1. Foreword

A: FOREWORD

These manuals are used when performing maintenance, repair or diagnosis of Subaru LEGACY.

Applicable model:
2012MY BM*****, BR*****

The manuals contain the latest information at the time of publication. Changes in the specifications, methods, etc. may be made without notice.

HOW TO USE THIS MANUALS

HU

Page

1. How to Use This Manuals 2

1. How to Use This Manuals

A: HOW TO USE THIS MANUALS

1. STRUCTURE

Each section consists of SCT that are broken down into SC that are divided into sections for each component. The specification, maintenance and other information for the components are included, and the diagnostic information has also been added where necessary.

2. CONTENTS

The first page has an index with tabs.

3. COMPONENT

Illustrations are provided for each component. The information necessary for repair work (tightening torque, grease up points, etc.) is described on these illustrations. Information is described using symbol.
To order parts, refer to parts catalogue.

Example:

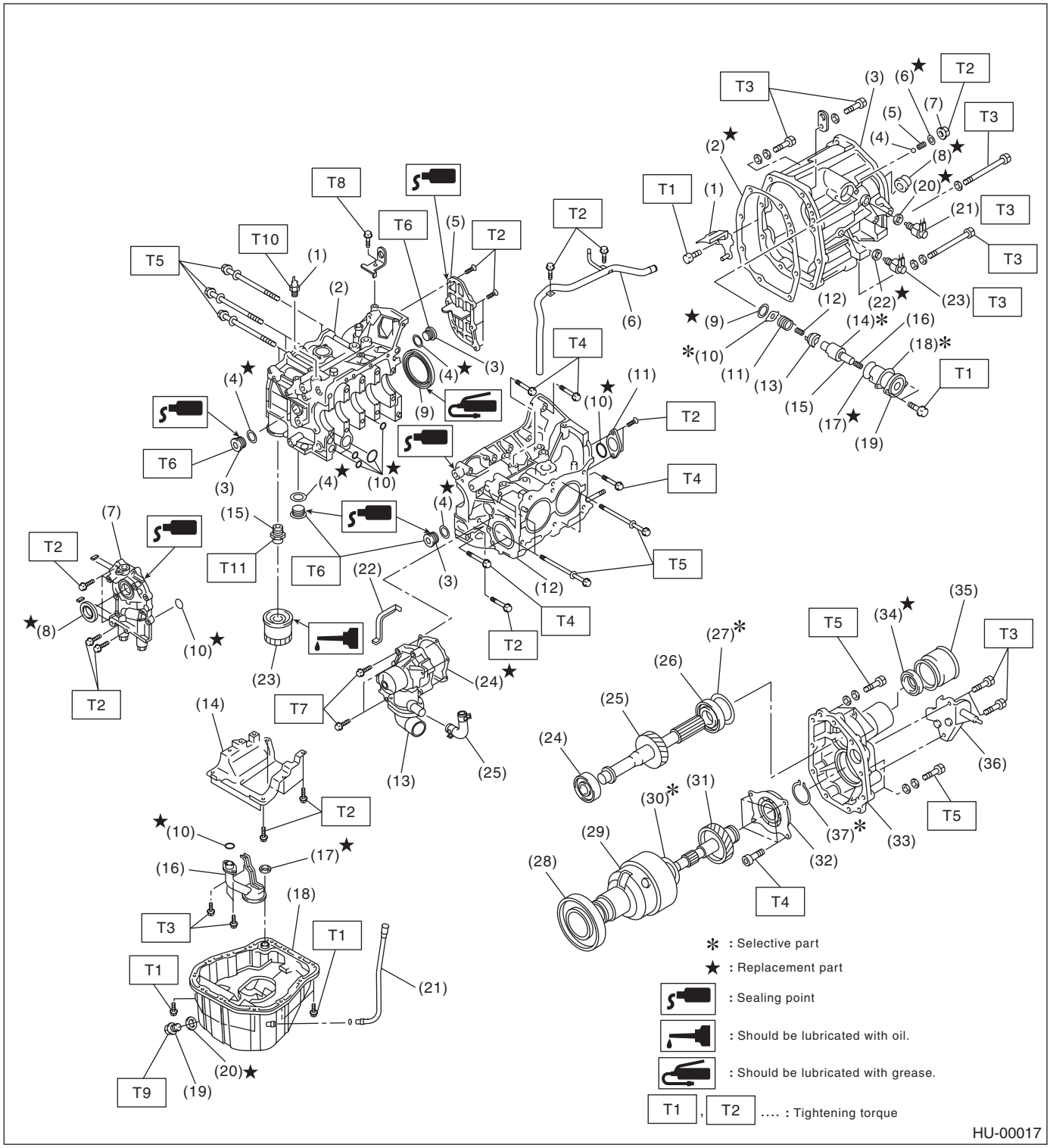

4. DEFINITION OF “NOTE”, “CAUTION” AND “WARNING”

- NOTE:

Describes supplementary explanations for efficient operation.

- CAUTION:

Describes particular items to be followed and items to be prohibited to avoid vehicle or parts damage.

- WARNING:

Describes items to be strictly prohibited to avoid serious injury to the person doing the work or people in the area, and items to be strictly followed to avoid any deficiency or accident.

5. SPECIFICATION

If necessary, specifications are also included.

6. INSPECTION

Inspections to be carried out before and after maintenance are included.

7. MAINTENANCE

• Maintenance instructions for serviceable parts describe work area and detailed step with illustration. It also describes the use of special tool, tightening torque, caution for each procedure.
• If many serviceable parts are included in one service procedure, appropriate reference is provided for each parts.

Example:

15.Main Shaft ← (A)

A: REMOVAL ← (B)

1) Remove the manual transmission assembly from vehicle. <Ref. to MT-33, REMOVAL, Manual Transmission Assembly.> ← (C)

---

11) Tighten the lock nuts to the specified torque using ST1 and ST2.

NOTE: ← (D)
Secure the lock nuts in two places after tightening.

ST1 498937000 TRANSMISSION HOLDER
ST2 499987003 (E) SOCKET WRENCH (35) (F)

Tightening torque:
118 N·m (12.0 kgf-m, 86.8 ft-lb) ← (G)

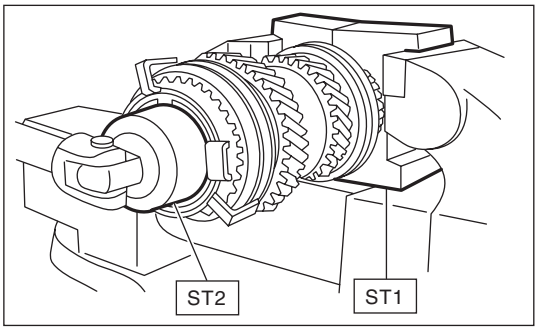

← (H)

HU-00020

(A) Component
(B) Process
(C) Reference
(D) Cautions
(E) Tool number of special tool
(F) Name of special tool
(G) Tightening torque
(H) Illustration

8. DIAGNOSIS

Diagnosis uses step-by-step process to make operations easier.

9. SI UNITS

Measurements in these manuals are according to the SI units. Metric and yard/pound measurements are also included.

Example:

Tightening torque:
44 N·m (4.5 kgf-m, 33 ft-lb)

List of SI unit

Item	SI units	Conventional unit	Remarks
Force	N (Newton)	kgf	1 kgf = 9.807 N
Mass (Weight)	kg, g	kg, g	
Capacity	ℓ, mℓ or cm^3	ℓ or cc	1 cc = 1 cm^3 = 1 mℓ
Torque	N·m	kgf-m, kgf-cm	1 kgf-m = 9.807 N·m
Rotating speed	rpm	rpm	
Pressure	kPa (Kilopascal)	kgf/cm^2	1 kgf/cm^2 = 98.07 kPa
		mmHg	1 mmHg = 0.1333 kPa
Power	W	PS	1 PS = 0.7355 kW
Calorie	W·h	cal	1 kcal = 1.163 W·h
Fuel consumption rate	g/kW·h	g/PS·h	1 g/PS·h = 1.3596 g/kW·h

The figure used in these manuals are described in the SI units and conventional units are described in ( ).

10.EXPLANATION OF TERMINOLOGY

List

2ndr	Secondary
AAI	Air Assist Injection
AAR	Angular Adjusted Roller
A/B	Airbag
ABS	Anti-lock Brake System
A/C	Air Conditioner
AC	Angular Contact
ACC	Accessory
A/F	Air Fuel Ratio
ALT	Generator
APS	Accessory Power Supply Socket
ASSY	Assembly
AT	Automatic Transmission
ATF	Automatic Transmission Fluid
AUX	Auxiliary Storage Unit (External Storage)
AVCS	Active Valve Control System
AWD	All Wheel Drive
BATT	Battery
BCM	Brake Control Module
BJ	Bell Joint
CAN	Controller Area Network
CD	Compact Disc
CD-R/RW	CD Recordable/Rewritable
COMPL	Complete
CPC	Canister Purge Control Solenoid Valve
CPU	Central Processing Unit
DCCD	Driver's Control Center Differential
DOHC	Double Overhead Camshaft
DOJ	Double Offset Joint
DTC	Diagnosis Trouble Code
DVD	Digital Versatile Disc or Digital Video Disc
EBD	Electronic Brake Distribution
EBJ	High-efficiency Compact Ball Fixed Joint
ECM	Engine Control Module
EDJ	High-Efficiency Compact Double Offset Joint
E/G	Engine
EGI	Electronic Gasoline Injection
EGR	Exhaust Gas Recirculation
ELR	Emergency Locking Retractor
ETC	Electronic Throttle Control
EX	Exhaust
F/B	Fuse & Joint Box
FL	Fusible Link
Ft	Front
FWD	Front Wheel Drive
GPS	Global Positioning System
HI	High
HID	High-Intensity Discharge
H/L	Headlight
H/U	Hydraulic Unit
HVAC	Heater, Ventilator and Air Conditioner
I/F	Interface
IG	Ignition
IN	Intake
INT	Intermittent
I/O	Input/Output
IR	Infrared Ray
ISC	Idle Speed Control
LAN	Local Area Network
LCD	Liquid Crystal Display
LED	Light Emitting Diode
LH	LH (Left Hand)
LHD	Left Hand Drive
LSD	Limited Slip Differential
M/B	Main Fuse & Relay Box
MD	Mini Disc
MID	Multi Information Display
MFI	Multi-Point Fuel Injection
MP-T	Multi-Plate Transfer
MT	Manual Transmission
NA	Natural Aspiration
NC	Normal Close (Relay)
NO	Normal Open (Relay)
OBD	On-Board Diagnosis
OP	Option Parts
PC	Personal Computer
PCD	Pitch Circle Diameter
PCV	Positive Crankcase Ventilation
PID	Parameter Identification
Pr	Primary
P/S	Power Steering
PTJ	Pillow Tripod Joint
P/W	Power Window
RAM	Random Access Memory
RH	RH (Right Hand)
RHD	Right Hand Drive
ROM	Read Only Memory
rpm	Revolution Per Minute
Rr	Rear
SDI	Subaru Diagnostic Interface
SI	Subaru Intelligent
SOHC	Single Overhead Camshaft
SRS	Supplemental Restraint System
SSM	Subaru Select Monitor
ST	Special Tool
STD	Standard
SW	Switch
T/B	Turbocharger

TCS	Traction Control System
TCM	Transmission Control Module
TGV	Tumble Generator Valve
T/M	Transmission
TPMS	Tire Pressure Monitoring System
UJ	Universal Joint
UV	Ultraviolet
VDC	Vehicle Dynamics Control
V.I.N.	Vehicle Identification Number
ViS-C	Viscous Coupling
VSV	Vacuum Switching Valve
VTD	Variable Torque Distribution
W/H	Wiring Harness

SPECIFICATIONS

SPC

Page

1. LEGACY 2
2. OUTBACK 6

1. LEGACY

A: DIMENSION

1. SEDAN MODEL

Model			2.5 L SOHC non-turbo	2.5 L DOHC turbo	3.6 L DOHC non-turbo
Overall length		mm (in)	4,735 (186.4)		
Overall width		mm (in)	1,820 (71.7)		
Overall height (at C.W.)		mm (in)	1,505 (59.3)		
Wheelbase		mm (in)	2,750 (108.3)		
Tread	Front	mm (in)	1,565 (61.6)	1,550 (61.0)	1,565 (61.6)
	Rear	mm (in)	1,570 (61.8)	1,555 (61.2)	1,570 (61.8)
Minimum road clearance		mm (in)	150 (5.9)		

B: ENGINE

Model	2.5 L SOHC non-turbo	2.5 L DOHC turbo	3.6 L DOHC non-turbo
Engine type	Horizontally opposed, liquid cooled, 4-cylinder, 4-stroke gasoline engine		Horizontally opposed, liquid cooled, 6-cylinder, 4-stroke gasoline engine
Valve arrangement	Overhead camshaft		
Bore × stroke mm (in)	99.5 × 79.0 (3.92 × 3.11)		92.0 × 91.0 (3.622 × 3.583)
Displacement cm^3 (cu in)	2,457 (149.94)		3,630 (221.5)
Compression ratio	10.0	9.5	10.5
Ignition order	1 — 3 — 2 — 4		1 — 6 — 3 — 2 — 5 — 4
Idle speed at Park or Neutral position rpm	650±100(MT) 675±100(CVT)	700±100	700±100
Maximum output kW (HP)/rpm	127 (170)/5,600	198 (265)/5,600	191 (256)/6,000
Maximum torque N·m (kgf-m, ft-lb)/rpm	230 (23.5, 170)/4,000	350 (35.7, 258)/2,000 — 5,200	334 (34.1, 247)/4,400

C: ELECTRICAL

Model		2.5 L SOHC non-turbo	2.5 L DOHC turbo	3.6 L DOHC non-turbo
Ignition timing (at idling) BTDC		10°±10°(MT), 15°±10°(CVT)	15°±10°	15°±8°
Spark plug	Type and manufacturer	NGK: SIFR6A11	NGK: SILFR6B8	NGK: SILFR6C11
Generator		12 V — 110 A		12 V — 130 A
Battery	Type and capacity (5HR)	12 V — 52 AH (75D23R)		

D: TRANSMISSION

1. MT

Model			2.5 L SOHC non-turbo	2.5 L DOHC turbo
Transmission type			6MT	6MT
Clutch type			DSPD	DSPD
Gear ratio		1st	3.454	3.454
		2nd	1.947	1.947
		3rd	1.296	1.296
		4th	0.972	0.972
		5th	0.825	0.780
		6th	0.695	0.666
		Rev.	3.636	3.636
Reduction gear (Front)		Type of gear	Hypoid	Hypoid
		Gear ratio	4.111	4.111
Reduction gear (Rear)	Transfer reduction	Type of gear	Helical	Helical
		Gear ratio	1.000	1.000
	Final reduction	Type of gear	Hypoid	Hypoid
		Gear ratio	4.111	4.111

6MT: 6-forward and 1-reverse speeds with synchromesh for all gears
DSPD: Dry Single Plate Diaphragm

2. AT

Model			3.6 L DOHC non-turbo
Transmission type			5AT
Clutch type			TCC
Gear ratio		1st	3.540
		2nd	2.264
		3rd	1.471
		4th	1.000
		5th	0.834
		Rev.	2.370
Reduction gear (Front)	1st reduction	Type of gear	Helical
		Gear ratio	1.000
	Final reduction	Type of gear	Hypoid
		Gear ratio	3.083
Reduction gear (Rear)		Type of gear	Hypoid
		Gear ratio	3.083

5AT: Electronically controlled fully-automatic, 5-forward speeds and 1-reverse
TCC: Torque Converter Clutch

3. CVT

Model			2.5 L SOHC non-turbo
Transmission type			CVT
Clutch type			TCC
Change gear ratio		Forward	3.525 — 0.558
		Rev.	2.358
Reduction gear (Front)	1st reduction	Type of gear	Helical
		Gear ratio	1.000
	Final reduction	Type of gear	Hypoid
		Gear ratio	3.700
Transfer reduction ratio			1.000
Reduction gear (Rear)		Type of gear	Hypoid
		Gear ratio	3.700

TCC: Torque Converter Clutch
CVT: Forward continuously variable speed change and 1-reverse

E: STEERING

Type			Rack & pinion
Turns, lock to lock			2.8
Minimum turning diameter	m (ft)	Curb to curb	11.2 (36.7)
		Wall to wall	11.8 (38.7)

F: SUSPENSION

Front	Macpherson strut type suspension
Rear	Double wishbone type suspension

G: BRAKE

Model	2.5 L SOHC non-turbo	2.5 L DOHC turbo	3.6 L DOHC non-turbo
Service brake system	Dual circuit hydraulic with vacuum suspended power unit		
Front	Ventilated disc brake		
Rear	Disc brake	Ventilated disc brake	
Parking brake	Electric mechanical on rear brakes		
Brake assist	Standard equipment for all vehicles		

H: TIRE

Model	2.5 L SOHC non-turbo	2.5 L DOHC turbo	3.6 L DOHC non-turbo
Wheel size	16 × 6 1/2JJ 16 × 6 1/2J 17 × 7 1/2J	18 × 7 1/2J	17 × 7 1/2J
Tire size	P205/60 R16 91V P215/50 R17 90V	225/45 R18 91W	P225/50 R17 93V
Type	Tubeless, Steel belted radial		

I: CAPACITY

Model			2.5 L SOHC non-turbo		2.5 L DOHC turbo	3.6 L DOHC non-turbo
			6MT	CVT	6MT	5AT
Fuel tank		ℓ (US gal, Imp gal)	70 (18.5, 15.4)			
Engine oil	Total capacity (at overhaul)	ℓ (US qt, Imp qt)	4.8 (5.1, 4.2)	4.8 (5.1, 4.2)	5.2 (5.5, 4.6)	7.8 (8.2, 6.9)
	Filling amount of engine oil ℓ (US qt, Imp qt)	When replacing engine oil and oil filter	4.2 (4.4, 3.7)	4.2 (4.4, 3.7)	4.3 (4.5, 3.8)	6.5 (6.9, 5.7)
		When replacing engine oil only	4.0 (4.2, 3.5)			6.3 (6.7, 5.5)
Transmission gear oil		ℓ (US qt, Imp qt)	3.7 (3.9, 3.3)	—	3.7 (3.9, 3.3)	—
ATF or CVTF		ℓ (US qt, Imp qt)	—	12.0 — 12.5 (12.7 — 13.2, 10.6 — 11.0)	—	9.6 — 10.0 (10.1 — 10.6, 8.4 — 8.8)
Front differential gear oil		ℓ (US qt, Imp qt)	—	1.3 — 1.5 (1.4 — 1.6, 1.1 — 1.3)	—	1.3 — 1.5 (1.4 — 1.6, 1.1 — 1.3)
Rear differential gear oil		ℓ (US qt, Imp qt)	0.8 (0.8, 0.7)			
Power steering fluid		ℓ (US qt, Imp qt)	0.7 (0.7, 0.6)			
Engine coolant		ℓ (US qt, Imp qt)	6.5 (6.9, 5.7)	6.4 (6.8, 5.6)	6.6 (7.0, 5.8)	6.5 (6.9, 5.7)

2. OUTBACK

A: DIMENSION

1. OUTBACK MODEL

Model			2.5 L SOHC non-turbo	3.6 L DOHC non-turbo
Overall length		mm (in)	4,780 (188.2)	
Overall width		mm (in)	1,820 (71.7)	
Overall height (at C.W.)		mm (in)	1,680 (66.1), 1,670 (65.7)*1	
Wheelbase		mm (in)	2,740 (107.9)	
Tread	Front	mm (in)	1,550 (61.0)	
	Rear	mm (in)	1,550 (61.0)	
Minimum road clearance		mm (in)	220 (8.7)	

*1: When crossbar is stored

B: ENGINE

Model	2.5 L SOHC non-turbo	3.6 L DOHC non-turbo
Engine type	Horizontally opposed, liquid cooled, 4-cylinder, 4-stroke gasoline engine	Horizontally opposed, liquid cooled, 6-cylinder, 4-stroke gasoline engine
Valve arrangement	Overhead camshaft	
Bore × stroke mm (in)	99.5 × 79.0 (3.92 × 3.11)	92.0 × 91.0 (3.622 × 3.583)
Displacement cm^3 (cu in)	2,457 (149.94)	3,630 (221.5)
Compression ratio	10.0	10.5
Ignition order	1 — 3 — 2 — 4	1 — 6 — 3 — 2 — 5 — 4
Idle speed at Park or Neutral position rpm	650±100(MT) 675±100(CVT)	700±100
Maximum output kW (HP)/rpm	127 (170)/5,600	191 (256)/6,000
Maximum torque N·m (kgf-m, ft-lb)/rpm	230 (23.5, 170)/4,000	334 (34.1, 247)/4,400

C: ELECTRICAL

Model		2.5 L SOHC non-turbo	3.6 L DOHC non-turbo
Ignition timing (at idling) BTDC		10°±10°(MT), 15°±10°(CVT)	15°±8°
Spark plug	Type and manufacturer	NGK: SIFR6A11	NGK: SILFR6C11
Generator		12 V — 110 A	12 V — 130 A
Battery	Type and capacity (5HR)	12 V — 52 AH (75D23R)	

D: TRANSMISSION

1. MT

Model			2.5 L SOHC non-turbo
Transmission type			6MT
Clutch type			DSPD
Gear ratio		1st	3.454
		2nd	1.947
		3rd	1.296
		4th	0.972
		5th	0.825
		6th	0.695
		Rev.	3.636
Reduction gear (Front)		Type of gear	Hypoid
		Gear ratio	4.444
Reduction gear (Rear)	Transfer reduction	Type of gear	Helical
		Gear ratio	1.000
	Final reduction	Type of gear	Hypoid
		Gear ratio	4.444

6MT: 6-forward and 1-reverse speeds with synchromesh for all gears
DSPD: Dry Single Plate Diaphragm

2. AT

Model			3.6 L DOHC non-turbo
Transmission type			5AT
Clutch type			TCC
Gear ratio		1st	3.540
		2nd	2.264
		3rd	1.471
		4th	1.000
		5th	0.834
		Rev.	2.370
Reduction gear (Front)	1st reduction	Type of gear	Helical
		Gear ratio	1.000
	Final reduction	Type of gear	Hypoid
		Gear ratio	3.083
Reduction gear (Rear)		Type of gear	Hypoid
		Gear ratio	3.083

5AT: Electronically controlled fully-automatic, 5-forward speeds and 1-reverse
TCC: Torque Converter Clutch

3. CVT

Model			2.5 L SOHC non-turbo
Transmission type			CVT
Clutch type			TCC
Change gear ratio		Forward	3.525 — 0.558
		Rev.	2.358
Reduction gear (Front)	1st reduction	Type of gear	Helical
		Gear ratio	1.000
	Final reduction	Type of gear	Hypoid
		Gear ratio	3.900
Transfer reduction ratio			1.000
Reduction gear (Rear)		Type of gear	Hypoid
		Gear ratio	3.900

TCC: Torque Converter Clutch
CVT: Forward continuously variable speed change and 1-reverse

E: STEERING

Model			2.5 L SOHC	3.6 L DOHC
Type			Rack and pinion	
Turns, lock to lock			3.2	
Minimum turning diameter	m (ft)	Curb to curb	11.2 (36.7)	
		Wall to wall	11.8 (38.7)	

F: SUSPENSION

Front	Macpherson strut type suspension
Rear	Double wishbone type suspension

G: BRAKE

Model	2.5 L SOHC non-turbo	3.6 L DOHC non-turbo
Service brake system	Dual circuit hydraulic with vacuum suspended power unit	
Front	Ventilated disc brake	
Rear	Disc brake	Ventilated disc brake
Parking brake	Electric mechanical on rear brakes	
Brake assist	Standard equipment for all vehicles	

H: TIRE

Model	2.5 L SOHC non-turbo	3.6 L DOHC non-turbo
Wheel size	16 × 6 1/2JJ 17 × 7J	17 × 7J
Tire size	P215/70 R16 99S P225/60 R17 98T	P225/60 R17 98T
Type	Tubeless, Steel belted radial	

I: CAPACITY

Model			2.5 L SOHC non-turbo		3.6 L DOHC non-turbo
			6MT	CVT	5AT
Fuel tank		ℓ (US gal, Imp gal)	70 (18.5, 15.4)		
Engine oil	Total capacity (at overhaul)	ℓ (US qt, Imp qt)	4.8 (5.1, 4.2)	4.8 (5.1, 4.2)	7.8 (8.2, 6.9)
	Filling amount of engine oil ℓ (US qt, Imp qt)	When replacing engine oil and oil filter	4.2 (4.4, 3.7)	4.2 (4.4, 3.7)	6.5 (6.9, 5.7)
		When replacing engine oil only	4.0 (4.2, 3.5)		6.3 (6.7, 5.5)
Transmission gear oil		ℓ (US qt, Imp qt)	3.7 (3.9, 3.3)	—	
ATF or CVTF		ℓ (US qt, Imp qt)	—	12.0 — 12.5 (12.7 — 13.2, 10.6 — 11.0)	9.6 — 10.0 (10.1 — 10.6, 8.4 — 8.8)
Front differential gear oil		ℓ (US qt, Imp qt)	—	1.3 — 1.5 (1.4 — 1.6, 1.1 — 1.3)	
Rear differential gear oil		ℓ (US qt, Imp qt)	0.8 (0.8, 0.7)		
Power steering fluid		ℓ (US qt, Imp qt)	0.7 (0.7, 0.6)		
Engine coolant		ℓ (US qt, Imp qt)	6.5 (6.9, 5.7)	6.4 (6.8, 5.6)	6.5 (6.9, 5.7)

PRECAUTION

PC

Page
1. Precaution 2

1. Precaution

A: CAUTION

Please clearly understand and adhere to the following general precautions. They must be strictly followed to avoid minor or serious injury to the person doing the work or people in the area.

1. VEHICLE DYNAMICS CONTROL (VDC)

Handle the VDC as a total system. Do not disassemble or attempt to repair parts which are not instructed in this manual. Follow the directions in this manual when performing maintenance on the VDCCM&H/U. When parts other than those specified are disassembled, it is possible that the VDC system will not operate when needed or cause it to operate incorrectly and result in injury.

2. ELECTRONIC PARKING BRAKE

Handle the electronic parking brake as a total system. Do not disassemble or attempt to repair individual parts. Doing so could prevent the electronic parking brake system from operating when needed, or the system may operate incorrectly and result in injury.

3. BRAKE FLUID

If brake fluid gets in your eyes or on your skin, do the following:

- Wash eyes and seek immediate medical attention.
- Wash your skin with soap and then rinse thoroughly with water.

4. RADIATOR FAN

The radiator fan may rotate without warning, even when the engine is not ON. Do not place your hand, cloth, tools or other items near the fan at any time.

5. ROAD TEST

Always conduct road tests in accordance with traffic rules and regulations to avoid bodily injury and interrupting traffic.

6. AIRBAG

To prevent bodily injury from unexpected deployment of airbags and unnecessary maintenance, follow the instructions in this manual when performing maintenance on the airbag components and nearby, around front of the vehicle (radiator panel, front wheel apron, front side frame, front bumper, front hood panel, front fender panel), around side of the vehicle (front door panel, rear door panel, center pillar, rear fender panel, side sill, rear wheel apron), around rear of the vehicle (the rear seat cushion, rear floor pan, rear crossmember) and the airbag wiring harnesses and nearby.

To prevent unexpected deployment, turn the ignition switch to OFF and disconnect the ground cable from battery, then wait at least 60 seconds to discharge backup power supply before starting work.

7. AIRBAG AND SEAT BELT PRETENSIONER DISPOSAL

To prevent bodily injury from unexpected airbag deployment, do not dispose the airbag modules or seat belt pretensioner in the same way as other waste. Follow the special instructions for disposal in this manual. Follow all government regulations concerning disposal of refuse.

8. AIRBAG MODULE

Adhere to the following when handing and storing the airbag module to prevent bodily injury from unexpected deployment:

- Do not hold the harnesses or connectors to carry the module.
- Do not face the bag in the direction that it opens towards yourself or other people.
- Do not face the bag in the direction that it opens towards the floor or walls.

9. AIRBAG SPECIAL TOOL

To prevent unexpected deployment, only use special tools.

10.WINDOW

Always wear safety glasses when working around any glass to prevent glass fragments from damaging your eyes.

11.WINDOW ADHESIVE

Always use the recommended or equivalent adhesive when attaching glass to prevent it from coming falling, resulting in accidents and injury.

12.OIL

When handling oil, adhere to the following to prevent unexpected accident.

- Prepare a container and cloth to prevent scattering of fuels when performing work where oil can be spilled. If the oil spills, wipe it off immediately to prevent from penetrating into floor or flowing out for environmental protection.
- Follow all government and local regulations concerning disposal of refuse when disposing.

13.FUEL

When handling and storing fuel, carefully observe the following to prevent unexpected accidents.

- Be careful with fire.
- Prepare a container and cloth to prevent scattering of fuels when performing work where fuels can be spilled. If the fuel spills, wipe it off immediately to prevent it from penetrating the floor or flowing out, to protect the environmental.
- Follow all government and local regulations concerning disposal of refuse when disposing.

14.ENGINE COOLANT

When handling engine coolant, adhere to the following to prevent from unexpected accident.

- Never remove the radiator cap since engine coolant may blow out when it is hot.
- Prepare a container and cloth to prevent scattering of engine coolant when performing work where engine coolant can be spilled. If the oil spills, wipe it off immediately to prevent from penetrating into floor or flowing out for environmental protection.
- Follow all government and local regulations concerning disposal of refuse when disposing.

15.AIR CONDITIONER REFRIGERANT

In order to prevent from global warming, avoid releasing air conditioner refrigerant into the atmosphere. Using a refrigerant recovery system, discharge and reuse it.

16.REMOVAL AND INSTALLATION OPERATION OF HOSES, ETC.

1. Before the removal and installation operation of hoses, etc.

- If you keep using the damaged or deformed hose, it results bleeds or leakage of the fat adheres or disconnection of the hose. Be careful not to spill fat adheres on exhaust pipes, etc. during maintenance to prevent emitting smoke or causing fires.
- Perform the operation with the hose removed. If the operation is performed without removing the hose, it may damage inner surface of the hose.

2. Removal and installation operation of hoses, etc. during the inspection

• Follow the instructions below when removing hose.

- Do not use a pointed hose remover (hose plucker) when using a general hose remover. It may damage the pipe surface or the hose.

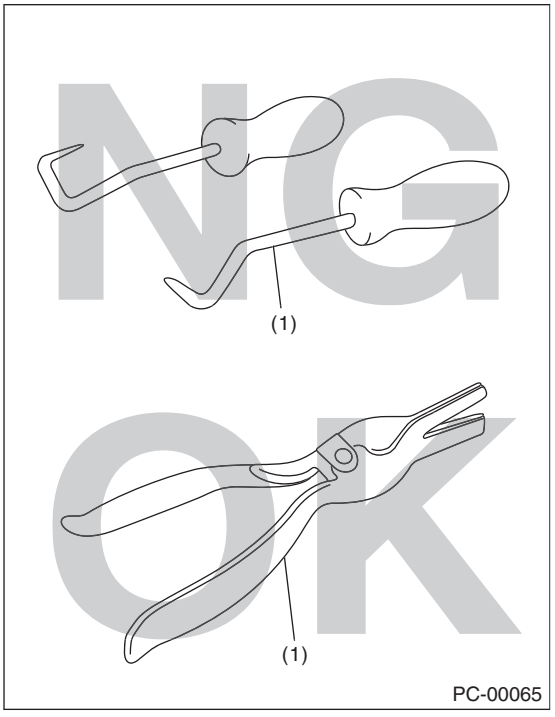

(1) Hose remover

- When draining hose using pliers, be sure to cover the hose with cloth and rotate the hose slightly to extract straight.

• If you keep using the hose, perform the inspection below and replace the hose with a new part if faulty.

• Replace the hose with a new part if it rides over the stay or spool.

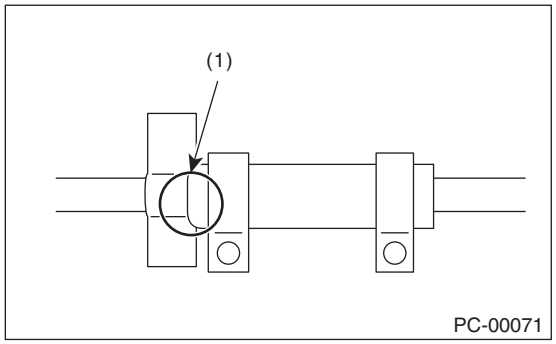

(1) Hose rides over the stay

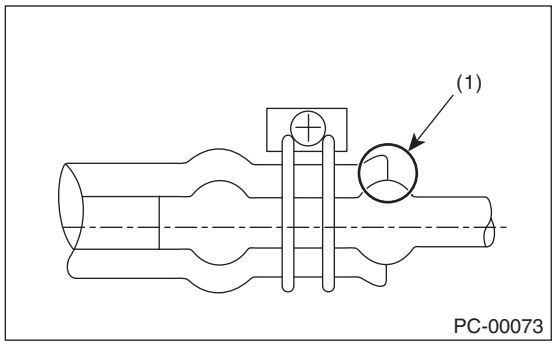

(1) Hose rides over the spool

• Check if the surface and the inner surface of the hose are damaged, cracked, bend, hardened, softened, swelled, peeled or deformed due to the adherence or the entry of the foreign matter by bending the hose. Replace with the new part if faulty.

• Follow the instructions below during installation.

• Check carefully for assembling position.

• Never use lubricants.

• Insert the hose to the specified position (stopper or spool) securely.

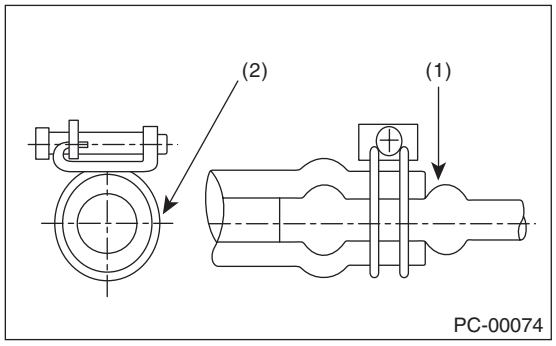

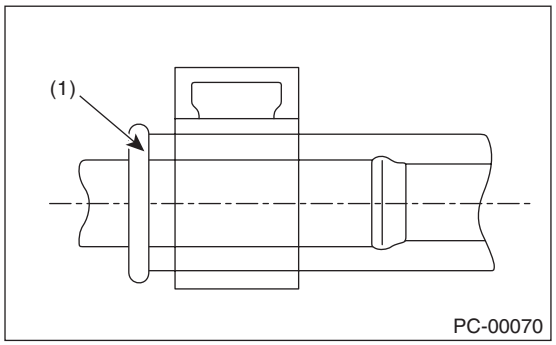

(1) Push against the spool. (Insert the hose and prevent it from becoming wrinkled.)

(2) Tighten the hose outwards and apply force thoroughly.

• Check if the position, direction and hose layout of the hose clamp are correct. (Check if the position, direction, length and the gap around are correct, or if it is different from the condition before the work)

• After the installation, check that the hose is installed securely and there is no leakage. (Check if it is fixed securely with the clamp)

• For hose clips and hose clamps, perform the inspection below and replace them with a new part if faulty.

• Check for deformation, rust, damage or foreign matters.

• For hose clip, check if it works and has clamping force.

• For hose clamp, check if it can tighten screw, not ovalized or the screw is not damaged.

• For hose pipes, perform the inspection below and replace with a new part if faulty.

Check if the pipe is not damaged, rusted, peeled (peeled plates included), covered with foreign matter, bent, compressed or cracked.

• For the parts below, replaces with a new part when the hose is removed or the installation position is changed.

ATF cooler hose, engine oil cooler hose, power steering suction hose, power steering return hose, fuel hose (delivery/return)

NOTE

NT

Page
1. Note 2

1. Note

A: BASIC REPAIR HINT

This section describes basic points that the service operator must understand before performing the service operation.

1. APPEARANCE

- Always wear clean work clothing.
- Wear a cap and protective shoes.

2. PROTECTION OF VEHICLE UNDER MAINTENANCE AND PREPARATION OF TOOLS/ EQUIPMENT

- Before work, cover the vehicle body. (Ex. grille cover, fender cover, seat cover and floor mat cover)
- Before performing the service operation, prepare tools, equipment, container box, grease and cloth etc.

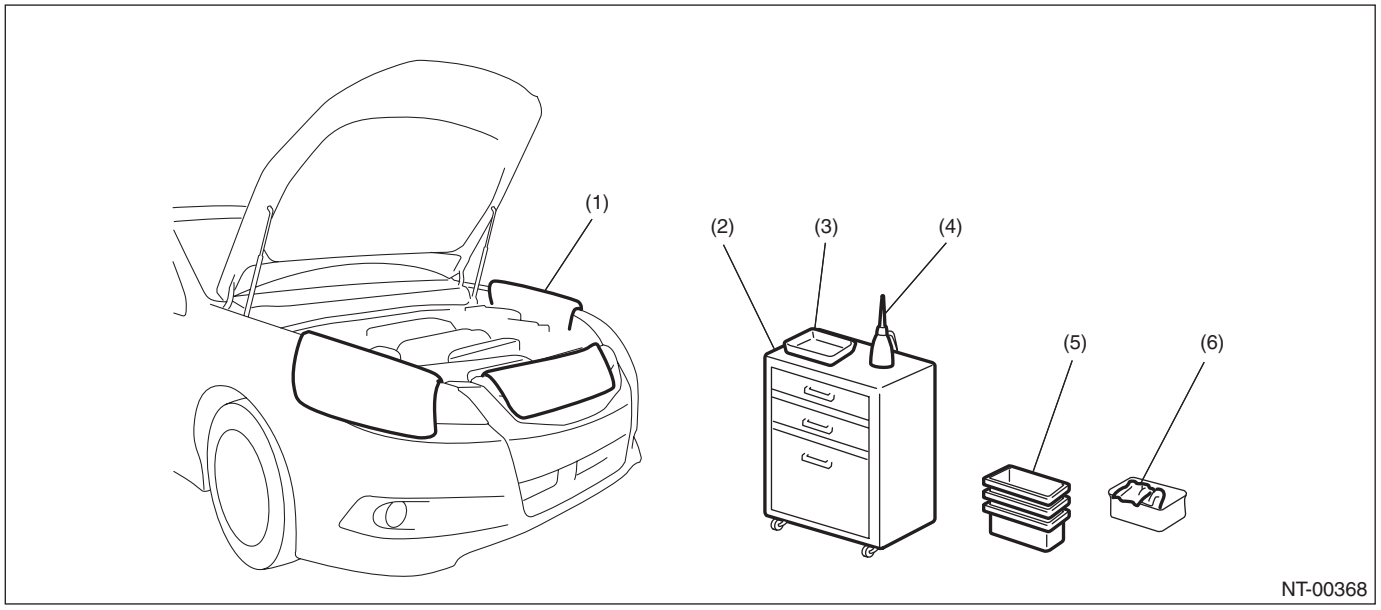

(1)	Fender cover	(3)	Tray	(5)	Container box
(2)	Tools/equipment case	(4)	Oil	(6)	Cloth

3. SAFETY

- Before work, set the wheel stoppers to secure the vehicle.
- When performing work by multiple workers, call to each other to make sure that service operation is performed safely.
- Before starting engine, ventilate the room.
- When performing the service operation of high-temperature parts like muffler, rotating parts like fan and other movable parts, be careful not to get burned or injured.
- For the jack-up and lift up, set the tool to the proper location to support the vehicle correctly. And use the safety device properly when lifting up.

4. SERVICE OPERATION

- By identifying the vehicle problems thoroughly before work, service operation will be performed effectively.
- Before removing parts, confirm the installation condition or the damage of the parts.
- To reinstall parts properly, leave a note of the condition before work as necessary.
- For a part which needs positioning, take appropriate action such as putting alignment marks.
- For a removed part, clean it as necessary and check for damage and defect before installation.

5. REMOVED PART

• A removed part must be organized to avoid mixing up with similar parts. When same parts are used in multiple locations, such as pistons in engine, manage the parts by using labels with cylinder No. so that the parts are not installed to the wrong location.
• Always replace nonreusable parts such as gasket and O-ring with new parts.
• After work, have a customer confirm the replaced part.

6. WHEN REMOVING BATTERY

When removing battery, power supply is cut off and the information stored in the computer memory is volatilized. Therefore, setting information of some device is initialized to the factory default. The device and functions initialized by removing battery are as follows.
• Clock
• Set temperature of fully automatic air conditioner
• Automatic full open/close of driver's window (power window needs to be initialized)
• User setting items in the navigation system
• Past trouble history (memory code)

B: NOTE

This is the information that can improve the efficiency of maintenance and assure the sound work.

1. FASTENERS NOTICE

Fasteners must be tightened to the specified torque.
Do not apply paint, lubricant, rust retardant or other substance to the surface around bolts, nuts, etc. Doing so will make it difficult to obtain the correct torque and result in looseness and other problem.

CAUTION:
Do not spray parts cleaner directly to rubber parts such as bushing or other resin parts.

2. STATIC ELECTRICITY DAMAGE

Do not touch the control modules, connectors, logic boards and other such parts when there is a risk of static electricity. Always use a static electricity prevention cord or touch grounded metal for the elimination of static electricity before conducting work.

3. BATTERY

When removing the battery terminal, always be sure to turn the ignition switch to OFF and remove the battery ground cable first.

4. BACKUP/POWER SUPPLY FUSE

Right after the vehicle has arrived, 10A backup fuse is removed to avoid run-down of the battery. Connect the backup fuse as shown in the figure. Also, delivery mode is canceled by disconnecting the backup fuse from the fuse holder.

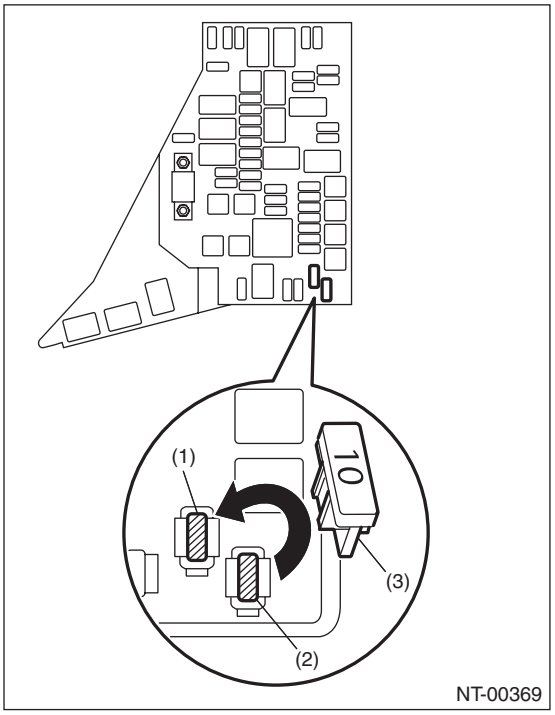

(1) Backup fuse insertion slot
(2) Backup fuse holder
(3) Backup fuse

5. IMMOBILIZER RELATED PART

Do not replace parts which have immobilizer ID (all ignition key, combination meter, body integrated unit, ECM, and security control module for Canada) with the parts from other vehicle.

6. SERVICE PARTS

Use genuine parts for maximum performance and maintenance when conducting repairs. Subaru/FHI will not be responsible for poor performance resulting from the use of parts except for genuine parts.

7. PROTECTING VEHICLE UNDER MAINTENANCE

Make sure to attach the fender cover, seat covers, etc. before work.

8. ENSURING SECURITY DURING WORK

When working in a group of two or more, perform the work with calling each other to ensure mutual safety.

9. LIFT AND JACK

When using a lift or shop jack to raise a vehicle or using rigid rack to support a vehicle, always follow instructions concerning jack-up points and weight limits to prevent the vehicle from falling, which could result in injury. Be especially careful that the vehicle is balanced before raising it. Be sure to set the wheel stoppers when jacking-up only the front or rear side of the vehicle.

CAUTION:
Select the lift attachment so that the side sill does not contact the lift arm.

NOTE:
- When using a lift, follow its operation manual.
- When the side sill cover contacts the lift arm, use a lift attachment.
- Do not work or leave unattended while the vehicle is supported with jack, support it with rigid racks.
- Be sure to use the rigid racks with rubber attached to cradle to support the vehicle.
- When using a lift, use an attachment or something similar.
- When using a plate lift, use a rubber attachment.

Place the attachment to the specified position of the vehicle, by adjusting front/rear and left/right sides accordingly.

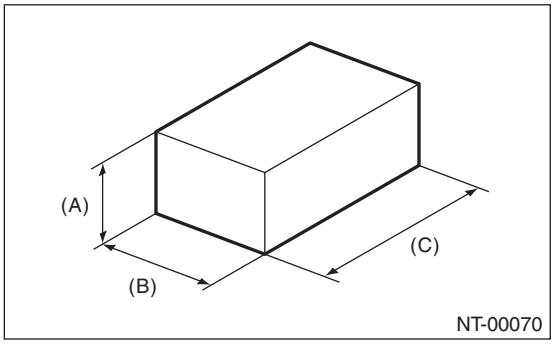

(A) 80 mm (3.1 in) or more
(B) 80 — 100 mm (3.15 — 3.94 in)
(C) 120 — 170 mm (4.72 — 6.69 in)

- Align the cushion rubber center part of plate lift with the center part of rubber attachment.

- Do not use the plate lift whose attachment does not reach the supporting locations.
- **Support locations**

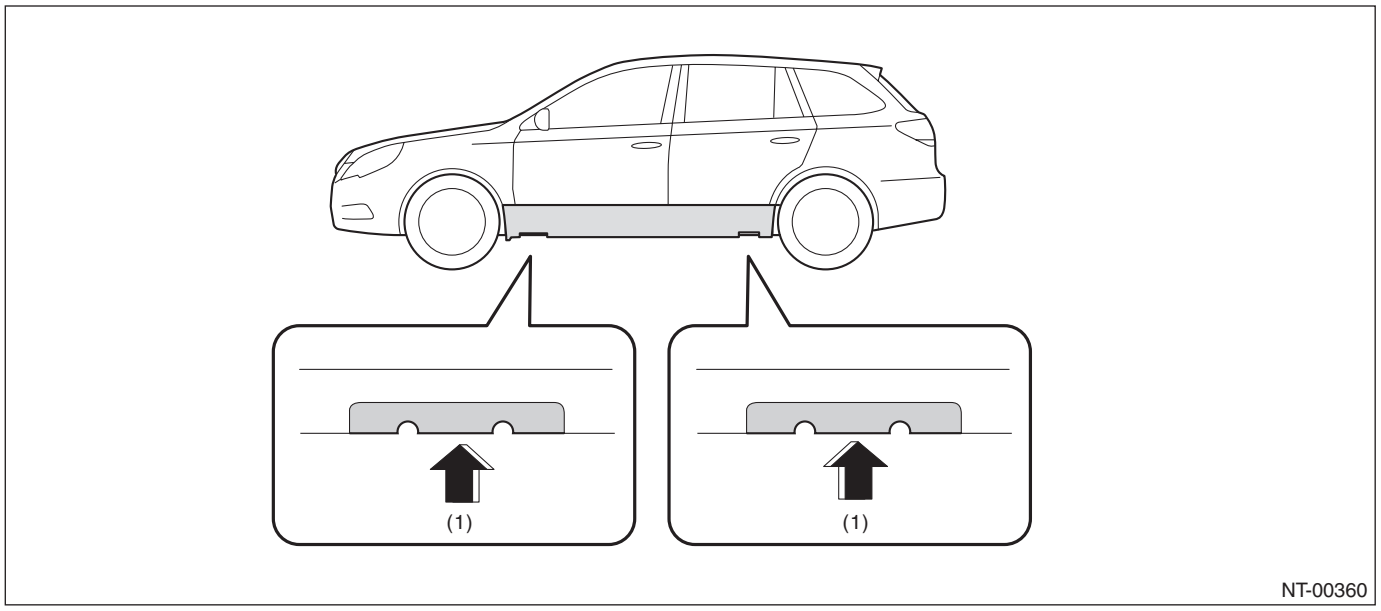

(1) Jack-up point

- **Pantograph jack**

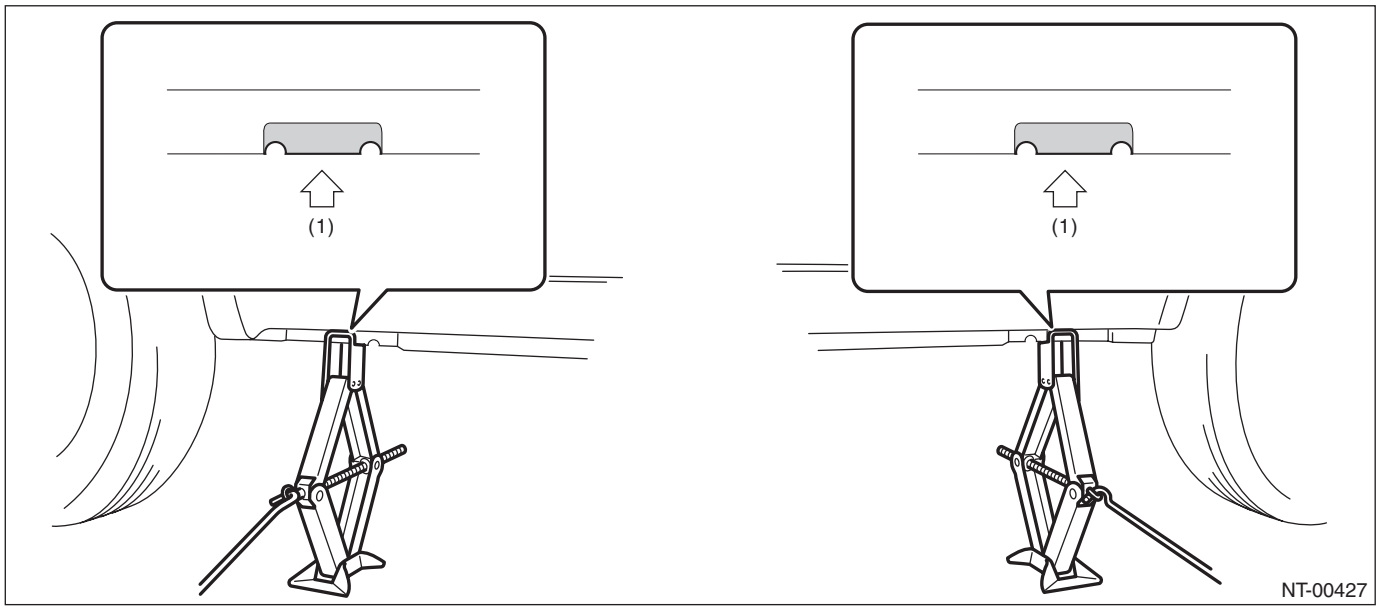

(1) Jack-up point

NOTE

- **Lift**

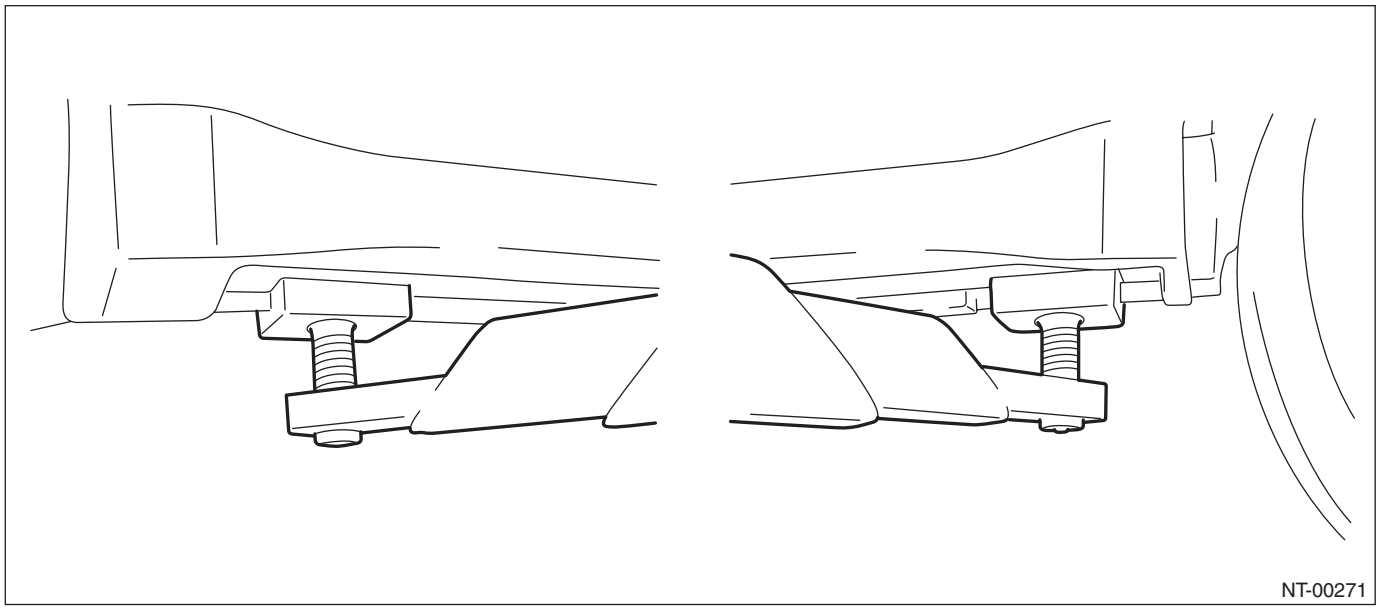

CAUTION:
For models with side under skirt, use a spacer or an attachment to lift up the vehicle securely at jack up point, without contact of side under skirt and lift.

- **Rigid rack**

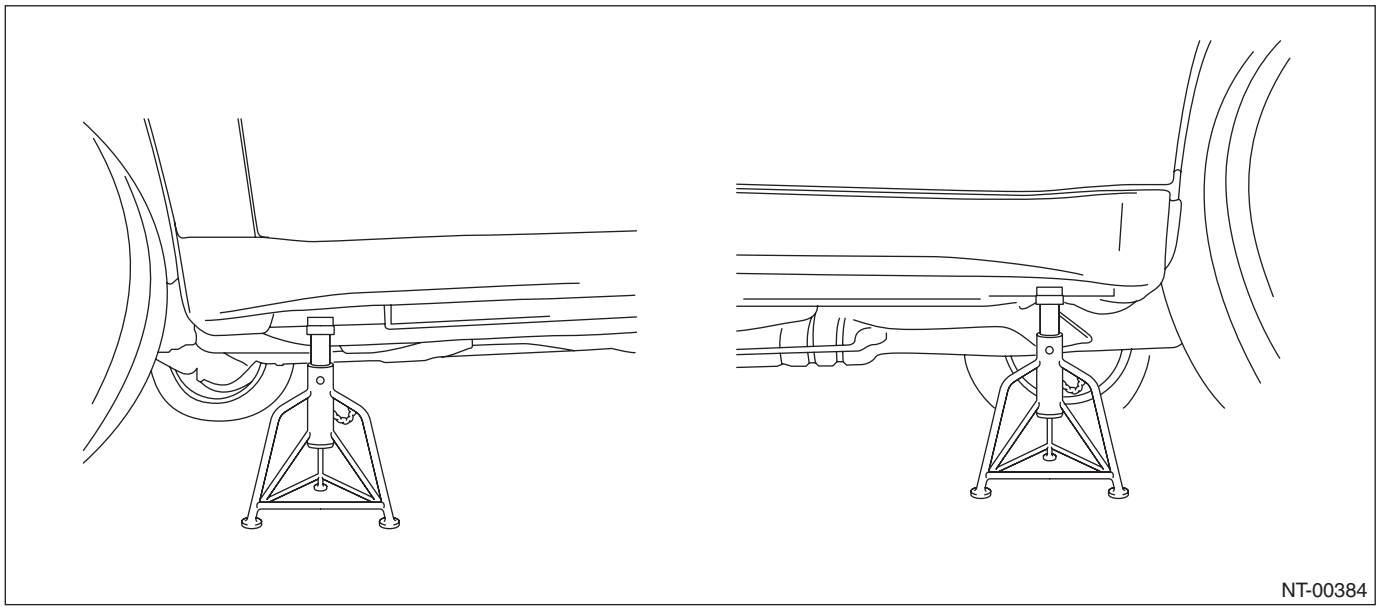

- **Plate lift**

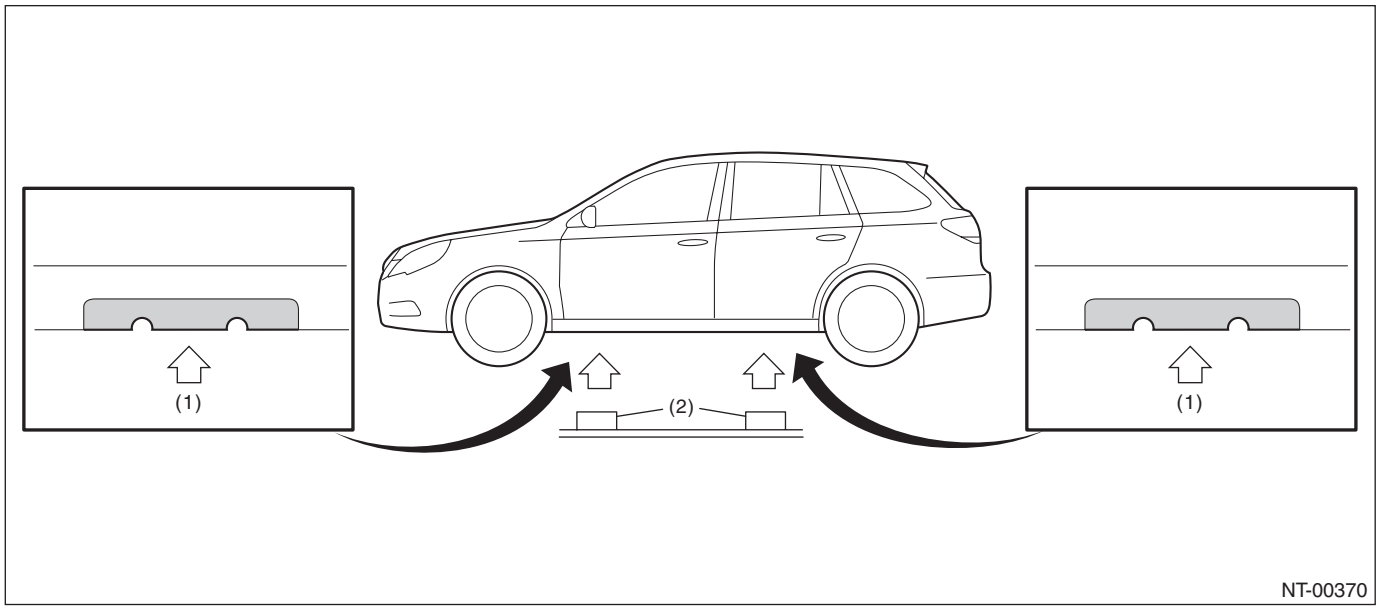

(1) Jack-up point (2) Attachment

- **Jack-up point (When using a garage jack)**

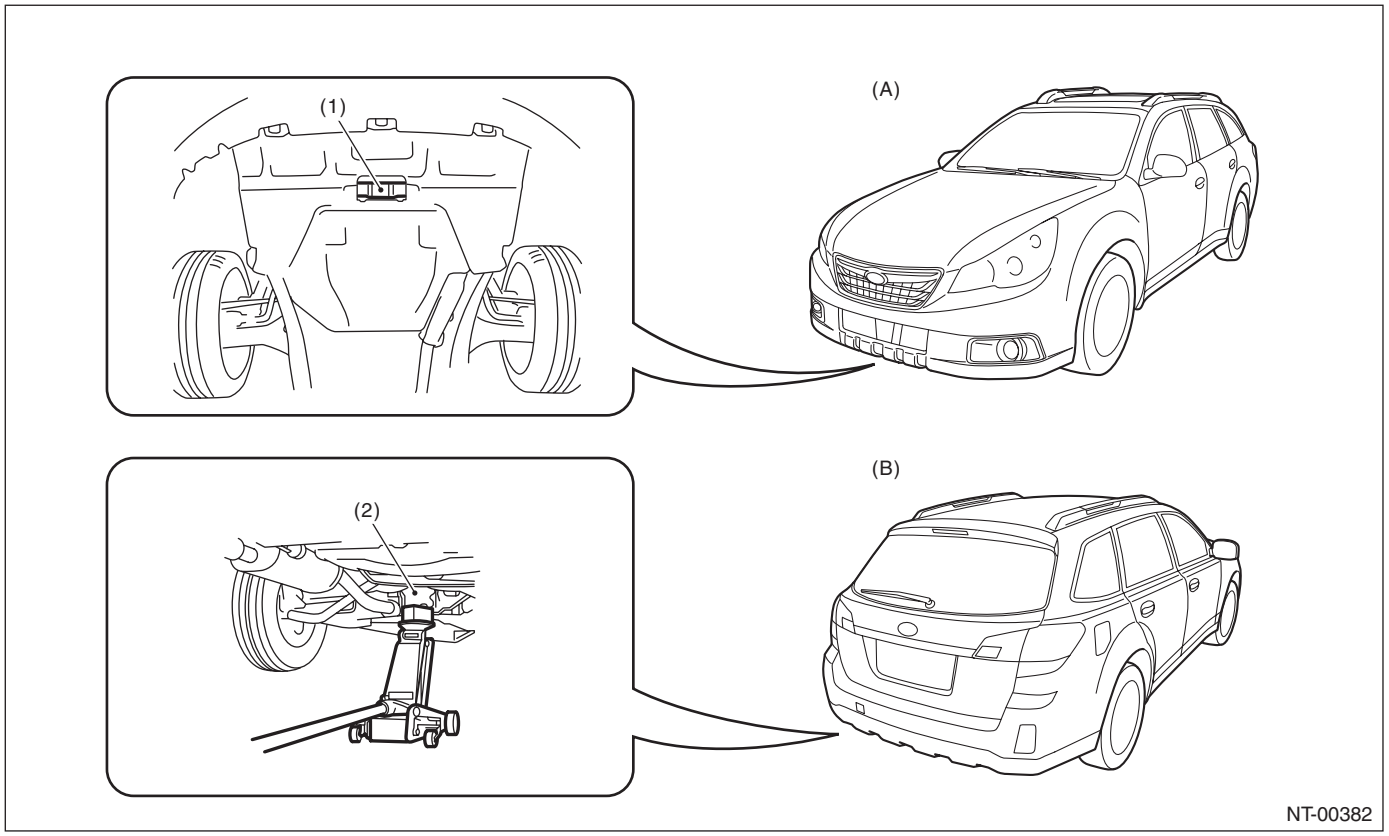

(A) Front (B) Rear
(1) Front cradle (2) Rear differential

CAUTION:
If jacking up the front side of the vehicle, make sure that the jack is attached at the center of the jack-up plate not at the sides.

NOTE

10.TIE-DOWNS

Tie-downs are used when transporting vehicles and when using the chassis dynamo. Attach tie-down only to the specified locations on the vehicle.

• Tie-down location

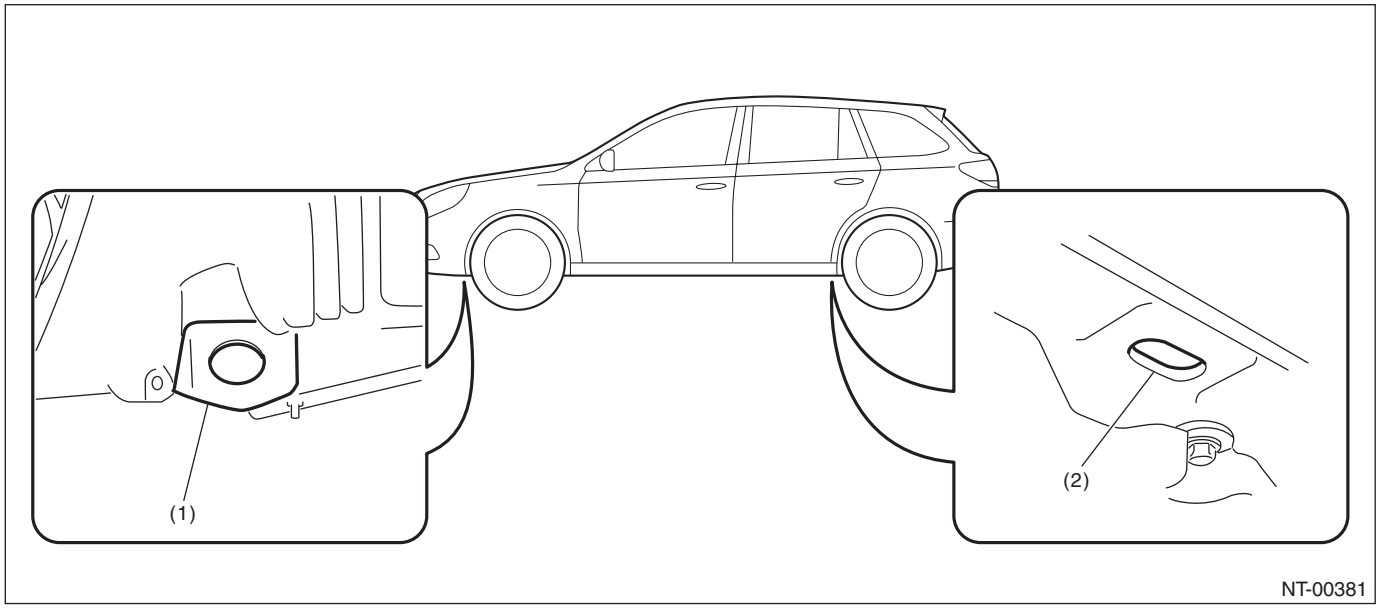

(1) Hook for tie-down (2) Tie-down hole

• Chain direction at tie-down condition

CAUTION:

• Pull the front and rear of the vehicle in the opposite direction, and pull the left and right of the vehicle in the same direction.

• Patterns except for the followings (recommended) are not allowed.

	Recommended
Tie-down direction	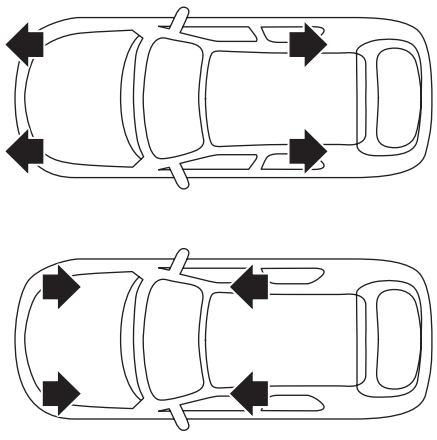 NT-00214

- **Tie-down range**

For ground transportation

CAUTION:

When the vehicle is tied down from vehicle inside, hook the hooks of tie-down chain on the rear tie-down hooks from vehicle inside. When the vehicle is tied down from vehicle outside, hook the hooks of tie-down chain on the rear tie-down hooks from vehicle outside.

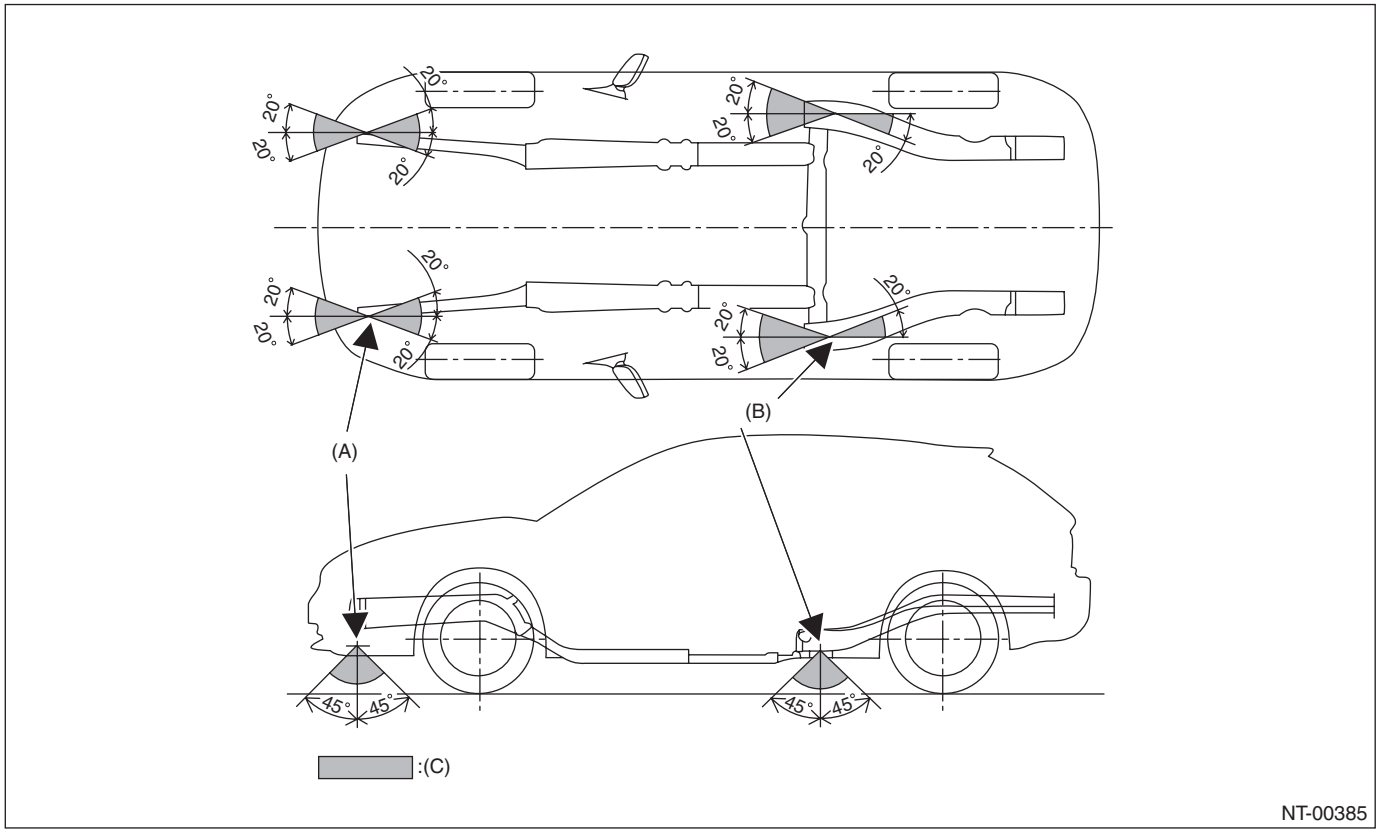

(A) Front tie-down hook

(B) Rear tie-down hole

(C) Chain pulling range at tie-down condition

NOTE

For sea transportation

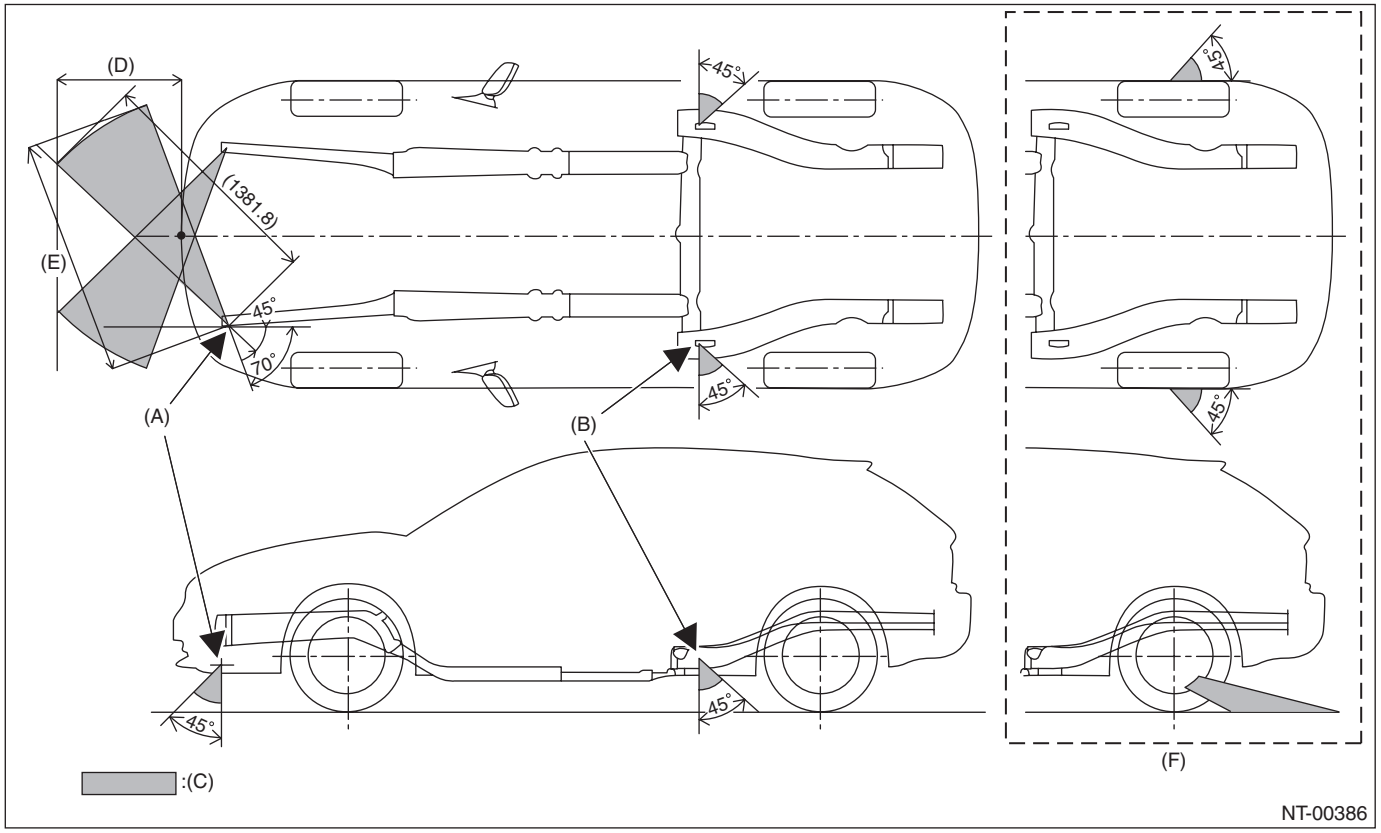

(A)	Front tie-down hook	(C)	Chain pulling range at tie-down condition	(E)	1,320 mm (52.0 in)
(B)	Tie-down hole or wheel spoke	(D)	400 mm (15.7 in)	(F)	When rear wheel is tied down

CAUTION:

- **Basically, tie down using the tie-down hole.**
- **Tie-down procedure should be followed as much as reasonably possible depending on the deck condition, however, lashing belt and vehicle must not contact each other. Also, if a wheel tie-down is conducted instead of using rear tie-down hole due to the vehicle loading condition of the deck, follow the instructions below.**
  1. **Tie-down range must be within the backward of rear wheel as shown in the figure.**
  2. **Wheel tie-down should be used only during sea transportation, and lashing belt should not contact air valve while tie-down. Be careful not damage the wheel and vehicle.**
  3. **Maximum tie-down load to each lashing belt is 5000 N (510 kgf, 1124 lbf).**
  4. **For steel wheel, do not tie down wheels.**

- **Vehicle sinking volume at tie-down condition**

CAUTION:
The vehicle sinking volume at tie-down condition should be less than 50 mm (1.97 in) and make sure to fix the vehicle securely.
Check to see if the tensions of chains or belts at tie-down condition are appropriate in the following procedures.
1) Before tie-down, measure the distance between the highest tire point and highest arch point at the center of wheel.
2) After tie-down, measure the distance between the highest tire point and highest arch point at the center of wheel.
3) If the distance (A) between the measured value of 1) and 2) above, is less than 50 mm (1.97 in), it is judged as OK. If the distance is 50 mm (1.97 in) or more, it is judged as NG because the tension is too high.

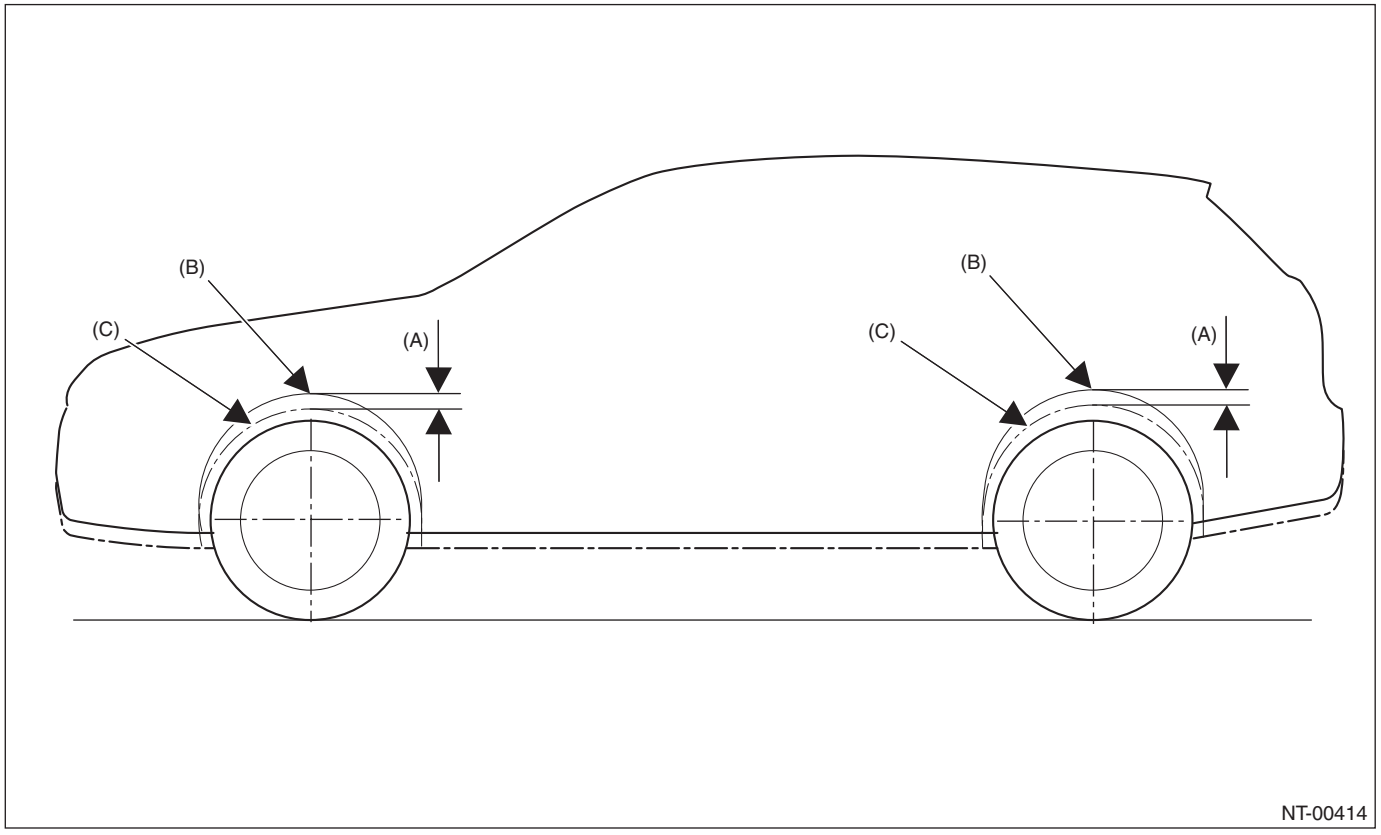

(B) Arch position before tie-down (C) Arch position after tie-down

- **Notes for the use of tie-down hook**

When the vehicle is tied down from vehicle inside, hook the hooks of tie-down chain from vehicle inside, and when the vehicle is tied down from vehicle outside, hook the hooks of tie-down chain from vehicle outside.
For front tie-down hook, use S hook and J hook, and for rear tie-down hole, use S hook, J hook and T hook. T hook can be used only for rear tie-down hole.

NOTE

11.TOWING

Avoid towing vehicles except when the vehicle cannot be driven. For models with AWD, AT or VTD, use a loader instead of towing. When towing other vehicles, pay attention to the following to prevent hook or vehicle damage resulting from excessive weight.

- Do not tow other vehicles with a front tie-down hook.
- Make sure the vehicle towing is heavier than the vehicle being towed.
- Front

Remove the hook cover, and install the towing hook.

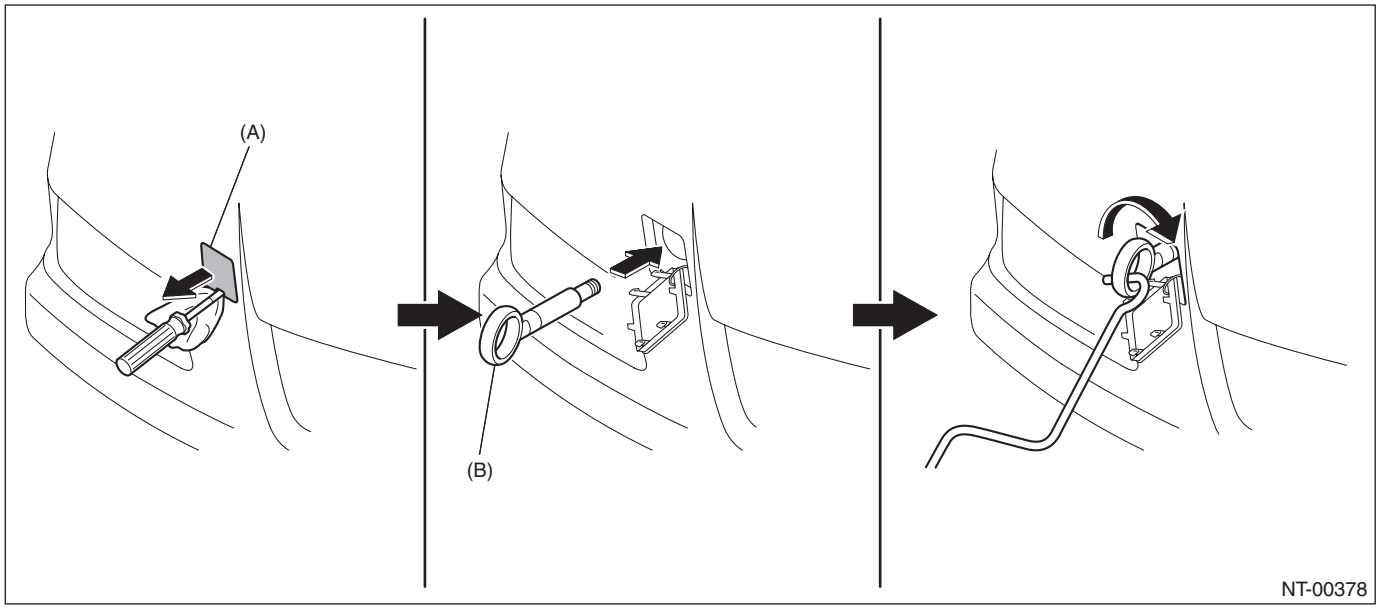

(A) Hook cover (B) Towing hook (eyebolt)

- Rear

Remove the hook cover, and install the towing hook.

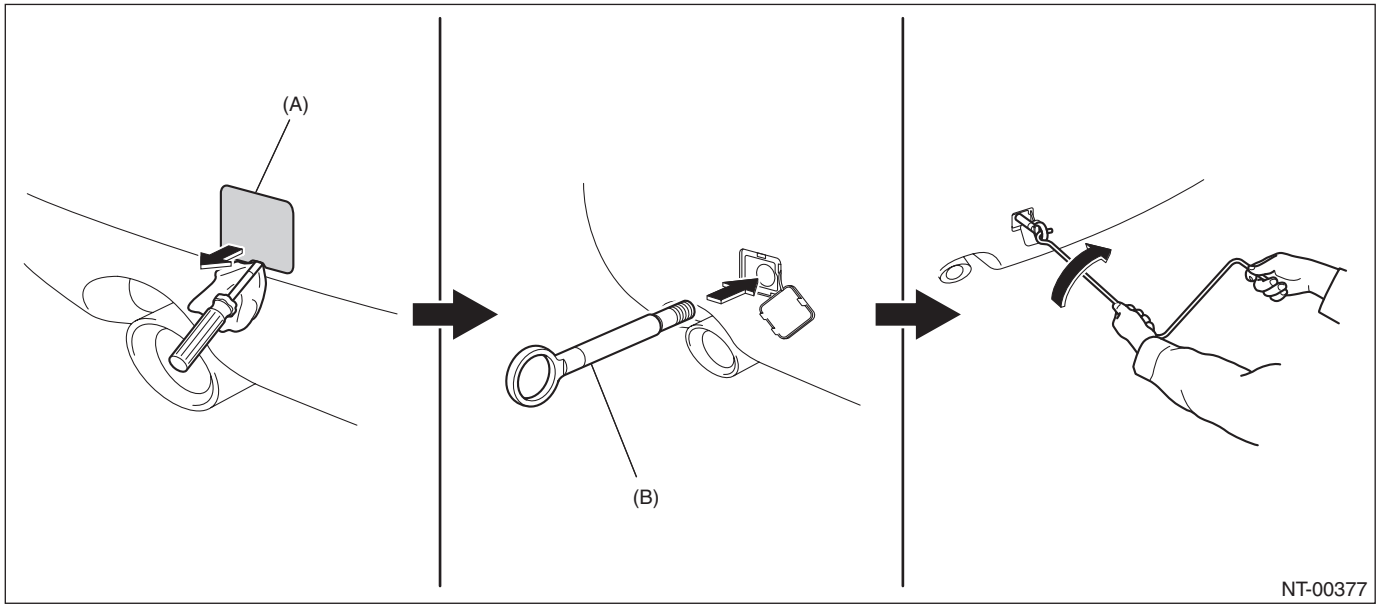

(A) Hook cover (B) Towing hook (eyebolt)

- Precautions

Towing	Precautions	MT	AT
Lifting up four wheels (On a trailer) 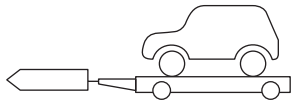 NT-00023	Towing the vehicle after lifting up all four wheels is a basic rule for AWD model.	○	○
Rope NT-00024	• Check if both front and rear wheels are rotated normally. • AT model driving conditions: Driving speed of 30 km/h (19 MPH) or less Allow driving distance 50 km (31 miles) or less	○	▲
Raising the front wheels 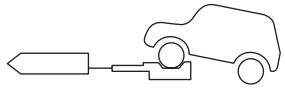 NT-00025	Prohibited for full-time AWD model.	×	×
Lifting up the front wheels 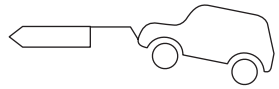 NT-00026	• Prohibited, due to damage on bumper, front grille, etc. • Do not raise the vehicle with bumper.	×	×

Marked ○: OK, Marked ×: Prohibited, Marked ▲: Conditionally OK.

NOTE

CAUTION:
- **Place the shift lever in "N" position during towing.**
- **Do not lift up the rear wheels to avoid unsteady rotation.**
- **Turn the ignition key to "ACC", then check the steering wheel moves freely. (Models without the keyless access with push button start system)**
- **Release the parking brake to avoid tire dragging.**
- **Since the power steering does not work, be careful for the heavy steering effort. (When engine is stopped)**
- **Since the servo brake does not work, be careful that the brake is not applied effectively. (When engine is stopped)**
- **In case of the malfunction of internal transmission or drive system, lift up four wheels (on a trailer) for towing.**
- **Do not use towing hook (eye bolt) except when towing.**
- **Make sure to detach the towing hook (eye bolt) after towing. If it remains attached, airbag may not operate properly when receiving a shock. And it may also affect the crash performance of the vehicle.**

12.CARRIER CAR

Before lowering the vehicle from the carrier car, perform the following operations.

CAUTION:
Always perform the following operations before lowering the vehicle from the carrier car. Otherwise, the power unit will rotate reversely, which may cause the damage to the engine, vacuum pump, and transmission.

1) Start the engine.
2) Set the transmission shift position into driving direction of the vehicle. (When the vehicle drives forward, do not set the transmission into R range. When the vehicle drives rearward, do not set the transmission into 1 — 6 speed, or D range.)

CAUTION:
Be sure to perform 2) mentioned above even if the engine cannot be started in some reasons.

13.FRONT HOOD DAMPER STAY

1) Always perform works such as inspections and maintenance with both damper stays attached.

CAUTION:
At the inspection and general maintenance, do not detach the damper stays.

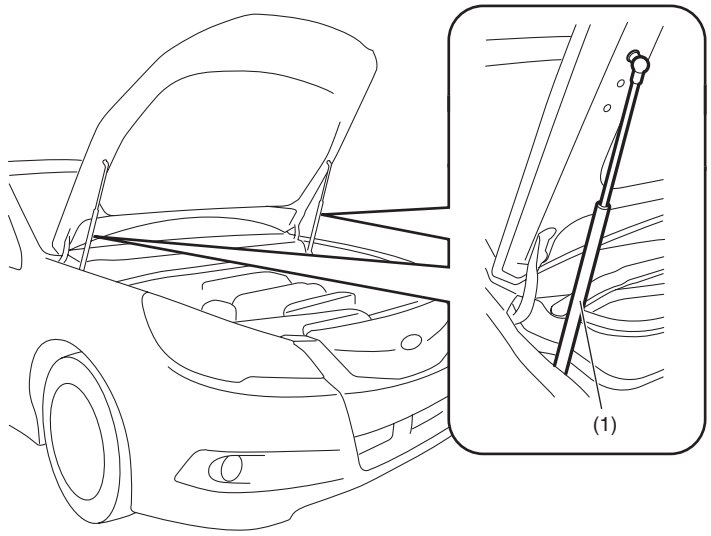

NT-00366

(1) Normal attached position

2) When wider hood opening is necessary, set the damper stay below as shown in the figure.

Tightening torque:
<Ref. to EB-2, FRONT HOOD, COMPONENT, General Description.>

CAUTION:
- **Always perform works such as inspections and maintenance with both damper stays attached.**
- **Do not leave one side of damper stay removed.**
- **The hood cannot be closed with the hood damper on the full open side. When it is necessary to close, tie the hood striker and the radiator panel with a string etc. to fix them.**
- **After work, set the damper stays back to the normal position and tighten the bolts to the specified torque.**

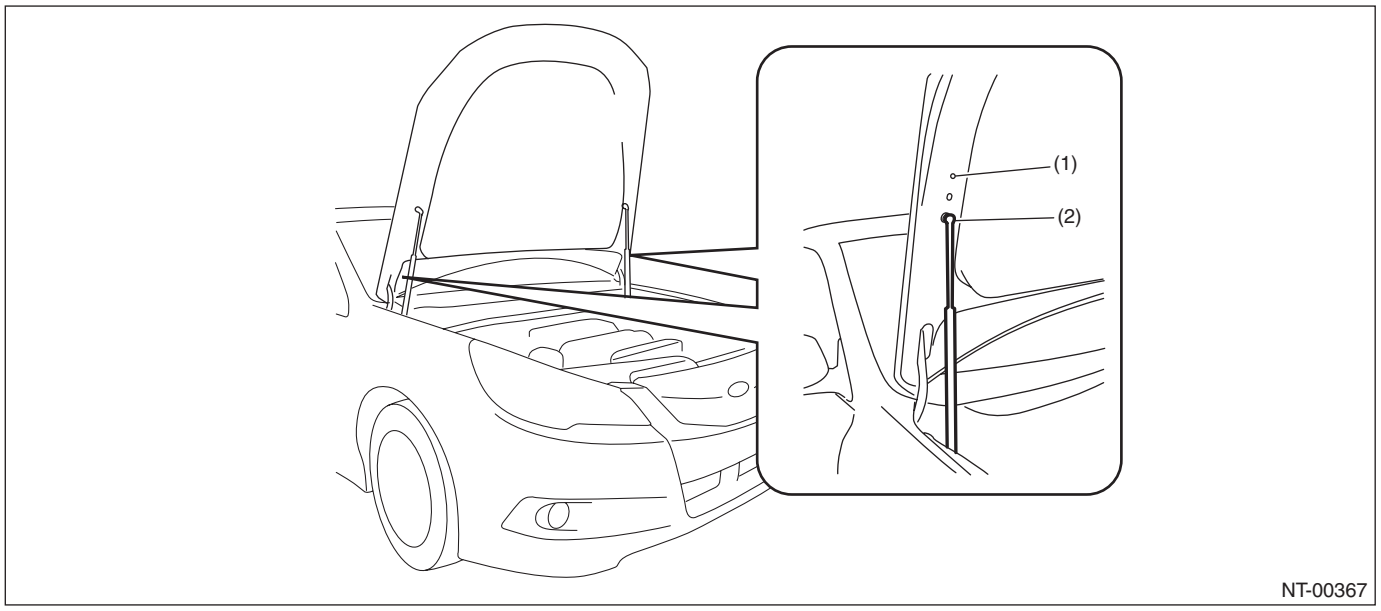

(1) Normal attached position (2) Installation position at full open

14.GENERAL SCAN TOOL

Using general scan tools will greatly improve the efficiency of repairing engine electronic throttle controls. Subaru Select Monitor can be used to diagnose the engine, VDC, air conditioner and other parts.

15.AWD CIRCUIT MEASURES

1) Full-time AWD MT model
Since viscous coupling (limited slip differential) is used in the center differential, cut-off of AWD circuit cannot be carried out.
2) Full-time AWD 5AT model
Since VTD type is used in the center differential, cut-off of AWD circuit cannot be carried out.
3) Full-time AWD CVT model
Since electronically controlled MT-P hydraulic multi-plate clutch is adapted for center differential, switch to FWD by using Subaru Select Monitor.

16.SPEEDOMETER TEST

1) Rear wheel free roller system

(1) Set the free roller on the floor of rear wheel side securely according to the wheel base and rear tread of the vehicle.

(2) Let the vehicle ride on the tester and free roller gently.

CAUTION:
Fix the vehicle using a pulling metal (chain or wire) to the front and rear towing hooks or tie-down hook to prevent the lateral runout of front wheels and springing out of vehicle.

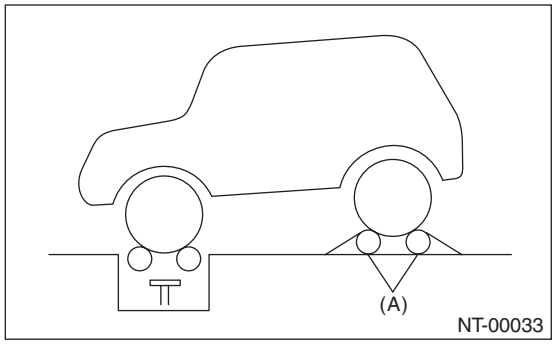

(A) Free roller

(3) Set the speedometer tester.

(4) Conduct the speedometer test work.

CAUTION:
Do not operate the clutch quickly and do not accelerate or decelerate suddenly during work.

2) Rear wheel jack-up system

(1) Set the vehicle on speedometer tester.

CAUTION:
Fix the vehicle using a pulling metal (chain or wire) to the front and rear towing hooks or tie-down hook to prevent the lateral runout of front wheels and springing out of vehicle.

(2) Jack up the rear wheels and set the rigid racks to the specified locations of side sill.

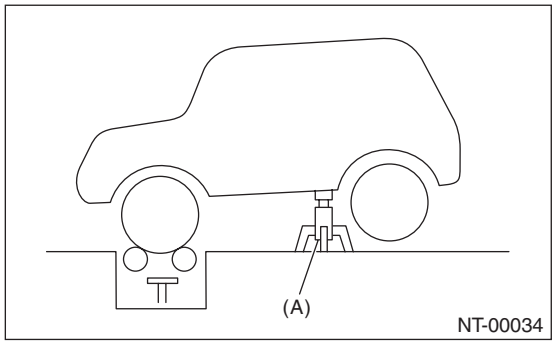

(A) Rigid rack

(3) Conduct the speedometer test work.

CAUTION:
Do not operate the clutch quickly and do not accelerate or decelerate suddenly during work.

17.BRAKE TEST

1) Full-time AWD MT model

(1) Perform this test after driving the vehicle 2 to 3 km (1.24 to 1.86 miles) on road in order to stabilize the viscous torque of viscous coupling.

(2) Keep the front or rear wheels on the ground for this test.

NOTE:
Effect of the viscous torque on braking force will be added approx. 25 kg compared with FWD model.

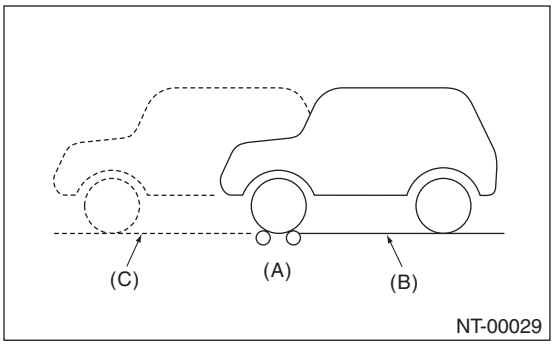

(A) Brake tester

(B) Position for measuring front wheel

(C) Position for measuring rear wheel

(3) When the brake dragging force is large.

• Check the dragging of brake pad or brake shoe.

• Since it may be affected by the viscosity of viscous coupling, jack up either of the front or rear two wheels to check the each wheel rotation condition with the viscous coupling affection removed.

2) Full-time AWD AT model

(1) Keep the front or rear wheels on the ground during measurement.

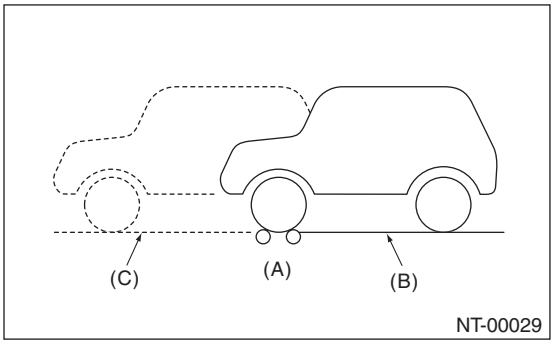

(A) Brake tester

(B) Position for measuring front wheel

(C) Position for measuring rear wheel

(2) When the brake dragging force is large.
• Check the dragging of brake pad or brake shoe.

Specifications:

	Braking force
Rear wheel total	10% or more of load on front or rear wheels
Difference between right and left wheels	8% or less of load on front or rear wheels
Grand total	50% or more of vehicle weight at the time of test

• When measurement is difficult to carry out because both of front wheels are locked, break force measurement in this condition conforms to standard grand total.

18.ON THE CAR WHEEL BALANCING

CAUTION:
• Carry out the procedures after measuring the balance of each single tire.
• Set the vehicle so that the front and rear wheels are the same height.
• Release the parking brake during measurement.
• Rotate each wheel by hands, and make sure it rotates without dragging.
• Do not operate the clutch quickly and do not accelerate or decelerate suddenly during work.
• When an error is indicated during engine drive, do not use the motor drive together.
1) Set the rigid rack to the specified locations of side sill, jack up the front or rear two wheels of non-measuring side and set the pickup stands to two wheels of measuring side.

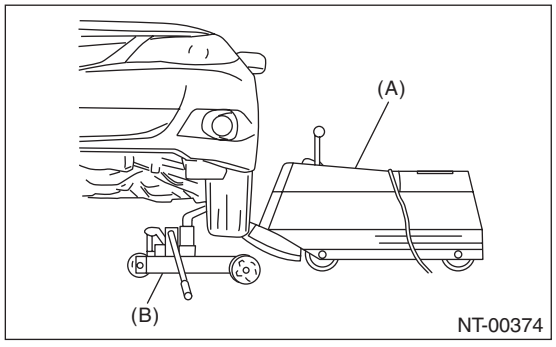

(A) Balancer body
(B) Pickup stand (left and right)

2) For drive wheel, drive the tires with engine for measurement.
3) For non-drive wheel, drive the tires from the on the car wheel balancer for measurement.

NOTE

IDENTIFICATION

ID

Page
1. Identification 2

1. Identification

A: IDENTIFICATION

1. IDENTIFICATION NUMBER & LABEL LOCATIONS

The V.I.N. (Vehicle Identification Numbers) is used to classify the vehicle.

- **POSITIONING OF THE PLATE LABEL FOR IDENTIFICATION**

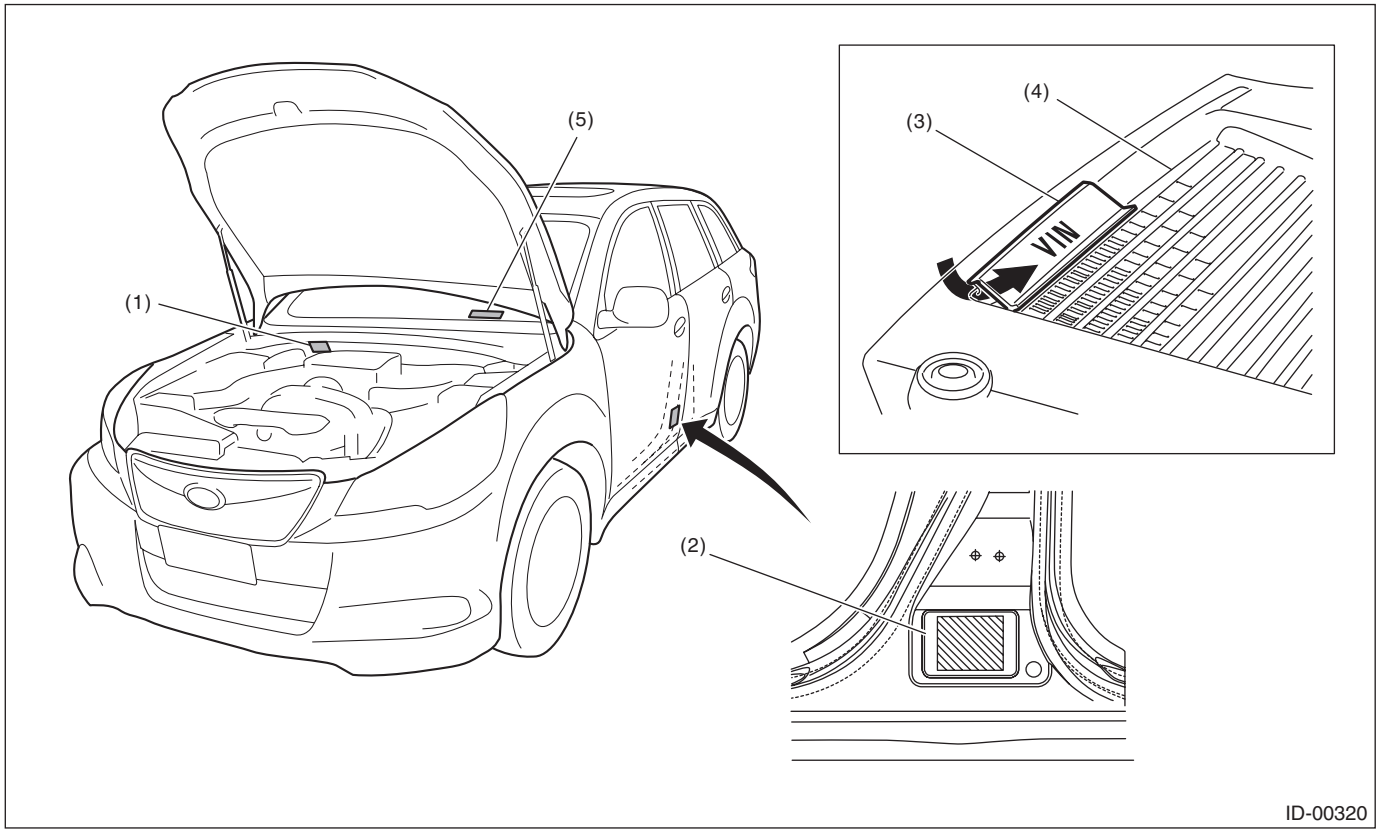

(1) Vehicle identification number (V.I.N.)
(2) FMVSS label (U.S. model) (left side)
CMVSS label (Canada model) (left side)
Model No. label (Korea model) (right side)
(3) VIN cover (turbo model)
(4) Intercooler (turbo model)
(5) VIN plate

- **ENGINE**

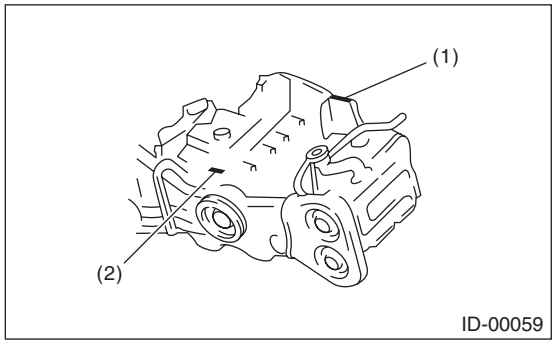

(1) Engine serial number (punch mark)
(2) Engine type (casting) crankcase upper side

- **AUTOMATIC TRANSMISSION**

5AT

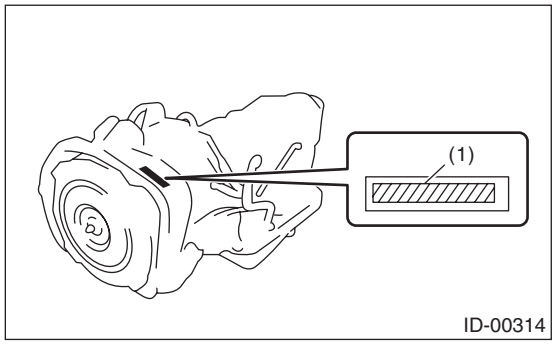

(1) Transmission serial number label and AT type label

CVT

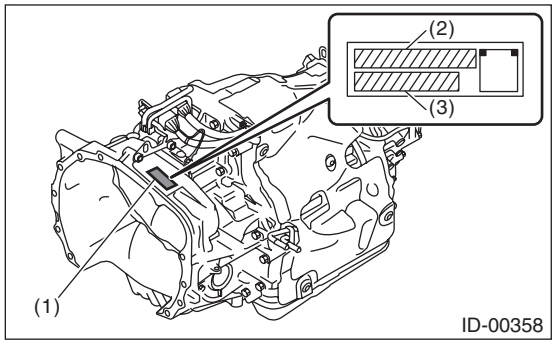

(1) Label
(2) CVT type label
(3) Transmission serial No. label

- **MANUAL TRANSMISSION**

6MT

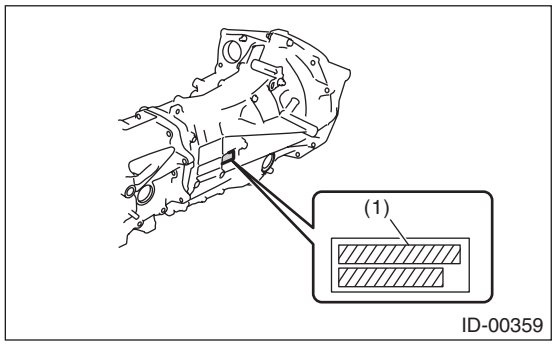

(1) Transmission serial number label and MT type label

- **REAR DIFFERENTIAL**

T-type

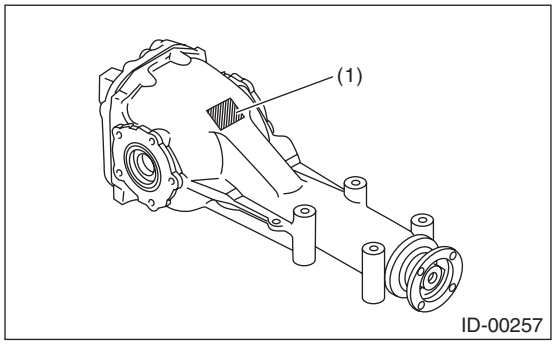

(1) Identification (white paint)

VA1-type

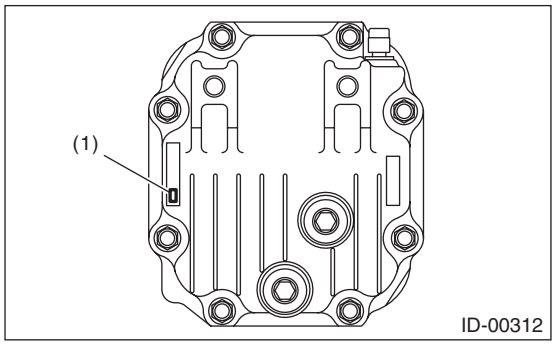

(1) Type (label)

VA2-type

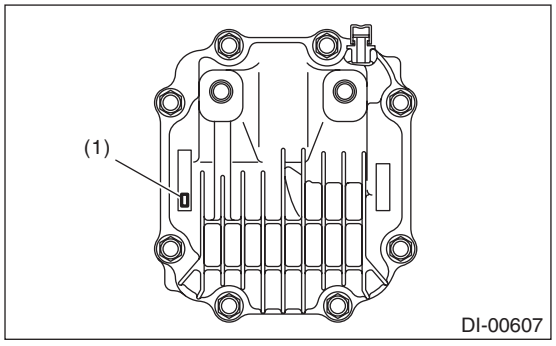

(1) Type (label)

- **FMVSS LABEL, CMVSS LABEL**

Example (FMVSS label)

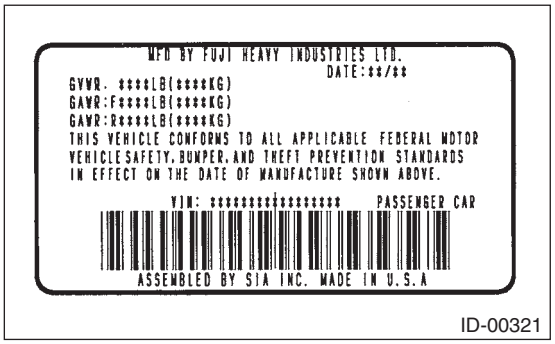

ID-00321

- **MODEL NUMBER LABEL**

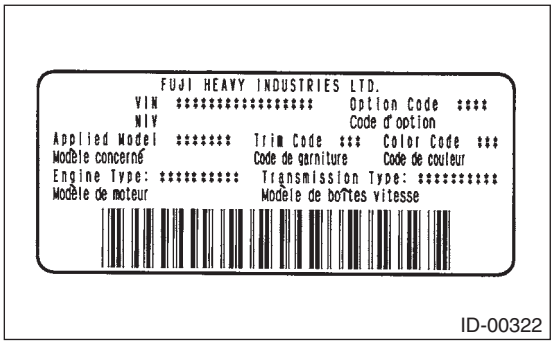

ID-00322

2. MEANING OF V.I.N.

The meaning of the V.I.N. is as follows:
]4S3BMAA6XC1002001[
The starting and ending brackets ( ] [ ) are stop marks.

Digits	Code	Meaning	Details
1 — 3	4S3	Manufacturer body area	4S3: All models except OUTBACK model for C0 4S4: OUTBACK for C0
4	B	Car line	B: LEGACY/OUTBACK
5	M	Body type	M: Sedan R: Wagon
6	A	Total emission and destination	A: 2.5 L non-turbo for U4 B: 2.5 L non-turbo for U5 C: 2.5 L non-turbo for U6 D: 3.6 L non-turbo for U5 E: 3.6 L non-turbo for U6 F: 2.5 L turbo for U4 G: 2.5 L non-turbo for C0 H: 2.5 L non-turbo for C5 J: 3.6 L non-turbo for C0 K: 2.5 L turbo for C0 L: 2.5 L non-turbo for C6 M: 3.6 L non-turbo for C6
7	A	Grade	A: Base B: Premium C: Premium + cold weather package D: Premium + harman/kardon E: Premium + M/R F: Premium + harman/kardon + cold weather package G: Premium + M/R + cold weather package H: Premium + M/R + cold weather package + harman/kardon J: Limited + harman/kardon K: Limited + harman/kardon + M/R L: Limited + M/R + navigation M: Limited + M/R
8	6	Restraint system or GVWR Class	6: Manual belt, dual airbag, side airbag for seat back + curtain airbag for roof (except for OUTBACK model) C: Manual belt, dual airbag, side airbag for seat back + curtain airbag for roof, class C (GVWR 4001 — 5000 lb) (for OUTBACK model)
9	X	Check digit	0 — 9 & X
10	C	Model year	C: 2012MY
11	1	Transmission type	1: Full-time AWD 6MT 2: Full-time AWD 5AT 3: Full-time AWD CVT
12 — 17	002001	Serial number	002001 — 199999: Sedan 200001 — 399999: Wagon

3. MODEL NUMBER PLATE

The model number plate indicates: the applied model, the option code, the trim code, the engine type, the transmission type, and the exterior color code. This information is helpful when placing orders for parts.

- **BM9CY4M**

Digits	Code	Meaning	Details
1	B	Series	LEGACY
2	M	Body type	M: Sedan R: Wagon
3	9	Total engine displacement Drive system Suspension system	9: 2.5 L AWD F: 3.6 L AWD
4	C	Model year	C: 2012MY
5	Y	Destination	Y: U.S.A., Canada
6	4	Grade	4: 2.5 i 5: 2.5 i Premium 6: 2.5 i Limited C: 2.5 GT Premium D: 2.5 GT Limited F: 3.6 R G: 3.6 R Premium H: 3.6 R Limited K: OUTBACK 2.5 i L: OUTBACK 2.5 i Premium M: OUTBACK 2.5 i Limited S: OUTBACK 3.6 R T: OUTBACK 3.6 R Premium U: OUTBACK 3.6 R Limited
7	M	Transmission, fuel feed system	9: SOHC MFI CVT M: SOHC MFI 6MT U: DOHC MFI 5AT X: DOHC MFI turbo 6MT

The engine and transmission type are as follows.

- **Engine**

EJ253CDAFB

Digits	Code	Meaning	Details
1 and 2	EJ	Engine type	EJ: 4-cylinder EZ: 6-cylinder
3 and 4	25	Displacement	25: 2.5 L 36: 3.6 L
5	3	Fuel feed system	3: MFI non-turbo (SOHC) 5: MFI turbo D: MFI non-turbo (DOHC, H6)
6	C	Emission regulations	A: For states not using California emission standards B: For all states C: For states using California emission standards
7	D	Mounted transmission	C: D5AT D: 6MT (T75) U: CVT
8 — 10	AFB	Detailed specifications	Used when ordering parts. For details, refer to the parts catalog.

- **Transmission**

1. MT

TY756VLCCA

Digits	Code	Meaning	Details
1	T	Transmission	T: Transmission
2	Y	Transmission system	Y: Full-time AWD MT center differential
3 and 4	75	Distance between gear center	75: Between main shaft and drive pinion
5	6	Classification	6: 6MT
6	V	Transmission specifications	V: Full-time AWD 6MT single range with viscous coupling center differential
7	L	Mounted engine	H: 2.5 L SOHC non-turbo L: 2.5 L DOHC turbo
8 — 10	CCA	Detailed specifications	Used when ordering parts. For details, refer to the parts catalog.

2. AT

TG5D8CJAAA

Digits	Code	Meaning	Details
1	T	Transmission	T: Transmission
2	G	Transmission type	G: Full-time AWD 5AT center differential
3 and 4	5D	Identification	5D: 5AT
5	8	Series	8: 5AT
6	C	Transmission specifications	C: Full-time AWD VTD 5AT
7	J	Equipped vehicle	J: 3.6 L DOHC non-turbo
8 — 10	AAA	Detailed specifications	Used when ordering parts. For details, refer to the parts catalog.

3. CVT

TR690JHBAA

Digits	Code	Meaning	Details
1	T	Transmission	T: Transmission
2	R	Transmission type	R: Full-time AWD CVT
3 and 4	69	Distance between gear center	69: Between pulley centers
5	0	Classification	0: CVT
6	J	Transmission specifications	J: Active torque split type full-time AWD CVT
7	H	Mounted engine	H: 2.5 L SOHC non-turbo
8 — 10	BAA	Detailed specifications	Used when ordering parts. For details, refer to the parts catalog.

- **Rear differential**

Code	Reduction gear ratio	LSD
B1	4.111	None
B2	3.900	None
XC	3.083	None
XD	3.700	None
T2	4.111	None
TP	4.444	None

- **Option**

U5AB

Digits	Code	Meaning	Details
1 — 2	U5	Destination	C0: Canada C5: Canada (PZEV) C6: Korea U4: USA U5: USA (for states using California emission standards) U6: USA (for states not using California emission standards)
3	A	Option equipment	A: Cruise control B: A package, power seat, cruise control C: A package, power seat, genuine leather seat, cruise control D: A package, cruise control 2: A package, power seat, cruise control, rearview camera (rearview mirror with display) 3: A package, power seat, genuine leather seat, cruise control, rearview camera (rearview mirror with display) 4: A package, power seat, genuine leather seat, cruise control, rearview camera (navigation display)
4	B	Option equipment	A: Winter pack, side & curtain airbag B: Side & curtain airbag C: Winter pack, side & curtain airbag, sunroof D: Side & curtain airbag, sunroof E: Winter pack, navigation + wide monitor, side & curtain airbag, sunroof F: Dark colored glass, winter pack, side & curtain airbag, sunroof G: Dark colored glass, side & curtain airbag, sunroof H: Dark colored glass, winter pack, navigation + wide monitor, side & curtain airbag, sunroof I: Dark colored glass, winter pack, side & curtain airbag J: Dark colored glass, side & curtain airbag V: Harman/kardon audio, side & curtain airbag, sunroof, winter pack W: Harman/kardon audio, side & curtain airbag, winter pack Y: Dark colored glass, winter pack, harman/kardon audio, side & curtain airbag, sunroof Z: Dark colored glass, winter pack, harman/kardon audio, side & curtain airbag

RECOMMENDED MATERIALS

RM

Page
1. Recommended Materials 2

1. Recommended Materials

A: RECOMMENDED MATERIALS

1. GENERAL

To insure the best performance, always use the specified oil, gasoline, adhesive, sealant, etc. or a substitute of equivalent quality.

2. FUEL

• Use unleaded gasoline to reduce air pollution, because using leaded gasoline will damage the catalytic converter.
• Do not use the low quality gasoline, or improper fuel such as diesel fuel, fuel alcohol, or gasoline additive because they will adversely affect on engine components.
• Always use gasoline that is equivalent to that prescribed in the owner's manual or that of high octane value. There is the possibility of damaging or improper operation of the engine and fuel injection system if the specifications are not observed. Use the prescribed gasoline type to maintain proper vehicle performance.

3. LUBRICANTS

Use the lubricants shown in the table below, or equivalent. See the table below to choose the correct SAE viscosity.

Lubricant	Recommended materials	
	API standard	ILSAC standard
Engine oil Choose oil suitable for the standard from the right.	SM or SN grade "Energy conserving" 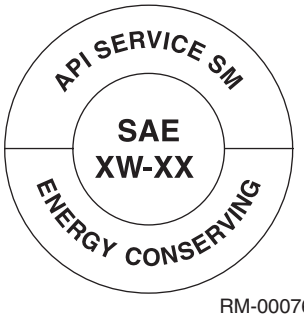 RM-00076 Those with the above API service labels	GF-4 or GF-5 RM-00002 Those with the above ILSAC certification mark (Starburst mark)
Manual transmission gear oil	GL-5	—
Front differential gear oil	GL-5	—
Rear differential gear oil	GL-5	—

SAE viscosity No. and applicable temperature

Engine oil

Non-turbo model

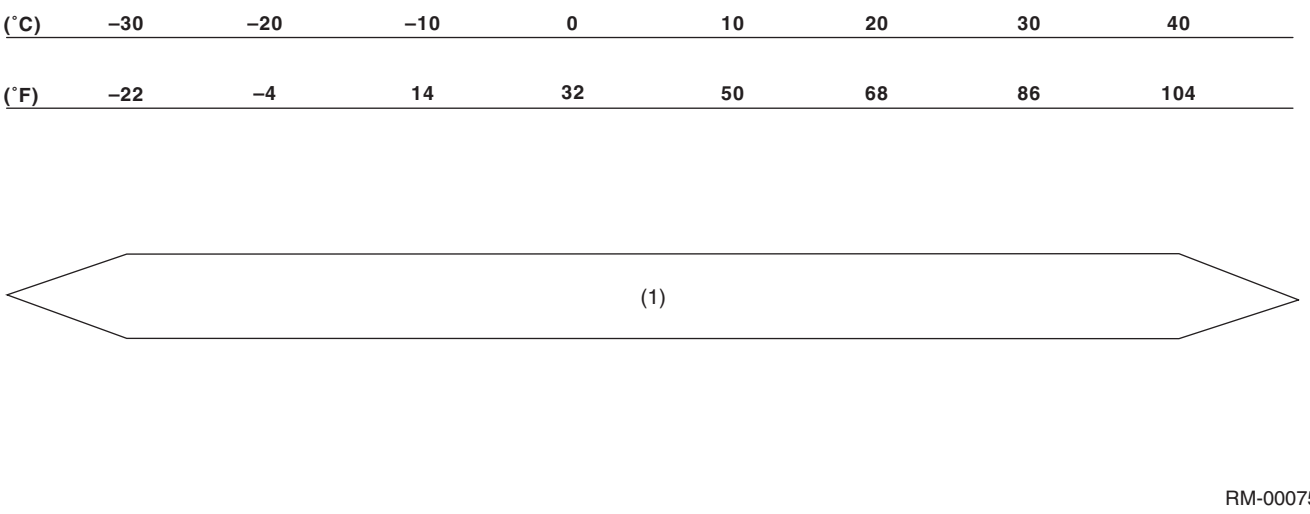

(1) 5W-30 (synthetic oil) Recommended

Turbo model

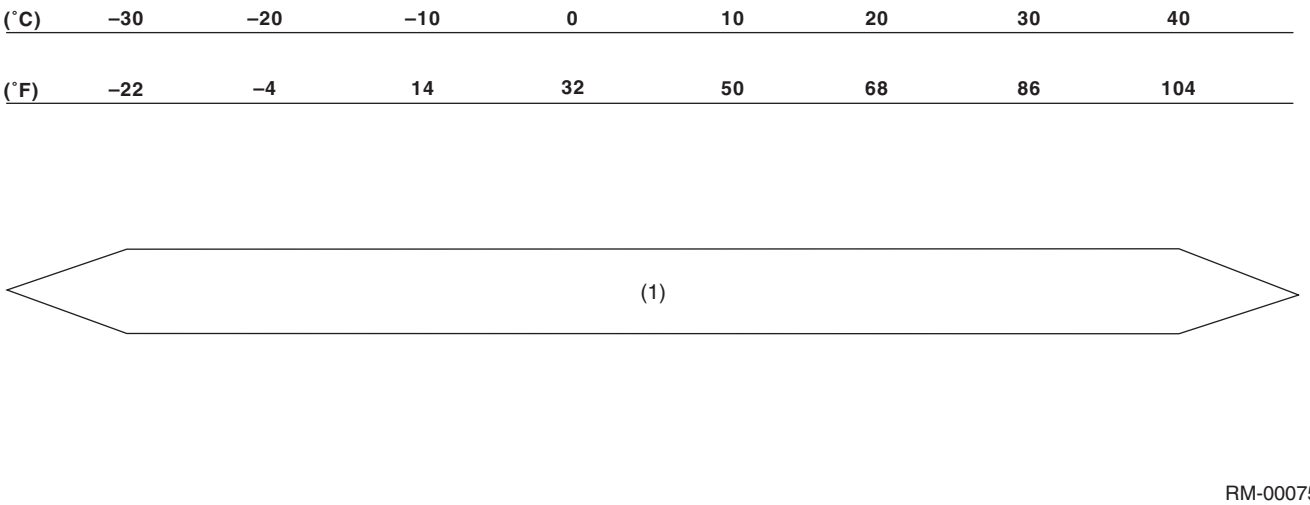

(1) 5W-30 (synthetic oil) Required

SAE viscosity No. and applicable temperature

Manual transmission gear oil, rear differential gear oil, AT and CVT front differential gear oil

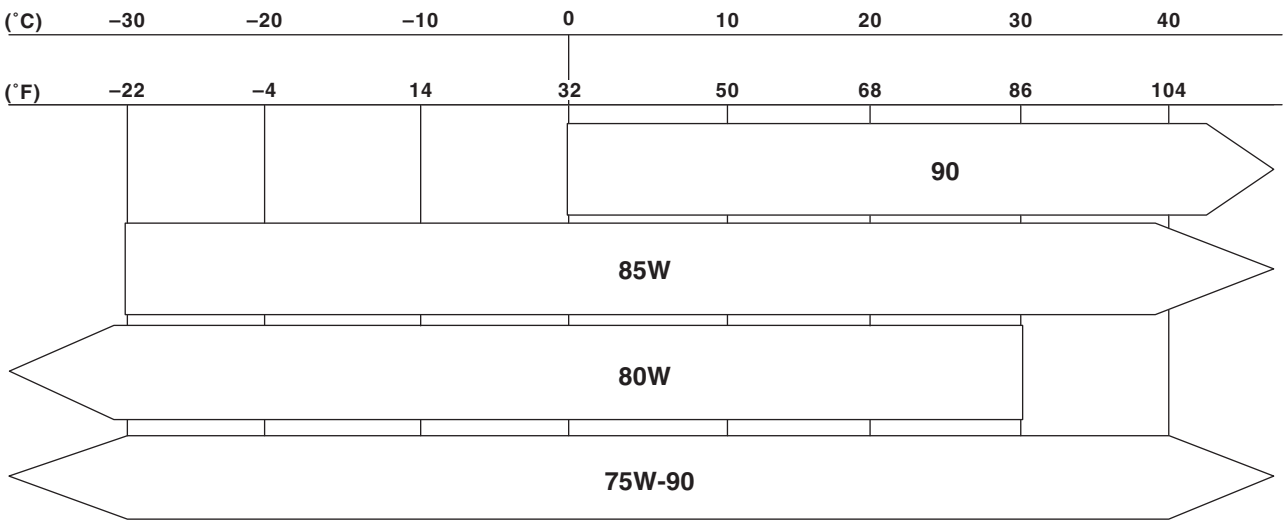

RM-00004

4. FLUID

Use the fluids specified in the table below. Do not mix two different kinds or makes of fluid.

CAUTION:
Be sure to use the recommended or equivalent ATF or CVTF. Using material except recommended one or substitute would cause trouble.

Fluid		Recommended materials	Item number	Alternative
Automatic transmission fluid	CVT	SUBARU CVT OIL FOR LINEARTRONIC	K0425Y0710	—
	5AT	SUBARU ATF	—	IDEMITSU: ATF HP
Power steering fluid		SUBARU PS fluid	K0515YA000	DEXRON III
Brake fluid		FMVSS No. 116 DOT3, or DOT4	—	—
Clutch fluid		FMVSS No. 116 DOT3	—	—

5. COOLANT

Use genuine coolant to protect the engine.

Engine coolant	Recommended materials	Item number	Alternative
Coolant	SUBARU SUPER COOLANT (Concentrated type)	K0670Y0001	—
	SUBARU SUPER COOLANT (Diluted type)	—	—
Cooling system protective agent	Cooling system conditioner	SOA345001	—

6. REFRIGERANT

Standard air conditioners on Subaru vehicles use HFC134a refrigerant. Do not mix it with other refrigerants. Also, do not use any compressor oil other than DENSO OIL 8.

Air Conditioner	Recommended materials	Item number	Alternative
Refrigerant	HFC134a	—	—
Compressor oil	DENSO OIL 8	—	—

7. GREASE

Use grease and supplementary lubricants shown in the table below.

Grease	Application point	Recommended materials	Item number	Alternative
Supplementary lubricants	Oxygen sensor	Spray type lubricant	—	—
Grease	• MT main shaft (spline parts) • MT main shaft (oil seal lip) • Clutch operating cylinder • Release bearing • Clutch release lever	NICHIMOLY N-130	—	—
	Clutch master cylinder push rod	SILICONE GREASE G-40M	—	—
	Gear shift lever	Multemp HL-D	—	—
	• Clutch pedal • Brake pedal	NIGTIGHT LYW No. 2 grease	—	—
	Select lever	Multemp D	—	—
	• Door latch • Door striker	SILICONE GREASE G-30M	004404002	—
	Steering gearbox	VALIANT GREASE M2	003608001	ONE LUBER SG or MO
	Disc brake (Lock pin, guide pin, piston boot)	Brake grease (NIGLUBE RX-2)	000041000	—
	Between brake pad and shim	Molykote AS-880N	K0777YA010	—
	Brake pad clip	Molykote M7439 (Brake Grease 60G)	—	—
	Front axle AC	Olistamoly 2LN584/L0	—	—
	Front axle AAR	One-Luber GKN-C	—	—
	• Rear axle BJ • Rear axle EBJ	NKG106	—	—
	Rear axle DOJ	NKG205	—	—

8. ADHESIVE

Use the adhesives shown in the table below, or equivalent.

Adhesive	Application point	Recommended materials	Item number	Alternative
Adhesive	Windshield, rear window glass, rear quarter glass, rear gate glass and body	Dow Automotive's adhesive: ESSEX U-400HV or the equivalent Glass primer: U-401 and U-402 Painted surface primer: U-413	—	—
	Rearview mirror base	REPAIR KIT IN MR	65029FC000	—

9. SEAL MATERIAL

Use the seal material shown in the table below, or equivalent.

Seal material	Application point	Recommended materials	Item number	Alternative
Seal material	• MT transmission case • MT extension case • MT transmission cover • 5AT converter case • CVT transmission case • CVT intermediate case • CVT extension case • CVT converter cover • CVT chain cover • CVT drive pinion retainer	THREE BOND 1215	004403007	DOW CORNING No. 7038
	Transmission oil pan (AT and CVT model)	THREE BOND 1217B	K0877YA020	—
	• Engine oil pan (block lower) (except for 3.6 L model) • Cylinder block lower (cylinder block) (except for 3.6 L model) • Camshaft cap • Oil pump (Except for 3.6 L model) • Strainer (3.6 L model) • Rocker cover (except for 2.5 L non-turbo model) • Oil pan (oil pan upper) (3.6 L model) • Block (oil pan upper) (3.6 L model) • Chain cover (block, head, oil pan upper, front cam shaft cap) (3.6 L model) • Separator cover (except for 3.6 L model) • Scavenge pump (turbo model)	THREE BOND 1217G	K0877Y0100	—
	• Engine oil pressure switch • Rear differential • Oil return cover mounting bolt (turbo model) • Engine oil separator cover (when reusing bolts) (turbo model) • Engine oil pump mounting bolt (when reusing the bolt) (except for 3.6 L model) • Timing belt guide cam sprocket side mounting bolt (when reusing bolts) (turbo model) • PCV valve (3.6 L model)	THREE BOND 1324	004403042	—
	• Rear differential • Service hole plug (Except for 3.6 L model) • Intake manifold nipple	THREE BOND 1105	004403010	DOW CORNING No. 7038
	Steering adjusting screw	THREE BOND 1102	004403006	THREE BOND 1215
	• Front sealing cover (door) • Rear sealing cover (door)	3M Butyl Rubber 8626	—	—
	Rear differential (side retainer bolt)	THREE BOND 1110B	K0879Y0020	—

PRE-DELIVERY INSPECTION

PI

Page
1. Pre-delivery Inspection 2

1. Pre-delivery Inspection

A: GENERAL DESCRIPTION

The purposes of the pre-delivery inspection (PDI) are as follows.
- Remove the additional parts used for ensuring the vehicle quality during transportation and restore the vehicle to its normal condition.
- Check the vehicle before delivery is in normal condition.
- Check the vehicle has no damage and no vehicle protective parts are missing while shipped or stored in a car barn.
- Make sure to deliver a complete vehicle to customer.

For above reasons, all SOA service center must carry out the PDIs before delivery of vehicle.
Besides, all SOA service center and PDI center check the condition of all vehicles to make sure to take responsibility.

B: PRE-DELIVERY INSPECTION (PDI) PROCEDURE

Static Checks Just after Vehicle Receipt

Operation	Check point
1. Appearance	1. If the vehicle is covered with protective coating, visually check the vehicle body for damage and dents. If the protective coating has been removed, visually check the painted body surfaces in detail for damage or rust. 2. Visually check the glass and light lenses for any damage, cracks or excessive gaps between body sheet metal. 3. Visually check the plated parts for any damage. 4. Check the instrument panel, console and trim for stains or dirt.
2. Tire	1. Check the tires for damage, defective, and dents on wheels. 2. Check the tire air pressure.
3. Fuses	If the vehicle is about to be delivered to customer, attach a back-up fuse.
4. Lock/unlock and open/close operation checks of doors.	1. Using the key, check the door can be locked or unlocked normally. 2. Open and close all doors to check that there are no problems. 3. Operate the power door lock switch to check that all doors and the rear gate lock and unlock normally.
5. Child safety lock	Check the child safety lock system operates normally.
6. Trunk lid open/close operations	1. Press the trunk opener switch for approx. one second to check for normal operation of the trunk lid. 2. Check that main and sub keys can lock/unlock the release lever, and that valet key can not lock/unlock the release lever. 3. Open and close the trunk lid to see that there are no abnormal conditions.
7. Operation check of trunk lid release lever	Operate the trunk lid release lever to check that the trunk lock is unlocked normally.
8. Rear gate lock/unlock and open/close operations	1. Open and close the rear gate to check that there are no problems. 2. Check if the rear gate can be unlocked normally through the emergency hole. 3. Operate the power door lock switch to check that all doors and the rear gate lock and unlock normally.
9. Fuel lid opener lever	Operate the fuel lid opener to check that the fuel lid is unlocked normally.
10. Accessory	Check that the following accessories are provided. • Owner's manual • Warranty booklet • Maintenance note • Spare key • Key number plate • Jack • Tool set • Spare tire • Towing hook (eyebolt (model with eyebolt)) • Security ID plate

Operation	Check point
11. Front hood lock release system	Operate the front hood lock release lever to check that the front hood opens normally.
12. Battery	Check the battery for any abnormal conditions such as rust or traces of battery fluid leaks.
13. Brake fluid	Check the brake fluid amount.
14. Engine oil	Check the engine oil amount.
15. Transmission gear oil	Check that the transmission gear oil level is normal.
16. AT front differential gear oil	Check for leakage of AT front differential gear oil.
17. CVT front differential gear oil	Check for no leakage of CVT front differential gear oil.
18. Rear differential gear oil	Check for leakage of gear oil from the rear differential.
19. Engine coolant	Check the engine coolant level.
20. Clutch fluid	Check the clutch fluid amount.
21. Window washer fluid	Check the window washer fluid amount.
22. Front hood latch	Check that the front hood is closed normally and locked securely.
23. Keyless entry system	Check that the keyless entry system operates normally.
24. Security system (Alarm system)	Check that the security system (alarm system) operates normally.
25. Seat	1. Check the seat surfaces for stains or dirt. 2. Check the seat installation conditions and functionality. 3. Check that the occupant detection system for passenger's seat operates normally.
26. Seat belt	1. Check the seat belt installation conditions and functionality. 2. Check the seat belt warning system operates normally.
27. TPMS (U.S. model)	1. Turn the TPMS transmitter power supply to ON. 2. If the display of TPMS warning light does not operate normally, perform the diagnosis by referring to TPMS (Diagnosis).

Checks with the Engine Running

Operation	Check point
28. Immobilizer system	1. Check that the engine starts with all keys that are equipped on vehicle. 2. 60 seconds after turning ignition switch from ON to ACC or OFF, or immediately after removing the key, check that the security indicator light is blinking.
29. Starting condition	Start the engine and check that the engine starts smoothly.
30. Exhaust system	Check that the exhaust noise is normal and no leaks are found.
31. Indicator and warning lights	Check that all indicator lights and warning lights are operating correctly.
32. Heater & ventilation	Check that the heater & ventilation system operates normally.
33. Air conditioner	Check that the air conditioner operates normally.
34. Clock	1. Check that the clock operates normally. 2. Check for normal switch operation of fuel economy display.
35. Audio	1. Check that the audio system operates normally. 2. Check that the radio, CD and AUX systems operate normally.
36. Navigation system	1. Check all display functions for normal operation. 2. Check that the navigation, audio and AUX systems operate normally. 3. Check that the rearview camera operates normally.
37. Accessory power supply socket	Check that the accessory power supply socket operates normally.
38. Lighting system	Check that the lighting system operates normally.
39. Wiper deicer	Check that the wiper deicer operates normally.
40. Illumination control	Check that the illumination control operates normally.
41. Window washer	Check that the window washer system operates normally.
42. Wiper	Check that the wiper system operates normally.
43. Power window	Check that the power window operates normally.
44. Sunroof	Check that the sunroof operates normally.
45. Door mirror	Check that the remote control mirror and heated mirror operate normally.

Operation	Check point
46. Room mirror (RCD model)	1. Check all display functions for normal operation. 2. Check that the automatic anti-glare function operates normally. 3. Check that the compass function operates normally. 4. Check that the rearview camera operates normally.
47. Rear defogger	Check that the rear defogger system operates normally.
48. Parking brake	Check the parking brake for normal operations.

Dynamic Test with the Vehicle Running

Operation	Check point
49. Brake test	Check the foot brake for normal operations.
50. AT, CVT shift control	Check that the AT, CVT shifts normally.
51. MT shift control	Check that the MT shifts normally.
52. Cruise control	Check that the cruise control system operates normally.

Checks after Dynamic Test

Operation	Check point
53. ATF level	Check that the ATF level is correct.
54. Power steering fluid level	Check that the power steering fluid level is normal.
55. Fluid leakage	Check for fluid/oil leaks.
56. Water leakage	Spray the vehicle with water and check for water leaks.
57. Appearance 2	1. Remove the protective coat. (If attached) 2. Check the body paints for damage and stain. 3. Check the plated parts for damage and rust.

1. APPEARANCE

• If the vehicle is covered with protective coating, visually check the vehicle body for damage and dents.
• When the protective coating is removed, visually check the body paints for damage or stains in detail and repair as necessary.
• Visually check the windshield glass, door glasses and light lenses for any damage, cracks or excessive gaps to the body sheet metal and repair as necessary.
• Visually check the plated parts, such as the grilles and door knobs, for damage or loss of gloss and replace the parts as necessary.
• Check the instrument panel, console, and trims for stains or dirt.

2. TIRE

• Check the tires for damage, defective, and dents on wheels.
• Check and correct the tire size, spare tire and tire air pressure described on the tire air pressure label (driver's side).

3. FUSE

Right after the vehicle has arrived, 10A backup fuse is removed to avoid run-down of the battery. Connect the backup fuse as shown in the figure. Also, delivery mode is canceled by disconnecting the backup fuse from the fuse holder.

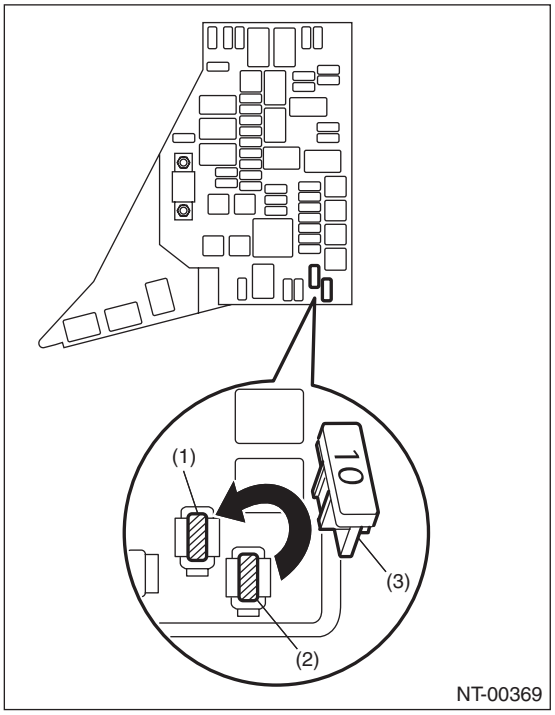

(1) Backup fuse insertion slot
(2) Backup fuse holder
(3) Backup fuse

4. LOCK/UNLOCK AND OPEN/CLOSE OPERATION CHECKS OF DOORS

1) Using the key, lock and unlock the door several times to check for normal operation. Open and close the door several times for smooth movement.

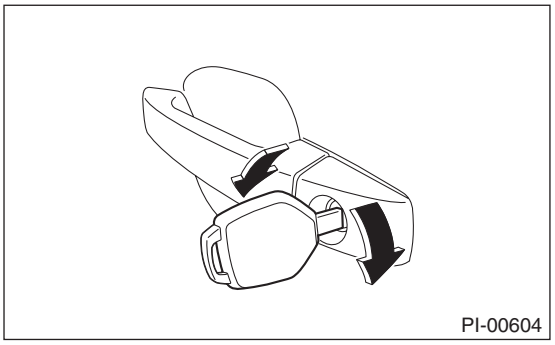

2) Completely close the driver's door, and then check the smooth movement with operating door lock knob from lock to unlock several times. Set the door lock knob (A) to lock position. Then pull the inner remote (B) to ensure that doors will not open. For other doors, place the door lock knob (A) to lock position and then pull the inner remote (B) to ensure that doors will not open.

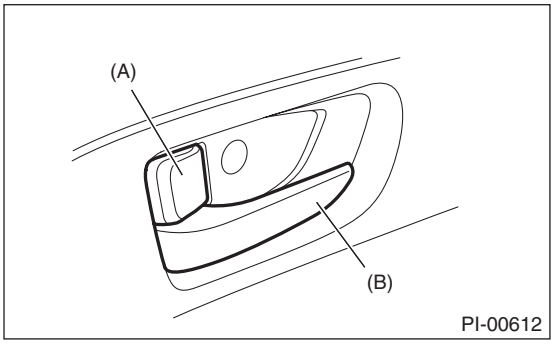

(A) Door lock knob
(B) Inner remote

3) Close all the doors, and then press the lock on power door lock switch at driver's side. Check that all doors including rear gate are locked.

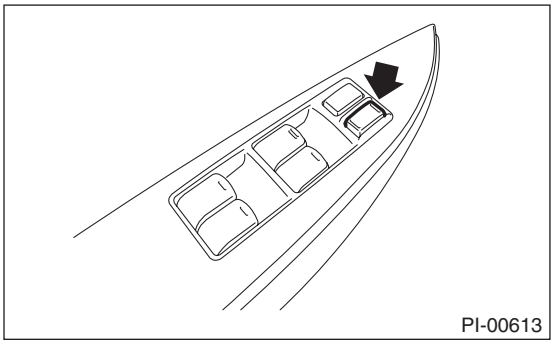

4) Press the driver's side power door lock switch to unlock side. Check that all doors including rear gate are unlocked.

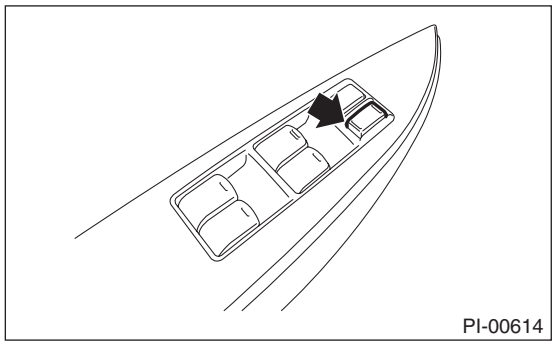
PI-00614

5) Check that the passenger's side power door lock switch locks and unlocks normally in the same manner.

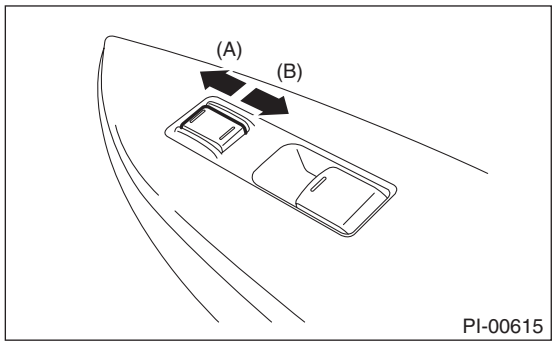

PI-00615

(A) Lock
(B) Unlock

6) Insert the key to ignition switch, and open the driver's side door. Press lock on power door lock. Check that the door is not locked.

5. CHILD SAFETY LOCK SYSTEM

1) Set the child safety lock on both rear doors to the lock position.
2) Close the rear doors completely.
3) Check that the lock levers of the rear doors are in the unlock position. Then, pull inner remote of rear doors to ensure that the doors will not open.

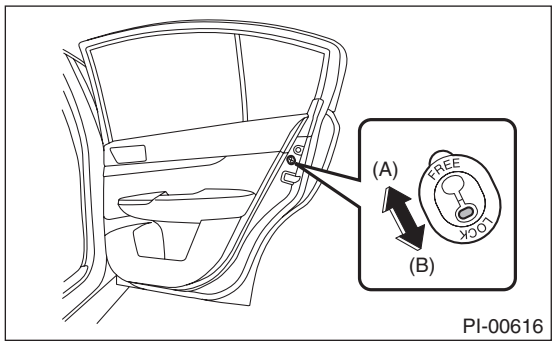

PI-00616

(A) Lock
(B) Unlock

4) Pull the outer handles to ensure that doors will open.

6. OPEN/CLOSE OPERATION CHECKS OF TRUNK LID

1) Press the trunk opener switch for approx. one second to check for normal operation of the trunk lid.

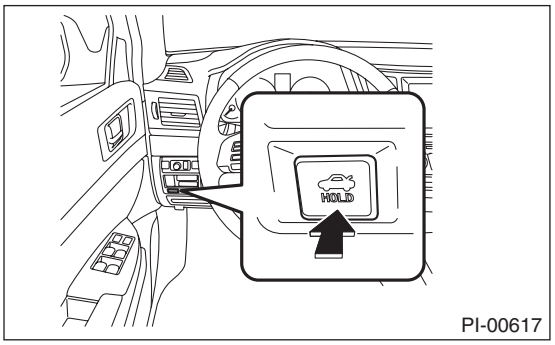

PI-00617

2) Open and close the trunk lid several times for smooth movement.
3) Press the trunk opener lock button in the glove box.

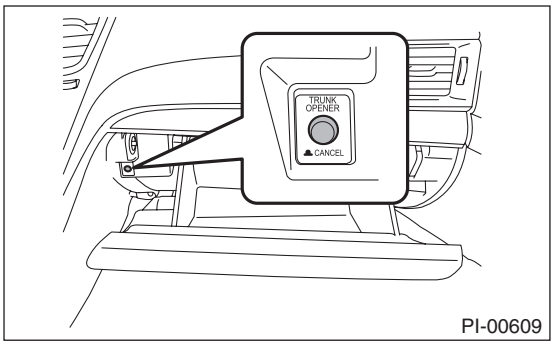

PI-00609

4) Check that the trunk lid will not open even when the trunk opener button is pressed.

7. TRUNK LID RELEASE HANDLE

CAUTION:
Do not check the trunk lid release handle when in the trunk. If the trunk lid release handle is defective, you may be trapped in.

1) Use a flat tip screwdriver. Slide in the screwdriver through the clearance at the lock assembly until a click sound is heard. This is the latch lock position.

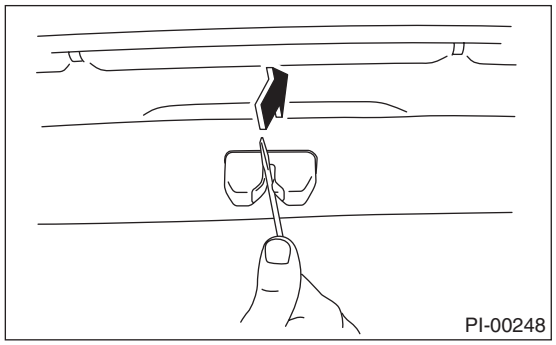

2) Make sure the latch is released by pulling the yellow trunk lid release handle in the direction of arrow.

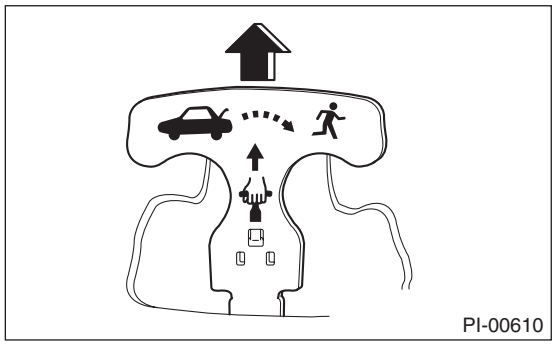

8. LOCK/UNLOCK AND OPEN/CLOSE OPERATIONS OF REAR GATE

1) Open and close the rear gate several times for smooth movement.
2) Operate the rear gate lever to check that the rear gate is locked and unlocked normally.
(1) Remove the cover inside the rear gate.

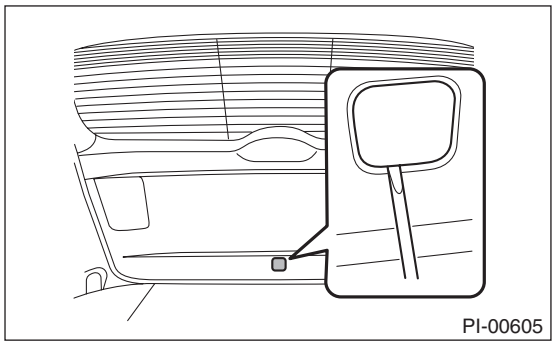

(2) Operate the lever to check that the rear gate is locked and unlocked normally.

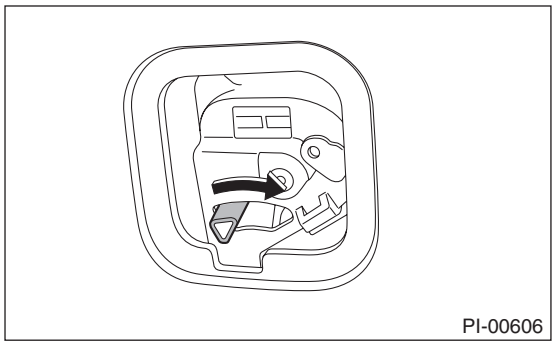

9. FUEL LID OPENER LEVER

Operate the fuel lid opener to check that the fuel lid is unlocked normally. Check that the filler cap is securely closed.

10.ACCESSORY

Check that the following accessories are provided.

- Owner's manual
- Warranty booklet
- Maintenance note
- Spare key
- Key number plate
- Jack
- Tool set
- Spare tire
- Towing hook (eyebolt (model with eyebolt))
- Security ID plate
  - Sedan model

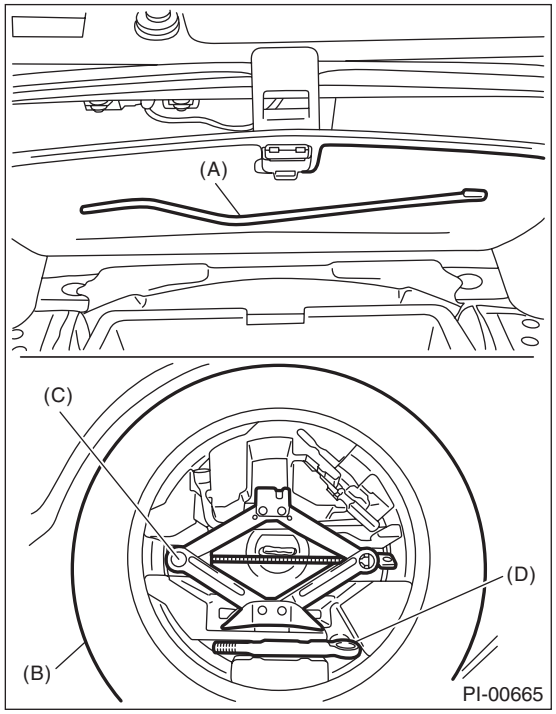

(A) Jack handle
(B) Spare tire
(C) Jack
(D) Towing hook (eyebolt)

- Wagon model

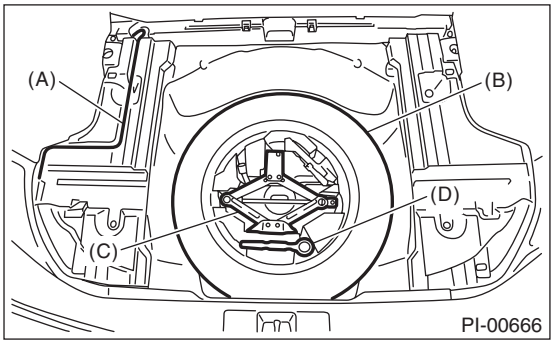

(A) Jack handle
(B) Spare tire
(C) Jack
(D) Towing hook (eyebolt)

11.OPERATION CHECK OF FRONT HOOD LOCK RELEASE SYSTEM

Operate the front hood lock release lever (A) to check that the front hood is unlocked normally.

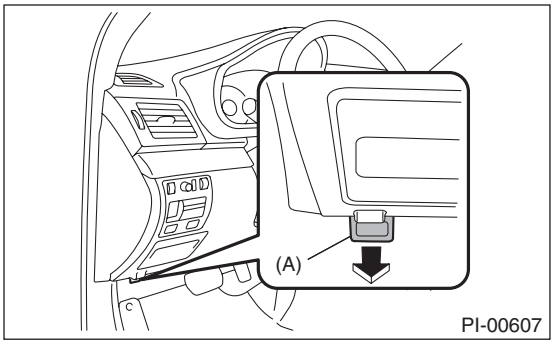

Operate the lever (B) and check that the front hood is opened normally. Check that the front hood can be supported by damper stay.

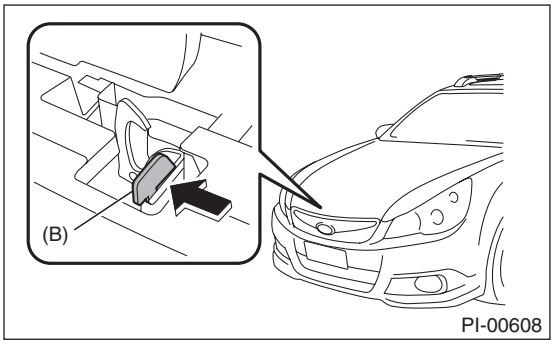

12.BATTERY

Check the battery terminals to make sure that there are no rust or corrosions due to fluid leaks.

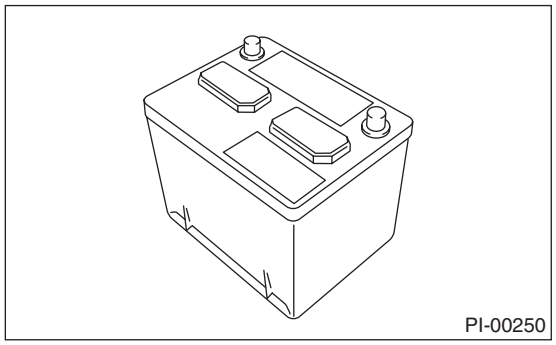

13.BRAKE FLUID

CAUTION:
If the brake fluid is spilt over exhaust pipe, wipe it off with cloth to avoid emitting smoke or causing a fire.

Check that the brake fluid level is normal. If the amount is insufficient, carry out a brake line test to identify brake fluid leaks and check the brake operation. After that, refill the brake fluid tank with the specified type of fluid.

14.ENGINE OIL

CAUTION:
If engine oil is spilt onto the exhaust pipe, wipe it off with cloth to avoid emission of smoke or causing a fire.

Check the engine oil amount. If the amount of oil is insufficient, check that no leaks are found. Then, add the necessary amount of the specified engine oil.

- 2.5 L model

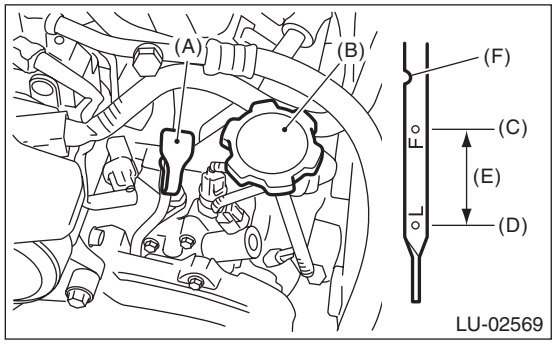

(A) Oil level gauge
(B) Engine oil filler cap
(C) “F” line
(D) “L” line
(E) Approx. 1.0 ℓ (1.1 US qt, 0.9 Imp qt)
(F) Notch mark

- 3.6 L model

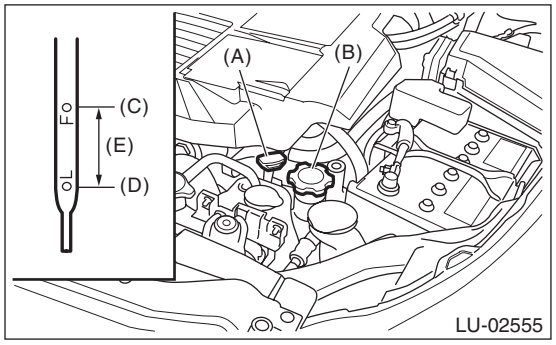

(A) Oil level gauge
(B) Engine oil filler cap
(C) “F” line
(D) “L” line
(E) Approx. 1.0 ℓ (1.1 US qt, 0.9 Imp qt)

15.TRANSMISSION GEAR OIL

CAUTION:
If transmission gear oil is spilt over the exhaust pipe, wipe it off with a cloth to avoid emitting smoke or causing a fire.

Check that the transmission gear oil level is normal. If the amount of gear oil is insufficient, check that no leaks are found. Then add the necessary amount of the specified transmission gear oil.

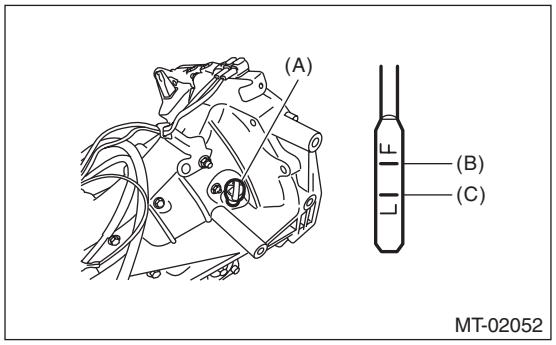

(A) Oil level gauge
(B) Upper level
(C) Lower level

16.AT FRONT DIFFERENTIAL GEAR OIL

CAUTION:
If the differential gear oil is spilt over exhaust pipe, wipe it off with cloth to avoid emitting smoke or causing a fire.
Check that the AT front differential gear oil level is normal. If the amount of oil is insufficient, check that no leaks are found. Then, add the necessary amount of the specified AT front differential gear oil.

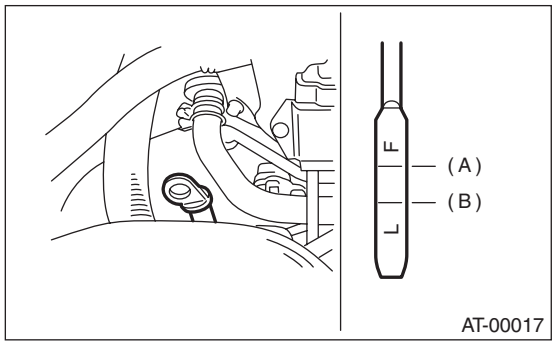

(A) Upper level
(B) Lower level

17.CVT FRONT DIFFERENTIAL GEAR OIL

CAUTION:
If the front differential gear oil is spilt over exhaust pipe, wipe it off with cloth to avoid emitting smoke or causing a fire.
Check for no leakage of CVT front differential gear oil.

18.REAR DIFFERENTIAL GEAR OIL

CAUTION:
If the rear differential gear oil is spilt over exhaust pipe, wipe it off with cloth to avoid emitting smoke or causing a fire.
Check for leakage of gear oil from the rear differential.

19.ENGINE COOLANT

CAUTION:
If the engine coolant is spilt over exhaust pipe, wipe it off with cloth to avoid emitting smoke or causing a fire.
Check that the engine coolant level on the reservoir tank is normal. If the amount of engine coolant is insufficient, check that no leaks are found. Then, add the necessary amount of coolant with the specified concentration.

20.CLUTCH FLUID

CAUTION:
If the clutch fluid is spilt over the exhaust pipe, wipe it off with cloth to avoid emitting smoke or causing a fire.
Check that the clutch fluid level is normal. If the amount of the fluid is insufficient, check that no leaks are found. Then, add the necessary amount of the specified fluid.

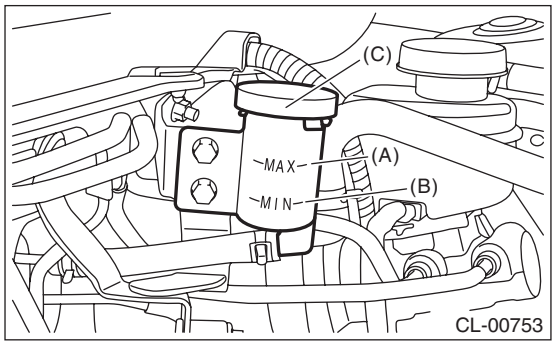

(A) MAX. level
(B) MIN. level
(C) Reservoir tank

21.WINDOW WASHER FLUID

Check that the window washer fluid level is normal. If the amount is insufficient, check that no leaks are found. Then, add the necessary amount of washer fluid.

22.FRONT HOOD LATCH

Close the front hood. Check that the front hood is securely latched.

23.KEYLESS ENTRY SYSTEM

NOTE:
The following inspections show the initial settings. When the settings are different from the initial settings, use Subaru Select Monitor to check the details of each setting for inspections. <Ref. to BC(diag)-16, OPERATION, User Customizing.>

1) Fully open all the door windows.
2) Remove the key from the ignition switch and close all the doors including rear gate.
3) Press the rear gate and trunk open button for at least one second.

- Check if the trunk is opened and the hazard light blinks twice and the buzzer sounds twice. (Sedan model)
- Check if the rear gate is unlocked and the hazard light blinks twice and the buzzer sounds twice. (OUTBACK model)

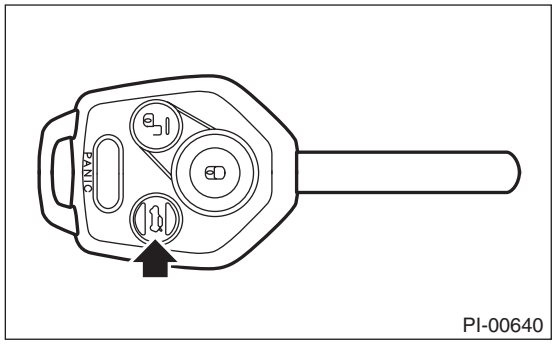

PI-00640

4) Press the “LOCK” button on the keyless transmitter with one of the doors (including the rear gate and trunk) opened. Check if all doors are locked, hazard light blinks five times and the buzzer sounds five times and warning shows one of the doors (including the rear gate and trunk) open.
5) Close all the doors including rear gate and trunk. Press the “LOCK” button momentarily on the keyless transmitter. Check that all the doors (including rear gate and trunk) are locked, hazard light blinks once and buzzer sounds once.

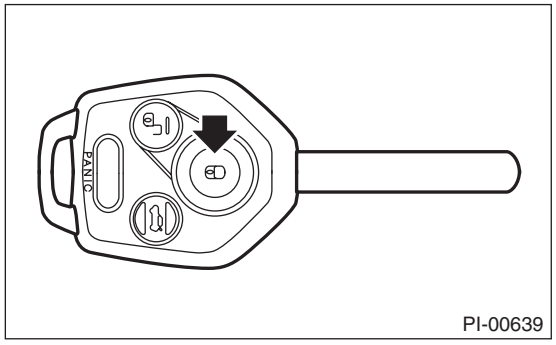

PI-00639

6) Press the “UNLOCK” button momentarily on the keyless transmitter. Check that the driver’s door is unlocked and hazard light blinks twice and the buzzer sounds twice.
And press the “UNLOCK” button momentarily again in 5 seconds. Check that all doors (including rear gate) are unlocked.

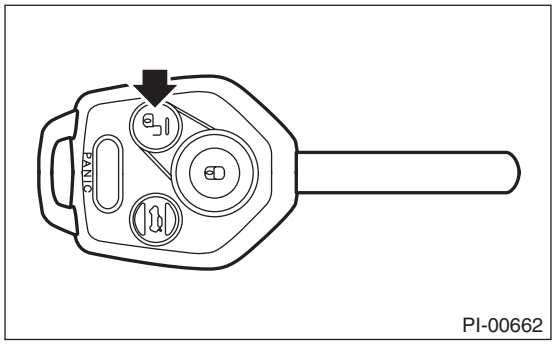

PI-00662

7) Within a distance of 10 m from a vehicle, press keyless transmitter’s “LOCK” button three times within five seconds. Check that the horn honks once and that the hazard light blinks three times.
8) Move the power door lock switch to the lock position with one of doors (including the rear gate) opened. Next, close all the doors including rear gate. Check if all doors are locked and buzzer sounds once and the hazard light flashes once.
9) Check buzzer operation.
The buzzer sounds when the doors are locked or unlocked. The buzzer can be turned off if desired. Turn the buzzer off or on with following procedure.

(1) Close all the doors including rear gate, then remove the key from ignition key lock.
(2) Press the power door lock switch to unlock and hold it until the operation is finished.
(3) Insert the key into ignition key lock, and insert and remove the key in ignition key lock 5 times in 10 seconds.
(4) When finished step (3), open and close the driver’s door once within 10 seconds.

NOTE:
When opening and closing of the door is not available within 10 seconds, hazard light blinks once and the change over operation is cancelled. Retry from the step (1).

(5) Hazard light blinks 3 times and the buzzer sound turns ON or OFF.

10) Press the “PANIC” button of the keyless transmitter. Check if the alarm condition happens (horn sounds continuously, hazard light blinks, security indicator comes on). Check whether this condition lasts until any button on the keyless transmitter is pressed or lasts for 30 seconds.

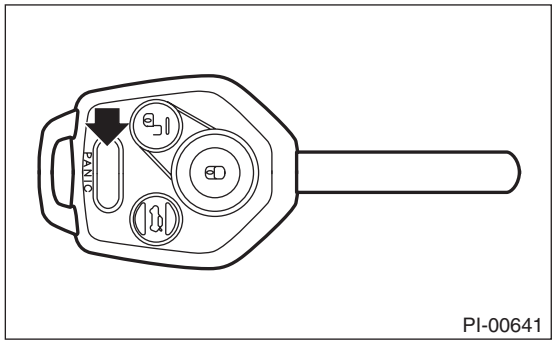

PI-00641

24.SECURITY SYSTEM (ALARM SYSTEM)

NOTE:
The following inspections show the initial settings. When the settings are different from the initial settings, use Subaru Select Monitor to check the details of each setting for inspections. <Ref. to BC(diag)-16, OPERATION, User Customizing.>
1) Fully open all the door windows.
2) Remove the key from the ignition switch and close all the doors including rear gate.
3) Press the “LOCK” button momentarily on the keyless transmitter. All doors are locked, and buzzer sounds once, hazard blinks once, security indicator light blinks faster (five times per two seconds) for 30 seconds and goes slower (twice per two seconds), then the alarm system is in set condition.

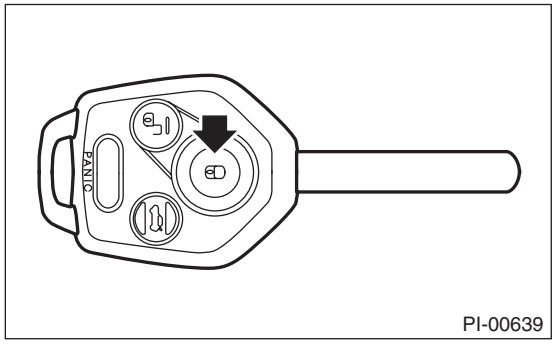

PI-00639

4) Press the “UNLOCK” button momentarily on the keyless transmitter. When the door of the driver’s seat is unlocked, the buzzer sounds twice, the hazard light flashes twice, the room light turns on and the security indicator light flashes once in three seconds, and the alarm system enters the release mode.

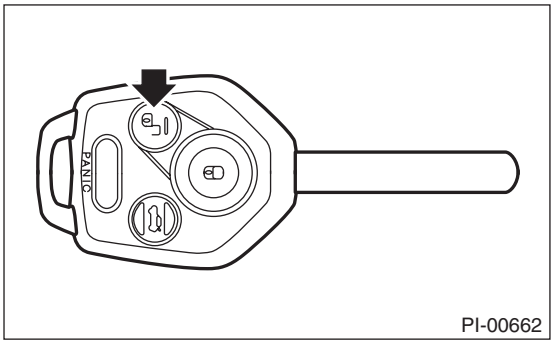

PI-00662

5) Close all the doors including rear gate. Press the “LOCK” button momentarily on the keyless transmitter. When all the doors are locked, buzzer sounds once, hazard blinks once and the alarm system is in set condition in 30 seconds.
6) Unlock the door using the inner lock knob and open the door while the alarm system is in the set mode. Check if the alarm condition happens (horn sounds continuously, hazard light blinks, security indicator illuminates). Check if this condition lasts for a maximum of three minutes or until the “UNLOCK” button of the keyless transmitter is pressed.

NOTE:
The alarm condition will cease in 30 seconds once the door is closed.
7) When none of above is applicable, perform troubleshooting for the security system.

25.SEAT

1) Check the seat surfaces for stains or dirt.
2) Check that each seat provides full functionality in sliding and reclining. Check all available functions of the rear seat such as a trunk-through and center armrest.
3) Check the passenger's seat occupant detection system.
(1) Turn the ignition switch to ON.
(2) Check the ON and OFF of passenger's airbag indicator light come on simultaneously for about 6 seconds and go off for 2 seconds, and then only OFF illuminates again.

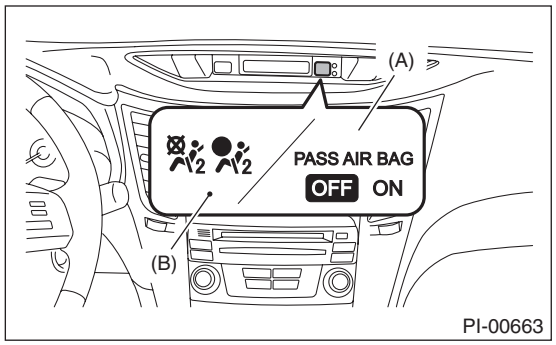

(A) Indication for US
(B) Indication for Canada

(3) Have a person weighing approximately 70 kg (155 lb) or more sit in the passenger's seat, and check whether the passenger's airbag indicator light illuminate or not.
(4) Empty the passenger seat, then check whether the passenger side airbag indicator light OFF illuminates.

26.SEAT BELT

1) Check installation condition of seat belt.
2) Pull out the seat belt and then release it. Check that the belt retracts smoothly.
3) Check that the ALR seat belt operates normally.
4) Check seat belt warning function.
(1) Turn the ignition switch to ON with the driver's and passenger's seat belt detached.
(2) Check the driver's and passenger's seat belt warning light blink for approx. 6 seconds and the buzzer sounds intermittently.
(3) Then, check the seat belt warning light illuminates and blinks repeatedly at a cycle of approx. 15 seconds. (If no passenger is on the passenger's seat, the seat belt warning light on passenger's seat does not operate.)
(4) When the driver's seat belt is fastened, check that the driver's seat belt warning light turns off.
(5) When the passenger's seat belt is fastened, check that the passenger's seat belt warning light turns off. (If no passenger is on the passenger's seat, the seat belt warning light on passenger's seat does not operate.)

27.TPMS

1) Turn the ignition switch to ON, and check TPMS warning light for normal operation.
• Normal operation (IG ON (light check))

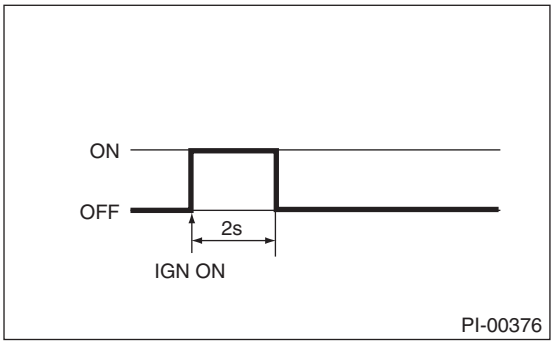

2) If the TPMS warning light display does not operate normally, check and repair the system. <Ref. to TPM(diag)-2, Basic Diagnostic Procedure.>

28.IMMOBILIZER SYSTEM

1) Check that the engine starts with all keys that are equipped on vehicle.
2) 60 seconds after turning ignition switch from ON to ACC or OFF, or immediately after removing the key, check that the security indicator light is blinking.
3) For the model for Canada, execute Each System Check > Integ. unit mode > "SCU collation mode" on SSMIII to check [Collation OK (no error)] is displayed.

NOTE:
If malfunctions occur, refer to "IMMOBILIZER (DIAGNOSIS)".

29.STARTING CONDITION

Start the engine and check that the engine starts smoothly. If the battery voltage is low, recharge or replace the battery. If any noises are observed, immediately stop the engine and check and repair the abnormal components.

30.EXHAUST SYSTEM

Listen to the exhaust noise to see if no exhaust gas leak or abnormal noises are observed.

31.INDICATOR LIGHT AND WARNING LIGHT

Check that all indicator lights and warning lights operate normally.

32.HEATER & VENTILATION

Operate the heater & ventilation system to check for normal airflow outlet control, air inlet control, airflow capacity and heating performance.

33.AIR CONDITIONER

Operate the air conditioner. Check that the A/C compressor operates normally and enough cooling is provided.

NOTE:
To prevent the insufficient lubrication of the air conditioner, operate the air conditioner for five minutes at idling.

34.CLOCK

Check the clock for normal operations and enough accuracy. Check the fuel economy display switches by operating the knob on the meter. Also check there is no significant error on the outside temperature display.

35.AUDIO

Check that all radio functions operate, the speakers emit sound properly and the noise is at an acceptable level. Also check the CD unit and AUX unit operations.

36.NAVIGATION SYSTEM

1) Check all display functions for normal operation. (Refer to the owner's manual for the operation procedures.)
2) Check the map disc (DVD) are provided on vehicle.
3) Check that the navigation system operates normally.
4) Check that the rearview camera operates normally.

37.ACCESSORY POWER SUPPLY SOCKET

1) Check the operation of the front accessory power supply socket.
2) Check operation of the accessory power supply socket in console box.

38.LIGHTING SYSTEM

1) Check the headlight operation.
2) Check the stop light operation.
3) Check other lights for normal operations.

39.WIPER DEICER

Check that the wiper deicer operates normally.

NOTE:
When an ambient temperature is 5°C or more, wiper deicer operation is cancelled. Press the switch for 3 seconds or more to perform the compulsory operation.

40.ILLUMINATION CONTROL

Check that the illumination control operates normally.

41.WINDOW WASHER

Check that the window washer system injects washer fluid to the specified area of the windshield and rear window glass shown in the figure.

Front injection position:

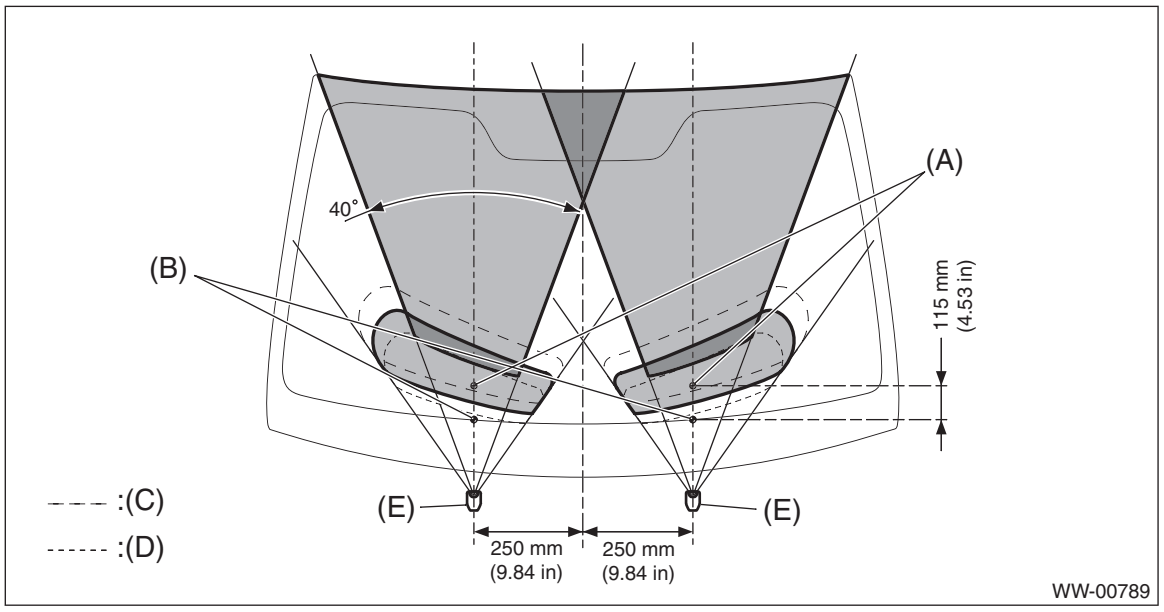

(A) Lower-side spray position center
(B) Ceramic line position on the washer nozzle center
(C) Washer nozzle elevation angle, lower limit of spray area
(D) Washer nozzle elevation angle, upper limit of spray area
(E) Washer nozzle

Rear injection position:

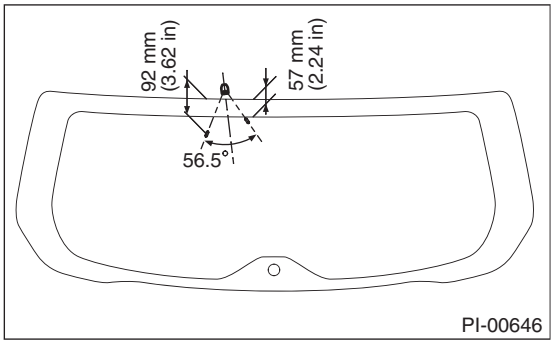

42.WIPER

Check the front and rear wipers for normal operations.

43.POWER WINDOW

• Operate the power window switches one by one to check that each of the power windows goes up and down without noises.
• Check AUTO UP/AUTO DOWN operate properly by operating the power window switch on driver's seat side.

CAUTION:
If battery has been removed, AUTO UP does not operate properly because initialized. In this case, perform the initial setting (reset A) and check AUTO UP operates properly.

44.SUNROOF

Check that the sunroof operates normally.

45.DOOR MIRROR

Check that the remote control mirror and heated mirror operate normally.

46.ROOM MIRROR (RCD MODEL)

1) Check all display functions for normal operation.
2) Check that the automatic anti-glare function operates normally.
3) Check that the compass function operates normally.
4) Check that the rearview camera operates normally.
5) Perform compass calibration. <Ref. to GW-62, CALIBRATION, ADJUSTMENT, Rearview Mirror (RCD Model).>
6) Perform compass zone setting. <Ref. to GW-63, ZONE SETTING, ADJUSTMENT, Rearview Mirror (RCD Model).>

47.REAR DEFOGGER

Check that the rear defogger system operates normally.

48.PARKING BRAKE

Check the parking brake operates properly by depressing brake pedal and pressing the electronic parking brake switch.

49.BRAKE TEST

Check the foot brake for normal operations.

50.AT, CVT SHIFT CONTROL

1) Turn the ignition switch to ON.
2) While brake pedal is not depressed, check if the select lever does not move from “P” range.
3) While brake pedal is depressed, check if the select lever moves from “P” range.
4) Set the select lever to other than “P” range.
5) When the ignition switch is turned to OFF, check if the ignition key switch cannot be removed.
6) Set the selector lever to “D” range and check the shifting while driving the vehicle.

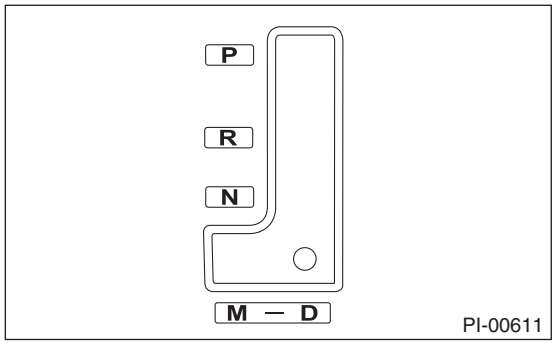

51.MT SHIFT CONTROL

1) Check for smooth operation to each position. Especially, shifting to 5th ←→ 6th, and then to Rev, check for any drag.
2) Check the slider returns to the original position by shifting to the Rev and then back in neutral while pulling up the slider.
3) If the shifting operation is not smooth, readjustment the exposed length (a) of MT gear select cable following the figure.

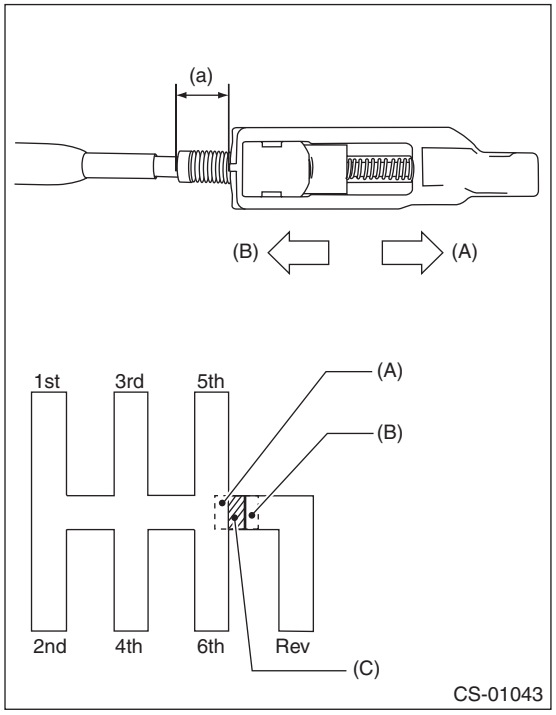

(a) Exposed length of MT gear select cable
(A) Extend direction of exposed length of MT gear select cable
(B) Shorten direction of exposed length of MT gear select cable
(C) Specification of exposed length (a)

• If the shift cannot be inserted to push the reverse lock bracket 5th and 6th.
→ Extend the exposed length (a) of MT gear select cable.
• When operate the select lever to 4th → 5th, it cannot be operated at select lever crank line.
→ Shorten the exposed length (a) of MT gear select cable.

52.CRUISE CONTROL

Operate the cruise control system. Check that the system is activated and deactivated correctly.

53.ATF LEVEL

CAUTION:
If the ATF is spilt over exhaust pipe, wipe it off with cloth to avoid emitting smoke or causing a fire.
After selecting all positions (P, R, N, D), set the select lever in "P" range. Idle the engine for 1 or 2 minutes, and measure the ATF level. If the amount is insufficient, check that no leaks are found. Then, add the necessary amount of the specified ATF.

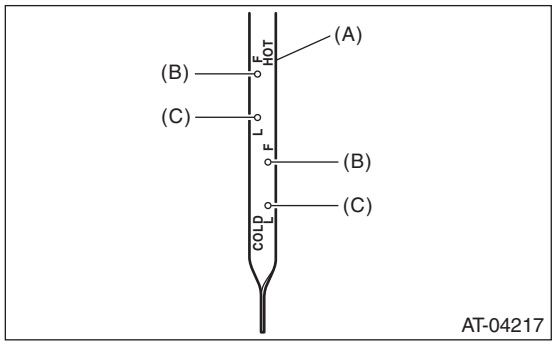

(A) Level gauge
(B) Upper level
(C) Lower level

54.POWER STEERING FLUID LEVEL

CAUTION:
If any power steering fluid is spilt over the exhaust pipe, wipe it off with a cloth to avoid emitting smoke or causing a fire.
Check that the power steering fluid level is normal. If the amount is insufficient, check that no leaks are found. Then add the necessary amount of the specified power steering fluid.

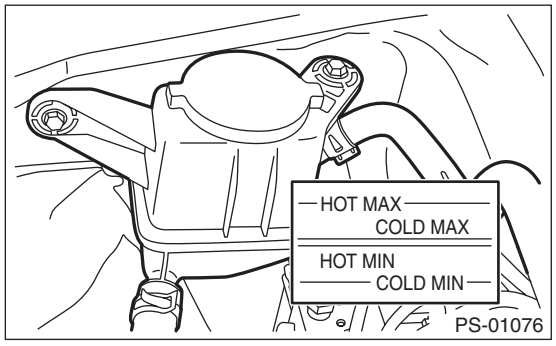

55.OIL LEAKAGE

Check entire areas of the vehicle for any trace of coolant/oil (such as engine and gear oil)/fluid (such as transmission and brake) leaks.

56.WATER LEAK TEST

Spray the vehicle with water using a hose and check that no water enters the passenger compartment.
• Before performing the water leakage test, remove anything that may obstruct the operation or which must be kept dry.
• Close all the windows and doors securely. Close the hood and trunk lid before starting the test.
• Spray the vehicle with water using a hose. The rate of water spray must be approx. 20 to 25 ℓ (5.3 — 6.6 US gal, 4.4 — 5.5 Imp gal) per minute.
When spraying water on areas adjacent to the floor and wheel house, increase the pressure. When spraying water on areas other than the floor and wheel house, decrease the pressure. But the force of water must be made strong occasionally by pressing the end of the hose.

NOTE:
Be sure to keep the hose at least 10 cm (3.9 in) away from vehicle.
Check the following areas.
• Front window and body framework mating portion
• Door mating portions
• Glass mating portions
• Rear quarter window mating portions
• Rear window and body framework mating portion
• Around roof drips
If any dampness in the compartments is discovered after the water has been applied, carefully check all the areas that may have possibly contributed to the leak.

57.APPEARANCE CHECK 2

1) If protective coating (lap guard) is applied, remove it.

NOTE:
• It is easier to remove the wrap guard using steam.
• For a vehicle left for a long time or at low temperature, sprinkle some water heated to 50 — 60°C (122 — 140°F) over the vehicle to raise its surface temperature before peeling off the wrap guard. Do not use the water heated to over 60°C (140°F).
• If the adhesive remains exist on the coated surface, soak a flannel rag, etc. with a small amount of coating wax or solvent such as oil benzene and IPA, put the soaked cloth on the remains lightly, and then wipe them off with a flannel rag etc.
• Keep solvent from touching the resin or rubber parts. Do not use coating wax or solvent while the component surface temperature is high due to hot weather etc.
• If the coated surface is swollen out due to seams or moisture, expose the vehicle to the sunlight for a few hours or heat the seam and swollen portions using a dryer etc.
• Dispose of the peeled wrap guard as burnable industrial garbage.
• If a yellow label is attached to the fog light lens, remove it.

2) Check the whole vehicle body for flaking paint, damage by transportation, corrosion, dirt, cracks or blisters.

NOTE:
• It is better to determine an inspection pattern in order to avoid missing an area, since the total inspection area is wide.
• Do not repair the body paint unless absolutely necessary. Also, if the vehicle is in need of repair to remove scratches or corroded paint, the repair area must be limited to the minimum. Re-painting and spray painting must be avoided as much as possible.

3) Check each window glass for scratches carefully. Slight damage may be removed by polishing with cerium oxide. (Fill a cup half with cerium oxide, and add warm water to it. Then agitate the content until it turns to wax. Apply this wax to a soft cloth, and polish the glass with it.)

4) Check each portion of the vehicle body and underside components for the formation of rust. If rust is discovered, remove it with sandpaper of #80 to #180 and treat the surface with rust preventive. After this treatment is completed, flush the portion thoroughly, and prepare the surface for repair painting.

5) Check each portion of body and all of the exterior parts for deformation or distortion. Also, check each light lens for cracks.

6) Peel the protective tape, vinyl wrapping and identification seal attached to the following places.
• Seat
• Door trim
• Floor carpet
• Side sill
• Front hood lock release lever
• Edge rear
• Rear wiper
• Sedan rear combination light (Trunk lid opening portion)
• Roof rail
• Assist rail
• Door mirror (except for North America)

PERIODIC MAINTENANCE SERVICES

PM

		Page
1.	General Description	2
2.	Schedule	3
3.	Engine Oil	8
4.	Engine Oil Filter	9
5.	Spark Plug	10
6.	V-belt	11
7.	Timing Belt	12
8.	Fuel Line	14
9.	Fuel Filter	15
10.	Air Cleaner Element	16
11.	Cooling System	17
12.	Engine Coolant	18
13.	Clutch System	19
14.	Transmission Gear Oil	20
15.	Automatic Transmission Fluid	21
16.	CVTF	22
17.	Front & Rear Differential Gear Oil	23
18.	Brake Line	24
19.	Brake Fluid	25
20.	Disc Brake Pad and Disc	26
21.	Parking Brake	27
22.	Suspension	28
23.	Wheel Bearing	31
24.	Axle Boots & Joints	32
25.	Tire Rotation	33
26.	Steering System (Power Steering)	34
27.	A/C Filter	36

1. General Description

A: GENERAL DESCRIPTION

Be sure to perform periodic maintenance in order to maintain vehicle performance and find problems before they occur.

2. Schedule

A: MAINTENANCE SCHEDULE 1

1. MODEL WITH US SPECIFICATION

- Other than U5 model

			Maintenance interval [Number of months or km (miles), whichever occurs first]																	
	Months		3	7.5	15	22.5	30	37.5	45	52.5	60	67.5	75	82.5	90	97.5	105	112.5	120	
	× 1,000 km		4.8	12	24	36	48	60	72	81.4	96	108	120	132	144	156	168	180	192	Remarks
	× 1,000 miles		3	7.5	15	22.5	30	37.5	45	52.5	60	67.5	75	82.5	90	97.5	105	112.5	120	
1	Engine oil	3.6 L	(R)	R	R	R	R	R	R	R	R	R	R	R	R	R	R	R	R	
		2.5 L		R	R	R	R	R	R	R	R	R	R	R	R	R	R	R	R	
2	Engine oil filter	3.6 L	(R)	R	R	R	R	R	R	R	R	R	R	R	R	R	R	R	R	
		2.5 L		R	R	R	R	R	R	R	R	R	R	R	R	R	R	R	R	
3	Spark plug										R								R	
4	Drive belt(s)						I				I				I		R			
5	Camshaft drive belt						I				I				I		R			
6	Fuel line						(I)				(I)				(I)				I	Note 1.
7	Air cleaner element						R				R				R				R	Note 2.
8	Cooling system						I				I				I				I	
9	Engine coolant		Replace after the first 11 years or 220,000 km (137,500 miles), and every six years or 120,000 km (75,000 miles) thereafter																	
10	Clutch system				I		I		I		I		I		I		I		I	
11	Transmission gear oil						I				I				I				I	
12	ATF						I				I				I				I	
13	CVTF						I				I				I				I	
14	Front & rear differential gear oil						I				I				I				I	
15	Brake line				I		I		I		I		I		I		I		I	
16	Brake fluid						R				R				R				R	
17	Disc brake pad and disc				I		I		I		I		I		I		I		I	
18	Parking brake				I		I		I		I		I		I		I		I	
19	Suspension				I		I		I		I		I		I		I		I	
20	Wheel bearing										(I)								(I)	
21	Axle boots and joints				I		I		I		I		I		I		I		I	
22	Tire rotation			P	P	P	P	P	P	P	P	P	P	P	P	P	P	P	P	Note 3.
23	Steering system (power steering)				I		I		I		I		I		I		I		I	
24	A/C filter		Replace every 15 months or 24,000 km (15,000 miles).																	Note 4.

Symbols used:
R: Replace
I: Inspection
P: Perform
(R): Recommended service for maintaining better vehicle performance
(I): Inspections recommended for vehicle safety

PERIODIC MAINTENANCE SERVICES

NOTE:

1. This inspection is not required to maintain emission warranty eligibility and it dose not affect the manufacturer's obligations under EPA's in-use compliance program.
2. When the vehicle is used in extremely dusty conditions, the air cleaner element should be replaced more often.
3. A tire should be replaced when the tread wear indicator appears as a solid band across the tread. The indicators appear when the remaining tread has been worn to 1.6 mm (0.063 in) or less.
4. When the vehicle is used under extremely dusty conditions, replace the A/C filter frequently.

- U5 model

			Maintenance interval [Number of months or km (miles), whichever occurs first]												
	Months		3	7.5	15	22.5	30	37.5	45	52.5	60	67.5	75	To be continued to the next table.	Remarks
	× 1,000 km		4.8	12	24	36	48	60	72	81.4	96	108	120		
	× 1,000 miles		3	7.5	15	22.5	30	37.5	45	52.5	60	67.5	75		
1	Engine oil	3.6 L	(R)	R	R	R	R	R	R	R	R	R	R		
		2.5 L		R	R	R	R	R	R	R	R	R	R		
2	Engine oil filter	3.6 L	(R)	R	R	R	R	R	R	R	R	R	R		
		2.5 L		R	R	R	R	R	R	R	R	R	R		
3	Spark plug										R				
4	Drive belt(s)						I				I				
5	Camshaft drive belt						I				I				
6	Fuel line						(I)				(I)				Note 1.
7	Air cleaner element						R				R				Note 2.
8	Cooling system						I				I				
9	Engine coolant		Replace after the first 11 years or 220,000 km (137,500 miles), and every six years or 120,000 km (75,000 miles) thereafter												
10	Clutch system				I		I		I		I		I		
11	Transmission gear oil						I				I				
12	ATF						I				I				
13	CVTF						I				I				
14	Front & rear differential gear oil						I				I				
15	Brake line				I		I		I		I		I		
16	Brake fluid						R				R				
17	Disc brake pad and disc				I		I		I		I		I		
18	Parking brake				I		I		I		I		I		
19	Suspension				I		I		I		I		I		
20	Wheel bearing										(I)				
21	Axle boots and joints				I		I		I		I		I		
22	Tire rotation			P	P	P	P	P	P	P	P	P	P		Note 3.
23	Steering system (power steering)				I		I		I		I		I		
24	A/C filter		Replace every 15 months or 24,000 km (15,000 miles).												Note 4.

Symbols used:
R: Replace
I: Inspection
P: Perform
(R): Recommended service for maintaining better vehicle performance
(I): Inspections recommended for vehicle safety

NOTE:
1. This inspection is not required to maintain emission warranty eligibility and it dose not affect the manufacturer's obligations under EPA's in-use compliance program.
2. When the vehicle is used in extremely dusty conditions, the air cleaner element should be replaced more often.
3. A tire should be replaced when the tread wear indicator appears as a solid band across the tread. The indicators appear when the remaining tread has been worn to 1.6 mm (0.063 in) or less.
4. When the vehicle is used under extremely dusty conditions, replace the A/C filter frequently.

PERIODIC MAINTENANCE SERVICES

		Maintenance interval [Number of months or km (miles), whichever occurs first]											
	Months	Continued from previous table	82.5	90	97.5	105	112.5	120	127.5	135	142.5	150	Remarks
	× 1,000 km		132	144	156	168	180	192	204	216	228	240	
	× 1,000 miles		82.5	90	97.5	105	112.5	120	127.5	135	142.5	150	
1	Engine oil		R	R	R	R	R	R	R	R	R	R	
2	Engine oil filter		R	R	R	R	R	R	R	R	R	R	
3	Spark plug							R					
4	Drive belt(s)			I		R				I			
5	Camshaft drive belt			I		R				I			
6	Fuel line			(I)				I				(I)	Note 1.
7	Air cleaner element			R				R				R	Note 2.
8	Cooling system			I				I				I	
9	Engine coolant	Replace after the first 11 years or 220,000 km (137,500 miles), and every six years or 120,000 km (75,000 miles) thereafter											
10	Clutch system			I		I		I				I	
11	Transmission gear oil			I				I				I	
12	ATF			I				I				I	
13	CVTF			I				I				I	
14	Front & rear differential gear oil			I				I				I	
15	Brake line			I		I		I		I		I	
16	Brake fluid			R				R				R	
17	Disc brake pad and disc			I		I		I		I		I	
18	Parking brake			I		I		I		I		I	
19	Suspension			I		I		I		I		I	
20	Wheel bearing							(I)				(I)	
21	Axle boots and joints			I		I		I		I		I	
22	Tire rotation		I	I	I	I	I	I	I	I	I	I	Note 3.
23	Steering system (power steering)			I		I		I		I		I	
24	A/C filter	Replace every 15 months or 24,000 km (15,000 miles).											Note 4.

Symbols used:
R: Replace
I: Inspection
(I): Inspections recommended for vehicle safety

NOTE:
1. This inspection is not required to maintain emission warranty eligibility and it dose not affect the manufacturer's obligations under EPA's in-use compliance program.
2. When the vehicle is used in extremely dusty conditions, the air cleaner element should be replaced more often.
3. A tire should be replaced when the tread wear indicator appears as a solid band across the tread. The indicators appear when the remaining tread has been worn to 1.6 mm (0.063 in) or less.
4. When the vehicle is used under extremely dusty conditions, replace the A/C filter frequently.

B: MAINTENANCE SCHEDULE 2

Item	Maintenance interval	Repeat short distance drive	Repeat rough/muddy road drive	Extremely cold weather area	Salt or other corrosive used or coastal area	High humidity or mountain area	Repeat towing trailer
Engine oil	3.75 months	R		R			R
	6,000 km						
	3,750 miles						
Engine oil filter	3.75 months	R		R			R
	6,000 km						
	3,750 miles						
Fuel line	7.5 months				I		
	12,000 km						
	7,500 miles						
Transmission gear oil	15 months						R
	24,000 km						
	15,000 miles						
ATF	15 months						R
	24,000 km						
	15,000 miles						
CVTF	40,000 km						R
	24,855 miles						
Front and rear Differential Gear Oil	15 months						R
	24,000 km						
	15,000 miles						
Brake line	7.5 months				I		
	12,000 km						
	7,500 miles						
Brake fluid	15 months					R	
	24,000 km						
	15,000 miles						
Disc brake pad and disc	7.5 months	I	I		I		I
	12,000 km						
	7,500 miles						
Parking brake	7.5 months	I	I		I		I
	12,000 km						
	7,500 miles						
Suspension	7.5 months		I	I	I		
	12,000 km						
	7,500 miles						
Axle boots and joints	7.5 months	I	I	I	I		I
	12,000 km						
	7,500 miles						
Steering system (power steering)	7.5 months		I	I	I		
	12,000 km						
	7,500 miles						

3. Engine Oil

A: INSPECTION

Refer to “LU” section for engine oil inspection. <Ref. to LU(H4SO)-13, INSPECTION, Engine Oil.> <Ref. to LU(H6DO)-9, INSPECTION, Engine Oil.>

B: REPLACEMENT

Refer to “LU” section for engine oil replacement. <Ref. to LU(H4SO)-13, REPLACEMENT, Engine Oil.> <Ref. to LU(H6DO)-9, REPLACEMENT, Engine Oil.>

4. Engine Oil Filter

A: REPLACEMENT

Refer to “LU” section for engine oil filter replacement. <Ref. to LU(H4SO)-36, Engine Oil Filter.> <Ref. to LU(H6DO)-15, Engine Oil Filter.>

5. Spark Plug

A: REPLACEMENT

Refer to “IG” section for spark plug replacement. <Ref. to IG(H4SO)-3, Spark Plug.> <Ref. to IG(H4DOTC)-4, Spark Plug.> <Ref. to IG(H6DO)-4, Spark Plug.>

6. V-belt

A: INSPECTION

Refer to “ME” section for V-belt inspection. <Ref. to ME(H4SO)-44, INSPECTION, V-belt.> <Ref. to ME(H4DOTC)-43, INSPECTION, V-belt.> <Ref. to ME(H6DO)-51, INSPECTION, V-belt.>

B: REPLACEMENT

Refer to “ME” section for V-belt replacement. <Ref. to ME(H4SO)-43, V-belt.> <Ref. to ME(H4DOTC)-42, V-belt.> <Ref. to ME(H6DO)-51, V-belt.>

7. Timing Belt

A: INSPECTION

1. SOHC MODEL (INSPECTION OF TIMING BELT POSITION)

1) Remove the timing belt cover (LH).
2) Turn the crank pulley to set #1 cylinder piston to top dead center of compression stroke and check the followings.
(1) Check that the arrow (A) of cam sprocket LH points to the upright.

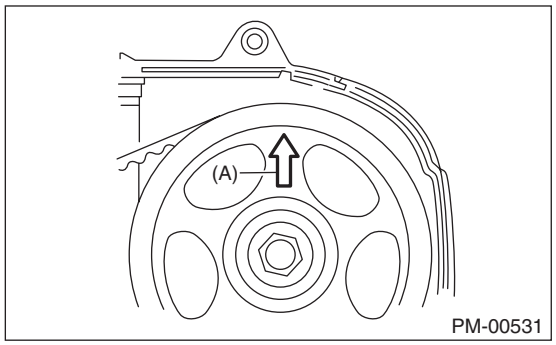

(2) Remove the sealing rubber (B) of the timing belt cover RH.
(3) Check that the arrow (C) of cam sprocket RH points to the upright.

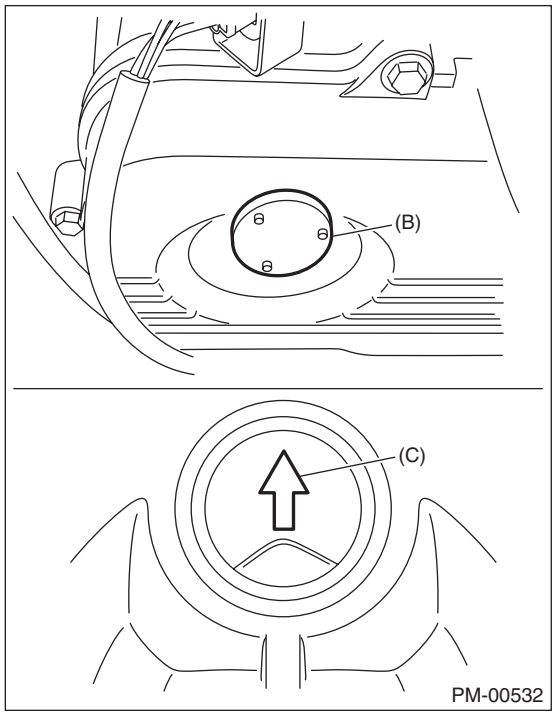

3) When cam sprocket or timing belt position is offset, check for any defect and repair or replace as required.

2. SOHC MODEL (OTHER INSPECTIONS)

1) Remove the front timing belt cover and timing belt cover (LH).
2) While cranking engine at least four rotations, check the timing belt back surface for cracks or damage. Replace the faulty timing belt with new part as needed.
3) When the side part of timing belt is abnormally worn (fluff or jumping out of core) or damaged, check the idlers, tensioner, water pump pulley and cam sprocket to determine idler alignment (squareness). Replace the worn timing belt with new part.
4) Install the front timing belt cover and timing belt cover (LH).

3. DOHC MODEL (INSPECTION OF TIMING BELT POSITION)

1) Remove the timing belt cover (LH) and (RH).
2) Turn the crank pulley and align single line mark (A) on the intake cam sprocket (RH) with notch (B) on timing belt cover and check the following.
(1) Make sure double lines (C) on intake and exhaust cam sprocket (RH side) are aligned.
(2) Make sure single line (D) on exhaust cam sprocket (RH side) is aligned to timing belt cover notch (E).

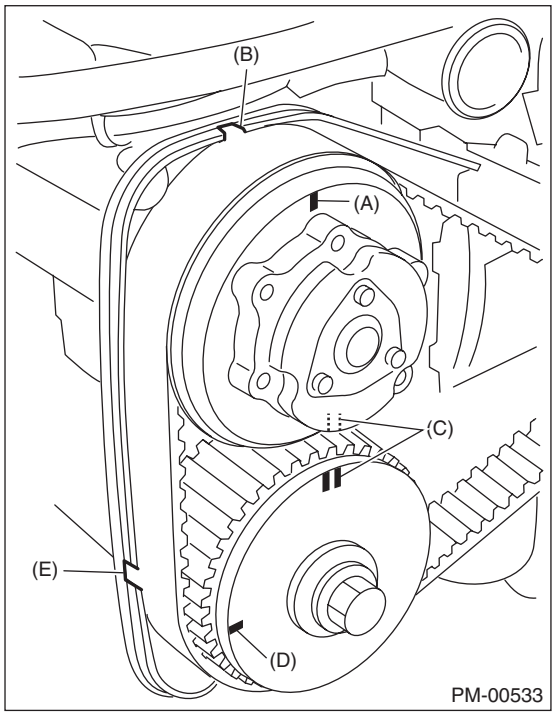

(3) Make sure single line (A) on intake cam sprocket (LH side) is aligned to timing belt cover notch (B).
(4) Make sure double lines (C) on intake and exhaust cam sprocket (LH side) are aligned.

(5) Check that the single line mark (D) on the exhaust cam sprocket (LH side) and notch (E) on the timing belt cover are aligned.

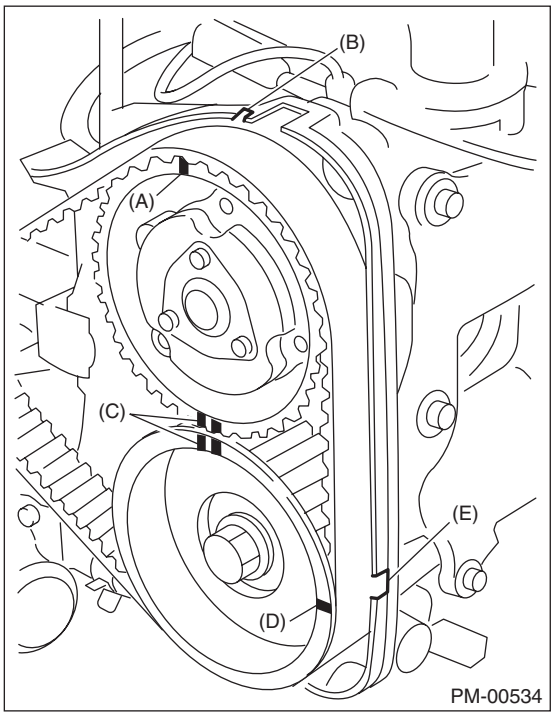

3) When cam sprocket position is offset, check for any defect, and repair or replace as required.

4. DOHC MODEL (OTHER INSPECTIONS)

1) Remove the timing belt cover (LH).
2) While cranking engine at least four rotations, check the timing belt back surface for cracks or damage. Replace the faulty timing belt with new part as needed.
3) When the side part of timing belt (arrow direction shown in the figure) is abnormally worn (fluff or jumping out of core) or damaged, check the idlers, tensioner, water pump pulley and cam sprocket to determine idler alignment (squareness). Replace the worn timing belt with new part.

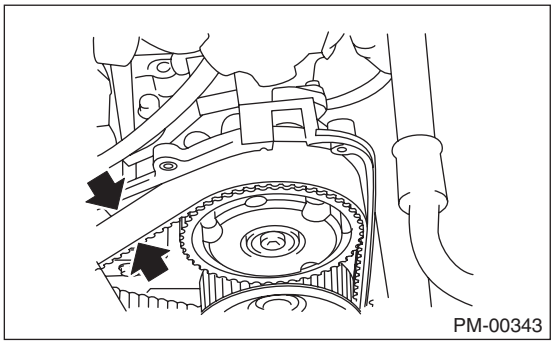

4) Install the timing belt cover (LH).

B: REPLACEMENT

Refer to “ME” section for timing belt replacement. <Ref. to ME(H4SO)-48, Timing Belt.> <Ref. to ME(H4DOTC)-52, Timing Belt.>

8. Fuel Line

A: INSPECTION

The fuel line is located mostly internally, so check pipes, areas near pipes, and engine compartment piping for rust, hose damage, loose band, etc. If faulty parts are found, repair or replace them. <Ref. to FU(H4DOTC)-93, INSPECTION, Fuel Delivery, Return and Evaporation Lines.>

9. Fuel Filter

A: REPLACEMENT

Refer to “FU” section for fuel filter replacement. <Ref. to FU(H4SO)-71, Fuel Filter.> <Ref. to FU(H4DOTC)-85, Fuel Filter.> <Ref. to FU(H6DO)-77, Fuel Filter.>

B: INSPECTION

Replace if the filter is clogged, or time for replacement has come.

10.Air Cleaner Element

A: REPLACEMENT

Refer to “IN” section for air cleaner element replacement. <Ref. to IN(H4SO)-4, Air Cleaner Element.> <Ref. to IN(H4DOTC)-7, Air Cleaner Element.> <Ref. to IN(H6DO)-4, Air Cleaner Element.>

11.Cooling System

A: INSPECTION

1. RADIATOR

Refer to “CO” section for radiator inspection. <Ref. to CO(H4SO)-22, INSPECTION, Radiator.> <Ref. to CO(H4DOTC)-23, INSPECTION, Radiator.> <Ref. to CO(H6DO)-19, INSPECTION, Radiator.>

2. RADIATOR CAP

Refer to “CO” section for radiator cap inspection. <Ref. to CO(H4SO)-23, INSPECTION, Radiator Cap.> <Ref. to CO(H4DOTC)-24, INSPECTION, Radiator Cap.> <Ref. to CO(H6DO)-20, INSPECTION, Radiator Cap.>

3. COOLING FAN

Check the radiator fan operates using Subaru Select Monitor, when the coolant temperature exceeds 98°C (208°F). If it does not operate, check the radiator fan system. <Ref. to CO(H4SO)-8, INSPECTION, Radiator Fan System.> <Ref. to CO(H4DOTC)-8, INSPECTION, Radiator Fan System.> <Ref. to CO(H6DO)-9, INSPECTION, Radiator Fan System.>

4. COOLING SYSTEM

Start the engine, and then inspect that it does not overheat or it is not cooled excessively. If it overheats or it is cooled excessively, check the cooling system.

12.Engine Coolant

A: REPLACEMENT

Refer to “CO” section for engine coolant replacement. <Ref. to CO(H4SO)-14, REPLACEMENT, Engine Coolant.> <Ref. to CO(H4DOTC)-14, REPLACEMENT, Engine Coolant.> <Ref. to CO(H6DO)-12, REPLACEMENT, Engine Coolant.>

13.Clutch System

A: INSPECTION AND ADJUSTMENT

Refer to “CL” section for inspection and adjustment of clutch system. <Ref. to CL-29, INSPECTION, Clutch Pedal.> <Ref. to CL-29, ADJUSTMENT, Clutch Pedal.>

14.Transmission Gear Oil

A: INSPECTION

Refer to “6MT” section for transmission gear oil inspection. <Ref. to 6MT-24, INSPECTION, Transmission Gear Oil.>

B: REPLACEMENT

Refer to “6MT” section for transmission gear oil replacement. <Ref. to 6MT-24, REPLACEMENT, Transmission Gear Oil.>

15. Automatic Transmission Fluid

A: INSPECTION

Refer to “5AT” section for ATF inspection. <Ref. to 5AT-29, INSPECTION, Automatic Transmission Fluid.>

B: REPLACEMENT

Refer to “5AT” section for ATF replacement. <Ref. to 5AT-29, REPLACEMENT, Automatic Transmission Fluid.>

16.CVTF

A: INSPECTION

Refer to “CVT” section for CVTF inspection. <Ref. to CVT-37, INSPECTION, CVTF.>

B: REPLACEMENT

Refer to “CVT” section for CVTF replacement. <Ref. to CVT-38, REPLACEMENT, CVTF.>

17. Front & Rear Differential Gear Oil

A: INSPECTION

1. FRONT DIFFERENTIAL (MT MODEL)

Front differential gear oil of MT model lubricates the transmission and differential together. Refer to “Transmission Gear Oil” for replacement procedure. <Ref. to 6MT-24, INSPECTION, Transmission Gear Oil.>

2. FRONT DIFFERENTIAL (AT MODEL)

Refer to “5AT” section for inspection of AT model front differential gear oil. <Ref. to 5AT-31, INSPECTION, Differential Gear Oil.>

3. FRONT DIFFERENTIAL (CVT MODEL)

Refer to “CVT” section for inspection of CVT model front differential gear oil. <Ref. to CVT-41, INSPECTION, Differential Gear Oil.>

4. REAR DIFFERENTIAL

Refer to “DI” section for rear differential gear oil inspection. <Ref. to DI-23, INSPECTION, Differential Gear Oil.>

B: REPLACEMENT

1. FRONT DIFFERENTIAL (MT MODEL)

Front differential gear oil of MT model lubricates the transmission and differential together. Refer to “6MT” section for replacement procedure. <Ref. to 6MT-24, REPLACEMENT, Transmission Gear Oil.>

2. FRONT DIFFERENTIAL (AT MODEL)

Refer to “5AT” section for front differential gear oil replacement. <Ref. to 5AT-31, REPLACEMENT, Differential Gear Oil.>

3. FRONT DIFFERENTIAL (CVT MODEL)

Refer to “CVT” section for front differential gear oil replacement. <Ref. to CVT-42, REPLACEMENT, Differential Gear Oil.>

4. REAR DIFFERENTIAL

Refer to “DI” section for rear differential gear oil replacement. <Ref. to DI-23, REPLACEMENT, Differential Gear Oil.>

18.Brake Line

A: INSPECTION

1. BRAKE LINE

1) Check for scratches, swelling, corrosion, traces of fluid leakage on the brake hoses or pipe joints.
2) Make sure that brake pipes/hoses do not interfere with adjacent parts and there is no loose connector/clamp during driving.
3) Check any trace of fluid leakage, scratches, etc. on master cylinder, wheel cylinder and hydraulic unit.

NOTE:
• When the brake fluid level in the reservoir tank is lower than specified limit, the brake warning light on the combination meter will illuminate.
• Visually check the brake hose for damage. (Use a mirror where it is difficult to see)

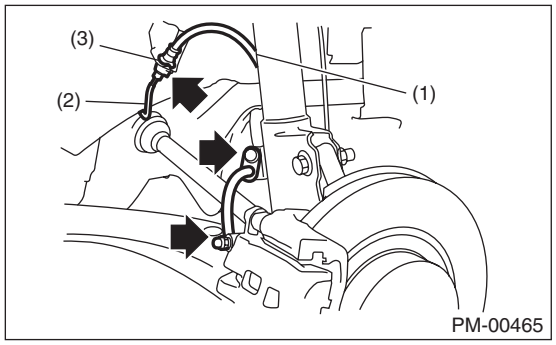

(1) Front brake hose
(2) Front brake pipe
(3) Clamp

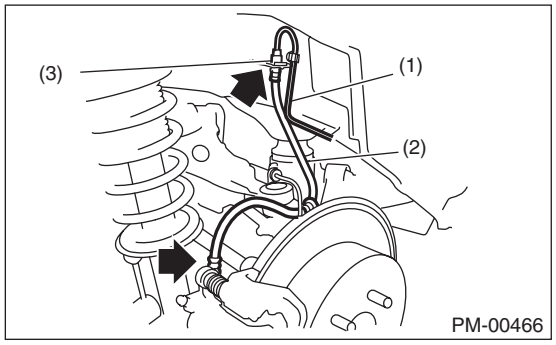

(1) Brake pipe
(2) Rear brake hose
(3) Clamp

2. SERVICE BRAKE

Refer to “BR” section for foot brake inspection. <Ref. to BR-63, INSPECTION, Brake Pedal.>

3. BRAKE SERVO SYSTEM

1) With the engine off, depress the brake pedal several times applying the same pedal force. Check that the travel distance should not change.
2) With the brake pedal depressed, start the engine. Check that the pedal moves slightly toward the floor.
3) With the brake pedal depressed, stop the engine and keep the pedal depressed for 30 seconds. Check that the pedal height does not change.
4) A check valve is built into the brake booster nipple. Disconnect the vacuum hose to inspect function of check valve.
Check that check valve ventilates from booster side to engine side. Also, check that there is no ventilation from engine side to booster side.

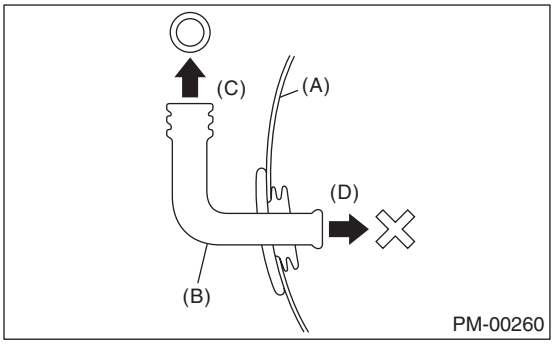

(A) Brake booster
(B) Check valve
(C) Engine side
(D) Brake booster side

5) Check the vacuum hose for cracks or other damage.

CAUTION:
When installing the vacuum hose on the engine and brake booster, do not use soapy water or lubricating oil on their connections.
6) Check that the vacuum hose is securely tightened.

19.Brake Fluid

A: INSPECTION

Refer to “BR” section for brake fluid inspection.
<Ref. to BR-53, INSPECTION, Brake Fluid.>

B: REPLACEMENT

Refer to “BR” section for brake fluid replacement.
<Ref. to BR-53, REPLACEMENT, Brake Fluid.>

20.Disc Brake Pad and Disc

A: INSPECTION

Refer to “BR” section for disc brake pad and disc inspection. <Ref. to BR-17, INSPECTION, Front Brake Pad.> <Ref. to BR-31, INSPECTION, Rear Brake Pad.> <Ref. to BR-19, INSPECTION, Front Disc Rotor.> <Ref. to BR-34, INSPECTION, Rear Disc Rotor.>

21.Parking Brake

A: INSPECTION

Refer to “PB” section for parking brake inspection. <Ref. to PB-15, INSPECTION, Parking Brake Assembly (Rear Disc Brake).>

B: ADJUSTMENT

Refer to “PB” section for parking brake adjustment. <Ref. to PB-15, ADJUSTMENT, Parking Brake Assembly (Rear Disc Brake).>

22.Suspension

A: INSPECTION

1. FRONT SUSPENSION BALL JOINT

1) Lift up the vehicle until front wheels are off ground.
2) Grasp the bottom of tire and move it in and out in axial direction. If movement (B) is observed between the brake disc cover (A) and end of front arm (D), ball joint (C) may be excessively worn.

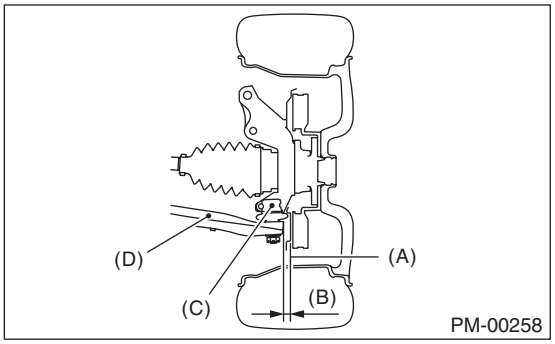

3) Next, grasp the end of front arm (C) and move it up and down. If movement (A) between the housing (D) and front arm (C) boss is observed, ball joint (B) may be excessively worn.

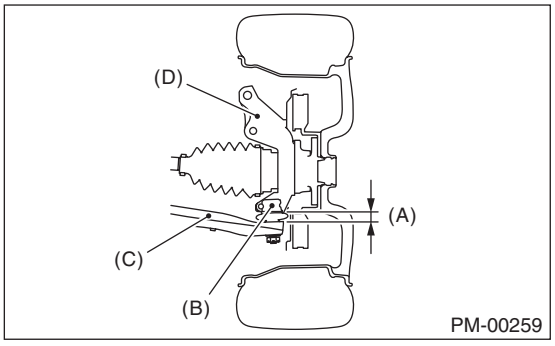

4) If the relative movement is observed in the preceding two steps, remove and inspect the ball joint. If the free play exceeds standard value, replace the ball joint. <Ref. to FS-32, Front Ball Joint.>

5) Damage of dust boot
Visually inspect the ball joint dust boot. Replace if ball joint is damaged.

NOTE:
When the front arm ball joint is removed or replaced, check the toe-in of front wheel. If it is not within the specified value, adjust the toe-in. <Ref. to FS-9, Wheel Alignment.>

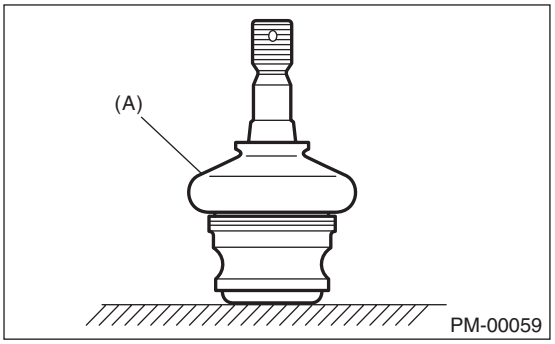

(A) Dust boot

2. REAR SUSPENSION BALL JOINT

1) Lift up the vehicle until rear wheels are off ground.
2) Grasp the bottom of tire and move it in and out in axial direction.
3) If movement is observed between the brake disc cover (A) and end of front lateral link (B), ball joint may be excessively worn.

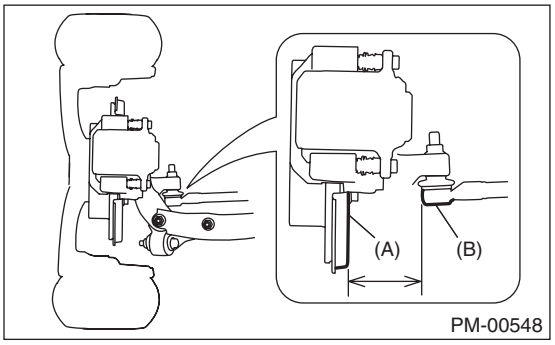

4) Grasp the end of front lateral link (B) and move it up and down. If movement is observed between the housing (C) and front lateral link (B) boss, ball joint may be excessively worn.

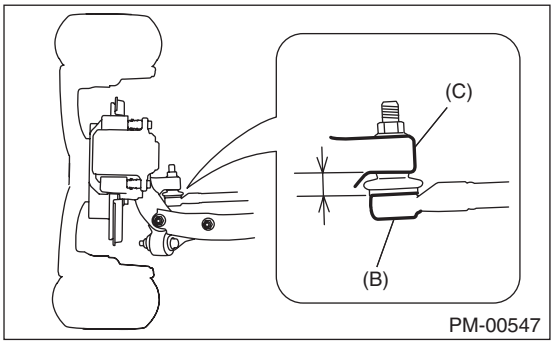

5) If the movement related to the previous two steps is observed, replace the front lateral link. <Ref. to RS-22, Front Lateral Link.>
6) Damage of dust boot
Visually inspect the ball joint dust boot. Replace if front lateral link is damaged.
7) Check upper arm ball joint in the same manner.

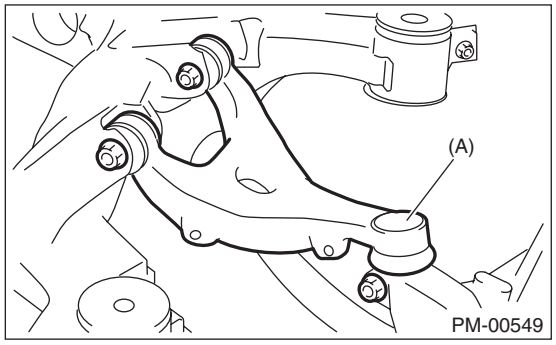

(A) Upper arm ball joint

3. FRONT, REAR SUSPENSION BUSHING

Apply pressure with tire lever etc, and inspect the bushing for excessive wear or damage. Replace the bushings if faulty.

- Front suspension bushing

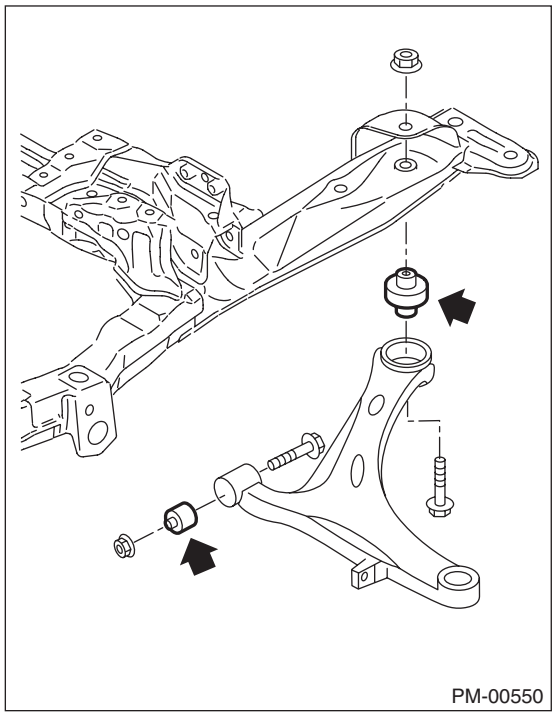

- Rear suspension bushing

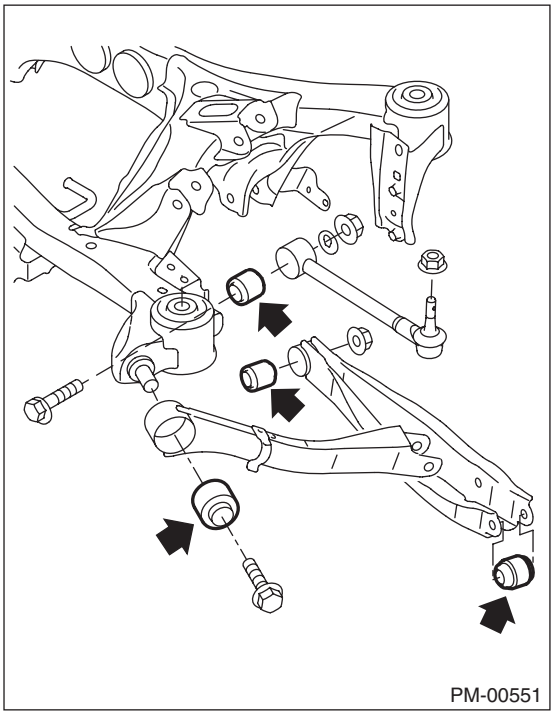

4. WHEEL ARCH HEIGHT

Refer to “FS” section for wheel arch height inspection. <Ref. to FS-10, WHEEL ARCH HEIGHT, INSPECTION, Wheel Alignment.>

5. WHEEL ALIGNMENT

Measure and adjust the front and rear wheel alignment at a time. Refer to “FS” section for measurement and adjustment of wheel alignment. <Ref. to FS-9, INSPECTION, Wheel Alignment.>

6. OIL LEAKAGE OF STRUT AND SHOCK ABSORBER

Visually inspect the front strut and rear shock absorber for oil leakage. Replace the front strut and rear shock absorber if oil leaks excessively.

7. TIGHTNESS OF BOLTS AND NUTS

Check the bolts and nuts for looseness. Retighten the bolts and nuts to specified torque. If the self-locking nuts and bolts are removed, replace them with new parts. <Ref. to FS-2, General Description.> <Ref. to RS-2, General Description.>

8. DAMAGE TO SUSPENSION PARTS

Check the following parts and the fastening portion of the vehicle body for deformation or excessive rusting which impairs the suspension. Thoroughly remove the deposits of the lower spring seat of strut where dust or mud are likely piled up. If necessary, replace the damaged parts with new parts. If minor rust formation, pitting, etc. are noted, remove the rust and take rust prevention measure.

- Front suspension
  - Front arm
  - Cradle
  - Strut
- Rear suspension
  - Sub frame
  - Front lateral link
  - Rear lateral link
  - Upper arm
  - Trailing link
  - Shock absorber
- In the area where salt is sprayed to melt snow on a road in winter, check suspension parts for damage caused by rust every 12 months after lapse of 60 months. Take rust prevention measures as required.

23.Wheel Bearing

A: INSPECTION

1. FRONT WHEEL BEARING

NOTE:
Inspect the condition of front wheel bearing grease.
1) Jack-up the front side of vehicle.
2) While holding the front wheel by hand, swing it in and out to check bearing free play.
3) Loosen the wheel nuts, and remove the front wheel.
4) If the bearing free play exists in step 2) above, attach a dial gauge to the hub and measure axial play in axial direction.

Service limit:
Straight-ahead position within 0.05 mm (0.0020 in)

5) Remove the bolts and self-locking nuts, and extract the front arm from front crossmember.
6) Remove the AAR of front drive shaft from transmission. <Ref. to DS-15, Front Axle.>
7) While supporting the front drive shaft horizontally with one hand, turn the hub with the other hand to check for noise or binding.
If the hub is noisy or binds, replace the front axle.

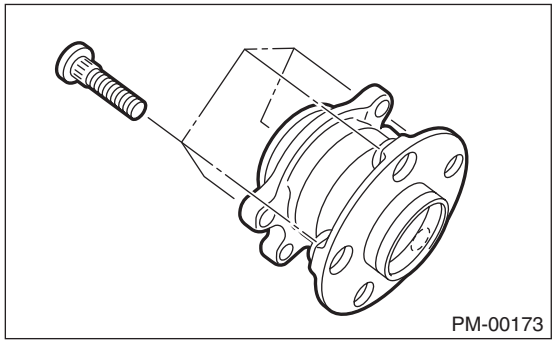
PM-00173

2. REAR WHEEL BEARING

1) Jack-up the rear side of vehicle.
2) While holding the rear wheel by hand, swing it in and out to check bearing free play.
3) Loosen the wheel nuts, and remove the rear wheel.
4) If the bearing free play exists in step 2) above, attach a dial gauge to the hub and measure axial play in axial direction.

Service limit:
Straight-ahead position within 0.05 mm (0.0020 in)

5) Remove the DOJ of rear drive shaft from rear differential. <Ref. to DS-57, Rear Drive Shaft.>
6) While supporting rear drive shaft horizontally with one hand, turn the hub with the other hand to check for noise or binding.
If the hub is noisy or binds, replace the rear axle.

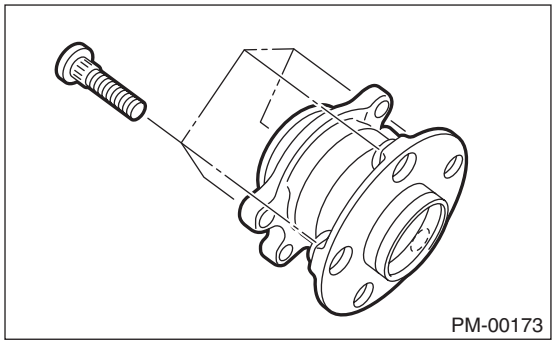
PM-00173

24.Axle Boots & Joints

A: INSPECTION

1. FRONT AND REAR AXLE BOOTS

Inspect the front axle boots (A) and rear axle boots (B) for deformation, damage or failure. If faulty, replace with new part. <Ref. to DS-48, Front Drive Shaft.> <Ref. to DS-57, Rear Drive Shaft.>

- Front

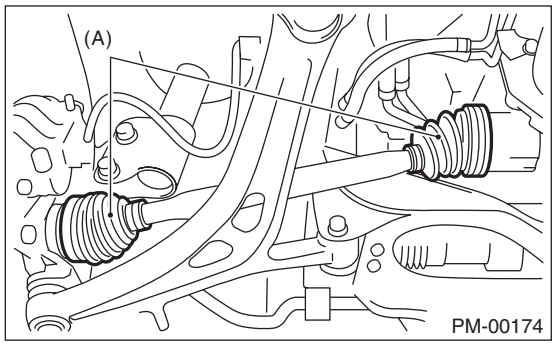

- Rear

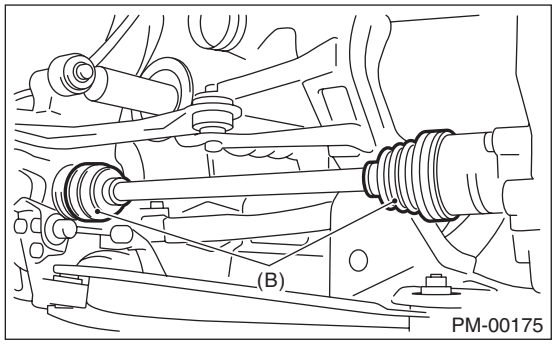

2. PROPELLER SHAFT

Inspect the propeller shaft for damage or failure. If faulty, replace with new part. <Ref. to DS-10, Propeller Shaft.>

25.Tire Rotation

A: INSPECTION

Refer to “WT” section for tire rotation procedures. <Ref. to WT-5, TIRE ROTATION, INSPECTION, Tire and Wheel.>

26.Steering System (Power Steering)

A: INSPECTION

1. STEERING WHEEL

1) Set the steering wheel in a straight-ahead position, and check the wheel spokes to make sure they are correctly set in their specified positions.
2) Lightly turn the steering wheel to the left and right to determine the point where front wheels start to move.
Measure the distance of the movement of steering wheel (periphery).

Steering wheel free play:
0 — 17 mm (0 — 0.67 in)

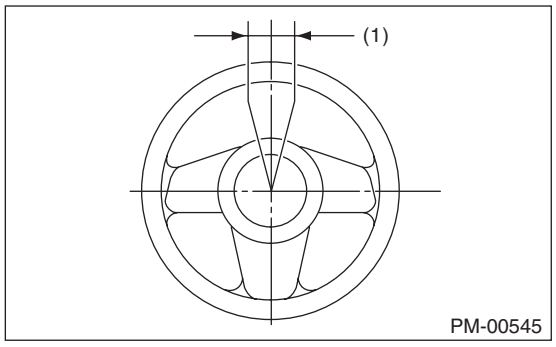

(1) Steering wheel free play

Move the steering wheel vertically toward the shaft to check if there is play in the direction.

Play limit:
0.5 mm (0.020 in)

3) Drive the vehicle and check the following items.
(1) Steering force:
The effort required for steering should be smooth and even at all points, and should not vary.
(2) Pulled to one side:
Steering wheel should not be pulled to one side while driving on a level surface.
(3) Wheel runout:
Steering wheel should not show any sign of runout.
(4) Return status:
Steering wheel should return to its original position after it has been turned and then released.

2. STEERING SHAFT JOINT

When the steering wheel free play is excessive, disconnect the universal joint of steering shaft and check it for any play and yawing torque (at the point of the crossing direction). Also inspect for any damage to sealing or worn serrations. If the joint is loose, retighten the mounting bolts to the specified torque. <Ref. to PS-21, Universal Joint.>

Tightening torque:
24 N·m (2.4 kgf-m, 17.4 ft-lb)

3. GEARBOX

1) Set the steering wheel in the straight position, then rotate it 90° in both the left and right directions. While steering wheel is being rotated, check the gearbox for looseness.

Tightening torque:
60 N·m (6.1 kgf-m, 44.3 ft-lb)

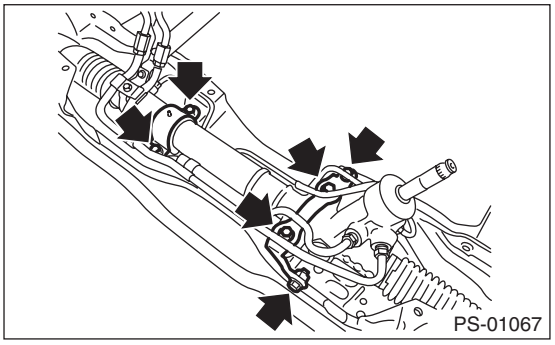

2) Check the boot for damage, cracks or deterioration.
3) With the vehicle stopped on a level surface, quickly turn the steering wheel to the left and right. While steering wheel is being rotated, check the gear backlash. If any noise is noticed, adjust the gear backlash. <Ref. to PS-61, GEARBOX BACKLASH ADJUSTMENT (SERVICING ON VEHICLE), ADJUSTMENT, Steering Gearbox.>

4. TIE-ROD

1) Check the tie-rod and tie-rod ends for bends, scratches or other damage.

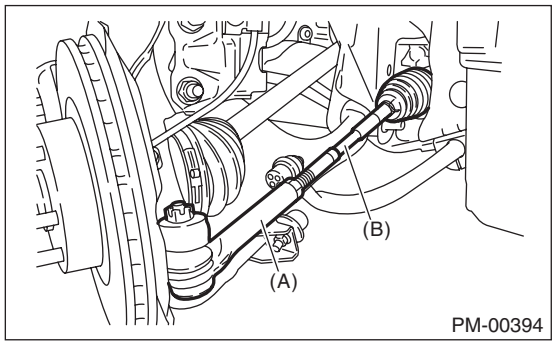

(A) Tie-rod end
(B) Tie-rod

2) Confirm that the connections of knuckle ball joints for play, and then check for damage on dust boots and free play of ball studs. If castle nut is loose, retighten it to the specified torque, then tighten further up to a maximum of 60° until the cotter pin hole is aligned.

Tightening torque:
27 N·m (2.75 kgf-m, 19.9 ft-lb)

3) Check the lock nut on the tie-rod end for tightness. If it is loose, retighten it to the specified torque.

Tightening torque:
85 N·m (8.7 kgf-m, 62.7 ft-lb)

5. GEARBOX BOOTS

Inspect both sides of the gearbox boot as follows, and correct the defects if necessary.
1) The (A) and (B) positions of the gearbox boot are fitted in (A) and (C) grooves of gearbox and the rod.
2) Clips are fitted outside of positions (A) and (B) of boot.
3) Check that there is no cracks or holes in the boot.

NOTE:
Rotate (B) position of gearbox boot against the torsion produced by the adjustment of toe-in etc. Apply grease to the groove (C).

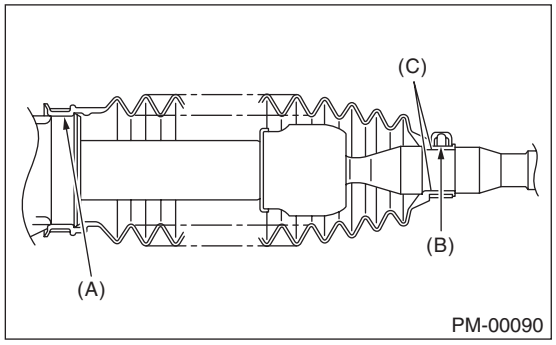

27.A/C Filter

A: REPLACEMENT

Refer to “AC” section for A/C filter replacement.
<Ref. to AC-104, REPLACEMENT, A/C Filter.>

ENGINE 1 SECTION

This service manual has been prepared to provide SUBARU service personnel with the necessary information and data for the correct maintenance and repair of SUBARU vehicles.
This manual includes the procedures for maintenance, disassembling, reassembling, inspection and adjustment of components and diagnostics for guidance of experienced mechanics.
Please peruse and utilize this manual fully to ensure complete repair work for satisfying our customers by keeping their vehicle in optimum condition. When replacement of parts during repair work is needed, be sure to use SUBARU genuine parts.

All information, illustration and specifications contained in this manual are based on the latest product information available at the time of publication approval.

FUEL INJECTION (FUEL SYSTEMS)	FU(H4SO)
EMISSION CONTROL (AUX. EMISSION CONTROL DEVICES)	EC(H4SO)
INTAKE (INDUCTION)	IN(H4SO)
MECHANICAL	ME(H4SO)
EXHAUST	EX(H4SO)
COOLING	CO(H4SO)
LUBRICATION	LU(H4SO)
SPEED CONTROL SYSTEMS	SP(H4SO)
IGNITION	IG(H4SO)
STARTING/CHARGING SYSTEMS	SC(H4SO)
ENGINE (DIAGNOSTICS)	EN(H4SO)(diag)
GENERAL DESCRIPTION	GD(H4SO)

FUEL INJECTION (FUEL SYSTEMS)

FU(H4SO)

		Page
1.	General Description	2
2.	Throttle Body	15
3.	Intake Manifold	17
4.	Engine Coolant Temperature Sensor	24
5.	Crankshaft Position Sensor	25
6.	Camshaft Position Sensor	27
7.	Knock Sensor	29
8.	Throttle Position Sensor	31
9.	Mass Air Flow and Intake Air Temperature Sensor	32
10.	Manifold Absolute Pressure Sensor	33
11.	EGR Valve	36
12.	Fuel Injector	37
13.	Variable Valve Lift Diagnosis Oil Pressure Switch	38
14.	Oil Temperature Sensor	40
15.	Front Oxygen (A/F) Sensor	42
16.	Rear Oxygen Sensor	44
17.	Engine Control Module (ECM)	46
18.	Main Relay	47
19.	Fuel Pump Relay	49
20.	Electronic Throttle Control Relay	51
21.	Fuel	53
22.	Fuel Tank	55
23.	Fuel Filler Pipe	62
24.	Fuel Pump	65
25.	Fuel Level Sensor	67
26.	Fuel Sub Level Sensor	69
27.	Fuel Filter	71
28.	Fuel Delivery and Evaporation Lines	73
29.	Fuel System Trouble in General	79

1. General Description

A: SPECIFICATION

Fuel tank	Capacity	70 ℓ (18.5 US gal, 15.4 Imp gal)
	Location	Under rear seat
Fuel pump	Type	Impeller
	Shutoff discharge pressure	677 kPa (6.9 kgf/cm^2, 98.2 psi) or less
	Discharge rate	105 ℓ (27.7 US gal, 23.1 Imp gal)/h or more [12 V at 300 kPa (3.06 kgf/cm^2, 43.5 psi)]
Fuel filter		In-tank type

B: COMPONENT

1. INTAKE MANIFOLD

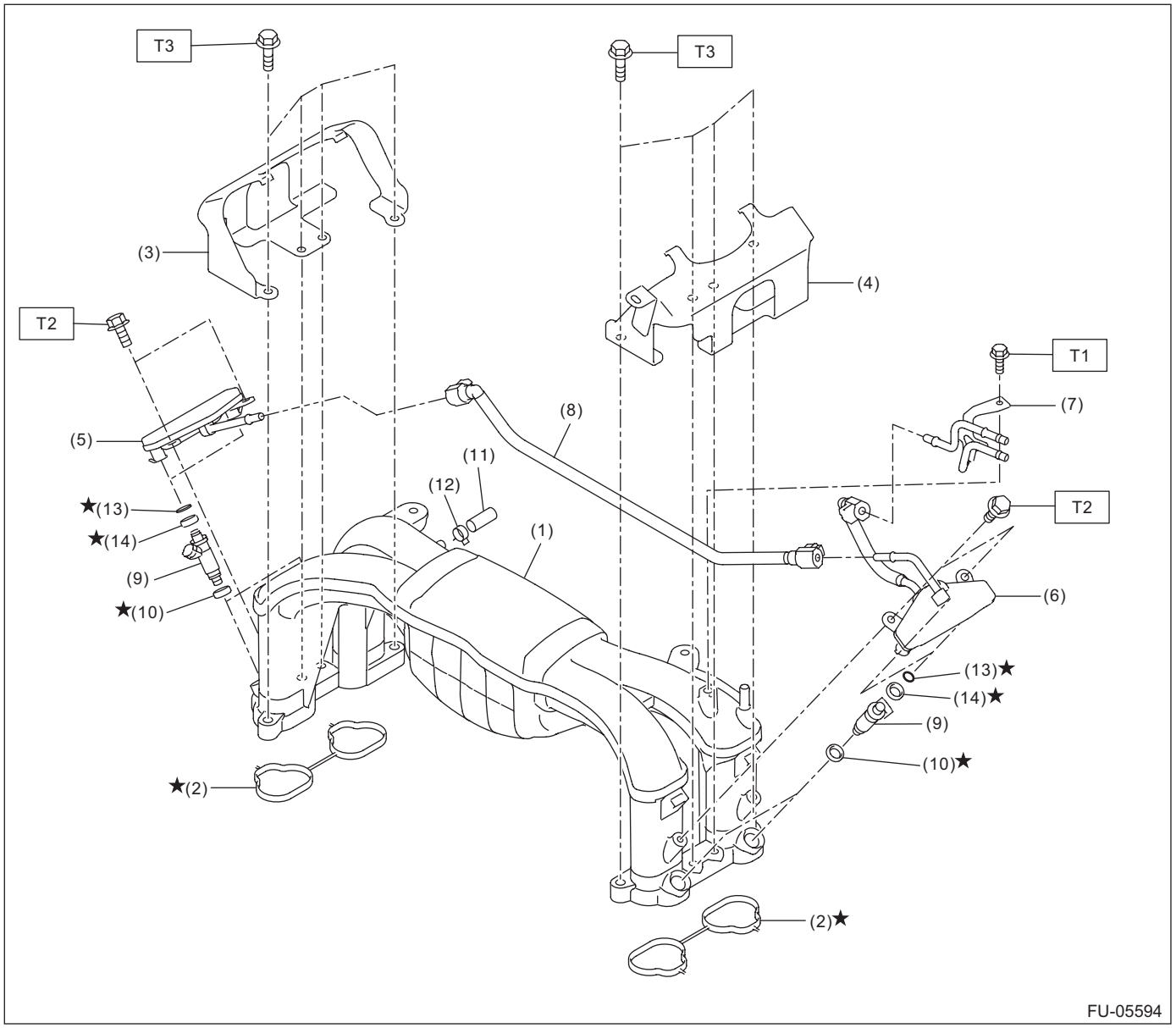

(1) Intake manifold
(2) Gasket
(3) Intake manifold protector RH
(4) Intake manifold protector LH
(5) Fuel gallery RH
(6) Fuel gallery LH
(7) Fuel pipe
(8) Fuel delivery pipe
(9) Injector
(10) Seal ring
(11) Cap
(12) Clip
(13) O-ring
(14) Rubber

Tightening torque:N·m (kgf-m, ft-lb)
T1: 6.4 (0.7, 4.7)
T2: 19 (1.9, 14.0)
T3: 25 (2.5, 18.4)

2. AIR INTAKE SYSTEM

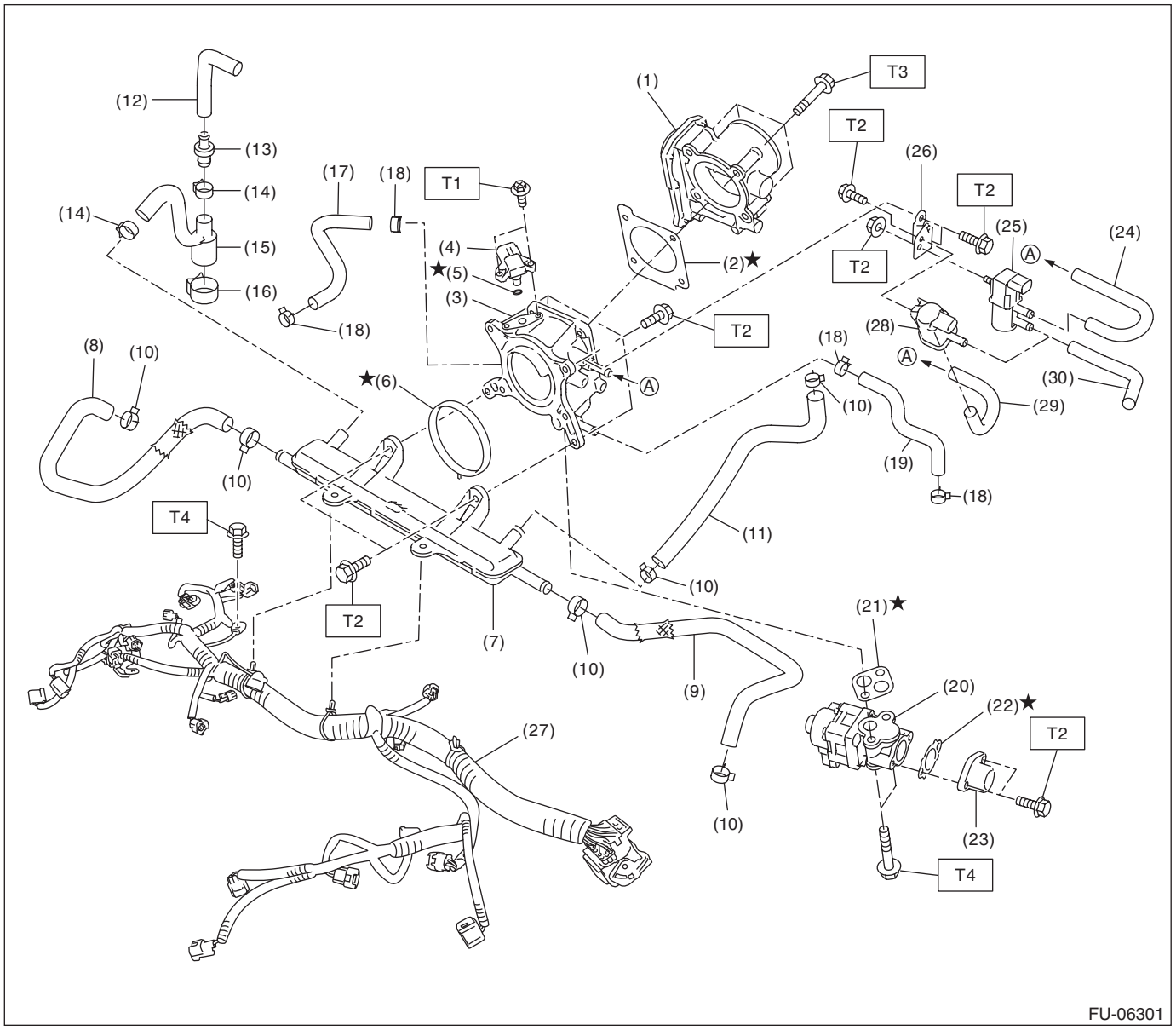

(1) Throttle body
(2) Gasket
(3) Multi-function duct
(4) Manifold absolute pressure sensor
(5) O-ring
(6) Gasket
(7) PCV pipe
(8) PCV hose A
(9) PCV hose B
(10) Clip
(11) PCV hose C
(12) PCV hose D
(13) PCV valve
(14) Clip
(15) PCV hose E
(16) Clip
(17) Heater hose A
(18) Clip
(19) Heater hose B
(20) EGR valve
(21) Gasket
(22) Gasket
(23) EGR pipe adapter
(24) Evaporation hose A
(25) Purge control solenoid valve (Other than U5 model)
(26) Bracket
(27) Engine harness
(28) Purge control solenoid valve (U5 model)
(29) Evaporation hose B
(30) Evaporation hose C

Tightening torque:N·m (kgf-m, ft-lb)
T1: 2 (0.2, 1.5)
T2: 6.4 (0.7, 4.7)
T3: 8 (0.8, 5.9)
T4: 19 (1.9, 14.0)

3. CRANKSHAFT POSITION, CAMSHAFT POSITION AND KNOCK SENSORS

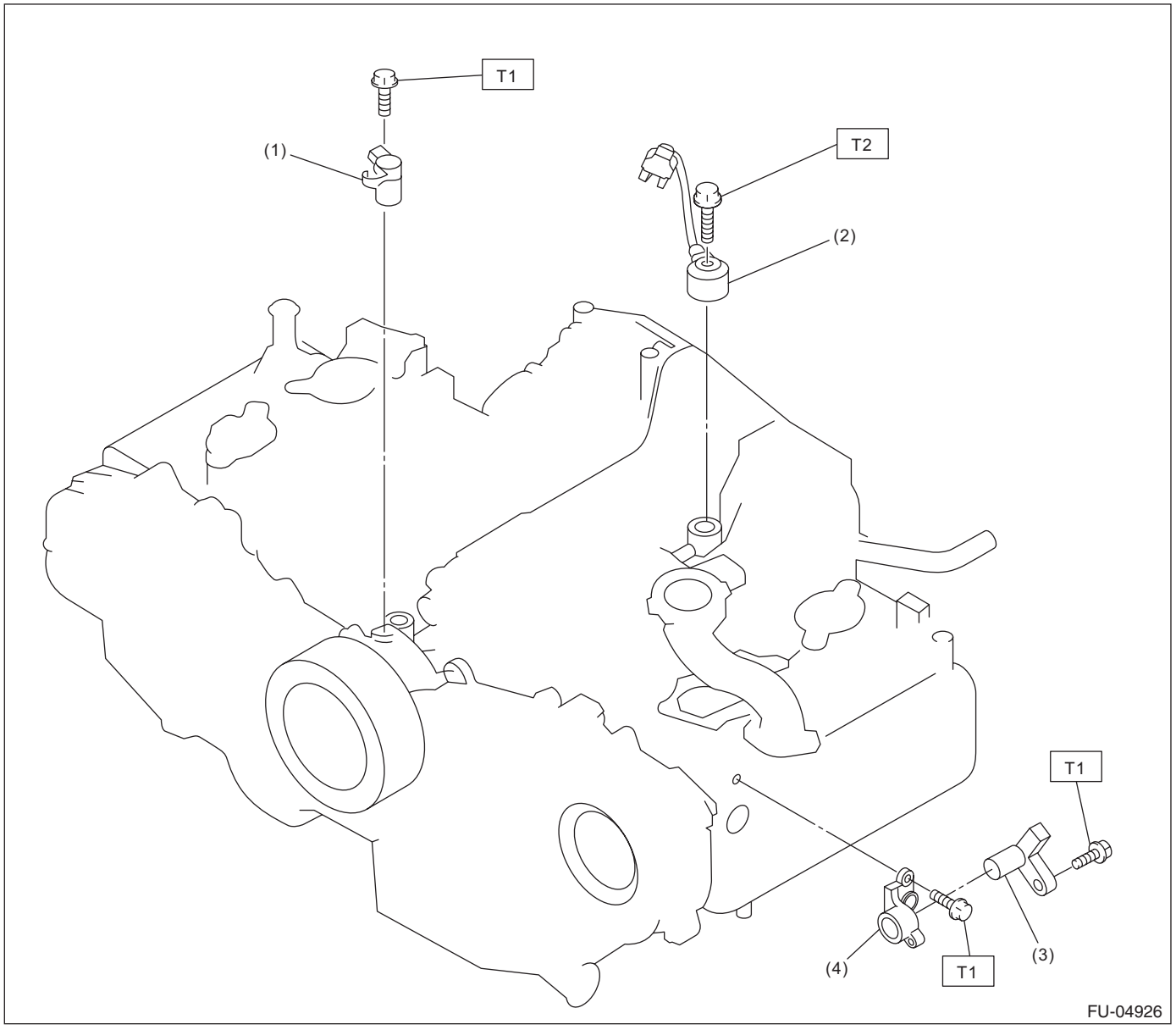

(1) Crankshaft position sensor
(2) Knock sensor
(3) Camshaft position sensor
(4) Camshaft position sensor support

Tightening torque:N·m (kgf-m, ft-lb)
T1: 6.4 (0.7, 4.7)
T2: 24 (2.4, 17.7)

4. FUEL TANK

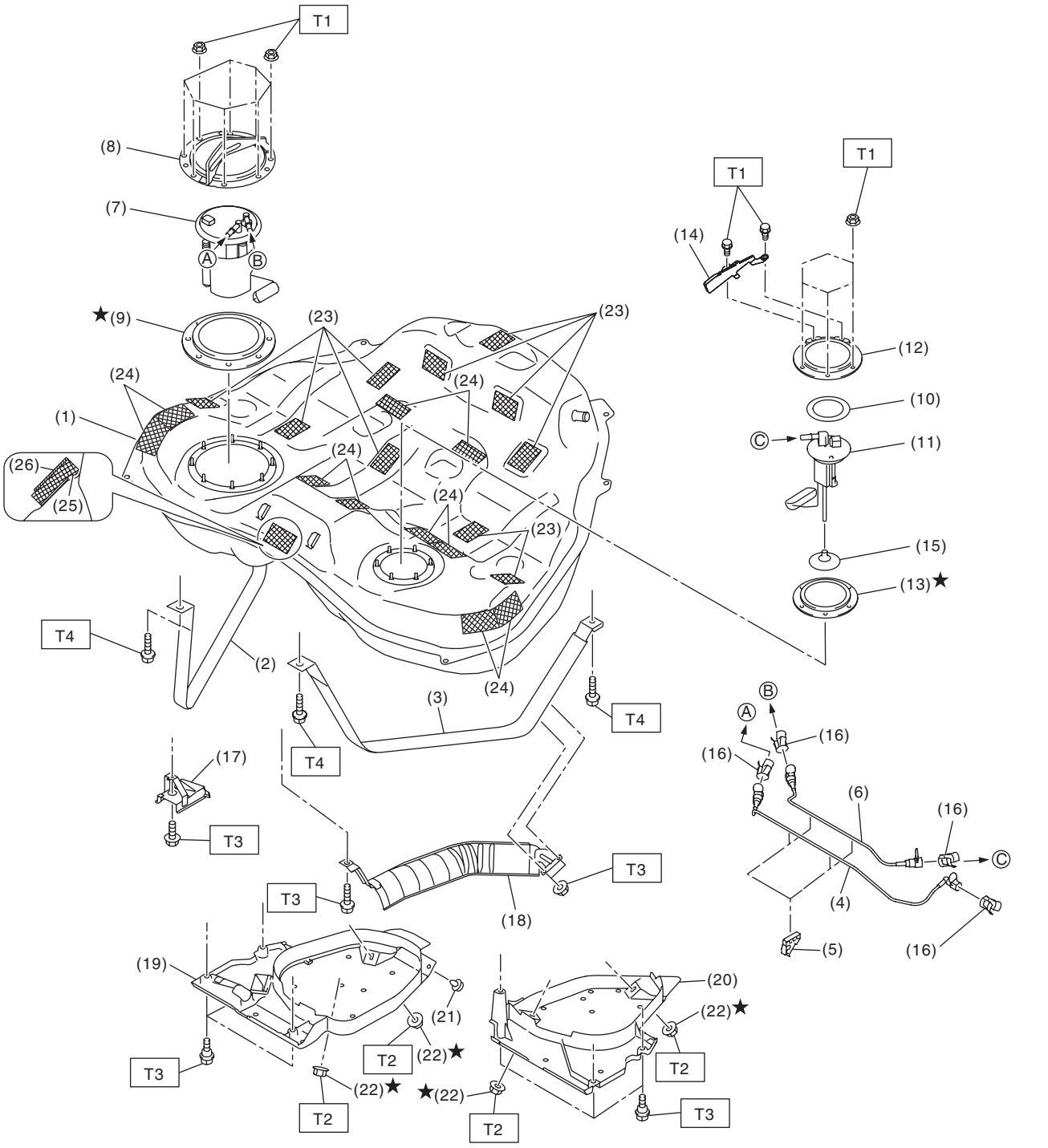

FU-06684

(1) Fuel tank
(2) Fuel tank band RH
(3) Fuel tank band LH
(4) Fuel delivery tube
(5) Tube clamp
(6) Fuel sub delivery tube
(7) Fuel pump assembly
(8) Fuel pump upper plate
(9) Fuel pump gasket
(10) Fuel sub level sensor upper plate cushion
(11) Fuel sub level sensor
(12) Fuel sub level sensor upper plate
(13) Fuel sub level sensor gasket
(14) Fuel sub level sensor protector
(15) Fuel sub level sensor filter
(16) Retainer
(17) Stopper
(18) Heat shield cover
(19) Fuel tank protector RH
(20) Fuel tank protector LH
(21) Clip
(22) Self-locking nut
(23) Cushion
(24) Cushion
(25) Cushion
(26) Cushion

Tightening torque:N·m (kgf-m, ft-lb)
T1: 4.4 (0.4, 3.2)
T2: 9 (0.9, 6.6)
T3: 18 (1.8, 13.3)
T4: 33 (3.4, 24.3)

5. FUEL LINE

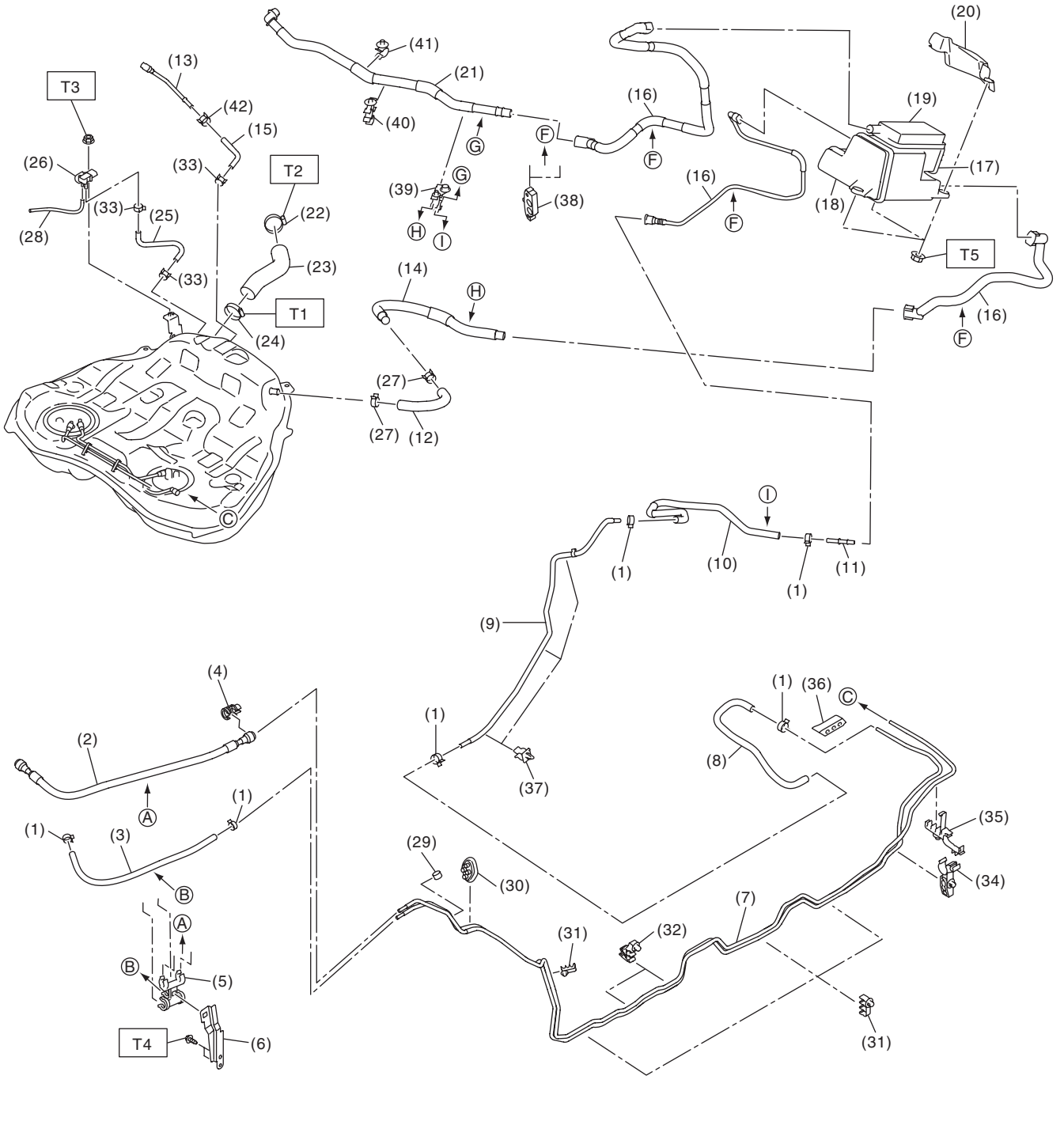

FU-06714

(1) Clip
(2) Fuel delivery hose
(3) Evaporation hose
(4) Connect check cover
(5) Hose clamp
(6) Hose clamp bracket
(7) Fuel pipe ASSY
(8) Purge hose A
(9) Purge pipe
(10) Purge hose B
(11) Connector
(12) Air vent hose A
(13) Circulate tube
(14) Air vent tube
(15) Circulate hose
(16) Canister tube ASSY
(17) Drain valve
(18) Canister
(19) Drain filter
(20) Canister protector
(21) Drain tube ASSY
(22) Clamp
(23) Fuel filler hose
(24) Clamp
(25) Pressure hose
(26) Fuel tank pressure sensor
(27) Clip
(28) Vacuum hose
(29) Bushing
(30) Fuel pipe front grommet
(31) Pipe clamp
(32) Pipe clamp
(33) Clip
(34) Pipe clamp
(35) Pipe clamp
(36) Fuel pipe rear grommet
(37) Pipe clamp
(38) Tube clamp
(39) Tube clamp
(40) Tube clamp
(41) Tube clamp
(42) Clip

Tightening torque:N·m (kgf-m, ft-lb)
T1: 2 (0.2, 1.5)
T2: 2.5 (0.3, 1.8)
T3: 7.35 (0.7, 5.4)
T4: 7.5 (0.8, 5.5)
T5: 8 (0.8, 5.9)

6. FUEL FILLER PIPE

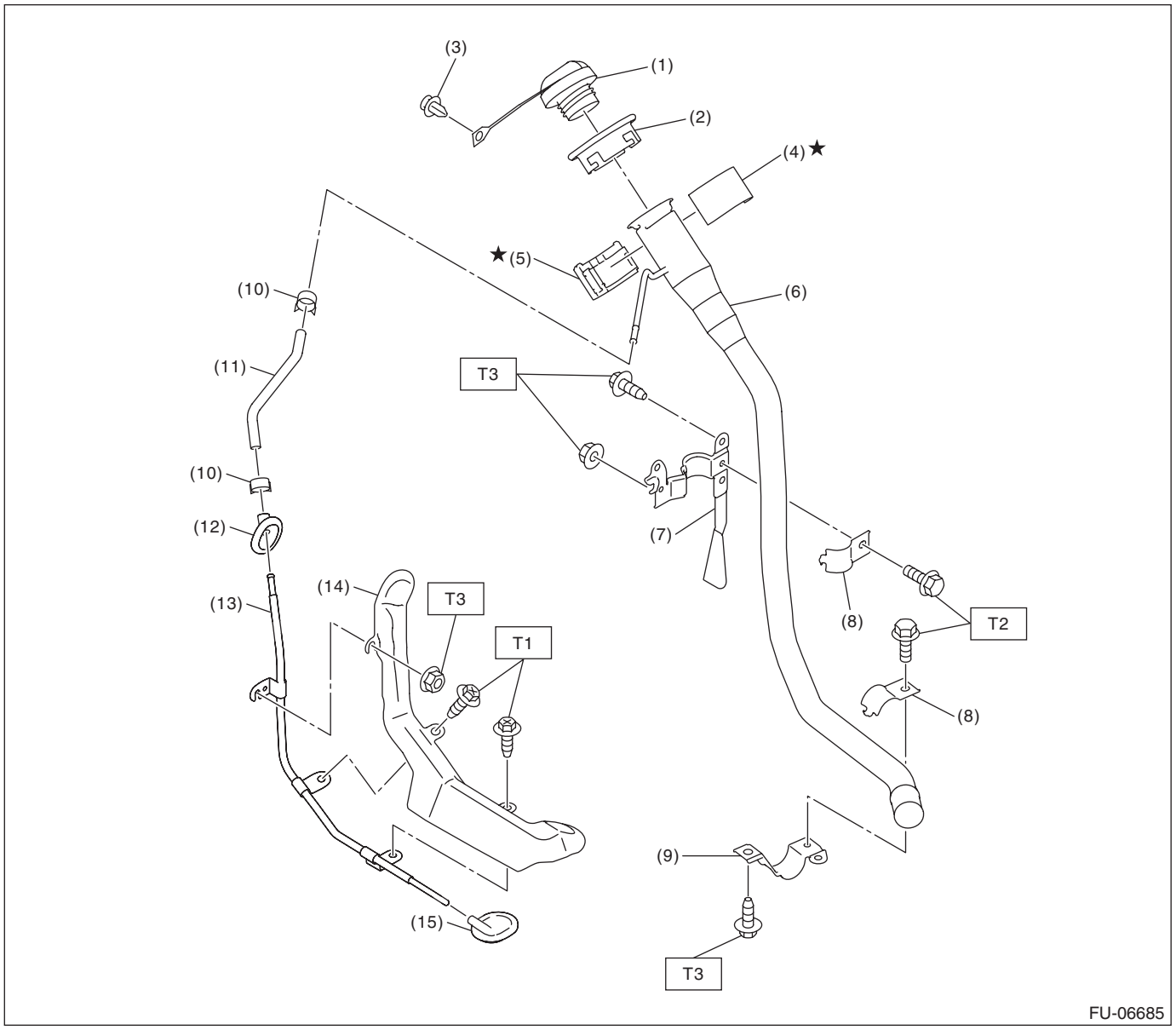

(1) Fuel filler cap
(2) Fuel filler pipe protector
(3) Clip
(4) Neck holder A
(5) Neck holder B
(6) Fuel filler pipe
(7) Fuel filler pipe bracket A
(8) Fuel filler pipe bracket B
(9) Fuel filler pipe bracket C
(10) Clip
(11) Evaporation hose
(12) Grommet
(13) Evaporation pipe
(14) Evaporation pipe protector
(15) Grommet

Tightening torque:N·m (kgf-m, ft-lb)
T1: 1 (0.1, 0.7)
T2: 7.35 (0.7, 5.4)
T3: 7.5 (0.8, 5.5)

7. FUEL PUMP

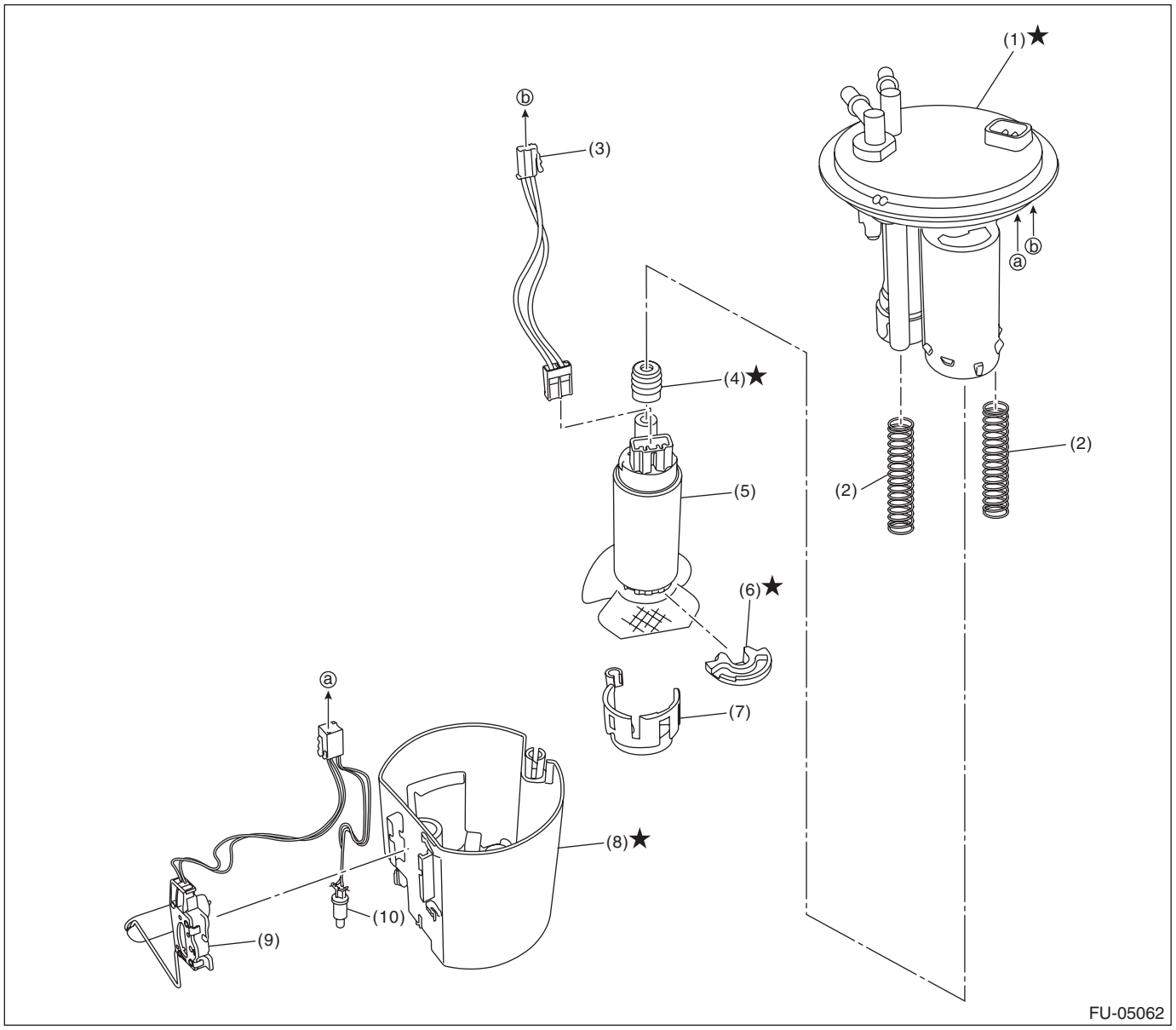

(1) Fuel filter assembly
(2) Pump module spring
(3) Fuel pump harness
(4) Gasket spacer
(5) Fuel pump
(6) Support rubber cushion
(7) Fuel pump holder
(8) Fuel chamber ASSY
(9) Fuel level sensor
(10) Fuel temperature sensor

C: CAUTION

• Wear appropriate work clothing, including a cap, protective goggles and protective shoes when performing any work.
• Remove contamination including dirt and corrosion before removal, installation or disassembly.
• Keep the disassembled parts in order and protect them from dust and dirt.
• Before removal, installation or disassembly, be sure to clarify the failure. Avoid unnecessary removal, installation, disassembly and replacement.
• Vehicle components are extremely hot after driving. Be wary of receiving burns from heated parts.
• Be sure to tighten fasteners including bolts and nuts to the specified torque.
• Place shop jacks or rigid racks at the specified points.
• Before disconnecting connectors of sensors or units, be sure to disconnect the ground cable from battery.
• Place “NO OPEN FLAMES” signs near the working area.
• Prepare a container and cloth to prevent scattering of fuels when performing work where fuels can be spilled. If the oil spills, wipe it off immediately to prevent from penetrating into floor or flowing out for environmental protection.
• Follow all government and local regulations concerning disposal of refuse when disposing fuel.

D: PREPARATION TOOL

1. SPECIAL TOOL

ILLUSTRATION	TOOL NUMBER	DESCRIPTION	REMARKS
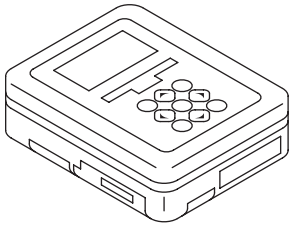 ST1B022XU0	1B022XU0	SUBARU SELECT MONITOR III KIT	Used for draining fuel and each inspection.
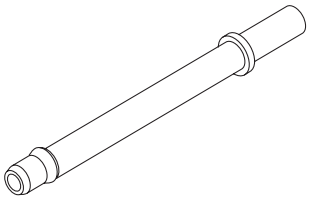 ST18471AA000	18471AA000	FUEL PIPE ADAPTER	Used for draining fuel.
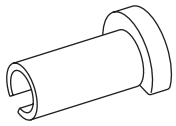 ST42099AE000	42099AE000	QUICK CONNECTOR RELEASE	Used for removing the quick connector.

2. GENERAL TOOL

TOOL NAME	REMARKS
Circuit tester	Used for measuring resistance and voltage.
Oscilloscope	Used for inspecting the waveform of each sensor.

2. Throttle Body

A: REMOVAL

1) Disconnect the ground cable from battery.

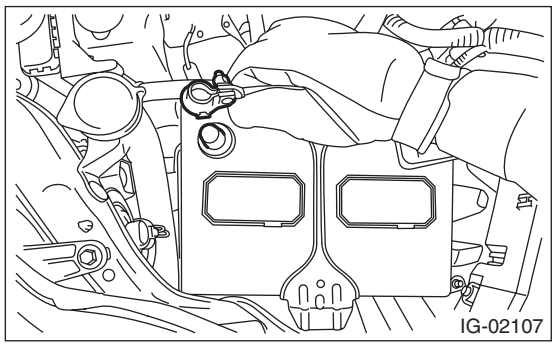

2) Remove the cover (A) and clip (B) from air intake boot assembly.

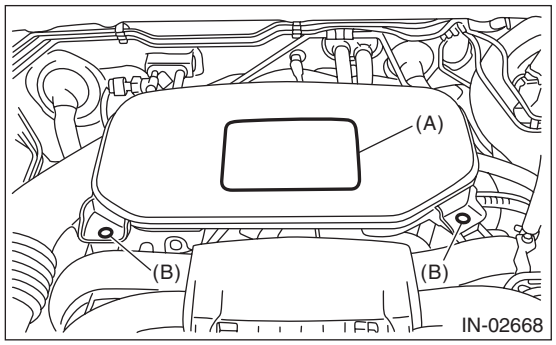

3) Loosen the clamp (A) which connects the air intake boot assembly and air cleaner case.
4) Loosen the clamp (B) which connects the air intake boot assembly and throttle body.

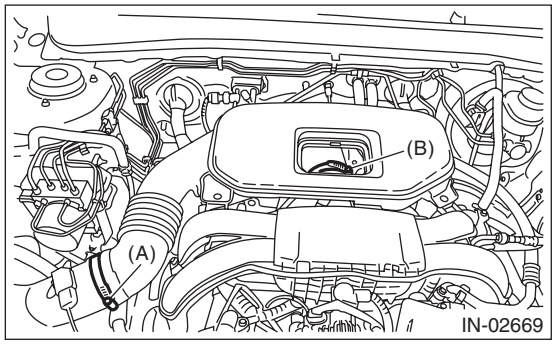

5) Remove the air intake boot from the throttle body, and move it to the left side wheel apron.

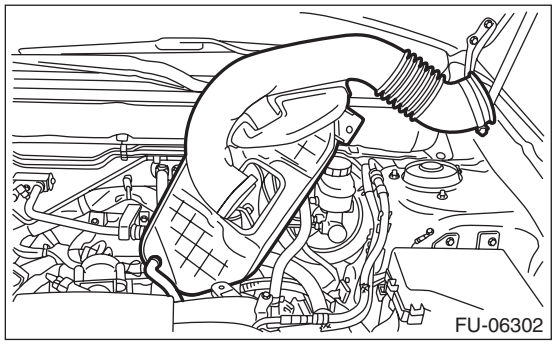

6) Disconnect the connectors (A) from the throttle position sensor.
7) Remove the bolts which secure the throttle body to the multi-function duct assembly, and remove the throttle body.

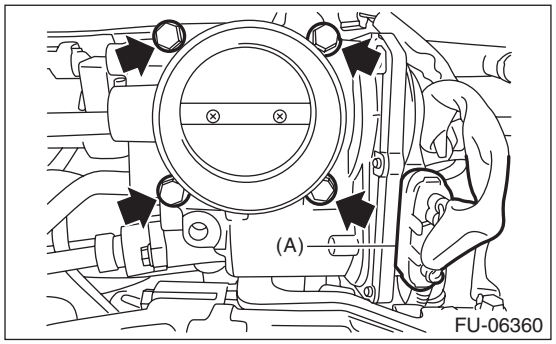

B: INSTALLATION

Install in the reverse order of removal.

NOTE:
Use a new gasket.

Tightening torque:
8 N·m (0.8 kgf-m, 5.9 ft-lb)

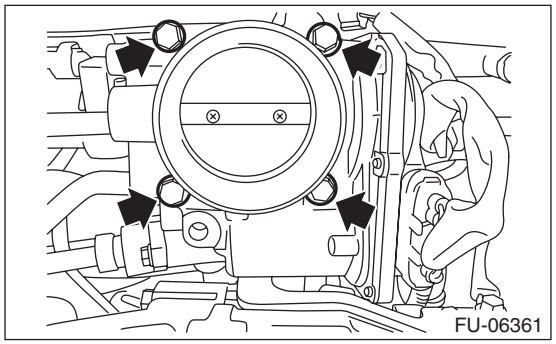

NOTE:
Align the clamp hole with the protrusion of the air intake boot assembly.

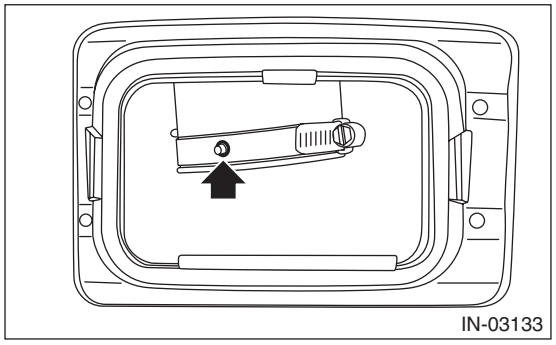

Tightening torque:
Clamp (A), (B)
3 N·m (0.3 kgf-m, 2.2 ft-lb)

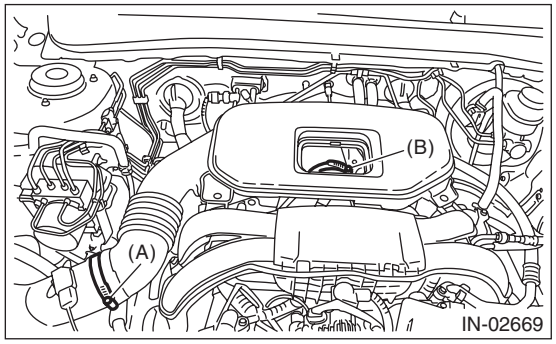

C: INSPECTION

1. THROTTLE SENSOR (METHOD WITH CIRCUIT TESTER)

1) Warm up the engine.
2) Remove the glove box lid assembly. <Ref. to EI-66, REMOVAL, Glove Box.>
3) Turn the ignition switch to ON. (engine OFF)
4) Measure the voltage between ECM connector terminals.

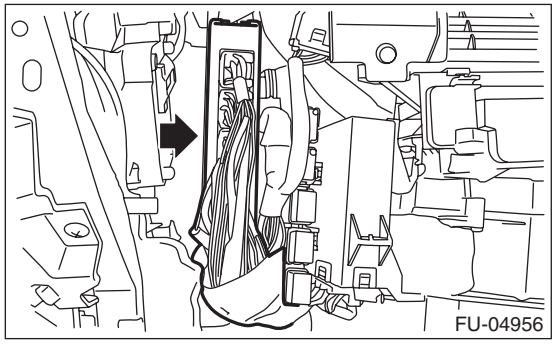

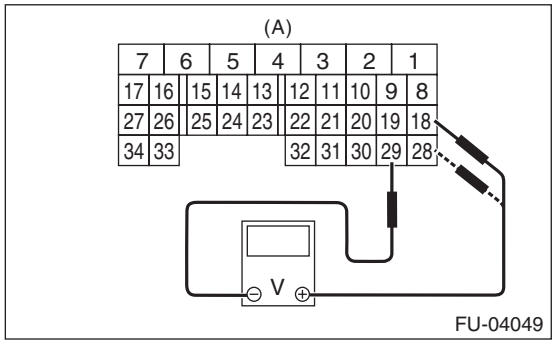

(A) To ECM connector

Throttle sensor	Accelerator pedal	Terminal No.	Standard
Main	Not depressed	18 (+) and 29 (–)	Approx. 0.9 V
Sub	Not depressed	28 (+) and 29 (–)	Approx. 1.7 V

5) After inspection, install the related parts in the reverse order of removal.

2. THROTTLE SENSOR (METHOD WITH SUBARU SELECT MONITOR)

1) Warm up the engine.
2) Turn the ignition switch to ON. (engine OFF)
3) Read the throttle opening angle signal and voltage of throttle sensor using Subaru Select Monitor. <Ref. to EN(H4SO)(diag)-33, READ CURRENT DATA FOR ENGINE (NORMAL MODE), OPERATION, Subaru Select Monitor.>

Throttle sensor	Throttle opening angle signal	Standard
Main	5%	Approx. 0.9 V
Sub	5%	Approx. 1.7 V

3. OTHER INSPECTIONS

1) Check that the throttle body has no deformation, cracks or other damages.
2) Check that the engine coolant hose has no cracks, damage or loose part.

3. Intake Manifold

A: REMOVAL

1. INTAKE MANIFOLD

1) Release the fuel pressure. <Ref. to FU(H4SO)-53, RELEASING OF FUEL PRESSURE, PROCEDURE, Fuel.>
2) Disconnect the ground cable from battery.

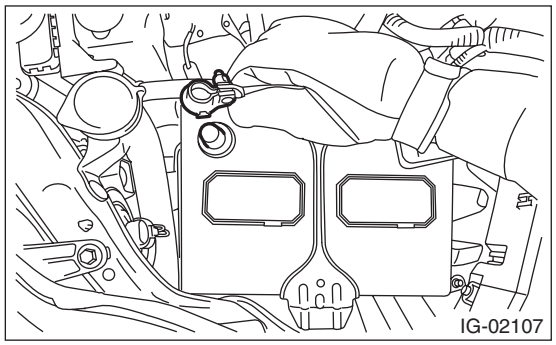

3) Open the fuel filler lid and remove the fuel filler cap.
4) Remove the cover (A) and clip (B) from air intake boot assembly.

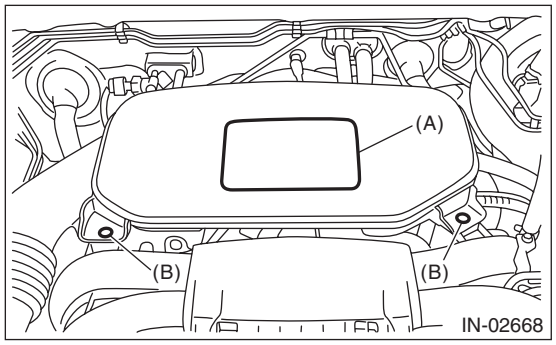

5) Loosen the clamp (A) which connects the air intake boot assembly and air cleaner case.
6) Loosen the clamp (B) which connects the air intake boot assembly and throttle body.

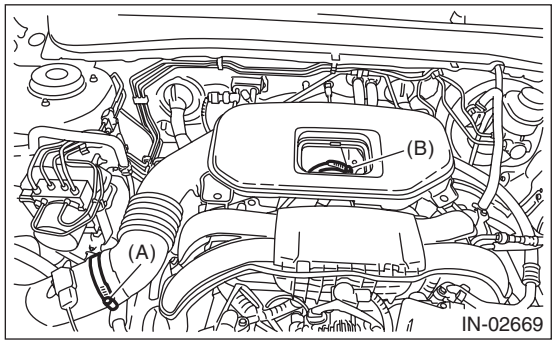

7) Remove the air intake boot from the throttle body, and move it to the left side wheel apron.

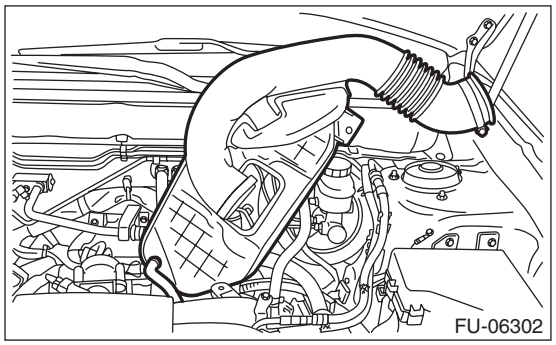

8) Disconnect the connector from the ignition coil of #3 cylinder.

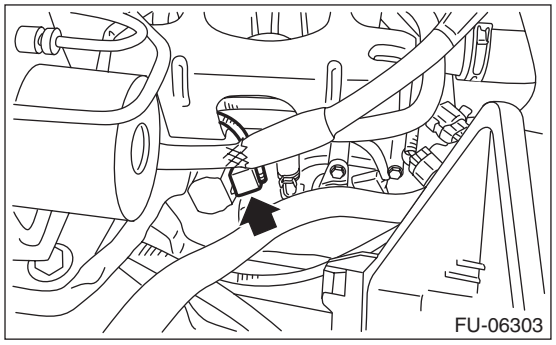

9) Remove the intake manifold protector RH.

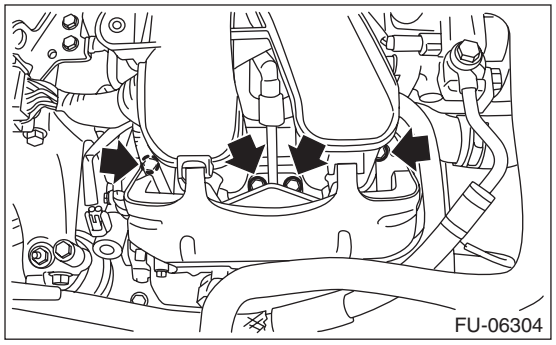

10) Remove the connector (A) from the fuel injector, and remove the fuel delivery pipe (B) from the fuel gallery RH.

NOTE:
Disconnect the quick connector as shown in the figure.

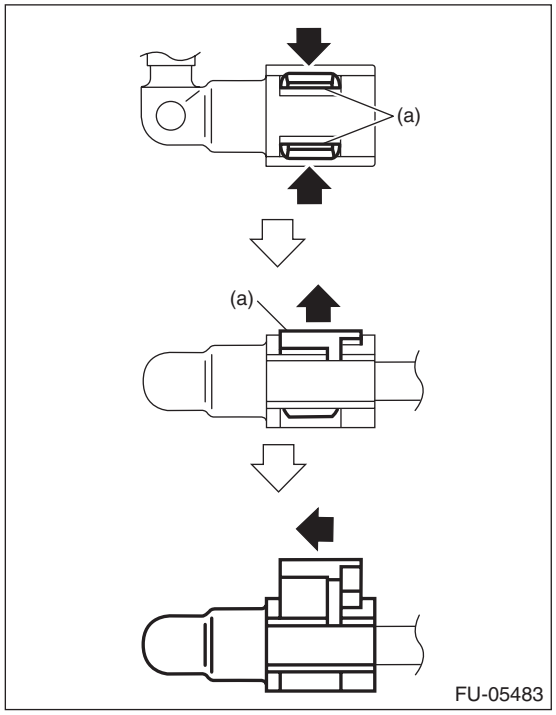

(a) Slider

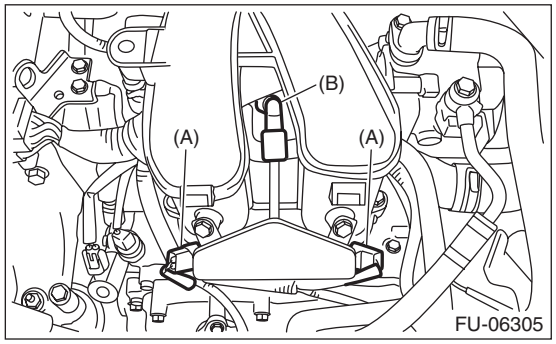

11) Disconnect the fuel delivery hose (A) and evaporation hose (B).

CAUTION:
- **Be careful not to spill fuel.**
- **Catch the fuel from hoses using a container or cloth.**

(1) Attach ST to the fuel delivery pipe and push ST in the direction of arrow mark to disconnect the quick connector of the fuel delivery hose (A).

ST 42099AE000 QUICK CONNECTOR RELEASE

(2) Remove the clip and disconnect the evaporation hose (B) from the pipe.

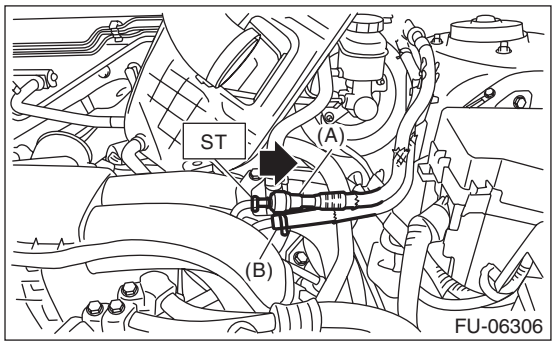

12) Remove the generator cable clip (A) from the intake manifold protector LH.
13) Remove the oil filler pipe (B) from the rocker cover LH.
14) Disconnect the brake booster vacuum hose (C).

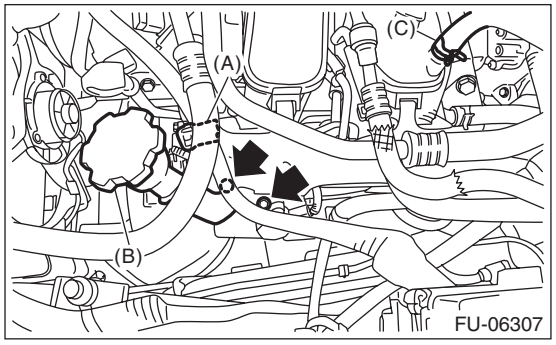

15) Disconnect the connector from the ignition coil of #2 cylinder.

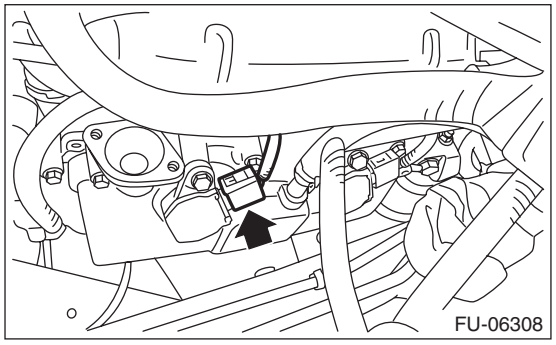

16) Remove the intake manifold protector LH.

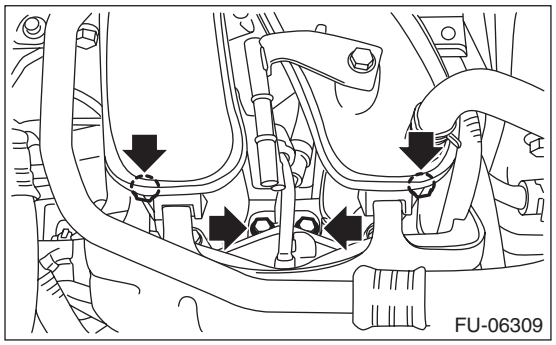

17) Remove the connector (A) from the fuel injector, and remove the fuel delivery pipe (B) from the fuel gallery LH.

NOTE:
Disconnect the quick connector as shown in the figure.

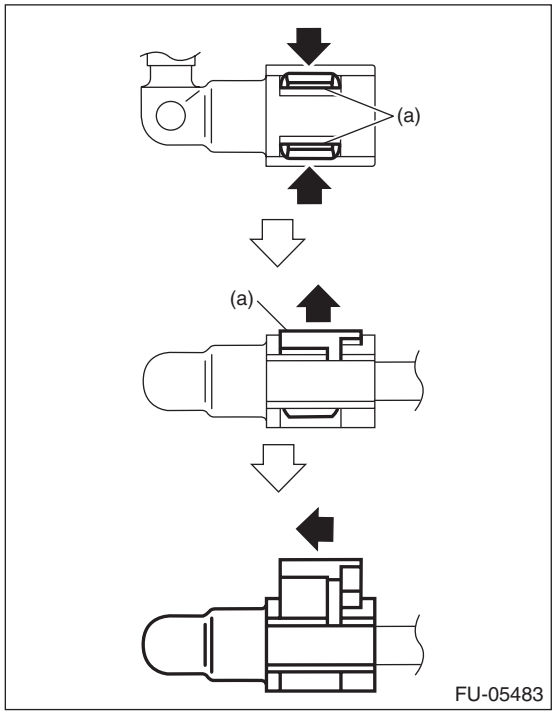

(a) Slider

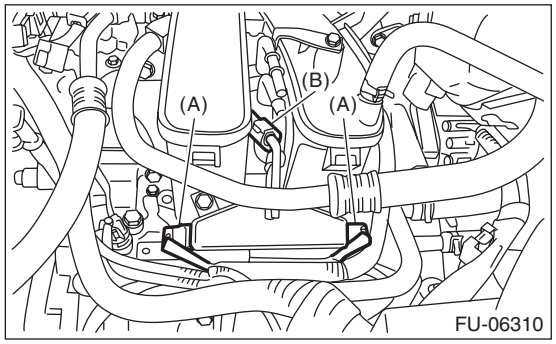

18) Remove the clip (A) securing the engine harness to the intake manifold, and remove the bolt (B) securing the LH side of the multifunction duct assembly.

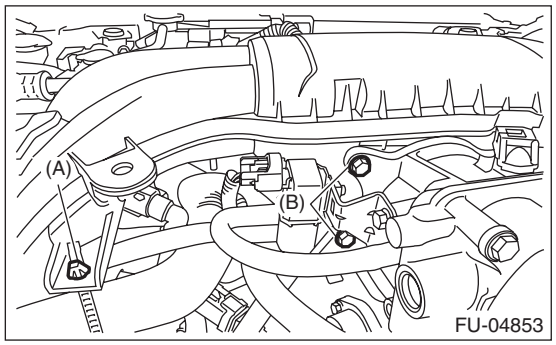

19) Remove the bolts (A) which secure the RH side of multi-function duct assembly to the intake manifold.

20) Remove the cap (B) from the intake manifold.

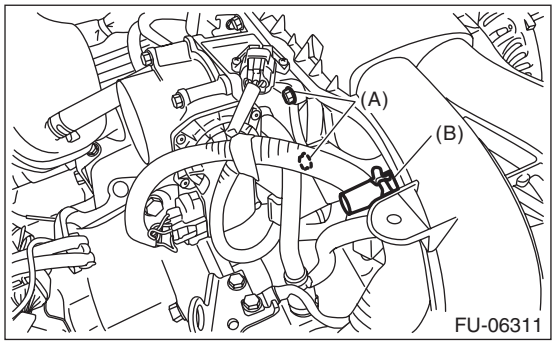

21) Remove the intake manifold from cylinder head.

22) Remove the fuel gallery RH and fuel injector from the intake manifold.

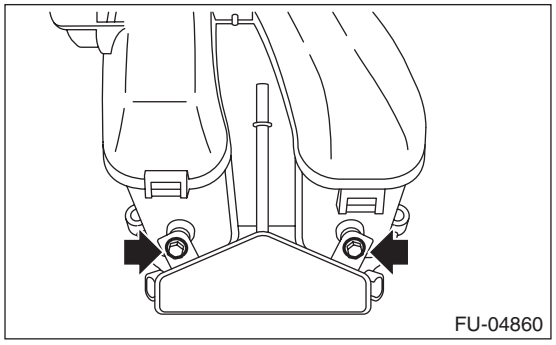

23) Remove the fuel gallery LH, fuel pipe and fuel injector from the intake manifold.

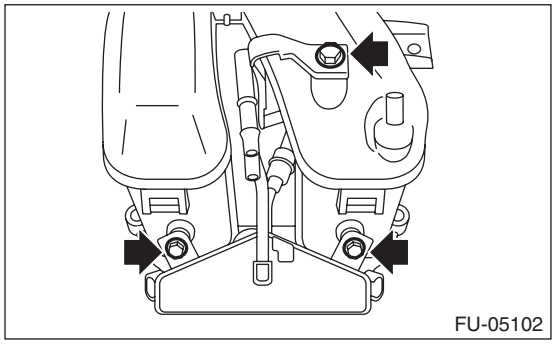

2. MULTI-FUNCTION DUCT ASSEMBLY

1) Release the fuel pressure. <Ref. to FU(H4SO)-53, RELEASING OF FUEL PRESSURE, PROCEDURE, Fuel.>
2) Disconnect the ground cable from battery.

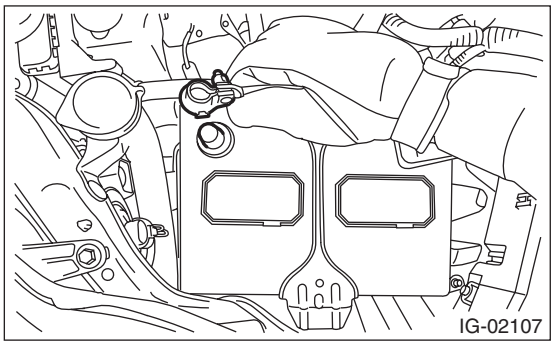

3) Open the fuel filler lid and remove the fuel filler cap.
4) Lift up the vehicle.
5) Remove the under cover. <Ref. to EI-35, REMOVAL, Front Under Cover.>
6) Drain approximately 3.0 ℓ (3.2 US qt, 2.6 Imp qt) of coolant. <Ref. to CO(H4SO)-14, DRAINING OF ENGINE COOLANT, REPLACEMENT, Engine Coolant.>
7) Lower the vehicle.
8) Remove the intake manifold. <Ref. to FU(H4SO)-17, INTAKE MANIFOLD, REMOVAL, Intake Manifold.>
9) Remove the bolt, and disconnect the bulkhead harness connector from the engine harness connector and rear engine hanger.

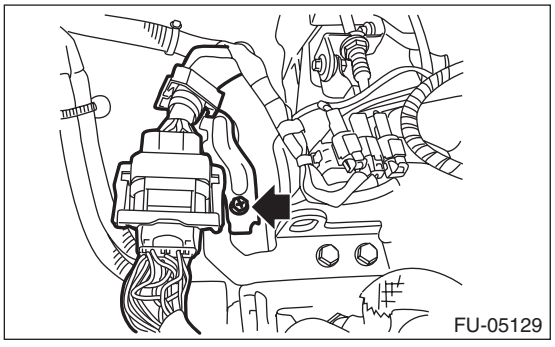

10) Slide the engine harness connector in the direction of the arrow and remove it from the rear engine hanger.

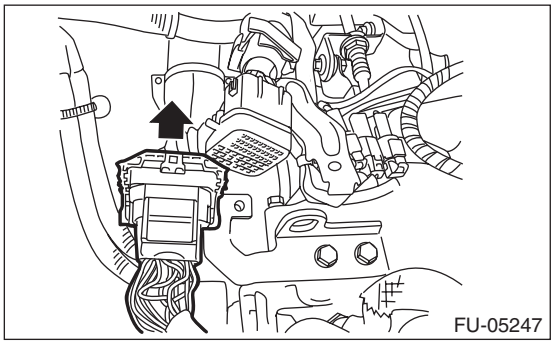

11) Disconnect the connector from the knock sensor.

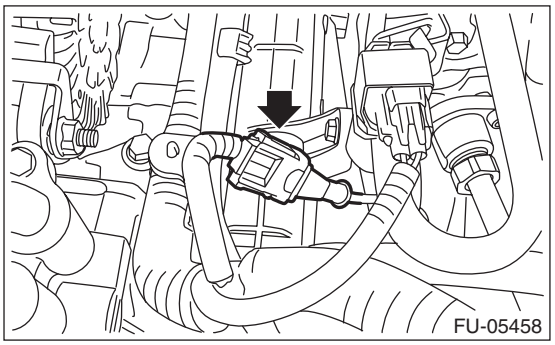

12) Disconnect the water hose (A) and EGR pipe (B) from the LH side of multi-function duct assembly.

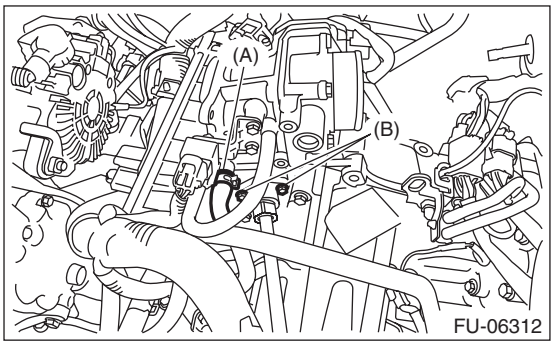

13) Disconnect the water hose from the RH side of multi-function duct assembly.

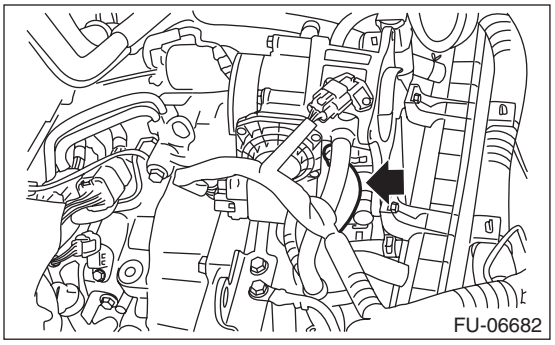

14) Disconnect the connector (A) from the engine coolant temperature sensor, and disconnect the terminal (B) from oil pressure switch and the connector (C) from the crankshaft position sensor.

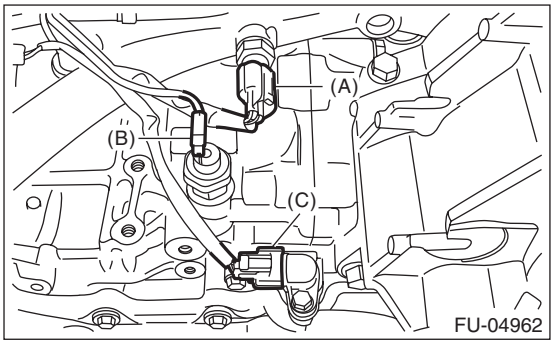

15) Disconnect the connector (A) from front oxygen (A/F) sensor and the connector (B) from the rear oxygen sensor.
16) Disconnect the connector (C) from the ignition coil of #1 cylinder.
17) Disconnect the connector (D) from the oil switching solenoid valve RH, disconnect the connector (E) from the oil temperature sensor RH, disconnect the connector (F) from the variable valve lift diagnosis switch and disconnect the ground terminal (G) from the rear engine hanger.

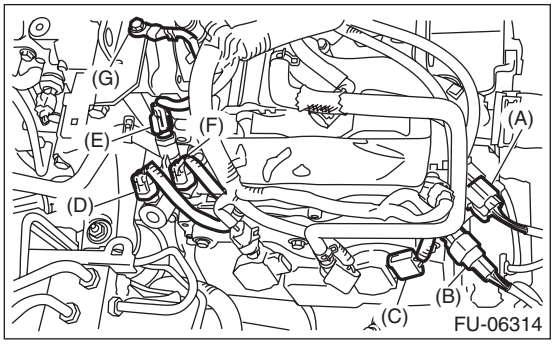

18) Slide the front oxygen (A/F) sensor connector and rear oxygen sensor connector in the direction of the arrow and remove them from the bracket.

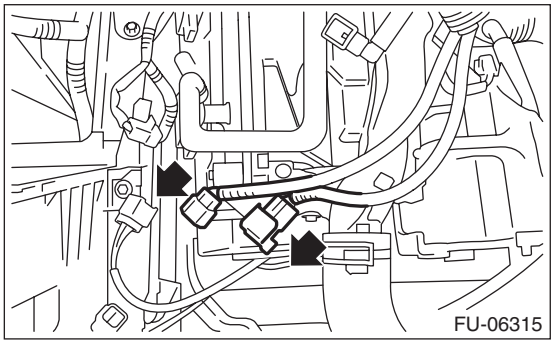

19) Disconnect the connector from the ignition coil of #4 cylinder.
20) Disconnect the connector (A) from the oil switching solenoid valve LH and the connector (B) from the camshaft position sensor LH.

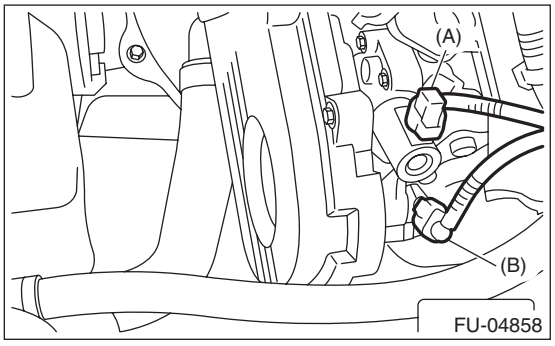

21) Remove the bolt (A) securing the multi-function duct assembly to the PCV pipe, and remove the multi-function duct assembly.
22) Remove the clip (B) securing the engine harness to the PCV pipe, and remove the engine harness.

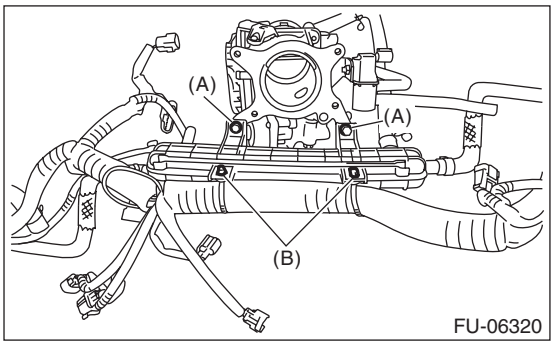

B: INSTALLATION

1. INTAKE MANIFOLD

Install in the reverse order of removal while being careful of the following.
• Connect the quick connector as shown in the figure.

CAUTION:
• Check that there is no damage or dust on the quick connector. If necessary, clean the seal surface of the pipe.
• When connecting the quick connector, make sure to insert the pipe all the way in before locking the slider.
• When it is difficult to lock the slider, check that the pipe is fully inserted.
• Make sure that the quick connector is securely connected.

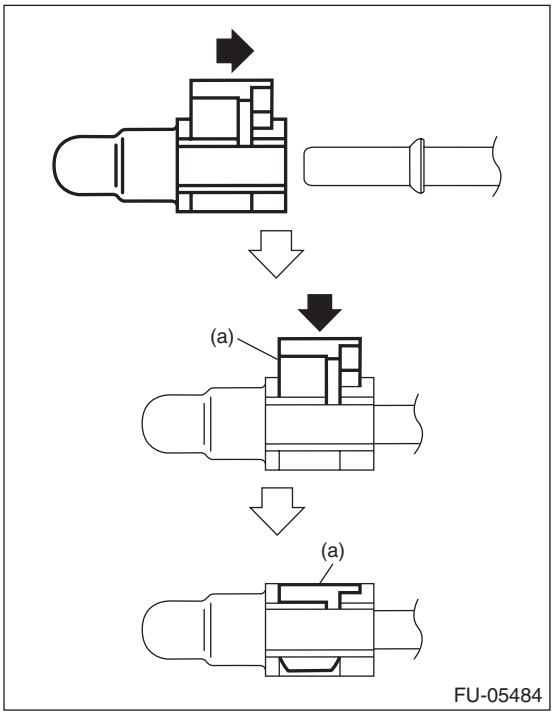

(a) Slider

NOTE:
- Use a new gasket.
- If fuel hoses or clamps are damaged, replace them with new parts.

Tightening torque:
T1: 6.4 N·m (0.7 kgf-m, 4.7 ft-lb)
T2: 19 N·m (1.9 kgf-m, 14.0 ft-lb)

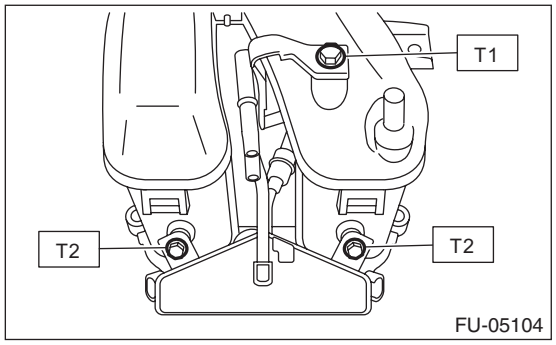

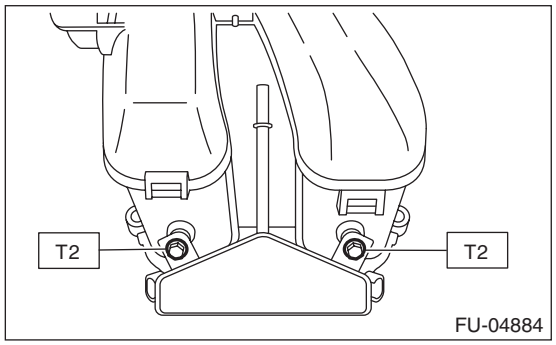

Tightening torque:
6.4 N·m (0.7 kgf-m, 4.7 ft-lb)

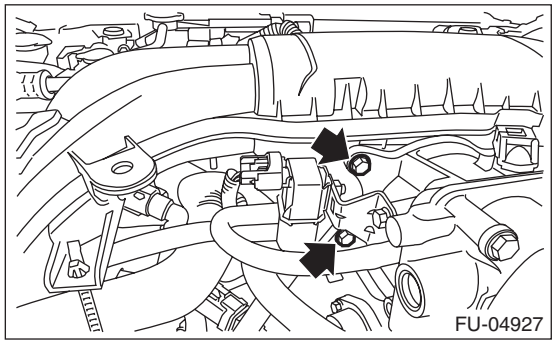

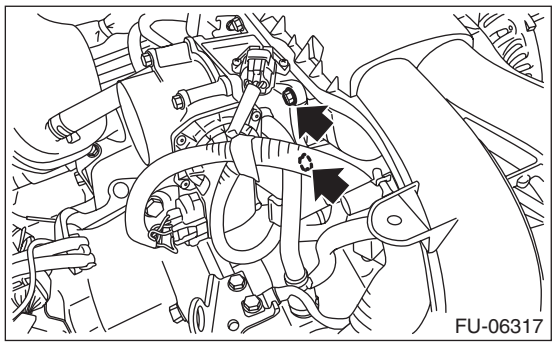

Tightening torque:
25 N·m (2.5 kgf-m, 18.4 ft-lb)

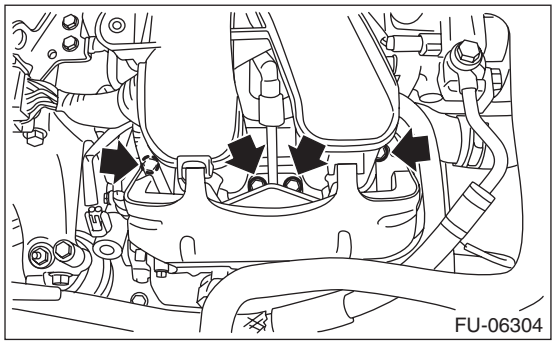

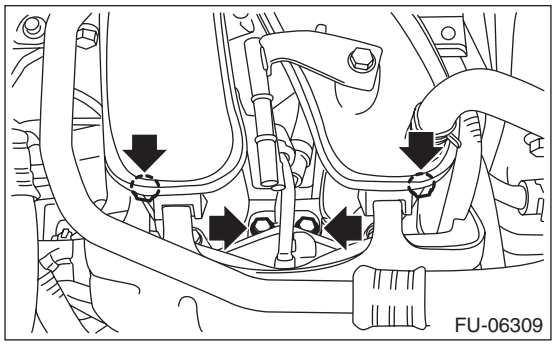

Tightening torque:
6.4 N·m (0.7 kgf-m, 4.7 ft-lb)

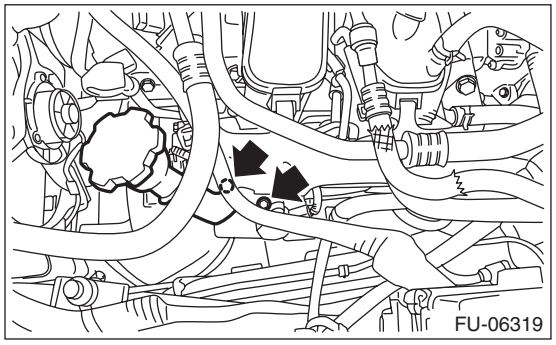

NOTE:
Align the clamp hole with the protrusion of the air intake boot assembly.

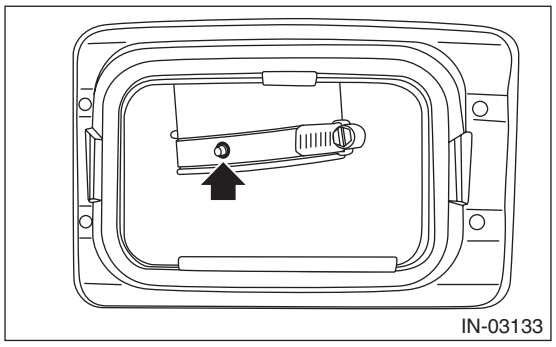

Tightening torque:
Clamp (A), (B)
3 N·m (0.3 kgf-m, 2.2 ft-lb)

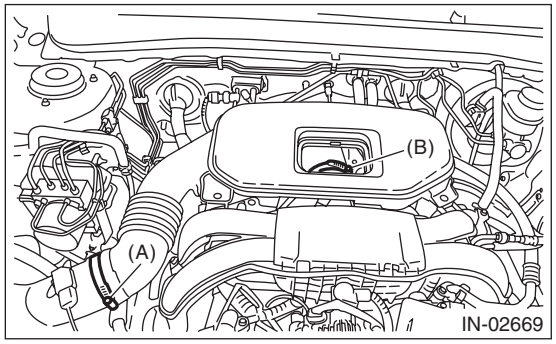

2. MULTI-FUNCTION DUCT ASSEMBLY

Install in the reverse order of removal.

NOTE:
- Use a new gasket.
- The oil pressure switch harness must be positioned to be within the range of a 45° angle on either left or right toward the rear of the vehicle.

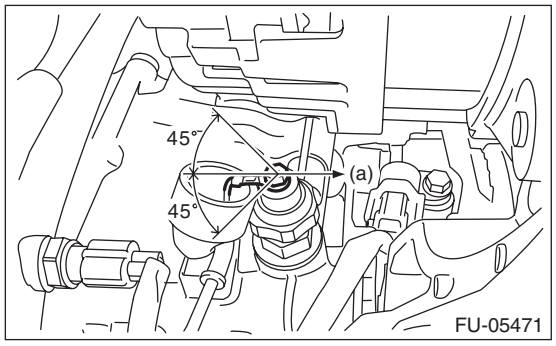

(a) Front side of vehicle

Tightening torque:
1.5 N·m (0.2 kgf-m, 1.1 ft-lb)

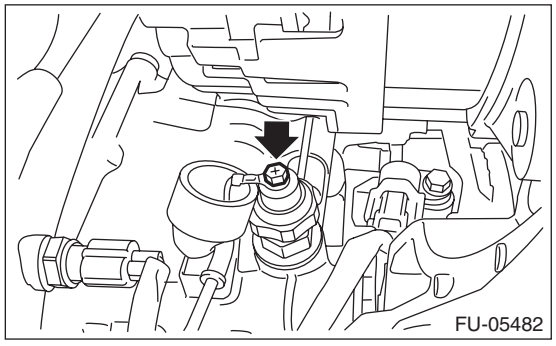

Tightening torque:
6.4 N·m (0.7 kgf-m, 4.7 ft-lb)

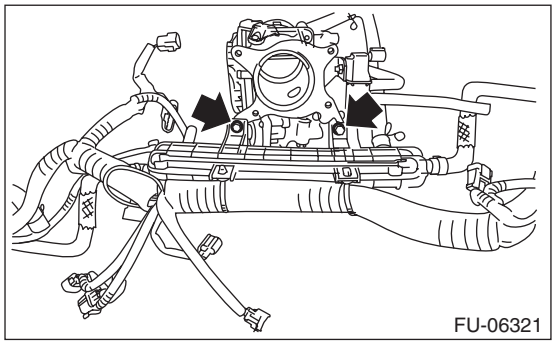

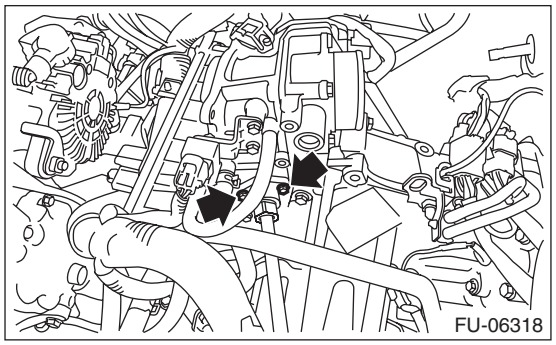

Tightening torque:
19 N·m (1.9 kgf-m, 14.0 ft-lb)

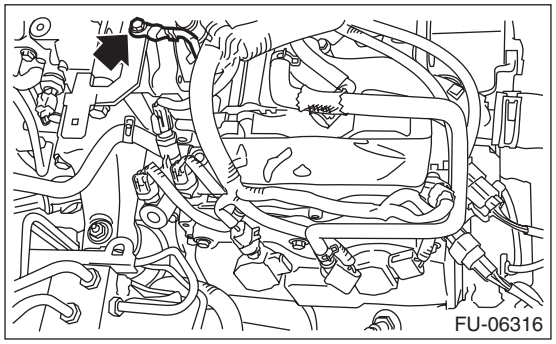

C: INSPECTION

1) Check that the intake manifold and fuel pipe have no deformation, cracks and other damages.
2) Check that the hose has no cracks, damage or loose part.

4. Engine Coolant Temperature Sensor

A: REMOVAL

1) Disconnect the ground cable from battery.

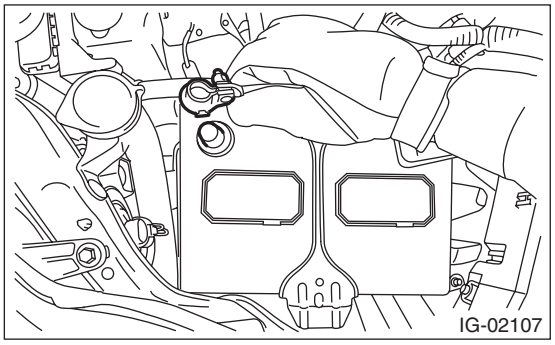

2) Remove the generator. <Ref. to SC(H4SO)-18, REMOVAL, Generator.>
3) Drain engine coolant. <Ref. to CO(H4SO)-14, DRAINING OF ENGINE COOLANT, REPLACEMENT, Engine Coolant.>
4) Disconnect the connector (A) from the engine coolant temperature sensor, and remove the engine coolant temperature sensor.

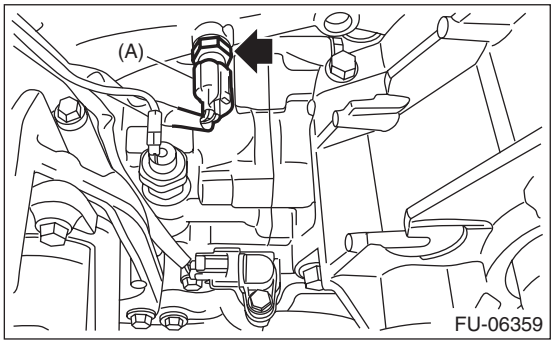

B: INSTALLATION

Install in the reverse order of removal.

NOTE:
Use a new gasket.

Tightening torque:
18 N·m (1.8 kgf-m, 13.3 ft-lb)

C: INSPECTION

1) Check that the engine coolant temperature sensor has no deformation, cracks or other damages.

2) Immerse the engine coolant temperature sensor and a thermometer in water.

CAUTION:
Take care not to allow water to get into the engine coolant temperature sensor connector. Completely remove any water inside.

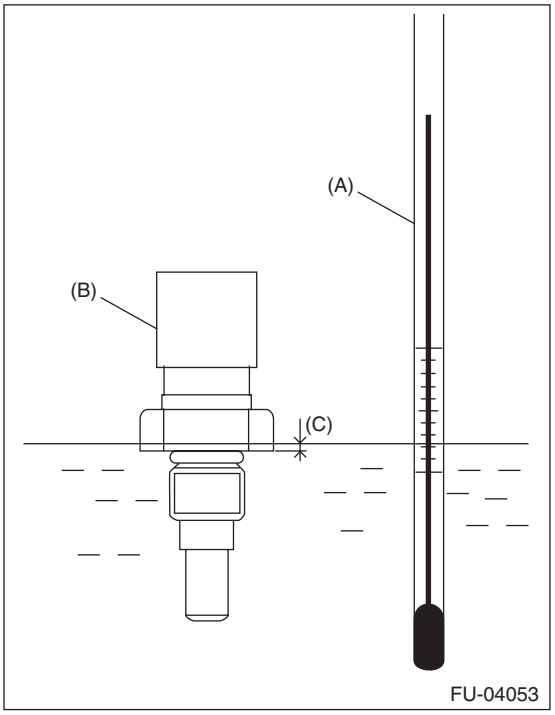

(A) Thermometer
(B) Engine coolant temperature sensor
(C) Hexagonal part height: To approx. $^{1}/_{3}$

3) Raise water temperature gradually, measure the resistance between the engine coolant temperature sensor terminals when the temperature is 20°C (68°F) and 80°C (176°F).

NOTE:
Agitate the water for even temperature distribution.

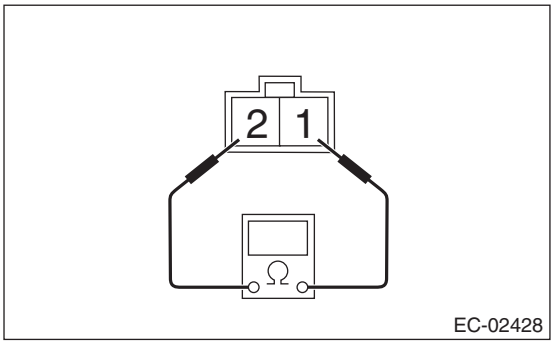

Water temperature	Terminal No.	Standard
20°C (68°F)	1 and 2	Approx. 2.45±0.2 kΩ
80°C (176°F)		Approx. 0.318±0.013 kΩ

5. Crankshaft Position Sensor

A: REMOVAL

1) Disconnect the ground cable from battery.

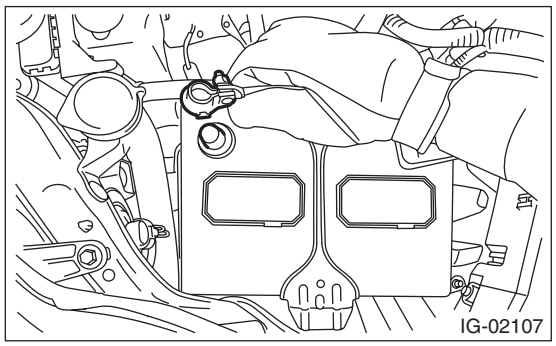

2) Remove the bolt which secures crankshaft position sensor to oil pump.

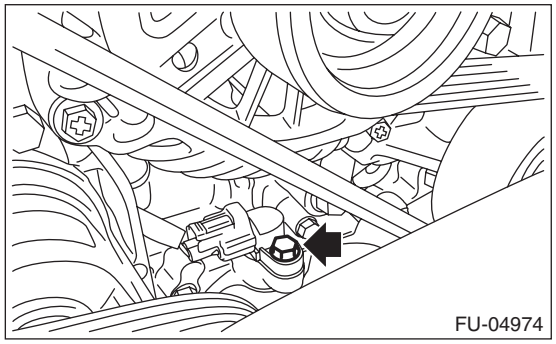

3) Remove the crankshaft position sensor, and disconnect the connector from the crankshaft position sensor.

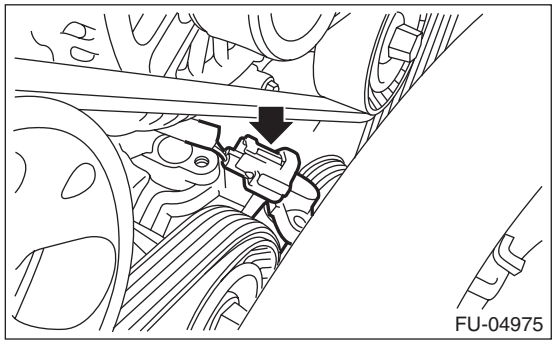

B: INSTALLATION

Install in the reverse order of removal.

Tightening torque:
6.4 N·m (0.7 kgf-m, 4.7 ft-lb)

C: INSPECTION

1. CRANKSHAFT POSITION SENSOR (METHOD WITH CIRCUIT TESTER)

Measure the resistance between crankshaft position sensor terminals.

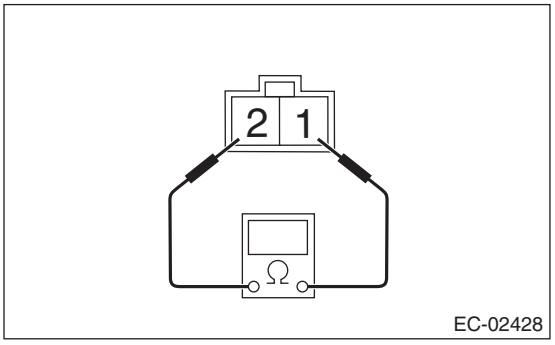

Terminal No.	Standard
1 and 2	2.04±0.204 kΩ

2. CRANKSHAFT POSITION SENSOR (METHOD WITH OSCILLOSCOPE)

1) Prepare an oscilloscope.
2) Remove the glove box lid assembly. <Ref. to EI-66, REMOVAL, Glove Box.>
3) Connect the probe to ECM connector.

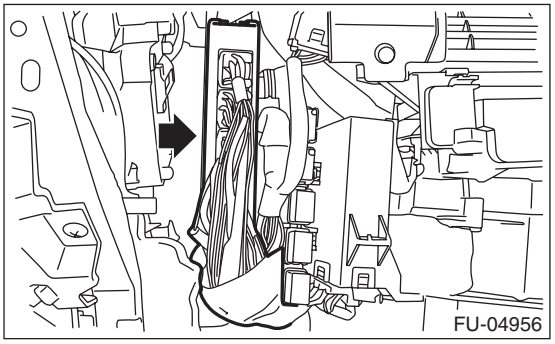

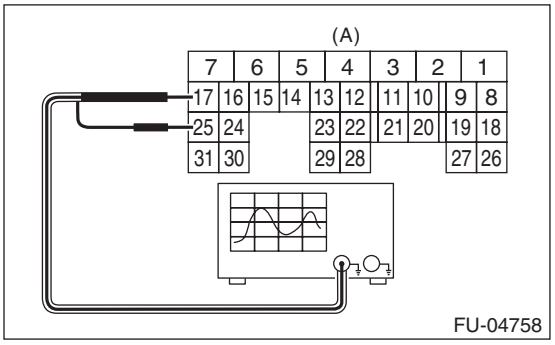

(A) To ECM connector

Terminal No.	Probe
17	+
25	–

4) Start the engine and let it idle.

5) Check the pattern is the same as the waveform and voltage shown below.

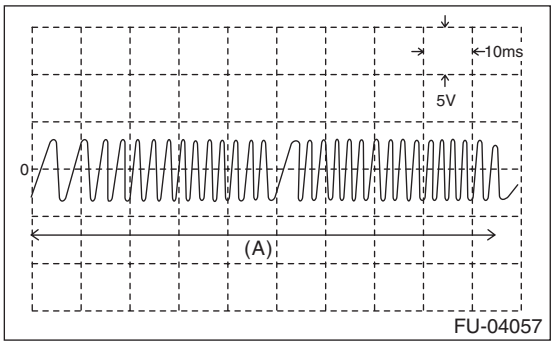

(A) One crankshaft rotation

6) After inspection, install the related parts in the reverse order of removal.

3. OTHER INSPECTIONS

Check that the crankshaft position sensor has no deformation, cracks or other damages.

6. Camshaft Position Sensor

A: REMOVAL

1) Disconnect the ground cable from battery.

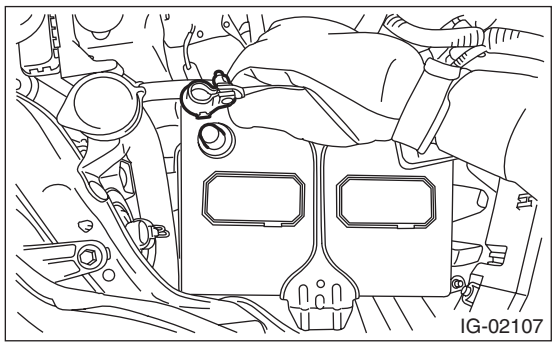

2) Disconnect the connector from camshaft position sensor.

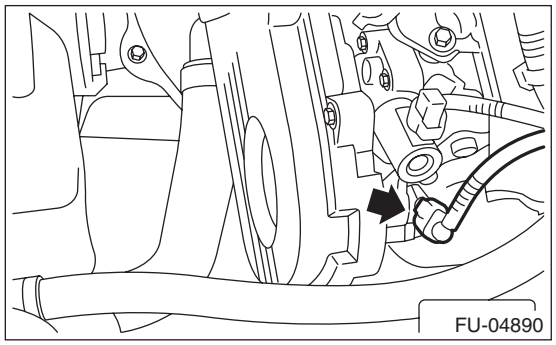

3) Remove the ignition coil. (LH side only) <Ref. to IG(H4SO)-5, REMOVAL, Ignition Coil.>

4) Remove the bolt which secures camshaft position sensor to camshaft position sensor support.

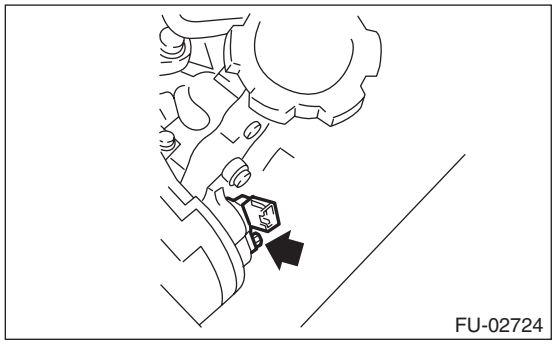

5) Remove the bolt which secures camshaft position sensor support to camshaft cap LH.

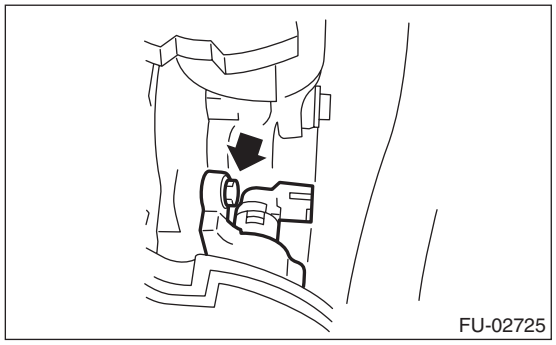

6) Remove the camshaft position sensor and the camshaft position sensor support as a unit.

NOTE:
Slide in the arrowed direction until the camshaft position sensor contacts the rocker cover LH.

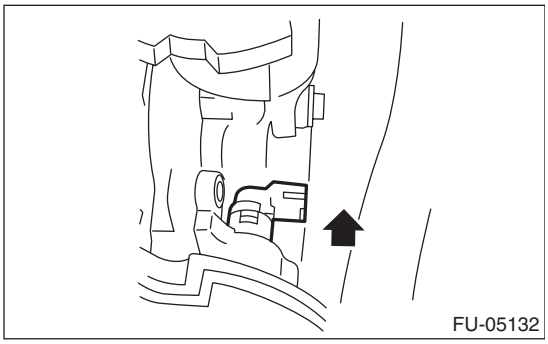

7) Remove the camshaft position sensor from the camshaft position sensor support.

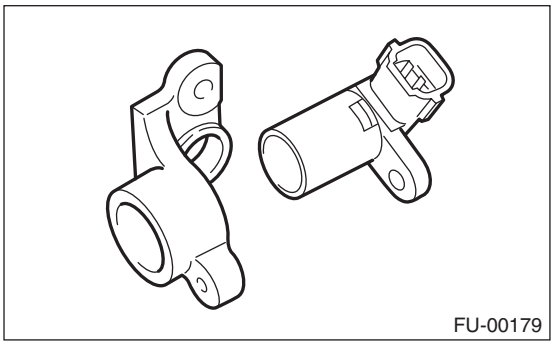

B: INSTALLATION

Install in the reverse order of removal.

Tightening torque:
Camshaft position sensor support
6.4 N·m (0.7 kgf-m, 4.7 ft-lb)
Camshaft position sensor
6.4 N·m (0.7 kgf-m, 4.7 ft-lb)

C: INSPECTION

1. CAMSHAFT POSITION SENSOR (METHOD WITH OSCILLOSCOPE)

1) Prepare an oscilloscope.
2) Remove the glove box lid assembly. <Ref. to EI-66, REMOVAL, Glove Box.>
3) Connect the probe to ECM connector.

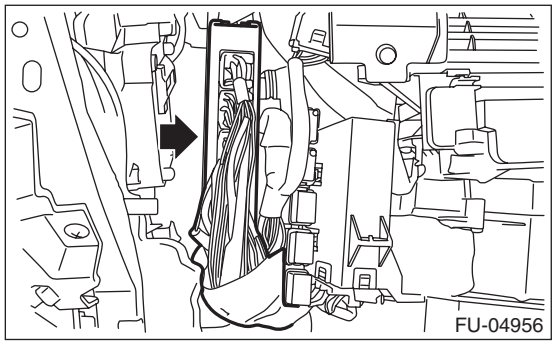

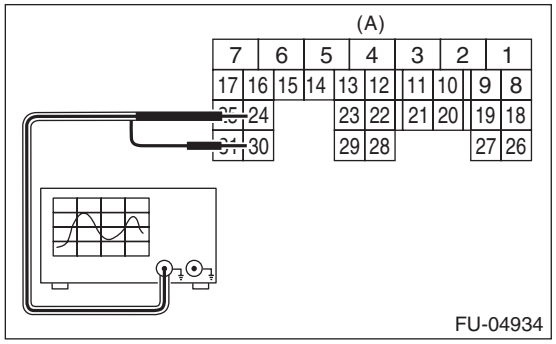

(A) To ECM connector

Terminal No.	Probe
24	+
30	–

4) Start the engine and let it idle.
5) Check the pattern is the same as the waveform and voltage shown below.

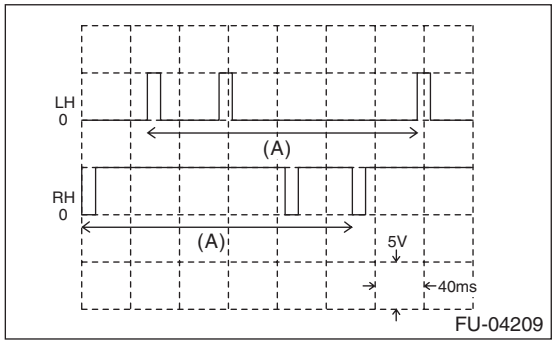

(A) One camshaft rotation

6) After inspection, install the related parts in the reverse order of removal.

2. OTHER INSPECTIONS

Check that the camshaft position sensor has no deformation, cracks or other damages.

7. Knock Sensor

A: REMOVAL

1) Disconnect the ground cable from battery.

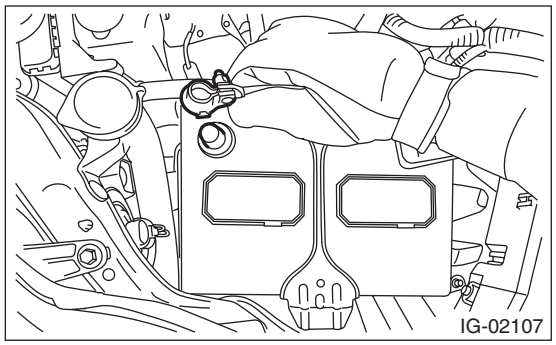

2) Remove the cover (A) and clip (B) from air intake boot assembly.

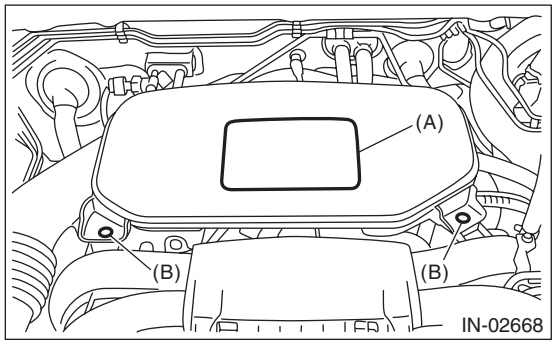

3) Loosen the clamp (A) which connects the air intake boot assembly and air cleaner case.
4) Loosen the clamp (B) which connects the air intake boot assembly and throttle body.

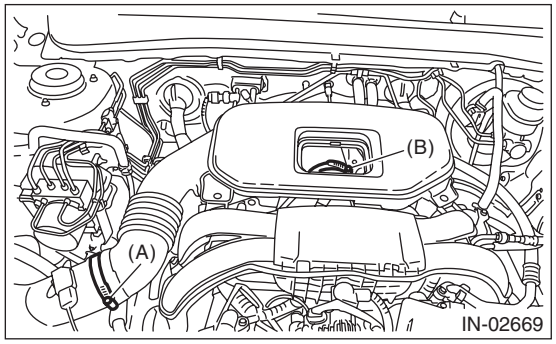

5) Remove the air intake boot from the throttle body, and move it to the left side wheel apron.

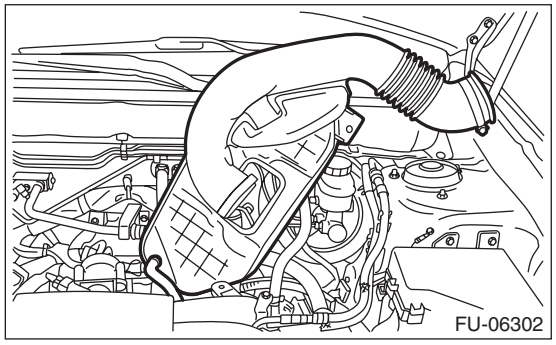

6) Disconnect the connector from the knock sensor.

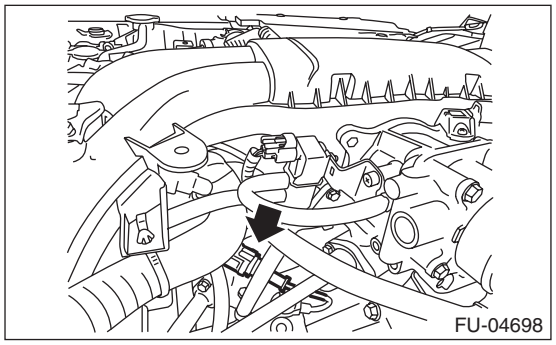

7) Remove the knock sensor from cylinder block.

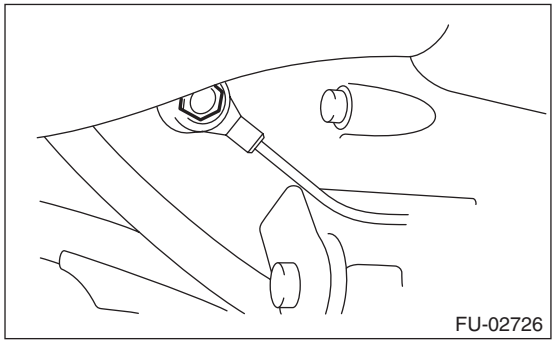

B: INSTALLATION

1) Install the knock sensor to the cylinder block.

NOTE:
The portion of the knock sensor cord that is pulled out must be positioned at a 60° angle relative to the engine rear.

Tightening torque:
24 N·m (2.4 kgf-m, 17.7 ft-lb)

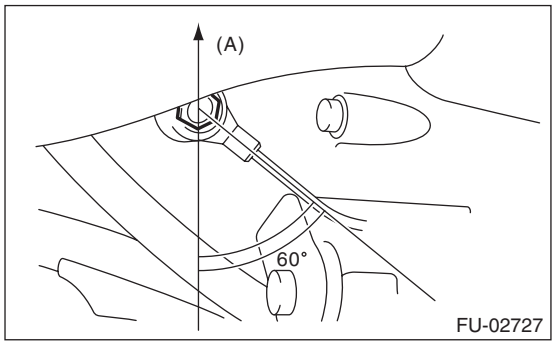

(A) Front side of vehicle

2) Connect the connector to the knock sensor.

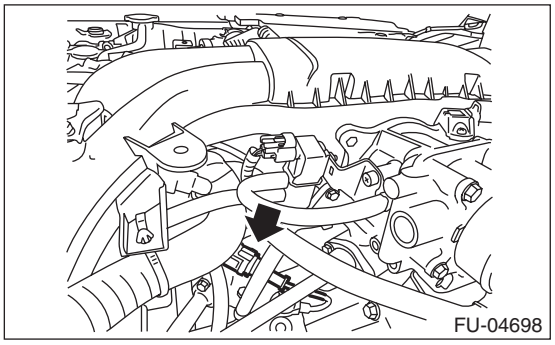

3) Install the air intake boot assembly.

NOTE:
Align the clamp hole with the protrusion of the air intake boot assembly.

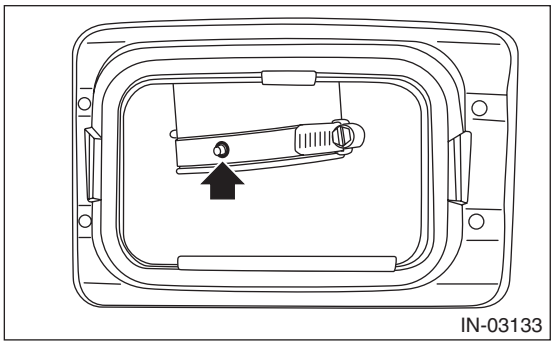

Tightening torque:
Clamp (A), (B)
3 N·m (0.3 kgf-m, 2.2 ft-lb)

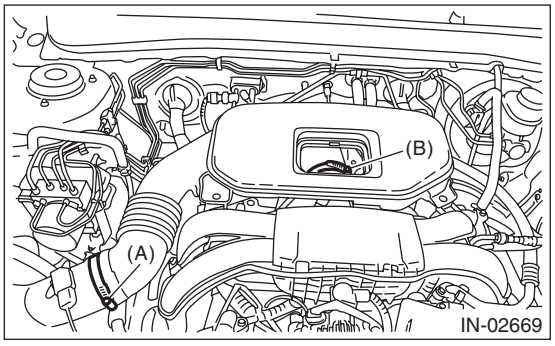

4) Connect the battery ground terminal.

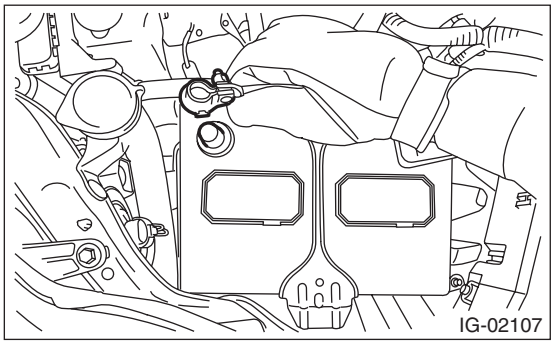

C: INSPECTION

1) Check that the knock sensor has no deformation, cracks or other damages.
2) Measure the resistance between knock sensor terminals.

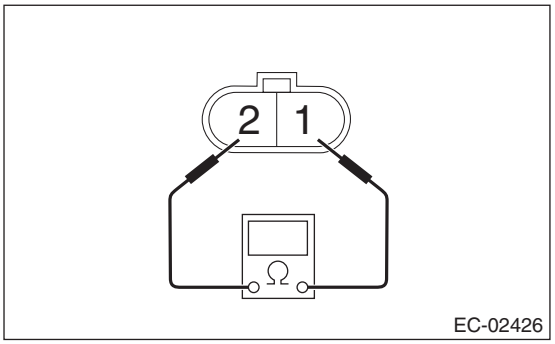

Terminal No.	Standard
1 and 2	560±28 kΩ

8. Throttle Position Sensor

A: SPECIFICATION

Throttle body is a non-disassembled part, so do not remove the throttle position sensor from throttle body.
Refer to “Throttle Body” for removal and installation procedure. <Ref. to FU(H4SO)-15, REMOVAL, Throttle Body.> <Ref. to FU(H4SO)-15, INSTALLATION, Throttle Body.>

9. Mass Air Flow and Intake Air Temperature Sensor

A: REMOVAL

1) Disconnect the ground cable from battery.

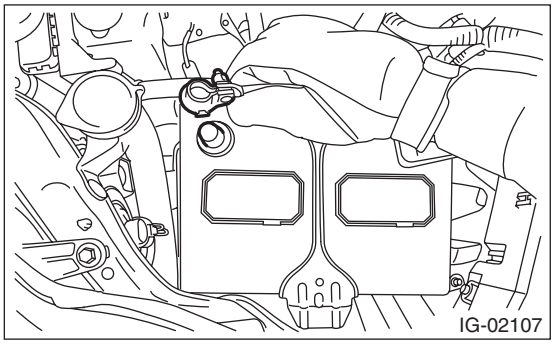

2) Disconnect the connector (A) from the mass air flow and intake air temperature sensor, and remove the mass air flow and intake air temperature sensor.

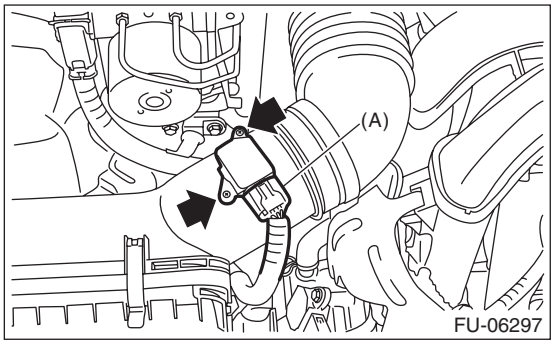

B: INSTALLATION

Install in the reverse order of removal.

Tightening torque:
1 N·m (0.1 kgf-m, 0.7 ft-lb)

C: INSPECTION

1. CHECK MASS AIR FLOW SENSOR UNIT

1) Connect the battery positive terminal to terminal No. 3 and the battery ground terminal to terminal No. 4, the circuit tester positive terminal to terminal No. 5 and the circuit tester ground terminal to terminal No. 4.

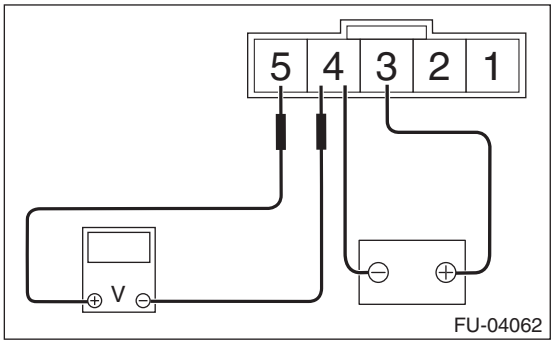

2) Check the voltage changes when air is blown to the mass air flow sensor unit in arrow direction.

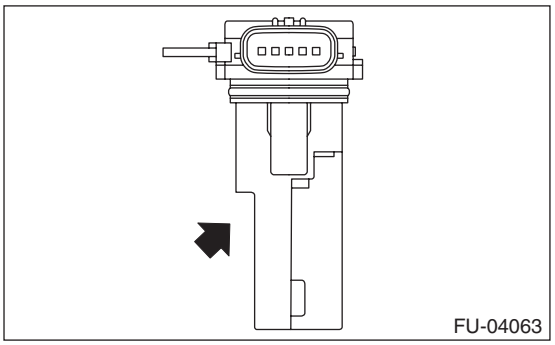

2. CHECK INTAKE AIR TEMPERATURE SENSOR UNIT

Measure the resistance between intake air temperature sensor terminals.

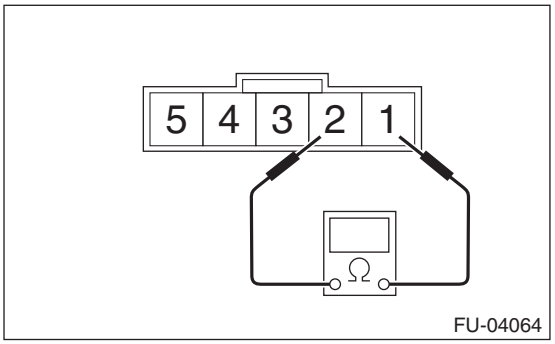

Temperature	Terminal No.	Standard
–20°C (–4°F)	1 and 2	16.0±2.4 kΩ
20°C (68°F)		2.45±0.24 kΩ
60°C (140°F)		0.58±0.087 kΩ

3. OTHER INSPECTIONS

1) Check that the mass air flow and intake air temperature sensor has no deformation, cracks or other damages.
2) Check that the mass air flow and intake air temperature sensor has no dirt.

10.Manifold Absolute Pressure Sensor

A: REMOVAL

1) Disconnect the ground cable from battery.

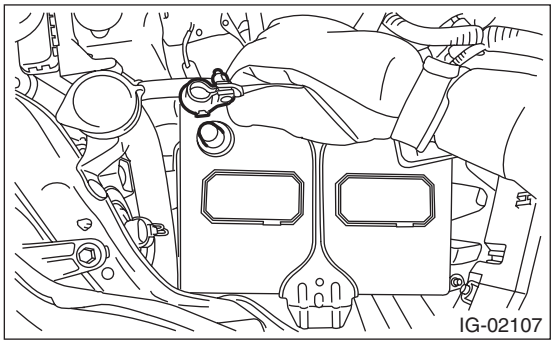

2) Remove the cover (A) and clip (B) from air intake boot assembly.

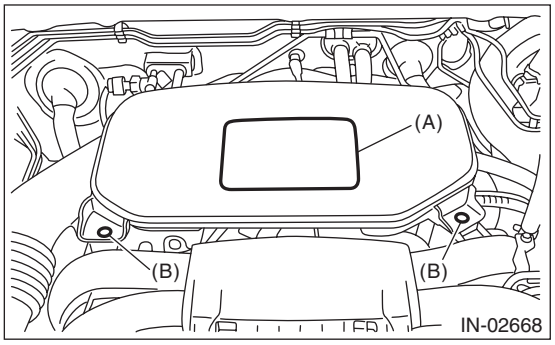

3) Loosen the clamp (A) which connects the air intake boot assembly and air cleaner case.
4) Loosen the clamp (B) which connects the air intake boot assembly and throttle body.

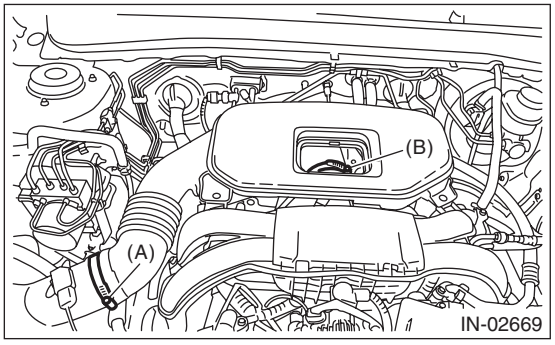

5) Remove the air intake boot from the throttle body, and move it to the left side wheel apron.

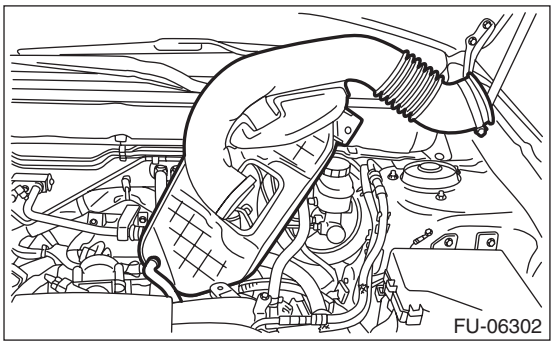

6) Disconnect the connector (A) from the manifold absolute pressure sensor, and remove the manifold absolute pressure sensor from the multi-function duct.

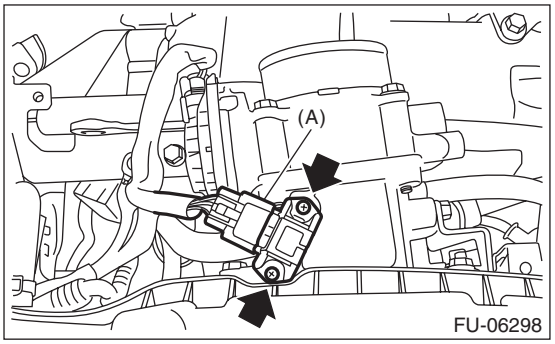

B: INSTALLATION

Install in the reverse order of removal.

NOTE:
Use new O-rings.

Tightening torque:
2 N·m (0.2 kgf-m, 1.5 ft-lb)

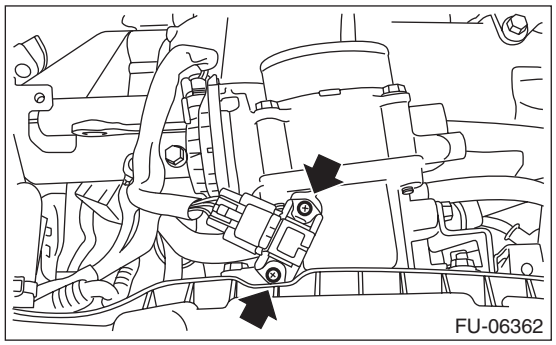

NOTE:
Align the clamp hole with the protrusion of the air intake boot assembly.

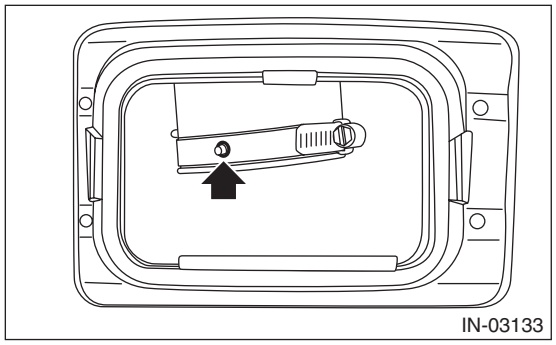

Tightening torque:
Clamp (A), (B)
3 N·m (0.3 kgf-m, 2.2 ft-lb)

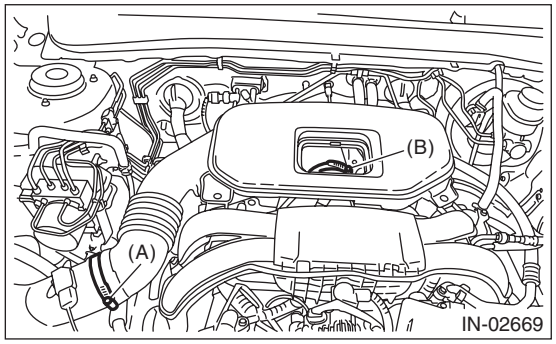

C: INSPECTION

1) Check that the manifold absolute pressure sensor has no deformation, cracks or other damages.
2) Connect dry-cell battery positive terminal to terminal No. 3 and dry-cell battery ground terminal to terminal No. 2, circuit tester ground terminal to terminal No. 2 and the circuit tester positive terminal to terminal No. 1.

NOTE:
- Use new dry-cell batteries.
- Using circuit tester, check the voltage of a single dry-cell battery is 1.6 V or more. And also check the voltage of three batteries in series is between 4.8 V and 5.2 V.

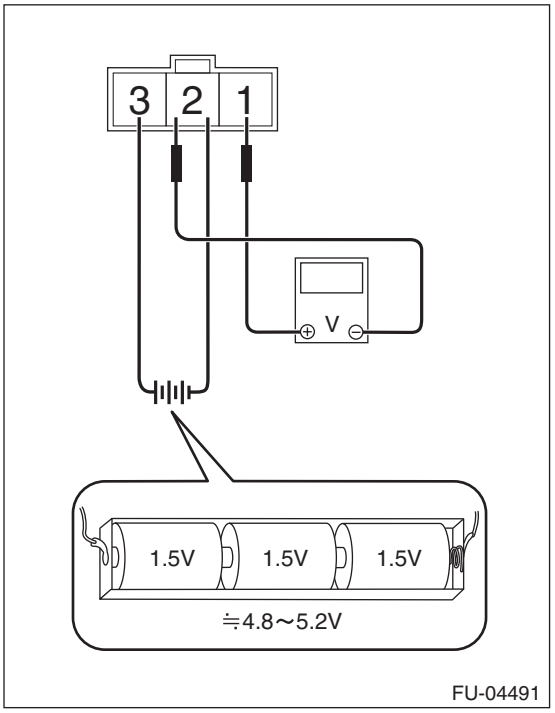

3) Connect the Mighty Vac to the pressure port (A) of manifold absolute pressure sensor.

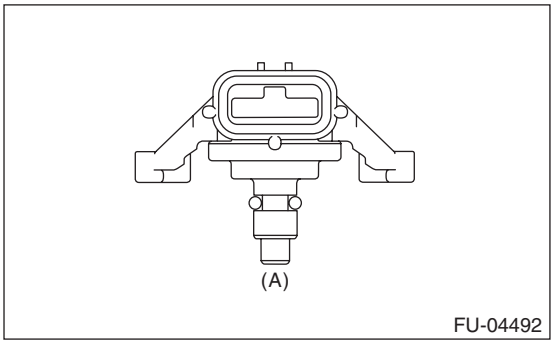

4) Check the voltage when generating vacuum and positive pressure using Mighty Vac.

CAUTION:
Do not apply vacuum of less than –88 kPa (–0.9 kgf/cm^2, –12.8 psi). Doing so may damage the manifold absolute pressure sensor.

NOTE:
When vacuum occurs at the pressure port of manifold absolute pressure sensor, the voltage will drop from the value as in step 3). When positive pressure occurs, on the other hand, the voltage will rise.

Pressure	Terminal No.	Standard
–88 kPa (–0.9 kgf/cm^2, –12.8 psi)	2 (+) and 1 (–)	Approx. 1 V (when 25°C (77°F))
–35 kPa (–0.4 kgf/cm^2, –5.1 psi)		Approx. 2.6 V (when 25°C (77°F))
19 kPa (–0.2 kgf/cm^2, 2.8 psi)		Approx. 4.2 V (when 25°C (77°F))

11.EGR Valve

A: REMOVAL

1) Disconnect the ground cable from battery.

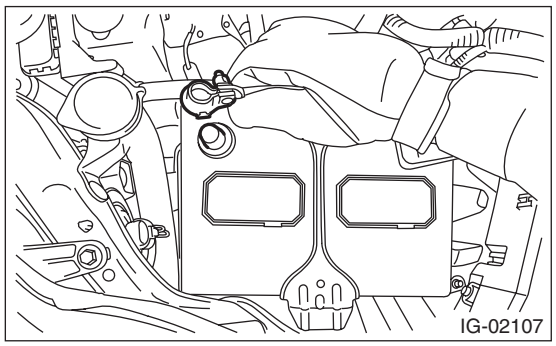

2) Remove the multi-function duct assembly. <Ref. to FU(H4SO)-20, MULTI-FUNCTION DUCT ASSEMBLY, REMOVAL, Intake Manifold.>
3) Remove the EGR valve from the multi-function duct assembly.

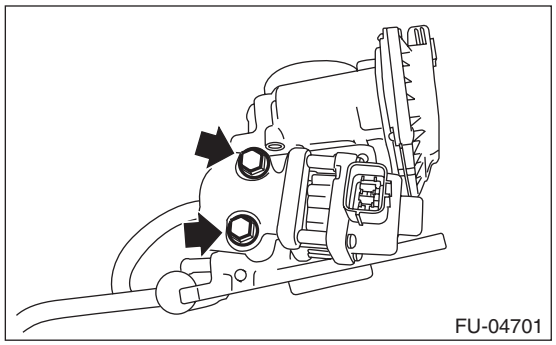

B: INSTALLATION

Install in the reverse order of removal.

NOTE:
Use a new gasket.

Tightening torque:
19 N·m (1.9 kgf-m, 14.0 ft-lb)

C: INSPECTION

1) Check that the EGR valve has no deformation, cracks or other damages.
2) Measure the resistance between EGR valve terminals.

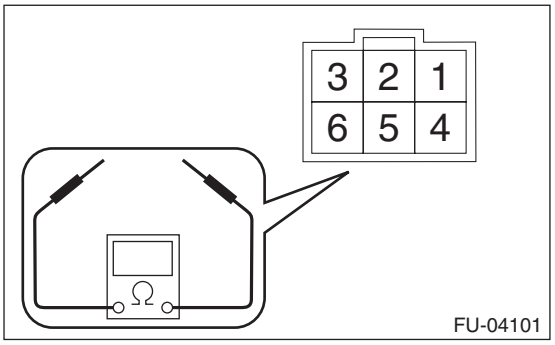

Terminal No.	Standard
2 and 1	22±2 Ω
2 and 3	22±2 Ω
5 and 4	22±2 Ω
5 and 6	22±2 Ω

12.Fuel Injector

A: REMOVAL

1) Release the fuel pressure. <Ref. to FU(H4SO)-53, RELEASING OF FUEL PRESSURE, PROCEDURE, Fuel.>
2) Disconnect the ground cable from battery.

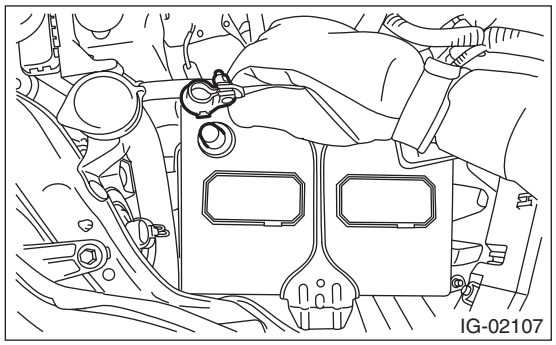

3) Open the fuel filler lid and remove the fuel filler cap.
4) Remove the intake manifold. <Ref. to FU(H4SO)-17, INTAKE MANIFOLD, REMOVAL, Intake Manifold.>
5) Remove the bolts securing the fuel gallery to intake manifold.

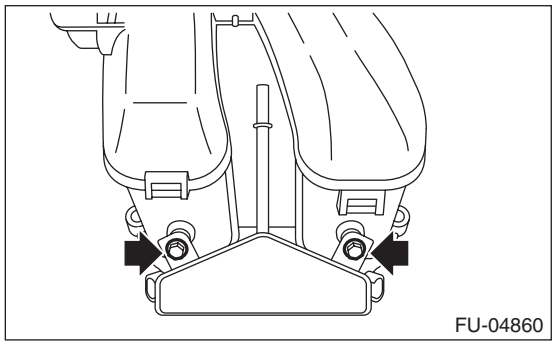

6) Remove the fuel injector while lifting up the fuel gallery.

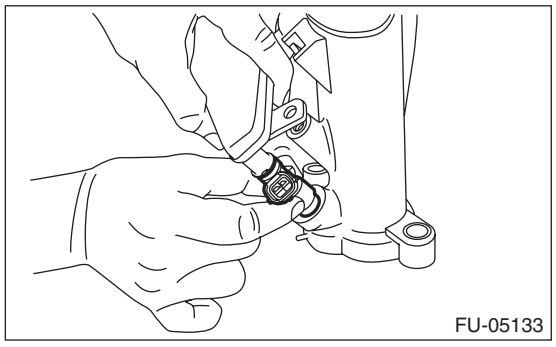

B: INSTALLATION

Install in the reverse order of removal.

NOTE:
Use new O-rings, rubbers and seal rings.

Tightening torque:
19 N·m (1.9 kgf-m, 14.0 ft-lb)

C: INSPECTION

1) Check that the fuel injector has no deformation, cracks or other damages.
2) Measure the resistance between fuel injector terminals.

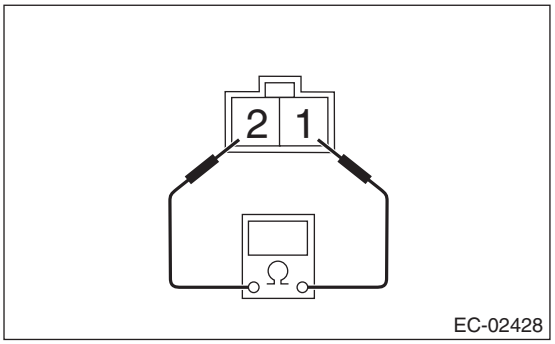

Terminal No.	Standard
1 and 2	Approx. 12.0 Ω (when 20°C (68°F))

13. Variable Valve Lift Diagnosis Oil Pressure Switch

A: REMOVAL

1) Disconnect the ground cable from battery.

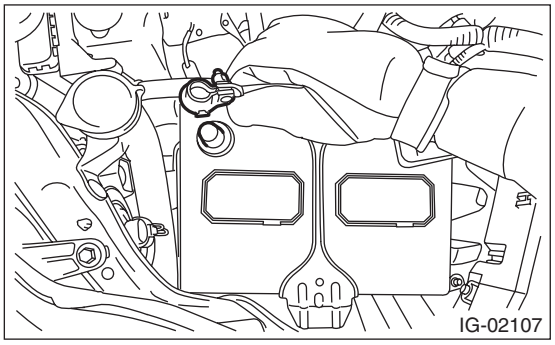

2) Remove the cover (A) and clip (B) from air intake boot assembly.

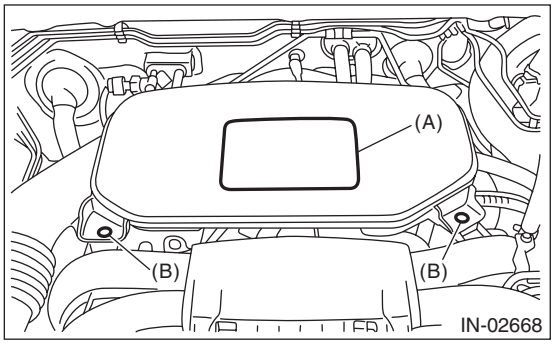

3) Loosen the clamp (A) which connects the air intake boot assembly and air cleaner case.
4) Loosen the clamp (B) which connects the air intake boot assembly and throttle body.

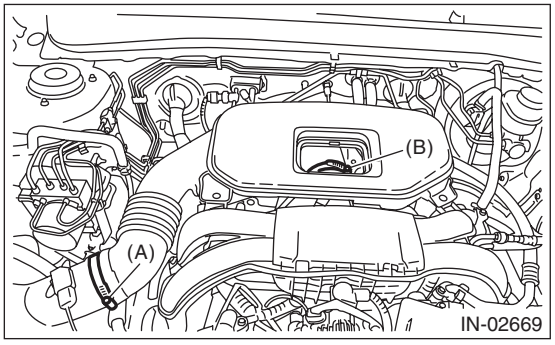

5) Remove the air intake boot from the throttle body, and move it to the left side wheel apron.

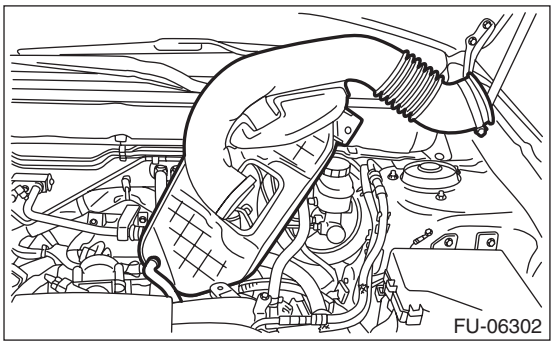

6) Disconnect the connector from the variable valve lift diagnosis oil pressure switch.
7) Remove the variable valve lift diagnosis oil pressure switch.

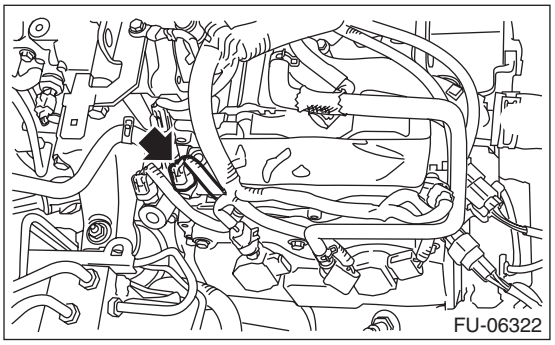

B: INSTALLATION

Install in the reverse order of removal.

NOTE:
Apply liquid gasket to the variable valve lift diagnosis oil pressure switch threads.

Liquid gasket:
THREE BOND 1324 (Part No. 004403042) or equivalent

Tightening torque:
17 N·m (1.7 kgf-m, 12.5 ft-lb)

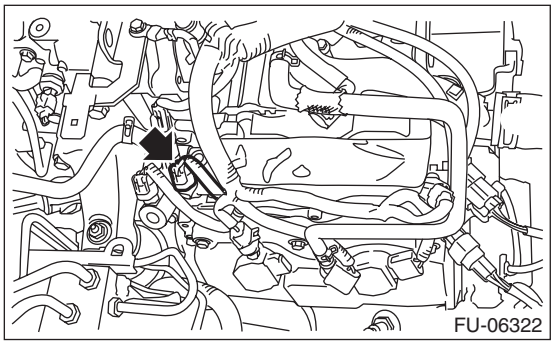

NOTE:
Align the clamp hole with the protrusion of the air intake boot assembly.

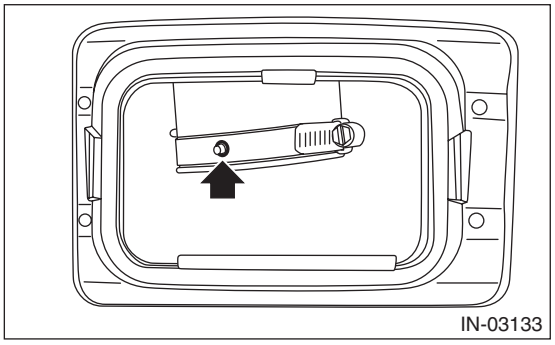

Tightening torque:
Clamp (A), (B)
3 N·m (0.3 kgf-m, 2.2 ft-lb)

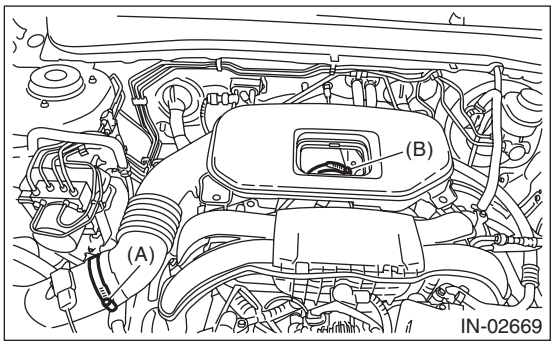

C: INSPECTION

1) Check that the variable valve lift diagnosis oil pressure switch does not have deformation, cracks or damage.
2) Check the variable valve lift diagnosis oil pressure switch installation portion for oil leakage and oil seepage.

14.Oil Temperature Sensor

A: REMOVAL

1) Disconnect the ground cable from battery.

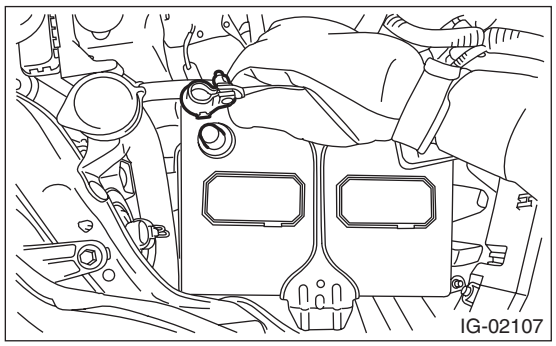

2) Remove the cover (A) and clip (B) from air intake boot assembly.

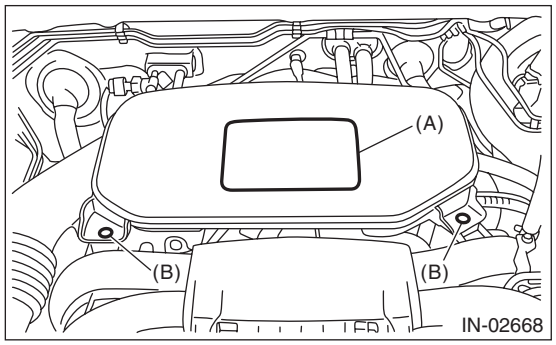

3) Loosen the clamp (A) which connects the air intake boot assembly and air cleaner case.
4) Loosen the clamp (B) which connects the air intake boot assembly and throttle body.

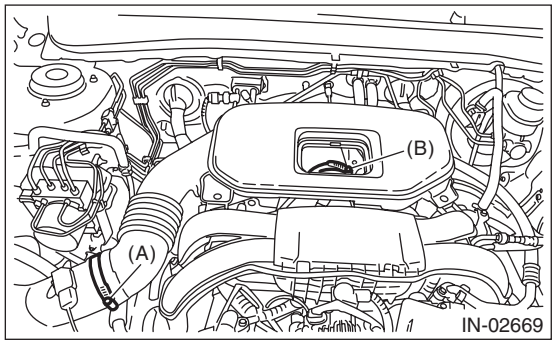

5) Remove the air intake boot from the throttle body, and move it to the left side wheel apron.

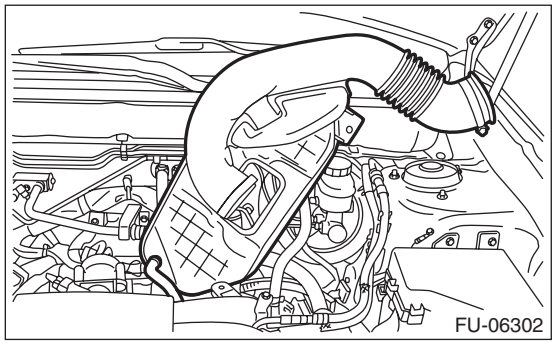

6) Disconnect the connector from oil temperature sensor.
7) Remove the oil temperature sensor.

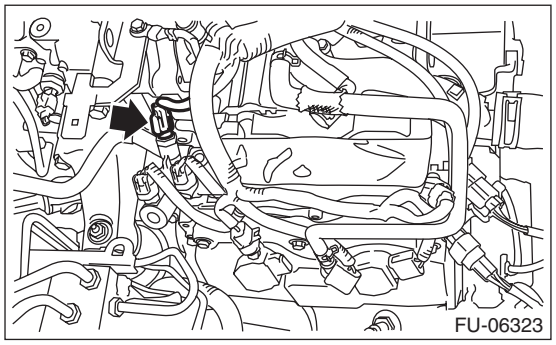

B: INSTALLATION

Install in the reverse order of removal.

NOTE:
Apply liquid gasket to the oil temperature sensor threads.

Liquid gasket:
THREE BOND 1324 (Part No. 004403042) or equivalent

Tightening torque:
18 N·m (1.8 kgf-m, 13.3 ft-lb)

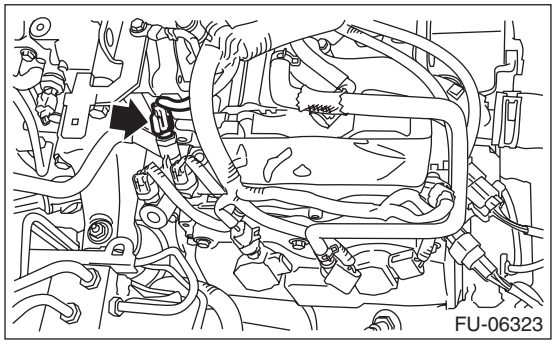

NOTE:
Align the clamp hole with the protrusion of the air intake boot assembly.

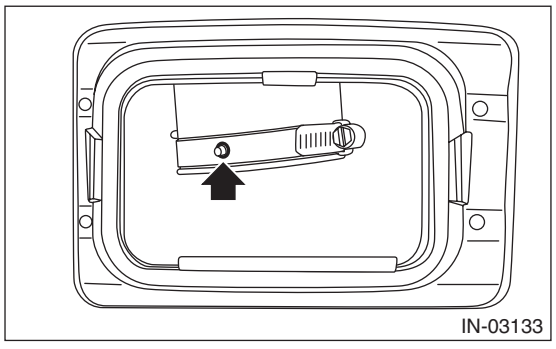

Tightening torque:
Clamp (A), (B)
3 N·m (0.3 kgf-m, 2.2 ft-lb)

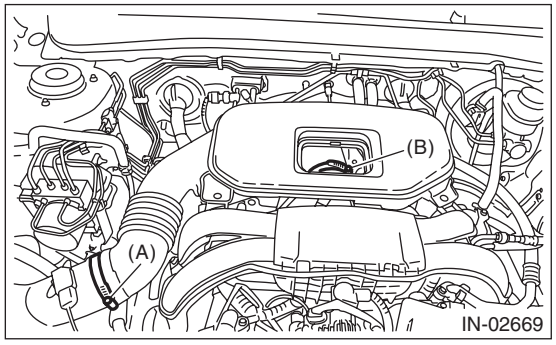

C: INSPECTION

1) Check that the oil temperature sensor has no deformation, cracks or other damages.
2) Check the resistance between the oil temperature sensor terminals.

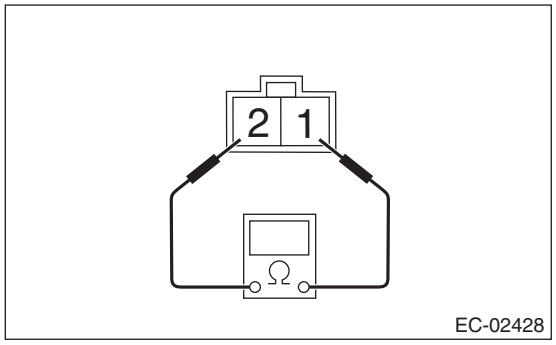

Terminal No.	Standard
1 and 2	2.45±0.2 (when 20°C (68°F))

15.Front Oxygen (A/F) Sensor

A: REMOVAL

1) Disconnect the ground cable from battery.

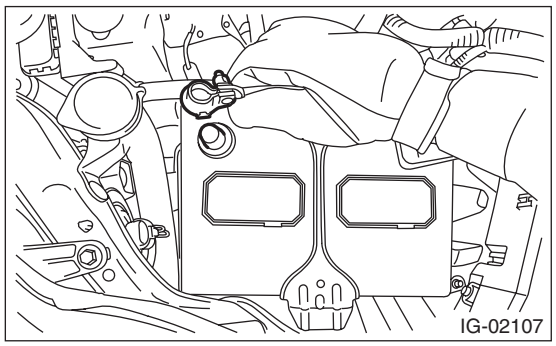

2) Remove the air intake duct. <Ref. to IN(H4SO)-9, REMOVAL, Air Intake Duct.>
3) Disconnect the front oxygen (A/F) sensor connector, and remove the clip holding the front oxygen (A/F) sensor harness.

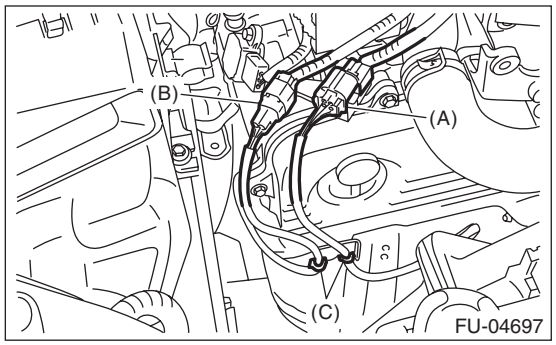

(A) Front oxygen (A/F) sensor connector
(B) Rear oxygen sensor connector
(C) Clip

4) Lift up the vehicle.
5) Remove the under cover. <Ref. to EI-35, REMOVAL, Front Under Cover.>
6) Apply spray-type lubricant to the threaded portion of front oxygen (A/F) sensor, and leave it for one minute or more.
7) Remove the front oxygen (A/F) sensor.

CAUTION:
When removing the front oxygen (A/F) sensor, wait until exhaust pipe cools, otherwise it will damage the exhaust pipe.

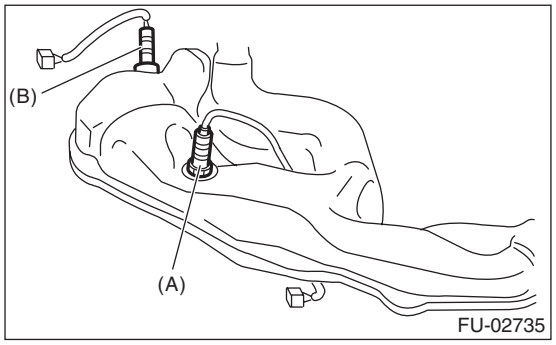

(A) Front oxygen (A/F) sensor
(B) Rear oxygen sensor

B: INSTALLATION

CAUTION:
If lubricant is spilt onto the exhaust pipe, wipe it off completely with cloth to avoid emission of smoke or causing a fire.
1) Before installing front oxygen (A/F) sensor, apply anti-seize compound only to the threaded portion of front oxygen (A/F) sensor to make the next removal easier.

CAUTION:
Never apply anti-seize compound to the protector of front oxygen (A/F) sensor.

Anti-seize compound:
NEVER-SEEZ NSN, JET LUBE SS-30 or equivalent
2) Install the front oxygen (A/F) sensor.

Tightening torque:
21 N·m (2.1 kgf-m, 15.5 ft-lb)

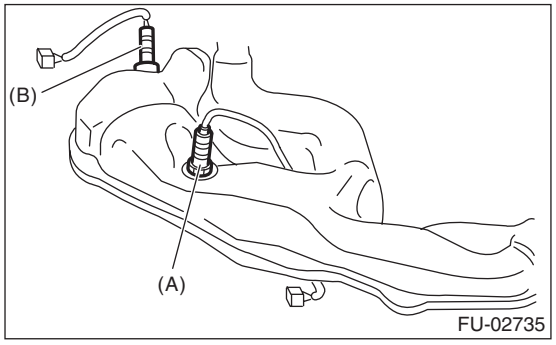

(A) Front oxygen (A/F) sensor
(B) Rear oxygen sensor

3) Install the under cover. <Ref. to EI-35, INSTALLATION, Front Under Cover.>
4) Lower the vehicle.

5) Connect the front oxygen (A/F) sensor connector, and secure the front oxygen (A/F) sensor harness by using the clip.

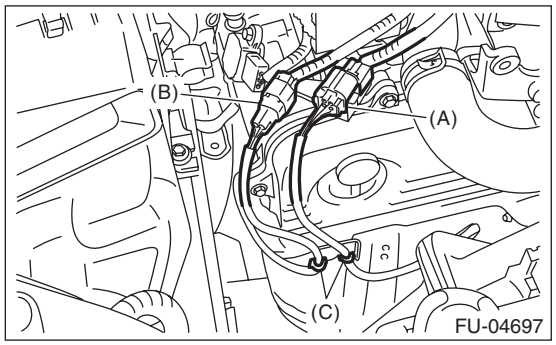

(A) Front oxygen (A/F) sensor connector
(B) Rear oxygen sensor connector
(C) Clip

6) Install the air intake duct. <Ref. to IN(H4SO)-9, INSTALLATION, Air Intake Duct.>
7) Connect the battery ground terminal.

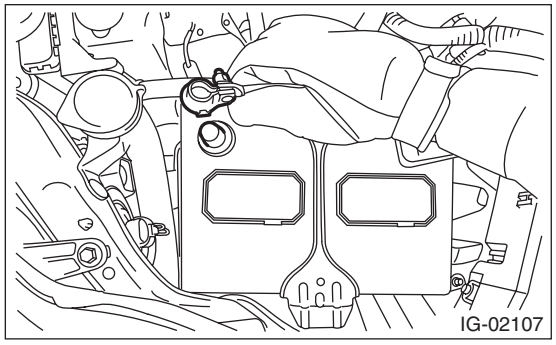

C: INSPECTION

1) Check that the front oxygen (A/F) sensor has no deformation, cracks or other damages.
2) Measure the resistance between front oxygen (A/F) sensor terminals.

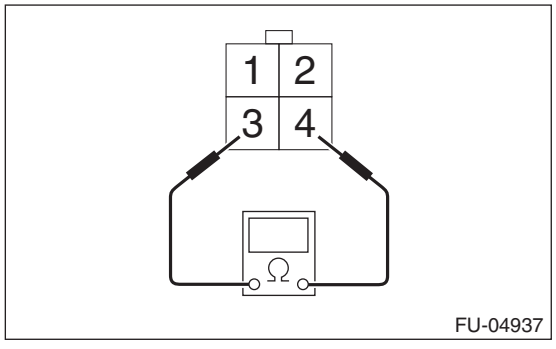

Terminal No.	Standard
3 and 4	2.4±0.24 Ω (when 20°C (68°F))

16.Rear Oxygen Sensor

A: REMOVAL

1) Disconnect the ground cable from battery.

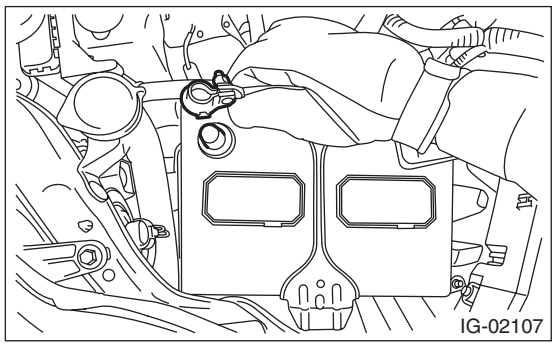

2) Remove the air intake duct. <Ref. to IN(H4SO)-9, REMOVAL, Air Intake Duct.>
3) Disconnect the rear oxygen sensor connector, and remove the clip holding the rear oxygen sensor harness.

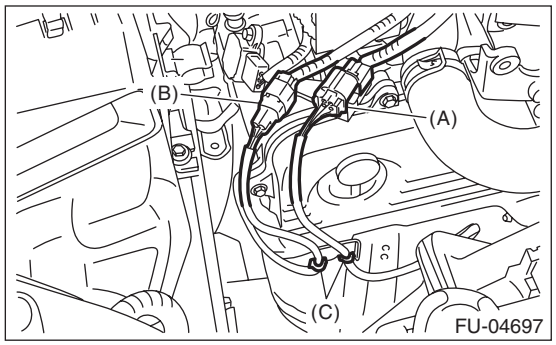

(A) Front oxygen (A/F) sensor connector
(B) Rear oxygen sensor connector
(C) Clip

4) Lift up the vehicle.
5) Remove the under cover. <Ref. to EI-35, REMOVAL, Front Under Cover.>
6) Apply spray-type lubricant to the threaded portion of rear oxygen sensor, and leave it for one minute or more.
7) Remove the rear oxygen sensor.

CAUTION:
When removing the rear oxygen sensor, wait until exhaust pipe cools, otherwise it will damage the exhaust pipe.

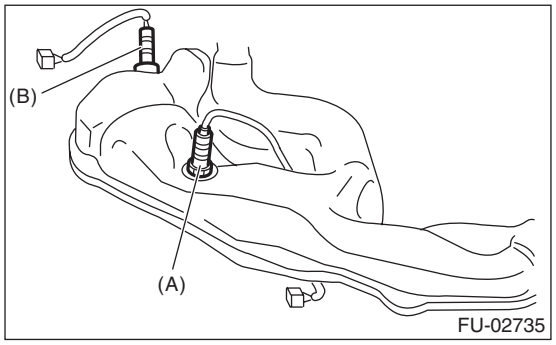

(A) Front oxygen (A/F) sensor
(B) Rear oxygen sensor

B: INSTALLATION

CAUTION:
If lubricant is spilt onto the exhaust pipe, wipe it off completely with cloth to avoid emission of smoke or causing a fire.
1) Before installing rear oxygen sensor, apply the anti-seize compound only to the threaded portion of rear oxygen sensor to make the next removal easier.

CAUTION:
Never apply anti-seize compound to the protector of rear oxygen sensor.

Anti-seize compound:
NEVER-SEEZ NSN, JET LUBE SS-30 or equivalent
2) Install the rear oxygen sensor.

Tightening torque:
21 N·m (2.1 kgf-m, 15.5 ft-lb)

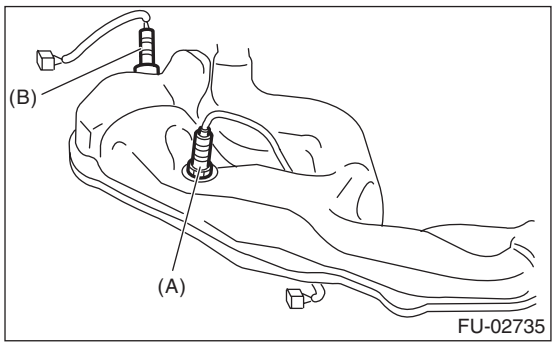

(A) Front oxygen (A/F) sensor
(B) Rear oxygen sensor

3) Install the under cover. <Ref. to EI-35, INSTALLATION, Front Under Cover.>
4) Lower the vehicle.

5) Connect the rear oxygen sensor connector, and hold the rear oxygen sensor harness with the clip.

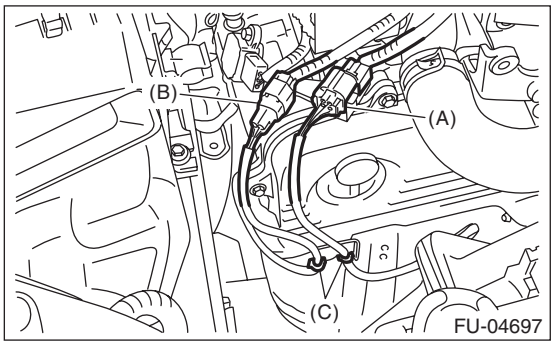

(A) Front oxygen (A/F) sensor connector
(B) Rear oxygen sensor connector
(C) Clip

6) Install the air intake duct. <Ref. to IN(H4SO)-9, INSTALLATION, Air Intake Duct.>
7) Connect the battery ground terminal.

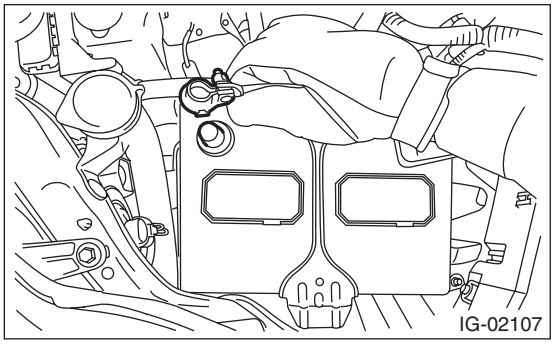

C: INSPECTION

1) Check that the rear oxygen sensor has no deformation, cracks or other damages.
2) Measure the resistance between rear oxygen sensor terminals.

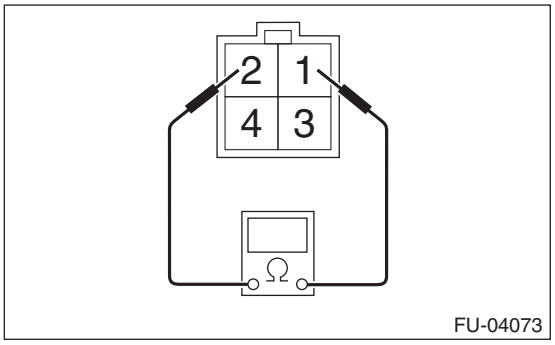

Terminal No.	Standard
1 and 2	$5.6^{+1.7}_{-0.6}$ Ω (when 20°C (68°F))

17.Engine Control Module (ECM)

A: REMOVAL

1) Disconnect the ground cable from battery.

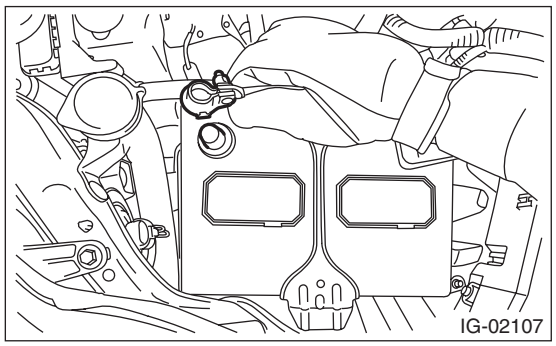

2) Remove the glove box lid assembly. <Ref. to EI-66, REMOVAL, Glove Box.>
3) Remove the connectors from ECM.

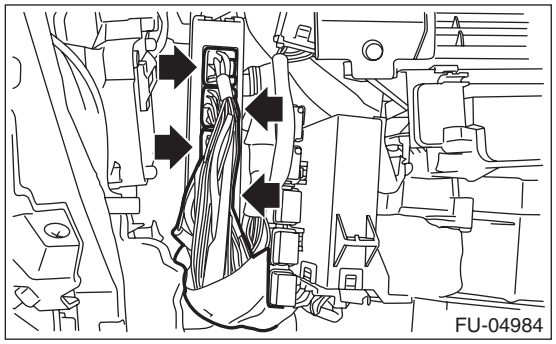

4) Remove the ECM from vehicle.

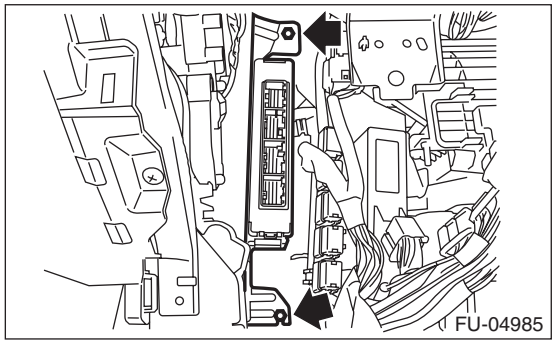

B: INSTALLATION

Install in the reverse order of removal.

CAUTION:
• When the ECM of model with immobilizer has been replaced, be sure to perform the registration of immobilizer system. (Refer to "PC application help for Subaru Select Monitor".)
• If replacing ECM or the bracket, replace both parts with new parts at a time.
• After installing the bracket to ECM, do not separate the bracket.
• If the bracket has been installed to ECM in the wrong direction, replace both parts to new parts.

NOTE:
When replacing the ECM, be careful not to use the wrong spec. ECM to avoid any damage on the fuel injection system.

Tightening torque:
7.5 N·m (0.8 kgf-m, 5.5 ft-lb)

C: INSPECTION

Check that the ECM has no deformation, cracks or other damages.

18.Main Relay

A: REMOVAL

1) Disconnect the ground cable from battery.

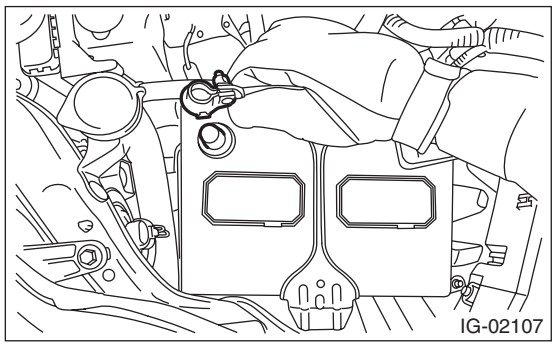

2) Remove the glove box lid assembly. <Ref. to EI-66, REMOVAL, Glove Box.>
3) Remove the main relay from the relay holder.

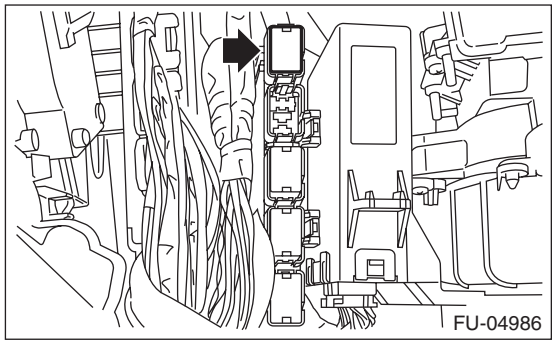

B: INSTALLATION

Install in the reverse order of removal.

C: INSPECTION

1) Check that the main relay has no deformation, cracks or other damages.
2) Measure the resistance between main relay terminals.

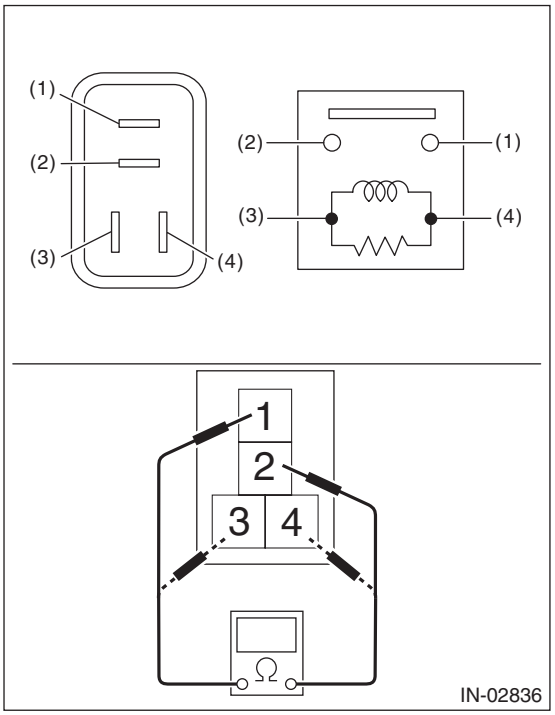

Terminal No.	Standard
1 and 2	1 MΩ or more
3 and 4	130.4 — 230.8 Ω (when 20°C (68°F))

3) Connect battery positive terminal to terminal No. 3 and battery ground terminal to terminal No. 4, and measure the resistance between the main relay terminals.

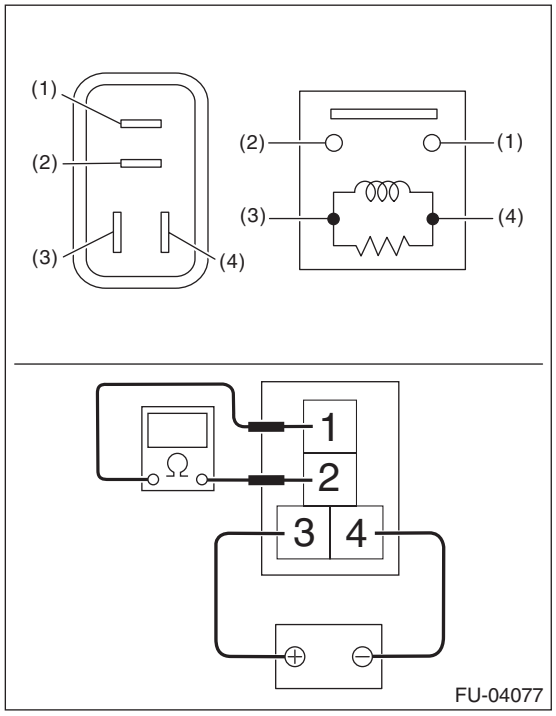

Terminal No.	Standard
1 and 2	Less than 1 Ω

19.Fuel Pump Relay

A: REMOVAL

1) Disconnect the ground cable from battery.

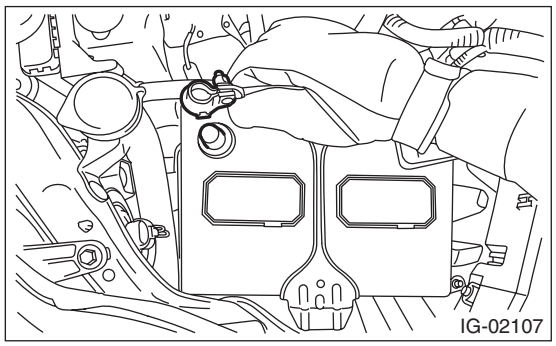

2) Remove the glove box lid assembly. <Ref. to EI-66, REMOVAL, Glove Box.>
3) Remove the fuel pump relay from the relay holder.

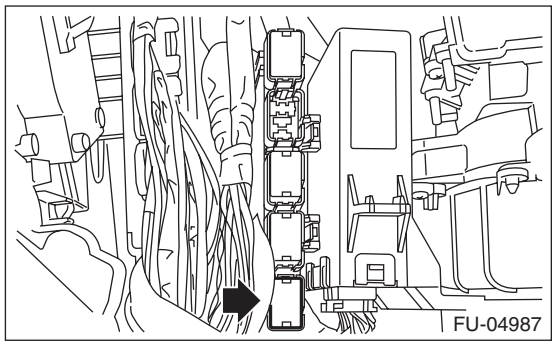

B: INSTALLATION

Install in the reverse order of removal.

C: INSPECTION

1) Check that the fuel pump relay has no deformation, cracks or other damages.
2) Measure the resistance between fuel pump relay terminals.

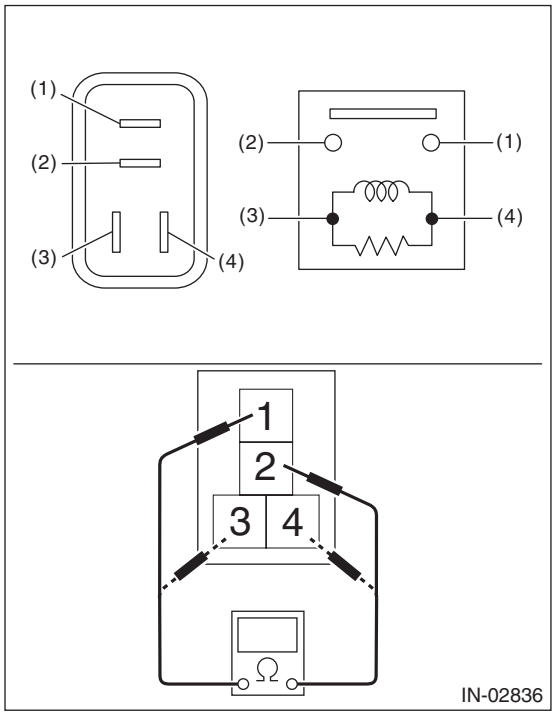

Terminal No.	Standard
1 and 2	1 MΩ or more
3 and 4	93.8 — 136.4 Ω (when 20°C (68°F))

3) Connect battery positive terminal to terminal No. 3 and battery ground terminal to terminal No. 4, and measure the resistance between the fuel pump relay terminals.

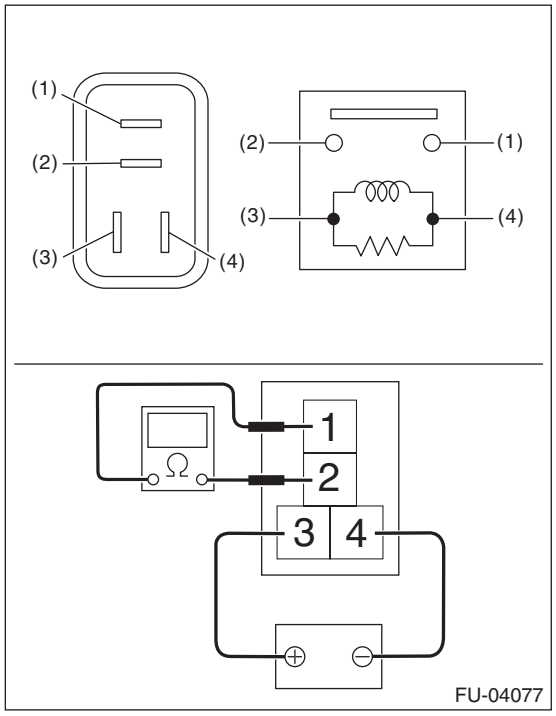

Terminal No.	Standard
1 and 2	Less than 1 Ω

20. Electronic Throttle Control Relay

A: REMOVAL

1) Disconnect the ground cable from battery.

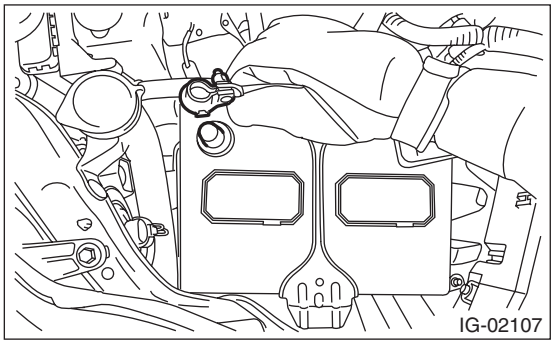

2) Remove the glove box lid assembly. <Ref. to EI-66, REMOVAL, Glove Box.>
3) Remove the electronic throttle control relay from the relay holder.

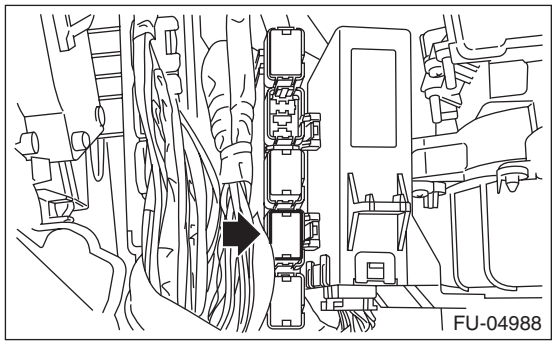

B: INSTALLATION

Install in the reverse order of removal.

C: INSPECTION

1) Check that the electronic throttle control relay has no deformation, cracks or other damages.
2) Measure the resistance between electronic throttle control relay terminals.

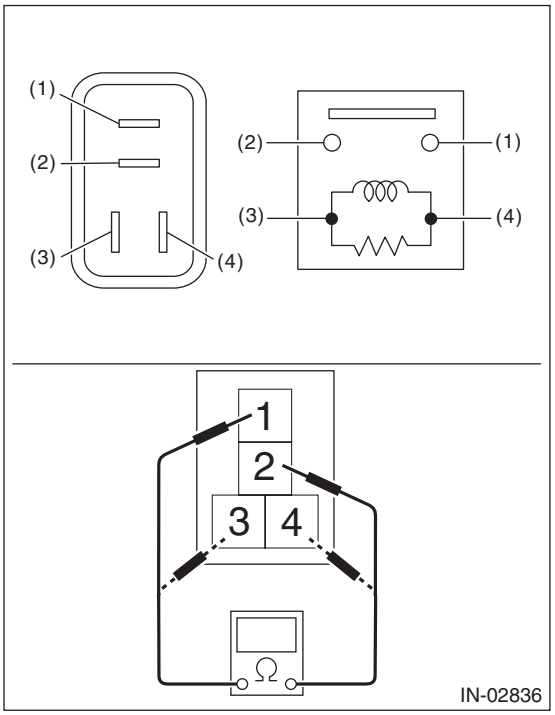

Terminal No.	Standard
1 and 2	1 MΩ or more
3 and 4	93.8 — 136.4 Ω (when 20°C (68°F))

3) Connect battery positive terminal to terminal No. 3 and battery ground terminal to terminal No. 4, and measure the resistance between the electronic throttle control relay terminals.

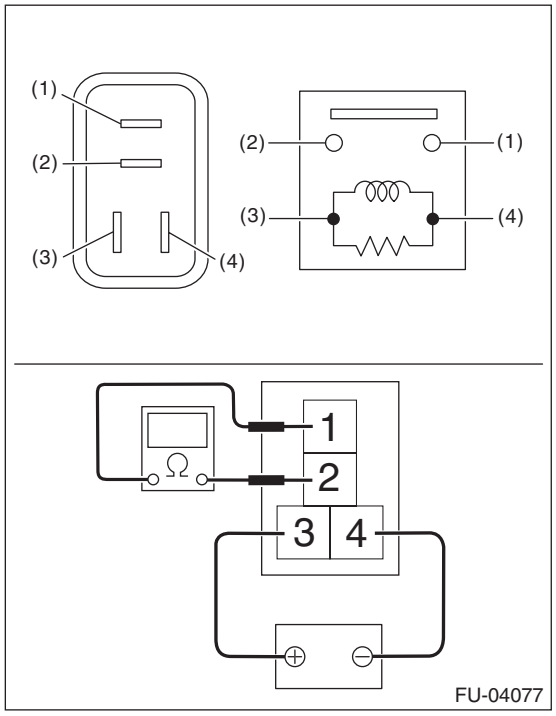

Terminal No.	Standard
1 and 2	Less than 1 Ω

21.Fuel

A: PROCEDURE

1. RELEASING OF FUEL PRESSURE

WARNING:
Place "NO OPEN FLAMES" signs near the working area.

CAUTION:
Be careful not to spill fuel.

1) Remove the fuse of fuel pump from main fuse box.

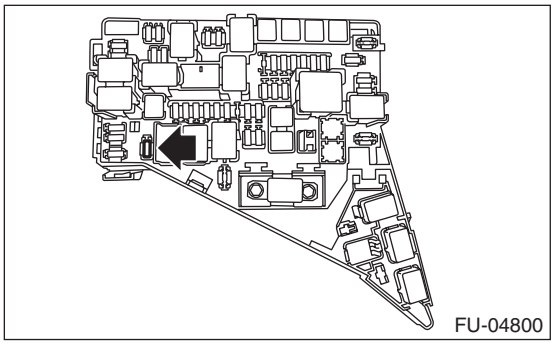

2) Start the engine and run it until it stalls.
3) After the engine stalls, crank it for five more seconds.
4) Turn the ignition switch to OFF.
5) Install the fuse of fuel pump to the main fuse box.

2. DRAINING FUEL (WITH SUBARU SELECT MONITOR)

WARNING:
Place "NO OPEN FLAMES" signs near the working area.

CAUTION:
Be careful not to spill fuel.

NOTE:
• If the fuel pump cannot be driven, refer to the procedures for draining from the fuel filler hose. <Ref. to FU(H4SO)-53, DRAINING FUEL (THROUGH THE FUEL FILLER HOSE), PROCEDURE, Fuel.>
• Be careful not to let the battery run-out.

1) Release the fuel pressure. <Ref. to FU(H4SO)-53, RELEASING OF FUEL PRESSURE, PROCEDURE, Fuel.>
2) Attach ST to the fuel delivery pipe and push ST in the direction of arrow mark to disconnect the fuel delivery hose.
ST 42099AE000 QUICK CONNECTOR RELEASE

CAUTION:
• Be careful not to spill fuel.
• Catch the fuel from hoses using a container or cloth.

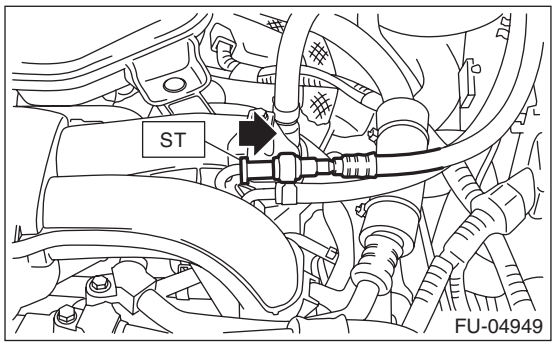

3) Connect ST to the fuel delivery hose.
ST 18471AA000 FUEL PIPE ADAPTER
4) Connect the gasoline proof hose to ST and put the end of the hose in the container.
5) Drive the fuel pump and drain the fuel using Subaru Select Monitor. (Refer to "PC application help for Subaru Select Monitor".)

CAUTION:
Be careful not to spill fuel.

6) Install the related parts in the reverse order after draining the fuel.

3. DRAINING FUEL (THROUGH THE FUEL FILLER HOSE)

WARNING:
Place "NO OPEN FLAMES" signs near the working area.

CAUTION:
• Be careful not to spill fuel.
• Fuel may remain in the fuel filler pipe. Draining the fuel from the fuel filler pipe through the fill opening using the gasoline proof pump and the gasoline proof hose (ø10 or less) before the operation.

1) Lift up the vehicle.
2) Remove the rear exhaust pipe and muffler. <Ref. to EX(H4SO)-9, REMOVAL, Rear Exhaust Pipe.> <Ref. to EX(H4SO)-11, REMOVAL, Muffler.>
3) Open the fuel filler lid and remove the fuel filler cap.
4) Drain the fuel from the fuel filler pipe through the filler opening using the gasoline proof pump and the gasoline proof hose (ø10 or less).

5) Disconnect the fuel filler hoses from the fuel filler pipe.

CAUTION:
- **Be careful not to spill fuel.**
- **Catch the fuel from hoses using a container or cloth.**

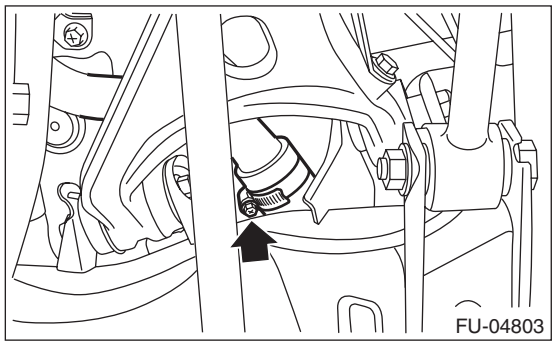

6) Set the container under the vehicle and insert the gasoline proof hose (ø10 or less) into the fuel filler hose to drain the fuel.

CAUTION:
Be careful not to spill fuel.

7) Install the related parts in the reverse order after draining the fuel.

NOTE:
Correctly insert the fuel filler hose to the spool, and then install the clamp as shown.

Tightening torque:
2.5 N·m (0.3 kgf-m, 1.8 ft-lb)

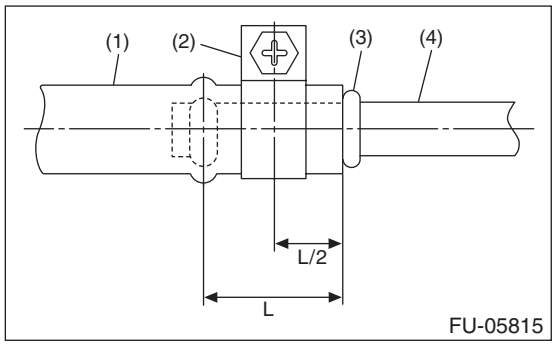

(1) Fuel filler hose
(2) Clamp
(3) Spool
(4) Fuel filler pipe

22.Fuel Tank

A: REMOVAL

WARNING:
Place "NO OPEN FLAMES" signs near the working area.

CAUTION:
Be careful not to spill fuel.

1) Release the fuel pressure. <Ref. to FU(H4SO)-53, RELEASING OF FUEL PRESSURE, PROCEDURE, Fuel.>
2) Drain fuel. <Ref. to FU(H4SO)-53, DRAINING FUEL (WITH SUBARU SELECT MONITOR), PROCEDURE, Fuel.>
3) Disconnect the ground cable from battery.

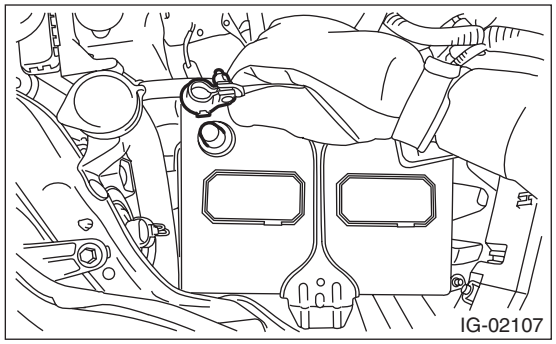

4) Remove the rear seat cushion. <Ref. to SE-34, REMOVAL, Rear Seat.>
5) Remove the clips (A) and seat cushion hooks (B), and turn over the floor mat (C).

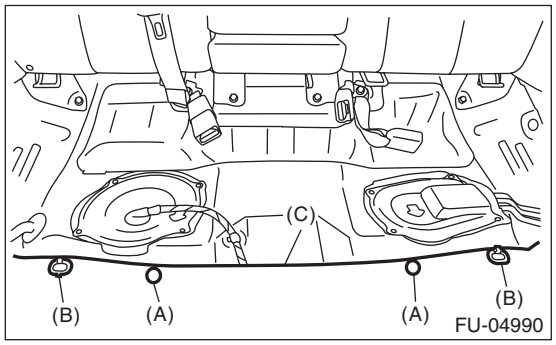

6) Remove the service hole cover of fuel pump.
   (1) Disconnect the fuel cord connector (A), and remove the clip (B).
   (2) Remove the screw (C).
   (3) Push the grommet (D) down and remove the service hole cover.

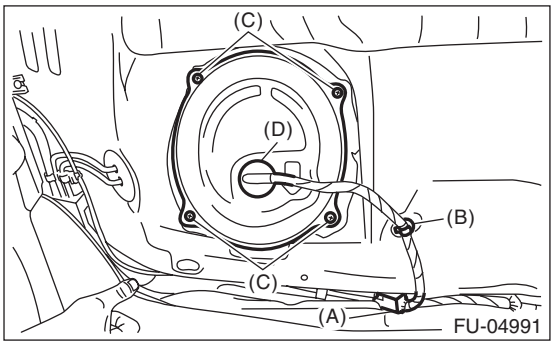

7) Remove the service hole cover of fuel sub level sensor.

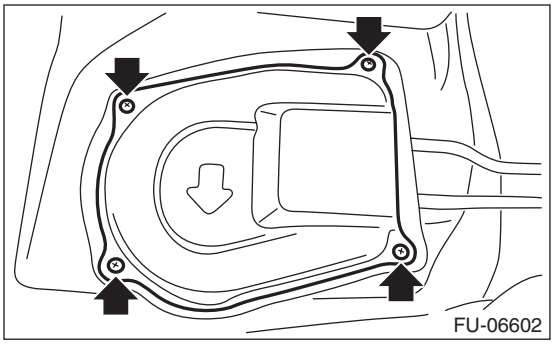

8) Disconnect the quick connector on the fuel delivery tube (A). <Ref. to FU(H4SO)-73, REMOVAL, Fuel Delivery and Evaporation Lines.>

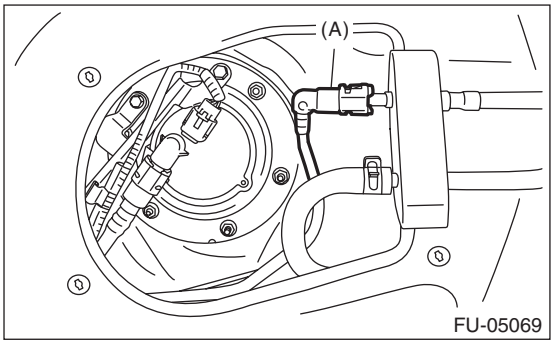

9) Remove the rear wheels.
10) Lift up the vehicle.
11) Remove the rear ABS wheel speed sensor from the rear housing.

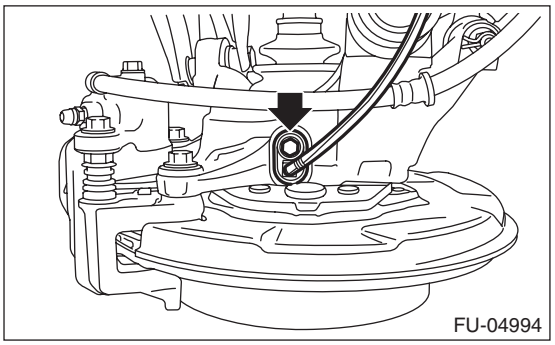

12) Remove the rear ABS wheel speed sensor harness bracket from the upper arm.

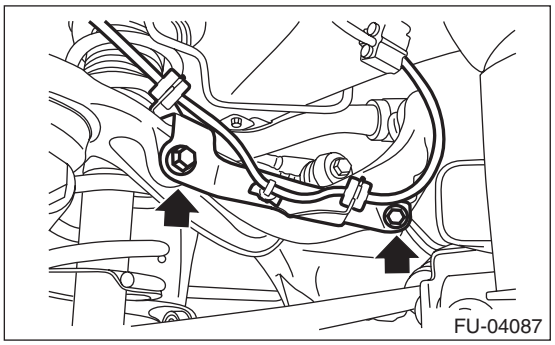

13) Remove the rear brake hose bracket from rear housing.

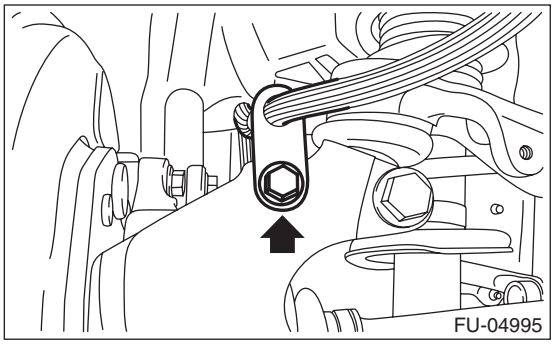

14) Remove the rear disc brake assembly and tie it to the body side of the vehicle.

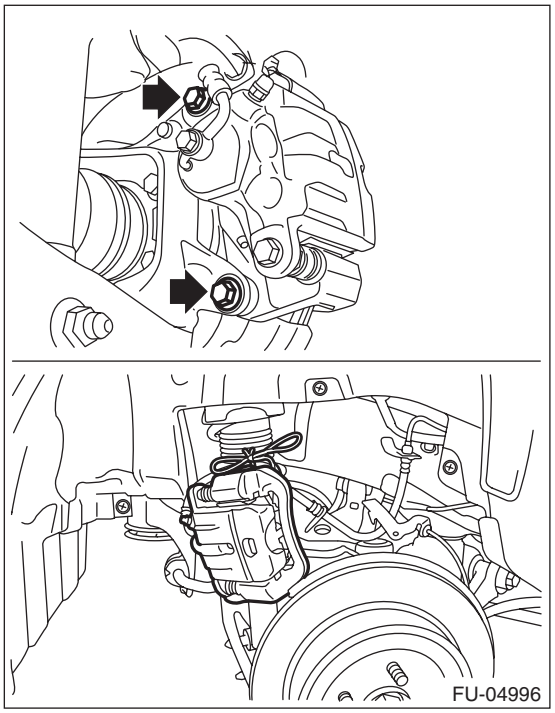

15) Remove the parking brake cable from parking brake assembly. <Ref. to PB-10, REMOVAL, Parking Brake Assembly (Rear Disc Brake).>

16) Remove the rear exhaust pipe and muffler. <Ref. to EX(H4SO)-9, REMOVAL, Rear Exhaust Pipe.> <Ref. to EX(H4SO)-11, REMOVAL, Muffler.>

17) Remove the heat shield cover (A).

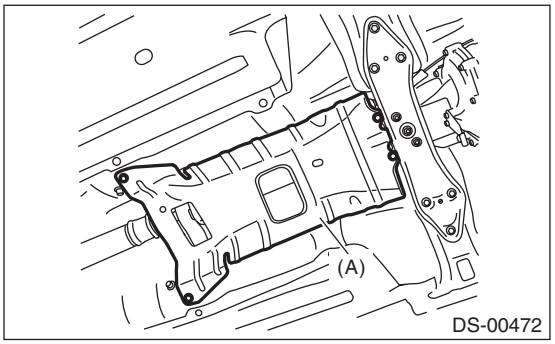

18) Remove the propeller shaft. <Ref. to DS-10, REMOVAL, Propeller Shaft.>

19) Remove the clip (A) securing the fuel tank protector and heat shield cover.

20) Remove the bolts (B) and nuts (C) securing the fuel tank protector, and remove the fuel tank protector.

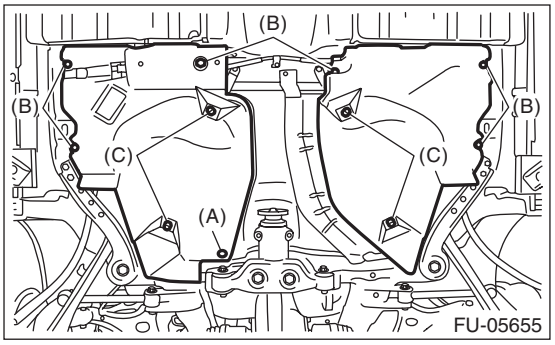

21) Remove the bolts and nuts securing the heat shield cover and remove the heat shield cover.

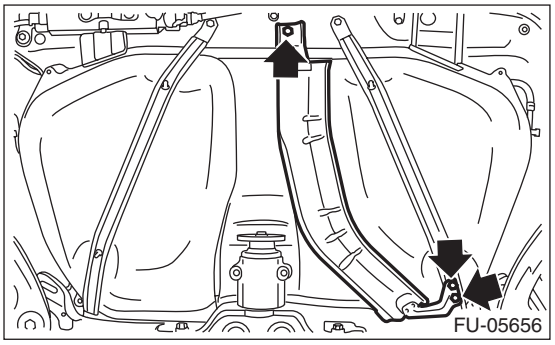

22) Remove the rear suspension assembly.

WARNING:
A helper is required to perform this work.

(1) Support the rear differential with the transmission jack.
(2) Remove the bolt and nut which secures rear shock absorber to rear suspension arm.

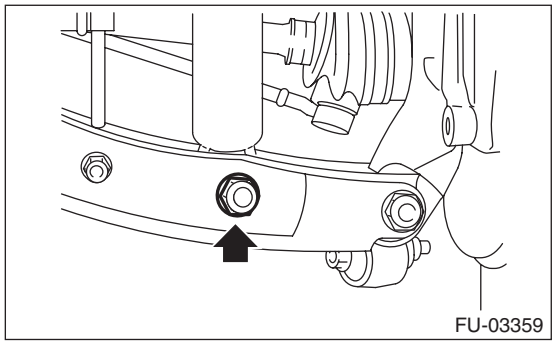

(3) Remove the bolts which secure the rear suspension assembly to the body.

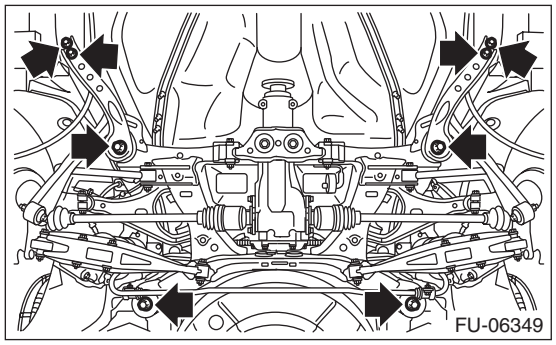

(4) Remove the rear suspension assembly.

23) Disconnect the air vent hose from the fuel tank.

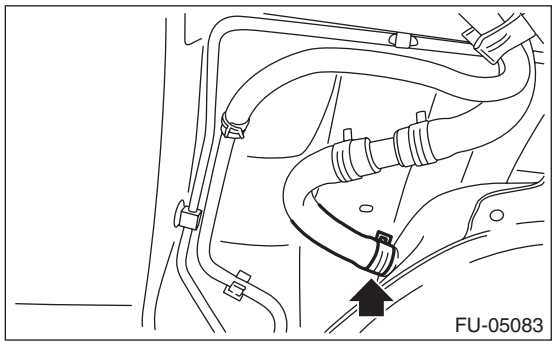

24) Disconnect the quick connector of the circulate tube from evaporation pipe.

NOTE:
Disconnect the quick connector as shown in the figure.

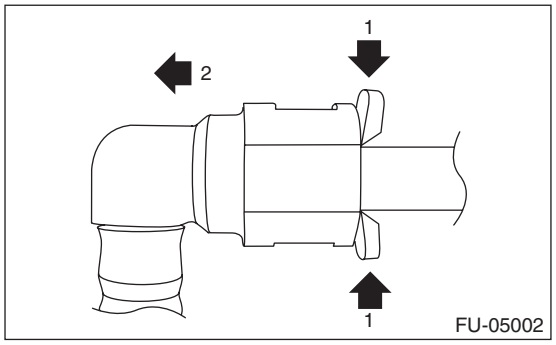

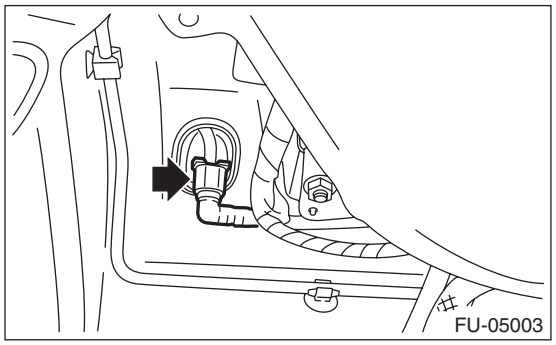

25) Disconnect the fuel filler hose from the fuel filler pipe assembly.

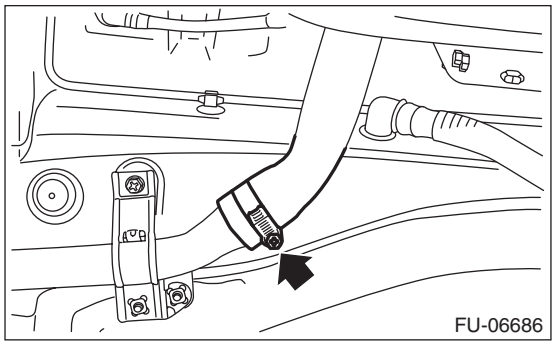

26) Support the fuel tank with a transmission jack, remove the fuel tank band, and remove the fuel tank from the vehicle.

WARNING:
- **A helper is required to perform this work.**
- **Fuel may remain in the fuel tank. This will cause the left and right sides to be unbalanced. Be careful not to drop the fuel tank.**

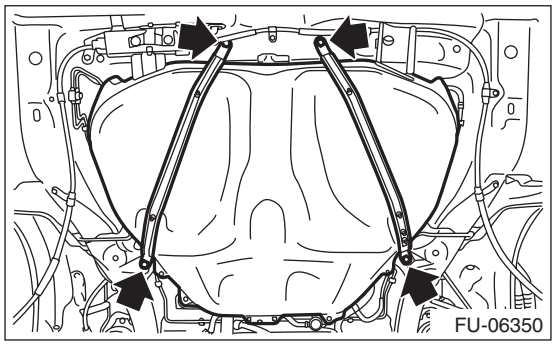

B: INSTALLATION

1) Support the fuel tank with a transmission jack, set the fuel tank and the fuel tank band in place, and temporarily tighten the bolts of the fuel tank band.

WARNING:
A helper is required to perform this work.

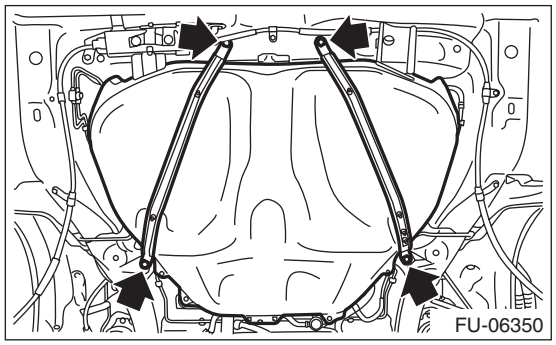

2) Correctly insert the fuel filler hose to the spool, and then install the clamp as shown.

Tightening torque:
2.5 N·m (0.3 kgf-m, 1.8 ft-lb)

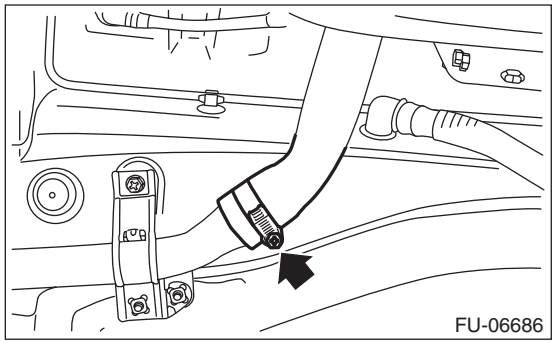

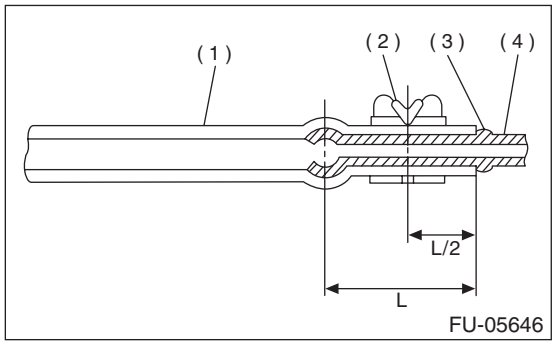

(1) Hose
(2) Clamp
(3) Spool
(4) Pipe

3) Connect the quick connector of the circulate tube to the evaporation pipe as shown in the figure.

CAUTION:
• Check that there is no damage or dust on the quick connector. If necessary, clean the seal surface of the pipe.
• Make sure that the quick connector is securely connected.

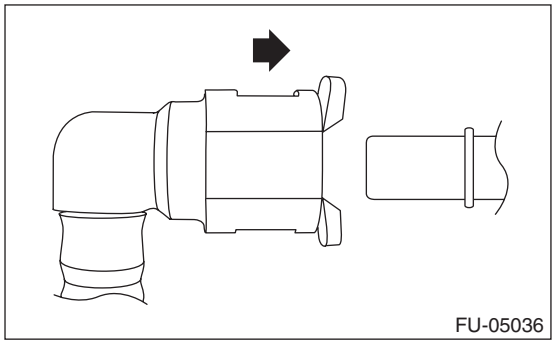

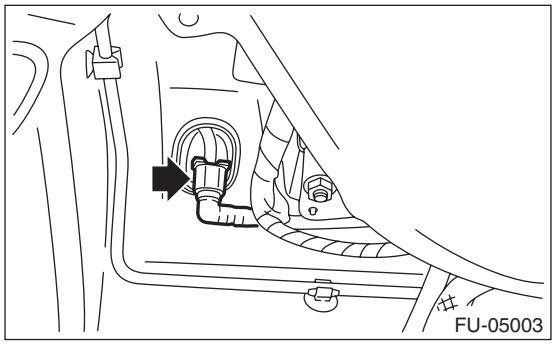

4) Connect the air vent hose to fuel tank.

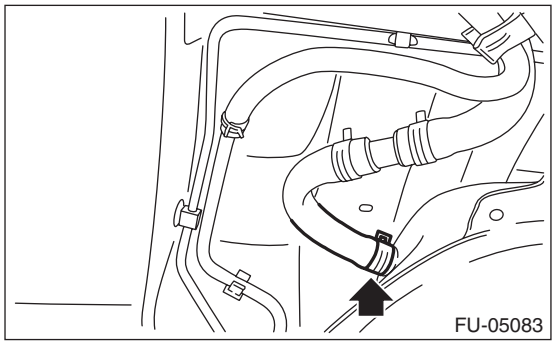

5) Move the fuel tank so that the distance between the center of the positioning hole for the body (A) and the front end of the fuel tank flange (B) becomes L, and tighten the bolts of the fuel tank bands in the sequence shown in the figure.

CAUTION:
To prevent the fuel tank from damage, after tightening the bolts of the fuel tank bands, make sure that the distance between the center of the positioning hole for the body (A) and the front end of the fuel tank flange (B) is L.

Distance L: Center of the positioning hole for the body (A) — Front end of the fuel tank flange (B)
14.5 mm (0.571 in) or less

Tightening torque:
33 N·m (3.4 kgf-m, 24.3 ft-lb)

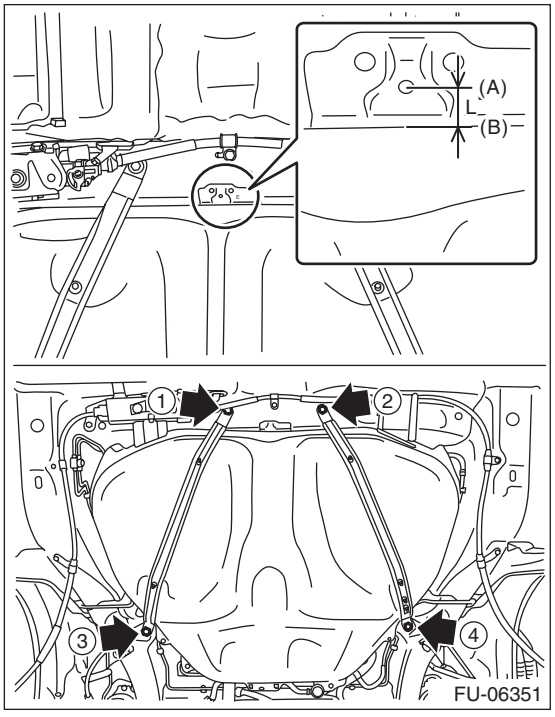

6) Install the rear suspension assembly.

WARNING:
A helper is required to perform this work.

(1) Support the rear differential with the transmission jack.

(2) Support the rear suspension assembly and install the rear suspension assembly to the body.

Tightening torque:
T1: 70 N·m (7.1 kgf-m, 51.6 ft-lb)
T2: 200 N·m (20.4 kgf-m, 147.5 ft-lb)

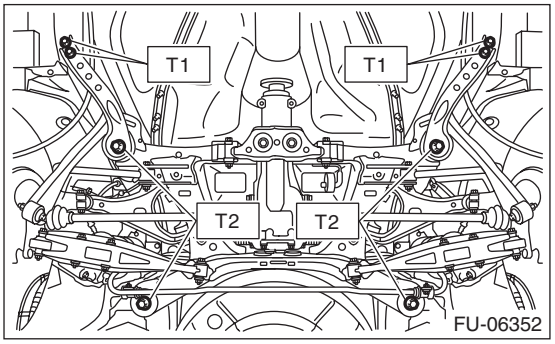

(3) Install the rear shock absorber to the rear suspension arm.

NOTE:
Use a new self-locking nut.

Tightening torque:
120 N·m (12.2 kgf-m, 88.5 ft-lb)

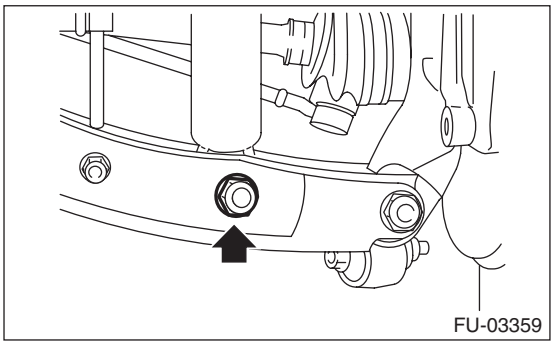

7) Install the heat shield cover.

Tightening torque:
18 N·m (1.8 kgf-m, 13.3 ft-lb)

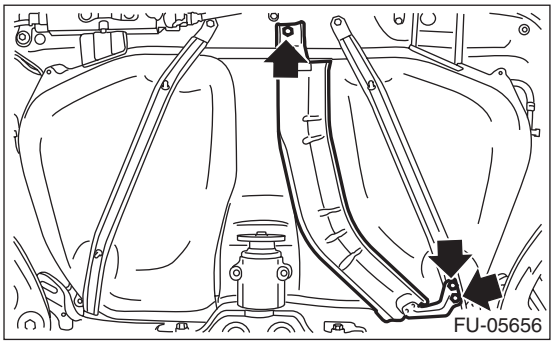

8) Install the bolts (B) and nuts (C) securing the fuel tank protector and install the clip (A) securing the fuel tank protector and heat shield cover.

NOTE:
Use a new self-locking nut.

Tightening torque:
Nut (C): 9 N·m (0.9 kgf-m, 6.6 ft-lb)
Bolt (B): 18 N·m (1.8 kgf-m, 13.3 ft-lb)

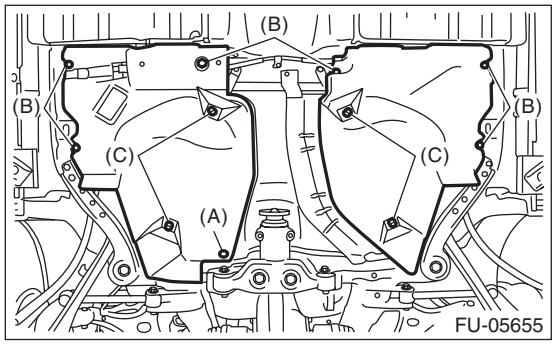

9) Install the propeller shaft. <Ref. to DS-11, INSTALLATION, Propeller Shaft.>
10) Install the heat shield cover (A).

Tightening torque:
18 N·m (1.8 kgf-m, 13.3 ft-lb)

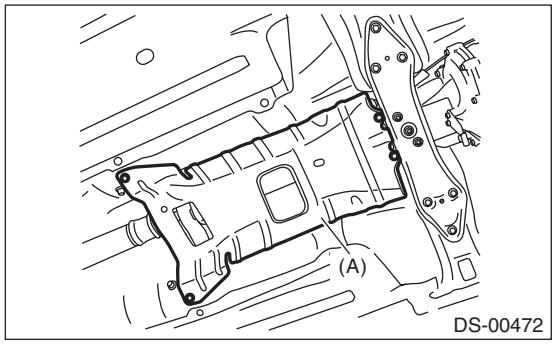

11) Install the rear exhaust pipe and muffler. <Ref. to EX(H4SO)-9, INSTALLATION, Rear Exhaust Pipe.> <Ref. to EX(H4SO)-11, INSTALLATION, Muffler.>
12) Lower the vehicle.
13) Connect the parking brake cable to the parking brake assembly. <Ref. to PB-14, INSTALLATION, Parking Brake Assembly (Rear Disc Brake).>
14) Install the rear disc brake assembly.

Tightening torque:
66 N·m (6.7 kgf-m, 48.7 ft-lb)

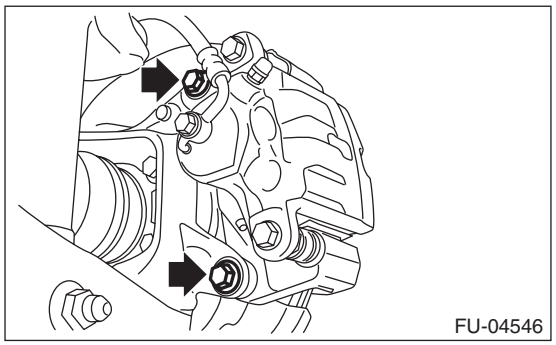

15) Install the rear brake hose bracket to the rear housing.

Tightening torque:
33 N·m (3.4 kgf-m, 24.3 ft-lb)

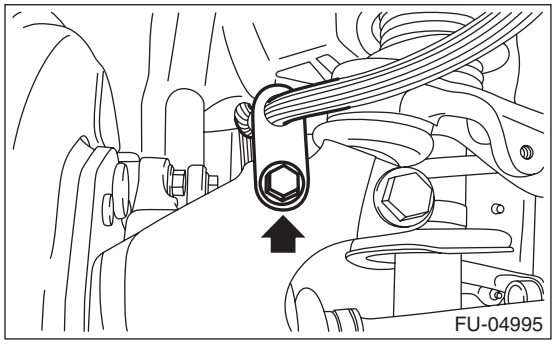

16) Install the rear ABS wheel speed sensor harness bracket to the upper arm.

NOTE:
Prevent the harness identification (line) from being twisted when installing. <Ref. to VDC-2, SPECIFICATION, General Description.>

Tightening torque:
7.5 N·m (0.8 kgf-m, 5.5 ft-lb)

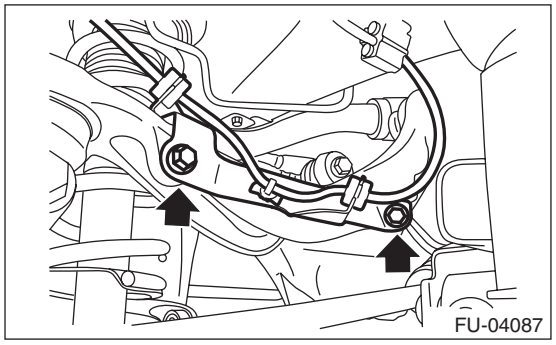

17) Attach the rear ABS wheel speed sensor to the rear housing.

NOTE:
Prevent the harness identification (line) from being twisted when installing. <Ref. to VDC-2, SPECIFICATION, General Description.>

Tightening torque:
7.5 N·m (0.8 kgf-m, 5.5 ft-lb)

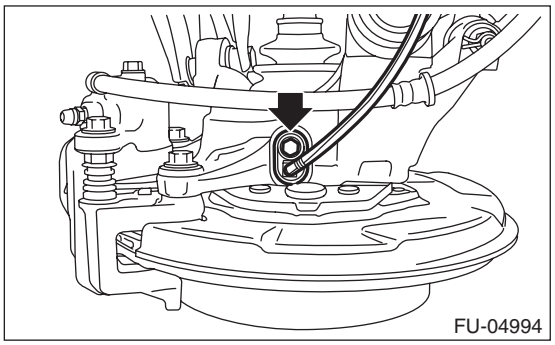
FU-04994

18) Install the rear wheels.

Tightening torque:
120 N·m (12.2 kgf-m, 88.5 ft-lb)

19) Connect the quick connector of the fuel delivery tube (A). <Ref. to FU(H4SO)-76, INSTALLATION, Fuel Delivery and Evaporation Lines.>

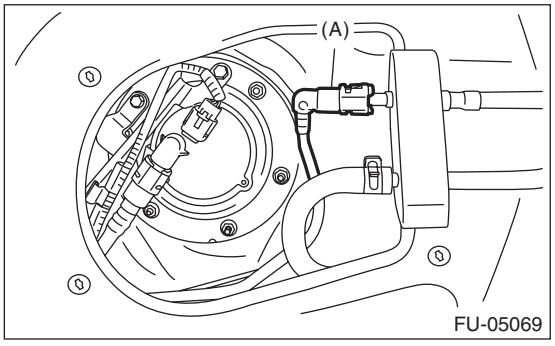

FU-05069

20) Install the service hole cover of fuel sub level sensor.

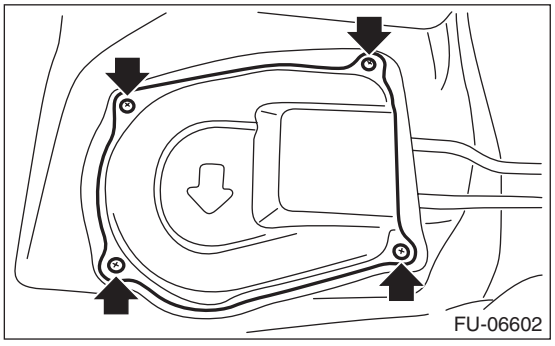
FU-06602

21) Attach the service hole cover of the fuel pump, and attach the connector and clip.

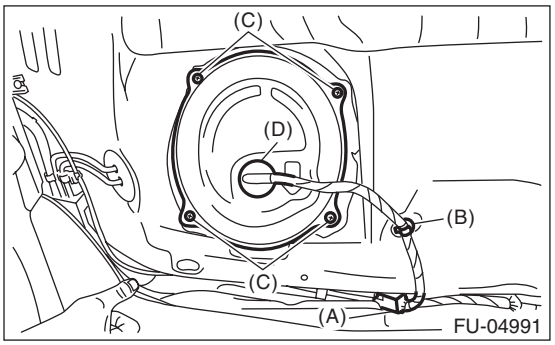

FU-04991

(A) Connector
(B) Clip
(C) Screw
(D) Grommet

22) Set the floor mat (C), and install clips (A) and seat cushion hooks (B).

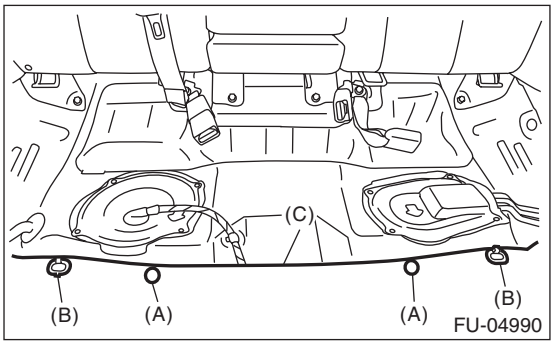

FU-04990

23) Install the rear seat cushion. <Ref. to SE-49, INSTALLATION, Rear Seat.>
24) Connect the battery ground terminal.

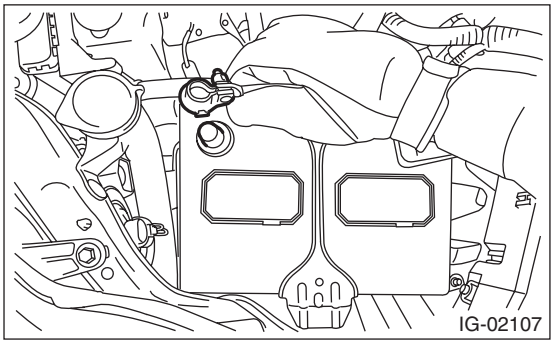
IG-02107

25) Inspect the wheel alignment and adjust if necessary.

C: INSPECTION

1) Check that the fuel tank and fuel pipe have no deformation, cracks and other damages.
2) Check that the fuel hose has no cracks, damage or loose part.

23.Fuel Filler Pipe

A: REMOVAL

WARNING:
Place "NO OPEN FLAMES" signs near the working area.

CAUTION:
Be careful not to spill fuel.

1) Release the fuel pressure. <Ref. to FU(H4SO)-53, RELEASING OF FUEL PRESSURE, PROCEDURE, Fuel.>
2) Drain fuel. <Ref. to FU(H4SO)-53, DRAINING FUEL (WITH SUBARU SELECT MONITOR), PROCEDURE, Fuel.>
3) Disconnect the ground cable from battery.

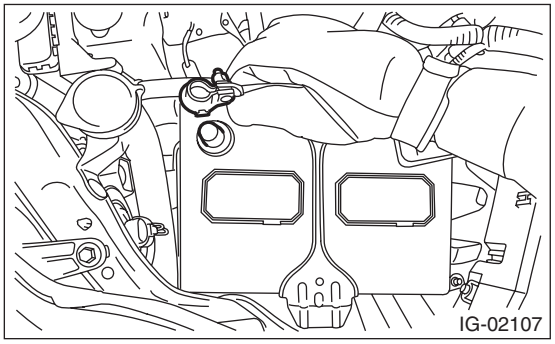
IG-02107

4) Open the fuel filler lid, and remove the filler cap.
5) Turn the fuel filler pipe protector in the direction of the arrow to unlock and remove it.

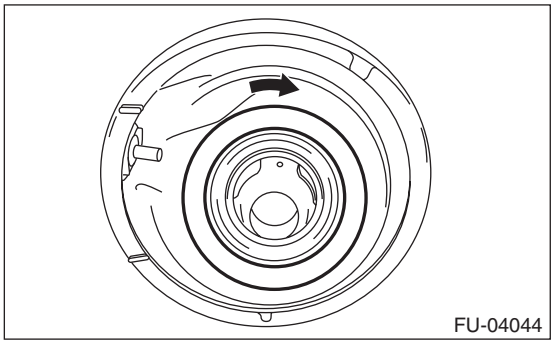
FU-04044

6) Remove the rear wheel RH.
7) Lift up the vehicle.
8) Remove the rear mud guard RH. <Ref. to EI-38, REMOVAL, Mud Guard.>
9) Remove the rear sub frame. <Ref. to RS-16, REMOVAL, Rear Sub Frame.>
10) Disconnect the fuel filler hose from the fuel filler pipe assembly.

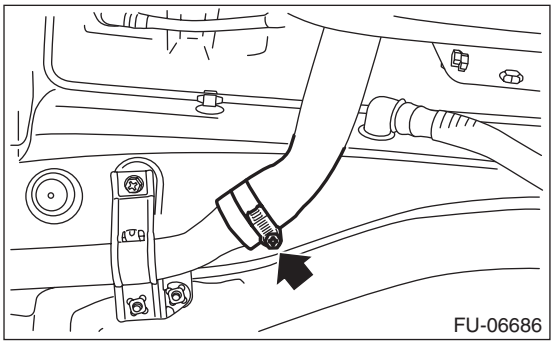
FU-06686

11) Disconnect the evaporation hose (A) from fuel filler pipe assembly and remove the bolts and nuts securing the fuel filler pipe assembly to the vehicle body.

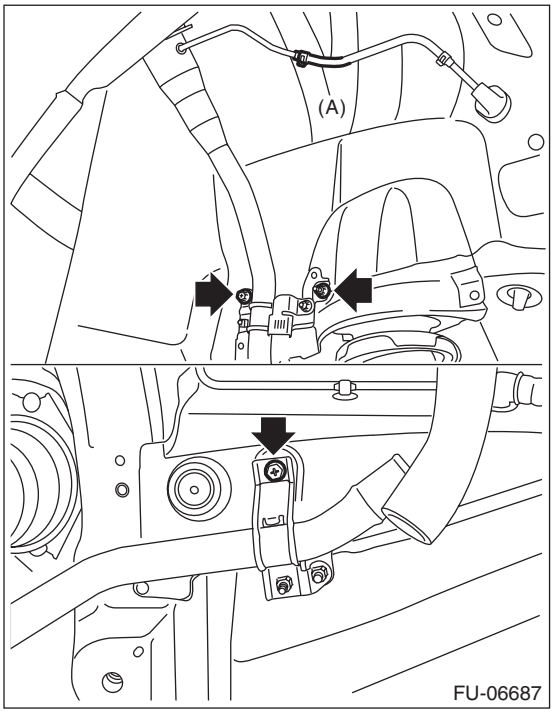

FU-06687

12) Remove the fuel filler pipe assembly from the underside of the vehicle.

B: INSTALLATION

1) Open the fuel filler lid.
2) Insert the fuel filler pipe assembly into the rubber saucer from inside of the rear fender.
3) Install the fuel filler pipe assembly to the vehicle body and connect the evaporation hose (A) to the fuel filler pipe assembly.

Tightening torque:
7.5 N·m (0.8 kgf-m, 5.5 ft-lb)

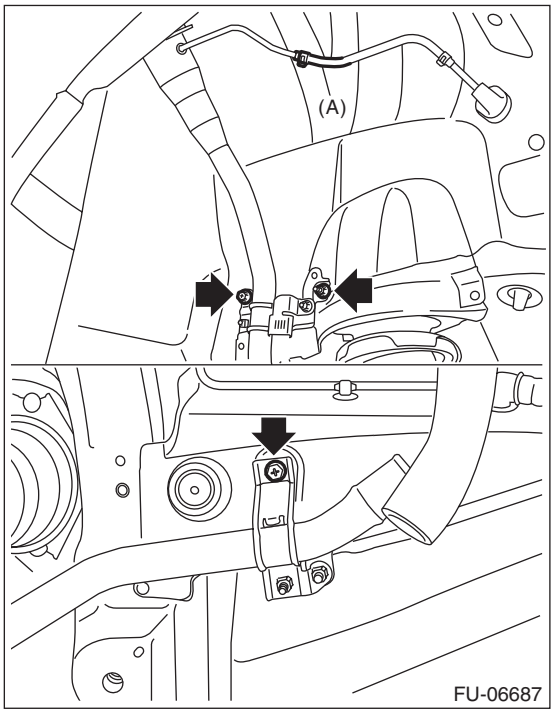

4) Align the cutout on the fuel filler pipe protector and the protrusion of the neck holder and insert them all the way, and then turn the fuel filler pipe protector in the direction of the arrow until it is locked.

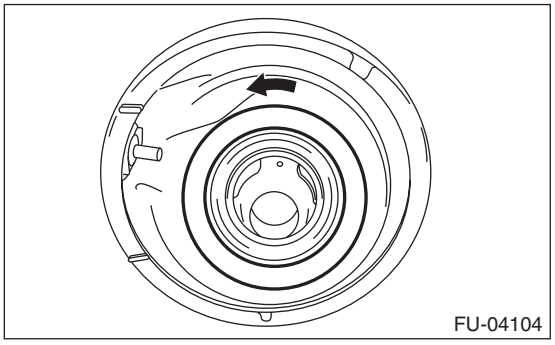

5) Correctly insert the fuel filler hose to the spool, and then install the clamp as shown.

Tightening torque:
2.5 N·m (0.3 kgf-m, 1.8 ft-lb)

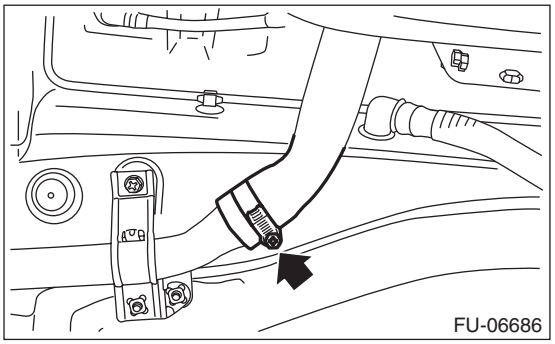

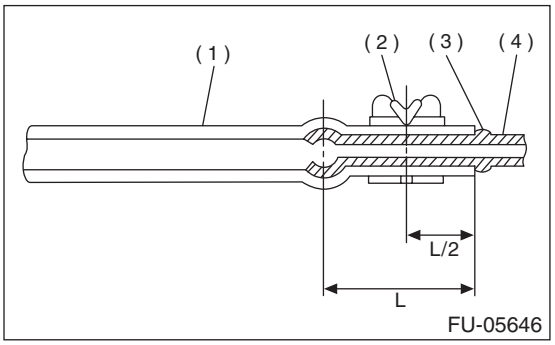

(1) Hose
(2) Clamp
(3) Spool
(4) Pipe

6) Install the rear sub frame. <Ref. to RS-18, INSTALLATION, Rear Sub Frame.>
7) Install the rear mud guard RH. <Ref. to EI-38, INSTALLATION, Mud Guard.>
8) Lower the vehicle.
9) Install the rear wheel RH.

Tightening torque:
120 N·m (12.2 kgf-m, 88.5 ft-lb)

10) Connect the battery ground terminal.

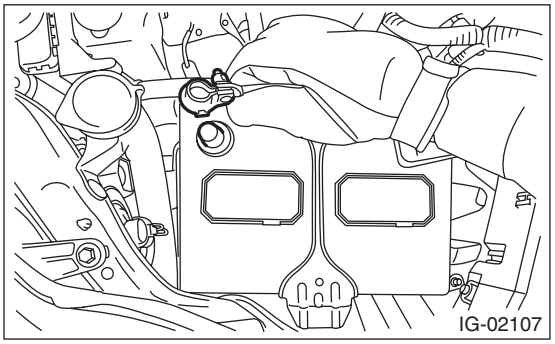

11) Inspect the wheel alignment and adjust if necessary.

C: DISASSEMBLY

Remove the fuel filler pipe bracket from the fuel filler pipe.

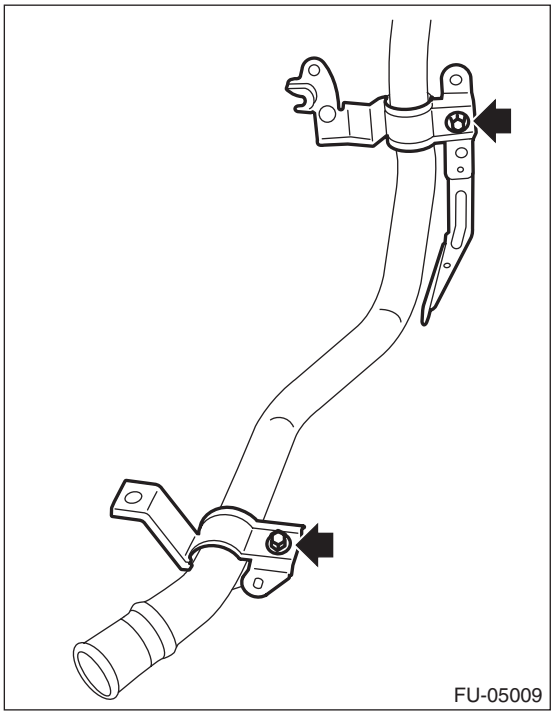

D: ASSEMBLY

Install the fuel filler pipe bracket to the fuel filler pipe.

Tightening torque:
7.35 N·m (0.7 kgf-m, 5.4 ft-lb)

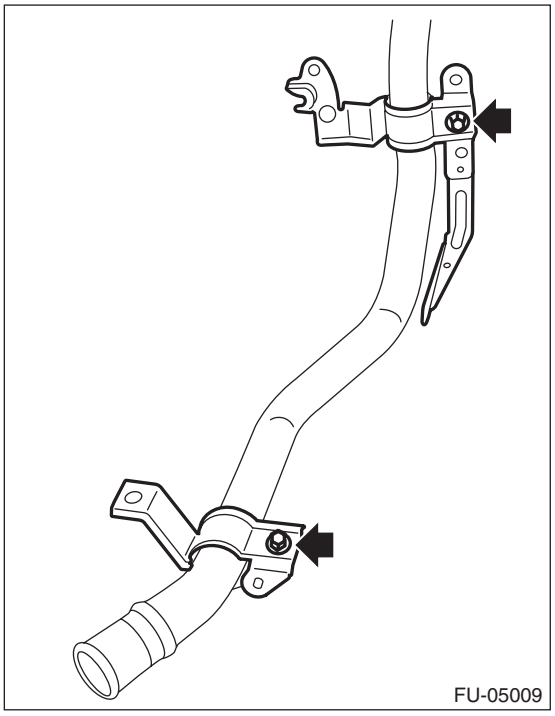

E: INSPECTION

1) Check that the fuel filler pipe does not have deformation, cracks or other damages.
2) Check that the fuel hose has no cracks, damage or loose part.

24.Fuel Pump

A: REMOVAL

WARNING:
Place "NO OPEN FLAMES" signs near the working area.

CAUTION:
- **Be careful not to spill fuel.**
- **If the fuel gauge indicates that two thirds or more of the fuel is remaining, be sure to drain fuel before starting work to avoid the fuel to spill.**

NOTE:
Fuel pump assembly consists of fuel pump, fuel filter, fuel chamber and fuel level sensor.

1) Release the fuel pressure. <Ref. to FU(H4SO)-53, RELEASING OF FUEL PRESSURE, PROCEDURE, Fuel.>
2) Drain fuel. <Ref. to FU(H4SO)-53, DRAINING FUEL (WITH SUBARU SELECT MONITOR), PROCEDURE, Fuel.>
3) Disconnect the ground cable from battery.

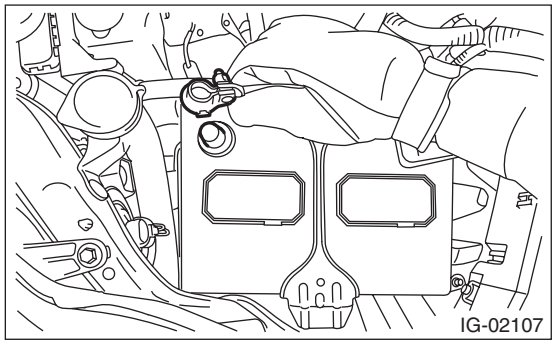
IG-02107

4) Remove the rear seat cushion. <Ref. to SE-34, REMOVAL, Rear Seat.>
5) Remove the clips (A) and seat cushion hooks (B), and turn over the floor mat (C).

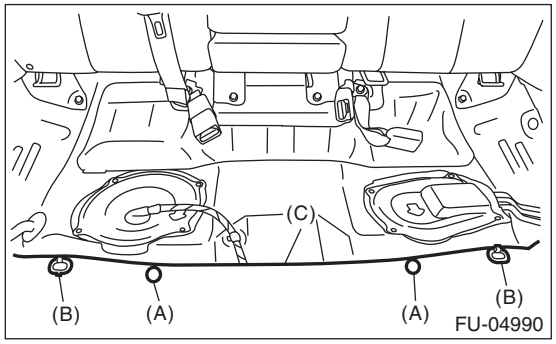

FU-04990

6) Remove the service hole cover.
(1) Disconnect the fuel cord connector (A), and remove the clip (B).
(2) Remove the screw (C).
(3) Push the grommet (D) down and remove the service hole cover.

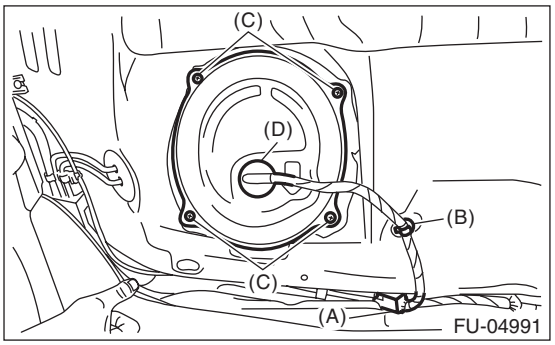

FU-04991

7) Disconnect the connector (A) from fuel pump, and remove the clip (B) securing the harness.
8) Disconnect the quick connector of fuel delivery tube (C) and fuel sub delivery tube (D). <Ref. to FU(H4SO)-73, REMOVAL, Fuel Delivery and Evaporation Lines.>

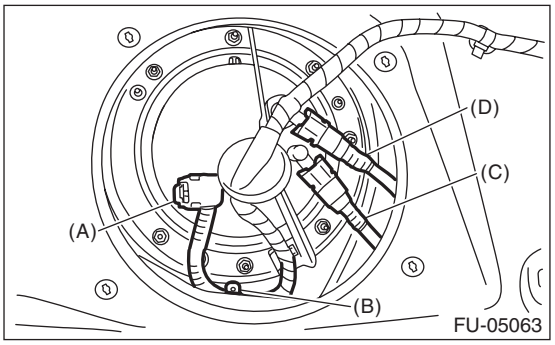

FU-05063

9) Remove the nuts securing the fuel pump upper plate to the fuel tank and remove the fuel pump upper plate.

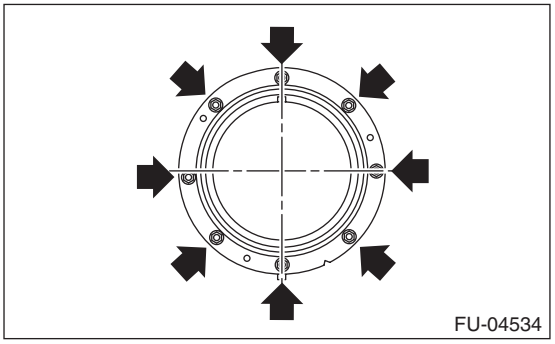
FU-04534

10) Remove the fuel pump assembly from the fuel tank.

B: INSTALLATION

Install in the reverse order of removal while being careful of the following.
• Make sure the sealing portion is free from fuel or foreign matter before installation.
• Align protrusion (A) of the gasket to the position shown in the figure.
• Insert the protrusion (B) of gasket to the fuel pump upper plate. (3 places)
• Align the protrusion (C) of fuel pump assembly with the cutout on the fuel pump upper plate.
• Tighten the nuts to the specified torque in the order as shown in the figure.

NOTE:
Use a new gasket.

Tightening torque:
4.4 N·m (0.4 kgf-m, 3.2 ft-lb)

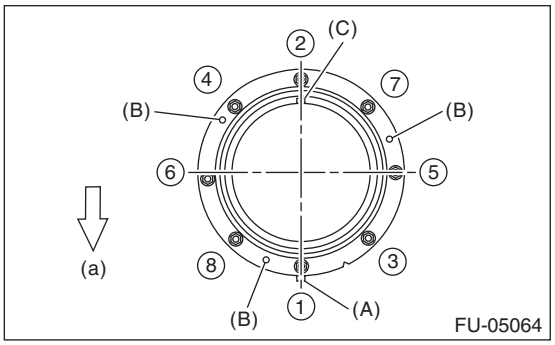

(a) Front side of vehicle

C: INSPECTION

1) Check that the fuel pump has no deformation, cracks or other damages.
2) Connect the battery positive terminal to terminal No. 5 and the battery ground terminal to terminal No. 6, and inspect the fuel pump operation.

WARNING:
• Wipe off fuel completely.
• Keep the battery as far apart from fuel pump as possible.
• Do not run the fuel pump for a long time under non-load condition.

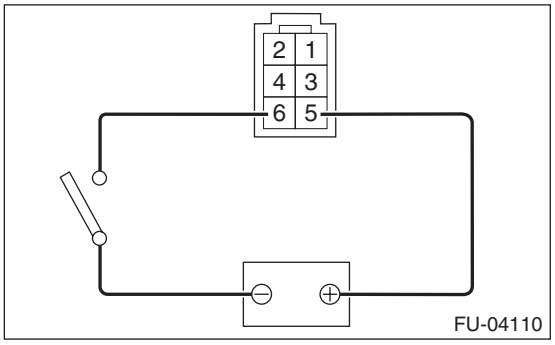

25.Fuel Level Sensor

A: REMOVAL

WARNING:
Place "NO OPEN FLAMES" signs near the working area.

CAUTION:
- **Be careful not to spill fuel.**
- **If the fuel gauge indicates that two thirds or more of the fuel is remaining, be sure to drain fuel before starting work to avoid the fuel to spill.**

NOTE:
The fuel level sensor is built in fuel pump assembly.
1) Remove the fuel pump assembly. <Ref. to FU(H4SO)-65, REMOVAL, Fuel Pump.>
2) Disconnect the fuel level sensor connector.

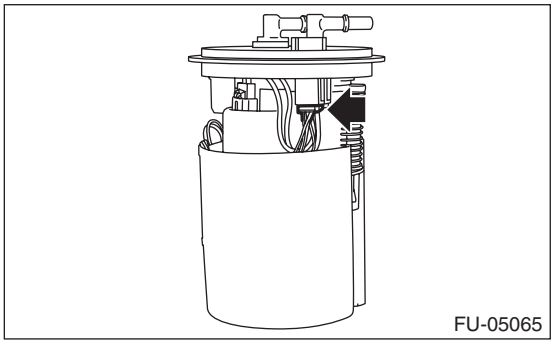
FU-05065

3) Remove the harness from the hooks (A) on the fuel chamber assembly and remove the fuel temperature sensor (B) from fuel chamber assembly.

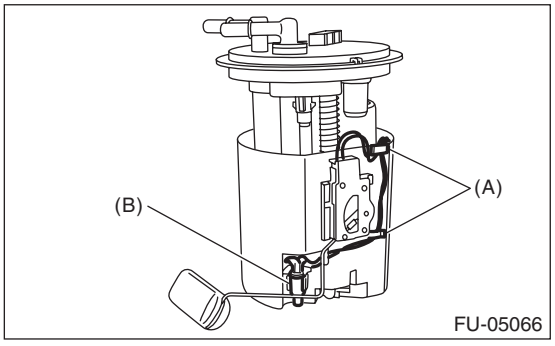

FU-05066

4) Press two claws (A) of the fuel level sensor, and slide the fuel level sensor in the direction of the arrow to remove the fuel level sensor.

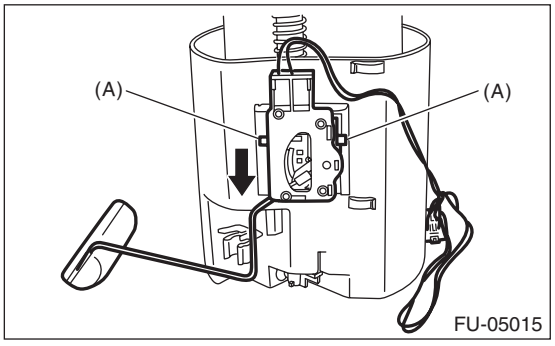

FU-05015

B: INSTALLATION

Install in the reverse order of removal.

C: INSPECTION

1) Check that the fuel level sensor has no damage.
2) Measure the fuel level sensor float position.

NOTE:
When inspecting the fuel level sensor, perform the work with the sensor installed to the fuel pump.

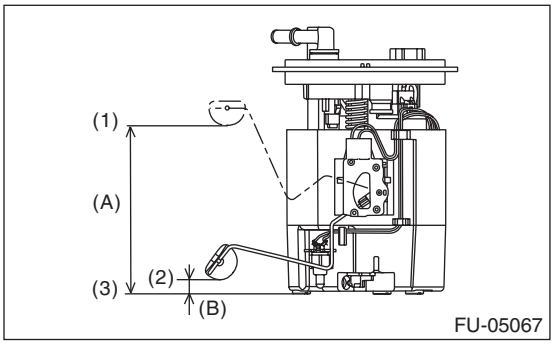

FU-05067

(1) FULL
(2) EMPTY
(3) Fuel tank seating surface

Float position	Standard
FULL to Fuel tank seating surface (A)	126.4±4 mm (4.976±0.157 in)
EMPTY to Fuel tank seating surface (B)	11.0±4 mm (0.433±0.157 in)

3) Measure the resistance between fuel level sensor terminals.

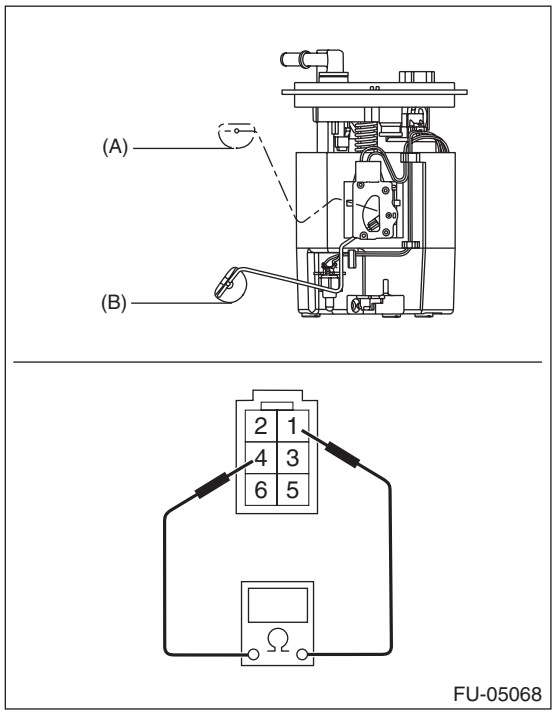

Float position	Terminal No.	Standard
FULL (A)	1 and 4	8.7±1.0 Ω
EMPTY (B)		139.1±2.0 Ω

26.Fuel Sub Level Sensor

A: REMOVAL

WARNING:
Place "NO OPEN FLAMES" signs near the working area.

CAUTION:
- **Be careful not to spill fuel.**
- **If the fuel gauge indicates that two thirds or more of the fuel is remaining, be sure to drain fuel before starting work to avoid the fuel to spill.**

1) Release the fuel pressure. <Ref. to FU(H4SO)-53, RELEASING OF FUEL PRESSURE, PROCEDURE, Fuel.>
2) Drain fuel. <Ref. to FU(H4SO)-53, DRAINING FUEL (WITH SUBARU SELECT MONITOR), PROCEDURE, Fuel.>
3) Disconnect the ground cable from battery.

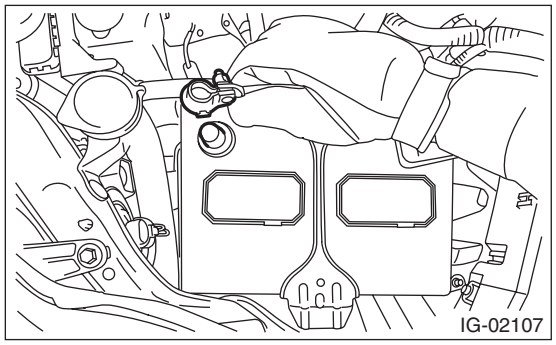
IG-02107

4) Remove the rear seat cushion. <Ref. to SE-34, REMOVAL, Rear Seat.>
5) Remove the service hole cover.

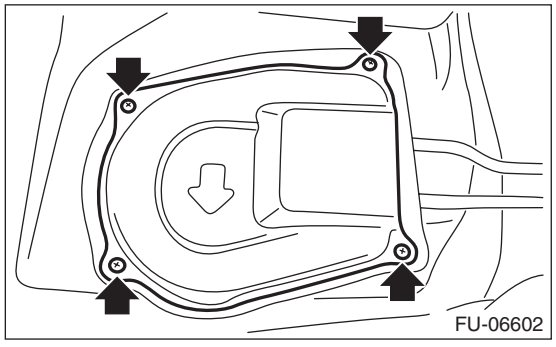
FU-06602

6) Disconnect the connector (A) from fuel sub level sensor, and remove the clip (B) securing the fuel cord from fuel sub level sensor protector.

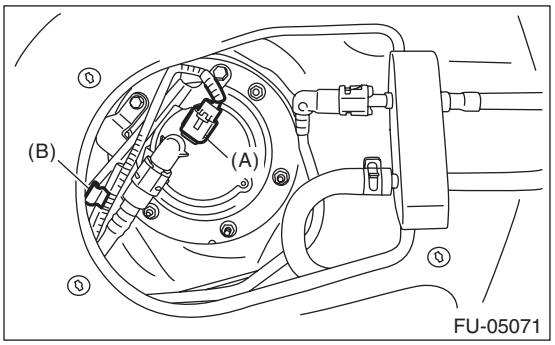

FU-05071

7) Remove the bolts (A) securing the fuel sub level sensor protector to the fuel sub level sensor upper plate, and remove the fuel sub level sensor protector.
8) Disconnect the quick connector on the fuel sub delivery tube (B). <Ref. to FU(H4SO)-73, REMOVAL, Fuel Delivery and Evaporation Lines.>

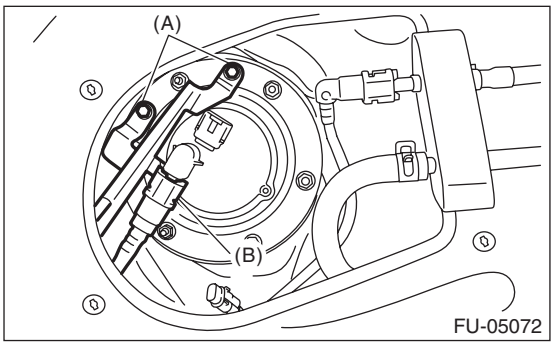

FU-05072

9) Remove the nuts securing the fuel sub level sensor upper plate to the fuel tank and remove the fuel sub level sensor upper plate.

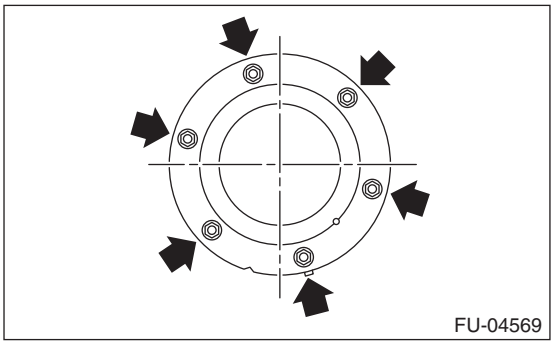
FU-04569

10) Remove the fuel sub level sensor from the fuel tank.

B: INSTALLATION

Install in the reverse order of removal while being careful of the following.
- Make sure the sealing portion is free from fuel or foreign matter before installation.
- Align protrusion (A) of the gasket to the position shown in the figure.
- Align protrusion (B) of the fuel sub level sensor to the cutout in the fuel sub level sensor upper plate.
- After tightening the bolts to the specified torque in the order indicated in the figure, install the fuel sub level sensor protector.

NOTE:
Use a new gasket.

Tightening torque:
4.4 N·m (0.4 kgf-m, 3.2 ft-lb)

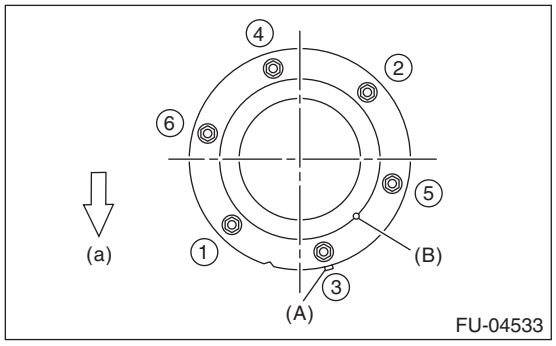

(a) Front side of vehicle

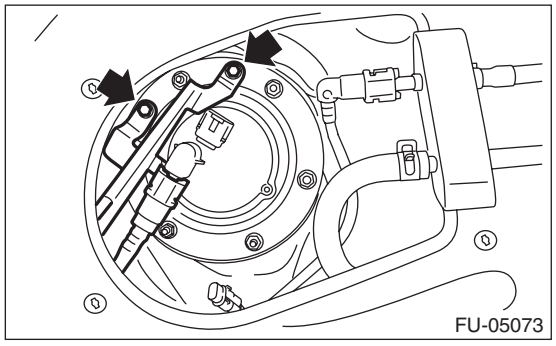

C: INSPECTION

1) Check that the fuel sub level sensor has no damage.
2) Measure the fuel sub level sensor float position.

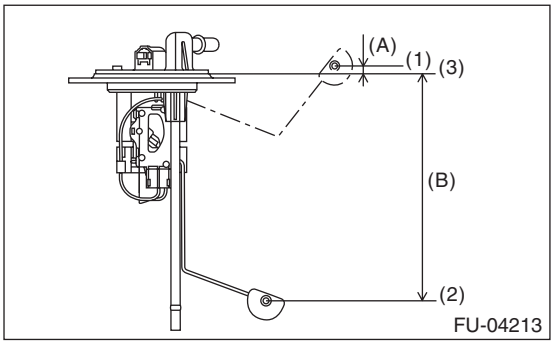

(1) FULL
(2) EMPTY
(3) Datum points

Float position	Standard
FULL to Datum point (A)	6.4±3.5 mm (0.252±0.138 in)
EMPTY to Datum point (B)	163.3±3.5 mm (6.429±0.138 in)

3) Measure the resistance between fuel sub level sensor terminals.

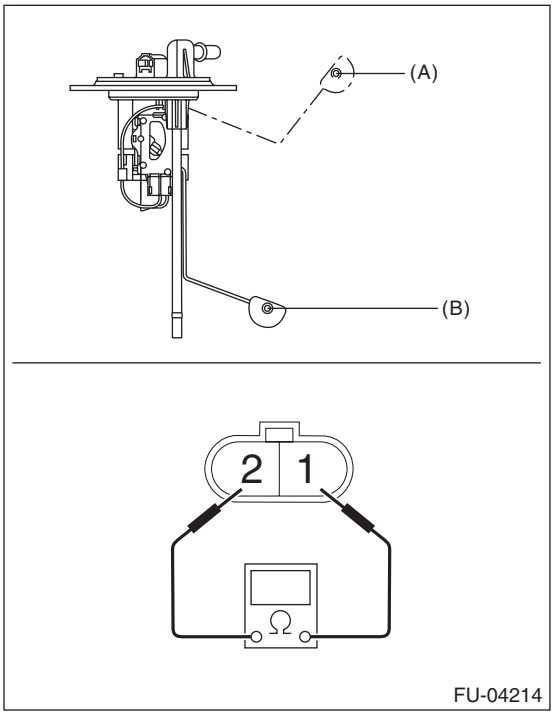

Float position	Terminal No.	Standard
FULL (A)	1 and 2	8.7±1.0 Ω
EMPTY (B)		270.9±4.0 Ω

27.Fuel Filter

A: REMOVAL

WARNING:
Place "NO OPEN FLAMES" signs near the working area.

CAUTION:
- **Be careful not to spill fuel.**
- **If the fuel gauge indicates that two thirds or more of the fuel is remaining, be sure to drain fuel before starting work to avoid the fuel to spill.**
- **Be careful not to drop or apply any impact to the fuel pump during work. This may deteriorate its performance.**

NOTE:
The fuel filter is built in fuel pump assembly.
1) Remove the fuel pump assembly. <Ref. to FU(H4SO)-65, REMOVAL, Fuel Pump.>
2) Remove the fuel level sensor and fuel temperature sensor. <Ref. to FU(H4SO)-67, REMOVAL, Fuel Level Sensor.>
3) Disconnect the connector from the fuel filter assembly.

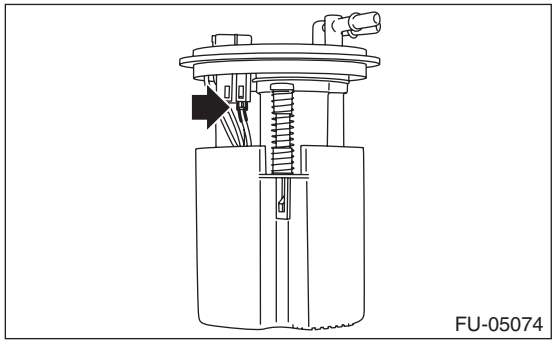
FU-05074

4) Remove the claw connecting the fuel filter assembly and fuel chamber assembly in order to separate the fuel filter assembly and fuel chamber assembly.

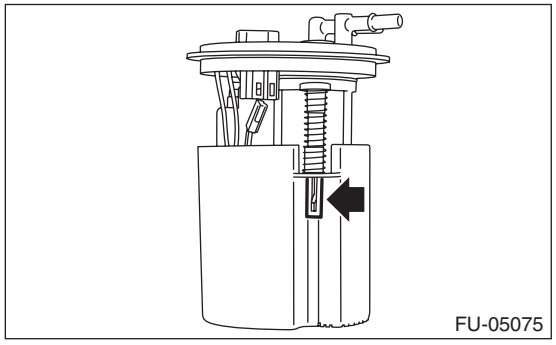
FU-05075

5) Remove the fuel pump holder from the fuel filter assembly.

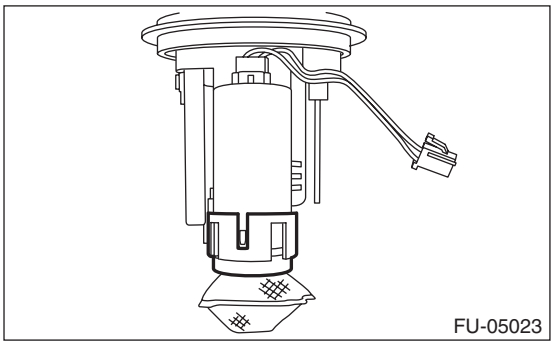
FU-05023

6) Remove the fuel pump from the fuel filter assembly.

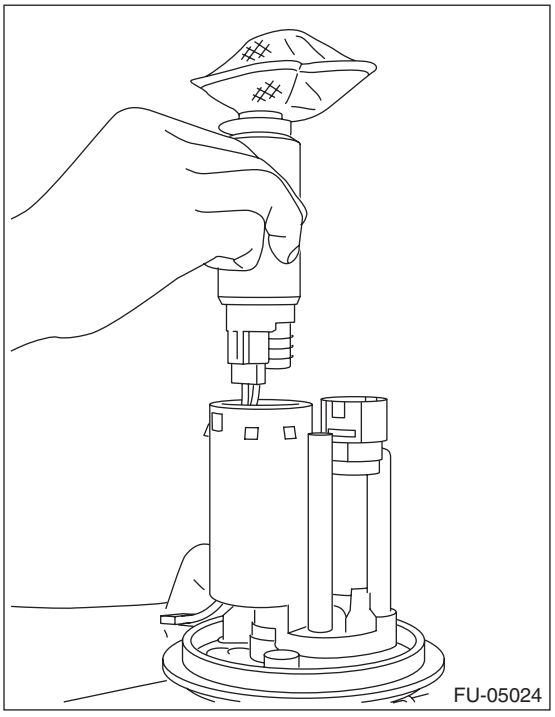
FU-05024

B: INSTALLATION

1) Assemble the gasket spacer (A) and support rubber cushion (B) to the fuel pump, and install the fuel pump to the fuel filter assembly.

NOTE:
- Use a new gasket spacer.
- Use a new support rubber cushion.
- Apply gasoline to the surface of gasket spacer and support rubber cushion.

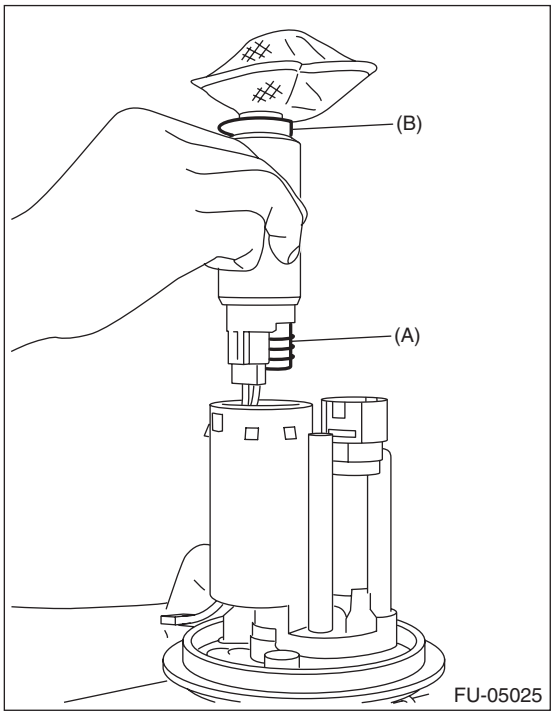

2) Install the fuel pump holder to the fuel filter assembly.

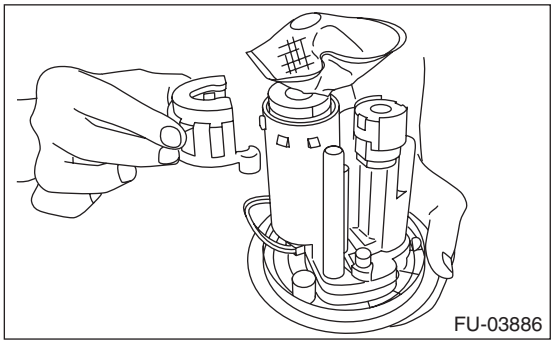

3) Install the pump module spring (A) to fuel filter assembly, and install the fuel chamber assembly (B).

NOTE:
- Use a new fuel chamber assembly.
- Check that the claw connecting the fuel filter assembly and fuel chamber assembly is securely fastened.

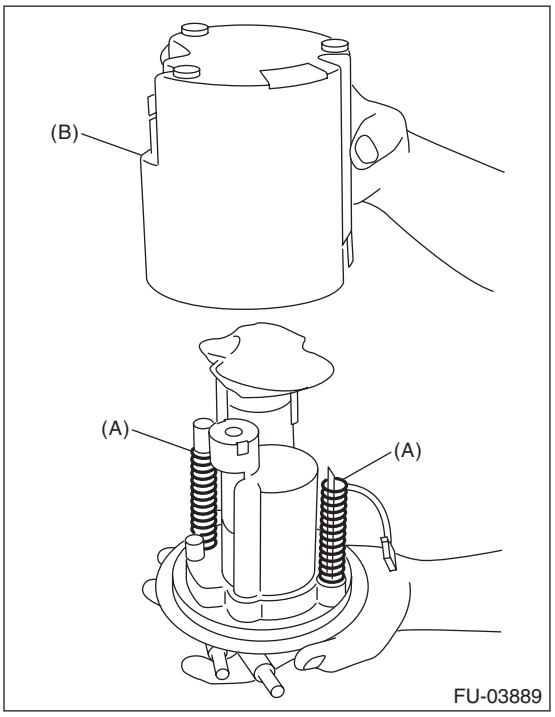

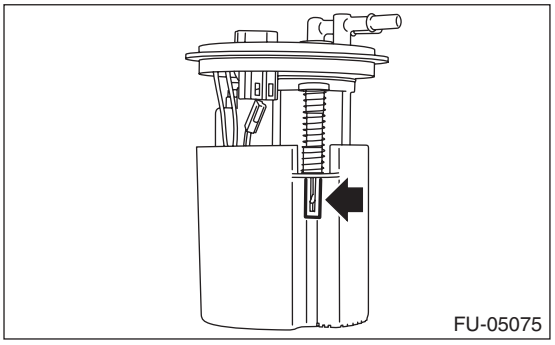

4) Connect the fuel pump connector.

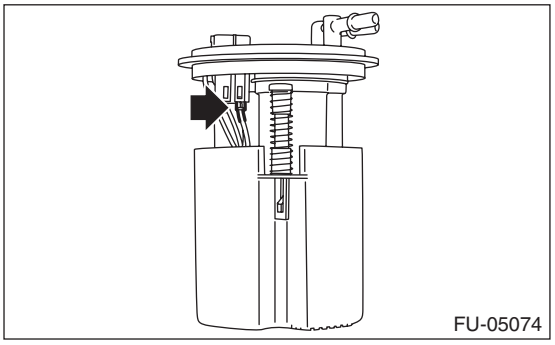

5) Install the fuel level sensor and fuel temperature sensor. <Ref. to FU(H4SO)-67, INSTALLATION, Fuel Level Sensor.>
6) Inspect the fuel level sensor. <Ref. to FU(H4SO)-67, INSPECTION, Fuel Level Sensor.>
7) Install the fuel pump assembly. <Ref. to FU(H4SO)-66, INSTALLATION, Fuel Pump.>

28.Fuel Delivery and Evaporation Lines

A: REMOVAL

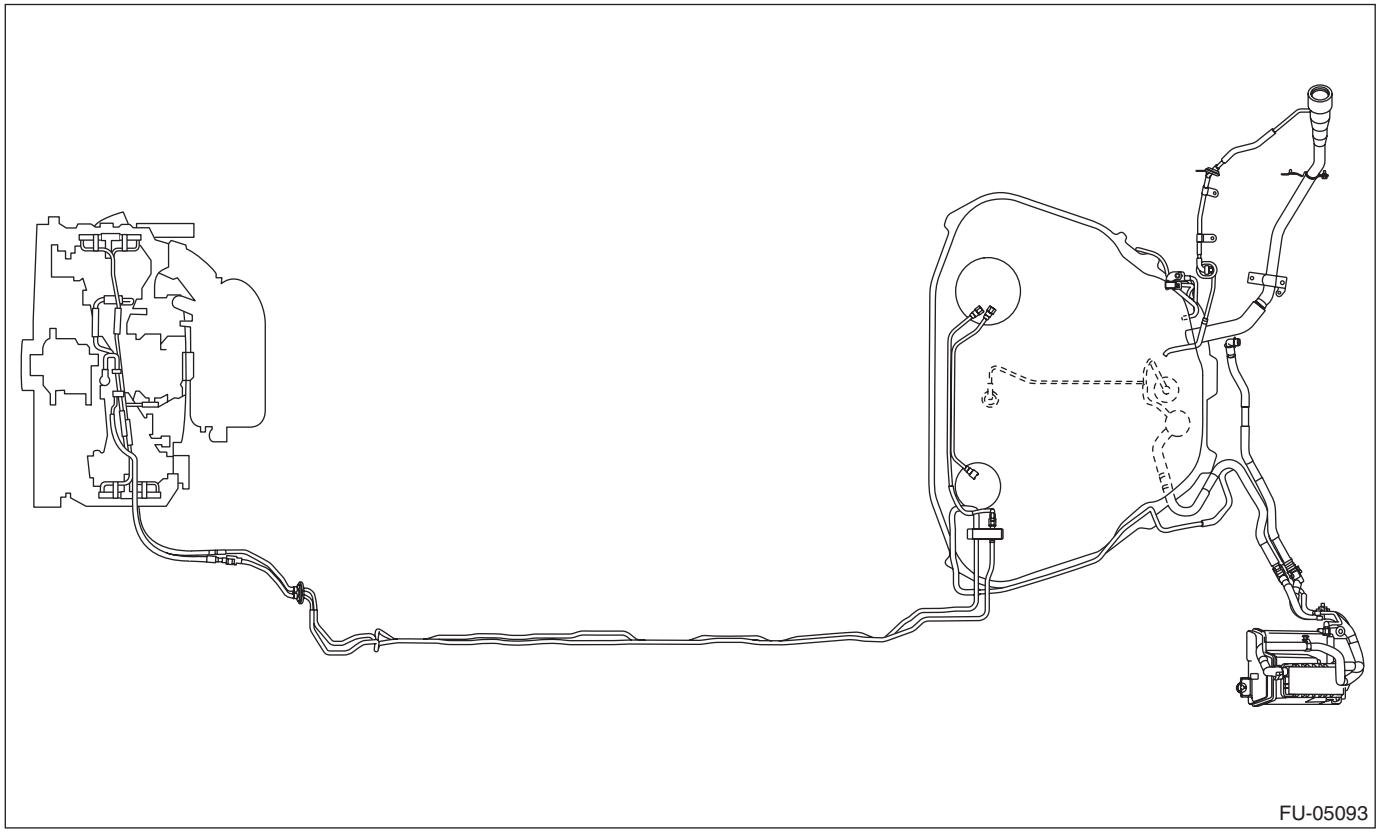

WARNING:
Place “NO OPEN FLAMES” signs near the working area.

CAUTION:
Be careful not to spill fuel.

1) Release the fuel pressure. <Ref. to FU(H4SO)-53, RELEASING OF FUEL PRESSURE, PROCEDURE, Fuel.>
2) Open the fuel filler lid and remove the fuel filler cap.
3) Remove the floor mat. <Ref. to EI-162, REMOVAL, Floor Mat.>
4) In the engine compartment, disconnect the fuel delivery hoses (A) and evaporation hose (B).

CAUTION:
- **Be careful not to spill fuel.**
- **Catch the fuel from hoses using a container or cloth.**

(1) Remove the connect check cover from the fuel delivery hose.

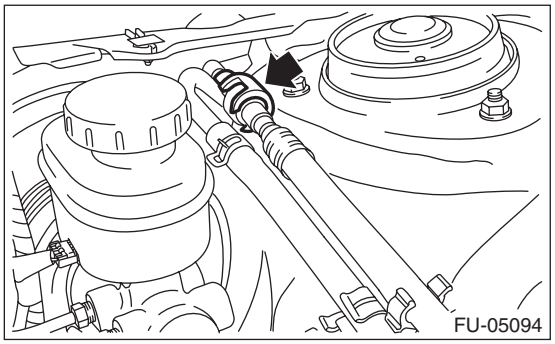

(2) Set the ST to the fuel pipe.

ST 42099AE000 QUICK CONNECTOR RELEASE

(3) Disconnect the quick connector of the fuel delivery hose by pushing the ST in the direction of the arrow.
(4) Remove the clip and disconnect the evaporation hose from the fuel pipe.

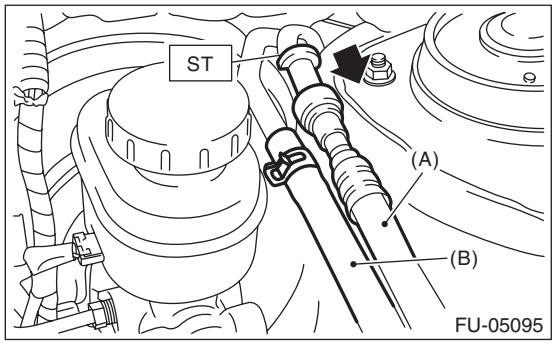

5) Remove the fuel tank. <Ref. to FU(H4SO)-55, REMOVAL, Fuel Tank.>
6) Remove the rear mud guard LH. <Ref. to EI-38, REMOVAL, Mud Guard.>
7) Remove the purge hose (A), purge pipe (B), air vent hose (C) and drain tube assembly (D).

NOTE:
Disconnect the quick connector as shown in the figure.

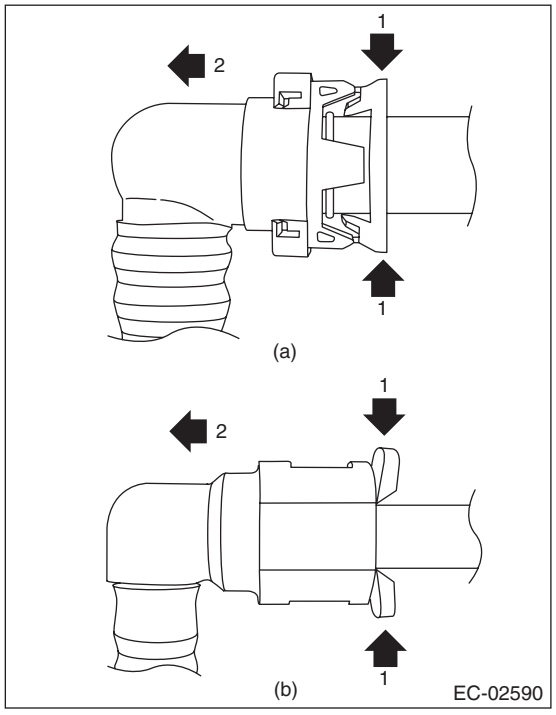

(a) Air vent hose (C), drain tube ASSY (D)
(b) Purge pipe (B)

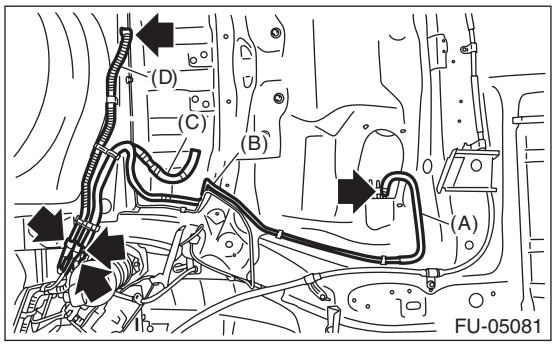

8) Remove the fuel pipe assembly from vehicle.
9) Disconnect the quick connector, and remove the fuel delivery tube and fuel sub delivery tube from the fuel tank.

• When using ST

1. Attach ST to the pipe and push ST in the direction of arrow mark to disconnect the quick connector.

ST 42099AE000 QUICK CONNECTOR RELEASE

CAUTION:
• Be careful not to spill fuel.
• Catch the fuel from hoses using a container or cloth.
• To disconnect the connector, hold (C) shown in the figure and pull in axial direction.
• If the connector and pipe are sticking to each other, push and pull the connector with ST pushed, and then pull the connector after it starts moving freely.
• When disconnecting the connector, do not bend or twist the tube forcibly. If the tube is bent, replace with a new part.

NOTE:
Clean the pipe and quick connector, if they are covered with dust.

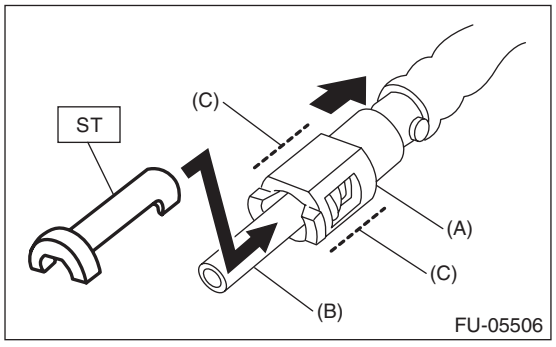

(A) Quick connector
(B) Pipe
(C) Connector holding position

2. To prevent from damaging or entering foreign matter, wrap the pipes and quick connectors with plastic bag etc.

CAUTION:
When reusing the retainer, do not disconnect the retainer from the connector.

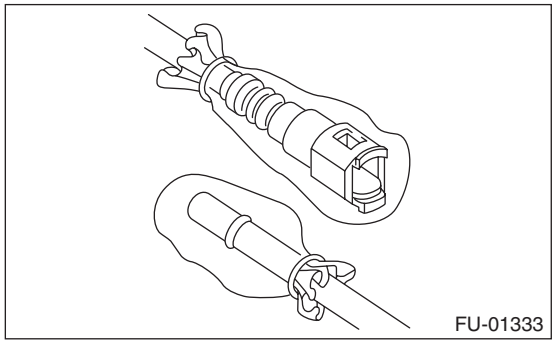

- When not using ST

1. Push the retainer in the direction of the arrow, disconnect the quick connector from pipe.

CAUTION:
- **Be careful not to spill fuel.**
- **Catch the fuel from hoses using a container or cloth.**
- **To disconnect the connector, hold (D) shown in the figure and pull in axial direction.**
- **If the connector and pipe are sticking to each other, push and pull the connector with the retainer pushed in the direction of the arrow, and then pull the connector after it starts moving freely.**
- **When disconnecting the connector, do not bend or twist the tube forcibly. If the tube is bent, replace with a new part.**

NOTE:
Clean the pipe and quick connector, if they are covered with dust.

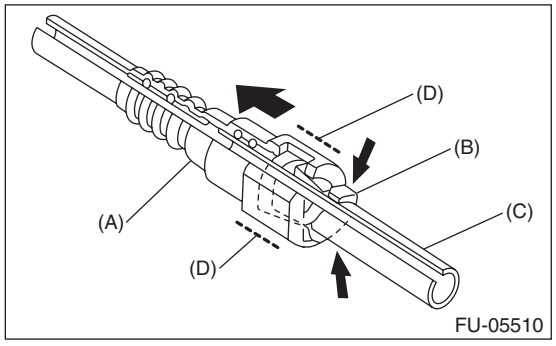

(A) Quick connector
(B) Retainer
(C) Pipe
(D) Connector holding position

2. To prevent from damaging or entering foreign matter, wrap the pipes and quick connectors with plastic bag etc.

CAUTION:
When reusing the retainer, do not disconnect the retainer from the pipe.

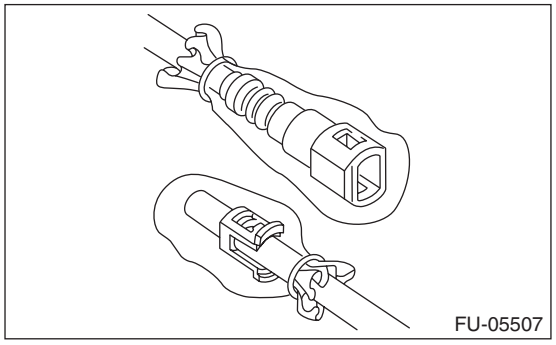

10) Remove the evaporation pipe.
(1) Remove the rear mud guard RH. <Ref. to EI-38, REMOVAL, Mud Guard.>
(2) Remove the evaporation hose.

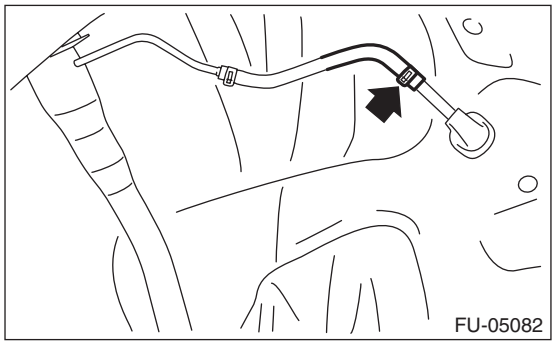

(3) Remove the trunk side trim panel assembly - side on the RH side. <Ref. to EI-110, REMOVAL, Rear Quarter Trim.>
(4) Remove the evaporation pipe protector.

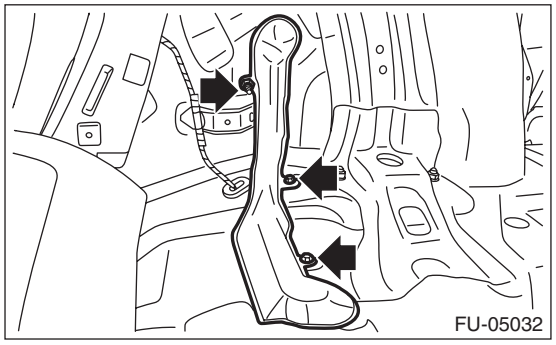

(5) Remove the evaporation pipe from vehicle.

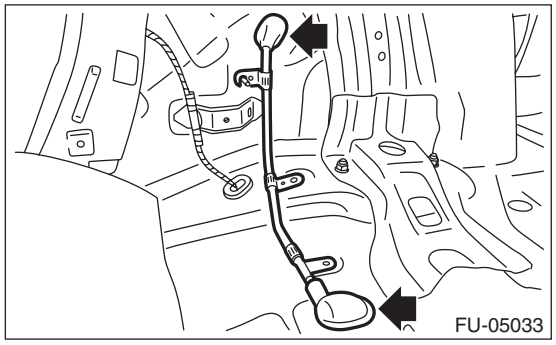

B: INSTALLATION

Install in the reverse order of removal while being careful of the following.

1. INSTALLATION OF EVAPORATION PIPE

1) Install the evaporation pipe to the vehicle.

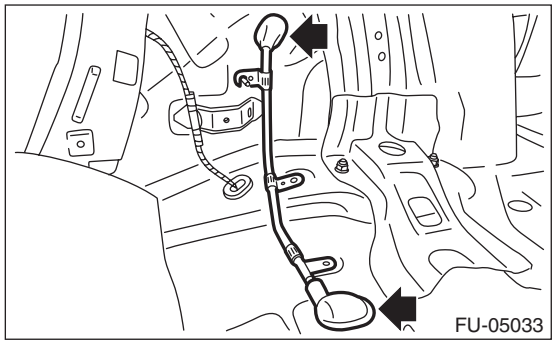

2) Install the evaporation pipe protector.

Tightening torque:
T1: 1 N·m (0.1 kgf-m, 0.7 ft-lb)
T2: 7.5 N·m (0.7 kgf-m, 5.4 ft-lb)

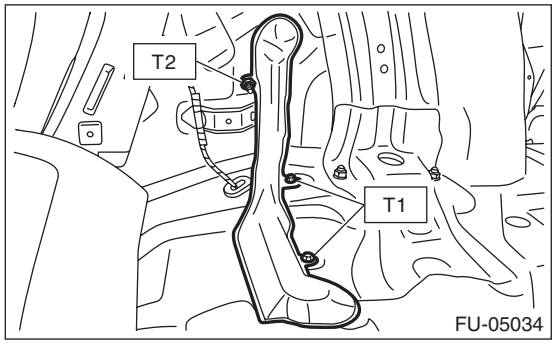

3) Install the trunk side trim panel assembly - side on RH side. <Ref. to EI-119, INSTALLATION, Rear Quarter Trim.>

4) Install the evaporation hose.

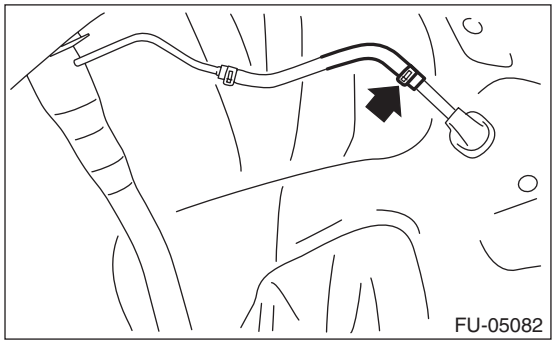

5) Install the rear mud guard RH. <Ref. to EI-38, INSTALLATION, Mud Guard.>

2. CONNECTING THE FUEL LINE QUICK CONNECTOR

CAUTION:
• Make sure there are no damage or dust on connections. If necessary, clean seal surface of pipe.

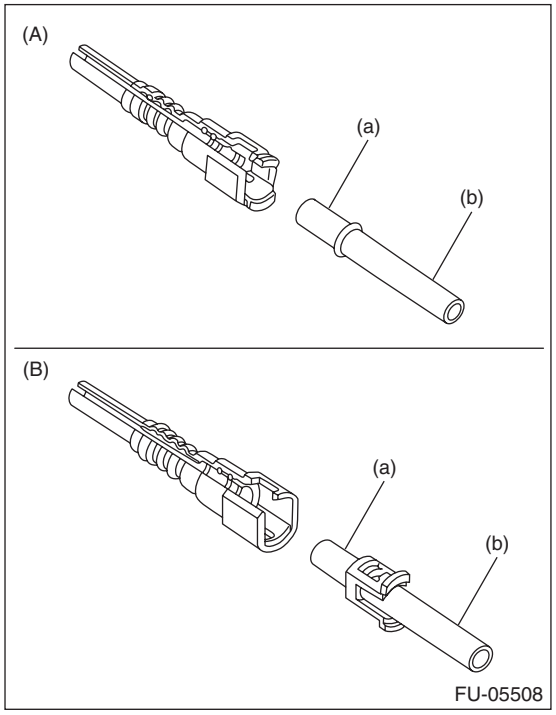

(A) When removed using ST
(B) When removed without using ST
(a) Seal surface
(b) Pipe

• When reusing the retainer, make sure that neither scratches nor deformation exist on the retainer. If it is faulty, use a new part.

1) Connect the quick connector to pipe.

CAUTION:
• Make sure that the quick connector is securely connected.

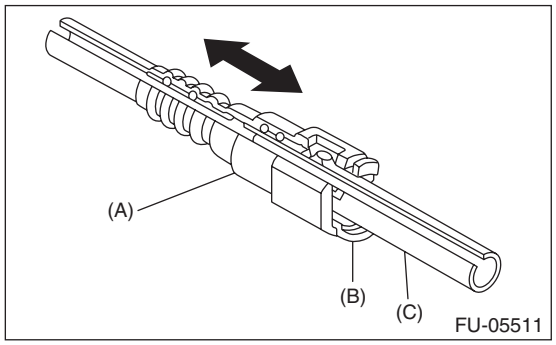

(A) Quick connector
(B) Retainer
(C) Pipe

• Make sure the two retainer pawls are engaged in their mating positions in the quick connector.
• Be sure to inspect tubes and their connections for any leakage of fuel.
• To connect the connector, hold (d) shown in the figure and push in axial direction.
• When connecting the connector, do not bend or twist the tube forcibly. If the tube is bent, replace with a new part.

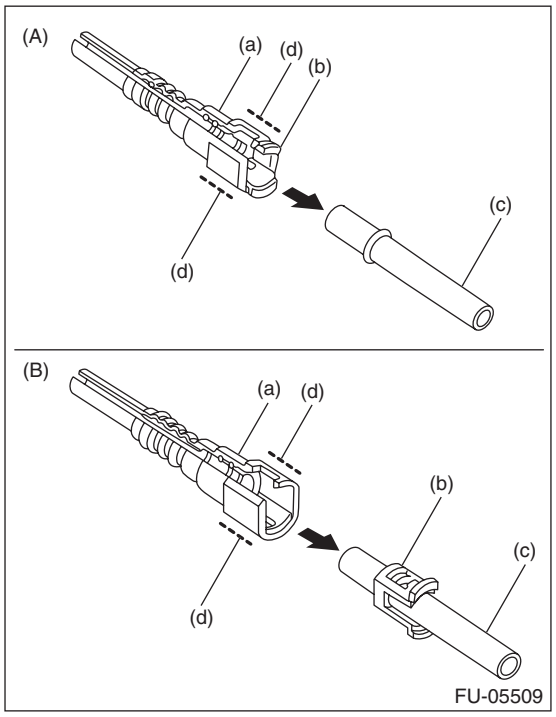

(A) When removed using ST
(B) When removed without using ST
(a) Quick connector
(b) Retainer
(c) Pipe
(d) Connector holding position

3. EVAPORATION HOSE CONNECTION

Connect the evaporation hose to the pipe with an overlap of 15 to 20 mm (0.59 to 0.79 in).

L = 17.5±2.5 mm (0.689±0.098 in)

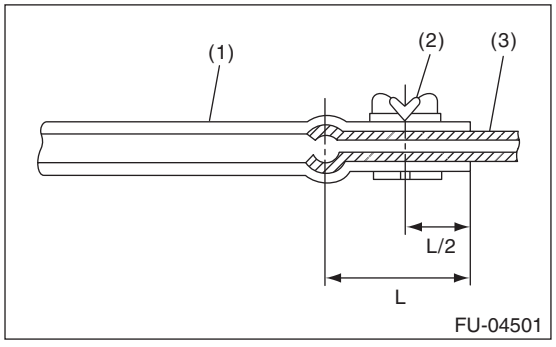

(1) Hose
(2) Clip
(3) Pipe

4. CONNECTING THE EVAPORATION LINE QUICK CONNECTOR

CAUTION:
• Make sure there are no damage or dust on connections. If necessary, clean the seal surface of the pipe.
• Make sure that the quick connector is securely connected.

Connect the quick connector as shown in the figure.

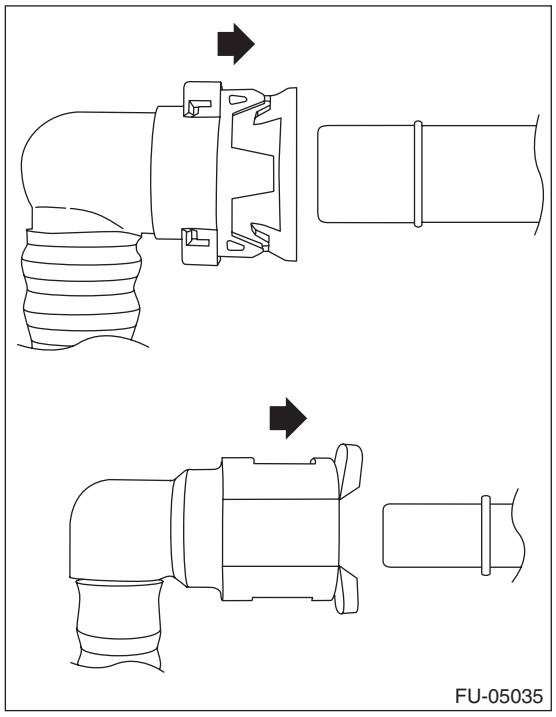

C: INSPECTION

1) Check that the fuel pipe has no deformation, cracks or other damages.
2) Check that the hose and tube have no cracks, damage or loose part.

29.Fuel System Trouble in General

A: INSPECTION

Trouble	Possible cause	Corrective action
Insufficient fuel supply to injector	a. Fuel pump does not operate.	
	❍ Defective terminal contact	Inspect contact, especially ground, and tighten it securely.
	❍ Trouble in electromagnetic or electronic circuit parts	Replace the faulty parts.
	b. Decline of fuel pump function	Replace the fuel pump.
	c. Clogged fuel filter	Replace the fuel filter. Clean or replace the fuel tank if necessary.
	d. Clogged or bent fuel line pipe, hose or tube	Clean, correct or replace the fuel line pipe, hose or tube.
	e. Air is mixed in fuel system.	Check the fuel line connections, correct or replace the defective part.
	f. Damaged diaphragm of pressure regulator	Replace the pressure regulator.
Leakage or blow out of fuel	a. Loose connections of fuel line pipe, hose or tube	Check the fuel line connections, correct or replace the defective part.
	b. Cracked fuel line pipe, hose or tube	Replace the fuel line pipe, hose or tube.
	c. Cracked fuel tank or defective welded part	Replace the fuel tank.
	d. Clogged or bent fuel line pipe, hose or tube	Clean, correct or replace the fuel line pipe, hose or tube.
Gasoline smell inside of compartment	a. Loose connections of fuel line pipe, hose or tube	Check the fuel line connections, correct or replace the defective part.
	b. Improper installation of rubber saucer	Correct or replace the rubber saucer.
	c. Defective canister	Replace the canister.
Defective fuel gauge	a. Defective operation of fuel level sensor	Replace the fuel level sensor.
	b. Defective operation of combination meter	Replace the combination meter.
Noise	a. Large operation noise or vibration of fuel pump	Replace the fuel pump.

NOTE:
• When the vehicle is left unattended for an extended period of time, water may accumulate in the fuel tank. Fill fuel fully to prevent the problem.
• In snow-covered areas, mountainous areas, skiing areas, etc. where ambient temperatures drop to 0°C (32°F) or less throughout the winter season, use a water removing agent in the fuel system to prevent freezing fuel system and accumulating water.
• When water is accumulated in fuel filter, fill the water removing agent in the fuel tank.
• Before using water removing agent, follow the cautions noted on the bottle.

EMISSION CONTROL (AUX. EMISSION CONTROL DEVICES)

EC(H4SO)

		Page
1.	General Description	2
2.	Front Catalytic Converter	3
3.	Rear Catalytic Converter	4
4.	Canister	5
5.	Purge Control Solenoid Valve	9
6.	EGR Valve	12
7.	Fuel Level Sensor	13
8.	Fuel Temperature Sensor	14
9.	Fuel Sub Level Sensor	15
10.	Fuel Tank Pressure Sensor	16
11.	Drain Filter	18
12.	Drain Valve	19
13.	PCV Hose Assembly	20
14.	PCV Valve	22

1. General Description

A: CAUTION

• Wear appropriate work clothing, including a cap, protective goggles and protective shoes when performing any work.
• Remove contamination including dirt and corrosion before removal, installation or disassembly.
• Keep the disassembled parts in order and protect them from dust and dirt.
• Before removal, installation or disassembly, be sure to clarify the failure. Avoid unnecessary removal, installation, disassembly and replacement.
• Vehicle components are extremely hot after driving. Be wary of receiving burns from heated parts.
• Be sure to tighten fasteners including bolts and nuts to the specified torque.
• Place shop jacks or rigid racks at the specified points.
• Before disconnecting connectors of sensors or units, be sure to disconnect the ground cable from battery.

B: PREPARATION TOOL

1. SPECIAL TOOL

ILLUSTRATION	TOOL NUMBER	DESCRIPTION	REMARKS
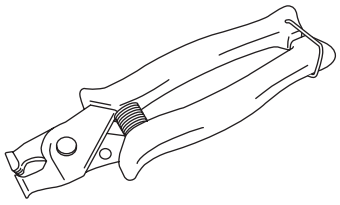 ST18353AA000	18353AA000	CLAMP PLIERS	• Used for removing and installing the PCV hose. • This is a general tool made by the French company CAILLAU. (code) 54.0.000.205 To make this easier to obtain, it has been provided with a tool number.

2. GENERAL TOOL

TOOL NAME	REMARKS
Circuit tester	Used for measuring resistance and voltage.
Mighty Vac	Used for inspecting the fuel tank pressure sensor.

2. Front Catalytic Converter

A: REMOVAL

The front catalytic converter is integrated into the front exhaust pipe; therefore, refer to “Front Exhaust Pipe” for the removal procedure. <Ref. to EX(H4SO)-5, REMOVAL, Front Exhaust Pipe.>

B: INSTALLATION

The front catalytic converter is integrated into the front exhaust pipe; therefore, refer to “Front Exhaust Pipe” for the installation procedure. <Ref. to EX(H4SO)-6, INSTALLATION, Front Exhaust Pipe.>

C: INSPECTION

1) Check the connections and welds for exhaust leaks.
2) Check for hole or rust.

3. Rear Catalytic Converter

A: REMOVAL

The rear catalytic converter is integrated into the center exhaust pipe. Refer to “Center Exhaust Pipe” for removal procedures. <Ref. to EX(H4SO)-8, REMOVAL, Center Exhaust Pipe.>

B: INSTALLATION

The rear catalytic converter is integrated into the center exhaust pipe. Refer to “Center Exhaust Pipe” for installation procedures. <Ref. to EX(H4SO)-8, INSTALLATION, Center Exhaust Pipe.>

C: INSPECTION

1) Check the connections and welds for exhaust leaks.
2) Check for hole or rust.

4. Canister

A: REMOVAL

1) Remove the rear wheel LH.
2) Lift up the vehicle.
3) Remove the rear mud guard LH. <Ref. to EI-38, REMOVAL, Mud Guard.>
4) Disconnect the quick connectors of the vent tube (A), canister drain tube (B) and charge tube (C), and remove the tubes from tube clamp (D).

NOTE:
Disconnect the quick connector as shown in the figure.

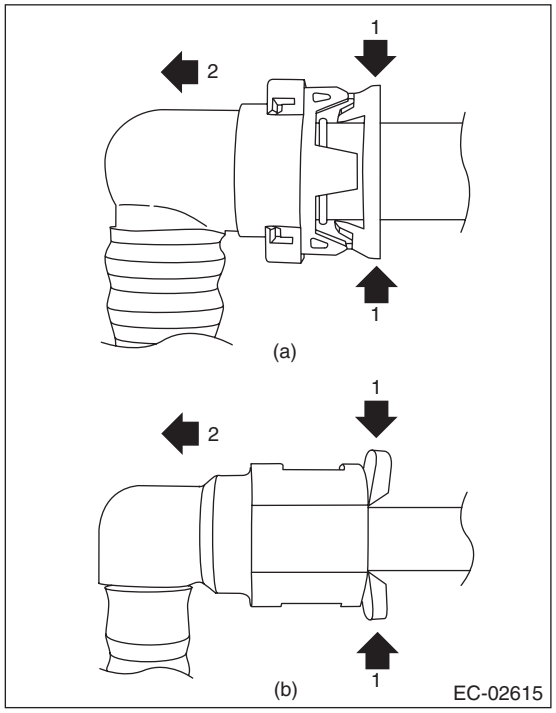

(a) Vent tube (A) and canister drain tube (B)
(b) Charge tube (C)

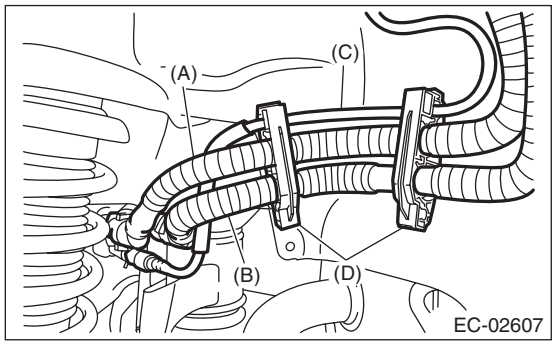

5) Remove the clip holding the rear wiring harness.

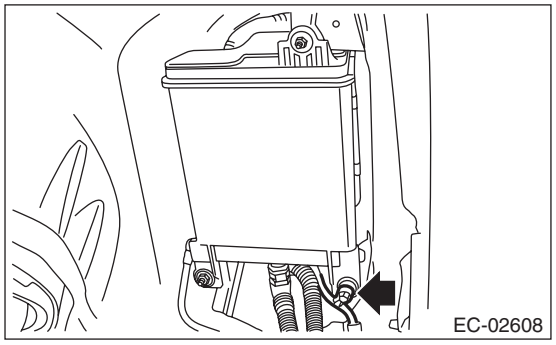

6) Remove the canister from vehicle.

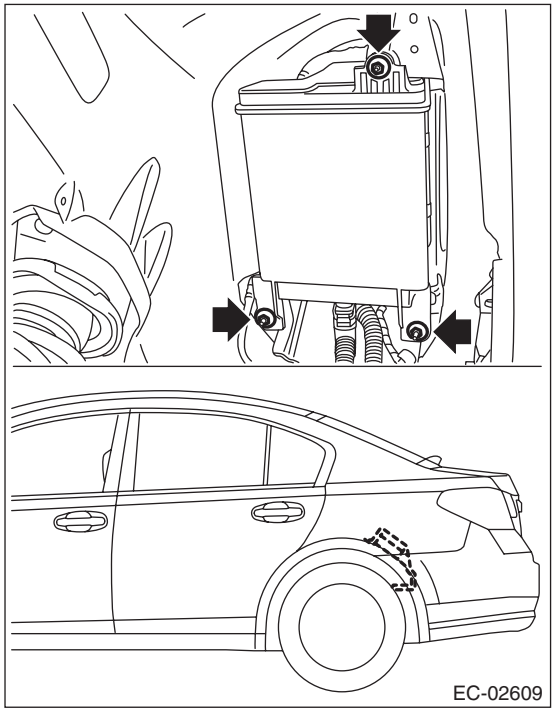

7) Disconnect the connector from drain valve.

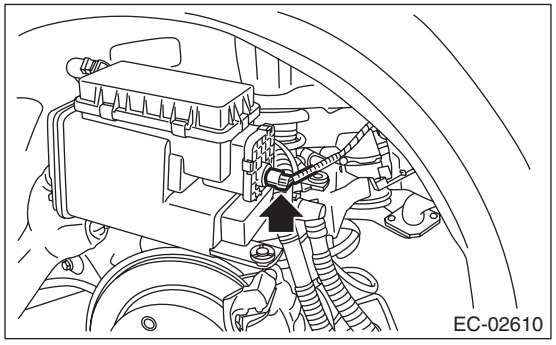

8) Disconnect the vent tube (A), canister drain tube (B) and charge tube (C) from the canister, and remove the canister drain tube (B) from canister clip (D).

NOTE:
Disconnect the quick connector as shown in the figure.

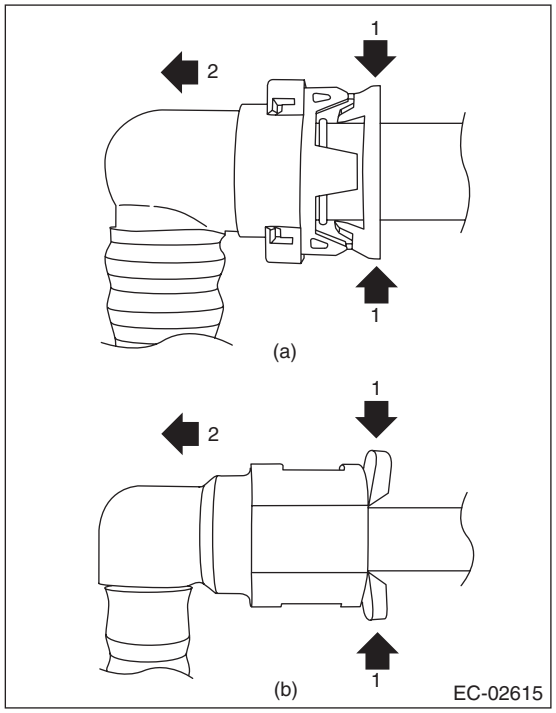

(a) Vent tube (A) and canister drain tube (B)
(b) Charge tube (C)

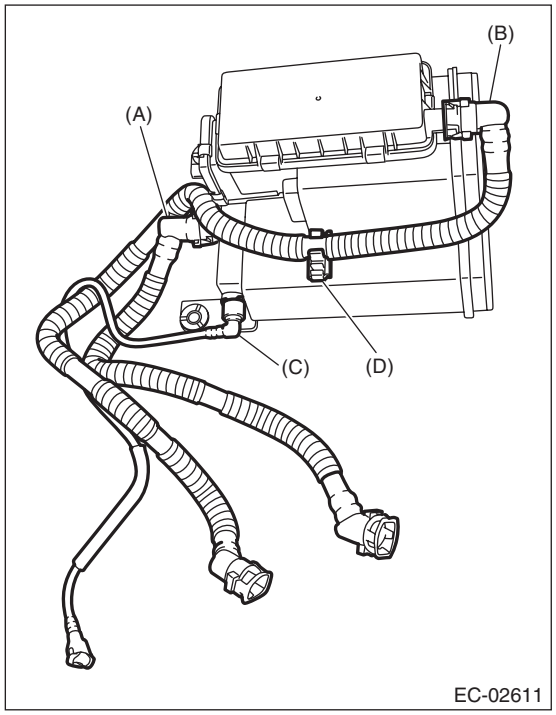

B: INSTALLATION

1) Connect the vent tube (A), canister drain tube (B) and charge tube (C), and install the canister drain tube (B) to canister clip (D).

CAUTION:
• Make sure there are no damage or dust on connections. If necessary, clean the seal surface of the pipe.
• Make sure that the quick connector is securely connected.

NOTE:
Connect the quick connector as shown in the figure.

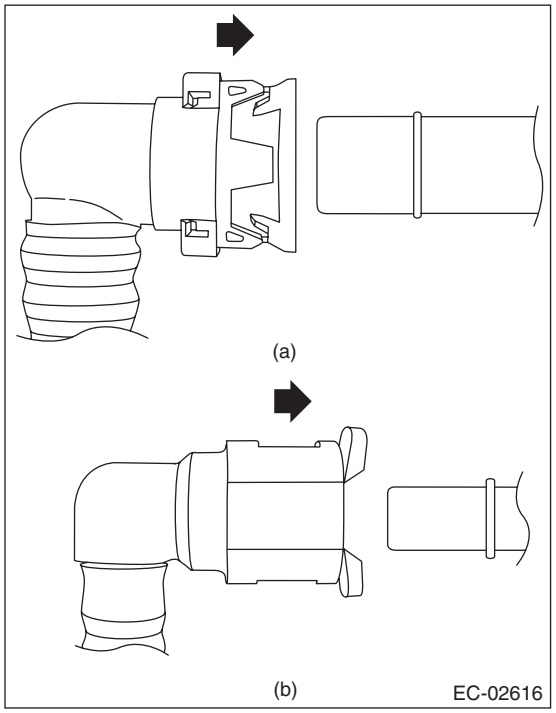

(a) Vent tube (A) and canister drain tube (B)
(b) Charge tube (C)

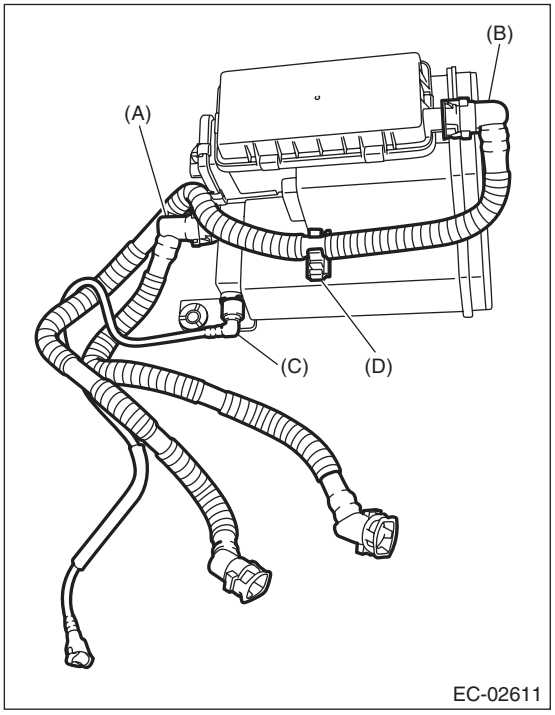

2) Connect the connector to the drain valve.

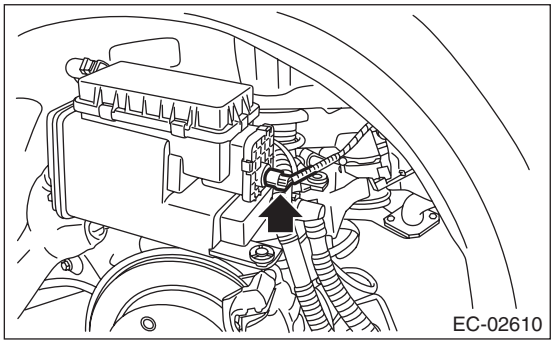

3) Install the canister to the vehicle.

Tightening torque:
8 N·m (0.8 kgf-m, 5.9 ft-lb)

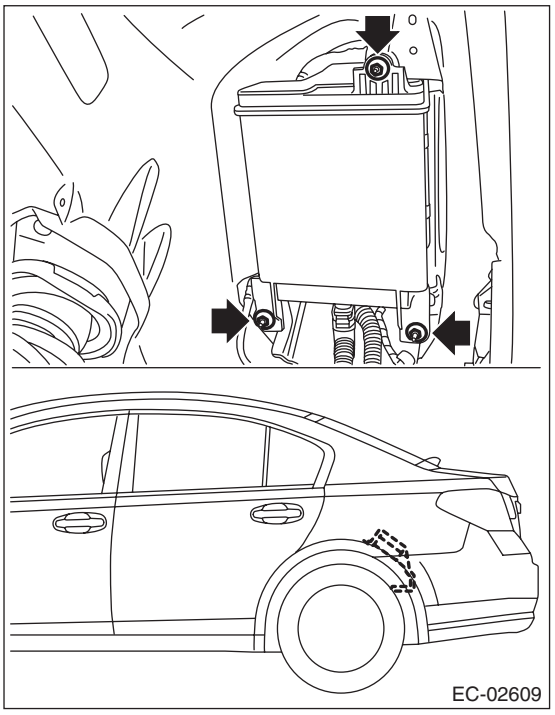

4) Secure the rear wiring harness with clip.

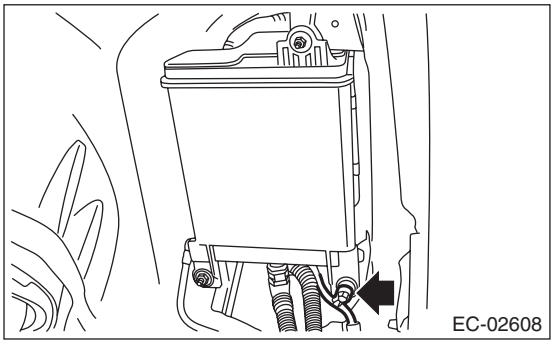

5) Attach all tubes to tube clamp (D), and connect the quick connectors of the vent tube (A), canister drain tube (B) and charge tube (C).

CAUTION:
• Make sure there are no damage or dust on connections. If necessary, clean the seal surface of the pipe.
• Make sure that the quick connector is securely connected.

NOTE:
Connect the quick connector as shown in the figure.

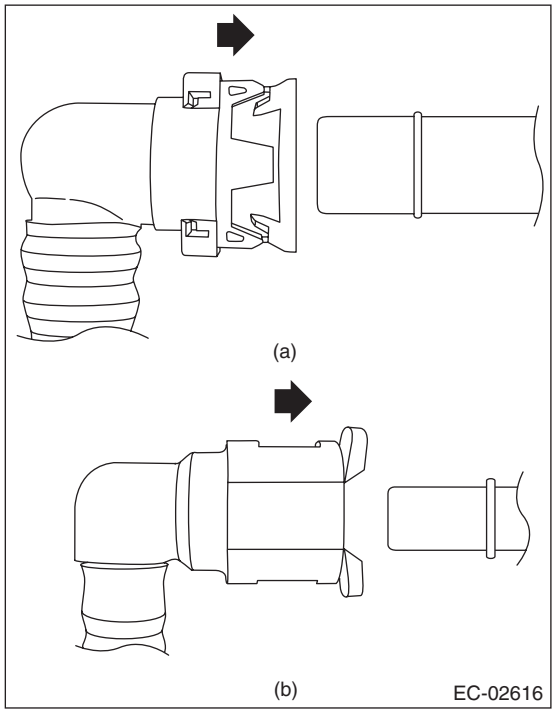

(a) Vent tube (A) and canister drain tube (B)
(b) Charge tube (C)

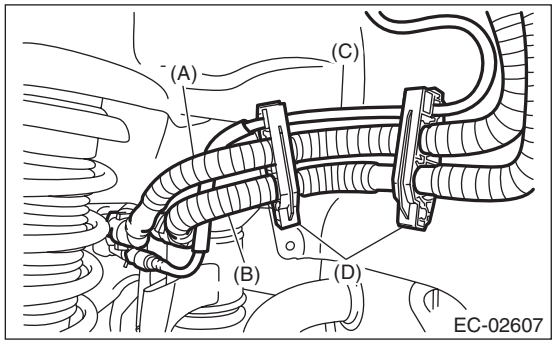

6) Install the rear mud guard LH. <Ref. to EI-38, INSTALLATION, Mud Guard.>
7) Lower the vehicle.
8) Install the rear wheel LH.

Tightening torque:
120 N·m (12.2 kgf-m, 88.5 ft-lb)

C: INSPECTION

1) Check that the canister has no deformation, cracks or other damages.
2) Check that the tube has no cracks, damage or loose part.

5. Purge Control Solenoid Valve

A: REMOVAL

1) Disconnect the ground cable from battery.

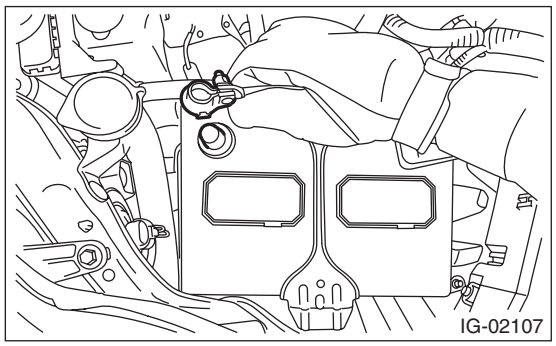

2) Remove the cover (A) and clip (B) from air intake boot assembly.

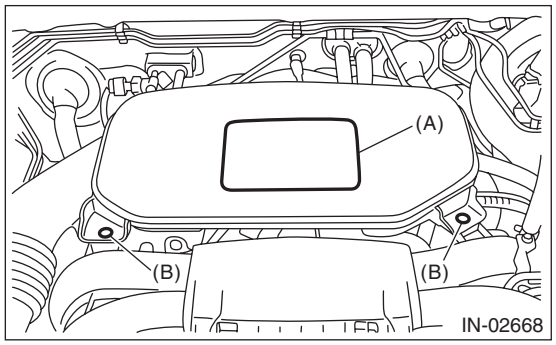

3) Loosen the clamp (A) which connects the air intake boot assembly and air cleaner case.
4) Loosen the clamp (B) which connects the air intake boot assembly and throttle body.

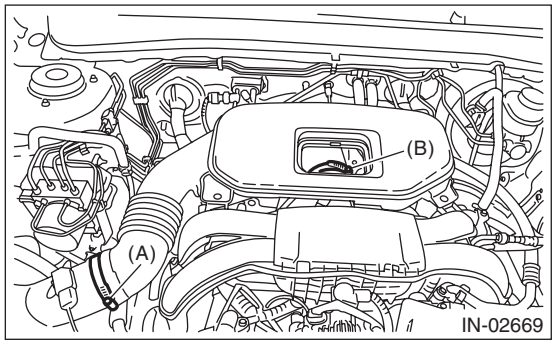

5) Remove the air intake boot from the throttle body, and move it to the left side wheel apron.

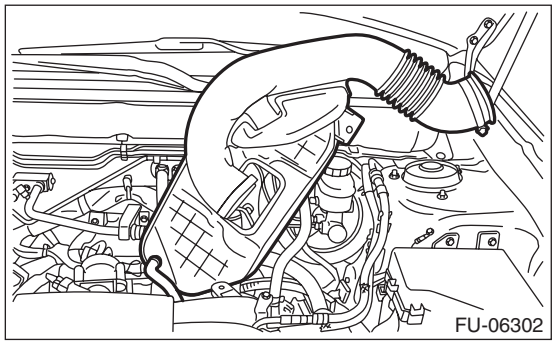

6) Disconnect the purge control solenoid valve connector (A) and evaporation hose (B), and then remove the purge control solenoid valve.

- Other than U5 model

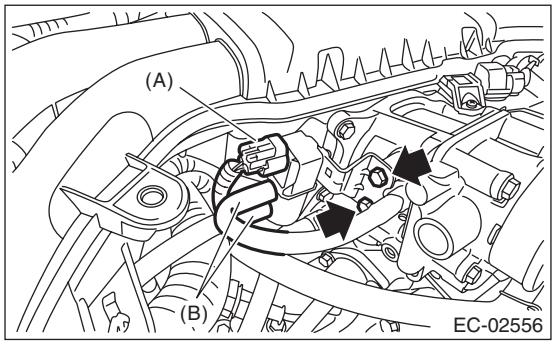

- U5 model

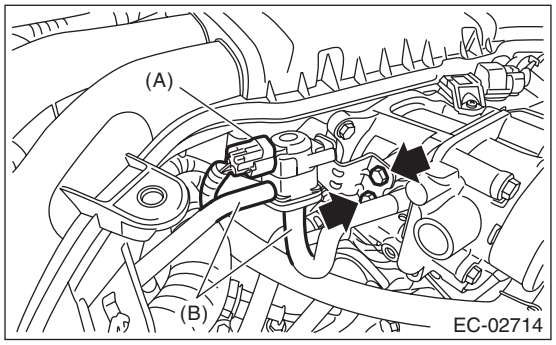

B: INSTALLATION

Install in the reverse order of removal.

NOTE:
Connect the evaporation hose as shown in the figure.

- Other than U5 model

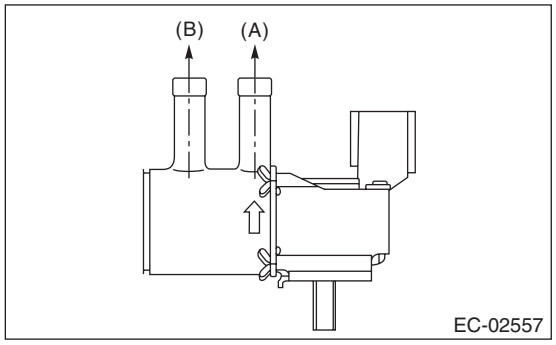

- U5 model

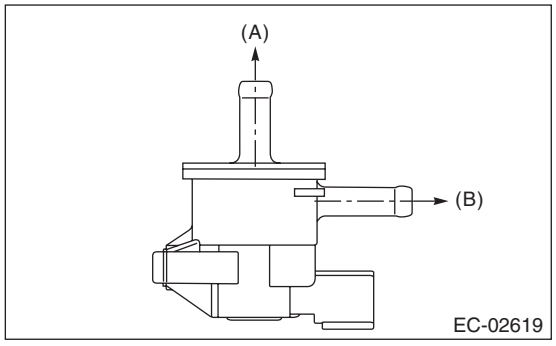

(A) To multifunction duct
(B) To evaporation line

Tightening torque:
6.4 N·m (0.7 kgf-m, 4.7 ft-lb)

- Other than U5 model

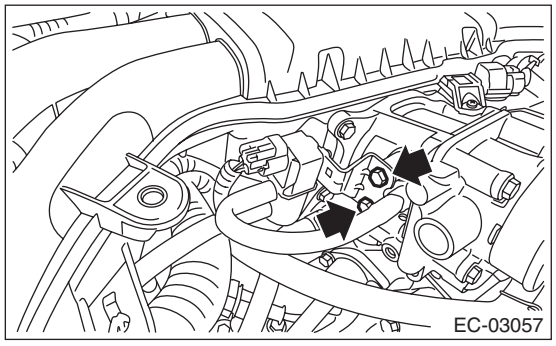

- U5 model

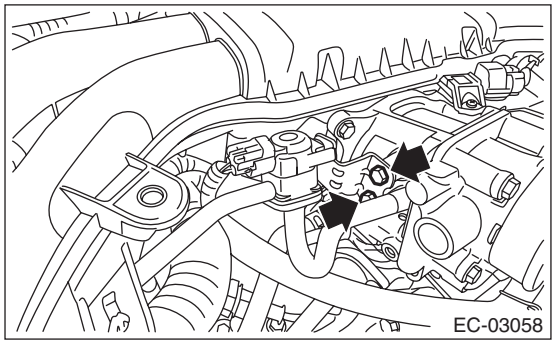

NOTE:
Align the clamp hole with the protrusion of the air intake boot assembly.

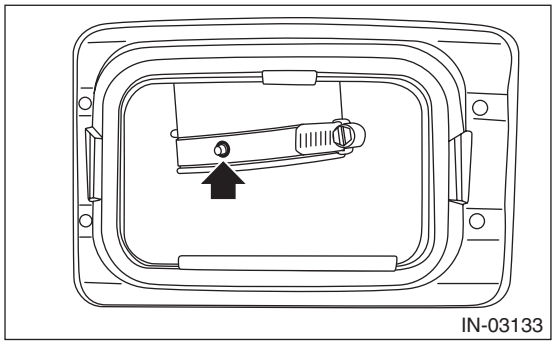

Tightening torque:
Clamp (A), (B)
3 N·m (0.3 kgf-m, 2.2 ft-lb)

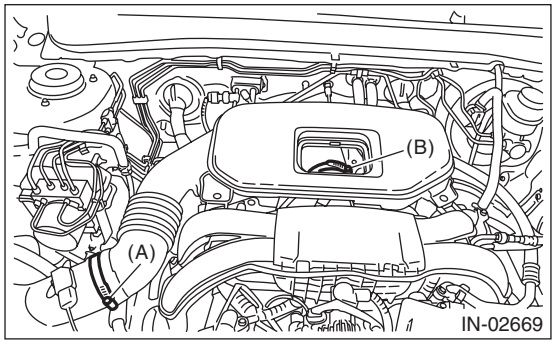

C: INSPECTION

1. PURGE CONTROL SOLENOID VALVE

1) Check that the purge control solenoid valve has no deformation, cracks or other damages.
2) Measure the resistance between the purge control solenoid valve terminals.

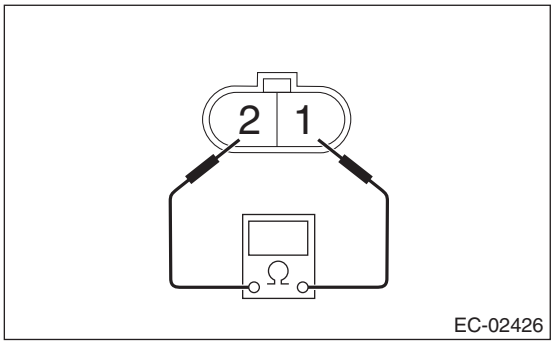

- Other than U5 model

Terminal No.	Standard
1 and 2	24±3 Ω (when 20°C (68°F))

- U5 model

Terminal No.	Standard
1 and 2	24.5±1.5 Ω (when 20°C (68°F))

3) Check that air does not come out from (B) when air is blown into (A).
- Other than U5 model

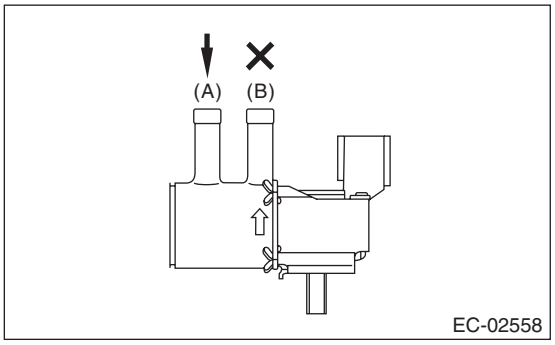

- U5 model

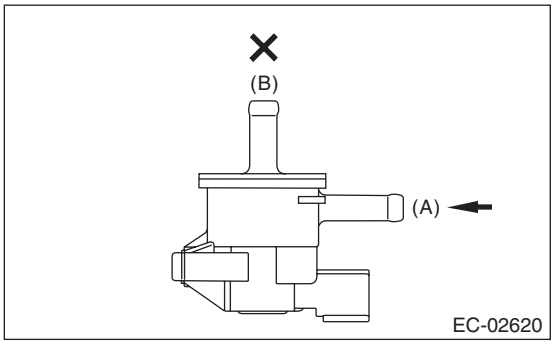

4) Connect the terminal No. 1 to the battery positive terminal and the terminal No. 2 to the battery ground terminal. Check that air is discharged from (B), when supplying air to (A).
- Other than U5 model

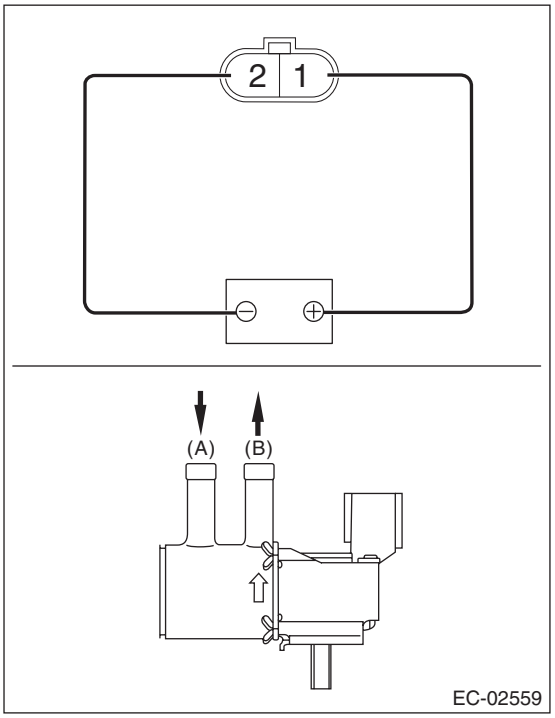

- U5 model

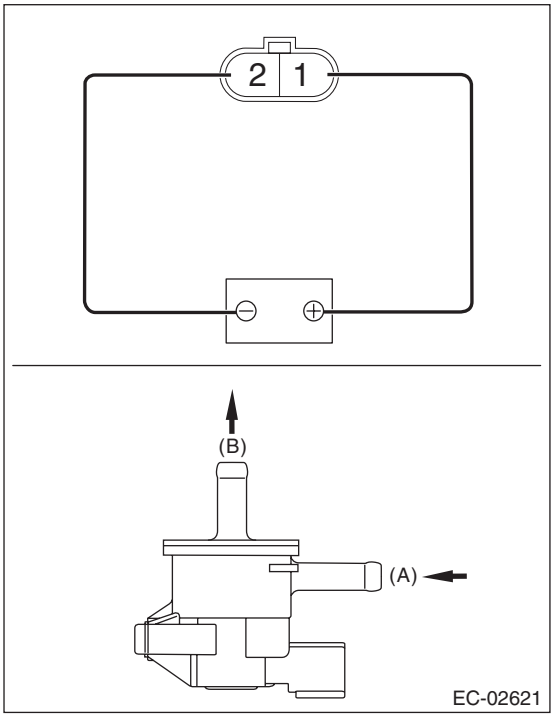

2. OTHER INSPECTIONS

Check that the evaporation hose has no cracks, damage or loose part.

6. EGR Valve

A: REMOVAL

For removal procedures, refer to the “FU(H4SO)” section. <Ref. to FU(H4SO)-36, REMOVAL, EGR Valve.>

B: INSTALLATION

For installation procedure, refer to “FU(H4SO)” section. <Ref. to FU(H4SO)-36, INSTALLATION, EGR Valve.>

C: INSPECTION

For inspection procedures, refer to the “FU(H4SO)” section. <Ref. to FU(H4SO)-36, INSPECTION, EGR Valve.>

7. Fuel Level Sensor

A: REMOVAL

For removal procedures, refer to the “FU(H4SO)” section. <Ref. to FU(H4SO)-67, REMOVAL, Fuel Level Sensor.>

B: INSTALLATION

For installation procedures, refer to the “FU(H4SO)” section. <Ref. to FU(H4SO)-67, INSTALLATION, Fuel Level Sensor.>

C: INSPECTION

For inspection procedures, refer to the “FU(H4SO)” section. <Ref. to FU(H4SO)-67, INSPECTION, Fuel Level Sensor.>

8. Fuel Temperature Sensor

A: REMOVAL

The fuel temperature sensor and fuel level sensor are integrated into one unit; therefore, refer to “Fuel Level Sensor” for removal procedure. <Ref. to FU(H4SO)-67, REMOVAL, Fuel Level Sensor.>

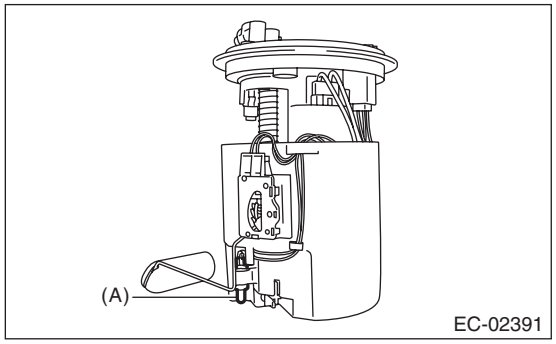

(A) Fuel temperature sensor

B: INSTALLATION

The fuel temperature sensor and fuel level sensor are integrated into one unit; therefore, refer to “Fuel Level Sensor” for installation procedure. <Ref. to FU(H4SO)-67, INSTALLATION, Fuel Level Sensor.>

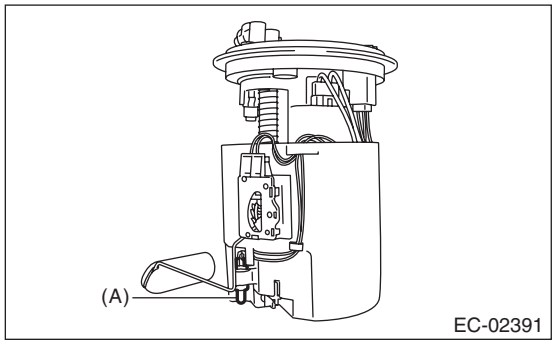

(A) Fuel temperature sensor

C: INSPECTION

1) Check that the fuel temperature sensor has no deformation, cracks or other damages.
2) Check the resistance between the fuel temperature sensor terminals.

CAUTION:
When measuring the resistance, check the circuit tester specification and be careful not to turn on electricity 3 V or more to prevent damaging the fuel temperature sensor.

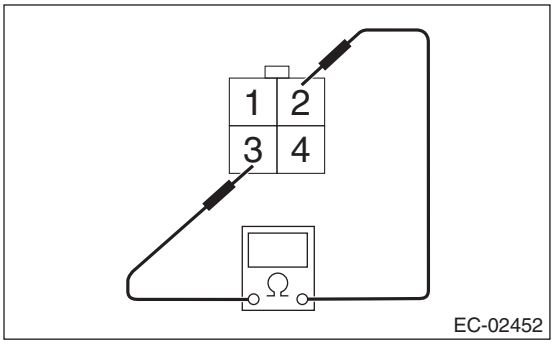

Temperature	Terminal No.	Standard
–10°C (14°F)	2 and 3	9.2±2.2 kΩ (when the measured current is 0.5 mA)
20°C (68°F)		2.5±0.2 kΩ (when the measured current is 1.0 mA)
50°C (122°F)		$0.84^{+0.06}_{-0.05}$ kΩ (when the measured current is 1.0 mA)

9. Fuel Sub Level Sensor

A: REMOVAL

For removal procedures, refer to the “FU(H4SO)” section. <Ref. to FU(H4SO)-69, REMOVAL, Fuel Sub Level Sensor.>

B: INSTALLATION

For installation procedures, refer to the “FU(H4SO)” section. <Ref. to FU(H4SO)-70, INSTALLATION, Fuel Sub Level Sensor.>

C: INSPECTION

For inspection procedures, refer to the “FU(H4SO)” section. <Ref. to FU(H4SO)-70, INSPECTION, Fuel Sub Level Sensor.>

10.Fuel Tank Pressure Sensor

A: REMOVAL

WARNING:
Place "NO OPEN FLAMES" signs near the working area.

1) Disconnect the ground cable from battery.

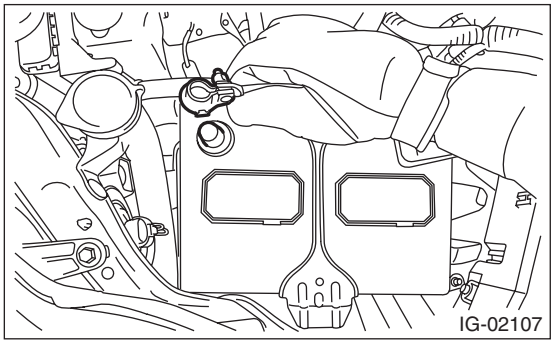

2) Open the fuel filler lid and remove the fuel filler cap.
3) Lift up the vehicle.
4) Disconnect connector (A) from fuel tank pressure sensor.
5) Pull out the vacuum hose (B) from vehicle.
6) Remove the fuel tank pressure sensor from the bracket.

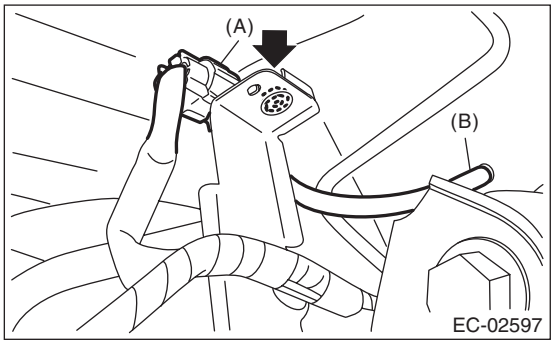

7) Disconnect the pressure hose from fuel tank pressure sensor and remove the fuel tank pressure sensor.

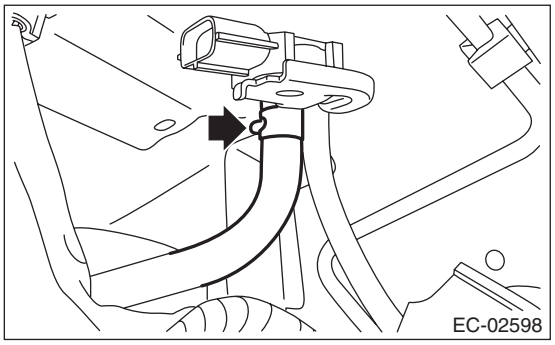

B: INSTALLATION

Install in the reverse order of removal.

Tightening torque:
7.35 N·m (0.7 kgf-m, 5.4 ft-lb)

C: INSPECTION

1. FUEL TANK PRESSURE SENSOR

1) Check that the fuel tank pressure sensor does not have deformation, cracks or other damages.
2) Connect dry-cell battery positive terminal to terminal No. 3 and dry-cell battery ground terminal to terminal No. 1, circuit tester positive terminal to terminal No. 2 and the circuit tester negative terminal to terminal No. 1.

NOTE:
- Use new dry-cell batteries.
- Using circuit tester, check the voltage of a single dry-cell battery is 1.6 V or more. And also check the voltage of three batteries in series is between 4.8 V and 5.2 V.

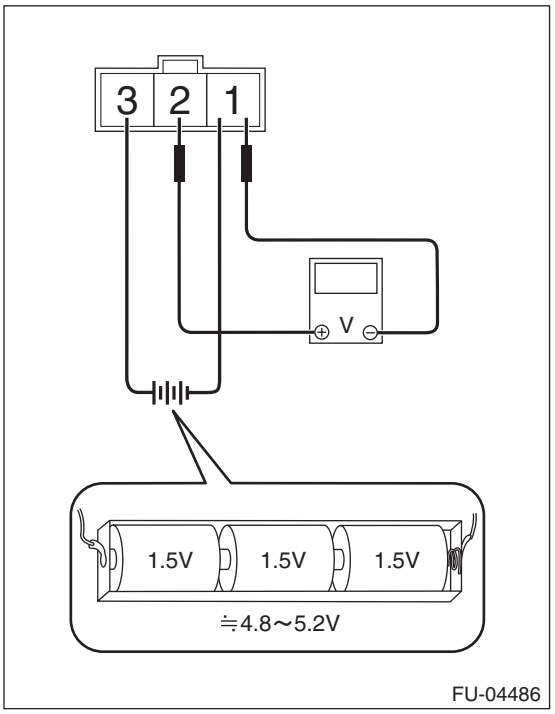

3) Check the voltage at a normal atmospheric pressure.

NOTE:
The atmospheric pressure at higher altitude is lower than normal. Therefore, the voltage is lower than the standard value.

Terminal No.	Standard
2 (+) and 1 (–)	Approx. 2.5 V (when 25°C (77°F))

4) Connect the Mighty Vac to the pressure port (A) on the fuel tank pressure sensor.

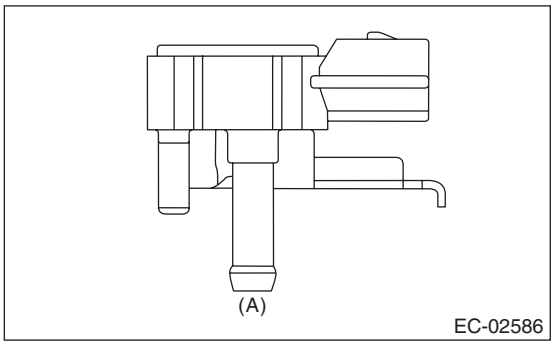

5) Check the voltage when generating vacuum and positive pressure using Mighty Vac.

CAUTION:
Be sure to apply pressure within a range of –10 — 20 kPa (–0.1 — 0.2 kgf/cm^2, –1.45 — 2.90 psi). Otherwise the fuel tank pressure sensor will be damaged.

Pressure	Terminal No.	Standard
–6.67 kPa (–0.07 kgf/cm^2, –0.97 psi)	2 (+) and 1 (–)	Approx. 0.5 V (when 25°C (77°F))
6.67 kPa (0.07 kgf/cm^2, 0.97 psi)		Approx. 4.5 V (when 25°C (77°F))

2. OTHER INSPECTIONS

Check that the hose has no cracks, damage or loose part.

11.Drain Filter

A: SPECIFICATION

Drain valve is a non-disassembled part, so do not remove the drain filter from drain valve. Refer to “Canister” for removal and installation procedures. <Ref. to EC(H4SO)-5, REMOVAL, Canister.> <Ref. to EC(H4SO)-6, INSTALLATION, Canister.>

12.Drain Valve

A: REMOVAL

Drain valve is integrated with canister. Refer to “Canister” for removal procedure. <Ref. to EC(H4SO)-5, REMOVAL, Canister.>

B: INSTALLATION

Refer to “Canister” for the installation procedure. <Ref. to EC(H4SO)-6, INSTALLATION, Canister.>

C: INSPECTION

Check the resistance between drain valve terminals.

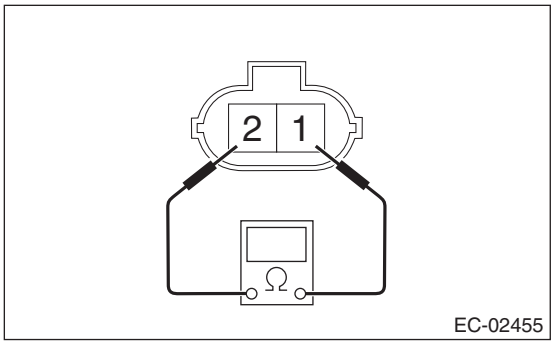

Terminal No.	Standard
1 and 2	20 — 30 Ω

13.PCV Hose Assembly

A: REMOVAL

CAUTION:
Do not remove except when the PCV hose is broken.

1) Remove the cover (A) and clip (B) from air intake boot assembly.

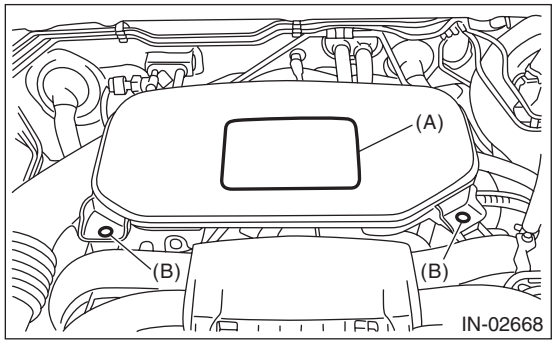

2) Loosen the clamp (A) which connects the air intake boot assembly and air cleaner case.

3) Loosen the clamp (B) which connects the air intake boot assembly and throttle body.

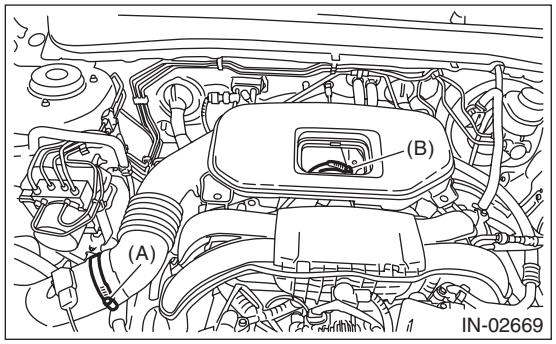

4) Remove the air intake boot from the throttle body, and move it to the left side wheel apron.

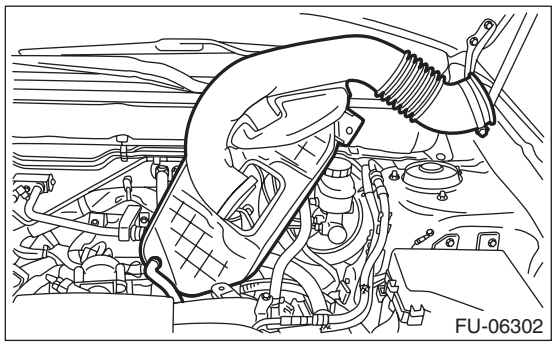

5) Disconnect the vacuum hose (A) from PCV valve, and remove the PCV hose assembly (B) from cylinder block RH and PCV pipe.

NOTE:
Pinch the clamp of the PCV hose assembly (B) by fitting the cut out in the ST with the protrusion on the clamp as shown in the figure, and unlock the clamp.

ST 18353AA000 CLAMP PLIERS

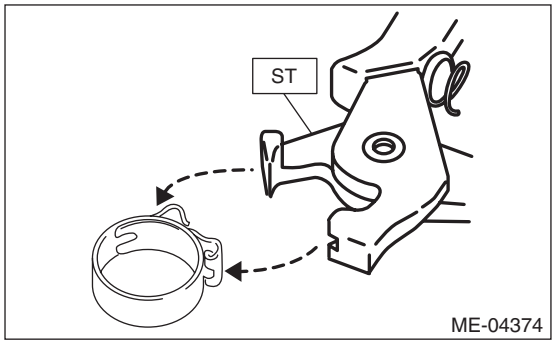

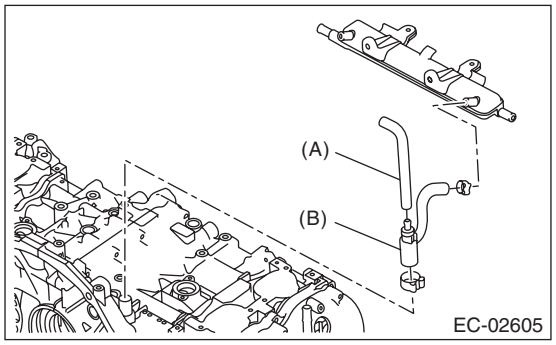

B: INSTALLATION

1) Install the PCV hose assembly (B) to the cylinder block RH and PCV pipe, and then connect the vacuum hose (A) to the PCV valve.

NOTE:
Use a new clamp for the PCV hose assembly (B), fit the cut out in the ST with the protrusion on the clamp as shown in the figure, and lock the clamp.
ST 18353AA000 CLAMP PLIERS

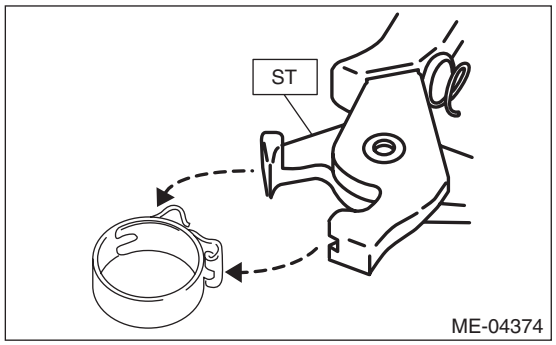

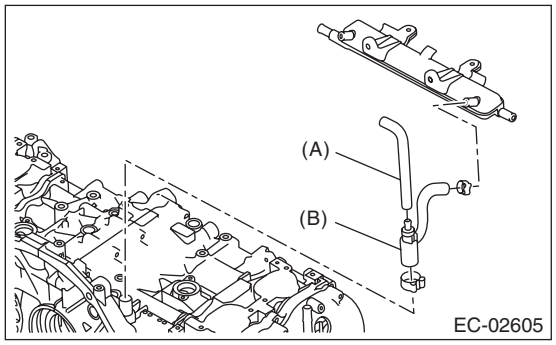

2) Install the air intake boot assembly.

NOTE:
Align the clamp hole with the protrusion of the air intake boot assembly.

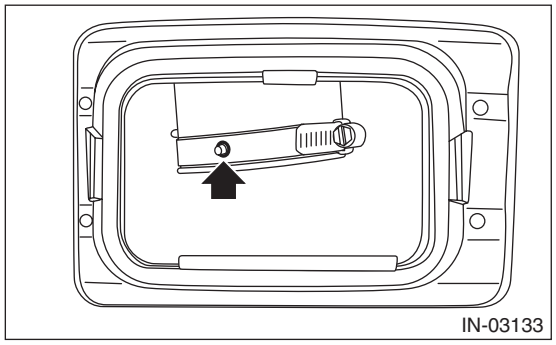

Tightening torque:
Clamp (A), (B)
3 N·m (0.3 kgf-m, 2.2 ft-lb)

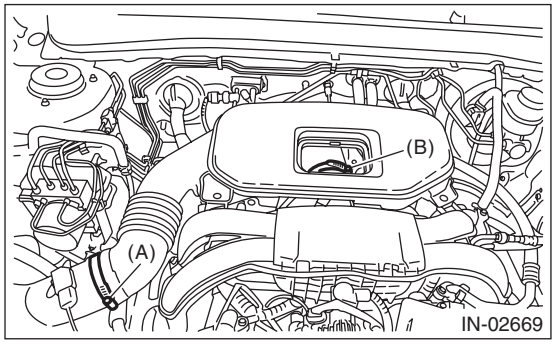

C: INSPECTION

Check the PCV hose assembly for cracks, damage or looseness.

14.PCV Valve

A: REMOVAL

CAUTION:
Do not remove unless the PCV valve is broken.
1) Remove the cover (A) and clip (B) from air intake boot assembly.

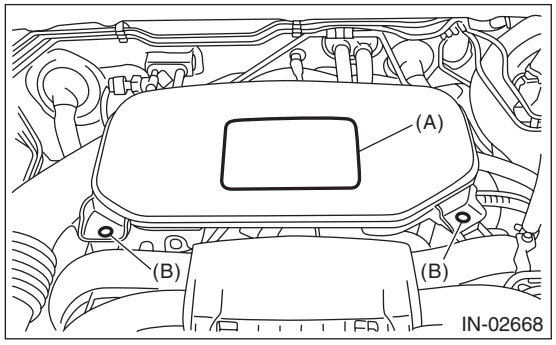

2) Loosen the clamp (A) which connects the air intake boot assembly and air cleaner case.
3) Loosen the clamp (B) which connects the air intake boot assembly and throttle body.

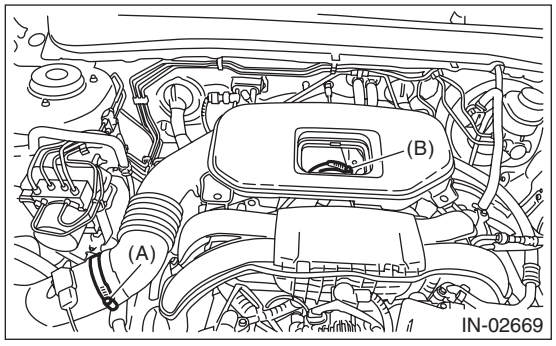

4) Remove the air intake boot from the throttle body, and move it to the left side wheel apron.

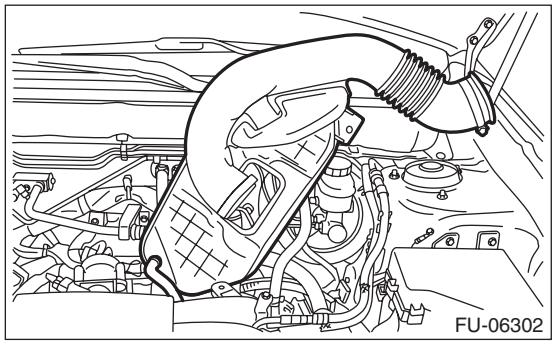

5) Disconnect the vacuum hose (A) and PCV hose (B) from the PCV valve and remove the PCV valve.

NOTE:
Pinch the clamp of the PCV hose (B) by fitting the cut out in the ST with the protrusion on the clamp as shown in the figure, and unlock the clamp.
ST 18353AA000 CLAMP PLIERS

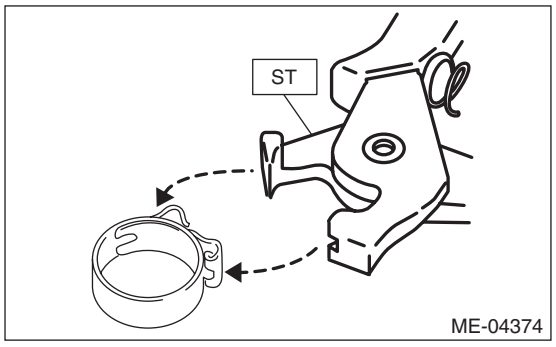

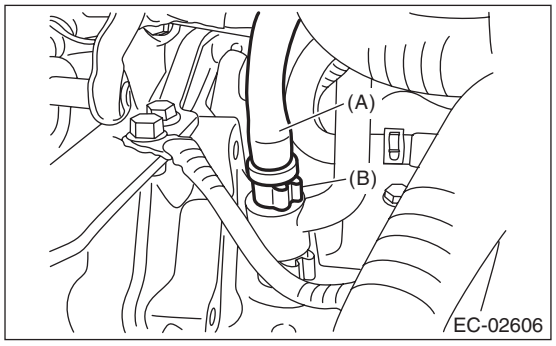

B: INSTALLATION

1) Connect the vacuum hose (A) and PCV hose (B) to the PCV valve.

NOTE:
Use a new clamp for the PCV hose (B), fit the cut out in the ST with the protrusion on the clamp as shown in the figure, and lock the clamp.
ST 18353AA000 CLAMP PLIERS

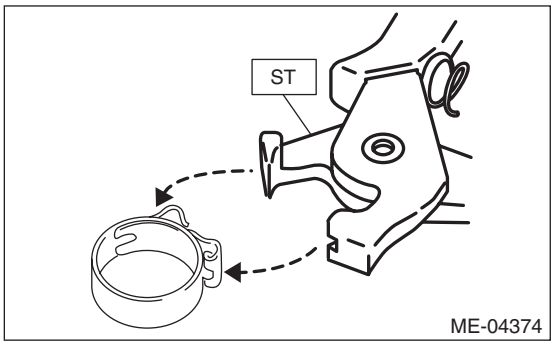

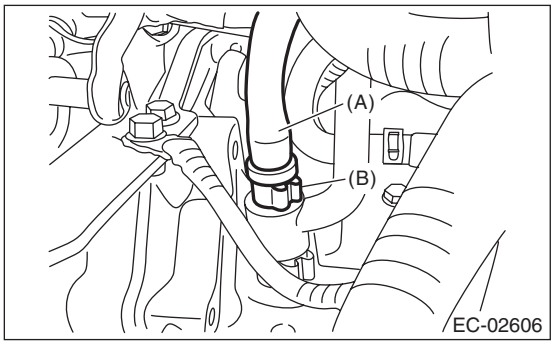

2) Install the air intake boot assembly.

NOTE:
Align the clamp hole with the protrusion of the air intake boot assembly.

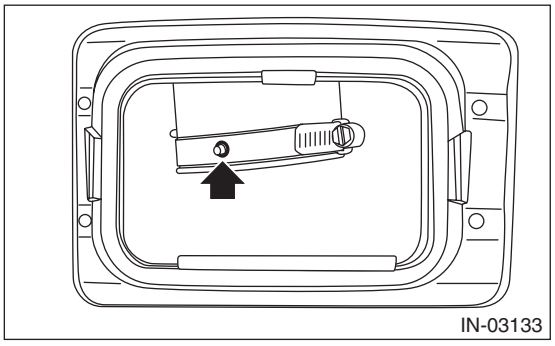

Tightening torque:
Clamp (A), (B)
3 N·m (0.3 kgf-m, 2.2 ft-lb)

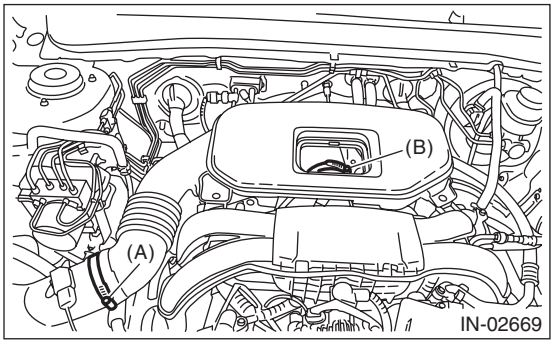

C: INSPECTION

1. PCV VALVE

1) Check that the PCV valve has no deformation, cracks or other damages.
2) Check that air is discharged from (B) when air is blown into (A).

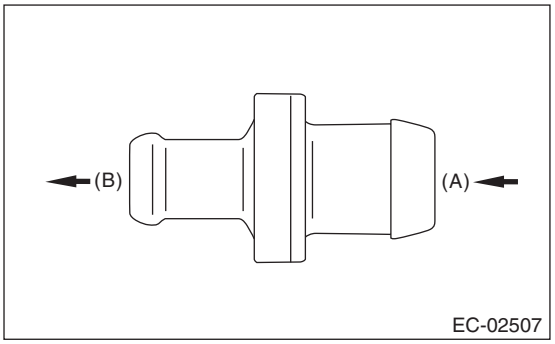

3) Check that air does not come out from (B) when air is blown into (A).

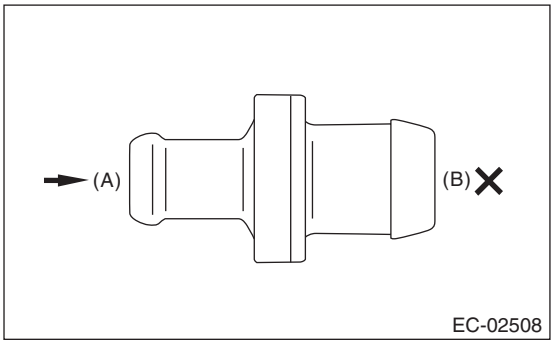

2. OTHER INSPECTIONS

Check the vacuum hose for cracks, damage or looseness.

INTAKE (INDUCTION)

IN(H4SO)

Page

1. General Description 2
2. Air Cleaner Element 4
3. Air Cleaner Case 6
4. Air Intake Boot 8
5. Air Intake Duct 9
6. Resonator Chamber 10

1. General Description

A: COMPONENT

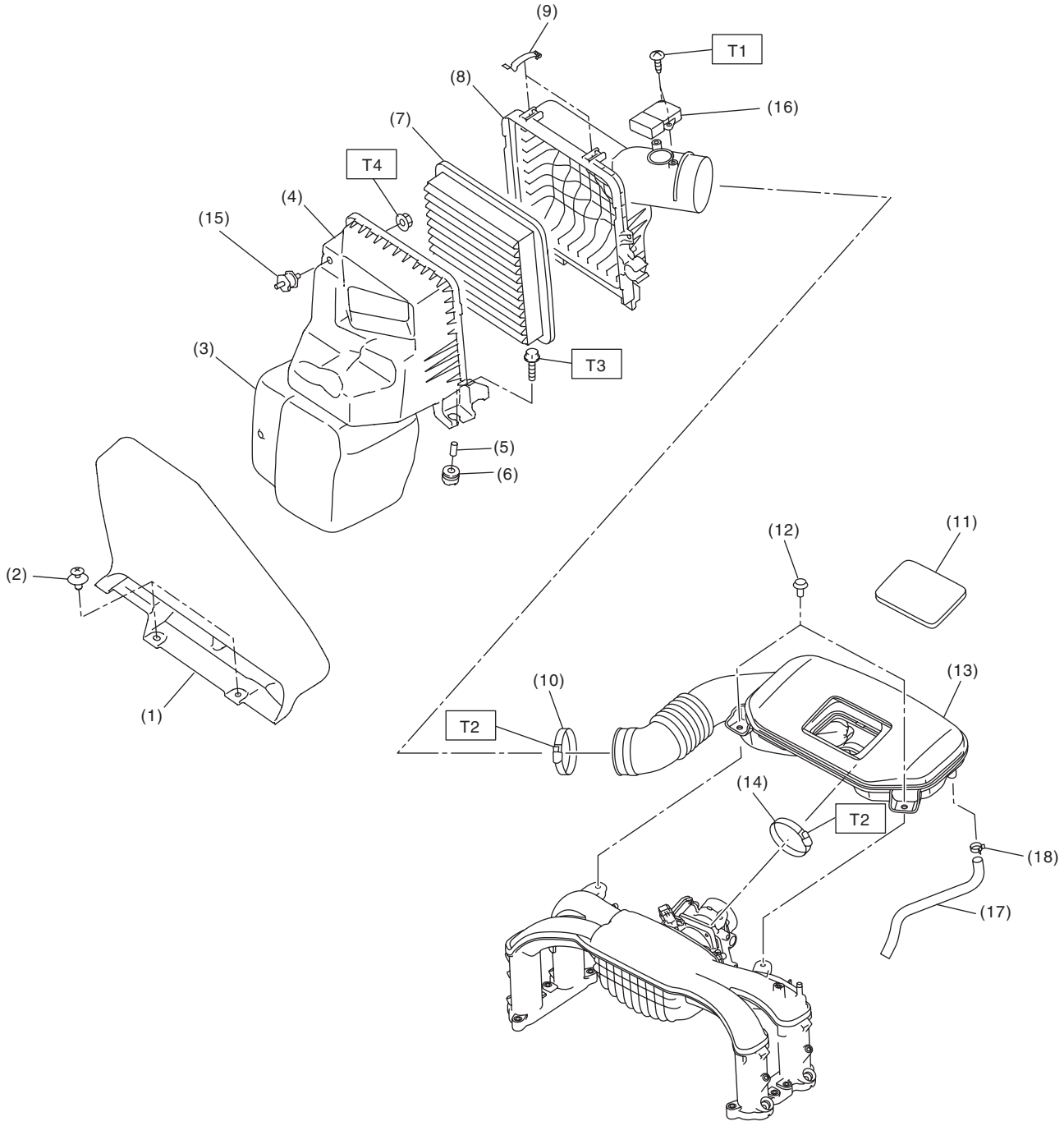

IN-03065

(1) Air intake duct
(2) Clip
(3) Resonator chamber
(4) Air cleaner case (front)
(5) Spacer
(6) Cushion
(7) Air cleaner element
(8) Air cleaner case (rear)
(9) Clip
(10) Clamp
(11) Cover
(12) Clip
(13) Air intake boot ASSY
(14) Clamp
(15) Cushion
(16) Mass air flow and intake air temperature sensor
(17) Blow-by hose
(18) Clip

Tightening torque:N·m (kgf-m, ft-lb)
T1: 1 (0.1, 0.7)
T2: 3 (0.3, 2.2)
T3: 6 (0.6, 4.4)
T4: 7.5 (0.8, 5.5)

B: CAUTION

• Wear appropriate work clothing, including a cap, protective goggles and protective shoes when performing any work.
• Remove contamination including dirt and corrosion before removal, installation or disassembly.
• Keep the disassembled parts in order and protect them from dust and dirt.
• Before removal, installation or disassembly, be sure to clarify the failure. Avoid unnecessary removal, installation, disassembly and replacement.
• Vehicle components are extremely hot after driving. Be wary of receiving burns from heated parts.
• Be sure to tighten fasteners including bolts and nuts to the specified torque.
• Place shop jacks or rigid racks at the specified points.
• Before disconnecting connectors of sensors or units, be sure to disconnect the ground cable from the battery.

2. Air Cleaner Element

A: REMOVAL

1) Disconnect the ground cable from battery.

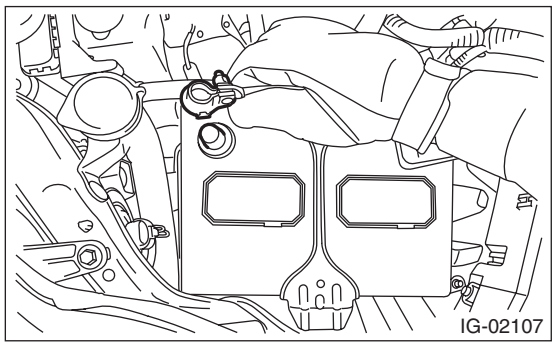

2) Disconnect the power steering oil pressure hose (suction hose) from the clip on the side of air cleaner case (rear).

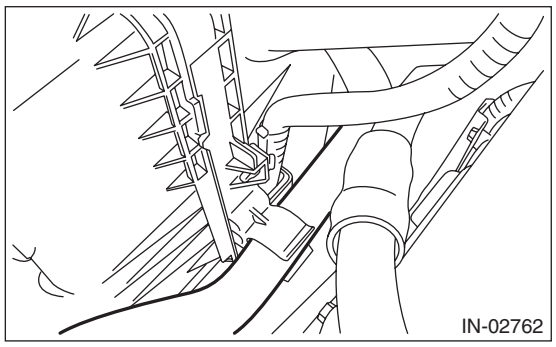

3) Disconnect the connector (A) from the mass air flow and intake air temperature sensor, and remove the clip (B).

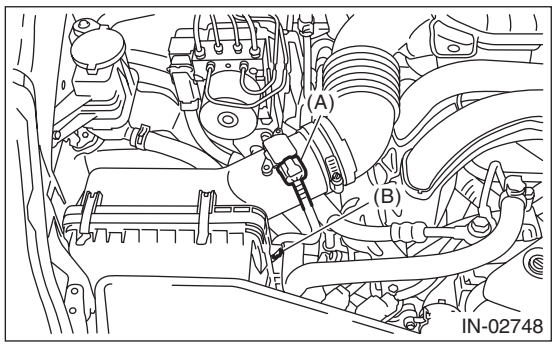

4) Loosen the clamp (A) which connects the air cleaner case (rear) and air intake boot assembly, and then remove the clip (B) from the air cleaner case (front).

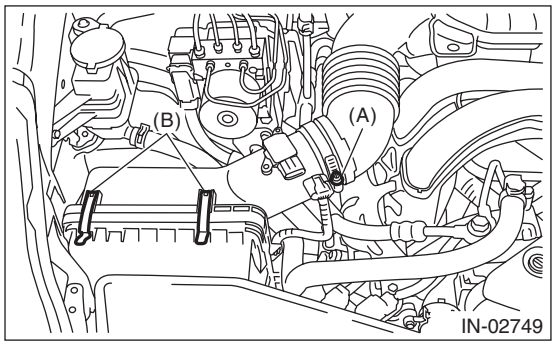

5) Pull the air cleaner case (rear) backward of the vehicle, and remove the air cleaner element.

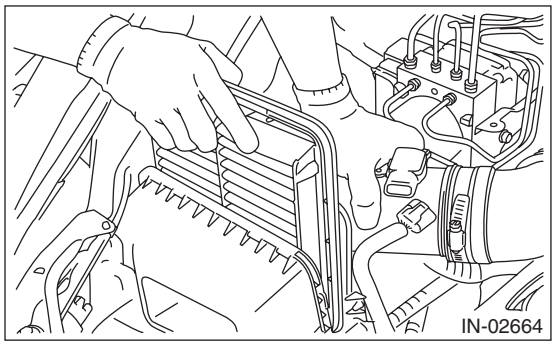

B: INSTALLATION

Install in the reverse order of removal.

CAUTION:
Be sure to use SUBARU genuine air cleaner element depending on the engine type when replacing the air cleaner elements. Using other air cleaner element may affect the engine performance.

NOTE:
• Check that there are no foreign objects in the air cleaner case.
• When installing the air cleaner case (rear), align the protrusion of the air cleaner case (rear) to the hole on the air cleaner case (front) to install.

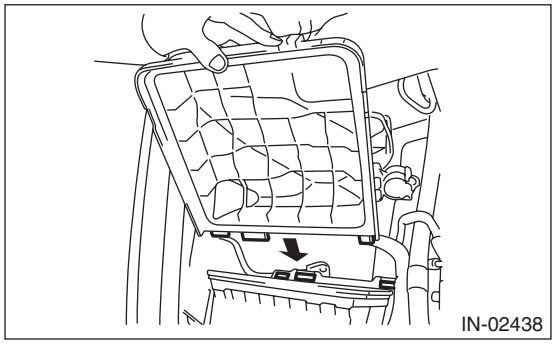

Tightening torque:
3 N·m (0.3 kgf-m, 2.2 ft-lb)

C: INSPECTION

1) Check that the air cleaner element has no deformation, cracks or other damages.
2) Check the air cleaner element for excessive dirt.

3. Air Cleaner Case

A: REMOVAL

1) Disconnect the ground cable from battery.

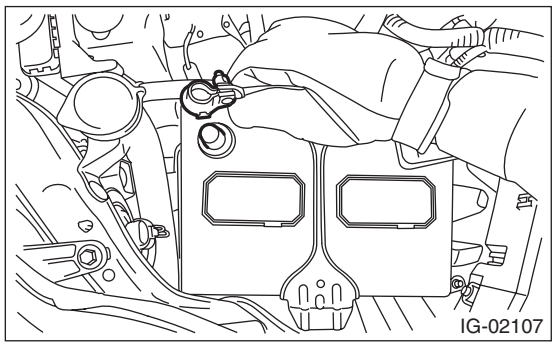

2) Remove the air intake duct. <Ref. to IN(H4SO)-9, REMOVAL, Air Intake Duct.>

3) Disconnect the power steering oil pressure hose (suction hose) from the clip on the side of air cleaner case (rear).

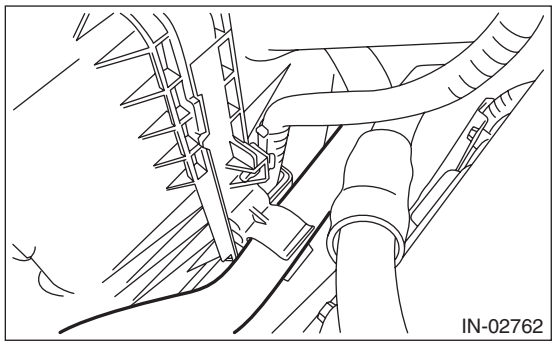

4) Disconnect the connector (A) from the mass air flow and intake air temperature sensor, and remove the clip (B).

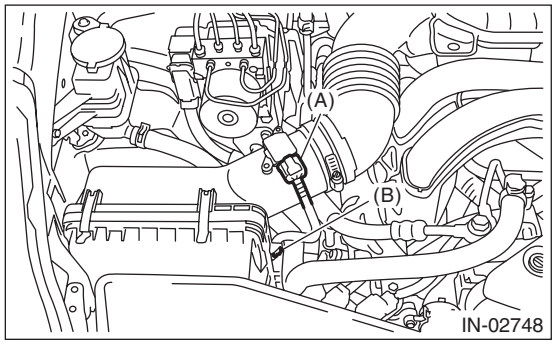

5) Loosen the clamp (A) which connects the air cleaner case (rear) and air intake boot assembly, and then remove the clip (B) from the air cleaner case (front).

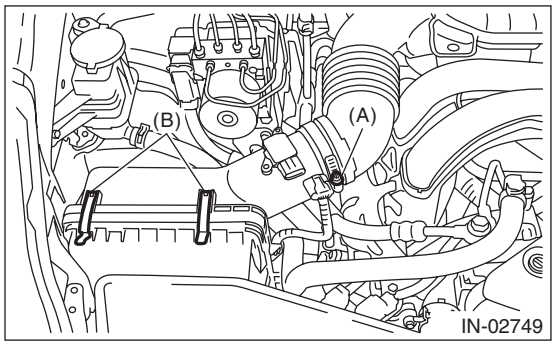

6) Remove the air cleaner case (rear) and air cleaner element.

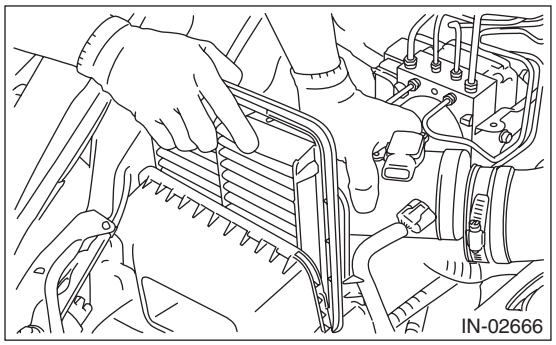

7) Remove bolts (A) and nuts (B) which secure the air cleaner case (front) to the body, and remove the air cleaner case (front).

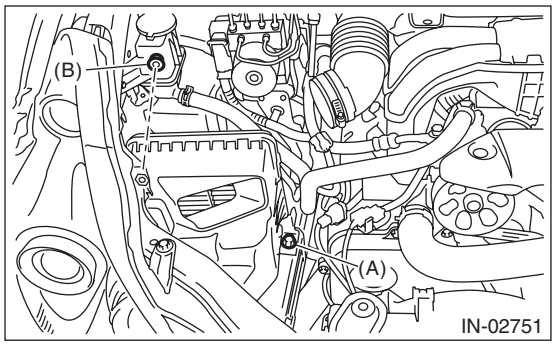

B: INSTALLATION

1) Install the bolt (A) and nut (B) which secure the air cleaner case (front) to the body.

Tightening torque:
Bolt (A)
6 N·m (0.6 kgf-m, 4.4 ft-lb)
Nut (B)
7.5 N·m (0.8 kgf-m, 5.5 ft-lb)

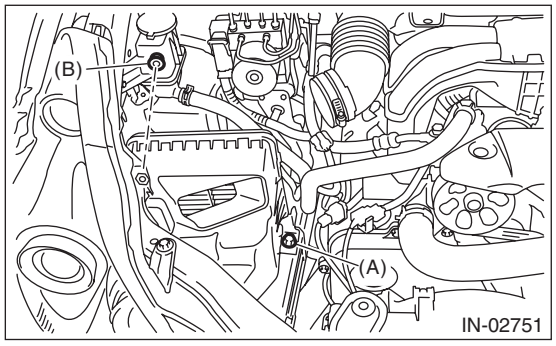

2) Install the air cleaner case (rear) and air cleaner element.

NOTE:
When installing the air cleaner case (rear), align the protrusion of the air cleaner case (rear) to the hole on the air cleaner case (front) to install.

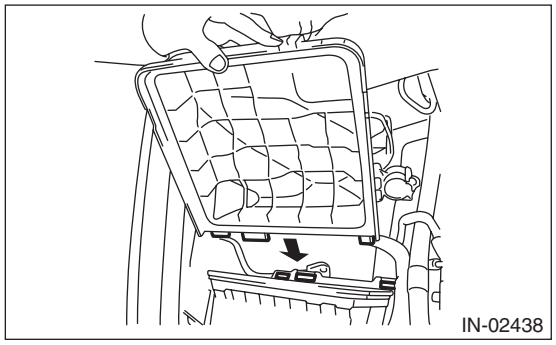

3) Attach the clip (B) to the air cleaner case (front), and tighten the clamp (A) connecting the air cleaner case (rear) and air intake boot assembly.

Tightening torque:
Clamp (A)
3 N·m (0.3 kgf-m, 2.2 ft-lb)

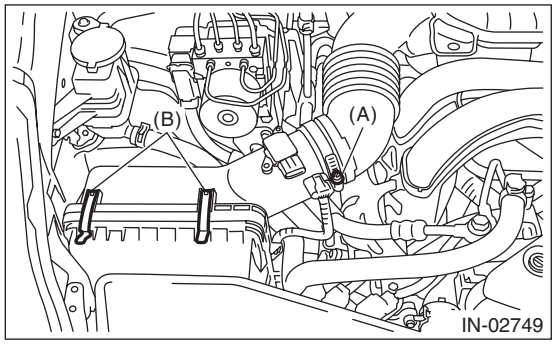

4) Connect the connector (A) to the mass air flow and intake air temperature sensor and secure the harness with clip (B).

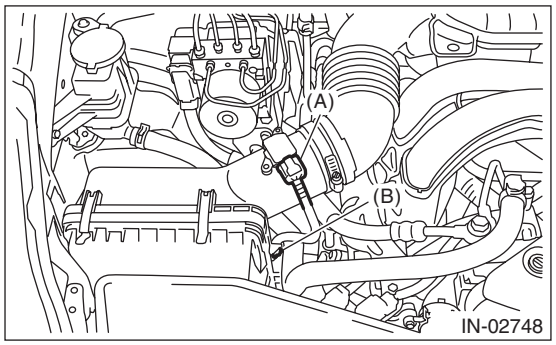

5) Connect the power steering oil pressure hose (suction hose) to the clip on the side of air cleaner case (rear).

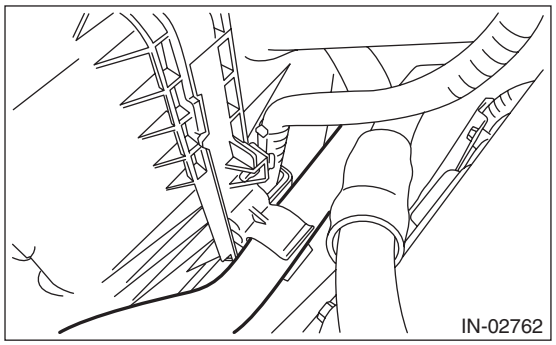

6) Install the air intake duct. <Ref. to IN(H4SO)-9, INSTALLATION, Air Intake Duct.>
7) Connect the battery ground terminal.

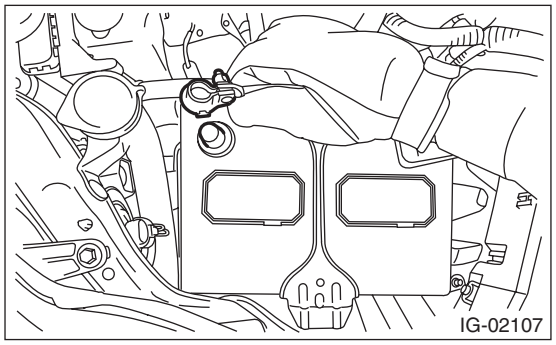

C: INSPECTION

1) Check that the air cleaner case has no deformation, cracks or other damages.
2) Check that the air intake boot has no cracks, damage or loose part.

4. Air Intake Boot

A: REMOVAL

1) Remove the cover (A) and clip (B) from air intake boot assembly.

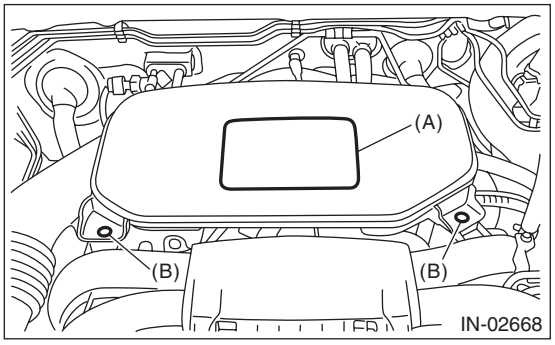

2) Loosen the clamp (A) which connects the air intake boot assembly and air cleaner case.
3) Loosen the clamp (B) which connects the air intake boot assembly and throttle body.

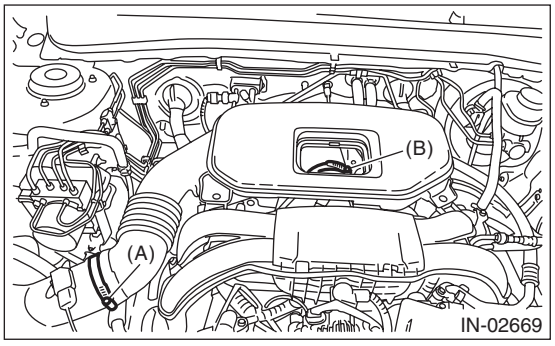

4) Disconnect the blow-by hose and remove the air intake boot assembly.

B: INSTALLATION

Install in the reverse order of removal.

NOTE:
Align the clamp hole with the protrusion of the air intake boot assembly.

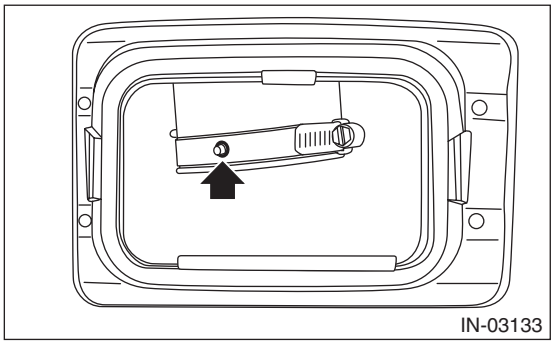

Tightening torque:
3 N·m (0.3 kgf-m, 2.2 ft-lb)

C: INSPECTION

1) Check that the air intake boot assembly does not have deformation, cracks or other damages.
2) Check there is no foreign matter in the air intake boot assembly.

5. Air Intake Duct

A: REMOVAL

1) Remove the clip which secures the air intake duct, and remove the air intake duct.

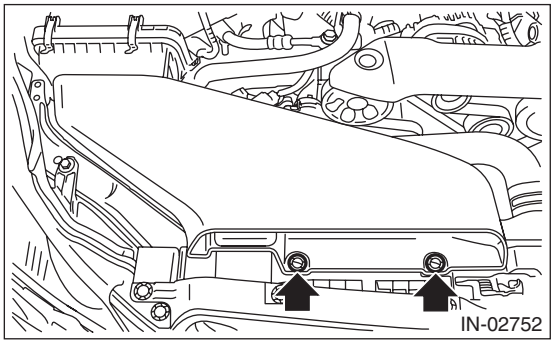

B: INSTALLATION

Install in the reverse order of removal.

C: INSPECTION

1) Check that the air intake duct has no deformation, cracks or other damages.
2) Inspect that no foreign objects are mixed in the air intake duct.

6. Resonator Chamber

A: REMOVAL

The resonator chamber and air cleaner case are integrated into one unit; therefore, refer to “Air Cleaner Case” for removal procedure. <Ref. to IN(H4SO)-6, REMOVAL, Air Cleaner Case.>

B: INSTALLATION

The resonator chamber and air cleaner case are integrated into one unit; therefore, refer to “Air Cleaner Case” for installation procedure. <Ref. to IN(H4SO)-7, INSTALLATION, Air Cleaner Case.>

C: INSPECTION

Check that the resonator chamber has no deformation, cracks or other damages.

MECHANICAL

ME(H4SO)

		Page
1.	General Description	2
2.	Compression	23
3.	Idle Speed	24
4.	Ignition Timing	25
5.	Intake Manifold Vacuum	26
6.	Engine Oil Pressure	27
7.	Fuel Pressure	28
8.	Valve Clearance	29
9.	Engine Assembly	31
10.	Engine Mounting	39
11.	Preparation for Overhaul	42
12.	V-belt	43
13.	Crank Pulley	45
14.	Timing Belt Cover	47
15.	Timing Belt	48
16.	Cam Sprocket	53
17.	Crank Sprocket	54
18.	Valve Rocker Assembly	55
19.	Camshaft	58
20.	Cylinder Head	63
21.	Cylinder Block	71
22.	Oil Switching Solenoid Valve	95
23.	Intake and Exhaust Valve	98
24.	Piston	99
25.	Connecting Rod	100
26.	Crankshaft	101
27.	Engine Trouble in General	102
28.	Engine Noise	108

1. General Description

A: SPECIFICATION

Engine	Model			2.5 L
	Cylinder arrangement			Horizontally opposed, liquid cooled, 4-cylinder, 4-stroke gasoline engine
	Valve system mechanism			Belt driven, single overhead camshaft, 4 valve/cylinder
	Bore × Stroke	mm (in)		99.5 × 79.0 (3.92 × 3.11)
	Displacement	cm^3 (cu in)		2,457 (149.94)
	Compression ratio			10.0
	Compression pressure (at 200 — 300 rpm)	kPa (kg/cm^2, psi)	Standard	1,020 — 1,275 (10.4 — 13.0, 148 — 185)
	Number of piston rings			Pressure ring: 2, Oil ring: 1
	Intake valve timing	Constant	Open	BTDC 0°
			Close	ABDC 58°
		Low speed	Open	BTDC 0°
			Close	ABDC –10°
		High speed	Open	BTDC 14°
			Close	ABDC 62°
	Exhaust valve timing		Open	BBDC30°
			Close	ATDC14°
	Valve clearance mm (in)	Intake		0.20±0.04 (0.0079±0.0016)
		Exhaust		0.25±0.04 (0.0098±0.0016)
	Idle speed (For CVT model, select lever in “P” or “N” range. For MT model, gear shift lever in neutral position.) rpm	No load	Standard	CVT model: 675±100 MT model: 650±100
		A/C ON	Standard	700 — 850±100
	Ignition order			1 → 3 → 2 → 4
	Ignition timing	BTDC/rpm	Standard	CVT model: 15°±10°/675 MT model: 10°±10°/650

NOTE:
US: Undersize OS: Oversize

Belt tension adjuster	Adjuster rod protrusion amount			mm (in)	5.2 — 6.2 (0.205 — 0.244)
Valve rocker arm	Clearance between arm and shaft			Standard	0.020 — 0.054 (0.0008 — 0.0021)
	Rocker arm inside diameter			Standard	22.020 — 22.041 (0.8669 — 0.8678)
	Rocker shaft diameter			Standard	21.987 — 22.000 (0.8656 — 0.8661)
Camshaft	Bending limit			mm (in)	0.025 (0.00098)
	Cam lobe height mm (in)	Intake	Constant	Standard	40.075 — 40.175 (1.5778 — 1.5817)
			Low speed	Standard	35.496 — 35.596 (1.3975 — 1.4014)
			High speed	Standard	40.315 — 40.415 (1.5872 — 1.5911)
		Exhaust		Standard	39.289 — 39.389 (1.5468 — 1.5507)
	Cam base circle diameter			Standard	34.00 (1.3386)
	Base circle step of adjacent intake cams (low speed and high speed)			Standard	0.03 (0.001) or less
	Oil clearance			Standard	0.055 — 0.090 (0.0022 — 0.0035)
	Journal O.D.			Standard	31.928 — 31.945 (1.2570 — 1.2577)
	Cylinder head journal I.D.			Standard	32.000 — 32.018 (1.2598 — 1.2605)
	Thrust clearance			Standard	0.030 — 0.090 (0.0012 — 0.0035)
Cylinder head	Warping limit (mating surface with cylinder block)			mm (in)	0.035 (0.0014)
	Grinding limit			mm (in)	0.1 (0.004)
	Standard height			mm (in)	97.5 (3.84)
Valve seat	Seating angle between valve and valve seat				90°
	Contacting width between valve and valve seat mm (in)		Intake	Standard	0.8 — 1.4 (0.03 — 0.055)
			Exhaust	Standard	1.2 — 1.8 (0.047 — 0.071)
Valve guide	Clearance between the valve guide and valve stem mm (in)		Intake	Standard	0.035 — 0.062 (0.0014 — 0.0024)
			Exhaust	Standard	0.040 — 0.067 (0.0016 — 0.0026)
	Inside diameter			mm (in)	6.000 — 6.012 (0.2362 — 0.2367)
	Valve stem outer diameters			mm (in)	Intake 5.950 — 5.965 (0.2343 — 0.2348)
					Exhaust 5.945 — 5.960 (0.2341 — 0.2346)
	Valve guide protrusion amount			mm (in)	Intake 20.3 — 20.7 (0.799 — 0.815)
					Exhaust 16.8 — 17.2 (0.661 — 0.677)
Valve	Head edge thickness mm (in)		Intake	Standard	0.8 — 1.2 (0.03 — 0.047)
			Exhaust	Standard	1.0 — 1.4 (0.039 — 0.055)
	Overall length			mm (in)	Intake 120.6 (4.75)
					Exhaust 121.7 (4.79)
Valve spring	Free length			mm (in)	55.2 (2.173)
	Tension/spring height			N (kgf, lb)/mm (in)	Set 235.3 — 270.7 (24 — 27.6, 52.9 — 60.8)/45.0 (1.772)
					Lift 578.9 — 639.9 (59.1 — 65.3, 130.3 — 143.9)/34.7 (1.366)
	Squareness				2.5°, 2.4 mm (0.094 in) or less
Cylinder block	Warping limit (mating surface with cylinder head)			mm (in)	0.025 (0.00098)
	Grinding limit			mm (in)	0.1 (0.004)
	Standard height			mm (in)	201.0 (7.91)
	Cylindricality			mm (in)	Limit 0.015 (0.0006)
	Out-of-roundness			mm (in)	Limit 0.010 (0.0004)
	Clearance between cylinder and piston at 20°C (68°F)			mm (in)	Standard –0.015 — 0.005 (–0.00059 — 0.00020)
	Cylinder inner diameter boring limit (diameter)			mm (in)	To 100.005 (3.9372)

Piston	Piston grade point			mm (in)	38.2 (1.504)
	Outer diameter mm (in)	Standard	A		99.510 — 99.520 (3.9177 — 3.9181)
			B		99.500 — 99.510 (3.9173 — 3.9177)
		0.25 (0.0098) OS			99.750 — 99.770 (3.9272 — 3.9280)
		0.50 (0.0197) OS			100.000 — 100.020 (3.9370 — 3.9378)
Piston pin	Degree of fit				Piston pin must be fitted into position with thumb at 20°C (68°F).
	Clearance between piston pin hole and piston pin			mm (in) Standard	0.004 — 0.008 (0.0002 — 0.0003)
Piston ring	Piston ring gap mm (in)	Top ring		Standard	0.20 — 0.35 (0.0079 — 0.0138)
		Second ring		Standard	0.37 — 0.52 (0.0146 — 0.0205)
		Oil ring		Standard	0.20 — 0.50 (0.0079 — 0.0197)
	Clearance between piston ring and piston ring groove mm (in)	Top ring		Standard	0.040 — 0.080 (0.0016 — 0.0031)
		Second ring		Standard	0.030 — 0.070 (0.0012 — 0.0028)
Connecting rod and connecting rod bearing	Bend or twist per 100 mm (3.94 in) in length			mm (in) Limit	0.10 (0.0039)
	Thrust clearance			mm (in) Standard	0.070 — 0.330 (0.0028 — 0.0130)
	Oil clearance			mm (in) Standard	0.016 — 0.044 (0.0006 — 0.0017)
	Bearing size (Thickness at center) mm (in)	Standard			1.492 — 1.501 (0.0587 — 0.0591)
		0.03 (0.0012) US			1.510 — 1.513 (0.0594 — 0.0596)
		0.05 (0.0020) US			1.520 — 1.523 (0.0598 — 0.0600)
		0.25 (0.0098) US			1.620 — 1.623 (0.0638 — 0.0639)
Bushing of small end	Clearance between piston pin and bushing			mm (in) Standard	0 — 0.022 (0 — 0.0009)
Crankshaft and crankshaft bearing	Bending limit				mm (in) 0.035 (0.0014)
	Crank pin	Cylindricality		mm (in) Limit	0.004 (0.0002)
		Out-of-roundness		mm (in) Limit	0.003 (0.0001)
		Grinding limit (dia.)			mm (in) To 51.750 (2.0374)
	Crank journal	Cylindricality		mm (in) Limit	0.006 (0.0002)
		Out-of-roundness		mm (in) Limit	0.005 (0.0002)
		Grinding limit (dia.)			mm (in) To 59.758 (2.3527)
	Crank pin outer diameter mm (in)	Standard			51.984 — 52.000 (2.0466 — 2.0472)
		0.03 (0.0012) US			51.954 — 51.970 (2.0454 — 2.0461)
		0.05 (0.0020) US			51.934 — 51.950 (2.0446 — 2.0453)
		0.25 (0.0098) US			51.734 — 51.750 (2.0368 — 2.0374)
	Crank journal outer diameter mm (in)	Standard			59.992 — 60.008 (2.3619 — 2.3625)
		0.03 (0.0012) US			59.962 — 59.978 (2.3607 — 2.3613)
		0.05 (0.0020) US			59.942 — 59.958 (2.3599 — 2.3605)
		0.25 (0.0098) US			59.742 — 59.758 (2.3520 — 2.3527)
	Bearing size (Thickness at center) mm (in)	#1, #3	Standard		1.998 — 2.011 (0.0787 — 0.0792)
			0.03 (0.0012) US		2.017 — 2.020 (0.0794 — 0.0795)
			0.05 (0.0020) US		2.027 — 2.030 (0.0798 — 0.0799)
			0.25 (0.0098) US		2.127 — 2.130 (0.0837 — 0.0839)
		#2, #4, #5	Standard		2.000 — 2.013 (0.0787 — 0.0793)
			0.03 (0.0012) US		2.019 — 2.022 (0.0795 — 0.0796)
			0.05 (0.0020) US		2.029 — 2.032 (0.0799 — 0.0800)
			0.25 (0.0098) US		2.129 — 2.132 (0.0838 — 0.0839)
	Thrust clearance			mm (in) Standard	0.030 — 0.115 (0.0012 — 0.0045)
	Oil clearance			mm (in) Standard	0.010 — 0.030 (0.0004 — 0.0012)

B: COMPONENT

1. V-BELT

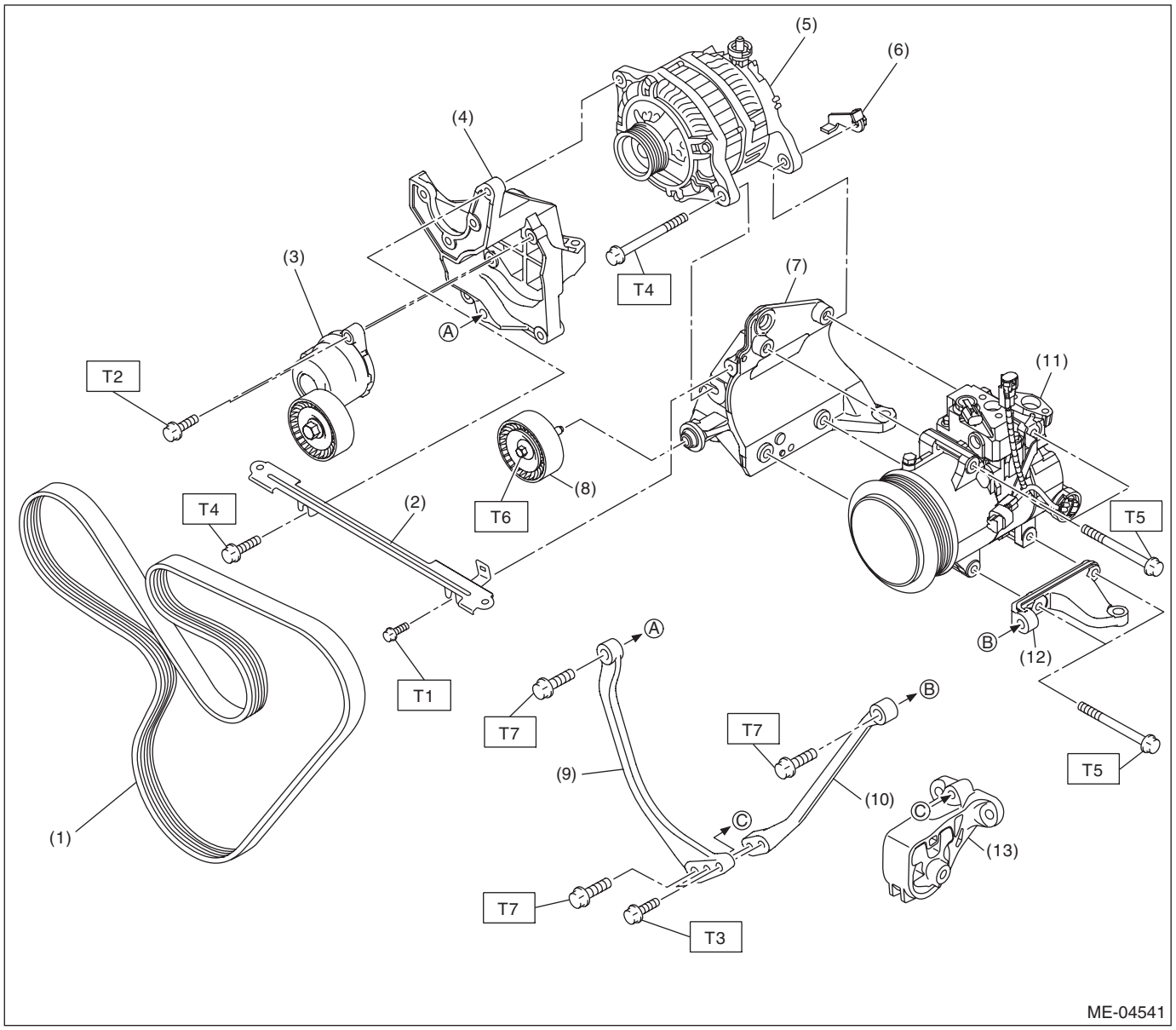

(1)	V-belt	(8)	Idler pulley ASSY
(2)	V-belt cover bracket	(9)	Stopper rod RH
(3)	V-belt tensioner ASSY	(10)	Stopper rod LH
(4)	Power steering pump bracket	(11)	A/C compressor
(5)	Generator	(12)	A/C compressor bracket B
(6)	Generator plate	(13)	Front cushion rubber
(7)	A/C compressor bracket A		

Tightening torque:N·m (kgf-m, ft-lb)

T1: 6.4 (0.7, 4.7)
T2: 20 (2.0, 14.8)
T3: 22 (2.2, 16.2)
T4: 25 (2.5, 18.4)
T5: 26.5 (2.7, 19.5)
T6: 33 (3.4, 24.3)
T7: 36 (3.7, 26.6)

2. TIMING BELT

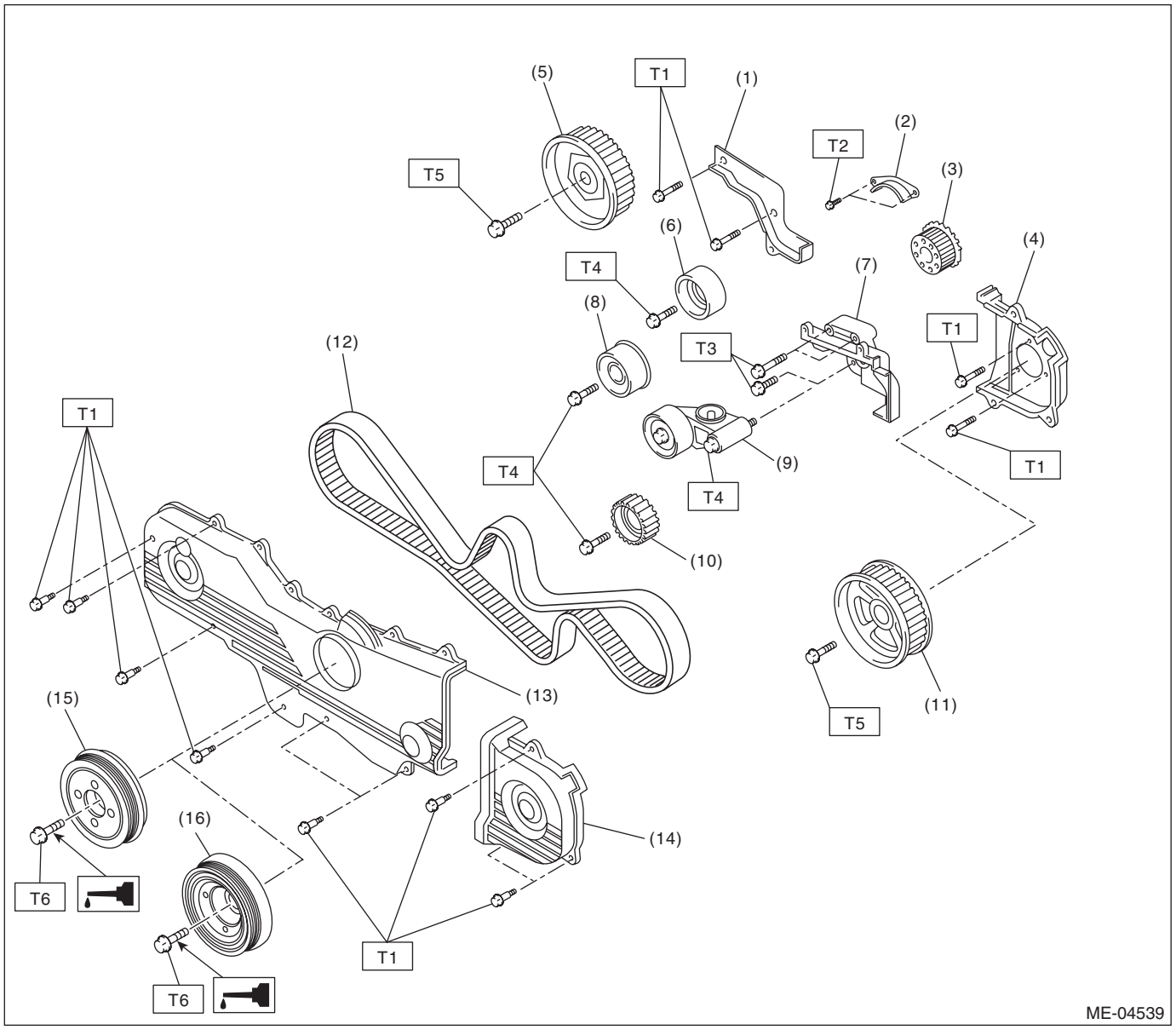

(1)	Timing belt cover No. 2 RH	(9)	Automatic belt tension adjuster ASSY	***Tightening torque:N·m (kgf-m, ft-lb)***
(2)	Timing belt guide (MT model)	(10)	Belt idler No. 2	***T1: 5 (0.5, 3.7)***
(3)	Crank sprocket	(11)	Cam sprocket No. 2	***T2: 9.75 (1.0, 7.2)***
(4)	Timing belt cover No. 2 LH	(12)	Timing belt	***T3: 24.5 (2.5, 18.1)***
(5)	Cam sprocket No. 1	(13)	Front timing belt cover	***T4: 39 (4.0, 28.8)***
(6)	Belt idler (A)	(14)	Timing belt cover LH	***T5: 78 (8.0, 57.5)***
(7)	Tensioner bracket	(15)	Crank pulley (MT model)	***T6: <Ref. to ME(H4SO)-45, INSTALLATION, Crank Pulley.>***
(8)	Belt idler (B)	(16)	Crank pulley (CVT model)	

3. CYLINDER HEAD AND CAMSHAFT

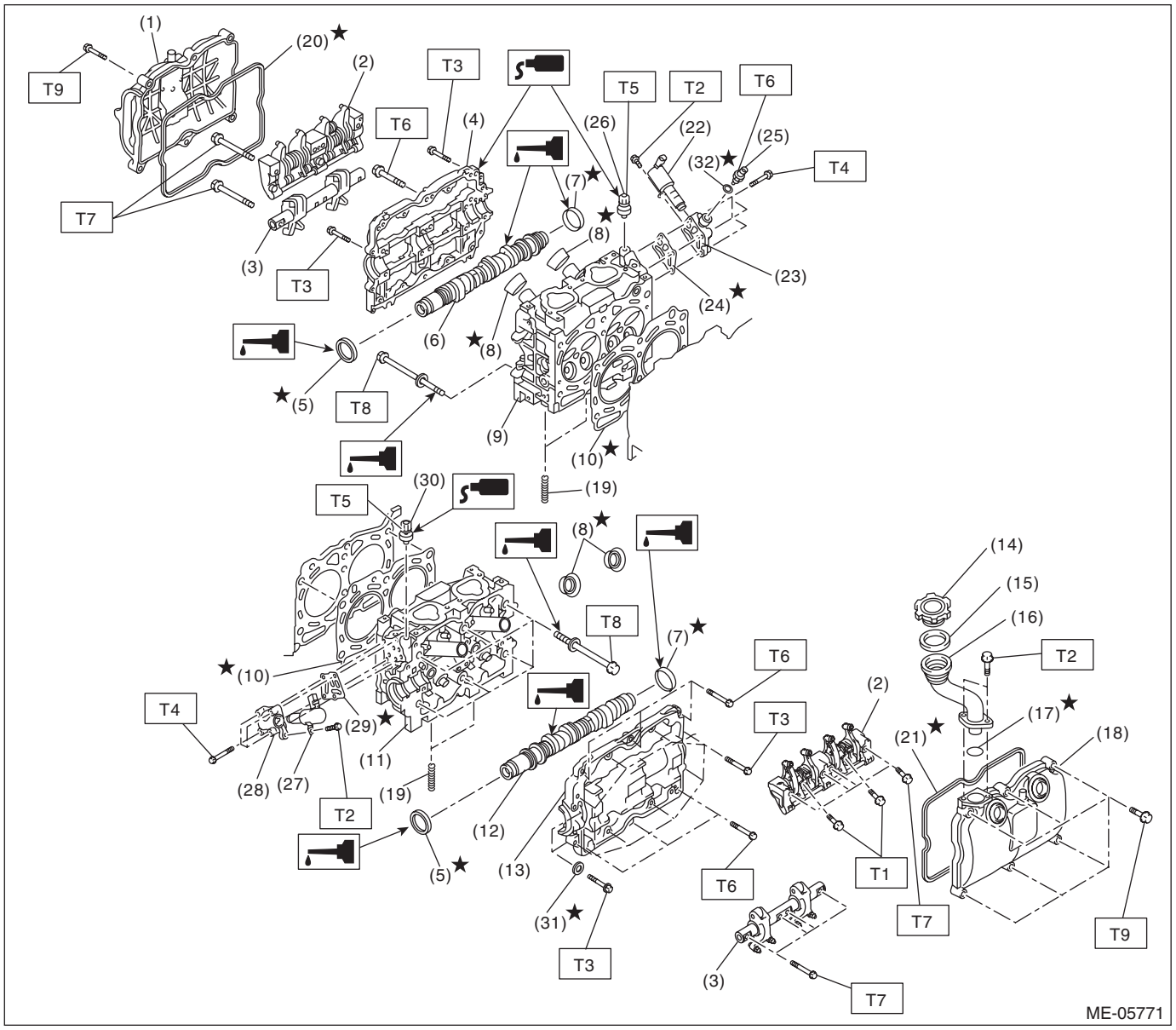

(1) Rocker cover RH
(2) Intake valve rocker ASSY
(3) Exhaust valve rocker ASSY
(4) Camshaft cap RH
(5) Oil seal
(6) Camshaft RH
(7) Plug
(8) Spark plug pipe gasket
(9) Cylinder head RH
(10) Cylinder head gasket
(11) Cylinder head LH
(12) Camshaft LH
(13) Camshaft cap LH
(14) Oil filler cap
(15) Gasket
(16) Oil filler duct
(17) O-ring
(18) Rocker cover LH
(19) Stud bolt
(20) Rocker cover gasket RH
(21) Rocker cover gasket LH
(22) Oil switching solenoid valve RH
(23) Oil switching solenoid valve holder RH
(24) Gasket
(25) Oil temperature sensor
(26) Variable valve lift diagnosis oil pressure switch RH
(27) Oil switching solenoid valve LH
(28) Oil switching solenoid valve holder LH
(29) Gasket
(30) Variable valve lift diagnosis oil pressure switch LH
(31) Seal washer
(32) Washer

Tightening torque:N·m (kgf-m, ft-lb)

T1: 6 (0.6, 4.4)
T2: 6.4 (0.7, 4.7)
T3: 9.75 (1.0, 7.2)
T4: 10 (1.0, 7.4)
T5: 17 (1.7, 12.5)
T6: 18 (1.8, 13.3)
T7: 25 (2.5, 18.4)
T8: <Ref. to ME(H4SO)-63, INSTALLATION, Cylinder Head.>
T9: <Ref. to ME(H4SO)-55, INSTALLATION, Valve Rocker Assembly.>

4. VALVE ROCKER ASSY

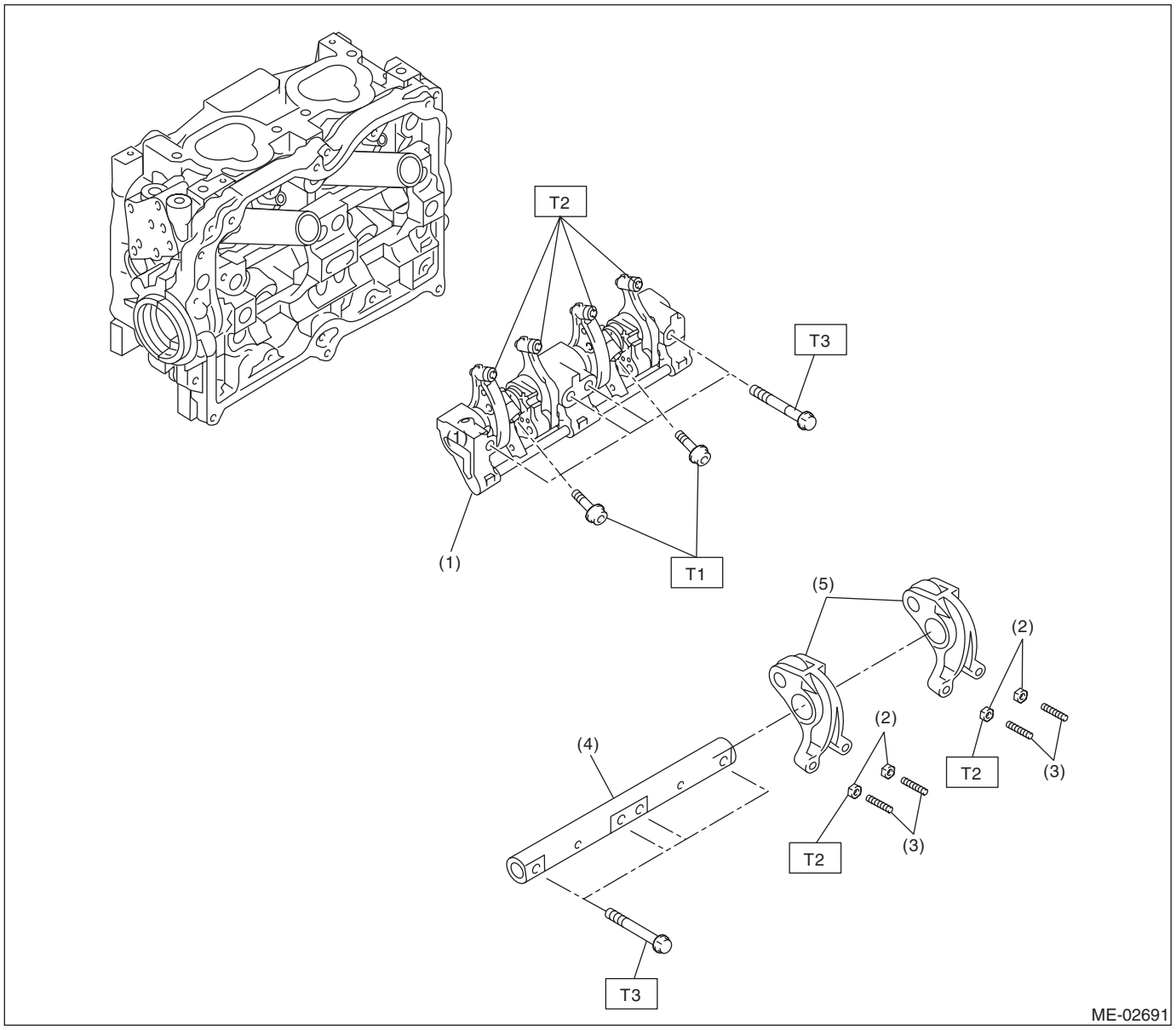

(1) Intake valve rocker ASSY
(2) Valve rocker nut
(3) Valve rocker adjusting screw
(4) Exhaust rocker shaft
(5) Exhaust valve rocker arm

Tightening torque:N·m (kgf-m, ft-lb)
T1: 6 (0.6, 4.4)
T2: 9.75 (1.0, 7.2)
T3: 25 (2.5, 18.4)

5. CYLINDER HEAD AND VALVE ASSEMBLY

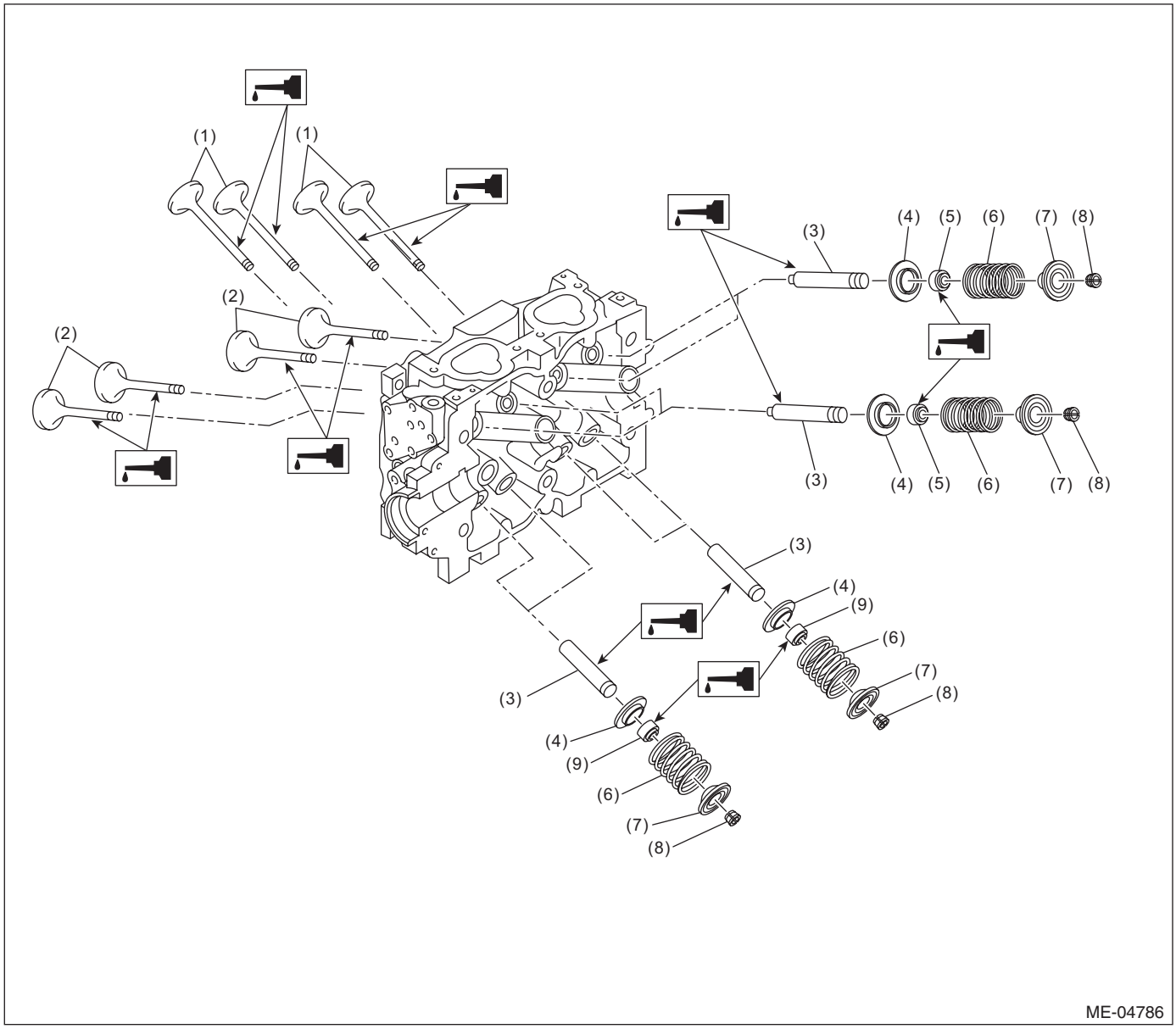

(1) Exhaust valve
(2) Intake valve
(3) Valve guide
(4) Valve spring seat
(5) Intake valve oil seal
(6) Valve spring
(7) Valve spring retainer
(8) Valve spring retainer key
(9) Exhaust valve oil seal

6. CYLINDER BLOCK

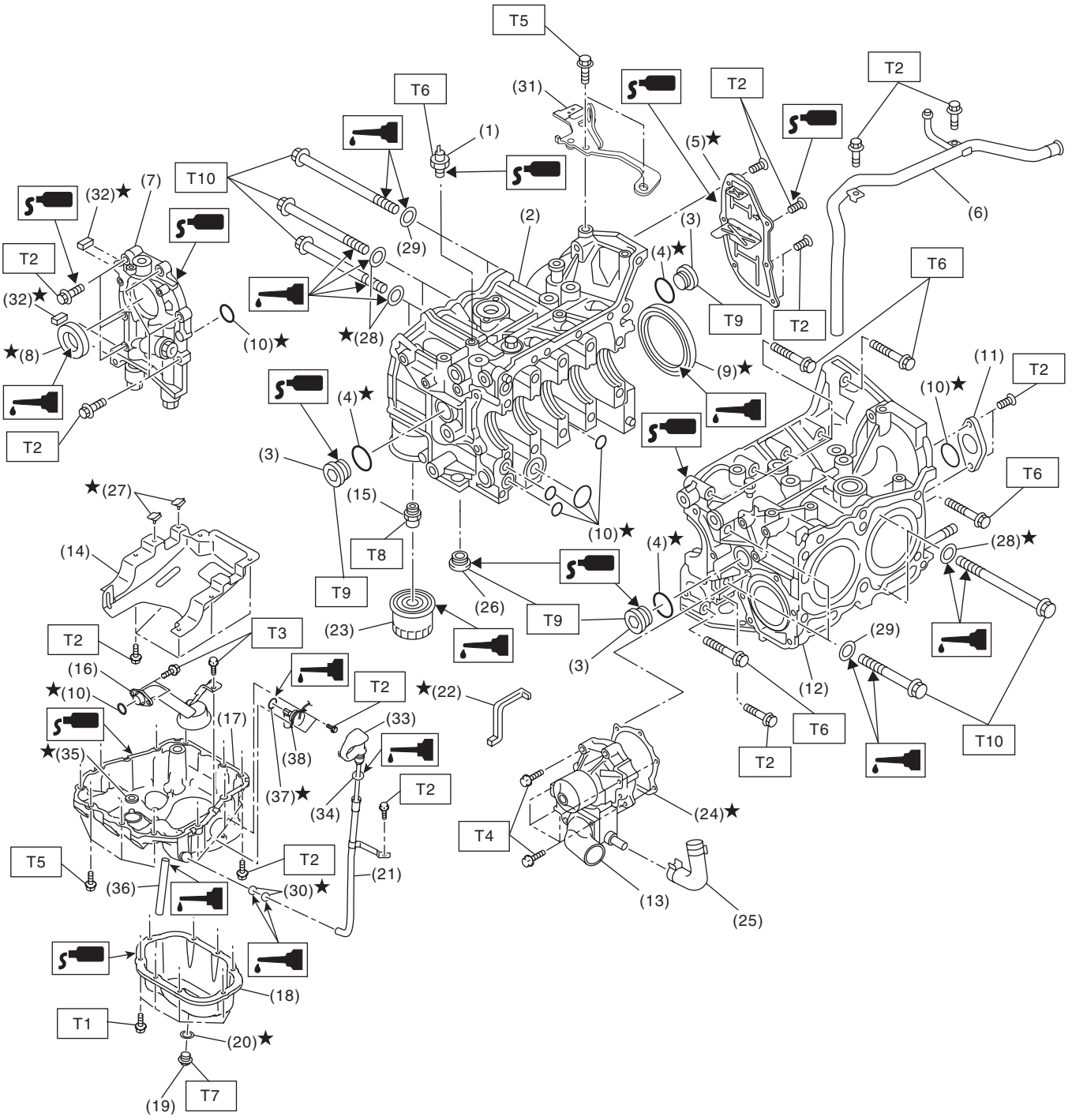

ME-05772

(1) Oil pressure switch
(2) Cylinder block RH
(3) Service hole plug
(4) Gasket
(5) Oil separator cover
(6) Water by-pass pipe
(7) Oil pump
(8) Front oil seal
(9) Rear oil seal
(10) O-ring
(11) Service hole cover
(12) Cylinder block LH
(13) Water pump
(14) Baffle plate
(15) Oil filter connector
(16) Oil strainer
(17) Cylinder block lower
(18) Oil pan
(19) Drain plug
(20) Drain plug gasket
(21) Oil level gauge guide
(22) Water pump sealing
(23) Oil filter
(24) Gasket
(25) Water pump hose
(26) Plug
(27) Seal
(28) Seal washer
(29) Washer
(30) O-ring
(31) Engine rear hanger
(32) Oil pump seal
(33) Oil level gauge
(34) O-ring
(35) O-ring
(36) Oil drain pipe
(37) O-ring
(38) Oil level switch

Tightening torque:N·m (kgf-m, ft-lb)

T1:	***5 (0.5, 3.7)***
T2:	***6.4 (0.7, 4.7)***
T3:	***10 (1.0, 7.4)***
T4:	***First 12 (1.2, 8.9) Second 12 (1.2, 8.9)***
T5:	***16 (1.6, 11.8)***
T6:	***25 (2.5, 18.4)***
T7:	***41.7 (4.3, 30.8)***
T8:	***45 (4.6, 33.2)***
T9:	***70 (7.1, 51.6)***
T10:	***<Ref. to ME(H4SO)-76, INSTALLATION, Cylinder Block.>***

7. CRANKSHAFT AND PISTON

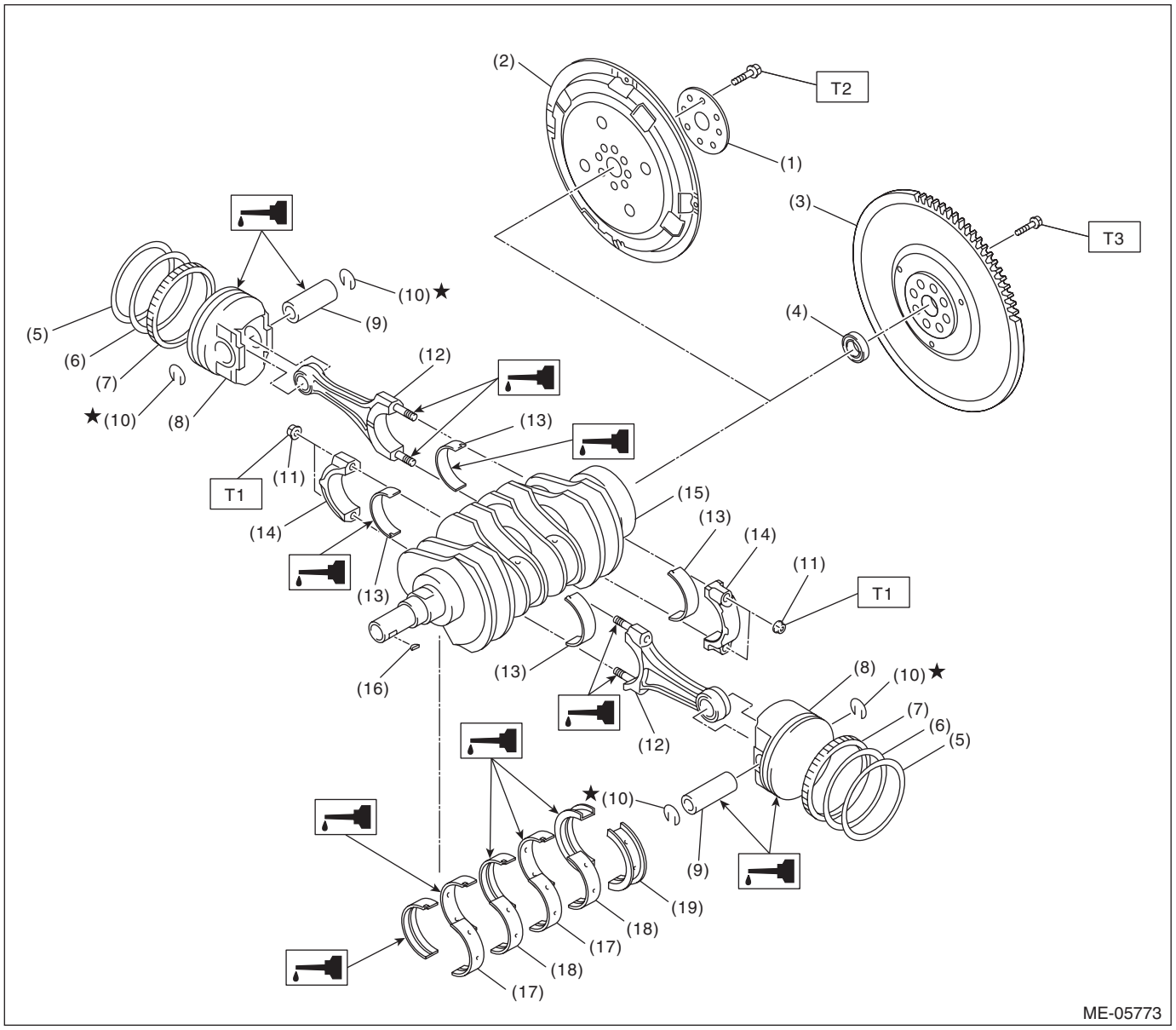

(1) Reinforcement (CVT model)
(2) Drive plate (CVT model)
(3) Flywheel (MT model)
(4) Ball bearing (MT model)
(5) Top ring
(6) Second ring
(7) Oil ring
(8) Piston
(9) Piston pin
(10) Snap ring
(11) Connecting rod nut
(12) Connecting rod
(13) Connecting rod bearing
(14) Connecting rod cap
(15) Crankshaft
(16) Woodruff key
(17) Crankshaft bearing #1, #3
(18) Crankshaft bearing #2, #4
(19) Crankshaft bearing #5

Tightening torque:N·m (kgf-m, ft-lb)
T1: 45 (4.6, 33.2)
T2: <Ref. to CVT-133, INSTALLATION, Drive Plate.>
T3: <Ref. to CL-14, INSTALLATION, Flywheel.>

8. ENGINE MOUNTING

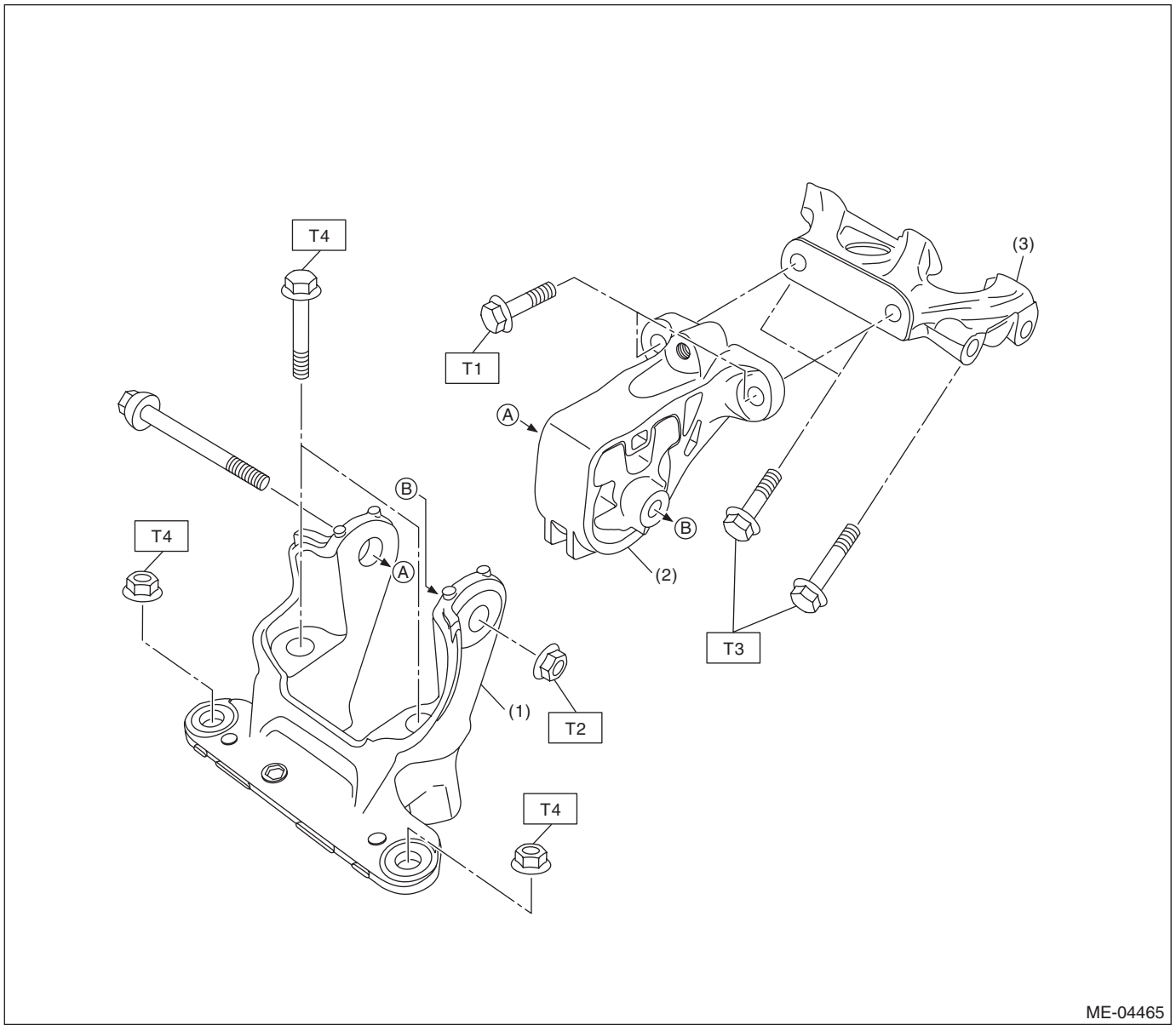

(1) Front mounting bracket
(2) Front cushion rubber
(3) Engine mounting bracket

Tightening torque:N·m (kgf-m, ft-lb)
T1: 25 (2.5, 18.4)
T2: 45 (4.6, 33.2)
T3: 58 (5.9, 42.8)
T4: 60 (6.1, 44.3)

C: CAUTION

• Wear appropriate work clothing, including a cap, protective goggles and protective shoes when performing any work.
• Remove contamination including dirt and corrosion before removal, installation or disassembly.
• Keep the disassembled parts in order and protect them from dust and dirt.
• Before removal, installation or disassembly, be sure to clarify the failure. Avoid unnecessary removal, installation, disassembly and replacement.
• Vehicle components are extremely hot after driving. Be wary of receiving burns from heated parts.
• Be sure to tighten fasteners including bolts and nuts to the specified torque.
• Place shop jacks or rigid racks at the specified points.
• Before disconnecting connectors of sensors or units, be sure to disconnect the ground cable from the battery.
• All parts should be thoroughly cleaned, paying special attention to engine oil passages, pistons and bearings.
• Rotating parts and sliding parts such as piston, bearing and gear should be coated with oil prior to assembly.
• Be careful not to let oil, grease or coolant contact the timing belt, clutch disc and flywheel.
• All removed parts, if to be reused, should be reinstalled in the original positions and directions.
• Bolts, nuts and washers should be replaced with new parts as required.
• Even if necessary inspections have been made in advance, proceed with assembly work while making rechecks.
• Remove or install the engine in an area where chain hoists, lifting devices, etc. are available for ready use.
• Be sure not to damage coated surfaces of body panels with tools, or not to stain seats and windows with coolant or oil. Place a cover over fender, as required, for protection.
• Prior to starting work, prepare the following:
Service tools, clean cloth, containers to catch coolant and oil, wire ropes, chain hoist, transmission jacks, etc.
• Lift up or lower the vehicle when necessary. Make sure to support the correct positions.

D: PREPARATION TOOL

1. SPECIAL TOOL

ILLUSTRATION	TOOL NUMBER	DESCRIPTION	REMARKS
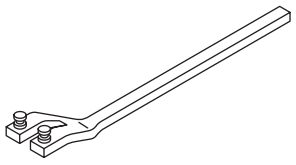 ST18231AA010	18231AA010	CAM SPROCKET WRENCH	Used for removing and installing cam sprocket. (LH side) NOTE: CAM SPROCKET WRENCH (499207100) can also be used.
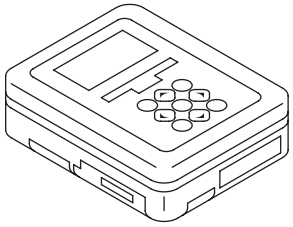 ST1B022XU0	1B022XU0	SUBARU SELECT MONITOR III KIT	Used for various inspections.

ILLUSTRATION	TOOL NUMBER	DESCRIPTION	REMARKS
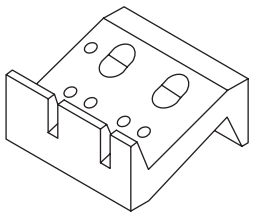 ST-498267800	498267800	CYLINDER HEAD TABLE	• Used for replacing valve guides. • Used for removing and installing valve spring.
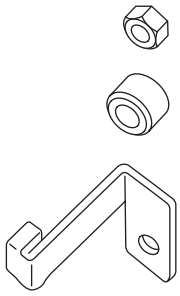 ST-498277200	498277200	STOPPER SET	Used for preventing the torque converter from falling when removing and installing the engine.
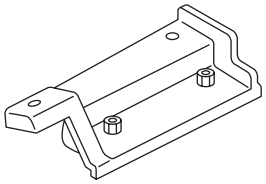 ST-498457000	498457000	ENGINE STAND ADAPTER RH	Used together with ENGINE STAND (499817100).
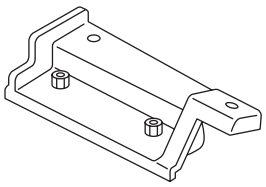 ST-498457100	498457100	ENGINE STAND ADAPTER LH	Used together with ENGINE STAND (499817100).
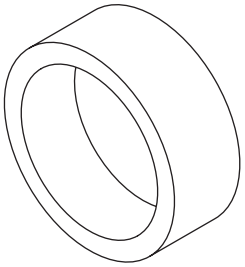 ST-498747300	498747300	PISTON GUIDE	Used for installing piston in cylinder.

ILLUSTRATION	TOOL NUMBER	DESCRIPTION	REMARKS
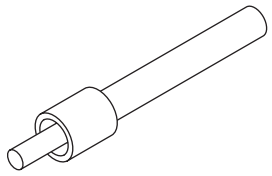 ST-498857100	498857100	VALVE OIL SEAL GUIDE	Used for press-fitting of intake valve guide oil seals and exhaust valve guide oil seals.
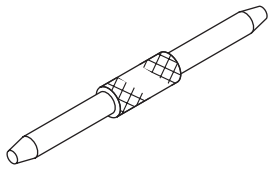 ST-499017100	499017100	PISTON PIN GUIDE	Used for installing piston pin, piston and connecting rod.
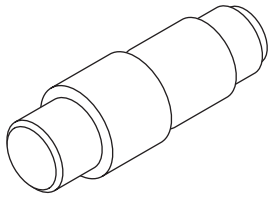 ST-499037100	499037100	CONNECTING ROD BUSHING REMOVER AND INSTALLER	Used for removing and installing connecting rod bushing.
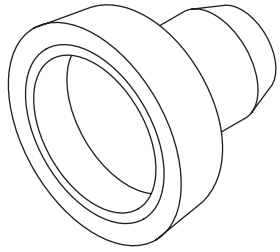 ST-499587200	499587200	CRANKSHAFT OIL SEAL INSTALLER	• Used for installing crankshaft oil seal. • Used together with CRANKSHAFT OIL SEAL GUIDE (499597100).
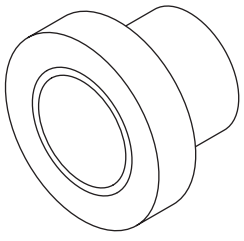 ST-499587500	499587500	OIL SEAL INSTALLER	• Used for installing the camshaft oil seal. • Used together with OIL SEAL GUIDE (499597000).

ILLUSTRATION	TOOL NUMBER	DESCRIPTION	REMARKS
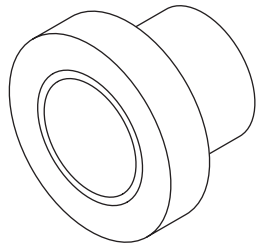 ST-499587700	499587700	CAMSHAFT OIL SEAL INSTALLER	Used for installing cylinder head plug.
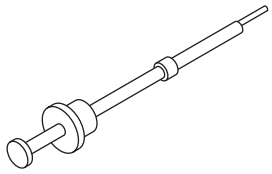 ST-499097700	499097700	PISTON PIN REMOVER ASSY	Used for removing piston pin.
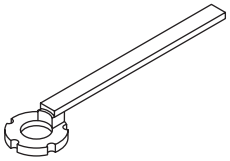 ST-499207400	499207400	CAM SPROCKET WRENCH	Used for removing and installing cam sprocket. (RH side)
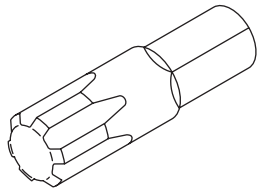 ST-499497000	499497000	TORX® PLUS	Used for removing and installing camshaft cap.
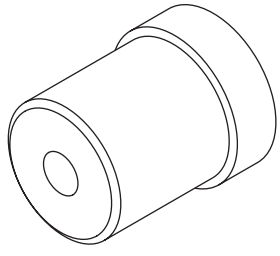 ST-499587100	499587100	OIL SEAL INSTALLER	Used for installing oil pump oil seal.

ILLUSTRATION	TOOL NUMBER	DESCRIPTION	REMARKS
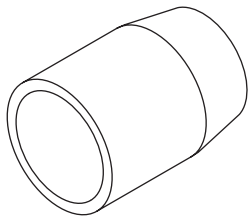 ST-499597000	499597000	OIL SEAL GUIDE	• Used for installing the camshaft oil seal. • Used together with CAMSHAFT OIL SEAL INSTALLER (499587500).
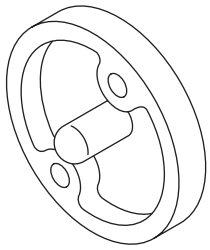 ST-499597100	499597100	CRANKSHAFT OIL SEAL GUIDE	• Used for installing crankshaft oil seal. • Used together with CRANKSHAFT OIL SEAL INSTALLER (499587200).
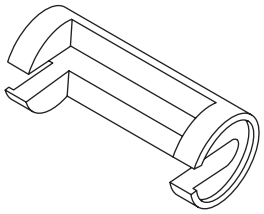 ST-499718000	499718000	VALVE SPRING REMOVER	Used for removing and installing valve spring.
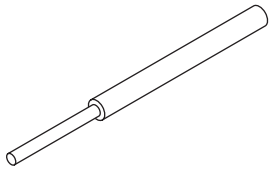 ST-499767200	499767200	VALVE GUIDE REMOVER	Used for removing valve guides.
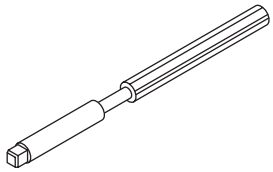 ST-499767400	499767400	VALVE GUIDE REAMER	Used for reaming valve guides.

ILLUSTRATION	TOOL NUMBER	DESCRIPTION	REMARKS
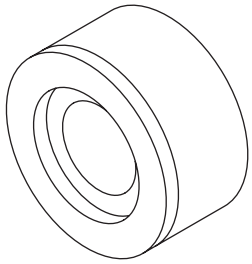 ST-499767700	499767700	VALVE GUIDE ADJUSTER	Used for installing valve guides. (Intake side)
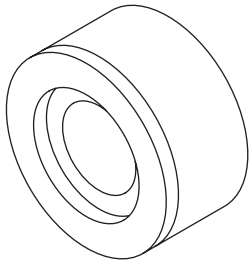 ST-499767800	499767800	VALVE GUIDE ADJUSTER	Used for installing valve guides. (Exhaust side)
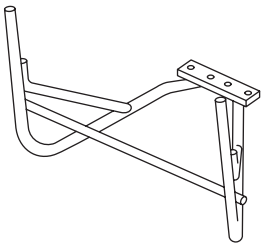 ST-499817100	499817100	ENGINE STAND	• Stand used for engine disassembly and assembly. • Used together with ENGINE STAND ADAPTER RH (498457000) & LH (498457100).
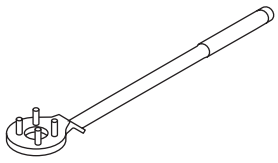 ST-499977100	499977100	CRANK PULLEY WRENCH	Used for removing and installing the crank pulley. (MT model)
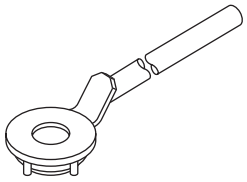 ST-499977400	499977400	CRANK PULLEY WRENCH	Used for removing and installing the crank pulley. (CVT model)

ILLUSTRATION	TOOL NUMBER	DESCRIPTION	REMARKS
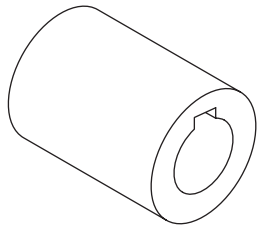 ST-499987500	499987500	CRANKSHAFT SOCKET	Used for rotating crankshaft.
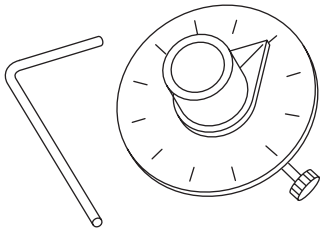 ST18854AA000	18854AA000	ANGLE GAUGE	Used for installing the crank pulley.
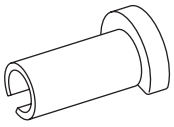 ST42099AE000	42099AE000	QUICK CONNECTOR RELEASE	Used for removing the quick connector.
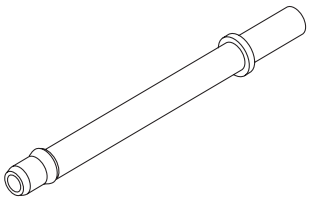 ST18471AA000	18471AA000	FUEL PIPE ADAPTER	Used for inspecting the fuel pressure.
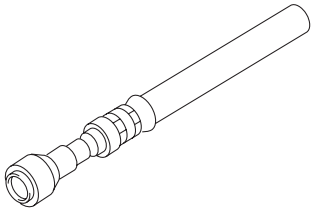 ST42075AG690	42075AG690	FUEL HOSE	Used for inspecting the fuel pressure. NOTE: This is the SUBARU genuine part.

ILLUSTRATION	TOOL NUMBER	DESCRIPTION	REMARKS
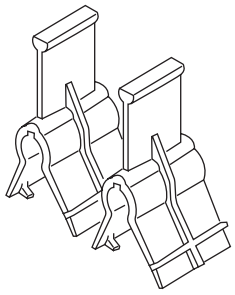 ST18354AA000	18354AA000	VALVE ROCKER HOLDER	Used for installing the valve rocker assembly (intake). (2-piece set)
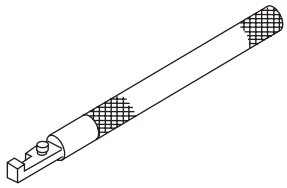 ST18258AA000	18258AA000	SPRING INSTALLER	Used for installing the valve rocker assembly (intake).

2. GENERAL TOOL

TOOL NAME	REMARKS
Compression gauge	Used for measuring compression.
Vacuum gauge	Used for measuring intake manifold vacuum.
Oil pressure gauge	Used for measuring engine oil pressure.
Fuel pressure gauge	Used for measuring fuel pressure.

2. Compression

A: INSPECTION

CAUTION:
After warming-up, engine becomes very hot. Be careful not to burn yourself during measurement.

1) After warming-up the engine, turn the ignition switch to OFF.
2) Make sure that the battery is fully charged.
3) Remove the fuse of fuel pump from main fuse box.

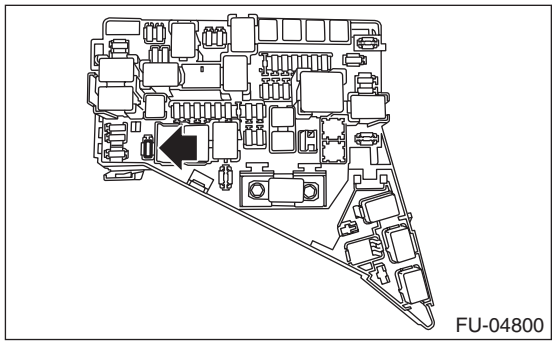

4) Start the engine and run it until it stalls.
5) After the engine stalls, crank it for five more seconds.
6) Turn the ignition switch to OFF.
7) Remove all spark plugs. <Ref. to IG(H4SO)-3, REMOVAL, Spark Plug.>
8) Fully open the throttle valve.
9) Check the starter motor for satisfactory performance and operation.
10) Install the compression gauge to the spark plug hole.

NOTE:
When using a screw-in type compression gauge, the screw should be less than 18 mm (0.71 in) long.

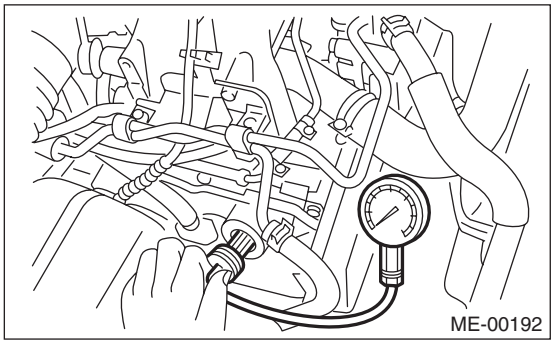

11) Crank the engine by starter motor and read the value when the needle of the compression gauge becomes stable.

NOTE:
• Perform at least two measurements per cylinder, and make sure that the values are correct.
• If the compression pressure is out of standard, check or adjust the pistons, valves and cylinders.

Compression (fully open throttle):
Standard
1,020 — 1,275 kPa (10.4 — 13.0 kgf/cm^2, 148 — 185 psi)
Difference between cylinders
49 kPa (0.5 kgf/cm^2, 7 psi) or less

12) After inspection, install the related parts in the reverse order of removal.

3. Idle Speed

A: INSPECTION

1) Before checking the idle speed, check the following item:
   (1) Check the air cleaner element is free from clogging, ignition timing is correct, spark plugs are in good condition, and hoses are connected properly.
   (2) Check the malfunction indicator light does not illuminate.
2) Warm up the engine.
3) Read the engine idle speed using Subaru Select Monitor. <Ref. to EN(H4SO)(diag)-33, READ CURRENT DATA FOR ENGINE (NORMAL MODE), OPERATION, Subaru Select Monitor.>

NOTE:
• Idle speed cannot be adjusted manually, because the idle speed is automatically adjusted.
• If idle speed is out of standard, refer to the General Diagnosis Table under “Engine Control System”. <Ref. to EN(H4SO)(diag)-2, Basic Diagnostic Procedure.>
   (1) Check the idle speed when no-loaded. (Headlight, heater fan, rear defroster, radiator fan, A/C and etc. are OFF)

Idle speed (No load, and for CVT model, select lever in “P” or “N” range, for MT model, gear shift lever in neutral position.):
Standard
675±100 rpm (CVT model)
650±100 rpm (MT model)
   (2) Check the idle speed when loaded. (Turn the A/C switch to “ON” and operate the compressor for at least one minute before measurement.)

Idle speed (A/C on, and for CVT model, select lever in “P” or “N” range, for MT model, gear shift lever in neutral position.):
Standard
700 — 850±100 rpm

4. Ignition Timing

A: INSPECTION

CAUTION:
After warming-up, engine becomes very hot. Be careful not to burn yourself at measurement.

1) Before checking the ignition timing, check the following item:
   (1) Check the air cleaner element is free from clogging, spark plugs are in good condition, and hoses are connected properly.
   (2) Check the malfunction indicator light does not illuminate.
2) Warm up the engine.
3) Read the ignition timing using Subaru Select Monitor. <Ref. to EN(H4SO)(diag)-33, READ CURRENT DATA FOR ENGINE (NORMAL MODE), OPERATION, Subaru Select Monitor.>

NOTE:
If ignition timing is out of standard, check the ignition control system. Refer to “Engine Control System”. <Ref. to EN(H4SO)(diag)-2, Basic Diagnostic Procedure.>

Ignition timing [BTDC/rpm]:
Standard
15°±10°/675 (CVT model)
10°±10°/650 (MT model)

5. Intake Manifold Vacuum

A: INSPECTION

1) Warm up the engine.
2) Disconnect the brake booster vacuum hose from the intake manifold, and attach the vacuum gauge.

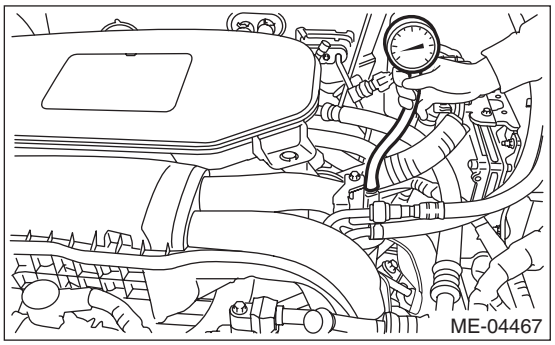

3) Keep the engine at idle speed and read the vacuum gauge indication.

NOTE:
Condition of engine inside can be diagnosed by observing the behavior of the vacuum gauge needle as described in table below.

Intake manifold vacuum (at idling, A/C OFF):
Standard
–60.0 kPa (–450 mmHg, –17.72 inHg) or more

4) After inspection, install the related parts in the reverse order of removal.

Diagnosis of engine condition by inspection of intake manifold vacuum	
Vacuum gauge needle behavior	Possible engine condition
1. Needle is steady but lower than standard value. This tendency becomes more evident as engine temperature rises.	Leakage around intake manifold gasket, disconnection or damage of vacuum hose
2. Needle intermittently drops to position lower than standard value.	Leakage around cylinder
3. Needle drops suddenly and intermittently from standard value.	Sticky valve
4. When engine speed is gradually increased, needle begins to vibrate rapidly at certain speed, and then vibration increases as engine speed increases.	Weak or broken valve springs
5. Needle vibrates above and below standard value in narrow range.	Defective ignition system

6. Engine Oil Pressure

A: INSPECTION

1) Disconnect the ground cable from battery.

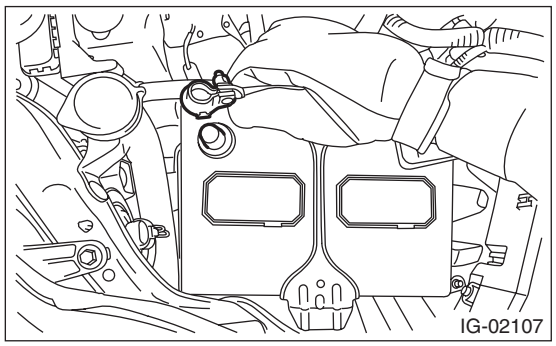

2) Remove the oil pressure switch. <Ref. to LU(H4SO)-25, REMOVAL, Oil Pressure Switch.>
3) Install the oil pressure gauge to cylinder block.

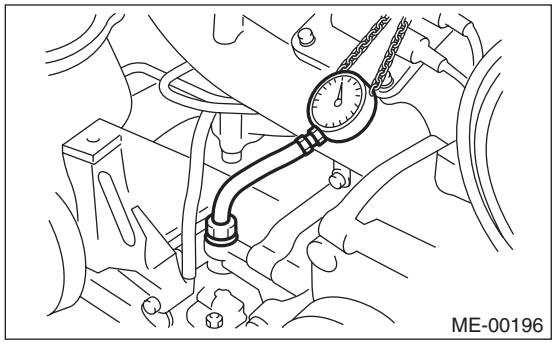

4) Connect the battery ground terminal.

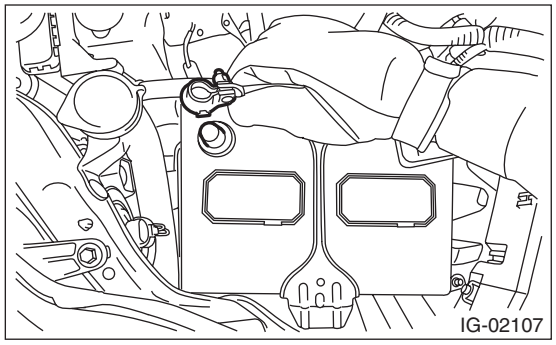

5) Start the engine, and check the oil pressure.

NOTE:
• Standard value is based on an engine oil temperature of 80°C (176°F).
• If the oil pressure is out of specification, check oil pump, oil filter and lubrication line. <Ref. to LU(H4SO)-45, INSPECTION, Engine Lubrication System Trouble in General.>
• If the oil pressure warning light is ON and oil pressure is within specification, check the oil pressure switch. <Ref. to LU(H4SO)-45, INSPECTION, Engine Lubrication System Trouble in General.>

Engine oil pressure:
Standard
98 kPa (1.0 kgf/cm^2, 14 psi) or more (at 600 rpm)
294 kPa (3.0 kgf/cm^2, 43 psi) or more (at 5,000 rpm)

6) After inspection, install the related parts in the reverse order of removal.

7. Fuel Pressure

A: INSPECTION

CAUTION:
• Before removing the fuel pressure gauge, release the fuel pressure.
• Be careful not to spill fuel.
• Catch the fuel from hoses using a container or cloth.

1) Release the fuel pressure. <Ref. to FU(H4SO)-53, RELEASING OF FUEL PRESSURE, PROCEDURE, Fuel.>
2) Open the fuel filler lid and remove the fuel filler cap.
3) Disconnect the fuel delivery hose from the fuel delivery pipe, and connect the fuel pressure gauge.

CAUTION:
• Be careful not to spill fuel.
• Catch the fuel from hoses using a container or cloth.

(1) Attach ST to the fuel delivery pipe and push ST1 in the direction of arrow mark to disconnect the quick connector of the fuel delivery hose.

ST 42099AE000 QUICK CONNECTOR RELEASE

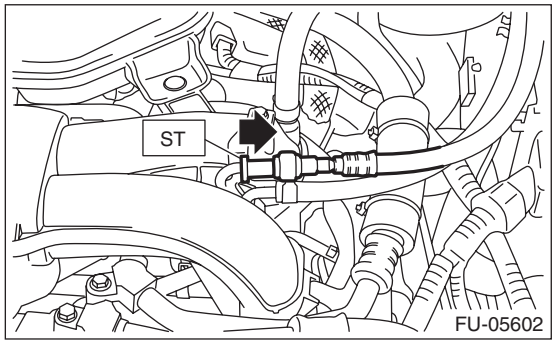

(2) Connect the fuel pressure gauge with ST2 and ST3.

NOTE:
ST2 is a SUBARU genuine part.
ST2 42075AG690 FUEL HOSE
ST3 18471AA000 FUEL PIPE ADAPTER

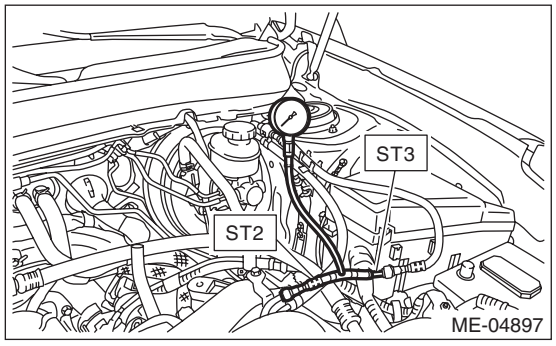

4) Start the engine.
5) Check the fuel pressure after warming up the engine.

NOTE:
• The fuel pressure gauge registers 10 to 20 kPa (0.1 to 0.2 kgf/cm^2, 1 to 3 psi) higher than standard values during high-altitude operations.
• Check or replace the fuel pump and fuel delivery line if the fuel pressure is out of the standard.

Fuel pressure:
Standard
340 — 400 kPa (3.5 — 4.1 kgf/cm^2, 49 — 58 psi)

6) After inspection, install the related parts in the reverse order of removal.

8. Valve Clearance

A: INSPECTION

CAUTION:
If engine oil is spilt onto the exhaust pipe, wipe it off with cloth to avoid emission of smoke or causing a fire.

NOTE:
Inspection of valve clearance should be performed while engine is cold.
1) Lift up the vehicle.
2) Remove the under cover. <Ref. to EI-35, REMOVAL, Front Under Cover.>
3) Lower the vehicle.
4) Disconnect the ground cable from battery.

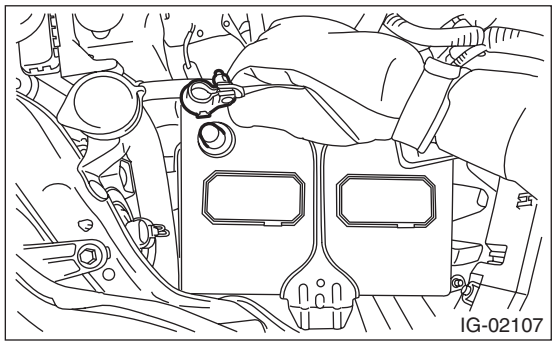
IG-02107

5) Remove the timing belt cover LH.

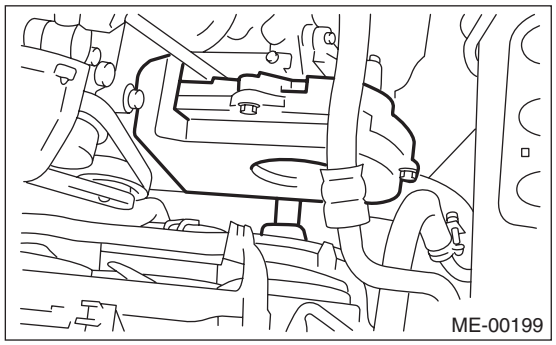
ME-00199

6) Remove the fuel injector. <Ref. to FU(H4SO)-37, REMOVAL, Fuel Injector.>
7) When inspecting #1 and #3 cylinders
   (1) Disconnect the ignition coil from spark plug on RH side. <Ref. to IG(H4SO)-3, RH SIDE, REMOVAL, Spark Plug.>
   (2) Place a suitable container under the vehicle.
   (3) Disconnect the PCV hose from the rocker cover RH.
   (4) Remove the bolts, then remove the rocker cover RH.
8) When inspecting #2 and #4 cylinders
   (1) Disconnect the ignition coil from spark plug on LH side. <Ref. to IG(H4SO)-3, LH SIDE, REMOVAL, Spark Plug.>
   (2) Place a suitable container under the vehicle.
   (3) Disconnect the PCV hose from the rocker cover LH.
   (4) Remove the bolts, then remove the rocker cover LH.
9) Set #1 cylinder piston to top dead center of compression stroke by rotating the crank pulley clockwise using the socket wrench.

NOTE:
When the arrow mark (A) on cam sprocket LH is at the top position, the #1 cylinder piston is at top dead center of the compression stroke.

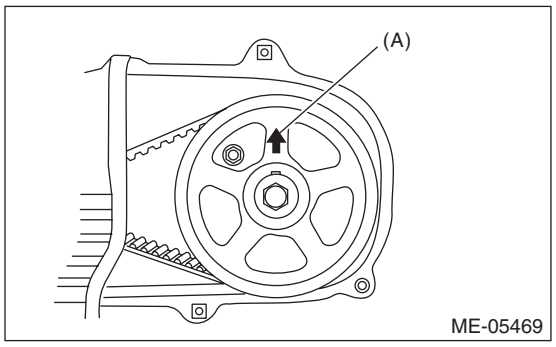

ME-05469

10) Measure #1 cylinder valve clearance by using thickness gauge (A).

NOTE:
• Insert the thickness gauge (A) in as horizontally as possible with respect to the valve stem end face.
• Lift up the vehicle, and then measure the exhaust valve clearances.
• If the measured value is not within the inspection value, take notes of the value in order to adjust the valve clearance later on.

Valve clearance (inspection value):
Intake
0.20±0.04 mm (0.0079±0.0016 in)
Exhaust
0.25±0.04 mm (0.0098±0.0016 in)

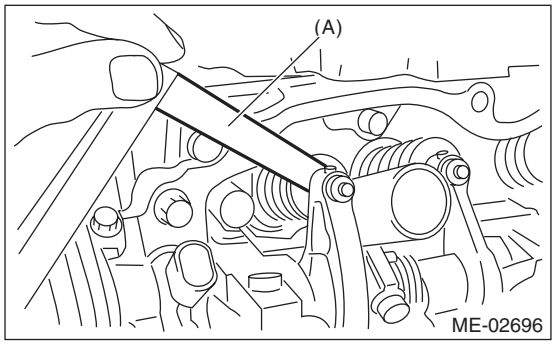

ME-02696

11) Measure the valve clearance in #3, #2 and #4 cylinder in the same measurement procedure as #1 cylinder in this order.

NOTE:
• Be sure to set the cylinder pistons to their respective top dead centers on compression stroke before measuring valve clearances.
• By rotating the crank pulley clockwise every 180° from the state that #1 cylinder piston is on the top dead center of compression stroke, #3, #2 and #4 cylinder pistons come to the top dead center of compression stroke in this order.

12) If necessary, adjust the valve clearance. <Ref. to ME(H4SO)-30, ADJUSTMENT, Valve Clearance.>
13) After inspection, install the related parts in the reverse order of removal.

NOTE:
Refer to “Camshaft” when installing the rocker cover. <Ref. to ME(H4SO)-59, INSTALLATION, Camshaft.>

B: ADJUSTMENT

CAUTION:
If engine oil is spilt onto the exhaust pipe, wipe it off with cloth to avoid emission of smoke or causing a fire.

NOTE:
Adjustment of valve clearance should be performed while engine is cold.
1) Set #1 cylinder piston to top dead center of compression stroke by rotating the crank pulley clockwise using the socket wrench.

NOTE:
When the arrow mark (A) on cam sprocket LH is at the top position, the #1 cylinder piston is at top dead center of the compression stroke.

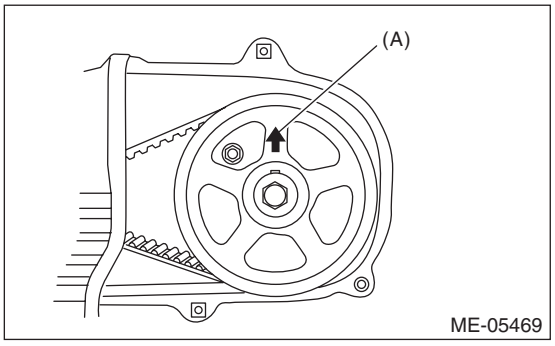

2) Adjust the #1 cylinder valve clearance.
(1) Loosen the valve rocker nut and screw.
(2) Set a suitable thickness gauge.
(3) While noting the valve clearance, tighten the valve rocker adjusting screw.
(4) When the specified valve clearance is obtained, tighten the valve rocker nut.

NOTE:
• Insert a thickness gauge in a direction as horizontal as possible with respect to the valve stem end face.
• Lift up the vehicle and adjust the exhaust valve clearances.

Valve clearance (adjustment value):
Intake
0.20±0.04 mm (0.0079±0.0016 in)
Exhaust
0.25±0.04 mm (0.0098±0.0016 in)

Tightening torque:
9.75 N·m (1.0 kgf-m, 7.2 ft-lb)

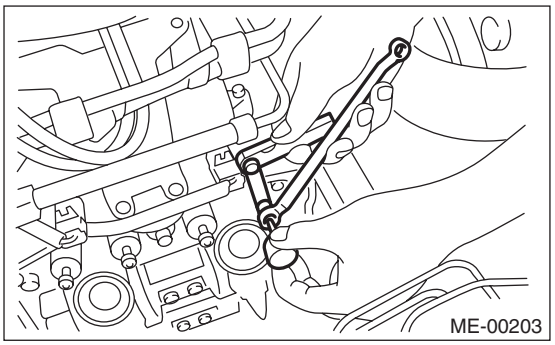

3) Adjust the valve clearance in #3, #2 and #4 cylinder in the same adjustment procedure as #1 cylinder in this order.

NOTE:
• Be sure to set the cylinder pistons to their respective top dead centers on compression stroke before adjusting valve clearances.
• By rotating the crank pulley clockwise every 180° from the state that #1 cylinder piston is on the top dead center of compression stroke, #3, #2 and #4 cylinder pistons come to the top dead center of compression stroke in this order.

4) Ensure the valve clearances of each cylinder are within specifications. If necessary, readjust the valve clearances.
5) After adjustment, install the related parts in the reverse order of removal.

NOTE:
Refer to “Camshaft” when installing the rocker cover. <Ref. to ME(H4SO)-59, INSTALLATION, Camshaft.>

9. Engine Assembly

A: REMOVAL

1) Change the front hood damper mounting position from (A) to (B), and completely open the front hood.

Tightening torque:
20 N·m (2.0 kgf-m, 14.8 ft-lb)

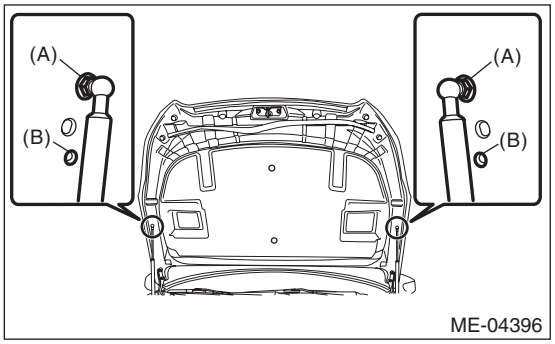

2) Remove the V-belt covers.
3) Collect the refrigerant from A/C system. <Ref. to AC-24, Refrigerant Recovery Procedure.>
4) Release the fuel pressure. <Ref. to FU(H4SO)-53, RELEASING OF FUEL PRESSURE, PROCEDURE, Fuel.>
5) Disconnect the ground cable from battery.

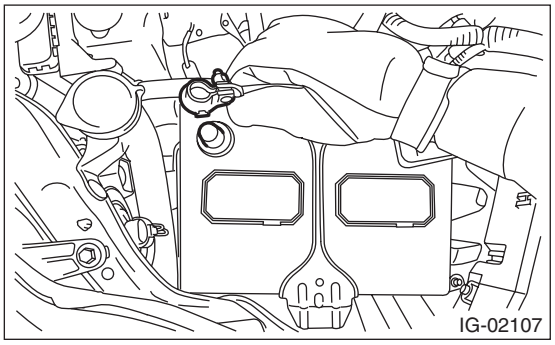

6) Open the fuel filler lid and remove the fuel filler cap.
7) Remove the air intake duct. <Ref. to IN(H4SO)-9, REMOVAL, Air Intake Duct.>
8) Remove the air intake boot assembly. <Ref. to IN(H4SO)-8, REMOVAL, Air Intake Boot.>
9) Remove the radiator. <Ref. to CO(H4SO)-20, REMOVAL, Radiator.>
10) Remove the front exhaust pipe. <Ref. to EX(H4SO)-5, REMOVAL, Front Exhaust Pipe.>
11) Lower the vehicle.
12) Remove the bolt, and disconnect the bulkhead harness connector from the engine harness connector and rear engine hanger.

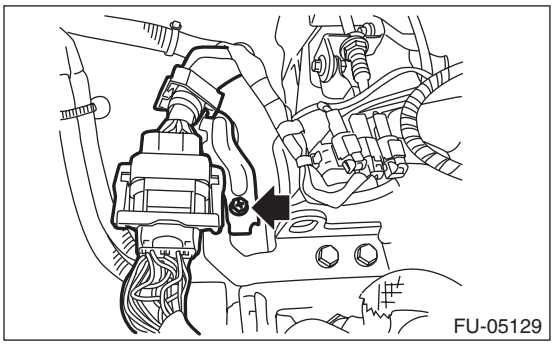

13) Slide the engine harness connector in the direction of the arrow and remove it from the rear engine hanger.

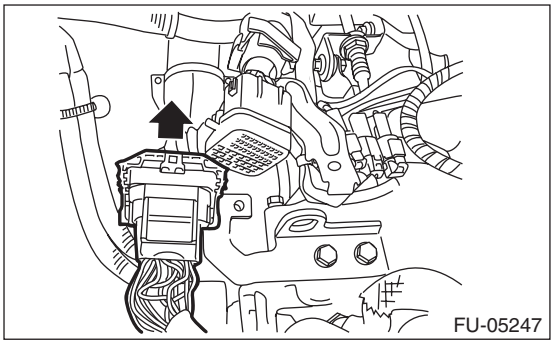

14) Disconnect connector (A) and terminal (B) from the generator, and remove the generator cord from clip (C).
15) Disconnect connector (D) from the A/C compressor.

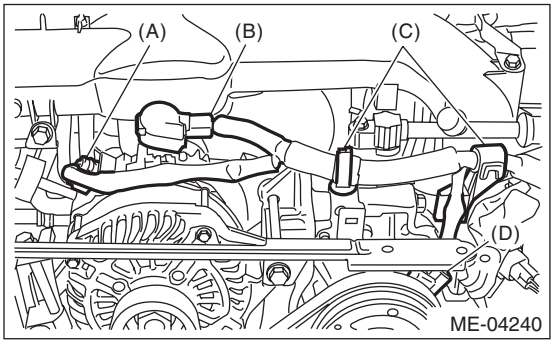

16) Remove the clip which secure the generator cord to the intake manifold protector LH.

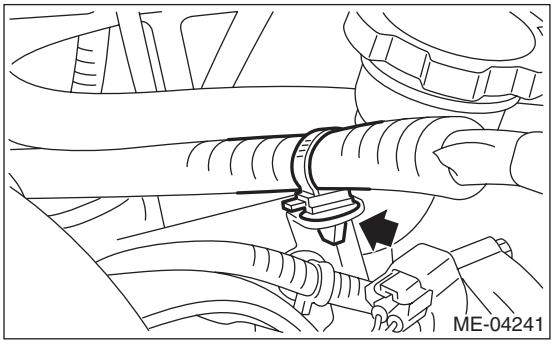

17) Disconnect the following hoses.
(1) A/C pressure hose <Ref. to AC-76, REMOVAL, Hose and Pipe.>
(2) Brake booster vacuum hose

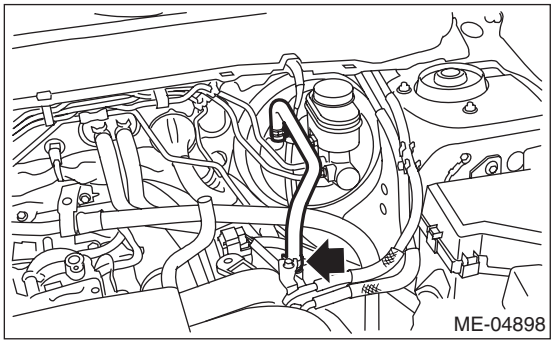

(3) Heater inlet hose and heater outlet hose

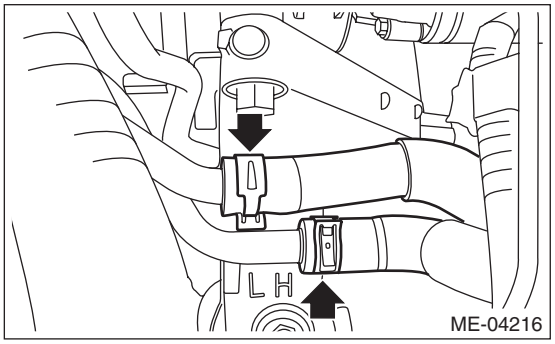

18) Remove the power steering pump.
(1) Remove the V-belts. <Ref. to ME(H4SO)-43, REMOVAL, V-belt.>
(2) Disconnect the connector (A) from power steering pump, and remove the power steering pump together with the power steering pump bracket from engine and stopper rod.

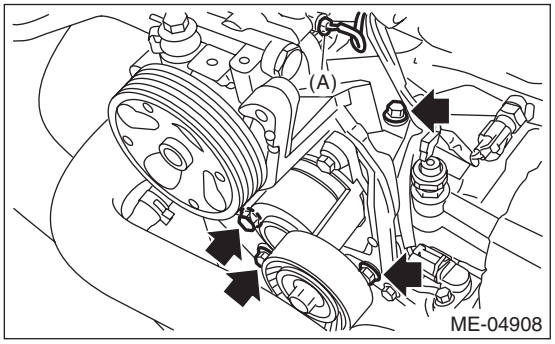

(3) Mount the power steering pump together with the power steering pump bracket on RH side wheel apron.

19) Lift up the vehicle.

20) Disconnect the ground cable on the engine side.

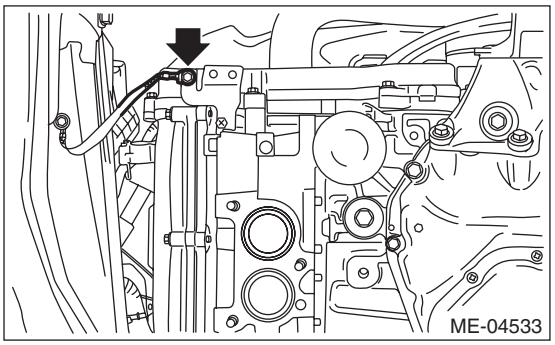

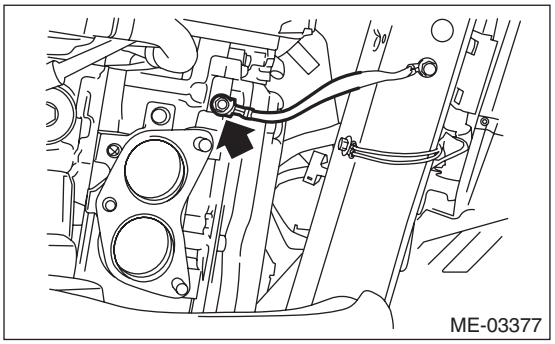

21) Lower the vehicle.
22) Separate the torque converter clutch from the drive plate. (CVT model)
(1) Remove the throttle body. <Ref. to FU(H4SO)-15, REMOVAL, Throttle Body.>
(2) Remove the manifold absolute pressure sensor. <Ref. to FU(H4SO)-33, REMOVAL, Manifold Absolute Pressure Sensor.>
(3) Remove the service hole plug.
(4) Insert the wrench into the crank pulley bolt, and rotate the crank pulley to remove the four bolts which hold torque converter clutch to the drive plate.

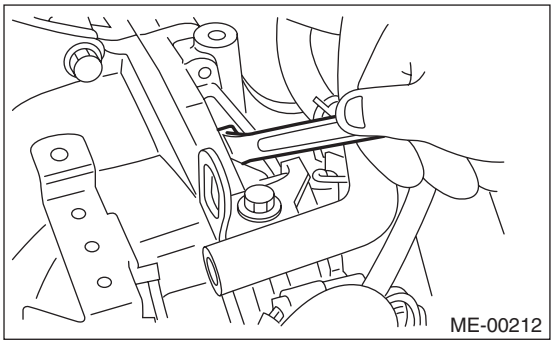

23) Disconnect the fuel delivery hose (A) and evaporation hose (B).

CAUTION:
- **Be careful not to spill fuel.**
- **Catch the fuel from hoses using a container or cloth.**

(1) Attach ST to the fuel delivery pipe and push ST in the direction of arrow mark to disconnect the quick connector of the fuel delivery hose (A).

ST 42099AE000 QUICK CONNECTOR RELEASE

(2) Remove the clip and disconnect the evaporation hose (B) from the evaporation pipe.

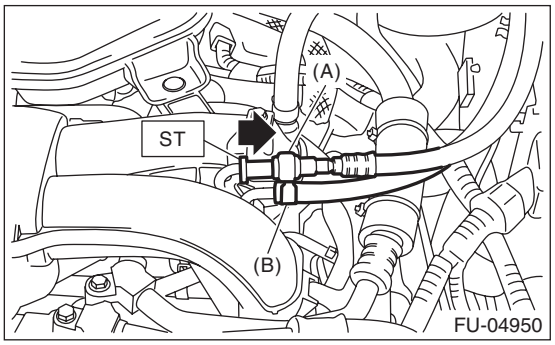

24) Support the engine with a lifting device and wire ropes.

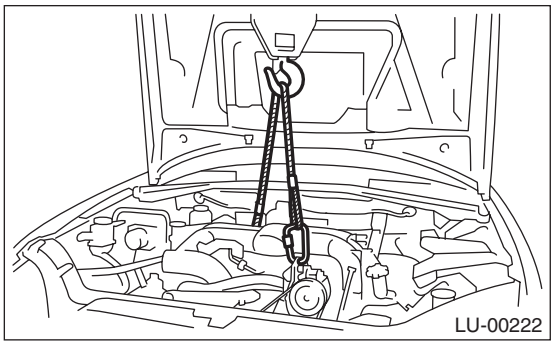

25) Remove the stopper rod.

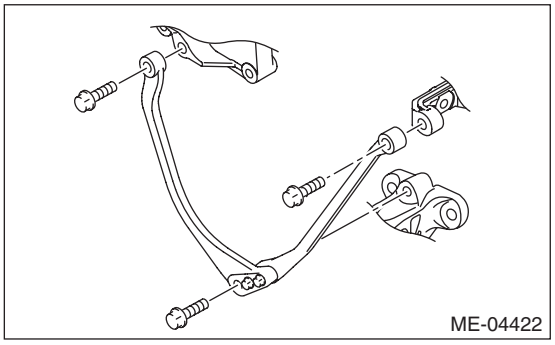

26) Remove the bolt and nut which secure engine mounting to the cradle.

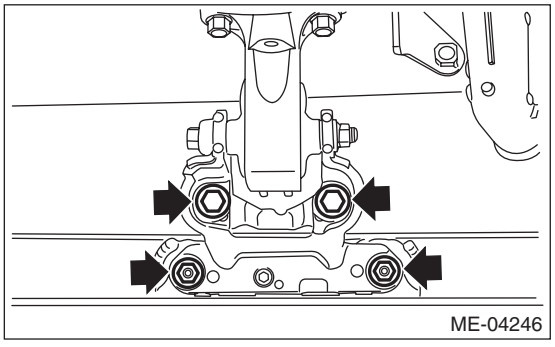

27) Lift up the vehicle.

CAUTION:
When lifting up the vehicle, raise up wire ropes at the same time.

28) Remove the bolts which secure the engine mounting onto the engine, and remove the engine mounting.

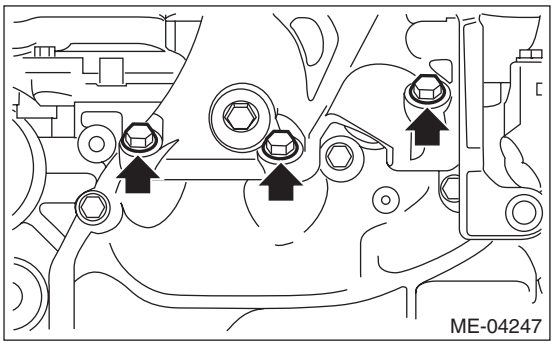

29) Remove the bolts and nuts which hold the lower side of transmission to the engine.

- CVT model

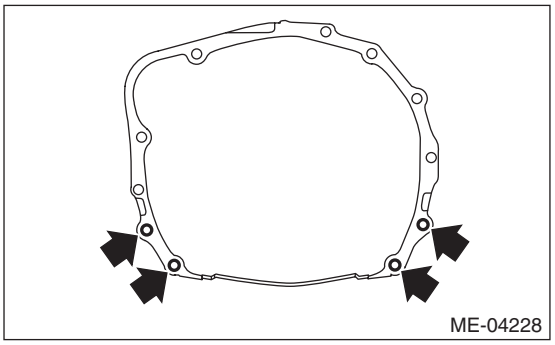

- MT model

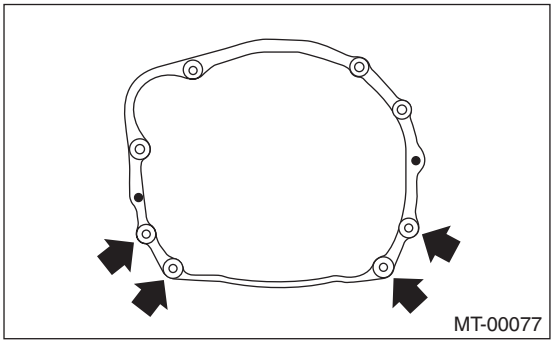

30) Lower the vehicle.

CAUTION:
When lifting down the vehicle, lower wire ropes at the same time.

31) Support the transmission with a garage jack.

NOTE:
Fine adjustment of the transmission height can be performed with this operation.

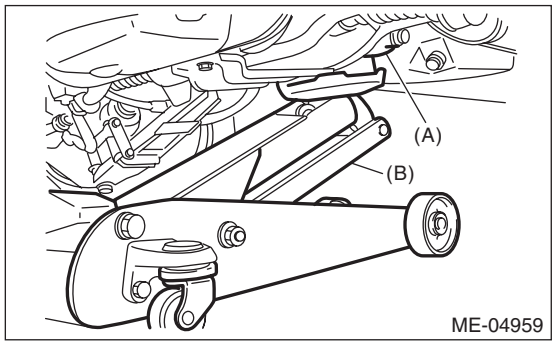

(A) Transmission
(B) Garage jack

32) Separation of engine and transmission

CAUTION:
Before removing the engine away from transmission, check to be sure no work has been overlooked.

(1) Remove the starter. <Ref. to SC(H4SO)-9, REMOVAL, Starter.>
(2) Attach the ST to the torque converter clutch case. (CVT model)

ST 498277200 STOPPER SET

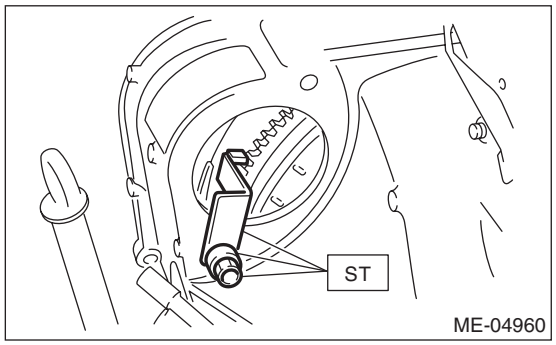

(3) Remove the bolts which hold the upper side of the transmission to the engine.

- CVT model

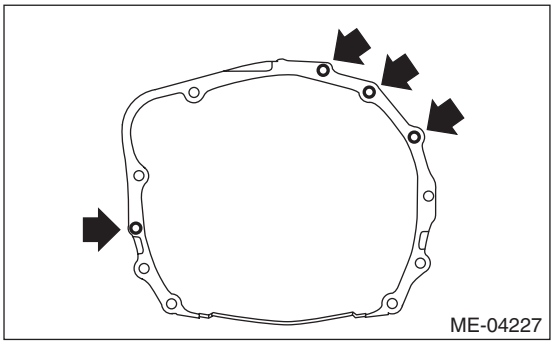

- MT model

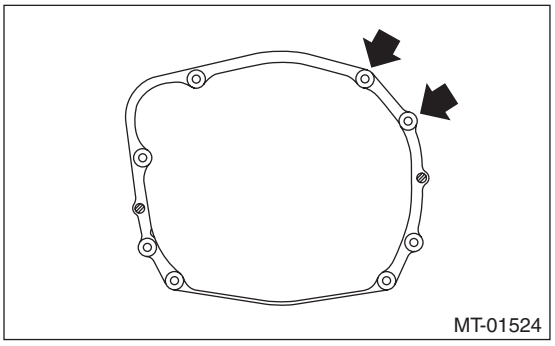

33) Remove the engine from the vehicle.

NOTE:
Be careful not to damage adjacent parts or body panels with crank pulley, oil level gauge, etc.

(1) Slightly raise the engine.
(2) Adjust the height of the transmission with garage jack.
(3) Move the engine horizontally until main shaft is withdrawn from clutch cover. (MT model)
(4) Slowly move the engine away from engine compartment.

B: INSTALLATION

1) Apply a small amount of grease to splines of main shaft. (MT model)

Grease:
NICHIMOLY N-130 or equivalent

2) Position the engine in engine compartment and align it with transmission.

NOTE:
Be careful not to damage adjacent parts or body panels with crank pulley, oil level gauge, etc.

3) Tighten the bolts which hold upper side of transmission to engine.

Tightening torque:
50 N·m (5.1 kgf-m, 36.9 ft-lb)

- CVT model

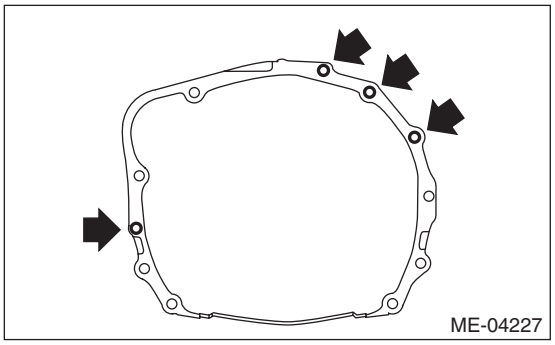

- MT model

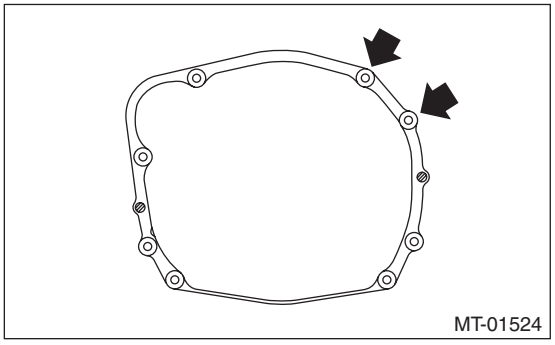

4) Remove the garage jack.

5) Remove the ST from torque converter clutch case. (CVT model)

NOTE:
Be careful not to drop the ST into the torque converter clutch case when removing the ST.

ST 498277200 STOPPER SET

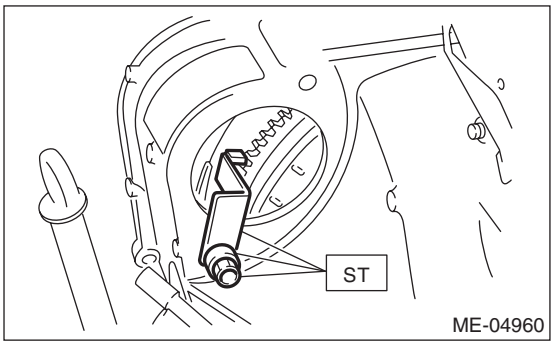

6) Install the starter. <Ref. to SC(H4SO)-10, INSTALLATION, Starter.>

7) Lift up the vehicle.

CAUTION:
When lifting up the vehicle, raise up wire ropes at the same time.

8) Attach the bolts and nuts which hold lower side of the transmission to engine.

Tightening torque:
50 N·m (5.1 kgf-m, 36.9 ft-lb)

- CVT model

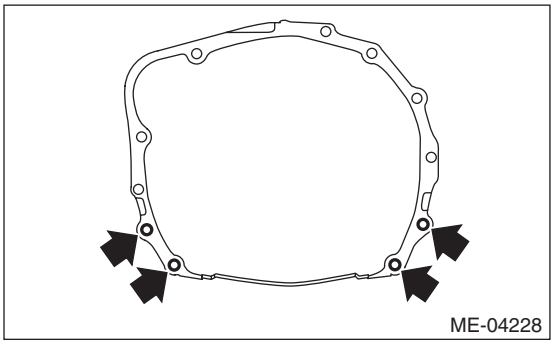

- MT model

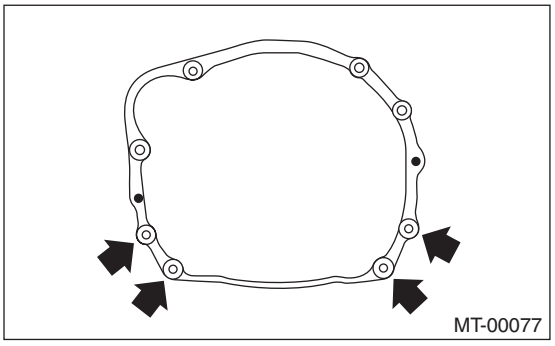

9) Set the engine mounting, and tighten the bolts which hold engine mounting to the engine.

Tightening torque:
58 N·m (5.9 kgf-m, 42.8 ft-lb)

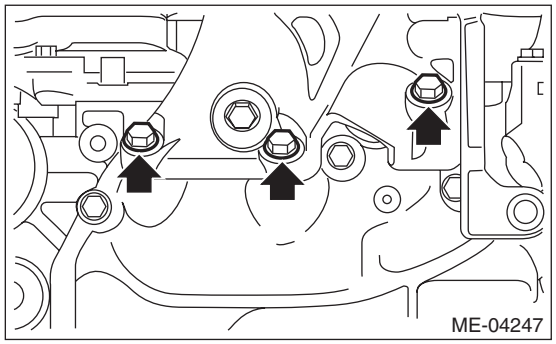

10) Lower the vehicle.

CAUTION:
When lifting down the vehicle, lower wire ropes at the same time.

11) Attach the bolts and nuts which secure engine mounting to the cradle.

Tightening torque:
60 N·m (6.1 kgf-m, 44.3 ft-lb)

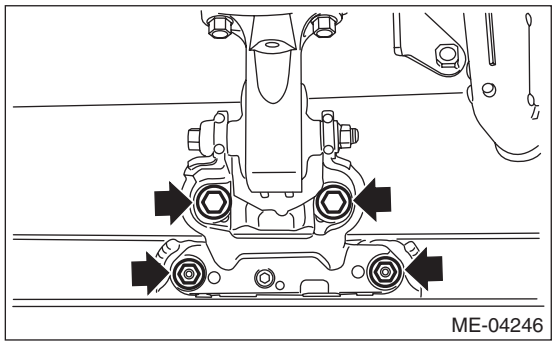

12) Install the stopper rod.

Tightening torque:
36 N·m (3.7 kgf-m, 26.6 ft-lb)

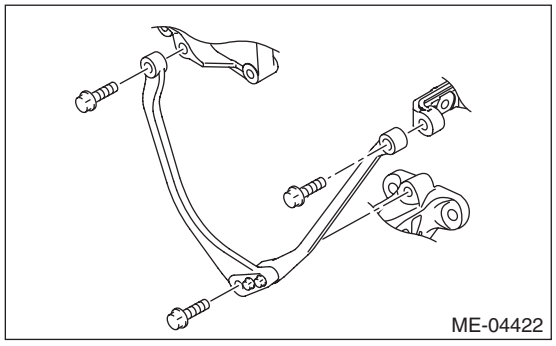

13) Remove the lifting device and wire ropes.

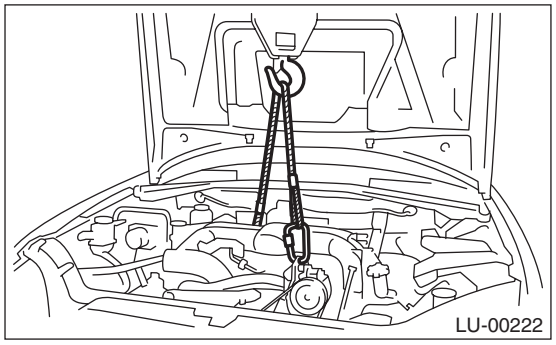

14) Install the torque converter clutch to drive plate. (CVT model)
(1) Insert the wrench into the crank pulley bolt, and rotate the crank pulley to attach the four bolts which hold torque converter clutch to the drive plate.

NOTE:
Be careful not to drop bolts into the torque converter clutch case.

Tightening torque:
25 N·m (2.5 kgf-m, 18.4 ft-lb)

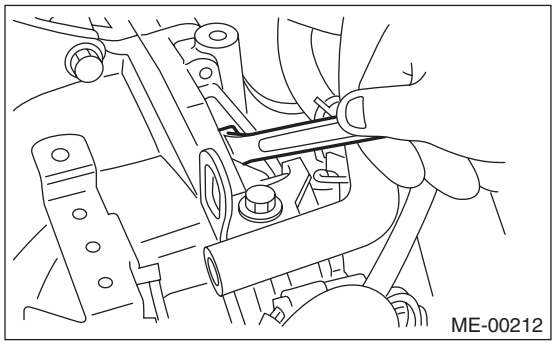

(2) Fit the plug to service hole.
(3) Install the throttle body. <Ref. to FU(H4SO)-15, INSTALLATION, Throttle Body.>
(4) Install the manifold absolute pressure sensor. <Ref. to FU(H4SO)-34, INSTALLATION, Manifold Absolute Pressure Sensor.>

15) Lift up the vehicle.

16) Connect the ground cable.

Tightening torque:
7.5 N·m (0.8 kgf-m, 5.5 ft-lb)

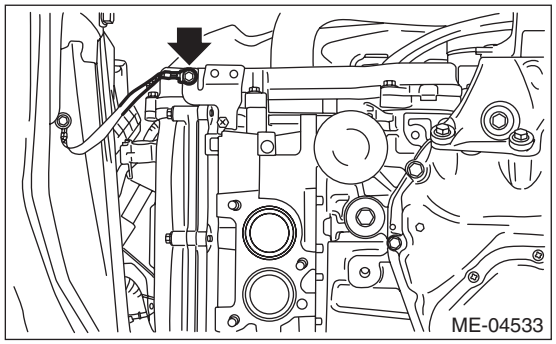
ME-04533

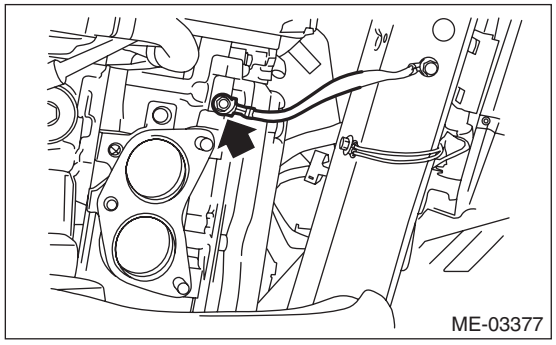
ME-03377

17) Lower the vehicle.
18) Install the power steering pump.
(1) Install the power steering pump together with the power steering pump bracket to engine and stopper rod, and connect the connector (A) to the power steering pump.

Tightening torque:
Refer to "COMPONENT" of "STARTING/ CHARGING SYSTEMS" for the tightening torque. <Ref. to SC(H4SO)-7, GENERATOR BRACKET, COMPONENT, General Description.>

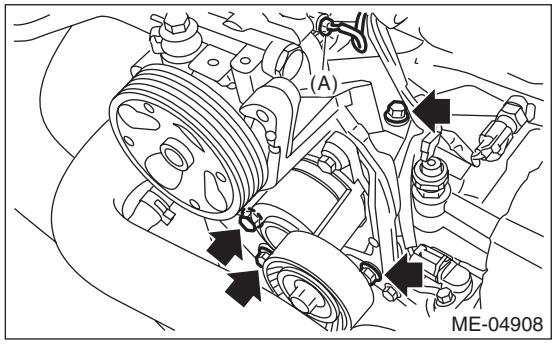

ME-04908

(2) Install the V-belts. <Ref. to ME(H4SO)-43, INSTALLATION, V-belt.>
19) Connect the following hoses.
(1) Fuel delivery hose and evaporation hose
(2) Heater inlet hose and heater outlet hose
(3) Brake booster vacuum hose
(4) A/C pressure hose <Ref. to AC-76, INSTALLATION, Hose and Pipe.>

20) Install the clip which secure the generator cord to the intake manifold protector LH.

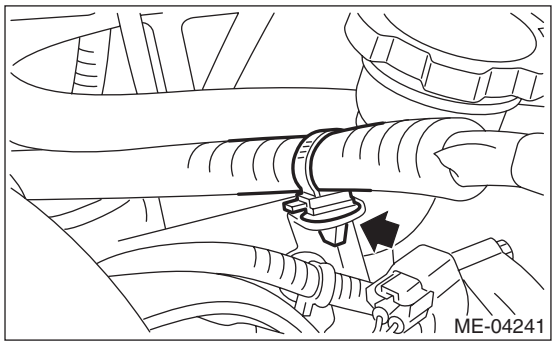
ME-04241

21) Connect connector (D) to the A/C compressor.
22) Install the generator cord to clip (C), and connect connector (A) and terminal (B) to the generator.

Tightening torque:
15 N·m (1.5 kgf-m, 11.1 ft-lb)

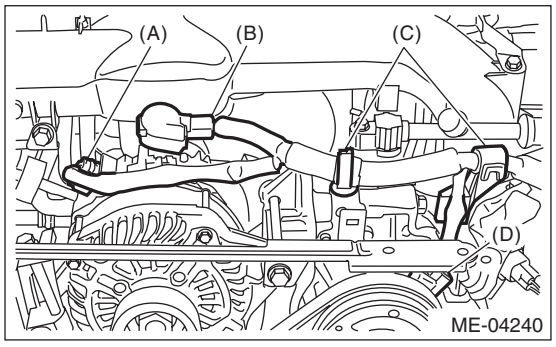

ME-04240

23) Connect the engine harness connector to the bulkhead harness connector, attach it to the rear engine hanger, and fasten with bolt.

Tightening torque:
6.4 N·m (0.7 kgf-m, 4.7 ft-lb)

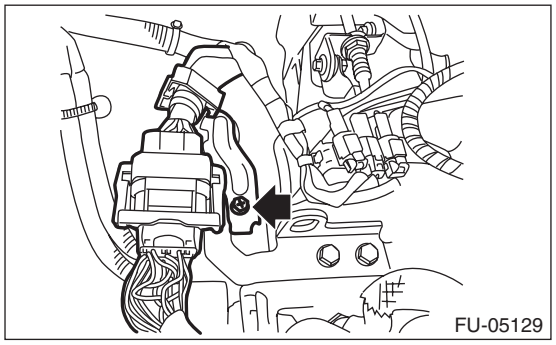
FU-05129

24) Install the front exhaust pipe. <Ref. to EX(H4SO)-6, INSTALLATION, Front Exhaust Pipe.>
25) Install the radiator. <Ref. to CO(H4SO)-21, INSTALLATION, Radiator.>
26) Install the air intake boot assembly. <Ref. to IN(H4SO)-8, INSTALLATION, Air Intake Boot.>
27) Install the air intake duct. <Ref. to IN(H4SO)-9, INSTALLATION, Air Intake Duct.>

28) Connect the battery ground terminal.

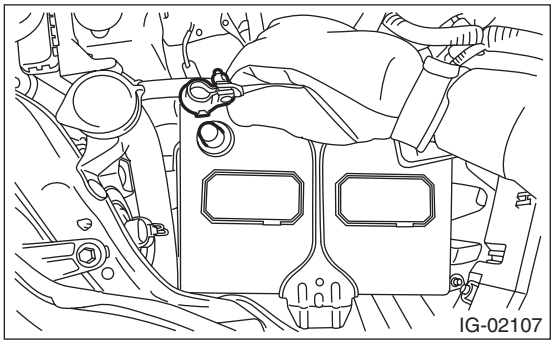

29) Fill engine coolant. <Ref. to CO(H4SO)-14, FILLING OF ENGINE COOLANT, REPLACEMENT, Engine Coolant.>
30) Charge the A/C system with refrigerant. <Ref. to AC-25, PROCEDURE, Refrigerant Charging Procedure.>
31) Check the CVTF level and replenish it if necessary. (CVT model) <Ref. to CVT-37, ADJUSTMENT, CVTF.>
32) Install the V-belt cover.
33) Change the front hood damper mounting position from (B) to (A), and close the front hood.

Tightening torque:
20 N·m (2.0 kgf-m, 14.8 ft-lb)

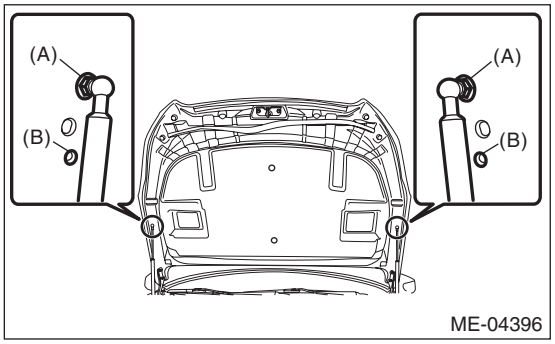

C: INSPECTION

1) Check that the pipes, hoses, connectors and clamps are securely connected.
2) Check that the engine coolant is up to specified level.
3) Check CVTF is at the specified level. (CVT model)
4) Start the engine and check for exhaust gas leakage, engine coolant leakage, fuel leakage, noise or vibration.

10.Engine Mounting

A: REMOVAL

1) Change the front hood damper mounting position from (A) to (B), and completely open the front hood.

Tightening torque:
20 N·m (2.0 kgf-m, 14.8 ft-lb)

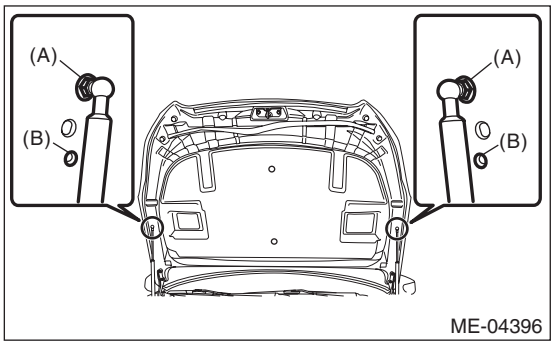

2) Disconnect the ground cable from battery.

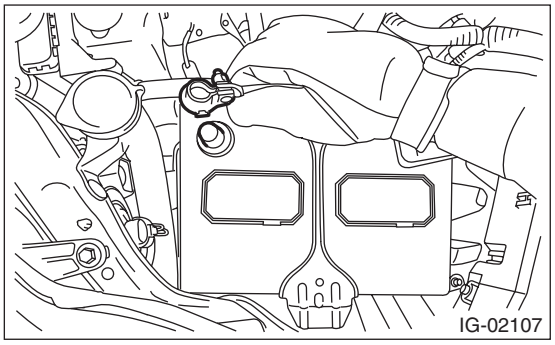

3) Remove the radiator main fan motor assembly and radiator sub fan motor assembly. <Ref. to CO(H4SO)-24, REMOVAL, Radiator Main Fan and Fan Motor.> <Ref. to CO(H4SO)-25, REMOVAL, Radiator Sub Fan and Fan Motor.>
4) Lift up the vehicle.
5) Remove the under cover. <Ref. to EI-35, REMOVAL, Front Under Cover.>
6) Remove the front exhaust pipe. <Ref. to EX(H4SO)-5, REMOVAL, Front Exhaust Pipe.>
7) Lower the vehicle.
8) Support the engine with a lifting device and wire ropes.

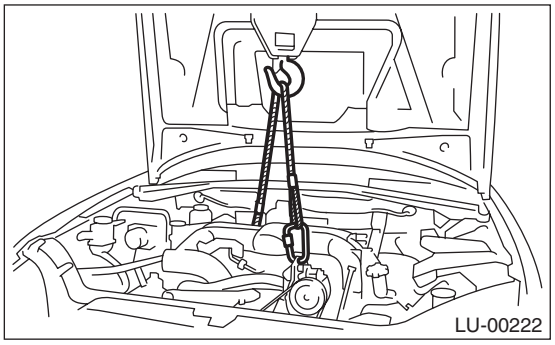

9) Remove the stopper rod.

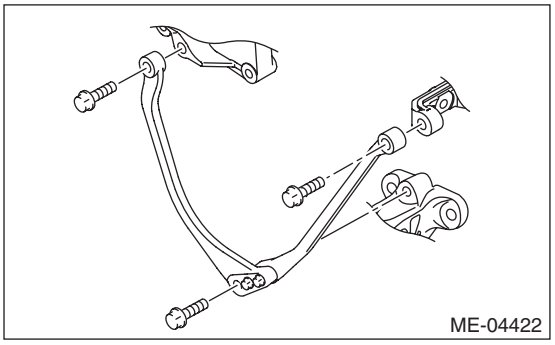

10) Remove the bolt and nut which secure engine mounting to the cradle.

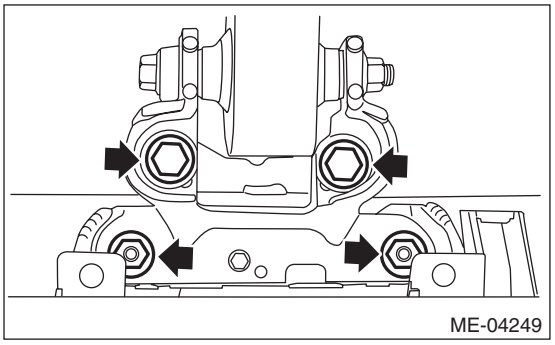

11) Lift up the vehicle.

CAUTION:
When lifting up the vehicle, raise up wire ropes at the same time.

12) Remove the bolts which secure the engine mounting onto the engine, and remove the engine mounting.

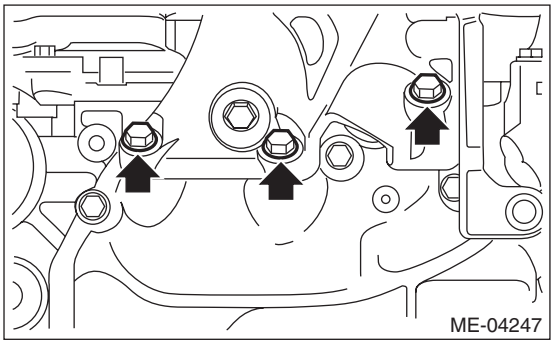

B: INSTALLATION

1) Set the engine mounting, and tighten the bolts which hold engine mounting to the engine.

Tightening torque:
58 N·m (5.9 kgf-m, 42.8 ft-lb)

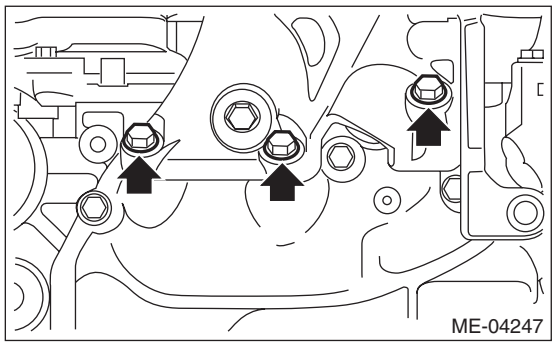

2) Lower the vehicle.

CAUTION:
When lifting down the vehicle, lower wire ropes at the same time.

3) Attach the bolts and nuts which secure engine mounting to the cradle.

Tightening torque:
60 N·m (6.1 kgf-m, 44.3 ft-lb)

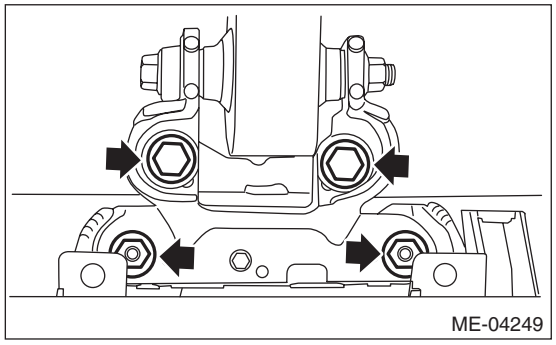

4) Install the stopper rod.

Tightening torque:
36 N·m (3.7 kgf-m, 26.6 ft-lb)

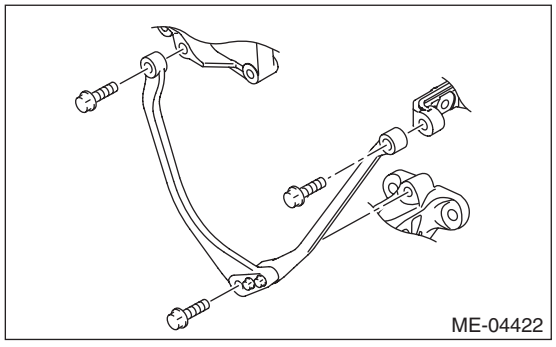

5) Remove the lifting device and wire ropes.

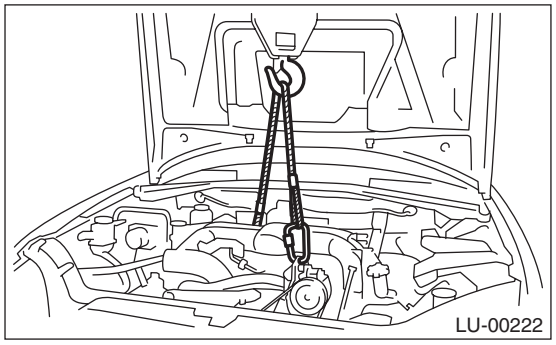

6) Lift up the vehicle.
7) Install the front exhaust pipe. <Ref. to EX(H4SO)-6, INSTALLATION, Front Exhaust Pipe.>
8) Install the under cover. <Ref. to EI-35, INSTALLATION, Front Under Cover.>
9) Lower the vehicle.
10) Install the radiator main fan motor assembly and radiator sub fan motor assembly. <Ref. to CO(H4SO)-24, INSTALLATION, Radiator Main Fan and Fan Motor.> <Ref. to CO(H4SO)-25, INSTALLATION, Radiator Sub Fan and Fan Motor.>
11) Connect the ground cable to battery.

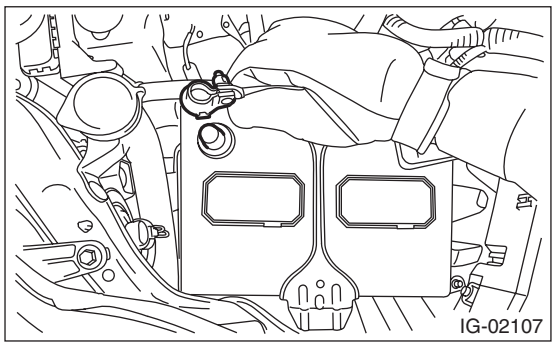

12) Change the front hood damper mounting position from (B) to (A), and close the front hood.

Tightening torque:
20 N·m (2.0 kgf-m, 14.8 ft-lb)

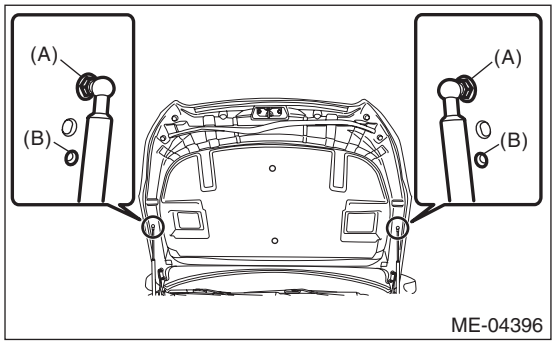

C: DISASSEMBLY

1) Remove the front cushion rubber from the engine mounting bracket.

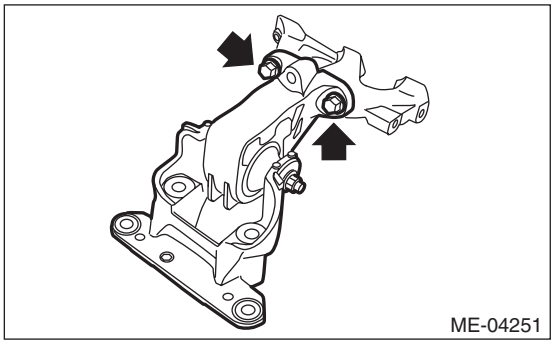

2) Remove the front cushion rubber from the front mounting bracket.

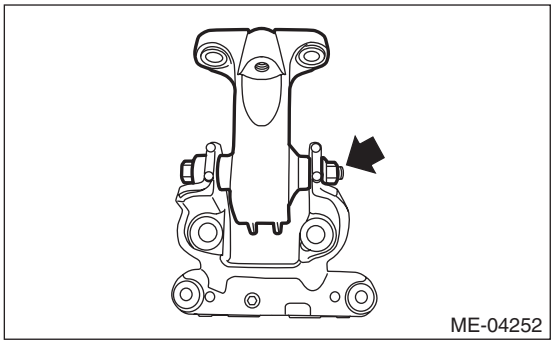

D: ASSEMBLY

1) Install the front cushion rubber to the front mounting bracket.

Tightening torque:
45 N·m (4.6 kgf-m, 33.2 ft-lb)

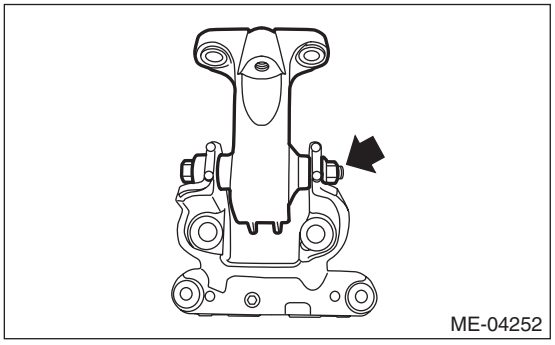

2) Install the front cushion rubber to the engine mounting bracket.

Tightening torque:
25 N·m (2.5 kgf-m, 18.4 ft-lb)

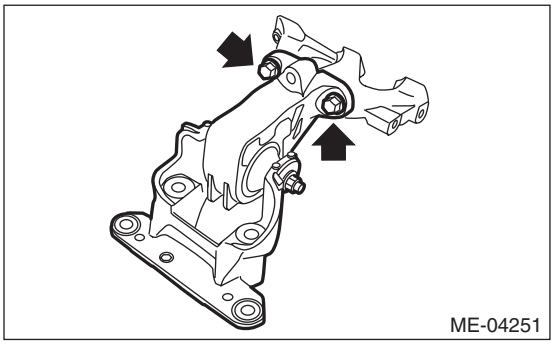

E: INSPECTION

Check that the engine mounting does not have deformation, cracks and any other damage.

11.Preparation for Overhaul

A: PROCEDURE

1) After removing the engine from vehicle body, attach the ST to the engine as shown in the figure.

ST1	498457000	ENGINE STAND ADAPTER RH
ST2	498457100	ENGINE STAND ADAPTER LH
ST3	499817100	ENGINE STAND

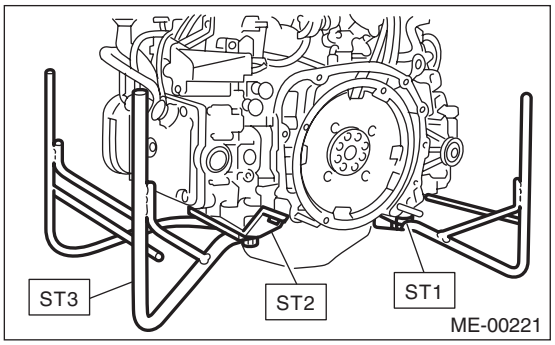

2) In this section the procedures described under each index are all connected and stated in order. Engine overhaul will be completed when you go through all steps in the procedure.
Therefore, in this section, to conduct the particular procedure within the flow of a section, you need to go back and conduct the procedure described previously in order to do that particular procedure.

12.V-belt

A: REMOVAL

NOTE:
When replacing a single part, perform the work with the engine assembly installed to body.

1. V-BELT

1) Remove the V-belt covers.
2) Remove the air intake duct. <Ref. to IN(H4SO)-9, REMOVAL, Air Intake Duct.>
3) Attach the tool to the V-belt tensioner assembly, and rotate the tool clockwise to loosen and remove the V-belt.

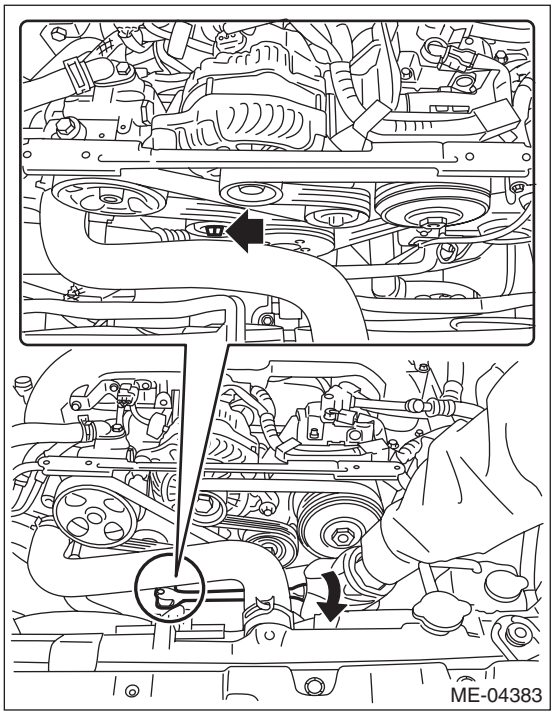

2. V-BELT TENSIONER ASSEMBLY AND IDLER PULLEY

1) Remove the V-belts. <Ref. to ME(H4SO)-43, V-BELT, REMOVAL, V-belt.>
2) Remove the bolt securing the V-belt tensioner assembly to the power steering pump bracket, and remove the V-belt tensioner assembly.

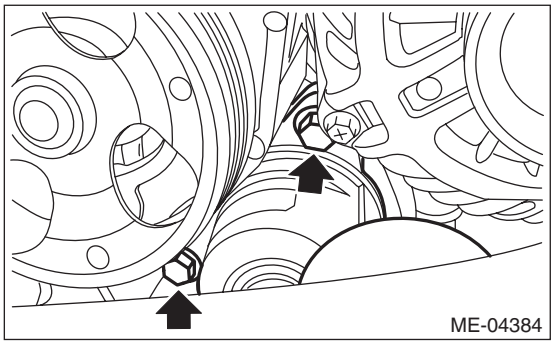

3) Remove the bolt securing the idler pulley to the A/C compressor bracket, and remove the idler pulley.

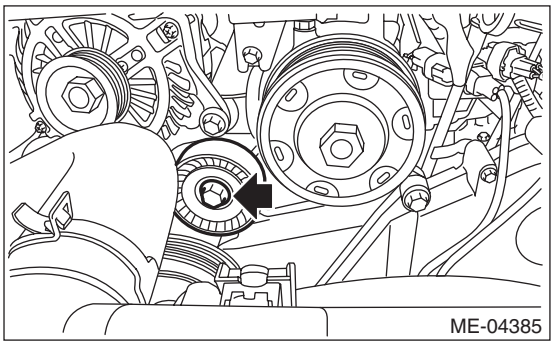

B: INSTALLATION

1. V-BELT

Install in the reverse order of removal.

CAUTION:
• When reusing the V-belt, wipe off dust and water with cloth.
• Do not use the V-belt if there is any oil, grease or coolant on the belt.
• Be careful not to rub the V-belt end surface with bare hands; exposed core may cause injury.
• Wipe off any dust, oil and water on the groove of each pulley with cloth.

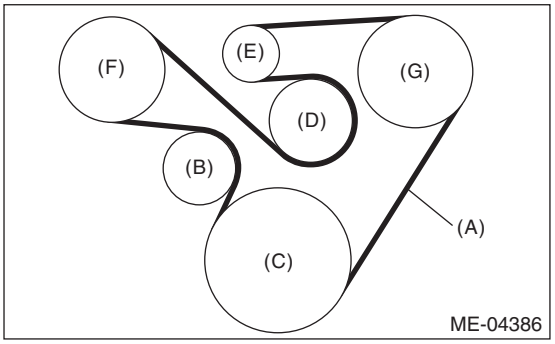

(A) V-belt
(B) V-belt tensioner ASSY
(C) Crank pulley
(D) Idler pulley
(E) Generator pulley
(F) Power steering pump pulley
(G) A/C compressor pulley

2. V-BELT TENSIONER ASSEMBLY AND IDLER PULLEY

Install in the reverse order of removal.

Tightening torque:
33 N·m (3.4 kgf-m, 24.3 ft-lb)

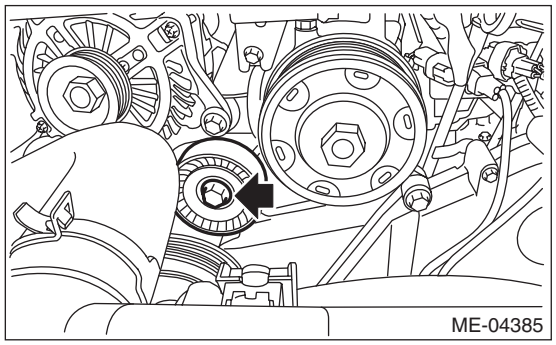

Tightening torque:
20 N·m (2.0 kgf-m, 14.8 ft-lb)

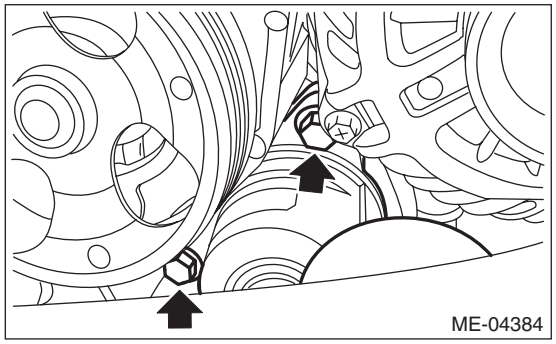

C: INSPECTION

1) Check the V-belt for cracks, tear or wear.
2) Remove the air intake duct. <Ref. to IN(H4SO)-9, REMOVAL, Air Intake Duct.>
3) Check the V-belt tensioner assembly and idler pulley for deformation, cracks or other damages.
4) Check that the V-belt tension indicator (A) is within the limit (B).

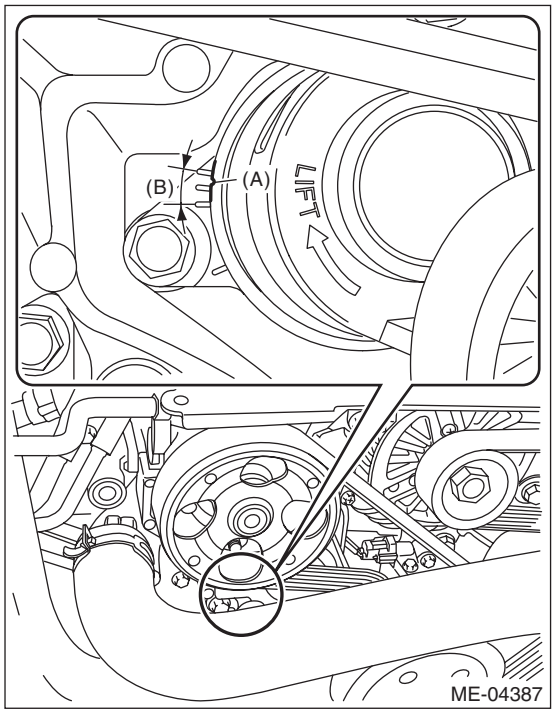

13.Crank Pulley

A: REMOVAL

NOTE:
When replacing a single part, perform the work with the engine assembly installed to body.
1) Remove the V-belts. <Ref. to ME(H4SO)-43, REMOVAL, V-belt.>
2) Use the ST to lock the crank pulley, and remove the crank pulley bolt.

ST 499977400 CRANK PULLEY WRENCH (CVT MODEL)
ST 499977100 CRANK PULLEY WRENCH (MT MODEL)

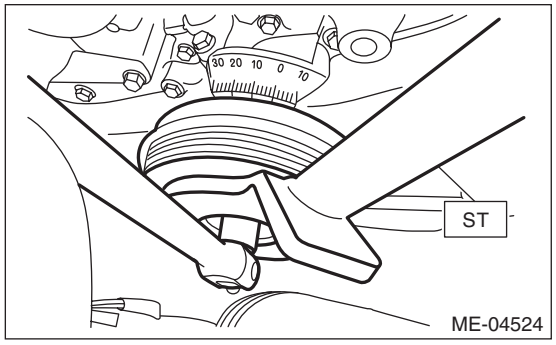

3) Remove the crank pulley.

B: INSTALLATION

1. METHOD WITHOUT ANGLE GAUGE

1) Clean the crankshaft thread using compressed air.
2) Install the crank pulley.
3) Apply engine oil to the crank pulley bolt seat and thread.
4) Tighten the crank pulley bolts.
(1) Use the ST to lock the crank pulley, and temporarily tighten the crank pulley bolt.

ST 499977400 CRANK PULLEY WRENCH (CVT MODEL)
ST 499977100 CRANK PULLEY WRENCH (MT MODEL)

Tightening torque:
47 N·m (4.8 kgf-m, 34.7 ft-lb)

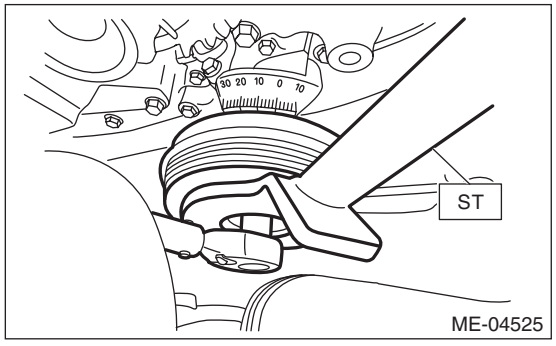

(2) Draw reference lines (A) and (B) using a marker to set the socket to the crank pulley bolt as shown in the figure.

NOTE:
Set the socket onto the crank pulley bolt so that reference lines (A) and (B) is visible.

ST 499977400 CRANK PULLEY WRENCH (CVT MODEL)
ST 499977100 CRANK PULLEY WRENCH (MT MODEL)

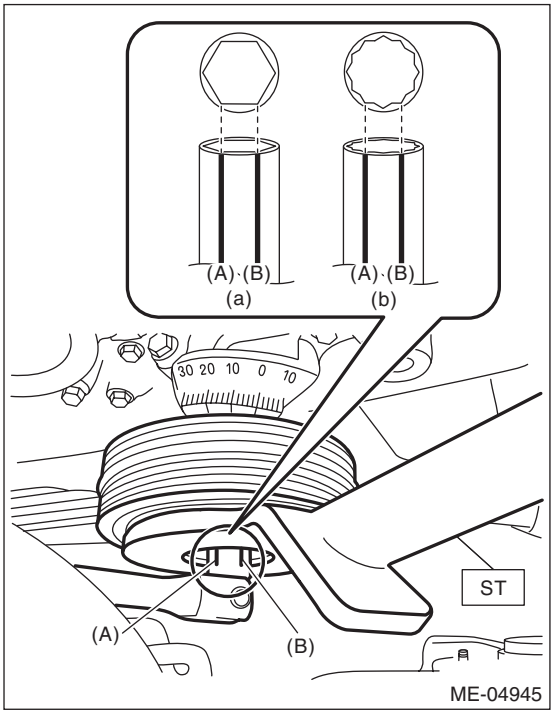

(a) When using 6-point socket
(b) When using 12-point socket

(3) Draw end line (C) on ST using a marker at the same position as reference line (B) drawn on the socket in step (2).

ST 499977400 CRANK PULLEY WRENCH (CVT MODEL)
ST 499977100 CRANK PULLEY WRENCH (MT MODEL)

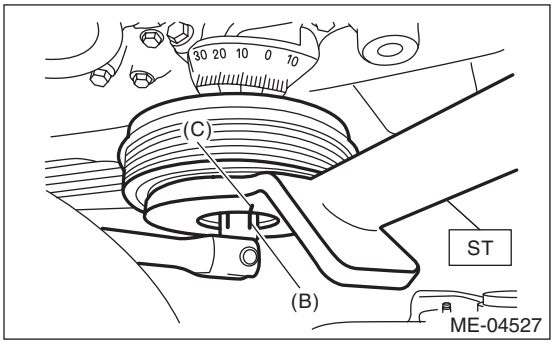

(4) Use the ST to lock the crank pulley, and tighten the crank pulley bolt to the angle where reference line (A) and end line (C) are aligned.

NOTE:
It should be approx. 60° when reference line (A) and end line (C) are aligned.

ST	499977400	CRANK PULLEY WRENCH (CVT MODEL)
ST	499977100	CRANK PULLEY WRENCH (MT MODEL)

Tightening angle:
60°±5°

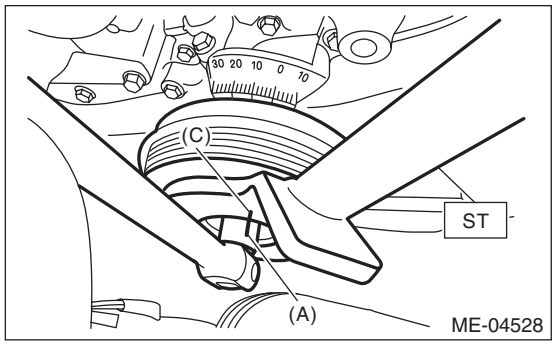

5) Install the V-belts. <Ref. to ME(H4SO)-43, INSTALLATION, V-belt.>

2. METHOD WITH ANGLE GAUGE

1) Clean the crankshaft thread using compressed air.
2) Install the crank pulley.
3) Apply engine oil to the crank pulley bolt seat and thread.
4) Tighten the crank pulley bolts.

(1) Remove the radiator main fan motor assembly and radiator sub fan motor assembly. <Ref. to CO(H4SO)-24, REMOVAL, Radiator Main Fan and Fan Motor.> <Ref. to CO(H4SO)-25, REMOVAL, Radiator Sub Fan and Fan Motor.>

(2) Use the ST1 to lock the crank pulley, and temporarily tighten the crank pulley bolt.

ST1	499977400	CRANK PULLEY WRENCH (CVT MODEL)
ST1	499977100	CRANK PULLEY WRENCH (MT MODEL)

Tightening torque:
47 N·m (4.8 kgf-m, 34.7 ft-lb)

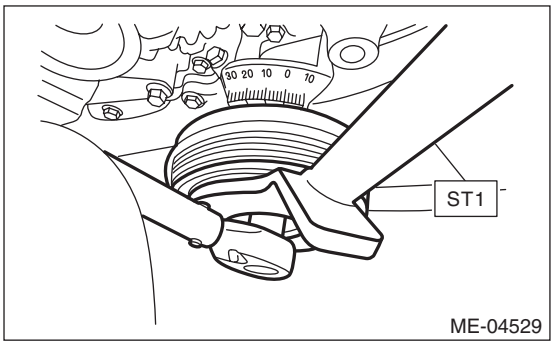

(3) Set the ST2, use the ST1 to lock the crank pulley, and tighten the crank pulley bolt to the specified angle.

NOTE:
Attach the magnet used for securing the ST2 (ANGLE GAUGE) to ST1.

ST1	499977400	CRANK PULLEY WRENCH (CVT MODEL)
ST1	499977100	CRANK PULLEY WRENCH (MT MODEL)
ST2	18854AA000	ANGLE GAUGE

Tightening angle:
60°±5°

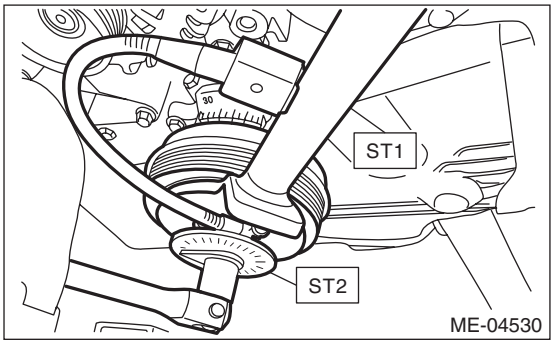

(4) Install the radiator main fan motor assembly and radiator sub fan motor assembly. <Ref. to CO(H4SO)-24, INSTALLATION, Radiator Main Fan and Fan Motor.> <Ref. to CO(H4SO)-25, INSTALLATION, Radiator Sub Fan and Fan Motor.>

5) Install the V-belts. <Ref. to ME(H4SO)-43, INSTALLATION, V-belt.>

C: INSPECTION

Check that the crank pulley has no deformation, cracks or other damages.

14.Timing Belt Cover

A: REMOVAL

NOTE:
When replacing a single part, perform the work with the engine assembly installed to body.
1) Remove the crank pulley. <Ref. to ME(H4SO)-45, REMOVAL, Crank Pulley.>
2) Remove the stopper rod.

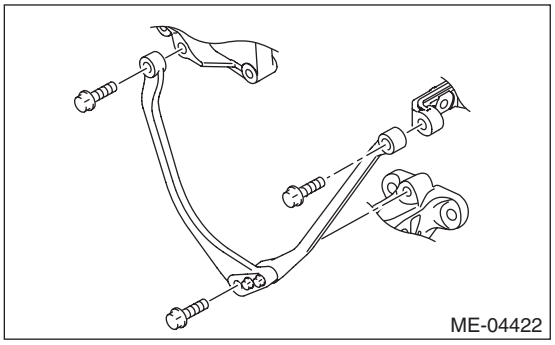

3) Remove the timing belt cover LH (A).
4) Remove the front timing belt cover (B).

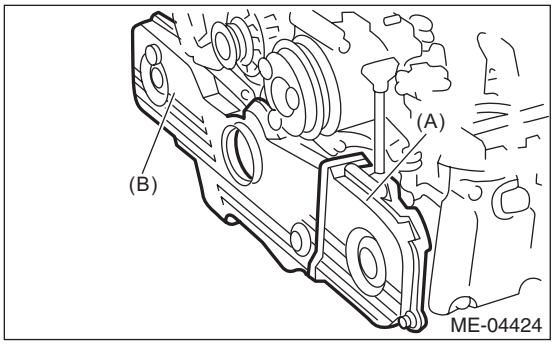

B: INSTALLATION

1) Install the front timing belt cover (B).

Tightening torque:
5 N·m (0.5 kgf-m, 3.7 ft-lb)

2) Install the timing belt cover LH (A).

Tightening torque:
5 N·m (0.5 kgf-m, 3.7 ft-lb)

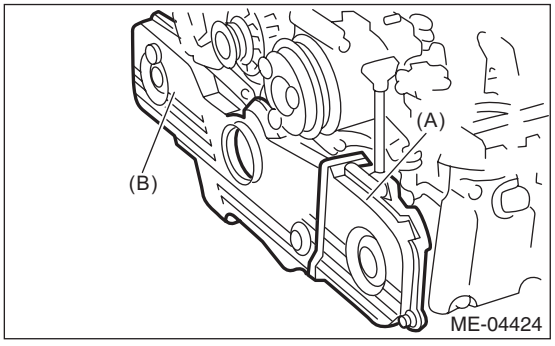

3) Install the stopper rod.

Tightening torque:
36 N·m (3.7 kgf-m, 26.6 ft-lb)

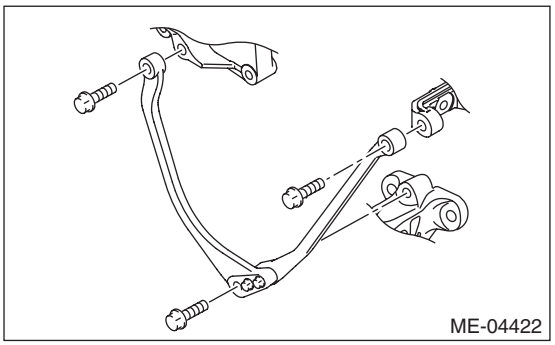

4) Install the crank pulley. <Ref. to ME(H4SO)-45, INSTALLATION, Crank Pulley.>

C: INSPECTION

Check that the timing belt cover does not have deformation, cracks and any other damage.

15.Timing Belt

A: REMOVAL

NOTE:
• When replacing a single part, perform the work with the engine assembly installed to body.
• When performing the work with the engine installed to body, the following parts must also be removed/installed.
  • Radiator main fan motor assembly <Ref. to CO(H4SO)-24, REMOVAL, Radiator Main Fan and Fan Motor.> <Ref. to CO(H4SO)-24, INSTALLATION, Radiator Main Fan and Fan Motor.>
  • Radiator sub fan motor assembly <Ref. to CO(H4SO)-25, REMOVAL, Radiator Sub Fan and Fan Motor.> <Ref. to CO(H4SO)-25, INSTALLATION, Radiator Sub Fan and Fan Motor.>
• When performing the work with the engine installed to body, protect the radiator with cardboards or blankets.

1. TIMING BELT

1) Remove the crank pulley. <Ref. to ME(H4SO)-45, REMOVAL, Crank Pulley.>
2) Remove the timing belt cover. <Ref. to ME(H4SO)-47, REMOVAL, Timing Belt Cover.>
3) Remove the timing belt guide. (MT model)

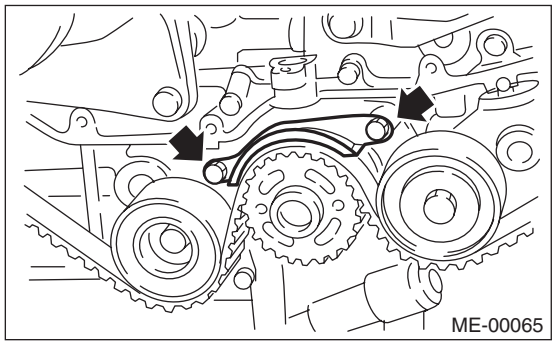

4) If the alignment mark or arrow mark (which indicates the direction of rotation) on timing belt fade away, put new marks before removing the timing belt as shown in procedures below.

(1) Use the ST to turn crankshaft. Align the mark (a) of sprocket to the mark (b) of oil pump, and then ensure the right side cam sprocket mark (c), cam cap and cylinder head matching surface (d) or left side cam sprocket mark (e), timing belt cover notch (f) are properly adjusted.

ST 499987500 CRANKSHAFT SOCKET

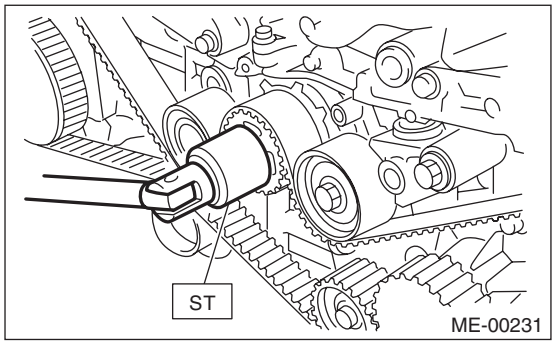

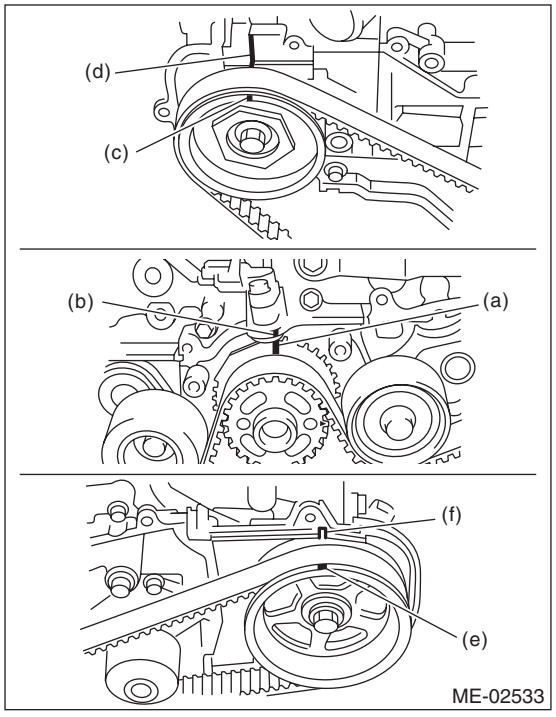

(2) Using white paint, put an alignment mark or an arrow mark on timing belts in relation to the crank sprocket and cam sprockets.

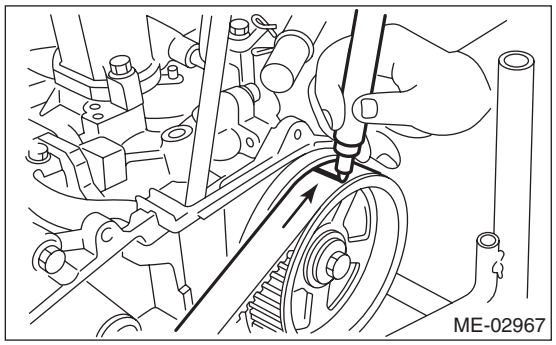

Z_1: 46.8 teeth
Z_2: 43.7 teeth

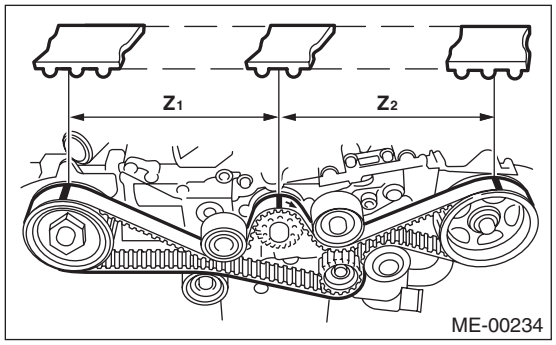

5) Remove the belt idler (A).
6) Remove the belt idler No. 2 (B).

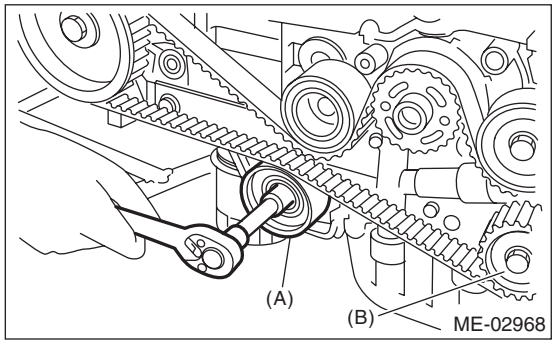

7) Remove the timing belt.

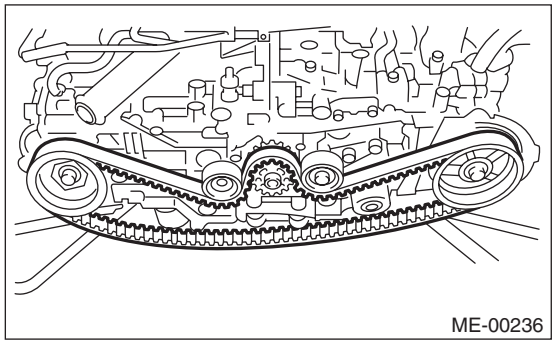

2. BELT IDLER AND AUTOMATIC BELT TENSION ADJUSTER ASSEMBLY

1) Remove the belt idler.

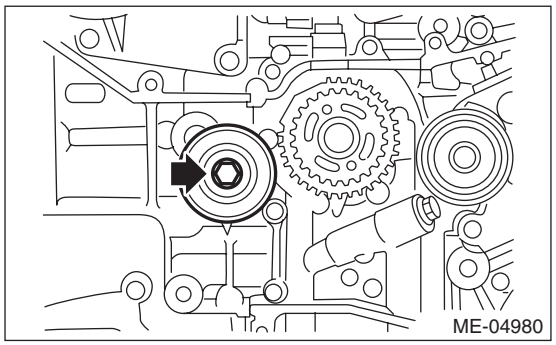

2) Remove the automatic belt tension adjuster assembly.

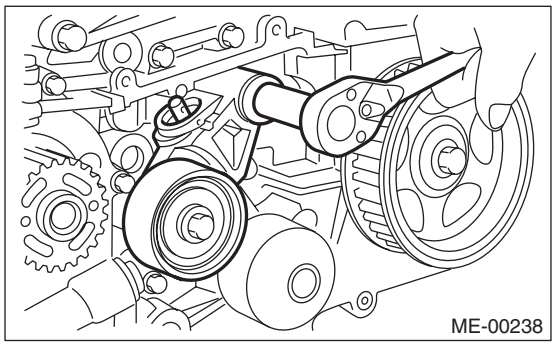

B: INSTALLATION

1. AUTOMATIC BELT TENSION ADJUSTER ASSEMBLY AND BELT IDLER

1) Prepare for installation of the automatic belt tension adjuster assembly.

CAUTION:
• Always use a vertical type pressing tool to move the adjuster rod down.
• Do not use a lateral type vise.
• Push the adjuster rod vertically.
• Press-in the push adjuster rod gradually taking three minutes or more.
• Do not allow press pressure to exceed 9,807 N (1,000 kgf, 2,205 lb).
• Push in the adjuster rod to the end face of the cylinder. However, do not push in the adjuster rod below the end face of the cylinder. Doing so may damage the cylinder.
• Do not release the press pressure until stopper pin is completely inserted.

(1) Attach the automatic belt tension adjuster assembly to vertical pressing tool.

(2) Slowly push in the adjuster rod with a pressure of 165 N (16.8 kgf, 37.1 lbf) or more until the adjuster rod is aligned with the stopper pin hole in the cylinder.

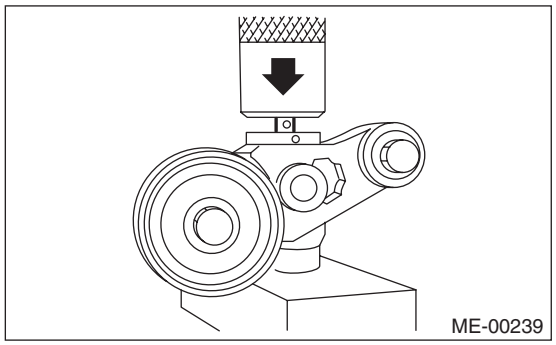
ME-00239

(3) With a 2 mm (0.08 in) dia. stopper pin or a 2 mm (nominal) dia. hex wrench inserted into the stopper pin hole in cylinder, secure the adjuster rod.

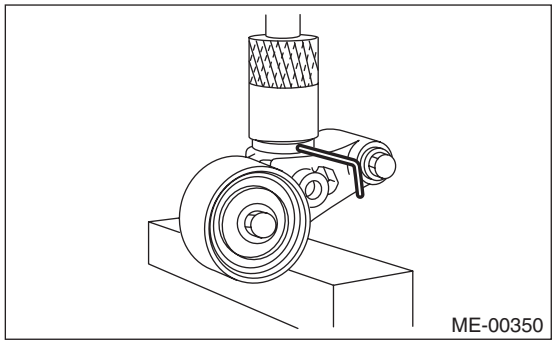
ME-00350

2) Install the automatic belt tension adjuster assembly.

Tightening torque:
39 N·m (4.0 kgf-m, 28.8 ft-lb)

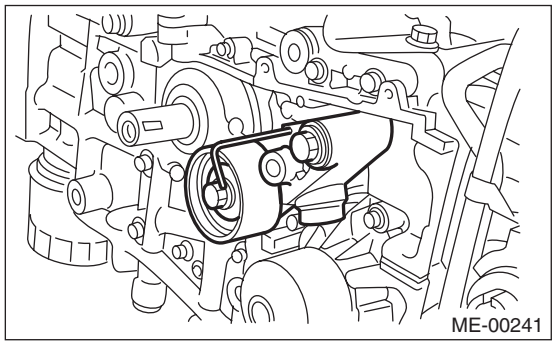
ME-00241

3) Install the belt idlers.

Tightening torque:
39 N·m (4.0 kgf-m, 28.8 ft-lb)

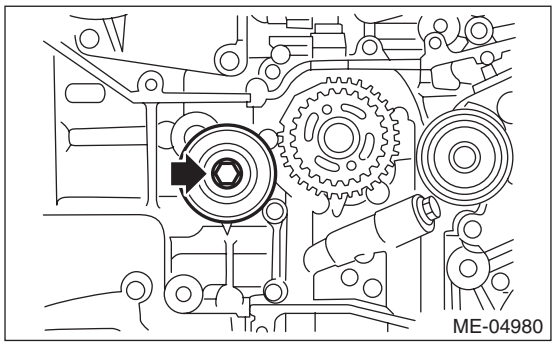
ME-04980

2. TIMING BELT

1) Prepare for installation of the automatic belt tension adjuster assembly. <Ref. to ME(H4SO)-49, AUTOMATIC BELT TENSION ADJUSTER ASSEMBLY AND BELT IDLER, INSTALLATION, Timing Belt.>
2) Align the mark (B) on oil pump with the mark (A) on crank sprocket.

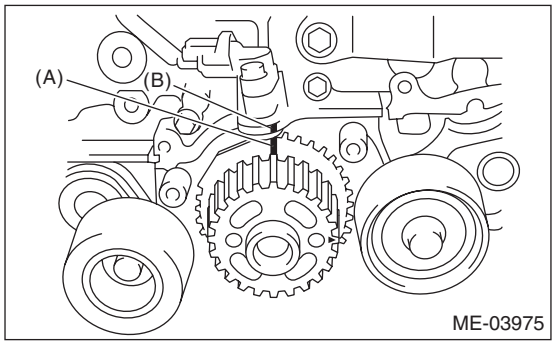

ME-03975

3) Turn the camshaft sprocket No. 2 using ST1, and turn the camshaft sprocket No. 1 using ST2 so that their alignment marks (A) come to top positions.
ST1 18231AA010 CAM SPROCKET WRENCH

NOTE:
CAM SPROCKET WRENCH (499207100) can also be used.
ST2 499207400 CAM SPROCKET WRENCH

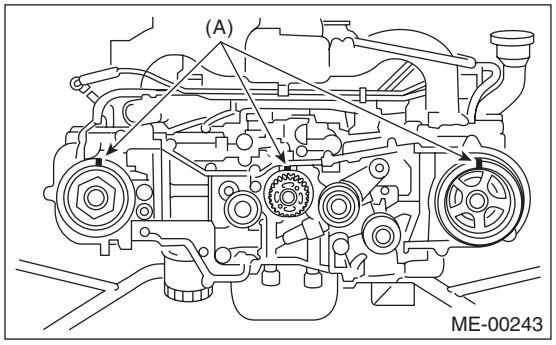

ME-00243

4) While aligning the alignment mark (B) on timing belt with the mark (A) on sprockets, position the timing belt properly.

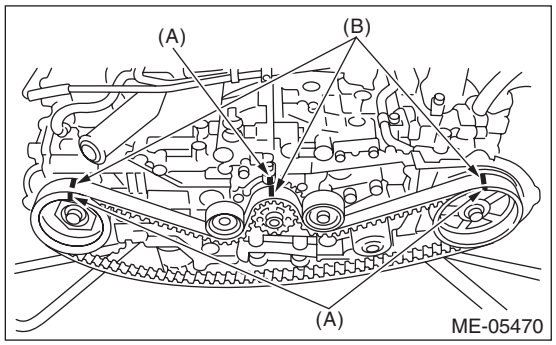

5) Install the belt idler No. 2 (B).

Tightening torque:
39 N·m (4.0 kgf-m, 28.8 ft-lb)

6) Install the belt idler (A).

Tightening torque:
39 N·m (4.0 kgf-m, 28.8 ft-lb)

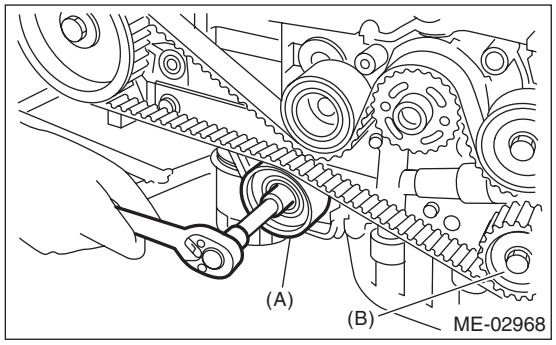

7) After ensuring the marks on timing belt and camshaft sprockets are aligned, remove the stopper pin from belt tension adjuster.

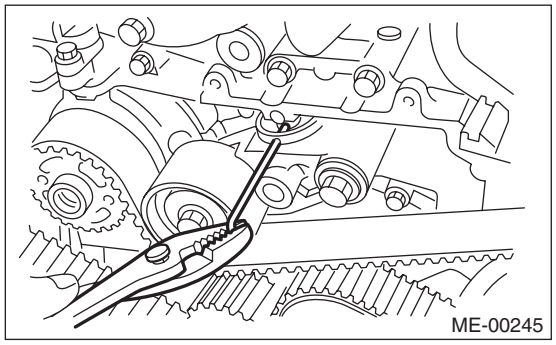

8) Install the timing belt guide. (MT model)

(1) Temporarily tighten the bolts mounting the timing belt guide.

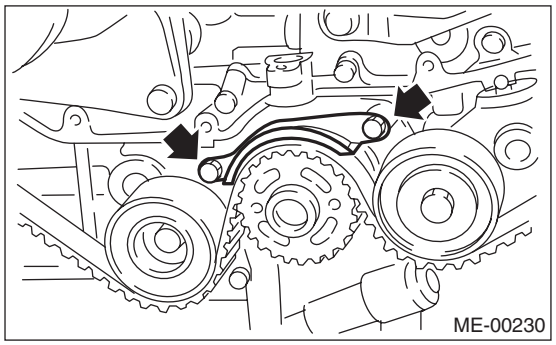

(2) Check and adjust the clearance between timing belt and timing belt guide by using thickness gauge.

Clearance:
1.0±0.5 mm (0.039±0.020 in)

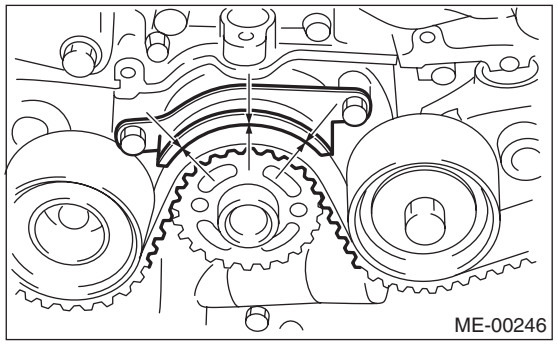

(3) Tighten the bolts mounting the timing belt guide.

Tightening torque:
9.75 N·m (1.0 kgf-m, 7.2 ft-lb)

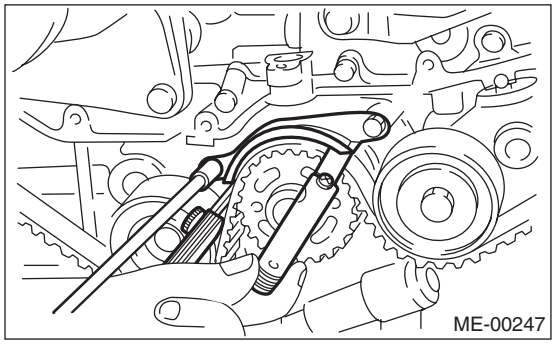

9) Install the timing belt cover. <Ref. to ME(H4SO)-47, INSTALLATION, Timing Belt Cover.>
10) Install the crank pulley. <Ref. to ME(H4SO)-45, INSTALLATION, Crank Pulley.>

C: INSPECTION

1. TIMING BELT

1) Check the timing belt teeth for breaks, cracks or wear. If any fault is found, replace the timing belt.
2) Check the condition on the back surface of the timing belt. If cracks are found, replace the timing belt.

CAUTION:
• Be careful not to let oil, grease or coolant contact the timing belt. Remove quickly and thoroughly if this happens.
• Do not bend the timing belt sharply.

In radial diameter h:
60 mm (2.36 in) or more

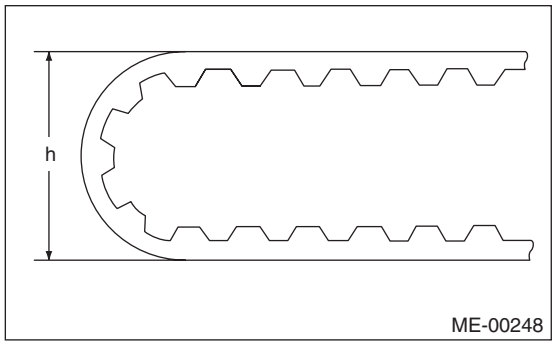

2. AUTOMATIC BELT TENSION ADJUSTER

1) Visually check the oil seals for leaks, and rod ends for abnormal wear and scratches. If necessary, replace the automatic belt tension adjuster assembly.

NOTE:
Slight traces of oil at rod's oil seal does not indicate a problem.
2) Check that the adjuster rod does not move when a pressure of 165 N (16.8 kgf, 37.1 lb) is applied to it. This is to check adjuster rod stiffness.
3) If the adjuster rod is not stiff and moves freely when applying 165 N (16.8 kgf, 37.1 lb), check it using the following procedures:
(1) Slowly press the adjuster rod down to the end surface of cylinder. Repeat this operation two to three times.
(2) With the adjuster rod moved all the way up, apply a pressure of 165 N (16.8 kgf, 37.1 lb) to it, and check the adjuster rod stiffness.
(3) If the adjuster rod is not stiff and moves down, replace the automatic belt tension adjuster assembly with a new part.

CAUTION:
• Always use a vertical type pressing tool to move the adjuster rod down.
• Do not use a lateral type vise.
• Push the adjuster rod vertically.
• Press the adjuster rod gradually taking three minutes or more.
• Do not allow press pressure to exceed 9,807 N (1,000 kgf, 2,205 lb).
• Push in the adjuster rod to the end face of the cylinder. However, do not press the adjuster rod below the end face of the cylinder. Doing so may damage the cylinder.
4) Measure the amount of adjuster rod protrusion "H" from the end surface of the cylinder. If it is not within specifications, replace the automatic belt tension adjuster assembly with a new part.

Amount of adjuster rod protrusion H:
5.2 — 6.2 mm (0.205 — 0.244 in)

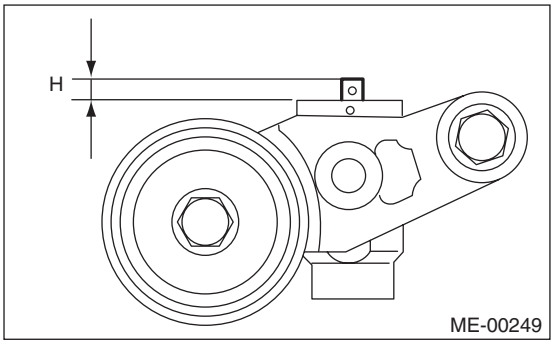

3. BELT TENSION PULLEY

1) Check the mating surfaces of timing belt and contact point of adjuster rod for abnormal wear or scratches. Replace the automatic belt tension adjuster assembly with a new part if faulty.
2) Check the belt tension pulley for smooth rotation. Replace the automatic belt tension adjuster assembly with a new part if abnormal noise or excessive play occurs.
3) Check the belt tension pulley for grease leakage.

4. BELT IDLER

1) Check the belt idler for smooth rotation. Replace if noise or excessive play occurs.
2) Check the outer contacting surfaces of idler pulley for abnormal wear and scratches.
3) Check the belt idler for grease leakage.

16.Cam Sprocket

A: REMOVAL

NOTE:
When replacing a single part, perform the work with the engine assembly installed to body.
1) Remove the crank pulley. <Ref. to ME(H4SO)-45, REMOVAL, Crank Pulley.>
2) Remove the timing belt cover. <Ref. to ME(H4SO)-47, REMOVAL, Timing Belt Cover.>
3) Remove the timing belt. <Ref. to ME(H4SO)-48, REMOVAL, Timing Belt.>
4) Remove the camshaft position sensor. <Ref. to FU(H4SO)-27, REMOVAL, Camshaft Position Sensor.>
5) Use the ST to lock the cam sprocket, and remove the cam sprocket bolt.
ST 18231AA010 CAM SPROCKET WRENCH

NOTE:
CAM SPROCKET WRENCH (499207100) can also be used.

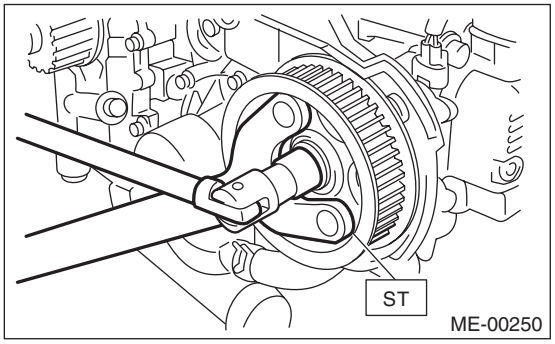

ST 499207400 CAM SPROCKET WRENCH

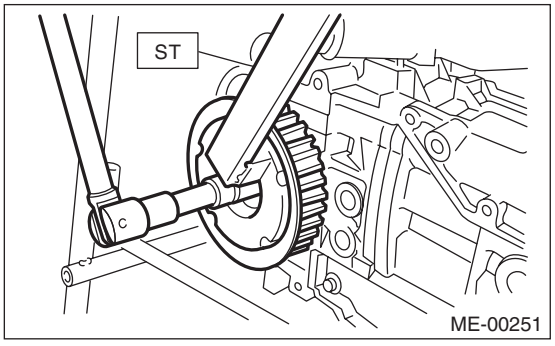

6) Remove the cam sprocket.

B: INSTALLATION

1) Install the cam sprocket.
2) Use the ST to lock the cam sprocket, and install the cam sprocket bolt.

NOTE:
• Do not confuse cam sprockets (LH) and (RH) during installation.
• They can be distinguished by the L or R indication.
ST 18231AA010 CAM SPROCKET WRENCH

NOTE:
CAM SPROCKET WRENCH (499207100) can also be used.

Tightening torque:
78 N·m (8.0 kgf-m, 57.5 ft-lb)

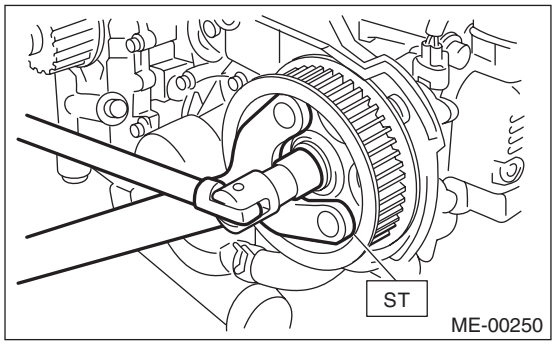

ST 499207400 CAM SPROCKET WRENCH

Tightening torque:
78 N·m (8.0 kgf-m, 57.5 ft-lb)

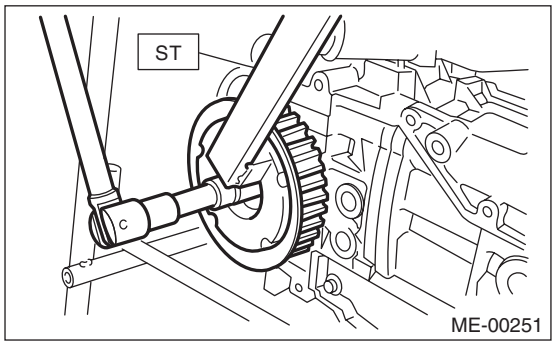

3) Install the camshaft position sensor. <Ref. to FU(H4SO)-27, INSTALLATION, Camshaft Position Sensor.>
4) Install the timing belt. <Ref. to ME(H4SO)-49, INSTALLATION, Timing Belt.>
5) Install the timing belt cover. <Ref. to ME(H4SO)-47, INSTALLATION, Timing Belt Cover.>
6) Install the crank pulley. <Ref. to ME(H4SO)-45, INSTALLATION, Crank Pulley.>

C: INSPECTION

1) Check the cam sprocket teeth for abnormal wear and scratches.
2) Make sure there is no free play between cam sprocket and key.
3) Check the cam sprocket protrusion used for sensor for damage and contamination of foreign matter.

17.Crank Sprocket

A: REMOVAL

NOTE:
When replacing a single part, perform the work with the engine assembly installed to body.
1) Remove the crank pulley. <Ref. to ME(H4SO)-45, REMOVAL, Crank Pulley.>
2) Remove the timing belt cover. <Ref. to ME(H4SO)-47, REMOVAL, Timing Belt Cover.>
3) Remove the timing belt. <Ref. to ME(H4SO)-48, REMOVAL, Timing Belt.>
4) Remove the crank sprocket.

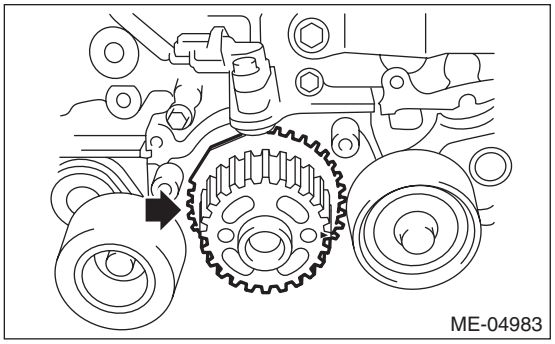

B: INSTALLATION

1) Install the crank sprocket.

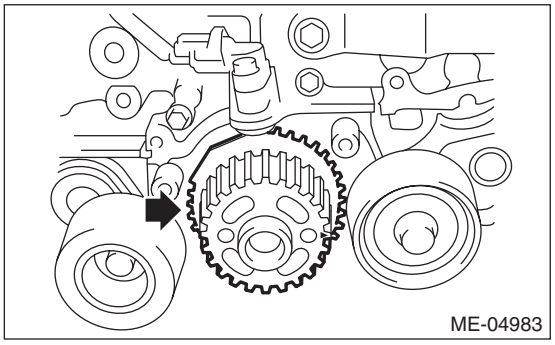

2) Install the timing belt. <Ref. to ME(H4SO)-49, INSTALLATION, Timing Belt.>
3) Install the timing belt cover. <Ref. to ME(H4SO)-47, INSTALLATION, Timing Belt Cover.>
4) Install the crank pulley. <Ref. to ME(H4SO)-45, INSTALLATION, Crank Pulley.>

C: INSPECTION

1) Check the crank sprocket teeth for abnormal wear and scratches.
2) Make sure there is no free play between crank sprocket and key.
3) Check the crank sprocket protrusion used for sensor for damage and contamination of foreign matter.

18.Valve Rocker Assembly

A: REMOVAL

NOTE:
When replacing a single part, perform the work with the engine assembly installed to body. Refer to "Valve Clearance" for preparation procedures. <Ref. to ME(H4SO)-29, Valve Clearance.>
1) Remove the ignition coil. <Ref. to IG(H4SO)-5, REMOVAL, Ignition Coil.>
2) Disconnect the PCV hose and remove the rocker cover.
3) Remove the valve rocker assembly.
(1) Use the ST to rotate the spring stopper in the direction of the arrow to remove it from adjuster pin.

ST 18258AA000 SPRING INSTALLER

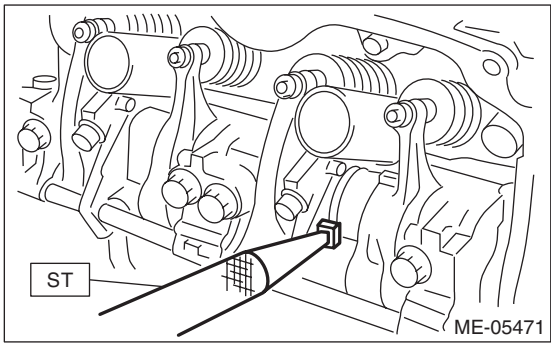

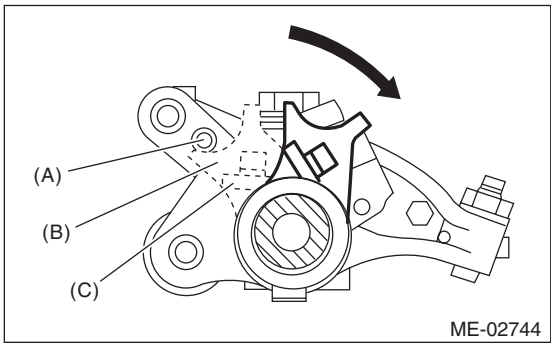

(A) Adjuster pin
(B) Spring stopper
(C) Spring

(2) Remove the bolts (a) through (j) in alphabetical sequence.

NOTE:
Leave two or three threads of bolts (i) and (j) engaged in order to retain the valve rocker assembly.

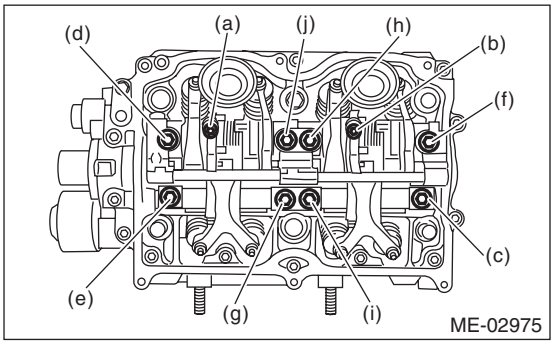

(3) Remove the valve rocker assembly.

NOTE:
Set the ST in the position shown in the drawing to remove the intake valve rocker assembly.

ST 18354AA000 VALVE ROCKER HOLDER

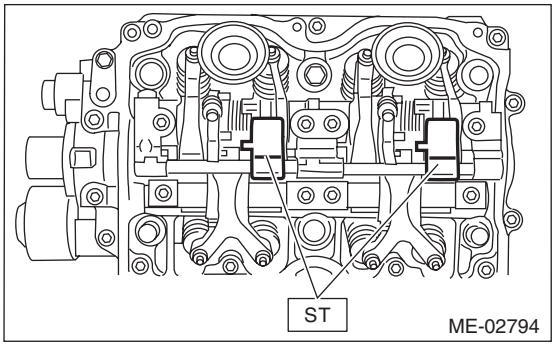

B: INSTALLATION

1) Install the valve rocker assembly.
(1) Temporarily tighten the bolts equally in alphabetical order as shown in the figure.

NOTE:
- Do not temporarily tighten the bolts (i) and (j).
- Set the ST in the position shown in the drawing to mount the intake valve rocker assembly.

ST 18354AA000 VALVE ROCKER HOLDER

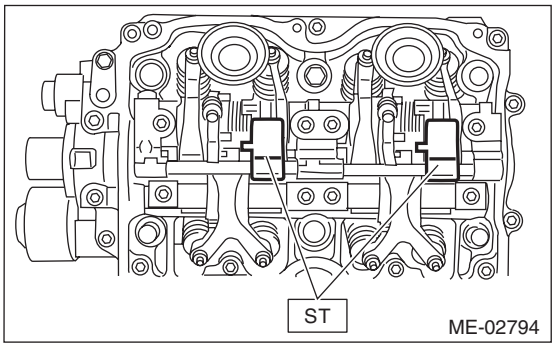

(2) Tighten the bolts (a) through (h) to specified torque.

Tightening torque:
25 N·m (2.5 kgf-m, 18.4 ft-lb)

(3) Tighten the bolts (i) through (j) to specified torque.

Tightening torque:
6 N·m (0.6 kgf-m, 4.4 ft-lb)

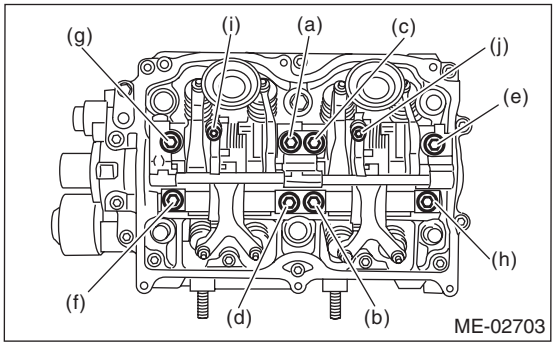

(4) Use the ST to rotate the spring stopper in the direction of the arrow to fasten the adjuster pin.

ST 18258AA000 SPRING INSTALLER

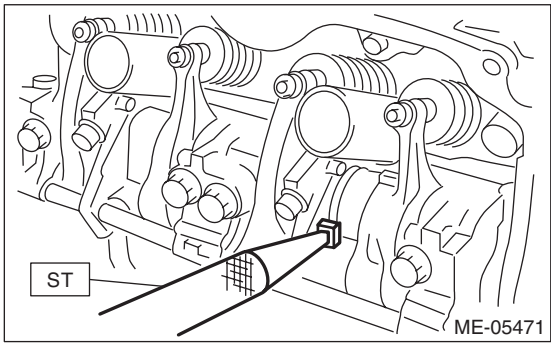

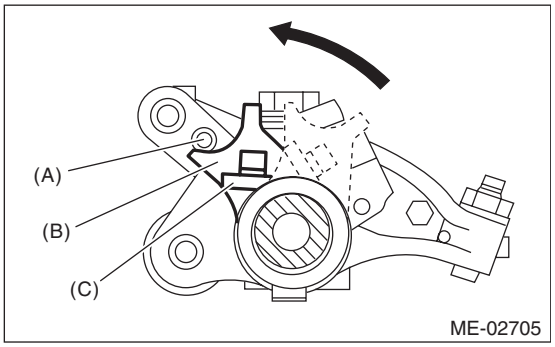

(A) Adjuster pin
(B) Spring stopper
(C) Spring

2) Remove the timing belt cover LH.
3) Adjust the valve clearance. <Ref. to ME(H4SO)-30, ADJUSTMENT, Valve Clearance.>
4) Install the timing belt cover LH.

Tightening torque:
5 N·m (0.5 kgf-m, 3.7 ft-lb)

5) Install the rocker cover.
(1) Install the rocker cover gasket to the rocker cover.

NOTE:
Use a new rocker cover gasket.

(2) Temporarily tighten the bolts in alphabetical order shown in the figure, tighten them in two stages.

Tightening torque:
First
6.4 N·m (0.7 kgf-m, 4.7 ft-lb)
Second (only (a) and (b) are tightened)
6.4 N·m (0.7 kgf-m, 4.7 ft-lb)

- RH side

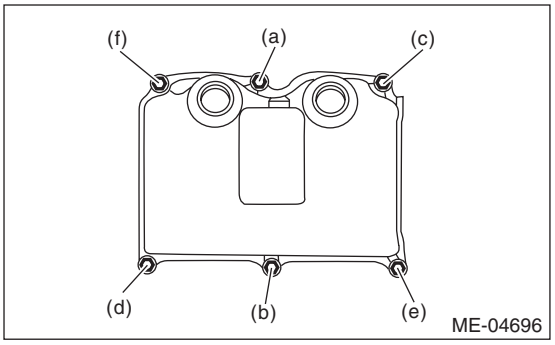

- LH side

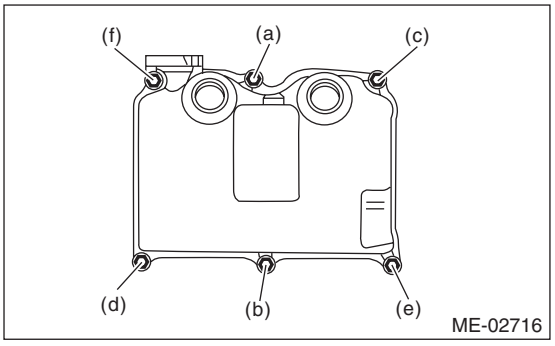

(3) Connect the PCV hose.

6) Install the ignition coil. <Ref. to IG(H4SO)-5, INSTALLATION, Ignition Coil.>

C: DISASSEMBLY

NOTE:
Intake valve rocker assembly cannot be disassembled.

1) Remove the exhaust valve rocker arm from the rocker shaft.

NOTE:
Keep all the removed parts in order for re-installing in their original positions.

2) Remove the nut and adjusting screw from exhaust valve rocker.

D: ASSEMBLY

NOTE:
Intake valve rocker assembly cannot be disassembled.
1) Install the adjusting screw and nut to the exhaust valve rocker.
2) Insert the exhaust valve rocker arm to rocker shaft.

NOTE:
Valve rocker arms, and rocker shaft have identification marks. Make sure the parts with same markings are properly assembled.

E: INSPECTION

1. INTAKE VALVE ROCKER ASSEMBLY

1) If the roller or valve contact surface of valve rocker arm is worn or dented excessively, replace the valve rocker assembly.
2) Check that the valve rocker arm roller rotates smoothly. If not, replace the valve rocker assembly.

2. EXHAUST VALVE ROCKER ASSEMBLY

1) Measure the inner diameter of valve rocker arm and outer diameter of valve rocker shaft, and confirm the difference (oil clearance) between the two values.

Clearance between arm and shaft:
Standard
0.020 — 0.054 mm (0.0008 — 0.0021 in)

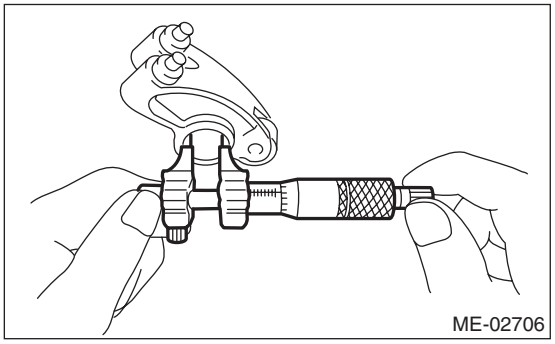
ME-02706

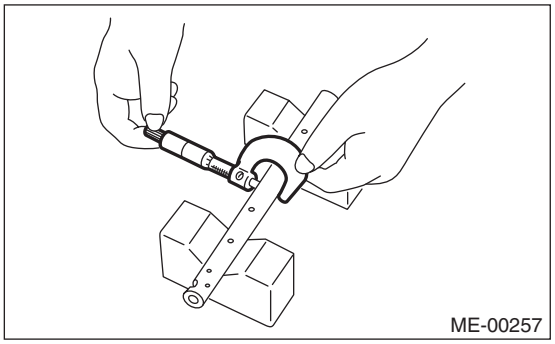
ME-00257

2) If the oil clearance exceeds the limit, replace the valve rocker arm or shaft, whichever shows the greater amount of wear.

Rocker arm inside diameter:
Standard
22.020 — 22.041 mm (0.8669 — 0.8678 in)

Rocker shaft diameter:
Standard
21.987 — 22.000 mm (0.8656 — 0.8661 in)

3) If the roller or valve contact surface of valve rocker arm is worn or dented excessively, replace the valve rocker arm.
4) Check that the valve rocker arm roller rotates smoothly. If not, replace the valve rocker arm.

19.Camshaft

A: REMOVAL

NOTE:
When replacing a single part, perform the work with the engine assembly installed to body. Refer to “Valve Clearance” for preparation procedures. <Ref. to ME(H4SO)-29, Valve Clearance.>
1) Remove the crank pulley. <Ref. to ME(H4SO)-45, REMOVAL, Crank Pulley.>
2) Remove the timing belt cover. <Ref. to ME(H4SO)-47, REMOVAL, Timing Belt Cover.>
3) Remove the timing belt. <Ref. to ME(H4SO)-48, REMOVAL, Timing Belt.>
4) Remove the cam sprocket. <Ref. to ME(H4SO)-53, REMOVAL, Cam Sprocket.>
5) Remove the timing belt cover No. 2 LH.
6) Remove the timing belt cover No. 2 RH.

NOTE:
When removing the timing belt cover, be careful not to damage the seal rubber.

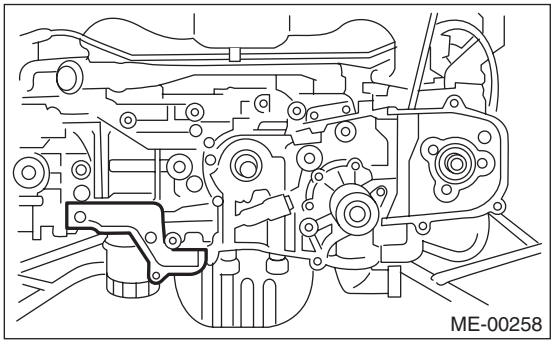
ME-00258

7) Remove the tensioner bracket.

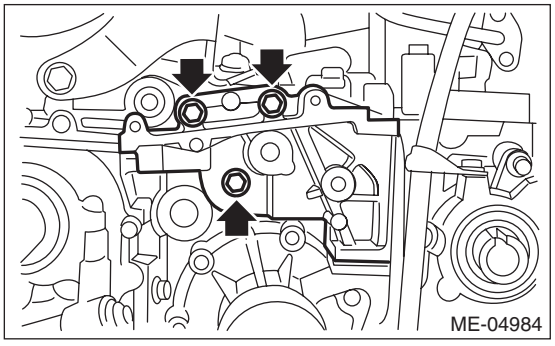
ME-04984

8) Remove the camshaft position sensor support. (LH side only)
9) Remove the valve rocker assembly. <Ref. to ME(H4SO)-55, REMOVAL, Valve Rocker Assembly.>
10) Remove the camshaft cap.
(1) Remove the bolts (a) and (b) in alphabetical sequence.

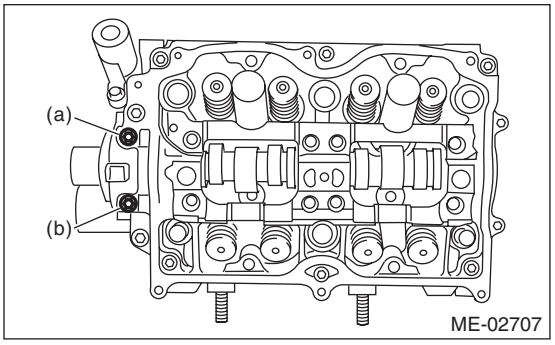

ME-02707

(2) Equally loosen the bolts (c) through (j) all the way in alphabetical sequence.

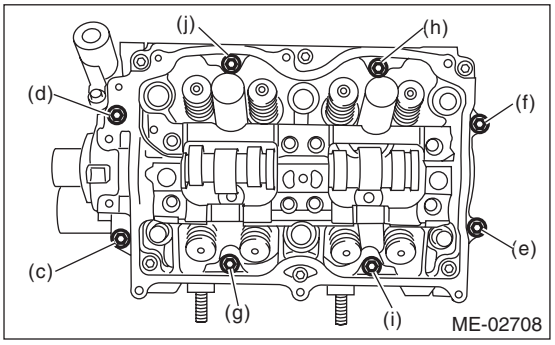

ME-02708

(3) Remove the bolts (k) through (p) in alphabetical sequence using ST.
ST 499497000 TORX® PLUS

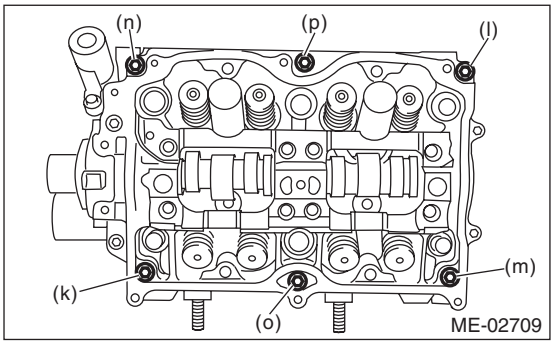

ME-02709

(4) Remove the camshaft cap.
11) Remove the camshaft.
12) Remove the oil seal.
13) Remove the plug from rear side of camshaft.

CAUTION:
Do not scratch the journal surface when removing the oil seal.
14) Similarly, remove the camshaft RH.

B: INSTALLATION

1) Apply a thin coat of engine oil to camshaft journals, and install the camshaft.
2) Install the camshaft cap.
(1) Apply liquid gasket to the mating surfaces of camshaft cap.

NOTE:
Install within 5 min. after applying liquid gasket.

Liquid gasket:
THREE BOND 1217G (Part No. K0877Y0100) or equivalent

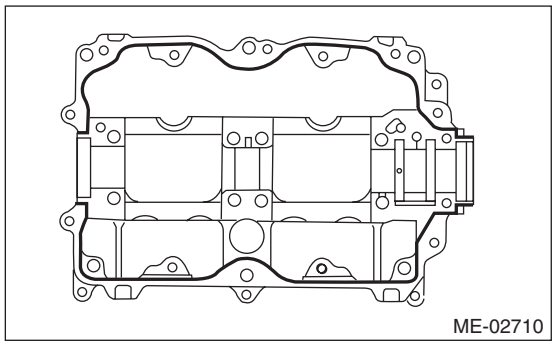

NOTE:
Apply a coat of liquid gasket of 3 mm (0.12 in) in diameter (A) along the edge (B) of camshaft cap (C) mating surface.

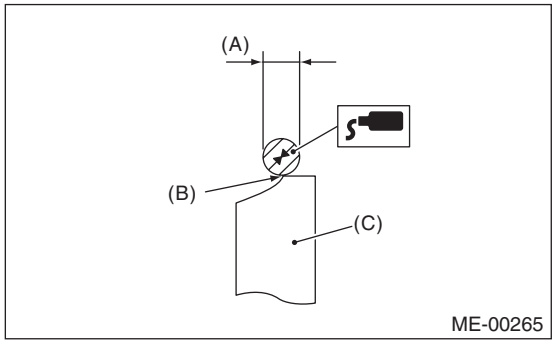

(2) Temporarily tighten the bolts (a) through (d) in alphabetical sequence.

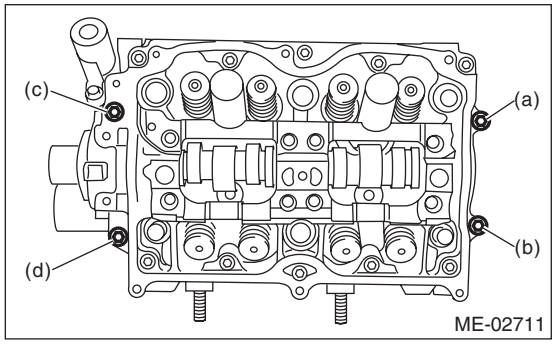

(3) Install the valve rocker assembly. <Ref. to ME(H4SO)-55, INSTALLATION, Valve Rocker Assembly.>

(4) Tighten the TORX® bolts (e) through (j) in alphabetical sequence using the ST.
ST 499497000 TORX® PLUS

Tightening torque:
18 N·m (1.8 kgf-m, 13.3 ft-lb)

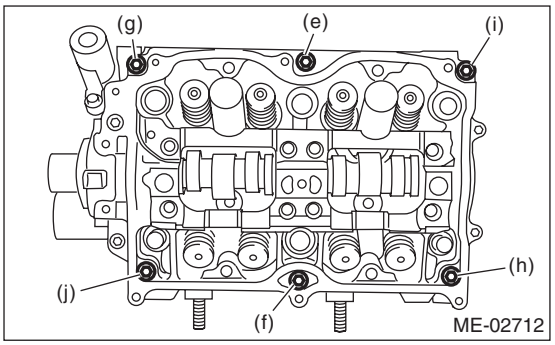

(5) Tighten the bolts (k) through (r) in alphabetical sequence.

Tightening torque:
9.75 N·m (1.0 kgf-m, 7.2 ft-lb)

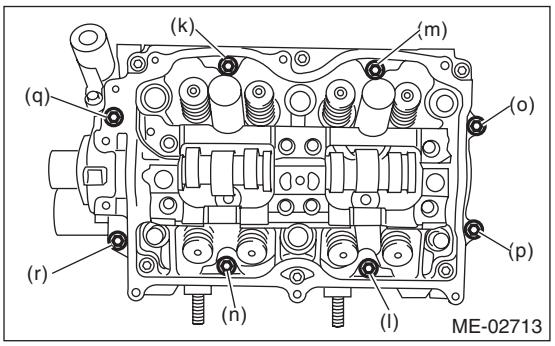

(6) Tighten the bolts (s) and (t) in alphabetical sequence.

NOTE:
- Use a new seal washer.
- Install and tighten the seal washer to the bolt.

Tightening torque:
9.75 N·m (1.0 kgf-m, 7.2 ft-lb)

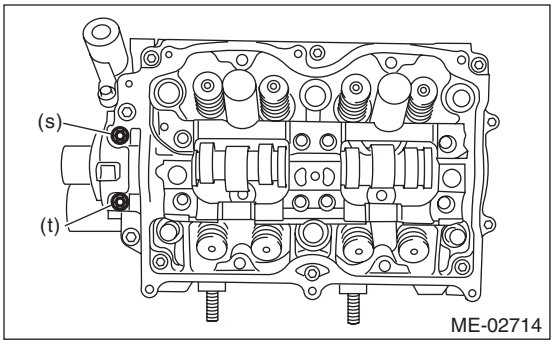

3) Apply a coat of engine oil to camshaft oil seal periphery and oil seal lips and install the oil seal (A) on camshaft using ST1 and ST2.

NOTE:
Use a new oil seal.
ST1 499597000 OIL SEAL GUIDE
ST2 499587500 OIL SEAL INSTALLER

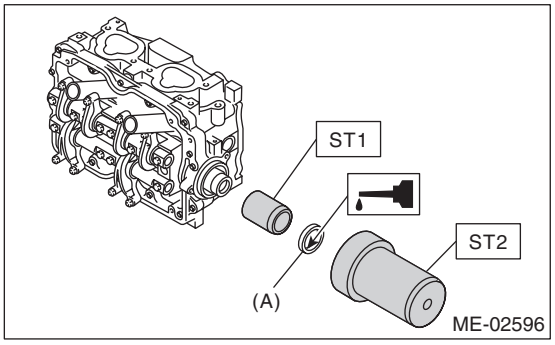

4) Apply a coat of engine oil to plug periphery and install the plug (A) using ST.
ST 499587700 CAMSHAFT OIL SEAL INSTALLER

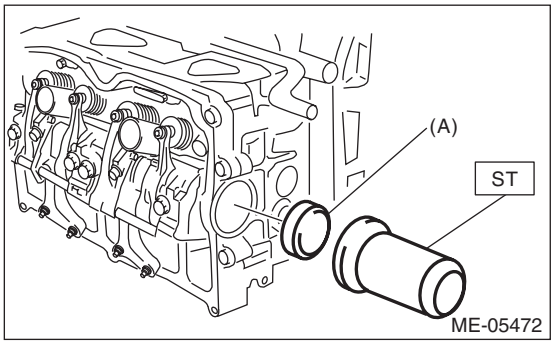

5) Install the camshaft position sensor support. (LH side only)

Tightening torque:
6.4 N·m (0.7 kgf-m, 4.7 ft-lb)

6) Similarly, install the camshaft RH.

7) Install the tensioner bracket.

Tightening torque:
24.5 N·m (2.5 kgf-m, 18.1 ft-lb)

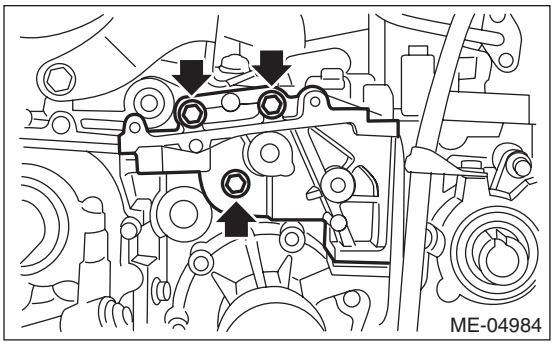

8) Install the timing belt cover No. 2 RH.

Tightening torque:
5 N·m (0.5 kgf-m, 3.7 ft-lb)

9) Install the timing belt cover No. 2 LH.

Tightening torque:
5 N·m (0.5 kgf-m, 3.7 ft-lb)

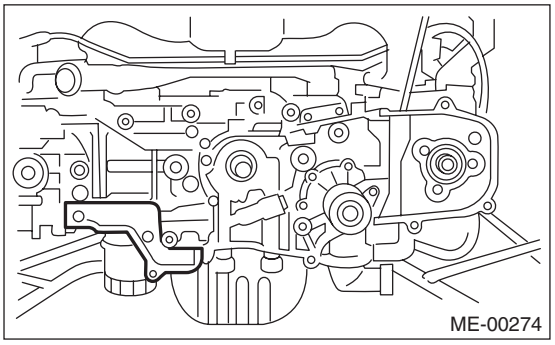

10) Install the cam sprocket. <Ref. to ME(H4SO)-53, INSTALLATION, Cam Sprocket.>
11) Install the timing belt. <Ref. to ME(H4SO)-49, INSTALLATION, Timing Belt.>
12) Adjust the valve clearance. <Ref. to ME(H4SO)-30, ADJUSTMENT, Valve Clearance.>

13) Install the rocker cover.
(1) Install the rocker cover gasket to the rocker cover.

NOTE:
Use a new rocker cover gasket.

(2) Temporarily tighten the bolts in alphabetical order shown in the figure, tighten them in two stages.

Tightening torque:
First
6.4 N·m (0.7 kgf-m, 4.7 ft-lb)
Second (only (a) and (b) are tightened)
6.4 N·m (0.7 kgf-m, 4.7 ft-lb)

- RH side

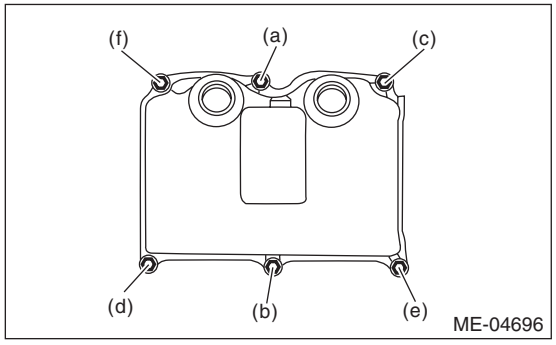

- LH side

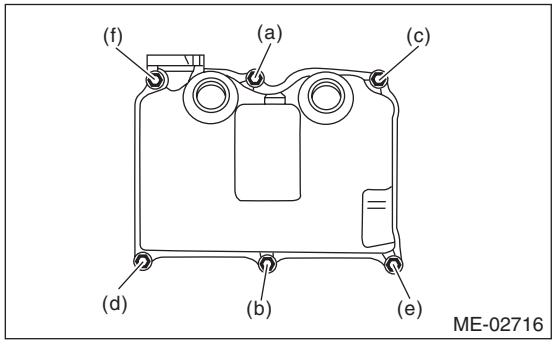

(3) Connect the PCV hose.

14) Install the timing belt cover. <Ref. to ME(H4SO)-47, INSTALLATION, Timing Belt Cover.>
15) Install the ignition coil. <Ref. to IG(H4SO)-5, INSTALLATION, Ignition Coil.>
16) Install the crank pulley. <Ref. to ME(H4SO)-45, INSTALLATION, Crank Pulley.>

C: INSPECTION

1) Measure the bend, and repair or replace if necessary.

Camshaft bend limit:
0.025 mm (0.00098 in)

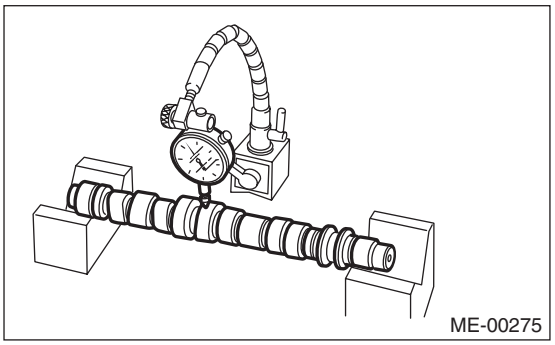

2) Check the journal for damage and wear. Replace if faulty.
3) Check the cam face condition, and remove the minor faults by grinding with oil stone. If offset wear occurs, replace it.
4) Measure the Cam height “H”, Cam base circle diameter “A”, and base circle step of adjacent intake cams (low speed and high speed). If it exceeds the standard or offset wear occurs, replace it.

Cam lobe height H:

			Unit: mm (in)
Intake	Constant	Standard	40.075 — 40.175 (1.5778 — 1.5817)
	Low speed	Standard	35.496 — 35.596 (1.3975 — 1.4014)
	High speed	Standard	40.315 — 40.415 (1.5872 — 1.5911)
Exhaust		Standard	39.289 — 39.389 (1.5468 — 1.5507)

Cam base circle diameter A:
Standard
34.00 mm (1.3386 in)

Base circle step of adjacent intake cams (low speed and high speed):
Standard
0.03 mm (0.001 in) or less

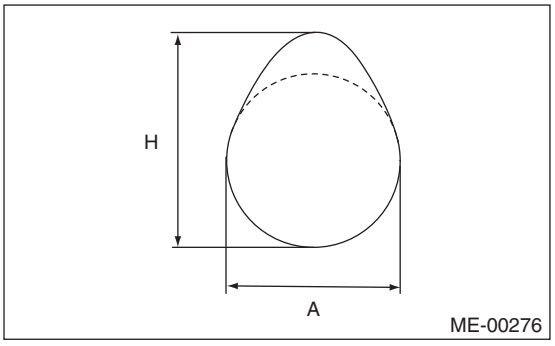

5) Measure the outer diameter of camshaft journal and inner diameter of cylinder head journal, and check the difference (oil clearance) between the two values. If the oil clearance is not within the standard, replace the camshaft or cylinder head as necessary.

		Unit: mm (in)
Oil clearance	Standard	0.055 — 0.090 (0.0022 — 0.0035)
Camshaft journal O.D.	Standard	31.928 — 31.945 (1.2570 — 1.2577)
Cylinder head journal I.D.	Standard	32.000 — 32.018 (1.2598 — 1.2605)

6) Measure the thrust clearance with setting the dial gauge at end surface of camshaft. If the thrust clearance is not within the standard or there is offset wear, replace the camshaft caps and cylinder head as a set. If necessary, replace the camshaft.

Camshaft thrust clearance:
Standard
0.030 — 0.090 mm (0.0012 — 0.0035 in)

20.Cylinder Head

A: REMOVAL

NOTE:
• When replacing a single part, perform the work with the engine assembly installed to body. Refer to "Valve Clearance" for preparation procedures. <Ref. to ME(H4SO)-29, Valve Clearance.>
• When performing the work with the engine installed to body, the following parts must also be removed/installed.
Front exhaust pipe <Ref. to EX(H4SO)-5, REMOVAL, Front Exhaust Pipe.> <Ref. to EX(H4SO)-6, INSTALLATION, Front Exhaust Pipe.>

1) Remove the intake manifold. <Ref. to FU(H4SO)-17, REMOVAL, Intake Manifold.>
2) Remove the crank pulley. <Ref. to ME(H4SO)-45, REMOVAL, Crank Pulley.>
3) Remove the timing belt cover. <Ref. to ME(H4SO)-47, REMOVAL, Timing Belt Cover.>
4) Remove the timing belt. <Ref. to ME(H4SO)-48, REMOVAL, Timing Belt.>
5) Remove the cam sprocket. <Ref. to ME(H4SO)-53, REMOVAL, Cam Sprocket.>
6) Remove the bolts which secure A/C compressor bracket to cylinder head.
7) Remove the valve rocker assembly. <Ref. to ME(H4SO)-55, REMOVAL, Valve Rocker Assembly.>
8) Remove the camshaft. <Ref. to ME(H4SO)-58, REMOVAL, Camshaft.>
9) Remove the oil level gauge guide. (LH side)
10) Remove the cylinder head bolts in alphabetical sequence as shown in the figure.

NOTE:
Leave bolts (a) and (c) engaged by three or four threads to prevent the cylinder head from falling.

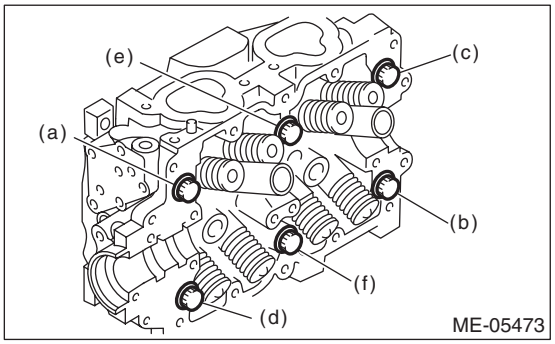

11) While tapping the cylinder head with a plastic hammer, separate it from cylinder block. Remove the bolts (a) and (c) to remove cylinder head.

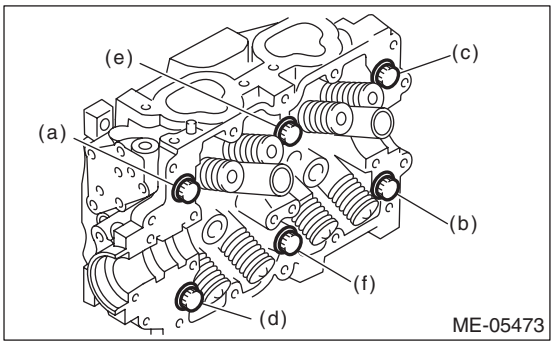

12) Remove the cylinder head gasket.

CAUTION:
Be careful not to scratch the mating surface of cylinder head and cylinder block.

13) Similarly, remove the right side cylinder head.

B: INSTALLATION

1) Install the cylinder head to the cylinder block.

CAUTION:
Be careful not to scratch the mating surface of cylinder head and cylinder block.

NOTE:
Use a new cylinder head gasket.

(1) Clean the bolt threads and the bolt holes in the cylinder block

CAUTION:
To avoid erroneous tightening of the bolts, clean out the bolt holes sufficiently by blowing with compressed air to eliminate engine coolant etc.

(2) Apply a sufficient coat of engine oil to the washer and bolt thread.
(3) Tighten all bolts to 40 N·m (4.1 kgf-m, 29.5 ft-lb) in alphabetical order.
(4) Retighten all bolts to 95 N·m (9.7 kgf-m, 70.1 ft-lb) in alphabetical order.

CAUTION:
If the bolt makes stick-slip sound during tightening, repeat the procedure from step (1). In this case, the cylinder head gasket can be reused.

(5) Loosen all the bolts by 180° in the reverse order of installing, and loosen them further by 180°.
(6) Tighten all bolts to 10 N·m (1.0 kgf-m, 7.4 ft-lb) in alphabetical order.
(7) Retighten all bolts to 30 N·m (3.1 kgf-m, 22.1 ft-lb) in alphabetical order.
(8) Retighten all bolts to 60 N·m (6.1 kgf-m, 44.3 ft-lb) in alphabetical order.

(9) Retighten all bolts by 80 — 90° in alphabetical order.
(10) Retighten all bolts by 40 — 45° in alphabetical order.

CAUTION:
The tightening angle of the bolt should not exceed 45°.

(11) Retighten bolts (a) and (b) by 40 — 45°.

CAUTION:
Make sure the total "tightening angle" of steps (10) and (11) does not exceed 90°.

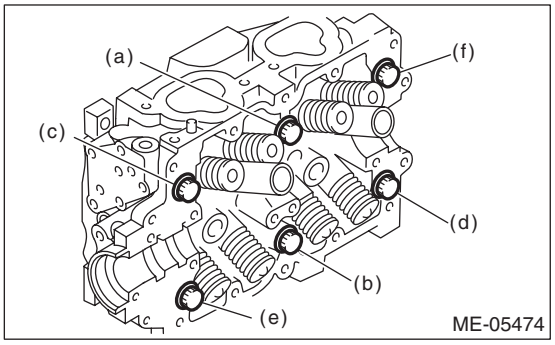

2) Similarly, install the right side cylinder head.
3) Install the oil level gauge guide. (LH side)

Tightening torque:
6.4 N·m (0.7 kgf-m, 4.7 ft-lb)

4) Install the camshaft. <Ref. to ME(H4SO)-59, INSTALLATION, Camshaft.>
5) Install the valve rocker assembly. <Ref. to ME(H4SO)-55, INSTALLATION, Valve Rocker Assembly.>
6) Install the A/C compressor bracket on cylinder head.

Tightening torque:
36 N·m (3.7 kgf-m, 26.6 ft-lb)

7) Install the cam sprocket. <Ref. to ME(H4SO)-53, INSTALLATION, Cam Sprocket.>
8) Install the timing belt. <Ref. to ME(H4SO)-49, INSTALLATION, Timing Belt.>
9) Adjust the valve clearance. <Ref. to ME(H4SO)-30, ADJUSTMENT, Valve Clearance.>
10) Install the rocker cover.
(1) Install the rocker cover gasket to the rocker cover.

NOTE:
Use a new rocker cover gasket.

(2) Temporarily tighten the bolts in alphabetical order shown in the figure, tighten them in two stages.

Tightening torque:
First
6.4 N·m (0.7 kgf-m, 4.7 ft-lb)
Second (only (a) and (b) are tightened)
6.4 N·m (0.7 kgf-m, 4.7 ft-lb)

- RH side

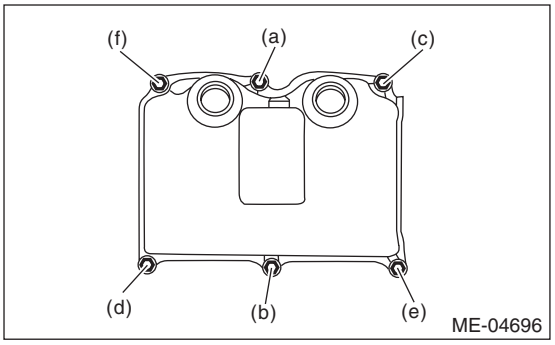

- LH side

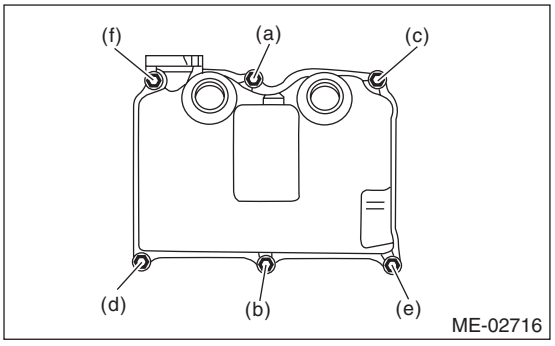

11) Install the timing belt cover. <Ref. to ME(H4SO)-47, INSTALLATION, Timing Belt Cover.>
12) Install the crank pulley. <Ref. to ME(H4SO)-45, INSTALLATION, Crank Pulley.>
13) Install the intake manifold. <Ref. to FU(H4SO)-21, INSTALLATION, Intake Manifold.>

C: DISASSEMBLY

1) Place the cylinder head on the ST.
ST 498267800 CYLINDER HEAD TABLE
2) Compress the valve spring and remove the valve spring retainer key using ST. Remove each valve and valve spring.
ST 499718000 VALVE SPRING REMOVER

NOTE:
• Keep all the removed parts in order for re-installing in their original positions.
• Mark each valve to prevent confusion.
• Pay careful attention not to damage the lips of intake valve oil seals and exhaust valve oil seals.
• For removal and installation procedures of the valve guide, intake valve oil seal and exhaust valve oil seal, refer to “INSPECTION”. <Ref. to ME(H4SO)-68, VALVE GUIDE, INSPECTION, Cylinder Head.> <Ref. to ME(H4SO)-70, INTAKE AND EXHAUST VALVE OIL SEAL, INSPECTION, Cylinder Head.>

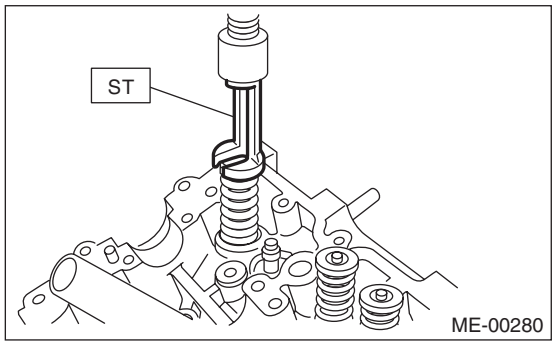

D: ASSEMBLY

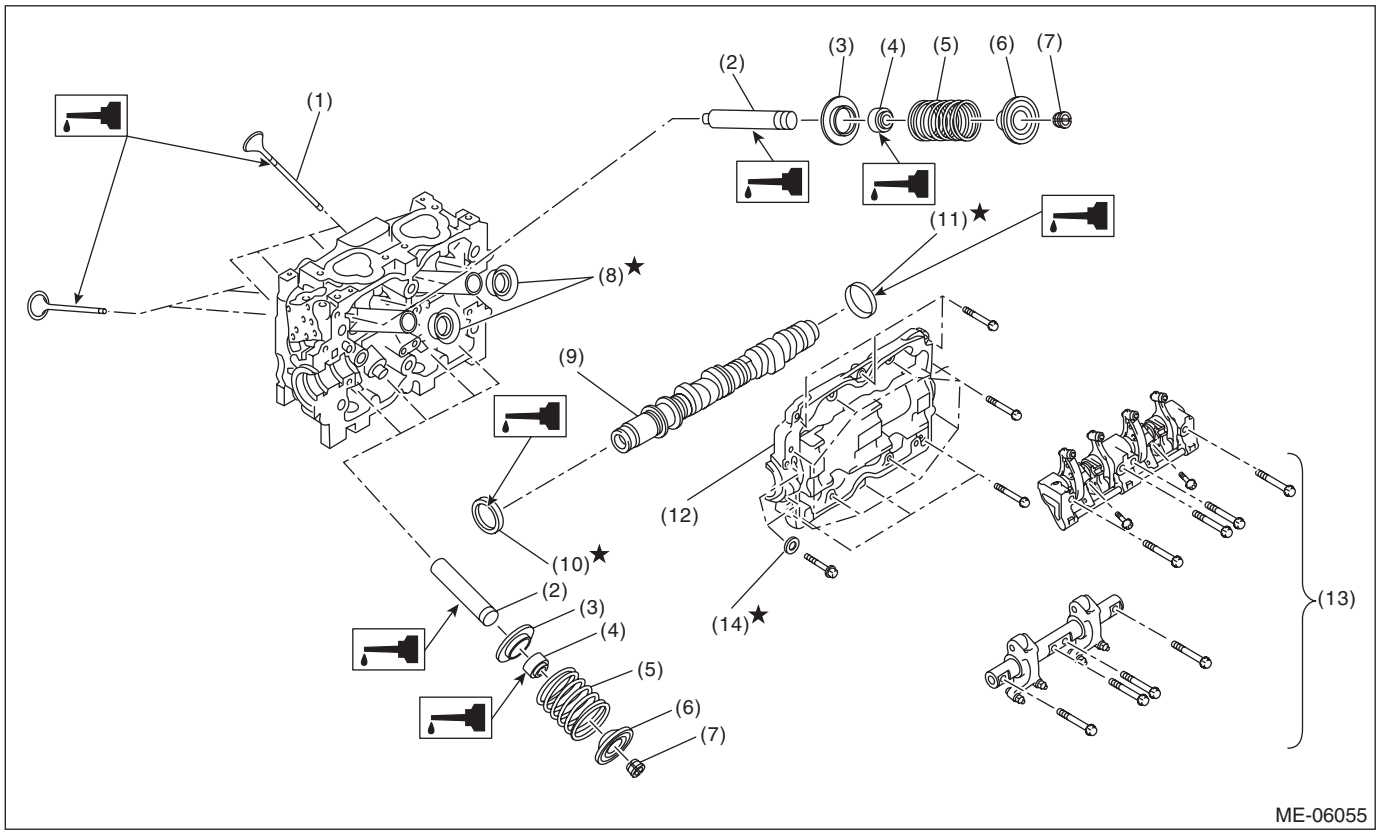

(1)	Valve	(6)	Valve spring retainer	(11)	Plug
(2)	Valve guide	(7)	Valve spring retainer key	(12)	Camshaft cap
(3)	Valve spring seat	(8)	Spark plug pipe gasket	(13)	Valve rocker ASSY
(4)	Oil seal	(9)	Camshaft	(14)	Seal washer
(5)	Valve spring	(10)	Oil seal		

1) Install the valve spring and valve.
(1) Coat the stem of each valve with engine oil and insert the valve into valve guide.

NOTE:
When inserting the valve into valve guide, use special care not to damage the oil seal lip.
(2) Set the cylinder head on ST.
ST 498267800 CYLINDER HEAD TABLE
(3) Install the valve spring and valve spring retainer.

NOTE:
Be sure to install the valve spring with its close-coiled end facing the cylinder head side.
(4) Set the ST on valve spring.
ST 499718000 VALVE SPRING REMOVER

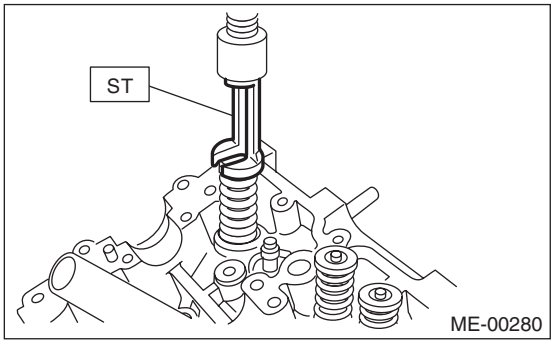

(5) Compress the valve spring and fit the valve spring retainer key.

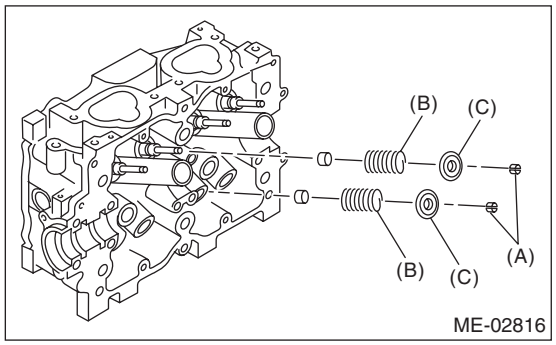

(A) Valve spring retainer key
(B) Valve spring
(C) Valve spring retainer

(6) After installing, tap the valve spring retainers lightly with a plastic hammer for better seating.

E: INSPECTION

1. CYLINDER HEAD

1) Check for cracks or damage. Use liquid penetrant tester on the important sections to check for fissures.
Check that there are no marks of gas leaking or water leaking on gasket installing surface.
2) Place the cylinder head on the ST.
ST 498267800 CYLINDER HEAD TABLE
3) Measure the warping of the cylinder head surface that mates with cylinder block using a straight edge (A) and thickness gauge (B).
If the warping exceeds the limit, correct the surface by grinding it with a surface grinder.

Warping limit:
0.035 mm (0.0014 in)

Grinding limit:
0.1 mm (0.004 in)

Standard height of cylinder head:
97.5 mm (3.84 in)

NOTE:
Uneven torque for the cylinder head bolts can cause warpage. When reassembling, pay special attention to the torque so as to tighten evenly.

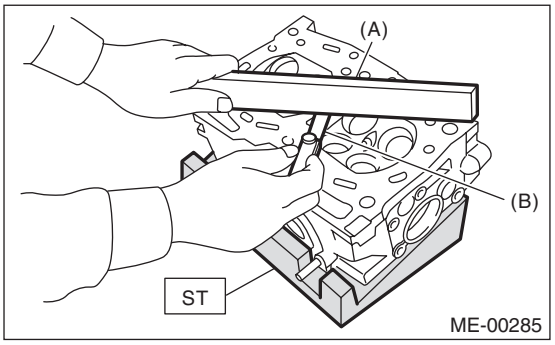

2. VALVE SEAT

Inspect the intake and exhaust valve seats, and correct the contact surfaces with a valve seat cutter if they are defective or when valve guides are replaced.

Contacting width of valve and valve seat W:

Standard
Intake (A)
0.8 — 1.4 mm (0.03 — 0.055 in)
Exhaust (B)
1.2 — 1.8 mm (0.047 — 0.071 in)

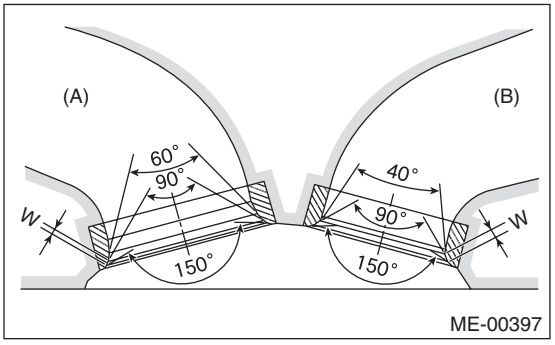

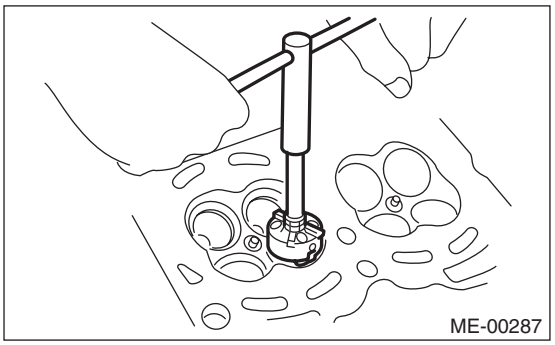

3. VALVE GUIDE

1) Check the clearance between valve guide and valve stem. The clearance can be checked by measuring respectively the outer diameter of valve stem with a micrometer and the inner diameter of valve guide with a caliper gauge.

Clearance between the valve guide and valve stem:

Standard
Intake
0.035 — 0.062 mm (0.0014 — 0.0024 in)
Exhaust
0.040 — 0.067 mm (0.0016 — 0.0026 in)

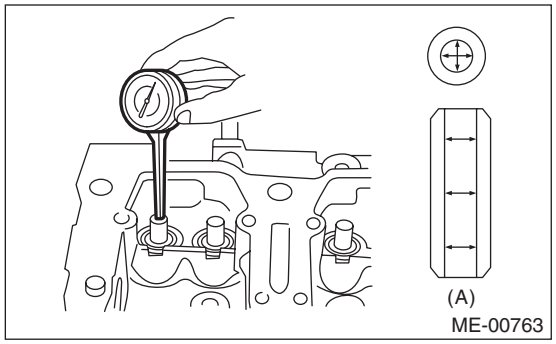

(A) Valve guide

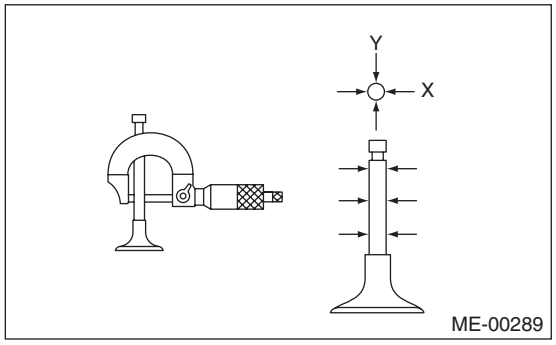

2) If the clearance between the valve guide and valve stem exceeds the standard, replace the valve guide or valve itself, whichever shows greater amount of wear or damage. See the following procedure for valve guide replacement.

Valve guide inner diameter:
6.000 — 6.012 mm (0.2362 — 0.2367 in)

Valve stem outer diameters:
Intake
5.950 — 5.965 mm (0.2343 — 0.2348 in)
Exhaust
5.945 — 5.960 mm (0.2341 — 0.2346 in)

(1) Place the cylinder head on ST1 with the combustion chamber upward so that valve guides fit the holes in ST1.

(2) Insert the ST2 into valve guide and press it down to remove the valve guide.

ST1 498267800 CYLINDER HEAD TABLE
ST2 499767200 VALVE GUIDE REMOVER

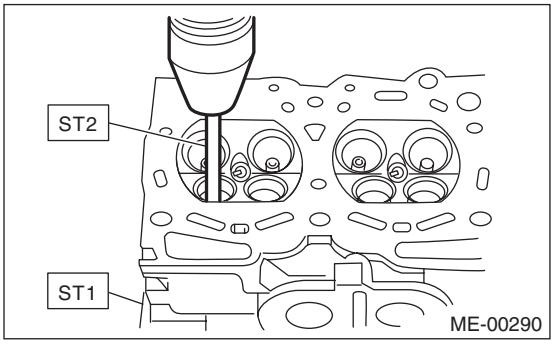

(3) Turn the cylinder head upside down and place the ST as shown in the figure.

Intake side
ST 499767700 VALVE GUIDE ADJUSTER
Exhaust side
ST 499767800 VALVE GUIDE ADJUSTER

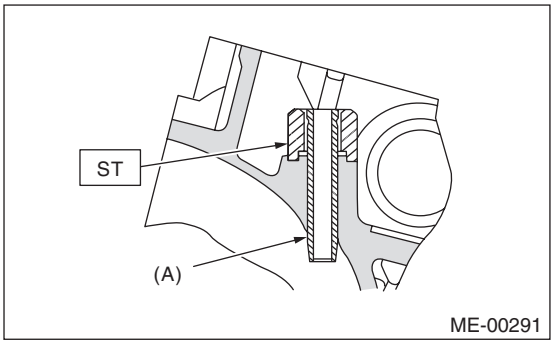

(A) Valve guide

(4) Before installing a new valve guide, make sure that neither scratches nor damages exist on the inner surface of valve guide holes in cylinder head.

(5) Put a new valve guide, coated with sufficient oil, in the cylinder head, and insert the ST1 into valve guide. Press in until the valve guide upper end is flush with the upper surface of ST2.

ST1 499767200 VALVE GUIDE REMOVER Intake side
ST2 499767700 VALVE GUIDE ADJUSTER Exhaust side
ST2 499767800 VALVE GUIDE ADJUSTER

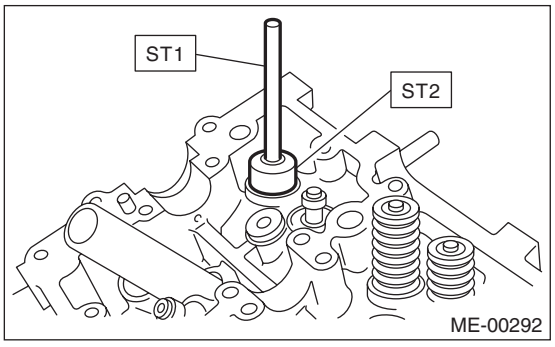

(6) Check the valve guide protrusion amount "L".

Valve guide protrusion amount L:
Intake
20.3 — 20.7 mm (0.799 — 0.815 in)
Exhaust
16.8 — 17.2 mm (0.661 — 0.677 in)

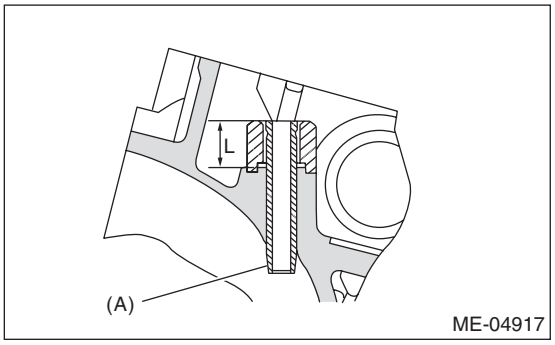

(A) Valve guide

(7) Ream the inside of valve guide using ST. Put the ST in valve guide, and rotate the ST slowly clockwise while pushing it lightly. Bring the ST back while rotating it clockwise.

NOTE:
• Apply engine oil to the ST when reaming.
• If the inner surface of valve guide is damaged, the edge of ST should be slightly ground with oil stone.
• If the inner surface of valve guide becomes lustrous and the ST does not chip, use a new ST or remedy the ST.

ST 499767400 VALVE GUIDE REAMER

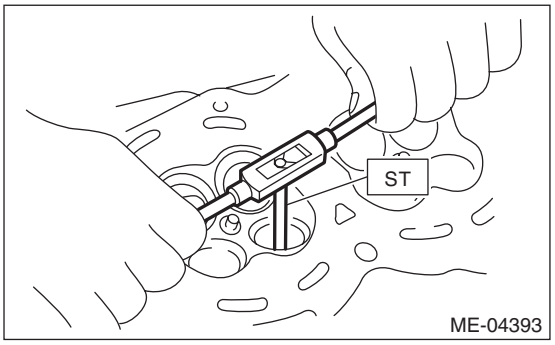

(8) After reaming, clean the valve guide to remove chips.
(9) Recheck the contact condition between valve and valve seat after replacing the valve guide.

4. INTAKE AND EXHAUST VALVE

1) Inspect the flange of valve and valve stem, and replace the valve with a new part if damaged, worn, deformed, or if dimension "H" in the figure is outside of the specified limit.

Head edge thickness H:

Intake (A)
Standard
0.8 — 1.2 mm (0.03 — 0.047 in)

Exhaust (B)
Standard
1.0 — 1.4 mm (0.039 — 0.055 in)

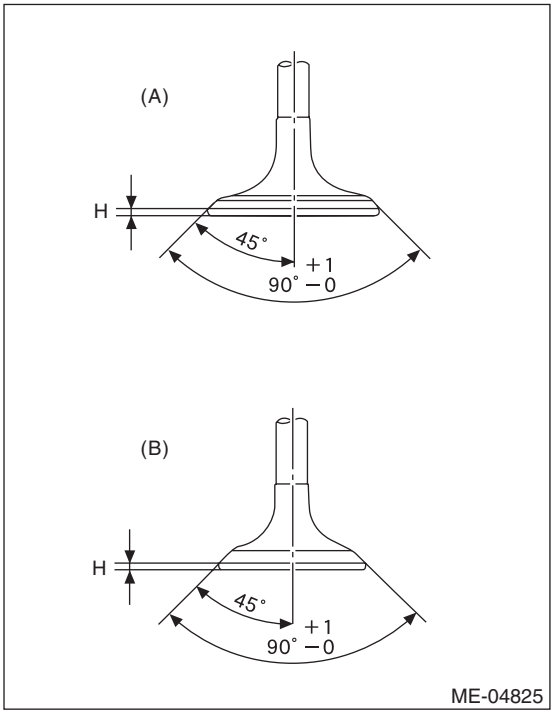

2) Put a small amount of grinding compound on the valve seat surface, and lap the valve and valve seat surface. Replace with a new valve oil seal after lapping.

NOTE:
It is possible to differentiate between the intake valve and the exhaust valve by their overall length.

Valve overall length:
Intake
120.6 mm (4.75 in)
Exhaust
121.7 mm (4.79 in)

5. VALVE SPRING

1) Check the valve springs for damage, free length, and tension. Replace the valve spring if it is not within the standard value presented in the table.
2) To measure the squareness of the valve spring, stand the valve spring on a surface plate and measure its deflection at the top of the valve spring using a try square.

Free length mm (in)		55.2 (2.173)
Tension/spring height N (kgf, lb)/mm (in)	Set	235.3 — 270.7 (24 — 27.6, 52.9 — 60.8)/45.0 (1.772)
	Lift	578.9 — 639.9 (59.1 — 65.3, 130.3 — 143.9)/ 34.7 (1.366)
Squareness		2.5°, 2.4 mm (0.094 in) or less

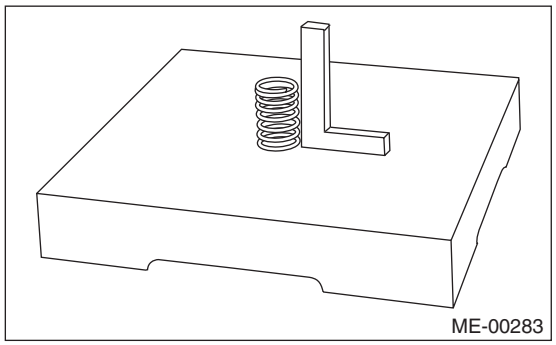

6. INTAKE AND EXHAUST VALVE OIL SEAL

1) For the following, replace the oil seal with a new part.
See the procedure 2) and subsequent for replacement procedures.
- When the lip is damaged.
- When the spring is out of the specified position.
- When readjusting the surfaces of valve and valve seat.
- When replacing the valve guide.

2) Place the cylinder head on ST1, and use ST2 to press-fit the oil seal.
ST1 498267800 CYLINDER HEAD TABLE
ST2 498857100 VALVE OIL SEAL GUIDE

NOTE:
- Apply engine oil to oil seal before press-fitting.
- When press-fitting the oil seal, do not use a hammer to strike in.
- The intake valve oil seals and exhaust valve oil seals are distinguished by their colors.

Color of rubber part:
Intake [Gray]
Exhaust [Green]

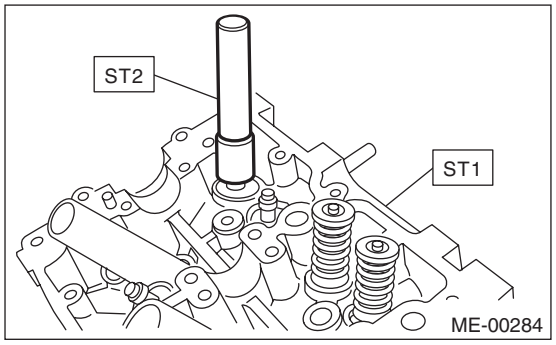

21.Cylinder Block

A: REMOVAL

NOTE:
Before conducting this procedure, drain the engine oil completely.
1) Remove the engine from the vehicle. <Ref. to ME(H4SO)-31, REMOVAL, Engine Assembly.>
2) Remove the intake manifold. <Ref. to FU(H4SO)-17, REMOVAL, Intake Manifold.>
3) Remove the crank pulley. <Ref. to ME(H4SO)-45, REMOVAL, Crank Pulley.>
4) Remove the timing belt cover. <Ref. to ME(H4SO)-47, REMOVAL, Timing Belt Cover.>
5) Remove the timing belt. <Ref. to ME(H4SO)-48, REMOVAL, Timing Belt.>
6) Remove the crank sprocket. <Ref. to ME(H4SO)-54, REMOVAL, Crank Sprocket.>
7) Remove the generator and A/C compressor with their brackets.
8) Remove the cylinder head. <Ref. to ME(H4SO)-63, REMOVAL, Cylinder Head.>
9) Remove the drive plate. (CVT model) <Ref. to CVT-133, REMOVAL, Drive Plate.>
10) Remove the clutch disc and cover. (MT model) <Ref. to CL-11, REMOVAL, Clutch Disc and Cover.>
11) Remove the flywheel. (MT model) <Ref. to CL-14, REMOVAL, Flywheel.>
12) Remove the oil separator cover.
13) Remove the water by-pass pipe for heater.
14) Remove the water pump. <Ref. to CO(H4SO)-16, REMOVAL, Water Pump.>
15) Remove the bolts which secure oil pump to cylinder block.

NOTE:
When disassembling and checking the oil pump, loosen the relief valve plug before removing the oil pump.

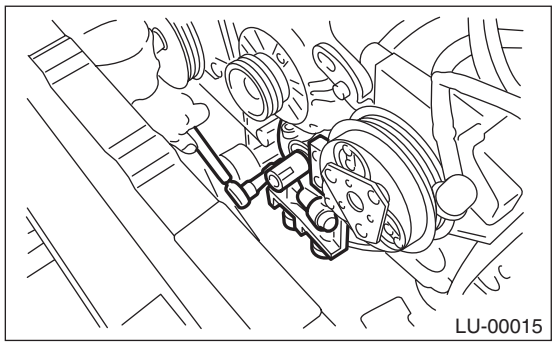
LU-00015

16) Remove the oil pump from cylinder block using a flat tip screwdriver.

CAUTION:
Be careful not to scratch the mating surface of cylinder block and oil pump.

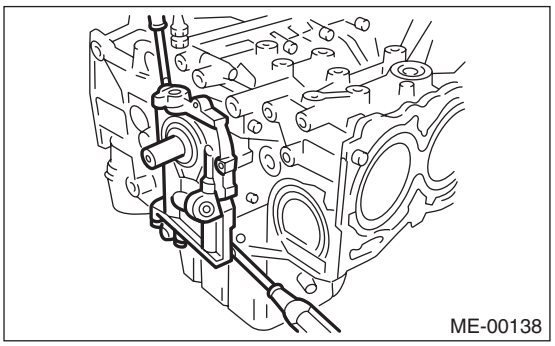
ME-00138

17) Remove the front oil seal from the oil pump.
18) Remove the clip holding the oil level switch harness from cylinder block.

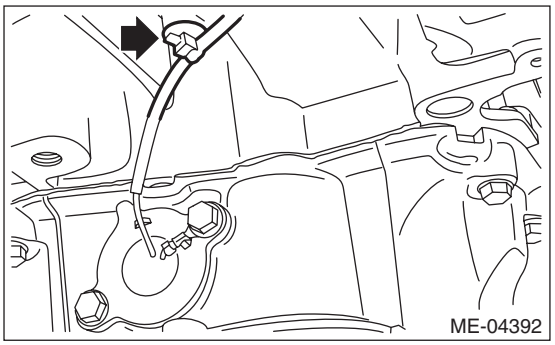
ME-04392

19) Remove the oil pan and cylinder block lower.
(1) Set the part so that the cylinder block LH is on the upper side.
(2) Remove the bolts which secure the oil pan to the cylinder block lower.
(3) Insert an oil pan cutter blade into the gap between cylinder block lower and oil pan, and remove the oil pan.

CAUTION:
Do not use a screwdriver or similar tools in place of oil pan cutter.

(4) Remove the bolts which secure the cylinder block lower to the cylinder block, and remove the cylinder block lower by using flat tip screwdriver.

CAUTION:
Insert the flat tip screwdriver to the position shown in the figure, and be careful not to damage the mating surface of the cylinder block and cylinder block lower.

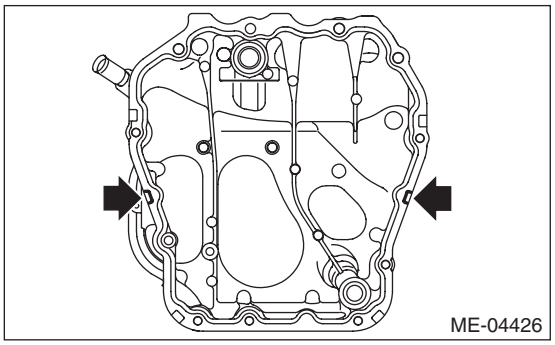

20) Remove the oil strainer.
21) Remove the baffle plate.
22) Remove the oil filter. <Ref. to LU(H4SO)-36, REMOVAL, Engine Oil Filter.>
23) Remove the water pipe assembly.

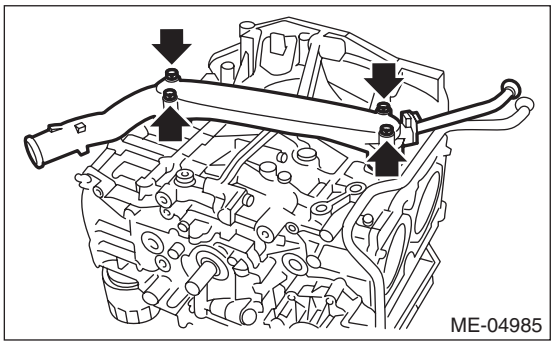

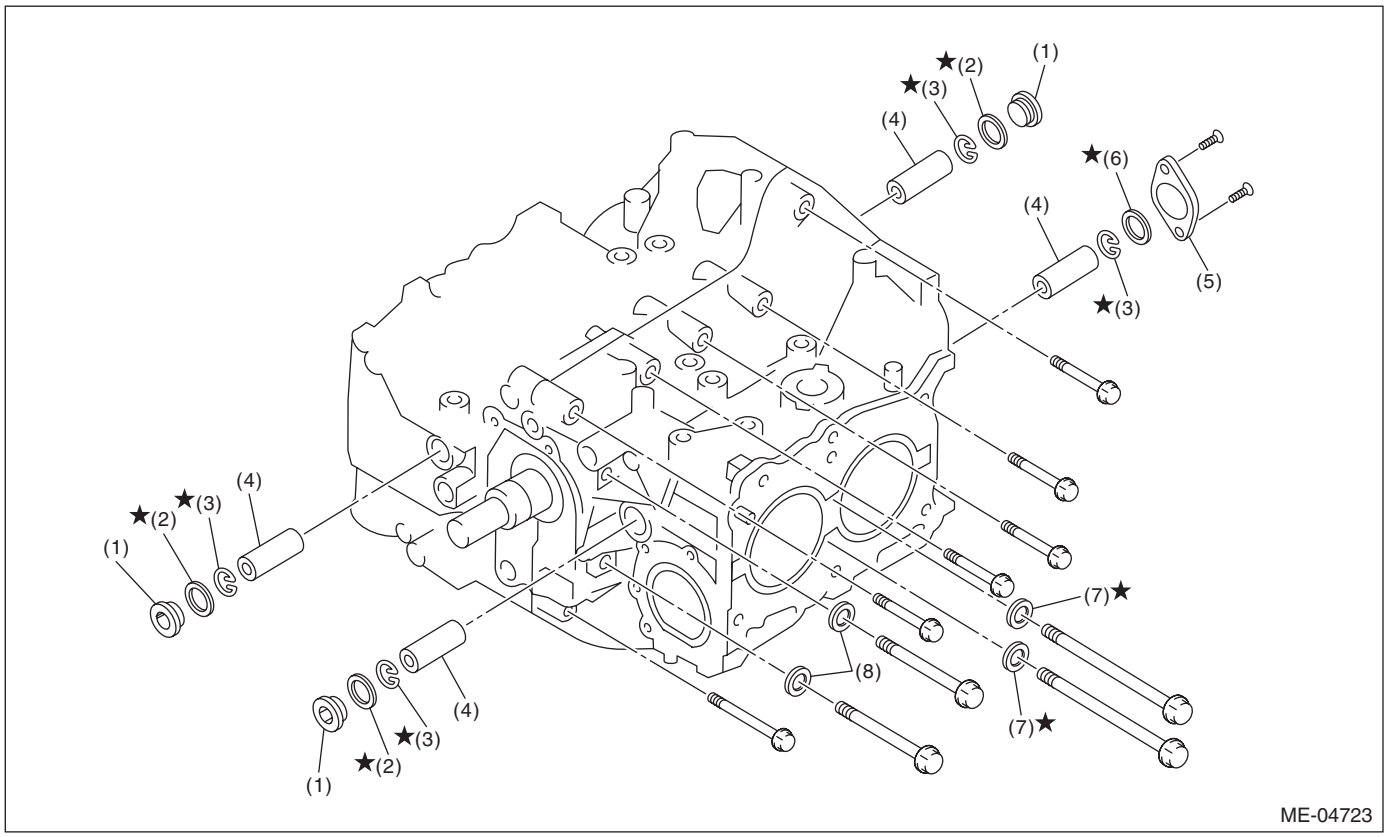

(1) Service hole plug
(2) Gasket
(3) Snap ring
(4) Piston pin
(5) Service hole cover
(6) O-ring
(7) Seal washer
(8) Washer

24) Remove the service hole plugs using a hexagon wrench [14 mm].

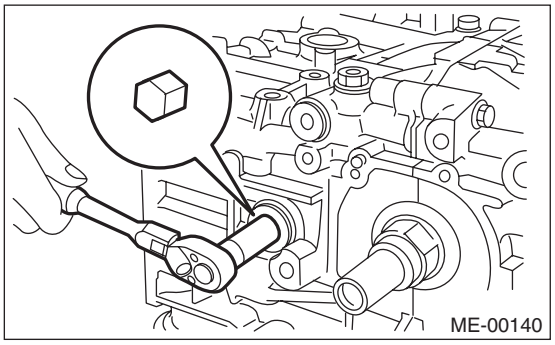

25) Remove the service hole cover.
26) Rotate the crankshaft to bring #1 and #2 pistons to bottom dead center position, then remove the piston snap ring through service hole of #1 and #2 cylinders.

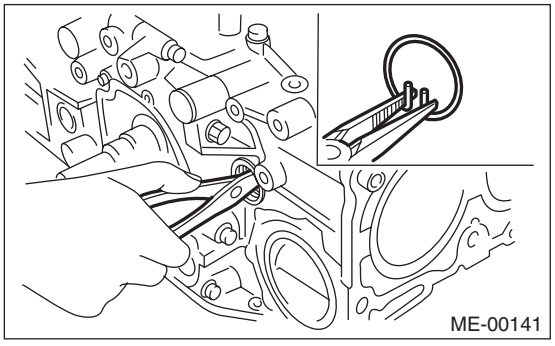

27) Draw out the piston pin from #1 and #2 pistons using ST.

ST 499097700 PISTON PIN REMOVER ASSY

NOTE:
Be careful not to confuse the original combination of piston, piston pin and cylinder.

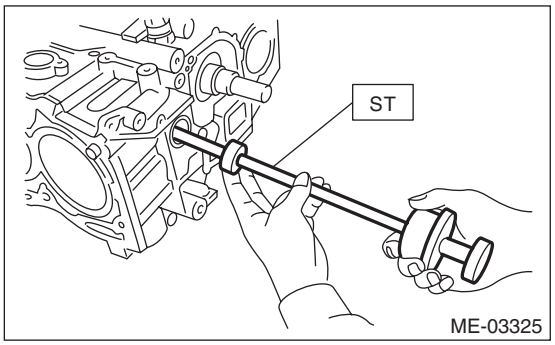

28) Similarly draw out the piston pins from #3 and #4 pistons.
29) Remove the cylinder block connecting bolt on the RH side.
30) Loosen the cylinder block connecting bolt on the LH side by 2 to 3 turns.
31) Set the part so that the cylinder block LH is on the upper side, and remove the cylinder block connecting bolt.

32) Separate the cylinder block LH and RH.

NOTE:
When separating the cylinder block, do not allow the connecting rod to fall or damage the cylinder block.

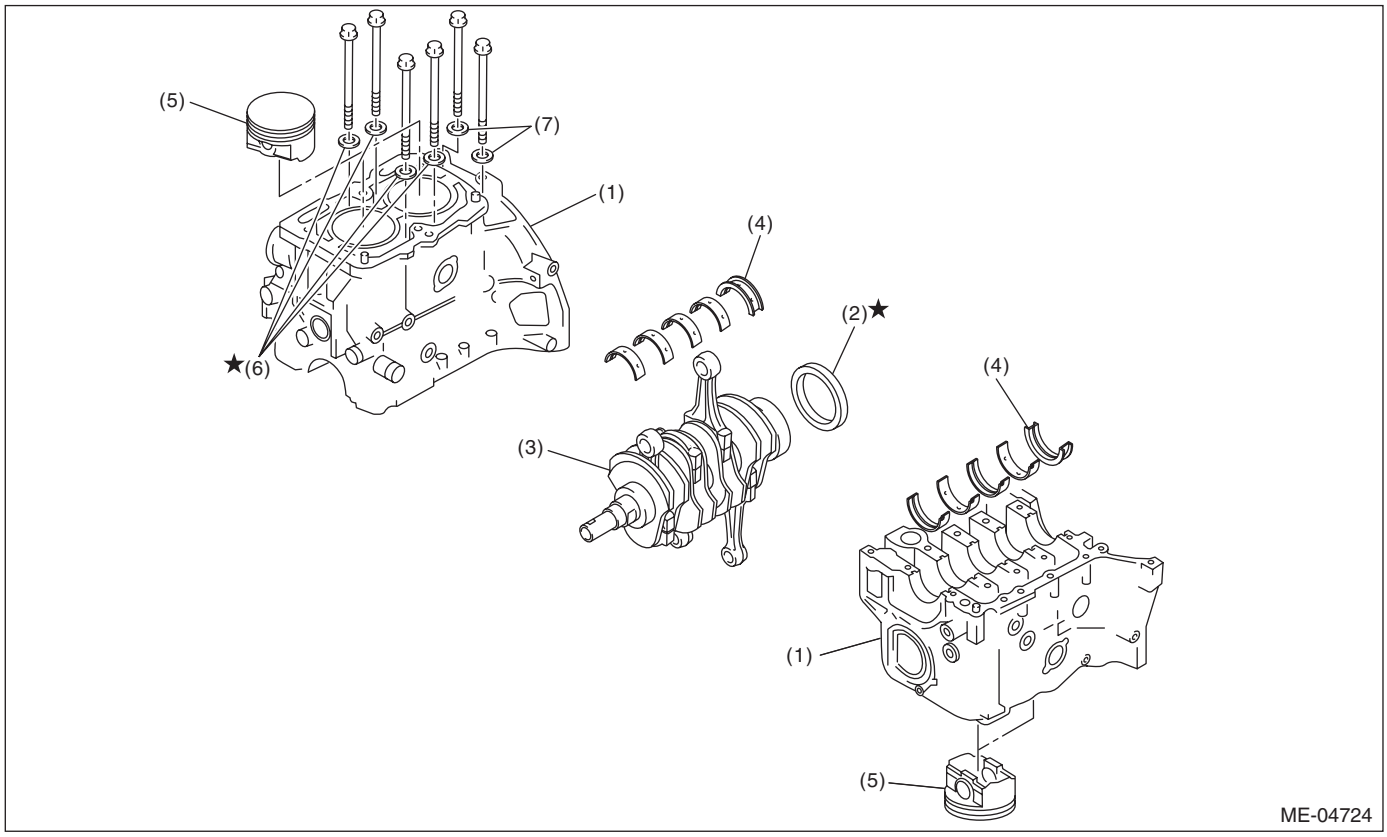

(1) Cylinder block
(2) Rear oil seal
(3) Crankshaft
(4) Crankshaft bearing
(5) Piston
(6) Seal washer
(7) Washer

33) Remove the rear oil seal.
34) Remove the crankshaft along with the connecting rods.
35) Remove the crankshaft bearings from cylinder block using a hammer handle.

NOTE:
• Press the crankshaft bearing at the end opposite to locking lip to remove.
• Be careful not to confuse the crankshaft bearing combination.

36) Remove each piston from the cylinder block using a wooden bar or hammer handle.

NOTE:
Be careful not to confuse the original combination of piston and cylinder.

B: INSTALLATION

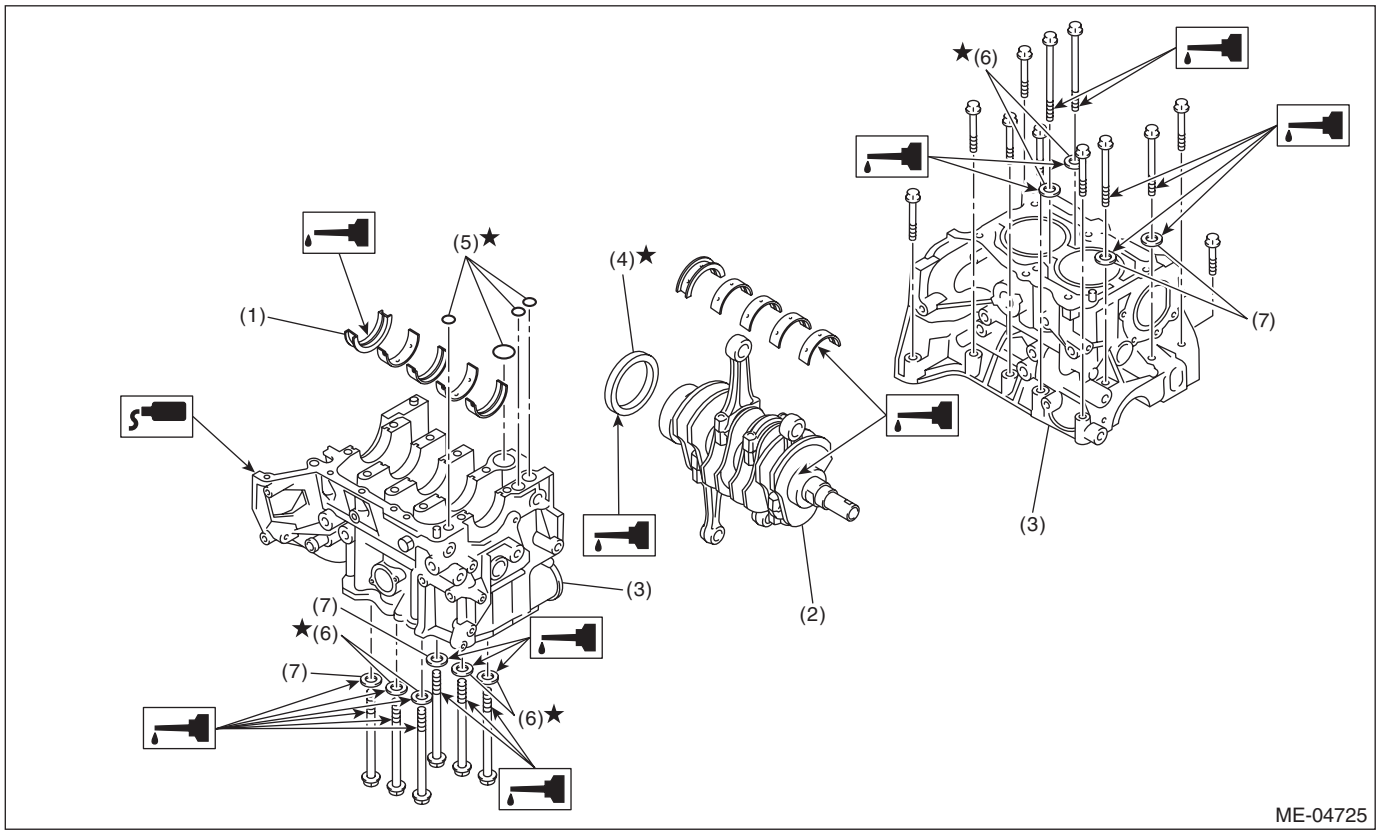

(1) Crankshaft bearing
(2) Crankshaft
(3) Cylinder block
(4) Rear oil seal
(5) O-ring
(6) Seal washer
(7) Washer

1) Remove oil on the mating surface of cylinder block before installation. Apply a coat of engine oil to the bearing and crankshaft journal.
2) Position the crankshaft and O-ring on cylinder block RH.

NOTE:
Use new O-rings.
3) Apply liquid gasket to the mating surfaces of cylinder block RH, and position cylinder block LH.

NOTE:
- Install within 5 min. after applying liquid gasket.
- Do not allow liquid gasket to jut into O-ring grooves, oil passages, bearing grooves, etc.

Liquid gasket:
THREE BOND 1217G (Part No. K0877Y0100) or equivalent

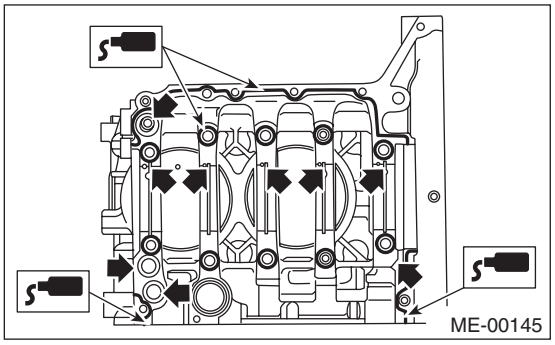

4) Apply a coat of engine oil to the washer and bolt thread.

NOTE:
Use a new seal washer.

5) Tighten the 10 mm cylinder block connecting bolts on the LH side (A — D) in alphabetical order.

Tightening torque:
10 N·m (1.0 kgf-m, 7.4 ft-lb)

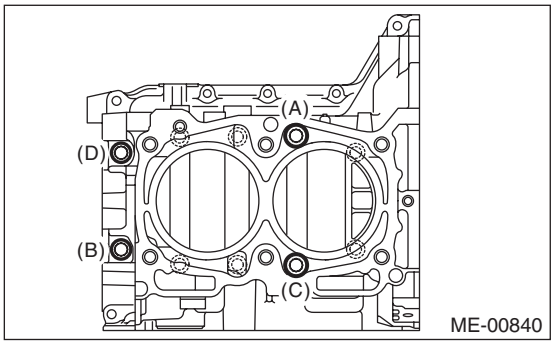

6) Tighten the 10 mm cylinder block connecting bolts on the RH side (E — J) in alphabetical order.

Tightening torque:
10 N·m (1.0 kgf-m, 7.4 ft-lb)

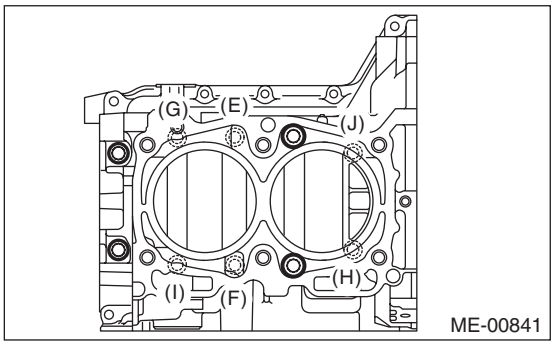

7) Tighten the LH side cylinder block connecting bolts (A — D) further in alphabetical order.

Tightening torque:
18 N·m (1.8 kgf-m, 13.3 ft-lb)

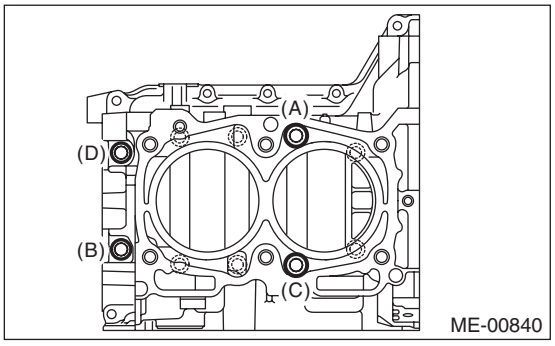

8) Tighten the RH side cylinder block connecting bolts (E — J) further in alphabetical order.

Tightening torque:
18 N·m (1.8 kgf-m, 13.3 ft-lb)

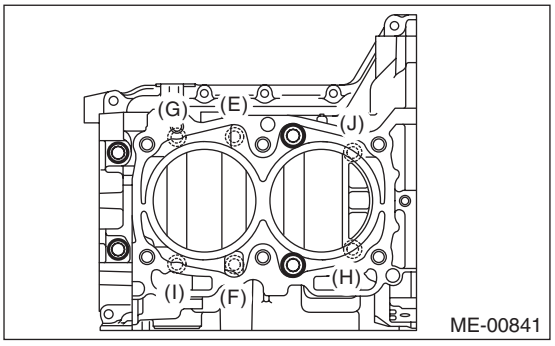

9) Tighten the LH side cylinder block connecting bolts (A — D) further in alphabetical order.

- (A), (C): Angle tightening

Tightening angle:
90°

- (B), (D): Torque tightening

Tightening torque:
40 N·m (4.1 kgf-m, 29.5 ft-lb)

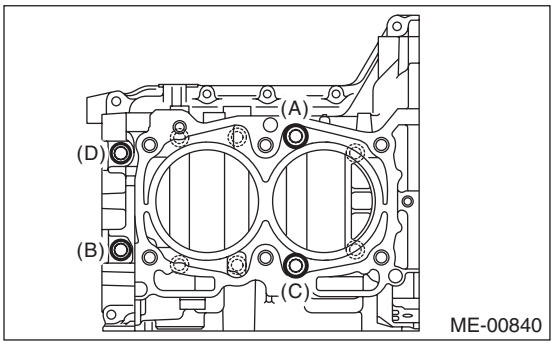

10) Tighten the RH side cylinder block connecting bolts (E — J) further in alphabetical order.

Tightening angle:
90°

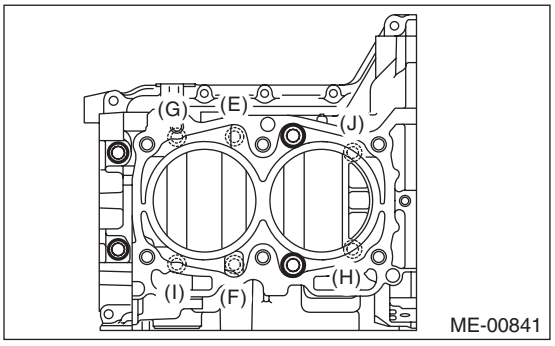

11) Tighten the 8 mm and 6 mm cylinder block connecting bolts on the LH side (A — H) in alphabetical order.

Tightening torque:
(A) — (G): 25 N·m (2.5 kgf-m, 18.4 ft-lb)
(H): 6.4 N·m (0.7 kgf-m, 4.7 ft-lb)

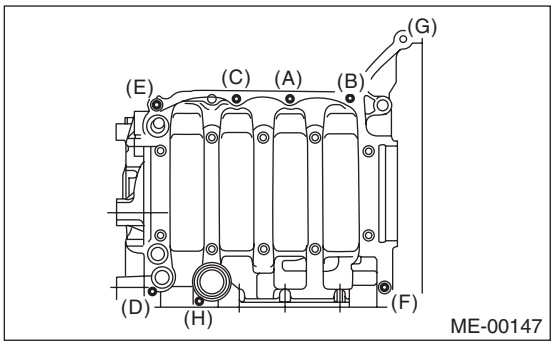

12) Apply a coat of engine oil to the oil seal inner periphery and outer periphery, and install the rear oil seal using ST1 and ST2.

NOTE:
Use a new rear oil seal.

ST1	499597100	CRANKSHAFT OIL SEAL GUIDE
ST2	499587200	CRANKSHAFT OIL SEAL INSTALLER

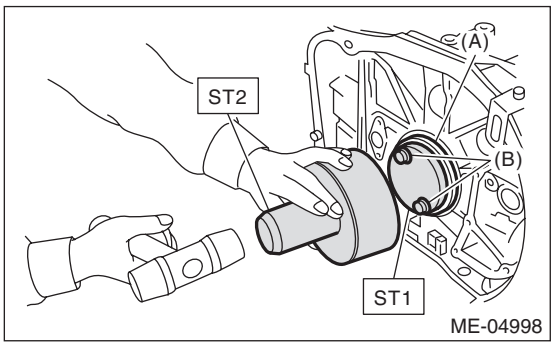

(A) Rear oil seal
(B) Mounting bolts for drive plate or flywheel

13) Position the top ring gap at (A) or (B) in the figure.
14) Position the second ring gap at 180° on the reverse side the top ring gap.

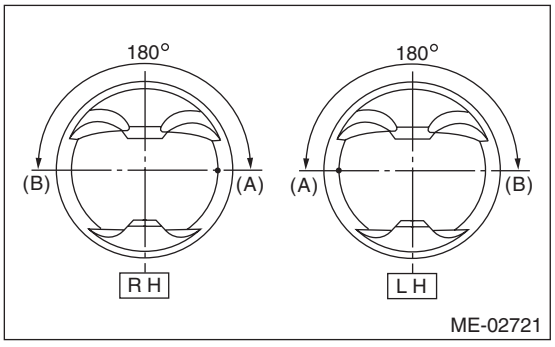

15) Position the upper rail gap at (C) in the figure.

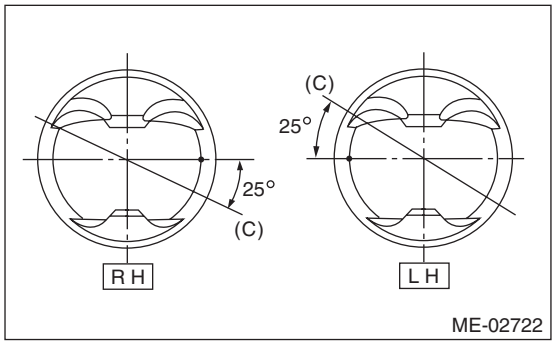

16) Align the upper rail spin stopper (E) to the side hole (D) on the piston.

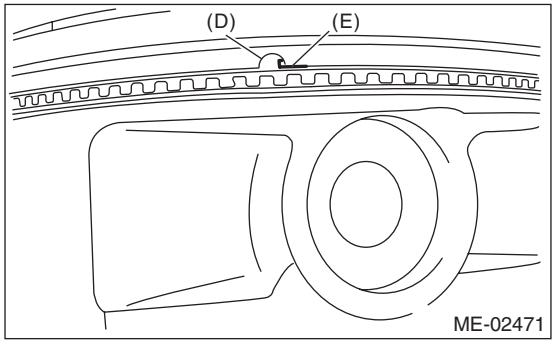

17) Position the expander gap at (F) in the figure on the 180° opposite direction of (C).

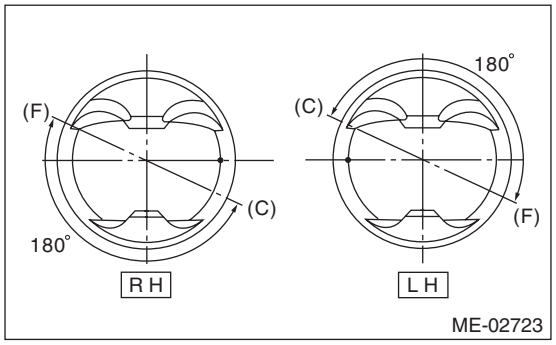

18) Set the lower rail gap at position (G), located 120° clockwise from (C) in the figure.

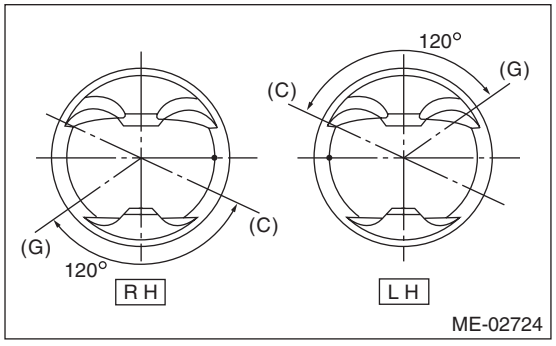

NOTE:
• Make sure ring gaps do not face the same direction.
• Make sure ring gaps are not within the piston skirt area.

19) Install the snap ring.
Before positioning the piston on the cylinder block, attach the snap ring in the service hole of the cylinder block, and the piston hole on the opposite side.

NOTE:
Use new snap rings.

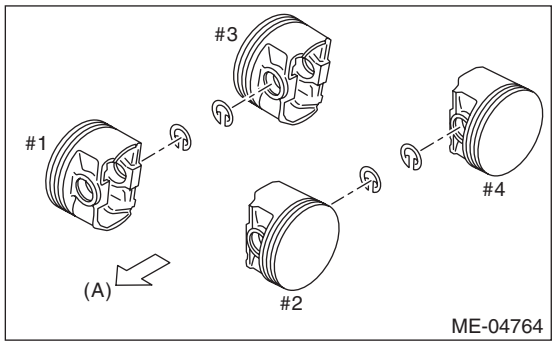

(A) Front side

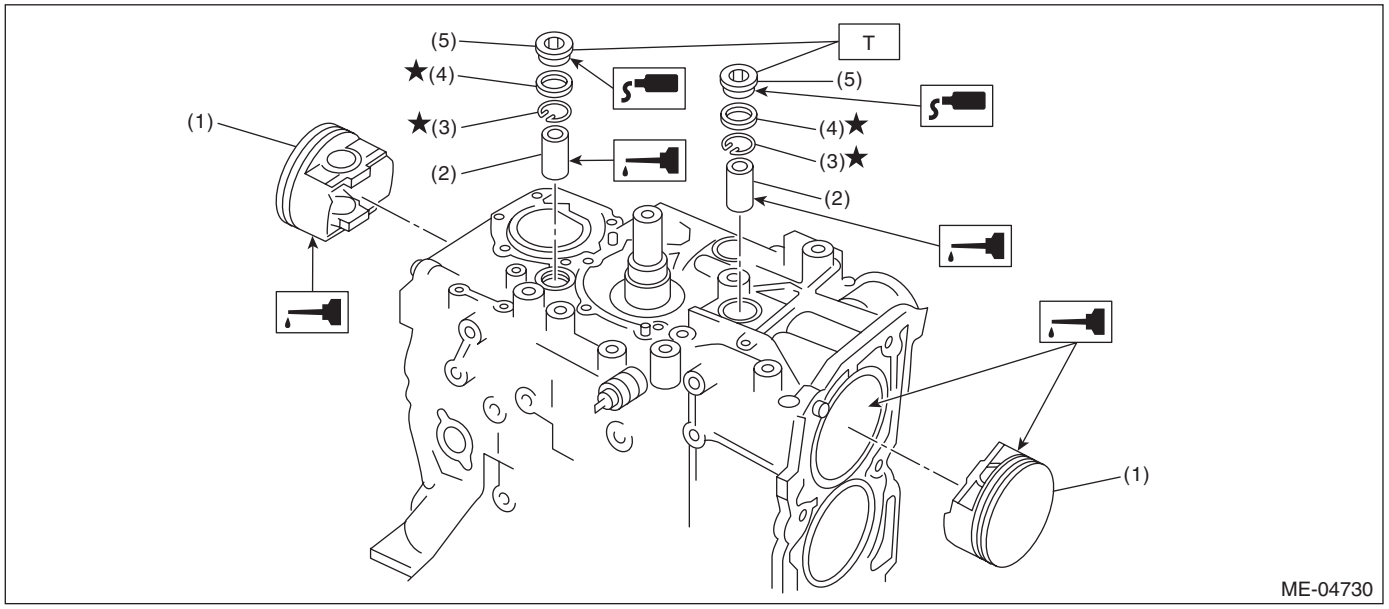

(1) Piston
(2) Piston pin
(3) Snap ring
(4) Gasket
(5) Service hole plug

Tightening torque:N·m (kgf-m, ft-lb)
T: 70 (7.1, 51.6)

20) Install the piston.
(1) Set the parts so that the #1 and #2 cylinders are on the upper side.
(2) Using the ST1, turn the crankshaft so that #1 and #2 connecting rods are set at bottom dead center.

ST1 499987500 CRANKSHAFT SOCKET

(3) Apply a coat of engine oil to the pistons and cylinders and insert pistons in their cylinders using ST2.

ST2 498747300 PISTON GUIDE

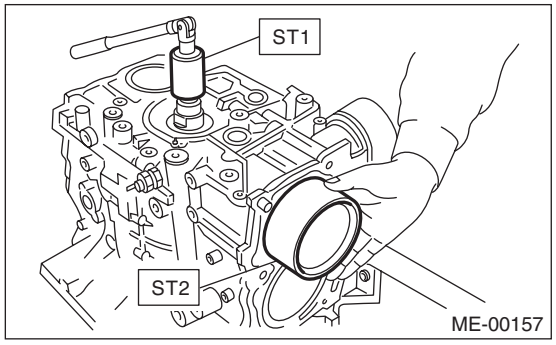

NOTE:
Face the piston front mark towards the front of the engine.

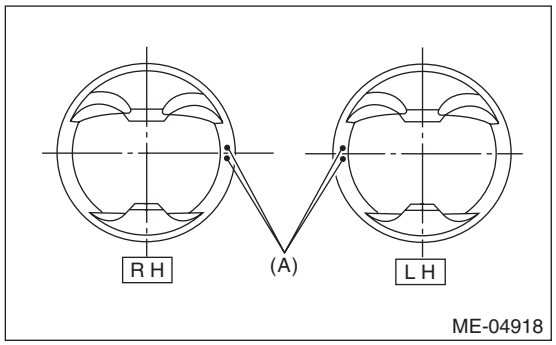

(A) Front mark

21) Install the piston pin.
(1) Apply a coat of engine oil to ST3.
(2) Insert ST3 into the service hole to align piston pin hole with connecting rod small end.

ST3 499017100 PISTON PIN GUIDE

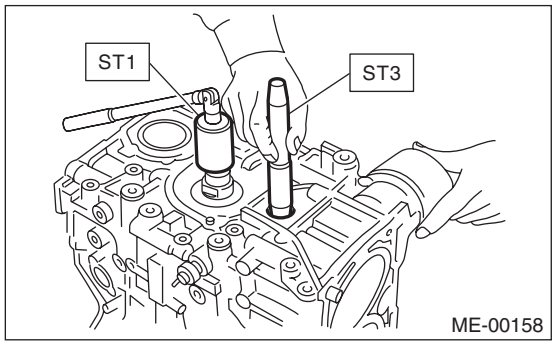

(3) Apply a thin coat of engine oil to piston pin, and insert the piston pin into piston and connecting rod through service hole.
(4) Install the snap ring.

NOTE:
Use new snap rings.

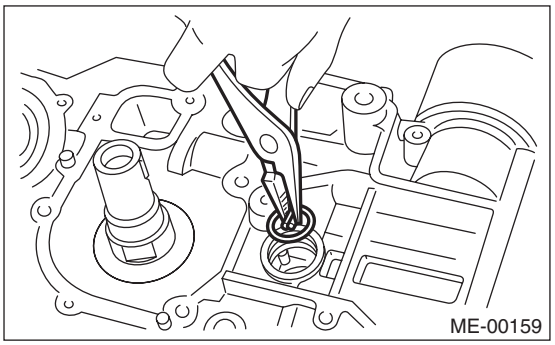

(5) Apply liquid gasket to the threaded portion of the service hole plug.

Liquid gasket:
THREE BOND 1105 (Part No. 004403010) or equivalent

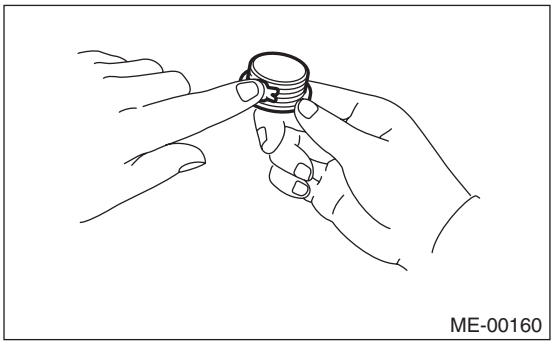

(6) Install the service hole plug and gasket.

NOTE:
Use a new gasket.

Tightening torque:
70 N·m (7.1 kgf-m, 51.6 ft-lb)

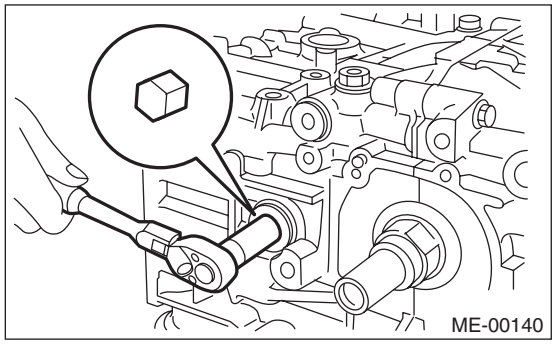

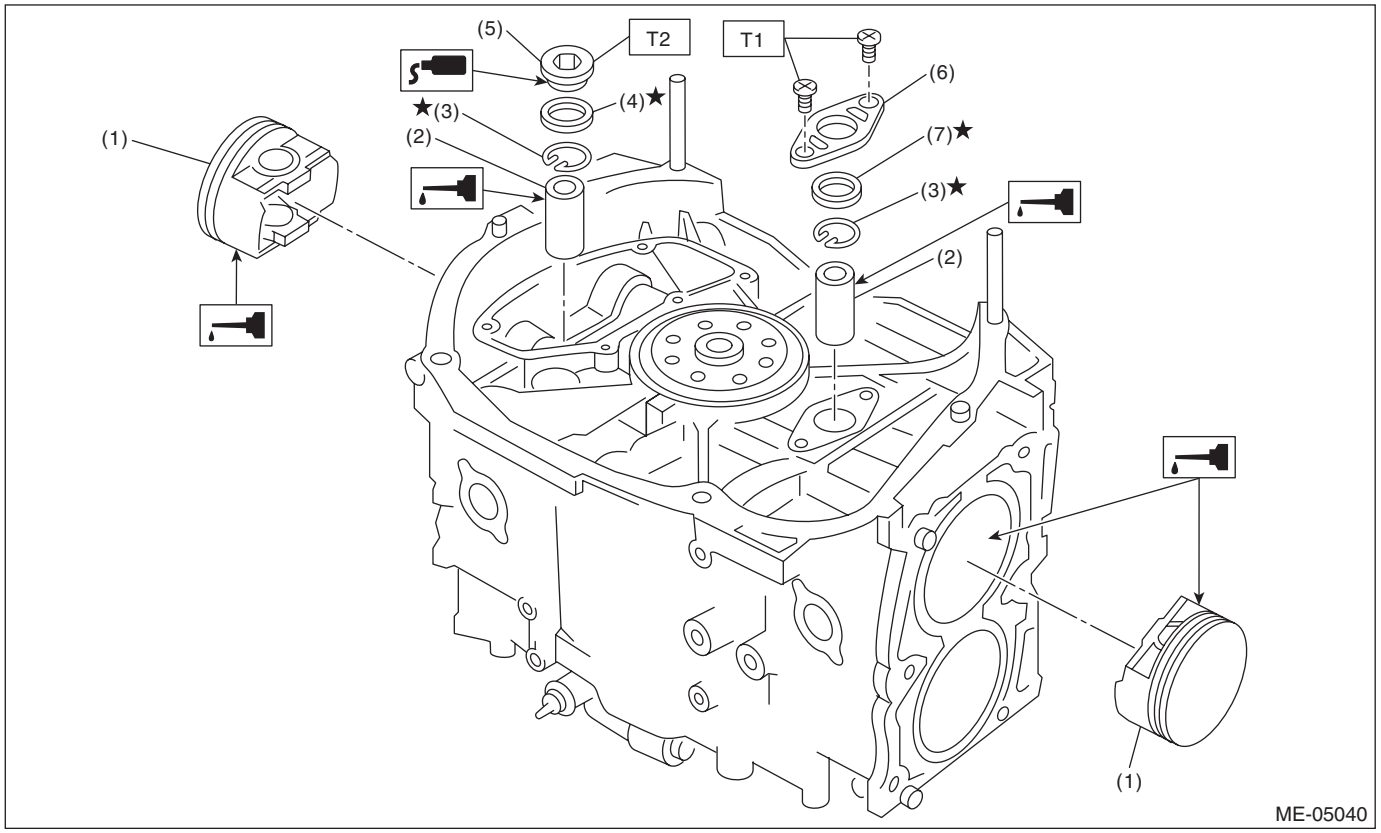

(1) Piston
(2) Piston pin
(3) Snap ring
(4) Gasket
(5) Service hole plug
(6) Service hole cover
(7) O-ring

Tightening torque:N·m (kgf-m, ft-lb)
T1: 6.4 (0.7, 4.7)
T2: 70 (7.1, 51.6)

(7) Set the parts so that the #3 and #4 cylinders are on the upper side. Following the same procedures as used for #1 and #2 cylinders, install the pistons and piston pins.
(8) Install the service hole cover.

NOTE:
Use new O-rings.

Tightening torque:
6.4 N·m (0.7 kgf-m, 4.7 ft-lb)

22) Install the water pipe assembly.

NOTE:
Use new O-rings.

Tightening torque:
6.4 N·m (0.7 kgf-m, 4.7 ft-lb)

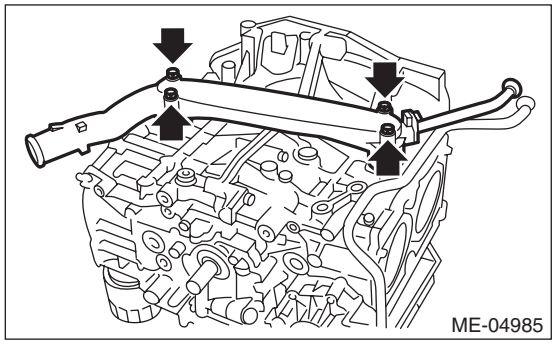

23) Install the baffle plate.

NOTE:
- Use a new seal.
- Make sure that the seals (A) are installed securely on the baffle plate in a direction as shown in the figure below.

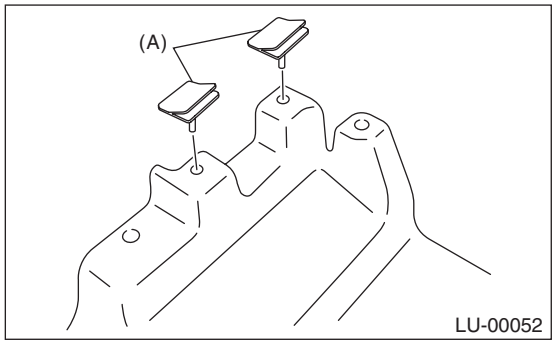

Tightening torque:
6.4 N·m (0.7 kgf-m, 4.7 ft-lb)

24) Apply liquid gasket to the mating surfaces of cylinder block lower, and install the cylinder block lower.

CAUTION:
Be careful not to apply any liquid gasket to the O-ring attachment section.

NOTE:
- Use new O-rings.
- Before installing the cylinder block lower, clean the mating surface of cylinder block lower and cylinder block.
- Install within 5 min. after applying liquid gasket.

Liquid gasket:
THREE BOND 1217G (Part No. K0877Y0100) or equivalent

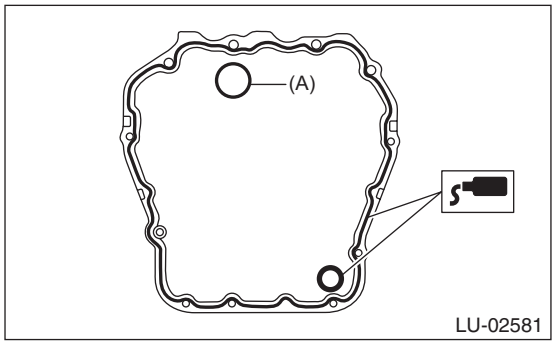

(A) O-ring

Tightening torque:
T1: 6.4 N·m (0.7 kgf-m, 4.7 ft-lb)
T2: 16 N·m (1.6 kgf-m, 11.8 ft-lb)

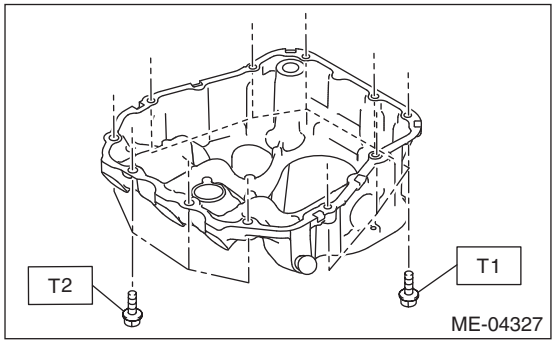

25) Apply liquid gasket to the mating surfaces of oil pan, and install the oil pan.

NOTE:
• Before installing the oil pan, clean the mating surface of oil pan and cylinder block.
• Install within 5 min. after applying liquid gasket.

Liquid gasket:
THREE BOND 1217G (Part No. K0877Y0100) or equivalent

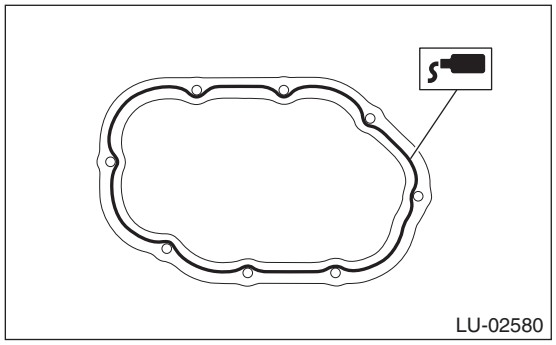

Tightening torque:
5 N·m (0.5 kgf-m, 3.7 ft-lb)

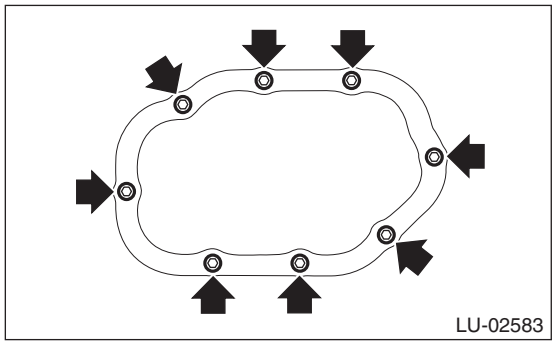

26) Secure the oil level switch harness to the cylinder block with clip.

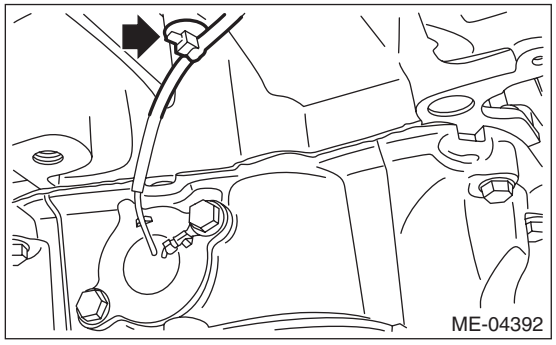

27) Apply liquid gasket to the mating surfaces of the oil separator cover and the threaded portion of bolt (A) shown in the figure (when reusing the bolt), and then install the oil separator cover.

NOTE:
• Install within 5 min. after applying liquid gasket.
• Use new oil separator cover.

Liquid gasket:
• Mating surface
THREE BOND 1217G (Part No. K0877Y0100) or equivalent
• (A) bolt thread (when reusing bolts)
THREE BOND 1324 (Part No. 004403042) or equivalent

Tightening torque:
6.4 N·m (0.7 kgf-m, 4.7 ft-lb)

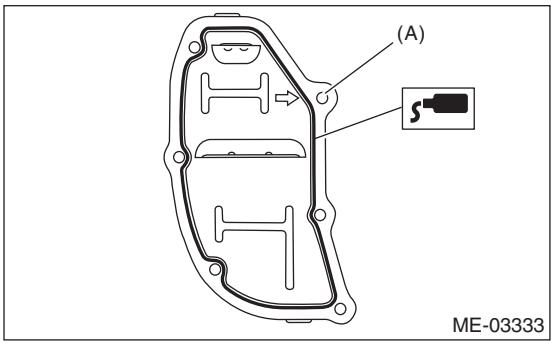

28) Install the drive plate. (CVT model) <Ref. to CVT-133, INSTALLATION, Drive Plate.>
29) Install the flywheel. (MT model) <Ref. to CL-14, INSTALLATION, Flywheel.>
30) Install the clutch disc and cover. (MT model) <Ref. to CL-11, INSTALLATION, Clutch Disc and Cover.>
31) Install the oil pump.
(1) Using the ST, install the front oil seal.
ST 499587100 OIL SEAL INSTALLER

NOTE:
Use a new front oil seal.

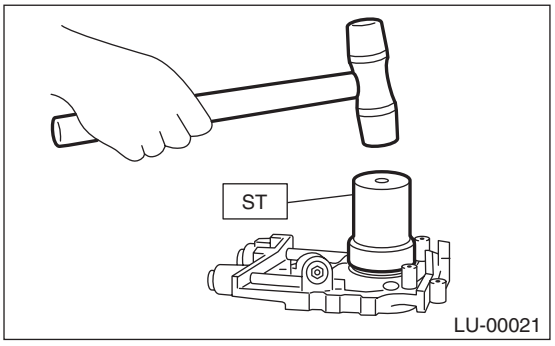

(2) Apply liquid gasket to the mating surfaces of oil pump.

NOTE:
Install within 5 min. after applying liquid gasket.

Liquid gasket:
THREE BOND 1217G (Part No. K0877Y0100) or equivalent

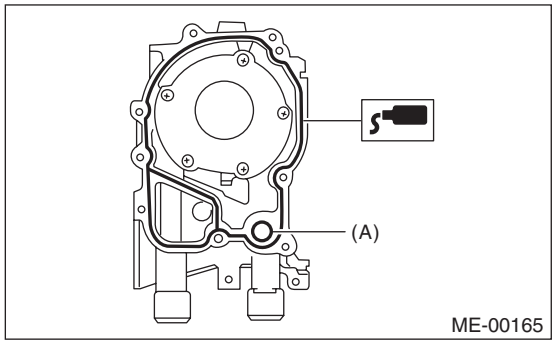

(A) O-ring

(3) Apply a thin coat of engine oil to the inside of front oil seal.

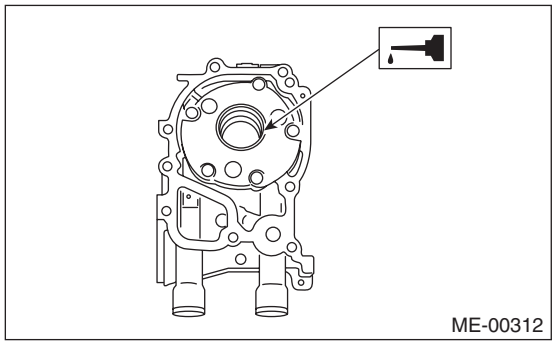

(4) Install the oil pump to cylinder block.

CAUTION:
• Be careful not to damage the front oil seal during installation.
• Make sure the front oil seal lip is not folded.

NOTE:
• Align the flat surface of oil pump's inner rotor with that of crankshaft before installation.
• Use new O-rings.
• Do not forget to assemble O-rings.

(5) Apply liquid gasket to the three bolts thread shown in figure. (when reusing bolts)

Liquid gasket:
THREE BOND 1324 (Part No. 004403042) or equivalent

Tightening torque:
6.4 N·m (0.7 kgf-m, 4.7 ft-lb)

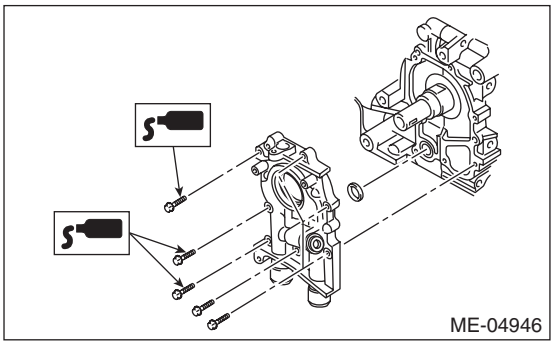

32) Install the water pump and gasket.

NOTE:
• When installing the water pump, tighten bolts in two stages in alphabetical order as shown in the figure.
• Use a new gasket.

Tightening torque:
First: 12 N·m (1.2 kgf-m, 8.9 ft-lb)
Second: 12 N·m (1.2 kgf-m, 8.9 ft-lb)

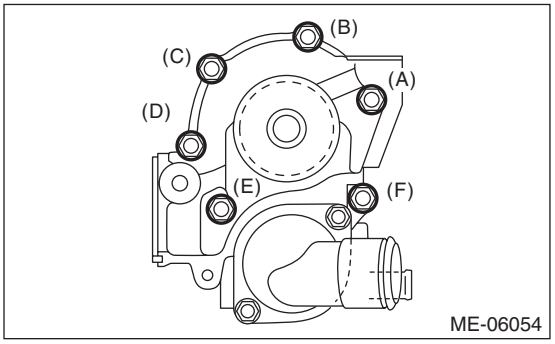

33) Install the water by-pass pipe for heater.

Tightening torque:
6.4 N·m (0.7 kgf-m, 4.7 ft-lb)

34) Install the oil filter.
<Ref. to LU(H4SO)-36, INSTALLATION, Engine Oil Filter.>
35) Install the cylinder head. <Ref. to ME(H4SO)-63, INSTALLATION, Cylinder Head.>
36) Install the generator and A/C compressor with their brackets.

Tightening torque:
36 N·m (3.7 kgf-m, 26.6 ft-lb)

37) Install the crank sprocket. <Ref. to ME(H4SO)-54, INSTALLATION, Crank Sprocket.>
38) Install the timing belt. <Ref. to ME(H4SO)-49, INSTALLATION, Timing Belt.>

39) Adjust the valve clearance. <Ref. to ME(H4SO)-30, ADJUSTMENT, Valve Clearance.>
40) Install the rocker cover.
(1) Install the rocker cover gasket to the rocker cover.

NOTE:
Use a new rocker cover gasket.

(2) Temporarily tighten the rocker cover bolts in alphabetical order shown in the figure, and then tighten to specified torque in alphabetical order in two steps.

Tightening torque:
First
6.4 N·m (0.7 kgf-m, 4.7 ft-lb)
Second (only (a) and (b) are tightened)
6.4 N·m (0.7 kgf-m, 4.7 ft-lb)

- RH side

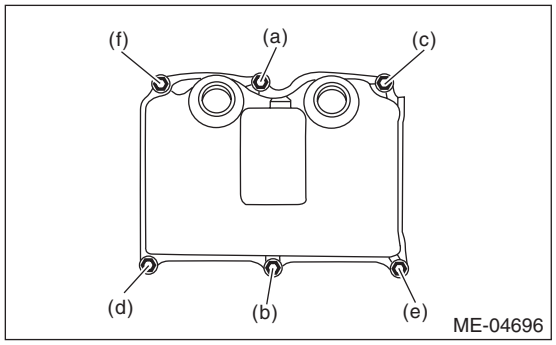

- LH side

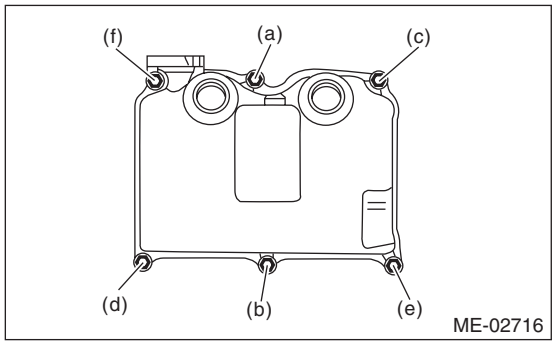

41) Install the timing belt cover. <Ref. to ME(H4SO)-47, INSTALLATION, Timing Belt Cover.>
42) Install the crank pulley. <Ref. to ME(H4SO)-45, INSTALLATION, Crank Pulley.>
43) Install the intake manifold. <Ref. to FU(H4SO)-21, INSTALLATION, Intake Manifold.>
44) Install the engine to the vehicle. <Ref. to ME(H4SO)-35, INSTALLATION, Engine Assembly.>

C: DISASSEMBLY

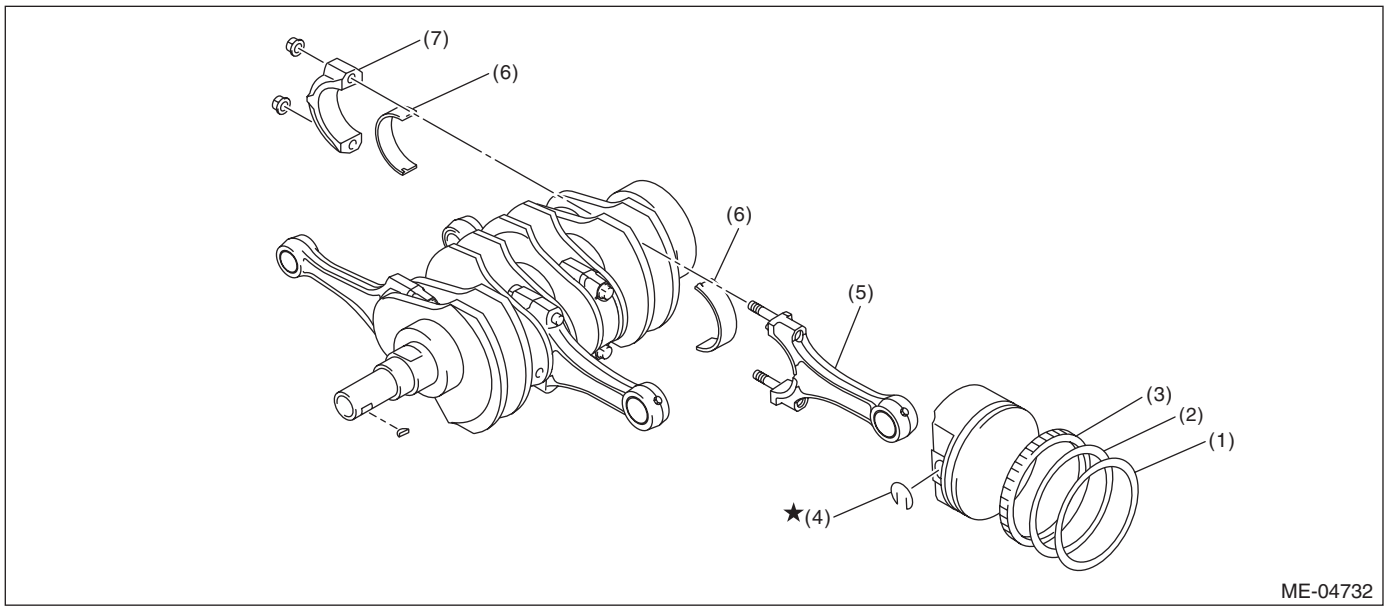

(1) Top ring
(2) Second ring
(3) Oil ring
(4) Snap ring
(5) Connecting rod
(6) Connecting rod bearing
(7) Connecting rod cap

1) Remove the connecting rod cap.
2) Remove the connecting rod bearing.

NOTE:
Keep the removed connecting rods, connecting rod caps and bearings in order so that they are kept in their original combinations/groups, and not mixed together.

3) Remove the piston rings using piston ring expander.
4) Remove the oil ring by hand.

NOTE:
Arrange the removed piston rings in proper order, to prevent confusion.

5) Remove the snap ring.

D: ASSEMBLY

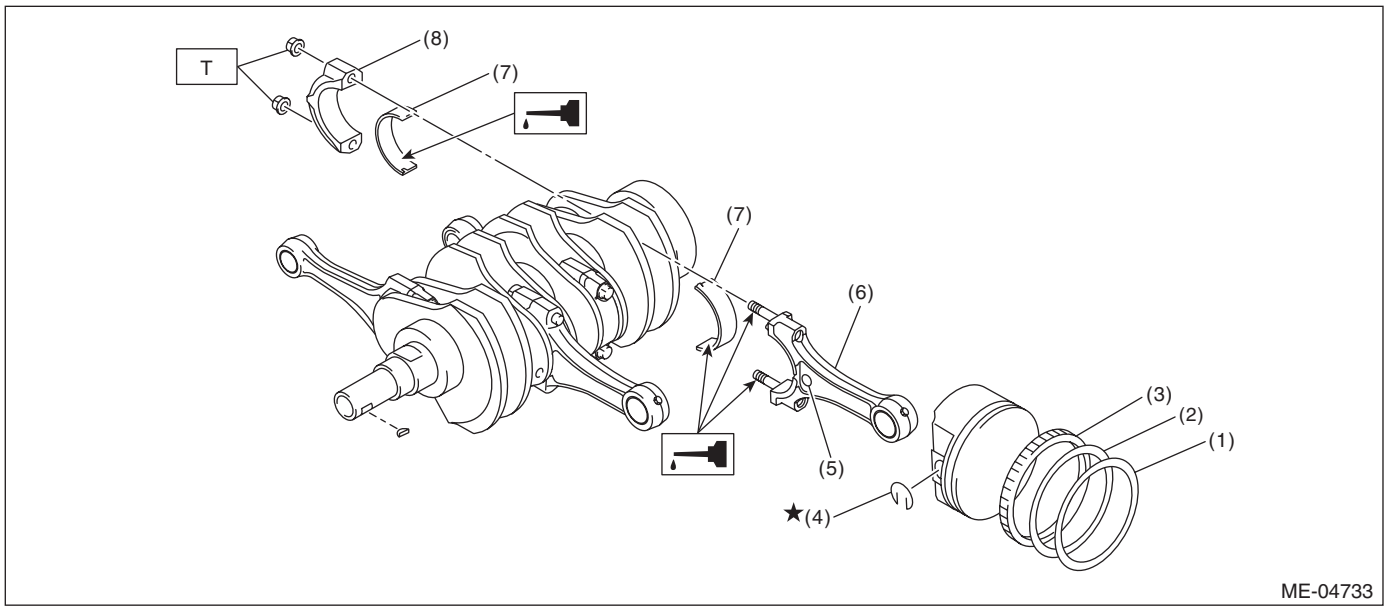

(1) Top ring
(2) Second ring
(3) Oil ring
(4) Snap ring
(5) Side mark
(6) Connecting rod
(7) Connecting rod bearing
(8) Connecting rod cap

Tightening torque:N·m (kgf-m, ft-lb)
T: 45 (4.6, 33.2)

1) Apply engine oil to the surface of the connecting rod bearings, and install the connecting rod bearings on connecting rods and connecting rod caps.
2) Position each connecting rod with the side with a side mark facing forward, and install it.
3) Attach the connecting rod cap, and tighten with connecting rod nut.
Make sure the arrow on connecting rod cap faces the front during installation.

NOTE:
• Each connecting rod has its own mating cap. Make sure that they are assembled correctly by checking their matching number.
• When tightening the connecting rod nuts, apply oil on the threads.

Tightening torque:
45 N·m (4.6 kgf-m, 33.2 ft-lb)

4) Install the oil ring upper rail, expander and lower rail by hand.
5) Install the second ring and top ring using piston ring expander.

NOTE:
Assemble so that the piston ring mark “R” faces the top side of the piston.

E: INSPECTION

1. CYLINDER BLOCK

1) Check for cracks or damage. Use liquid penetrant tester on the important sections to check for fissures. Check that there are no marks of gas leaking or water leaking on gasket installing surface.
2) Check the oil passages for clogging.
3) Inspect the cylinder head surface that mates with cylinder block for warping by using a straight edge, and correct by grinding if necessary.

Warping limit:
0.025 mm (0.00098 in)

Grinding limit:
0.1 mm (0.004 in)

Standard height of cylinder block:
201.0 mm (7.91 in)

2. CYLINDER AND PISTON

1) The cylinder bore size is stamped on the front upper face of the cylinder block.

NOTE:
• Measurement should be performed at a temperature of 20°C (68°F).
• Standard sized pistons are classified into two grades, “A” and “B”. These grades should be used as guide lines in selecting a standard piston.

Standard diameter:
A: 99.505 — 99.515 mm (3.9175 — 3.9179 in)
B: 99.495 — 99.505 mm (3.9171 — 3.9175 in)

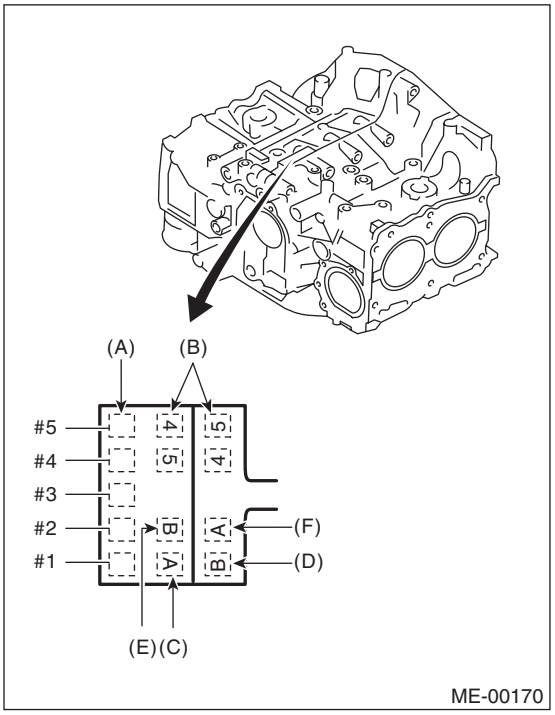

(A) Main journal size mark
(B) Cylinder block (RH) — (LH) combination mark
(C) #1 cylinder bore size mark
(D) #2 cylinder bore size mark
(E) #3 cylinder bore size mark
(F) #4 cylinder bore size mark

2) Measure inner diameter of each cylinder.
Measure the inner diameter of each cylinder in both the thrust and piston pin directions at the heights as shown in the figure, using a cylinder bore gauge.

NOTE:
Measurement should be performed at a temperature of 20°C (68°F).

Cylindricality:
Limit
0.015 mm (0.0006 in)

Out-of-roundness:
Limit
0.010 mm (0.0004 in)

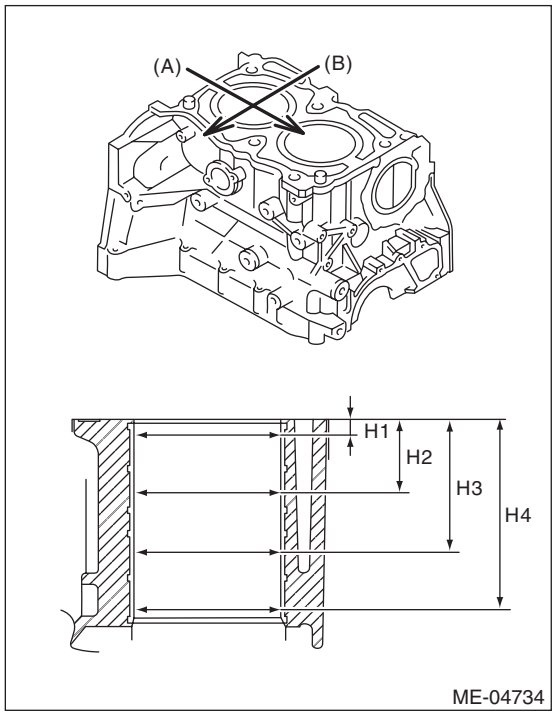

(A) Piston pin direction
(B) Thrust direction
H1 10 mm (0.39 in)
H2 45 mm (1.77 in)
H3 80 mm (3.15 in)
H4 115 mm (4.53 in)

3) When the piston is to be replaced due to general or cylinder wear, select a suitable sized piston by measuring the piston clearance.

4) Measure outer diameter of each piston.
Measure the outer diameter of each piston at the height as shown in the figure. (Thrust direction)

NOTE:
Measurement should be performed at a temperature of 20°C (68°F).

Piston grade point H:
38.2 mm (1.504 in)

Piston outer diameter:

Standard
A: 99.510 — 99.520 mm (3.9177 — 3.9181 in)
B: 99.500 — 99.510 mm (3.9173 — 3.9177 in)

0.25 mm (0.0098 in) oversize:
99.750 — 99.770 mm (3.9272 — 3.9280 in)

0.50 mm (0.0197 in) oversize:
100,000 — 100.020 mm (3.9370 — 3.9378 in)

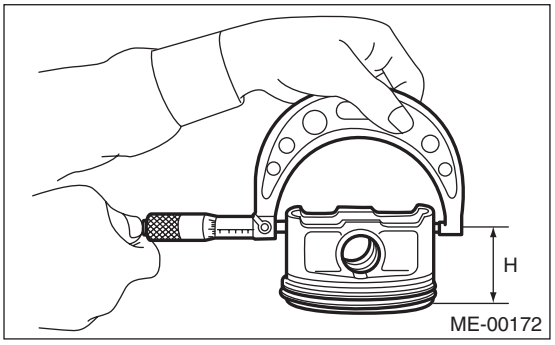

5) Calculate the clearance between cylinder and piston.

NOTE:
Measurement should be performed at a temperature of 20°C (68°F).

Clearance between cylinder and piston at 20°C (68°F):
Standard
–0.015 — 0.005 mm (–0.00059 — 0.00020 in)

6) Boring and honing
(1) If any of the measured value of cylindricality, out-of-roundness or cylinder-to-piston clearance is out of standard or if there is any damage on the cylinder wall, rebore it to replace with an oversize piston.

CAUTION:
When any of the cylinders needs reboring, all other cylinders must be bored at the same time, and replaced with oversize pistons.

(2) If the cylinder inner diameter exceeds the limit after boring and honing, replace the cylinder block.

NOTE:
Immediately after reboring, the cylinder diameter may differ from its real diameter due to temperature rise. Thus, when measuring the cylinder diameter, wait until it has cooled to room temperature.

Cylinder inner diameter boring limit:
To 100.005 mm (3.9372 in)

3. PISTON AND PISTON PIN

1) Check the piston and piston pin for damage, cracks or wear. Replace if faulty.
2) Check the piston ring groove for wear or damage. Replace if faulty.
3) Make sure that the piston pin can be inserted into the piston pin hole with a thumb at 20°C (68°F). Replace if faulty.

Clearance between piston pin hole and piston pin:
Standard
0.004 — 0.008 mm (0.0002 — 0.0003 in)

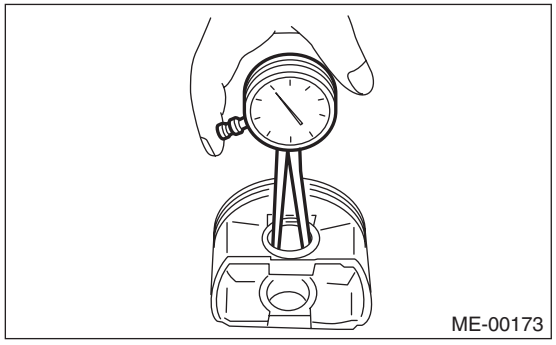
ME-00173

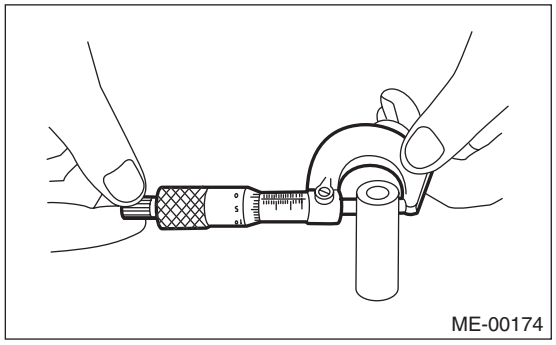
ME-00174

4) Check the snap ring installation groove (A) on the piston for burr. If necessary, remove burr from the groove so that the piston pin can lightly move.

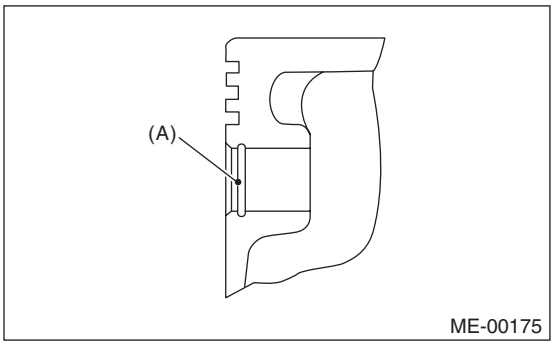

ME-00175

5) Check the snap ring for distortion, cracks and wear.

4. PISTON RING

1) If the piston ring is broken, damaged or worn, or if its tension is insufficient, or when the piston is replaced, replace the piston ring with a new part of the same size as piston.

NOTE:
• The top ring and second ring have the mark to determine the direction for installing. When installing the ring to piston, face marks to the top side.
• Oil ring consists of the upper rail, expander and lower rail. When installing oil ring on piston, be careful of the direction of each rail.

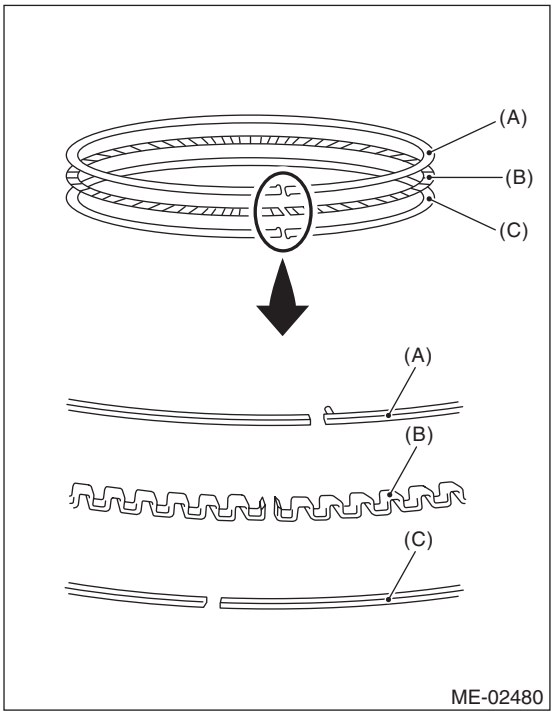

ME-02480

(A) Upper rail
(B) Expander
(C) Lower rail

2) Using the piston, insert the piston ring and oil ring into the cylinder block so that they are perpendicular to the cylinder wall, and measure the piston ring gap using a thickness gauge.

		Standard mm (in)
Piston ring gap	Top ring	0.20 — 0.35 (0.0079 — 0.0138)
	Second ring	0.37 — 0.52 (0.0146 — 0.0205)
	Oil ring rail	0.20 — 0.50 (0.0079 — 0.0197)

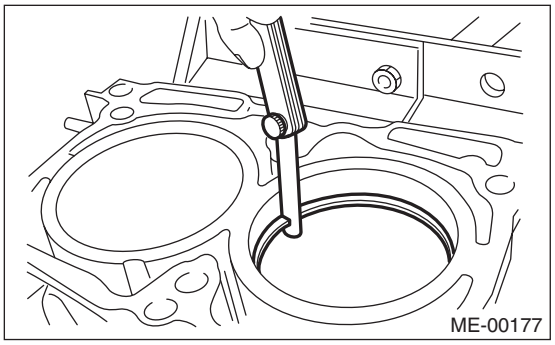

3) Fit the piston ring straight into the piston ring groove, then measure the clearance between piston ring and piston ring groove with a thickness gauge.

NOTE:
Before measuring the clearance, clean the piston ring groove and piston ring.

		Standard mm (in)
Clearance between piston ring and piston ring groove	Top ring	0.040 — 0.080 (0.0016 — 0.0031)
	Second ring	0.030 — 0.070 (0.0012 — 0.0028)

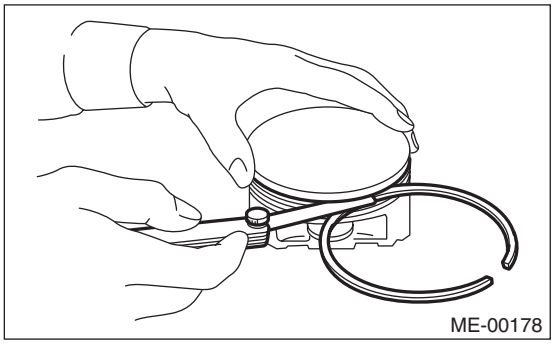

5. CONNECTING ROD

1) Replace the connecting rod, if the large or small end thrust surface is damaged.
2) Check for bend or twist using a connecting rod aligner. Replace the connecting rod if the bend or twist exceeds the limit.

Limit of bend or twist per 100 mm (3.94 in) in length:
0.10 mm (0.0039 in)

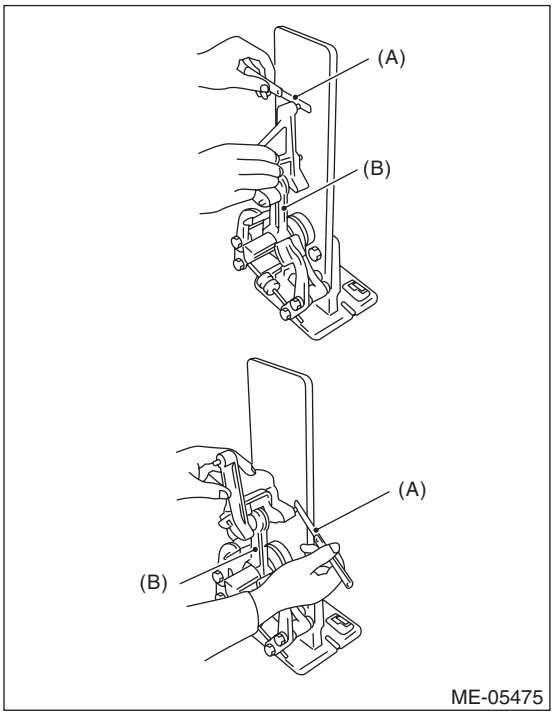

(A) Thickness gauge
(B) Connecting rod

3) Install the connecting rod with bearings attached to the crankshaft, and using a thickness gauge, measure the thrust clearance. If the thrust clearance exceeds the standard or uneven wear is found, replace the connecting rod.

Connecting rod thrust clearance:
Standard
0.070 — 0.330 mm (0.0028 — 0.0130 in)

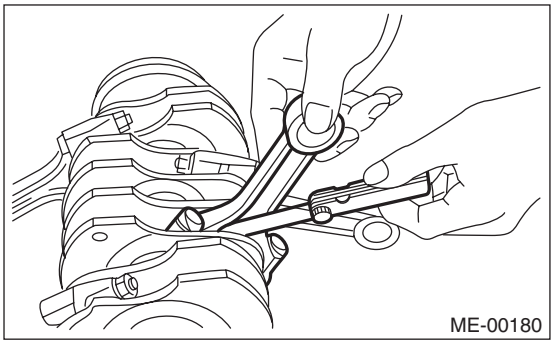

4) Inspect the connecting rod bearing for scar, peeling, seizure, melting, wear, etc.

5) Measure the oil clearance on each connecting rod bearing using plastigauge. If any oil clearance is not within the standard, replace the defective bearing with a new part of standard size or undersize as necessary.

Connecting rod oil clearance:
Standard
0.016 — 0.044 mm (0.0006 — 0.0017 in)

Unit: mm (in)

Bearing	Bearing size (Thickness at center)	Outer diameter of crank pin
Standard	1.492 — 1.501 (0.0587 — 0.0591)	51.984 — 52.000 (2.0466 — 2.0472)
0.03 (0.0012) Undersize	1.510 — 1.513 (0.0594 — 0.0596)	51.954 — 51.970 (2.0454 — 2.0461)
0.05 (0.0020) Undersize	1.520 — 1.523 (0.0598 — 0.0600)	51.934 — 51.950 (2.0446 — 2.0453)
0.25 (0.0098) Undersize	1.620 — 1.623 (0.0638 — 0.0639)	51.734 — 51.750 (2.0368 — 2.0374)

6) Inspect the bushing at connecting rod small end, and replace with a new part if worn or damaged.
7) Measure the piston pin clearance at connecting rod small end. If the measured value is not within the standard, replace it with a new part.

Clearance between piston pin and bushing:
Standard
0 — 0.022 mm (0 — 0.0009 in)

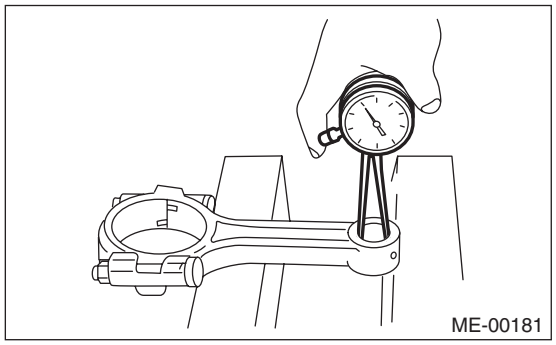
ME-00181

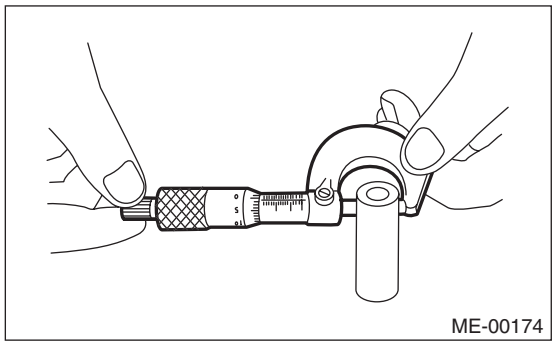
ME-00174

8) The replacement procedure for the connecting rod small end bushing is as follows.
(1) Remove the bushing from connecting rod with ST and press.
(2) Press the bushing with the ST after applying oil on the periphery of new bushing.

ST 499037100 CONNECTING ROD BUSHING REMOVER AND INSTALLER

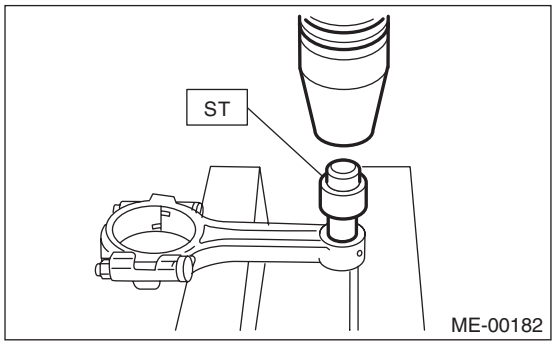

ME-00182

(3) Make two 3 mm (0.12 in) holes in the pressed bushing to match the pre-manufactured holes on the connecting rod, then ream the inside of the bushing.
(4) After completion of reaming, clean the bushing to remove chips.

6. CRANKSHAFT AND CRANKSHAFT BEARING

1) Clean the crankshaft completely, and check it for cracks using liquid penetrant tester. If defective, replace the crankshaft.
2) Measure warping of the crankshaft. If it exceeds the limit, correct or replace it.

NOTE:
If a suitable V-block is not available, using just the #1 and #5 crankshaft bearings on cylinder block, position the crankshaft on cylinder block. Then, measure the crankshaft bend using a dial gauge.

Crankshaft bend limit:
0.035 mm (0.0014 in)

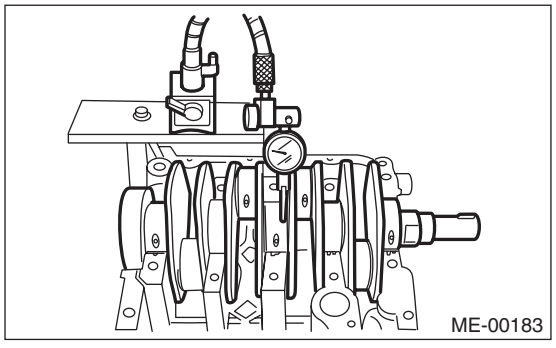
ME-00183

3) Inspect the crank journal and crank pin for wear. If they are not within the standard, replace the bearing with a suitable (undersize) one, and replace or grind to correct the crankshaft as necessary. When grinding the crank journal or crank pin, finish them to the specified dimensions according to the undersize bearing to be used.

Crank pin:
- ***Cylindricality***
  - ***Limit***
  - ***0.004 mm (0.0002 in)***
- ***Out-of-roundness***
  - ***Limit***
  - ***0.003 mm (0.0001 in)***
- ***Grinding limit (dia.)***
  - ***To 51.750 mm (2.0374 in)***

Crank journal:
- ***Cylindricality***
  - ***Limit***
  - ***0.006 mm (0.0002 in)***
- ***Out-of-roundness***
  - ***Limit***
  - ***0.005 mm (0.0002 in)***
- ***Grinding limit (dia.)***
  - ***To 59.758 mm (2.3527 in)***

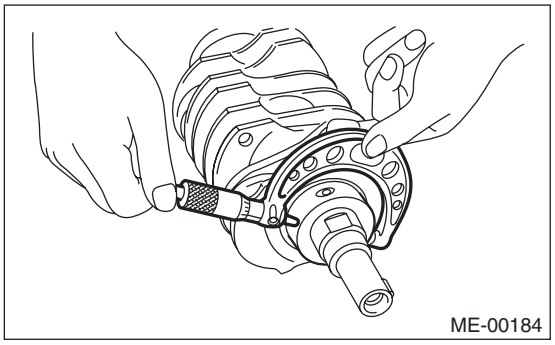

Unit: mm (in)

		Crank journal outer diameter		Crank pin outer diameter
		#1, #3	#2, #4, #5	
Standard	Journal O.D.	59.992 — 60.008 (2.3619 — 2.3625)	59.992 — 60.008 (2.3619 — 2.3625)	51.984 — 52.000 (2.0466 — 2.0472)
	Bearing size (Thickness at center)	1.998 — 2.011 (0.0787 — 0.0792)	2.000 — 2.013 (0.0787 — 0.0793)	1.492 — 1.501 (0.0587 — 0.0591)
0.03 (0.0012) Undersize	Journal O.D.	59.962 — 59.978 (2.3607 — 2.3613)	59.962 — 59.978 (2.3607 — 2.3613)	51.954 — 51.970 (2.0454 — 2.0461)
	Bearing size (Thickness at center)	2.017 — 2.020 (0.0794 — 0.0795)	2.019 — 2.022 (0.0795 — 0.0796)	1.510 — 1.513 (0.0594 — 0.0596)
0.05 (0.0020) Undersize	Journal O.D.	59.942 — 59.958 (2.3599 — 2.3605)	59.942 — 59.958 (2.3599 — 2.3605)	51.934 — 51.950 (2.0446 — 2.0453)
	Bearing size (Thickness at center)	2.027 — 2.030 (0.0798 — 0.0799)	2.029 — 2.032 (0.0799 — 0.0800)	1.520 — 1.523 (0.0598 — 0.0600)
0.25 (0.0098) Undersize	Journal O.D.	59.742 — 59.758 (2.3520 — 2.3527)	59.742 — 59.758 (2.3520 — 2.3527)	51.734 — 51.750 (2.0368 — 2.0374)
	Bearing size (Thickness at center)	2.127 — 2.130 (0.0837 — 0.0839)	2.129 — 2.132 (0.0838 — 0.0839)	1.620 — 1.623 (0.0638 — 0.0639)

4) Use a thickness gauge to measure the thrust clearance of crankshaft at #5 crank journal bearing. If clearance exceeds the standard, replace the bearing.

Crankshaft thrust clearance:
Standard
0.030 — 0.115 mm (0.0012 — 0.0045 in)

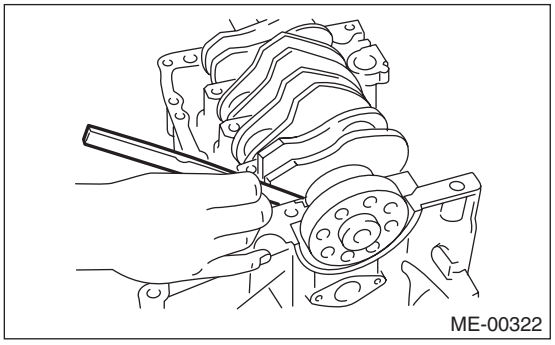

5) Inspect individual crankshaft bearings for signs of flaking, seizure, melting and wear.
6) Measure the oil clearance on each crankshaft bearing using plastigauge. If the measured value is out of standard, replace the defective bearing with an undersize one, and replace or grind to correct the crankshaft as necessary.

Crankshaft oil clearance:
Standard
0.010 — 0.030 mm (0.0004 — 0.0012 in)

22.Oil Switching Solenoid Valve

A: REMOVAL

1. RH SIDE

1) Disconnect the ground cable from battery.

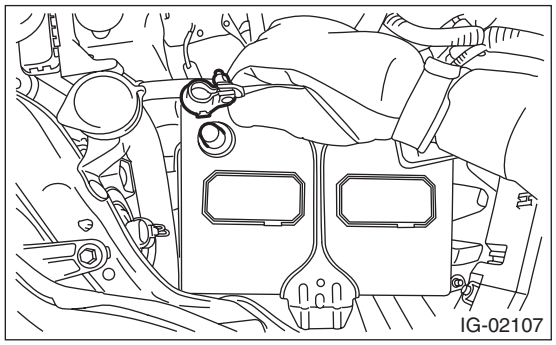

2) Remove the cover (A) and clip (B) from air intake boot assembly.

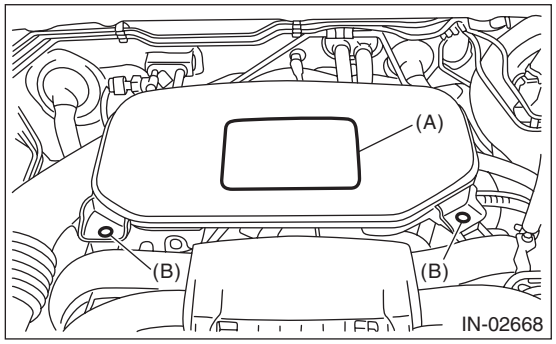

3) Loosen the clamp (A) which connects the air intake boot assembly and air cleaner case.

4) Loosen the clamp (B) which connects the air intake boot assembly and throttle body.

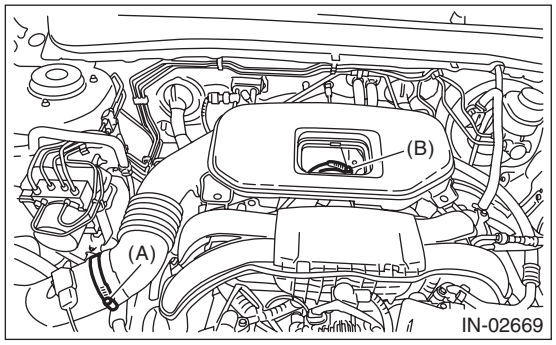

5) Remove the air intake boot from the throttle body, and move it to the left side wheel apron.

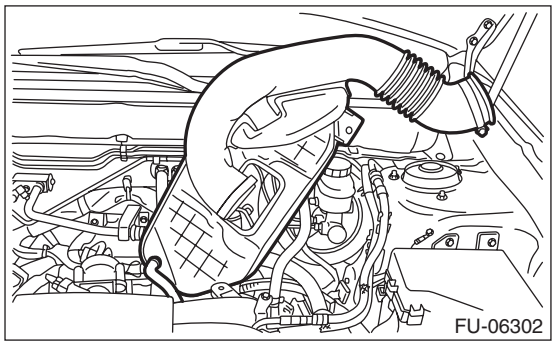

6) Remove the bolt, and disconnect the bulkhead harness connector from the engine harness connector and rear engine hanger.

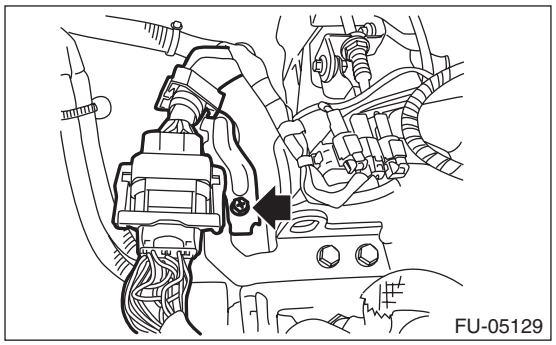

7) Slide the engine harness connector in the direction of the arrow and remove it from the rear engine hanger.

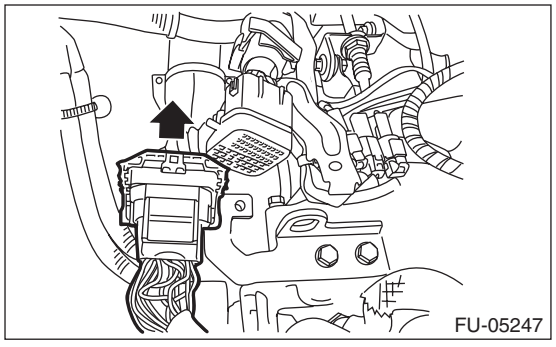

8) Disconnect the connector from the oil switching solenoid valve.

9) Remove the oil switching solenoid valve.

10) Remove the variable valve lift diagnosis oil pressure switch. <Ref. to FU(H4SO)-38, REMOVAL, Variable Valve Lift Diagnosis Oil Pressure Switch.>

11) Remove the oil temperature sensor. <Ref. to FU(H4SO)-40, REMOVAL, Oil Temperature Sensor.>

12) Remove the oil switching solenoid valve holder from the cylinder head.

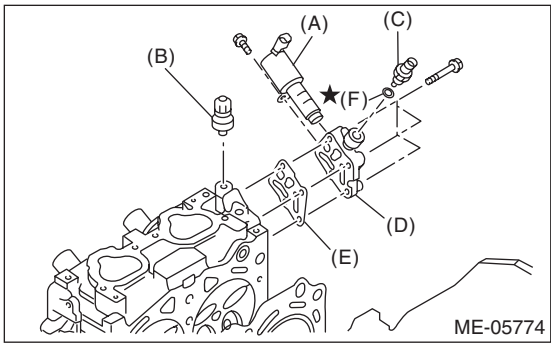

(A) Oil switching solenoid valve
(B) Variable valve lift diagnosis oil pressure switch
(C) Oil temperature sensor
(D) Oil switching solenoid valve holder
(E) Gasket
(F) Washer

2. LH SIDE

1) Disconnect the ground cable from battery.

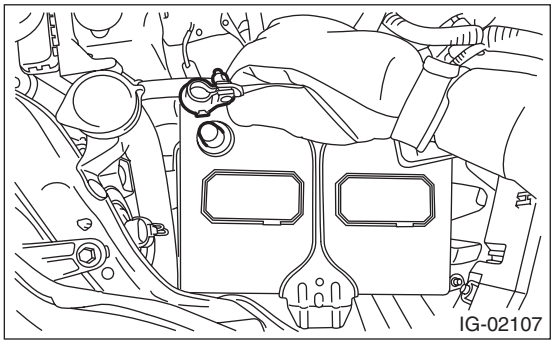

2) Remove the V-belts. <Ref. to ME(H4SO)-43, REMOVAL, V-belt.>
3) Remove the crank pulley. <Ref. to ME(H4SO)-45, REMOVAL, Crank Pulley.>
4) Remove the timing belt cover. <Ref. to ME(H4SO)-47, REMOVAL, Timing Belt Cover.>
5) Remove the timing belt. <Ref. to ME(H4SO)-48, REMOVAL, Timing Belt.>
6) Remove the cam sprocket. <Ref. to ME(H4SO)-53, REMOVAL, Cam Sprocket.>
7) Remove the timing belt cover No. 2 LH.
8) Disconnect the connector from the oil switching solenoid valve.
9) Remove the oil switching solenoid valve.
10) Remove the variable valve lift diagnosis oil pressure switch. <Ref. to FU(H4SO)-38, REMOVAL, Variable Valve Lift Diagnosis Oil Pressure Switch.>
11) Remove the oil switching solenoid valve holder from the cylinder head.

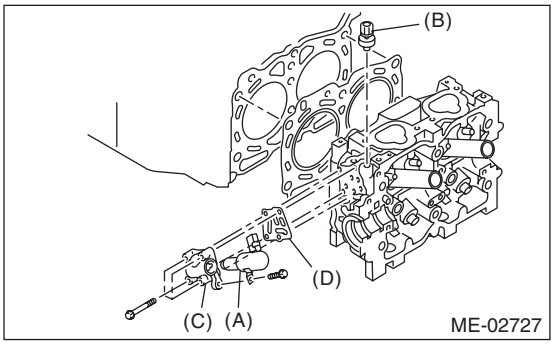

(A) Oil switching solenoid valve
(B) Variable valve lift diagnosis oil pressure switch
(C) Oil switching solenoid valve holder
(D) Gasket

B: INSTALLATION

1. RH SIDE

Install in the reverse order of removal.

NOTE:
• Use a new gasket and washer.
• Apply liquid gasket to variable valve lift diagnosis oil pressure switch threads.
• Install the oil switching solenoid valve to the holder, then install it to the cylinder head.

Tightening torque:
T1: 6.4 N·m (0.7 kgf-m, 4.7 ft-lb)
T2: 10 N·m (1.0 kgf-m, 7.4 ft-lb)
T3: 17 N·m (1.7 kgf-m, 12.5 ft-lb)
T4: 18 N·m (1.8 kgf-m, 13.3 ft-lb)

Liquid gasket:
THREE BOND 1324 (Part No. 004403042) or equivalent

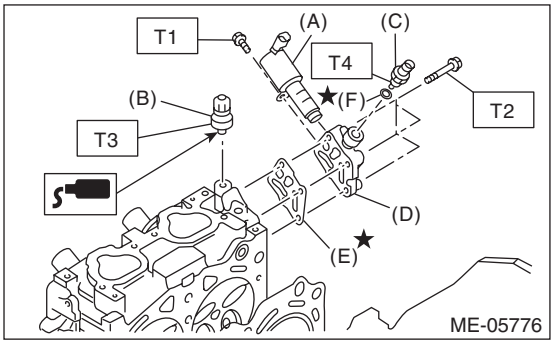

(A) Oil switching solenoid valve
(B) Variable valve lift diagnosis oil pressure switch
(C) Oil temperature sensor
(D) Oil switching solenoid valve holder
(E) Gasket
(F) Washer

Tightening torque:
6.4 N·m (0.7 kgf-m, 4.7 ft-lb)

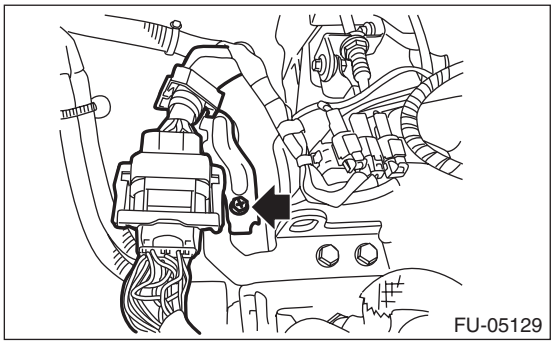

NOTE:
Align the clamp hole with the protrusion of the air intake boot assembly.

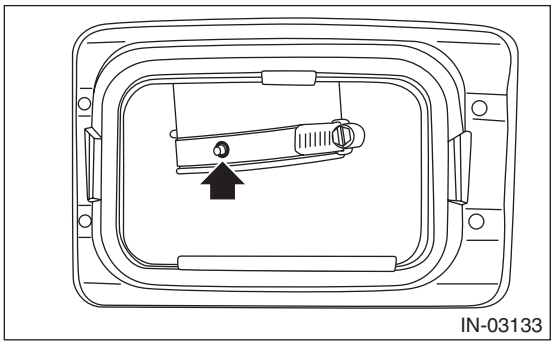

Tightening torque:
Clamp (A), (B)
3 N·m (0.3 kgf-m, 2.2 ft-lb)

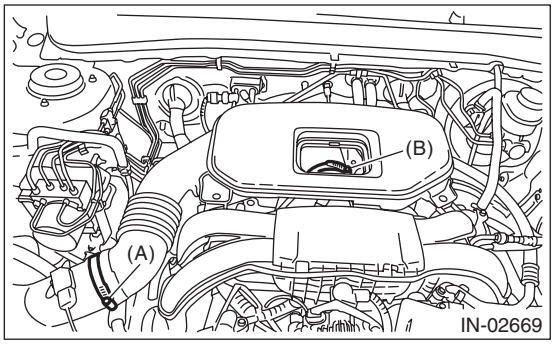

2. LH SIDE

Install in the reverse order of removal.

NOTE:
- Use a new gasket.
- Apply liquid gasket to variable valve lift diagnosis oil pressure switch threads.
- Install the oil switching solenoid valve to the holder, then install it to the cylinder head.

Tightening torque:
T1: 6.4 N·m (0.7 kgf-m, 4.7 ft-lb)
T2: 10 N·m (1.0 kgf-m, 7.4 ft-lb)
T3: 17 N·m (1.7 kgf-m, 12.5 ft-lb)

Liquid gasket:
THREE BOND 1324 (Part No. 004403042) or equivalent

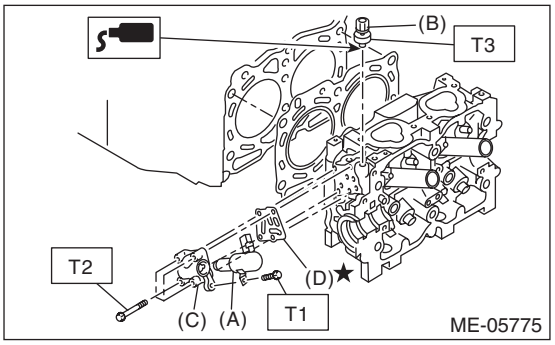

(A) Oil switching solenoid valve
(B) Variable valve lift diagnosis oil pressure switch
(C) Oil switching solenoid valve holder
(D) Gasket

23.Intake and Exhaust Valve

A: SPECIFICATION

Refer to “Cylinder Head” for removal and installation procedures of the intake and exhaust valves. <Ref. to ME(H4SO)-63, REMOVAL, Cylinder Head.> <Ref. to ME(H4SO)-63, INSTALLATION, Cylinder Head.>

24.Piston

A: SPECIFICATION

Refer to “Cylinder Block” for removal and installation procedures of pistons. <Ref. to ME(H4SO)-71, REMOVAL, Cylinder Block.> <Ref. to ME(H4SO)-76, INSTALLATION, Cylinder Block.>

25.Connecting Rod

A: SPECIFICATION

Refer to “Cylinder Block” for removal and installation procedures of connecting rods. <Ref. to ME(H4SO)-71, REMOVAL, Cylinder Block.> <Ref. to ME(H4SO)-76, INSTALLATION, Cylinder Block.>

26.Crankshaft

A: SPECIFICATION

Refer to “Cylinder Block” for removal and installation procedures of the crankshaft. <Ref. to ME(H4SO)-71, REMOVAL, Cylinder Block.> <Ref. to ME(H4SO)-76, INSTALLATION, Cylinder Block.>

27.Engine Trouble in General

A: INSPECTION

NOTE:
The “RANK” shown in the chart shows the possibilities of the cause of trouble in order from “Very often” to “Rarely”.
A — Very often
B — Sometimes
C — Rarely

Symptoms	Problem parts etc.	Possible cause	RANK
1. Engine does not start.			
1) Starter does not turn.	Starter	Defective battery-to-starter harness	B
		Defective starter switch	C
		Defective inhibitor switch	C
		Defective starter	B
	Battery	Improper connection of terminal	A
		Run-down battery	A
		Defective charging system	B
	Friction	Seizure of crankshaft and connecting rod bearing	C
		Seized camshaft	C
		Seized or stuck piston and cylinder	C
	Immobilizer system <Ref. to IM(diag)-2, Basic Diagnostic Procedure.>		A
2) Initial combustion does not occur.	Starter	Defective starter	C
	Engine control system <Ref. to EN(H4SO)(diag)-2, Basic Diagnostic Procedure.>		A
	Fuel line	Defective fuel pump and relay	A
		Clogged fuel line	C
		Lack of fuel or insufficient fuel	B
	Timing belt	Degradation, etc.	B
		Defective timing	B
	Compression	Incorrect valve clearance	C
		Loosened spark plug or defective gasket	C
		Loosened cylinder head bolt or defective cylinder head gasket	C
		Improper valve sealing	C
		Defective valve stem	C
		Worn or broken valve spring	B
		Worn or stuck piston rings, cylinder and piston	C
		Incorrect valve timing	B
		Improper engine oil (low viscosity)	B

Symptoms	Problem parts etc.	Possible cause	RANK
3) Initial combustion occurs.	Engine control system <Ref. to EN(H4SO)(diag)-2, Basic Diagnostic Procedure.>		A
	Intake system	Defective intake manifold gasket	B
		Defective throttle body gasket	B
	Fuel line	Defective fuel pump and relay	C
		Clogged fuel line	C
		Lack of fuel or insufficient fuel	B
	Timing belt	Degradation, etc.	B
		Defective timing	B
	Compression	Incorrect valve clearance	C
		Loosened spark plug or defective gasket	C
		Loosened cylinder head bolt or defective cylinder head gasket	C
		Improper valve sealing	C
		Defective valve stem	C
		Worn or broken valve spring	B
		Worn or stuck piston rings, cylinder and piston	C
		Incorrect valve timing	B
		Improper engine oil (low viscosity)	B
4) Engine stalls after initial combustion.	Engine control system <Ref. to EN(H4SO)(diag)-2, Basic Diagnostic Procedure.>		A
	Intake system	Loosened or cracked intake duct	B
		Loosened or cracked PCV hose	C
		Loosened or cracked vacuum hose	C
		Defective intake manifold gasket	B
		Defective throttle body gasket	B
		Dirty air cleaner element	C
	Fuel line	Clogged fuel line	C
		Lack of fuel or insufficient fuel	B
	Timing belt	Degradation, etc.	B
		Defective timing	B
	Compression	Incorrect valve clearance	C
		Loosened spark plug or defective gasket	C
		Loosened cylinder head bolt or defective cylinder head gasket	C
		Improper valve sealing	C
		Defective valve stem	C
		Worn or broken valve spring	B
		Worn or stuck piston rings, cylinder and piston	C
		Incorrect valve timing	B
		Improper engine oil (low viscosity)	B

Symptoms	Problem parts etc.	Possible cause	RANK
2. Rough idle and engine stall	Engine control system <Ref. to EN(H4SO)(diag)-2, Basic Diagnostic Procedure.>		A
	Intake system	Loosened or cracked intake duct	A
		Loosened or cracked PCV hose	A
		Loosened or cracked vacuum hose	A
		Defective intake manifold gasket	B
		Defective throttle body gasket	B
		Defective PCV valve	C
		Loosened oil filler cap	B
		Dirty air cleaner element	C
	Fuel line	Defective fuel pump and relay	C
		Clogged fuel line	C
		Lack of fuel or insufficient fuel	B
	Timing belt	Defective timing	C
	Compression	Incorrect valve clearance	B
		Loosened spark plug or defective gasket	B
		Loosened cylinder head bolt or defective cylinder head gasket	B
		Improper valve sealing	B
		Defective valve stem	C
		Worn or broken valve spring	B
		Worn or stuck piston rings, cylinder and piston	B
		Incorrect valve timing	A
		Improper engine oil (low viscosity)	B
	Lubrication system	Incorrect oil pressure	B
		Defective rocker cover gasket	C
	Cooling system	Over-heating	C
	Others	Evaporative emission control system malfunction	A
		Stuck or damaged throttle valve	B

Symptoms	Problem parts etc.	Possible cause	RANK
3. Low output, hesitation and poor acceleration	Engine control system <Ref. to EN(H4SO)(diag)-2, Basic Diagnostic Procedure.>		A
	Intake system	Loosened or cracked intake duct	A
		Loosened or cracked PCV hose	A
		Loosened or cracked vacuum hose	B
		Defective intake manifold gasket	B
		Defective throttle body gasket	B
		Defective PCV valve	B
		Loosened oil filler cap	B
		Dirty air cleaner element	A
	Fuel line	Defective fuel pump and relay	B
		Clogged fuel line	B
		Lack of fuel or insufficient fuel	C
	Timing belt	Defective timing	B
	Compression	Incorrect valve clearance	B
		Loosened spark plug or defective gasket	B
		Loosened cylinder head bolt or defective cylinder head gasket	B
		Improper valve sealing	B
		Defective valve stem	C
		Worn or broken valve spring	B
		Worn or stuck piston rings, cylinder and piston	C
		Incorrect valve timing	A
		Improper engine oil (low viscosity)	B
	Lubrication system	Incorrect oil pressure	B
	Cooling system	Over-heating	C
		Over-cooling	C
	Others	Evaporative emission control system malfunction	A

Symptoms	Problem parts etc.	Possible cause	RANK
4. Surging	Engine control system <Ref. to EN(H4SO)(diag)-2, Basic Diagnostic Procedure.>		A
	Intake system	Loosened or cracked intake duct	A
		Loosened or cracked PCV hose	A
		Loosened or cracked vacuum hose	A
		Defective intake manifold gasket	B
		Defective throttle body gasket	B
		Defective PCV valve	B
		Loosened oil filler cap	B
		Dirty air cleaner element	B
	Fuel line	Defective fuel pump and relay	B
		Clogged fuel line	B
		Lack of fuel or insufficient fuel	C
	Timing belt	Defective timing	B
	Compression	Incorrect valve clearance	B
		Loosened spark plug or defective gasket	C
		Loosened cylinder head bolt or defective cylinder head gasket	C
		Improper valve sealing	C
		Defective valve stem	C
		Worn or broken valve spring	C
		Worn or stuck piston rings, cylinder and piston	C
		Incorrect valve timing	A
		Improper engine oil (low viscosity)	B
	Cooling system	Over-heating	B
	Others	Evaporative emission control system malfunction	C
5. Engine does not return to idle.	Engine control system <Ref. to EN(H4SO)(diag)-2, Basic Diagnostic Procedure.>		A
	Intake system	Loosened or cracked vacuum hose	A
	Others	Stuck or damaged throttle valve	A
6. Dieseling (Run-on)	Engine control system <Ref. to EN(H4SO)(diag)-2, Basic Diagnostic Procedure.>		A
	Cooling system	Over-heating	B
	Others	Evaporative emission control system malfunction	B
7. After burning in exhaust system	Engine control system <Ref. to EN(H4SO)(diag)-2, Basic Diagnostic Procedure.>		A
	Intake system	Loosened or cracked intake duct	C
		Loosened or cracked PCV hose	C
		Loosened or cracked vacuum hose	B
		Defective PCV valve	B
		Loosened oil filler cap	C
	Timing belt	Defective timing	B
	Compression	Incorrect valve clearance	B
		Loosened spark plug or defective gasket	C
		Loosened cylinder head bolt or defective cylinder head gasket	C
		Improper valve sealing	B
		Defective valve stem	C
		Worn or broken valve spring	C
		Worn or stuck piston rings, cylinder and piston	C
		Incorrect valve timing	A
	Lubrication system	Incorrect oil pressure	C
	Cooling system	Over-cooling	C
	Others	Evaporative emission control system malfunction	C

Symptoms	Problem parts etc.	Possible cause	RANK
8. Knocking	Engine control system <Ref. to EN(H4SO)(diag)-2, Basic Diagnostic Procedure.>		A
	Intake system	Loosened oil filler cap	B
	Timing belt	Defective timing	B
	Compression	Incorrect valve clearance	C
		Incorrect valve timing	B
	Cooling system	Over-heating	A
9. Excessive engine oil consumption	Intake system	Loosened or cracked PCV hose	A
		Defective PCV valve	B
		Loosened oil filler cap	C
	Compression	Defective valve stem	A
		Worn or stuck piston rings, cylinder and piston	A
	Lubrication system	Loosened oil pump attaching bolts and defective gasket	B
		Defective oil filter gasket	B
		Defective crankshaft oil seal	B
		Defective rocker cover gasket	B
		Loosened oil drain plug or defective gasket	B
		Loosened oil pan fitting bolts or defective oil pan	B
10. Excessive fuel consumption	Engine control system <Ref. to EN(H4SO)(diag)-2, Basic Diagnostic Procedure.>		A
	Intake system	Dirty air cleaner element	A
	Timing belt	Defective timing	B
	Compression	Incorrect valve clearance	B
		Loosened spark plug or defective gasket	C
		Loosened cylinder head bolt or defective cylinder head gasket	C
		Improper valve sealing	B
		Defective valve stem	C
		Worn or broken valve spring	C
		Worn or stuck piston rings, cylinder and piston	B
		Incorrect valve timing	B
	Lubrication system	Incorrect oil pressure	C
	Cooling system	Over-cooling	C

28.Engine Noise

A: INSPECTION

Type of sound	Condition	Possible cause
Regular clicking sound	Sound increases as engine speed increases.	• Valve mechanism is defective. • Incorrect valve clearance • Worn valve rocker • Worn camshaft • Broken valve spring
Heavy and dull clank	Oil pressure is low.	• Worn crankshaft main bearing • Worn connecting rod bearing (large end)
	Oil pressure is normal.	• Damaged engine mounting • Loosened flywheel mounting bolt
High-pitched clank (Spark knock)	Sound is noticeable when accelerating with an overload condition.	• Ignition timing advanced • Accumulation of carbon inside combustion chamber • Wrong heat range of spark plug • Improper octane value gasoline
Clank when engine speed is 1,000 to 2,000 rpm	Sound is reduced when fuel injector connector of noisy cylinder is disconnected. *	• Worn crankshaft main bearing • Worn connecting rod bearing (large end)
Knocking sound when engine is operating under idling speed and engine is warm	Sound is reduced when fuel injector connector of noisy cylinder is disconnected. *	• Worn cylinder liner and piston ring • Broken or stuck piston ring • Worn piston pin and hole at piston end of connecting rod
	Sound is not reduced if each fuel injector connector is disconnected in turn. *	• Worn cam sprocket • Worn camshaft journal bore in cylinder head
Squeaky sound	—	Insufficient generator lubrication
Rubbing sound	—	Poor contact of generator brush and rotor
Gear scream when starting engine	—	• Defective ignition starter switch • Worn gear and starter pinion
Sound like polishing glass with a dry cloth	—	• Loose V-belt • Defective water pump shaft
Hissing sound	—	• Insufficient compression • Air leakage in air intake system, hose, connection or manifold
Timing belt noise	—	• Loose timing belt • Timing belt contacting with adjacent part
Valve noise	—	Incorrect valve clearance

* When disconnecting the fuel injector connector, the malfunction indicator light illuminates and DTC is stored in ECM memory. Therefore, perform the Clear Memory Mode <Ref. to EN(H4SO)(diag)-51, OPERATION, Clear Memory Mode.> and Inspection Mode <Ref. to EN(H4SO)(diag)-40, PROCEDURE, Inspection Mode.> after connecting the fuel injector connector.

EXHAUST

EX(H4SO)

Page

1. General Description 2
2. Front Exhaust Pipe 5
3. Center Exhaust Pipe 8
4. Rear Exhaust Pipe 9
5. Muffler 11

1. General Description

A: COMPONENT

- Models other than C6 model

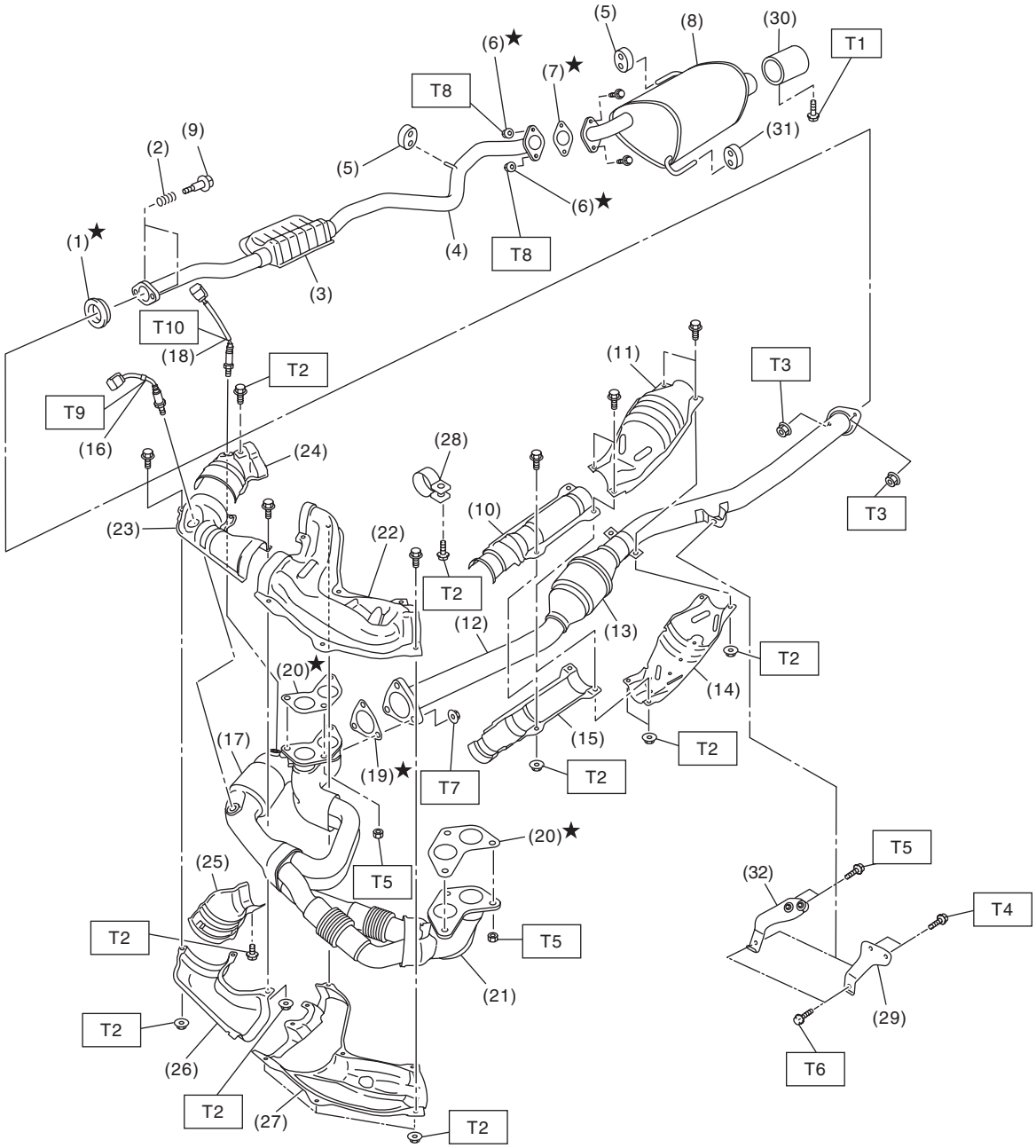

- C6 model

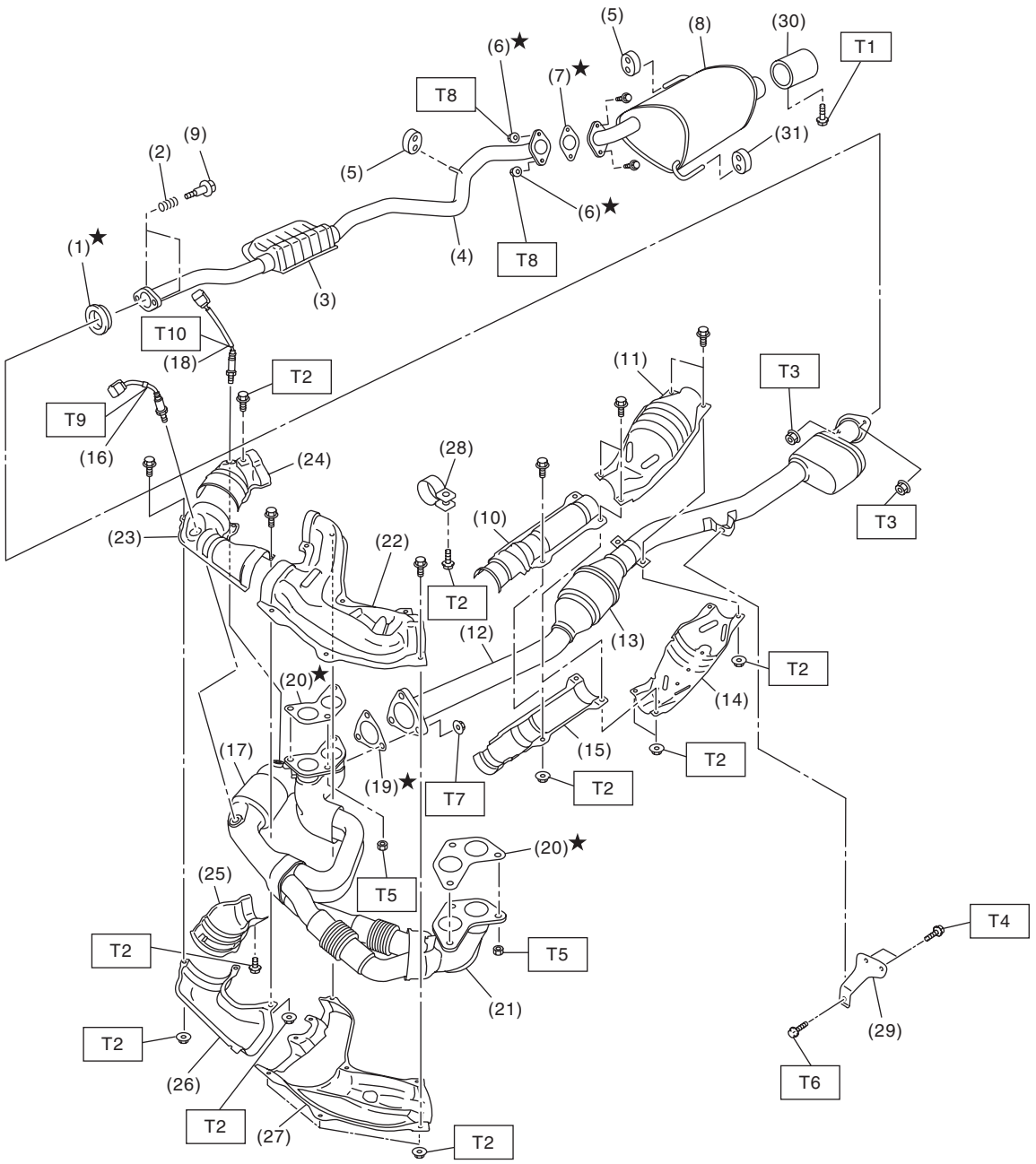
(1)★
(2)
(3)
(4)
(5)
(6)★
(7)★
(8)
(9)
(10)
(11)
(12)
(13)
(14)
(15)
(16)
(17)
(18)
(19)★
(20)★
(21)
(22)
(23)
(24)
(25)
(26)
(27)
(28)
(29)
(30)
(31)
T1
T2
T3
T4
T5
T6
T7
T8
T9
T10
EX-02833

(1) Gasket
(2) Spring
(3) Chamber
(4) Rear exhaust pipe
(5) Cushion rubber (without protrusion)
(6) Self-locking nut
(7) Gasket
(8) Muffler
(9) Bolt
(10) Center exhaust pipe front upper cover
(11) Rear catalytic converter upper cover
(12) Center exhaust pipe
(13) Rear catalytic converter
(14) Rear catalytic converter lower cover
(15) Center exhaust pipe front lower cover
(16) Front oxygen (A/F) sensor
(17) Front catalytic converter
(18) Rear oxygen sensor
(19) Gasket
(20) Gasket
(21) Front exhaust pipe
(22) Front exhaust pipe upper cover LH
(23) Front exhaust pipe upper cover RH
(24) Front catalytic converter upper cover
(25) Front catalytic converter lower cover
(26) Front exhaust pipe lower cover RH
(27) Front exhaust pipe lower cover LH
(28) Band
(29) Hanger bracket (CVT model)
(30) Muffler cutter (models with muffler cutter)
(31) Cushion rubber (with protrusion)
(32) Hanger bracket (MT model)

Tightening torque:N·m (kgf-m, ft-lb)
T1: 7.5 (0.8, 5.5)
T2: 13 (1.3, 9.6)
T3: 18 (1.8, 13.3)
T4: 23 (2.3, 17.0)
T5: 30 (3.1, 22.1)
T6: 35 (3.6, 25.8)
T7: 40 (4.1, 29.5)
T8: 48 (4.9, 35.4)
T9: <Ref. to FU(H4SO)-42, INSTALLATION, Front Oxygen (A/F) Sensor.>
T10: <Ref. to FU(H4SO)-44, INSTALLATION, Rear Oxygen Sensor.>

B: CAUTION

- Wear appropriate work clothing, including a cap, protective goggles and protective shoes when performing any work.
- Remove contamination including dirt and corrosion before removal, installation or disassembly.
- Keep the disassembled parts in order and protect them from dust and dirt.
- Before removal, installation or disassembly, be sure to clarify the failure. Avoid unnecessary removal, installation, disassembly and replacement.
- Vehicle components are extremely hot after driving. Be wary of receiving burns from heated parts.
- Be sure to tighten fasteners including bolts and nuts to the specified torque.
- Place shop jacks or rigid racks at the specified points.
- Before disconnecting connectors of sensors or units, be sure to disconnect the ground cable from the battery.
- If any fat adheres to the exhaust pipe, wipe it off. Otherwise a fire may happen.

2. Front Exhaust Pipe

A: REMOVAL

CAUTION:
Vehicle components are extremely hot after driving. Be wary of receiving burns from heated parts.

1) Remove the air intake duct. <Ref. to IN(H4SO)-9, REMOVAL, Air Intake Duct.>
2) Disconnect the ground cable from battery.

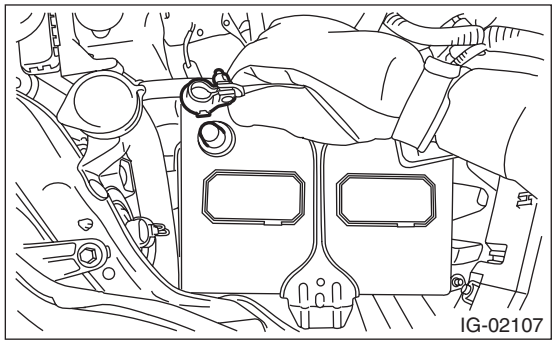

3) Disconnect the front oxygen (A/F) sensor connector (A) and rear oxygen sensor connector (B) and remove the clip (C) fastening the harness.

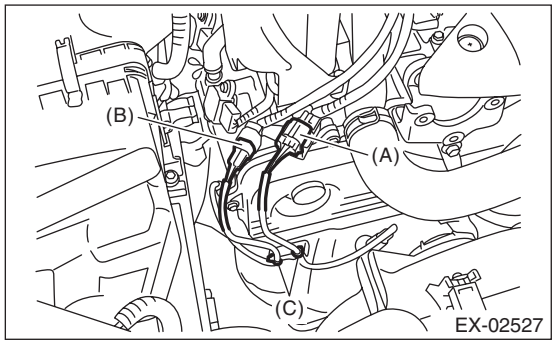

4) Lift up the vehicle.
5) Remove the under cover. <Ref. to EI-35, REMOVAL, Front Under Cover.>
6) Remove the rear exhaust pipe from center exhaust pipe.

- Models other than C6 model

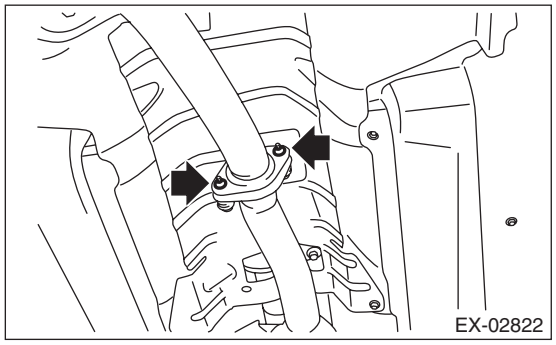

- C6 model

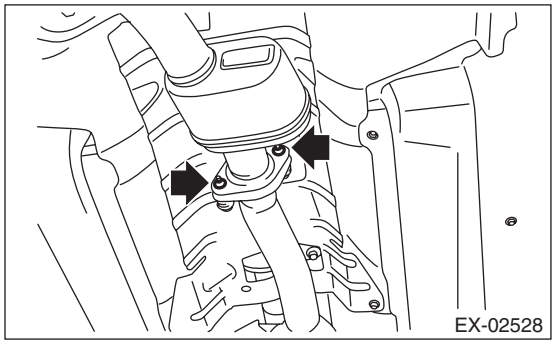

7) Remove the nuts which hold front exhaust pipe onto cylinder heads.

CAUTION:
Be careful not to drop the front exhaust pipe and center exhaust pipe assembly.

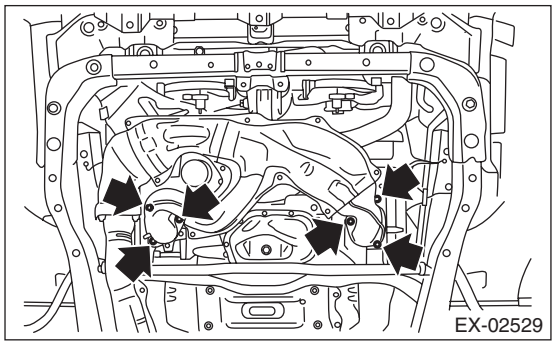

8) Remove the bolt which holds center exhaust pipe to hanger bracket.

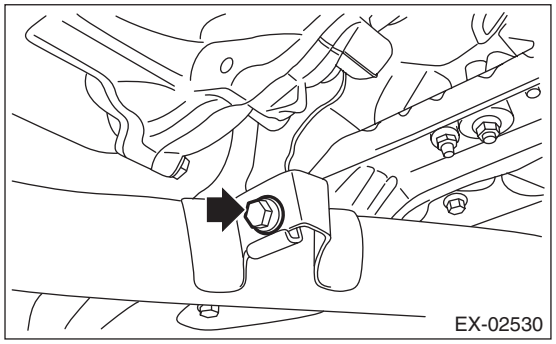

9) Remove the front exhaust pipe and center exhaust pipe from vehicle as a unit.

CAUTION:
• The front exhaust pipe and center exhaust pipe assembly are very heavy. Be careful not to drop the exhaust pipes when removing.
• After removing the front exhaust pipe and center exhaust pipe assembly, do not pull the rear exhaust pipe with excessive force.

10) Remove the center exhaust pipe from the front exhaust pipe.

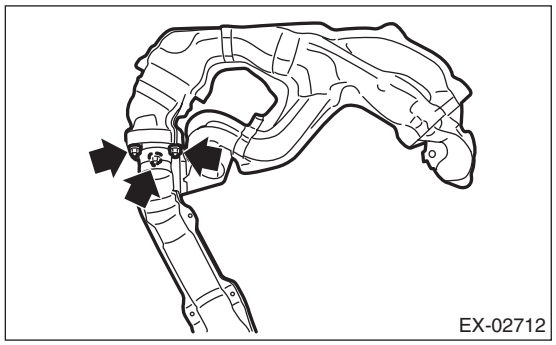

11) Remove the front oxygen (A/F) sensor and rear oxygen sensor from front exhaust pipe. <Ref. to FU(H4SO)-42, REMOVAL, Front Oxygen (A/F) Sensor.> <Ref. to FU(H4SO)-44, REMOVAL, Rear Oxygen Sensor.>

B: INSTALLATION

1) Install the front oxygen (A/F) sensor and rear oxygen sensor to the front exhaust pipe. <Ref. to FU(H4SO)-42, INSTALLATION, Front Oxygen (A/F) Sensor.> <Ref. to FU(H4SO)-44, INSTALLATION, Rear Oxygen Sensor.>
2) Install the center exhaust pipe to front exhaust pipe.

NOTE:
Use a new gasket.

Tightening torque:
40 N·m (4.1 kgf-m, 29.5 ft-lb)

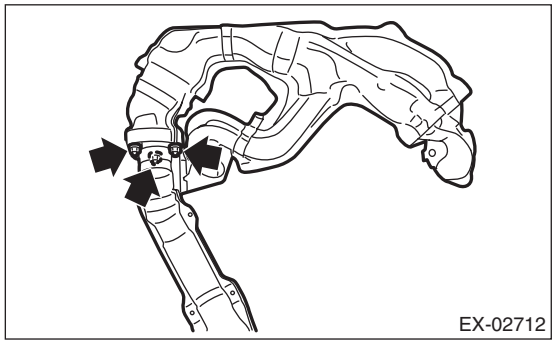

3) Install the front exhaust pipe and center exhaust pipe as a unit to the vehicle.

NOTE:
Use a new gasket.

4) Temporarily tighten the nuts which hold front exhaust pipe to cylinder heads.

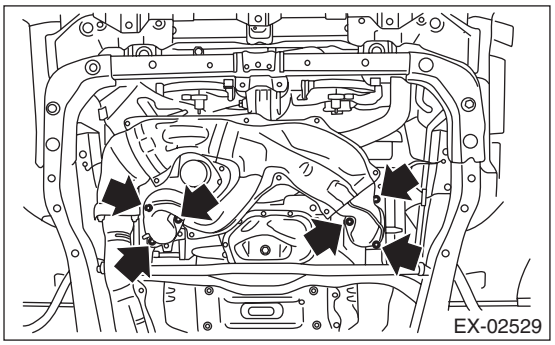

5) Install the rear exhaust pipe to center exhaust pipe.

NOTE:
Use a new gasket.

Tightening torque:
18 N·m (1.8 kgf-m, 13.3 ft-lb)

- ***Models other than C6 model***

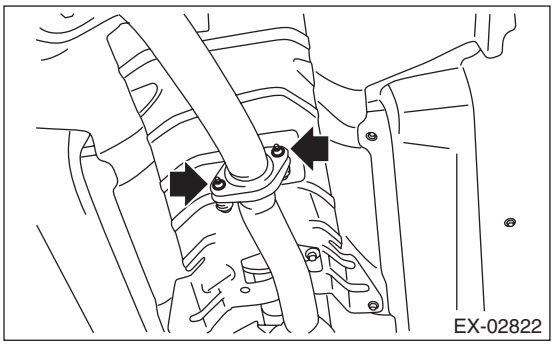

- ***C6 model***

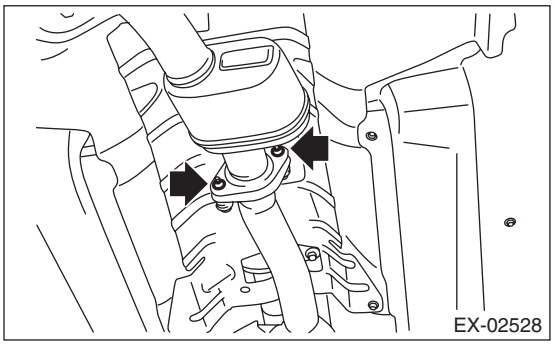

6) Tighten the bolts which secure the center exhaust pipe to the hanger bracket.

Tightening torque:
35 N·m (3.6 kgf-m, 25.8 ft-lb)

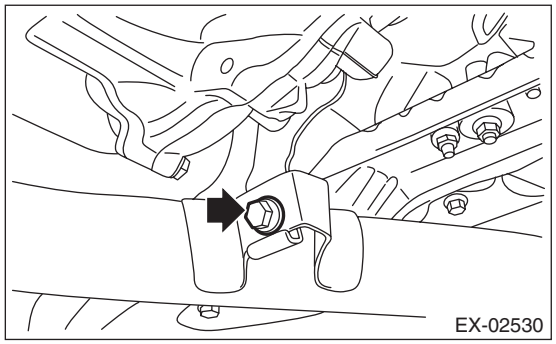

7) Tighten the nuts which hold front exhaust pipe to cylinder heads.

Tightening torque:
30 N·m (3.1 kgf-m, 22.1 ft-lb)

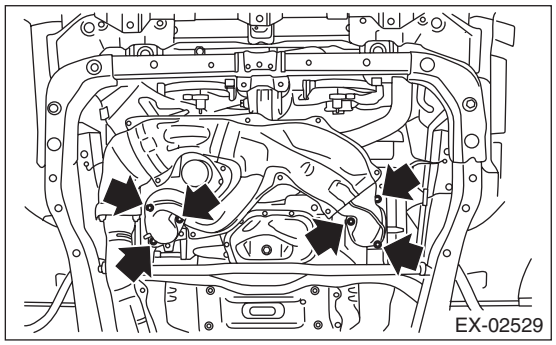

8) Install the under cover. <Ref. to EI-35, INSTALLATION, Front Under Cover.>
9) Lower the vehicle.
10) Connect the front oxygen (A/F) sensor connector (A) and rear oxygen sensor connector (B), and fasten the harness with the clip (C).

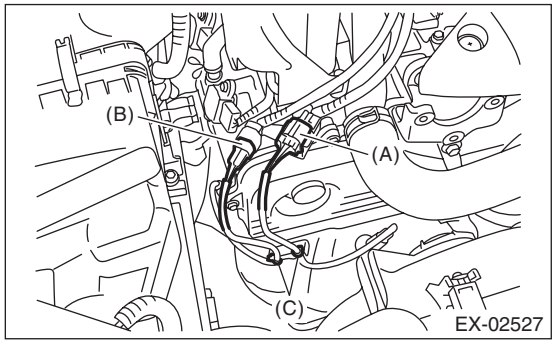

11) Connect the battery ground terminal.

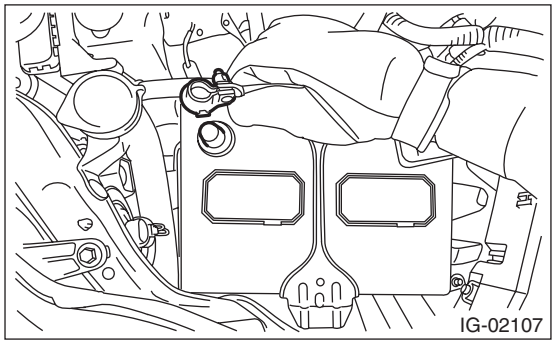

12) Install the air intake duct. <Ref. to IN(H4SO)-9, INSTALLATION, Air Intake Duct.>

C: INSPECTION

1) Check the connections and welds for exhaust leaks.
2) Make sure there are no holes or rusting.

3. Center Exhaust Pipe

A: REMOVAL

After removing the center exhaust pipe and front exhaust pipe as a unit, separate them. Refer to “Front Exhaust Pipe” for the removal procedure. <Ref. to EX(H4SO)-5, REMOVAL, Front Exhaust Pipe.>

B: INSTALLATION

Install the center exhaust pipe and front exhaust pipe as a unit. Refer to “Front Exhaust Pipe” for the installation procedure. <Ref. to EX(H4SO)-6, INSTALLATION, Front Exhaust Pipe.>

C: INSPECTION

1) Check the connections and welds for exhaust leaks.
2) Make sure there are no holes or rusting.

4. Rear Exhaust Pipe

A: REMOVAL

CAUTION:
Vehicle components are extremely hot after driving. Be wary of receiving burns from heated parts.

1) Lift up the vehicle.
2) Remove the center exhaust pipe from rear exhaust pipe.

- Models other than C6 model

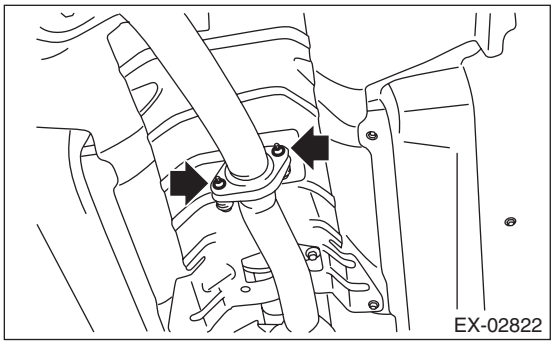

- C6 model

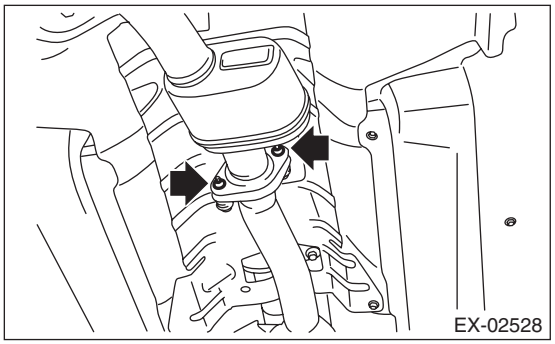

3) Remove the muffler from rear exhaust pipe.

CAUTION:
Be careful not to drop the rear exhaust pipe.

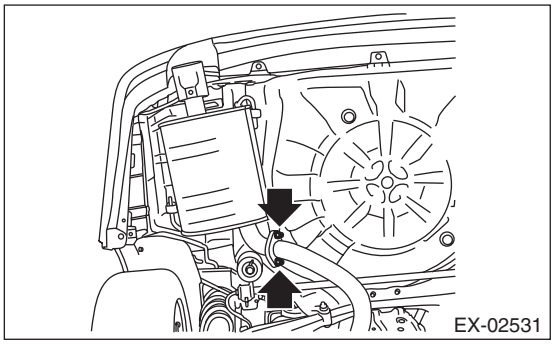

4) Apply a coat of spray type lubricant to the mating area of cushion rubber.
5) Remove the rear exhaust pipe from the cushion rubber.

CAUTION:
Be careful not to let the muffler contact the rear bumper.

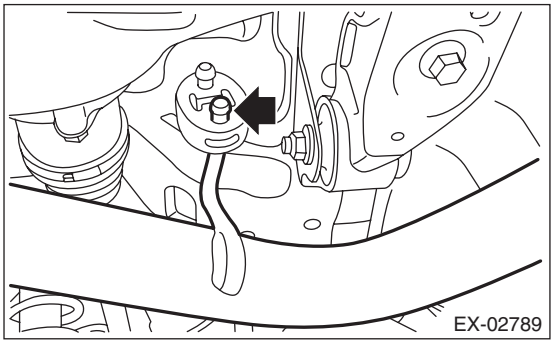

B: INSTALLATION

1) Apply a coat of spray type lubricant to the mating area of cushion rubber.
2) Install the rear exhaust pipe to cushion rubber.

NOTE:
After assembling, degrease the lubricant which was applied to the cushion rubber while removing/installing.

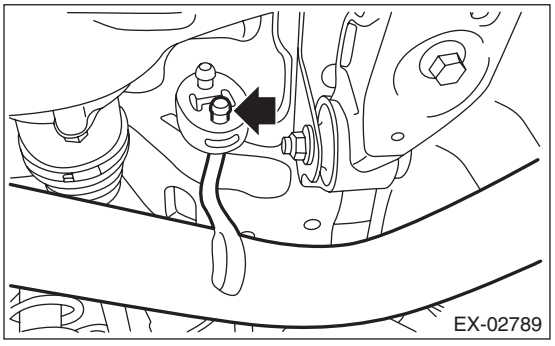

3) Install the rear exhaust pipe to the muffler.

NOTE:
Use a new gasket and self-locking nut.

Tightening torque:
48 N·m (4.9 kgf-m, 35.4 ft-lb)

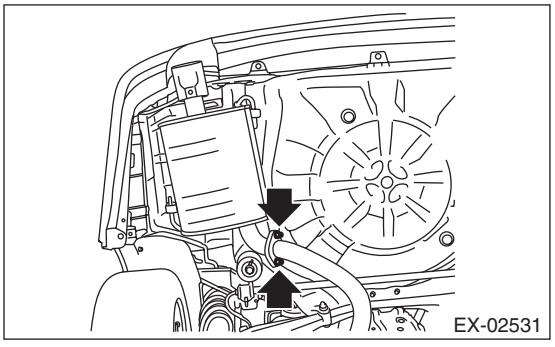

4) Install the center exhaust pipe to rear exhaust pipe.

NOTE:
Use a new gasket.

Tightening torque:
18 N·m (1.8 kgf-m, 13.3 ft-lb)

- ***Models other than C6 model***

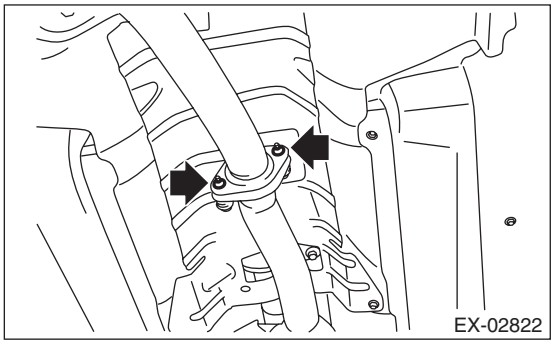

- ***C6 model***

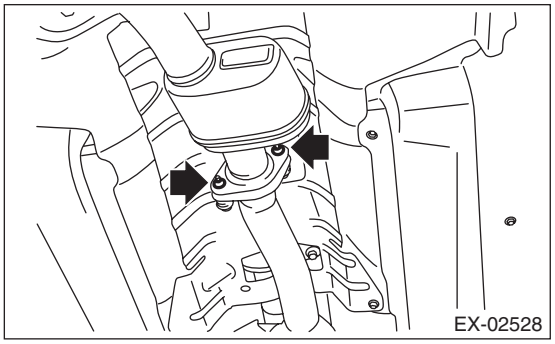

5) Lower the vehicle.

C: INSPECTION

1) Check the connections and welds for exhaust leaks.
2) Make sure there are no holes or rusting.
3) Check the cushion rubber for wear or crack.

5. Muffler

A: REMOVAL

CAUTION:
Vehicle components are extremely hot after driving. Be wary of receiving burns from heated parts.

1) Lift up the vehicle.
2) Remove the rear exhaust pipe from the muffler.

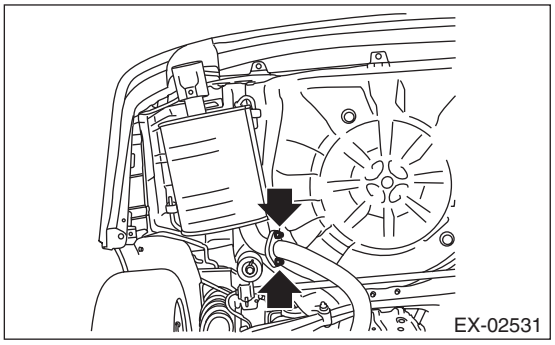

3) Apply a coat of spray type lubricant to the mating area of cushion rubber.
4) Remove the muffler from the cushion rubber.

CAUTION:
Be careful not to drop the muffler during removal.

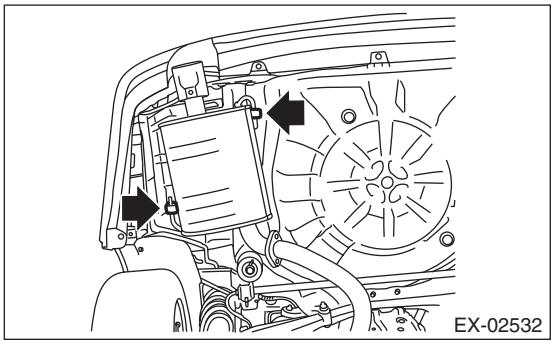

B: INSTALLATION

Install in the reverse order of removal.

NOTE:
- Use a new gasket and self-locking nut.
- After assembling, degrease the lubricant which was applied to the cushion rubber while removing/ installing.

Tightening torque:
48 N·m (4.9 kgf-m, 35.4 ft-lb)

C: INSPECTION

1) Check the connections and welds for exhaust leaks.
2) Make sure there are no holes or rusting.
3) Check the cushion rubber for wear or crack.

COOLING

CO(H4SO)

Page

1. General Description 2
2. Radiator Fan System 7
3. Engine Coolant 14
4. Water Pump 16
5. Thermostat 18
6. Radiator 20
7. Radiator Cap 23
8. Radiator Main Fan and Fan Motor 24
9. Radiator Sub Fan and Fan Motor 25
10. Reservoir Tank 26
11. Engine Cooling System Trouble in General 27

1. General Description

A: SPECIFICATION

Cooling system				Electric fan + Forced engine coolant circulation system
Total engine coolant capacity	ℓ (US qt, Imp qt)			MT: approx. 6.5 (6.9, 5.7) CVT: approx. 6.4 (6.8, 5.6)
Water pump	Type			Centrifugal impeller type
	Discharge performance	Discharge rate ℓ (US gal, Imp gal) /min.		200 (52.8, 44.0)
		Pump speed — Discharge pressure		6,000 rpm — 225.4 kPa (23 mAq)
		Engine coolant temperature		80°C (176°F)
	Impeller diameter mm (in)			76 (2.99)
	Number of impeller vanes			8
	Pump pulley diameter mm (in)			60 (2.36)
	Clearance between impeller and case mm (in)		Standard	0.5 — 1.6 (0.020 — 0.063)
Thermostat	Type			Wax pellet type
	Starting temperature to open			86 — 90°C (187 — 194°F)
	Fully opens			95°C (203°F)
	Valve lift mm (in)			9.0 (0.354) or more
	Valve bore mm (in)			35 (1.38)
Radiator fan	Motor input	Main fan W		90
		Sub fan W		90
	Fan diameter / Blade	Main fan		300 mm (11.81 in)/4
		Sub fan		300 mm (11.81 in)/5
Radiator	Type			Down flow, pressure type
	Core dimensions	Width × Height × Thickness mm (in)		687.4 × 340 × 16 (27.06 × 13.39 × 0.63)
	Pressure range in which cap valve is open kPa (kg/cm^2, psi)	Positive pressure side	Standard	93 — 123 (0.95 — 1.25, 14 — 18)
			Limit	83 (0.85, 12)
		Negative pressure side	Standard	–1.0 to –4.9 or less (–0.01 — –0.05, –0.1 — –0.7)
	Fins			Corrugated fin type
Reservoir tank	Capacity ℓ (US qt, Imp qt)			0.45 (0.48, 0.40)

	Recommended materials	Item number	Alternative
Coolant	SUBARU SUPER COOLANT (Concentrated type)	—	—
	SUBARU SUPER COOLANT (Diluted type)	K0670Y0001	
Water for dilution	Distilled water	—	Soft water or tap water
Cooling system protective agent	Cooling system conditioner	SOA345001	—

B: COMPONENT

1. WATER PUMP

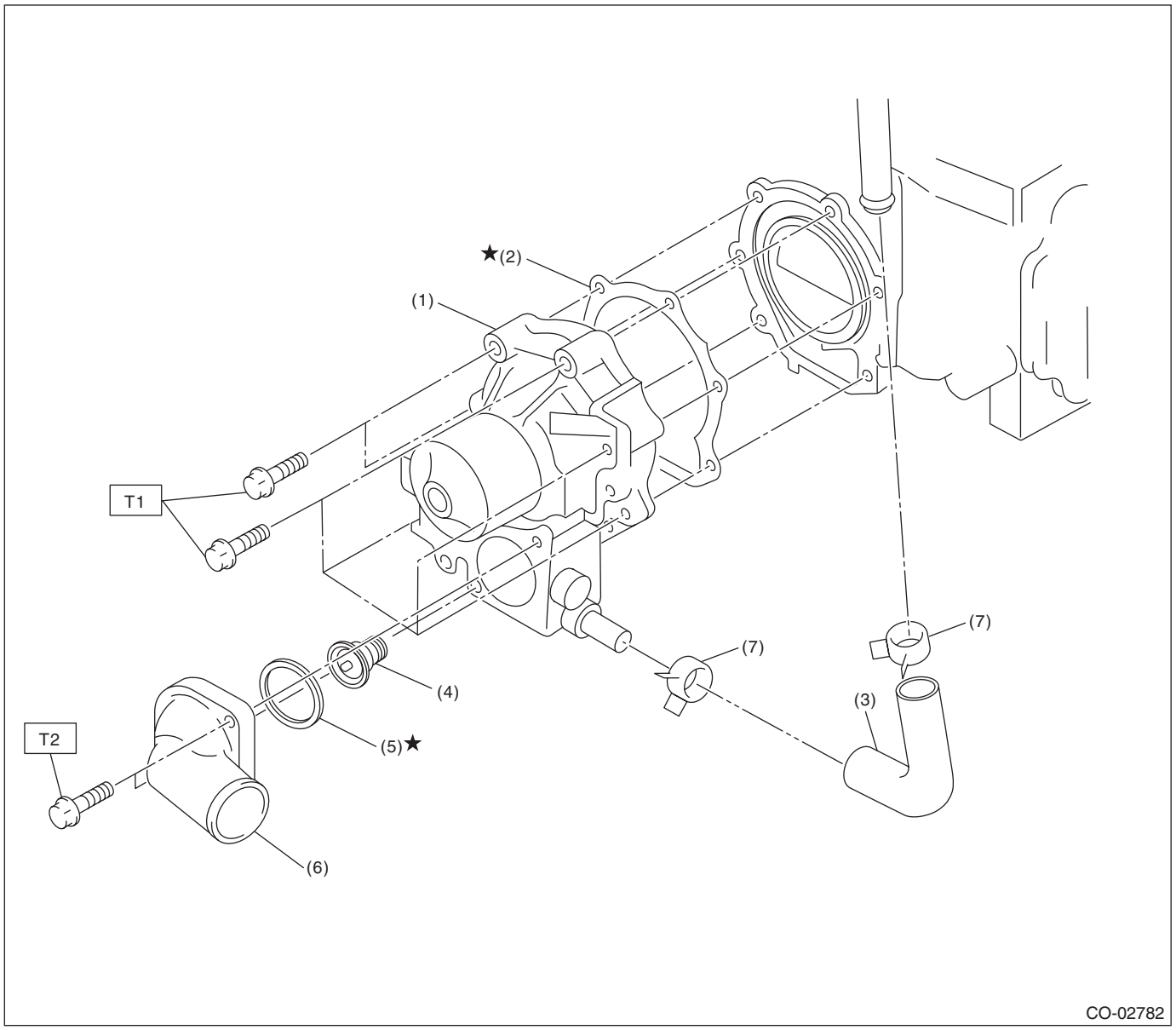

(1) Water pump ASSY
(2) Gasket
(3) Heater by-pass hose
(4) Thermostat
(5) Gasket
(6) Thermostat cover
(7) Clip

Tightening torque:N·m (kgf-m, ft-lb)
T1: First 12 (1.2, 8.9)
Second 12 (1.2, 8.9)
T2: 12 (1.2, 8.9)

2. RADIATOR & RADIATOR FAN

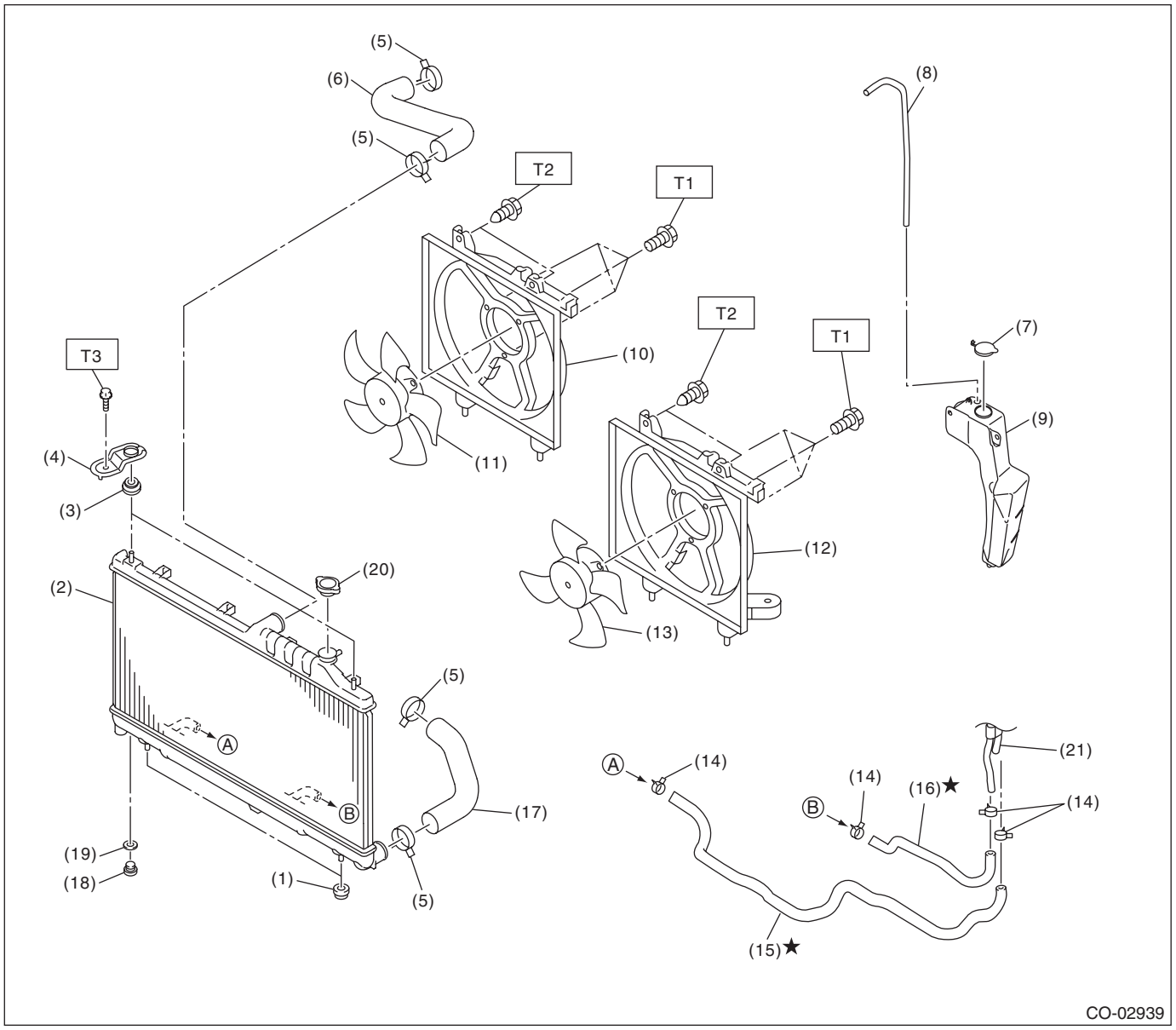

(1)	Radiator lower cushion	(10)	Radiator sub fan shroud	(19)	O-ring
(2)	Radiator	(11)	Radiator sub fan, radiator sub fan motor ASSY	(20)	Radiator cap
(3)	Radiator upper cushion	(12)	Radiator main fan shroud	(21)	CVTF pipe
(4)	Radiator upper bracket	(13)	Radiator main fan, radiator main fan motor ASSY		
(5)	Clip	(14)	Clip (CVT model)	***Tightening torque:N·m (kgf-m, ft-lb)***	
(6)	Radiator inlet hose	(15)	CVTF radiator inlet hose (CVT model)	***T1:***	***5 (0.5, 3.7)***
(7)	Engine coolant reservoir tank cap	(16)	CVTF radiator outlet hose (CVT model)	***T2:***	***7.5 (0.8, 5.5)***
(8)	Over flow hose	(17)	Radiator outlet hose	***T3:***	***12 (1.2, 8.9)***
(9)	Engine coolant reservoir tank	(18)	Radiator drain plug		

C: CAUTION

• Wear appropriate work clothing, including a cap, protective goggles and protective shoes when performing any work.
• Remove contamination including dirt and corrosion before removal, installation or disassembly.
• Keep the disassembled parts in order and protect them from dust and dirt.
• Before removal, installation or disassembly, be sure to clarify the failure. Avoid unnecessary removal, installation, disassembly and replacement.
• Vehicle components are extremely hot after driving. Be wary of receiving burns from heated parts.
• Be sure to tighten fasteners including bolts and nuts to the specified torque.
• Place shop jacks or rigid racks at the specified points.
• Before disconnecting connectors of sensors or units, be sure to disconnect the ground cable from battery.
• Prepare a container and cloth to prevent scattering of engine coolant when performing work where engine coolant can be spilled. If the fuel spills, wipe it off immediately to prevent from penetrating into floor or flowing out for environmental protection.
• Follow all government and local regulations concerning disposal of refuse when disposing engine coolant.

D: PREPARATION TOOL

1. SPECIAL TOOL

ILLUSTRATION	TOOL NUMBER	DESCRIPTION	REMARKS
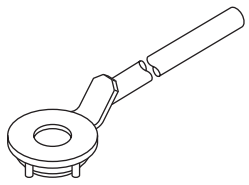 ST-499977400	499977400	CRANK PULLEY WRENCH	Used for removing and installing the crank pulley. (CVT model)
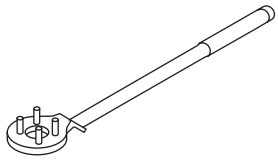 ST-499977100	499977100	CRANK PULLEY WRENCH	Used for removing and installing the crank pulley. (MT model)
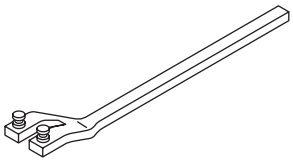 ST18231AA010	18231AA010	CAM SPROCKET WRENCH	Used for removing and installing cam sprocket. NOTE: CAM SPROCKET WRENCH (499207100) can also be used.
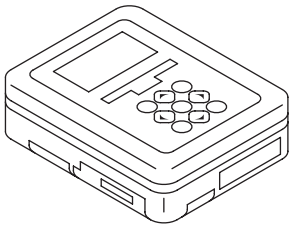 ST1B022XU0	1B022XU0	SUBARU SELECT MONITOR III KIT	Used for troubleshooting the electrical system.

2. GENERAL TOOL

TOOL NAME	REMARKS
Circuit tester	Used for measuring resistance and voltage.
Radiator cap tester	Used for checking radiator and radiator cap.

2. Radiator Fan System

A: WIRING DIAGRAM

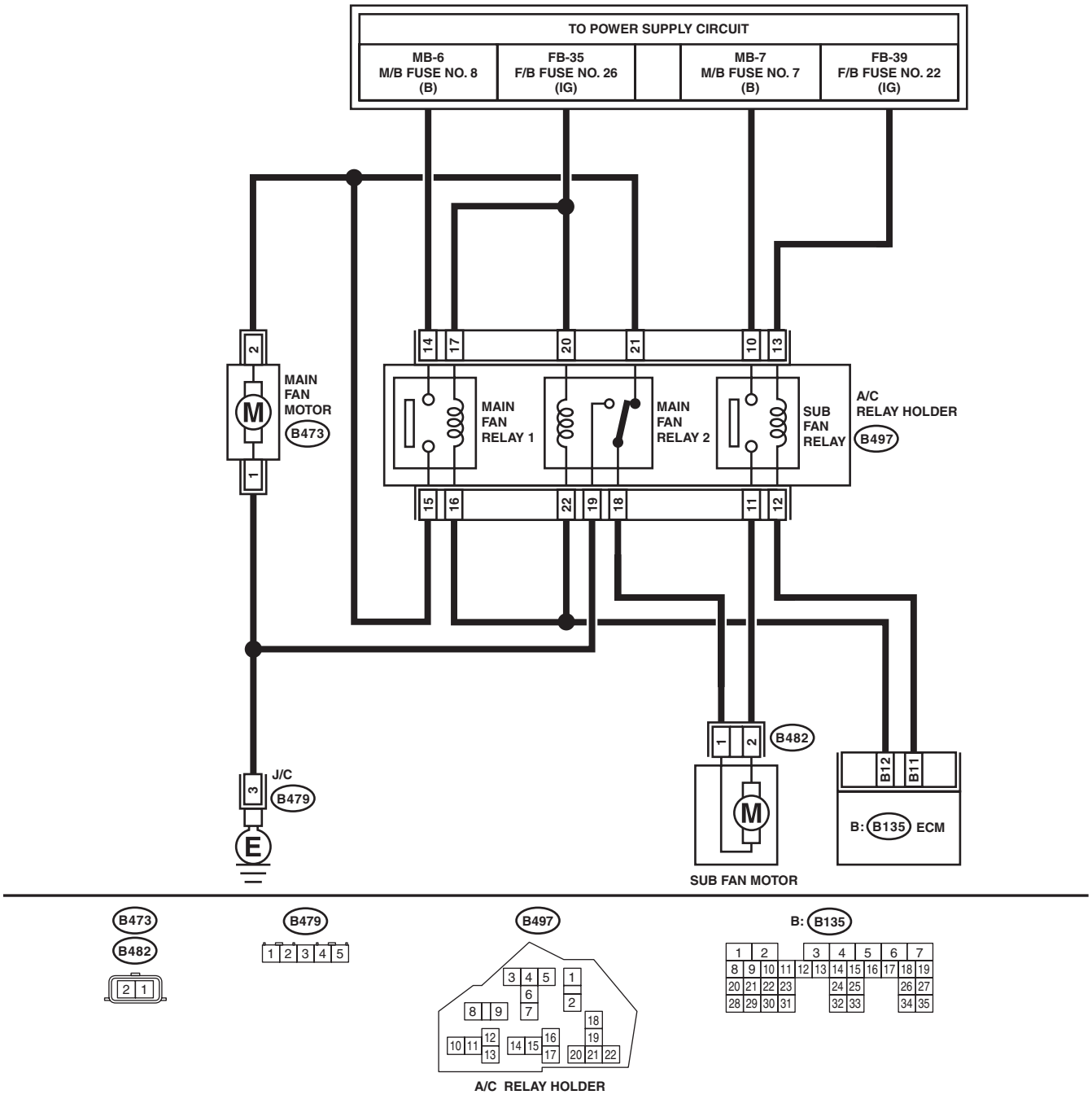

CO-02650

B: INSPECTION

Operating condition:
Radiator fan operates depending on the radiator fan operation mode related to engine coolant temperature or the radiator fan operation mode related to A/C compressor load, whichever is higher as an operation mode.

- Radiator fan operation mode related to engine coolant temperature

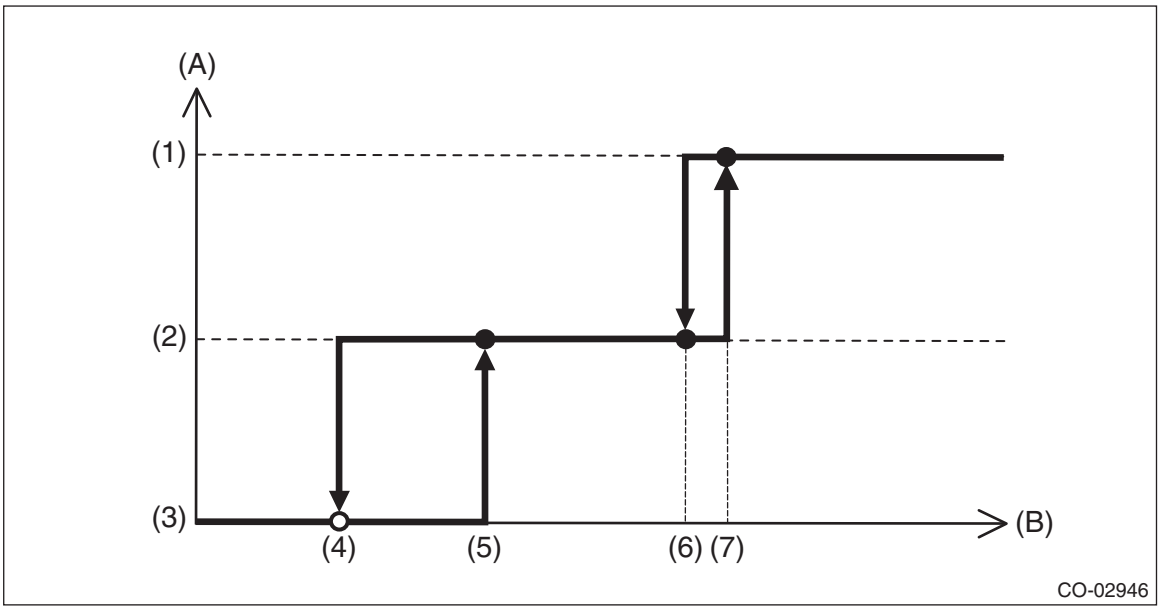

(A)	Radiator fan operation mode	(B)	Engine coolant temperature		
(1)	High-Speed	(4)	96°C (205°F)	(7)	101°C (214°F)
(2)	Low-Speed	(5)	98°C (208°F)		
(3)	OFF	(6)	100°C (212°F)		

- Radiator fan operation mode related to A/C compressor load

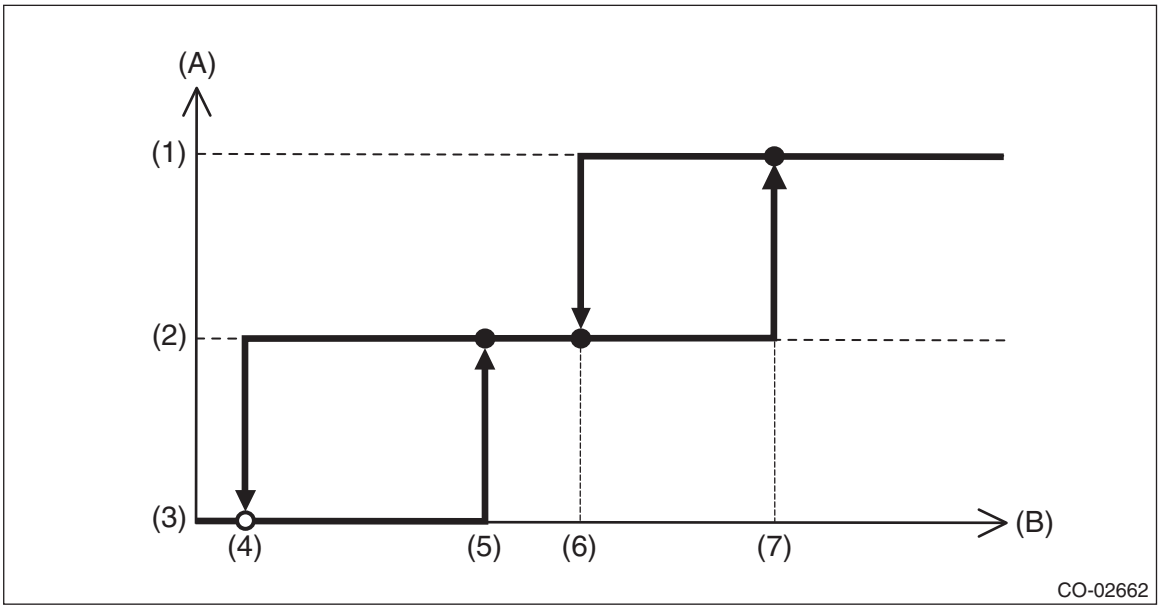

(A)	Radiator fan operation mode	(B)	A/C compressor refrigerant pressure		
(1)	High-Speed	(4)	0.8 MPa (8.16 kgf/cm^2, 116 psi)	(7)	1.5 MPa (15.30 kgf/cm^2, 218 psi)
(2)	Low-Speed	(5)	1.125 MPa (11.47 kgf/cm^2, 163 psi)		
(3)	OFF	(6)	1.25 MPa (12.75 kgf/cm^2, 181 psi)		

DIAGNOSIS:
Radiator main fan and radiator sub fans do not rotate under the above operating conditions.

	Step	Check	Yes	No
1	**CHECK OPERATION OF RADIATOR FAN.** 1) Connect the delivery mode fuse. 2) Turn the ignition switch to ON. 3) Perform the compulsory operation check for the radiator fan relay using Subaru Select Monitor. NOTE: • When performing a forced operation radiator fan relay check using the Subaru Select Monitor, the radiator main fan and radiator sub fan will repeat low speed revolution → high speed revolution → OFF in this order. • Subaru Select Monitor For detailed operation procedures, refer to "PC application help for Subaru Select Monitor".	Do the radiator main fans and radiator sub fans rotate at low speed?	Go to step **2**.	Go to step **3**.
2	**CHECK OPERATION OF RADIATOR FAN.** 1) Connect the delivery mode fuse. 2) Turn the ignition switch to ON. 3) Perform the compulsory operation check for the radiator fan relay using Subaru Select Monitor. NOTE: • When performing a forced operation radiator fan relay check using the Subaru Select Monitor, the radiator main fan and radiator sub fan will repeat low speed revolution → high speed revolution → OFF in this order. • Subaru Select Monitor For detailed operation procedures, refer to "PC application help for Subaru Select Monitor".	Do the radiator main fans and radiator sub fans rotate at high speed?	Radiator main fan system is normal.	Go to step **27**.
3	**CHECK POWER SUPPLY TO SUB FAN RELAY.** 1) Turn the ignition switch to OFF. 2) Remove the sub fan relay from A/C relay holder. 3) Measure the voltage between sub fan relay connector and chassis ground. ***Connector & terminal*** ***(B497) No. 10 (+) — Chassis ground (–):***	Is the voltage 10 V or more?	Go to step **4**.	Go to step **5**.
4	**CHECK POWER SUPPLY TO SUB FAN RELAY.** 1) Turn the ignition switch to ON. 2) Measure the voltage between sub fan relay connector and chassis ground. ***Connector & terminal*** ***(B497) No. 13 (+) — Chassis ground (–):***	Is the voltage 10 V or more?	Go to step **7**.	Go to step **6**.
5	**CHECK FUSE.** 1) Turn the ignition switch to OFF. 2) Remove the fuse No. 7. 3) Check the condition of fuse.	Is the fuse blown out?	Replace the fuse.	Repair the power supply line.
6	**CHECK FUSE.** 1) Turn the ignition switch to OFF. 2) Remove the fuse No. 22. 3) Check the condition of fuse.	Is the fuse blown out?	Replace the fuse.	Repair the power supply line.

	Step	Check	Yes	No
7	**CHECK SUB FAN RELAY.** 1) Turn the ignition switch to OFF. 2) Measure the resistance between sub fan relay terminals. ***Terminals*** ***No. 10 — No. 11:***	Is the resistance 1 MΩ or more?	Go to step **8**.	Replace the sub fan relay. <Ref. to AC-30, Relay and Fuse.>
8	**CHECK SUB FAN RELAY.** 1) Connect the battery to terminals No. 13 and No. 12 of the sub fan relay. 2) Measure the resistance between sub fan relay terminals. ***Terminals*** ***No. 10 — No. 11:***	Is the resistance less than 1 Ω?	Go to step **9**.	Replace the sub fan relay. <Ref. to AC-30, Relay and Fuse.>
9	**CHECK HARNESS BETWEEN SUB FAN RELAY CONNECTOR AND SUB FAN MOTOR CONNECTOR.** 1) Disconnect the connector from the sub fan motor. 2) Measure the resistance of harness between sub fan relay connector and sub fan motor connector. ***Connector & terminal*** ***(B482) No. 2 — (B497) No. 11:***	Is the resistance less than 1 Ω?	Go to step **10**.	Repair the open circuit of harness between sub fan relay connector and sub fan motor connector.
10	**CHECK HARNESS BETWEEN SUB FAN MOTOR CONNECTOR AND MAIN FAN RELAY 2 CONNECTOR.** 1) Remove the main fan relay 2 from A/C relay holder. 2) Measure the resistance of harness between sub fan motor connector and main fan relay 2 connector. ***Connector & terminal*** ***(B482) No. 1 — (B497) No. 18:***	Is the resistance less than 1 Ω?	Go to step **11**.	Repair the open circuit of the harness between sub fan motor connector and main fan relay 2 connector.
11	**CHECK FOR POOR CONTACT.** Check poor contact of sub fan motor connector.	Is there poor contact of the sub fan motor connector?	Repair the poor contact of sub fan motor connector.	Go to step **12**.
12	**CHECK SUB FAN MOTOR.** Connect the battery positive (+) terminal to terminal No. 2 of the sub fan motor, and the ground (–) terminal to terminal No. 1.	Does the radiator sub fan rotate?	Go to step **13**.	Replace the sub fan motor. <Ref. to CO(H4SO)-25, Radiator Sub Fan and Fan Motor.>
13	**CHECK MAIN FAN RELAY 2.** Measure the resistance between main fan relay 2 terminals. ***Terminals*** ***No. 21 — No. 18:***	Is the resistance less than 1 Ω?	Go to step **14**.	Replace the main fan relay 2. <Ref. to AC-30, Relay and Fuse.>
14	**CHECK HARNESS BETWEEN MAIN FAN RELAY 2 CONNECTOR AND MAIN FAN MOTOR CONNECTOR.** 1) Disconnect the connector from the main fan motor. 2) Measure the resistance of the harness between main fan relay 2 connector and main fan motor connector. ***Connector & terminal*** ***(B473) No. 2 — (B497) No. 21:***	Is the resistance less than 1 Ω?	Go to step **15**.	Repair the open circuit of the harness between main fan relay 2 connector and main fan motor connector.

	Step	Check	Yes	No
15	**CHECK GROUND CIRCUIT OF MAIN FAN MOTOR.** Measure the resistance between main fan motor connector and chassis ground. ***Connector & terminal*** ***(B473) No. 1 — Chassis ground:***	Is the resistance less than 5 Ω?	Go to step **16**.	Repair the open circuit of the harness between the main fan motor connector and chassis ground or poor contact of the joint connector.
16	**CHECK FOR POOR CONTACT.** Check poor contact of main fan motor connector.	Is there poor contact of the main fan motor connector?	Repair the poor contact of main fan motor connector.	Go to step **17**.
17	**CHECK MAIN FAN MOTOR.** Connect the battery positive (+) terminal to terminal No. 2 of the main fan motor, and the ground (–) terminal to terminal No. 1.	Does the radiator main fan rotate?	Go to step **18**.	Replace the main fan motor. <Ref. to CO(H4SO)-24, Radiator Main Fan and Fan Motor.>
18	**CHECK HARNESS BETWEEN SUB FAN RELAY CONNECTOR AND ECM.** 1) Disconnect the connector from ECM. 2) Measure the resistance between the sub fan relay connector and ECM connector. ***Connector & terminal*** ***(B135) No. 11 — (B497) No. 12:***	Is the resistance less than 1 Ω?	Go to step **19**.	Repair the open circuit of harness between sub fan relay connector and ECM.
19	**CHECK FOR POOR CONTACT.** Check for poor contact of ECM connector.	Is there poor contact of ECM connector?	Repair the poor contact of ECM connector.	Check the DTC. Repair the trouble cause. <Ref. to EN(H4SO)(diag)-39, Read Diagnostic Trouble Code (DTC).>
20	**CHECK MAIN FAN RELAY 1.** 1) Turn the ignition switch to OFF. 2) Remove the main fan relay 1 from A/C relay holder. 3) Measure the resistance between main fan relay 1 terminals. ***Terminals*** ***No. 14 — No. 15:***	Is the resistance 1 MΩ or more?	Go to step **21**.	Replace the main fan relay 1. <Ref. to AC-30, Relay and Fuse.>
21	**CHECK MAIN FAN RELAY 1.** 1) Connect terminals No. 17 and No. 16 of the main fan relay 1 to the battery. 2) Measure the resistance between terminals of main fan relay 1 switch. ***Terminals*** ***No. 14 — No. 15:***	Is the resistance less than 1 Ω?	Go to step **22**.	Replace the main fan relay 1. <Ref. to AC-30, Relay and Fuse.>
22	**CHECK HARNESS BETWEEN MAIN FAN RELAY 1 CONNECTOR AND MAIN FAN MOTOR CONNECTOR.** 1) Disconnect the connector from the main fan motor. 2) Measure the resistance of the harness between main fan relay 1 connector and main fan motor connector. ***Connector & terminal*** ***(B473) No. 2 — (B497) No. 15:***	Is the resistance less than 1 Ω?	Go to step **23**.	Repair the open circuit of the harness between main fan relay 1 connector and main fan motor connector.

	Step	Check	Yes	No
23	**CHECK HARNESS BETWEEN MAIN FAN RELAY 1 CONNECTOR AND ECM.** 1) Disconnect the connector from ECM. 2) Measure the resistance between the main fan relay 1 connector and ECM connector. ***Connector & terminal*** ***(B135) No. 12 — (B497) No. 16:***	Is the resistance less than 1 Ω?	Go to step **24**.	Repair the open circuit of the harness between main fan relay 1 connector and ECM.
24	**CHECK HARNESS BETWEEN MAIN FAN RELAY 2 CONNECTOR AND ECM.** Measure the resistance between the main fan relay 2 connector and ECM connector. ***Connector & terminal*** ***(B135) No. 12 — (B497) No. 22:***	Is the resistance less than 1 Ω?	Go to step **25**.	Repair the open circuit of the harness between main fan relay 2 connector and ECM.
25	**CHECK FUSE.** 1) Turn the ignition switch to OFF. 2) Remove the fuse No. 8 and No. 26. 3) Check the condition of fuse.	Is the fuse blown out?	Replace the fuse.	Go to step **26**.
26	**CHECK FOR POOR CONTACT.** Check for poor contact of ECM connector.	Is there poor contact of ECM connector?	Repair the poor contact of ECM connector.	Repair the power supply circuit to the main fuse box.
27	**CHECK OPERATION OF RADIATOR FAN.** If the both fans do not rotate at high speed in the condition of step 2, check whether the radiator sub fan is rotating.	Does the radiator sub fan rotate?	Go to step **20**.	Go to step **28**.
28	**CHECK GROUND CIRCUIT OF MAIN FAN RELAY 2.** 1) Remove the main fan relay 2 from A/C relay holder. 2) Measure the resistance between main fan relay 2 connector and chassis ground. ***Connector & terminal*** ***(B497) No. 19 — Chassis ground:***	Is the resistance less than 1 Ω?	Go to step **29**.	Repair the open circuit of the harness between main fan relay 2 connector and chassis ground or poor contact of the joint connector.
29	**CHECK POWER SUPPLY TO MAIN FAN RELAY 2.** 1) Turn the ignition switch to ON. 2) Measure the voltage between main fan relay 2 connector and chassis ground. ***Connector & terminal*** ***(B497) No. 20 (+) — Chassis ground (–):***	Is the voltage 10 V or more?	Go to step **30**.	Repair the power supply line.
30	**CHECK MAIN FAN RELAY 2.** 1) Turn the ignition switch to OFF. 2) Remove the main fan relay 2. 3) Measure the resistance between main fan relay 2 terminals. ***Terminals*** ***No. 18 — No. 19:***	Is the resistance 1 MΩ or more?	Go to step **31**.	Replace the main fan relay 2. <Ref. to AC-30, Relay and Fuse.>
31	**CHECK MAIN FAN RELAY 2.** 1) Connect the battery to terminals No. 20 and No. 22 of the main fan relay 2. 2) Measure the resistance between main fan relay 2 terminals. ***Terminals*** ***No. 18 — No. 19:***	Is the resistance less than 1 Ω?	Go to step **23**.	Replace the main fan relay 2. <Ref. to AC-30, Relay and Fuse.>

3. Engine Coolant

A: REPLACEMENT

1. DRAINING OF ENGINE COOLANT

1) Lift up the vehicle.
2) Remove the under cover. <Ref. to EI-35, REMOVAL, Front Under Cover.>
3) Remove the drain plug to drain engine coolant into container.

NOTE:
Remove the radiator cap so that engine coolant will drain faster.

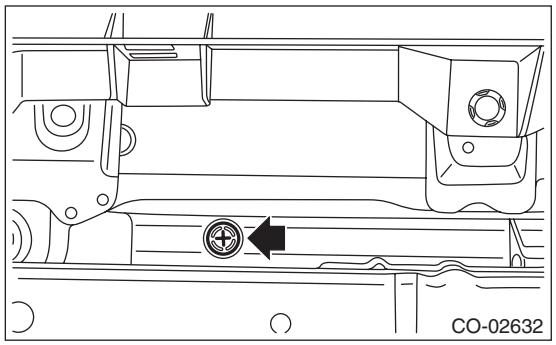

4) Install the drain plug.
5) Install the under cover. <Ref. to EI-35, INSTALLATION, Front Under Cover.>

2. FILLING OF ENGINE COOLANT

1) Pour cooling system conditioner through the filler neck.

Cooling system protective agent:
Refer to "SPECIFICATION" for cooling system protective agent. <Ref. to CO(H4SO)-2, SPECIFICATION, General Description.>

2) Pour engine coolant into the radiator up to the filler neck position.

Recommended engine coolant:
Refer to "SPECIFICATION" for recommended engine coolant. <Ref. to CO(H4SO)-2, SPECIFICATION, General Description.>

Engine coolant level:
Refer to "SPECIFICATION" for engine coolant level. <Ref. to CO(H4SO)-2, SPECIFICATION, General Description.>

Engine coolant concentration:
Refer to "ADJUSTMENT" for the recommended engine coolant concentration. <Ref. to CO(H4SO)-15, ADJUSTMENT, Engine Coolant.>

NOTE:
The SUBARU Super Coolant contains anti-freeze and anti-rust agents, and is especially made for Subaru engines with an aluminum cylinder block. Be sure to use SUBARU Super Coolant, since other coolant may cause corrosion.
3) Fill engine coolant into the reservoir tank up to "FULL" level.

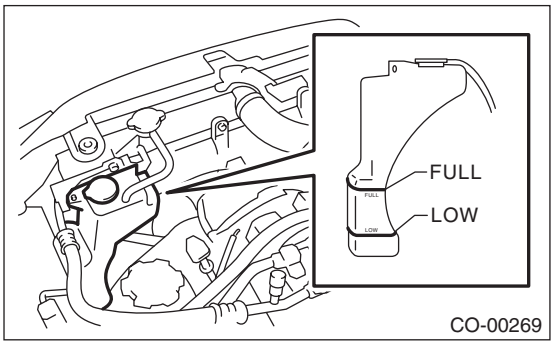

4) Close the radiator cap and start the engine. Race 5 to 6 times at 3,000 rpm or less, then stop the engine. (Complete this operation within 40 seconds.)
5) Wait for one minute after the engine stops, and open the radiator cap. If the engine coolant level drops, add engine coolant into radiator up to the filler neck position.
6) Perform the procedures 4) and 5) again.
7) Attach the radiator cap and reservoir tank cap properly.
8) Start the engine and operate the heater at maximum hot position and the blower speed setting to "LO".
9) Run the engine at 2,000 rpm or less until radiator fan starts and stops.

NOTE:
Be careful with the engine coolant temperature to prevent overheating.
10) Stop the engine and wait until the engine coolant temperature lowers to 30°C (86°F) or less.
11) Open the radiator cap. If the engine coolant level drops, add engine coolant into the radiator up to the filler neck position and the reservoir tank to "FULL" level.
12) Attach the radiator cap correctly.
13) Set the heater setting to maximum hot position and the blower speed setting to "LO" and start the engine. Perform racing at 3,000 rpm or less. If the flowing sound is heard from the heater core, repeat the procedures from step 9).

B: ADJUSTMENT

1. PROCEDURE TO ADJUST THE SUBARU SUPER COOLANT CONCENTRATION

CAUTION:
SUBARU Super Coolant concentration must be used from 50 to 60% to assure the best performance of the anti-freeze and anti-rust agents.
To adjust the concentration of SUBARU Super Coolant according to temperature, find the proper SUBARU Super Coolant concentration in the table, and add diluting water to the SUBARU Super Coolant (concentrated type) until it reaches the proper dilution.

Relationship of SUBARU Super Coolant concentration and freezing temperature			
SUBARU Super Coolant concentration	50%	55%	60%
Freezing temperature	–36°C (–33°F)	–41°C (–42°F)	–50°C (–58°F)

Recommended Engine Coolant and Water for Dilution:
Refer to "SPECIFICATION" for the recommended engine coolant and diluting water. <Ref. to CO(H4SO)-2, SPECIFICATION, General Description.>

4. Water Pump

A: REMOVAL

1) Remove the radiator. <Ref. to CO(H4SO)-20, REMOVAL, Radiator.>
2) Remove the V-belts. <Ref. to ME(H4SO)-43, REMOVAL, V-belt.>
3) Remove the crank pulley. <Ref. to ME(H4SO)-45, REMOVAL, Crank Pulley.>
4) Remove the timing belt cover. <Ref. to ME(H4SO)-47, REMOVAL, Timing Belt Cover.>
5) Remove the timing belt. <Ref. to ME(H4SO)-48, TIMING BELT, REMOVAL, Timing Belt.>
6) Remove the automatic belt tension adjuster.

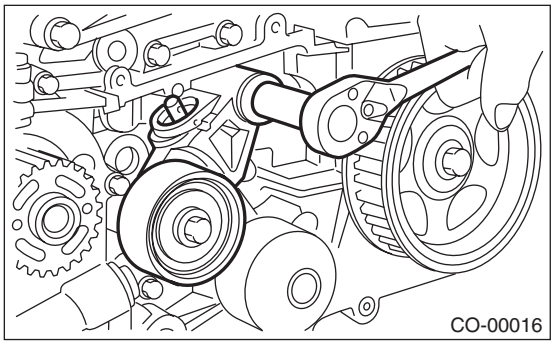
CO-00016

7) Remove the camshaft position sensor. <Ref. to FU(H4SO)-27, REMOVAL, Camshaft Position Sensor.>
8) Remove the cam sprocket LH. <Ref. to ME(H4SO)-53, REMOVAL, Cam Sprocket.>
9) Remove the belt cover No. 2 LH.

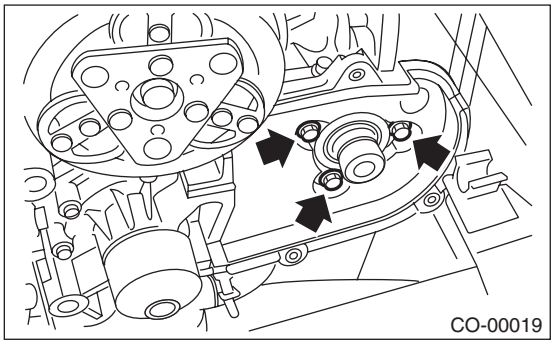
CO-00019

10) Remove the tensioner bracket.

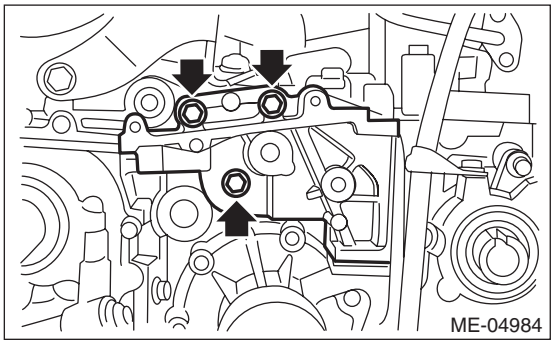
ME-04984

11) Disconnect the hose from water pump.
12) Remove the water pump.

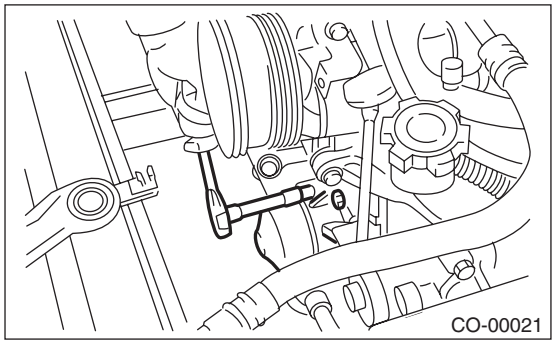
CO-00021

B: INSTALLATION

1) Install the water pump onto cylinder block LH.

NOTE:
- Use a new gasket.
- When installing the water pump, tighten the bolts in two stages in alphabetical sequence as shown in figure.

Tightening torque:
1st
12 N·m (1.2 kgf-m, 8.9 ft-lb)
2nd
12 N·m (1.2 kgf-m, 8.9 ft-lb)

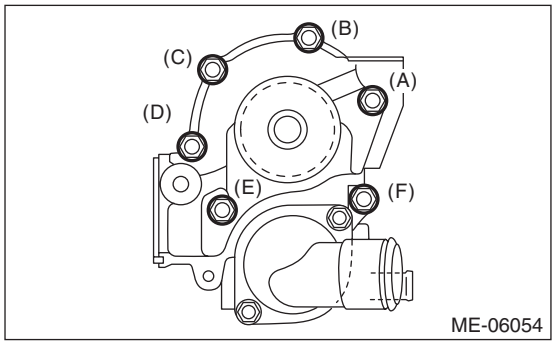

ME-06054

2) Install the hose to water pump.
3) Install the tensioner bracket.

Tightening torque:
24.5 N·m (2.5 kgf-m, 18.1 ft-lb)

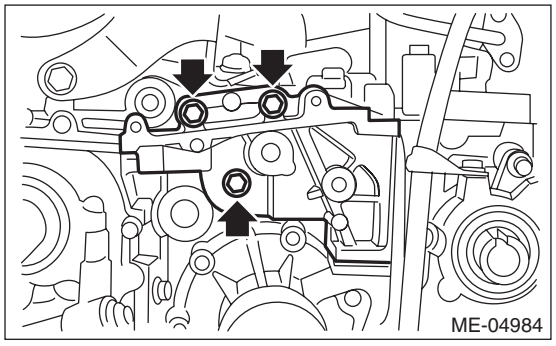
ME-04984

4) Install the belt cover No. 2 LH.

Tightening torque:
5 N·m (0.5 kgf-m, 3.7 ft-lb)

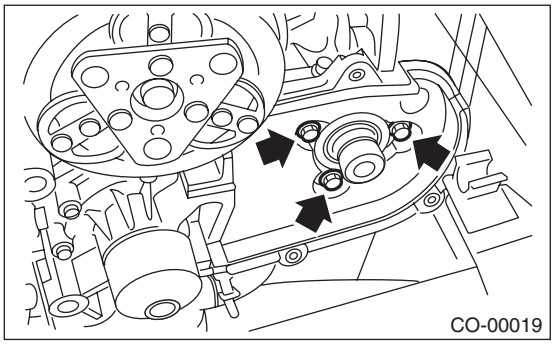

5) Install the cam sprocket LH. <Ref. to ME(H4SO)-53, INSTALLATION, Cam Sprocket.>
6) Install the camshaft position sensor. <Ref. to FU(H4SO)-27, INSTALLATION, Camshaft Position Sensor.>
7) Install an automatic belt tension adjuster with the tension rod held by a pin. <Ref. to ME(H4SO)-49, AUTOMATIC BELT TENSION ADJUSTER ASSEMBLY AND BELT IDLER, INSTALLATION, Timing Belt.>
8) Install the timing belt. <Ref. to ME(H4SO)-50, TIMING BELT, INSTALLATION, Timing Belt.>
9) Install the timing belt cover. <Ref. to ME(H4SO)-47, INSTALLATION, Timing Belt Cover.>
10) Install the crank pulley. <Ref. to ME(H4SO)-45, INSTALLATION, Crank Pulley.>
11) Install the V-belts. <Ref. to ME(H4SO)-43, INSTALLATION, V-belt.>
12) Install the radiator. <Ref. to CO(H4SO)-21, INSTALLATION, Radiator.>

C: INSPECTION

1) Check the water pump bearing for smooth rotation.
2) Check the water pump pulley for abnormalities.
3) Make sure the impeller is not abnormally deformed or damaged.
4) Inspect the clearance between impeller and pump case.

Clearance between impeller and pump case:
Standard
0.5 — 1.6 mm (0.020 — 0.063 in)

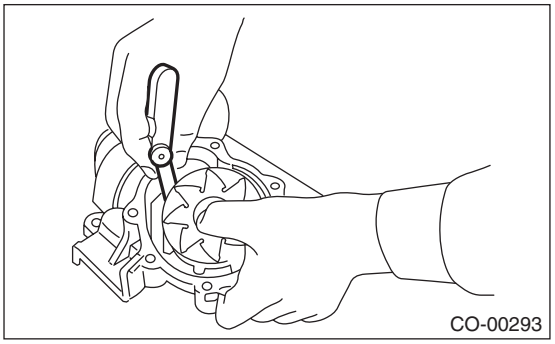

5) After water pump installation, check pulley shaft for engine coolant leaks or noise. If leaks or noise are noted, replace the water pump assembly.

5. Thermostat

A: REMOVAL

1) Lift up the vehicle.
2) Remove the under cover. <Ref. to EI-35, REMOVAL, Front Under Cover.>
3) Drain engine coolant. <Ref. to CO(H4SO)-14, DRAINING OF ENGINE COOLANT, REPLACEMENT, Engine Coolant.>
4) Disconnect the radiator outlet hose from thermostat cover.

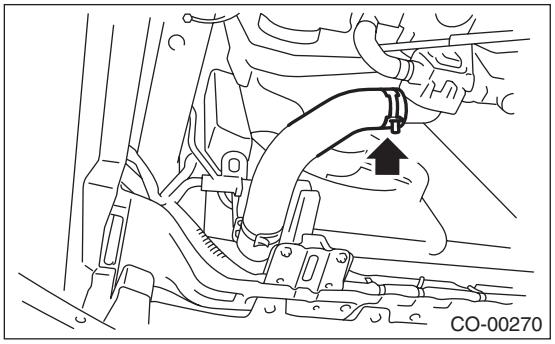

5) Remove the thermostat cover, and then remove the gasket and thermostat.

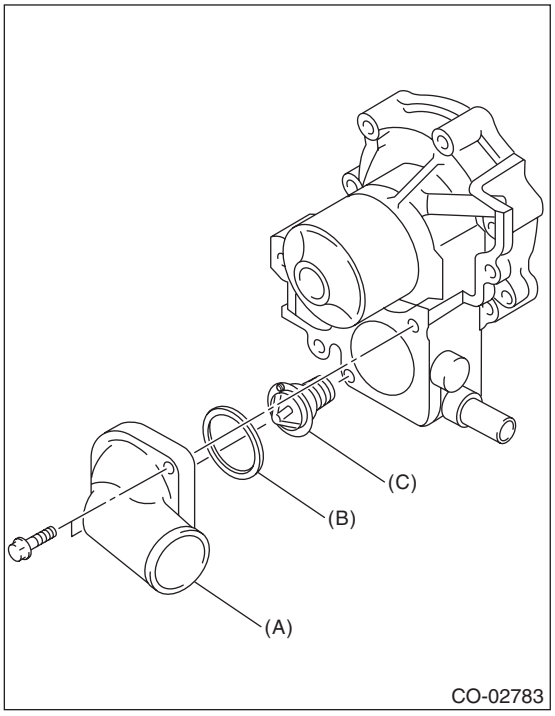

(A) Thermostat cover
(B) Gasket
(C) Thermostat

B: INSTALLATION

1) Install a gasket to thermostat.

NOTE:
Use a new gasket.
2) Install the thermostat and thermostat cover.

NOTE:
Install the parts with the jiggle pin facing upward.

Tightening torque:
12 N·m (1.2 kgf-m, 8.9 ft-lb)

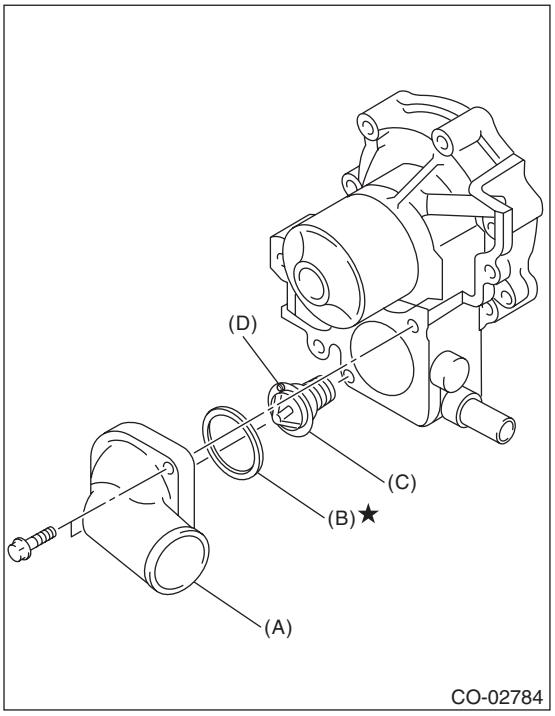

(A) Thermostat cover
(B) Gasket
(C) Thermostat
(D) Jiggle pin

3) Connect the radiator outlet hose to thermostat cover.
4) Install the under cover. <Ref. to EI-35, INSTALLATION, Front Under Cover.>
5) Lower the vehicle.
6) Fill engine coolant. <Ref. to CO(H4SO)-14, FILLING OF ENGINE COOLANT, REPLACEMENT, Engine Coolant.>

C: INSPECTION

1) Check that the thermostat does not have deformation, cracks or damage.
2) Check that the thermostat valve closes completely at an ambient temperature.
3) Immerse the thermostat and a thermometer in water. Raise water temperature gradually, and check the temperature and valve lift when the valve begins to open and when the valve is fully opened. Replace the thermostat if faulty.

NOTE:
- During the test, agitate the water for even temperature distribution.
- Leave the thermostat in the boiling water for five minutes or more before measuring the valve lift.
- Hold the thermostat with a wire or the like to avoid contacting with container bottom.

Starting temperature to open:
86 — 90°C (187 — 194°F)

Full open temperature:
95°C (203°F)

Total valve lift:
9.0 mm (0.354 in) or more

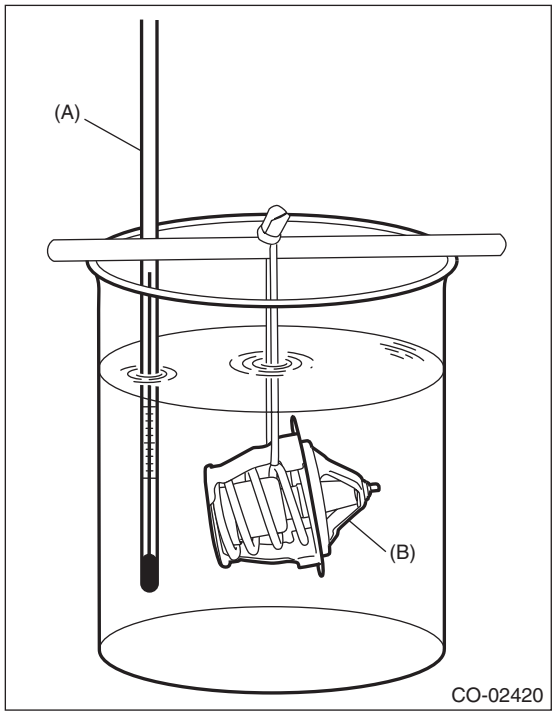

(A) Thermometer
(B) Thermostat

6. Radiator

A: REMOVAL

CAUTION:
The radiator is pressurized when the engine and radiator are hot. Wait until engine and radiator cool down before working on the radiator.

1) Disconnect the ground cable from battery.

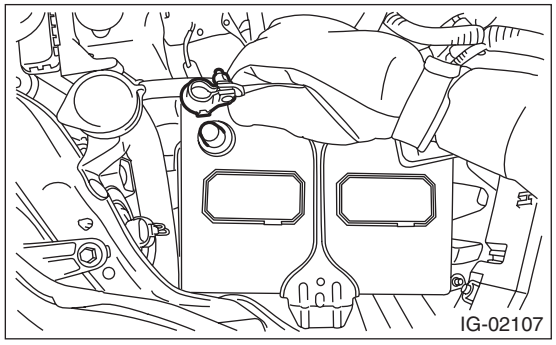

2) Lift up the vehicle.
3) Remove the under cover. <Ref. to EI-35, REMOVAL, Front Under Cover.>
4) Drain engine coolant. <Ref. to CO(H4SO)-14, DRAINING OF ENGINE COOLANT, REPLACEMENT, Engine Coolant.>
5) Disconnect the radiator outlet hose from thermostat cover.

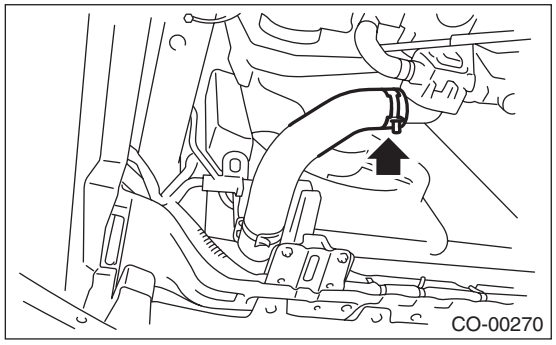

6) Disconnect the CVTF radiator hose from the CVTF pipe. (CVT model)

NOTE:
Plug the CVTF pipe to prevent CVTF from leaking.

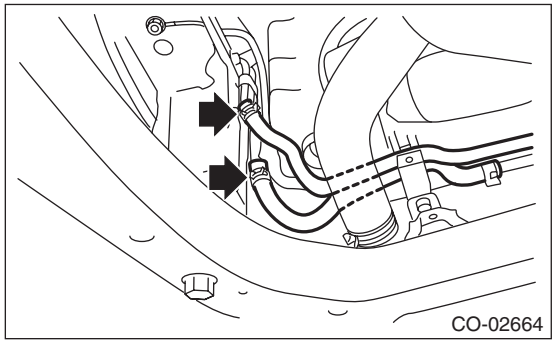

7) Lower the vehicle.
8) Remove the air intake duct. <Ref. to IN(H4SO)-9, REMOVAL, Air Intake Duct.>
9) Remove the reservoir tank. <Ref. to CO(H4SO)-26, REMOVAL, Reservoir Tank.>
10) Disconnect the connector (A) from the main fan motor and the connector (B) from the sub fan motor.

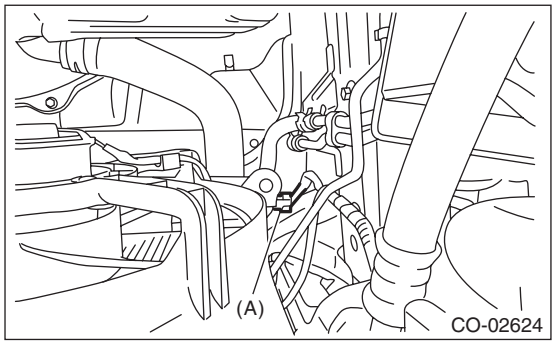

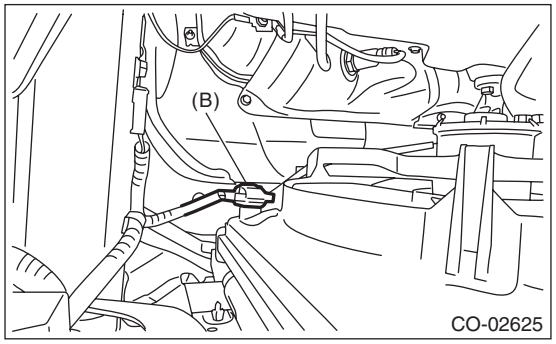

11) Disconnect the radiator inlet hoses from the engine.

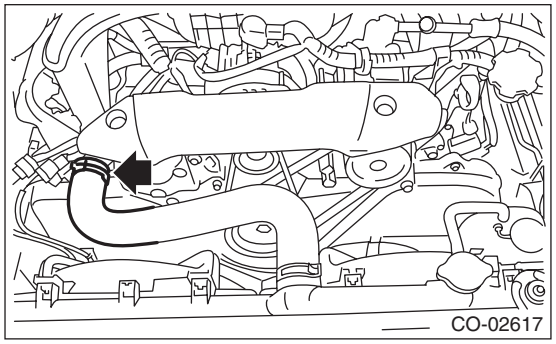

12) Remove the grille bracket.

NOTE:
Remove ten clips when removing the grille bracket.

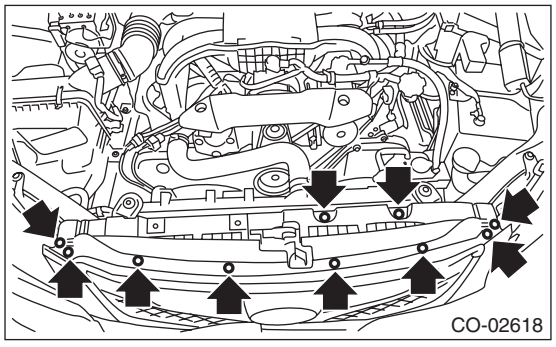

13) Remove the radiator upper brackets.

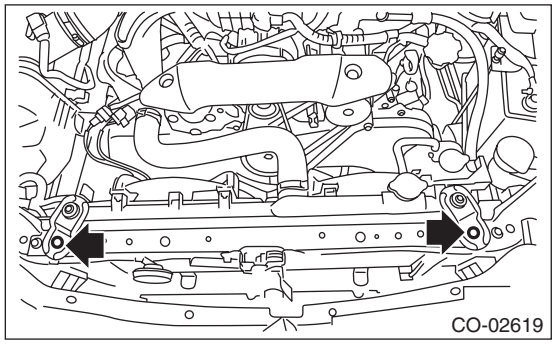

14) Lift the radiator up and away from vehicle.
15) Remove the radiator lower cushion from the vehicle body.

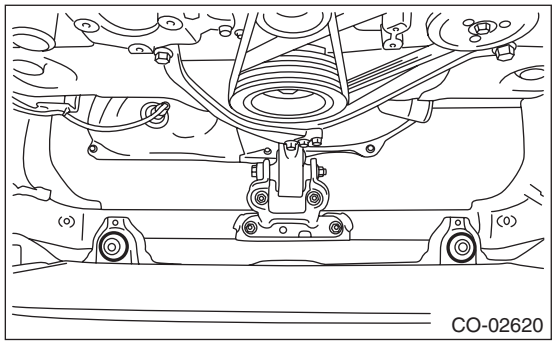

B: INSTALLATION

1) Install the radiator lower cushion to the vehicle body.

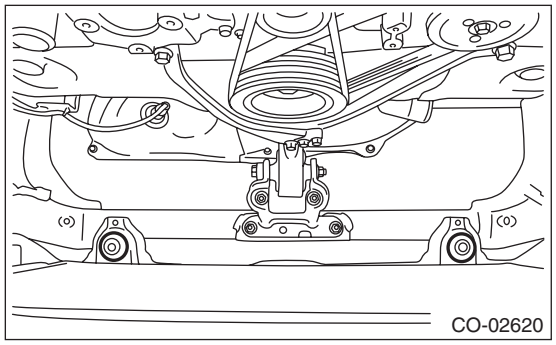

2) Install the radiator to vehicle.

NOTE:
Make pins on the lower side of radiator be fitted into the radiator lower cushions.

3) Install the radiator upper brackets.

Tightening torque:
12 N·m (1.2 kgf-m, 8.9 ft-lb)

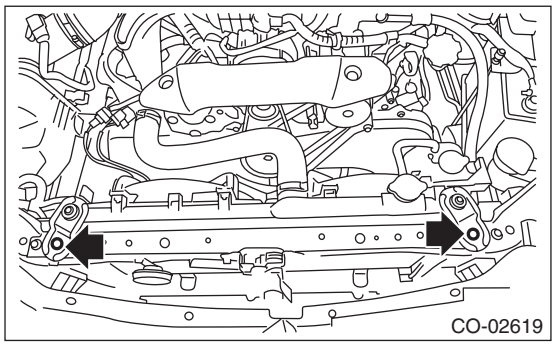

4) Attach the grille bracket.

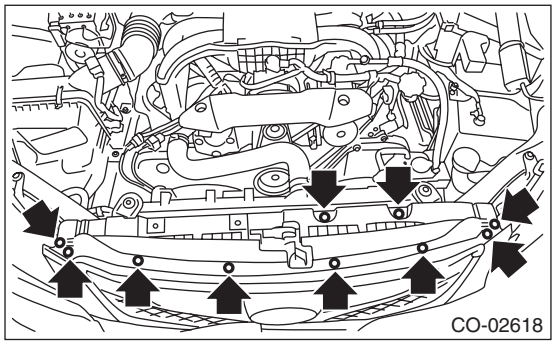

5) Connect the radiator inlet hose.

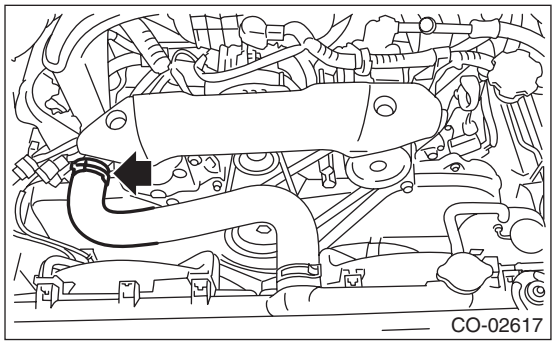

6) Connect the connector (A) to the radiator main fan motor and the connector (B) to the sub fan motor connector.

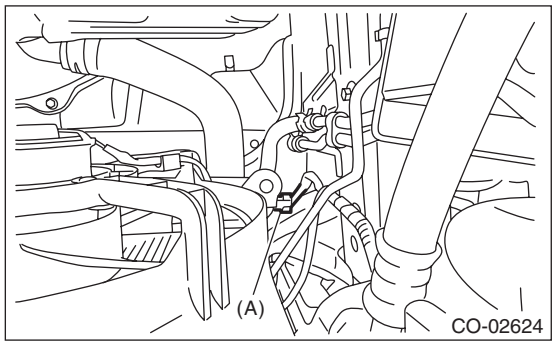

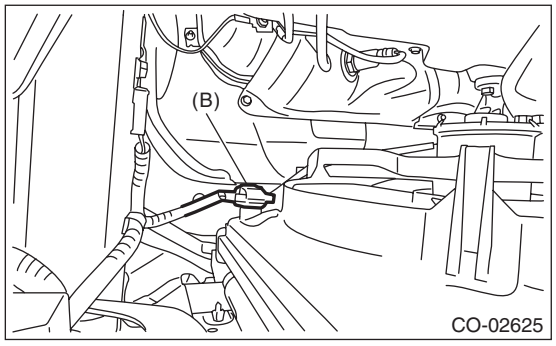

7) Install the air intake duct. <Ref. to IN(H4SO)-9, INSTALLATION, Air Intake Duct.>
8) Install the reservoir tank. <Ref. to CO(H4SO)-26, INSTALLATION, Reservoir Tank.>
9) Lift up the vehicle.
10) Connect the CVTF radiator hose. (CVT model)

NOTE:
Use a new CVTF radiator hose.

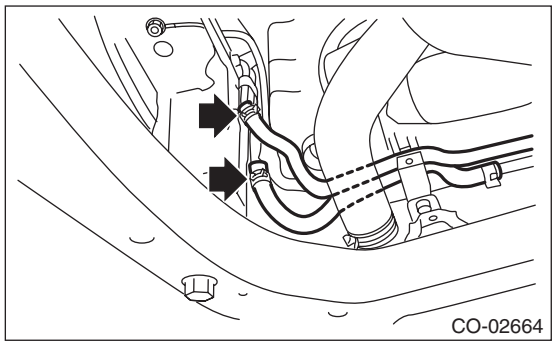

11) Connect the radiator outlet hose.

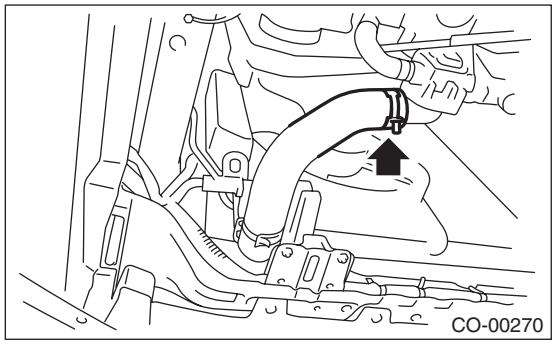

12) Install the under cover. <Ref. to EI-35, INSTALLATION, Front Under Cover.>
13) Lower the vehicle.
14) Connect the battery ground terminal.

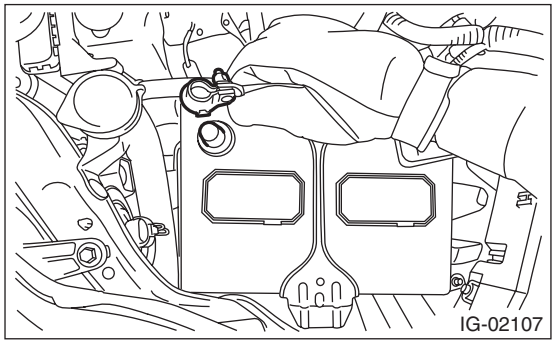

15) Fill engine coolant. <Ref. to CO(H4SO)-14, FILLING OF ENGINE COOLANT, REPLACEMENT, Engine Coolant.>
16) Adjust the CVTF level. (CVT model) <Ref. to CVT-37, ADJUSTMENT, CVTF.>

C: INSPECTION

1) Check that the radiator does not have deformation, cracks or damage.
2) Check that the hose has no cracks, damage or loose part.
3) Remove the radiator cap, fill the radiator with engine coolant, and then install the radiator cap tester to the filler neck of radiator.

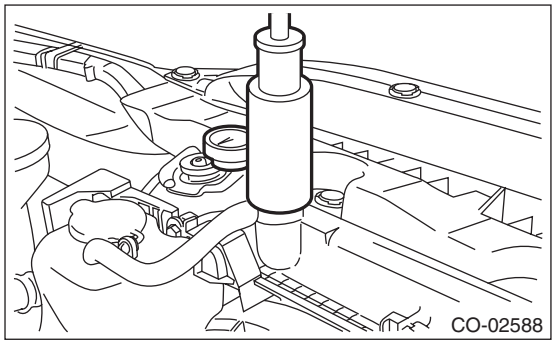

4) Apply a pressure of 157 kPa (1.6 kgf/cm^2, 23 psi) to the radiator, and check the following items.
- Leakage from the radiator or its vicinity
- Leakage from the hose or its connections

CAUTION:
- **Engine should be turned off.**
- **Wipe engine coolant from check points in advance.**
- **Be careful not to deform the filler neck of radiator when installing and removing the radiator cap tester.**
- **Be careful of engine coolant from spurting out when removing the radiator cap tester.**

7. Radiator Cap

A: INSPECTION

1) Check that the radiator cap does not have deformation, cracks or damage.
2) Attach the radiator cap tester to radiator cap.

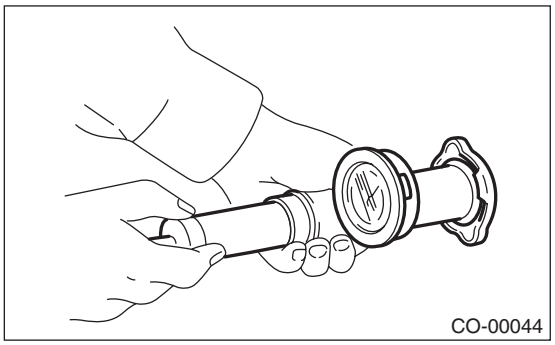

3) Increase pressure until the radiator cap tester gauge needle stops. Radiator cap is functioning properly if it holds the service limit pressure for 5 — 6 seconds. Replace the radiator cap if its valve opens at less than the service limit.

Standard:
93 — 123 kPa (0.95 — 1.25 kgf/cm^2, 14 — 18 psi)

Service limit:
83 kPa (0.85 kgf/cm^2, 12 psi)

CAUTION:
Be sure to remove foreign matter and rust from the cap in advance. Otherwise, results of pressure test will be incorrect.

8. Radiator Main Fan and Fan Motor

A: REMOVAL

1) Disconnect the ground cable from battery.

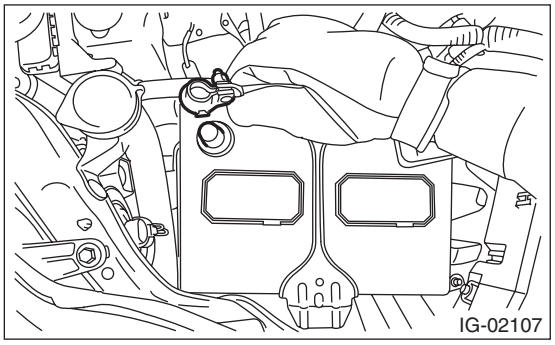

2) Remove the reservoir tank. <Ref. to CO(H4SO)-26, REMOVAL, Reservoir Tank.>
3) Disconnect the connector from the main fan motor assembly.

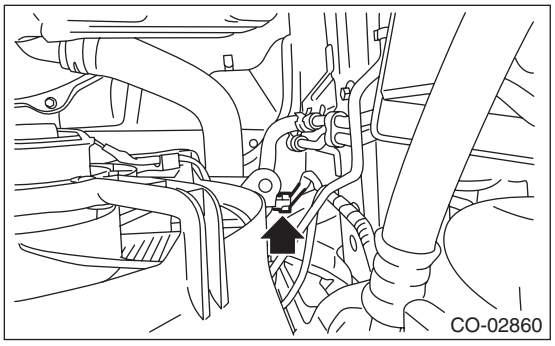

4) Remove the CVTF radiator hose from the clip of the radiator main fan shroud. (CVT model)
5) Remove the bolts which hold the radiator main fan shroud onto the radiator.

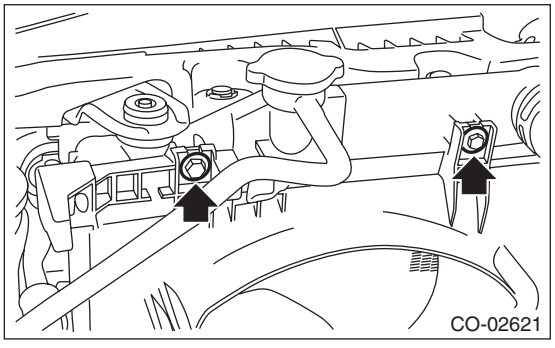

6) Remove the radiator main fan and fan motor from vehicle.

B: INSTALLATION

CAUTION:
Confirm that the radiator hose is securely connected.
Install in the reverse order of removal.

Tightening torque:
7.5 N·m (0.8 kgf-m, 5.5 ft-lb)

C: DISASSEMBLY

1) Remove the clip which holds the main fan motor assembly connector onto the radiator main fan shroud.
2) Remove the bolts which hold the main fan motor assembly onto the radiator main shroud.

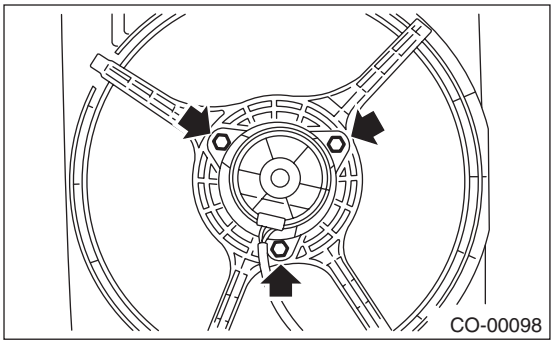

D: ASSEMBLY

Assemble in the reverse order of disassembly.

Tightening torque:
5 N·m (0.5 kgf-m, 3.7 ft-lb)

E: INSPECTION

Check that the radiator main fan, radiator main fan shroud and main fan motor assembly do not have deformation, cracks or damage.

9. Radiator Sub Fan and Fan Motor

A: REMOVAL

1) Disconnect the ground cable from battery.

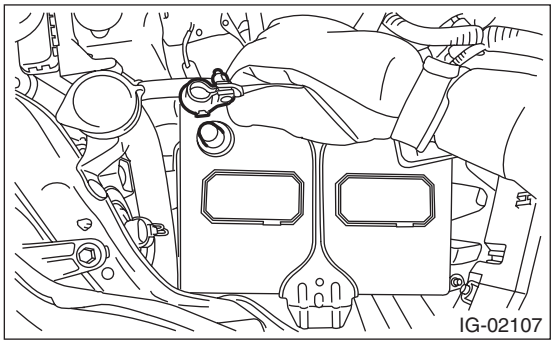

2) Remove the air intake duct. <Ref. to IN(H4SO)-9, REMOVAL, Air Intake Duct.>
3) Disconnect the connector from the sub fan motor assembly.

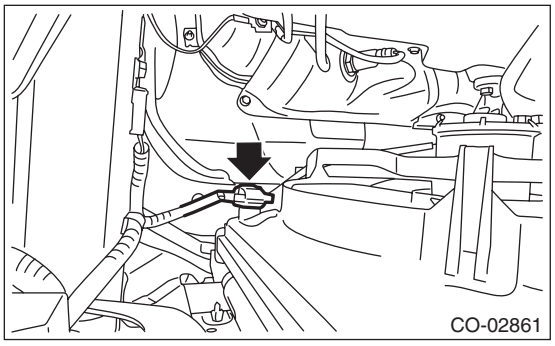

4) Remove the CVTF radiator hose from the clip of the radiator sub fan & fan motor. (CVT model)
5) Remove the bolts which hold the radiator sub fan shroud onto the radiator.

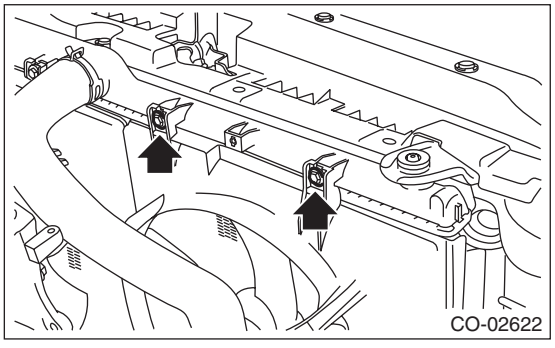

6) Remove the radiator sub fan and fan motor from vehicle.

B: INSTALLATION

CAUTION:
Confirm that the radiator hose is securely connected.
Install in the reverse order of removal.

Tightening torque:
7.5 N·m (0.8 kgf-m, 5.5 ft-lb)

C: DISASSEMBLY

1) Remove the clip which holds the radiator sub fan motor assembly connector onto the radiator sub fan shroud.
2) Remove the bolts which hold the sub fan motor assembly onto the radiator sub fan shroud.

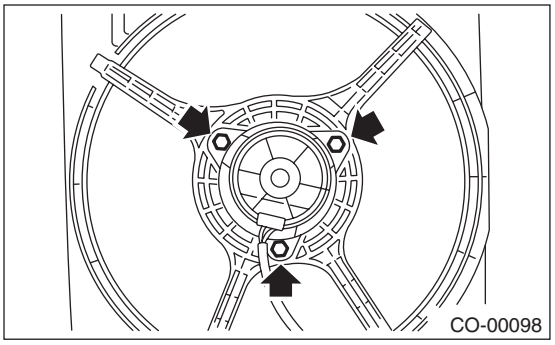

D: ASSEMBLY

Assemble in the reverse order of disassembly.

Tightening torque:
5 N·m (0.5 kgf-m, 3.7 ft-lb)

E: INSPECTION

Check that the radiator sub fan, radiator sub fan shroud and sub fan motor assembly do not have deformation, cracks or damage.

10.Reservoir Tank

A: REMOVAL

1) Pull out the over flow hose (A) from the reservoir tank.
2) Pull out the reservoir tank to the arrow direction while pushing the claw (B).

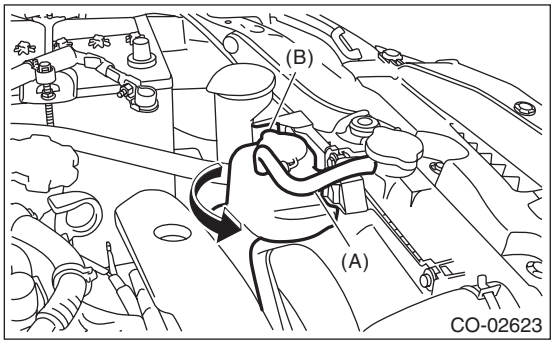

B: INSTALLATION

Install in the reverse order of removal.

C: INSPECTION

1) Check that the reservoir tank does not have deformation, cracks or damage.
2) Make sure the over flow hoses are not cracked, damaged or loose.
3) Make sure the engine coolant level is between “FULL” and “LOW”.

11.Engine Cooling System Trouble in General

A: INSPECTION

Trouble	Possible cause	Corrective action
Over-heating	a. Insufficient engine coolant	Replenish engine coolant, inspect for leakage, and repair it if necessary.
	b. Loose timing belt	Repair or replace timing belt tensioner.
	c. Oil on timing belt	Replace.
	d. Malfunction of thermostat	Replace.
	e. Malfunction of water pump	Replace.
	f. Clogged engine coolant passage	Clean.
	g. Improper ignition timing	Inspect and repair ignition control system. <Ref. to EN(H4SO)(diag)-2, Basic Diagnostic Procedure.>
	h. Clogged or leaking radiator	Clean, repair or replace.
	i. Defective radiator fan	Replace.
	j. Improper engine oil in engine coolant	Replace the engine coolant. If ineffective, check, repair or replace engine components.
	k. Air/fuel mixture ratio too lean	Inspect and repair the fuel injection system. <Ref. to EN(H4SO)(diag)-2, Basic Diagnostic Procedure.>
	l. Excessive back pressure in exhaust system	Clean or replace.
	m. Insufficient clearance between piston and cylinder	Adjust or replace.
	n. Slipping clutch	Repair or replace.
	o. Dragging brake	Adjust.
	p. Defective radiator fan	Inspect the radiator fan relay, engine coolant temperature sensor or fan motor and replace them.
Over-cooling	a. Ambient temperature extremely low	Partly cover radiator front area.
	b. Defective thermostat	Replace.
Engine coolant leaks	a. Loosened or damaged connecting units on hoses	Repair or replace.
	b. Leakage from water pump	Replace.
	c. Leakage from water pipe	Repair or replace.
	d. Leakage around cylinder head gasket	Retighten cylinder head bolts or replace cylinder head gasket.
	e. Damaged or cracked cylinder head and cylinder block	Repair or replace.
	f. Damaged or cracked thermostat cover	Repair or replace.
	g. Leakage from radiator	Repair or replace.
Noise	a. Timing belt problem	Replace.
	b. Defective radiator fan	Replace.
	c. Defective water pump bearing	Replace water pump.
	d. Defective water pump mechanical seal	Replace water pump.

LUBRICATION

LU(H4SO)

		Page
1.	General Description	2
2.	Oil Pressure System	11
3.	Engine Oil	13
4.	Oil Pump	15
5.	Oil Pan and Strainer	19
6.	Oil Pressure Switch	25
7.	Engine Oil Cooler	27
8.	Oil Catch Tank	29
9.	Scavenge Pump	30
10.	Oil Pipe	31
11.	Engine Oil Filter	36
12.	Oil Level Switch	37
13.	Engine Lubrication System Trouble in General	45

1. General Description

A: SPECIFICATION

- Non-turbo model

Lubrication method					Forced lubrication
Oil pump	Pump type				Trochoid type
	Number of teeth	Inner rotor			9
		Outer rotor			10
	Outer rotor diameter × thickness			mm (in)	76 × 10 (2.99 × 0.39)
	Tip clearance between inner and outer rotors			mm (in)	Standard: 0.04 — 0.14 (0.0016 — 0.0055)
	Case clearance between outer rotor and pump case			mm (in)	Standard: 0.10 — 0.175 (0.0039 — 0.0069)
	Side clearance between inner rotor and pump case			mm (in)	Standard: 0.02 — 0.07 (0.0008 — 0.0028)
	Relief valve spring	Free length		mm (in)	73.7 (2.902)
		Installed length		mm (in)	54.7 (2.154)
		Load when installed		N (kgf, lbf)	93.1 (9.49, 20.93)
	Performance (Oil temperature 80°C (176°F))	600 rpm	Discharge pressure	kPa (kgf/cm^2, psi)	98 (1.0, 14)
			Discharge rate	ℓ (US qt, Imp qt)/min.	4.6 (4.9, 4.0) or more
		5,000 rpm	Discharge pressure	kPa (kgf/cm^2, psi)	294 (3.0, 43)
			Discharge rate	ℓ (US qt, Imp qt)/min.	47.0 (49.7, 41.4) or more
	Relief valve working pressure			kPa (kgf/cm^2, psi)	588 (6.0, 85)
Oil filter	Filter type				Full-flow filter type
	Filtration area cm^2 (sq in)			Outer diameter: 68 mm (2.68 in) (Black)	800 (124)
				Outer diameter: 67.4 mm (2.65 in) (Blue)	555 (86)
	By-pass valve opening pressure			kPa (kgf/cm^2, psi)	160 (1.63, 23.2)
	Outer diameter × width mm (in)			Outer diameter: 68 mm (2.68 in) (Black)	68 × 65 (2.68 × 2.56)
				Outer diameter: 67.4 mm (2.65 in) (Blue)	67.4 × 65.3 (2.65 × 2.57)
	Installation screw specifications				M 20 × 1.5
Oil pressure switch	Type				Immersed contact point type
	Operating voltage — power consumption				12 V — 3.4 W or less
	Warning light operating pressure			kPa (kgf/cm^2, psi)	14.7 (0.15, 2.1)
	Proof pressure			kPa (kgf/cm^2, psi)	981 (10, 142) or more
Engine oil	Total capacity (at overhaul)			ℓ (US qt, Imp qt)	4.8 (5.1, 4.2)
	When replacing engine oil and oil filter			ℓ (US qt, Imp qt)	4.2 (4.4, 3.7)
	When replacing engine oil only			ℓ (US qt, Imp qt)	4.0 (4.2, 3.5)

Recommended oil:

CAUTION:
It is acceptable to fill an engine with oil of another brand when replacing the oil, but make sure to use the following engine oil specified by Subaru.

Engine oil standard		SAE viscosity No.
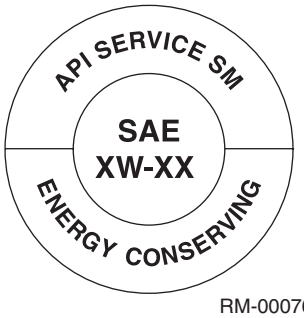 RM-00076 Those with the API standard SM "Energy Conserving" or SN "Resource Conserving" logo.	or	 RM-00002 Those with the ILSAC standard GF-4 or GF-5 "starburst mark" displayed on top of the container.	5W-30 (synthetic oil)

NOTE:
The proper viscosity oil helps the engine maintain its ideal temperature, and cranking speed increased by reducing viscosity friction in hot condition.

- Turbo model

Lubrication method					Forced lubrication
Oil pump	Pump type				Trochoid type
	Number of teeth	Inner rotor			9
		Outer rotor			10
	Outer rotor diameter × thickness			mm (in)	78 × 11 (3.07 × 0.43)
	Tip clearance between inner and outer rotors		mm (in)	Standard	0.04 — 0.14 (0.0016 — 0.0055)
	Case clearance between outer rotor and pump case		mm (in)	Standard	0.10 — 0.175 (0.0039 — 0.0069)
	Side clearance between inner rotor and pump case		mm (in)	Standard	0.02 — 0.07 (0.0008 — 0.0028)
	Relief valve spring	Free length		mm (in)	73.7 (2.902)
		Installed length		mm (in)	54.7 (2.154)
		Load when installed		N (kgf, lbf)	93.1 (9.49, 20.93)
	Performance (Oil temperature 80°C (176°F))	600 rpm	Discharge pressure	kPa (kg/cm^2, psi)	98 (1.0, 14)
			Discharge rate	ℓ (US qt, Imp qt)/min.	6.4 (6.8, 5.6) or more
		6,000 rpm	Discharge pressure	kPa (kg/cm^2, psi)	392 (4.0, 56.8)
			Discharge rate	ℓ (US qt, Imp qt)/min.	63.0 (66.6, 55.4) or more
	Relief valve working pressure			kPa (kg/cm^2, psi)	538 (5.5, 78)
Oil filter	Filter type				Full-flow filter type
	Filtration area	cm^2 (sq in)	Outer diameter: 68 mm (2.68 in) (Black)		800 (124)
			Outer diameter: 67.4 mm (2.65 in) (Blue)		555 (86)
	By-pass valve opening pressure			kPa (kg/cm^2, psi)	160 (1.63, 23.2)
	Outer diameter × width	mm (in)	Outer diameter: 68 mm (2.68 in) (Black)		68 × 65 (2.68 × 2.56)
			Outer diameter: 67.4 mm (2.65 in) (Blue)		67.4 × 65.3 (2.65 × 2.57)
	Installation screw specifications				M 20 × 1.5
Oil pressure switch	Type				Immersed contact point type
	Operating voltage — power consumption				12 V — 3.4 W or less
	Warning light operating pressure			kPa (kg/cm^2, psi)	14.7 (0.15, 2.1)
	Proof pressure			kPa (kg/cm^2, psi)	981 (10, 142) or more
Engine oil	Total capacity (at overhaul)			ℓ (US qt, Imp qt)	5.2 (5.5, 4.6)
	When replacing engine oil and oil filter			ℓ (US qt, Imp qt)	4.3 (4.5, 3.8)
	When replacing engine oil only			ℓ (US qt, Imp qt)	4.0 (4.2, 3.5)

Required oil:

CAUTION:

- **Use 5W-30 (synthetic oil).**
- **It is acceptable to fill an engine with oil of another brand when replacing the oil, but make sure to use the following engine oil specified by Subaru.**

Engine oil standard		SAE viscosity No.
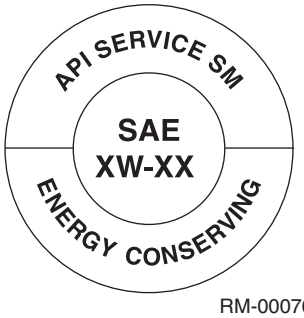 RM-00076 Those with the API standard SM "Energy Conserving" or SN "Resource Conserving" logo.	or	 RM-00002 Those with the ILSAC standard GF-4 or GF-5 "starburst mark" displayed on top of the container.	5W-30 (synthetic oil)

NOTE:
The proper viscosity oil helps the engine maintain its ideal temperature, and cranking speed increased by reducing viscosity friction in hot condition.

B: COMPONENT

- Non-turbo model

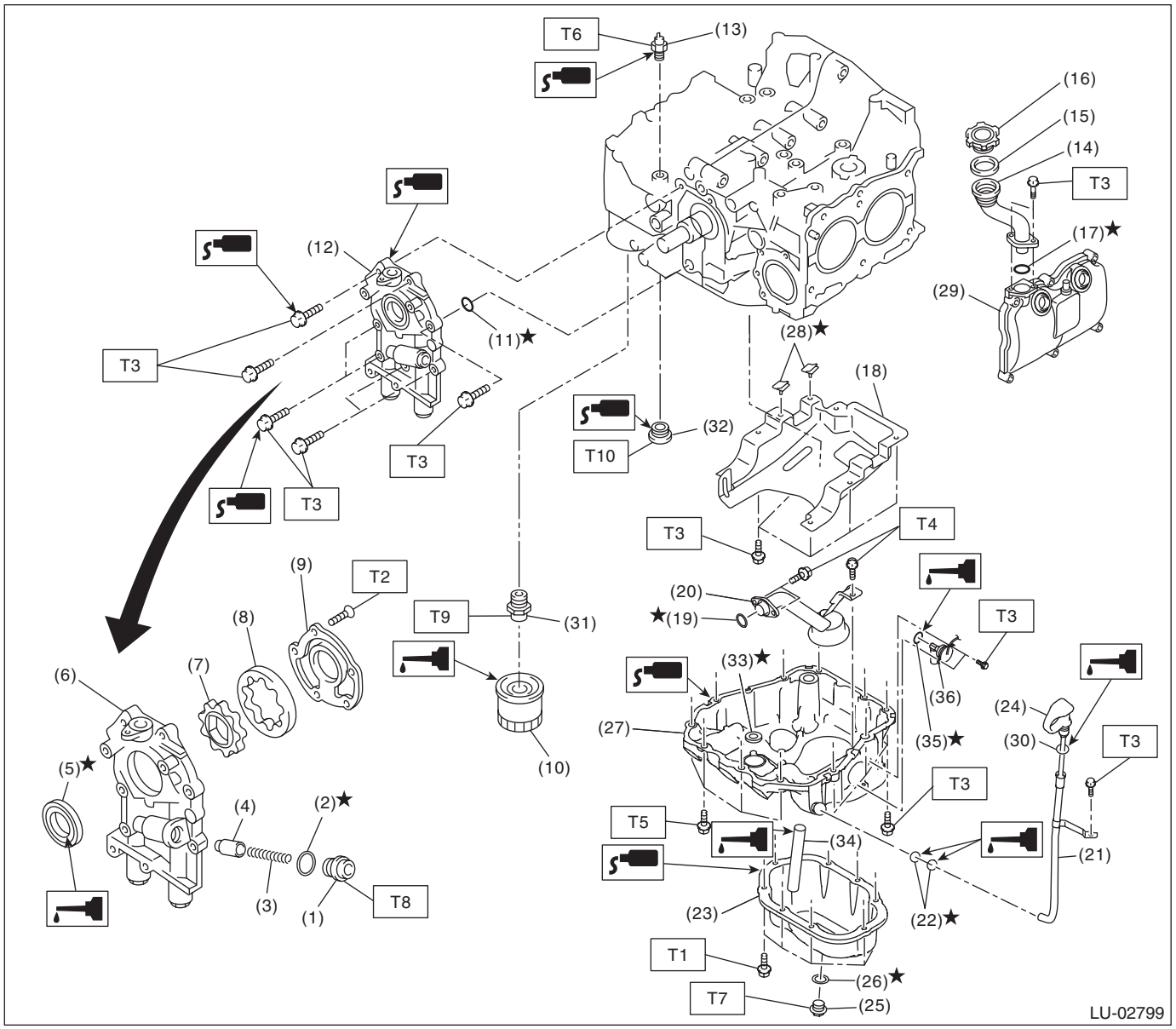

(1) Plug
(2) Gasket
(3) Relief valve spring
(4) Relief valve
(5) Front oil seal
(6) Oil pump case
(7) Inner rotor
(8) Outer rotor
(9) Oil pump cover
(10) Oil filter
(11) O-ring
(12) Oil pump ASSY
(13) Oil pressure switch
(14) Oil filler duct
(15) Gasket
(16) Oil filler cap
(17) O-ring
(18) Baffle plate
(19) O-ring
(20) Oil strainer
(21) Oil level gauge guide
(22) O-ring
(23) Oil pan
(24) Oil level gauge
(25) Drain plug
(26) Drain plug gasket
(27) Cylinder block lower
(28) Seal
(29) Rocker cover
(30) O-ring
(31) Oil filter connector
(32) Plug
(33) O-ring
(34) Oil drain pipe
(35) O-ring
(36) Oil level switch

Tightening torque:N·m (kgf-m, ft-lb)

T1: 5 (0.5, 3.7)
T2: 5.4 (0.6, 4.0)
T3: 6.4 (0.7, 4.7)
T4: 10 (1.0, 7.4)
T5: 16 (1.6, 11.8)
T6: 25 (2.5, 18.4)
T7: 41.7 (4.3, 30.8)
T8: 44 (4.5, 32.5)
T9: 45 (4.6, 33.2)
T10: 70 (7.1, 51.6)

- Turbo model

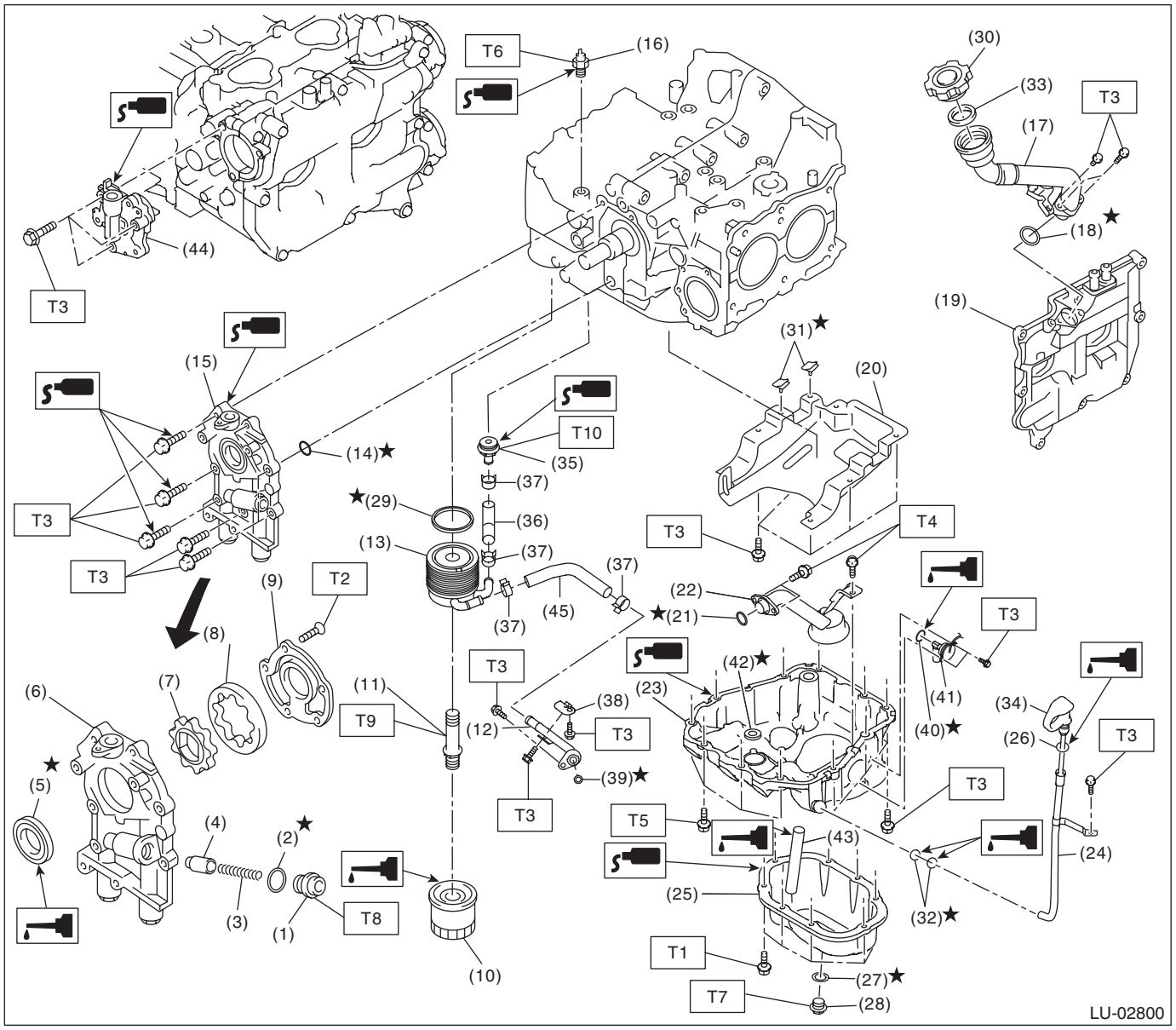
T6
(16)
(30)
(33)
T3
(17)
(18)★
(19)
(44)
T3
(31)★
(20)
(15)
T10
(14)★
(35)
(37)
★(29)
(36)
T3
T4
(13)
(37)
T3
(37)
(22)
(9)
T2
(45)
★(21)
T3
(37)
(8)
(42)★
T3
(23)
(41)
(34)
(6)
(7)
(11)
(38)
T9
(12)
T3
(40)★
(26)
T3
★
(5)
(39)★
T3
T3
T5
(4)
(2)★
(43)
(24)
(25)
(3)
(1)
T8
(32)★
T1
(10)
(27)★
T7
(28)
LU-02800

(1) Plug
(2) Gasket
(3) Relief valve spring
(4) Relief valve
(5) Front oil seal
(6) Oil pump case
(7) Inner rotor
(8) Outer rotor
(9) Oil pump cover
(10) Oil filter
(11) Oil cooler connector
(12) Oil cooler pipe
(13) Oil cooler
(14) O-ring
(15) Oil pump ASSY
(16) Oil pressure switch
(17) Oil filler duct
(18) O-ring
(19) Rocker cover
(20) Baffle plate
(21) O-ring
(22) Oil strainer
(23) Cylinder block lower
(24) Oil level gauge guide
(25) Oil pan
(26) O-ring
(27) Drain plug gasket
(28) Drain plug
(29) Gasket
(30) Oil filler cap
(31) Seal
(32) O-ring
(33) Gasket
(34) Oil level gauge
(35) Plug
(36) Oil cooler hose A
(37) Clip
(38) Oil cooler pipe stay
(39) O-ring
(40) O-ring
(41) Oil level switch
(42) O-ring
(43) Oil drain pipe
(44) Scavenge pump
(45) Oil cooler hose B

Tightening torque:N·m (kgf-m, ft-lb)
T1: 5 (0.5, 3.7)
T2: 5.4 (0.6, 4.0)
T3: 6.4 (0.7, 4.7)
T4: 10 (1.0, 7.4)
T5: 16 (1.6, 11.8)
T6: 25 (2.5, 18.4)
T7: 41.7 (4.3, 30.8)
T8: 44 (4.5, 32.5)
T9: 54 (5.5, 39.8)
T10: 69 (7.0, 50.9)

C: CAUTION

- Wear appropriate work clothing, including a cap, protective goggles and protective shoes when performing any work.
- Remove contamination including dirt and corrosion before removal, installation or disassembly.
- Keep the disassembled parts in order and protect them from dust and dirt.
- Before removal, installation or disassembly, be sure to clarify the failure. Avoid unnecessary removal, installation, disassembly and replacement.
- Vehicle components are extremely hot after driving. Be wary of receiving burns from heated parts.
- Be sure to tighten fasteners including bolts and nuts to the specified torque.
- Place shop jacks or rigid racks at the specified points.
- Before disconnecting connectors of sensors or units, be sure to disconnect the ground cable from battery.
- If the engine oil is spilt over exhaust pipe or the under cover, wipe it off with cloth to avoid emitting smoke or causing a fire.
- Prepare a container and cloth to prevent scattering of fuels when performing work where oil can be spilled. If the oil spills, wipe it off immediately to prevent from penetrating into floor or flowing out for environmental protection.
- Follow all government and local regulations concerning disposal of refuse when disposing of oil.

D: PREPARATION TOOL

1. SPECIAL TOOL

ILLUSTRATION	TOOL NUMBER	DESCRIPTION	REMARKS
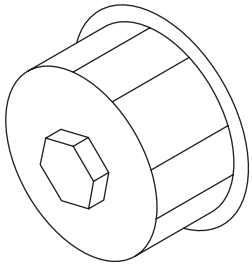 ST18332AA000	18332AA000	OIL FILTER WRENCH	Used for removing and installing black oil filter (outer diameter: 68 mm (2.68 in)).
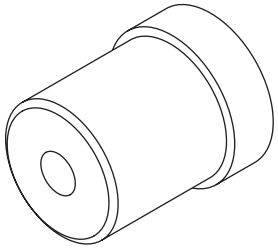 ST-499587100	499587100	OIL SEAL INSTALLER	Used for installing oil pump oil seal.

2. GENERAL TOOL

TOOL NAME	REMARKS
Oil filter wrench (65/67 mm 14 flutes)	Used for removing and installing blue oil filter (outer diameter: 67.4 mm (2.65 in)).
Circuit tester	Used for measuring resistance and voltage.

2. Oil Pressure System

A: WIRING DIAGRAM

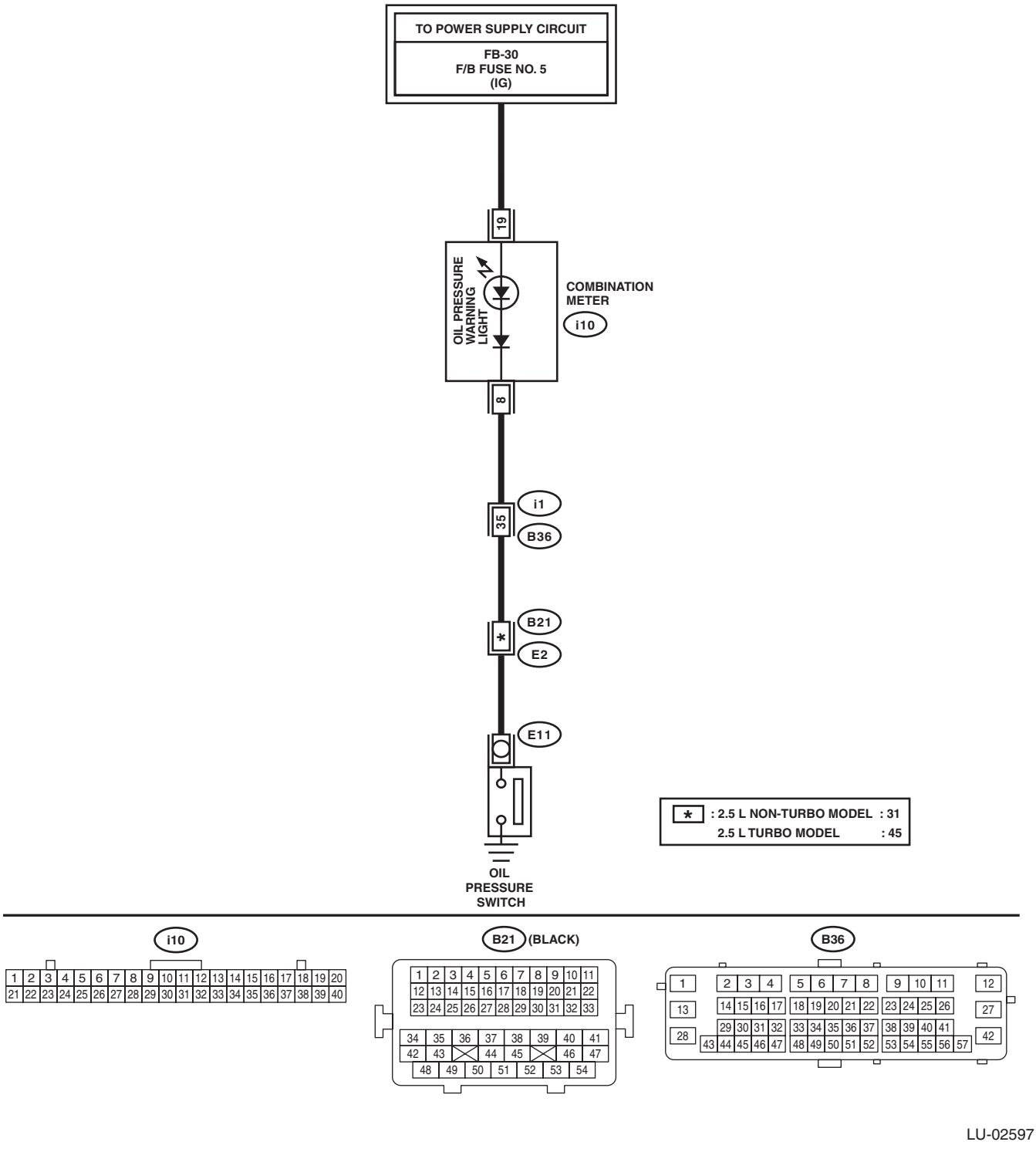

LU-02597

B: INSPECTION

	Step	Check	Yes	No
1	**CHECK COMBINATION METER.** 1) Turn the ignition switch to ON. (engine OFF) 2) Check the warning light in the combination meter.	Does the warning light illuminate?	Go to step **2**.	Repair or replace the combination meter. <Ref. to IDI-11, INSPECTION, Combination Meter System.>
2	**CHECK HARNESS CONNECTOR BETWEEN COMBINATION METER AND OIL PRESSURE SWITCH.** 1) Turn the ignition switch to OFF. 2) Disconnect the connector from oil pressure switch. 3) Turn the ignition switch to ON. 4) Measure the voltage of harness between oil pressure switch connector and chassis ground. ***Connector & terminal*** ***(E11) No. 1 (+) — Chassis ground (–):***	Is the voltage 10 V or more?	Replace the oil pressure switch. <Ref. to LU(H4SO)-25, Oil Pressure Switch.>	Go to step **3**.
3	**CHECK COMBINATION METER.** 1) Turn the ignition switch to OFF. 2) Remove the combination meter. 3) Measure the resistance of combination meter. ***Terminals*** ***No. 8 — No. 19:***	Is the resistance less than 10 Ω?	Repair the harness and connector. NOTE: In this case, repair the following item: • Open circuit of harness between combination meter and oil pressure switch • Poor contact of combination meter connector • Poor contact of oil pressure switch connector • Poor contact of coupling connector	Repair or replace the combination meter. <Ref. to IDI-11, INSPECTION, Combination Meter System.>

3. Engine Oil

A: INSPECTION

CAUTION:
If the engine oil is spilt over exhaust pipe or the under cover, wipe it off with cloth to avoid emitting smoke or causing a fire.

1) Park the vehicle on a level surface.
2) Remove the oil level gauge and wipe away the oil.
3) Reinsert the oil level gauge all the way. Be sure that the oil level gauge is correctly inserted and properly orientated.
4) Pull out the oil level gauge again, and check the oil level. If the engine oil level is below "L" line, check for oil leakage from engine and add oil to bring the level up to "F" line.
5) Start the engine to circulate the oil in engine room.
6) After turning off the engine, wait a few minutes for the oil to return to the oil pan before checking the level.

NOTE:
• Just after driving or while the engine is warm, engine oil level shows in the range between the "F" line and the notch mark. This is caused by thermal expansion of engine oil.
• To prevent overfilling of engine oil, do not add oil above "F" line when the engine is cold.
• As the oil level gauge is used for daily maintenance, "F" line and "L" line is set assuming that the engine is cold.

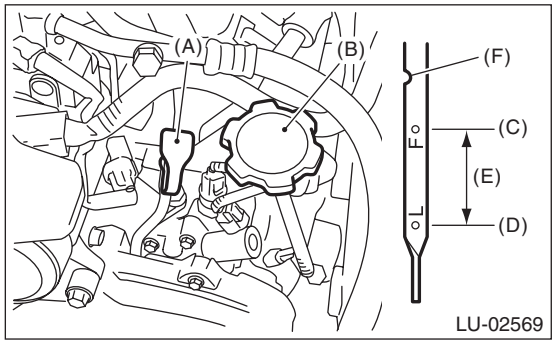

(A) Oil level gauge
(B) Oil filler cap
(C) "F" line
(D) "L" line
(E) Approx. 1.0 ℓ (1.1 US qt, 0.9 Imp qt)
(F) Notch mark

B: REPLACEMENT

CAUTION:
If the engine oil is spilt over exhaust pipe or the under cover, wipe it off with cloth to avoid emitting smoke or causing a fire.

1) Open the oil filler cap for quick draining of engine oil.
2) Lift up the vehicle.
3) Remove the service hole cover of the under cover. (Large under cover model)

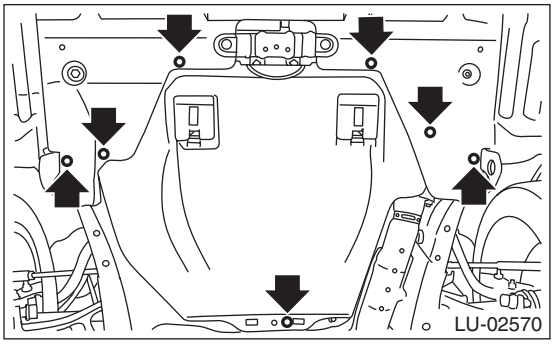

4) Drain engine oil by loosening the drain plug.

NOTE:
Prepare the container for draining of engine oil.
• Models with small and medium size under covers

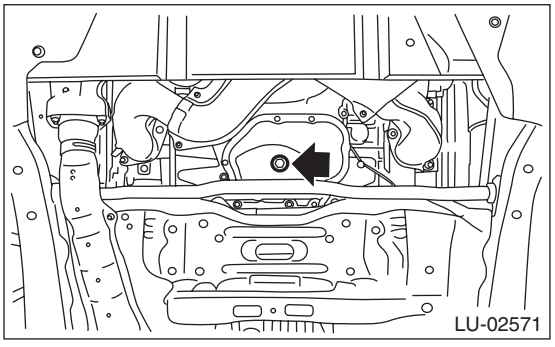

• Models with large under cover

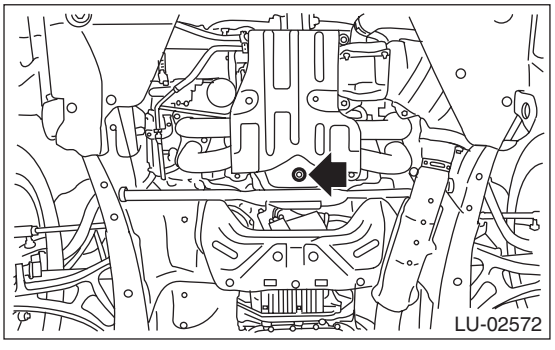

5) After draining the engine oil, tighten the engine oil drain plug.

NOTE:
Use a new drain plug gasket.

Tightening torque:
41.7 N·m (4.3 kgf-m, 30.8 ft-lb)

• Models with small and medium size under covers

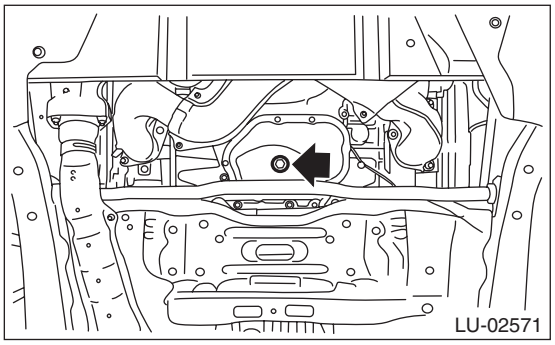

• Models with large under cover

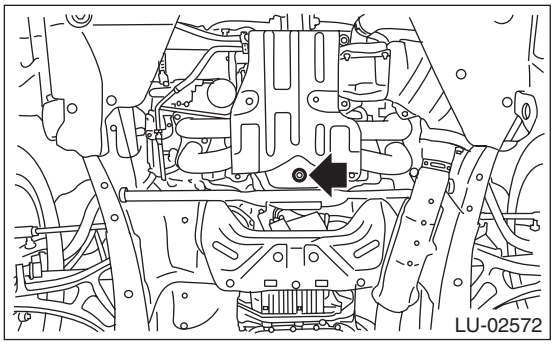

6) Install the service hole cover of the under cover. (Large under cover model)

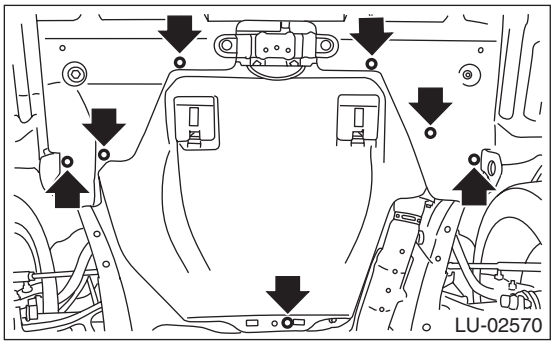

7) Lower the vehicle.

8) Select engine oil of adequate quality and viscosity and fill it through the oil filler duct to the “F” line on the oil level gauge. Make sure that the vehicle is parked on a level surface when checking oil level.

Recommended oil:
Refer to “SPECIFICATION” for recommended oil. <Ref. to LU(H4SO)-2, SPECIFICATION, General Description.>

Engine oil capacity:
Refer to “SPECIFICATION” for engine oil capacity. <Ref. to LU(H4SO)-2, SPECIFICATION, General Description.>

9) Close the oil filler cap.
10) Start the engine to circulate the oil in engine room.
11) After stopping the engine, recheck the oil level. If necessary, add engine oil up to the “F” line on oil level gauge.

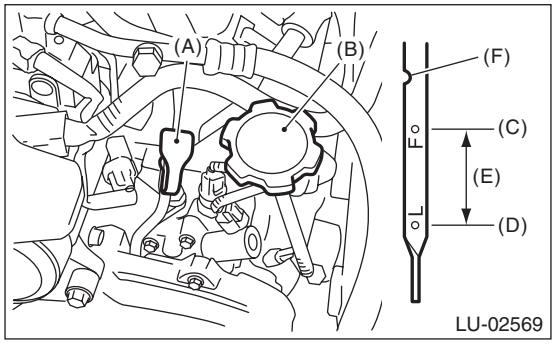

(A) Oil level gauge
(B) Oil filler cap
(C) “F” line
(D) “L” line
(E) Approx. 1.0 ℓ (1.1 US qt, 0.9 Imp qt)
(F) Notch mark

4. Oil Pump

A: REMOVAL

1) Remove the collector cover. (turbo model)
2) Disconnect the ground cable from battery.

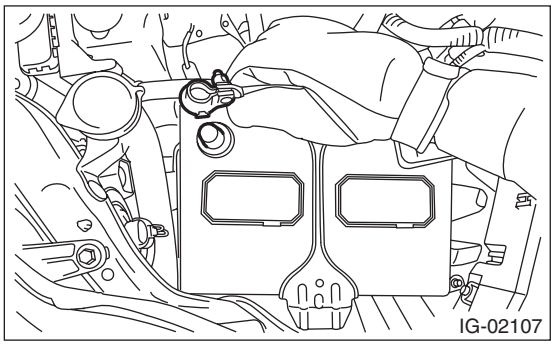

3) Remove the radiator. <Ref. to CO(H4SO)-20, REMOVAL, Radiator.> <Ref. to CO(H4DOTC)-21, REMOVAL, Radiator.>
4) Remove the crankshaft position sensor. <Ref. to FU(H4SO)-25, REMOVAL, Crankshaft Position Sensor.> <Ref. to FU(H4DOTC)-35, REMOVAL, Crankshaft Position Sensor.>
5) Remove the water pump. <Ref. to CO(H4SO)-16, REMOVAL, Water Pump.> <Ref. to CO(H4DOTC)-16, REMOVAL, Water Pump.>
6) Remove the crank sprocket. <Ref. to ME(H4SO)-54, REMOVAL, Crank Sprocket.> <Ref. to ME(H4DOTC)-62, REMOVAL, Crank Sprocket.>
7) Remove the bolts which install oil pump onto cylinder block.

NOTE:
When disassembling and checking the oil pump, loosen the relief valve plug before removing the oil pump.

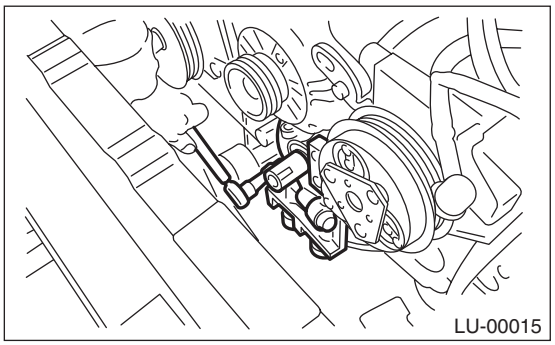

8) Remove the oil pump by using flat tip screwdriver.

CAUTION:
Be careful not to scratch the mating surface of the cylinder block and oil pump.

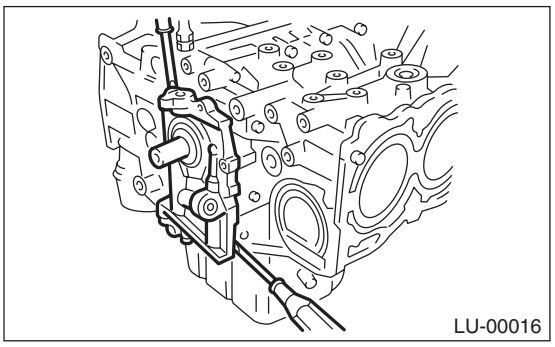

9) Remove the front oil seal from the oil pump.

B: INSTALLATION

1) Using the ST, install the front oil seal.
ST 499587100 OIL SEAL INSTALLER

NOTE:
Use a new front oil seal.

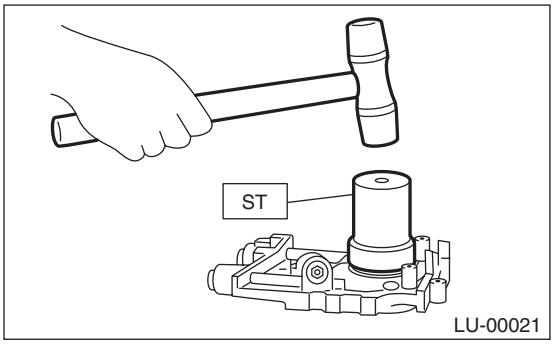

2) Apply liquid gasket to the mating surfaces of oil pump.

NOTE:
Install within 5 min. after applying liquid gasket.

Liquid gasket:
THREE BOND 1217G (Part No. K0877Y0100) or equivalent

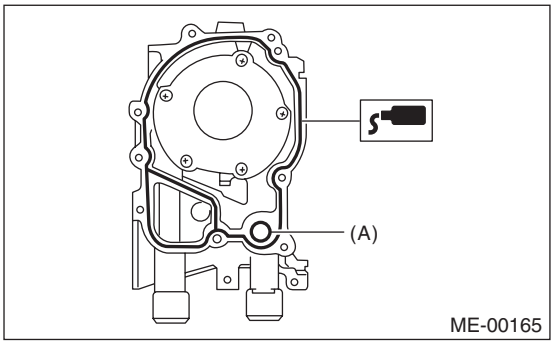

(A) O-ring

3) Apply a coat of engine oil to the inside of front oil seal.

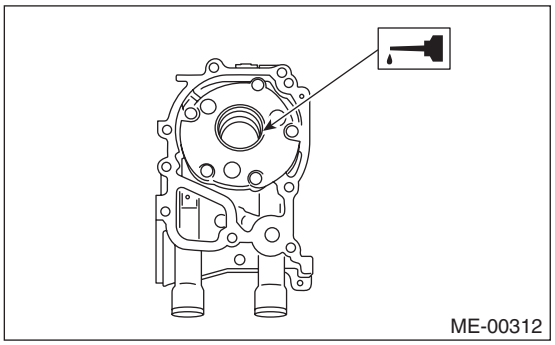

4) Install the oil pump to cylinder block.

CAUTION:
• Be careful not to damage the front oil seal during installation.
• Make sure the front oil seal lip is not folded.

NOTE:
• Align the flat surface of oil pump's inner rotor with that of crankshaft before installation.
• Use new O-rings.
• Do not forget to assemble O-rings.

5) Apply liquid gasket to the three bolts thread shown in figure. (when reusing bolts)

Liquid gasket:
THREE BOND 1324 (Part No. 004403042) or equivalent

Tightening torque:
6.4 N·m (0.7 kgf-m, 4.7 ft-lb)

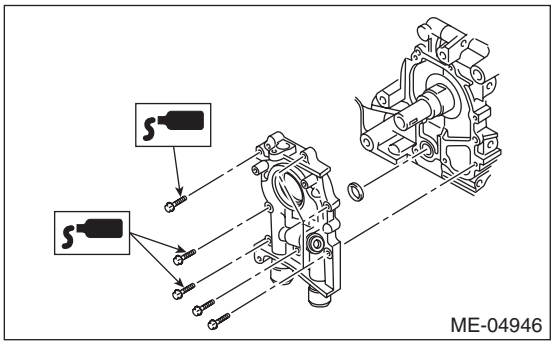

6) Install the crank sprocket. <Ref. to ME(H4SO)-54, INSTALLATION, Crank Sprocket.> <Ref. to ME(H4DOTC)-62, INSTALLATION, Crank Sprocket.>
7) Install the water pump. <Ref. to CO(H4SO)-16, INSTALLATION, Water Pump.> <Ref. to CO(H4DOTC)-17, INSTALLATION, Water Pump.>
8) Install the crankshaft position sensor. <Ref. to FU(H4SO)-25, INSTALLATION, Crankshaft Position Sensor.> <Ref. to FU(H4DOTC)-35, INSTALLATION, Crankshaft Position Sensor.>
9) Install the radiator. <Ref. to CO(H4SO)-21, INSTALLATION, Radiator.> <Ref. to CO(H4DOTC)-22, INSTALLATION, Radiator.>
10) Connect the battery ground terminal.

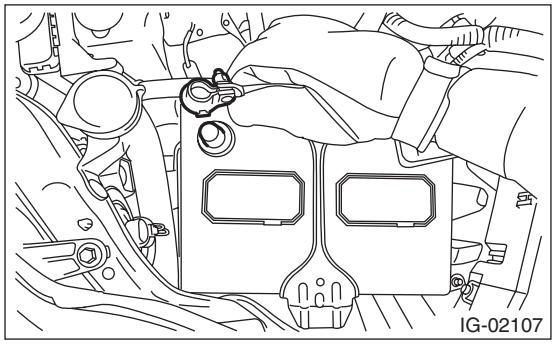

C: DISASSEMBLY

Remove the screw which secures oil pump cover and then disassemble oil pump. Inscribe alignment marks on the inner rotor and outer rotor so that they can be replaced in their original positions during re-assembly.

NOTE:
Before disassembling the oil pump, remove the relief valve.

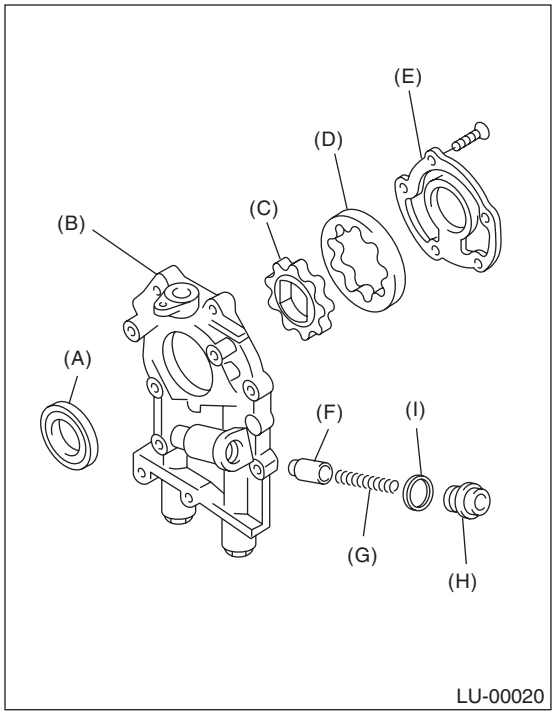

(A) Front oil seal
(B) Oil pump case
(C) Inner rotor
(D) Outer rotor
(E) Oil pump cover
(F) Relief valve
(G) Relief valve spring
(H) Plug
(I) Gasket

D: ASSEMBLY

1) Using the ST, install the front oil seal.
ST 499587100 OIL SEAL INSTALLER

NOTE:
Use a new front oil seal.

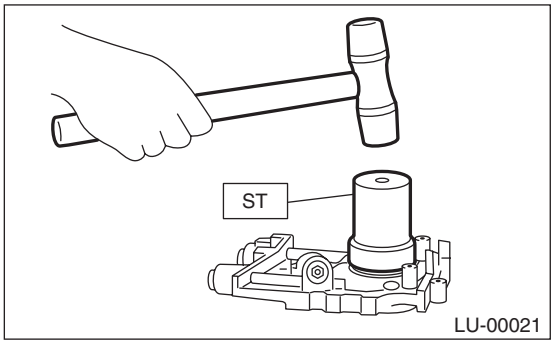

2) Apply a coat of engine oil to the inner rotor and outer rotor.
3) Install the inner rotor and outer rotor.
4) Assemble the oil relief valve and install relief valve spring and plug.

NOTE:
Use a new gasket.

5) Install the oil pump cover.

Tightening torque:
T1: 5.4 N·m (0.6 kgf-m, 4.0 ft-lb)
T2: 44 N·m (4.5 kgf-m, 32.5 ft-lb)

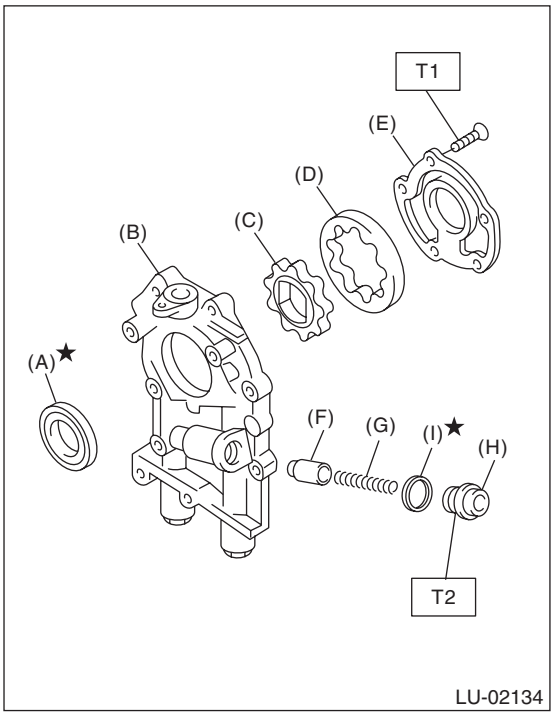

(A) Front oil seal
(B) Oil pump case
(C) Inner rotor
(D) Outer rotor
(E) Oil pump cover
(F) Relief valve
(G) Relief valve spring
(H) Plug
(I) Gasket

E: INSPECTION

1. TIP CLEARANCE

Measure the tip clearance of rotors. If the clearance is out of standard, replace the rotors as a set.

Tip clearance between inner and outer rotors:
Standard
0.04 — 0.14 mm (0.0016 — 0.0055 in)

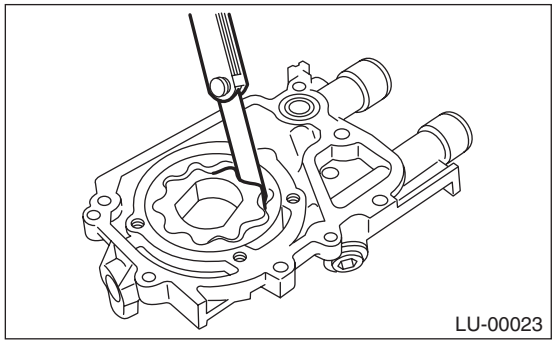

2. CASE CLEARANCE

Measure the clearance between outer rotor and oil pump case. If clearance is out of standard, replace the oil pump case.

Case clearance between outer rotor and pump case:
Standard
0.10 — 0.175 mm (0.0039 — 0.0069 in)

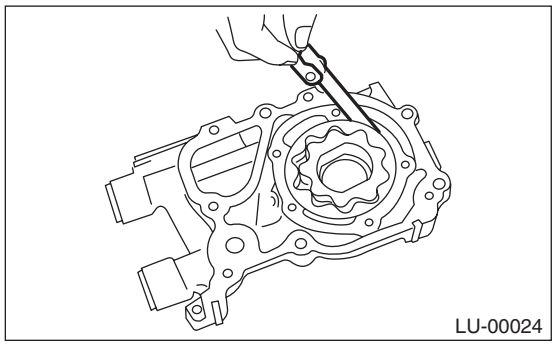

3. SIDE CLEARANCE

Measure the gap between the inner rotor and the oil pump case to measure the clearance between the inner rotor and the oil pump cover as shown in the figure. If clearance is out of standard, replace the rotor or the oil pump case.

Side clearance between inner rotor and pump case:
Standard
0.02 — 0.07 mm (0.0008 — 0.0028 in)

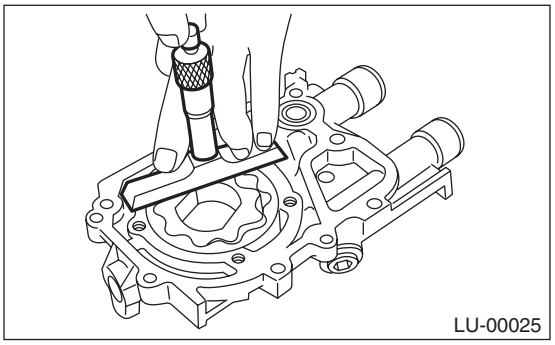

4. OIL RELIEF VALVE

Check the valve for assembly condition and damage, and the relief valve spring for damage and deterioration. Replace the parts if defective.

Relief valve spring:
Free length
73.7 mm (2.902 in)
Installed length
54.7 mm (2.154 in)
Load when installed
93.1 N (9.49 kgf, 20.93 lbf)

5. OIL PUMP CASE

Check for worn shaft hole, clogged oil passage, worn rotor chamber, cracks and other faults.

6. FRONT OIL SEAL

Check the front oil seal lips for deformation and hardening, wear.

5. Oil Pan and Strainer

A: REMOVAL

1. OIL PAN

1) Disconnect the ground cable from battery.

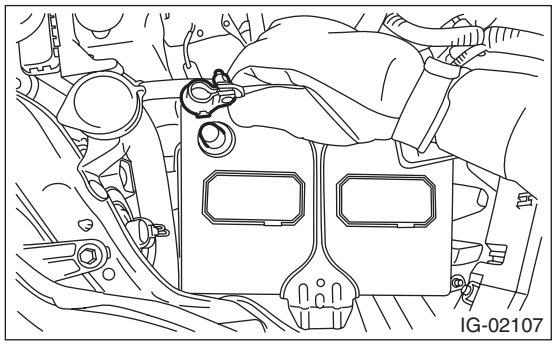

2) Lift up the vehicle.
3) Remove the under cover. <Ref. to EI-35, REMOVAL, Front Under Cover.>
4) Drain the engine oil. <Ref. to LU(H4SO)-13, REPLACEMENT, Engine Oil.>
5) Remove the front exhaust pipe. <Ref. to EX(H4SO)-5, REMOVAL, Front Exhaust Pipe.> <Ref. to EX(H4DOTC)-5, REMOVAL, Front Exhaust Pipe.>
6) Remove the bolts which secure the oil pan to the cylinder block lower.

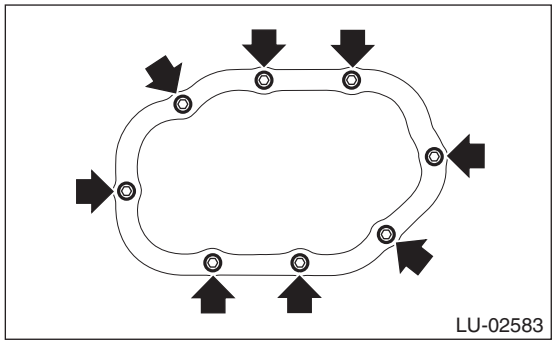

7) Insert an oil pan cutter blade into the gap between cylinder block lower and oil pan, and remove the oil pan.

CAUTION:
Do not use a screwdriver or similar tool in place of oil pan cutter.

2. CYLINDER BLOCK LOWER

1) Remove the collector cover. (turbo model)
2) Disconnect the ground cable from battery.

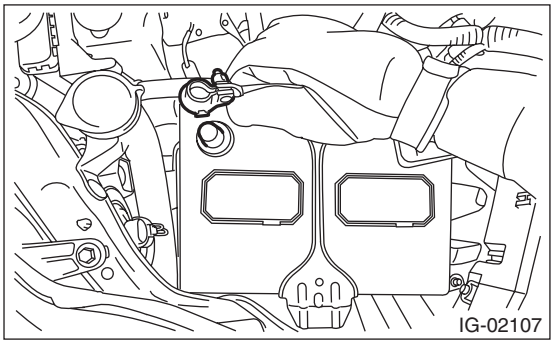

3) Remove the cover (A) and clip (B) from air intake boot assembly. (non-turbo model)

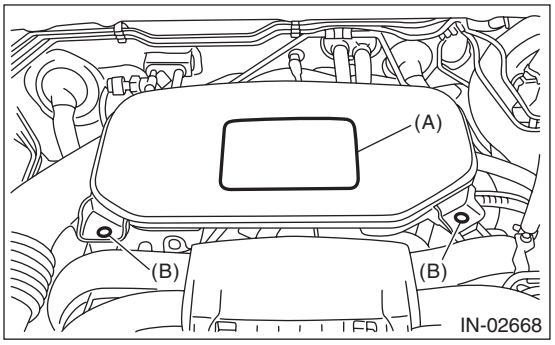

4) Loosen the clamp (A) which connects the air intake boot assembly and air cleaner case. (non-turbo model)
5) Loosen the clamp (B) which connects the air intake boot assembly and throttle body. (non-turbo model)

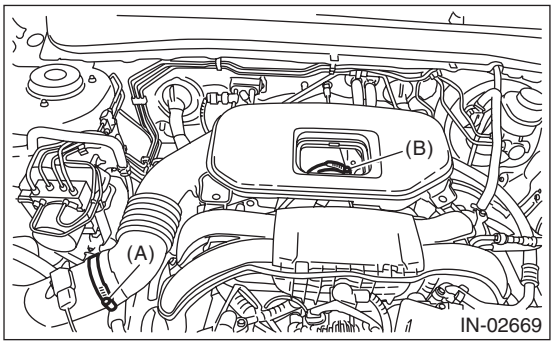

6) Remove the air intake boot from the throttle body, and move it to the left side wheel apron. (non-turbo model)

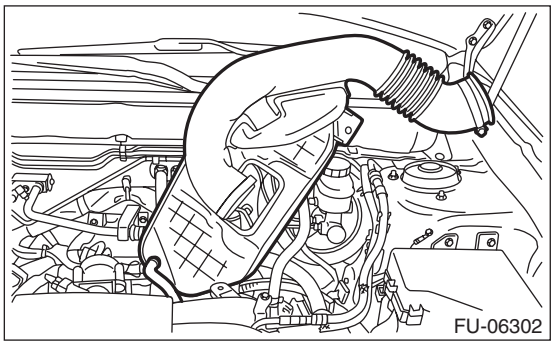
FU-06302

7) Remove the intercooler. (turbo model) <Ref. to IN(H4DOTC)-17, REMOVAL, Intercooler.>
8) Support the engine with a lifting device and wire ropes.

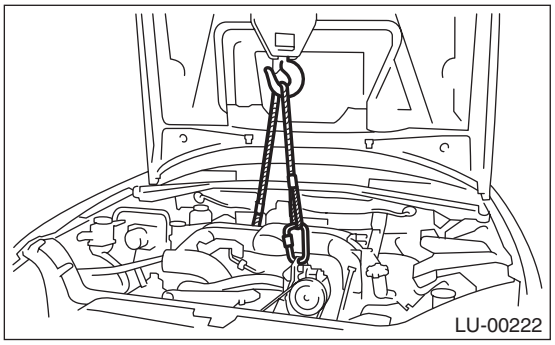
LU-00222

9) Lift up the vehicle.

CAUTION:
When lifting up the vehicle, raise up wire ropes at the same time.

10) Remove the oil pan. <Ref. to LU(H4SO)-19, OIL PAN, REMOVAL, Oil Pan and Strainer.>
11) Remove the engine mounting. <Ref. to ME(H4SO)-39, REMOVAL, Engine Mounting.> <Ref. to ME(H4DOTC)-38, REMOVAL, Engine Mounting.>
12) Remove the bolt which secures the cylinder block lower to the cylinder block.

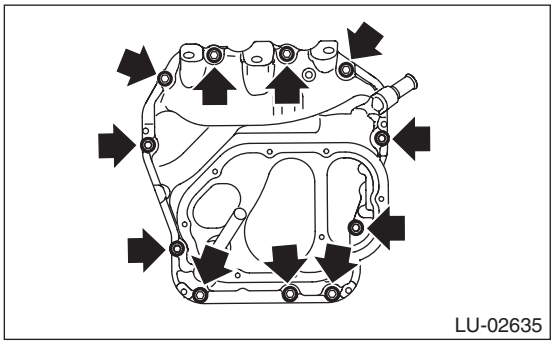
LU-02635

13) Use a flat tip screwdriver through the gap between the cylinder block and cylinder block lower to remove the cylinder block lower.

CAUTION:
Insert the flat tip screwdriver to the position shown in the figure, and be careful not to damage the mating surface of the cylinder block and cylinder block lower.

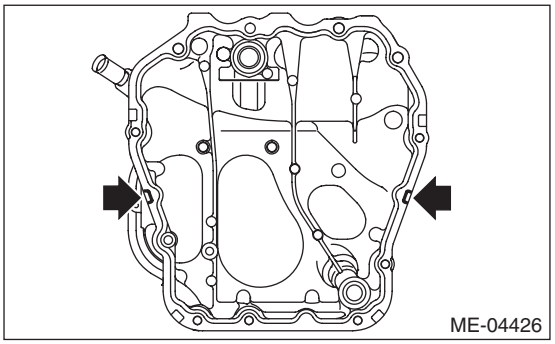
ME-04426

14) Remove the oil strainer from the cylinder block lower.
15) Remove the oil level switch from the cylinder block lower. <Ref. to LU(H4SO)-37, REMOVAL, Oil Level Switch.>
16) Remove the baffle plate.

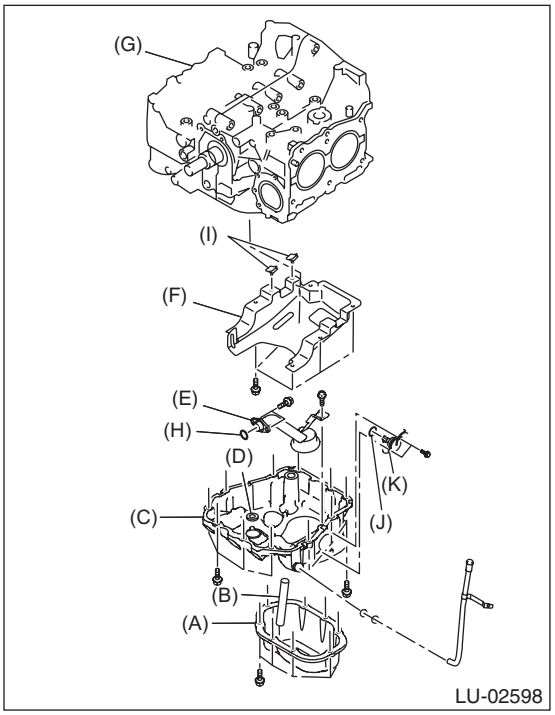

LU-02598

(A) Oil pan
(B) Oil drain pipe
(C) Cylinder block lower
(D) O-ring
(E) Oil strainer
(F) Baffle plate
(G) Cylinder block
(H) O-ring
(I) Seal
(J) O-ring
(K) Oil level switch

B: INSTALLATION

1. OIL PAN

NOTE:
Before installing the oil pan, clean the mating surface of oil pan and cylinder block.
1) Apply liquid gasket to the mating surfaces of oil pan, and install the oil pan.

NOTE:
Install within 5 min. after applying liquid gasket.

Liquid gasket:
THREE BOND 1217G (Part No. K0877Y0100) or equivalent

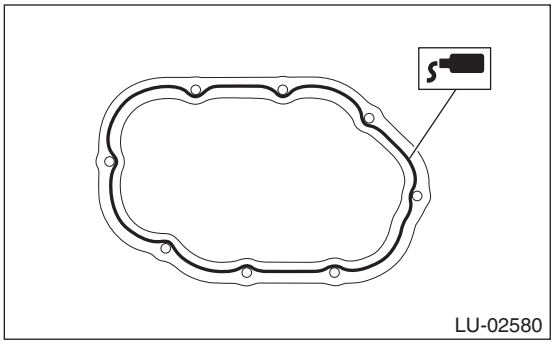

2) Tighten the bolts to install the oil pan to the cylinder block lower.

Tightening torque:
5 N·m (0.5 kgf-m, 3.7 ft-lb)

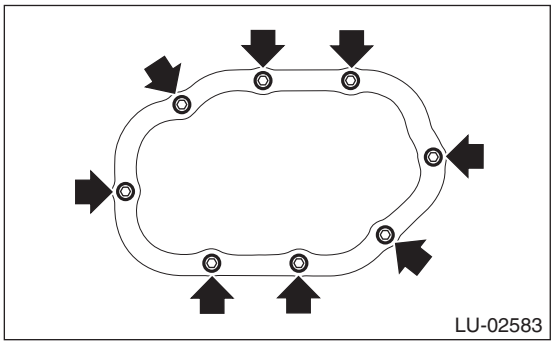

3) Install the front exhaust pipe. <Ref. to EX(H4SO)-6, INSTALLATION, Front Exhaust Pipe.> <Ref. to EX(H4DOTC)-7, INSTALLATION, Front Exhaust Pipe.>
4) Install the under cover. <Ref. to EI-35, INSTALLATION, Front Under Cover.>
5) Lower the vehicle.
6) Connect the battery ground terminal.

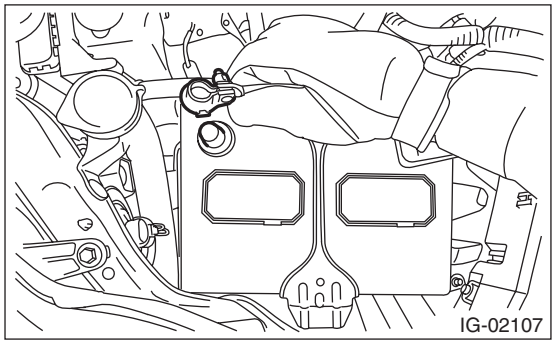

7) Refill the engine oil. <Ref. to LU(H4SO)-13, REPLACEMENT, Engine Oil.>

2. CYLINDER BLOCK LOWER

NOTE:
Before installing the cylinder block lower, clean the mating surface of cylinder block lower and cylinder block.
1) Make sure that the seals (A) are installed securely on the baffle plate in a direction as shown in the figure below.

NOTE:
Use a new seal.

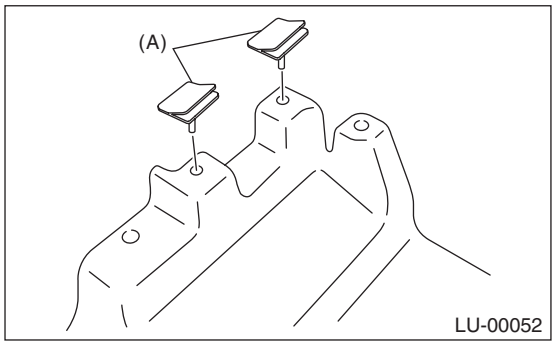

2) Install the baffle plate.

Tightening torque:
6.4 N·m (0.7 kgf-m, 4.7 ft-lb)

3) Install the oil drain pipe to the cylinder block lower.

(1) Draw a reference line (A) on the oil drain pipe using a marker as shown in the figure.

Oil drain pipe protrusion L:
90.0 mm (3.54 in)

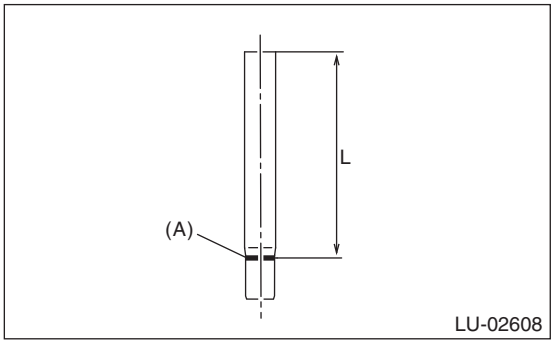

(2) Insert the oil drain pipe up to the reference line (A) using a plastic hammer.

NOTE:
Be careful not to deform the oil drain pipe.

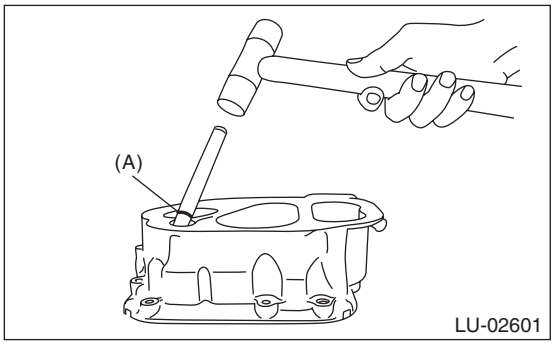

(3) Measure the oil drain pipe protrusion “L” and check that the value is within the specified range.

Oil drain pipe protrusion L:
Standard
89.0 — 91.0 mm (3.50 — 3.58 in)

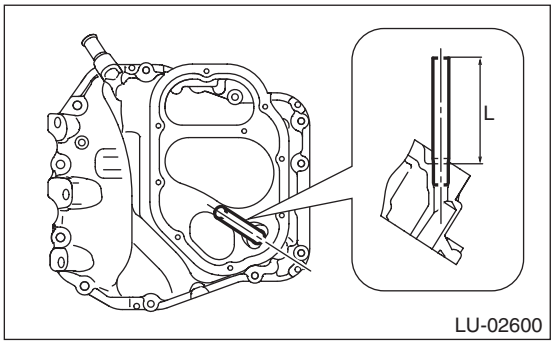

4) Install the oil level switch to the cylinder block lower. <Ref. to LU(H4SO)-38, INSTALLATION, Oil Level Switch.>

5) Install the oil strainer to the cylinder block lower.

NOTE:
Use new O-rings.

Tightening torque:
10 N·m (1.0 kgf-m, 7.4 ft-lb)

6) Install the O-ring to the cylinder block lower.

NOTE:
- Use new O-rings.
- Install the O-ring with the metal side facing upward.

7) Apply liquid gasket to the mating surfaces of the oil pan, and install the cylinder block lower.

CAUTION:
Be careful not to apply any liquid gasket to the O-ring (A).

NOTE:
Install within 5 min. after applying liquid gasket.

Liquid gasket:
THREE BOND 1217G (Part No. K0877Y0100) or equivalent

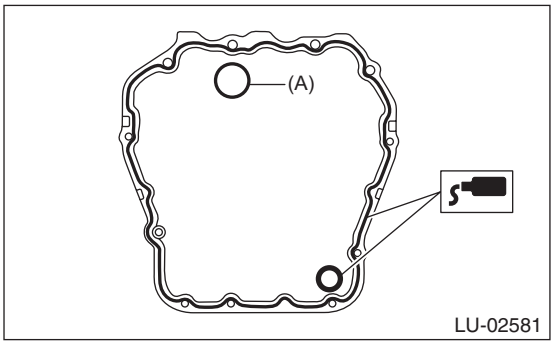

(A) O-ring

8) Tighten the bolts to install the cylinder block lower to the cylinder block.

Tightening torque:
T1: 5 N·m (0.5 kgf-m, 3.7 ft-lb)
T2: 6.4 N·m (0.7 kgf-m, 4.7 ft-lb)
T3: 10 N·m (1.0 kgf-m, 7.4 ft-lb)
T4: 16 N·m (1.6 kgf-m, 11.8 ft-lb)

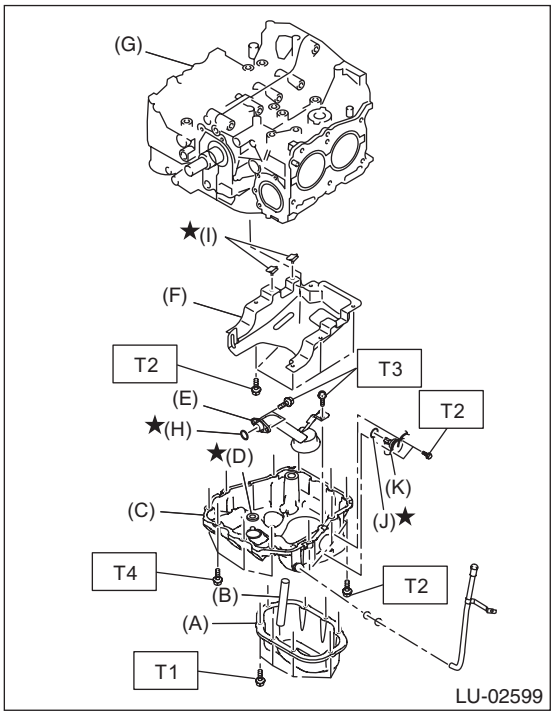

(A) Oil pan
(B) Oil drain pipe
(C) Cylinder block lower
(D) O-ring
(E) Oil strainer
(F) Baffle plate
(G) Cylinder block
(H) O-ring
(I) Seal
(J) O-ring
(K) Oil level switch

9) Install the engine mount. <Ref. to ME(H4SO)-40, INSTALLATION, Engine Mounting.> <Ref. to ME(H4DOTC)-39, INSTALLATION, Engine Mounting.>
10) Install the oil pan. <Ref. to LU(H4SO)-21, OIL PAN, INSTALLATION, Oil Pan and Strainer.>
11) Lower the vehicle.

CAUTION:
When lowering the vehicle, lower the lift up device and wire ropes at the same time.
12) Remove the lifting device and wire ropes.

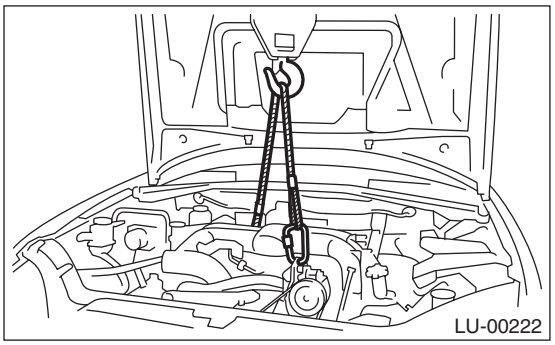

13) Install the intercooler. (turbo model) <Ref. to IN(H4DOTC)-18, INSTALLATION, Intercooler.>
14) Install the air intake boot assembly. (non-turbo model)

NOTE:
Align the clamp hole with the protrusion of the air intake boot assembly.

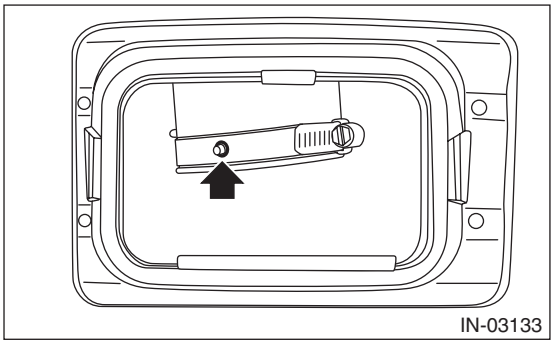

Tightening torque:
Clamp (A), (B)
3 N·m (0.3 kgf-m, 2.2 ft-lb)

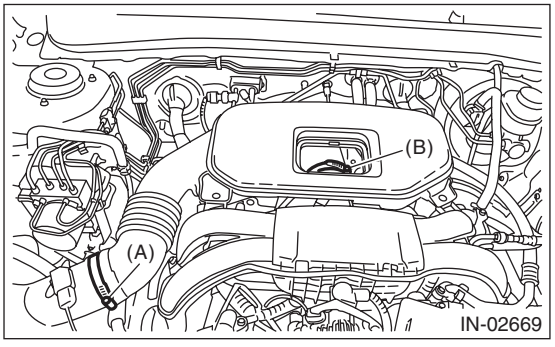

15) Connect the battery ground terminal.

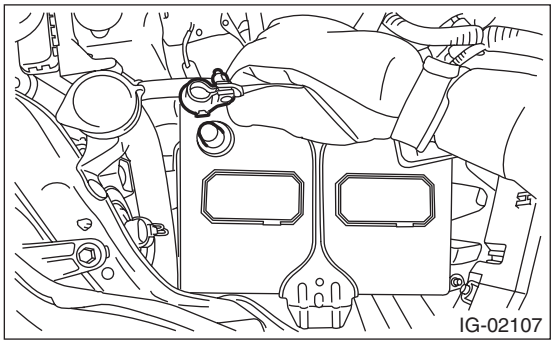

16) Install the collector cover. (turbo model)
17) Refill the engine oil. <Ref. to LU(H4SO)-13, REPLACEMENT, Engine Oil.>

C: INSPECTION

Check that the oil pan, oil strainer and baffle plate do not have deformation, cracks or damage.

6. Oil Pressure Switch

A: REMOVAL

1) Disconnect the ground cable from battery.

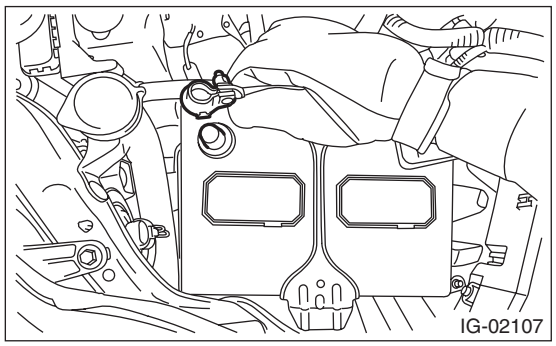

2) Remove the generator. <Ref. to SC(H4SO)-18, REMOVAL, Generator.>

3) Disconnect the terminal from oil pressure switch.

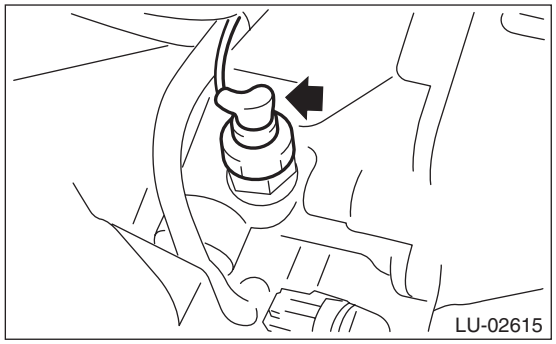

4) Remove the oil pressure switch.

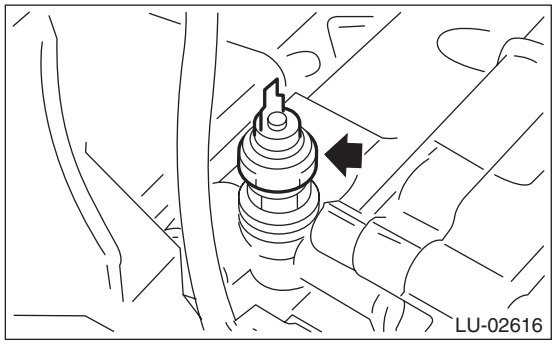

B: INSTALLATION

1) Apply liquid gasket to the oil pressure switch threads.

Liquid gasket:
THREE BOND 1324 (Part No. 004403042) or equivalent

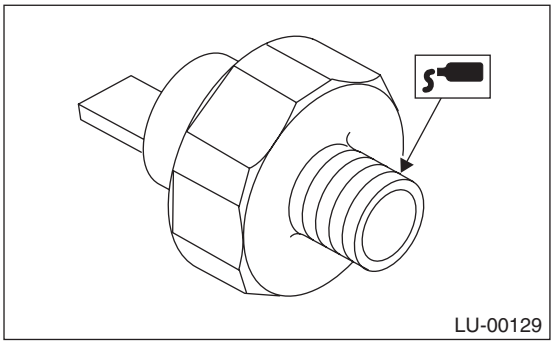

2) Install the oil pressure switch to cylinder block.

Tightening torque:
25 N·m (2.5 kgf-m, 18.4 ft-lb)

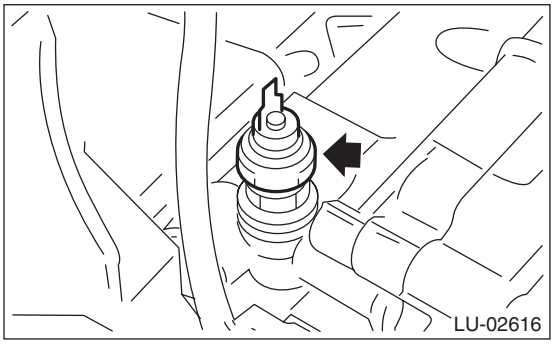

3) Connect the terminal to the oil pressure switch.

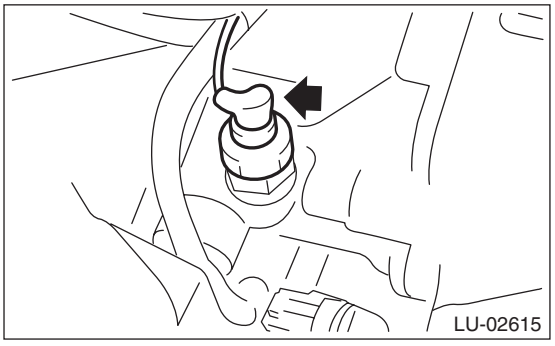

4) Install the generator. <Ref. to SC(H4SO)-18, INSTALLATION, Generator.>

5) Connect the battery ground terminal.

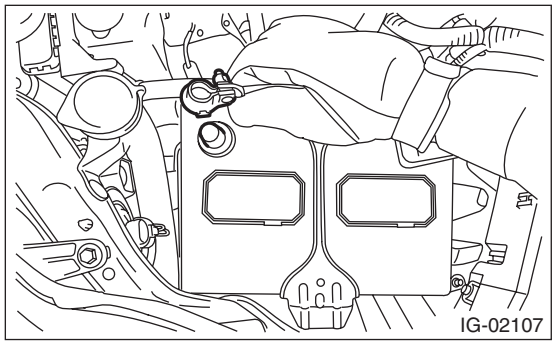

C: INSPECTION

1) Check that the oil pressure switch does not have deformation, cracks or damage.
2) Check the oil pressure switch installation portion for oil leakage and oil seepage.

7. Engine Oil Cooler

A: REMOVAL

CAUTION:
If engine oil is spilt onto the exhaust pipe, wipe it off with cloth to avoid emission of smoke or causing a fire.

NOTE:
Turbo model is equipped with engine oil cooler.
1) Lift up the vehicle.
2) Remove the under cover. <Ref. to EI-35, REMOVAL, Front Under Cover.>
3) Drain engine coolant. <Ref. to CO(H4DOTC)-14, DRAINING OF ENGINE COOLANT, REPLACEMENT, Engine Coolant.>
4) Remove the front exhaust pipe. <Ref. to EX(H4DOTC)-5, REMOVAL, Front Exhaust Pipe.>
5) Remove the engine oil filter. <Ref. to LU(H4SO)-36, REMOVAL, Engine Oil Filter.>
6) Remove the bolt (B) holding the oil cooler pipe (A) to the oil pump.
7) Remove the oil cooler pipe (A), oil cooler hose A (C) and oil cooler hose B (J).
8) Remove the oil cooler connector (D) and oil cooler (E).

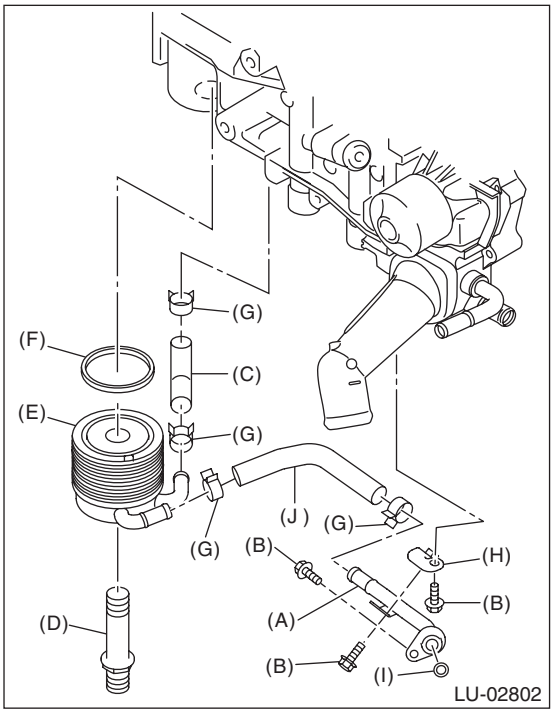

(A) Oil cooler pipe
(B) Bolt
(C) Oil cooler hose A
(D) Oil cooler connector
(E) Oil cooler
(F) Gasket
(G) Clip
(H) Oil cooler pipe stay
(I) O-ring
(J) Oil cooler hose B

B: INSTALLATION

Install in the reverse order of removal.

NOTE:
- Use new gaskets and O-rings.
- After installing, check the engine oil level and replenish it if necessary. <Ref. to LU(H4SO)-13, INSPECTION, Engine Oil.>
- After temporarily installing the oil cooler pipe, tighten the bolts in alphabetical order as shown below.

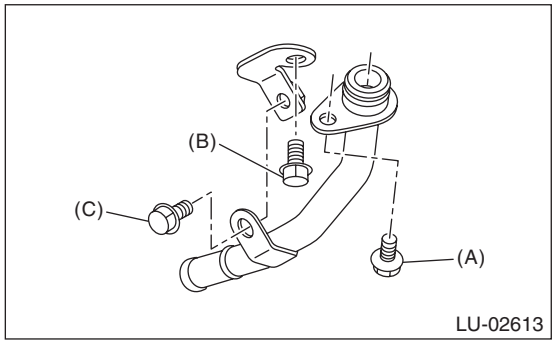

Tightening torque:
T1: 6.4 N·m (0.7 kgf-m, 4.7 ft-lb)
T2: 54 N·m (5.5 kgf-m, 39.8 ft-lb)

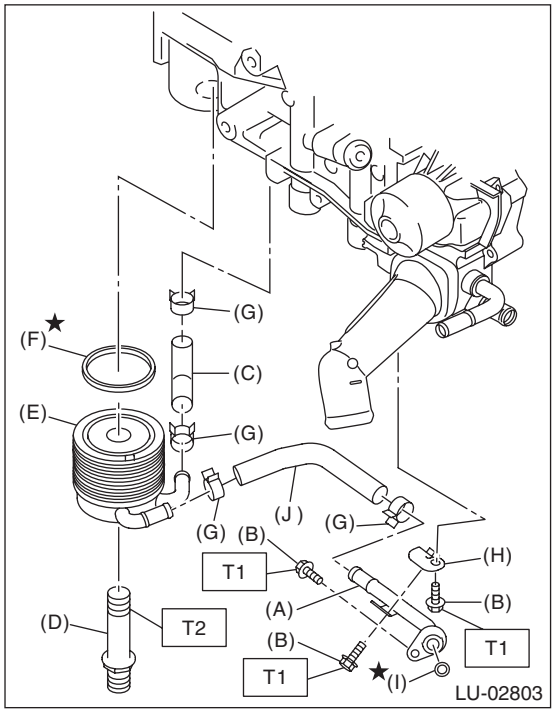

(A) Oil cooler pipe
(B) Bolt
(C) Oil cooler hose A
(D) Oil cooler connector
(E) Oil cooler
(F) Gasket
(G) Clip
(H) Oil cooler pipe stay
(I) O-ring
(J) Oil cooler hose B

C: INSPECTION

1) Check that the engine oil cooler, oil cooler pipe and oil cooler connector do not have deformation, cracks or damage.
2) Make sure the oil cooler hoses are not cracked, damaged or loose.
3) Check the coolant paths for clogs while spraying compressed air.
4) Make sure the mating surfaces of the cylinder block do not have damage.

8. Oil Catch Tank

A: REMOVAL

For the removal procedures, refer to IN (H4DOTC) section. <Ref. to IN(H4DOTC)-23, REMOVAL, Oil Catch Tank.>

B: INSTALLATION

For the installation procedures, refer to IN (H4DOTC) section. <Ref. to IN(H4DOTC)-23, INSTALLATION, Oil Catch Tank.>

C: INSPECTION

For the inspection procedures, refer to IN (H4DOTC) section. <Ref. to IN(H4DOTC)-24, INSPECTION, Oil Catch Tank.>

9. Scavenge Pump

A: REMOVAL

CAUTION:
If engine oil is spilt onto the exhaust pipe, wipe it off with cloth to avoid emission of smoke or causing a fire.

NOTE:
The scavenge pump is installed on turbo models.
1) Lift up the vehicle.
2) Remove the under cover. <Ref. to EI-35, REMOVAL, Front Under Cover.>
3) Remove the union bolt (A) which fixes the oil pipe (C) to the scavenge pump (E).
4) Remove the bolt (D) which fixes the scavenge pump (E) to the cylinder head, and remove the scavenge pump using a flat tip screwdriver.

CAUTION:
Be careful not to damage the mating surfaces of the cylinder head and scavenge pump.

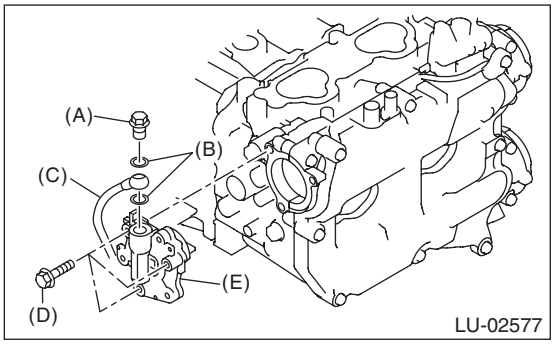

(A) Union bolt
(B) Gasket
(C) Oil pipe
(D) Bolt
(E) Scavenge pump

B: INSTALLATION

Install in the reverse order of removal.

CAUTION:
Do not start applying liquid gasket from (A) as shown in the following figure.

NOTE:
- Use a new gasket.
- Install within 5 min. after applying liquid gasket.

Liquid gasket:
THREE BOND 1217G (Part No. K0877Y0100) or equivalent

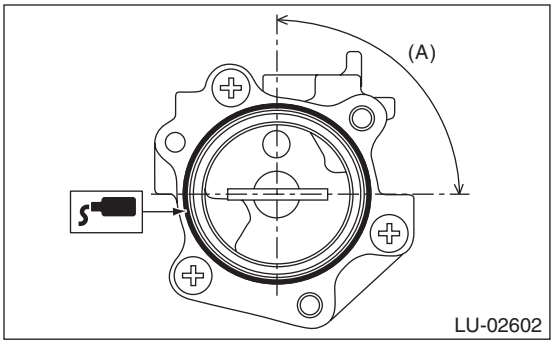

Tightening torque:
T1: 6.4 N·m (0.7 kgf-m, 4.7 ft-lb)
T2: 29 N·m (3.0 kgf-m, 21.4 ft-lb)

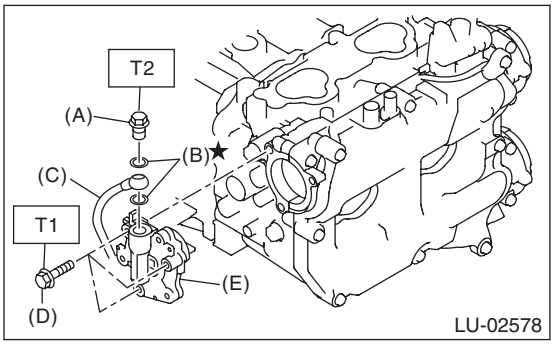

(A) Union bolt
(B) Gasket
(C) Oil pipe
(D) BOLT
(E) Scavenge pump

C: INSPECTION

1) Check that the scavenge pump and oil pipe have no deformation, cracks and other damages.
2) Check that the scavenge pump has no cracks, damage or loose part.

10.Oil Pipe

A: REMOVAL

NOTE:
Turbo model is equipped with oil pipe.
1) Remove the collector cover.
2) Disconnect the ground cable from battery.

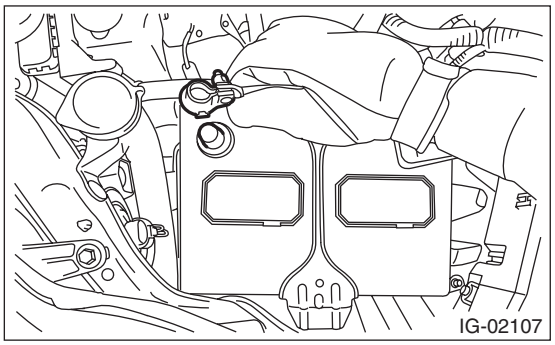

3) Remove the intercooler. <Ref. to IN(H4DOTC)-17, REMOVAL, Intercooler.>
4) Lift up the vehicle.
5) Remove the under cover. <Ref. to EI-35, REMOVAL, Front Under Cover.>
6) Remove the ground cable from the oil outlet pipe.
7) Disconnect the oil outlet hose from the oil outlet pipe.

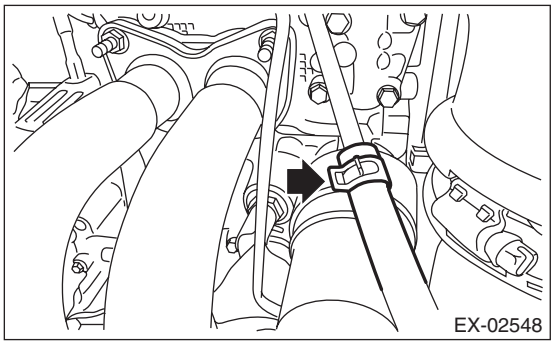

8) Remove oil inlet pipe B (B) from oil inlet pipe A (A), and remove the bolt which holds oil outlet pipe C (C) and oil inlet pipe A (A).

CAUTION:
In order to prevent damaging the oil inlet pipe, fix the section (a) shown in the figure when loosing the oil inlet pipe flare nut, and avoid the part from rotating together while loosening the nut.

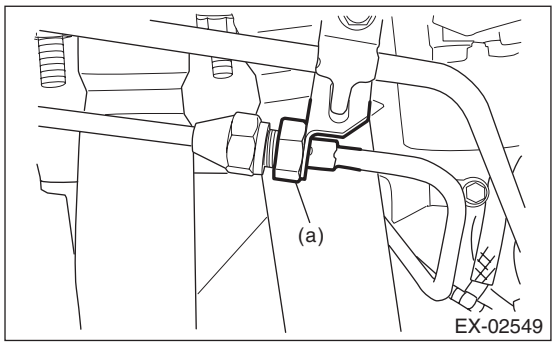

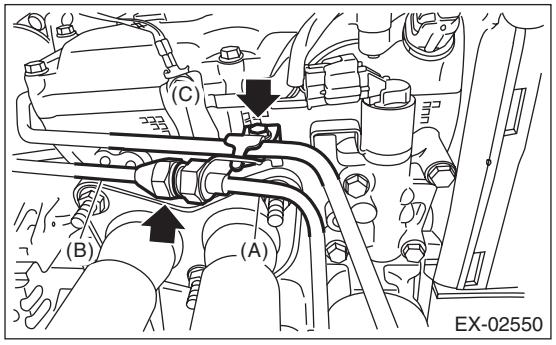

9) Lower the vehicle.
10) Remove the union bolt (B) securing the oil outlet pipe (A) from the scavenge pump.
11) Remove the bolts (C) and (D) securing the oil outlet pipe (A) to the cylinder head, and remove the oil outlet pipe (A).

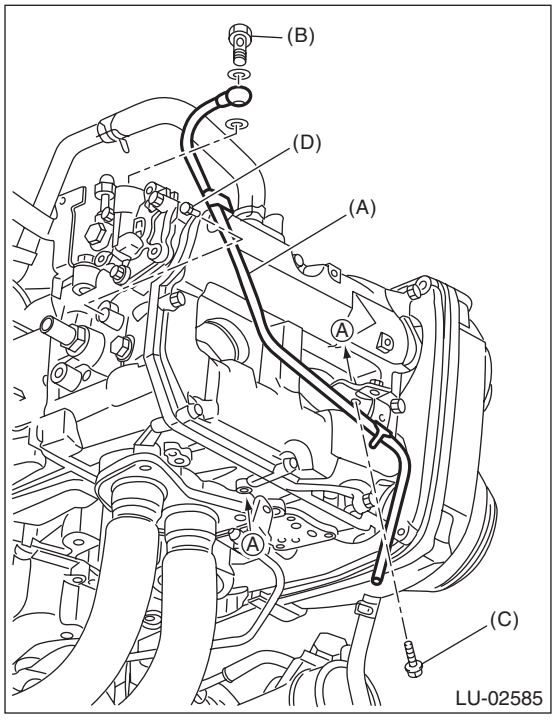

12) Remove the oil inlet pipe B (A) from the oil inlet pipe C (C).

CAUTION:
In order to avoid damaging the oil inlet pipe C (C), fix the section (a) shown in the figure so that it will not rotate together when loosening the flare nut of the oil inlet pipe B (A).

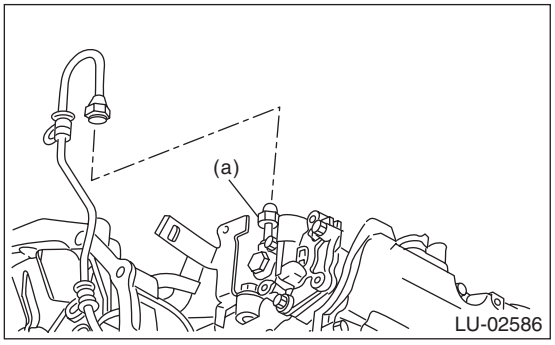

13) Remove the bolt (B) securing the oil inlet pipe B (A) to the cylinder head and stay, and remove the oil inlet pipe B (A).
14) Remove the union bolt (D) securing the oil inlet pipe C (C) to the cylinder head, and remove the oil inlet pipe C (C).

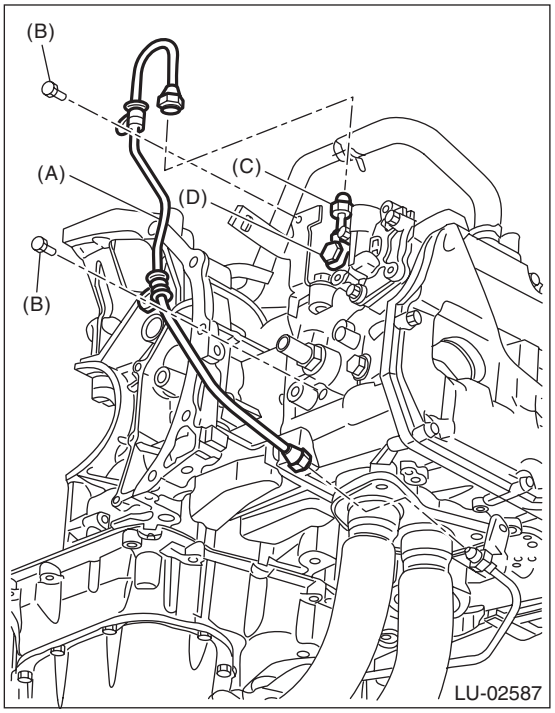

15) Remove the intake manifold. <Ref. to FU(H4DOTC)-18, REMOVAL, Intake Manifold.>
16) Remove the radiator main fan and radiator sub fan. <Ref. to CO(H4DOTC)-25, REMOVAL, Radiator Main Fan and Fan Motor.> <Ref. to CO(H4DOTC)-27, REMOVAL, Radiator Sub Fan and Fan Motor.>
17) Remove the V-belts. <Ref. to ME(H4DOTC)-42, REMOVAL, V-belt.>
18) Remove the crank pulley. <Ref. to ME(H4DOTC)-44, REMOVAL, Crank Pulley.>
19) Remove the timing belt cover. <Ref. to ME(H4DOTC)-46, REMOVAL, Timing Belt Cover.>
20) Remove the timing belt. <Ref. to ME(H4DOTC)-52, REMOVAL, Timing Belt.>
21) Remove the cam sprocket LH. <Ref. to ME(H4DOTC)-61, REMOVAL, Cam Sprocket.>
22) Remove the belt cover No. 2 LH.

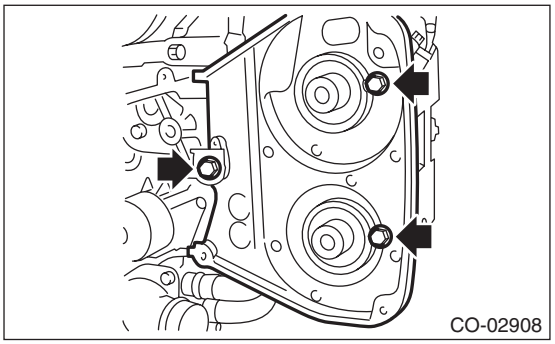

23) Remove the oil pipe.

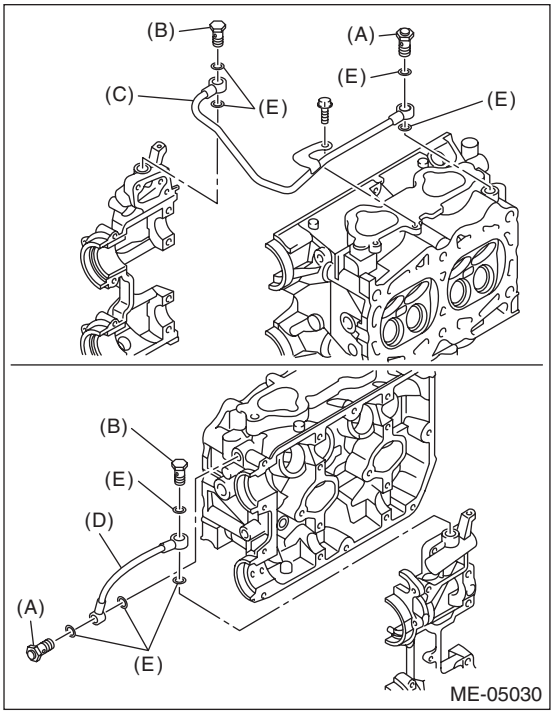

(A) Union bolt with filter (with protrusion)
(B) Union bolt without filter (without protrusion)
(C) Oil pipe RH
(D) Oil pipe LH
(E) Gasket

B: INSTALLATION

1) Inspect the union bolt with filter. <Ref. to LU(H4SO)-35, INSPECTING UNION BOLT WITH FILTER, INSPECTION, Oil Pipe.>
2) Install the oil pipe.

NOTE:
• Be careful of the install location of the union bolt; the location will differ depending on the presence of filter.
• Use a new gasket.

Tightening torque:
T1: 6.4 N·m (0.7 kgf-m, 4.7 ft-lb)
T2: 29 N·m (3.0 kgf-m, 21.4 ft-lb)

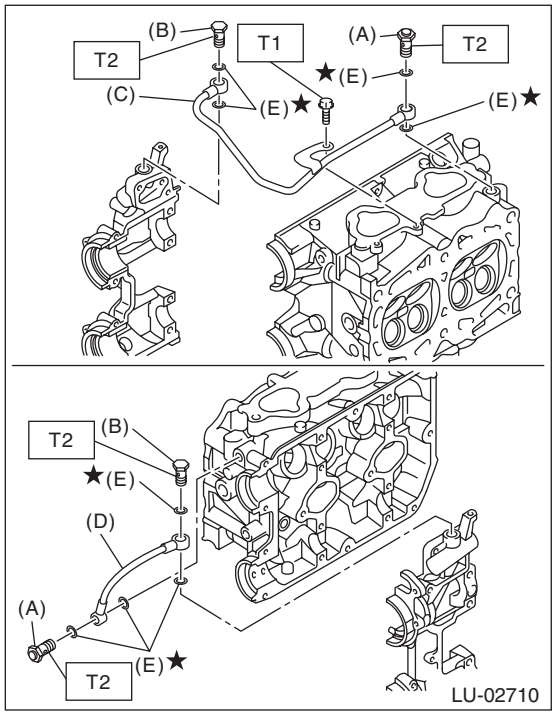

(A) Union bolt with filter (with protrusion)
(B) Union bolt without filter (without protrusion)
(C) Oil pipe RH
(D) Oil pipe LH
(E) Gasket

3) Install the belt cover No. 2 LH.

Tightening torque:
5 N·m (0.5 kgf-m, 3.7 ft-lb)

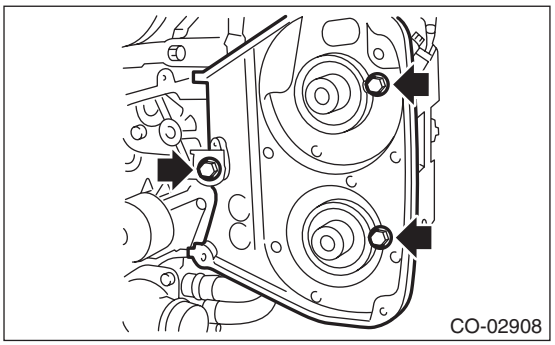

4) Install the cam sprocket LH. <Ref. to ME(H4DOTC)-61, INSTALLATION, Cam Sprocket.>
5) Install the timing belt. <Ref. to ME(H4DOTC)-55, TIMING BELT, INSTALLATION, Timing Belt.>
6) Install the timing belt cover. <Ref. to ME(H4DOTC)-49, INSTALLATION, Timing Belt Cover.>
7) Install the crank pulley. <Ref. to ME(H4DOTC)-44, INSTALLATION, Crank Pulley.>
8) Install the V-belts. <Ref. to ME(H4DOTC)-42, INSTALLATION, V-belt.>
9) Install the radiator main fan and the radiator sub fan. <Ref. to CO(H4DOTC)-25, INSTALLATION, Radiator Main Fan and Fan Motor.> <Ref. to CO(H4DOTC)-27, INSTALLATION, Radiator Sub Fan and Fan Motor.>
10) Install the intake manifold. <Ref. to FU(H4DOTC)-22, INSTALLATION, Intake Manifold.>
11) Install the oil inlet pipe C (C) to the cylinder head with the union bolt (D).

NOTE:
Use a new gasket.

Tightening torque:
29 N·m (3.0 kgf-m, 21.4 ft-lb)
12) Temporarily install the oil inlet pipe B (A) to the oil inlet pipe C (C).
13) Install the oil inlet pipe B (A) to the cylinder head with the bolt (B).

Tightening torque:
6.4 N·m (0.7 kgf-m, 4.7 ft-lb)

14) Tighten the flare nut of the oil inlet pipe B (A).

CAUTION:
In order to avoid damaging the oil inlet pipe C (C), fix the section (a) shown in the figure so that it will not rotate together when tightening the flare nut of the oil inlet pipe B (A).

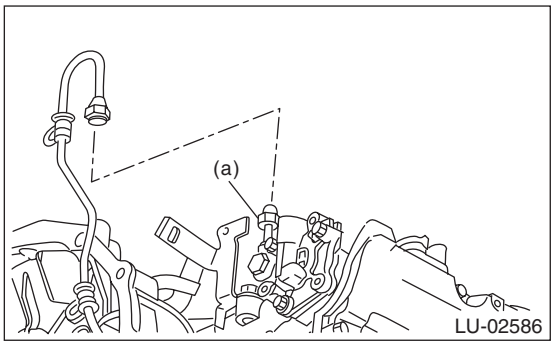

Tightening torque:
20 N·m (2.0 kgf-m, 14.8 ft-lb)

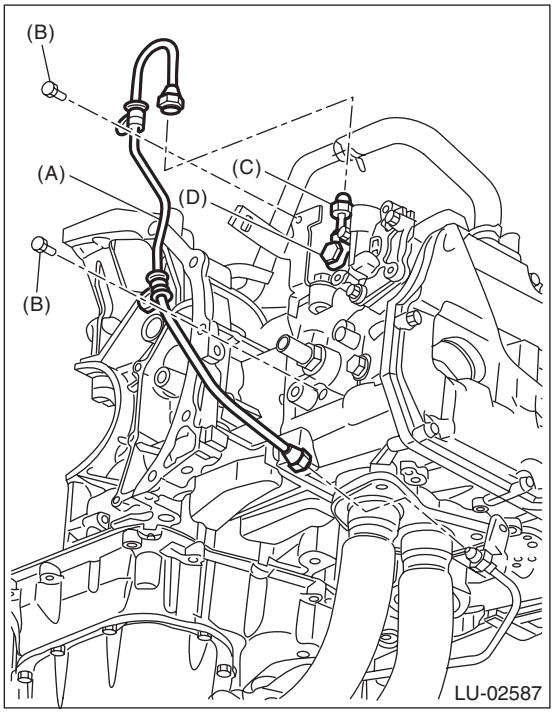

15) Temporarily install the oil outlet pipe (A) to the scavenge pump using the union bolt (B).
16) Secure the oil outlet pipe (A) to the cylinder head and stay with bolts (C) and (D).

Tightening torque:
6.4 N·m (0.7 kgf-m, 4.7 ft-lb)

17) Tighten the union bolt (B) of the oil outlet pipe (A).

Tightening torque:
29 N·m (3.0 kgf-m, 21.4 ft-lb)

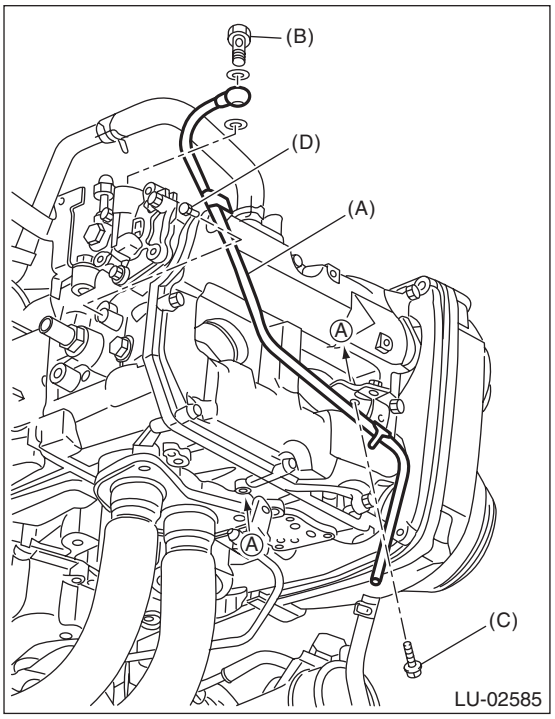

18) Lift up the vehicle.
19) Install the bolt which holds oil outlet pipe (C) and oil inlet pipe A (A), and install oil inlet pipe B (B) to oil inlet pipe A (A).

CAUTION:
In order to prevent damaging the oil inlet pipe, fix the section (a) shown in the figure when tightening the oil inlet pipe flare nut, and avoid the part from rotating together while tightening the nut.

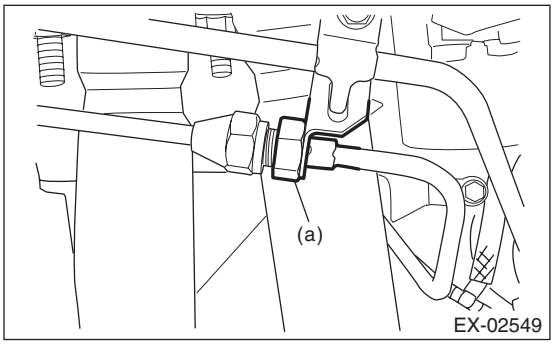

Tightening torque:
T1: 6.4 N·m (0.7 kgf-m, 4.7 ft-lb)
T2: 20 N·m (2.0 kgf-m, 14.8 ft-lb)

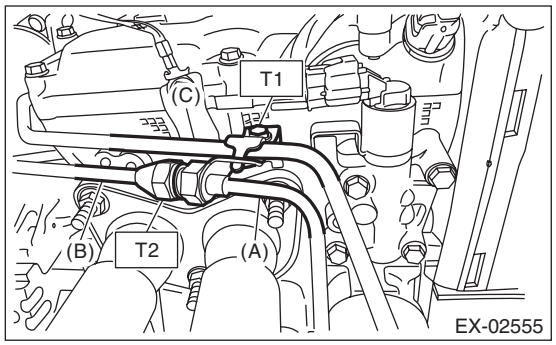

20) Attach the ground cable to the oil outlet pipe.

Tightening torque:
7 N·m (0.7 kgf-m, 5.2 ft-lb)

21) Connect the oil outlet hose to the oil outlet pipe.

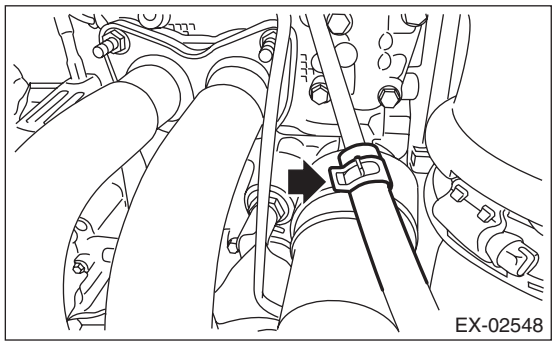

22) Install the under cover. <Ref. to EI-35, INSTALLATION, Front Under Cover.>
23) Lower the vehicle.
24) Install the intercooler. <Ref. to IN(H4DOTC)-18, INSTALLATION, Intercooler.>
25) Connect the battery ground terminal.

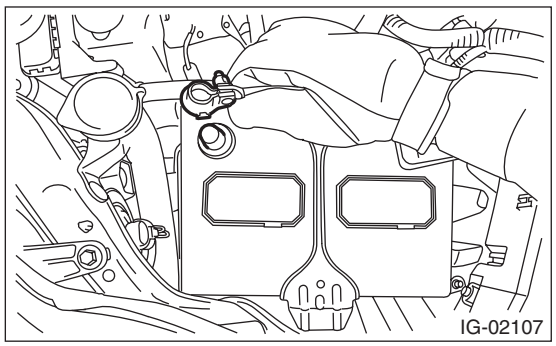

26) Install the collector cover.

C: INSPECTION

1. INSPECTING UNION BOLT WITH FILTER

Check the filter part of union bolt for clogging or damage, and if defective, replace the union bolt with filter with the new part.

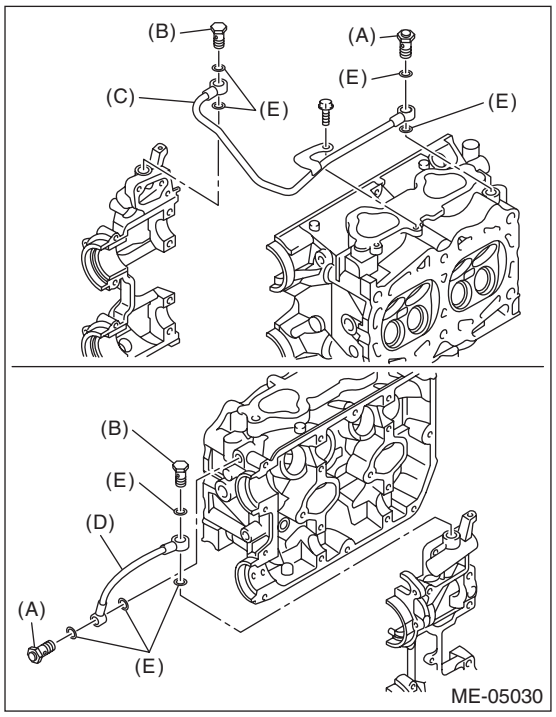

(A) Union bolt with filter (with protrusion)
(B) Union bolt without filter (without protrusion)
(C) Oil pipe RH
(D) Oil pipe LH
(E) Gasket

2. OTHER INSPECTIONS

1) Check that the oil pipe and union bolt have no deformation, cracks and other damages.
2) Check that there are no oil leaks or oil oozing from the oil pipe attachment section.

11.Engine Oil Filter

A: REMOVAL

CAUTION:
If the engine oil is spilt over exhaust pipe or the under cover, wipe it off with cloth to avoid emitting smoke or causing a fire.

1) Lift up the vehicle.
2) Remove the service hole cover of under cover.
• Medium under cover model

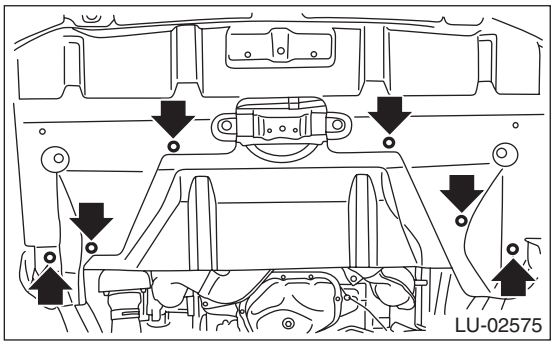

• Models with large under cover

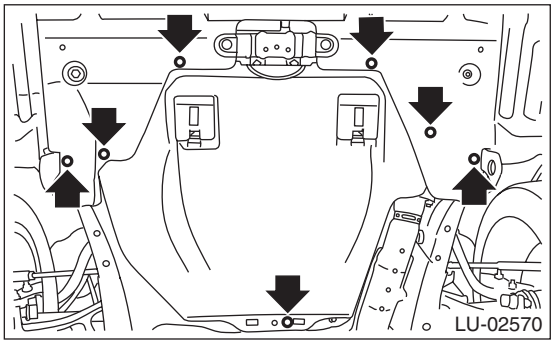

3) Remove the oil filter.
• Black oil filter

Remove it using the ST.

ST 18332AA000 OIL FILTER WRENCH (OUTER DIAMETER: 68 MM (2.68 IN) FOR OIL FILTER)

• Blue oil filter

Remove it using the general tool (65/67 mm 14 flutes).

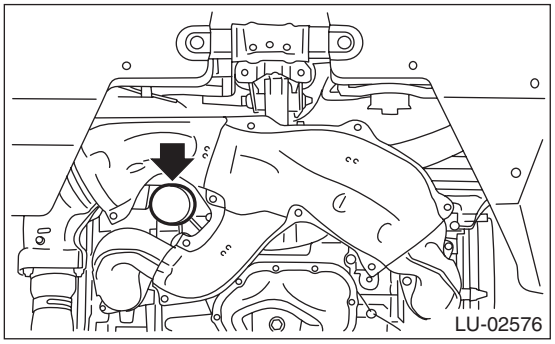

B: INSTALLATION

CAUTION:
Do not tighten excessively, or oil may leak.

1) Clean the oil filter installation surface on the cylinder block or engine oil cooler.
2) Obtain a new oil filter and apply a thin coat of engine oil to the seal rubber.
3) Install the oil filter turning it by hand, being careful not to damage the seal rubber of the oil filter.
• Tighten the oil filter (Black) with an outer diameter of 68 mm (2.68 in) (approx. 1 rotation) after the seal rubber of the oil filter comes in contact with cylinder block. When using a torque wrench, tighten to 14 N·m (1.4 kgf-m, 10.3 ft-lb).
• Tighten the oil filter (Blue) with an outer diameter of 67.4 mm (2.65 in) (approx. 7/8 rotation) after the seal rubber of the oil filter comes in contact with cylinder block. When using a torque wrench, tighten to 12 N·m (1.2 kgf-m, 8.9 ft-lb).
4) Return the service hole cover to its original position.
5) Lower the vehicle.
6) After installing, check the engine oil level and replenish it if necessary. <Ref. to LU(H4SO)-13, INSPECTION, Engine Oil.>

C: INSPECTION

1) After installing the oil filter, run the engine and make sure that no oil is leaking around seal rubber.

NOTE:
The filter element and filter case are permanently jointed; therefore, interior cleaning is not necessary.

2) Check the engine oil level. <Ref. to LU(H4SO)-13, INSPECTION, Engine Oil.>

12.Oil Level Switch

A: REMOVAL

1) Disconnect the ground cable from battery.

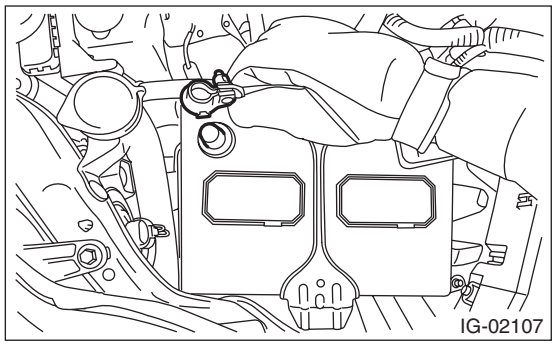

2) Lift up the vehicle.
3) Remove the under cover. <Ref. to EI-35, REMOVAL, Front Under Cover.>
4) Drain the engine oil. <Ref. to LU(H4SO)-13, REPLACEMENT, Engine Oil.>
5) Disconnect the connector of the oil level switch from the engine harness.

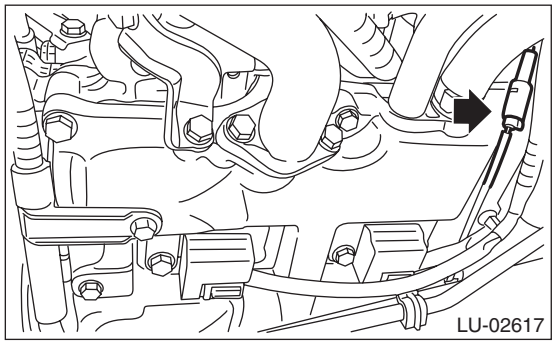

6) Remove the clip holding the oil level switch harness.

- Turbo model

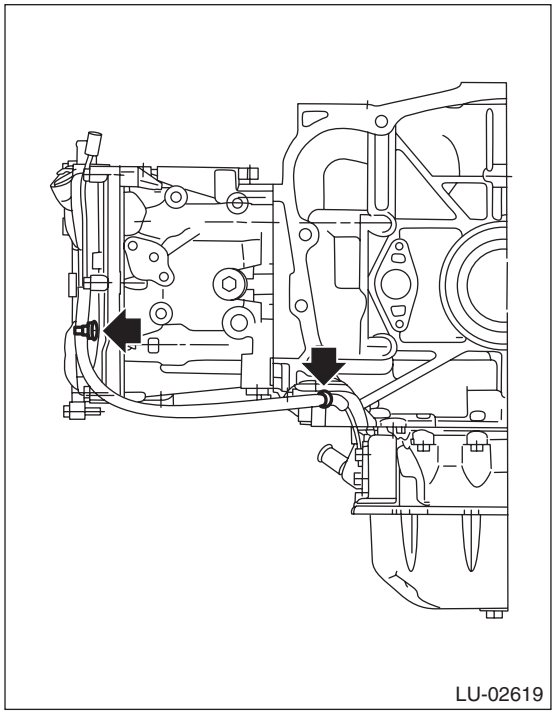

- Non-turbo model

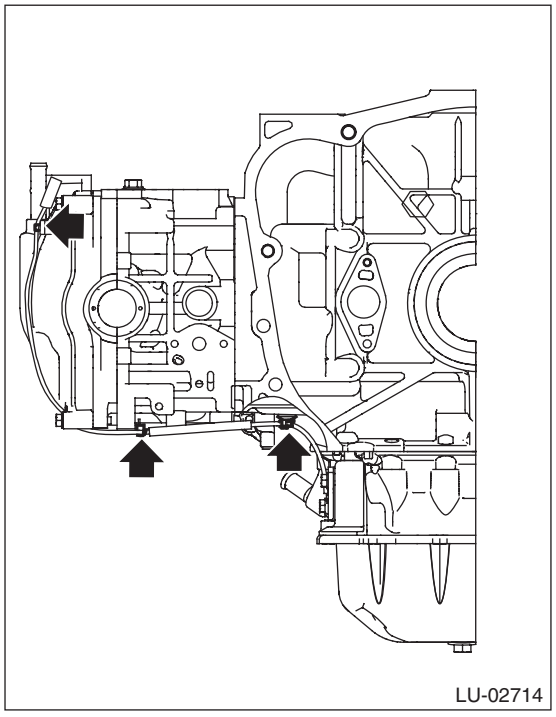

7) Remove the oil level switch from the cylinder block lower.

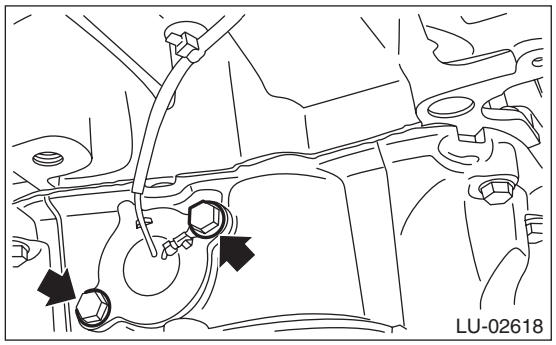

B: INSTALLATION

1) Install the oil level switch to the cylinder block lower.

NOTE:
- Use new O-rings.
- Apply a coat of engine oil to the O-rings.

Tightening torque:
6.4 N·m (0.7 kgf-m, 4.7 ft-lb)

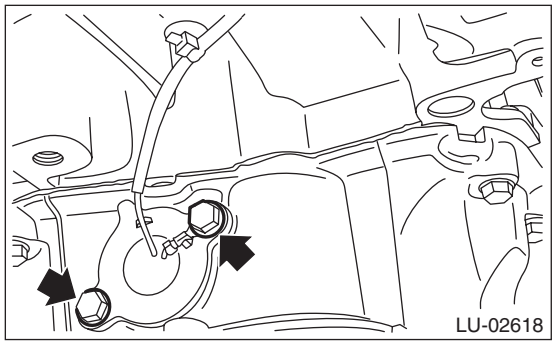

2) Hold the oil level switch harness with the clip.
- Turbo model

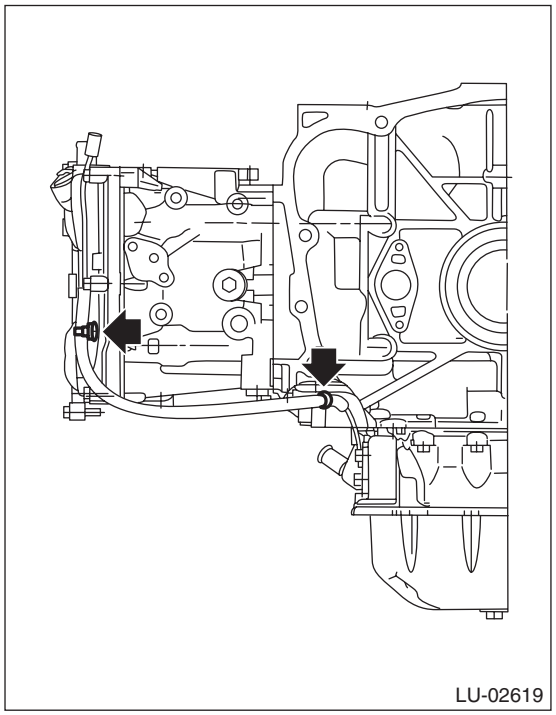

- Non-turbo model

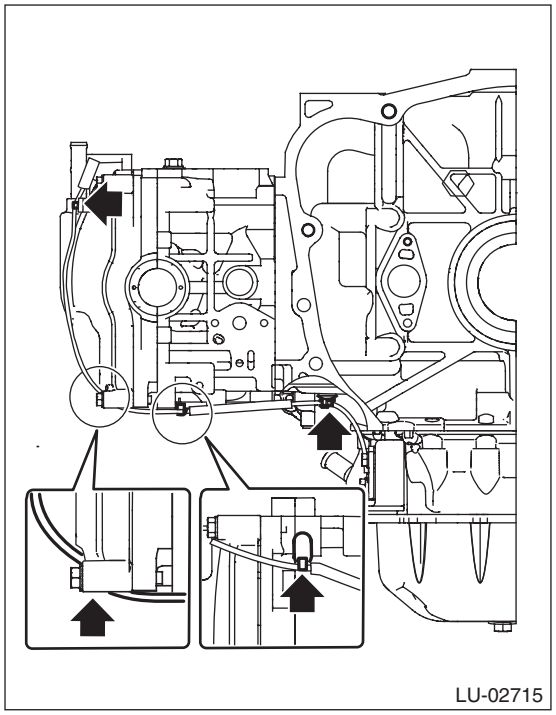

3) Connect the connector of the oil level switch to the engine harness.

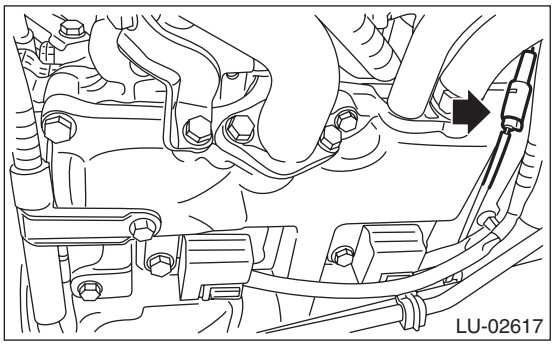

4) Install the under cover. <Ref. to EI-35, INSTALLATION, Front Under Cover.>
5) Lower the vehicle.
6) Refill the engine oil. <Ref. to LU(H4SO)-13, REPLACEMENT, Engine Oil.>
7) Check the engine oil level. <Ref. to LU(H4SO)-13, INSPECTION, Engine Oil.>
8) Connect the battery ground terminal.

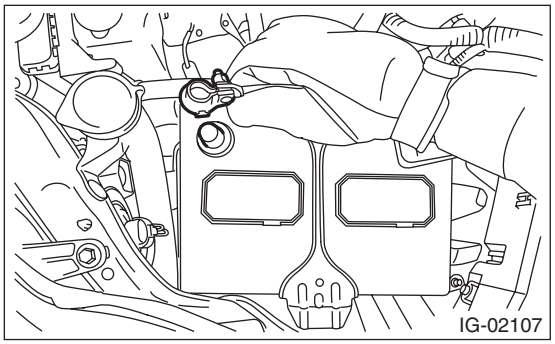

C: WIRING DIAGRAM

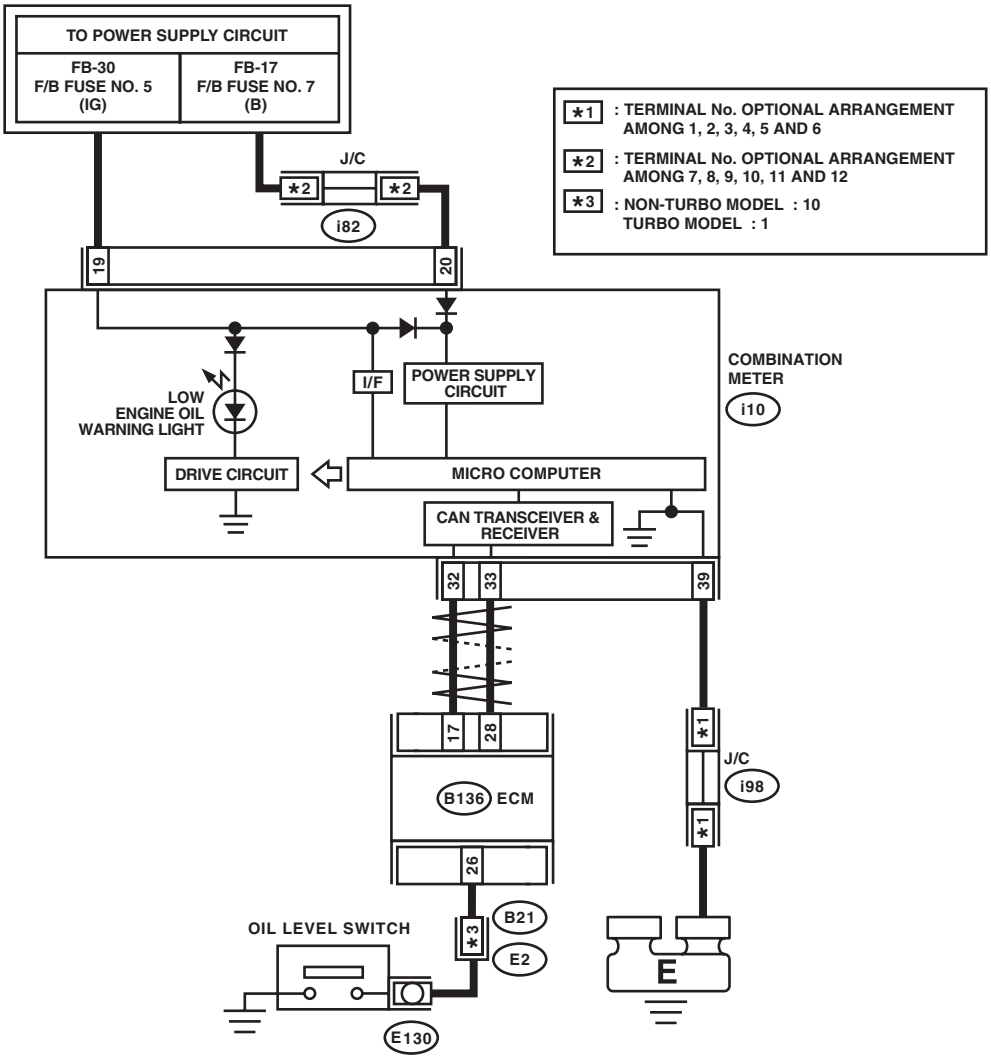

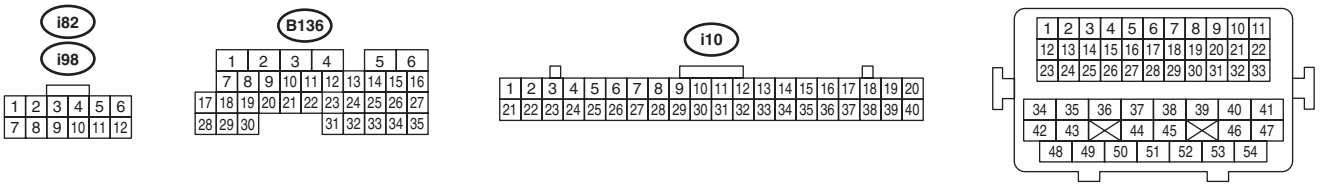

LU-02653

D: INSPECTION

1. INSPECTION WHEN LOW ENGINE OIL WARNING LIGHT IS ILLUMINATED

Step	Check	Yes	No
1 **CHECK ENGINE OIL LEVEL.**	Is engine oil level normal?	Go to step **2**.	Replace engine oil or refill, and check again while the oil level is normal condition. <Ref. to LU(H4SO)-13, REPLACEMENT, Engine Oil.> To turn off the low engine oil warning light, install the spare fuse at the delivery (test) mode fuse in the main fuse box. Then turn the ignition switch to ON (engine off) again, to confirm the low engine oil warning light turns off. Remove the spare fuse installed to finish. NOTE: The engine oil level switch is normal, if the low engine oil level warning light turns off with the delivery (test) mode fuse installed.
2 **CHECK LAN SYSTEM.**	Has a DTC of the LAN system been input?	Perform the diagnosis according to DTC.	Go to step **3**.

	Step	Check	Yes	No
3	**CHECK OIL LEVEL SWITCH CIRCUIT.** 1) Turn the ignition switch to ON (engine OFF). 2) Read the current data for engine in the Subaru Select Monitor to confirm the item for "Oil level switch". <Ref. to EN(H4SO)(diag)-33, READ CURRENT DATA FOR ENGINE (NORMAL MODE), OPERATION, Subaru Select Monitor.> <Ref. to EN(H4DOTC)(diag)-34, READ CURRENT DATA FOR ENGINE (NORMAL MODE), OPERATION, Subaru Select Monitor.>	Is the "Oil level switch" signal displayed in Subaru Select Monitor HIGH?	To turn off the low engine oil warning light, install the spare fuse at the delivery (test) mode fuse in the main fuse box. Then turn the ignition switch to ON (engine off) again, to confirm the low engine oil warning light turns off. Remove the spare fuse installed to finish. NOTE: The engine oil level switch is normal, if the low engine oil level warning light turns off with the delivery (test) mode fuse installed.	Go to step **4**.
4	**CHECK COMBINATION METER.** Perform the self-diagnosis of combination meter to check if there are any faults in the combination meter. <Ref. to IDI-6, OPERATION, Combination Meter System.>	Is combination meter OK?	Go to step **5**.	Replace the combination meter. <Ref. to IDI-21, REMOVAL, Combination Meter.>
5	**CHECK SECURE CONNECTION OF CONNECTOR BETWEEN ENGINE HARNESS AND OIL LEVEL SWITCH.**	Is there any insecure connection?	Remedy the connection condition. Then, to turn off the low engine oil warning light, install the spare fuse at the delivery (test) mode fuse in the main fuse box. Then turn the ignition switch to ON (engine off) again, to confirm the low engine oil warning light turns off. Remove the spare fuse installed to finish. NOTE: The engine oil level switch is normal, if the low engine oil level warning light turns off with the delivery (test) mode fuse installed.	Go to step **6**.

	Step	Check	Yes	No
6	**CHECK OIL LEVEL SWITCH.** 1) Deliberately short circuits by connecting the engine harness connector terminal and chassis ground. 2) Turn the ignition switch to ON (engine OFF). 3) Read the current data for engine in the Subaru Select Monitor to confirm the item for "Oil level switch". <Ref. to EN(H4SO)(diag)-33, READ CURRENT DATA FOR ENGINE (NORMAL MODE), OPERATION, Subaru Select Monitor.> <Ref. to EN(H4DOTC)(diag)-34, READ CURRENT DATA FOR ENGINE (NORMAL MODE), OPERATION, Subaru Select Monitor.> ***Connector & terminal*** ***(E130) No. 1 — Chassis ground:***	Is the "Oil level switch" signal displayed in Subaru Select Monitor HIGH?	Replace the oil level switch. <Ref. to LU(H4SO)-37, REMOVAL, Oil Level Switch.>	Go to step **7**.
7	**CHECK SECURE CONNECTION OF CONNECTOR BETWEEN BULKHEAD HARNESS AND ENGINE HARNESS.**	Is there any insecure connection?	Remedy the connection condition. Then, to turn off the low engine oil warning light, install the spare fuse at the delivery (test) mode fuse in the main fuse box. Then turn the ignition switch to ON (engine off) again, to confirm the low engine oil warning light turns off. Remove the spare fuse installed to finish. NOTE: The engine oil level switch is normal, if the low engine oil level warning light turns off with the delivery (test) mode fuse installed.	Go to step **8**.
8	**CHECK ENGINE HARNESS.** 1) Disconnect the connector on the oil level switch side for the engine harness. 2) Disconnect the connector on the bulkhead harness side for the engine harness. 3) Measure the resistance between connector terminals. ***Connector & terminal*** ***• Non-turbo model*** ***(E2) No. 10 — (E130) No. 1:*** ***• Turbo model*** ***(E2) No. 1 — (E130) No. 1:***	Is the resistance less than 1 Ω?	Go to step **9**.	Repair or replace the open circuit of engine harness.

	Step	Check	Yes	No
9	**CHECK SECURE CONNECTION OF CONNECTOR BETWEEN ENGINE CONTROL MODULE (ECM) AND BULKHEAD HARNESS.** Remove the glove box lid assembly. <Ref. to EI-66, REMOVAL, Glove Box.>	Is there any insecure connection?	Remedy the connection condition. Then, to turn off the low engine oil warning light, install the spare fuse at the delivery (test) mode fuse in the main fuse box. Then turn the ignition switch to ON (engine off) again, to confirm the low engine oil warning light turns off. Remove the spare fuse installed to finish. NOTE: The engine oil level switch is normal, if the low engine oil level warning light turns off with the delivery (test) mode fuse installed.	Go to step **10**.
10	**CHECK BULKHEAD HARNESS.** 1) Remove the glove box lid assembly. <Ref. to EI-66, REMOVAL, Glove Box.> 2) Disconnect the engine control module (ECM) side connector for the bulkhead harness. 3) Disconnect the engine harness connectors from the bulkhead harness. 4) Measure the resistance between connector terminals. ***Connector & terminal*** ***• Non-turbo model*** ***(B136) No. 26 — (B21) No. 10:*** ***• Turbo model*** ***(B136) No. 26 — (B21) No. 1:***	Is the resistance less than 1 Ω?	Replace the engine control module (ECM). <Ref. to FU(H4SO)-46, REMOVAL, Engine Control Module (ECM).> <Ref. to FU(H4DOTC)-58, REMOVAL, Engine Control Module (ECM).>	Repair or replace the open circuit of the bulkhead harness.

2. OTHER INSPECTIONS

1) Check that the oil level switch does not have deformation, cracks, or damage.
2) Check the oil level switch installation part for oil leakage and oil seepage.

13.Engine Lubrication System Trouble in General

A: INSPECTION

Before performing diagnostics, make sure that the engine oil level is correct and no oil leakage exists.

Trouble	Possible cause	Corrective action
Warning light remains ON.	a. Oil pressure switch failure	
	❍ Cracked diaphragm or oil leakage within switch	Replace.
	❍ Broken spring or seized contacts	Replace.
	b. Low oil pressure	
	❍ Clogging of oil filter	Replace.
	❍ Malfunction of oil by-pass valve in oil filter	Replace.
	❍ Malfunction of oil relief valve in oil pump	Clean or replace.
	❍ Clogged oil passage	Clean.
	❍ Excessive tip clearance and side clearance of oil pump rotor	Replace.
	❍ Clogged oil strainer or broken pipe	Clean or replace.
	c. No oil pressure	
	❍ Insufficient engine oil (degradation, etc.)	Replace.
	❍ Broken pipe of oil strainer	Replace.
	❍ Stuck oil pump rotor	Replace.
Warning light does not illuminate.	a. Defective combination meter	Replace.
	b. Poor contact of switch contact points	Replace.
	c. Disconnection of wiring	Repair.
Warning light flickers momentarily.	a. Defective terminal contact	Repair.
	b. Defective wiring harness	Repair.
	c. Oil pressure switch failure	
	❍ Cracked diaphragm or oil leakage within switch	Replace.
	❍ Broken spring or seized contacts	Replace.
	d. Low oil pressure	
	❍ Clogging of oil filter	Replace.
	❍ Malfunction of oil by-pass valve in oil filter	Replace.
	❍ Malfunction of oil relief valve in oil pump	Clean or replace.
	❍ Clogged oil passage	Clean.
	❍ Excessive tip clearance and side clearance of oil pump rotor	Replace.
	❍ Clogged oil strainer or broken pipe	Clean or replace.

SPEED CONTROL SYSTEMS

SP(H4SO)

Page

1. General Description 2
2. Accelerator Pedal 4

1. General Description

A: SPECIFICATION

Accelerator pedal	Stroke	At pedal pad	54 — 59 mm (2.13 — 2.32 in)

B: COMPONENT

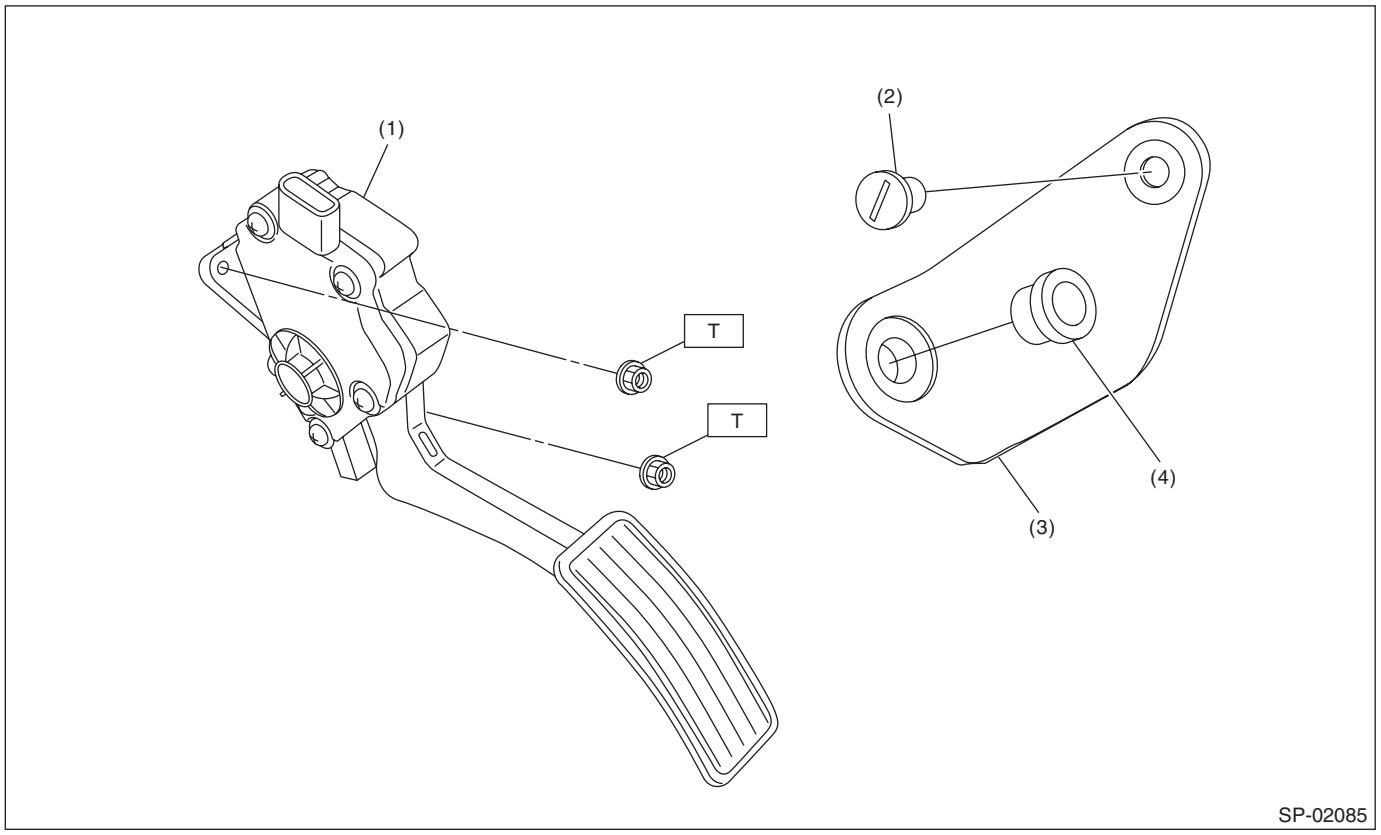

(1) Accelerator pedal ASSY
(2) Clip
(3) Accelerator plate
(4) Accelerator stopper

Tightening torque:N·m (kgf-m, ft-lb)
T: 18 (1.8, 13.3)

C: CAUTION

• Wear appropriate work clothing, including a cap, protective goggles and protective shoes when performing any work.
• Remove contamination including dirt and corrosion before removal or installation.
• Keep the parts in order and protect them from dust and dirt.
• Before removal or installation, be sure to clarify the failure. Avoid unnecessary removal, installation, disassembly and replacement.
• Vehicle components are extremely hot after driving. Be wary of receiving burns from heated parts.
• Be sure to tighten fasteners including bolts and nuts to the specified torque.
• Place shop jacks or rigid racks at the specified points.
• Before disconnecting connectors of sensors or units, be sure to disconnect the ground cable from the battery.

D: PREPARATION TOOL

1. SPECIAL TOOL

ILLUSTRATION	TOOL NUMBER	DESCRIPTION	REMARKS
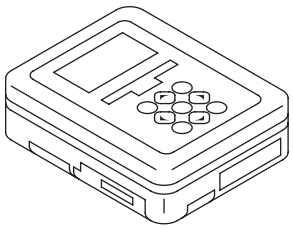 ST1B022XU0	1B022XU0	SUBARU SELECT MONITOR III KIT	Used for inspecting the accelerator pedal.

2. GENERAL TOOL

TOOL NAME	REMARKS
Circuit tester	Used for measuring voltage.

2. Accelerator Pedal

A: REMOVAL

1) Disconnect the ground cable from battery.

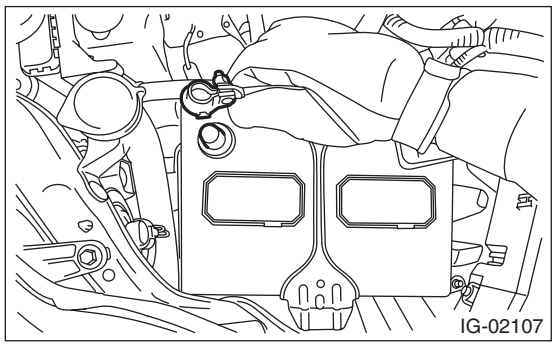

2) Disconnect the connector (A).
3) Remove the nut (B) securing accelerator pedal assembly and remove the accelerator pedal assembly.

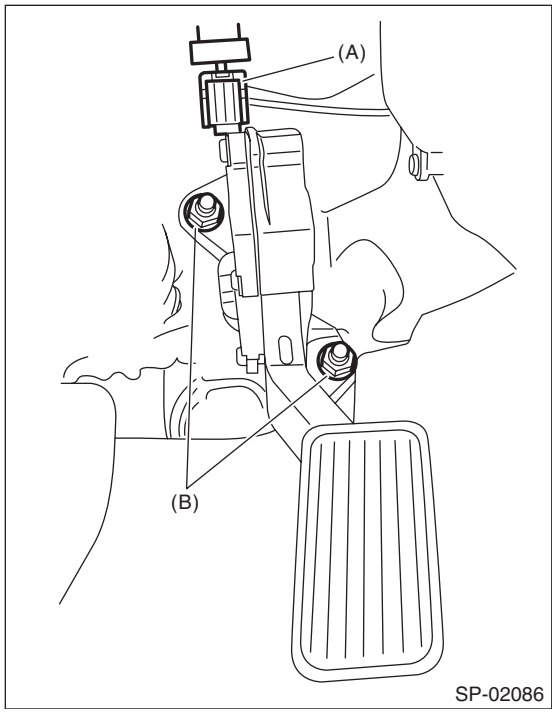

B: INSTALLATION

Install in the reverse order of removal.

Tightening torque:
18 N·m (1.8 kgf-m, 13.3 ft-lb)

C: DISASSEMBLY

NOTE:
The accelerator pedal cannot be disassembled.

D: INSPECTION

1. CHECK ACCELERATOR PEDAL SENSOR AREA (METHOD WITH CIRCUIT TESTER)

1) Remove the glove box lid assembly, glove box lower cover, instrument panel side cover RH and glove box back panel. <Ref. to EI-66, REMOVAL, Glove Box.>
2) Turn the ignition switch to ON. (engine OFF)
3) Measure the voltage between ECM connector terminals.

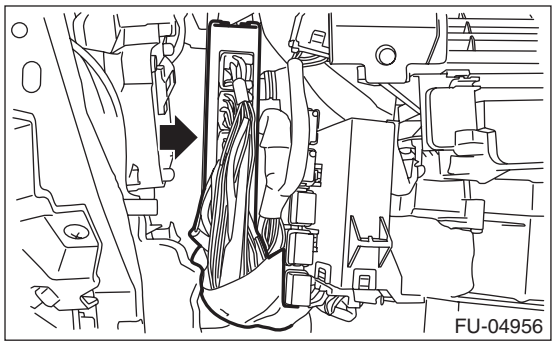

Main sensor side

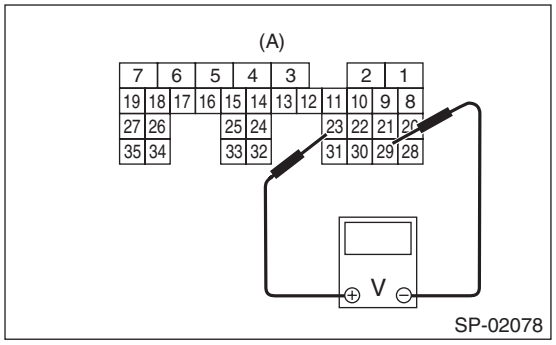

Sub sensor side

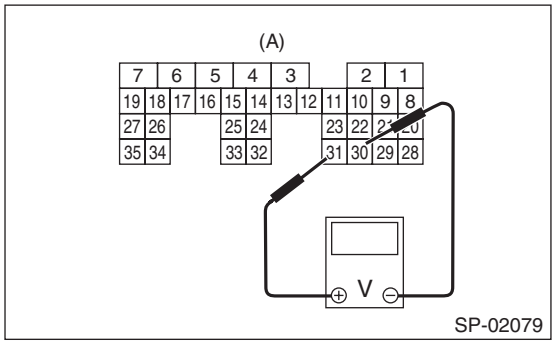

(A) To ECM connector

Accelerator pedal sensor	Accelerator pedal	Terminal No.	Standard
Main	Not depressed (Full closed)	23 (+) and 29 (–)	1 V
	Depressed (Full opened)		3.5 V
Sub	Not depressed (Full closed)	31 (+) and 30 (–)	1 V
	Depressed (Full opened)		3.5 V

4) After inspection, install the related parts in the reverse order of removal.

2. CHECK ACCELERATOR PEDAL SENSOR AREA (METHOD WITH SUBARU SELECT MONITOR)

1) Turn the ignition switch to ON. (engine OFF)
2) Read the accelerator pedal opening angle signal and voltage of accelerator pedal sensor using Subaru Select Monitor. <Ref. to EN(H4SO)(diag)-33, READ CURRENT DATA FOR ENGINE (NORMAL MODE), OPERATION, Subaru Select Monitor.> <Ref. to EN(H4DOTC)(diag)-34, READ CURRENT DATA FOR ENGINE (NORMAL MODE), OPERATION, Subaru Select Monitor.> <Ref. to EN(H6DO)(diag)-35, READ CURRENT DATA FOR ENGINE (NORMAL MODE), OPERATION, Subaru Select Monitor.>

Accelerator pedal sensor	Accelerator pedal opening angle signal	Standard
Main	0.0%	1 V
	100.0%	3.5 V
Sub	0.0%	1 V
	100.0%	3.5 V

3. OTHER INSPECTIONS

1) Check that the accelerator pedal does not have deformation, cracks or damage.
2) Check for smooth operation when the accelerator pedal is depressed.
3) Check if the accelerator pedal returns to its original position smoothly when the pedal is released.

IGNITION

IG(H4SO)

Page

1. General Description 2
2. Spark Plug 3
3. Ignition Coil 5

1. General Description

A: SPECIFICATION

Item				Specifications
Ignition coil	Type			FK 0376
	Ignition system			Independent ignition coil
	Manufacturer			Diamond Electric
Spark plug	Manufacturer and type			NGK: SIFR6A11
	Thread size (diameter, pitch, length)		mm	14, 1.25, 19
	Spark plug gap	mm (in)	Standard	1.0 — 1.1 (0.039 — 0.043)
	Electrode			Iridium

B: COMPONENT

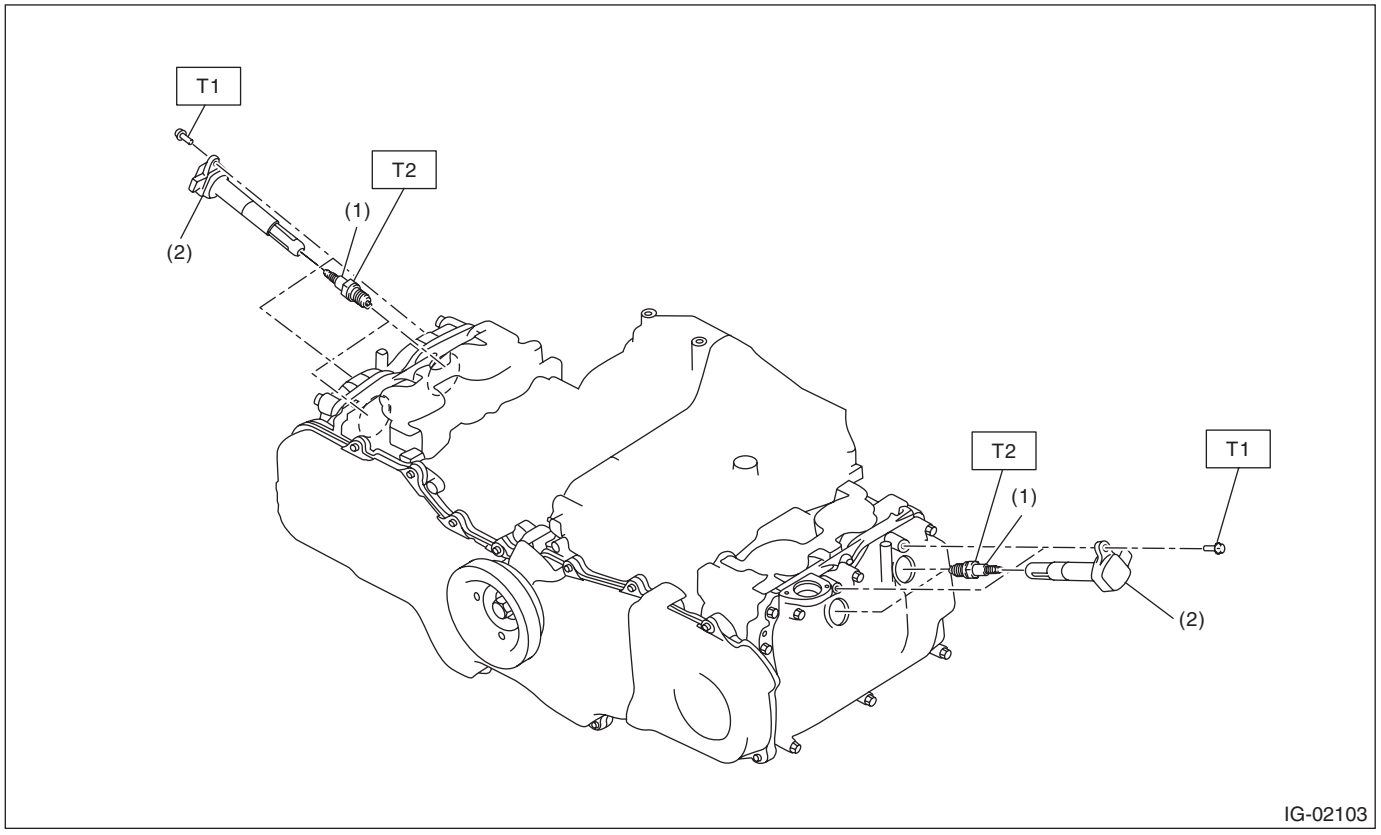

(1) Spark plug
(2) Ignition coil

Tightening torque:N·m (kgf-m, ft-lb)
T1: 9 (0.9, 6.6)
T2: 21 (2.1, 15.5)

C: CAUTION

- Wear appropriate work clothing, including a cap, protective goggles and protective shoes when performing any work.
- Remove contamination including dirt and corrosion before removal, installation or disassembly.
- Keep the disassembled parts in order and protect them from dust and dirt.
- Before removal, installation or disassembly, be sure to clarify the failure. Avoid unnecessary removal, installation, disassembly and replacement.
- Vehicle components are extremely hot after driving. Be wary of receiving burns from heated parts.
- Be sure to tighten fasteners including bolts and nuts to the specified torque.
- Place shop jacks or rigid racks at the specified points.
- Before disconnecting connectors of sensors or units, be sure to disconnect the ground cable from the battery.

2. Spark Plug

A: REMOVAL

Spark plug:
Refer to "SPECIFICATION" for the spark plug. <Ref. to IG(H4SO)-2, SPECIFICATION, General Description.>

1. RH SIDE

1) Disconnect the ground cable from battery.

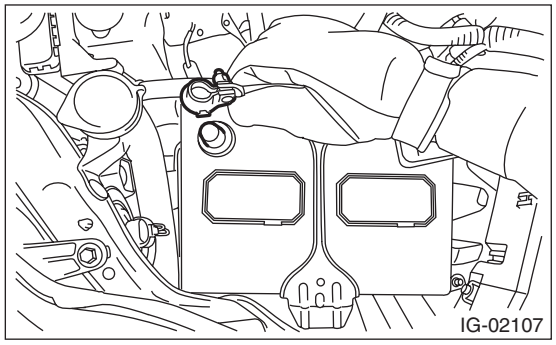

2) Remove the air cleaner case. <Ref. to IN(H4SO)-6, REMOVAL, Air Cleaner Case.>
3) Disconnect the connector (A) from the ignition coil.
4) Remove the bolt (B), and remove the ignition coil.

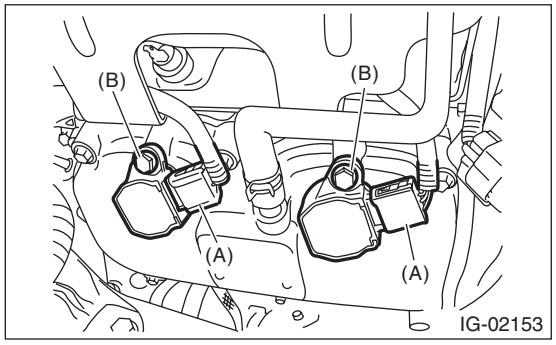

5) Remove the spark plug with a spark plug socket.

2. LH SIDE

1) Disconnect the ground cable from battery.

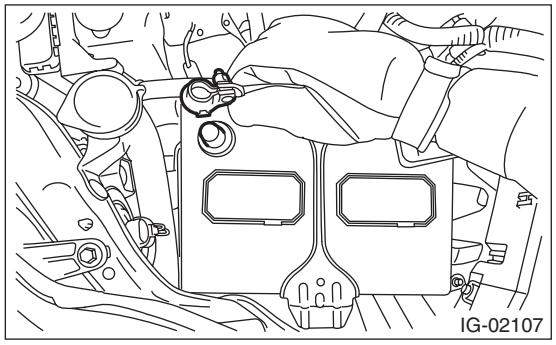

2) Disconnect the connector (A) from the ignition coil.
3) Remove the bolt (B), and remove the ignition coil.

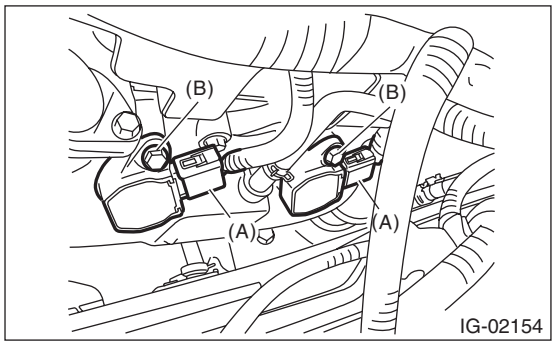

4) Remove the spark plug with a spark plug socket.

B: INSTALLATION

1. RH SIDE

Install in the reverse order of removal.

Tightening torque (Spark plug):
21 N·m (2.1 kgf-m, 15.5 ft-lb)

Tightening torque (Ignition coil):
9 N·m (0.9 kgf-m, 6.6 ft-lb)

2. LH SIDE

Install in the reverse order of removal.

Tightening torque (Spark plug):
21 N·m (2.1 kgf-m, 15.5 ft-lb)

Tightening torque (Ignition coil):
9 N·m (0.9 kgf-m, 6.6 ft-lb)

C: INSPECTION

1) Check the spark plug for abnormalities. If defective, replace the spark plug.

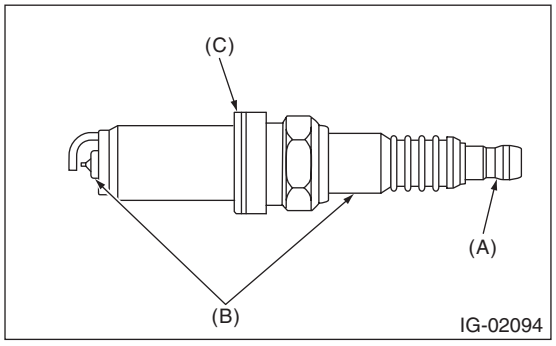

(A) Terminal damage
(B) Crack or damage in insulator
(C) Damaged gasket

2) Check the spark plug electrode and condition of the insulator. If abnormal, check and repair the cause and replace the spark plug.

(1) Normal:
Brown to grayish-tan deposits and slight electrode wear indicate correct spark plug heat range.

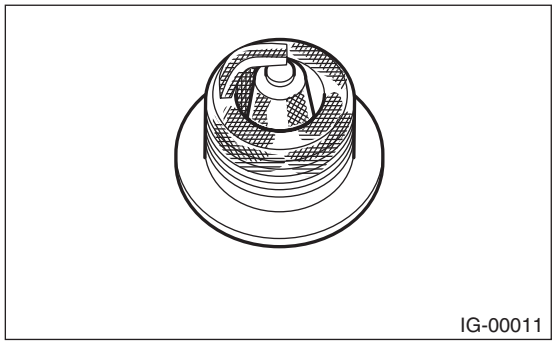
IG-00011

(2) Carbon fouled:
Dry fluffy carbon deposits on insulator and electrode are mostly caused by slow speed driving in the city, weak ignition, too rich fuel mixture, etc.

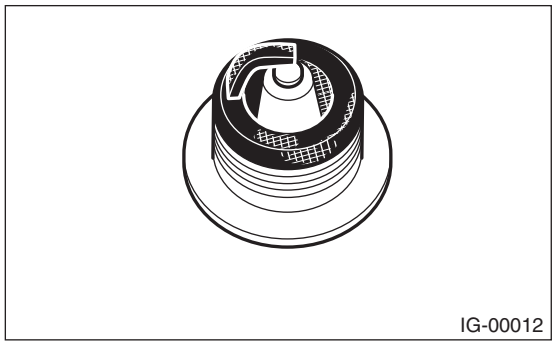
IG-00012

(3) Oil fouled:
Wet black deposits show oil entrance into combustion chamber through worn piston rings or increased clearance between valve guides and valve stems.

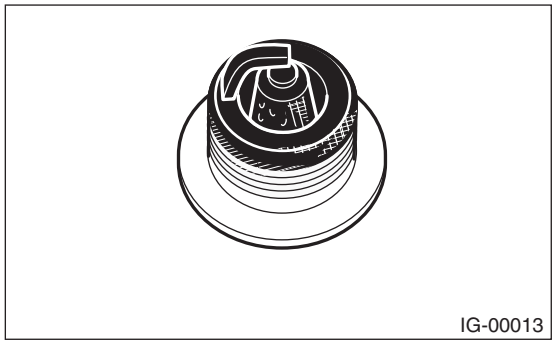
IG-00013

(4) Overheating:
White or light gray insulator with black or brown spots and bluish burnt electrodes indicate engine overheating, wrong selection of fuel, or loose spark plugs.

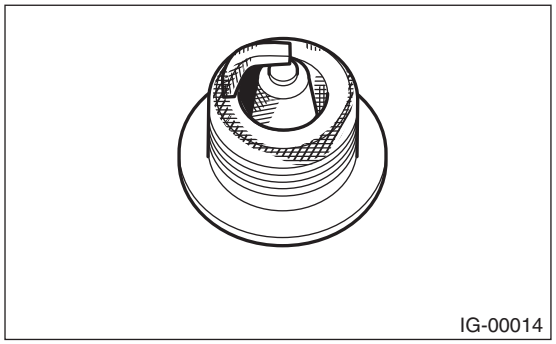
IG-00014

3) Using a nylon brush, etc., clean and remove the carbon or oxide deposits from the spark plug. If deposits are too stubborn, replace the spark plugs. After cleaning the spark plugs, check the spark plug gap “L” using a gap gauge. If it is not within the standard, replace the spark plug.

NOTE:
- Never use a plug cleaner.
- Do not use a metal brush as it may damage the electrode area.

Spark plug gap L:
Standard
1.0 — 1.1 mm (0.039 — 0.043 in)

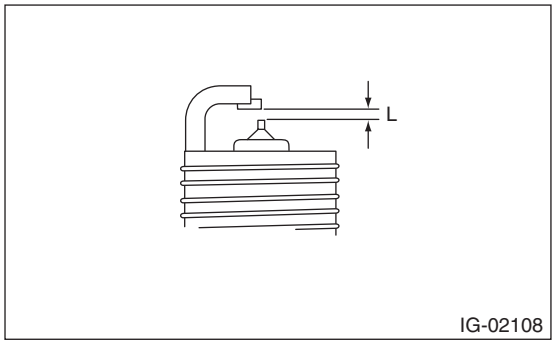

IG-02108

3. Ignition Coil

A: REMOVAL

Direct ignition type is adopted. Refer to “Spark Plug” for removal procedure. <Ref. to IG(H4SO)-3, REMOVAL, Spark Plug.>

B: INSTALLATION

Install in the reverse order of removal.

Tightening torque:
9 N·m (0.9 kgf-m, 6.6 ft-lb)

C: INSPECTION

For inspection procedure, refer to “Diagnostics for Engine Starting Failure”. <Ref. to EN(H4SO)(diag)-70, IGNITION CONTROL SYSTEM, Diagnostics for Engine Starting Failure.>

STARTING/CHARGING SYSTEMS

SC(H4SO)

Page

1. General Description 2
2. Starter 9
3. Generator 18
4. Battery 28

1. General Description

A: SPECIFICATION

1. 2.5 L MODEL

Item			Specifications	
Vehicle model			CVT	MT
Starter	Type		Reduction type	
	Model		428000-4790	428000-4780
	Manufacturer		DENSO	
	Voltage and output		12 V — 1.6 kW	
	Direction of rotation		Counterclockwise (when observed from pinion)	
	Number of pinion teeth		9	
	No-load characteristics	Voltage	11 V	
		Current	90 A or less	
		Rotating speed	1,900 rpm or more	
	Load characteristics	Voltage	8 V	
		Current	370 A	
		Torque	11.1 N·m (1.1 kgf-m, 8.2 ft-lb) or more	
		Rotating speed	910 rpm or more	
	Lock characteristics	Voltage	3 V	
		Current	750 A or less	
		Torque	15.5 N·m (1.6 kgf-m, 11.4 ft-lb) or more	
Generator	Type		Rotating-field three-phase type, voltage regulator built-in type, with load response control system	
	Model		A3TG6191	
	Manufacturer		Mitsubishi Electric	
	Voltage and output		12 V — 110 A	
	Polarity on ground side		Negative	
	Direction of rotation		Clockwise (when observed from pulley side)	
	Stator connection		3-phase △ type	
	Output current		1,500 rpm — 50 A or more 2,500 rpm — 91 A or more 5,000 rpm — 105 A or more	
	Regulated voltage		14.1 — 14.8 V [20°C (68°F)]	
	Rotor slip ring outer diameter	Standard	22.7 mm (0.894 in)	
		Limit	22.1 mm (0.870 in)	
	Brush length	Standard	18.5 mm (0.728 in)	
		Limit	5.0 mm (0.197 in)	
Battery	Type and capacity		12 V — 52 AH (75D 23R)	

2. 3.6 L MODEL

Item			Specifications
Vehicle model			AT
Starter	Type		Reduction type
	Model		428000-5250
	Manufacturer		DENSO
	Voltage and output		12 V — 1.6 kW
	Direction of rotation		Counterclockwise (when observed from pinion)
	Number of pinion teeth		9
	No-load characteristics	Voltage	11 V
		Current	90 A or less
		Rotating speed	1,550 rpm or more
	Load characteristics	Voltage	8 V
		Current	370 A
		Torque	12.8 N·m (1.3 kgf-m, 9.4 ft-lb) or more
		Rotating speed	800 rpm or more
	Lock characteristics	Voltage	3 V
		Current	750 A or less
		Torque	19.0 N·m (1.9 kgf-m, 14.0 ft-lb) or more
Generator	Type		Rotating-field three-phase type, voltage regulator built-in type, with load response control system
	Model		A3TJ3591
	Manufacturer		Mitsubishi Electric
	Voltage and output		12 V — 130 A
	Polarity on ground side		Negative
	Direction of rotation		Clockwise (when observed from pulley side)
	Stator connection		3-phase △ type
	Output current		1,500 rpm — 55 A or more 2,500 rpm — 108 A or more 5,000 rpm — 127 A or more
	Regulated voltage		14.1 — 14.8 V [20°C (68°F)]
	Rotor slip ring outer diameter	Standard	22.7 mm (0.894 in)
		Limit	22.1 mm (0.870 in)
	Brush length	Standard	22.5 mm (0.886 in)
		Limit	5.0 mm (0.197 in)
Battery	Type and capacity		12 V — 52 AH (75D 23R)

B: COMPONENT

1. STARTER

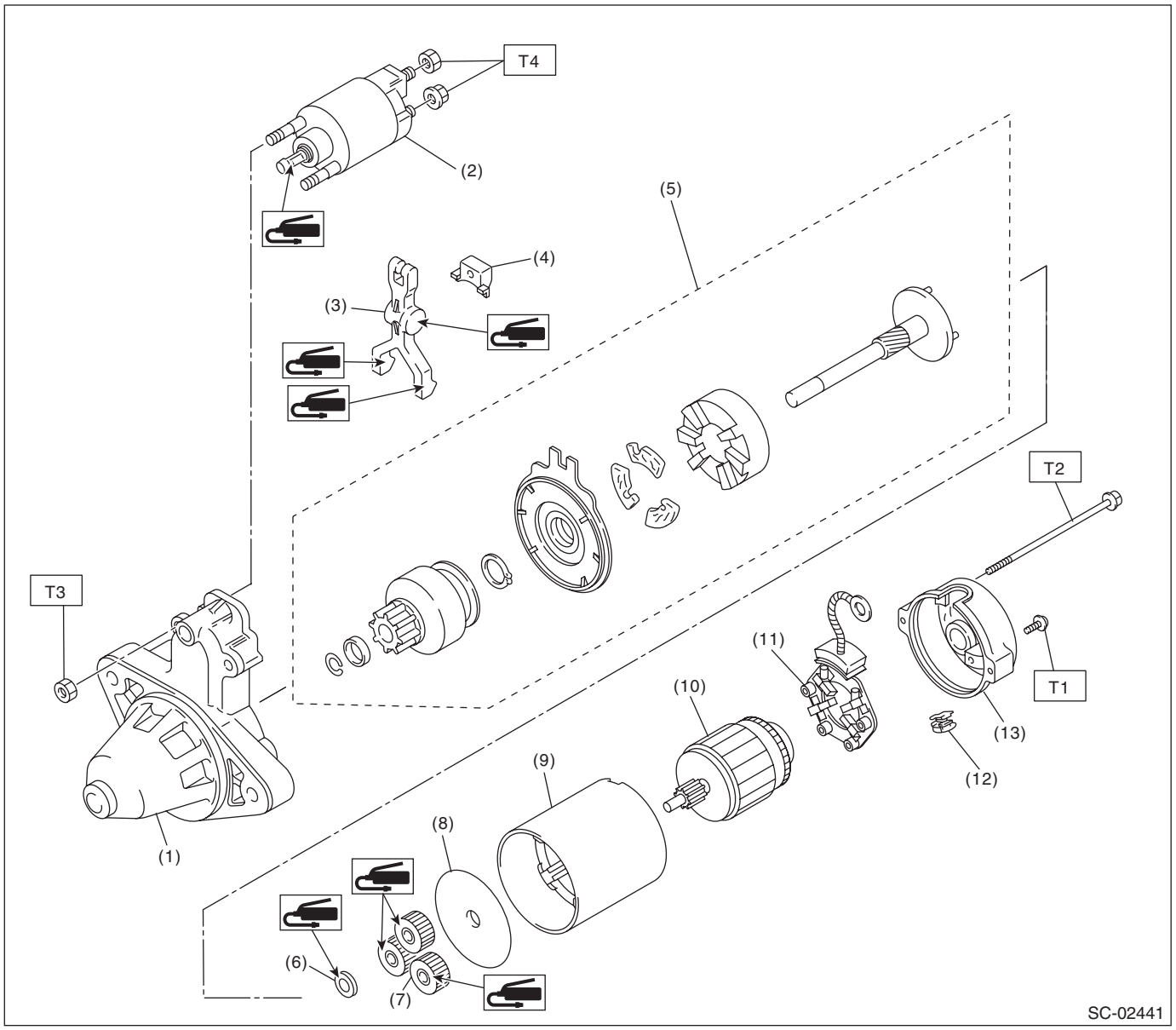

(1) Starter housing
(2) Magnet switch ASSY
(3) Shift lever
(4) Starter seal
(5) Overrunning clutch ASSY
(6) Washer
(7) Planetary gear
(8) Starter plate
(9) Yoke
(10) Armature
(11) Brush holder ASSY
(12) Drain duct
(13) Starter cover

Tightening torque:N·m (kgf-m, ft-lb)
T1: 1.4 (0.1, 1.0)
T2: 6 (0.6, 4.4)
T3: 7.5 (0.8, 5.5)
T4: 10 (1.0, 7.4)

2. GENERATOR

- 2.5 L model

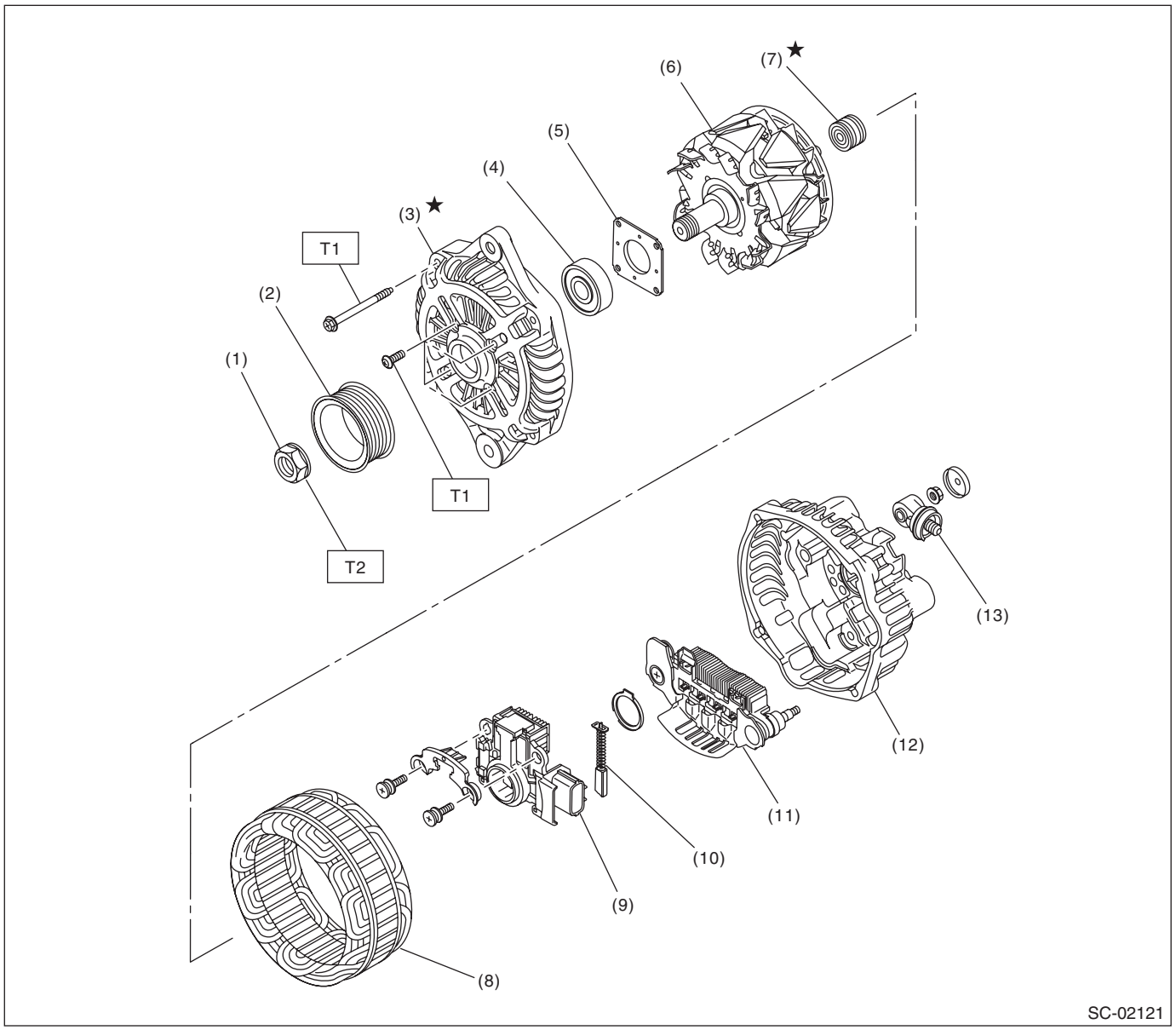

(1) Pulley nut
(2) Pulley
(3) Front cover
(4) Ball bearing
(5) Bearing retainer
(6) Rotor
(7) Bearing
(8) Stator coil
(9) IC regulator
(10) Brush
(11) Rectifier
(12) Rear cover
(13) Terminal B

Tightening torque:N·m (kgf-m, ft-lb)
T1: 4.7 (0.5, 3.5)
T2: 108 (11.0, 79.8)

- 3.6 L model

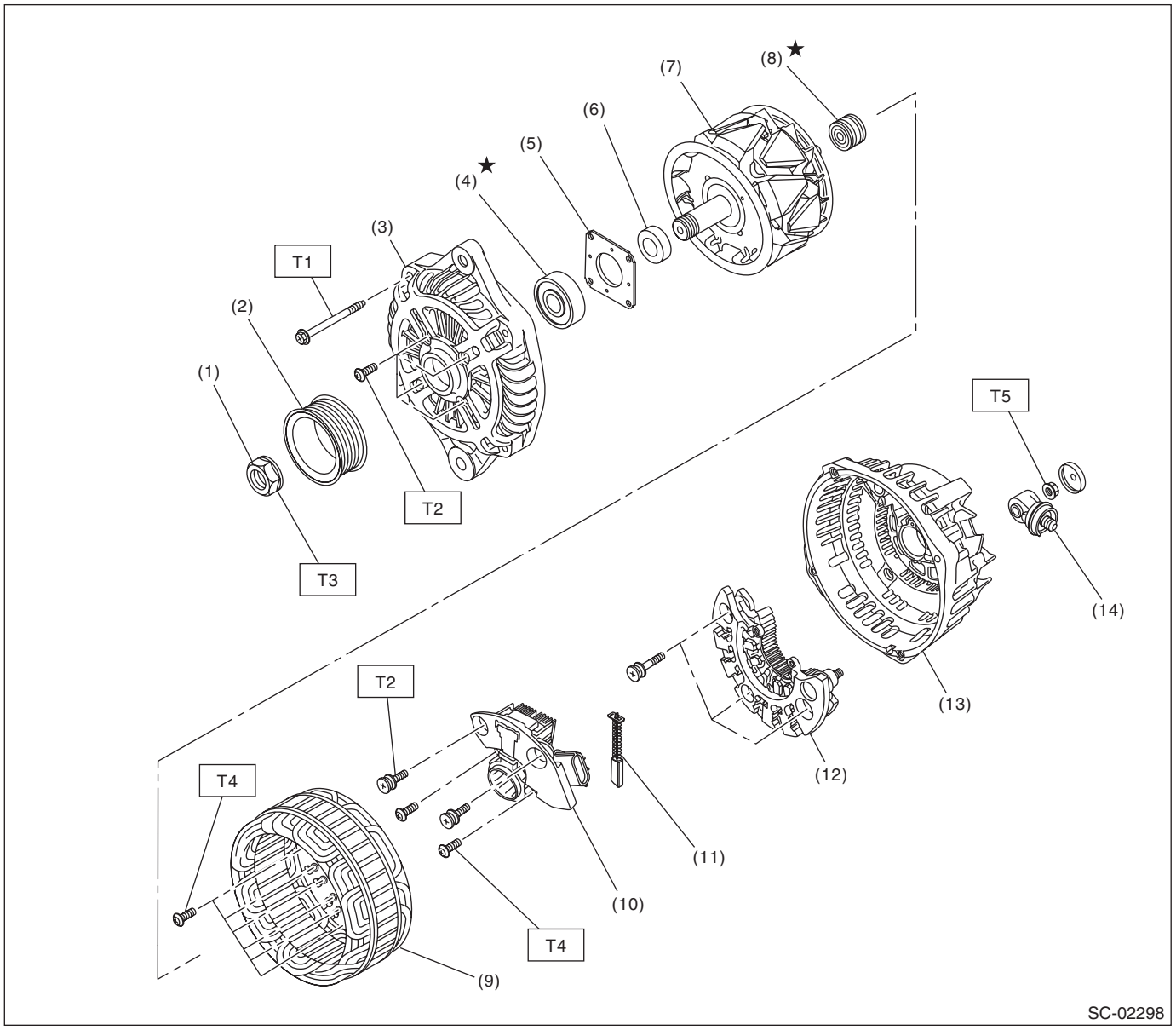

(1)	Pulley nut	(8)	Bearing
(2)	Pulley	(9)	Stator coil
(3)	Front cover	(10)	IC regulator
(4)	Ball bearing	(11)	Brush
(5)	Bearing retainer	(12)	Rectifier
(6)	Spacer	(13)	Rear cover
(7)	Rotor	(14)	Terminal B

Tightening torque:N·m (kgf-m, ft-lb)
T1: 4.4 (0.4, 3.2)
T2: 3.9 (0.4, 2.9)
T3: 117.5 (12.0, 86.7)
T4: 2 (0.2, 1.5)
T5: 8.9 (0.9, 6.6)

3. GENERATOR BRACKET

- 2.5 L model

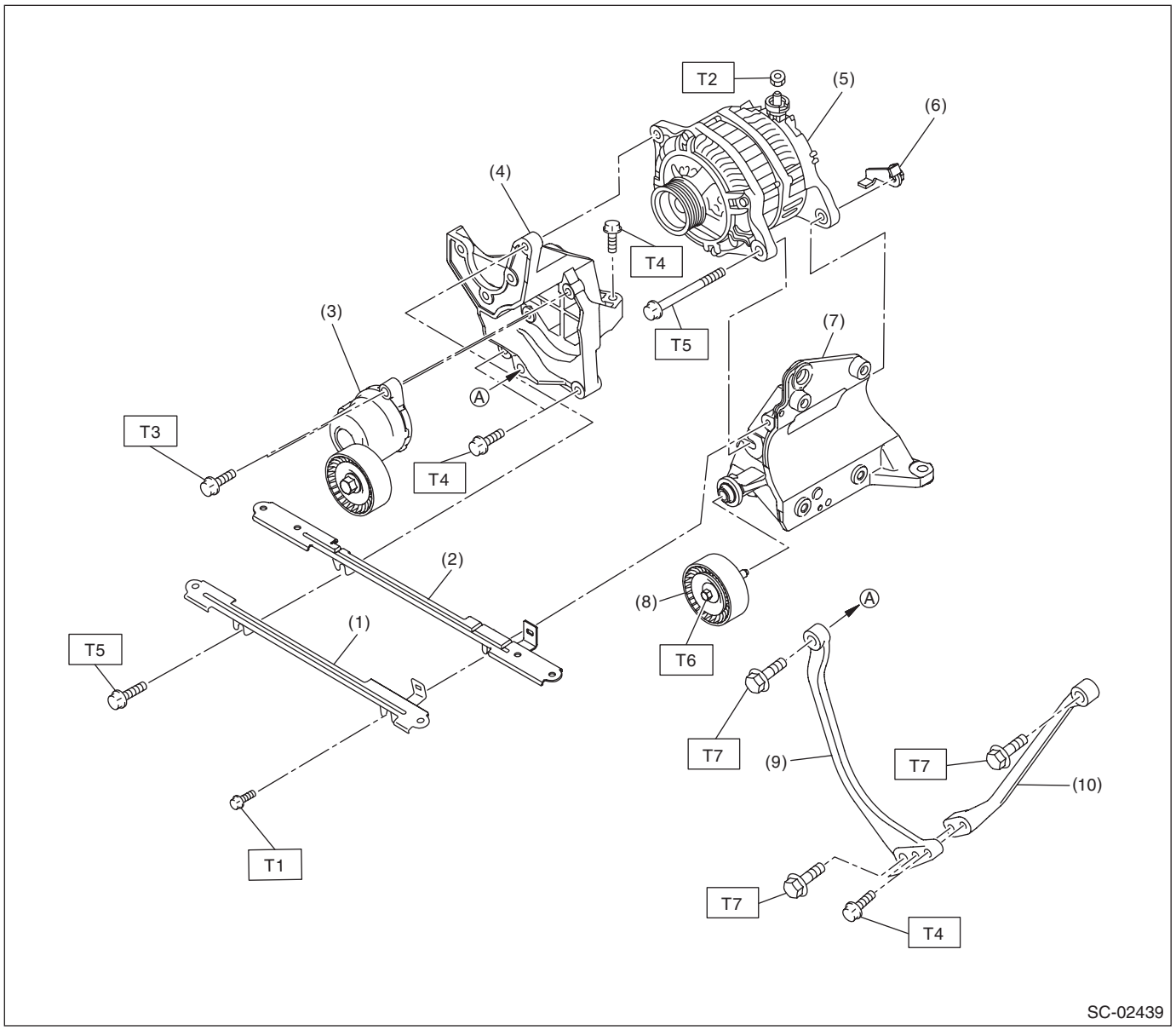

(1)	V-belt cover bracket	(6)	Generator plate
(2)	Collector cover bracket	(7)	A/C compressor bracket
(3)	V-belt tensioner ASSY	(8)	Idler pulley
(4)	Power steering pump bracket	(9)	Stopper rod RH
(5)	Generator	(10)	Stopper rod LH

Tightening torque:N·m (kgf-m, ft-lb)

T1: 6.4 (0.7, 4.7)
T2: 16 (1.6, 11.8)
T3: 20 (2.0, 14.8)
T4: 22 (2.2, 16.2)
T5: 25 (2.5, 18.4)
T6: 33 (3.4, 24.3)
T7: 36 (3.7, 26.6)

• 3.6 L model

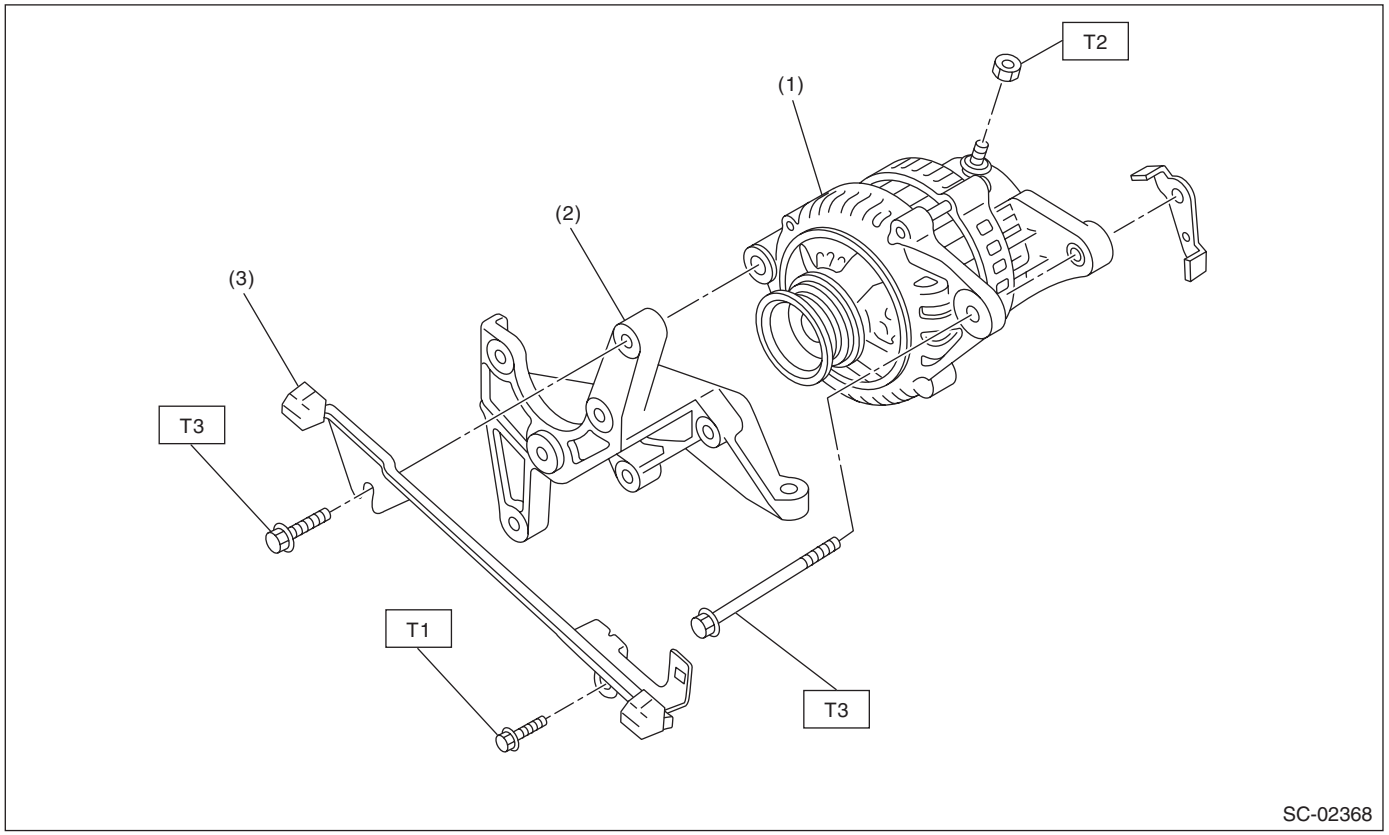

(1) Generator
(2) Power steering pump bracket
(3) Collector cover bracket

Tightening torque:N·m (kgf-m, ft-lb)
T1: 6.4 (0.7, 4.7)
T2: 16 (1.6, 11.8)
T3: 25 (2.5, 18.4)

C: CAUTION

• Wear appropriate work clothing, including a cap, protective goggles and protective shoes when performing any work.
• Remove contamination including dirt and corrosion before removal, installation or disassembly.
• Keep the disassembled parts in order and protect them from dust and dirt.
• Before removal, installation or disassembly, be sure to clarify the failure. Avoid unnecessary removal, installation, disassembly and replacement.
• Vehicle components are extremely hot after driving. Be wary of receiving burns from heated parts.
• Be sure to tighten fasteners including bolts and nuts to the specified torque.
• Place shop jacks or rigid racks at the specified points.
• Before disconnecting connectors of sensors or units, be sure to disconnect the ground cable from the battery.

D: PREPARATION TOOL

1. GENERAL TOOL

TOOL NAME	REMARKS
Circuit tester	Used for measuring resistance, voltage and current.

2. Starter

A: REMOVAL

1) Disconnect the ground cable from battery.

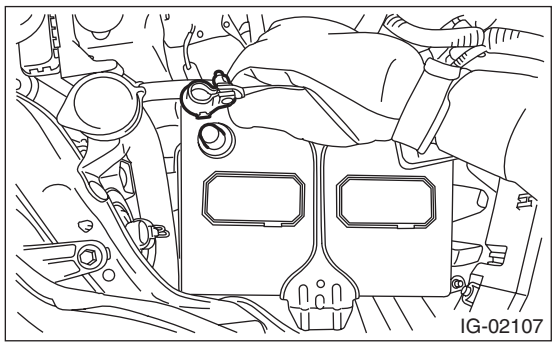

2) Remove the cover (A) and clip (B) from air intake boot assembly. (2.5 L non-turbo model)

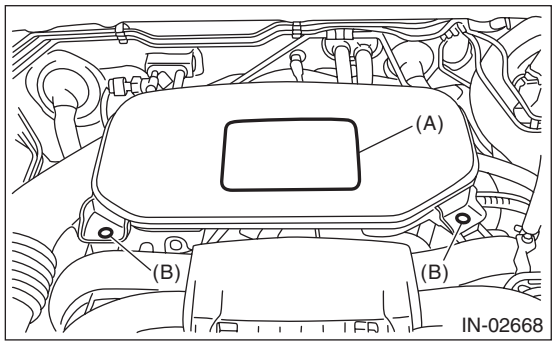

3) Loosen the clamp (A) which connects the air intake boot assembly and air cleaner case. (2.5 L non-turbo model)
4) Loosen the clamp (B) which connects the air intake boot assembly and throttle body. (2.5 L non-turbo model)

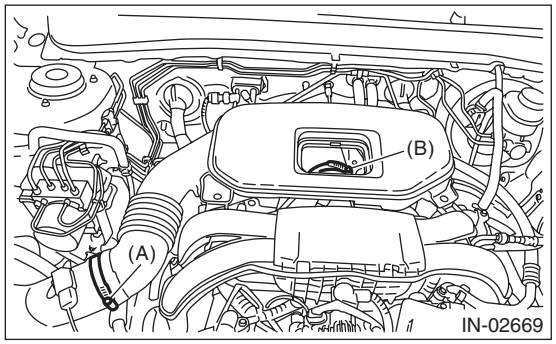

5) Remove the air intake boot from the throttle body, and move it to the left side wheel apron. (2.5 L non-turbo model)

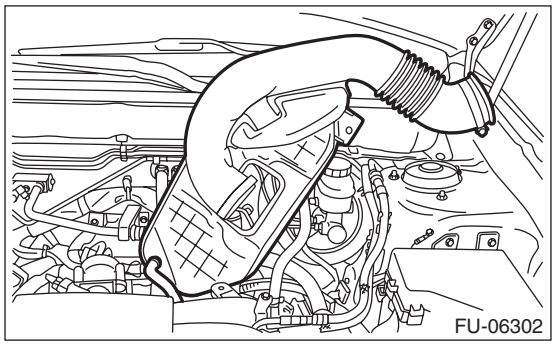

6) Loosen the clamp (A) which connects the air intake boot assembly. (3.6 L model)
7) Loosen the bolt (B) which secures the air intake boot assembly to the collector cover bracket. (3.6 L model)

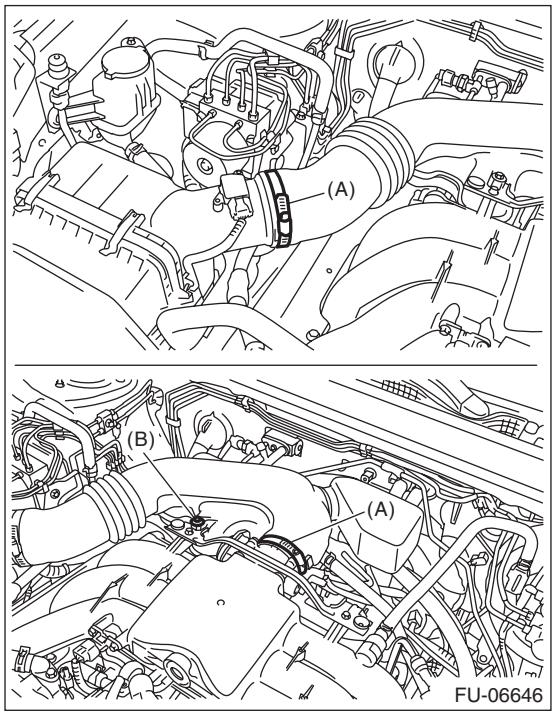

8) Remove the air intake boot assembly, and move it to the left side wheel apron. (3.6 L model)

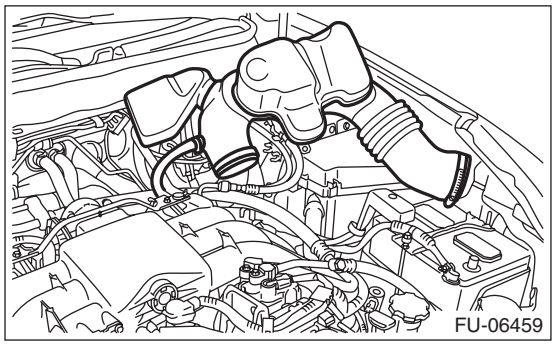

9) Remove the intercooler. (turbo model) <Ref. to IN(H4DOTC)-17, REMOVAL, Intercooler.>

10) Disconnect the connector (B) and terminal (A) from starter.

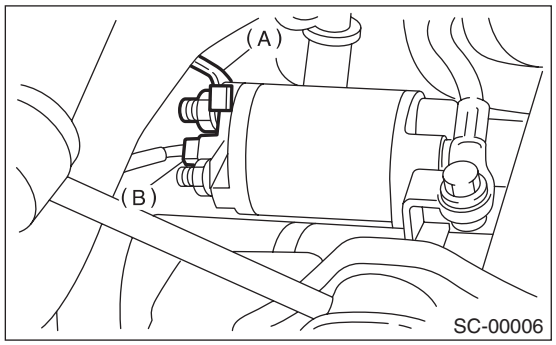

11) Remove the starter from transmission.

NOTE:
For the MT model, a bolt is used in place (A).

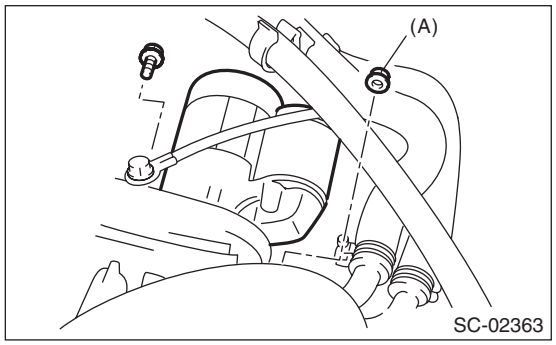

B: INSTALLATION

Install in the reverse order of removal.

NOTE:
For the MT model, a bolt is used in place (A).

Tightening torque:
50 N·m (5.1 kgf-m, 36.9 ft-lb)

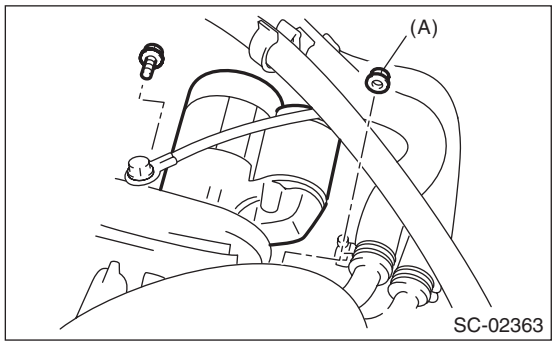

Tightening torque:
10 N·m (1.0 kgf-m, 7.4 ft-lb)

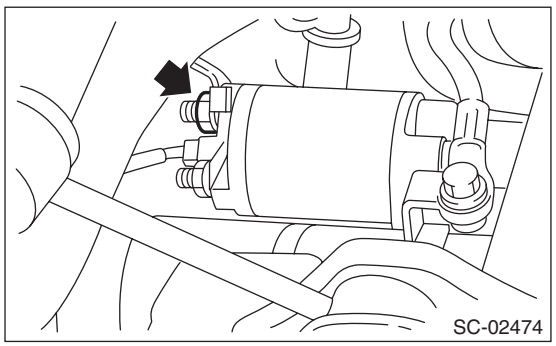

- 2.5 L non-turbo model

NOTE:
Align the clamp hole with the protrusion of the air intake boot assembly.

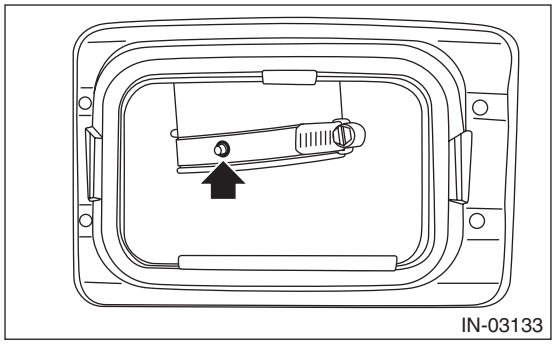

Tightening torque:
Clamp (A), (B)
3 N·m (0.3 kgf-m, 2.2 ft-lb)

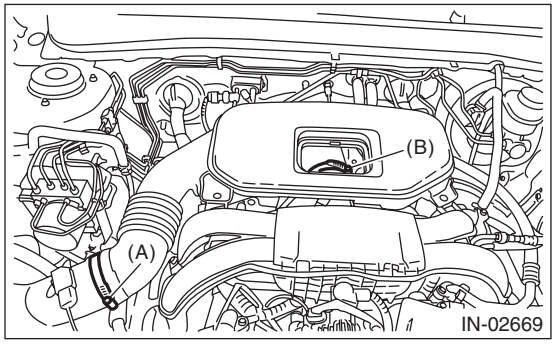

- 3.6 L model

Tightening torque:
Clamp (A)
3 N·m (0.3 kgf-m, 2.2 ft-lb)
Bolt (B)
6.5 N·m (0.7 kgf-m, 4.8 ft-lb)

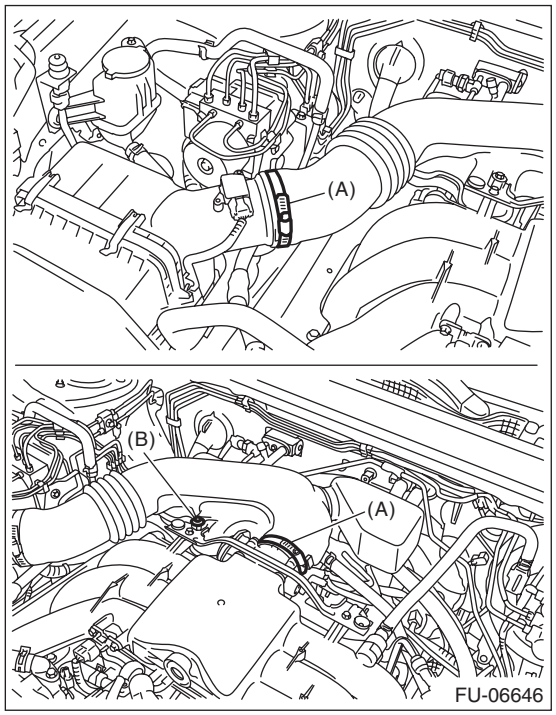

C: DISASSEMBLY

1) Remove the nut which holds terminal M (A) of the magnet switch assembly, then disconnect the harness from the terminal.

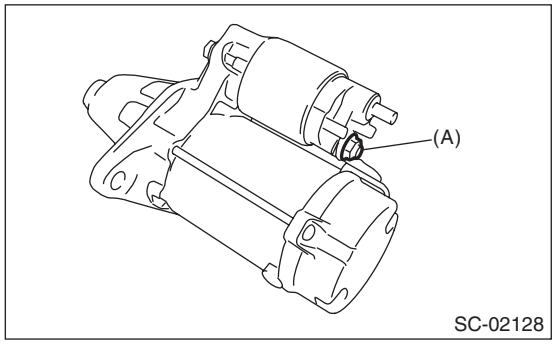

2) Remove the nuts fastening the magnet switch assembly to the starter housing, then remove the magnet switch assembly.

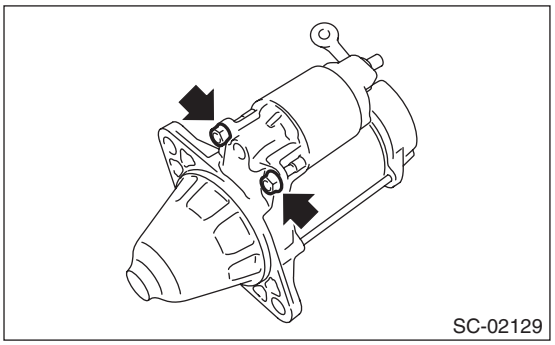

3) Remove the starter seal.

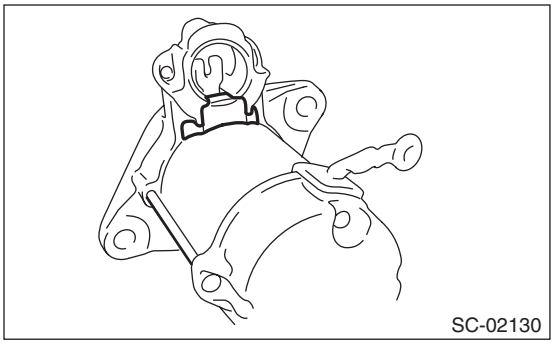

4) Remove the through bolts on both sides, and remove the starter housing.

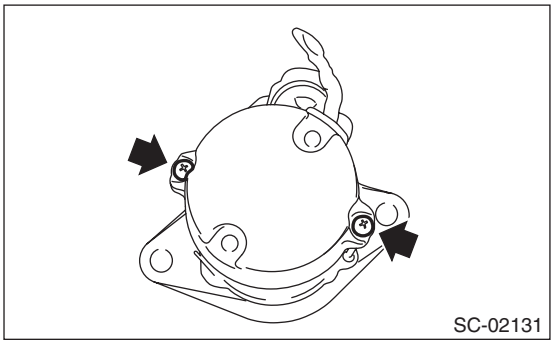

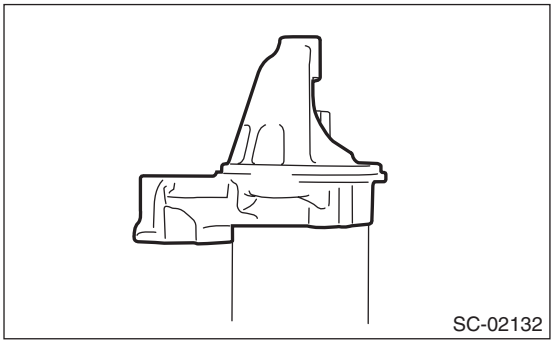

5) Remove the shift lever.

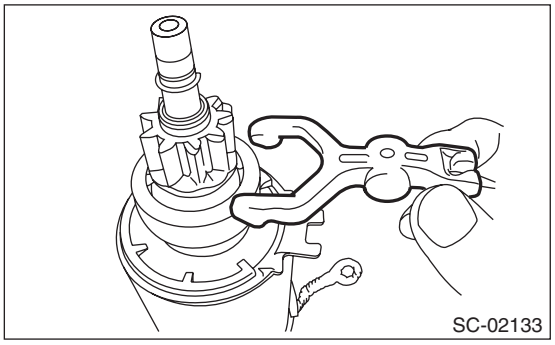

6) Remove the overrunning clutch assembly from the yoke.

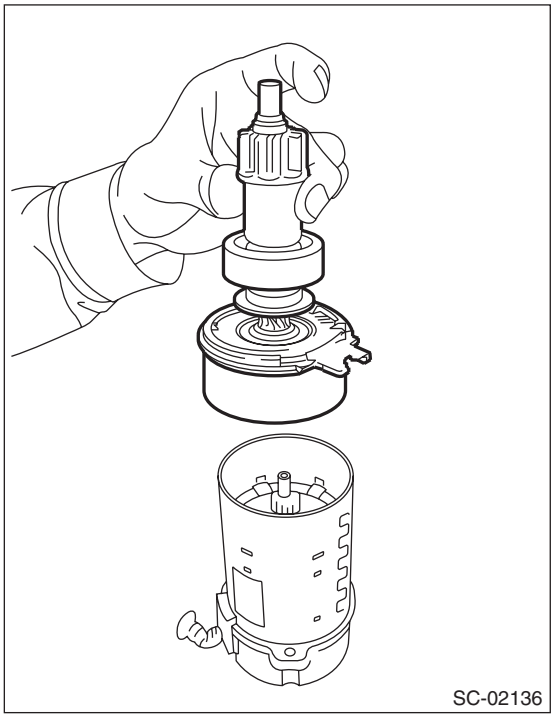

7) Remove the starter plate.

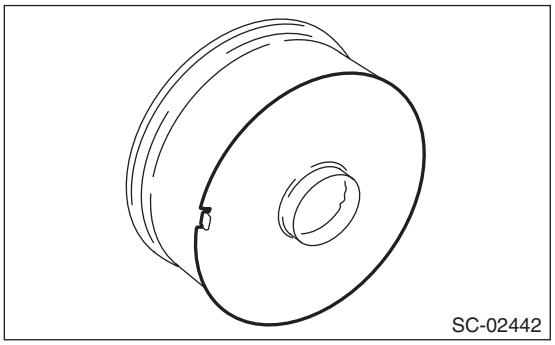

8) Remove the planetary gear (A) and washer (B) from internal gear.

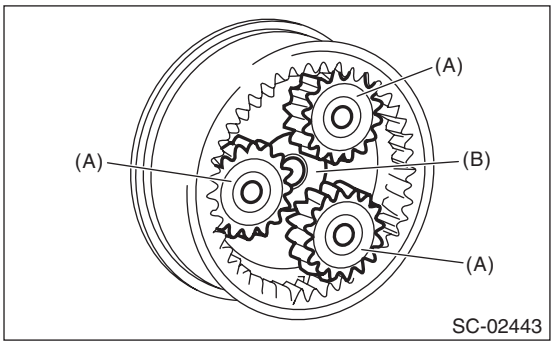

9) Remove the screws, and remove the starter cover from the brush holder assembly.

NOTE:
Separate the starter cover by pressing the brush holder assembly using the screws so that the assembly stays onto the armature side.

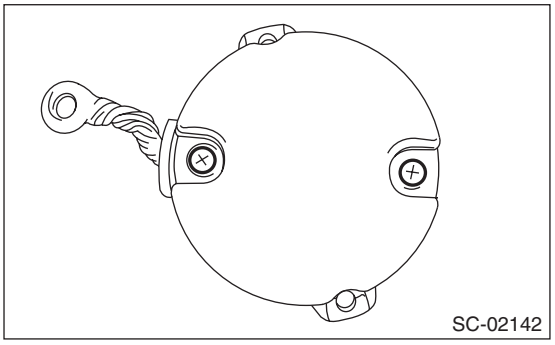

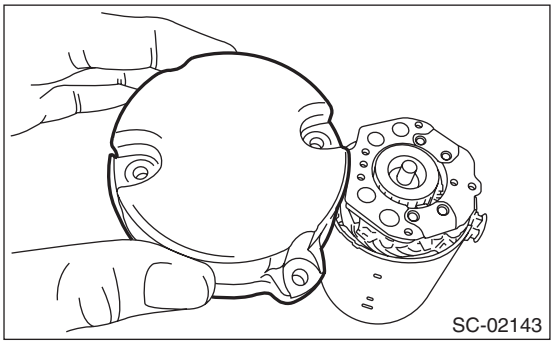

10) Remove the brush holder assembly from the armature.

NOTE:
Spread the brush with your fingers, being careful not to damage the brush.

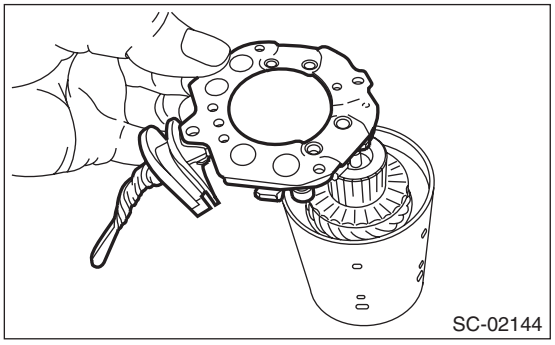
SC-02144

11) Remove the armature from the yoke.

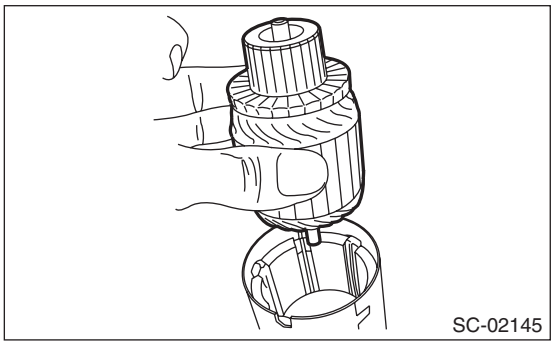
SC-02145

D: ASSEMBLY

1) Install the armature to the yoke.

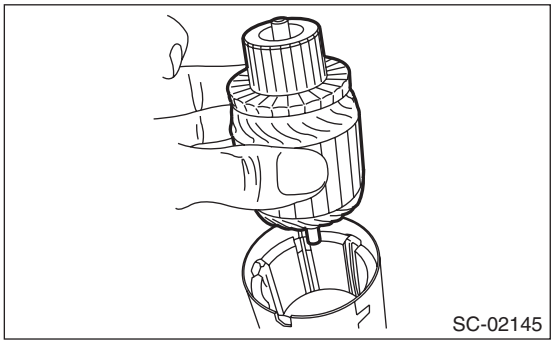
SC-02145

2) Install the brush holder assembly to the armature.

NOTE:
Spread the brush with your fingers, being careful not to damage the brush.

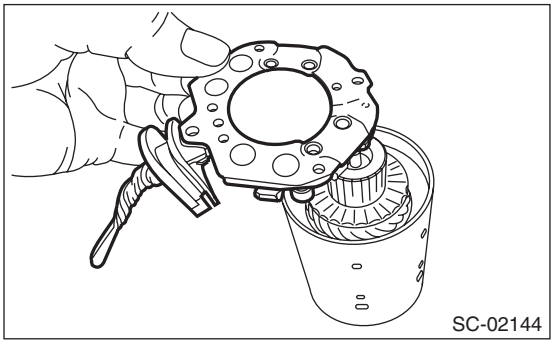
SC-02144

3) Install the starter cover, and secure it to the brush holder assembly with the screws.

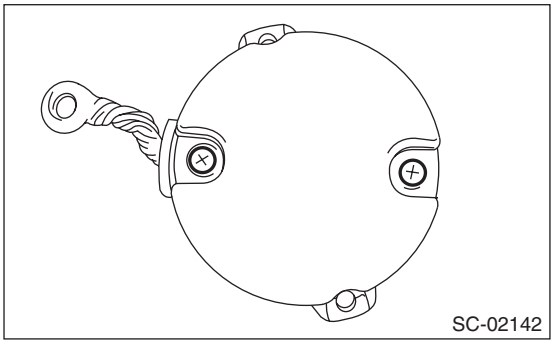
SC-02142

4) Assemble the planetary gear (A) and washer (B) to the internal gear.

(1) Apply grease to the planetary gear installation position.

Grease:
DENSO HL50

(2) Install the planetary gear to the pin.

(3) Apply grease to the planetary gear, internal gear, washer, and upper part of the pin.

NOTE:
- Apply grease so that it contacts each gear.
- Be careful not to allow dirt to get in.

Grease:
DENSO HL50

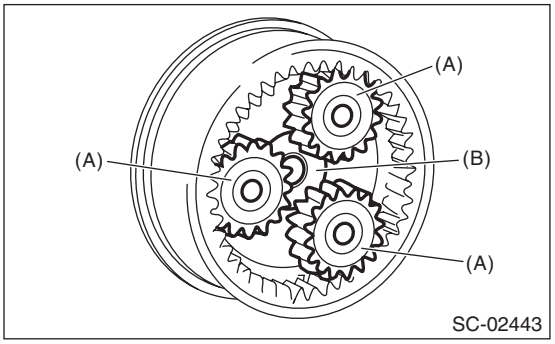

SC-02443

(4) Install the starter plate.

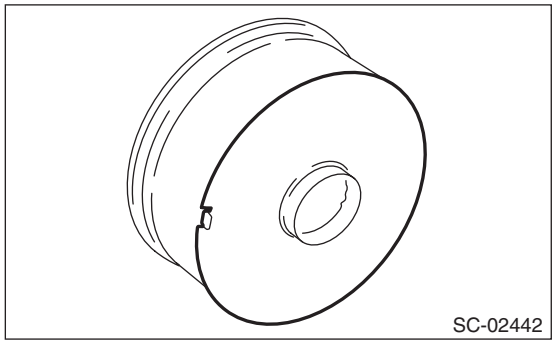
SC-02442

5) Assemble the overrunning clutch assembly to the yoke.

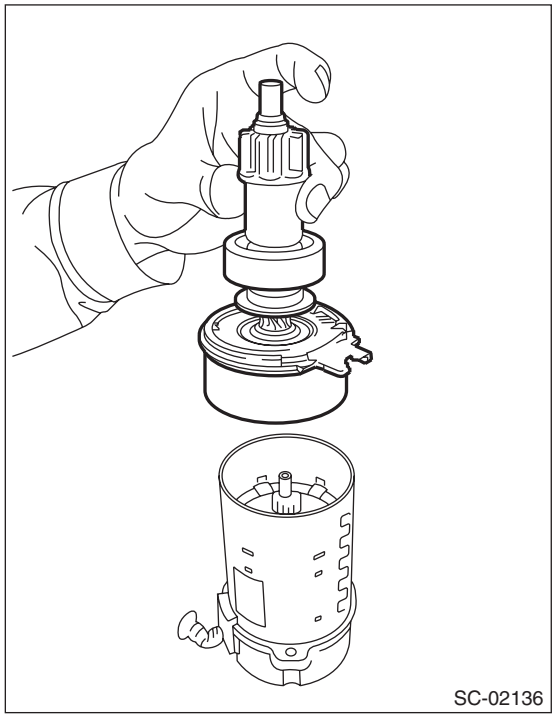
SC-02136

6) Install the shift lever.

NOTE:
Apply grease to the contact portion of the shift lever.

Grease:
DENSO HL50

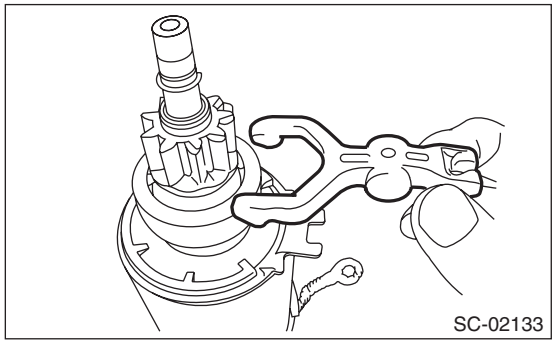
SC-02133

7) Install the starter housing, and tighten through bolts on both sides.

Tightening torque:
6 N·m (0.6 kgf-m, 4.4 ft-lb)

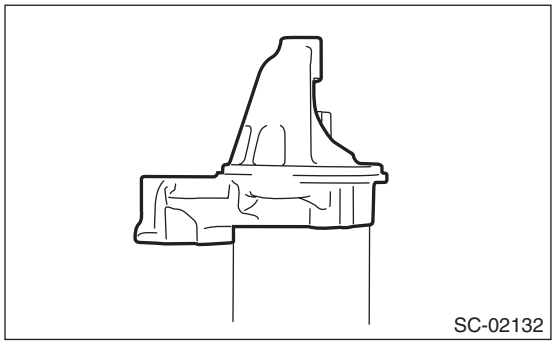
SC-02132

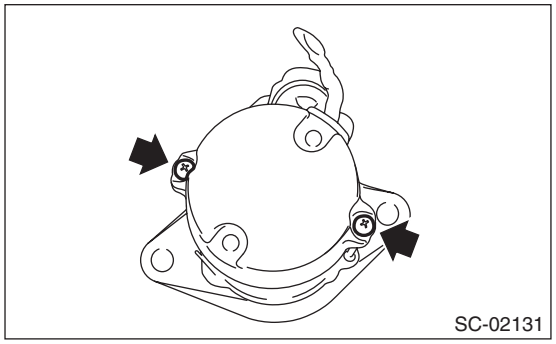
SC-02131

8) Install the starter seal.

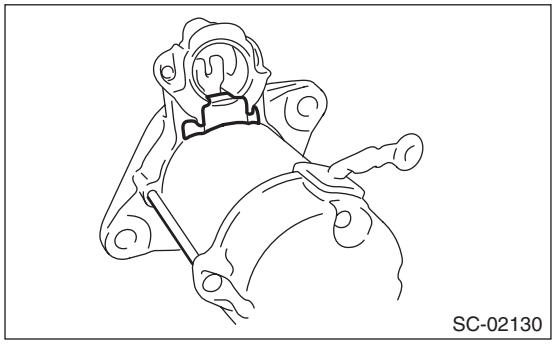
SC-02130

9) Install the magnet switch assembly to the starter housing, and tighten the nuts.

NOTE:
Apply grease to the shift lever installation position.

Grease:
DENSO HL50

Tightening torque:
7.5 N·m (0.8 kgf-m, 5.5 ft-lb)

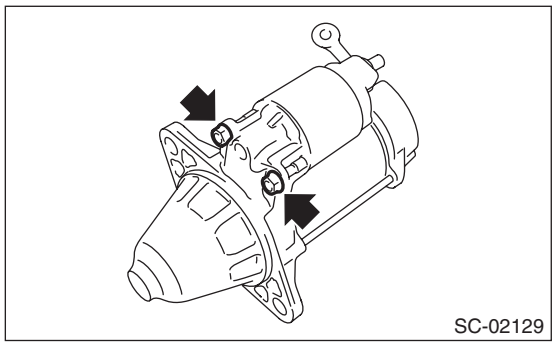
SC-02129

10) Install the harness to the terminal M (A) of the magnet switch assembly, and tighten the nut.

Tightening torque:
10 N·m (1.0 kgf-m, 7.4 ft-lb)

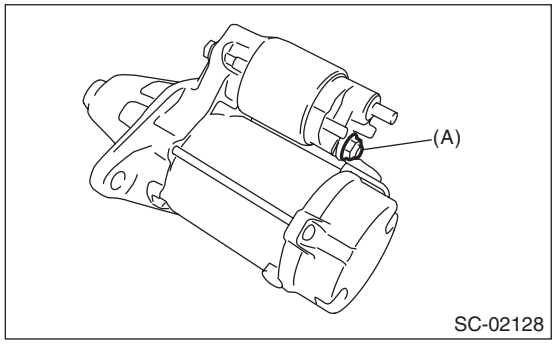

SC-02128

E: INSPECTION

1. SWITCH ASSEMBLY

Using a circuit tester (set to “ohm”), check that there is continuity between terminals S and M, and between terminal S and ground.
Also check to be sure there is no continuity between terminals M and B.

Terminal/Resistance:
S — M/1 Ω or less
S — Ground/1 Ω or less
M — B/1 MΩ or more

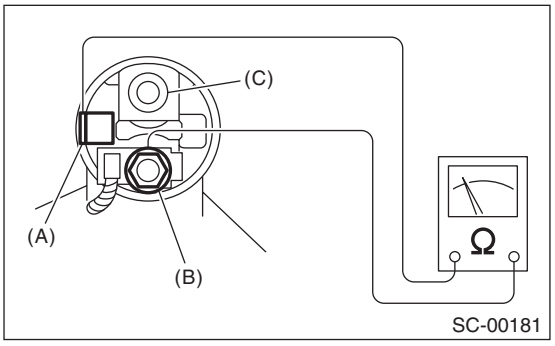

SC-00181

(A) Terminal S
(B) Terminal M
(C) Terminal B

2. SWITCH ASSEMBLY OPERATION

NOTE:
Perform each test in a short period of time (3 — 5 sec).
1) Suction test
Check that the pinion gear comes flying out when the harness is disconnected from terminal M and connected as shown in the figure.

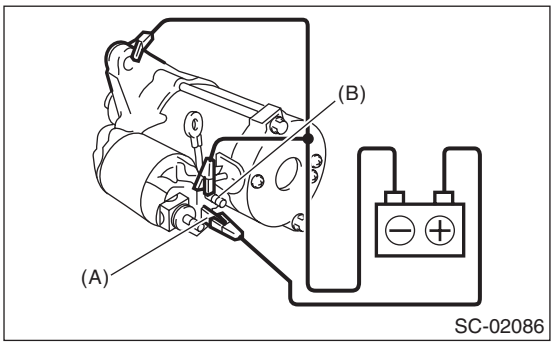

SC-02086

(A) Terminal S
(B) Terminal M

2) Holding test
Check that the pinion gear remains flying out after the cable is disconnected from terminal M.

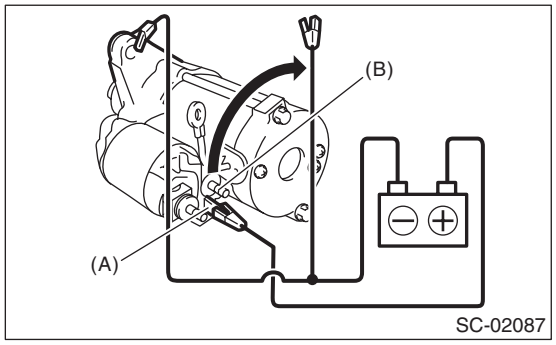

(A) Terminal S
(B) Terminal M

3) Returning test
With terminal S connected to the positive terminal, and terminal M and starter body connected to the battery ground terminal to suction the main contact point, check that the pinion gear returns to its original position when terminal S is disconnected.

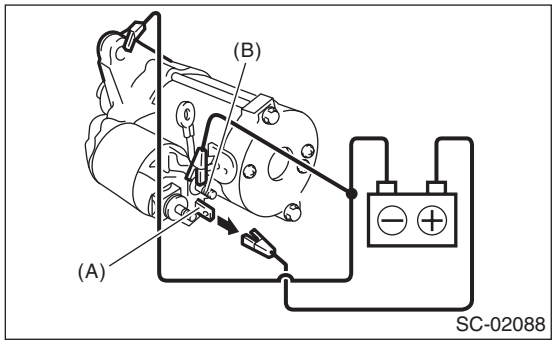

(A) Terminal S
(B) Terminal M

3. PERFORMANCE TEST

The starter should be submitted to performance tests whenever it has been overhauled, to assure its satisfactory performance when installed on the engine.
Three performance tests, no-load test, load test, and lock test, are presented here; however, if the load test and lock test cannot be performed, carry out at least the no-load test.

For these performance tests, use the circuit shown in figure.

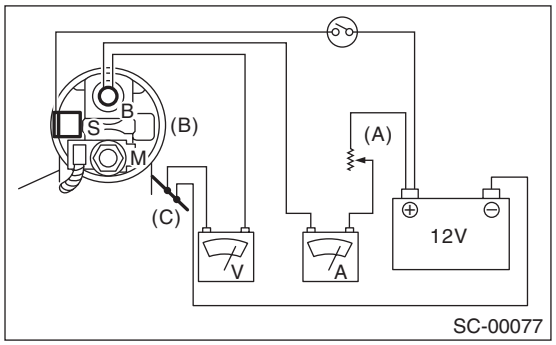

(A) Variable resistance
(B) Magnetic switch
(C) Starter body

1) No-load test
Adjust the variable resistance with the switch on until the voltage is 11 V, and read the value displayed on the ammeter to measure rotating speed. Compare these values with the standard.

No-load test (standard):

Voltage/Current
Max. 11 V/90 A or less

Rotating speed
2.5 L model
1,900 rpm or more
3.6 L model
1,550 rpm or more

2) Load test
Apply the specified braking torque to starter. The condition is normal if the current draw and rotating speed are within standard.

Load test (standard):

Voltage/Load
2.5 L model
8 V/11.1 N·m (1.1 kgf-m, 8.2 ft-lb) or more
3.6 L model
8 V/12.8 N·m (1.3 kgf-m, 9.4 ft-lb) or more

Current/Rotating speed
2.5 L model
370 A/910 rpm or more
3.6 L model
370 A/800 rpm or more

3) Lock test
With the starter stalled, or not rotating, measure the torque developed and current draw when the voltage is adjusted to standard voltage.

Lock test (standard):

Voltage/Current
3 V/750 A or less

Torque
2.5 L model
15.5 N·m (1.6 kgf-m, 11.4 ft-lb) or more
3.6 L model
19.0 N·m (1.9 kgf-m, 14.0 ft-lb) or more

4. OTHER INSPECTIONS

Check that the starter does not have deformation, cracks and any other damage.

3. Generator

A: REMOVAL

1) Disconnect the ground cable from battery.

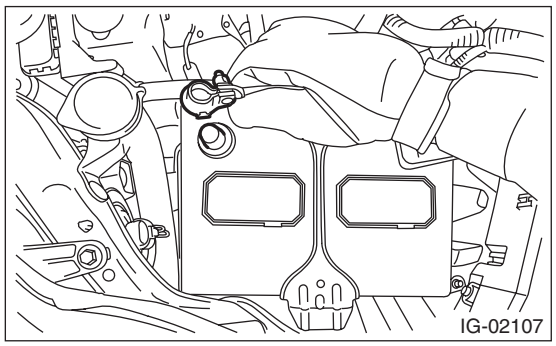

2) Remove the V-belts. <Ref. to ME(H4SO)-43, V-BELT, REMOVAL, V-belt.> <Ref. to ME(H4DOTC)-42, V-BELT, REMOVAL, V-belt.> <Ref. to ME(H6DO)-51, REMOVAL, V-belt.>

3) Disconnect the connector and terminal from generator.

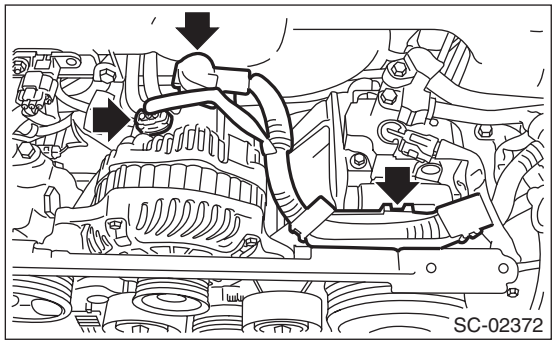

4) Remove the collector cover bracket or v-belt cover bracket.

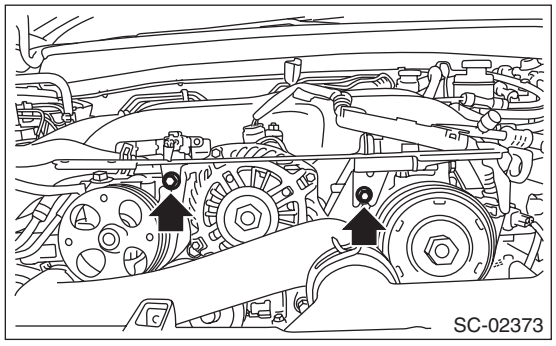

5) Remove the generator from the bracket.

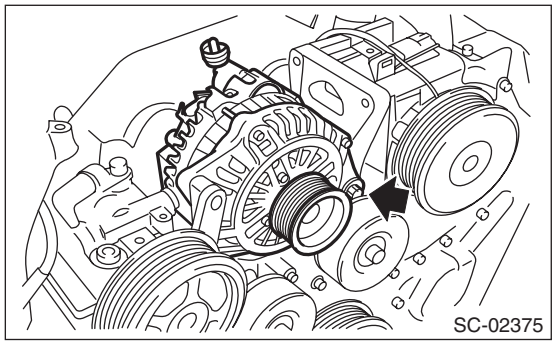

B: INSTALLATION

Install in the reverse order of removal.

Tightening torque:
T1: 25 N·m (2.5 kgf-m, 18.4 ft-lb)
T2: 6.4 N·m (0.7 kgf-m, 4.7 ft-lb)

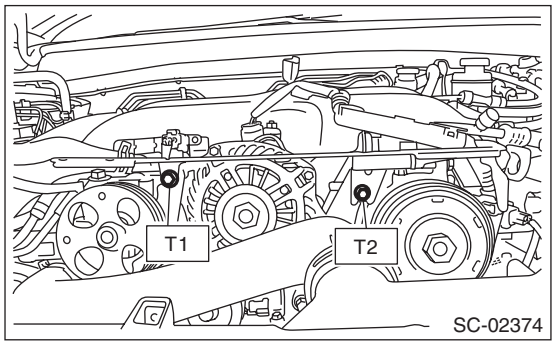

C: DISASSEMBLY

1. 2.5 L MODEL

1) Remove the four through-bolts.

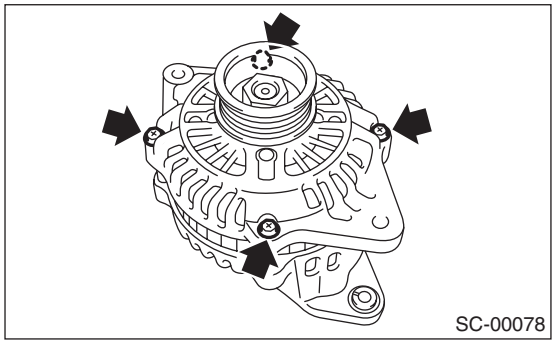

2) Use a drier to heat the rear cover (A) portion to 50°C (122°F).

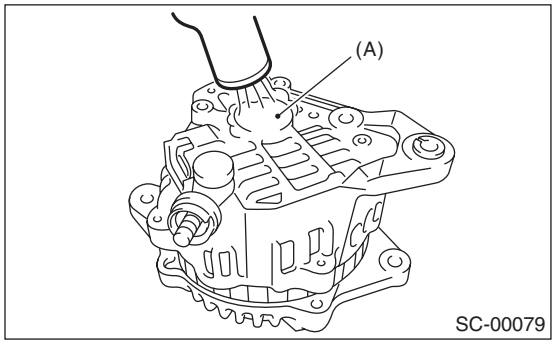

3) Insert the end of a flat tip screwdriver into the gap between stator core and front cover. Pry them apart to disassemble.

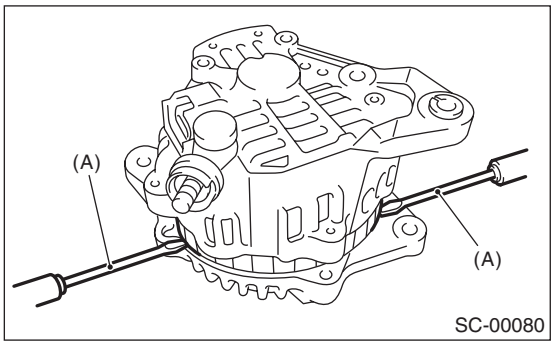

(A) Screwdriver

4) Using a vise, support the rotor and remove the pulley nut, then remove the rotor from the front cover.

CAUTION:
When holding the rotor with a vise, place aluminum plates or wooden pieces on the vise jaws to prevent rotor from damage.

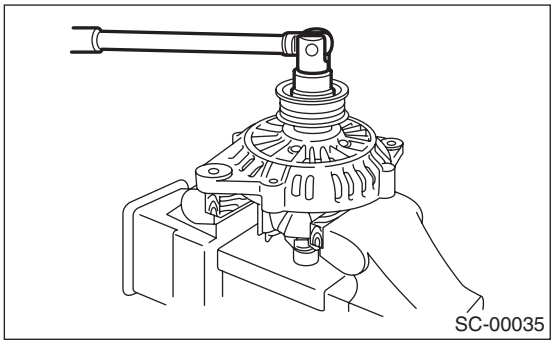

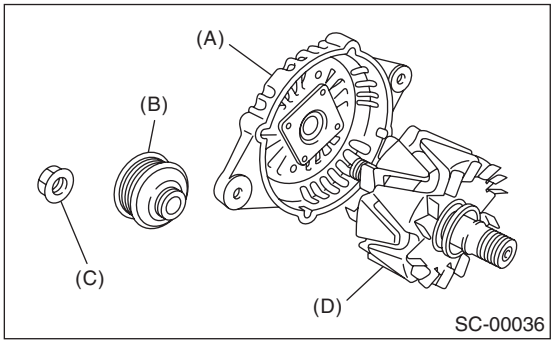

(A) Front cover
(B) Pulley
(C) Pulley nut
(D) Rotor

5) Use the following procedures to remove the ball bearings.
(1) Remove the bolt, and then detach the bearing retainer.

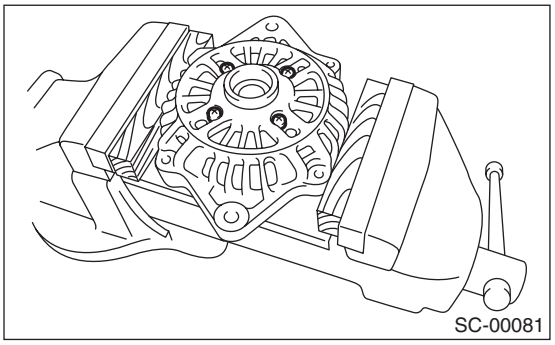

(2) Firmly attach an appropriate tool (such as a correct size socket wrench) to the bearing inner race.

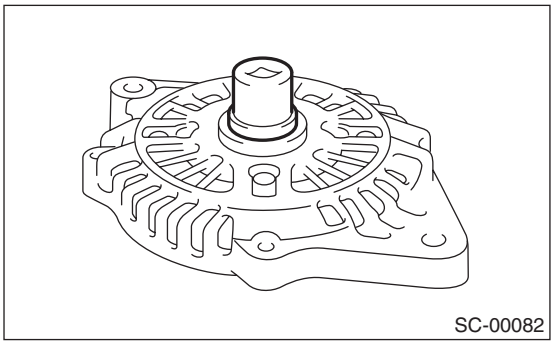

(3) Use the press to push the ball bearings out from the front cover.

6) Using the bearing puller, remove the bearings from the rotor.

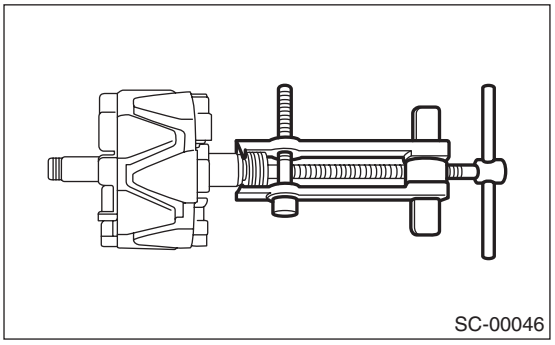

7) Disconnect the connection between the rectifier and stator coil, then remove the stator coil.

CAUTION:
The rectifier is easily damaged by heat. Do not allow a 180 — 270 W soldering iron to contact the terminals for 5 seconds or more at a time.

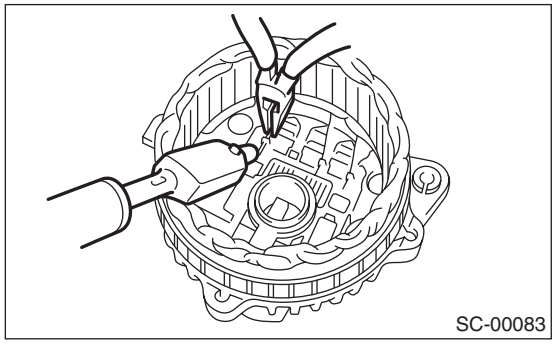
SC-00083

8) Use the following procedures to remove the IC regulator.

(1) Remove the screws which secure the IC regulator to the rear cover.

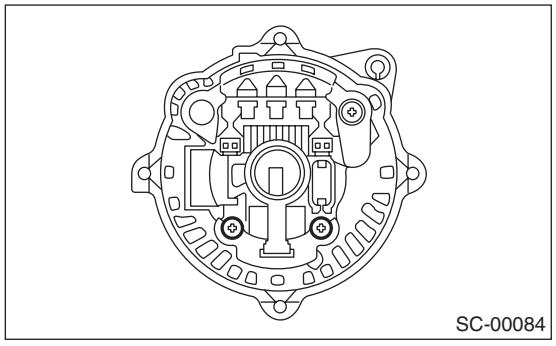
SC-00084

(2) Disconnect the connection between the IC regulator and rectifier, then remove the IC regulator.

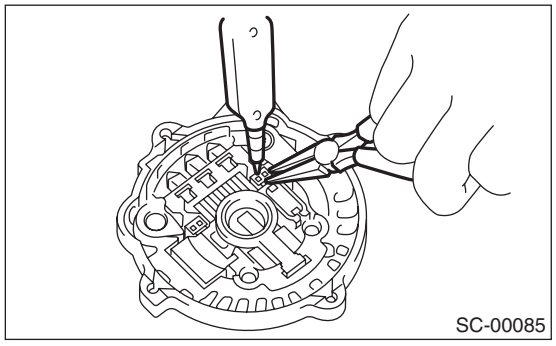
SC-00085

9) Use the following procedures to remove the brush.

(1) Remove the cover A.

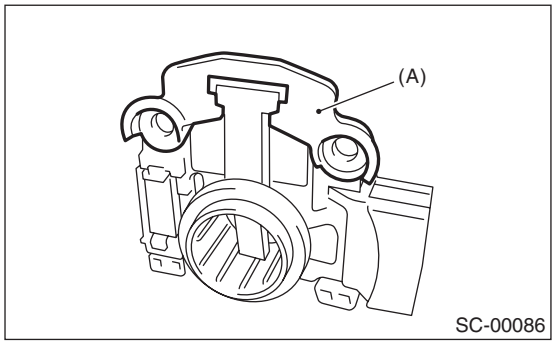

SC-00086

(A) Cover A

(2) Remove the cover B.

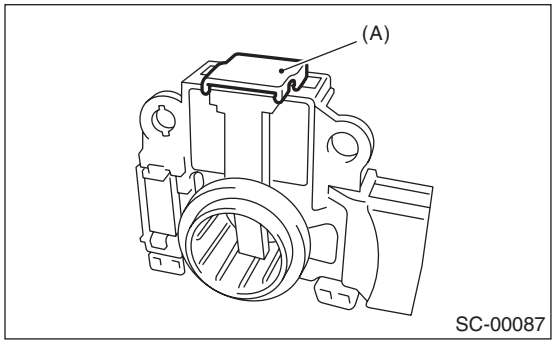

SC-00087

(A) Cover B

(3) Disconnect the connection and remove the brush.

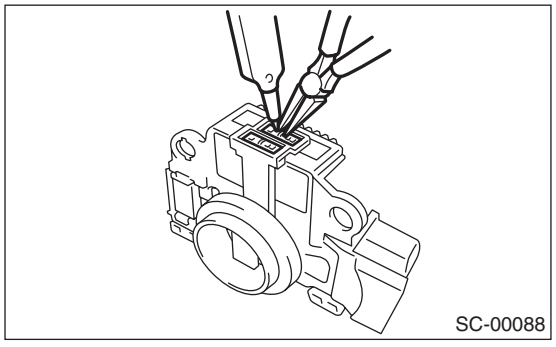
SC-00088

10) Remove the rectifier as follows.

(1) Remove the bolts which secure the rectifier.

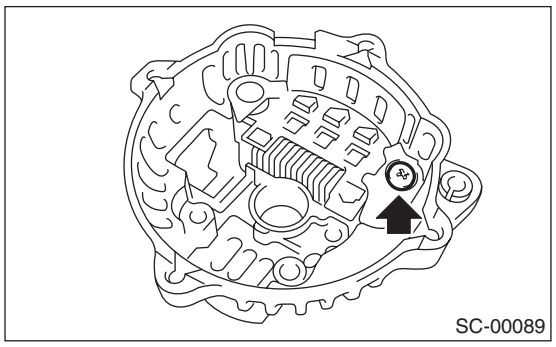
SC-00089

(2) Remove the cover on terminal B.

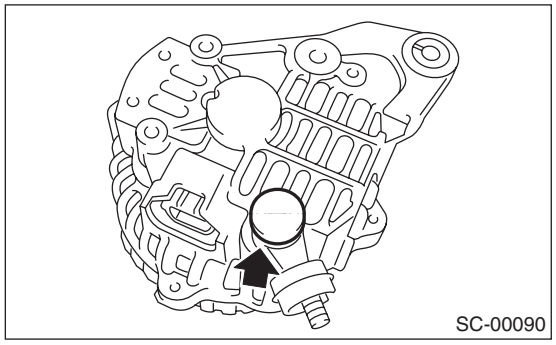
SC-00090

(3) Remove the nuts of terminal B, then remove the rectifier.

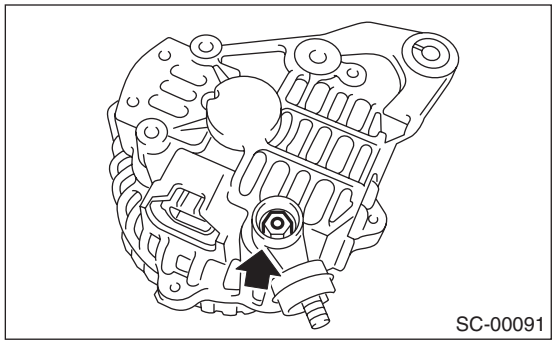
SC-00091

2. 3.6 L MODEL

1) Remove the four through-bolts.

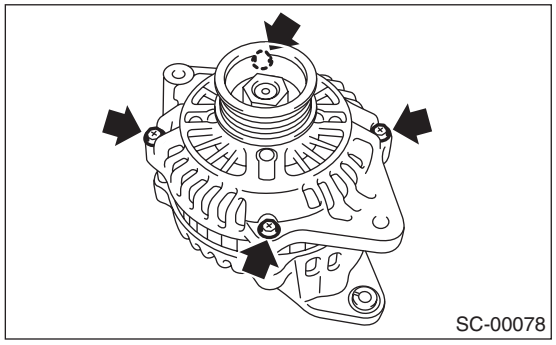
SC-00078

2) Use a drier to heat the rear cover (A) portion to 50 — 60°C (122 — 140°F).

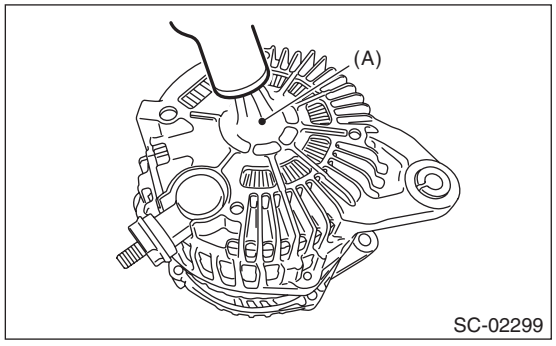

SC-02299

3) Insert the end of a flat tip screwdriver into the gap between stator core and front cover. Pry them apart to disassemble.

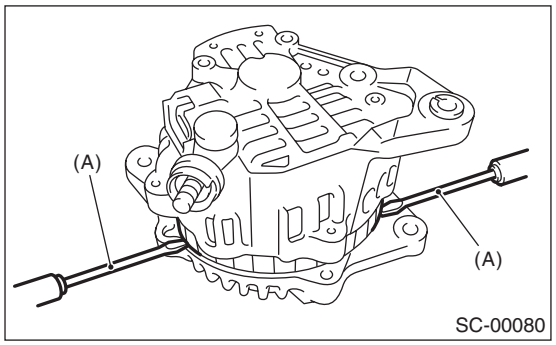

SC-00080

(A) Screwdriver

4) Using a vise, support the rotor and remove the pulley nut, then remove the rotor from the front cover.

CAUTION:
When holding the rotor with a vise, place aluminum plates or wooden pieces on the vise jaws to prevent rotor from damage.

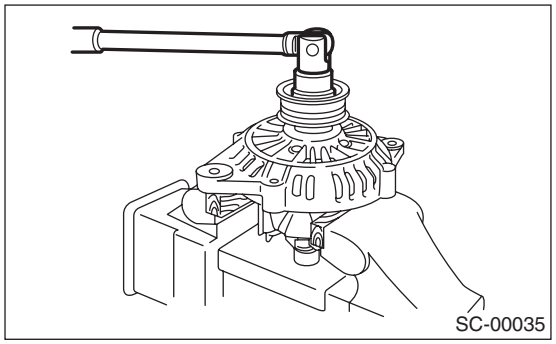
SC-00035

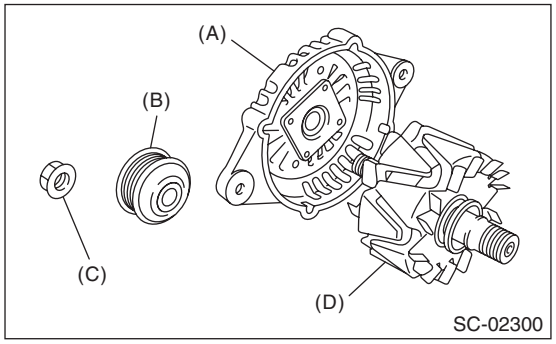

SC-02300

(A) Front cover
(B) Pulley
(C) Pulley nut
(D) Rotor

5) Use the following procedures to remove the ball bearings.
(1) Remove the bolt, and then detach the bearing retainer.

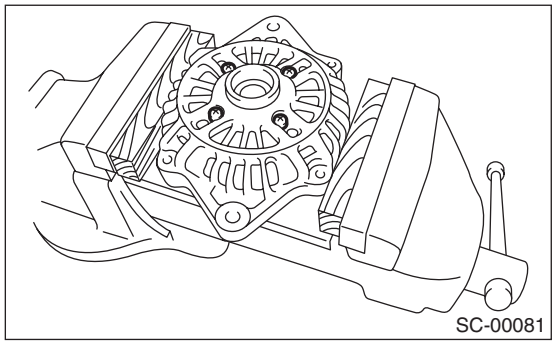
SC-00081

(2) Firmly attach an appropriate tool (such as a correct size socket wrench) to the bearing inner race.

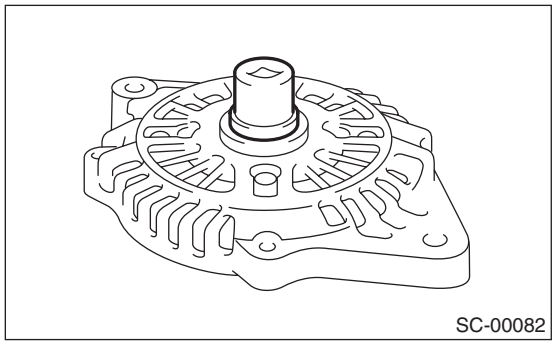
SC-00082

(3) Use the press to push the ball bearings out from the front cover.

6) Using the bearing puller, remove the bearings from the rotor.

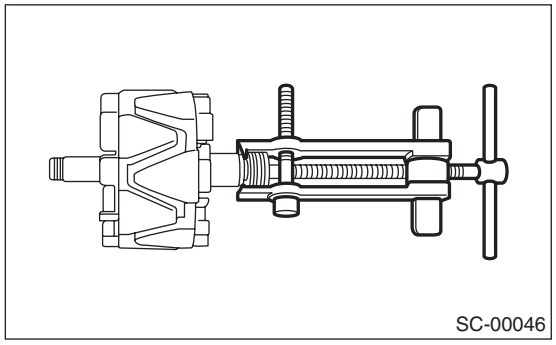
SC-00046

7) Remove six bolts between the rectifier and stator coil, then remove the stator coil.

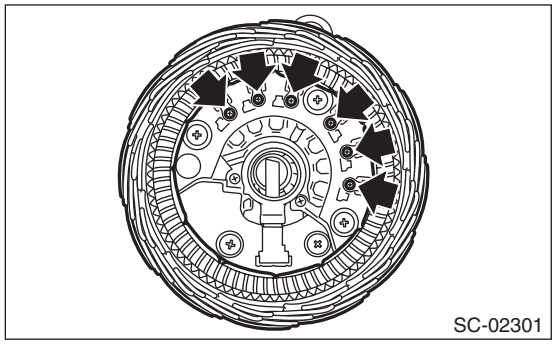
SC-02301

8) Remove four screws which secure the IC regulator to the rear cover, then remove the IC regulator.

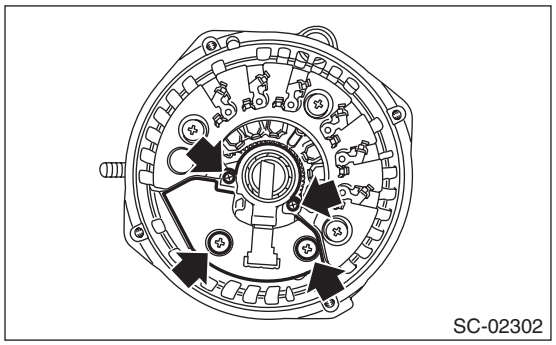
SC-02302

9) Use the following procedures to remove the brush.
(1) Remove the cover A.

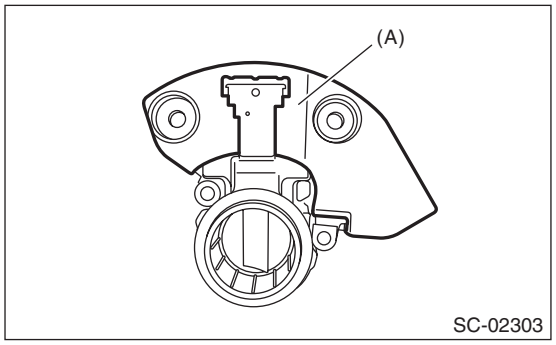

SC-02303

(A) Cover A

(2) Remove the cover B.

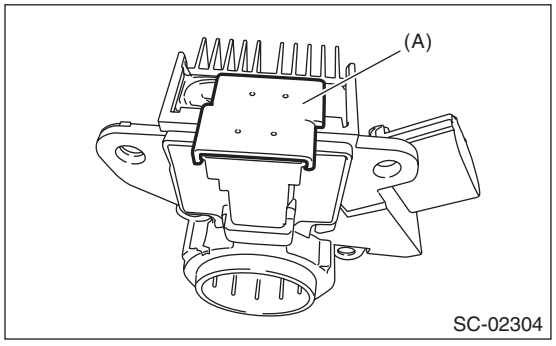

SC-02304

(A) Cover B

(3) Disconnect the connection and remove the brush.

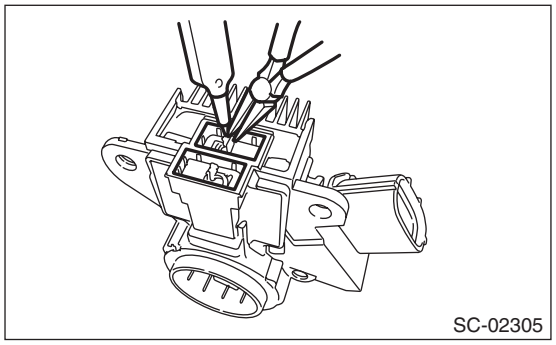
SC-02305

10) Remove the rectifier as follows.
(1) Remove the cover on terminal B.

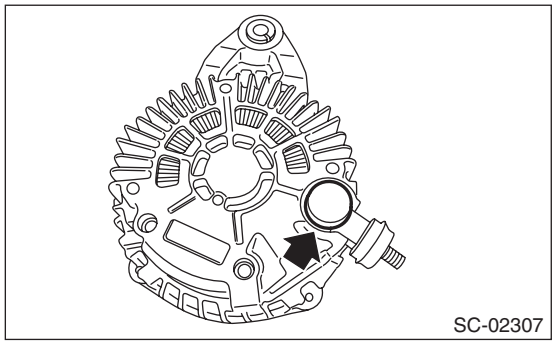
SC-02307

(2) Remove the nut on terminal B.

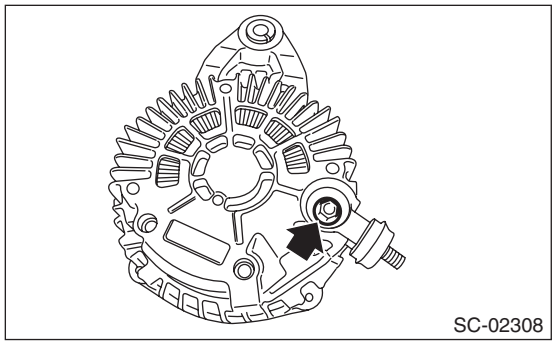
SC-02308

(3) Remove the bolts which secure the rectifier, and remove the rectifier.

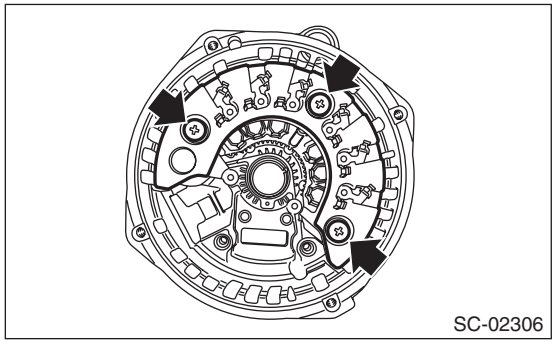
SC-02306

D: ASSEMBLY

1. 2.5 L MODEL

Assemble in the reverse order of disassembly.

NOTE:
• Refer to component for tightening torque of each part. <Ref. to SC(H4SO)-5, GENERATOR, COMPONENT, General Description.>
• After assembling, manually turn the pulley to check that the rotor rotates smoothly.

1) Push of the brush
Before assembling the front and rear parts, press the brush down into the brush holder, then fix the brush in that position by inserting a [1 mm (0.04 in) dia., 40 — 50 mm (1.6 — 2.0 in) long] wire through the hole as shown in the figure.

CAUTION:
After re-assembling, remove the wire.

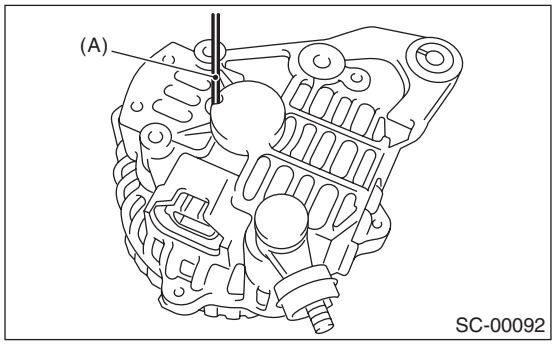

SC-00092

(A) Wire

2) Install the ball bearings.
(1) Set the ball bearings in the front cover, then securely install an appropriate tool (such as a socket wrench of proper size) to the bearing outer race.
(2) Using a press to press the ball bearings into the specified location.
(3) Install the bearing retainer.
3) Use a press to install the bearings (rear side) to the rotor shaft.
4) Heat the bearing box in rear cover to 50 — 60°C (122 — 140°F), and then press the rear bearing into rear cover.

CAUTION:
Do not apply grease to the rear bearings. If there is any oil on the bearing box, remove it completely.

2. 3.6 L MODEL

Assemble in the reverse order of disassembly.

NOTE:
• Refer to component for tightening torque of each part. <Ref. to SC(H4SO)-5, GENERATOR, COMPONENT, General Description.>
• After assembling, manually turn the pulley to check that the rotor rotates smoothly.

1) Push of the brush
Before assembling the front and rear parts, press the brush down into the brush holder, then fix the brush in that position by inserting a [1 mm (0.08 in) dia., 40 — 50 mm (1.6 — 2.0 in) long] wire through the hole as shown in the figure.

CAUTION:
After re-assembling, remove the wire.

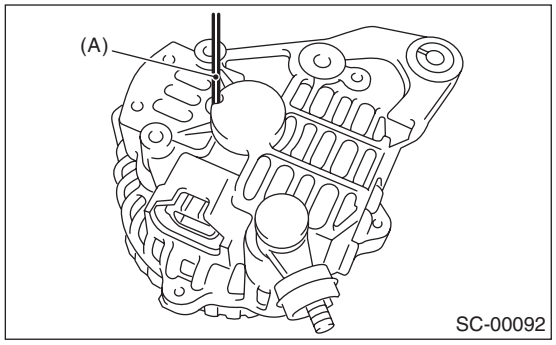

(A) Wire

2) Install the ball bearings.
(1) Set the ball bearings in the front cover, then securely install an appropriate tool (such as a socket wrench of proper size) to the bearing outer race.
(2) Using a press to press the ball bearings into the specified location.
(3) Install the bearing retainer.

3) Use a press to install the bearings (rear side) to the rotor shaft.

4) Heat the bearing box in rear cover to 50 — 60°C (122 — 140°F), and then press the rear bearing into rear cover.

CAUTION:
Do not apply grease to the rear bearings. If there is any oil on the bearing box, remove it completely.

E: INSPECTION

1. DIODE (2.5 L MODEL)

CAUTION:
There is the possibility of damaging the diodes if a mega-tester (used to measure high voltages) or a similar measuring instrument is used. Never use a mega tester or equivalent for this test.

1) Check for continuity between the diode lead and positive side heat sink. If resistance is 1 Ω or more only in the direction from the diode lead to the heat sink, replace the rectifier.

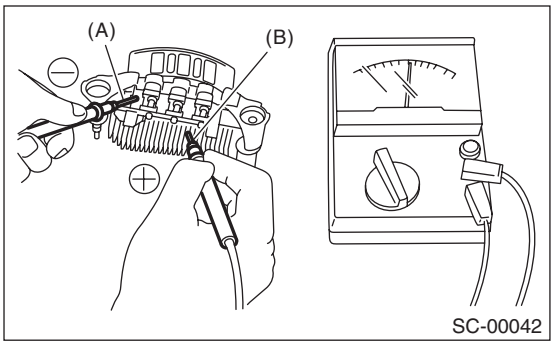

(A) Diode lead
(B) Heat sink (positive side)

2) Check for continuity between the negative side heat sink and diode lead. If resistance is 1 Ω or more only in the direction from the heat sink to the diode lead, replace the rectifier.

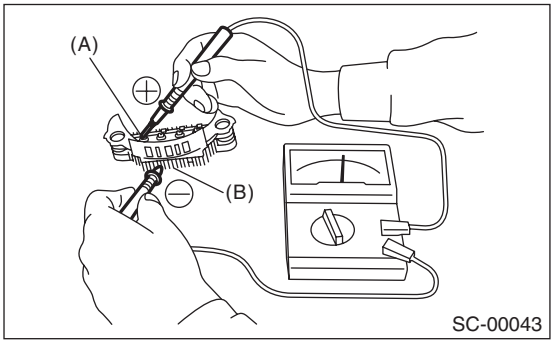

(A) Diode lead
(B) Heat sink (negative side)

2. DIODE (3.6 L MODEL)

CAUTION:
There is the possibility of damaging the diodes if a mega-tester (used to measure high voltages) or a similar measuring instrument is used. Never use a mega tester or equivalent for this test.

1) Check for continuity between the diode lead and terminal E or B. If continuity is not as shown in the table, replace the rectifier.

- At analog type tester

Tester lead		Continuity
–lead	+lead	
E	P1, P2, P3, P4, P5, P6	Yes
B		None
P1, P2, P3, P4, P5, P6	E	None
	B	Yes

- At digital type tester

Tester lead		Continuity
–lead	+lead	
E	P1, P2, P3, P4, P5, P6	None
B		Yes
P1, P2, P3, P4, P5, P6	E	Yes
	B	None

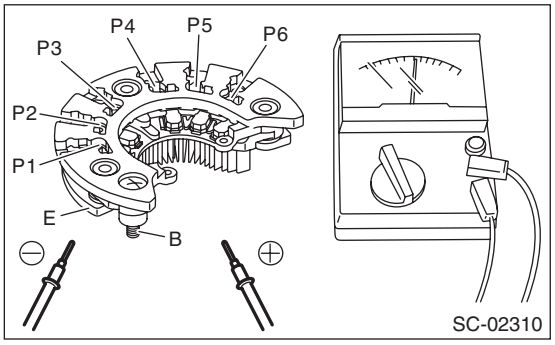

3. ROTOR

1) Inspect the slip rings for contamination or any roughness on the sliding surface. Repair the slip ring surface using a lathe or sand paper.
2) Measure the slip ring outer diameter. Replace the rotor if the slip ring is worn.

Slip ring outer diameter:
Standard
22.7 mm (0.894 in)
Limit
22.1 mm (0.870 in)

3) Using a circuit tester, check the resistance between slip rings. If resistance exceeds the standard, replace the rotor.

Standard:
Approx. 1.8 — 2.2 Ω

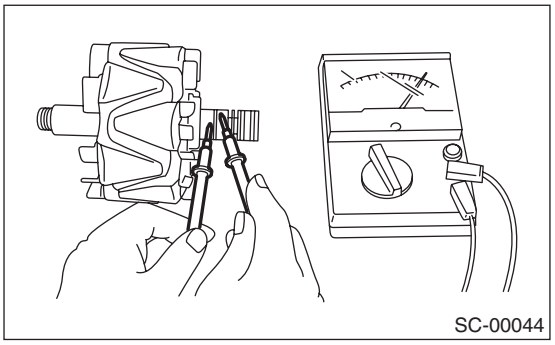

4) Check the continuity between slip ring and rotor core or shaft. If there is continuity, replace the rotor because the rotor coil is grounded.

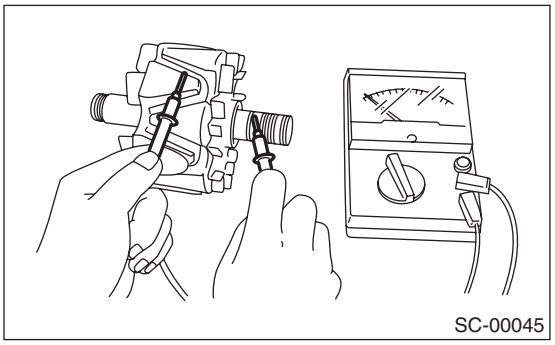

5) Check the ball bearings. If there is any noise, or the rotor does not rotate smoothly, replace the bearings.

4. STATOR COIL (2.5 L MODEL)

1) Inspect continuity between the stator coil lead wire terminals. If the resistance is 1 MΩ or more, replace the stator coil.

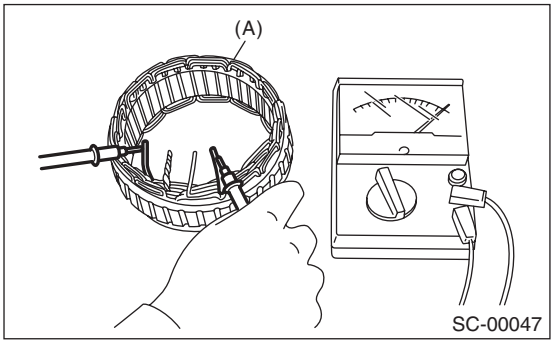

(A) Stator

2) Inspect the continuity between the stator coil stator core and lead wire terminals. If the resistance is 1 Ω or less, replace the stator coil.

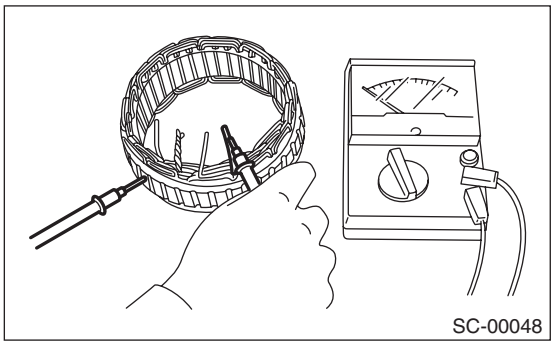
SC-00048

5. 3.6 L MODEL

1) Continuity test
Inspect the continuity between the stator coil terminals. If continuity is not as shown in the table, replace the stator coil.

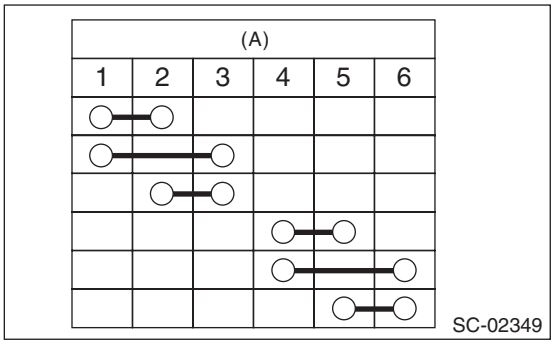

SC-02349

(A) Terminals

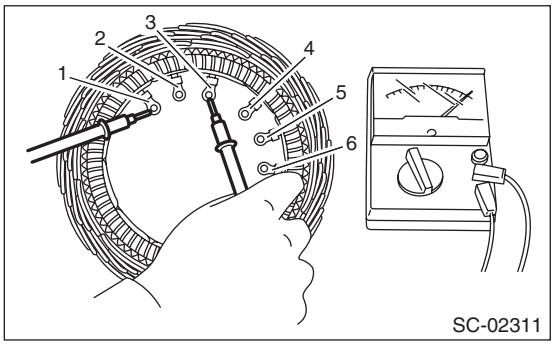

SC-02311

2) Insulation test
Inspect the continuity between the stator coil stator core and lead wire terminals. If there is continuity, replace the stator coil because the stator coil is grounded.

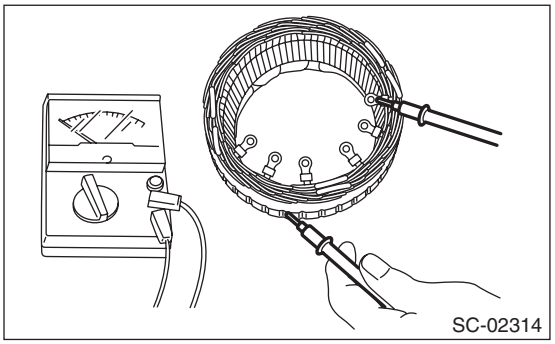
SC-02314

6. BRUSH

1) Measure the length of each brush. Replace the brush if wear exceeds service limits. There is a service limit mark (A) on each brush.

Brush length:

- ***2.5 L model***
  Standard (1)
  18.5 mm (0.728 in)
  Limit (2)
  5.0 mm (0.197 in)
- ***3.6 L model***
  Standard (1)
  22.5 mm (0.886 in)
  Limit (2)
  5.0 mm (0.197 in)

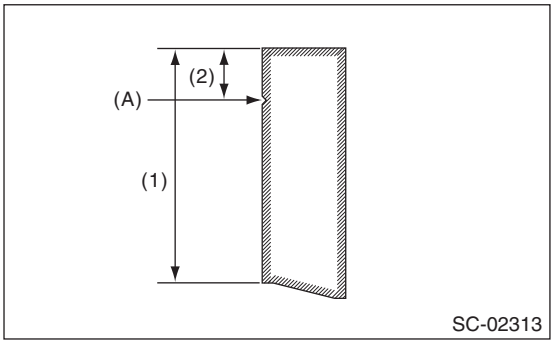

SC-02313

2) Using a spring pressure indicator, push the brush into the brush holder until its tip protrudes 2 mm (0.08 in). Then measure the pressure of brush spring. If the pressure is 2.648 N (270 g, 9.52 oz) or less, replace the brush spring with a new part. 4.609 — 5.786 N (470 — 590 g, 16.58 — 20.810 oz) pressure is required on the new spring.

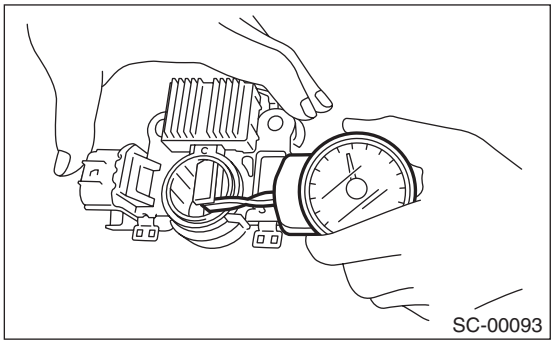

7. BALL BEARING

Check the ball bearings. Replace the ball bearings if there is resistance in the rotation, or if there is any abnormal noise.

8. OTHER INSPECTIONS

Check that the generator does not have deformation, cracks and any other damage.

4. Battery

A: REMOVAL

1) After disconnecting the battery ground terminal, remove the terminal cover, then disconnect the positive terminal.
2) Remove the battery cable holder from the battery rod.
3) Remove flange nut from the battery rod and remove battery holder.

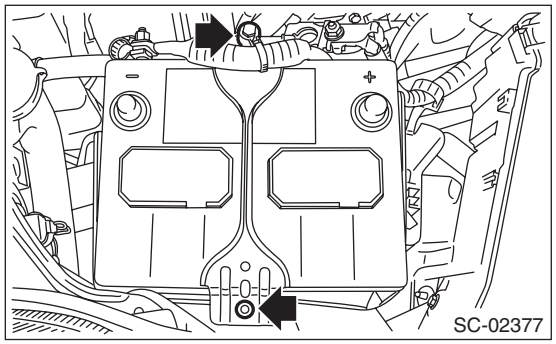

4) Remove the battery.

B: INSTALLATION

Install in the reverse order of removal.

Tightening torque:
3.5 N·m (0.4 kgf-m, 2.6 ft-lb)

NOTE:
• Clean the battery cable terminals and apply grease to retard the formation of corrosion.
• Connect the positive (+) terminal, and then connect the negative (–) terminal of the battery.
• After the battery is installed, initial diagnosis of the electronic throttle control is performed. Wait for 10 seconds or more after turning the ignition switch to ON, and then start the engine.

C: INSPECTION

WARNING:
• Electrolyte is corrosive acid, and has toxicity; be careful of handling the fluid.
• Make sure the electrode does not come into contact with skin, eyes or clothing. Especially at contact with eyes, flush with water for 15 minutes and get prompt medical attention.
• In addition, be careful not to let the electrode contact with the coated parts.
• Be careful when handling the batteries because they produce explosive gases.
• Be sure to keep battery away from any fire.
• For safety, in case an explosion does occur, wear eye protection or shield your eyes when working near any battery. In addition, never lean over the battery.
• Ventilate sufficiently when using or charging battery in enclosed space.
• Before starting work, remove rings, metal watch-bands, and other metal jewelry.
• Never allow metal tools to contact the positive battery terminal and anything connected to it while you are at the same time in contact with any other metallic portion of the vehicle.

1. EXTERNAL PARTS

Check the battery case, top cover, vent plugs, and terminal posts for dirt or cracks. If necessary, clean with water and wipe with a dry cloth.
Apply a thin coat of grease on the terminal posts to prevent corrosion.

2. ELECTROLYTE LEVEL

Check the electrolyte level in each cell. If the level is below MIN level, bring the level to MAX level by pouring distilled water into the battery cell. Do not fill beyond MAX level.

3. SPECIFIC GRAVITY OF ELECTROLYTE

1) Measure specific gravity of electrolyte using a hydrometer and a thermometer.
Specific gravity varies with temperature of electrolyte so that it must be corrected at 20°C (68°F) using the following calculation:

S_{20} = St + 0.0007 × (t – 20)
S_{20}: Specific gravity corrected at electrolyte temperature of 20°C (68°F)
St: Measured specific gravity
t: Measured temperature (°C)
Judge whether or not battery must be charged, according to corrected specific gravity.
Standard specific gravity: 1.220 — 1.290 [at 20°C (68°F)]

2) Measuring the specific gravity of the electrolyte in the battery will disclose the state of charge of the battery. The relation between specific gravity and state of charge is as shown in the figure.

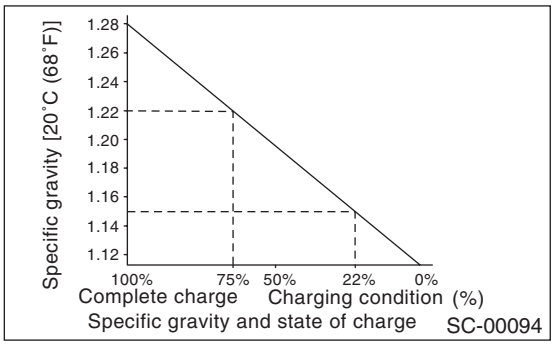

D: MEASUREMENT

WARNING:
Do not bring an open flame close to the battery when working.

CAUTION:
• Prior to charging, corroded terminals should be cleaned with a brush and common caustic soda solution.
• Be careful since battery electrolyte overflows while charging the battery.
• Observe instructions when handling the battery charger.
• Before charging the battery on the vehicle, disconnect the battery ground terminal to prevent damage of generator diodes or other electrical units.

1. JUDGMENT OF BATTERY IN CHARGED CONDITION

1) Specific gravity of electrolyte should be held within the specific range from 1.250 to 1.290 for one hour or more.
2) Voltage per battery cell should be held at a specific value in a range from 2.5 to 2.8 V for one hour or more.

2. CHECK CONDITION OF CHARGE WITH HYDROMETER

Hydrometer indicator	State of charge	Corrective action
Green dot	65% or more	Load test
Dark dot	65% or less	Charge battery
Clear dot	Low electrolyte	Replace the battery.* (If cranking is difficult)
* Check electrical system before replacement.		

3. NORMAL CHARGING

Charge the battery at the current value specified by manufacturer or at approximately 1/10 of battery's ampere-hour rating.

4. QUICK CHARGING

CAUTION:
• Observe the items in "3. NORMAL CHARGING".
• Never use 10 A or more when charging the battery because it will shorten the battery life.

Quick charging is a method that the battery is charged in a short period of time with a relatively large current by using a quick charger.
Since a large current flow raises electrolyte temperature, the battery is subject to damage if the large current is used for prolonged time. For this reason, quick charging must be carried out within a current range that will not raise the electrolyte temperature to 40°C (104°F) or more.
Also the quick charging is a temporary mean to bring battery voltage up to some level, and battery should be charged slowly with low current as a rule.

ENGINE (DIAGNOSTICS)

EN(H4SO)(diag)

		Page
1.	Basic Diagnostic Procedure	2
2.	Check List for Interview	4
3.	General Description	6
4.	Electrical Component Location	9
5.	Engine Control Module (ECM) I/O Signal	17
6.	Engine Condition Data	26
7.	Data Link Connector	27
8.	General Scan Tool	28
9.	Subaru Select Monitor	33
10.	Read Diagnostic Trouble Code (DTC)	39
11.	Inspection Mode	40
12.	Drive Cycle	45
13.	Clear Memory Mode	51
14.	System Operation Check Mode	52
15.	Malfunction Indicator Light	53
16.	Diagnostics for Engine Starting Failure	63
17.	Diagnostic Procedure for Subaru Select Monitor Communication	76
18.	List of Diagnostic Trouble Code (DTC)	78
19.	Diagnostic Procedure with Diagnostic Trouble Code (DTC)	86
20.	General Diagnostic Table	292

1. Basic Diagnostic Procedure

A: PROCEDURE

1. ENGINE

	Step	Check	Yes	No
1	**CHECK ENGINE START FAILURE.** 1) Ask the customer when and how the trouble occurred using the interview check list. <Ref. to EN(H4SO)(diag)-4, CHECK, Check List for Interview.> 2) Start the engine.	Does the engine start?	Go to step **2**.	Inspection using "Diagnostics for Engine Start Failure". <Ref. to EN(H4SO)(diag)-63, Diagnostics for Engine Starting Failure.>
2	**CHECK ILLUMINATION OF MALFUNCTION INDICATOR LIGHT.**	Does the malfunction indicator light illuminate?	Go to step **3**.	Inspection using "General Diagnostic Table". <Ref. to EN(H4SO)(diag)-292, INSPECTION, General Diagnostic Table.>
3	**CHECK COMMUNICATION STATUS.** 1) Turn the ignition switch to OFF. 2) Connect the Subaru Select Monitor or general scan tool to the data link connector. 3) Turn the ignition switch to ON, and run the Subaru Select Monitor or general scan tool. NOTE: • Subaru Select Monitor For detailed procedures, refer to "Subaru Select Monitor". <Ref. to EN(H4SO)(diag)-33, Subaru Select Monitor.> • General scan tool For detailed operation procedures, refer to the general scan tool operation manual.	Does Subaru Select Monitor or general scan tool communicate with vehicle normally?	Go to step **4**.	Inspection using "Diagnostics Procedure for Subaru Select Monitor Communication". <Ref. to EN(H4SO)(diag)-76, Diagnostic Procedure for Subaru Select Monitor Communication.>
4	**CHECK DTC.** Read DTC using Subaru Select Monitor or general scan tool. NOTE: • Subaru Select Monitor Refer to "Read Diagnostic Trouble Code" for detailed operation procedure. <Ref. to EN(H4SO)(diag)-39, Read Diagnostic Trouble Code (DTC).> • General scan tool For detailed operation procedures, refer to the general scan tool operation manual.	Is DTC displayed on Subaru Select Monitor or general scan tool?	Record the DTC. Repair the trouble cause. <Ref. to EN(H4SO)(diag)-78, List of Diagnostic Trouble Code (DTC).> Go to step **5**.	Repair the related parts. NOTE: If DTC is not shown on display although the malfunction indicator light illuminates, perform the diagnosis of malfunction indicator light circuit or combination meter. <Ref. to EN(H4SO)(diag)-53, Malfunction Indicator Light.>

	Step	Check	Yes	No
5	**CHECK FREEZE FRAME DATA.** Check the freeze frame data using the Subaru Select Monitor or general scan tool. NOTE: • Subaru Select Monitor For detailed procedures, refer to "Subaru Select Monitor". <Ref. to EN(H4SO)(diag)-33, Subaru Select Monitor.> • General scan tool For detailed operation procedures, refer to the general scan tool operation manual.	Is freeze frame data displayed on Subaru Select Monitor or general scan tool?	Record the freeze frame data. Repair the cause of fault, and go to the next step. Go to step **6**.	Go to step **6**.
6	**PERFORM DIAGNOSIS.** 1) Perform the Clear Memory Mode. <Ref. to EN(H4SO)(diag)-51, Clear Memory Mode.> 2) Perform the Inspection Mode or Drive Cycle. <Ref. to EN(H4SO)(diag)-40, Inspection Mode.> <Ref. to EN(H4SO)(diag)-45, Drive Cycle.>	Is DTC displayed on Subaru Select Monitor or general scan tool?	Inspect using "Diagnostic Procedure with Diagnostic Trouble Code (DTC)". <Ref. to EN(H4SO)(diag)-86, Diagnostic Procedure with Diagnostic Trouble Code (DTC).>	Finish the diagnosis.

2. Check List for Interview

A: CHECK

1. CHECK LIST NO. 1

Check the following item when problem has occurred.

NOTE:
Use copies of this page for interviewing customers.

Customer's name		Engine No.	
Date of purchase		Fuel type	
Date of repair		Odometer reading	km
V.I.N.			miles
Weather	❑ Fine ❑ Cloudy ❑ Rainy ❑ Snowy ❑ Various/Others:		
Ambient air temperature	°C (°F)		
	❑ Hot ❑ Warm ❑ Cool ❑ Cold		
Place	❑ Highway ❑ Suburbs ❑ Inner city ❑ Uphill ❑ Downhill ❑ Rough road ❑ Others:		
Engine temperature	❑ Cold ❑ Warming-up ❑ After warming-up ❑ Any temperature ❑ Others:		
Engine speed	rpm		
Vehicle speed	km/h (MPH)		
Driving conditions	❑ Not affected ❑ At starting ❑ While idling ❑ At racing ❑ While accelerating ❑ While cruising ❑ While decelerating ❑ While turning (RH/LH)		
Headlight	❑ ON/❑ OFF	Rear defogger	❑ ON/❑ OFF
Blower	❑ ON/❑ OFF	Audio	❑ ON/❑ OFF
A/C compressor	❑ ON/❑ OFF	Rear entertainment system	❑ ON/❑ OFF
Radiator fan	❑ ON/❑ OFF	Car phone	❑ ON/❑ OFF
Front wiper	❑ ON/❑ OFF	Wireless device	❑ ON/❑ OFF
Rear wiper	❑ ON/❑ OFF		

2. CHECK LIST NO. 2

Check the following item about the vehicle's state when the malfunction indicator light turns on.

NOTE:
Use copies of this page for interviewing customers.

a) Other warning lights or indicators illuminate: ❑ Yes / ❑ No
❑ Fuel level warning light ❑ Charge warning light ❑ Engine coolant temperature warning light ❑ Oil pressure warning light ❑ ATF temperature warning light or SPORT indicator light ❑ Driver's control center differential indicator light ❑ ABS warning light ❑ VDC warning light ❑ Cruise indicator light ❑ SI-CRUISE warning light ❑ Immobilizer indicator light ❑ STEERING warning light ❑ Electronic parking brake warning light ❑ Glow indicator light ❑ Sedimenter warning light ❑ Others:
b) Fuel level
• Lack of fuel: ❑ Yes / ❑ No • Indicator position of fuel gauge: • Experienced running out of fuel: ❑ Yes / ❑ No
c) Intentional connecting or disconnecting of harness connectors or spark plug cords: ❑ Yes / ❑ No
• What:
d) Intentional connecting or disconnecting of hoses: ❑ Yes / ❑ No
• What:
e) Installing of other parts except genuine parts: ❑ Yes / ❑ No
• What: • Where:
f) Occurrence of noise: ❑ Yes / ❑ No
• From where: • What kind:
g) Occurrence of smell: ❑ Yes / ❑ No
• From where: • What kind:
h) Intrusion of water into engine compartment or passenger compartment: ❑ Yes / ❑ No
i) Troubles occurred
❑ Engine does not start. ❑ Engine stalls during idling. ❑ Engine stalls while driving. ❑ Engine speed decreases. ❑ Engine speed does not decrease. ❑ Rough idling ❑ Poor acceleration ❑ Back fire ❑ After fire ❑ Does not shift. ❑ Excessive shift shock

3. General Description

A: CAUTION

1) Airbag system wiring harness is routed near the ECM, main relay and fuel pump relay.

CAUTION:
• Do not use electrical test equipment on the airbag system circuits.
• Be careful not to damage the airbag system wiring harness when servicing the ECM, TCM, main relay and fuel pump relay.

2) Never connect the battery in reverse polarity. Doing so will damage the ECM instantly, and other parts will also be damaged.
3) Do not disconnect the battery terminals while the engine is running. A large counter electromotive force will be generated in the generator, and this voltage may damage electronic parts such as ECM etc.
4) Before disconnecting the connectors of each sensor and ECM, be sure to turn the ignition switch to OFF. Perform the Clear Memory Mode after connecting the connectors. <Ref. to EN(H4SO)(diag)-51, Clear Memory Mode.>
5) When measuring the voltage or resistance of individual sensor or all electrical control modules, use a tapered pin with a diameter of less than 0.6 mm (0.024 in). Do not insert the pin 4 mm (0.16 in) or more into the part.

CAUTION:
When replacing the ECM, be careful not to use the wrong spec. ECM to avoid any damage on the fuel injection system.

NOTE:
When replacing the ECM of the models with Immobilizer, immobilizer system must be registered. To do so, all ignition keys and ID cards need to be prepared. Refer to the “PC application help for Subaru Select Monitor”.
6) Take care not to allow water to get into the connectors when servicing or washing the vehicle in rainy weather. Avoid exposure to water even if the connectors are waterproof.
7) Use ECM mounting stud bolts at the body side grounding point when measuring voltage and resistance inside the passenger compartment.

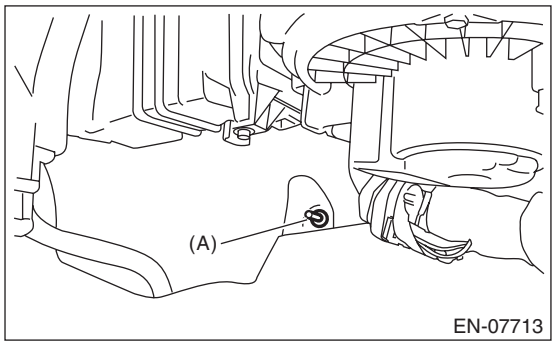

(A) Stud bolt

8) Use the engine ground terminal or engine assembly for the grounding point to chassis when measuring the voltage and resistance in engine compartment.

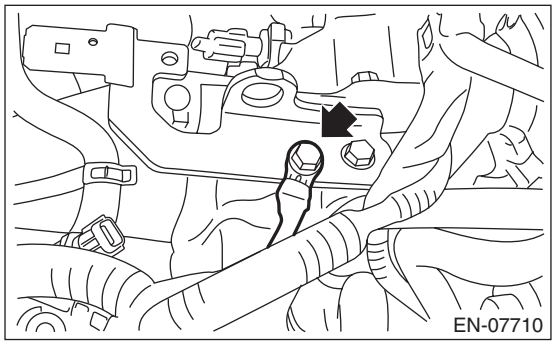

9) Every engine control system-related part is a precision part. Do not drop them.
10) Observe the following cautions when installing a radio in vehicle.

CAUTION:
• The antenna must be kept as far apart as possible from control module. (ECM is installed at the back of the glove box.)
• The antenna feeder must be placed as far apart as possible from the ECM and engine control system harness.
• Carefully adjust the antenna for correct matching.
• When mounting a large power type radio, pay special attention to the three items mentioned above.
• Incorrect installation of the radio may affect the operation of ECM.

11) When disconnecting the fuel hose, release the fuel pressure. <Ref. to FU(H4SO)-53, RELEASING OF FUEL PRESSURE, PROCEDURE, Fuel.>

12) Warning lights may illuminate when performing driving test with jacked-up or lifted-up condition, but this is not a system malfunction. The reason for this is the speed difference between the front and rear wheels. When engine control system diagnosis is finished, perform the VDC memory clearance procedure of self-diagnosis function. <Ref. to VDC(diag)-25, Clear Memory Mode.>

B: INSPECTION

Before performing diagnostics, check the following item which might affect engine problems.

1. BATTERY

1) Measure the battery voltage and specific gravity of the electrolyte.

Standard voltage: 12 V

Specific gravity: 1.260 or more

2) Check the condition of the main and other fuses, and harnesses and connectors. Also check for proper grounding.

2. ENGINE GROUND

Make sure that the engine ground terminal has no contamination, corrosion or looseness and is properly connected to the engine.

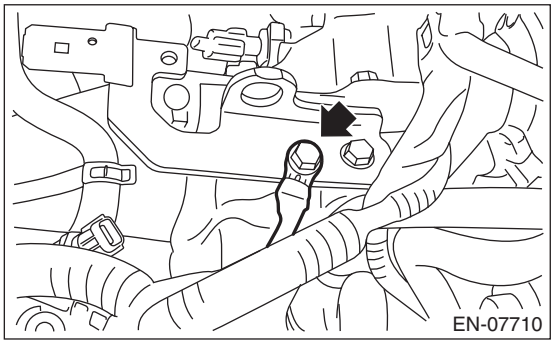

C: NOTE

- The on-board diagnostic (OBD) system detects and indicates a fault in various inputs and outputs of the complex electronic control. Malfunction indicator light in the combination meter indicates occurrence of a fault or trouble.
- Further, against such a failure of sensors as may disable the drive, the fail-safe function is provided to ensure the minimal drivability.
- The OBD system incorporated with the vehicles within this type of engine complies with OBD-II regulations. The OBD system monitors the components and the system malfunction listed in “Engine Section” which affects on emissions.
- When the system decides that a malfunction occurs, malfunction indicator light illuminates. At the same time of the malfunction indicator light illumination or blinking, a DTC and a freeze frame engine conditions are stored into on-board computer.
- The OBD system stores freeze frame engine condition data (engine load, engine coolant temperature, fuel trim, engine speed and vehicle speed, etc.) into on-board computer when it detects a malfunction.
- Freeze frame engine condition data are stored until the DTCs are cleared. However when such malfunctions as fuel trim fault and misfire are detected with the freeze frame engine condition data stored, they are rewritten into those related to the fuel trim fault and misfire.
- When the malfunction does not occur again for three consecutive driving cycles*, malfunction indicator light is turned off, but DTC remains at on-board computer.

*: One driving cycle means the period between the ignition switch ON and the ignition switch OFF after driving.

- When performing diagnosis, connect the Subaru Select Monitor or general scan tool to the vehicle.

D: PREPARATION TOOL

ILLUSTRATION	TOOL NUMBER	DESCRIPTION	REMARKS
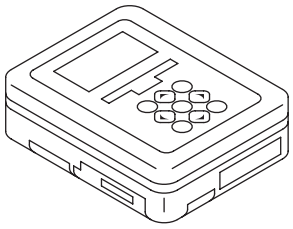 ST1B022XU0	1B022XU0	SUBARU SELECT MONITOR III KIT	Used for troubleshooting the electrical system.
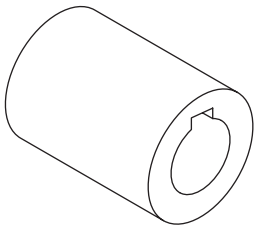 ST-499987500	499987500	CRANKSHAFT SOCKET	Used for rotating crankshaft.

4. Electrical Component Location

A: LOCATION

1. CONTROL MODULE

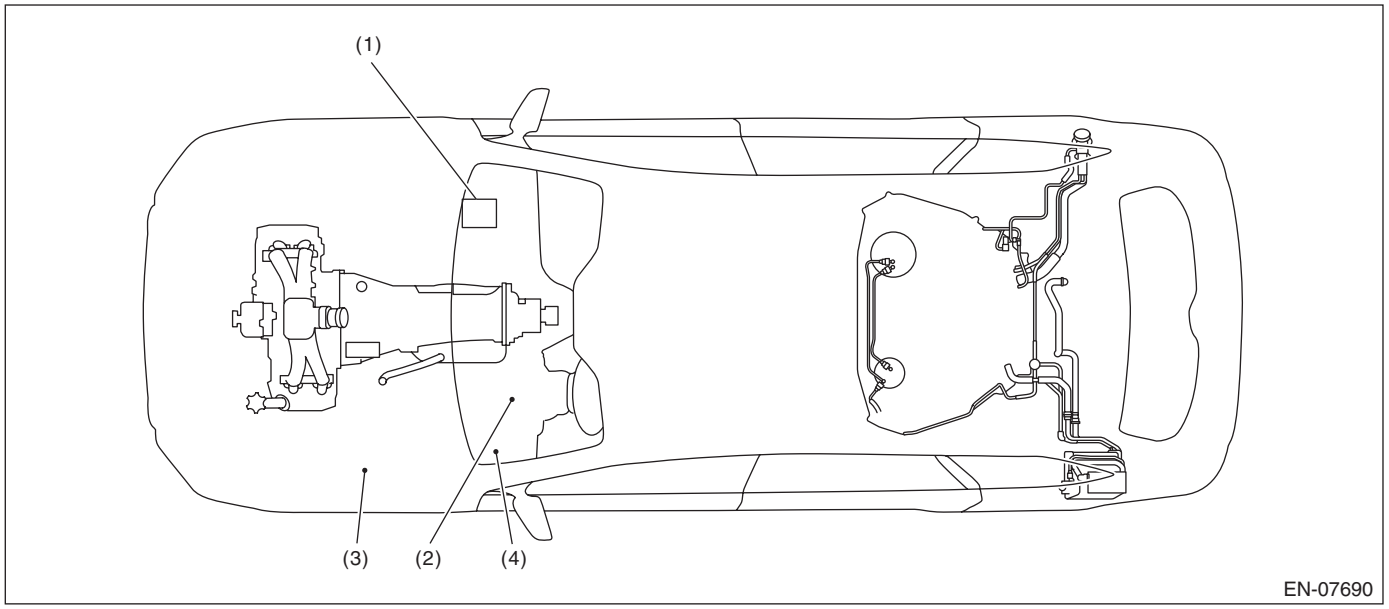

(1) Engine control module (ECM)
(2) Malfunction indicator light
(3) Delivery (test) mode fuse
(4) Data link connector

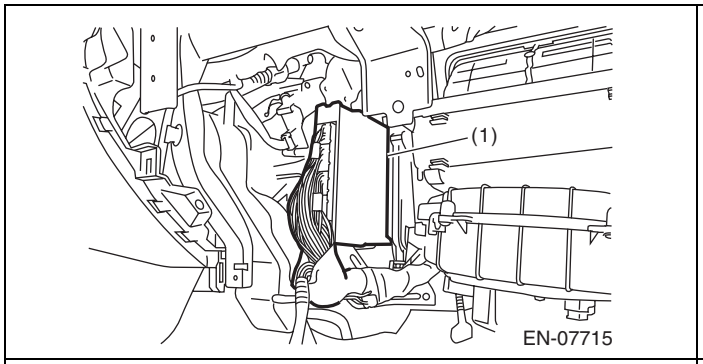

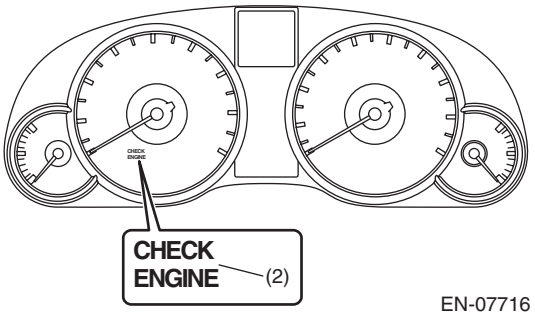

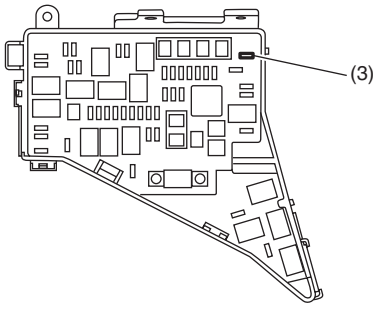

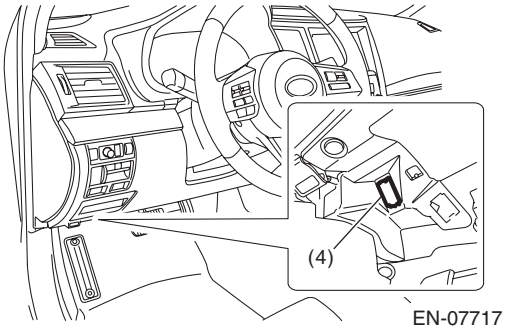

2. SENSOR

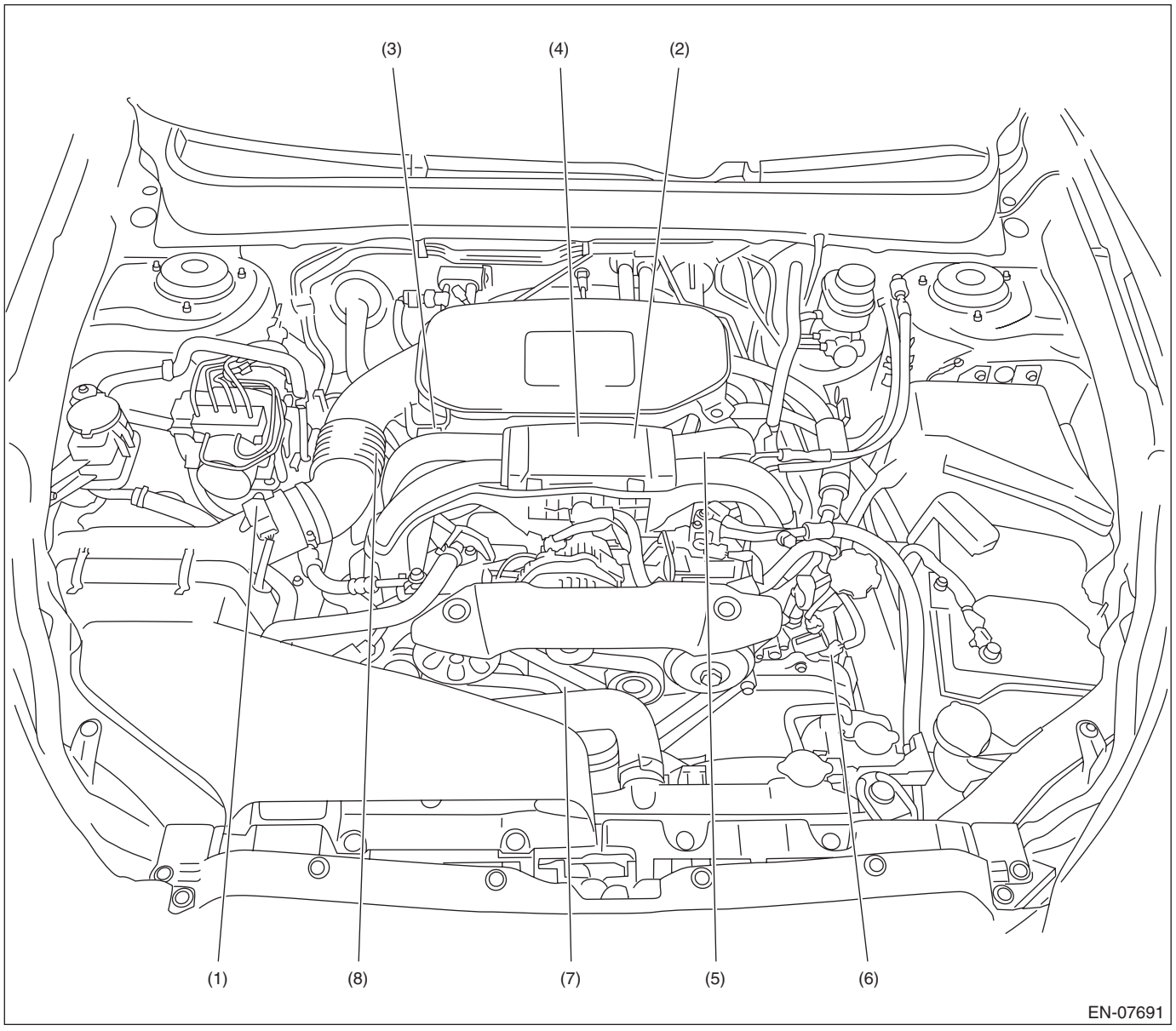

(1) Mass air flow and intake air temperature sensor
(2) Manifold absolute pressure sensor
(3) Engine coolant temperature sensor
(4) Electronic throttle control
(5) Knock sensor
(6) Camshaft position sensor
(7) Crankshaft position sensor
(8) Engine oil temperature sensor

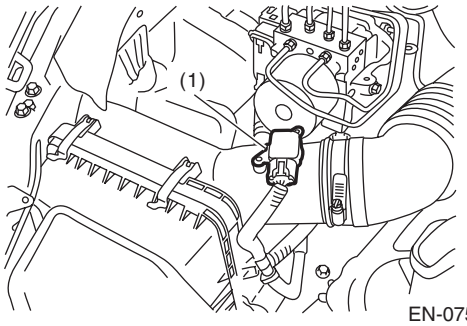

EN-07595

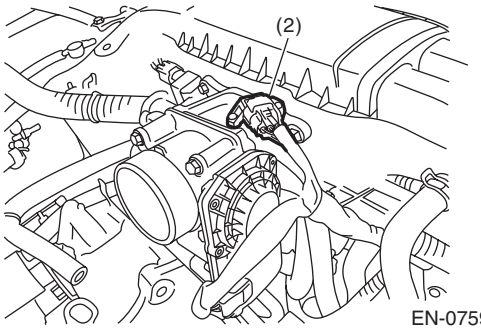

EN-07596

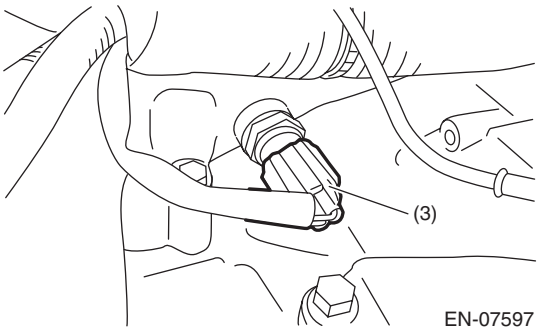

EN-07597

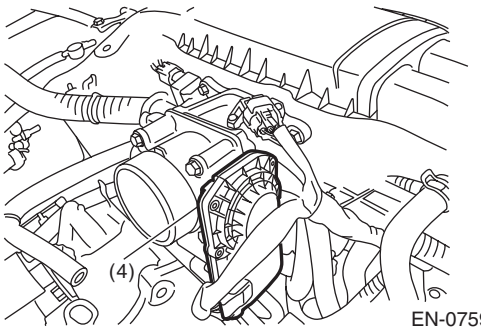

EN-07598

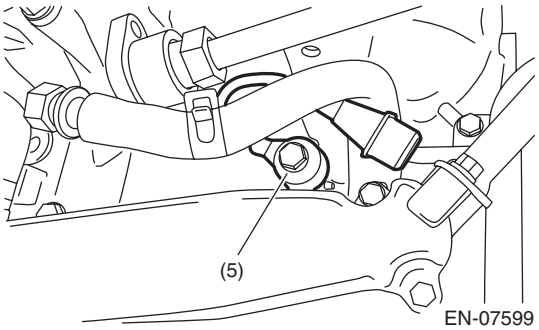

EN-07599

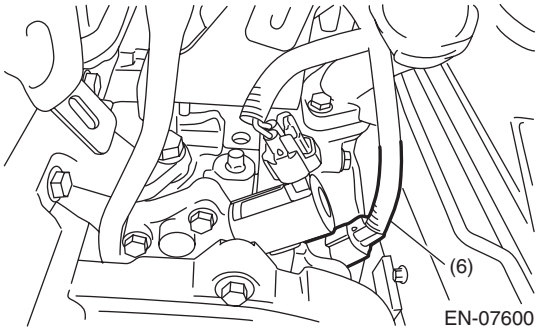

EN-07600

EN-07601

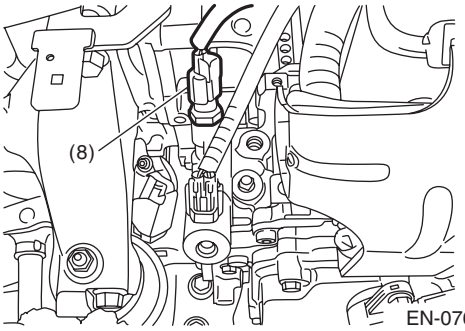

EN-07602

Electrical Component Location

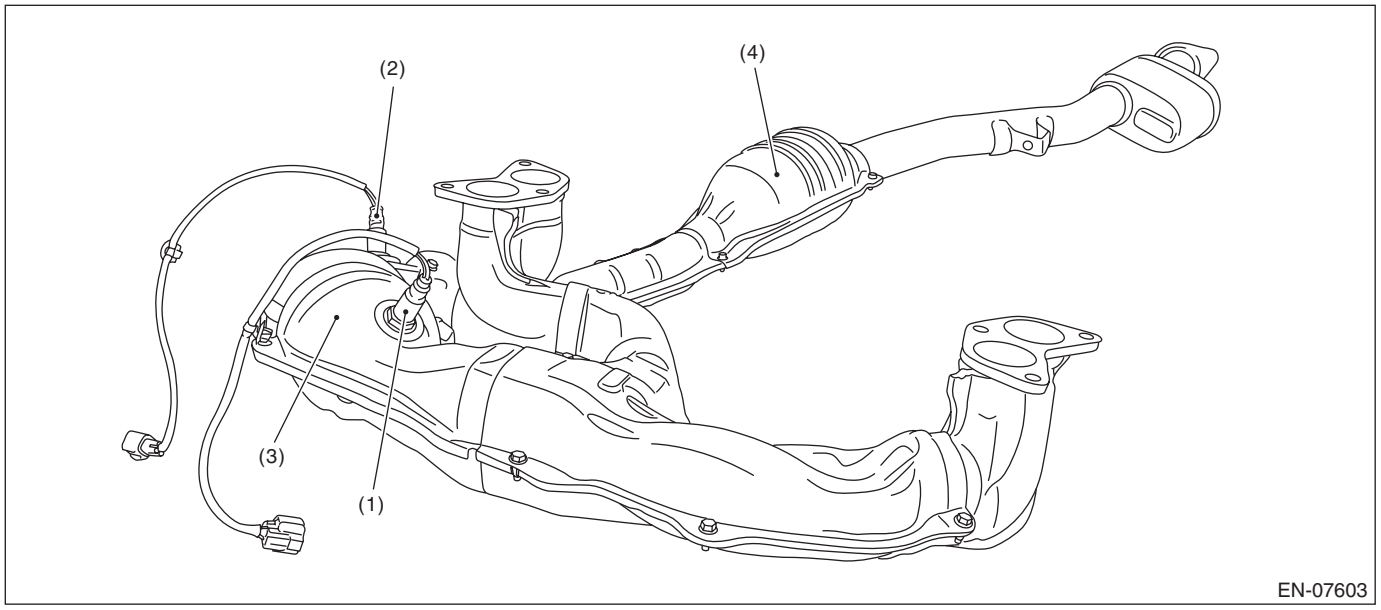

(1) Front oxygen (A/F) sensor
(2) Rear oxygen sensor
(3) Front catalytic converter
(4) Rear catalytic converter

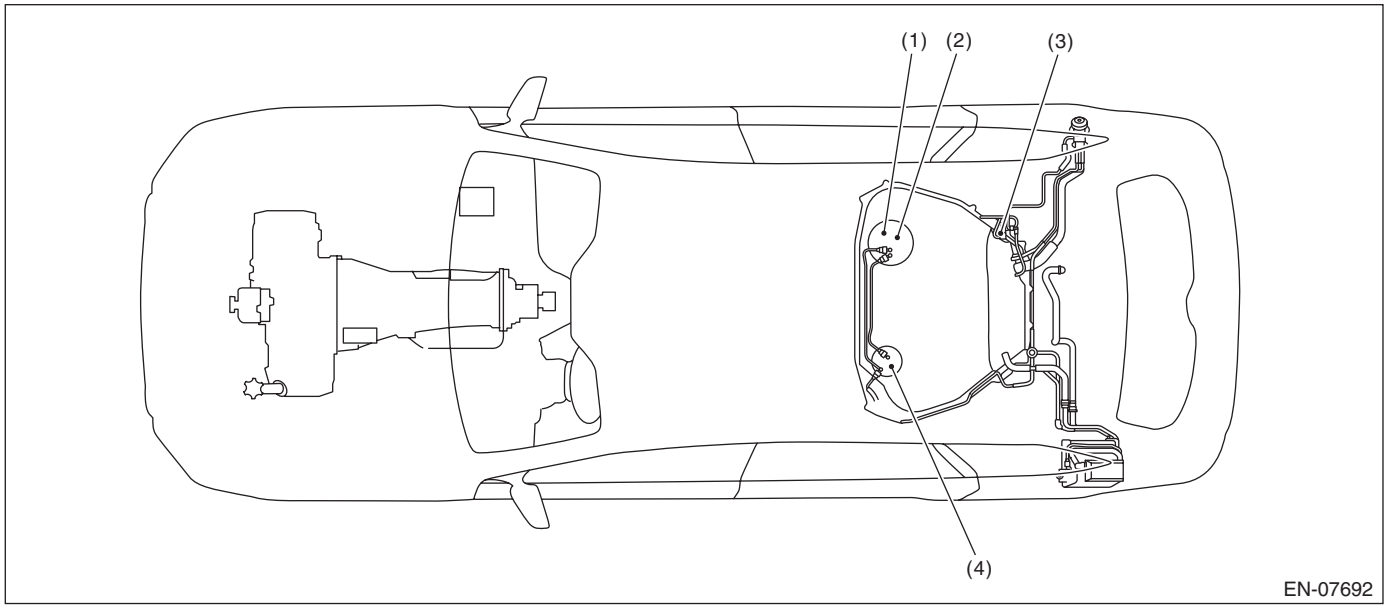

(1) Fuel level sensor
(2) Fuel temperature sensor
(3) Fuel tank pressure sensor
(4) Fuel sub level sensor

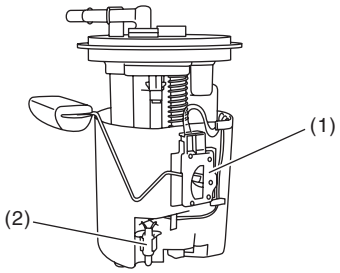

EN-07718

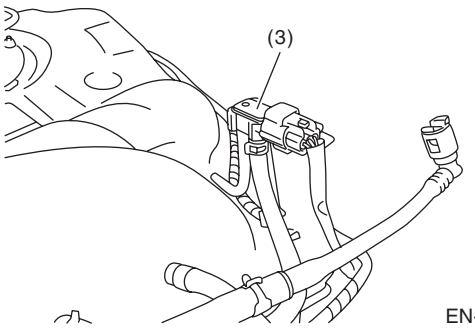

EN-07719

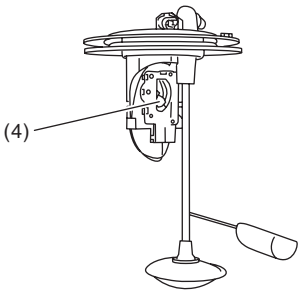

EN-07720

3. SOLENOID VALVE, ACTUATOR, EMISSION CONTROL SYSTEM PARTS AND IGNITION SYSTEM PARTS

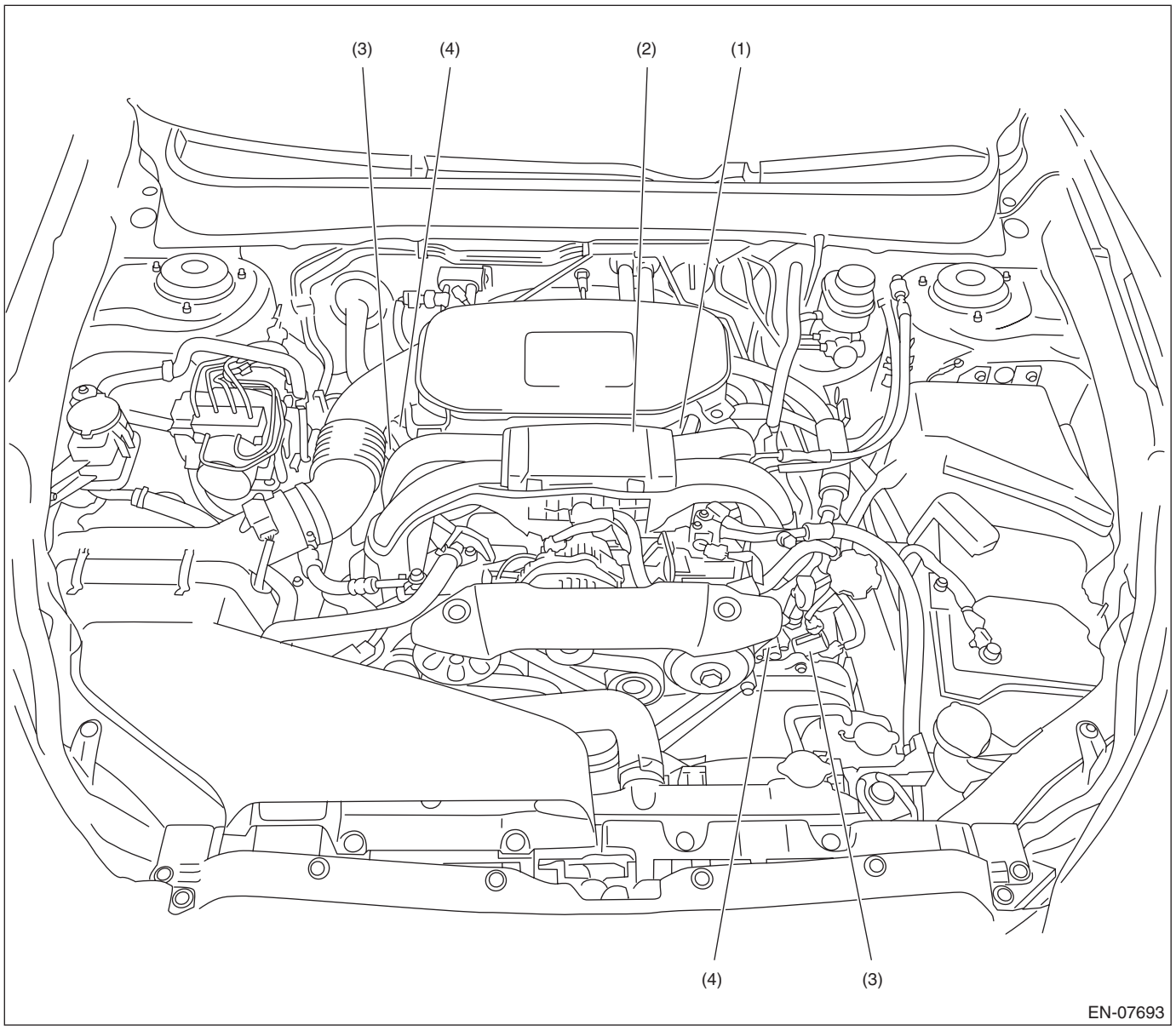

(1) Purge control solenoid valve
(2) EGR control valve
(3) Oil switching solenoid valve
(4) Variable valve lift diagnosis oil pressure switch

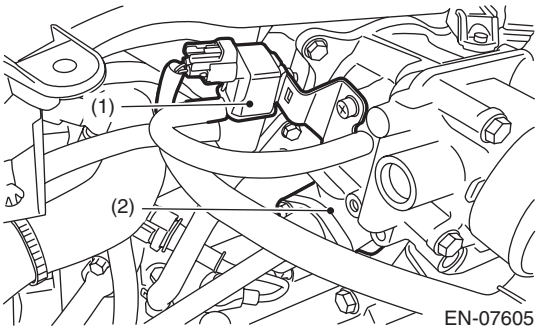

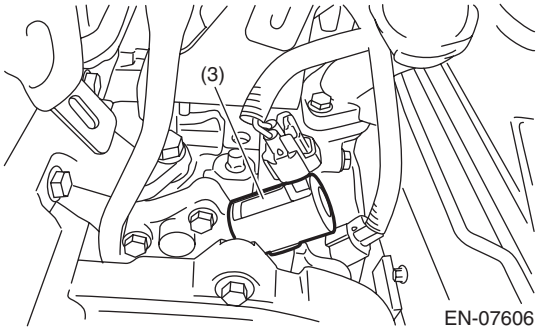

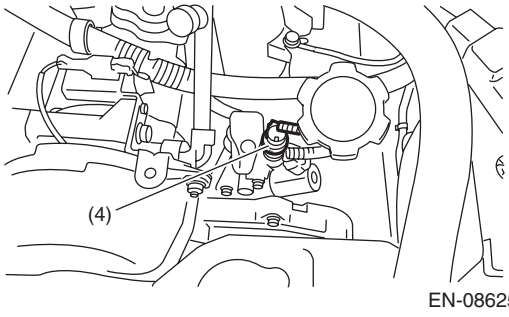

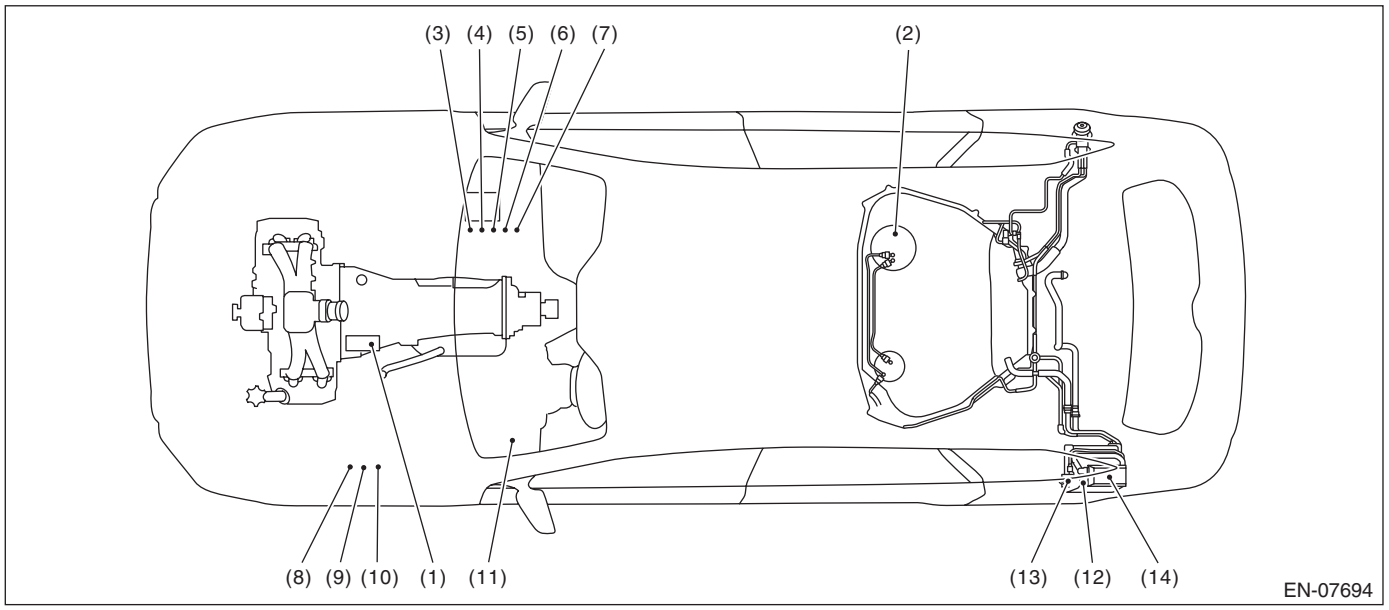

(1) Starter
(2) Fuel pump
(3) Main relay
(4) IG relay
(5) A/F, oxygen sensor relay
(6) Electronic throttle control relay
(7) Fuel pump relay
(8) Radiator main fan relay 1
(9) Radiator main fan relay 2
(10) Radiator sub fan relay
(11) Starter relay
(12) Canister
(13) Drain valve
(14) Drain filter

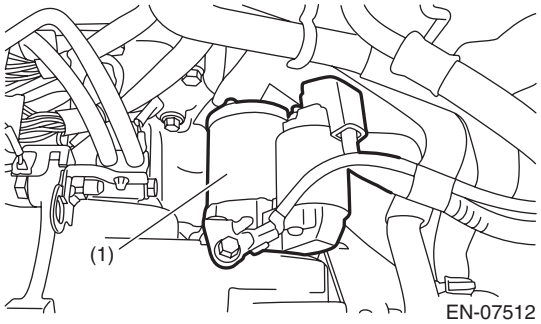

EN-07512

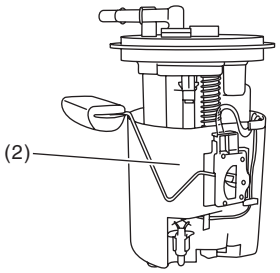

EN-07752

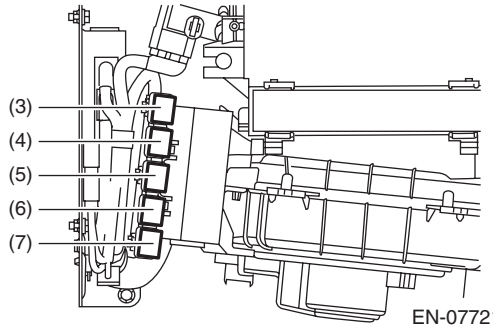

EN-07721

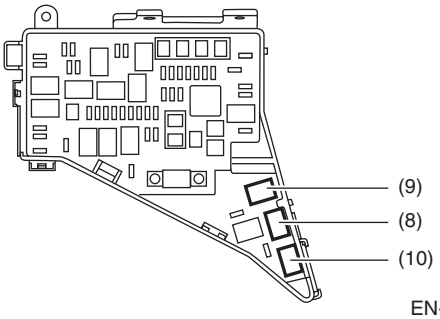

EN-07514

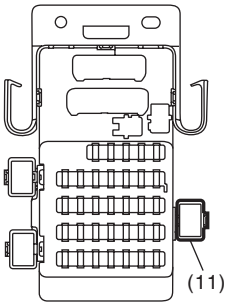

EN-07722

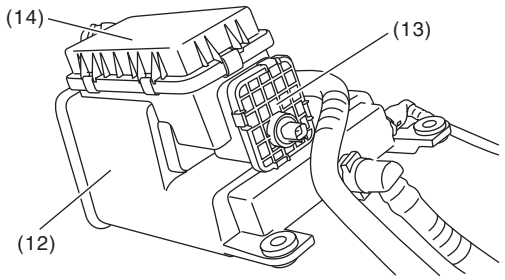

EN-07723

4. TRANSMISSION

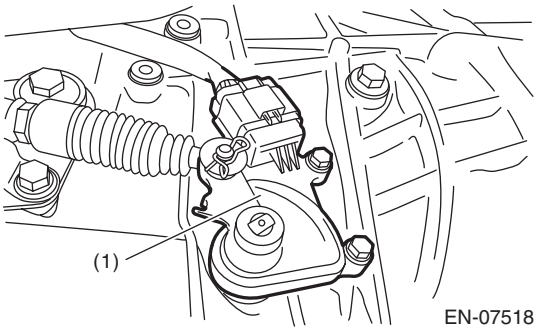

EN-07518

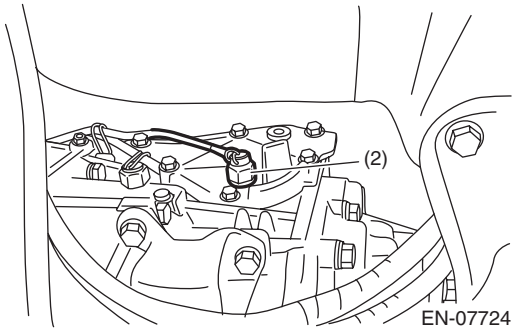

EN-07724

(1) Inhibitor switch (CVT model)
(2) Neutral position switch (MT model)

5. Engine Control Module (ECM) I/O Signal

A: ELECTRICAL SPECIFICATION

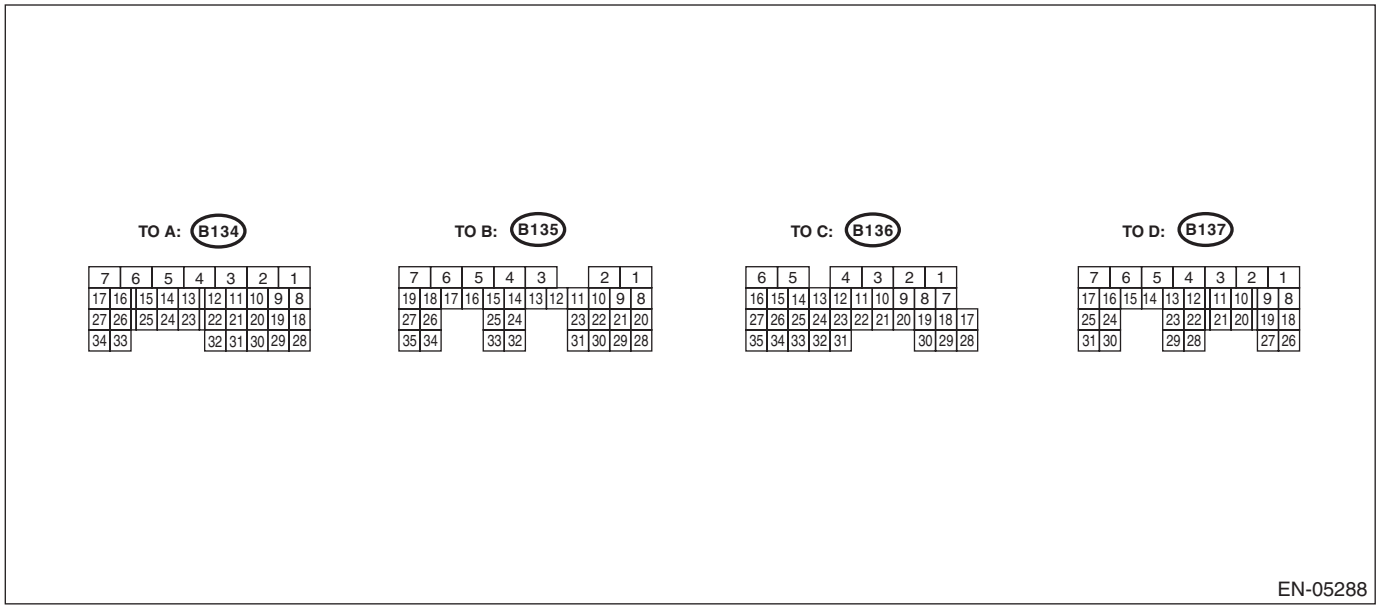

Description		Connector No.	Terminal No.	Signal (V)		Note
				Ignition SW ON (engine OFF)	Engine ON (idling)	
Crankshaft position sensor	Signal (+)	B137	17	0	–7 — +7	Waveform
	Signal (–)	B137	25	0	0	—
	Shield	B137	31	0	0	—
Camshaft position sensor	Signal (+)	B137	24	0	–7 — +7	Waveform
	Signal (–)	B137	30	0	0	—
	Shield	B137	31	0	0	—
Electronic throttle control	Main	B134	18	Approx. 0.9 (After engine is warmed up.)	Approx. 0.6 — 0.7 (After engine is warmed up.)	Fully closed: Approx. 0.6 Fully open: Approx. 4.0
	Sub	B134	28	Approx. 1.7 (After engine is warmed up.)	Approx. 1.5 — 1.6 (After engine is warmed up.)	Fully closed: Approx. 1.5 Fully open: Approx. 4.2
	Power supply	B134	19	5	5	—
	Ground (sensor)	B134	29	0	0	—
Electronic throttle control motor (+)		B134	2	Duty waveform	Duty waveform	Drive frequency: 500 Hz
Electronic throttle control motor (–)		B134	1	Duty waveform	Duty waveform	Drive frequency: 500 Hz
Electronic throttle control motor power supply		B135	7	10 — 13	12 — 14	—
Electronic throttle control motor relay		B135	17	ON: 0 OFF: 10 — 13	ON: 0 OFF: 12 — 14	When ignition switch is turned to ON: ON

Engine Control Module (ECM) I/O Signal

Description		Connector No.	Terminal No.	Signal (V)		Note
				Ignition SW ON (engine OFF)	Engine ON (idling)	
Accelerator pedal position sensor	Main sensor signal	B135	23	Fully closed: 1.0 Fully opened: 3.5	Fully closed: 1.0 Fully opened: 3.5	—
	Main power supply	B135	21	5	5	—
	Ground (Main sensor)	B135	29	0	0	—
	Sub sensor signal	B135	31	Fully closed: 1.0 Fully opened: 3.5	Fully closed: 1.0 Fully opened: 3.5	—
	Sub power supply	B135	22	5	5	—
	Ground (Sub sensor)	B135	30	0	0	—
Front oxygen (A/F) sensor	Signal (+)	B136	19	—	2.7 — 2.9	—
	Signal (–)	B136	18	—	2.35 — 2.25	—
	Shield	B136	9	0	0	—
Rear oxygen sensor	Signal	B136	20	0	0 — 0.9	—
	Shield	B136	9	0	0	—
Front oxygen (A/F) sensor heater	Signal 1	B136	6	10 — 13	1 — 14	Duty waveform
	Signal 2	B136	5	10 — 13	1 — 14	Duty waveform
Rear oxygen sensor heater signal		B135	6	10 — 13	1 — 14	Duty waveform
Engine coolant temperature sensor		B137	22	1.0 — 1.4	1.0 — 1.4	After engine is warmed up.
Starter switch		B136	16	0	0	CVT model Cranking: 8 — 14 MT model Cranking with the clutch pedal pressed: 8 — 14
Starter relay control		B135	26	ON: 0.5 or less OFF: 10 — 13	ON: 0.5 or less OFF: 12 — 14	—
Ignition switch		B136	30	10 — 13	12 — 14	—
Neutral position switch		B136	35	ON: 0 OFF: 12±0.5		CVT model: Switch is ON when select lever is in “P” range or “N” range. MT model: Switch is ON when the shift lever is in neutral.
Delivery (test) mode switch		B136	34	10 — 13	13 — 14	When fuse is installed: 0
Knock sensor	Signal	B137	2	2.5	2.5	—
	Shield	B137	8	0	0	—
Back-up power supply		B136	2	10 — 13	12 — 14	Ignition switch “OFF”: 10 — 13
Control module power supply		B137	7	10 — 13	12 — 14	—
		B136	1	10 — 13	12 — 14	—
Ignition control	#1	B134	21	0	0 or 5	Waveform
	#2	B134	22	0	0 or 5	Waveform
	#3	B134	31	0	0 or 5	Waveform
	#4	B134	32	0	0 or 5	Waveform

Description		Connector No.	Terminal No.	Signal (V)		Note
				Ignition SW ON (engine OFF)	Engine ON (idling)	
Fuel injector	#1	B134	10	10 — 13	1 — 14	Waveform
	#2	B134	11	10 — 13	1 — 14	Waveform
	#3	B134	12	10 — 13	1 — 14	Waveform
	#4	B134	13	10 — 13	1 — 14	Waveform
Fuel pump relay control		B136	33	ON: 0.5 or less OFF: 10 — 13	ON: 0.5 or less OFF: 12 — 14	—
Main fan relay control		B135	12	ON: 0.5 or less OFF: 10 — 13	ON: 0.5 or less OFF: 12 — 14	—
Sub fan relay control		B135	11	ON: 0.5 or less OFF: 10 — 13	ON: 0.5 or less OFF: 12 — 14	—
Self-shutoff control		B135	13	0.5 or less	0.5 or less	—
Malfunction indicator light		B135	33	—	—	C6 model Light “ON”: 1 or less Light “OFF”: 10 — 14
Engine speed output		B135	15	—	0 — 13 or more	Waveform
Engine oil temperature sensor signal		B137	21	1.0 — 1.4	1.0 — 1.4	After engine is warmed up.
Purge control solenoid valve		B137	6	ON: 1 or less OFF: 10 — 13	ON: 1 or less OFF: 12 — 14	Duty waveform
EGR control valve	Signal 1	B134	8	0 or 10 — 13	0 or 12 — 14	Waveform
	Signal 2	B134	9	0 or 10 — 13	0 or 12 — 14	Waveform
	Signal 3	B134	20	0 or 10 — 13	0 or 12 — 14	Waveform
	Signal 4	B134	30	0 or 10 — 13	0 or 12 — 14	Waveform
Power steering oil pressure switch		B137	28	ON: 1 or less OFF: 10 — 13	ON: 1 or less OFF: 12 — 14	—
Oil level switch		B136	26	0	0	Oil level LOW: 10 — 14
Oil switching solenoid valve RH	Signal (+)	B134	7	0	Duty waveform	Drive frequency: 300 Hz
	Signal (–)	B134	15	0	0	—
Oil switching solenoid valve LH	Signal (+)	B134	5	0	Duty waveform	Drive frequency: 300 Hz
	Signal (–)	B134	14	0	0	—
Variable valve lift diagnosis oil pressure switch RH		B137	14	0	0	—
Variable valve lift diagnosis oil pressure switch LH		B137	13	0	0	—
Manifold absolute pressure sensor		B137	20	3.4 — 3.8	1.4 — 1.8	—
Air flow sensor	Signal	B136	22	—	0.3 — 4.5	—
	Shield	B136	10	0	0	—
	Ground	B136	11	0	0	—
Intake air temperature sensor signal		B136	31	0.3 — 4.6	0.3 — 4.6	—
Immobilizer communication		B135	25	1 or less ←→ 4 or more	1 or less ←→ 4 or more	—
SSM communication		B135	14	1 or less ←→ 4 or more	1 or less ←→ 4 or more	—
Sensor power supply		B134	19	5	5	—
		B135	22	5	5	—

Engine Control Module (ECM) I/O Signal

Description		Connector No.	Terminal No.	Signal (V)		Note
				Ignition SW ON (engine OFF)	Engine ON (idling)	
Ground	Sensor	B134	29	0	0	—
		B135	30	0	0	—
	Engine 1	B134	6	0	0	—
	Engine 2	B134	4	0	0	—
	Engine 3	B134	3	0	0	—
	Engine 4	B137	1	0	0	—
	Engine 5	B137	3	0	0	—
	Body	B136	4	0	0	—
Clutch switch		B135	9	When clutch pedal is depressed: 0 When clutch pedal is released: 10 — 13	When clutch pedal is depressed: 0 When clutch pedal is released: 12 — 14	—
Brake switch 1 (brake switch)		B136	15	When brake pedal is depressed: 0 When brake pedal is released: 10 — 13	When brake pedal is depressed: 0 When brake pedal is released: 12 — 14	—
Brake switch 2 (stop light switch)		B136	3	When brake pedal is depressed: 10 — 13 When brake pedal is released: 0	When brake pedal is depressed: 12 — 14 When brake pedal is released: 0	—
Cruise control main switch		B136	13	ON: 0 OFF: 5	ON: 0 OFF: 5	—
Cruise control command switch		B136	12	When operating nothing: 3.5 — 4.5 When operating RES/ACC: 2.5 — 3.5 When operating SET/COAST: 0.5 — 1.5 When operating CANCEL: 0 — 0.5	When operating nothing: 3.5 — 4.5 When operating RES/ACC: 2.5 — 3.5 When operating SET/COAST: 0.5 — 1.5 When operating CANCEL: 0 — 0.5	—
Fuel temperature sensor		B136	23	2.5 — 3.8	2.5 — 3.8	Ambient temperature: 25°C (77°F)
Fuel tank pressure sensor		B136	21	2.3 — 2.7	2.3 — 2.7	Value after removing fuel filler cap and installing again
Drain valve		B135	4	ON: 1 or less OFF: 10 — 13	ON: 1 or less OFF: 12 — 14	—
CAN communication	(Hi)	B136	17	2.5 — 3.5	2.5 — 3.5	Waveform
	(Lo)	B136	28	1.5 — 2.5	1.5 — 2.5	Waveform

Input/output name:

- Crankshaft position sensor
- Camshaft position sensor

Measuring condition:

- After warming-up
- At idling

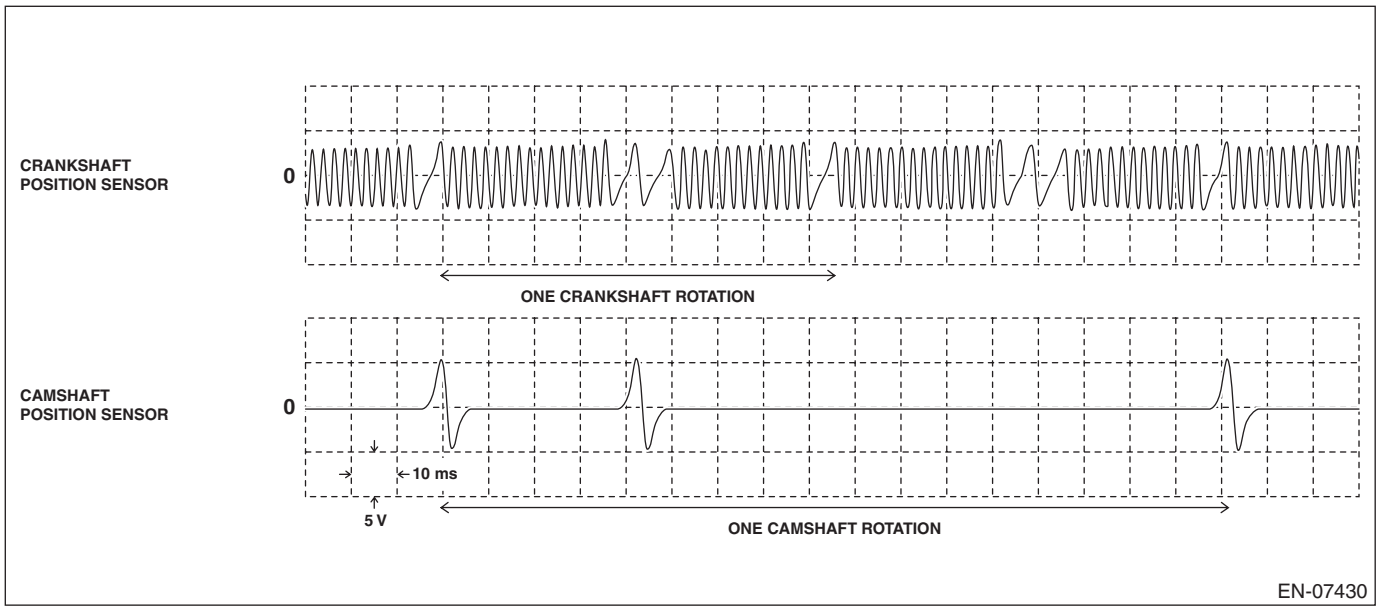

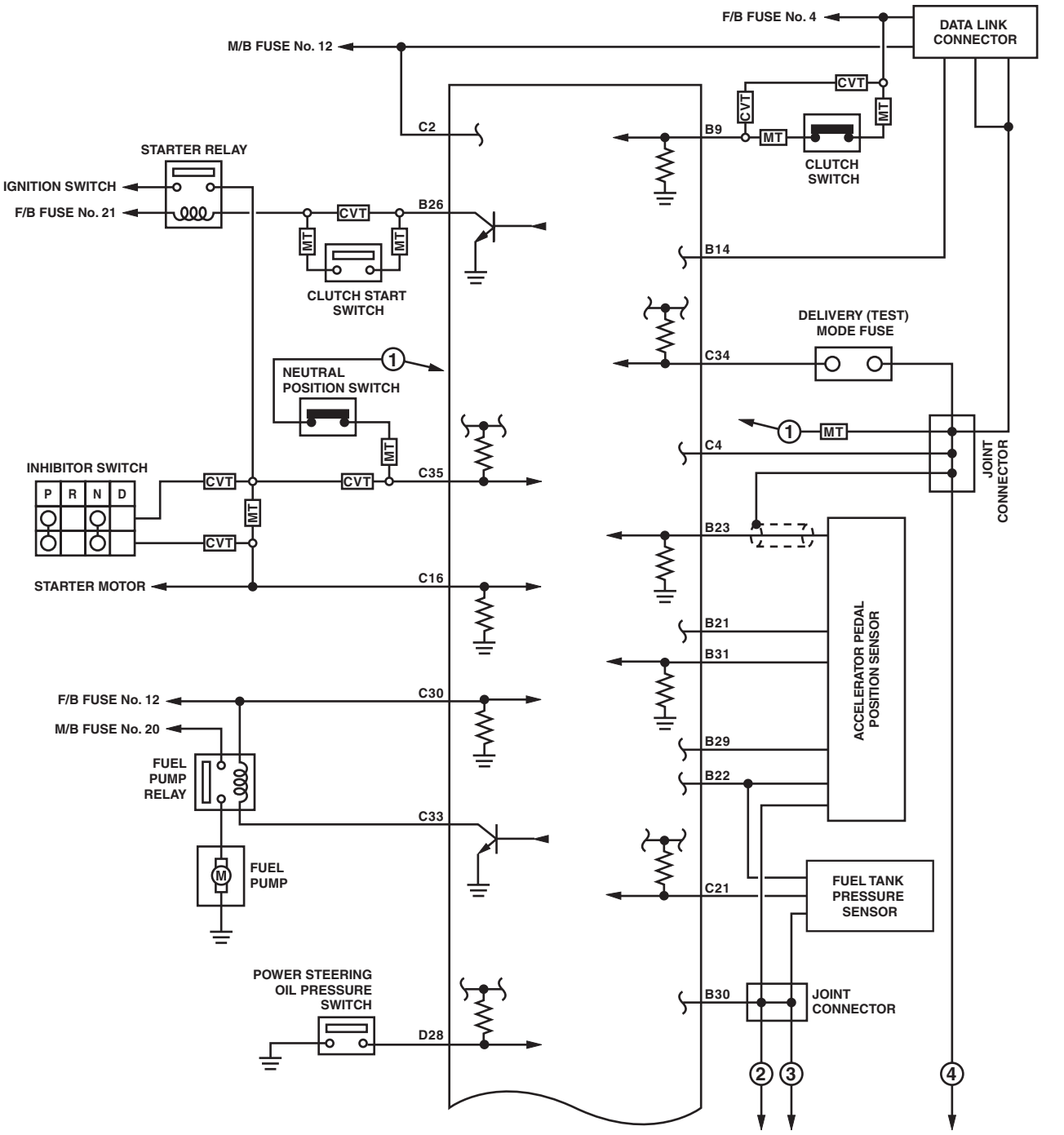
F/B FUSE No. 4
DATA LINK CONNECTOR
M/B FUSE No. 12
CVT
MT
C2
B9
CLUTCH SWITCH
STARTER RELAY
IGNITION SWITCH
F/B FUSE No. 21
B26
CLUTCH START SWITCH
B14
DELIVERY (TEST) MODE FUSE
C34
NEUTRAL POSITION SWITCH
C4
JOINT CONNECTOR
INHIBITOR SWITCH
P R N D
C35
B23
STARTER MOTOR
C16
B21
B31
ACCELERATOR PEDAL POSITION SENSOR
F/B FUSE No. 12
C30
M/B FUSE No. 20
FUEL PUMP RELAY
B29
B22
C33
FUEL PUMP
C21
FUEL TANK PRESSURE SENSOR
POWER STEERING OIL PRESSURE SWITCH
D28
B30
JOINT CONNECTOR
EN-08626

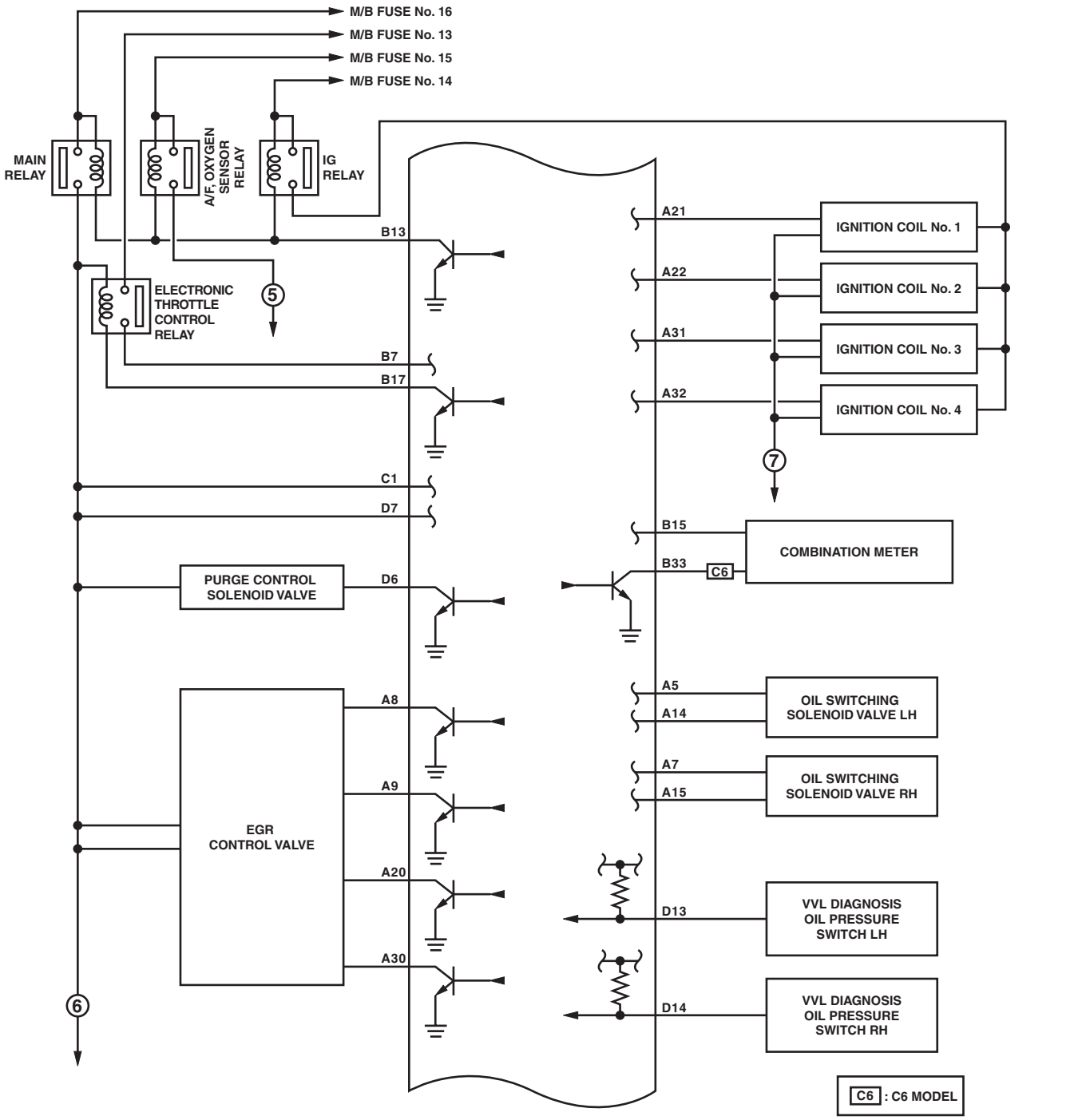
M/B FUSE No. 16
M/B FUSE No. 13
M/B FUSE No. 15
M/B FUSE No. 14
MAIN RELAY
A/F, OXYGEN SENSOR RELAY
IG RELAY
ELECTRONIC THROTTLE CONTROL RELAY
B13
B7
B17
C1
D7
PURGE CONTROL SOLENOID VALVE
D6
EGR CONTROL VALVE
A8
A9
A20
A30
A21
A22
A31
A32
IGNITION COIL No. 1
IGNITION COIL No. 2
IGNITION COIL No. 3
IGNITION COIL No. 4
B15
B33
C6
COMBINATION METER
A5
A14
OIL SWITCHING SOLENOID VALVE LH
A7
A15
OIL SWITCHING SOLENOID VALVE RH
D13
VVL DIAGNOSIS OIL PRESSURE SWITCH LH
D14
VVL DIAGNOSIS OIL PRESSURE SWITCH RH
5
6
7
C6 : C6 MODEL

EN-09178

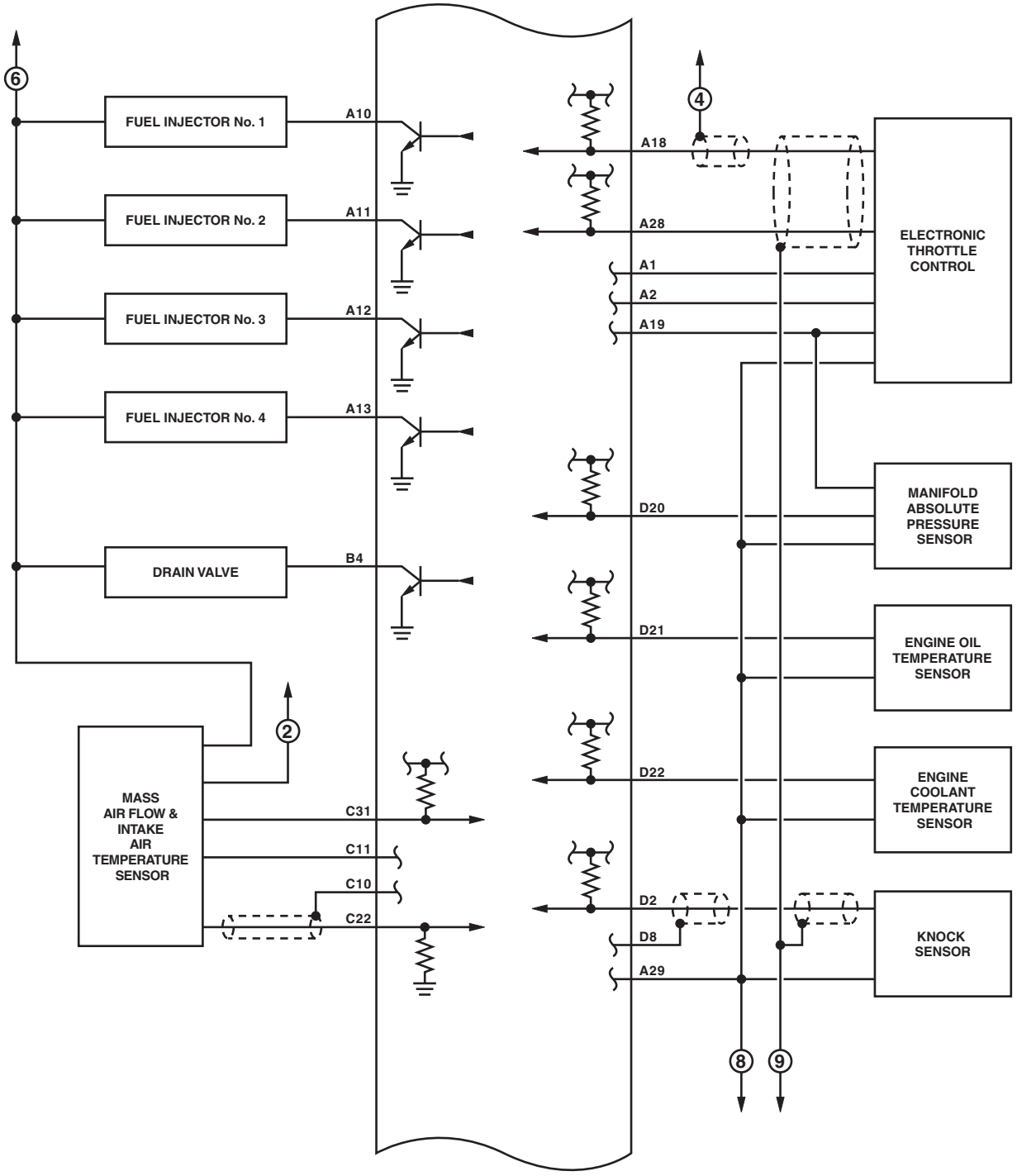
6
FUEL INJECTOR No. 1
FUEL INJECTOR No. 2
FUEL INJECTOR No. 3
FUEL INJECTOR No. 4
DRAIN VALVE
A10
A11
A12
A13
B4
2
MASS AIR FLOW & INTAKE AIR TEMPERATURE SENSOR
C31
C11
C10
C22
4
A18
A28
A1
A2
A19
ELECTRONIC THROTTLE CONTROL
D20
MANIFOLD ABSOLUTE PRESSURE SENSOR
D21
ENGINE OIL TEMPERATURE SENSOR
D22
ENGINE COOLANT TEMPERATURE SENSOR
D2
D8
A29
KNOCK SENSOR
8
9

EN-09179

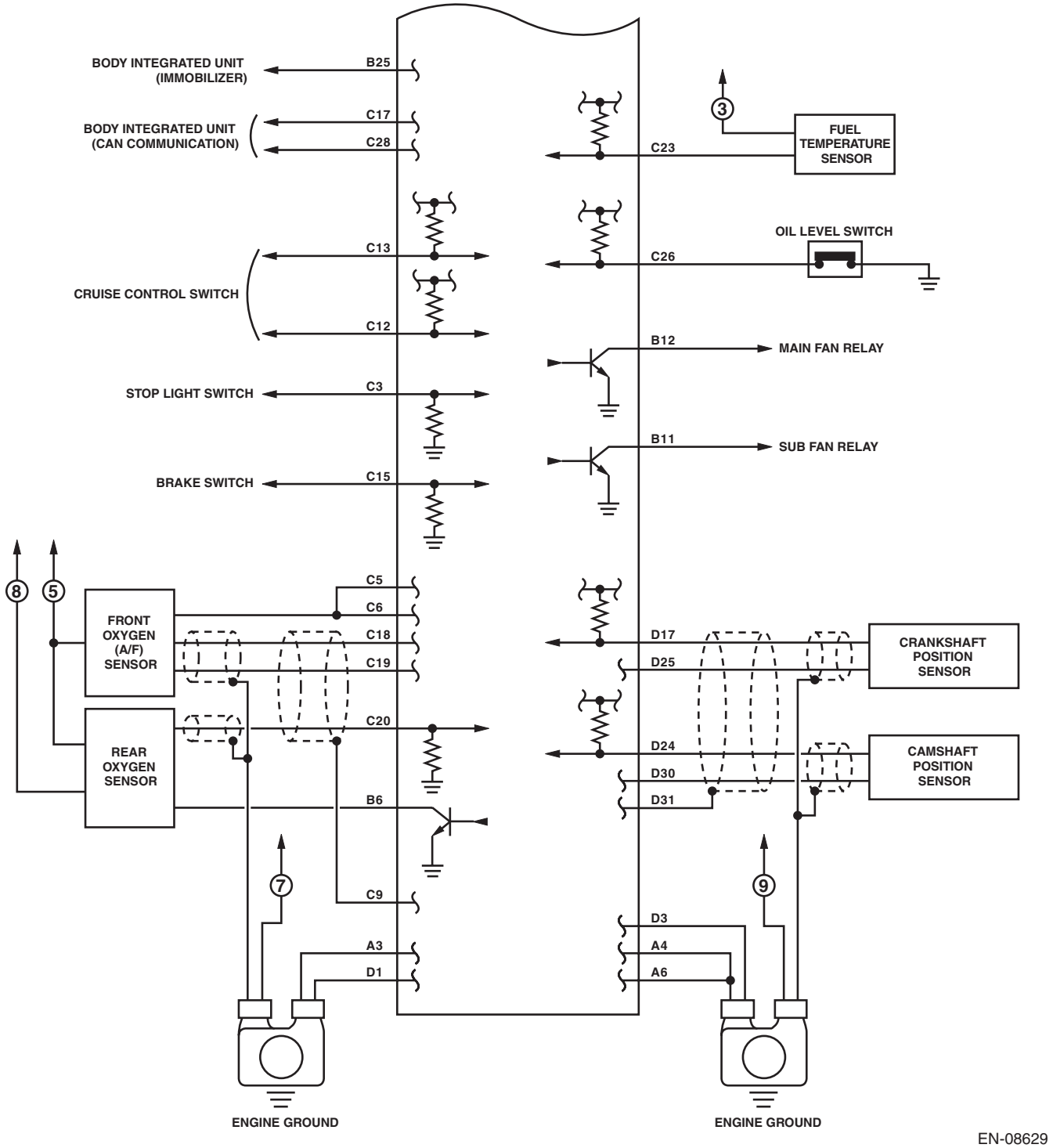
BODY INTEGRATED UNIT (IMMOBILIZER)
B25
BODY INTEGRATED UNIT (CAN COMMUNICATION)
C17
C28
C13
CRUISE CONTROL SWITCH
C12
STOP LIGHT SWITCH
C3
BRAKE SWITCH
C15
8
5
FRONT OXYGEN (A/F) SENSOR
REAR OXYGEN SENSOR
C5
C6
C18
C19
C20
B6
7
C9
A3
D1
ENGINE GROUND
3
FUEL TEMPERATURE SENSOR
C23
OIL LEVEL SWITCH
C26
B12
MAIN FAN RELAY
B11
SUB FAN RELAY
D17
D25
CRANKSHAFT POSITION SENSOR
D24
D30
D31
CAMSHAFT POSITION SENSOR
9
D3
A4
A6
ENGINE GROUND

EN-08629

6. Engine Condition Data

A: ELECTRICAL SPECIFICATION

Contents	Specifications
Engine load	17.6 — 40.5 (%): Idling
	14.7 — 29.8 (%): 2,500 rpm racing

Measuring condition:
- After engine is warmed up.
- Set the select lever in “P” range or “N” range, or the shift lever in neutral.
- Turn the A/C to OFF.
- Turn all the accessory switches to OFF.

7. Data Link Connector

A: NOTE

This connector is used for Subaru Select Monitor.

CAUTION:
Do not connect any scan tools other than Subaru Select Monitor or general scan tool because the circuit for Subaru Select Monitor may be damaged.

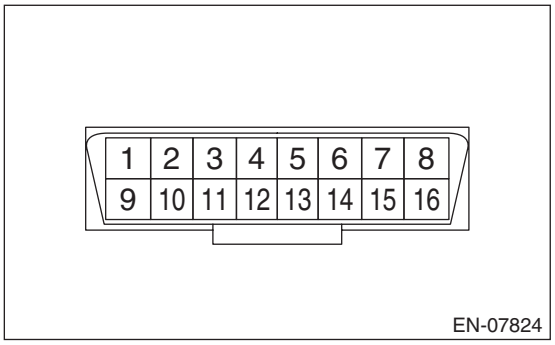

Terminal No.	Contents	Terminal No.	Contents
1	Blank	9	Blank
2	Blank	10	Blank
3	Blank	11	Blank
4	Ground	12	Blank
5	Ground	13	Blank
6	CAN communication (Hi)	14	CAN communication (Lo)
7	Subaru Select Monitor signal	15	Blank
8	Blank	16	Power supply

8. General Scan Tool

A: OPERATION

1. HOW TO USE GENERAL SCAN TOOL

1) Prepare a scan tool (general scan tool) required by SAE J1978.
2) Connect the general scan tool to data link connector located in the lower portion of the instrument panel (on the driver's side).

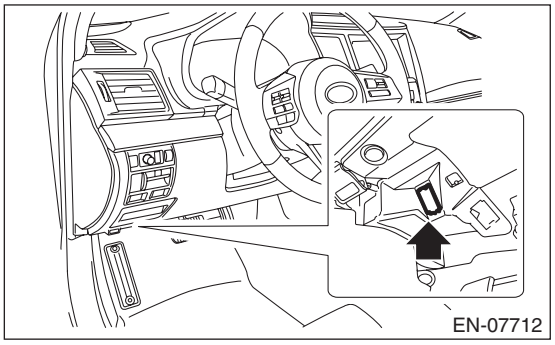

3) Using the general scan tool, call up each data. General scan tool functions consist of:
   (1) MODE $01: Current powertrain diagnostic data
   (2) MODE $02: Powertrain freeze frame data
   (3) MODE $03: Emission-related powertrain DTC
   (4) MODE $04: Clear/Reset emission-related diagnostic information
   (5) MODE $06: Request on-board monitoring test results for intermittently monitored systems
   (6) MODE $07: Request on-board monitoring test results for continuously monitored systems
   (7) MODE $09: Request vehicle information
4) Read out the data according to repair procedures. (For detailed operation procedure, refer to the general scan tool operation manual.)

NOTE:
For details concerning DTC, refer to "List of Diagnostic Trouble Code (DTC)". <Ref. to EN(H4SO)(diag)-78, List of Diagnostic Trouble Code (DTC).>

2. MODE $01: (CURRENT POWERTRAIN DIAGNOSTIC DATA)

Refer to data denoting the current operating condition of analog input/output, digital input/output or the powertrain system.
A list of the support data and PID (Parameter Identification) codes are shown in the following table.

PID	Data	Unit of measure
$01	Number of emission-related powertrain DTC, and malfunction indicator light status and diagnosis support information	—
$03	Fuel system control status	—
$04	Calculated engine load value	%
$05	Engine coolant temperature	°C
$06	Short term fuel trim	%
$07	Long term fuel trim	%
$0B	Intake manifold absolute pressure	kPa
$0C	Engine speed	rpm
$0D	Vehicle speed	MPH
$0E	Ignition timing advance	°
$0F	Intake air temperature	°C
$10	Intake air amount	g/s
$11	Throttle valve opening angle	%
$13	Air fuel ratio sensor	—

PID	Data	Unit of measure
$15	Oxygen sensor output voltage and short term fuel trim associated with oxygen sensor (Bank 1 Sensor 2)	V and %
$1C	Supporting OBD system	—
$1F	Elapsed time after starting the engine	sec
$21	Travel distance after the malfunction indicator light illuminates	miles
$24	A/F value and A/F sensor output voltage (Bank 1 Sensor 1)	– and V
$2C	Target EGR	%
$2D	EGR deviation	%
$2E	Evaporative purge	%
$2F	Fuel level	%
$30	Number of warm ups after DTC clear	—
$31	Travel distance after DTC clear	miles
$32	Fuel tank pressure	Pa
$33	Barometric pressure	kPa
$34	A/F value and A/F sensor current (Bank 1 Sensor 1)	– and mA
$3C	Catalyst temperature #1	°C
$41	Diagnostic monitor of each drive cycle	—
$42	ECM power voltage	V
$43	Absolute load	%
$44	A/F target lambda	—
$45	Relative throttle opening angle	%
$46	Ambient temperature	°C
$47	Absolute throttle opening angle 2	%
$49	Absolute accelerator opening angle 1	%
$4A	Absolute accelerator opening angle 2	%
$4C	Target throttle opening angle	%
$4D	Engine operating time while malfunction indicator lit	min
$4E	Elapsed time after DTC clear	min
$51	Fuel used	—
$5A	Relative accelerator opening angle	%
$65	Neutral status	—

NOTE:
Refer to general scan tool manufacturer's operation manual to access current powertrain diagnostic data (MODE $01).

3. MODE $02 (POWERTRAIN FREEZE FRAME DATA)

Refer to data denoting the operating condition when trouble is detected by on-board diagnosis system. A list of the support data and PID (Parameter Identification) codes are shown in the following table.

PID	Data	Unit of measure
$02	DTC that caused the freeze frame data storage required by CARB	—
$03	Fuel system control status	—
$04	Calculated engine load value	%
$05	Engine coolant temperature	°C
$06	Short term fuel trim (Bank 1 Sensor 1)	%
$07	Long term fuel trim (Bank 1 Sensor 1)	%
$0B	Intake manifold absolute pressure	kPa
$0C	Engine speed	rpm
$0D	Vehicle speed	MPH
$0E	Ignition timing advance	°
$0F	Intake air temperature	°C
$10	Intake air amount	g/s
$11	Throttle valve opening angle	%
$13	Air fuel ratio sensor	—
$15	Oxygen sensor output voltage and short term fuel trim associated with oxygen sensor (Bank 1 Sensor 2)	V and %
$1C	Supporting OBD system	—
$1F	Elapsed time after starting the engine	sec
$2C	Target EGR	%
$2D	EGR deviation	%
$2E	Evaporative purge	%
$2F	Fuel level	%
$32	Fuel tank pressure	Pa
$33	Barometric pressure	kPa
$42	ECM power voltage	V
$43	Absolute load	%
$44	A/F target lambda	—
$45	Relative throttle opening angle	%
$46	Ambient temperature	°C
$47	Absolute throttle opening angle 2	%
$49	Absolute accelerator opening angle 1	%
$4A	Absolute accelerator opening angle 2	%
$4C	Target throttle opening angle	%
$65	Neutral status	—

NOTE:
Refer to general scan tool manufacturer's instruction manual to access freeze frame data (MODE $02).

4. MODE $03 (EMISSION-RELATED POWERTRAIN DTC)

Refer to "List of Diagnostic Trouble Code (DTC)" for information about data denoting emission-related powertrain DTC. <Ref. to EN(H4SO)(diag)-78, List of Diagnostic Trouble Code (DTC).>

5. MODE $04 (CLEAR/RESET EMISSION-RELATED DIAGNOSTIC INFORMATION)

Refer to the mode used to clear or reset emission-related diagnostic information (OBD-II trouble diagnostic information).

NOTE:
- Refer to general scan tool manufacturer's instruction manual to clear the emission-related diagnostic information (MODE $04).
- Initial diagnosis of electronic throttle control is performed after memory clearance. Wait for 10 seconds or more after turning the ignition switch to ON, and then start the engine.

6. MODE $06

Refer to diagnostic value of troubleshooting and data of test limit indicated on the support data bit sequence table. A list of the support data is shown in the following table.

OBDMID	TID	SID	Diagnostic item
$01	$84	$1E	A/F sensor range failure (Bank 1 Sensor 1)
	$85	$1E	
	$86	$20	A/F sensor response failure (Bank 1 Sensor 1)
	$91	$20	
	$92	$10	
	$A3	$20	
	$A4	$10	
	$AC	$10	
	$AD	$10	
	$AE	$10	
	$AF	$10	
	$CD	$20	
	$CF	$20	
$02	$07	$0B	Oxygen sensor drop failure (Bank 1 Sensor 2)
	$08	$0B	
	$A5	$0B	
	$05	$10	Oxygen sensor response failure (Bank 1 Sensor 2)
	$06	$10	
	$D1	$10	Oxygen sensor delay failure (Bank 1 Sensor 2)
	$D2	$01	
$21	$89	$20	Catalyst deterioration diagnosis (Bank 1)
$31	$8A	$FD	EGR system diagnosis
$39	$93	$FE	Evaporative emission control system (Cap off)
$3B	$94	$FE	Evaporative emission control system (0.04 inch leak)
	$95	$FE	
	$A6	$FE	
$3C	$96	$FE	Evaporative emission control system (0.02 inch leak)
	$C1	$FE	
	$C2	$FE	
	$C3	$FE	
	$C4	$FE	
	$C5	$FE	
	$C6	$35	
	$C7	$FE	
	$C8	$FE	
	$C9	$FE	
	$CA	$FE	
$3D	$98	$FE	Evaporative emission control system (Purge flow)

OBDMID	TID	SID	Diagnostic item
$41	$9B	$14	A/F sensor heater characteristics failure (Bank 1 Sensor 1)
$42	$A2	$24	Oxygen sensor heater characteristics failure (Bank 1 Sensor 2)
$A1	$0B	$24	Misfire monitoring (All cylinders)
	$0C	$24	
$A2	$0B	$24	Misfire monitoring (#1 cylinder)
	$0C	$24	
$A3	$0B	$24	Misfire monitoring (#2 cylinder)
	$0C	$24	
$A4	$0B	$24	Misfire monitoring (#3 cylinder)
	$0C	$24	
$A5	$0B	$24	Misfire monitoring (#4 cylinder)
	$0C	$24	

7. MODE $07

Refer to the data of DTC (pending code) for troubleshooting result about emission in the first time.

8. MODE $09

Refer to data of vehicle specification (V.I.N., calibration ID, diagnosis frequency etc.).

9. Subaru Select Monitor

A: OPERATION

1. HOW TO USE SUBARU SELECT MONITOR

NOTE:
For detailed operation procedures, refer to “PC application help for Subaru Select Monitor”.

2. READ CURRENT DATA FOR ENGINE (NORMAL MODE)

NOTE:
- For detailed operation procedures, refer to “PC application help for Subaru Select Monitor”.
- A list of the support data is shown in the following table.
- *: For models without cruise control, the brake switch signal does not change.

Content	Display	Unit of measure	Note (at idling)
Engine load	Engine Load	%	21.0%
Engine coolant temperature signal	Coolant Temperature	°C or °F	85°C or 185°F or more (after warm-up)
A/F correction #1	A/F Correction #1	%	–0.8%
A/F learning #1	A/F Learning #1	%	0.0%
Intake manifold absolute pressure	Mani. Absolute Pressure	mmHg, kPa, inHg or psig	200 — 300 mmHg, 26.7 — 40 kPa, 7.8 — 11.8 inHg or 3.8 — 5.8 psig
Engine speed signal	Engine Speed	rpm	700 rpm (Agree with the tachometer indication)
Meter vehicle speed signal	Vehicle Speed	km/h or MPH	0 km/h or 0 MPH (at parking)
Ignition timing signal	Ignition Timing	deg	14 — 16 deg
Intake air temperature signal	Intake Air Temp.	°C or °F	(Ambient air temperature)
Intake air amount	Mass Air Flow	g/s or lb/m	2.5 g/s or 0.33 lb/m
Throttle opening angle signal	Throttle Opening Angle	%	2.0%
Rear oxygen sensor voltage	Rear O2 Sensor	V	0.1 — 0.7 V
Battery voltage	Battery Voltage	V	12 — 14 V
Mass air flow voltage	Air Flow Sensor Voltage	V	1.26 V
Injection 1 pulse width	Fuel Injection #1 Pulse	ms	2.82 ms
Atmospheric pressure signal	Atmosphere Pressure	mmHg, kPa, inHg or psig	(Atmospheric pressure)
Intake manifold relative pressure	Mani. Relative Pressure	mmHg, kPa, inHg or psig	(Air intake absolute pressure – Atmospheric pressure)
Learned ignition timing	Learned Ignition Timing	deg	0 deg
Acceleration opening angle signal	Accel. Opening Angle	%	0.0%
Fuel temperature signal	Fuel Temperature	°C or °F	+20°C or +68°F
Purge control solenoid duty ratio	CPC Valve Duty Ratio	%	0 — 3%
Number of EGR steps	No. of EGR steps	STEP	0 STEP
A/F sensor current value 1	A/F Sensor #1 Current	mA	–0.2 — 0.2 mA
A/F sensor resistance value 1	A/F Sensor #1 Resistance	Ω	32 Ω
A/F sensor output lambda 1	A/F Sensor #1	—	1.0
A/F correction #3	A/F Correction #3	%	0.3%
A/F learning #3	A/F Learning #3	%	0.00%
Throttle motor duty	Throttle Motor Duty	%	–15%
Throttle motor voltage	Throttle Motor Voltage	V	(Battery voltage)
Sub throttle sensor voltage	Sub-Throttle Sensor	V	1.52 V

Content	Display	Unit of measure	Note (at idling)
Main throttle sensor voltage	Main-Throttle Sensor	V	0.66 V
Sub accelerator sensor voltage	Sub-Accelerator Sensor	V	0.68 V
Main acceleration sensor voltage	Main-Accelerator Sensor	V	0.68 V
Memory vehicle speed	Memorized Cruise Speed	km/h or MPH	0 km/h or 0 MPH
Fuel level sensor signal	Fuel level resistance	Ω	2 — 96 Ω
Engine oil temperature signal	Engine Oil Temperature	°C	≥ 85°C (after warm-up)
Oil switching solenoid valve duty RH	OSV Duty R	%	16.9%
Oil switching solenoid valve duty LH	OSV Duty L	%	16.9%
Oil switching solenoid valve current RH	OSV Current R	mA	192 mA
Oil switching solenoid valve current LH	OSV Current L	mA	192 mA
Variable valve lift lift mode	VVL Lift Mode	—	1
#1 cylinder roughness monitor	Roughness Monitor #1	—	0
#2 cylinder roughness monitor	Roughness Monitor #2	—	0
#3 cylinder roughness monitor	Roughness Monitor #3	—	0
#4 cylinder roughness monitor	Roughness Monitor #4	—	0
Knock sensor correction	Knocking Correction	deg	0.0 deg
Fuel tank pressure signal	Fuel Tank Pressure	mmHg, kPa, inHg or psig	+7.7 mmHg, +1.1 kPa, +0.31 inHg or +0.15 psig
AT vehicle ID signal	AT Vehicle ID Signal	—	ON/OFF
D-check require Flag	D-check Require Flag	—	OFF
Delivery (test) mode terminal	Delivery Mode Connector (Test Mode Connector)	—	OFF
Neutral position switch signal	Neutral Position Switch	—	ON
Soft idle switch signal	Idle Switch Signal	—	ON
Ignition switch signal	Ignition Switch	—	ON
Power steering switch signal	P/S Switch	—	OFF (when OFF)
Air conditioning switch signal	A/C Switch	—	OFF (when OFF)
Starter switch signal	Starter Switch	—	OFF
Rear oxygen monitor	Rear O2 Rich Signal	—	Rich/Lean
Knocking signal	Knocking Signal	—	OFF
Crankshaft position sensor signal	Crankshaft Position Sig.	—	ON
Camshaft position sensor signal	Camshaft Position Sig.	—	ON
Rear defogger switch signal	Rear Defogger SW	—	OFF (when OFF)
Blower fan switch signal	Blower Fan SW	—	OFF (when OFF)
Light switch signal	Light Switch	—	OFF (when OFF)
Radiator fan relay 1 signal	Radiator Fan Relay #1	—	OFF (when OFF)
Radiator fan relay 2 signal	Radiator Fan Relay #2	—	OFF (when OFF)
Fuel pump relay signal	Fuel Pump Relay	—	ON output
Drain valve signal	Vent. Solenoid Valve	—	OFF output
Variable valve lift diagnosis oil pressure switch signal 1	Eng. Oil Press. SW 1	—	ON
Variable valve lift diagnosis oil pressure switch signal 2	Eng. Oil Press. SW 2	—	ON
AT coordinate retard angle demand signal	Retard Signal from AT	—	OFF
AT coordinate fuel cut demand signal	Fuel Cut signal from AT	—	OFF
Vehicle dynamics control (VDC) torque down prohibition output	Ban of Torque Down	—	ON
Vehicle dynamics control (VDC) torque down demand	Request Torque Down VDC	—	OFF

Content	Display	Unit of measure	Note (at idling)
AT coordinate permission signal	Torque Permission Signal	—	ON (OFF on MT vehicles)
Electronic throttle control motor relay signal	ETC Motor Relay	—	ON
Clutch switch signal	Clutch Switch	—	OFF (when OFF)
Stop light switch signal	Stop Light Switch	—	OFF (when OFF)
SET/COAST switch signal	SET/COAST Switch	—	OFF (when OFF)
RES/ACC switch signal	RESUME/ACCEL Switch	—	OFF (when OFF)
Brake switch signal*	Brake Switch	—	OFF (when OFF)
Main switch signal	Main Switch	—	OFF (when OFF)
Cruise control cancel switch signal	CC Cancel SW	—	OFF (when OFF)
Malfunction indicator light signal	MIL On Flag	—	OFF (when unlit)
Oil level switch	Oil level switch	—	HIGH level

3. READ CURRENT DATA FOR ENGINE (OBD MODE)

NOTE:
- For detailed operation procedures, refer to “PC application help for Subaru Select Monitor”.
- A list of the support data is shown in the following table.

Contents	Display	Note (at idling)	Unit of measure
Number of diagnosis code	Number of Diag. Code:	0	—
Condition of malfunction indicator light	MI(MIL)	OFF	—
Monitoring test of misfire	Misfire monitoring (Supp)	YES	—
Monitoring test of misfire	Misfire monitoring (Rdy)	YES	—
Monitoring test of fuel system	Fuel system monitoring (Supp)	YES	—
Monitoring test of fuel system	Fuel system monitoring (Rdy)	YES	—
Monitoring test of comprehensive component	Component monitoring (Supp)	YES	—
Monitoring test of comprehensive component	Component monitoring (Rdy)	YES	—
Test of catalyst	Catalyst Diagnosis (Supp)	YES	—
Test of catalyst	Catalyst Diagnosis (Rdy)	NO	—
Test of heating-type catalyst	Heated catalyst (Supp)	NO	—
Test of heating-type catalyst	Heated catalyst (Rdy)	N/A	—
Test of evaporative emission purge control system	Evaporative purge system (Supp)	YES	—
Test of evaporative emission purge control system	Evaporative purge system (Rdy)	NO	—
Secondary air system test	Secondary air system (Supp)	NO	—
Secondary air system test	Secondary air system (Rdy)	N/A	—
Test of air conditioning system refrigerant	A/C system refrigerant (Supp)	NO	—
Test of air conditioning system refrigerant	A/C system refrigerant (Rdy)	N/A	—
Test of oxygen sensor	Oxygen sensor (Supp)	YES	—
Test of oxygen sensor	Oxygen sensor (Rdy)	NO	—
Test of oxygen sensor heater	O2 Heater Diagnosis (Supp)	YES	—

Contents	Display	Note (at idling)	Unit of measure
Test of oxygen sensor heater	O2 Heater Diagnosis (Rdy)	NO	—
Test of EGR system	EGR system (Supp)	YES	—
Test of EGR system	EGR system (Rdy)	NO	—
Air fuel ratio control system for bank 1	Fuel system for Bank 1	Cl_normal	—
Engine load data	Calculated load value	23.0	%
Engine coolant temperature signal	Coolant Temp.	92	°C
Short term fuel trim by front oxygen (A/F) sensor (Bank 1)	Short term fuel trim B1	–0.8	%
Long term fuel trim by front oxygen (A/F) sensor (Bank 1)	Long term fuel trim B1	0.0	%
Intake manifold absolute pressure signal	Mani. Absolute Pressure	28	kPa
Engine speed signal	Engine Speed	700	rpm
Vehicle speed signal	Vehicle Speed	0	km/h
#1 Cylinder ignition timing	Ignition timing adv. #1	16.0	°
Intake air temperature signal	Intake Air Temp.	36	°C
Intake air amount	Mass Air Flow	2.7	g/s
Throttle position signal	Throttle Opening Angle	13	%
Oxygen sensor (Bank 1 Sensor 2)	Oxygen sensor #12	0.7	V
A/F correction (Bank 1 Sensor 2)	Short term fuel trim #12	0.0	%
On-board diagnostic system	OBD System	OBD/OBD2	—
Front oxygen (A/F) sensor (Bank 1 Sensor 1)	Oxygen sensor #11	Supported	—
Oxygen sensor (Bank 1 Sensor 2)	Oxygen sensor #12	Supported	—
Elapsed time after engine start	Time Since Engine Start	—	sec
Travel distance after the malfunction indicator light illuminates	Lighted MI lamp history	—	km
A/F lambda signal (Bank 1 Sensor 1)	A/F Sensor #11	1.001	—
A/F sensor output signal (Bank 1 Sensor 1)	A/F Sensor #11	2.79	V
Target EGR	Commanded EGR	—	%
EGR deviation	EGR Error	—	%
Evaporative purge	Commanded Evap Purge	0	%
Fuel level signal	Fuel Level	—	%
Number of warm ups after DTC clear	Number of warm-ups	—	—
Travel distance after DTC clear	Meter since DTC cleared	—	km
Fuel tank pressure signal	Fuel Tank Pressure	–32.00	Pa
Atmospheric pressure signal	Atmosphere Pressure	Atmospheric pressure	kPa
A/F lambda signal (Bank 1 Sensor 1)	A/F Sensor #11	1.001	—
A/F sensor current (Bank 1 Sensor 1)	A/F Sensor #11	0.00	mA
Catalyst temperature #1	Catalyst Temperature #11	—	°C
Monitoring test of misfire	Misfire monitoring (Enable)	YES	—
Monitoring test of misfire	Misfire monitoring (Comp)	NO	—
Monitoring test of fuel system	Fuel system monitoring (Enable)	YES	—
Monitoring test of fuel system	Fuel system monitoring (Comp)	NO	—
Monitoring test of comprehensive component	Component monitoring (Enable)	YES	—
Monitoring test of comprehensive component	Component monitoring (Comp)	NO	—
Test of catalyst	Catalyst Diagnosis (Enable)	YES	—

Contents	Display	Note (at idling)	Unit of measure
Test of catalyst	Catalyst Diagnosis (Comp)	NO	—
Test of heating-type catalyst	Heated catalyst (Enable)	N/A	—
Test of heating-type catalyst	Heated catalyst (Comp)	N/A	—
Test of evaporative emission purge control system	Evaporative purge system (Enable)	YES	—
Test of evaporative emission purge control system	Evaporative purge system (Comp)	NO	—
Secondary air system test	Secondary air system (Enable)	N/A	—
Secondary air system test	Secondary air system (Comp)	N/A	—
Test of air conditioning system refrigerant	A/C system refrigerant (Enable)	N/A	—
Test of air conditioning system refrigerant	A/C system refrigerant (Comp)	N/A	—
Test of oxygen sensor	Oxygen sensor (Enable)	YES	—
Test of oxygen sensor	Oxygen sensor (Comp)	NO	—
Test of oxygen sensor heater	O2 Heater Diagnosis (Enable)	YES	—
Test of oxygen sensor heater	O2 Heater Diagnosis (Comp)	NO	—
Test of EGR system	EGR system (Enable)	YES	—
Test of EGR system	EGR system (Comp)	NO	—
ECM power supply voltage	Control module voltage	13.789	V
Absolute load	Absolute Load Value	22	%
A/F target lambda	Target Equivalence Ratio	0.976	—
Relative throttle opening angle	Relative Throttle Pos.	2	%
Ambient temperature	Ambient Temperature	Ambient air temperature	°C
Absolute throttle opening angle 2	Absolute Throttle Pos.#2	32	%
Absolute accelerator opening angle 1	Accelerator Pedal Pos.#1	13	%
Absolute accelerator opening angle 2	Accelerator Pedal Pos.#2	13	%
Target throttle opening angle	Target Throt. Act. Cont.	0	%
Engine operating time while malfunction indicator light lit	Time while MIL lighted	—	min
Elapsed time after DTC clear	Time since DTC cleared	—	min
Type of fuel	Type of fuel	GAS	—
Relative acceleration opening angle	Relative Accelera. Pos.	0	%
Neutral condition	AT drive status/MT gear status	NEUT	—

4. READ FREEZE FRAME DATA FOR ENGINE (OBD MODE)

NOTE:
- For detailed operation procedures, refer to “PC application help for Subaru Select Monitor”.
- A list of the support data is shown in the following table.

Description	Display	Unit of measure
DTCs of freeze frame data	Freeze frame data	—
Air fuel ratio control system for bank 1	Fuel system for Bank 1	—
Engine load data	Calculated load value	%
Engine coolant temperature signal	Coolant Temp.	°C or °F
Short term fuel trim by front oxygen (A/F) sensor	Short term fuel trim B1	%
Long term fuel trim by front oxygen (A/F) sensor	Long term fuel trim B1	%
Intake manifold absolute pressure signal	Mani. Absolute Pressure	mmHg, kPa, inHg or psig
Engine speed signal	Engine Speed	rpm
Vehicle speed signal	Vehicle Speed	km/h or MPH
Ignition timing advance for #1 cylinder	Ignition timing adv. #1	°
Intake air temperature signal	Intake Air Temp.	°C or °F
Intake air amount	Mass Air Flow	g/s or lb/m
Throttle position signal	Throttle Opening Angle	%
Oxygen sensor (Bank 1 Sensor 2)	Oxygen sensor #12	V
A/F correction (Bank 1 Sensor 2)	Short term fuel trim #12	%
On-board diagnostic system	OBD System	—
Front oxygen (A/F) sensor (Bank 1 Sensor 1)	Oxygen sensor #11	—
Oxygen sensor (Bank 1 Sensor 2)	Oxygen sensor #12	—
Elapsed time after engine start	Time Since Engine Start	sec
Target EGR	Commanded EGR	%
EGR deviation	EGR Error	%
Evaporative purge	Commanded Evap Purge	%
Fuel level signal	Fuel Level	%
Fuel tank pressure signal	Fuel Tank Pressure	mmHg, kPa, inHg or psig
Atmospheric pressure	Atmosphere Pressure	mmHg, kPa, inHg or psig
ECM power supply voltage	Control module voltage	V
Absolute load	Absolute Load Value	%
A/F target lambda	Target Equivalence Ratio	—
Relative throttle opening angle	Relative Throttle Pos.	%
Ambient temperature	Ambient Temperature	°C or °F
Absolute throttle opening angle 2	Absolute Throttle Pos.#2	%
Absolute accelerator opening angle 1	Accelerator Pedal Pos.#1	%
Absolute accelerator opening angle 2	Accelerator Pedal Pos.#2	%
Target throttle opening angle	Target Throt. Act. Cont.	%
Neutral condition	AT drive status/MT gear status	—

5. V.I.N REGISTRATION

1) On «Main Menu» display, select {Each System Check}.
2) On «System Selection Menu» display, select {Engine Control System}.
3) Click the [OK] button after the information of engine type has been displayed.
4) On the «Engine Diagnosis» display, select {Entry VIN}.
5) Perform the procedures shown on the display screen.

10.Read Diagnostic Trouble Code (DTC)

A: OPERATION

1. SUBARU SELECT MONITOR

NOTE:
• For detailed operation procedures, refer to “PC application help for Subaru Select Monitor”.
• For details concerning DTC, refer to “List of Diagnostic Trouble Code (DTC)”. <Ref. to EN(H4SO)(diag)-78, List of Diagnostic Trouble Code (DTC).>

2. GENERAL SCAN TOOL

Refer to data denoting emission-related powertrain DTC.
For details concerning DTC, refer to “List of Diagnostic Trouble Code (DTC)”. <Ref. to EN(H4SO)(diag)-78, List of Diagnostic Trouble Code (DTC).>

NOTE:
Refer to general scan tool manufacturer’s instruction manual to access powertrain DTC (MODE $03).

11.Inspection Mode

A: PROCEDURE

Perform the diagnosis shown in the following DTC table.
When performing the diagnosis not listed in “List of Diagnostic Trouble Code (DTC)”, refer to the item on the drive cycle. <Ref. to EN(H4SO)(diag)-45, Drive Cycle.>

DTC	Item	Condition
P0031	HO2S Heater Control Circuit Low (Bank 1 Sensor 1)	—
P0032	HO2S Heater Control Circuit High (Bank 1 Sensor 1)	—
P0037	HO2S Heater Control Circuit Low (Bank 1 Sensor 2)	—
P0038	HO2S Heater Control Circuit High (Bank 1 Sensor 2)	—
P0077	Intake Valve Control Solenoid Circuit High (Bank 1)	—
P0083	Intake Valve Control Solenoid Circuit High (Bank 2)	—
P0102	Mass or Volume Air Flow Circuit Low Input	—
P0103	Mass or Volume Air Flow Circuit High Input	—
P0107	Manifold Absolute Pressure/Barometric Pressure Circuit Low Input	—
P0108	Manifold Absolute Pressure/Barometric Pressure Circuit High Input	—
P0112	Intake Air Temperature Sensor 1 Circuit Low	—
P0113	Intake Air Temperature Sensor 1 Circuit High	—
P0117	Engine Coolant Temperature Circuit Low	—
P0118	Engine Coolant Temperature Circuit High	—
P0122	Throttle/Pedal Position Sensor/Switch “A” Circuit Low	—
P0123	Throttle/Pedal Position Sensor/Switch “A” Circuit High	—
P0131	O2 Sensor Circuit Low Voltage (Bank 1 Sensor 1)	—
P0132	O2 Sensor Circuit High Voltage (Bank 1 Sensor 1)	—
P0137	O2 Sensor Circuit Low Voltage (Bank 1 Sensor 2)	—
P0138	O2 Sensor Circuit High Voltage (Bank 1 Sensor 2)	—
P0140	O2 Sensor Circuit No Activity Detected (Bank1 Sensor2)	—
P0182	Fuel Temperature Sensor “A” Circuit Low Input	—
P0183	Fuel Temperature Sensor “A” Circuit High Input	—
P0197	Engine Oil Temperature Sensor Low	—
P0198	Engine Oil Temperature Sensor High	—
P0201	Injector #1	—
P0202	Injector #2	—
P0203	Injector #3	—
P0204	Injector #4	—
P0222	Throttle/Pedal Position Sensor/Switch “B” Circuit Low	—
P0223	Throttle/Pedal Position Sensor/Switch “B” Circuit High	—
P0327	Knock Sensor 1 Circuit Low (Bank 1 or Single Sensor)	—
P0328	Knock Sensor 1 Circuit High (Bank 1 or Single Sensor)	—
P0335	Crankshaft Position Sensor “A” Circuit	—
P0336	Crankshaft Position Sensor “A” Circuit Range/Performance	—
P0340	Camshaft Position Sensor “A” Circuit (Bank 1 or Single Sensor)	—
P0341	Camshaft Position Sensor “A” Circuit Range/Performance (Bank 1 or Single Sensor)	—
P0351	Ignition Coil A Primary/Secondary Circuit	—
P0352	Ignition Coil B Primary/Secondary Circuit	—
P0353	Ignition Coil C Primary/Secondary Circuit	—
P0354	Ignition Coil D Primary/Secondary Circuit	—
P0447	Evaporative Emission Control System Vent Control Circuit Open	—
P0448	Evaporative Emission Control System Vent Control Circuit Shorted	—

DTC	Item	Condition
P0452	Evaporative Emission Control System Pressure Sensor Low Input	—
P0453	Evaporative Emission Control System Pressure Sensor High Input	—
P0458	Evaporative Emission System Purge Control Valve Circuit Low	—
P0462	Fuel Level Sensor “A” Circuit Low	—
P0463	Fuel Level Sensor “A” Circuit High	—
P0500	Vehicle Speed Sensor “A”	—
P0512	Starter Request Circuit	—
P0513	Incorrect Immobilizer Key	—
P0604	Internal Control Module Random Access Memory (RAM) Error	—
P0605	Internal Control Module Read Only Memory (ROM) Error	—
P0607	Throttle Control System Circuit Range/Performance	—
P0638	Throttle Actuator Control Range/Performance (Bank 1)	—
P0700	Transmission Control System (MIL Request)	—
P0851	Park/Neutral Switch Input Circuit Low	—
P0852	Park/Neutral Switch Input Circuit High	—
P1152	O2 Sensor Circuit Range/Performance (Low) (Bank1 Sensor1)	—
P1153	O2 Sensor Circuit Range/Performance (High) (Bank1 Sensor1)	—
P1160	Return Spring Failure	—
P1518	Starter Switch Circuit Low Input	—
P1560	Back-Up Voltage Circuit Malfunction	—
P1570	Antenna	—
P1571	Reference Code Incompatibility	—
P1572	IMM Circuit Failure (Except Antenna Circuit)	—
P1574	Key Communication Failure	—
P1576	EGI Control Module EEPROM	—
P1577	IMM Control Module EEPROM	—
P1578	Meter Failure	—
P2101	Throttle Actuator Control Motor Circuit Range/Performance	—
P2102	Throttle Actuator Control Motor Circuit Low	—
P2103	Throttle Actuator Control Motor Circuit High	—
P2109	Throttle/Pedal Position Sensor “A” Minimum Stop Performance	—
P2122	Throttle/Pedal Position Sensor/Switch “D” Circuit Low Input	—
P2123	Throttle/Pedal Position Sensor/Switch “D” Circuit High Input	—
P2127	Throttle/Pedal Position Sensor/Switch “E” Circuit Low Input	—
P2128	Throttle/Pedal Position Sensor/Switch “E” Circuit High Input	—
P2135	Throttle/Pedal Position Sensor/Switch “A”/“B” Voltage Correlation	—
P2138	Throttle/Pedal Position Sensor/Switch “D”/“E” Voltage Correlation	—
P2227	Barometric Pressure Circuit Range/Performance	—
P2228	Barometric Pressure Circuit Low	—
P2229	Barometric Pressure Circuit High	—

1. PREPARATION FOR THE INSPECTION MODE

1) Check that the battery voltage is 12 V or more and fuel remains approx. half [20 — 40 ℓ (5.3 — 10.6 US gal, 4.4 — 8.8 Imp gal)].
2) Lift up the vehicle using a garage jack and place it on rigid racks, or drive the vehicle onto free rollers.

WARNING:
• Before lifting up the vehicle, ensure parking brake is applied.
• Do not use a pantograph jack in place of a rigid rack.
• Secure a rope or wire to the front or rear towing hooks to prevent the lateral runout of front wheels.
• Before rotating the wheels, make sure that there is no one in front of the vehicle. Besides while the wheels are rotating, make sure that no one approaches the vehicle front side.
• Make sure that there is nothing around the wheels. For AWD model, pay attention to all four wheels.
• While servicing, do not depress or release the clutch pedal or accelerator pedal quickly regardless of the engine speed. Quick operation may cause the vehicle to drop off the free roller.
• To prevent the vehicle from slipping due to vibration, do not place anything between rigid rack and the vehicle.

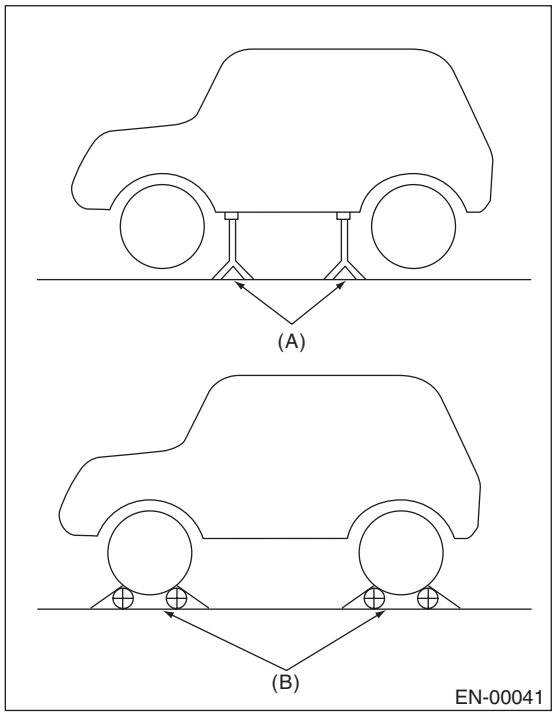

(A) Rigid rack
(B) Free roller

2. SUBARU SELECT MONITOR

1) Check that no DTC remains after clearing memory. <Ref. to EN(H4SO)(diag)-51, Clear Memory Mode.>
2) Warm up the engine.
3) Prepare the Subaru Select Monitor kit. <Ref. to EN(H4SO)(diag)-8, PREPARATION TOOL, General Description.>

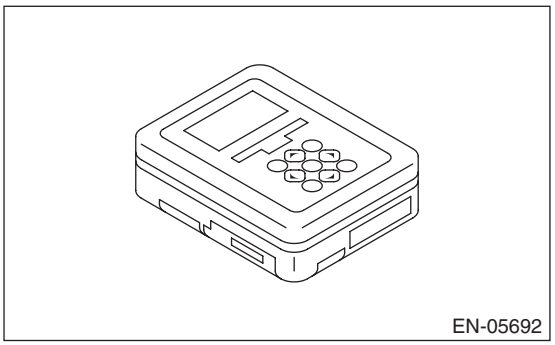

4) Prepare PC with Subaru Select Monitor installed.
5) Connect the USB cable to SDI (Subaru Diagnosis Interface) and USB port on the personal computer (dedicated port for the Subaru Select Monitor).

NOTE:
The dedicated port for the Subaru Select Monitor means the USB port which was used to install the Subaru Select Monitor.
6) Connect the diagnosis cable to SDI.
7) Install the delivery (test) mode fuse (A) of the fuse box.

CAUTION:
Do not use any fuses that are installed on the vehicle.

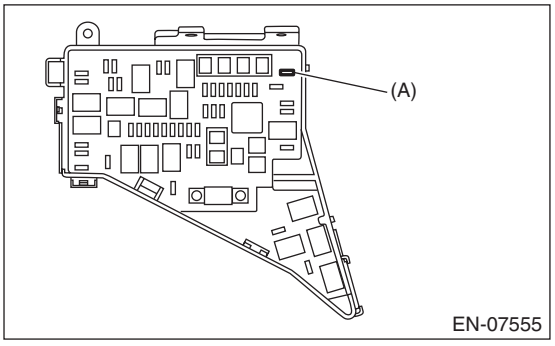

8) Connect SDI to data link connector located in the lower portion of the instrument panel (on the driver's side).

CAUTION:
Do not connect the scan tools except for Subaru Select Monitor and general scan tool.

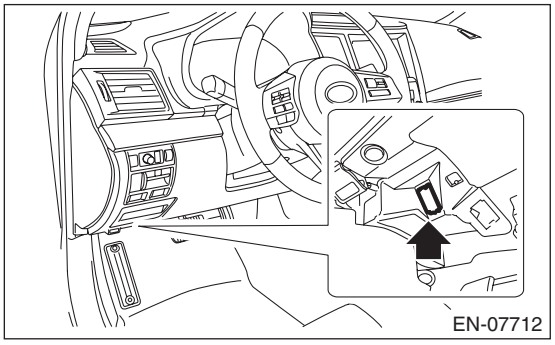

9) Start the PC.
10) Turn the ignition switch to ON (engine OFF) and run the "PC application for Subaru Select Monitor".
11) On «Main Menu» display, select {Each System Check}.
12) On «System Selection Menu» display, select {Engine Control System}.
13) Click the [OK] button after the information of engine type has been displayed.
14) On «Engine Diagnosis» display, select {Dealer Check Mode Procedure}.
15) When the "Perform Inspection (Dealer Check) Mode ?" is shown on the screen, click the [Next] button.
16) Perform subsequent procedures as instructed on the display screen.
• If trouble still remains in the memory, the corresponding DTC appears on the display screen.

NOTE:
• For detailed operation procedures, refer to "PC application help for Subaru Select Monitor".
• For details concerning DTC, refer to "List of Diagnostic Trouble Code (DTC)". <Ref. to EN(H4SO)(diag)-78, List of Diagnostic Trouble Code (DTC).>
• Release the parking brake.
• The speed difference between front and rear wheels may illuminate the ABS warning light, but this does not indicate a malfunction. When engine control system diagnosis is finished, perform the VDC memory clearance procedure of self-diagnosis function. <Ref. to VDC(diag)-25, Clear Memory Mode.>

3. GENERAL SCAN TOOL

1) Check that no DTC remains after clearing memory. <Ref. to EN(H4SO)(diag)-31, MODE $04 (CLEAR/RESET EMISSION-RELATED DIAGNOSTIC INFORMATION), OPERATION, General Scan Tool.>
2) Warm up the engine.
3) Install the delivery (test) mode fuse (A) of the main fuse box.

CAUTION:
Do not use any fuses that are installed on the vehicle.

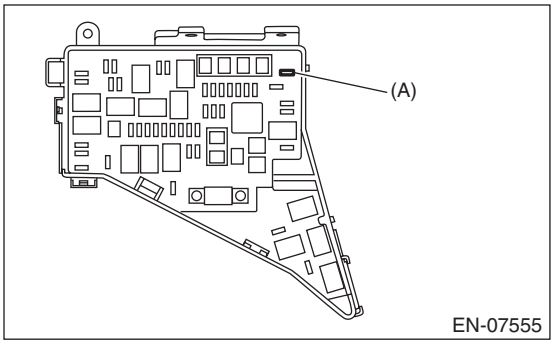

4) Connect the general scan tool to data link connector located in the lower portion of the instrument panel (on the driver's side).

CAUTION:
Do not connect the scan tools except for Subaru Select Monitor and general scan tool.

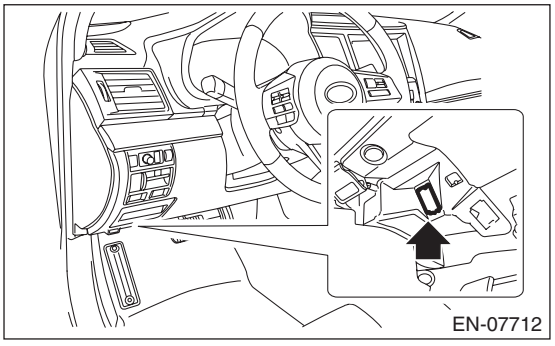

5) Start the engine.

NOTE:
• Ensure the selector lever is placed in the "P" range before starting. (CVT model)
• Depress the clutch pedal when starting engine. (MT model)
6) Turn the neutral position switch to ON using select lever or shift lever.
7) Depress the brake pedal to turn the brake switch ON. (CVT model)
8) Keep the engine speed in 2,500 — 3,000 rpm range for 40 seconds.

9) Place the select lever or shift lever in “D” position (CVT model) or “1st gear” (MT model) and drive the vehicle at 5 to 10 km/h (3 to 6 MPH).

NOTE:
• For AWD model, release the parking brake.
• The speed difference between front and rear wheels may illuminate the ABS warning light, but this does not indicate a malfunction. When engine control system diagnosis is finished, perform the VDC memory clearance procedure of self-diagnosis function. <Ref. to VDC(diag)-25, Clear Memory Mode.>

10) Using the general scan tool, check for DTC and record the result(s).

NOTE:
• For detailed operation procedures, refer to the general scan tool operation manual.
• For details concerning DTC, refer to “List of Diagnostic Trouble Code (DTC)”.
<Ref. to EN(H4SO)(diag)-78, List of Diagnostic Trouble Code (DTC).>

12.Drive Cycle

A: PROCEDURE

It is necessary to perform the drive cycle listed below if DTC is not found in the Inspection Mode. It is possible to complete diagnosis of the DTC by performing the indicated drive cycle. After the repair for the DTC, perform a necessary drive cycle and make sure the function recovers and the DTC is recorded.

1. PREPARATION FOR DRIVE CYCLE

1) Check that the battery voltage is 12 V or more and fuel remains approx. half [20 — 40 ℓ (5.3 — 10.6 US gal, 4.4 — 8.8 Imp gal)].
2) After performing the diagnostics and Clear Memory Mode, check that no DTC remains. <Ref. to EN(H4SO)(diag)-51, Clear Memory Mode.>
3) Check the delivery (test) mode fuse is removed.

NOTE:
• Perform the drive cycle after warming up the engine except when the engine coolant temperature at engine start is specified.
• Perform the drive cycle twice if the DTC in the list is marked with *. After completing the first drive cycle, stop the engine and perform second diagnosis in same condition.

2. DRIVE CYCLE A

DTC	Item	Condition
*P0125	Insufficient Coolant Temperature for Closed Loop Fuel Control	Engine coolant temperature at engine start is less than 20°C (68°F).
*P0126	Insufficient Engine Coolant Temperature for Stable Operation	—
*P0128	Coolant Thermostat (Engine Coolant Temperature Below Thermostat Regulating Temperature)	—
*P0133	O2 Sensor Circuit Slow Response (Bank 1 Sensor 1)	—
*P0141	O2 Sensor Heater Circuit (Bank1 Sensor2)	—
*P014C	O2 Sensor Slow Response - Rich to Lean (Bank 1 Sensor 1)	—
*P014D	O2 Sensor Slow Response - Lean to Rich (Bank 1 Sensor 1)	—
*P015A	O2 Sensor Delayed Response - Rich to Lean (Bank 1 Sensor 1)	—
*P015B	O2 Sensor Delayed Response - Lean to Rich (Bank 1 Sensor 1)	—
*P0171	System Too Lean (Bank 1)	Complete diagnosis with drive cycle B or C as well.
*P0172	System Too Rich (Bank 1)	Complete diagnosis with drive cycle B or C as well.
*P0196	Engine Oil Temperature Sensor Circuit Range/Performance	—
*P0301	Cylinder 1 Misfire Detected	Complete diagnosis with drive cycle B or C as well.
*P0302	Cylinder 2 Misfire Detected	Complete diagnosis with drive cycle B or C as well.
*P0303	Cylinder 3 Misfire Detected	Complete diagnosis with drive cycle B or C as well.
*P0304	Cylinder 4 Misfire Detected	Complete diagnosis with drive cycle B or C as well.
*P0420	Catalyst System Efficiency Below Threshold (Bank 1)	—
*P0442	Evaporative Emission Control System Leak Detected (Small Leak)	Engine coolant temperature at engine start is less than 30°C (86°F).
*P0451	Evaporative Emission Control System Pressure Sensor	—
*P0456	Evaporative Emission Control System Leak Detected (Very Small Leak)	Engine coolant temperature at engine start is less than 30°C (86°F).

DTC	Item	Condition
*P0457	Evaporative Emission Control System Leak Detected (Fuel Cap Loose/Off)	Engine coolant temperature at engine start is less than 30°C (86°F).
*P0459	Evaporative Emission System Purge Control Valve Circuit High	—
P1443	Vent Control Solenoid Valve Function Problem	—
*P2096	Post Catalyst Fuel Trim System Too Lean (Bank 1)	Complete diagnosis with drive cycle B or C as well.
*P2097	Post Catalyst Fuel Trim System Too Rich (Bank 1)	Complete diagnosis with drive cycle B or C as well.

Diagnostic procedure:
1) Drive for 20 minutes or more at a constant speed of 80 km/h (50 MPH) or more.
2) Stop the vehicle and idle for one minute.

3. DRIVE CYCLE B

DTC	Item	Condition
*P0171	System Too Lean (Bank 1)	Complete diagnosis with drive cycle A or C as well.
*P0172	System Too Rich (Bank 1)	Complete diagnosis with drive cycle A or C as well.
*P0301	Cylinder 1 Misfire Detected	Complete diagnosis with drive cycle A or C as well.
*P0302	Cylinder 2 Misfire Detected	Complete diagnosis with drive cycle A or C as well.
*P0303	Cylinder 3 Misfire Detected	Complete diagnosis with drive cycle A or C as well.
*P0304	Cylinder 4 Misfire Detected	Complete diagnosis with drive cycle A or C as well.
*P0464	Fuel Level Sensor Circuit Intermittent	—
*P0506	Idle Air Control System RPM Lower Than Expected	—
*P0507	Idle Air Control System RPM Higher Than Expected	—
*P2096	Post Catalyst Fuel Trim System Too Lean (Bank 1)	Complete diagnosis with drive cycle A or C as well.
*P2097	Post Catalyst Fuel Trim System Too Rich (Bank 1)	Complete diagnosis with drive cycle A or C as well.

Diagnostic procedure:
1) Drive at 10 km/h (6 MPH) or more.
2) Stop the vehicle and idle for ten minutes.

4. DRIVE CYCLE C

DTC	Item	Condition
P0026	Intake Valve Control Solenoid Circuit Range/Performance (Bank 1)	—
P0028	Intake Valve Control Solenoid Circuit Range/Performance (Bank 2)	—
*P0030	HO2S Heater Control Circuit (Bank 1 Sensor 1)	—
*P0068	MAP/MAF - Throttle Position Correlation	—
P0076	Intake Valve Control Solenoid Circuit Low (Bank 1)	—
P0082	Intake Valve Control Solenoid Circuit Low (Bank 2)	—
*P0101	Mass or Volume Air Flow Circuit Range/Performance	—
P0134	O2 Sensor Circuit No Activity Detected (Bank 1 Sensor 1)	—
*P013A	O2 Sensor Slow Response - Rich to Lean (Bank 1 Sensor 2)	—
*P013B	O2 Sensor Slow Response - Lean to Rich (Bank 1 Sensor 2)	—
*P013E	O2 Sensor Delayed Response - Rich to Lean (Bank 1 Sensor 2)	—
*P013F	O2 Sensor Delayed Response - Lean to Rich (Bank 1 Sensor 2)	—

Drive Cycle

DTC	Item	Condition
*P0171	System Too Lean (Bank 1)	Complete diagnosis with drive cycle A or B as well.
*P0172	System Too Rich (Bank 1)	Complete diagnosis with drive cycle A or B as well.
*P0301	Cylinder 1 Misfire Detected	Complete diagnosis with drive cycle A or B as well.
*P0302	Cylinder 2 Misfire Detected	Complete diagnosis with drive cycle A or B as well.
*P0303	Cylinder 3 Misfire Detected	Complete diagnosis with drive cycle A or B as well.
*P0304	Cylinder 4 Misfire Detected	Complete diagnosis with drive cycle A or B as well.
*P0400	Exhaust Gas Recirculation Flow	—
P1492	EGR Solenoid Valve Signal #1 Circuit Malfunction (Low Input)	—
P1493	EGR Solenoid Valve Signal #1 Circuit Malfunction (High Input)	—
P1494	EGR Solenoid Valve Signal #2 Circuit Malfunction (Low Input)	—
P1495	EGR Solenoid Valve Signal #2 Circuit Malfunction (High Input)	—
P1496	EGR Solenoid Valve Signal #3 Circuit Malfunction (Low Input)	—
P1497	EGR Solenoid Valve Signal #3 Circuit Malfunction (High Input)	—
P1498	EGR Solenoid Valve Signal #4 Circuit Malfunction (Low Input)	—
P1499	EGR Solenoid Valve Signal #4 Circuit Malfunction (High Input)	—
*P2096	Post Catalyst Fuel Trim System Too Lean (Bank 1)	Complete diagnosis with drive cycle A or B as well.
*P2097	Post Catalyst Fuel Trim System Too Rich (Bank 1)	Complete diagnosis with drive cycle A or B as well.

Diagnostic procedure:

Drive according to the drive pattern described below.

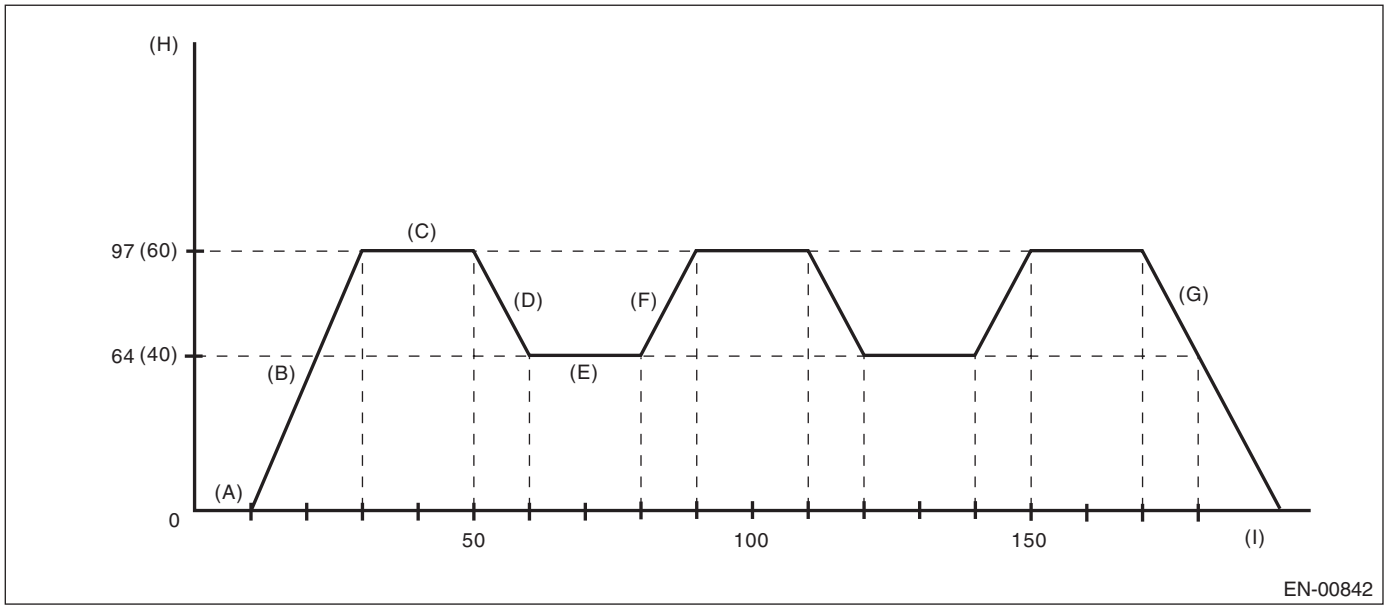

(A) Idle the engine for 10 seconds or more.

(B) Accelerate to 97 km/h (60 MPH) or more within 20 seconds.

(C) Drive for 20 seconds or more at 97 km/h (60 MPH) or more.

(D) Decelerate with fully closed throttle to 64 km/h (40 MPH) or less.

(E) Drive for 20 seconds or more at 64 km/h (40 MPH) or less.

(F) Accelerate to 97 km/h (60 MPH) or more within 10 seconds.

(G) Stop the vehicle with throttle fully closed.

(H) Vehicle speed km/h (MPH)

(I) Sec.

5. DRIVE CYCLE D

DTC	Item	Condition
*P0181	Fuel Temperature Sensor “A” Circuit Range/Performance	—

NOTE:
In drive cycle D, one drive cycle will be established when both the drift diagnosis and stuck diagnosis have completed.

Diagnostic procedure:

DRIFT DIAGNOSIS

1) Make sure of the items below before starting the engine.
- Engine coolant temperature is less than 30°C (86°F).
- Remaining fuel is 10 ℓ (2.6 US gal, 2.2 Imp gal) or more.
- Battery voltage is 10.9 V or more.

2) Idle the engine until engine coolant temperature is at least 10°C (18°F) higher than it was when engine started.
3) After the engine has reached the state of procedure 2), idle the engine for another 5 minutes or more.

STUCK DIAGNOSIS

1) Make sure that the battery voltage is 10.9 V or more.
2) Perform the Clear Memory Mode. <Ref. to EN(H4SO)(diag)-51, Clear Memory Mode.>
3) Drive for approximately 50 ℓ (13.2 US gal, 11 Imp gal) of fuel.

NOTE:
- It is acceptable to drive the vehicle intermittently.
- Do not disconnect the battery terminals during stuck diagnosis. (Data will be cleared by disconnecting the battery terminals.)

6. DRIVE CYCLE E

DTC	Item	Condition
*P0461	Fuel Level Sensor “A” Circuit Range/Performance	—

Diagnostic procedure:
1) Make sure that the battery voltage is 10.9 V or more.
2) Perform the Clear Memory Mode. <Ref. to EN(H4SO)(diag)-51, Clear Memory Mode.>
3) Drive for approximately 30 ℓ (7.9 US gal, 6.6 Imp gal) of fuel.

NOTE:
- It is acceptable to drive the vehicle intermittently.
- Do not disconnect the battery terminals while diagnosing. (Data will be cleared by disconnecting the battery terminals.)

7. DRIVE CYCLE F

DTC	Item	Condition
*P0111	Intake Air Temperature Sensor 1 Circuit Range/Performance	—

Diagnostic procedure:
1) Make sure that the engine coolant temperature is less than 30°C (86°F).
2) Drive according to the drive pattern described below.

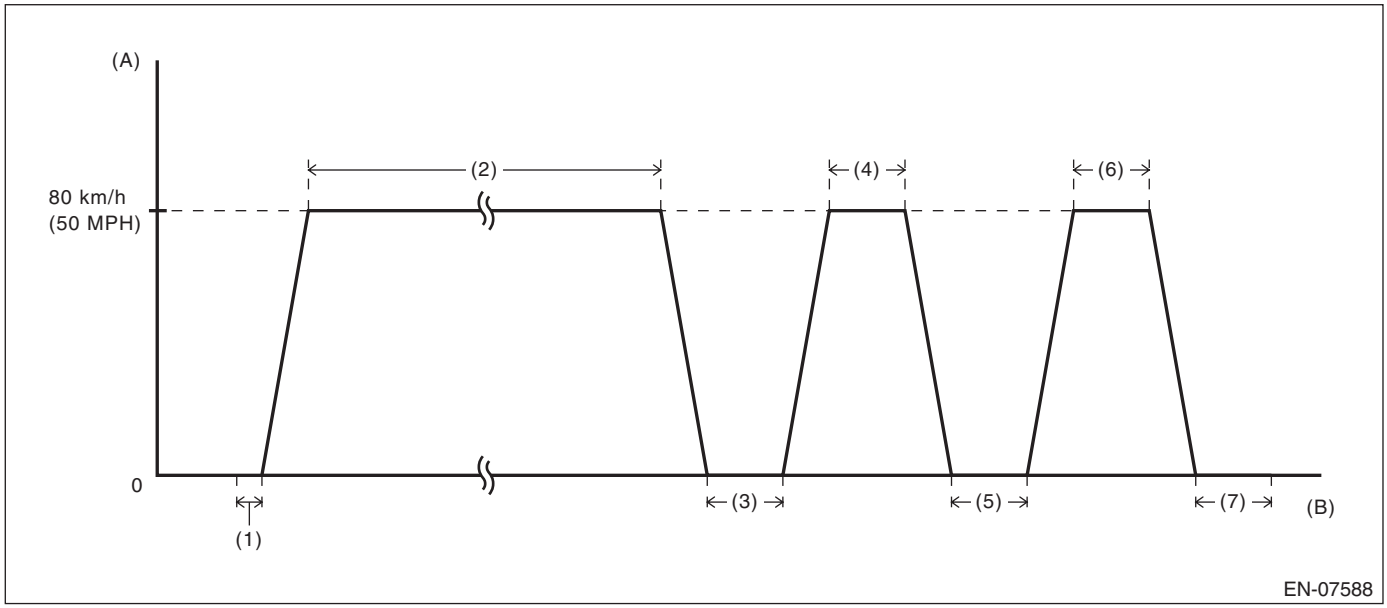

(A) Vehicle speed
(B) Elapsed time
(1) Idle the engine for 10 seconds or more after engine start.
(2) Drive for 8 minutes or more at a constant speed of 80 km/h (50 MPH) or more.
(3) Stop the vehicle and idle for 30 seconds or more.
(4) Drive for 30 seconds or more at a constant speed of 80 km/h (50 MPH) or more.
(5) Stop the vehicle and idle for 30 seconds or more.
(6) Drive for 30 seconds or more at a constant speed of 80 km/h (50 MPH) or more.
(7) Stop the vehicle and idle for 30 seconds.

NOTE:
- There is no given transition time between idling and cruising.
- Driving at constant speed only on a downhill causes smaller engine load and may result in failure to obtain a right diagnostic result.
- When the engine stops while performing drive cycle F, perform it again from the state of procedure 1).

8. DRIVE CYCLE H

DTC	Item	Condition
*P050A	Cold Start Idle Air Control System Performance	—
*P050B	Cold Start Ignition Timing Performance	—

Diagnostic procedure:
1) Perform the Clear Memory Mode. <Ref. to EN(H4SO)(diag)-51, Clear Memory Mode.>
2) With the ignition switch ON (engine OFF), read the engine coolant temperature, intake air temperature and fuel temperature. <Ref. to EN(H4SO)(diag)-33, READ CURRENT DATA FOR ENGINE (NORMAL MODE), OPERATION, Subaru Select Monitor.>
3) If the values from step 2) satisfy the following two conditions, idle the engine for one minute.

Condition:
|Engine coolant temperature — Intake air temperature| ≤ 5°C (9°F)
|Engine coolant temperature — Fuel temperature| ≤ 2°C (3.6°F)

NOTE:
- If the conditions are not satisfied, turn the ignition switch to OFF and wait until the parameters are satisfied.
- For CVT models, hold the select lever to “P” range or “N” range at idling, and for MT models, the shift lever in the neutral position at idling.

9. DRIVE CYCLE J

DTC	Item	Condition
P2610	ECM/PCM Internal Engine Off Timer Performance	—

1) Idle the engine for 15 minutes or more.
2) Turn the ignition switch to OFF.
3) After 6 hours passed from the start of step 2), read the temporary code using the Subaru Select Monitor. <Ref. to EN(H4SO)(diag)-39, OPERATION, Read Diagnostic Trouble Code (DTC).>

13.Clear Memory Mode

A: OPERATION

1. SUBARU SELECT MONITOR

NOTE:
• Initial diagnosis of electronic throttle control is performed after memory clearance. Wait for 10 seconds or more after turning the ignition switch to ON, and then start the engine.
• For detailed operation procedures, refer to “PC application help for Subaru Select Monitor”.

2. GENERAL SCAN TOOL

For clear memory procedures using the general scan tool, refer to “General Scan Tool Instruction Manual”.

NOTE:
Initial diagnosis of electronic throttle control is performed after memory clearance. Wait for 10 seconds or more after turning the ignition switch to ON, and then start the engine.

14. System Operation Check Mode

A: OPERATION

CAUTION:
After executing the system operation check mode, execute the Clear Memory Mode. <Ref. to EN(H4SO)(diag)-51, OPERATION, Clear Memory Mode.>

NOTE:
For detailed operation procedures, refer to “PC application help for Subaru Select Monitor”.

15.Malfunction Indicator Light

A: PROCEDURE

1. Activation of malfunction indicator light. <Ref. to EN(H4SO)(diag)-53, ACTIVATION OF MALFUNCTION INDICATOR LIGHT, Malfunction Indicator Light.>
↓
2. Malfunction indicator light does not come on. <Ref. to EN(H4SO)(diag)-55, MALFUNCTION INDICATOR LIGHT DOES NOT COME ON, Malfunction Indicator Light.>
↓
3. Malfunction indicator light does not go off <Ref. to EN(H4SO)(diag)-57, MALFUNCTION INDICATOR LIGHT DOES NOT GO OFF, Malfunction Indicator Light.>
↓
4. Malfunction indicator light does not blink <Ref. to EN(H4SO)(diag)-59, MALFUNCTION INDICATOR LIGHT DOES NOT BLINK, Malfunction Indicator Light.>
↓
5. Malfunction indicator light remains blinking <Ref. to EN(H4SO)(diag)-61, MALFUNCTION INDICATOR LIGHT REMAINS BLINKING, Malfunction Indicator Light.>

B: ACTIVATION OF MALFUNCTION INDICATOR LIGHT

1) When the ignition switch is turned to ON (engine OFF), the malfunction indicator light (A) in the combination meter illuminates.

NOTE:
If the malfunction indicator light does not illuminate, perform diagnostics of the malfunction indicator light circuit or the combination meter circuit. <Ref. to EN(H4SO)(diag)-55, MALFUNCTION INDICATOR LIGHT DOES NOT COME ON, Malfunction Indicator Light.>

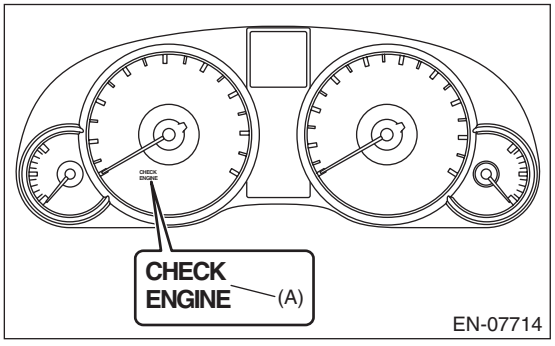

2) After starting the engine, the malfunction indicator light goes out. If it does not go off, any of the engine and emission control system has malfunction.

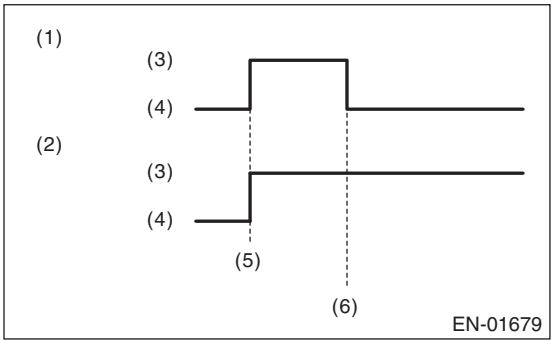

(1) No faulty
(2) Trouble occurs
(3) ON
(4) OFF
(5) Ignition switch ON
(6) Engine start

3) If the diagnostic system detects a misfire which could damage the catalyst, the malfunction indicator light will blink at a cycle of 1 Hz.

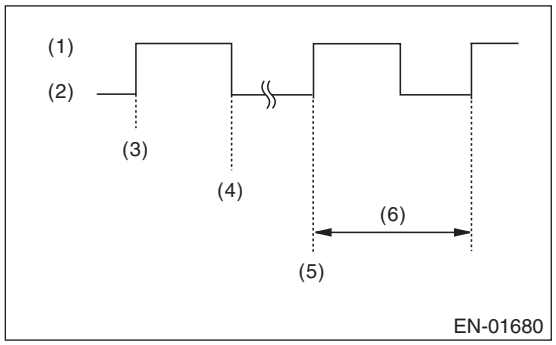

(1) ON
(2) OFF
(3) Ignition switch ON
(4) Engine start
(5) Misfire start
(6) 1 second

4) Install the delivery (test) mode fuse (A) with ignition switch to OFF.

CAUTION:
Do not use any fuses that are installed on the vehicle.

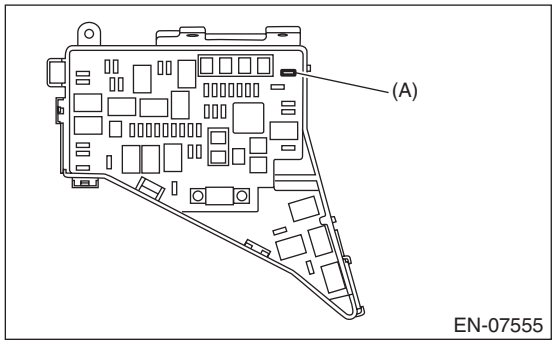

(1) When the ignition switch is turned to ON (engine OFF), the malfunction indicator light illuminates.
(2) After the engine starts, malfunction indicator light blinks in a cycle of 0.5 Hz. (During diagnosis)

(3) Malfunction indicator light blinks at a cycle of 3 Hz after diagnosis if there is no trouble. Malfunction indicator light illuminates if faulty.

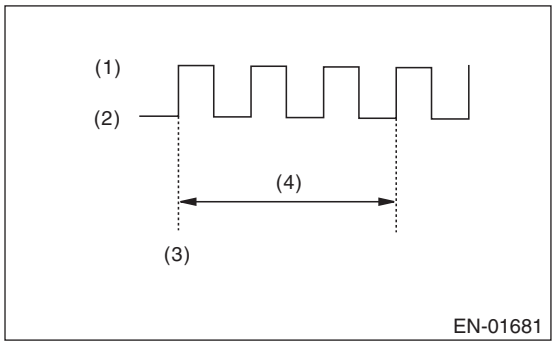

(1) ON
(2) OFF
(3) Ignition switch ON
(4) 1 second

C: MALFUNCTION INDICATOR LIGHT DOES NOT COME ON

TROUBLE SYMPTOM:
When the ignition switch is turned to ON (engine OFF), malfunction indicator light does not illuminate.
WIRING DIAGRAM:

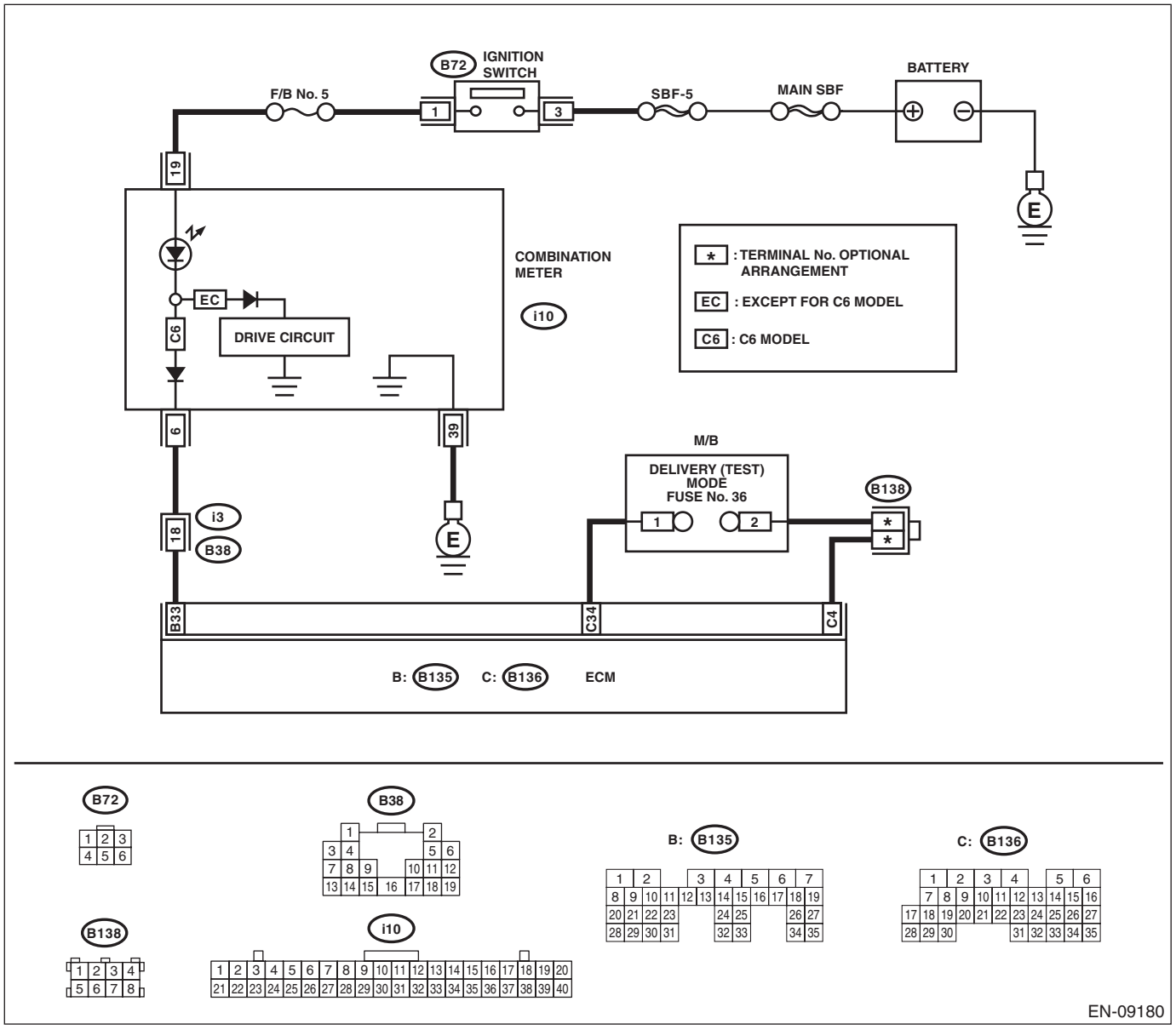

Step		Check	Yes	No
1	**CHECK VEHICLE SPECIFICATION.**	Is the vehicle except for C6 model?	Go to step **2**.	Go to step **3**.
2	**CHECK DTC.**	Is DTC of LAN system displayed? <Ref. to LAN(diag)-10, OPERATION, Read Diagnostic Trouble Code (DTC).>	Check the appropriate DTC using the "List of Diagnostic Trouble Code (DTC)". <Ref. to LAN(diag)-32, List of Diagnostic Trouble Code (DTC).>	Replace the meter case assembly of combination meter. <Ref. to IDI-21, Combination Meter.>

	Step	Check	Yes	No
3	**CHECK OUTPUT SIGNAL OF ECM.** 1) Turn the ignition switch to OFF. 2) Disconnect the connector from ECM. 3) Turn the ignition switch to ON. 4) Measure the voltage between ECM connector and chassis ground. ***Connector & terminal*** ***(B135) No. 33 (+) — Chassis ground (–):***	Is the voltage 10 V or more?	Go to step **7**.	Go to step **4**.
4	**CHECK HARNESS BETWEEN COMBINATION METER AND IGNITION SWITCH CONNECTOR.** 1) Turn the ignition switch to OFF. 2) Remove the combination meter. <Ref. to IDI-21, Combination Meter.> 3) Turn the ignition switch to ON. 4) Measure the voltage between combination meter connector and chassis ground. ***Connector & terminal*** ***(i10) No. 19 (+) — Chassis ground (–):***	Is the voltage 10 V or more?	Go to step **5**.	Check the following item and repair if necessary. NOTE: • Blown out of fuse • Open circuit or short circuit to ground in harness of power supply circuit
5	**CHECK HARNESS BETWEEN ECM AND COMBINATION METER CONNECTOR.** Measure the resistance of harness between ECM and combination meter connector. ***Connector & terminal*** ***(B135) No. 33 — (i10) No. 6:***	Is the resistance less than 1 Ω?	Go to step **6**.	Repair the harness and connector. NOTE: In this case, repair the following item: • Open circuit in harness between ECM and combination meter connector • Poor contact of coupling connector
6	**CHECK FOR POOR CONTACT.** Check for poor contact of combination meter connector.	Is there poor contact of combination meter connector?	Repair the poor contact of combination meter connector.	Replace the meter case assembly of combination meter. <Ref. to IDI-21, Combination Meter.>
7	**CHECK ECM CONNECTOR.** Check the connection of ECM connector.	Is the ECM connector correctly connected?	Go to step **8**.	Connect the ECM connector correctly.
8	**CHECK FOR POOR CONTACT.** Check for poor connection by shaking or pulling ECM connector and harness.	Does the malfunction indicator light illuminate?	Repair the poor contact of ECM connector.	Replace the ECM. <Ref. to FU(H4SO)-46, Engine Control Module (ECM).>

D: MALFUNCTION INDICATOR LIGHT DOES NOT GO OFF

TROUBLE SYMPTOM:

Although malfunction indicator light comes on when the engine runs, DTC is not shown on the Subaru Select Monitor or general scan tool display.

WIRING DIAGRAM:

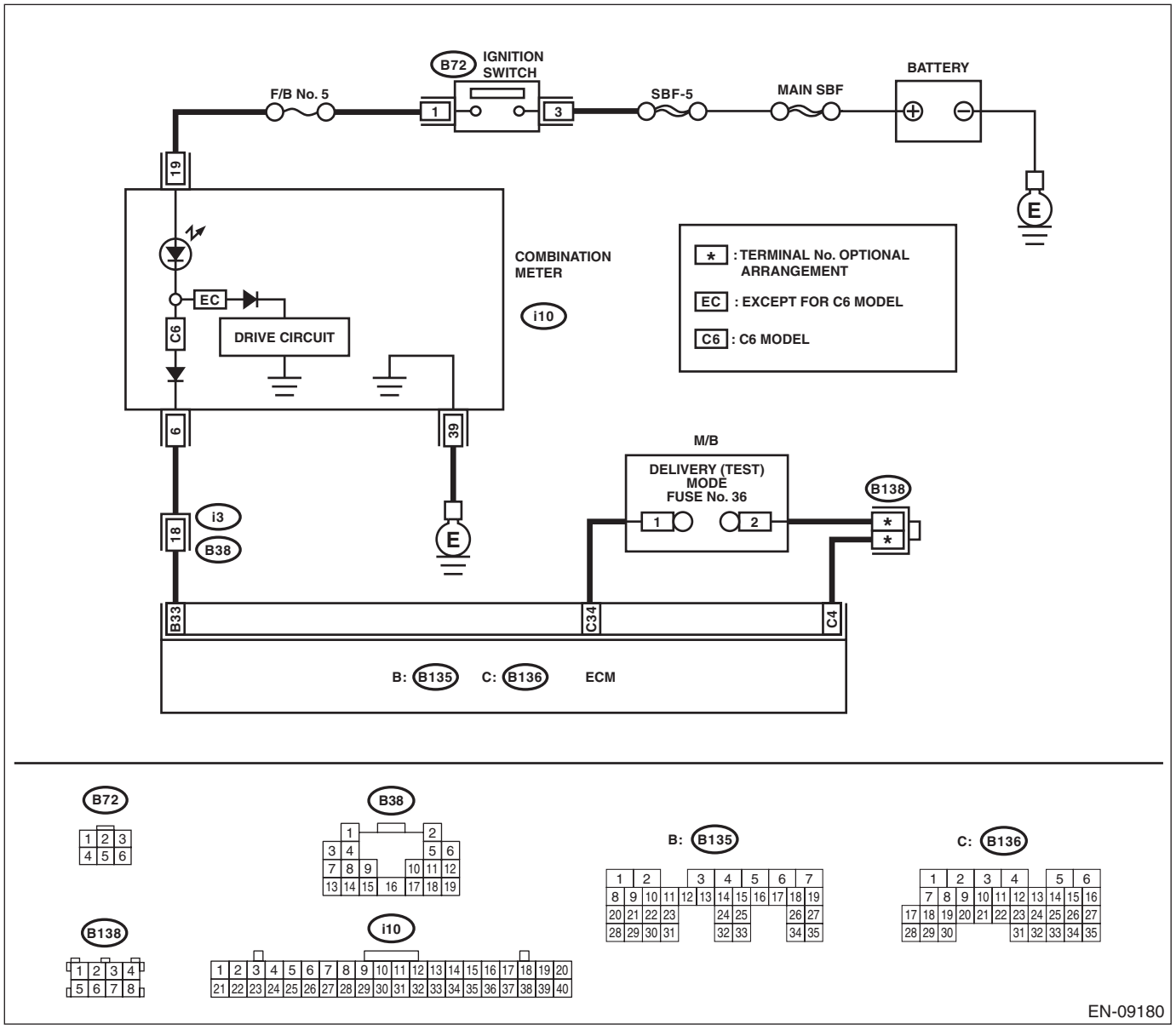

Step	Check	Yes	No
1 **CHECK DTC.**	Is DTC of engine or LAN system displayed? <Ref. to EN(H4SO)(diag)-39, OPERATION, Read Diagnostic Trouble Code (DTC).>	Check the appropriate DTC using the "List of Diagnostic Trouble Code (DTC)". <Ref. to EN(H4SO)(diag)-78, List of Diagnostic Trouble Code (DTC).> <Ref. to LAN(diag)-32, List of Diagnostic Trouble Code (DTC).>	Go to step **2**.

	Step	Check	Yes	No
2	**CHECK VEHICLE SPECIFICATION.**	Is the vehicle except for C6 model?	Go to step **3**.	Go to step **4**.
3	**CHECK COMBINATION METER.** Perform the self-diagnosis for combination meter system. <Ref. to IDI-6, SELF-DIAGNOSIS DISPLAY MODE, OPERATION, Combination Meter System.>	Does the malfunction indicator light illuminate and go off normally?	Replace the ECM. <Ref. to FU(H4SO)-46, Engine Control Module (ECM).>	Replace the meter case assembly of combination meter. <Ref. to IDI-21, Combination Meter.>
4	**CHECK HARNESS BETWEEN ECM AND COMBINATION METER CONNECTOR.** 1) Turn the ignition switch to OFF. 2) Disconnect the connector from ECM. 3) Turn the ignition switch to ON.	Does the malfunction indicator light illuminate?	Go to step **5**.	Replace the ECM. <Ref. to FU(H4SO)-46, Engine Control Module (ECM).>
5	**CHECK HARNESS BETWEEN ECM AND COMBINATION METER CONNECTOR.** 1) Turn the ignition switch to OFF. 2) Remove the combination meter. <Ref. to IDI-21, Combination Meter.> 3) Measure the resistance between ECM and chassis ground. ***Connector & terminal*** ***(B135) No. 33 — Chassis ground:***	Is the resistance 1 MΩ or more?	Replace the meter case assembly of combination meter. <Ref. to IDI-21, Combination Meter.>	Repair the ground short circuit of harness between ECM and combination meter connector.

E: MALFUNCTION INDICATOR LIGHT DOES NOT BLINK

DIAGNOSIS:

- The malfunction indicator light circuit is open or shorted.
- The delivery (test) mode fuse circuit is open.

TROUBLE SYMPTOM:

Malfunction indicator light does not blink during Inspection Mode.

WIRING DIAGRAM:

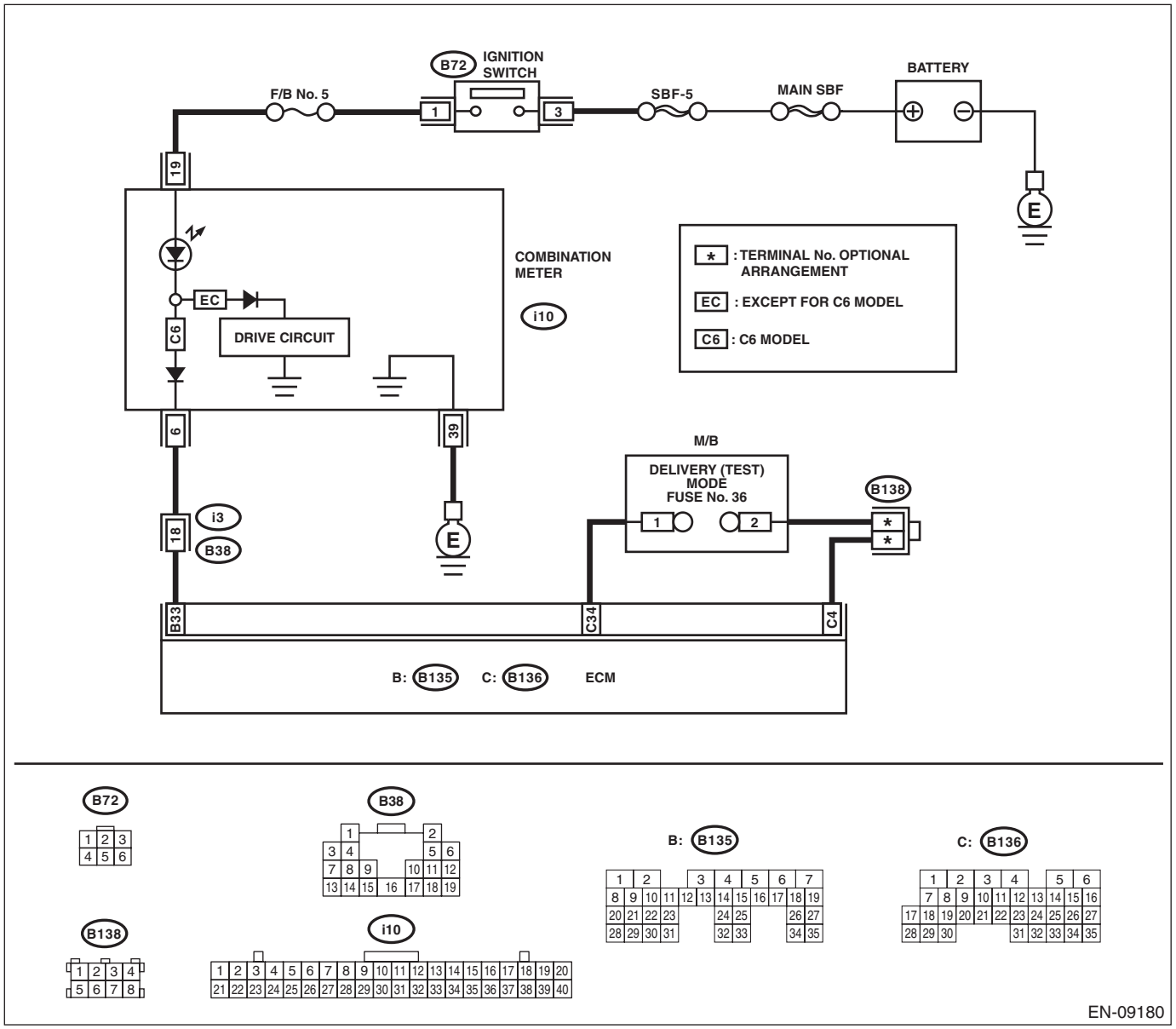

	Step	Check	Yes	No
1	**CHECK STATUS OF MALFUNCTION INDICATOR LIGHT.** 1) Turn the ignition switch to OFF. 2) Check the delivery (test) mode fuse is removed. 3) Turn the ignition switch to ON. (engine OFF)	Does the malfunction indicator light illuminate?	Go to step **2**.	Repair the malfunction indicator light circuit. <Ref. to EN(H4SO)(diag)-55, MALFUNCTION INDICATOR LIGHT DOES NOT COME ON, Malfunction Indicator Light.>
2	**CHECK VEHICLE SPECIFICATION.**	Is the vehicle except for C6 model?	Go to step **4**.	Go to step **3**.
3	**CHECK HARNESS BETWEEN ECM AND COMBINATION METER CONNECTOR.** 1) Turn the ignition switch to OFF. 2) Disconnect the connector from ECM. 3) Turn the ignition switch to ON.	Does the malfunction indicator light illuminate?	Repair the ground short circuit of harness between ECM and combination meter connector.	Go to step **4**.
4	**CHECK HARNESS BETWEEN ECM AND DELIVERY (TEST) MODE FUSE.** 1) Turn the ignition switch to OFF. 2) Disconnect the connector from ECM. 3) Install the delivery (test) mode fuse. **CAUTION:** **Do not use any fuses that are installed on the vehicle.** 4) Measure the resistance of harness between ECM connectors. ***Connector & terminal*** ***(B136) No. 34 — (B136) No. 4:***	Is the resistance less than 1 Ω?	Go to step **5**.	Repair the harness and connector. NOTE: In this case, repair the following item: • Open circuit of harness between ECM and delivery (test) mode fuse • Poor contact of joint connector
5	**CHECK FOR POOR CONTACT.** Check for poor contact of ECM connector.	Is there poor contact of ECM connector?	Repair the poor contact of ECM connector.	Replace the ECM. <Ref. to FU(H4SO)-46, Engine Control Module (ECM).>

F: MALFUNCTION INDICATOR LIGHT REMAINS BLINKING

DIAGNOSIS:
The delivery (test) mode fuse circuit is short-circuited to ground.
TROUBLE SYMPTOM:
Malfunction indicator light blinks when delivery (test) mode fuse is not connected.
WIRING DIAGRAM:

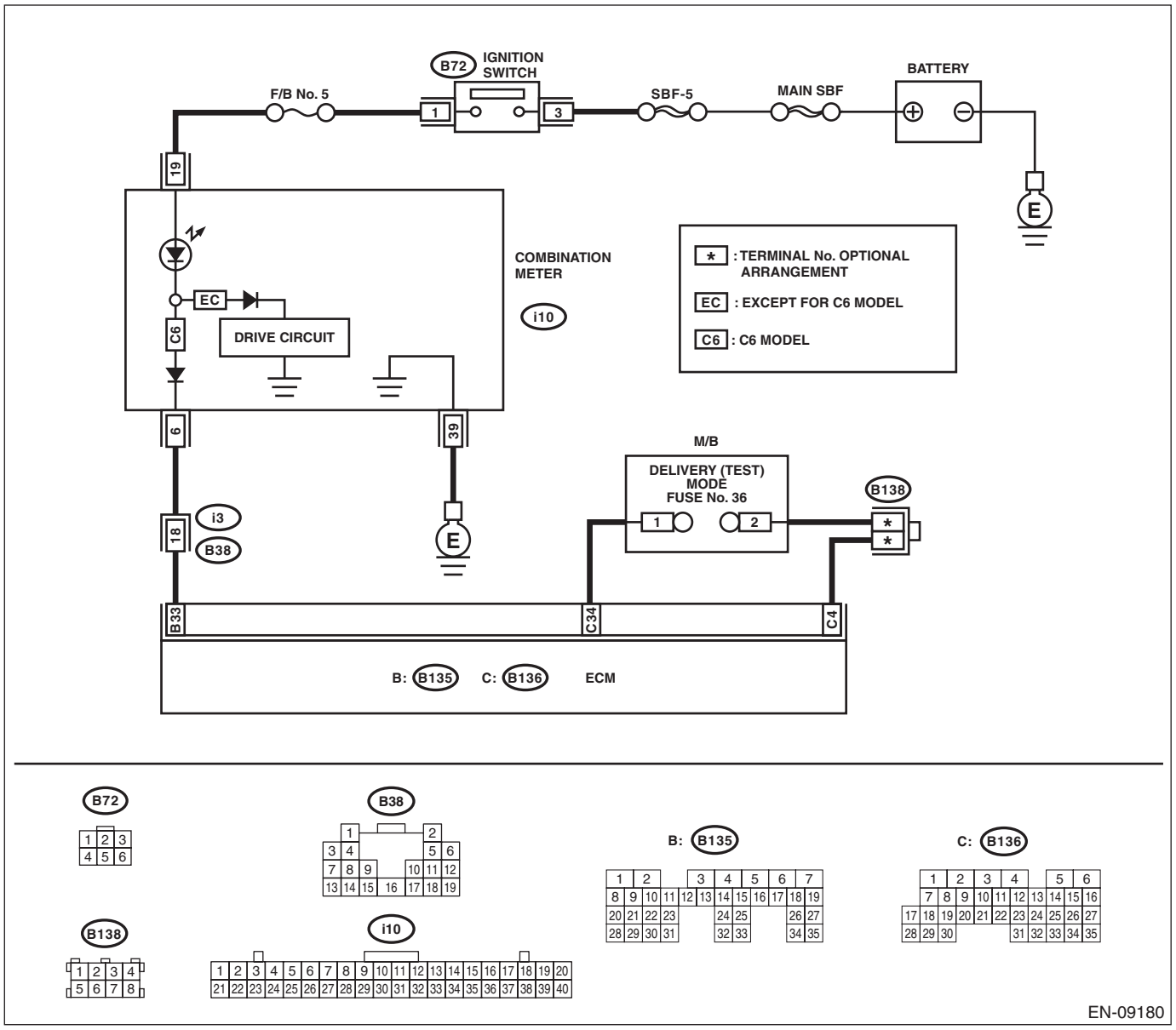

Step		Check	Yes	No
1	**CHECK DELIVERY (TEST) MODE FUSE.** 1) Check the delivery (test) mode fuse is removed. 2) Turn the ignition switch to ON.	Does the malfunction indicator light blink?	Go to step **2**.	System is normal. NOTE: Malfunction indicator light blinks at a cycle of 3 Hz when delivery (test) mode fuse is attached.

	Step	Check	Yes	No
2	**CHECK HARNESS BETWEEN ECM AND DELIVERY (TEST) MODE FUSE.** 1) Turn the ignition switch to OFF. 2) Disconnect the connector from ECM. 3) Measure the resistance between ECM and chassis ground. ***Connector & terminal*** ***(B136) No. 34 — Chassis ground:***	Is the resistance 1 MΩ or more?	Replace the ECM. <Ref. to FU(H4SO)-46, Engine Control Module (ECM).>	Repair the short circuit to ground in harness between ECM and delivery (test) mode fuse.

16.Diagnostics for Engine Starting Failure

A: PROCEDURE

1. Check of the fuel amount
↓
2. Inspection of starter motor circuit <Ref. to EN(H4SO)(diag)-64, STARTER MOTOR CIRCUIT, Diagnostics for Engine Starting Failure.>
↓
3. Inspection of ECM power supply and ground line <Ref. to EN(H4SO)(diag)-68, CHECK POWER SUPPLY AND GROUND LINE OF ENGINE CONTROL MODULE (ECM), Diagnostics for Engine Starting Failure.>
↓
4. Inspection of ignition control system <Ref. to EN(H4SO)(diag)-70, IGNITION CONTROL SYSTEM, Diagnostics for Engine Starting Failure.>
↓
5. Inspection of fuel pump circuit <Ref. to EN(H4SO)(diag)-72, FUEL PUMP CIRCUIT, Diagnostics for Engine Starting Failure.>
↓
6. Inspection of fuel injector circuit <Ref. to EN(H4SO)(diag)-74, FUEL INJECTOR CIRCUIT, Diagnostics for Engine Starting Failure.>

B: STARTER MOTOR CIRCUIT

CAUTION:
After servicing or replacing faulty parts, perform Clear Memory Mode <Ref. to EN(H4SO)(diag)-51, Clear Memory Mode.>, and Inspection Mode <Ref. to EN(H4SO)(diag)-40, Inspection Mode.>.
WIRING DIAGRAM:

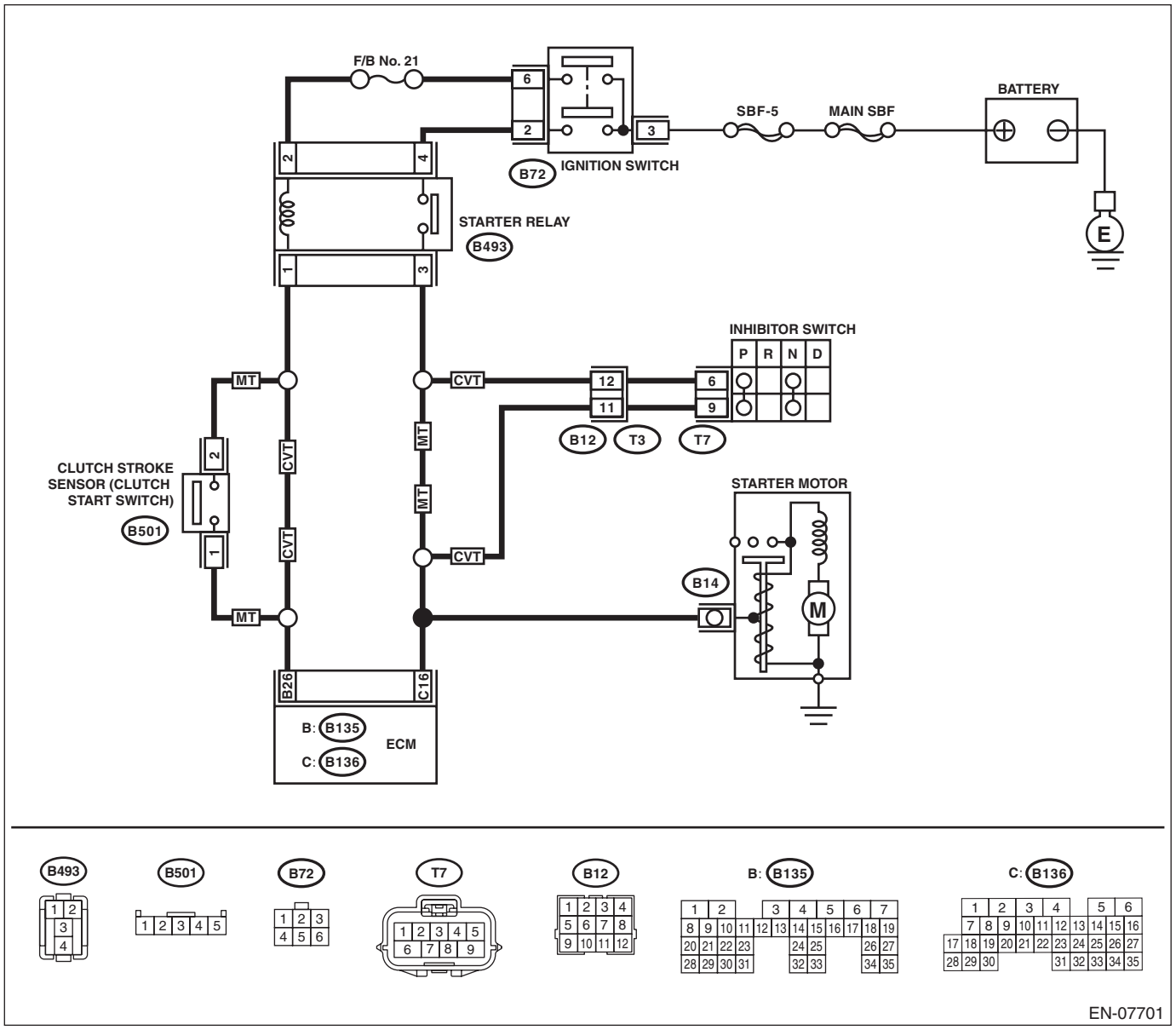

Step		Check	Yes	No
1	**CHECK BATTERY.** Check the battery voltage.	Is the voltage 12 V or more?	Go to step **2**.	Charge or replace the battery.
2	**CHECK OPERATION OF STARTER MOTOR.**	Does the starter motor operate?	Go to step **3**.	Go to step **4**.

	Step	Check	Yes	No
3	**CHECK DTC.**	Is DTC displayed? <Ref. to EN(H4SO)(diag)-39, OPERATION, Read Diagnostic Trouble Code (DTC).>	Check the appropriate DTC using the "List of Diagnostic Trouble Code (DTC)". <Ref. to EN(H4SO)(diag)-78, List of Diagnostic Trouble Code (DTC).>	The circuit has returned to a normal condition at this time. Reproduce the failure, and then perform the diagnosis again. NOTE: In this case, temporary poor contact of connector, temporary open or short circuit of harness may be the cause.
4	**CHECK INPUT SIGNAL FOR STARTER MOTOR.** 1) Turn the ignition switch to OFF. 2) Disconnect the connector from starter motor. 3) Turn the ignition switch to START. 4) Measure the voltage between the starter motor connector and the engine ground. ***Connector & terminal*** ***(B14) No. 1 (+) — Engine ground (–):*** NOTE: For CVT model, place the select lever in "P" range or "N" range. For MT model, depress the clutch pedal.	Is the voltage 10 V or more?	Check the starter motor. <Ref. to SC(H4SO)-9, Starter.>	Go to step **5**.
5	**CHECK HARNESS BETWEEN BATTERY AND IGNITION SWITCH CONNECTOR.** 1) Turn the ignition switch to OFF. 2) Disconnect the connector from ignition switch. 3) Measure the voltage between ignition switch connector and chassis ground. ***Connector & terminal*** ***(B72) No. 3 (+) — Chassis ground (–):***	Is the voltage 10 V or more?	Go to step **6**.	Repair the power supply circuit.
6	**CHECK IGNITION SWITCH.** Measure the resistance between ignition switch terminals after turning the ignition switch to START position. ***Terminals*** ***No. 3 — No. 2:*** ***No. 3 — No. 6:***	Is the resistance less than 1 Ω?	Go to step **7**.	Replace the ignition switch. <Ref. to SL-58, REPLACEMENT, Ignition Key Lock.>
7	**CHECK INPUT VOLTAGE OF STARTER RELAY.** 1) Turn the ignition switch to OFF. 2) Remove the starter relay. 3) Connect the connector to ignition switch. 4) Measure the input voltage between starter relay connector and chassis ground after turning the ignition switch to START position. ***Connector & terminal*** ***(B493) No. 2 (+) — Chassis ground (–):*** ***(B493) No. 4 (+) — Chassis ground (–):***	Is the voltage 10 V or more?	Go to step **8**.	Repair open or short circuit to ground in harness between starter relay and ignition switch connector.

	Step	Check	Yes	No
8	**CHECK STARTER RELAY.** 1) Connect the battery to starter relay terminals No. 1 and No. 2. 2) Measure the resistance between starter relay terminals. ***Terminals*** ***No. 3 — No. 4:***	Is the resistance less than 1 Ω?	Go to step **9**.	Replace the starter relay. <Ref. to EN(H4SO)(diag)-9, Electrical Component Location.>
9	**CHECK TRANSMISSION TYPE.**	Is the transmission type CVT?	Go to step **10**.	Go to step **14**.
10	**CHECK HARNESS BETWEEN ECM AND STARTER RELAY CONNECTOR.** 1) Turn the ignition switch to OFF. 2) Disconnect the connectors from ECM. 3) Measure the resistance of harness connector between ECM and starter relay. ***Connector & terminal*** ***(B493) No. 1 — (B135) No. 26:***	Is the resistance less than 1 Ω?	Go to step **11**.	Repair the open circuit of harness between ECM and starter relay connector.
11	**CHECK HARNESS BETWEEN STARTER RELAY AND INHIBITOR SWITCH CONNECTOR.** 1) Disconnect the connector from inhibitor switch. 2) Measure the resistance of harness between starter relay connector and inhibitor relay connector. ***Connector & terminal*** ***(B493) No. 3 — (T7) No. 6:***	Is the resistance less than 1 Ω?	Go to step **12**.	Repair the harness and connector. NOTE: In this case, repair the following item: • Open circuit in harness between starter relay connector and inhibitor switch connector • Poor contact of coupling connector
12	**CHECK HARNESS BETWEEN INHIBITOR SWITCH AND STARTER MOTOR.** Measure the resistance of harness between the inhibitor switch and starter motor. ***Connector & terminal*** ***(T7) No. 9 — (B14) No. 1:***	Is the resistance less than 1 Ω?	Go to step **13**.	Repair the harness and connector. NOTE: In this case, repair the following item: • Open circuit in harness between inhibitor switch connector and starter motor • Poor contact of coupling connector
13	**CHECK INHIBITOR SWITCH.** 1) Place the select lever in “P” range or “N” range. 2) Measure the resistance between inhibitor switch terminals. ***Terminals*** ***No. 6 — No. 9:***	Is the resistance less than 1 Ω?	Check the ECM power supply and ground line. <Ref. to EN(H4SO)(diag)-68, CHECK POWER SUPPLY AND GROUND LINE OF ENGINE CONTROL MODULE (ECM), Diagnostics for Engine Starting Failure.>	Replace the inhibitor switch. <Ref. to CVT-95, Inhibitor Switch.>

	Step	Check	Yes	No
14	**CHECK HARNESS BETWEEN STARTER RELAY AND CLUTCH STROKE SENSOR CONNECTOR.** 1) Turn the ignition switch to OFF. 2) Disconnect the connector from clutch stroke sensor. 3) Measure the resistance of harness between starter relay connector and clutch stroke sensor connector. ***Connector & terminal*** ***(B493) No. 1 — (B501) No. 2:***	Is the voltage 10 V or more?	Go to step **15**.	Repair the open circuit in harness between starter relay connector and clutch stroke sensor connector.
15	**CHECK HARNESS BETWEEN ECM AND CLUTCH STROKE SENSOR CONNECTOR.** 1) Disconnect the connectors from ECM. 2) Measure the resistance of harness between ECM and clutch stroke sensor connector. ***Connector & terminal*** ***(B135) No. 26 — (B501) No. 1:***	Is the resistance less than 1 Ω?	Go to step **16**.	Repair the open circuit of harness between ECM and clutch stroke sensor connector.
16	**CHECK CLUTCH STROKE SENSOR.** Measure the resistance between clutch stroke sensor terminals while depressing the clutch. ***Terminals*** ***No. 1 — No. 2:***	Is the resistance less than 1 Ω?	Go to step **17**.	Replace the clutch stroke sensor. <Ref. to PB(diag)-10, Electrical Component Location.>
17	**CHECK HARNESS BETWEEN STARTER RELAY AND STARTER MOTOR.** Measure the resistance of harness between starter relay connector and starter motor. ***Connector & terminal*** ***(B493) No. 3 — (B14) No. 1:***	Is the resistance less than 1 Ω?	Check the ECM power supply and ground line. <Ref. to EN(H4SO)(diag)-68, CHECK POWER SUPPLY AND GROUND LINE OF ENGINE CONTROL MODULE (ECM), Diagnostics for Engine Starting Failure.>	Repair the open circuit of the harness between starter relay connector and starter motor.

C: CHECK POWER SUPPLY AND GROUND LINE OF ENGINE CONTROL MODULE (ECM)

CAUTION:
After servicing or replacing faulty parts, perform Clear Memory Mode <Ref. to EN(H4SO)(diag)-51, OPERATION, Clear Memory Mode.>, and Inspection Mode <Ref. to EN(H4SO)(diag)-40, PROCEDURE, Inspection Mode.>.
WIRING DIAGRAM:

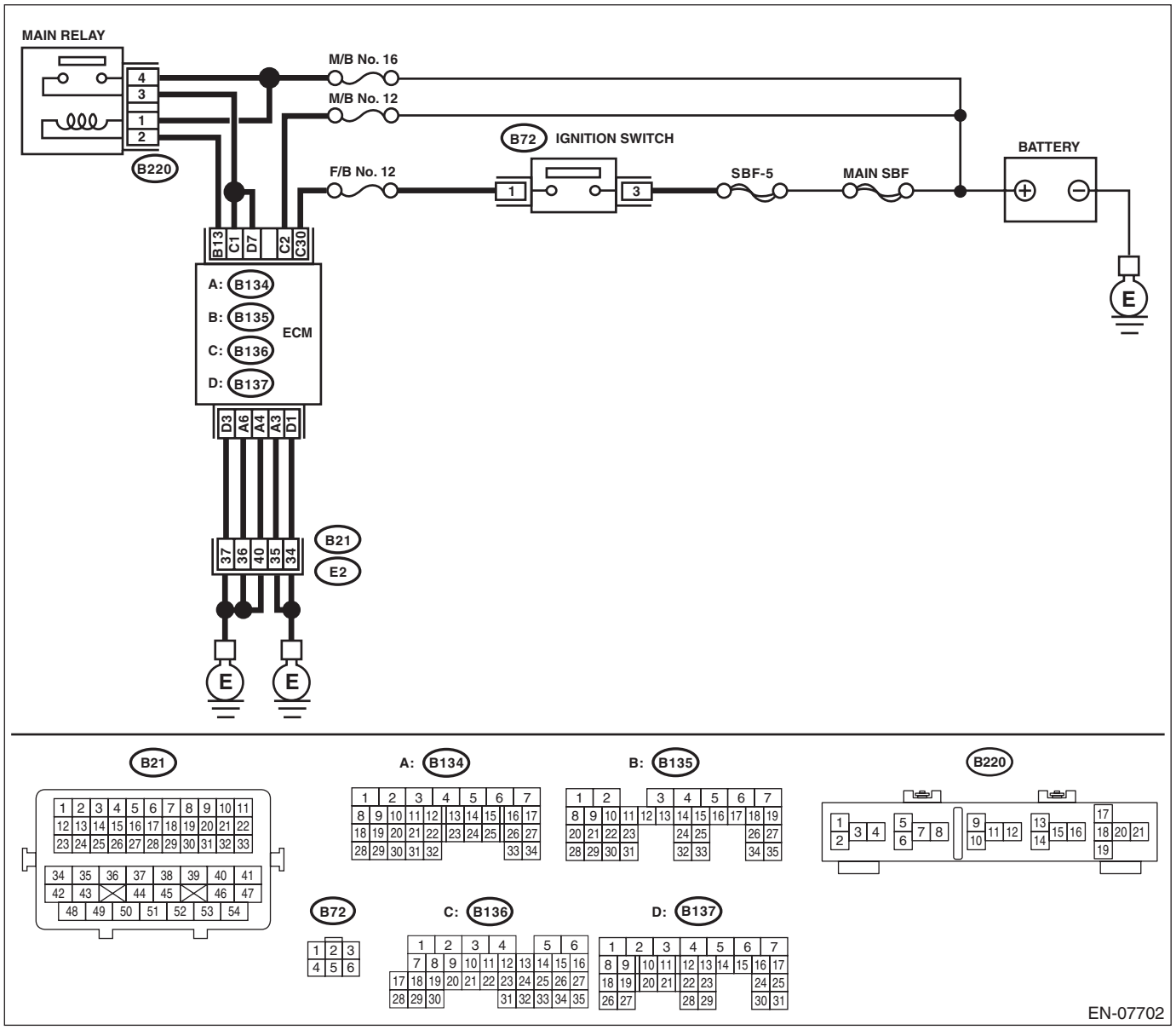

Step		Check	Yes	No
1	**CHECK MAIN RELAY.** 1) Turn the ignition switch to OFF. 2) Remove the main relay. 3) Connect the battery to main relay terminals No. 1 and No. 2. 4) Measure the resistance between main relay terminals. ***Terminals*** ***No. 3 — No. 4:***	Is the resistance less than 1 Ω?	Go to step **2**.	Replace the main relay. <Ref. to FU(H4SO)-47, Main Relay.>

	Step	Check	Yes	No
2	**CHECK GROUND CIRCUIT FOR ECM.** 1) Disconnect the connectors from ECM. 2) Measure the resistance of harness between ECM and chassis ground. ***Connector & terminal*** ***(B134) No. 3 — Chassis ground:*** ***(B134) No. 4 — Chassis ground:*** ***(B134) No. 6 — Chassis ground:*** ***(B137) No. 1 — Chassis ground:*** ***(B137) No. 3 — Chassis ground:***	Is the resistance less than 5 Ω?	Go to step **3**.	Repair the harness and connector. NOTE: In this case, repair the following item: • Open circuit in harness between ECM and engine ground terminal • Poor contact of coupling connector
3	**CHECK INPUT VOLTAGE OF ECM.** 1) Turn the ignition switch to ON. 2) Measure the voltage between ECM and chassis ground. ***Connector & terminal*** ***(B136) No. 2 (+) — Chassis ground (–):*** ***(B136) No. 30 (+) — Chassis ground (–):***	Is the voltage 10 V or more?	Go to step **4**.	Repair the open or ground short circuit of harness of power supply circuit.
4	**CHECK INPUT VOLTAGE OF MAIN RELAY.** Measure the voltage between main relay connector and chassis ground. ***Connector & terminal*** ***(B220) No. 1 (+) — Chassis ground (–):*** ***(B220) No. 4 (+) — Chassis ground (–):***	Is the voltage 10 V or more?	Go to step **5**.	Repair the open or ground short circuit of harness of power supply circuit.
5	**CHECK INPUT VOLTAGE OF ECM.** 1) Turn the ignition switch to OFF. 2) Install the main relay. 3) Turn the ignition switch to ON. 4) Measure the voltage between ECM and chassis ground. ***Connector & terminal*** ***(B135) No. 13 (+) — Chassis ground (–):***	Is the voltage 10 V or more?	Go to step **6**.	Repair the open circuit in harness between ECM and main relay connector.
6	**CHECK INPUT VOLTAGE OF ECM.** 1) Turn the ignition switch to OFF. 2) Connect the connector to ECM. 3) Turn the ignition switch to ON. 4) Measure the voltage between ECM and chassis ground. ***Connector & terminal*** ***(B136) No. 1 (+) — Chassis ground (–):*** ***(B137) No. 7 (+) — Chassis ground (–):***	Is the voltage 10 V or more?	Check ignition control system. <Ref. to EN(H4SO)(diag)-70, IGNITION CONTROL SYSTEM, Diagnostics for Engine Starting Failure.>	Repair the harness and connector. NOTE: In this case, repair the following item: • Open circuit in harness between ECM and main relay connector • Poor contact of main relay connector • Poor contact of ECM connector

D: IGNITION CONTROL SYSTEM

CAUTION:
After servicing or replacing faulty parts, perform Clear Memory Mode <Ref. to EN(H4SO)(diag)-51, Clear Memory Mode.>, and Inspection Mode <Ref. to EN(H4SO)(diag)-40, Inspection Mode.>.
WIRING DIAGRAM:

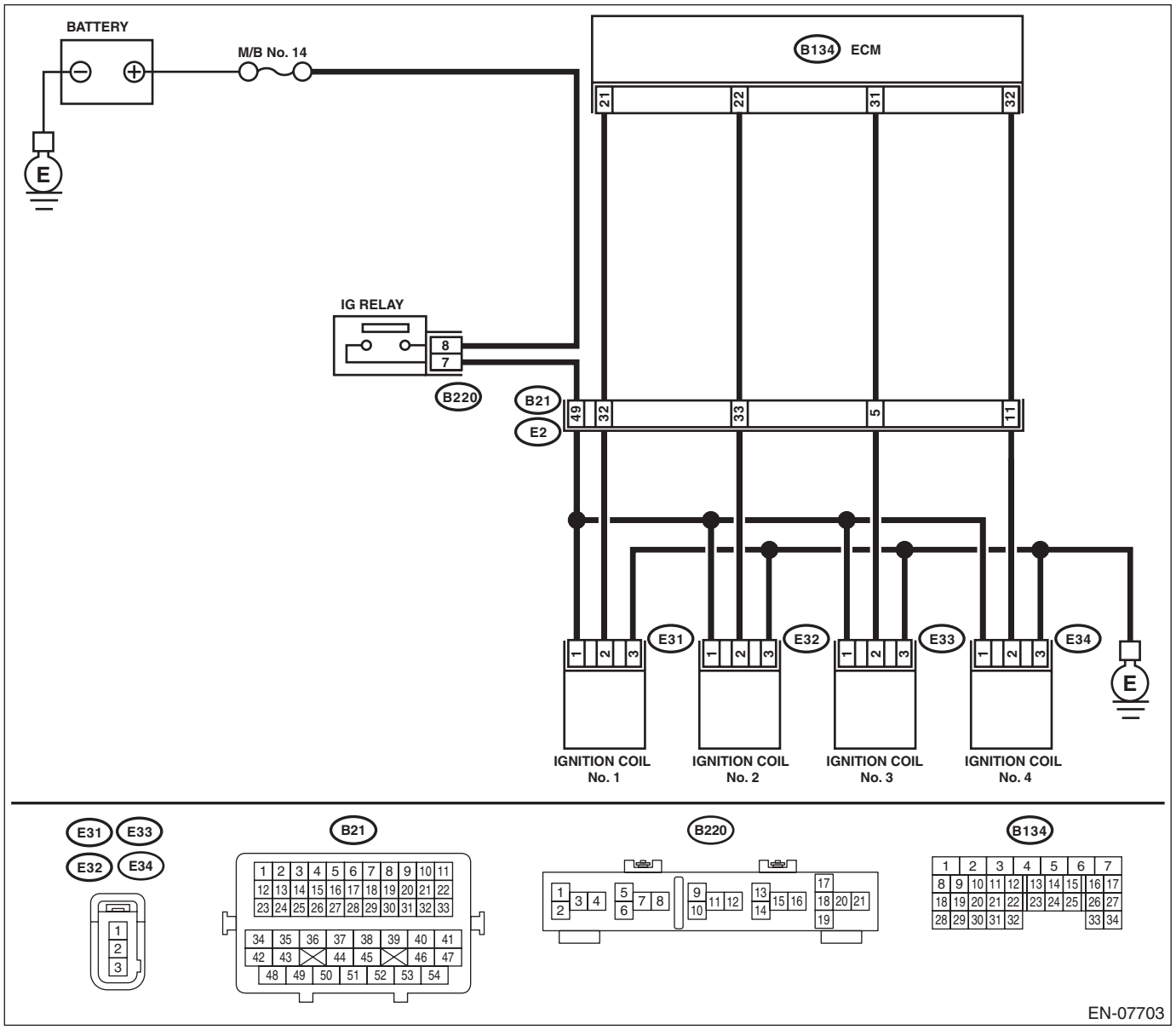

Step		Check	Yes	No
1	**CHECK SPARK PLUG CONDITION.** 1) Remove the spark plug. <Ref. to IG(H4SO)-3, REMOVAL, Spark Plug.> 2) Check the spark plug condition. <Ref. to IG(H4SO)-3, INSPECTION, Spark Plug.>	Is the spark plug condition normal?	Go to step **2**.	Replace the spark plug. <Ref. to IG(H4SO)-3, Spark Plug.>

	Step	Check	Yes	No
2	**CHECK IGNITION SYSTEM FOR SPARKS.** 1) Connect the spark plug to ignition coil. 2) Release the fuel pressure. <Ref. to FU(H4SO)-53, RELEASING OF FUEL PRESSURE, PROCEDURE, Fuel.> 3) Contact the spark plug thread portion to engine. 4) While opening the throttle valve fully, crank the engine to check that spark occurs at each cylinder.	Does spark occur at each cylinder?	Check fuel pump system. <Ref. to EN(H4SO)(diag)-72, FUEL PUMP CIRCUIT, Diagnostics for Engine Starting Failure.>	Go to step **3**.
3	**CHECK IGNITION COIL POWER SUPPLY CIRCUIT.** 1) Turn the ignition switch to OFF. 2) Disconnect the connector from ignition coil. 3) Turn the ignition switch to ON. 4) Measure the voltage between ignition coil connector and engine ground. ***Connector & terminal*** ***(E31) No. 1 (+) — Engine ground (–):*** ***(E32) No. 1 (+) — Engine ground (–):*** ***(E33) No. 1 (+) — Engine ground (–):*** ***(E34) No. 1 (+) — Engine ground (–):***	Is the voltage 10 V or more?	Go to step **4**.	Repair the harness and connector. NOTE: In this case, repair the following item: • Open circuit or short circuit to ground in harness of power supply circuit • Poor contact of coupling connector • Blown out of fuse (M/B No. 14)
4	**CHECK HARNESS OF IGNITION COIL GROUND CIRCUIT.** 1) Turn the ignition switch to OFF. 2) Measure the resistance of harness between ignition coil connector and engine ground. ***Connector & terminal*** ***(E31) No. 3 — Engine ground:*** ***(E32) No. 3 — Engine ground:*** ***(E33) No. 3 — Engine ground:*** ***(E34) No. 3 — Engine ground:***	Is the resistance less than 5 Ω?	Go to step **5**.	Repair the open circuit in harness between ignition coil connector and engine grounding terminal.
5	**CHECK HARNESS BETWEEN ECM AND IGNITION COIL CONNECTOR.** 1) Disconnect the connector from ECM. 2) Measure the resistance of harness between ECM and ignition coil connector. ***Connector & terminal*** ***(B134) No. 21 — (E31) No. 2:*** ***(B134) No. 22 — (E32) No. 2:*** ***(B134) No. 31 — (E33) No. 2:*** ***(B134) No. 32 — (E34) No. 2:***	Is the resistance less than 1 Ω?	Go to step **6**.	Repair the harness and connector. NOTE: In this case, repair the following item: • Open circuit of harness between ECM and ignition coil connector • Poor contact of coupling connector
6	**CHECK HARNESS BETWEEN ECM AND IGNITION COIL CONNECTOR.** Measure the resistance of harness between ECM and engine ground. ***Connector & terminal:*** ***(B134) No. 21 — Engine ground:*** ***(B134) No. 22 — Engine ground:*** ***(B134) No. 31 — Engine ground:*** ***(B134) No. 32 — Engine ground:***	Is the resistance 1 MΩ or more?	Go to step **7**.	Repair the ground short circuit of harness between ECM and ignition coil connector.
7	**CHECK FOR POOR CONTACT.** Check for poor contact of ECM connector.	Is there poor contact of ECM connector?	Repair the poor contact of ECM connector.	Replace the ignition coil. <Ref. to IG(H4SO)-5, Ignition Coil.>

E: FUEL PUMP CIRCUIT

CAUTION:
After servicing or replacing faulty parts, perform Clear Memory Mode <Ref. to EN(H4SO)(diag)-51, OPERATION, Clear Memory Mode.>, and Inspection Mode <Ref. to EN(H4SO)(diag)-40, PROCEDURE, Inspection Mode.>.
WIRING DIAGRAM:

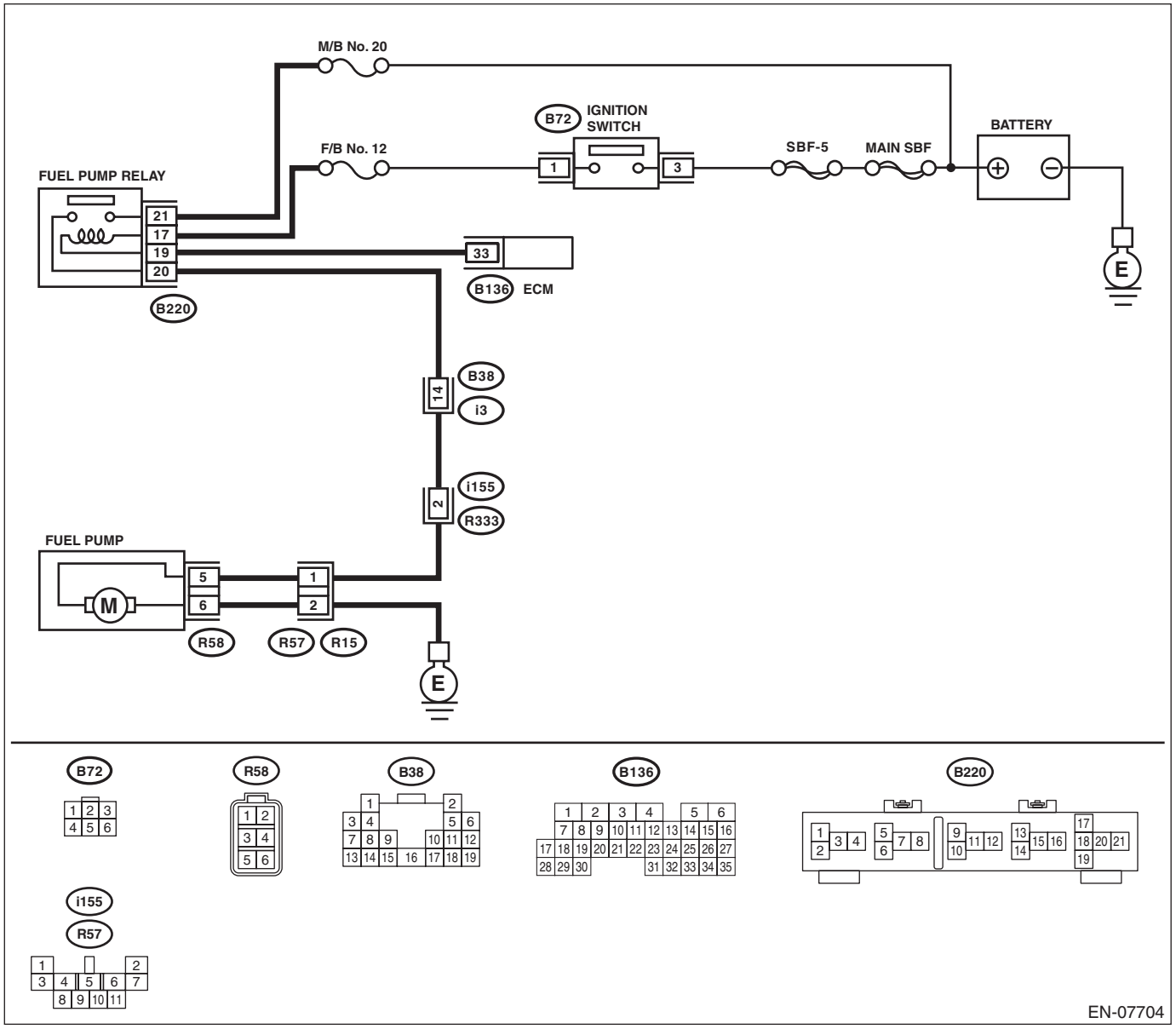

Step		Check	Yes	No
1	**CHECK OPERATING SOUND OF FUEL PUMP.** Check if the fuel pump operates for two seconds when turning the ignition switch to ON. NOTE: Fuel pump operation can be executed using the Subaru Select Monitor. For detailed procedures, refer to "SYSTEM OPERATION CHECK MODE". <Ref. to EN(H4SO)(diag)-52, System Operation Check Mode.>	Does the fuel pump emit operating sound?	Check the fuel injector circuit. <Ref. to EN(H4SO)(diag)-74, FUEL INJECTOR CIRCUIT, Diagnostics for Engine Starting Failure.>	Go to step **2**.

	Step	Check	Yes	No
2	**CHECK GROUND CIRCUIT OF FUEL PUMP.** 1) Turn the ignition switch to OFF. 2) Remove the fuel pump access hole lid. 3) Disconnect the connector from fuel pump. 4) Measure the resistance of harness connector between fuel pump and chassis ground. ***Connector & terminal*** ***(R58) No. 6 — Chassis ground:***	Is the resistance less than 5 Ω?	Go to step **3**.	Repair the harness and connector. NOTE: In this case, repair the following item: • Open circuit in harness between fuel pump connector and chassis grounding terminal • Poor contact of coupling connector
3	**CHECK POWER SUPPLY TO FUEL PUMP.** 1) Turn the ignition switch to ON. 2) Measure the voltage between fuel pump connector and chassis ground. ***Connector & terminal*** ***(R58) No. 5 (+) — Chassis ground (–):***	Is the voltage 10 V or more?	Replace the fuel pump. <Ref. to FU(H4SO)-65, Fuel Pump.>	Go to step **4**.
4	**CHECK HARNESS BETWEEN FUEL PUMP AND FUEL PUMP RELAY CONNECTOR.** 1) Turn the ignition switch to OFF. 2) Measure the resistance of harness between fuel pump connector and fuel pump relay connector. ***Connector & terminal*** ***(R58) No. 5 — (B220) No. 20:***	Is the resistance less than 1 Ω?	Go to step **5**.	Repair the harness and connector. NOTE: In this case, repair the following item: • Open circuit in harness between fuel pump connector and fuel pump relay connector • Poor contact of coupling connector
5	**CHECK HARNESS BETWEEN FUEL PUMP AND FUEL PUMP RELAY CONNECTOR.** Measure the resistance of harness between fuel pump and fuel pump relay connector. ***Connector & terminal*** ***(R58) No. 5 — Chassis ground:***	Is the resistance 1 MΩ or more?	Go to step **6**.	Repair the short circuit to ground in harness between fuel pump connector and fuel pump relay connector.
6	**CHECK FUEL PUMP RELAY.** 1) Remove the fuel pump relay. 2) Connect the battery to fuel pump relay terminals No. 17 and No. 19. 3) Measure the resistance between fuel pump relay terminals. ***Terminals*** ***No. 20 — No. 21:***	Is the resistance less than 1 Ω?	Go to step **7**.	Replace the fuel pump relay. <Ref. to FU(H4SO)-49, Fuel Pump Relay.>
7	**CHECK HARNESS BETWEEN ECM AND FUEL PUMP RELAY CONNECTOR.** 1) Disconnect the connectors from ECM. 2) Measure the resistance of harness between ECM and fuel pump relay connector. ***Connector & terminal*** ***(B136) No. 33 — (B220) No. 19:***	Is the resistance less than 1 Ω?	Go to step **8**.	Repair the open circuit of harness between ECM and fuel pump relay connector.
8	**CHECK POWER SUPPLY OF FUEL PUMP RELAY.** 1) Turn the ignition switch to ON. 2) Measure the voltage between fuel pump relay connector and chassis ground. ***Connector & terminal*** ***(B220) No. 17 (+) — Chassis ground (–):*** ***(B220) No. 21 (+) — Chassis ground (–):***	Is the voltage 10 V or more?	Repair the poor contact of ECM connector.	Repair the open or ground short circuit of harness of power supply circuit.

F: FUEL INJECTOR CIRCUIT

CAUTION:
- **Check or repair only faulty parts.**
- **After servicing or replacing faulty parts, perform Clear Memory Mode <Ref. to EN(H4SO)(diag)-51, OPERATION, Clear Memory Mode.>, and Inspection Mode <Ref. to EN(H4SO)(diag)-40, PROCEDURE, Inspection Mode.>.**

WIRING DIAGRAM:

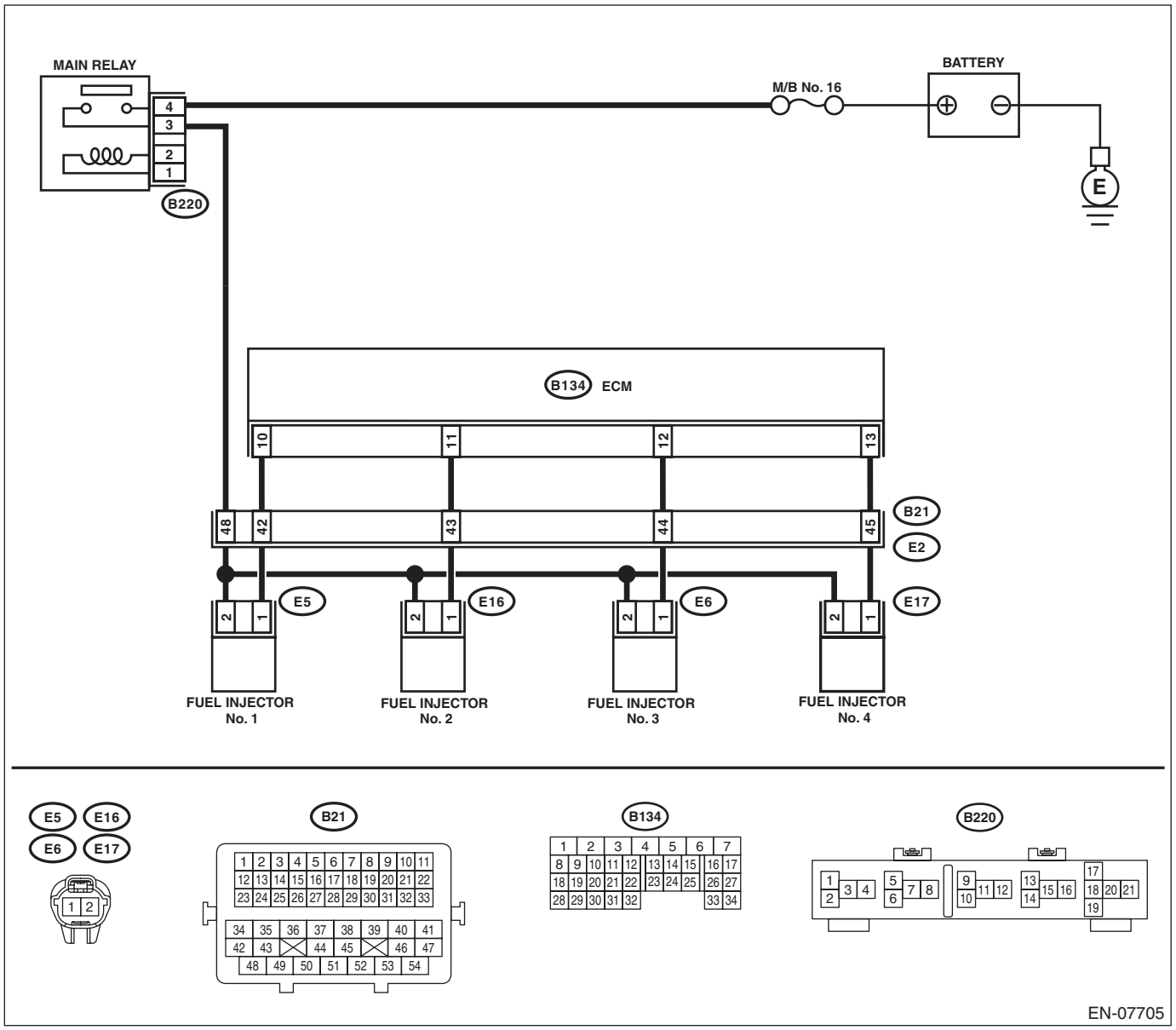

Step		Check	Yes	No
1	**CHECK OPERATION OF EACH FUEL INJECTOR.** While cranking the engine, check each fuel injector emits operating sound. Use a sound scope or attach a screwdriver to the injector to listen to sounds for this check.	Does the fuel pump emit operating sound?	Check the fuel pressure. <Ref. to ME(H4SO)-28, INSPECTION, Fuel Pressure.>	Go to step **2**.

	Step	Check	Yes	No
2	**CHECK POWER SUPPLY TO EACH FUEL INJECTOR.** 1) Turn the ignition switch to OFF. 2) Disconnect the connector from fuel injector. 3) Turn the ignition switch to ON. 4) Measure the voltage between fuel injector connector and the engine ground. ***Connector & terminal*** ***#1 (E5) No. 2 (+) — Engine ground (–):*** ***#2 (E16) No. 2 (+) — Engine ground (–):*** ***#3 (E6) No. 2 (+) — Engine ground (–):*** ***#4 (E17) No. 2 (+) — Engine ground (–):***	Is the voltage 10 V or more?	Go to step **3**.	Repair the harness and connector. NOTE: In this case, repair the following item: • Open circuit in harness between main relay connector and fuel injector connector • Poor contact of main relay connector • Poor contact of coupling connector
3	**CHECK HARNESS BETWEEN ECM AND FUEL INJECTOR CONNECTOR.** 1) Turn the ignition switch to OFF. 2) Disconnect the connectors from ECM. 3) Measure the resistance of harness between ECM and fuel injector connector. ***Connector & terminal*** ***#1 (B134) No. 10 — (E5) No. 1:*** ***#2 (B134) No. 11 — (E16) No. 1:*** ***#3 (B134) No. 12 — (E6) No. 1:*** ***#4 (B134) No. 13 — (E17) No. 1:***	Is the resistance less than 1 Ω?	Go to step **4**.	Repair the harness and connector. NOTE: In this case, repair the following item: • Open circuit in harness between ECM and fuel injector connector • Poor contact of coupling connector
4	**CHECK HARNESS BETWEEN ECM AND FUEL INJECTOR CONNECTOR.** Measure the resistance between ECM and chassis ground. ***Connector & terminal*** ***#1 (B134) No. 10 — Chassis ground:*** ***#2 (B134) No. 11 — Chassis ground:*** ***#3 (B134) No. 12 — Chassis ground:*** ***#4 (B134) No. 13 — Chassis ground:***	Is the resistance 1 MΩ or more?	Go to step **5**.	Repair the short circuit to ground in harness between ECM and fuel injector connector.
5	**CHECK EACH FUEL INJECTOR.** Measure the resistance between each fuel injector terminals. ***Terminals*** ***No. 1 — No. 2:***	Is the resistance 5 — 20 Ω?	Go to step **6**.	Replace the faulty fuel injector. <Ref. to FU(H4SO)-37, Fuel Injector.>
6	**CHECK FOR POOR CONTACT.** Check for poor contact of ECM connector.	Is there poor contact of ECM connector?	Repair the poor contact of ECM connector.	Inspection using “General Diagnostic Table”. <Ref. to EN(H4SO)(diag)-292, INSPECTION, General Diagnostic Table.>

17.Diagnostic Procedure for Subaru Select Monitor Communication

A: COMMUNICATION FOR INITIALIZING IMPOSSIBLE

DIAGNOSIS:
Open or short circuit in data link connector
TROUBLE SYMPTOM:
Subaru Select Monitor communication failure
WIRING DIAGRAM:

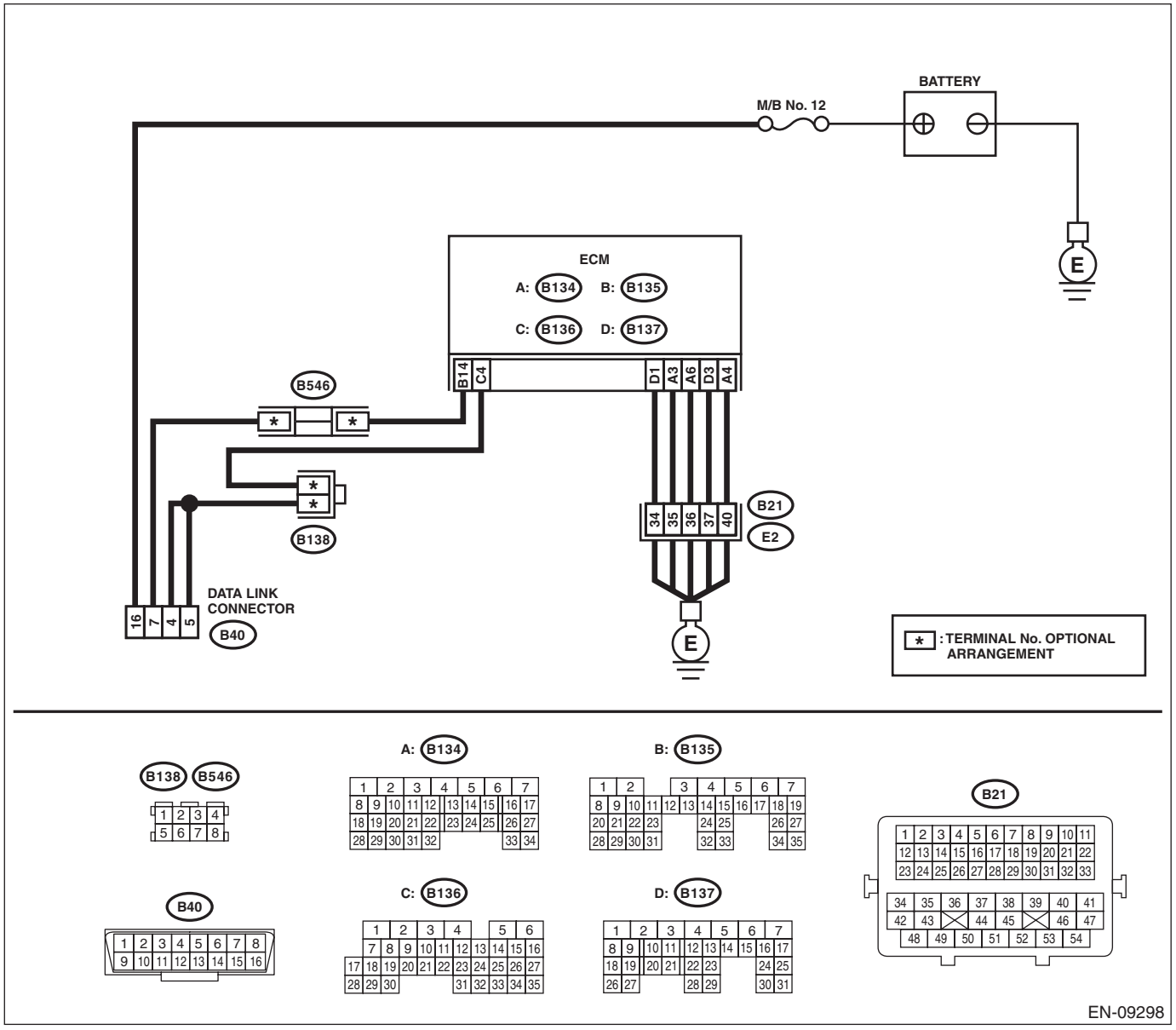

Step		Check	Yes	No
1	**CHECK POWER SUPPLY CIRCUIT.** Connect the SDI (Subaru Diagnosis Interface) or general scan tool to data link connector.	Does SDI or general scan tool turn ON?	Go to step **4**.	Go to step **2**.

	Step	Check	Yes	No
2	**CHECK POWER SUPPLY CIRCUIT.** Measure the voltage between data link connector and chassis ground. ***Connector & terminal*** ***(B40) No. 16 (+) — Chassis ground (–):***	Is the voltage 10 V or more?	Go to step **3**.	Repair the power supply circuit. NOTE: In this case, repair the following item: • Open or ground short circuit of harness between battery and data link connector • Blown out of fuse (M/B No. 12)
3	**CHECK HARNESS BETWEEN DATA LINK CONNECTOR AND CHASSIS GROUND.** 1) Turn the ignition switch to OFF. 2) Measure the resistance of harness between data link connector and chassis ground. ***Connector & terminal*** ***(B40) No. 4 — Chassis ground:*** ***(B40) No. 5 — Chassis ground:***	Is the resistance less than 5 Ω?	Repair the poor contact of data link connector.	Repair the harness and connector. NOTE: In this case, repair the following item: • Open circuit of harness between ECM and data link connector • Open circuit of harness between ECM and engine ground • Poor contact of ECM connector • Poor contact of coupling connector
4	**CHECK HARNESS BETWEEN ECM AND DATA LINK CONNECTOR.** 1) Turn the ignition switch to OFF. 2) Disconnect the connector from ECM, TCM, VDC CM, airbag CM and body integrated unit. **CAUTION:** **When disconnecting the connector from airbag CM, always follow the precautions on AB section. <Ref. to AB-9, CAUTION, General Description.>** 3) Measure the resistance of harness between ECM and data link connector. ***Connector & terminal*** ***(B135) No. 14 — (B40) No. 7:***	Is the resistance less than 1 Ω?	Go to step **5**.	Repair the harness and connector. NOTE: In this case, repair the following item: • Open circuit of harness between ECM and data link connector • Poor contact of coupling connector
5	**CHECK HARNESS BETWEEN ECM AND DATA LINK CONNECTOR.** Measure the resistance between data link connector and chassis ground. ***Connector & terminal*** ***(B40) No. 7 — Chassis ground:***	Is the resistance 1 MΩ or more?	Repair the poor contact of the ECM or data link connector.	Repair the ground short circuit of harness between ECM and data link connector.

18.List of Diagnostic Trouble Code (DTC)

A: LIST

DTC	Item	Note
P0026	Intake Valve Control Solenoid Circuit Range/Performance (Bank 1)	<Ref. to EN(H4SO)(diag)-86, DTC P0026 INTAKE VALVE CONTROL SOLENOID CIRCUIT RANGE/PERFORMANCE (BANK 1), Diagnostic Procedure with Diagnostic Trouble Code (DTC).>
P0028	Intake Valve Control Solenoid Circuit Range/Performance (Bank 2)	<Ref. to EN(H4SO)(diag)-88, DTC P0028 INTAKE VALVE CONTROL SOLENOID CIRCUIT RANGE/PERFORMANCE (BANK 2), Diagnostic Procedure with Diagnostic Trouble Code (DTC).>
P0030	HO2S Heater Control Circuit (Bank 1 Sensor 1)	<Ref. to EN(H4SO)(diag)-90, DTC P0030 HO2S HEATER CONTROL CIRCUIT (BANK 1 SENSOR 1), Diagnostic Procedure with Diagnostic Trouble Code (DTC).>
P0031	HO2S Heater Control Circuit Low (Bank 1 Sensor 1)	<Ref. to EN(H4SO)(diag)-92, DTC P0031 HO2S HEATER CONTROL CIRCUIT LOW (BANK 1 SENSOR 1), Diagnostic Procedure with Diagnostic Trouble Code (DTC).>
P0032	HO2S Heater Control Circuit High (Bank 1 Sensor 1)	<Ref. to EN(H4SO)(diag)-94, DTC P0032 HO2S HEATER CONTROL CIRCUIT HIGH (BANK 1 SENSOR 1), Diagnostic Procedure with Diagnostic Trouble Code (DTC).>
P0037	HO2S Heater Control Circuit Low (Bank 1 Sensor 2)	<Ref. to EN(H4SO)(diag)-96, DTC P0037 HO2S HEATER CONTROL CIRCUIT LOW (BANK 1 SENSOR 2), Diagnostic Procedure with Diagnostic Trouble Code (DTC).>
P0038	HO2S Heater Control Circuit High (Bank 1 Sensor 2)	<Ref. to EN(H4SO)(diag)-98, DTC P0038 HO2S HEATER CONTROL CIRCUIT HIGH (BANK 1 SENSOR 2), Diagnostic Procedure with Diagnostic Trouble Code (DTC).>
P0068	MAP/MAF - Throttle Position Correlation	<Ref. to EN(H4SO)(diag)-100, DTC P0068 MAP/MAF - THROTTLE POSITION CORRELATION, Diagnostic Procedure with Diagnostic Trouble Code (DTC).>
P0076	Intake Valve Control Solenoid Circuit Low (Bank 1)	<Ref. to EN(H4SO)(diag)-101, DTC P0076 INTAKE VALVE CONTROL SOLENOID CIRCUIT LOW (BANK 1), Diagnostic Procedure with Diagnostic Trouble Code (DTC).>
P0077	Intake Valve Control Solenoid Circuit High (Bank 1)	<Ref. to EN(H4SO)(diag)-103, DTC P0077 INTAKE VALVE CONTROL SOLENOID CIRCUIT HIGH (BANK 1), Diagnostic Procedure with Diagnostic Trouble Code (DTC).>
P0082	Intake Valve Control Solenoid Circuit Low (Bank 2)	<Ref. to EN(H4SO)(diag)-105, DTC P0082 INTAKE VALVE CONTROL SOLENOID CIRCUIT LOW (BANK 2), Diagnostic Procedure with Diagnostic Trouble Code (DTC).>
P0083	Intake Valve Control Solenoid Circuit High (Bank 2)	<Ref. to EN(H4SO)(diag)-107, DTC P0083 INTAKE VALVE CONTROL SOLENOID CIRCUIT HIGH (BANK 2), Diagnostic Procedure with Diagnostic Trouble Code (DTC).>
P0101	Mass or Volume Air Flow Circuit Range/Performance	<Ref. to EN(H4SO)(diag)-109, DTC P0101 MASS OR VOLUME AIR FLOW CIRCUIT RANGE/PERFORMANCE, Diagnostic Procedure with Diagnostic Trouble Code (DTC).>
P0102	Mass or Volume Air Flow Circuit Low Input	<Ref. to EN(H4SO)(diag)-110, DTC P0102 MASS OR VOLUME AIR FLOW CIRCUIT LOW INPUT, Diagnostic Procedure with Diagnostic Trouble Code (DTC).>
P0103	Mass or Volume Air Flow Circuit High Input	<Ref. to EN(H4SO)(diag)-112, DTC P0103 MASS OR VOLUME AIR FLOW CIRCUIT HIGH INPUT, Diagnostic Procedure with Diagnostic Trouble Code (DTC).>
P0107	Manifold Absolute Pressure/Barometric Pressure Circuit Low Input	<Ref. to EN(H4SO)(diag)-114, DTC P0107 MANIFOLD ABSOLUTE PRESSURE/BAROMETRIC PRESSURE CIRCUIT LOW INPUT, Diagnostic Procedure with Diagnostic Trouble Code (DTC).>
P0108	Manifold Absolute Pressure/Barometric Pressure Circuit High Input	<Ref. to EN(H4SO)(diag)-116, DTC P0108 MANIFOLD ABSOLUTE PRESSURE/BAROMETRIC PRESSURE CIRCUIT HIGH INPUT, Diagnostic Procedure with Diagnostic Trouble Code (DTC).>

DTC	Item	Note
P0111	Intake Air Temperature Sensor 1 Circuit Range/Performance	<Ref. to EN(H4SO)(diag)-118, DTC P0111 INTAKE AIR TEMPERATURE SENSOR 1 CIRCUIT RANGE/PERFORMANCE, Diagnostic Procedure with Diagnostic Trouble Code (DTC).>
P0112	Intake Air Temperature Sensor 1 Circuit Low	<Ref. to EN(H4SO)(diag)-119, DTC P0112 INTAKE AIR TEMPERATURE SENSOR 1 CIRCUIT LOW, Diagnostic Procedure with Diagnostic Trouble Code (DTC).>
P0113	Intake Air Temperature Sensor 1 Circuit High	<Ref. to EN(H4SO)(diag)-121, DTC P0113 INTAKE AIR TEMPERATURE SENSOR 1 CIRCUIT HIGH, Diagnostic Procedure with Diagnostic Trouble Code (DTC).>
P0117	Engine Coolant Temperature Circuit Low	<Ref. to EN(H4SO)(diag)-123, DTC P0117 ENGINE COOLANT TEMPERATURE CIRCUIT LOW, Diagnostic Procedure with Diagnostic Trouble Code (DTC).>
P0118	Engine Coolant Temperature Circuit High	<Ref. to EN(H4SO)(diag)-125, DTC P0118 ENGINE COOLANT TEMPERATURE CIRCUIT HIGH, Diagnostic Procedure with Diagnostic Trouble Code (DTC).>
P0122	Throttle/Pedal Position Sensor/Switch “A” Circuit Low	<Ref. to EN(H4SO)(diag)-127, DTC P0122 THROTTLE/PEDAL POSITION SENSOR/SWITCH “A” CIRCUIT LOW, Diagnostic Procedure with Diagnostic Trouble Code (DTC).>
P0123	Throttle/Pedal Position Sensor/Switch “A” Circuit High	<Ref. to EN(H4SO)(diag)-129, DTC P0123 THROTTLE/PEDAL POSITION SENSOR/SWITCH “A” CIRCUIT HIGH, Diagnostic Procedure with Diagnostic Trouble Code (DTC).>
P0125	Insufficient Coolant Temperature for Closed Loop Fuel Control	<Ref. to EN(H4SO)(diag)-131, DTC P0125 INSUFFICIENT COOLANT TEMPERATURE FOR CLOSED LOOP FUEL CONTROL, Diagnostic Procedure with Diagnostic Trouble Code (DTC).>
P0126	Insufficient Engine Coolant Temperature for Stable Operation	<Ref. to EN(H4SO)(diag)-132, DTC P0126 INSUFFICIENT ENGINE COOLANT TEMPERATURE FOR STABLE OPERATION, Diagnostic Procedure with Diagnostic Trouble Code (DTC).>
P0128	Coolant Thermostat (Engine Coolant Temperature Below Thermostat Regulating Temperature)	<Ref. to EN(H4SO)(diag)-132, DTC P0128 COOLANT THERMOSTAT (ENGINE COOLANT TEMPERATURE BELOW THERMOSTAT REGULATING TEMPERATURE), Diagnostic Procedure with Diagnostic Trouble Code (DTC).>
P0131	O2 Sensor Circuit Low Voltage (Bank 1 Sensor 1)	<Ref. to EN(H4SO)(diag)-133, DTC P0131 O2 SENSOR CIRCUIT LOW VOLTAGE (BANK 1 SENSOR 1), Diagnostic Procedure with Diagnostic Trouble Code (DTC).>
P0132	O2 Sensor Circuit High Voltage (Bank 1 Sensor 1)	<Ref. to EN(H4SO)(diag)-135, DTC P0132 O2 SENSOR CIRCUIT HIGH VOLTAGE (BANK 1 SENSOR 1), Diagnostic Procedure with Diagnostic Trouble Code (DTC).>
P0133	O2 Sensor Circuit Slow Response (Bank 1 Sensor 1)	<Ref. to EN(H4SO)(diag)-137, DTC P0133 O2 SENSOR CIRCUIT SLOW RESPONSE (BANK 1 SENSOR 1), Diagnostic Procedure with Diagnostic Trouble Code (DTC).>
P0134	O2 Sensor Circuit No Activity Detected (Bank 1 Sensor 1)	<Ref. to EN(H4SO)(diag)-138, DTC P0134 O2 SENSOR CIRCUIT NO ACTIVITY DETECTED (BANK 1 SENSOR 1), Diagnostic Procedure with Diagnostic Trouble Code (DTC).>
P0137	O2 Sensor Circuit Low Voltage (Bank 1 Sensor 2)	<Ref. to EN(H4SO)(diag)-140, DTC P0137 O2 SENSOR CIRCUIT LOW VOLTAGE (BANK 1 SENSOR 2), Diagnostic Procedure with Diagnostic Trouble Code (DTC).>
P0138	O2 Sensor Circuit High Voltage (Bank 1 Sensor 2)	<Ref. to EN(H4SO)(diag)-142, DTC P0138 O2 SENSOR CIRCUIT HIGH VOLTAGE (BANK 1 SENSOR 2), Diagnostic Procedure with Diagnostic Trouble Code (DTC).>
P013A	O2 Sensor Slow Response - Rich to Lean (Bank 1 Sensor 2)	<Ref. to EN(H4SO)(diag)-144, DTC P013A O2 SENSOR SLOW RESPONSE - RICH TO LEAN (BANK 1 SENSOR 2), Diagnostic Procedure with Diagnostic Trouble Code (DTC).>
P013B	O2 Sensor Slow Response - Lean to Rich (Bank 1 Sensor 2)	<Ref. to EN(H4SO)(diag)-145, DTC P013B O2 SENSOR SLOW RESPONSE - LEAN TO RICH (BANK 1 SENSOR 2), Diagnostic Procedure with Diagnostic Trouble Code (DTC).>

DTC	Item	Note
P013E	O2 Sensor Delayed Response - Rich to Lean (Bank 1 Sensor 2)	<Ref. to EN(H4SO)(diag)-145, DTC P013E O2 SENSOR DELAYED RESPONSE - RICH TO LEAN (BANK 1 SENSOR 2), Diagnostic Procedure with Diagnostic Trouble Code (DTC).>
P013F	O2 Sensor Delayed Response - Lean to Rich (Bank 1 Sensor 2)	<Ref. to EN(H4SO)(diag)-145, DTC P013F O2 SENSOR DELAYED RESPONSE - LEAN TO RICH (BANK 1 SENSOR 2), Diagnostic Procedure with Diagnostic Trouble Code (DTC).>
P0140	O2 Sensor Circuit No Activity Detected (Bank1 Sensor2)	<Ref. to EN(H4SO)(diag)-146, DTC P0140 O2 SENSOR CIRCUIT NO ACTIVITY DETECTED (BANK1 SENSOR2), Diagnostic Procedure with Diagnostic Trouble Code (DTC).>
P0141	O2 Sensor Heater Circuit (Bank1 Sensor2)	<Ref. to EN(H4SO)(diag)-148, DTC P0141 O2 SENSOR HEATER CIRCUIT (BANK1 SENSOR2), Diagnostic Procedure with Diagnostic Trouble Code (DTC).>
P014C	O2 Sensor Slow Response - Rich to Lean (Bank 1 Sensor 1)	<Ref. to EN(H4SO)(diag)-149, DTC P014C O2 SENSOR SLOW RESPONSE - RICH TO LEAN (BANK 1 SENSOR 1), Diagnostic Procedure with Diagnostic Trouble Code (DTC).>
P014D	O2 Sensor Slow Response - Lean to Rich (Bank 1 Sensor 1)	<Ref. to EN(H4SO)(diag)-149, DTC P014D O2 SENSOR SLOW RESPONSE - LEAN TO RICH (BANK 1 SENSOR 1), Diagnostic Procedure with Diagnostic Trouble Code (DTC).>
P015A	O2 Sensor Delayed Response - Rich to Lean (Bank 1 Sensor 1)	<Ref. to EN(H4SO)(diag)-149, DTC P015A O2 SENSOR DELAYED RESPONSE - RICH TO LEAN (BANK 1 SENSOR 1), Diagnostic Procedure with Diagnostic Trouble Code (DTC).>
P015B	O2 Sensor Delayed Response - Lean to Rich (Bank 1 Sensor 1)	<Ref. to EN(H4SO)(diag)-149, DTC P015B O2 SENSOR DELAYED RESPONSE - LEAN TO RICH (BANK 1 SENSOR 1), Diagnostic Procedure with Diagnostic Trouble Code (DTC).>
P0171	System Too Lean (Bank 1)	<Ref. to EN(H4SO)(diag)-149, DTC P0171 SYSTEM TOO LEAN (BANK 1), Diagnostic Procedure with Diagnostic Trouble Code (DTC).>
P0172	System Too Rich (Bank 1)	<Ref. to EN(H4SO)(diag)-150, DTC P0172 SYSTEM TOO RICH (BANK 1), Diagnostic Procedure with Diagnostic Trouble Code (DTC).>
P0181	Fuel Temperature Sensor “A” Circuit Range/Performance	<Ref. to EN(H4SO)(diag)-152, DTC P0181 FUEL TEMPERATURE SENSOR “A” CIRCUIT RANGE/PERFORMANCE, Diagnostic Procedure with Diagnostic Trouble Code (DTC).>
P0182	Fuel Temperature Sensor “A” Circuit Low Input	<Ref. to EN(H4SO)(diag)-153, DTC P0182 FUEL TEMPERATURE SENSOR “A” CIRCUIT LOW INPUT, Diagnostic Procedure with Diagnostic Trouble Code (DTC).>
P0183	Fuel Temperature Sensor “A” Circuit High Input	<Ref. to EN(H4SO)(diag)-155, DTC P0183 FUEL TEMPERATURE SENSOR “A” CIRCUIT HIGH INPUT, Diagnostic Procedure with Diagnostic Trouble Code (DTC).>
P0196	Engine Oil Temperature Sensor Circuit Range/Performance	<Ref. to EN(H4SO)(diag)-157, DTC P0196 ENGINE OIL TEMPERATURE SENSOR CIRCUIT RANGE/PERFORMANCE, Diagnostic Procedure with Diagnostic Trouble Code (DTC).>
P0197	Engine Oil Temperature Sensor Low	<Ref. to EN(H4SO)(diag)-158, DTC P0197 ENGINE OIL TEMPERATURE SENSOR LOW, Diagnostic Procedure with Diagnostic Trouble Code (DTC).>
P0198	Engine Oil Temperature Sensor High	<Ref. to EN(H4SO)(diag)-160, DTC P0198 ENGINE OIL TEMPERATURE SENSOR HIGH, Diagnostic Procedure with Diagnostic Trouble Code (DTC).>
P0201	Injector #1	<Ref. to EN(H4SO)(diag)-162, DTC P0201 INJECTOR #1, Diagnostic Procedure with Diagnostic Trouble Code (DTC).>
P0202	Injector #2	<Ref. to EN(H4SO)(diag)-164, DTC P0202 INJECTOR #2, Diagnostic Procedure with Diagnostic Trouble Code (DTC).>
P0203	Injector #3	<Ref. to EN(H4SO)(diag)-164, DTC P0203 INJECTOR #3, Diagnostic Procedure with Diagnostic Trouble Code (DTC).>
P0204	Injector #4	<Ref. to EN(H4SO)(diag)-164, DTC P0204 INJECTOR #4, Diagnostic Procedure with Diagnostic Trouble Code (DTC).>
P0222	Throttle/Pedal Position Sensor/Switch “B” Circuit Low	<Ref. to EN(H4SO)(diag)-165, DTC P0222 THROTTLE/PEDAL POSITION SENSOR/SWITCH “B” CIRCUIT LOW, Diagnostic Procedure with Diagnostic Trouble Code (DTC).>

DTC	Item	Note
P0223	Throttle/Pedal Position Sensor/Switch “B” Circuit High	<Ref. to EN(H4SO)(diag)-167, DTC P0223 THROTTLE/PEDAL POSITION SENSOR/SWITCH “B” CIRCUIT HIGH, Diagnostic Procedure with Diagnostic Trouble Code (DTC).>
P0301	Cylinder 1 Misfire Detected	<Ref. to EN(H4SO)(diag)-169, DTC P0301 CYLINDER 1 MISFIRE DETECTED, Diagnostic Procedure with Diagnostic Trouble Code (DTC).>
P0302	Cylinder 2 Misfire Detected	<Ref. to EN(H4SO)(diag)-169, DTC P0302 CYLINDER 2 MISFIRE DETECTED, Diagnostic Procedure with Diagnostic Trouble Code (DTC).>
P0303	Cylinder 3 Misfire Detected	<Ref. to EN(H4SO)(diag)-169, DTC P0303 CYLINDER 3 MISFIRE DETECTED, Diagnostic Procedure with Diagnostic Trouble Code (DTC).>
P0304	Cylinder 4 Misfire Detected	<Ref. to EN(H4SO)(diag)-170, DTC P0304 CYLINDER 4 MISFIRE DETECTED, Diagnostic Procedure with Diagnostic Trouble Code (DTC).>
P0327	Knock Sensor 1 Circuit Low (Bank 1 or Single Sensor)	<Ref. to EN(H4SO)(diag)-175, DTC P0327 KNOCK SENSOR 1 CIRCUIT LOW (BANK 1 OR SINGLE SENSOR), Diagnostic Procedure with Diagnostic Trouble Code (DTC).>
P0328	Knock Sensor 1 Circuit High (Bank 1 or Single Sensor)	<Ref. to EN(H4SO)(diag)-177, DTC P0328 KNOCK SENSOR 1 CIRCUIT HIGH (BANK 1 OR SINGLE SENSOR), Diagnostic Procedure with Diagnostic Trouble Code (DTC).>
P0335	Crankshaft Position Sensor “A” Circuit	<Ref. to EN(H4SO)(diag)-179, DTC P0335 CRANKSHAFT POSITION SENSOR “A” CIRCUIT, Diagnostic Procedure with Diagnostic Trouble Code (DTC).>
P0336	Crankshaft Position Sensor “A” Circuit Range/Performance	<Ref. to EN(H4SO)(diag)-181, DTC P0336 CRANKSHAFT POSITION SENSOR “A” CIRCUIT RANGE/PERFORMANCE, Diagnostic Procedure with Diagnostic Trouble Code (DTC).>
P0340	Camshaft Position Sensor “A” Circuit (Bank 1 or Single Sensor)	<Ref. to EN(H4SO)(diag)-182, DTC P0340 CAMSHAFT POSITION SENSOR “A” CIRCUIT (BANK 1 OR SINGLE SENSOR), Diagnostic Procedure with Diagnostic Trouble Code (DTC).>
P0341	Camshaft Position Sensor “A” Circuit Range/Performance (Bank 1 or Single Sensor)	<Ref. to EN(H4SO)(diag)-184, DTC P0341 CAMSHAFT POSITION SENSOR “A” CIRCUIT RANGE/PERFORMANCE (BANK 1 OR SINGLE SENSOR), Diagnostic Procedure with Diagnostic Trouble Code (DTC).>
P0351	Ignition Coil A Primary/Secondary Circuit	<Ref. to EN(H4SO)(diag)-186, DTC P0351 IGNITION COIL A PRIMARY/SECONDARY CIRCUIT, Diagnostic Procedure with Diagnostic Trouble Code (DTC).>
P0352	Ignition Coil B Primary/Secondary Circuit	<Ref. to EN(H4SO)(diag)-188, DTC P0352 IGNITION COIL B PRIMARY/SECONDARY CIRCUIT, Diagnostic Procedure with Diagnostic Trouble Code (DTC).>
P0353	Ignition Coil C Primary/Secondary Circuit	<Ref. to EN(H4SO)(diag)-188, DTC P0353 IGNITION COIL C PRIMARY/SECONDARY CIRCUIT, Diagnostic Procedure with Diagnostic Trouble Code (DTC).>
P0354	Ignition Coil D Primary/Secondary Circuit	<Ref. to EN(H4SO)(diag)-188, DTC P0354 IGNITION COIL D PRIMARY/SECONDARY CIRCUIT, Diagnostic Procedure with Diagnostic Trouble Code (DTC).>
P0400	Exhaust Gas Recirculation Flow	<Ref. to EN(H4SO)(diag)-189, DTC P0400 EXHAUST GAS RECIRCULATION FLOW, Diagnostic Procedure with Diagnostic Trouble Code (DTC).>
P0420	Catalyst System Efficiency Below Threshold (Bank 1)	<Ref. to EN(H4SO)(diag)-190, DTC P0420 CATALYST SYSTEM EFFICIENCY BELOW THRESHOLD (BANK 1), Diagnostic Procedure with Diagnostic Trouble Code (DTC).>
P0442	Evaporative Emission Control System Leak Detected (Small Leak)	<Ref. to EN(H4SO)(diag)-194, DTC P0442 EVAPORATIVE EMISSION CONTROL SYSTEM LEAK DETECTED (SMALL LEAK), Diagnostic Procedure with Diagnostic Trouble Code (DTC).>
P0447	Evaporative Emission Control System Vent Control Circuit Open	<Ref. to EN(H4SO)(diag)-196, DTC P0447 EVAPORATIVE EMISSION CONTROL SYSTEM VENT CONTROL CIRCUIT OPEN, Diagnostic Procedure with Diagnostic Trouble Code (DTC).>
P0448	Evaporative Emission Control System Vent Control Circuit Shorted	<Ref. to EN(H4SO)(diag)-198, DTC P0448 EVAPORATIVE EMISSION CONTROL SYSTEM VENT CONTROL CIRCUIT SHORTED, Diagnostic Procedure with Diagnostic Trouble Code (DTC).>

List of Diagnostic Trouble Code (DTC)

DTC	Item	Note
P0451	Evaporative Emission Control System Pressure Sensor	<Ref. to EN(H4SO)(diag)-200, DTC P0451 EVAPORATIVE EMISSION CONTROL SYSTEM PRESSURE SENSOR, Diagnostic Procedure with Diagnostic Trouble Code (DTC).>
P0452	Evaporative Emission Control System Pressure Sensor Low Input	<Ref. to EN(H4SO)(diag)-201, DTC P0452 EVAPORATIVE EMISSION CONTROL SYSTEM PRESSURE SENSOR LOW INPUT, Diagnostic Procedure with Diagnostic Trouble Code (DTC).>
P0453	Evaporative Emission Control System Pressure Sensor High Input	<Ref. to EN(H4SO)(diag)-203, DTC P0453 EVAPORATIVE EMISSION CONTROL SYSTEM PRESSURE SENSOR HIGH INPUT, Diagnostic Procedure with Diagnostic Trouble Code (DTC).>
P0456	Evaporative Emission Control System Leak Detected (Very Small Leak)	<Ref. to EN(H4SO)(diag)-205, DTC P0456 EVAPORATIVE EMISSION CONTROL SYSTEM LEAK DETECTED (VERY SMALL LEAK), Diagnostic Procedure with Diagnostic Trouble Code (DTC).>
P0457	Evaporative Emission Control System Leak Detected (Fuel Cap Loose/Off)	<Ref. to EN(H4SO)(diag)-207, DTC P0457 EVAPORATIVE EMISSION CONTROL SYSTEM LEAK DETECTED (FUEL CAP LOOSE/OFF), Diagnostic Procedure with Diagnostic Trouble Code (DTC).>
P0458	Evaporative Emission System Purge Control Valve Circuit Low	<Ref. to EN(H4SO)(diag)-209, DTC P0458 EVAPORATIVE EMISSION SYSTEM PURGE CONTROL VALVE CIRCUIT LOW, Diagnostic Procedure with Diagnostic Trouble Code (DTC).>
P0459	Evaporative Emission System Purge Control Valve Circuit High	<Ref. to EN(H4SO)(diag)-211, DTC P0459 EVAPORATIVE EMISSION SYSTEM PURGE CONTROL VALVE CIRCUIT HIGH, Diagnostic Procedure with Diagnostic Trouble Code (DTC).>
P0461	Fuel Level Sensor “A” Circuit Range/Performance	<Ref. to EN(H4SO)(diag)-213, DTC P0461 FUEL LEVEL SENSOR “A” CIRCUIT RANGE/PERFORMANCE, Diagnostic Procedure with Diagnostic Trouble Code (DTC).>
P0462	Fuel Level Sensor “A” Circuit Low	<Ref. to EN(H4SO)(diag)-213, DTC P0462 FUEL LEVEL SENSOR “A” CIRCUIT LOW, Diagnostic Procedure with Diagnostic Trouble Code (DTC).>
P0463	Fuel Level Sensor “A” Circuit High	<Ref. to EN(H4SO)(diag)-213, DTC P0463 FUEL LEVEL SENSOR “A” CIRCUIT HIGH, Diagnostic Procedure with Diagnostic Trouble Code (DTC).>
P0464	Fuel Level Sensor Circuit Intermittent	<Ref. to EN(H4SO)(diag)-214, DTC P0464 FUEL LEVEL SENSOR CIRCUIT INTERMITTENT, Diagnostic Procedure with Diagnostic Trouble Code (DTC).>
P0500	Vehicle Speed Sensor “A”	<Ref. to EN(H4SO)(diag)-214, DTC P0500 VEHICLE SPEED SENSOR “A”, Diagnostic Procedure with Diagnostic Trouble Code (DTC).>
P0506	Idle Air Control System RPM Lower Than Expected	<Ref. to EN(H4SO)(diag)-215, DTC P0506 IDLE AIR CONTROL SYSTEM RPM LOWER THAN EXPECTED, Diagnostic Procedure with Diagnostic Trouble Code (DTC).>
P0507	Idle Air Control System RPM Higher Than Expected	<Ref. to EN(H4SO)(diag)-216, DTC P0507 IDLE AIR CONTROL SYSTEM RPM HIGHER THAN EXPECTED, Diagnostic Procedure with Diagnostic Trouble Code (DTC).>
P050A	Cold Start Idle Air Control System Performance	<Ref. to EN(H4SO)(diag)-217, DTC P050A COLD START IDLE AIR CONTROL SYSTEM PERFORMANCE, Diagnostic Procedure with Diagnostic Trouble Code (DTC).>
P050B	Cold Start Ignition Timing Performance	<Ref. to EN(H4SO)(diag)-225, DTC P050B COLD START IGNITION TIMING PERFORMANCE, Diagnostic Procedure with Diagnostic Trouble Code (DTC).>
P0512	Starter Request Circuit	<Ref. to EN(H4SO)(diag)-226, DTC P0512 STARTER REQUEST CIRCUIT, Diagnostic Procedure with Diagnostic Trouble Code (DTC).>
P0513	Incorrect Immobilizer Key	<Ref. to IM(diag)-16, DTC P0513 INCORRECT IMMOBILIZER KEY, Diagnostic Procedure with Diagnostic Trouble Code (DTC).>
P0604	Internal Control Module Random Access Memory (RAM) Error	<Ref. to EN(H4SO)(diag)-228, DTC P0604 INTERNAL CONTROL MODULE RANDOM ACCESS MEMORY (RAM) ERROR, Diagnostic Procedure with Diagnostic Trouble Code (DTC).>
P0605	Internal Control Module Read Only Memory (ROM) Error	<Ref. to EN(H4SO)(diag)-228, DTC P0605 INTERNAL CONTROL MODULE READ ONLY MEMORY (ROM) ERROR, Diagnostic Procedure with Diagnostic Trouble Code (DTC).>

DTC	Item	Note
P0607	Throttle Control System Circuit Range/Performance	<Ref. to EN(H4SO)(diag)-229, DTC P0607 THROTTLE CONTROL SYSTEM CIRCUIT RANGE/PERFORMANCE, Diagnostic Procedure with Diagnostic Trouble Code (DTC).>
P0638	Throttle Actuator Control Range/Performance (Bank 1)	<Ref. to EN(H4SO)(diag)-230, DTC P0638 THROTTLE ACTUATOR CONTROL RANGE/PERFORMANCE (BANK 1), Diagnostic Procedure with Diagnostic Trouble Code (DTC).>
P0700	Transmission Control System (MIL Request)	<Ref. to EN(H4SO)(diag)-230, DTC P0700 TRANSMISSION CONTROL SYSTEM (MIL REQUEST), Diagnostic Procedure with Diagnostic Trouble Code (DTC).>
P0851	Park/Neutral Switch Input Circuit Low (AT Model)	<Ref. to EN(H4SO)(diag)-231, DTC P0851 PARK/NEUTRAL SWITCH INPUT CIRCUIT LOW (AT MODEL), Diagnostic Procedure with Diagnostic Trouble Code (DTC).>
P0851	Neutral Switch Input Circuit Low (MT Model)	<Ref. to EN(H4SO)(diag)-233, DTC P0851 NEUTRAL SWITCH INPUT CIRCUIT LOW (MT MODEL), Diagnostic Procedure with Diagnostic Trouble Code (DTC).>
P0852	Park/Neutral Switch Input Circuit High (AT Model)	<Ref. to EN(H4SO)(diag)-235, DTC P0852 PARK/NEUTRAL SWITCH INPUT CIRCUIT HIGH (AT MODEL), Diagnostic Procedure with Diagnostic Trouble Code (DTC).>
P0852	Neutral Switch Input Circuit High (MT Model)	<Ref. to EN(H4SO)(diag)-237, DTC P0852 NEUTRAL SWITCH INPUT CIRCUIT HIGH (MT MODEL), Diagnostic Procedure with Diagnostic Trouble Code (DTC).>
P1152	O2 Sensor Circuit Range/Performance (Low) (Bank1 Sensor1)	<Ref. to EN(H4SO)(diag)-239, DTC P1152 O2 SENSOR CIRCUIT RANGE/PERFORMANCE (LOW) (BANK1 SENSOR1), Diagnostic Procedure with Diagnostic Trouble Code (DTC).>
P1153	O2 Sensor Circuit Range/Performance (High) (Bank1 Sensor1)	<Ref. to EN(H4SO)(diag)-241, DTC P1153 O2 SENSOR CIRCUIT RANGE/PERFORMANCE (HIGH) (BANK1 SENSOR1), Diagnostic Procedure with Diagnostic Trouble Code (DTC).>
P1160	Return Spring Failure	<Ref. to EN(H4SO)(diag)-242, DTC P1160 RETURN SPRING FAILURE, Diagnostic Procedure with Diagnostic Trouble Code (DTC).>
P1443	Vent Control Solenoid Valve Function Problem	<Ref. to EN(H4SO)(diag)-243, DTC P1443 VENT CONTROL SOLENOID VALVE FUNCTION PROBLEM, Diagnostic Procedure with Diagnostic Trouble Code (DTC).>
P1492	EGR Solenoid Valve Signal #1 Circuit Malfunction (Low Input)	<Ref. to EN(H4SO)(diag)-244, DTC P1492 EGR SOLENOID VALVE SIGNAL #1 CIRCUIT MALFUNCTION (LOW INPUT), Diagnostic Procedure with Diagnostic Trouble Code (DTC).>
P1493	EGR Solenoid Valve Signal #1 Circuit Malfunction (High Input)	<Ref. to EN(H4SO)(diag)-244, DTC P1493 EGR SOLENOID VALVE SIGNAL #1 CIRCUIT MALFUNCTION (HIGH INPUT), Diagnostic Procedure with Diagnostic Trouble Code (DTC).>
P1494	EGR Solenoid Valve Signal #2 Circuit Malfunction (Low Input)	<Ref. to EN(H4SO)(diag)-244, DTC P1494 EGR SOLENOID VALVE SIGNAL #2 CIRCUIT MALFUNCTION (LOW INPUT), Diagnostic Procedure with Diagnostic Trouble Code (DTC).>
P1495	EGR Solenoid Valve Signal #2 Circuit Malfunction (High Input)	<Ref. to EN(H4SO)(diag)-244, DTC P1495 EGR SOLENOID VALVE SIGNAL #2 CIRCUIT MALFUNCTION (HIGH INPUT), Diagnostic Procedure with Diagnostic Trouble Code (DTC).>
P1496	EGR Solenoid Valve Signal #3 Circuit Malfunction (Low Input)	<Ref. to EN(H4SO)(diag)-244, DTC P1496 EGR SOLENOID VALVE SIGNAL #3 CIRCUIT MALFUNCTION (LOW INPUT), Diagnostic Procedure with Diagnostic Trouble Code (DTC).>
P1497	EGR Solenoid Valve Signal #3 Circuit Malfunction (High Input)	<Ref. to EN(H4SO)(diag)-244, DTC P1497 EGR SOLENOID VALVE SIGNAL #3 CIRCUIT MALFUNCTION (HIGH INPUT), Diagnostic Procedure with Diagnostic Trouble Code (DTC).>
P1498	EGR Solenoid Valve Signal #4 Circuit Malfunction (Low Input)	<Ref. to EN(H4SO)(diag)-245, DTC P1498 EGR SOLENOID VALVE SIGNAL #4 CIRCUIT MALFUNCTION (LOW INPUT), Diagnostic Procedure with Diagnostic Trouble Code (DTC).>
P1499	EGR Solenoid Valve Signal #4 Circuit Malfunction (High Input)	<Ref. to EN(H4SO)(diag)-248, DTC P1499 EGR SOLENOID VALVE SIGNAL #4 CIRCUIT MALFUNCTION (HIGH INPUT), Diagnostic Procedure with Diagnostic Trouble Code (DTC).>

DTC	Item	Note
P1518	Starter Switch Circuit Low Input	<Ref. to EN(H4SO)(diag)-251, DTC P1518 STARTER SWITCH CIRCUIT LOW INPUT, Diagnostic Procedure with Diagnostic Trouble Code (DTC).>
P1560	Back-Up Voltage Circuit Malfunction	<Ref. to EN(H4SO)(diag)-253, DTC P1560 BACK-UP VOLTAGE CIRCUIT MALFUNCTION, Diagnostic Procedure with Diagnostic Trouble Code (DTC).>
P1570	Antenna	<Ref. to IM(diag)-17, DTC P1570 ANTENNA, Diagnostic Procedure with Diagnostic Trouble Code (DTC).>
P1571	Reference Code Incompatibility	<Ref. to IM(diag)-19, DTC P1571 REFERENCE CODE INCOMPATIBILITY, Diagnostic Procedure with Diagnostic Trouble Code (DTC).>
P1572	IMM Circuit Failure (Except Antenna Circuit)	<Ref. to IM(diag)-20, DTC P1572 IMM CIRCUIT FAILURE (EXCEPT ANTENNA CIRCUIT), Diagnostic Procedure with Diagnostic Trouble Code (DTC).>
P1574	Key Communication Failure	<Ref. to IM(diag)-22, DTC P1574 KEY COMMUNICATION FAILURE, Diagnostic Procedure with Diagnostic Trouble Code (DTC).>
P1576	EGI Control Module EEPROM	<Ref. to IM(diag)-22, DTC P1576 EGI CONTROL MODULE EEPROM, Diagnostic Procedure with Diagnostic Trouble Code (DTC).>
P1577	IMM Control Module EEPROM	<Ref. to IM(diag)-23, DTC P1577 IMM CONTROL MODULE EEPROM, Diagnostic Procedure with Diagnostic Trouble Code (DTC).>
P1578	Meter Failure	<Ref. to IM(diag)-24, DTC P1578 METER FAILURE, Diagnostic Procedure with Diagnostic Trouble Code (DTC).>
P2096	Post Catalyst Fuel Trim System Too Lean (Bank 1)	<Ref. to EN(H4SO)(diag)-255, DTC P2096 POST CATALYST FUEL TRIM SYSTEM TOO LEAN (BANK 1), Diagnostic Procedure with Diagnostic Trouble Code (DTC).>
P2097	Post Catalyst Fuel Trim System Too Rich (Bank 1)	<Ref. to EN(H4SO)(diag)-261, DTC P2097 POST CATALYST FUEL TRIM SYSTEM TOO RICH (BANK 1), Diagnostic Procedure with Diagnostic Trouble Code (DTC).>
P2101	Throttle Actuator Control Motor Circuit Range/Performance	<Ref. to EN(H4SO)(diag)-267, DTC P2101 THROTTLE ACTUATOR CONTROL MOTOR CIRCUIT RANGE/PERFORMANCE, Diagnostic Procedure with Diagnostic Trouble Code (DTC).>
P2102	Throttle Actuator Control Motor Circuit Low	<Ref. to EN(H4SO)(diag)-272, DTC P2102 THROTTLE ACTUATOR CONTROL MOTOR CIRCUIT LOW, Diagnostic Procedure with Diagnostic Trouble Code (DTC).>
P2103	Throttle Actuator Control Motor Circuit High	<Ref. to EN(H4SO)(diag)-274, DTC P2103 THROTTLE ACTUATOR CONTROL MOTOR CIRCUIT HIGH, Diagnostic Procedure with Diagnostic Trouble Code (DTC).>
P2109	Throttle/Pedal Position Sensor “A” Minimum Stop Performance	<Ref. to EN(H4SO)(diag)-275, DTC P2109 THROTTLE/PEDAL POSITION SENSOR “A” MINIMUM STOP PERFORMANCE, Diagnostic Procedure with Diagnostic Trouble Code (DTC).>
P2122	Throttle/Pedal Position Sensor/Switch “D” Circuit Low Input	<Ref. to EN(H4SO)(diag)-276, DTC P2122 THROTTLE/PEDAL POSITION SENSOR/SWITCH “D” CIRCUIT LOW INPUT, Diagnostic Procedure with Diagnostic Trouble Code (DTC).>
P2123	Throttle/Pedal Position Sensor/Switch “D” Circuit High Input	<Ref. to EN(H4SO)(diag)-278, DTC P2123 THROTTLE/PEDAL POSITION SENSOR/SWITCH “D” CIRCUIT HIGH INPUT, Diagnostic Procedure with Diagnostic Trouble Code (DTC).>
P2127	Throttle/Pedal Position Sensor/Switch “E” Circuit Low Input	<Ref. to EN(H4SO)(diag)-280, DTC P2127 THROTTLE/PEDAL POSITION SENSOR/SWITCH “E” CIRCUIT LOW INPUT, Diagnostic Procedure with Diagnostic Trouble Code (DTC).>
P2128	Throttle/Pedal Position Sensor/Switch “E” Circuit High Input	<Ref. to EN(H4SO)(diag)-282, DTC P2128 THROTTLE/PEDAL POSITION SENSOR/SWITCH “E” CIRCUIT HIGH INPUT, Diagnostic Procedure with Diagnostic Trouble Code (DTC).>
P2135	Throttle/Pedal Position Sensor/Switch “A”/“B” Voltage Correlation	<Ref. to EN(H4SO)(diag)-284, DTC P2135 THROTTLE/PEDAL POSITION SENSOR/SWITCH “A”/“B” VOLTAGE CORRELATION, Diagnostic Procedure with Diagnostic Trouble Code (DTC).>
P2138	Throttle/Pedal Position Sensor/Switch “D”/“E” Voltage Correlation	<Ref. to EN(H4SO)(diag)-287, DTC P2138 THROTTLE/PEDAL POSITION SENSOR/SWITCH “D”/“E” VOLTAGE CORRELATION, Diagnostic Procedure with Diagnostic Trouble Code (DTC).>

DTC	Item	Note
P2227	Barometric Pressure Circuit Range/ Performance	<Ref. to EN(H4SO)(diag)-289, DTC P2227 BAROMETRIC PRESSURE CIRCUIT RANGE/PERFORMANCE, Diagnostic Procedure with Diagnostic Trouble Code (DTC).>
P2228	Barometric Pressure Circuit Low	<Ref. to EN(H4SO)(diag)-289, DTC P2228 BAROMETRIC PRESSURE CIRCUIT LOW, Diagnostic Procedure with Diagnostic Trouble Code (DTC).>
P2229	Barometric Pressure Circuit High	<Ref. to EN(H4SO)(diag)-290, DTC P2229 BAROMETRIC PRESSURE CIRCUIT HIGH, Diagnostic Procedure with Diagnostic Trouble Code (DTC).>
P2610	ECM/PCM Internal Engine Off Timer Performance	<Ref. to EN(H4SO)(diag)-290, DTC P2610 ECM/PCM INTERNAL ENGINE OFF TIMER PERFORMANCE, Diagnostic Procedure with Diagnostic Trouble Code (DTC).>
U0073	CAN Failure, Bus 'Off' Detection	<Ref. to EN(H4SO)(diag)-291, DTC U0073 CAN FAILURE, BUS 'OFF' DETECTION, Diagnostic Procedure with Diagnostic Trouble Code (DTC).>
U0101	CAN (TCU) Data Not Loaded	<Ref. to EN(H4SO)(diag)-291, DTC U0101 CAN (TCU) DATA NOT LOADED, Diagnostic Procedure with Diagnostic Trouble Code (DTC).>
U0122	CAN (VDC) Data Not Loaded	<Ref. to EN(H4SO)(diag)-291, DTC U0122 CAN (VDC) DATA NOT LOADED, Diagnostic Procedure with Diagnostic Trouble Code (DTC).>
U0140	CAN (BCU) Data Not Loaded	<Ref. to EN(H4SO)(diag)-291, DTC U0140 CAN (BCU) DATA NOT LOADED, Diagnostic Procedure with Diagnostic Trouble Code (DTC).>
U0402	CAN (TCU) Data Abnormal	<Ref. to EN(H4SO)(diag)-291, DTC U0402 CAN (TCU) DATA ABNORMAL, Diagnostic Procedure with Diagnostic Trouble Code (DTC).>
U0416	CAN (VDC) Data Abnormal	<Ref. to EN(H4SO)(diag)-291, DTC U0416 CAN (VDC) DATA ABNORMAL, Diagnostic Procedure with Diagnostic Trouble Code (DTC).>
U0422	CAN (BCU) Data Abnormal	<Ref. to EN(H4SO)(diag)-291, DTC U0422 CAN (BCU) DATA ABNORMAL, Diagnostic Procedure with Diagnostic Trouble Code (DTC).>

19.Diagnostic Procedure with Diagnostic Trouble Code (DTC)

A: DTC P0026 INTAKE VALVE CONTROL SOLENOID CIRCUIT RANGE/PERFORMANCE (BANK 1)

DTC DETECTING CONDITION:

- Immediately at fault recognition
- GENERAL DESCRIPTION <Ref. to GD(H4SO)-9, DTC P0026 INTAKE VALVE CONTROL SOLENOID CIRCUIT RANGE/PERFORMANCE (BANK 1), Diagnostic Trouble Code (DTC) Detecting Criteria.>

TROUBLE SYMPTOM:

Improper idling

CAUTION:

After servicing or replacing faulty parts, perform Clear Memory Mode <Ref. to EN(H4SO)(diag)-51, OPERATION, Clear Memory Mode.>, and Inspection Mode <Ref. to EN(H4SO)(diag)-40, PROCEDURE, Inspection Mode.>.

WIRING DIAGRAM:

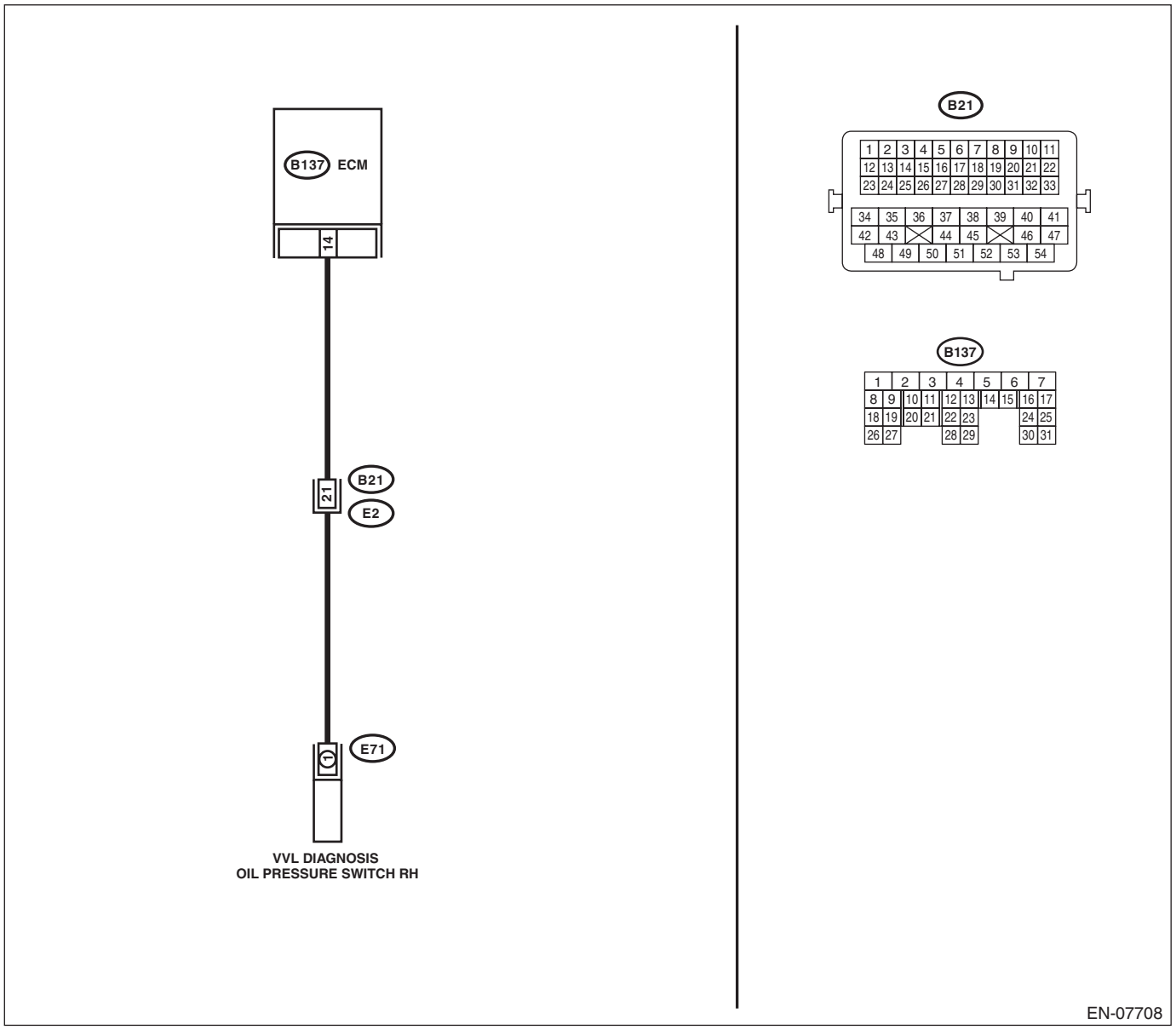

	Step	Check	Yes	No
1	**CHECK HARNESS BETWEEN ECM AND VARIABLE VALVE LIFT DIAGNOSIS OIL PRESSURE SWITCH RH CONNECTOR.** 1) Warm up the engine. 2) Turn the ignition switch to OFF. 3) Disconnect the connectors from the ECM and variable valve lift diagnosis oil pressure switch RH. 4) Measure the resistance of harness between ECM and variable valve lift diagnosis oil pressure switch RH connector. ***Connector & terminal*** ***(B137) No. 14 — (E71) No. 1:***	Is the resistance less than 1 Ω?	Go to step **2**.	Repair the harness and connector. NOTE: In this case, repair the following item: • Open circuit in harness between ECM and variable valve lift diagnosis oil pressure switch RH connector • Poor contact of coupling connector
2	**CHECK HARNESS BETWEEN ECM AND VARIABLE VALVE LIFT DIAGNOSIS OIL PRESSURE SWITCH RH CONNECTOR.** Measure the resistance between the variable valve lift diagnosis oil pressure switch RH connector and engine ground. ***Connector & terminal*** ***(E71) No. 1 — Engine ground:***	Is the resistance 1 MΩ or more?	Go to step **3**.	Repair the ground short circuit in harness between ECM and variable valve lift diagnosis oil pressure switch RH connector.
3	**CHECK HARNESS BETWEEN ECM AND VARIABLE VALVE LIFT DIAGNOSIS OIL PRESSURE SWITCH RH CONNECTOR.** 1) Turn the ignition switch to ON. 2) Measure the voltage between the variable valve lift diagnosis oil pressure switch RH connector and engine ground. ***Connector & terminal*** ***(E71) No. 1 (+) — Engine ground (–):***	Is the voltage 10 V or more?	Repair the short circuit to power supply in harness between ECM and variable valve lift diagnosis oil pressure switch RH connector.	Go to step **4**.
4	**CHECK DTC.** 1) Perform the Clear Memory Mode. <Ref. to EN(H4SO)(diag)-51, Clear Memory Mode.> 2) After idling the engine, check the DTC.	Is DTC displayed?	Replace the oil switching solenoid valve RH. <Ref. to ME(H4SO)-95, Oil Switching Solenoid Valve.> After replacement, go to the next step. Go to step **5**.	End.
5	**CHECK DTC.** 1) Perform the Clear Memory Mode. <Ref. to EN(H4SO)(diag)-51, Clear Memory Mode.> 2) After idling the engine, check the DTC.	Is DTC displayed?	Check for oil routing.	End.

B: DTC P0028 INTAKE VALVE CONTROL SOLENOID CIRCUIT RANGE/PERFORMANCE (BANK 2)

DTC DETECTING CONDITION:

- Immediately at fault recognition
- GENERAL DESCRIPTION <Ref. to GD(H4SO)-10, DTC P0028 INTAKE VALVE CONTROL SOLENOID CIRCUIT RANGE/PERFORMANCE (BANK 2), Diagnostic Trouble Code (DTC) Detecting Criteria.>

TROUBLE SYMPTOM:

Improper idling

CAUTION:

After servicing or replacing faulty parts, perform Clear Memory Mode <Ref. to EN(H4SO)(diag)-51, OPERATION, Clear Memory Mode.>, and Inspection Mode <Ref. to EN(H4SO)(diag)-40, PROCEDURE, Inspection Mode.>.

WIRING DIAGRAM:

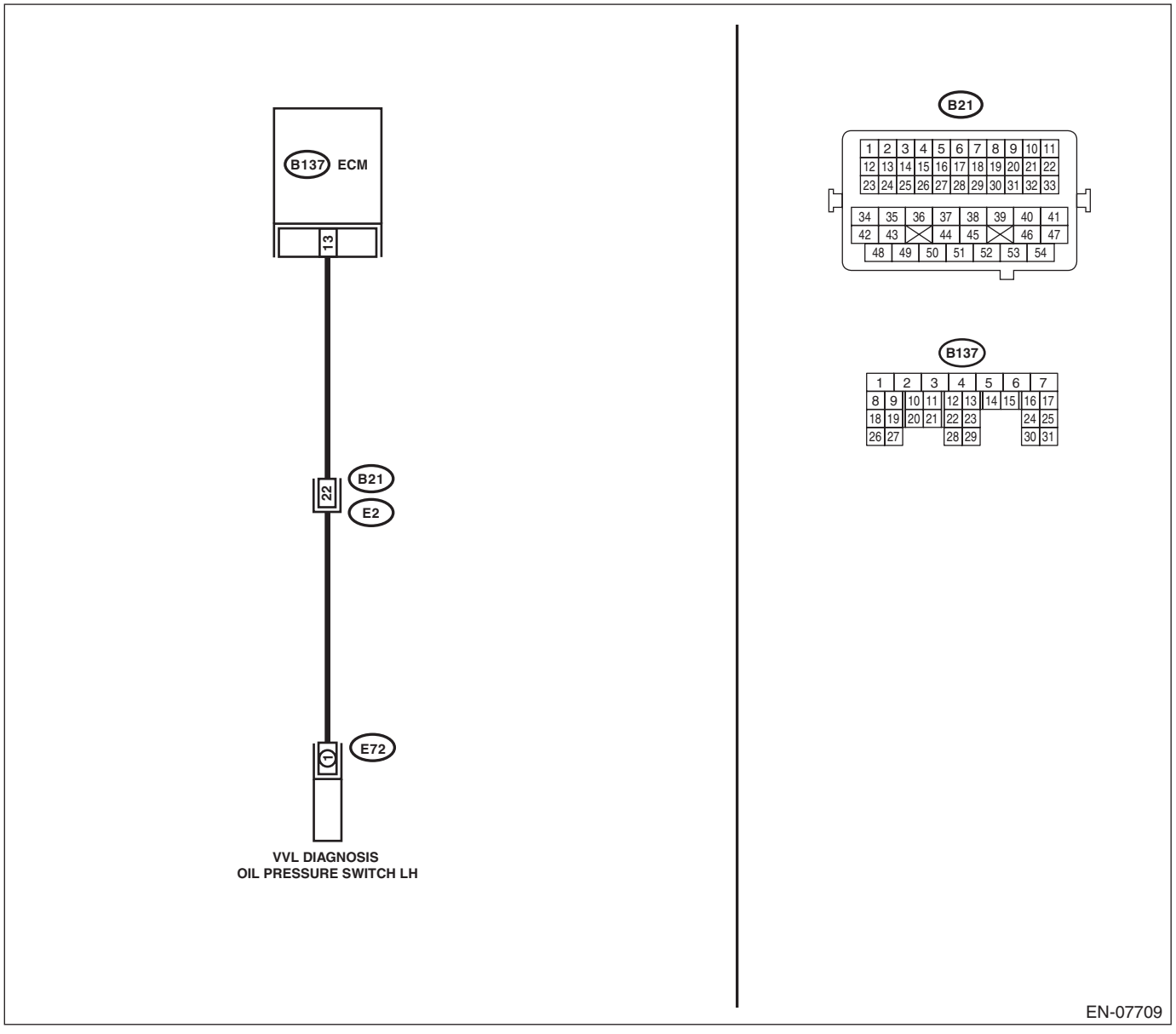

	Step	Check	Yes	No
1	**CHECK HARNESS BETWEEN ECM AND VARIABLE VALVE LIFT DIAGNOSIS OIL PRESSURE SWITCH LH CONNECTOR.** 1) Warm up the engine. 2) Turn the ignition switch to OFF. 3) Disconnect the connectors from the ECM and variable valve lift diagnosis oil pressure switch LH. 4) Measure the resistance of harness between ECM and variable valve lift diagnosis oil pressure switch LH connector. ***Connector & terminal*** ***(B137) No. 13 — (E72) No. 1:***	Is the resistance less than 1 Ω?	Go to step **2**.	Repair the harness and connector. NOTE: In this case, repair the following item: • Open circuit in harness between ECM and variable valve lift diagnosis oil pressure switch LH connector • Poor contact of coupling connector
2	**CHECK HARNESS BETWEEN ECM AND VARIABLE VALVE LIFT DIAGNOSIS OIL PRESSURE SWITCH LH CONNECTOR.** Measure the resistance between the variable valve lift diagnosis oil pressure switch LH connector and engine ground. ***Connector & terminal*** ***(E72) No. 1 — Engine ground:***	Is the resistance 1 MΩ or more?	Go to step **3**.	Repair the ground short circuit in harness between ECM and variable valve lift diagnosis oil pressure switch LH connector.
3	**CHECK HARNESS BETWEEN ECM AND VARIABLE VALVE LIFT DIAGNOSIS OIL PRESSURE SWITCH LH CONNECTOR.** 1) Turn the ignition switch to ON. 2) Measure the voltage between the variable valve lift diagnosis oil pressure switch LH connector and engine ground. ***Connector & terminal*** ***(E72) No. 1 (+) — Engine ground (–):***	Is the voltage 10 V or more?	Repair the short circuit to power supply in harness between ECM and variable valve lift diagnosis oil pressure switch LH connector.	Go to step **4**.
4	**CHECK DTC.** 1) Perform the Clear Memory Mode. <Ref. to EN(H4SO)(diag)-51, Clear Memory Mode.> 2) After idling the engine, check the DTC.	Is DTC displayed?	Replace the oil switching solenoid valve LH. <Ref. to ME(H4SO)-95, Oil Switching Solenoid Valve.> After replacement, go to the next step. Go to step **5**.	End.
5	**CHECK DTC.** 1) Perform the Clear Memory Mode. <Ref. to EN(H4SO)(diag)-51, Clear Memory Mode.> 2) After idling the engine, check the DTC.	Is DTC displayed?	Check for oil routing.	End.

C: DTC P0030 HO2S HEATER CONTROL CIRCUIT (BANK 1 SENSOR 1)

DTC DETECTING CONDITION:

- Detected when two consecutive driving cycles with fault occur.
- GENERAL DESCRIPTION <Ref. to GD(H4SO)-11, DTC P0030 HO2S HEATER CONTROL CIRCUIT (BANK 1 SENSOR 1), Diagnostic Trouble Code (DTC) Detecting Criteria.>

CAUTION:
After servicing or replacing faulty parts, perform Clear Memory Mode <Ref. to EN(H4SO)(diag)-51, OPERATION, Clear Memory Mode.>, and Inspection Mode <Ref. to EN(H4SO)(diag)-40, PROCEDURE, Inspection Mode.>.

WIRING DIAGRAM:

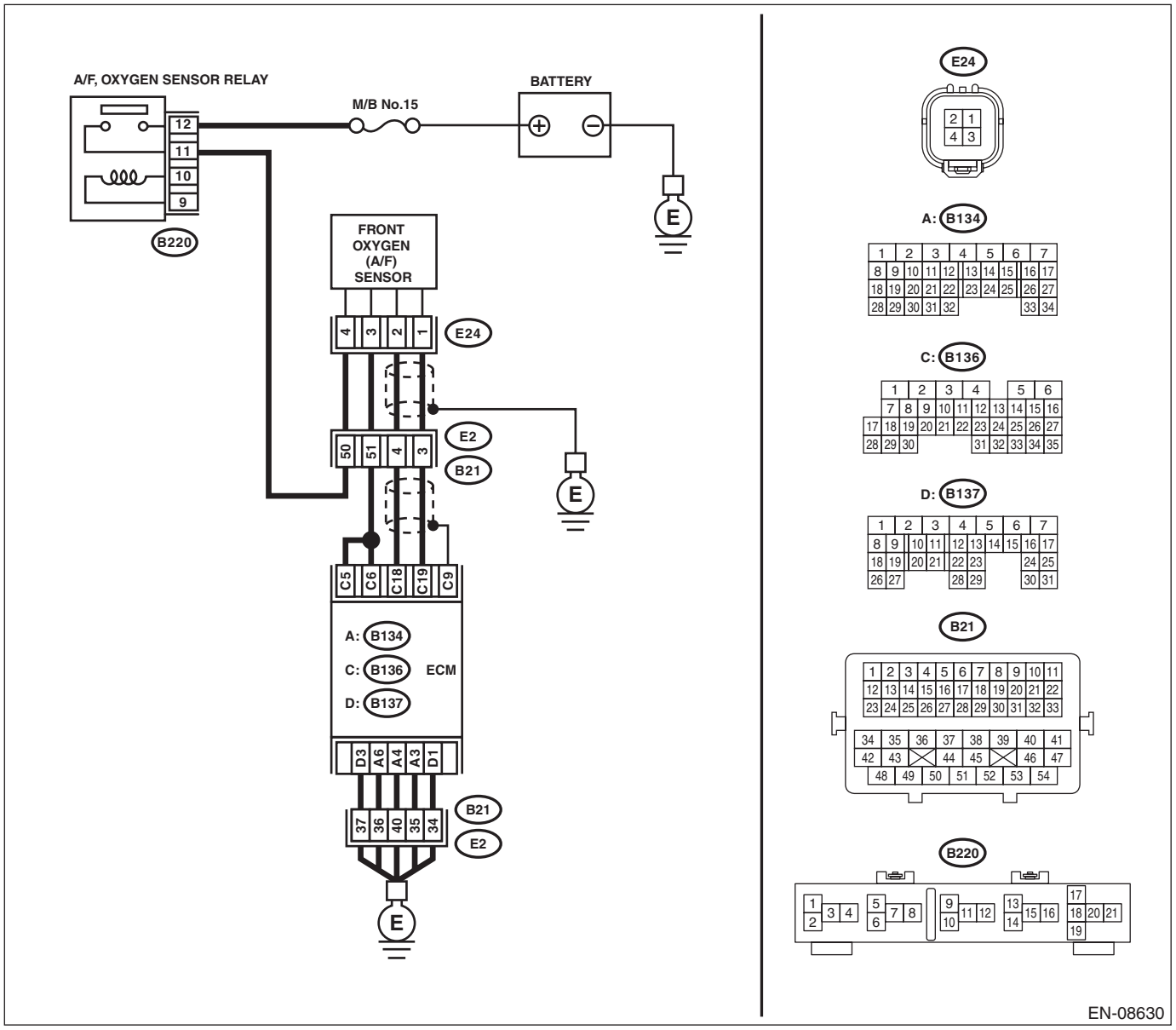

	Step	Check	Yes	No
1	**CHECK HARNESS BETWEEN ECM AND FRONT OXYGEN (A/F) SENSOR CONNECTOR.** 1) Start and warm up the engine. 2) Turn the ignition switch to OFF. 3) Disconnect the connectors from ECM and front oxygen (A/F) sensor. 4) Measure the resistance of harness between ECM and front oxygen (A/F) sensor connector. ***Connector & terminal*** ***(B136) No. 5 — (E24) No. 3:*** ***(B136) No. 6 — (E24) No. 3:*** ***(B136) No. 18 — (E24) No. 2:*** ***(B136) No. 19 — (E24) No. 1:***	Is the resistance less than 1 Ω?	Go to step **2**.	Repair the harness and connector. NOTE: In this case, repair the following item: • Open circuit in harness between ECM and front oxygen (A/F) sensor connector • Poor contact of coupling connector
2	**CHECK FRONT OXYGEN (A/F) SENSOR.** Measure the resistance between front oxygen (A/F) sensor connector terminals. ***Terminals*** ***No. 3 — No. 4:***	Is the resistance 2 — 3 Ω?	Go to step **3**.	Replace the front oxygen (A/F) sensor. <Ref. to FU(H4SO)-42, Front Oxygen (A/F) Sensor.>
3	**CHECK FOR POOR CONTACT.** Check for poor contact of ECM and front oxygen (A/F) sensor connector.	Is there poor contact of ECM or front oxygen (A/F) sensor connector?	Repair the poor contact of ECM or front oxygen (A/F) sensor connector.	Replace the front oxygen (A/F) sensor. <Ref. to FU(H4SO)-42, Front Oxygen (A/F) Sensor.>

D: DTC P0031 HO2S HEATER CONTROL CIRCUIT LOW (BANK 1 SENSOR 1)

DTC DETECTING CONDITION:

- Immediately at fault recognition
- GENERAL DESCRIPTION <Ref. to GD(H4SO)-13, DTC P0031 HO2S HEATER CONTROL CIRCUIT LOW (BANK 1 SENSOR 1), Diagnostic Trouble Code (DTC) Detecting Criteria.>

CAUTION:
After servicing or replacing faulty parts, perform Clear Memory Mode <Ref. to EN(H4SO)(diag)-51, OPERATION, Clear Memory Mode.>, and Inspection Mode <Ref. to EN(H4SO)(diag)-40, PROCEDURE, Inspection Mode.>.
WIRING DIAGRAM:

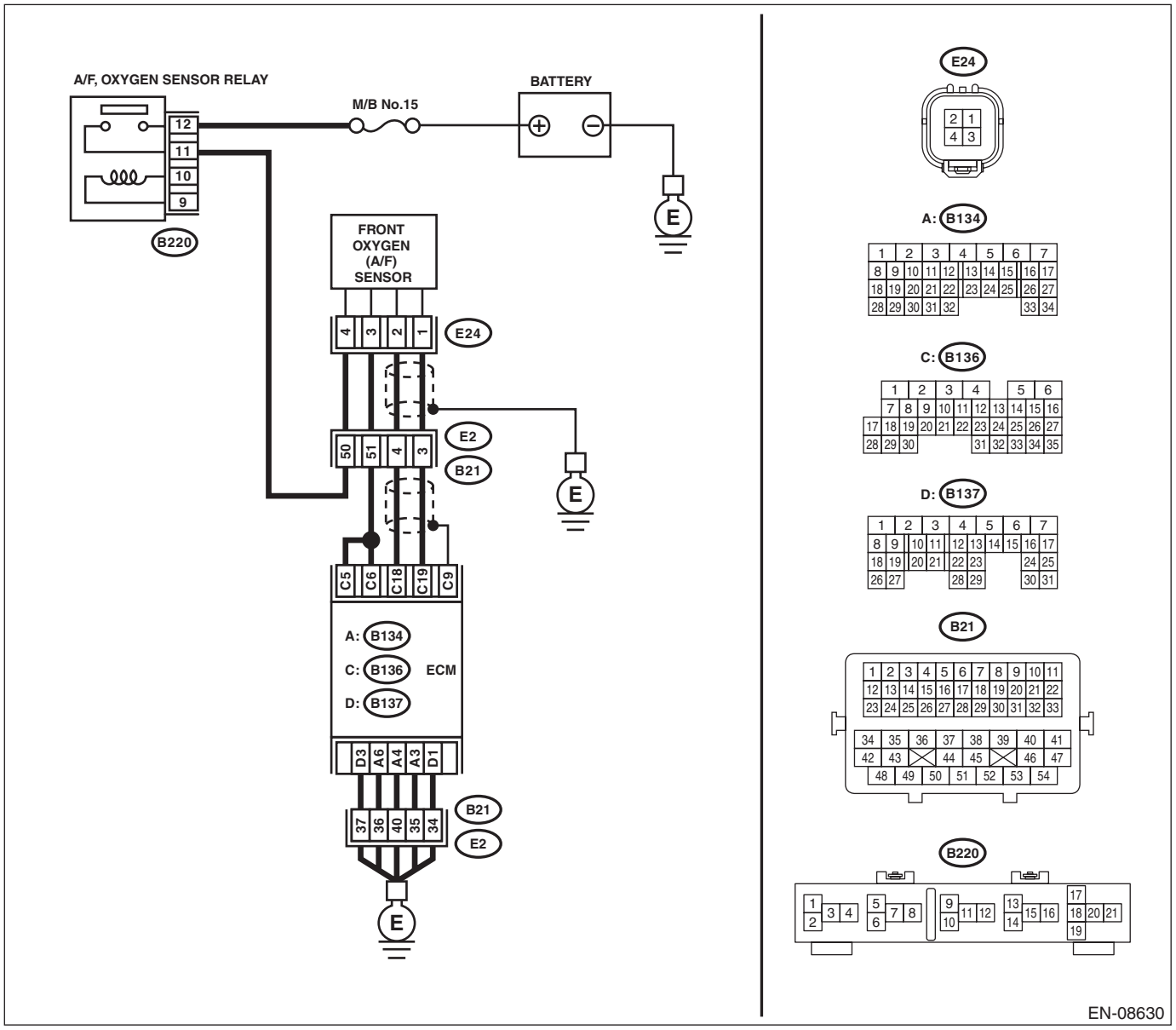

	Step	Check	Yes	No
1	**CHECK POWER SUPPLY TO FRONT OXYGEN (A/F) SENSOR.** 1) Turn the ignition switch to OFF. 2) Disconnect the connectors from front oxygen (A/F) sensor. 3) Turn the ignition switch to ON. 4) Measure the voltage between front oxygen (A/F) sensor connector and engine ground. ***Connector & terminal*** ***(E24) No. 4 (+) — Engine ground (–):***	Is the voltage 10 V or more?	Go to step **2**.	Repair the power supply line. NOTE: In this case, repair the following item: • Open circuit in harness between A/F, oxygen sensor relay connector and front oxygen (A/F) sensor connector • Poor contact of A/F, oxygen sensor relay connector • Poor contact of coupling connector • Malfunction of A/F, oxygen sensor relay
2	**CHECK HARNESS BETWEEN ECM AND FRONT OXYGEN (A/F) SENSOR CONNECTOR.** 1) Turn the ignition switch to OFF. 2) Disconnect the connectors from ECM. 3) Measure the resistance between ECM and front oxygen (A/F) sensor connector. ***Connector & terminal*** ***(B136) No. 5 — (E24) No. 3:*** ***(B136) No. 6 — (E24) No. 3:***	Is the resistance less than 1 Ω?	Go to step **3**.	Repair the harness and connector. NOTE: In this case, repair the following item: • Open circuit in harness between ECM and front oxygen (A/F) sensor connector • Poor contact of coupling connector
3	**CHECK GROUND CIRCUIT FOR ECM.** Measure the resistance of harness between ECM and chassis ground. ***Connector & terminal*** ***(B134) No. 3 — Chassis ground:*** ***(B134) No. 4 — Chassis ground:*** ***(B134) No. 6 — Chassis ground:*** ***(B137) No. 1 — Chassis ground:*** ***(B137) No. 3 — Chassis ground:***	Is the resistance less than 5 Ω?	Go to step **4**.	Repair the harness and connector. NOTE: In this case, repair the following item: • Open circuit of harness between ECM and engine ground • Poor contact of coupling connector
4	**CHECK FRONT OXYGEN (A/F) SENSOR.** Measure the resistance between front oxygen (A/F) sensor connector terminals. ***Terminals*** ***No. 3 — No. 4:***	Is the resistance 2 — 3 Ω?	Repair the poor contact of ECM connector.	Replace the front oxygen (A/F) sensor. <Ref. to FU(H4SO)-42, Front Oxygen (A/F) Sensor.>

E: DTC P0032 HO2S HEATER CONTROL CIRCUIT HIGH (BANK 1 SENSOR 1)

DTC DETECTING CONDITION:

- Immediately at fault recognition
- GENERAL DESCRIPTION <Ref. to GD(H4SO)-15, DTC P0032 HO2S HEATER CONTROL CIRCUIT HIGH (BANK 1 SENSOR 1), Diagnostic Trouble Code (DTC) Detecting Criteria.>

CAUTION:

After servicing or replacing faulty parts, perform Clear Memory Mode <Ref. to EN(H4SO)(diag)-51, OPERATION, Clear Memory Mode.>, and Inspection Mode <Ref. to EN(H4SO)(diag)-40, PROCEDURE, Inspection Mode.>.

WIRING DIAGRAM:

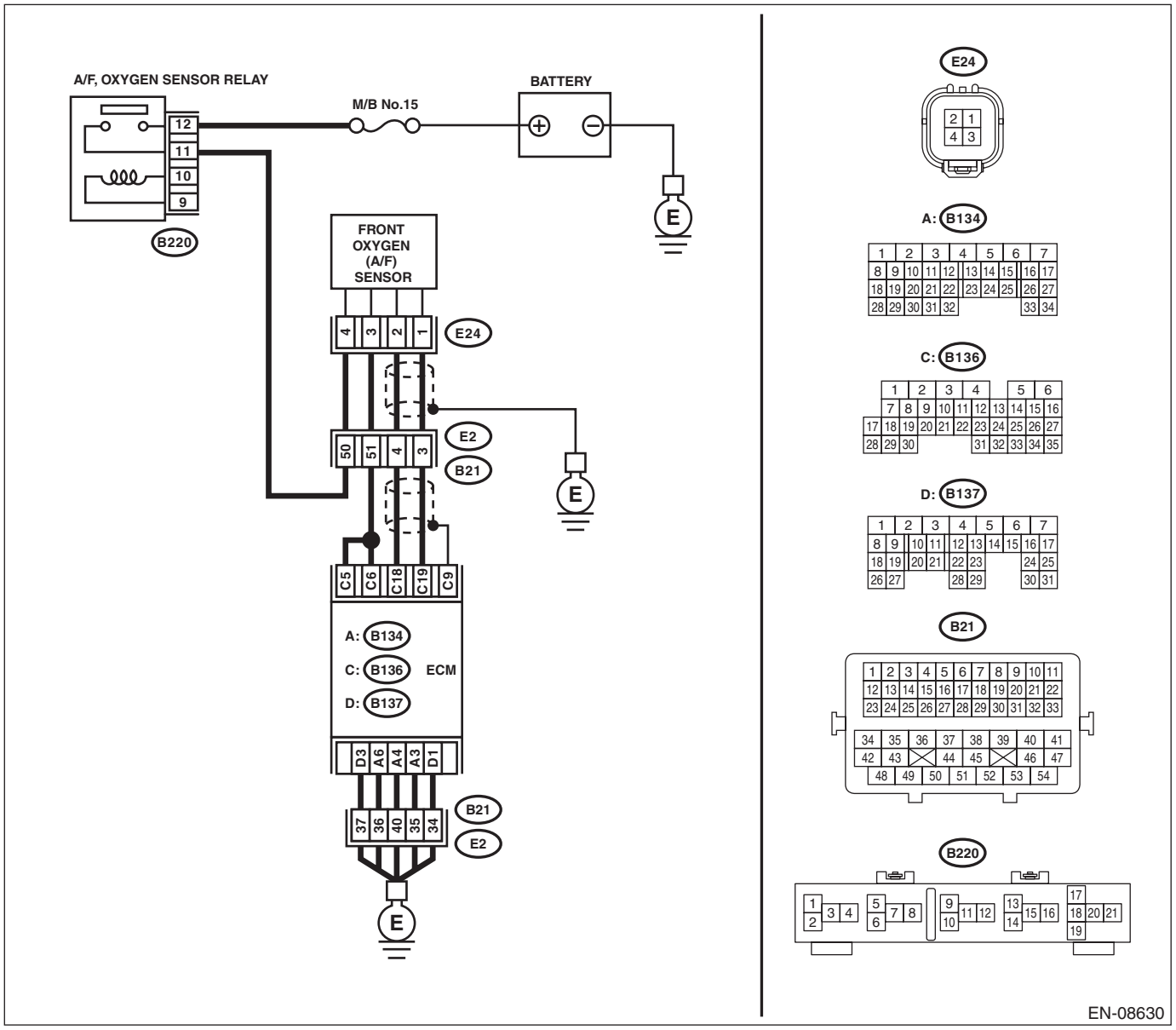

	Step	Check	Yes	No
1	**CHECK HARNESS BETWEEN ECM AND FRONT OXYGEN (A/F) SENSOR CONNECTOR.** 1) Turn the ignition switch to OFF. 2) Measure the voltage between ECM and chassis ground. ***Connector & terminal*** ***(B136) No. 5 (+) — Chassis ground (–):*** ***(B136) No. 6 (+) — Chassis ground (–):***	Is the voltage 10 V or more?	Repair the short circuit to power in the harness between ECM and front oxygen (A/F) sensor connector.	Go to step **2**.
2	**CHECK GROUND CIRCUIT FOR ECM.** 1) Disconnect the connectors from ECM. 2) Measure the resistance between ECM and chassis ground. ***Connector & terminal*** ***(B134) No. 3 — Chassis ground:*** ***(B134) No. 4 — Chassis ground:*** ***(B134) No. 6 — Chassis ground:*** ***(B137) No. 1 — Chassis ground:*** ***(B137) No. 3 — Chassis ground:***	Is the resistance less than 5 Ω?	Repair the poor contact of ECM connector.	Repair the harness and connector. NOTE: In this case, repair the following item: • Open circuit of harness between ECM and engine ground • Poor contact of coupling connector

F: DTC P0037 HO2S HEATER CONTROL CIRCUIT LOW (BANK 1 SENSOR 2)

DTC DETECTING CONDITION:

- Detected when two consecutive driving cycles with fault occur.
- GENERAL DESCRIPTION <Ref. to GD(H4SO)-17, DTC P0037 HO2S HEATER CONTROL CIRCUIT LOW (BANK 1 SENSOR 2), Diagnostic Trouble Code (DTC) Detecting Criteria.>

CAUTION:
After servicing or replacing faulty parts, perform Clear Memory Mode <Ref. to EN(H4SO)(diag)-51, OPERATION, Clear Memory Mode.>, and Inspection Mode <Ref. to EN(H4SO)(diag)-40, PROCEDURE, Inspection Mode.>.

WIRING DIAGRAM:

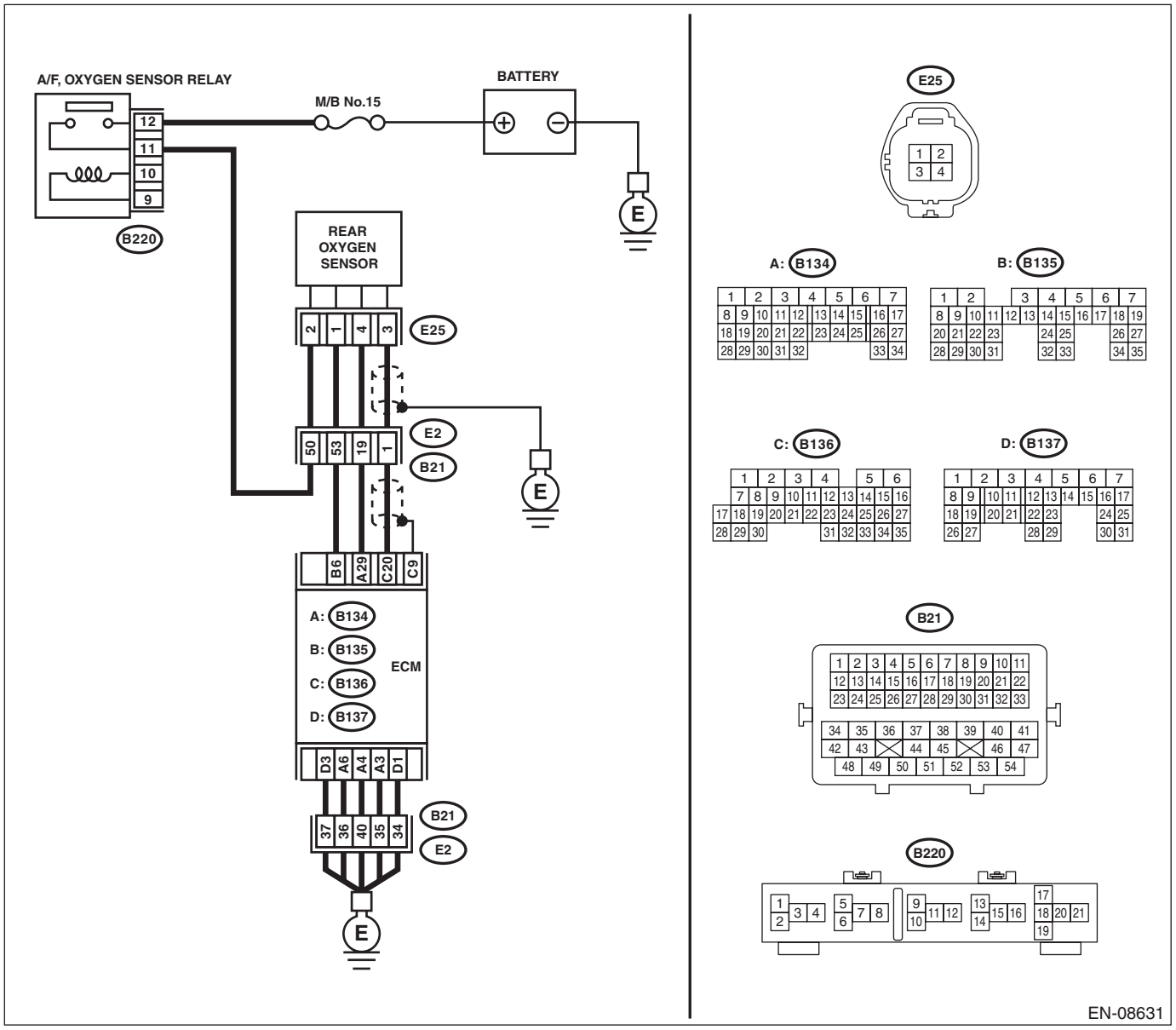

	Step	Check	Yes	No
1	**CHECK POWER SUPPLY TO REAR OXYGEN SENSOR.** 1) Turn the ignition switch to OFF. 2) Disconnect the connector from rear oxygen sensor. 3) Turn the ignition switch to ON. 4) Measure the voltage between rear oxygen sensor connector and engine ground. ***Connector & terminal*** ***(E25) No. 2 (+) — Engine ground (–):***	Is the voltage 10 V or more?	Go to step **2**.	Repair the power supply line. NOTE: In this case, repair the following item: • Open circuit in harness between A/F, oxygen sensor relay connector and rear oxygen sensor connector • Poor contact of A/F, oxygen sensor relay connector • Poor contact of coupling connector
2	**CHECK HARNESS BETWEEN ECM AND REAR OXYGEN SENSOR CONNECTOR.** 1) Turn the ignition switch to OFF. 2) Disconnect the connector from ECM. 3) Measure the resistance between ECM and oxygen sensor connector. ***Connector & terminal*** ***(B135) No. 6 — (E25) No. 1:***	Is the resistance less than 1 Ω?	Go to step **3**.	Repair the harness and connector. NOTE: In this case, repair the following item: • Open circuit in harness between ECM and rear oxygen sensor connector • Poor contact of coupling connector
3	**CHECK GROUND CIRCUIT FOR ECM.** Measure the resistance of harness between ECM and chassis ground. ***Connector & terminal*** ***(B134) No. 3 — Chassis ground:*** ***(B134) No. 4 — Chassis ground:*** ***(B134) No. 6 — Chassis ground:*** ***(B137) No. 1 — Chassis ground:*** ***(B137) No. 3 — Chassis ground:***	Is the resistance less than 5 Ω?	Go to step **4**.	Repair the harness and connector. NOTE: In this case, repair the following item: • Open circuit of harness between ECM and engine ground • Poor contact of coupling connector
4	**CHECK REAR OXYGEN SENSOR.** Measure the resistance between rear oxygen sensor connector terminals. ***Terminals*** ***No. 2 — No. 1:***	Is the resistance 5 — 7 Ω?	Repair the poor contact of ECM connector.	Replace the rear oxygen sensor. <Ref. to FU(H4SO)-44, Rear Oxygen Sensor.>

G: DTC P0038 HO2S HEATER CONTROL CIRCUIT HIGH (BANK 1 SENSOR 2)

DTC DETECTING CONDITION:

- Detected when two consecutive driving cycles with fault occur.
- GENERAL DESCRIPTION <Ref. to GD(H4SO)-19, DTC P0038 HO2S HEATER CONTROL CIRCUIT HIGH (BANK 1 SENSOR 2), Diagnostic Trouble Code (DTC) Detecting Criteria.>

CAUTION:
After servicing or replacing faulty parts, perform Clear Memory Mode <Ref. to EN(H4SO)(diag)-51, OPERATION, Clear Memory Mode.>, and Inspection Mode <Ref. to EN(H4SO)(diag)-40, PROCEDURE, Inspection Mode.>.

WIRING DIAGRAM:

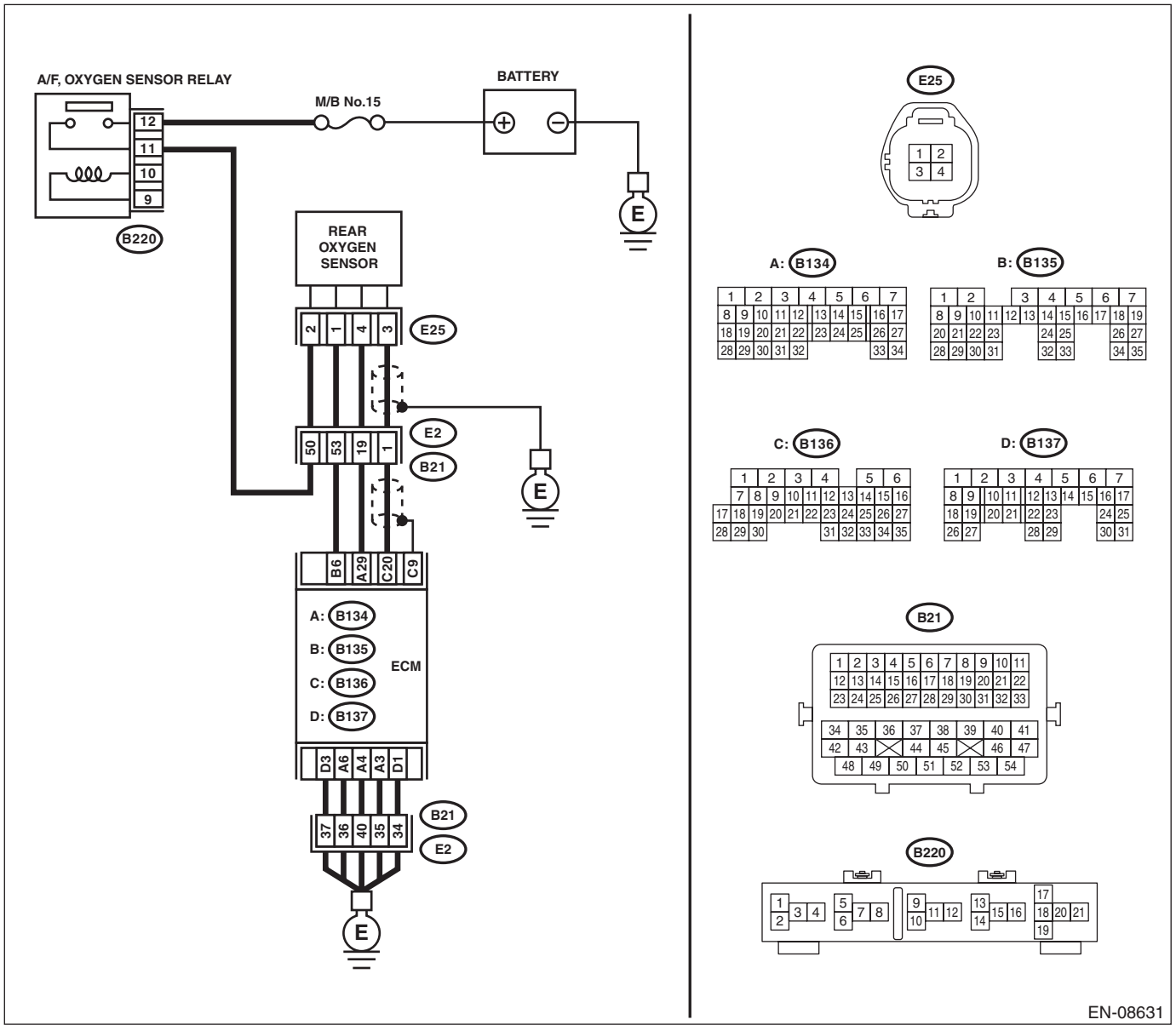

Step		Check	Yes	No
1	**CHECK HARNESS BETWEEN ECM AND REAR OXYGEN SENSOR CONNECTOR.** 1) Turn the ignition switch to OFF. 2) Measure the voltage between ECM and chassis ground. ***Connector & terminal*** ***(B135) No. 6 (+) — Chassis ground (–):***	Is the voltage 10 V or more?	Repair the short circuit to power in the harness between ECM and rear oxygen sensor connector.	Go to step **2**.

	Step	Check	Yes	No
2	**CHECK GROUND CIRCUIT FOR ECM.** 1) Disconnect the connector from ECM. 2) Measure the resistance between ECM and chassis ground. ***Connector & terminal*** ***(B134) No. 3 — Chassis ground:*** ***(B134) No. 4 — Chassis ground:*** ***(B134) No. 6 — Chassis ground:*** ***(B137) No. 1 — Chassis ground:*** ***(B137) No. 3 — Chassis ground:***	Is the resistance less than 5 Ω?	Repair the poor contact of ECM connector.	Repair the harness and connector. NOTE: In this case, repair the following item: • Open circuit of harness between ECM and engine ground • Poor contact of coupling connector

H: DTC P0068 MAP/MAF - THROTTLE POSITION CORRELATION

DTC DETECTING CONDITION:

- Detected when two consecutive driving cycles with fault occur.
- GENERAL DESCRIPTION <Ref. to GD(H4SO)-21, DTC P0068 MAP/MAF - THROTTLE POSITION CORRELATION, Diagnostic Trouble Code (DTC) Detecting Criteria.>

CAUTION:
After servicing or replacing faulty parts, perform Clear Memory Mode <Ref. to EN(H4SO)(diag)-51, OPERATION, Clear Memory Mode.>, and Inspection Mode <Ref. to EN(H4SO)(diag)-40, PROCEDURE, Inspection Mode.>.

	Step	Check	Yes	No
1	**CHECK AIR INTAKE SYSTEM.**	Are there holes, loose bolts or disconnection of hose on air intake system?	Repair the air intake system.	Go to step **2**.
2	**CHECK MANIFOLD ABSOLUTE PRESSURE SENSOR.** 1) Start the engine and warm up engine until coolant temperature is higher than 75°C (167°F). 2) For CVT models, set the select lever to "P" range or "N" range, and for MT models, place the shift lever in the neutral position. 3) Turn the A/C switch to OFF. 4) Turn all the accessory switches to OFF. 5) Read the value of «Mani. Absolute Pressure» using the Subaru Select Monitor or a general scan tool. NOTE: • Subaru Select Monitor For detailed operation procedures, refer to "READ CURRENT DATA FOR ENGINE". <Ref. to EN(H4SO)(diag)-33, Subaru Select Monitor.> • General scan tool For detailed operation procedures, refer to the "General Scan Tool Instruction Manual".	Is the value in «Mani. Absolute Pressure» 73.3 — 106.6 kPa (550 — 800 mmHg, 21.65 — 31.50 inHg) when the ignition is turned ON, and 20.0 — 46.7 kPa (150 — 350 mmHg, 5.91 — 13.78 inHg) during idling?	Go to step **3**.	Replace the manifold absolute pressure sensor. <Ref. to FU(H4SO)-33, Manifold Absolute Pressure Sensor.>
3	**CHECK THROTTLE OPENING ANGLE.** Using the Subaru Select Monitor or a general scan tool, read the value in «Throttle Opening Angle». NOTE: • Subaru Select Monitor For detailed operation procedures, refer to "READ CURRENT DATA FOR ENGINE". <Ref. to EN(H4SO)(diag)-33, Subaru Select Monitor.> • General scan tool For detailed operation procedures, refer to the "General Scan Tool Instruction Manual".	Is the value in «Throttle Opening Angle» with the throttle fully closed less than 5%?	Go to step **4**.	Replace the electronic throttle control. <Ref. to FU(H4SO)-15, Throttle Body.>
4	**CHECK THROTTLE OPENING ANGLE.**	Is the value in «Throttle Opening Angle» with the throttle fully open 85% or more?	Replace the manifold absolute pressure sensor. <Ref. to FU(H4SO)-33, Manifold Absolute Pressure Sensor.>	Replace the electronic throttle control. <Ref. to FU(H4SO)-15, Throttle Body.>

I: DTC P0076 INTAKE VALVE CONTROL SOLENOID CIRCUIT LOW (BANK 1)

DTC DETECTING CONDITION:

- Immediately at fault recognition
- GENERAL DESCRIPTION <Ref. to GD(H4SO)-23, DTC P0076 INTAKE VALVE CONTROL SOLENOID CIRCUIT LOW (BANK 1), Diagnostic Trouble Code (DTC) Detecting Criteria.>

TROUBLE SYMPTOM:

Improper idling

CAUTION:

After servicing or replacing faulty parts, perform Clear Memory Mode <Ref. to EN(H4SO)(diag)-51, OPERATION, Clear Memory Mode.>, and Inspection Mode <Ref. to EN(H4SO)(diag)-40, PROCEDURE, Inspection Mode.>.

WIRING DIAGRAM:

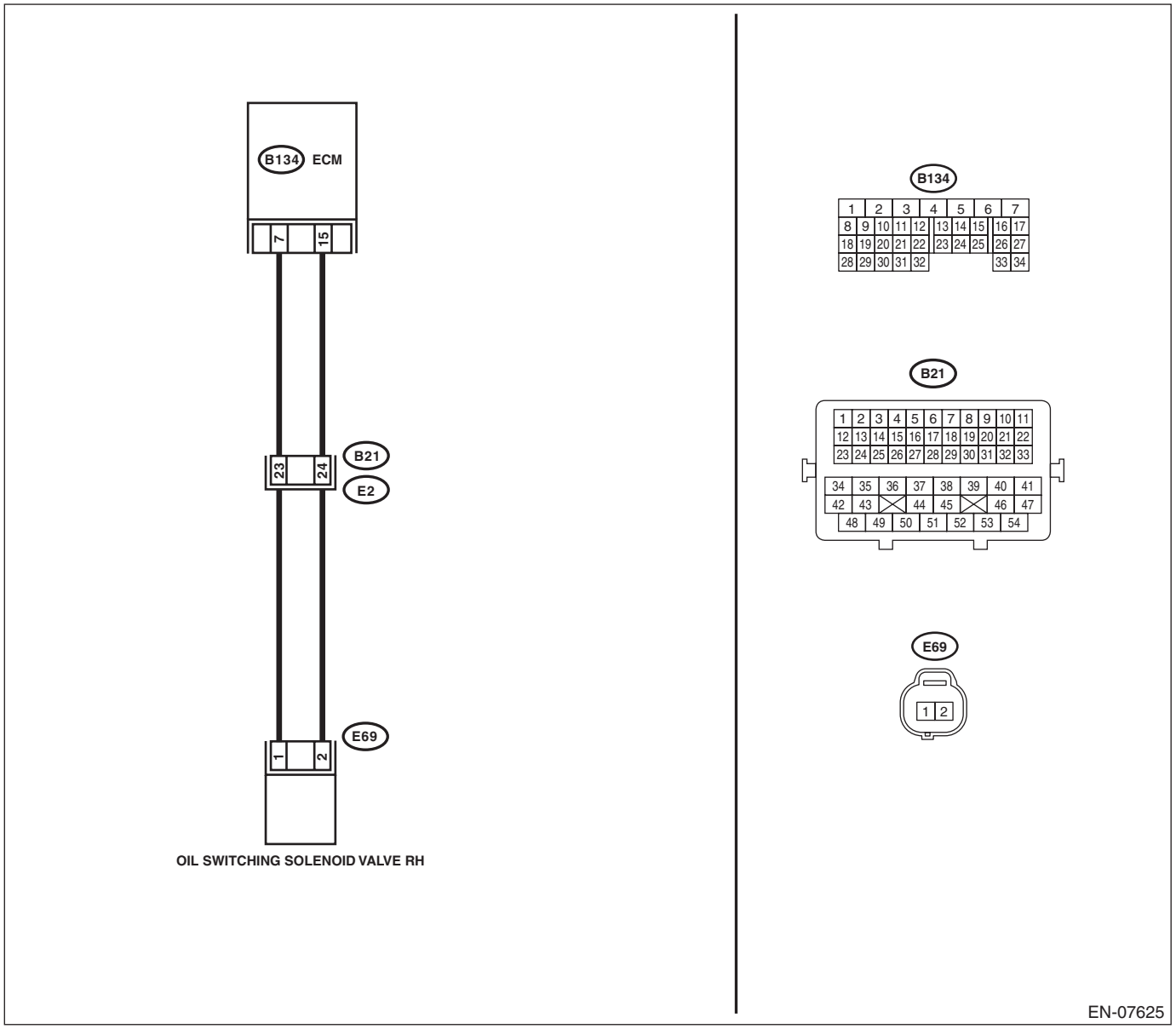

	Step	Check	Yes	No
1	**CHECK HARNESS BETWEEN ECM AND OIL SWITCHING SOLENOID VALVE RH CONNECTOR.** 1) Turn the ignition switch to OFF. 2) Disconnect the connectors from the ECM and oil switching solenoid valve RH. 3) Measure the resistance of harness between ECM and oil switching solenoid valve RH. ***Connector & terminal*** ***(B134) No. 7 — (E69) No. 1:*** ***(B134) No. 15 — (E69) No. 2:***	Is the resistance less than 1 Ω?	Go to step **2**.	Repair the harness and connector. NOTE: In this case, repair the following item: • Open circuit in harness between ECM and oil switching solenoid valve RH connector • Poor contact of coupling connector
2	**CHECK HARNESS BETWEEN ECM AND OIL SWITCHING SOLENOID VALVE RH CONNECTOR.** Measure the resistance between ECM and chassis ground. ***Connector & terminal*** ***(B134) No. 7 — Chassis ground:*** ***(B134) No. 15 — Chassis ground:***	Is the resistance 1 MΩ or more?	Go to step **3**.	Repair the short circuit to ground in harness between ECM and oil switching solenoid valve RH connector.
3	**CHECK OIL SWITCHING SOLENOID VALVE RH.** Measure the resistance between oil switching solenoid valve RH terminals. ***Terminals*** ***No. 1 — No. 2:***	Is the resistance 6 — 12 Ω?	Repair the poor contact of ECM and oil switching solenoid valve RH connector.	Replace the oil switching solenoid valve RH. <Ref. to ME(H4SO)-95, Oil Switching Solenoid Valve.>

J: DTC P0077 INTAKE VALVE CONTROL SOLENOID CIRCUIT HIGH (BANK 1)

DTC DETECTING CONDITION:

- Immediately at fault recognition
- GENERAL DESCRIPTION <Ref. to GD(H4SO)-24, DTC P0077 INTAKE VALVE CONTROL SOLENOID CIRCUIT HIGH (BANK 1), Diagnostic Trouble Code (DTC) Detecting Criteria.>

TROUBLE SYMPTOM:

Improper idling

CAUTION:

After servicing or replacing faulty parts, perform Clear Memory Mode <Ref. to EN(H4SO)(diag)-51, OPERATION, Clear Memory Mode.>, and Inspection Mode <Ref. to EN(H4SO)(diag)-40, PROCEDURE, Inspection Mode.>.

WIRING DIAGRAM:

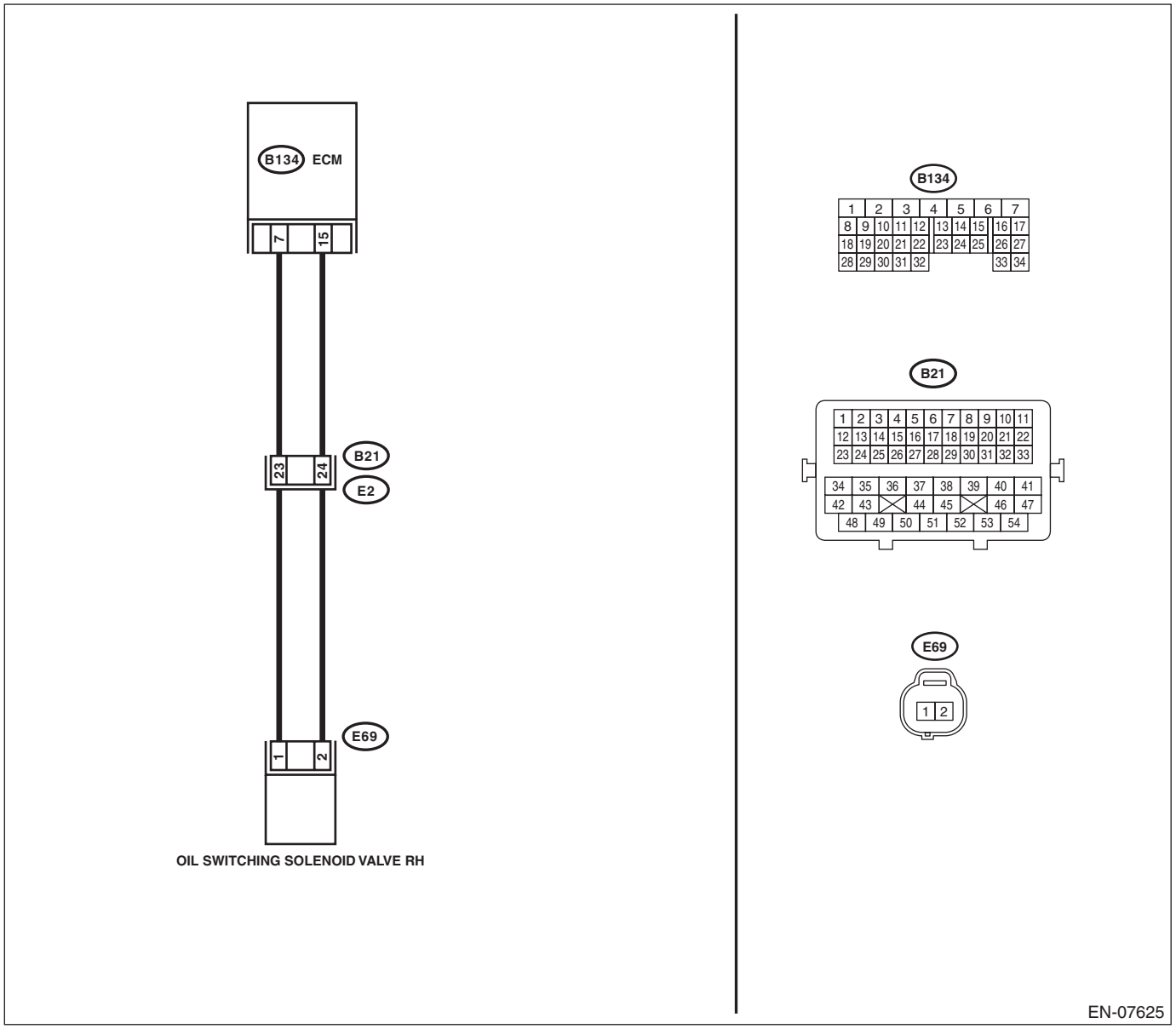

	Step	Check	Yes	No
1	**CHECK HARNESS BETWEEN ECM AND OIL SWITCHING SOLENOID VALVE RH CONNECTOR.** 1) Turn the ignition switch to OFF. 2) Disconnect the connectors from the ECM and oil switching solenoid valve RH. 3) Measure the voltage between ECM and chassis ground. ***Connector & terminal*** ***(B134) No. 7 (+) — Chassis ground (–):*** ***(B134) No. 15 (+) — Chassis ground (–):***	Is the voltage less than 1 V?	Go to step **2**.	Repair the short circuit to power supply in harness between ECM and oil switching solenoid valve RH connector.
2	**CHECK HARNESS BETWEEN ECM AND OIL SWITCHING SOLENOID VALVE RH CONNECTOR.** Measure the resistance of harness between ECM and oil switching solenoid valve RH connector. ***Connector & terminal*** ***(B134) No. 7 — (E69) No. 1:*** ***(B134) No. 15 — (E69) No. 2:***	Is the resistance less than 1 Ω?	Go to step **3**.	Repair the harness and connector. NOTE: In this case, repair the following item: • Open circuit in harness between ECM and oil switching solenoid valve RH connector • Poor contact of coupling connector
3	**CHECK OIL SWITCHING SOLENOID VALVE RH.** Measure the resistance between oil switching solenoid valve RH terminals. ***Terminals*** ***No. 1 — No. 2:***	Is the resistance 6 — 12 Ω?	Repair the poor contact of ECM and oil switching solenoid valve RH connector.	Replace the oil switching solenoid valve RH. <Ref. to ME(H4SO)-95, Oil Switching Solenoid Valve.>

K: DTC P0082 INTAKE VALVE CONTROL SOLENOID CIRCUIT LOW (BANK 2)

DTC DETECTING CONDITION:

- Immediately at fault recognition
- GENERAL DESCRIPTION <Ref. to GD(H4SO)-24, DTC P0082 INTAKE VALVE CONTROL SOLENOID CIRCUIT LOW (BANK 2), Diagnostic Trouble Code (DTC) Detecting Criteria.>

TROUBLE SYMPTOM:

Improper idling

CAUTION:

After servicing or replacing faulty parts, perform Clear Memory Mode <Ref. to EN(H4SO)(diag)-51, OPERATION, Clear Memory Mode.>, and Inspection Mode <Ref. to EN(H4SO)(diag)-40, PROCEDURE, Inspection Mode.>.

WIRING DIAGRAM:

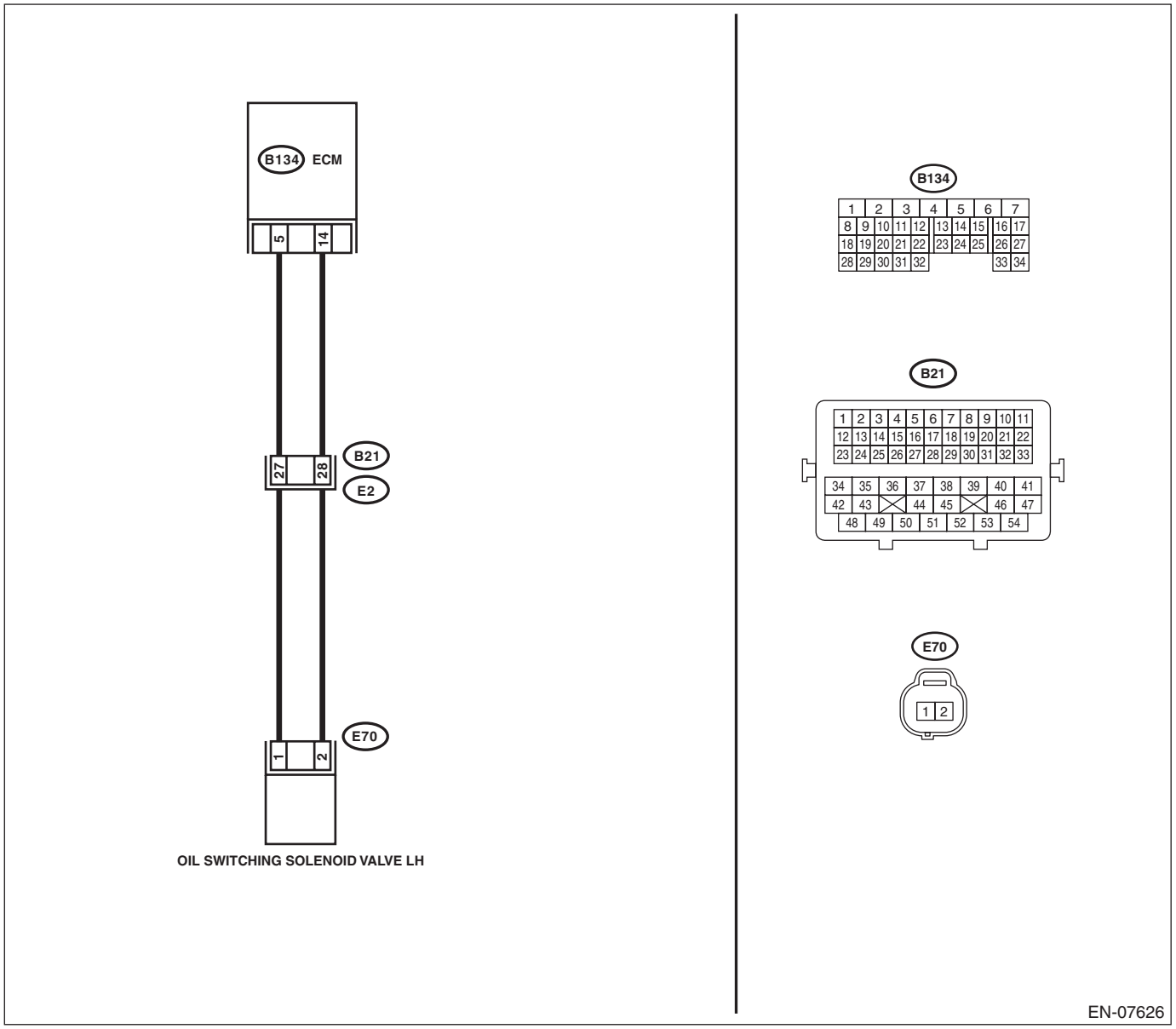

	Step	Check	Yes	No
1	**CHECK HARNESS BETWEEN ECM AND OIL SWITCHING SOLENOID VALVE LH CONNECTOR.** 1) Turn the ignition switch to OFF. 2) Disconnect the connectors from the ECM and oil switching solenoid valve LH. 3) Measure the resistance between ECM and oil switching solenoid valve LH. ***Connector & terminal*** ***(B134) No. 5 — (E70) No. 1:*** ***(B134) No. 14 — (E70) No. 2:***	Is the resistance less than 1 Ω?	Go to step **2**.	Repair the harness and connector. NOTE: In this case, repair the following item: • Open circuit in harness between ECM and oil switching solenoid valve LH connector • Poor contact of coupling connector
2	**CHECK HARNESS BETWEEN ECM AND OIL SWITCHING SOLENOID VALVE LH CONNECTOR.** Measure the resistance between ECM and chassis ground. ***Connector & terminal*** ***(B134) No. 5 — Chassis ground:*** ***(B134) No. 14 — Chassis ground:***	Is the resistance 1 MΩ or more?	Go to step **3**.	Repair the short circuit to ground in harness between ECM and oil switching solenoid valve LH connector.
3	**CHECK OIL SWITCHING SOLENOID VALVE LH.** Measure the resistance between oil switching solenoid valve LH terminals. ***Terminals*** ***No. 1 — No. 2:***	Is the resistance 6 — 12 Ω?	Repair the poor contact of ECM and oil switching solenoid valve LH connector.	Replace the oil switching solenoid valve LH. <Ref. to ME(H4SO)-95, Oil Switching Solenoid Valve.>

L: DTC P0083 INTAKE VALVE CONTROL SOLENOID CIRCUIT HIGH (BANK 2)

DTC DETECTING CONDITION:

- Immediately at fault recognition
- GENERAL DESCRIPTION <Ref. to GD(H4SO)-24, DTC P0083 INTAKE VALVE CONTROL SOLENOID CIRCUIT HIGH (BANK 2), Diagnostic Trouble Code (DTC) Detecting Criteria.>

TROUBLE SYMPTOM:

Improper idling

CAUTION:

After servicing or replacing faulty parts, perform Clear Memory Mode <Ref. to EN(H4SO)(diag)-51, OPERATION, Clear Memory Mode.>, and Inspection Mode <Ref. to EN(H4SO)(diag)-40, PROCEDURE, Inspection Mode.>.

WIRING DIAGRAM:

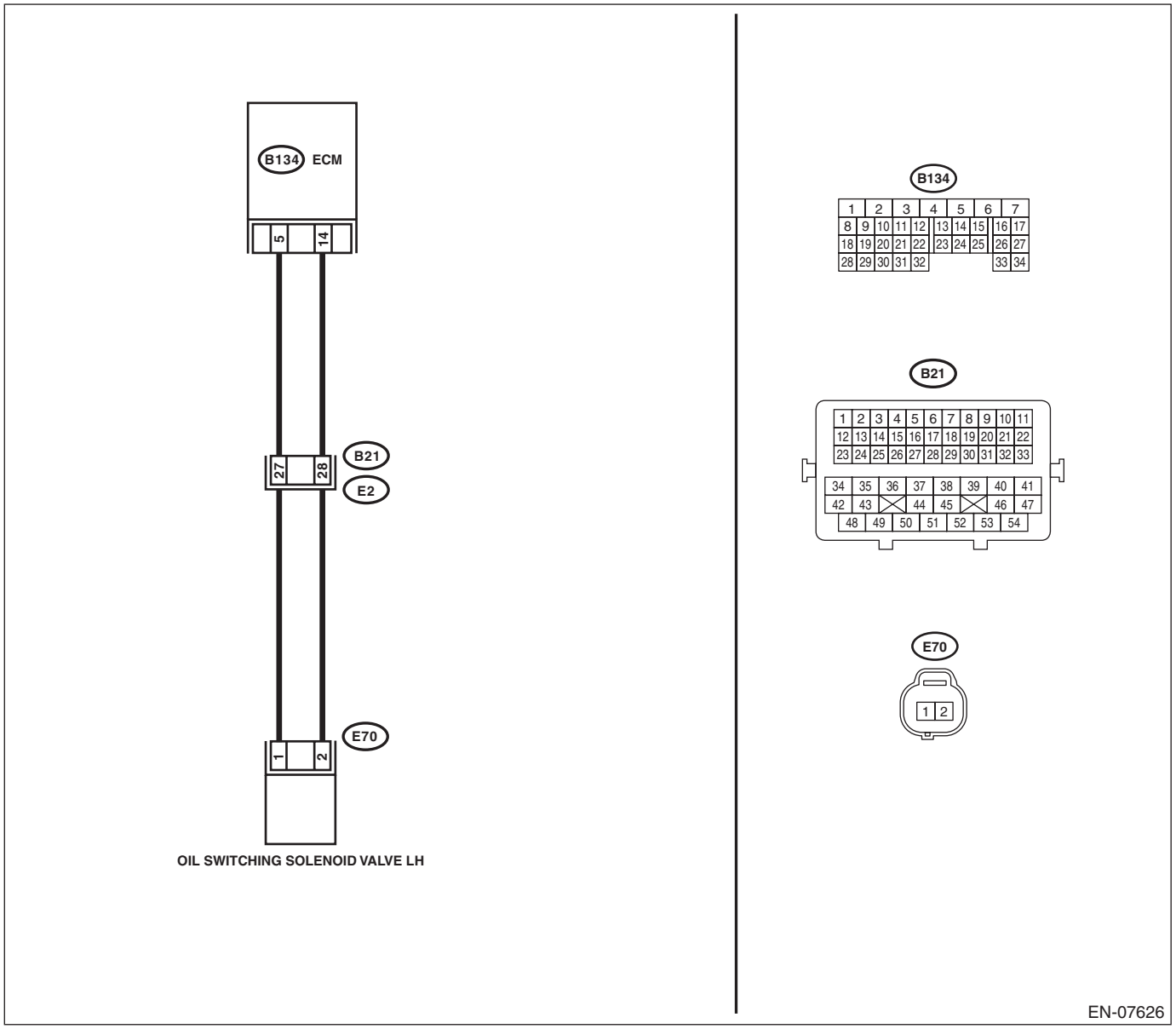

	Step	Check	Yes	No
1	**CHECK HARNESS BETWEEN ECM AND OIL SWITCHING SOLENOID VALVE LH CONNECTOR.** 1) Turn the ignition switch to OFF. 2) Disconnect the connectors from the ECM and oil switching solenoid valve LH. 3) Measure the voltage between ECM and chassis ground. ***Connector & terminal*** ***(B134) No. 5 (+) — Chassis ground (–):*** ***(B134) No. 14 (+) — Chassis ground (–):***	Is the voltage less than 1 V?	Go to step **2**.	Repair the short circuit to power supply in harness between ECM and oil switching solenoid valve LH connector.
2	**CHECK HARNESS BETWEEN ECM AND OIL SWITCHING SOLENOID VALVE LH CONNECTOR.** Measure the resistance between ECM and oil switching solenoid valve LH connector. ***Connector & terminal*** ***(B134) No. 5 — (E70) No. 1:*** ***(B134) No. 14 — (E70) No. 2:***	Is the resistance less than 1 Ω?	Go to step **3**.	Repair the harness and connector. NOTE: In this case, repair the following item: • Open circuit in harness between ECM and oil switching solenoid valve LH connector • Poor contact of coupling connector
3	**CHECK OIL SWITCHING SOLENOID VALVE LH.** Measure the resistance between oil switching solenoid valve LH terminals. ***Terminals*** ***No. 1 — No. 2:***	Is the resistance 6 — 12 Ω?	Repair the poor contact of ECM and oil switching solenoid valve LH connector.	Replace the oil switching solenoid valve LH. <Ref. to ME(H4SO)-95, Oil Switching Solenoid Valve.>

M: DTC P0101 MASS OR VOLUME AIR FLOW CIRCUIT RANGE/PERFORMANCE

DTC DETECTING CONDITION:

- Detected when two consecutive driving cycles with fault occur.
- GENERAL DESCRIPTION <Ref. to GD(H4SO)-25, DTC P0101 MASS OR VOLUME AIR FLOW CIRCUIT RANGE/PERFORMANCE, Diagnostic Trouble Code (DTC) Detecting Criteria.>

TROUBLE SYMPTOM:

- Improper idling
- Engine stalls.
- Poor driving performance

CAUTION:
After servicing or replacing faulty parts, perform Clear Memory Mode <Ref. to EN(H4SO)(diag)-51, OPERATION, Clear Memory Mode.>, and Inspection Mode <Ref. to EN(H4SO)(diag)-40, PROCEDURE, Inspection Mode.>.

Step		Check	Yes	No
1	**CHECK FOR ANY OTHER DTC ON DISPLAY.**	Is any other DTC displayed?	Check the appropriate DTC using the “List of Diagnostic Trouble Code (DTC)”. <Ref. to EN(H4SO)(diag)-78, List of Diagnostic Trouble Code (DTC).>	Replace the mass air flow and intake air temperature sensor. <Ref. to FU(H4SO)-32, Mass Air Flow and Intake Air Temperature Sensor.>

N: DTC P0102 MASS OR VOLUME AIR FLOW CIRCUIT LOW INPUT

DTC DETECTING CONDITION:

- Immediately at fault recognition
- GENERAL DESCRIPTION <Ref. to GD(H4SO)-28, DTC P0102 MASS OR VOLUME AIR FLOW CIRCUIT LOW INPUT, Diagnostic Trouble Code (DTC) Detecting Criteria.>

TROUBLE SYMPTOM:

- Improper idling
- Engine stalls.
- Poor driving performance

CAUTION:
After servicing or replacing faulty parts, perform Clear Memory Mode <Ref. to EN(H4SO)(diag)-51, OPERATION, Clear Memory Mode.>, and Inspection Mode <Ref. to EN(H4SO)(diag)-40, PROCEDURE, Inspection Mode.>.

WIRING DIAGRAM:

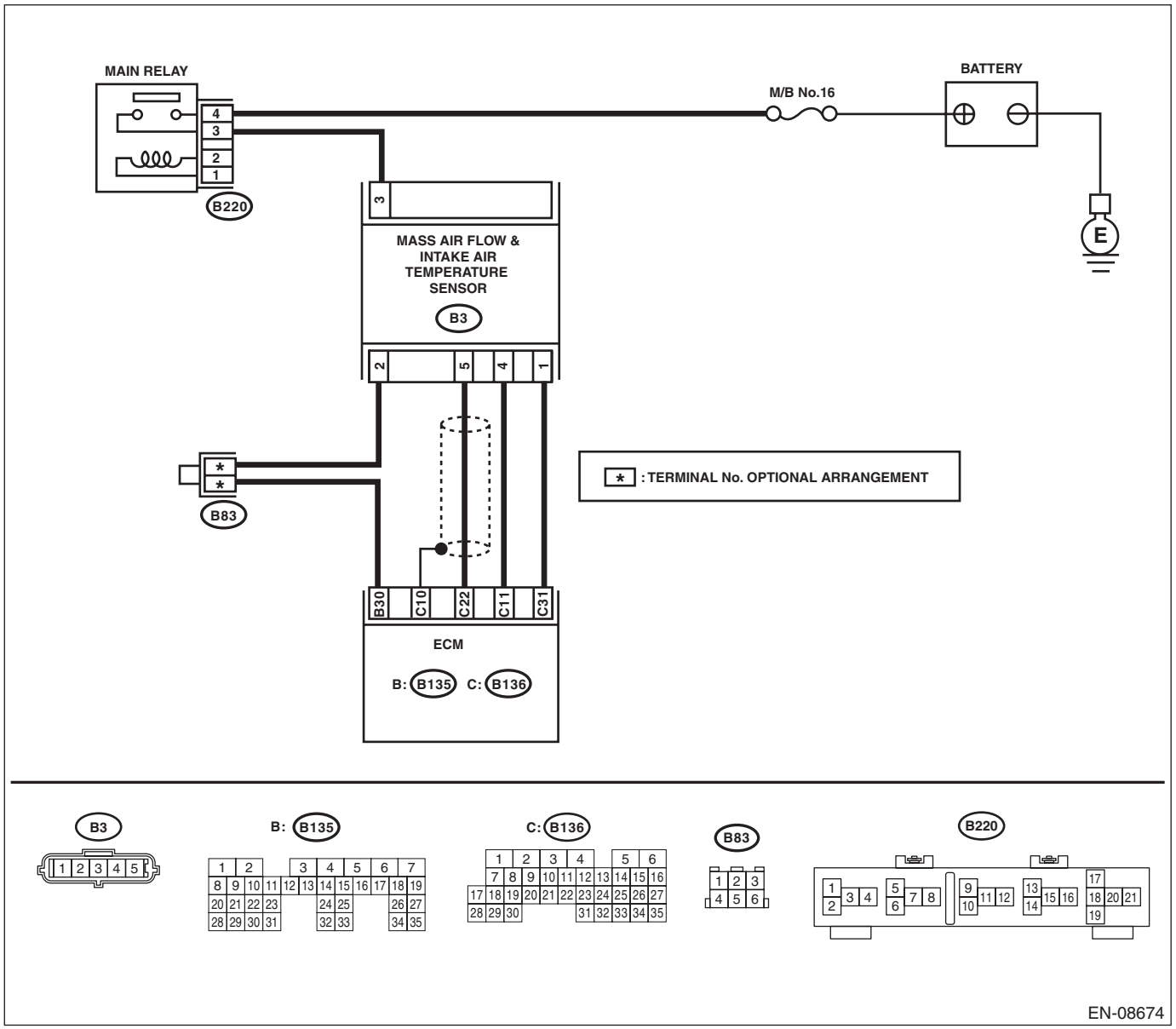

	Step	Check	Yes	No
1	**CHECK CURRENT DATA.** 1) Start the engine. 2) Read the value of «Air Flow Sensor Voltage» using Subaru Select Monitor. NOTE: For detailed operation procedures, refer to "READ CURRENT DATA FOR ENGINE". <Ref. to EN(H4SO)(diag)-33, Subaru Select Monitor.>	Is the value of «Air Flow Sensor Voltage» less than 0.2 V?	Go to step **2**.	Even if DTC is detected, the circuit has returned to a normal condition at this time. Reproduce the failure, and then perform the diagnosis again. NOTE: In this case, temporary poor contact of connector, temporary open or short circuit of harness may be the cause.
2	**CHECK POWER SUPPLY OF MASS AIR FLOW AND INTAKE AIR TEMPERATURE SENSOR.** 1) Turn the ignition switch to OFF. 2) Disconnect the connectors from the mass air flow and intake air temperature sensor. 3) Turn the ignition switch to ON. 4) Measure the voltage between mass air flow and intake air temperature sensor connector and engine ground. ***Connector & terminal*** ***(B3) No. 3 (+) — Engine ground (–):***	Is the voltage 10 V or more?	Go to step **3**.	Repair the harness and connector. NOTE: In this case, repair the following item: • Open circuit in harness between main relay and mass air flow and intake air temperature sensor connector • Poor contact of main relay connector
3	**CHECK HARNESS BETWEEN ECM AND MASS AIR FLOW AND INTAKE AIR TEMPERATURE SENSOR CONNECTOR.** 1) Turn the ignition switch to OFF. 2) Disconnect the connector from ECM. 3) Measure the resistance of harness between ECM and the mass air flow and intake air temperature sensor connector. ***Connector & terminal*** ***(B136) No. 22 — (B3) No. 5:***	Is the resistance less than 1 Ω?	Go to step **4**.	Repair the open circuit in harness between ECM and the mass air flow and intake air temperature sensor connector.
4	**CHECK HARNESS BETWEEN ECM AND MASS AIR FLOW AND INTAKE AIR TEMPERATURE SENSOR CONNECTOR.** Measure the resistance between ECM and chassis ground. ***Connector & terminal*** ***(B136) No. 22 — Chassis ground:***	Is the resistance 1 MΩ or more?	Go to step **5**.	Repair the short circuit to ground in harness between ECM and mass air flow and intake air temperature sensor connector.
5	**CHECK FOR POOR CONTACT.** Check for poor contact of ECM and mass air flow and intake air temperature sensor connector.	Is there poor contact of ECM or mass air flow and intake air temperature sensor connector?	Repair the poor contact of ECM or mass air flow and intake air temperature sensor connector.	Replace the mass air flow and intake air temperature sensor. <Ref. to FU(H4SO)-32, Mass Air Flow and Intake Air Temperature Sensor.>

O: DTC P0103 MASS OR VOLUME AIR FLOW CIRCUIT HIGH INPUT

DTC DETECTING CONDITION:

- Immediately at fault recognition
- GENERAL DESCRIPTION <Ref. to GD(H4SO)-30, DTC P0103 MASS OR VOLUME AIR FLOW CIRCUIT HIGH INPUT, Diagnostic Trouble Code (DTC) Detecting Criteria.>

TROUBLE SYMPTOM:

- Improper idling
- Engine stalls.
- Poor driving performance

CAUTION:
After servicing or replacing faulty parts, perform Clear Memory Mode <Ref. to EN(H4SO)(diag)-51, OPERATION, Clear Memory Mode.>, and Inspection Mode <Ref. to EN(H4SO)(diag)-40, PROCEDURE, Inspection Mode.>.

WIRING DIAGRAM:

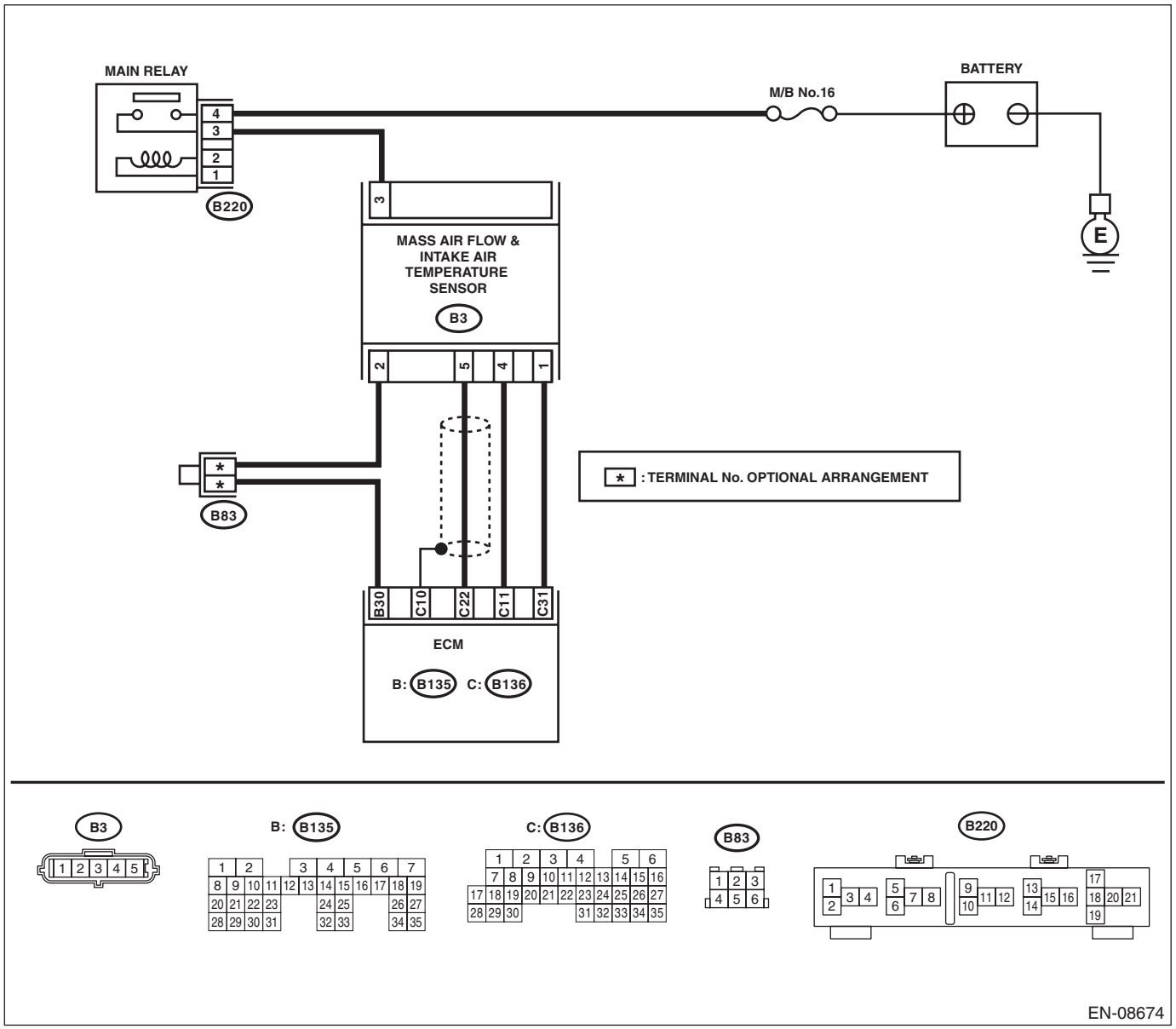

	Step	Check	Yes	No
1	**CHECK CURRENT DATA.** 1) Start the engine. 2) Read the value of «Air Flow Sensor Voltage» using Subaru Select Monitor. NOTE: For detailed operation procedures, refer to "READ CURRENT DATA FOR ENGINE". <Ref. to EN(H4SO)(diag)-33, Subaru Select Monitor.>	Is the value of «Air Flow Sensor Voltage» 5 V or more?	Go to step **2**.	Even if DTC is detected, the circuit has returned to a normal condition at this time. Reproduce the failure, and then perform the diagnosis again. NOTE: In this case, temporary poor contact of connector, temporary open or short circuit of harness may be the cause.
2	**CHECK HARNESS BETWEEN ECM AND MASS AIR FLOW AND INTAKE AIR TEMPERATURE SENSOR CONNECTOR.** 1) Turn the ignition switch to OFF. 2) Disconnect the connectors from the mass air flow and intake air temperature sensor. 3) Start the engine. 4) Read the value of «Air Flow Sensor Voltage» using Subaru Select Monitor. NOTE: For detailed operation procedures, refer to "READ CURRENT DATA FOR ENGINE". <Ref. to EN(H4SO)(diag)-33, Subaru Select Monitor.>	Is the value of «Air Flow Sensor Voltage» 5 V or more?	Repair the short circuit of harness to power supply between ECM and mass air flow and intake air temperature sensor connector.	Go to step **3**.
3	**CHECK HARNESS BETWEEN ECM AND MASS AIR FLOW AND INTAKE AIR TEMPERATURE SENSOR CONNECTOR.** 1) Turn the ignition switch to OFF. 2) Measure the resistance of harness between mass air flow and intake air temperature sensor connector and engine ground. ***Connector & terminal*** ***(B3) No. 4 — Engine ground:***	Is the resistance less than 5 Ω?	Go to step **4**.	Repair the harness and connector. NOTE: In this case, repair the following item: • Open circuit in harness between ECM and mass air flow and intake air temperature sensor connector • Poor contact of ECM connector
4	**CHECK FOR POOR CONTACT.** Check for poor contact of mass air flow and intake air temperature sensor connector.	Is there poor contact of mass air flow and intake air temperature sensor connector?	Repair the poor contact of mass air flow and intake air temperature sensor connector.	Replace the mass air flow and intake air temperature sensor. <Ref. to FU(H4SO)-32, Mass Air Flow and Intake Air Temperature Sensor.>

P: DTC P0107 MANIFOLD ABSOLUTE PRESSURE/BAROMETRIC PRESSURE CIRCUIT LOW INPUT

DTC DETECTING CONDITION:

- Immediately at fault recognition
- GENERAL DESCRIPTION <Ref. to GD(H4SO)-32, DTC P0107 MANIFOLD ABSOLUTE PRESSURE/ BAROMETRIC PRESSURE CIRCUIT LOW INPUT, Diagnostic Trouble Code (DTC) Detecting Criteria.>

CAUTION:
After servicing or replacing faulty parts, perform Clear Memory Mode <Ref. to EN(H4SO)(diag)-51, OPERATION, Clear Memory Mode.>, and Inspection Mode <Ref. to EN(H4SO)(diag)-40, PROCEDURE, Inspection Mode.>.
WIRING DIAGRAM:

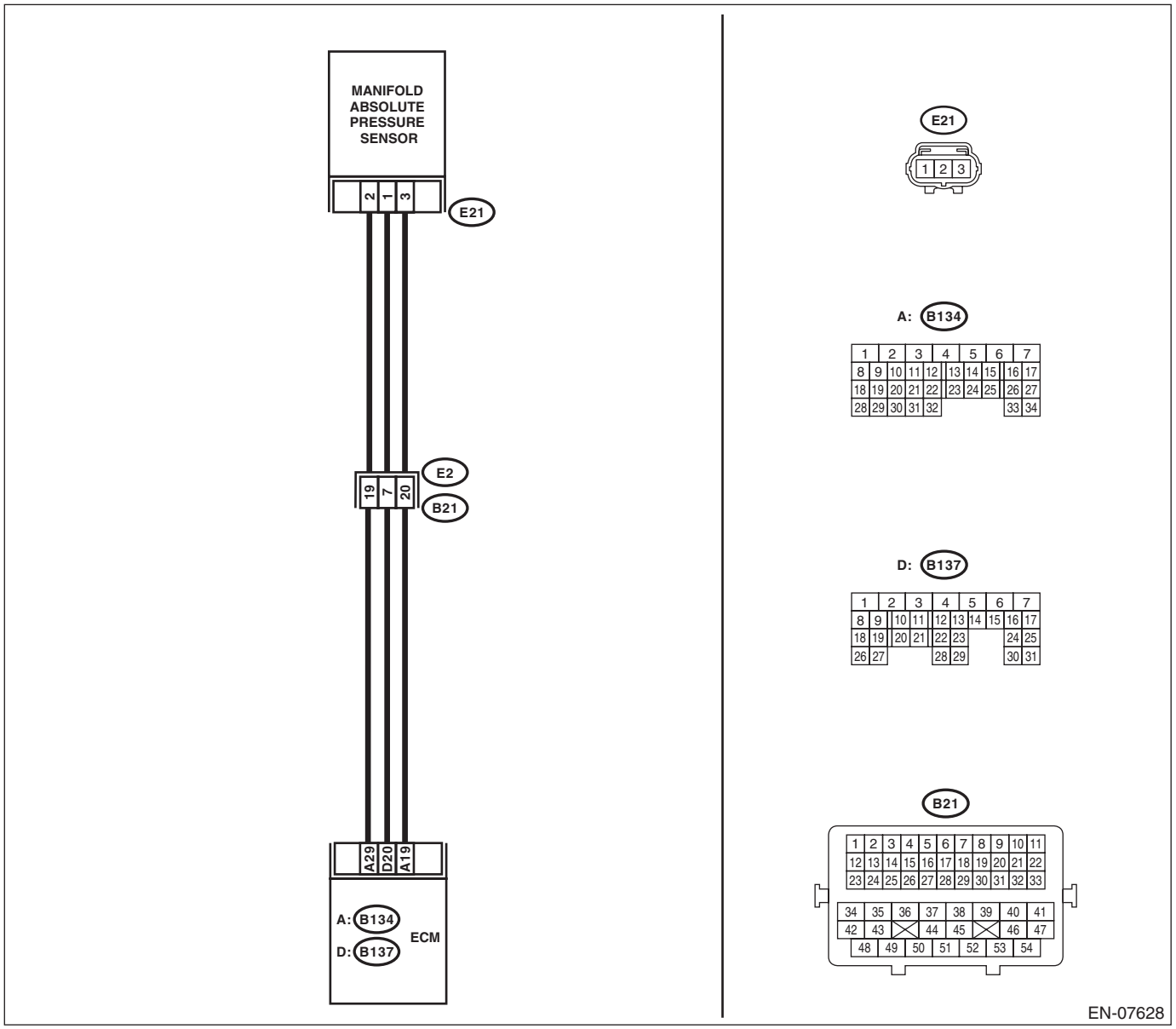

	Step	Check	Yes	No
1	**CHECK CURRENT DATA.** 1) Start the engine. 2) Read the value of «Mani. Absolute Pressure» using the Subaru Select Monitor or a general scan tool. NOTE: • Subaru Select Monitor For detailed operation procedures, refer to "READ CURRENT DATA FOR ENGINE". <Ref. to EN(H4SO)(diag)-33, Subaru Select Monitor.> • General scan tool For detailed operation procedures, refer to the general scan tool operation manual.	Is the value of «Mani. Absolute Pressure» less than 13.3 kPa (100 mmHg, 3.94 inHg)?	Go to step **2**.	Even if DTC is detected, the circuit has returned to a normal condition at this time. Reproduce the failure, and then perform the diagnosis again. NOTE: In this case, temporary poor contact of connector, temporary open or short circuit of harness may be the cause.
2	**CHECK POWER SUPPLY OF MANIFOLD ABSOLUTE PRESSURE SENSOR.** 1) Turn the ignition switch to OFF. 2) Disconnect the connector from manifold absolute pressure sensor. 3) Turn the ignition switch to ON. 4) Measure the voltage between manifold absolute pressure sensor connector and engine ground. ***Connector & terminal*** ***(E21) No. 3 (+) — Engine ground (–):***	Is the voltage 4.5 V or more?	Go to step **3**.	Repair the harness and connector. NOTE: In this case, repair the following item: • Open circuit of harness between ECM and manifold absolute pressure sensor connector. • Poor contact of ECM connector • Poor contact of coupling connector
3	**CHECK HARNESS BETWEEN ECM AND MANIFOLD ABSOLUTE PRESSURE SENSOR CONNECTOR.** 1) Turn the ignition switch to OFF. 2) Disconnect the connector from ECM. 3) Measure the resistance of harness between ECM and manifold absolute pressure sensor connector. ***Connector & terminal*** ***(B137) No. 20 — (E21) No. 1:***	Is the resistance less than 1 Ω?	Go to step **4**.	Repair the harness and connector. NOTE: In this case, repair the following item: • Open circuit of harness between ECM and manifold absolute pressure sensor connector. • Poor contact of coupling connector
4	**CHECK HARNESS BETWEEN ECM AND MANIFOLD ABSOLUTE PRESSURE SENSOR CONNECTOR.** Measure the resistance between ECM and chassis ground. ***Connector & terminal*** ***(B137) No. 20 — Chassis ground:***	Is the resistance 1 MΩ or more?	Go to step **5**.	Repair ground short circuit of harness between ECM and manifold absolute pressure sensor connector.
5	**CHECK FOR POOR CONTACT.** Check for poor contact of ECM and manifold absolute pressure sensor connector.	Is there poor contact of ECM or manifold absolute pressure sensor connector?	Repair the poor contact of ECM or manifold absolute pressure sensor connector.	Replace the manifold absolute pressure sensor. <Ref. to FU(H4SO)-33, Manifold Absolute Pressure Sensor.>

Q: DTC P0108 MANIFOLD ABSOLUTE PRESSURE/BAROMETRIC PRESSURE CIRCUIT HIGH INPUT

DTC DETECTING CONDITION:

- Immediately at fault recognition
- GENERAL DESCRIPTION <Ref. to GD(H4SO)-34, DTC P0108 MANIFOLD ABSOLUTE PRESSURE/ BAROMETRIC PRESSURE CIRCUIT HIGH INPUT, Diagnostic Trouble Code (DTC) Detecting Criteria.>

CAUTION:
After servicing or replacing faulty parts, perform Clear Memory Mode <Ref. to EN(H4SO)(diag)-51, OPERATION, Clear Memory Mode.>, and Inspection Mode <Ref. to EN(H4SO)(diag)-40, PROCEDURE, Inspection Mode.>.
WIRING DIAGRAM:

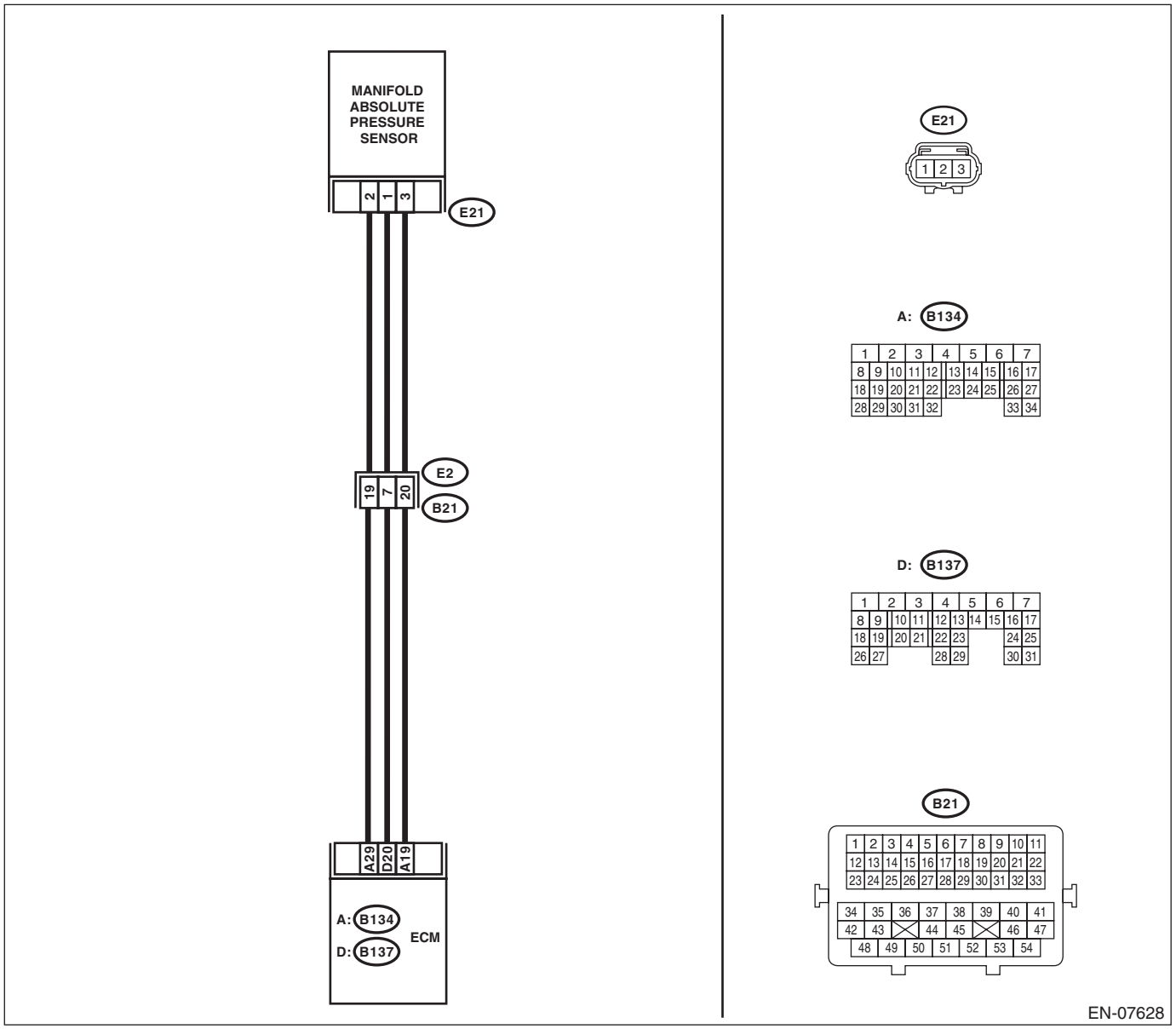

	Step	Check	Yes	No
1	**CHECK CURRENT DATA.** 1) Start the engine. 2) Read the value of «Mani. Absolute Pressure» using the Subaru Select Monitor or a general scan tool. NOTE: • Subaru Select Monitor For detailed operation procedures, refer to "READ CURRENT DATA FOR ENGINE". <Ref. to EN(H4SO)(diag)-33, Subaru Select Monitor.> • General scan tool For detailed operation procedures, refer to the general scan tool operation manual.	Is the value of «Mani. Absolute Pressure» 119.5 kPa (896.5 mmHg, 35.29 inHg) or more?	Go to step **2**.	Even if DTC is detected, the circuit has returned to a normal condition at this time. Reproduce the failure, and then perform the diagnosis again. NOTE: In this case, temporary poor contact of connector, temporary open or short circuit of harness may be the cause.
2	**CHECK HARNESS BETWEEN ECM AND MANIFOLD ABSOLUTE PRESSURE SENSOR CONNECTOR.** 1) Turn the ignition switch to OFF. 2) Disconnect the connector from manifold absolute pressure sensor. 3) Start the engine. 4) Read the value of «Mani. Absolute Pressure» using the Subaru Select Monitor or a general scan tool. NOTE: • Subaru Select Monitor For detailed operation procedures, refer to "READ CURRENT DATA FOR ENGINE". <Ref. to EN(H4SO)(diag)-33, Subaru Select Monitor.> • General scan tool For detailed operation procedures, refer to the general scan tool operation manual.	Is the value of «Mani. Absolute Pressure» 119.5 kPa (896.5 mmHg, 35.29 inHg) or more?	Repair the short circuit to power in harness between ECM and manifold absolute pressure sensor connector.	Go to step **3**.
3	**CHECK HARNESS BETWEEN ECM AND MANIFOLD ABSOLUTE PRESSURE SENSOR CONNECTOR.** 1) Turn the ignition switch to OFF. 2) Measure the resistance of harness between manifold absolute pressure sensor connector and engine ground. ***Connector & terminal*** ***(E21) No. 2 — Engine ground:***	Is the resistance less than 5 Ω?	Go to step **4**.	Repair the harness and connector. NOTE: In this case, repair the following item: • Open circuit of harness between ECM and manifold absolute pressure sensor connector. • Poor contact of ECM connector • Poor contact of coupling connector
4	**CHECK FOR POOR CONTACT.** Check for poor contact of manifold absolute pressure sensor connector.	Is there poor contact of manifold absolute pressure sensor connector?	Repair the poor contact of manifold absolute pressure sensor connector.	Replace the manifold absolute pressure sensor. <Ref. to FU(H4SO)-33, Manifold Absolute Pressure Sensor.>

R: DTC P0111 INTAKE AIR TEMPERATURE SENSOR 1 CIRCUIT RANGE/PERFORMANCE

DTC DETECTING CONDITION:

- Detected when two consecutive driving cycles with fault occur.
- GENERAL DESCRIPTION <Ref. to GD(H4SO)-36, DTC P0111 INTAKE AIR TEMPERATURE SENSOR 1 CIRCUIT RANGE/PERFORMANCE, Diagnostic Trouble Code (DTC) Detecting Criteria.>

TROUBLE SYMPTOM:

- Improper idling
- Poor driving performance

CAUTION:
After servicing or replacing faulty parts, perform Clear Memory Mode <Ref. to EN(H4SO)(diag)-51, OPERATION, Clear Memory Mode.>, and Inspection Mode <Ref. to EN(H4SO)(diag)-40, PROCEDURE, Inspection Mode.>.

	Step	Check	Yes	No
1	**CHECK ENGINE COOLANT TEMPERATURE.** 1) Start the engine and warm up completely. 2) Read the value of «Coolant Temp.» using the Subaru Select Monitor or a general scan tool. NOTE: • Subaru Select Monitor For detailed operation procedures, refer to “READ CURRENT DATA FOR ENGINE”. <Ref. to EN(H4SO)(diag)-33, Subaru Select Monitor.> • General scan tool For detailed operation procedures, refer to the general scan tool operation manual.	Is the value of «Coolant Temp.» 75°C (167°F) or more?	Replace the mass air flow and intake air temperature sensor. <Ref. to FU(H4SO)-32, Mass Air Flow and Intake Air Temperature Sensor.>	Check for DTC P0125. <Ref. to EN(H4SO)(diag)-131, DTC P0125 INSUFFICIENT COOLANT TEMPERATURE FOR CLOSED LOOP FUEL CONTROL, Diagnostic Procedure with Diagnostic Trouble Code (DTC).>

S: DTC P0112 INTAKE AIR TEMPERATURE SENSOR 1 CIRCUIT LOW

DTC DETECTING CONDITION:

- Immediately at fault recognition
- GENERAL DESCRIPTION <Ref. to GD(H4SO)-39, DTC P0112 INTAKE AIR TEMPERATURE SENSOR 1 CIRCUIT LOW, Diagnostic Trouble Code (DTC) Detecting Criteria.>

TROUBLE SYMPTOM:

- Improper idling
- Poor driving performance

CAUTION:

After servicing or replacing faulty parts, perform Clear Memory Mode <Ref. to EN(H4SO)(diag)-51, OPERATION, Clear Memory Mode.>, and Inspection Mode <Ref. to EN(H4SO)(diag)-40, PROCEDURE, Inspection Mode.>.

WIRING DIAGRAM:

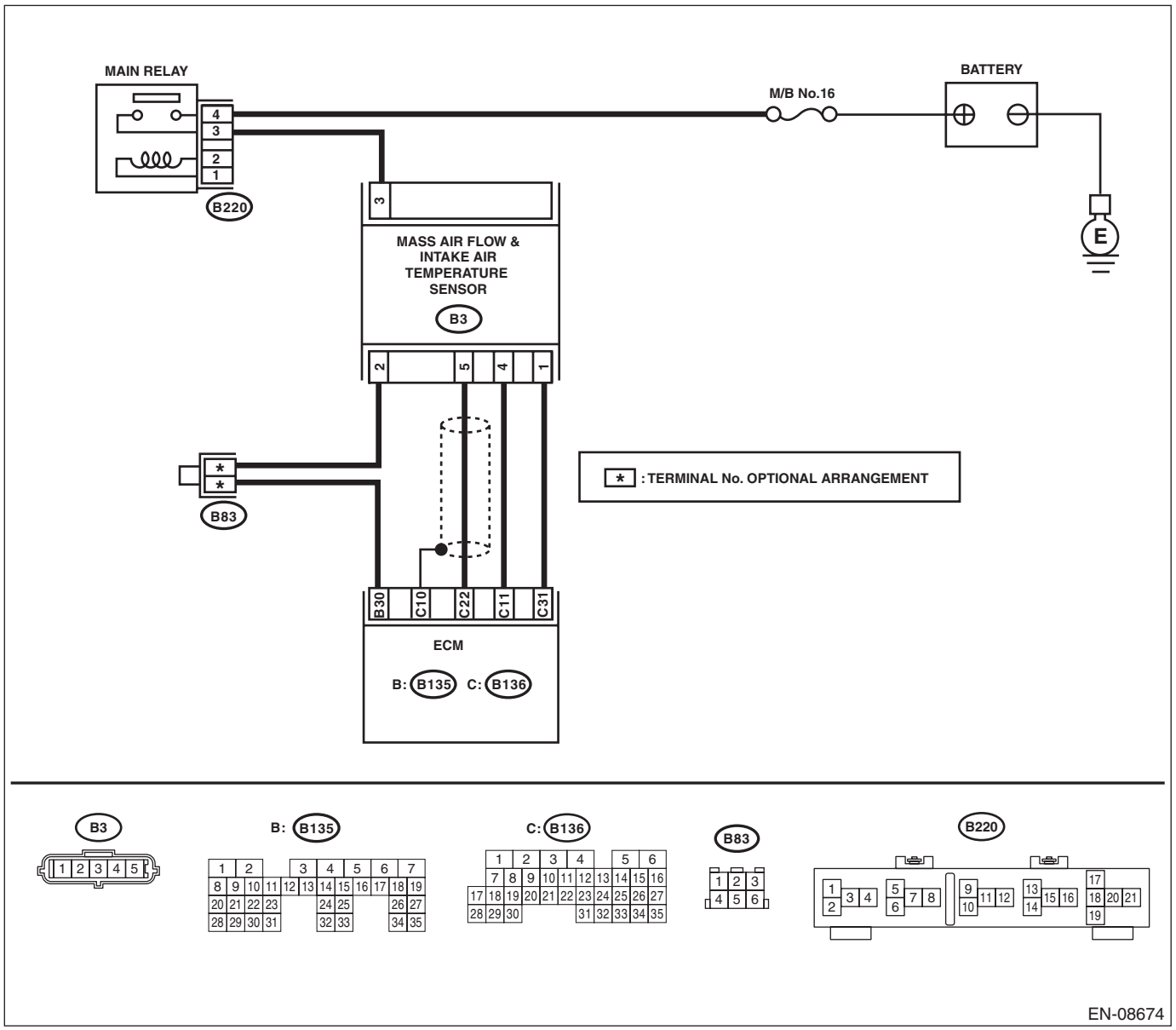

	Step	Check	Yes	No
1	**CHECK CURRENT DATA.** 1) Start the engine. 2) Read the value of «Intake Air Temp.» using the Subaru Select Monitor or a general scan tool. NOTE: • Subaru Select Monitor For detailed operation procedures, refer to “READ CURRENT DATA FOR ENGINE”. <Ref. to EN(H4SO)(diag)-33, Subaru Select Monitor.> • General scan tool For detailed operation procedures, refer to the general scan tool operation manual.	Is the value of «Intake Air Temp.» 120°C (248°F) or more?	Go to step **2**.	Even if DTC is detected, the circuit has returned to a normal condition at this time. Reproduce the failure, and then perform the diagnosis again. NOTE: In this case, temporary poor contact of connector, temporary open or short circuit of harness may be the cause.
2	**CHECK HARNESS BETWEEN ECM AND MASS AIR FLOW AND INTAKE AIR TEMPERATURE SENSOR CONNECTOR.** 1) Turn the ignition switch to OFF. 2) Disconnect the connector from ECM and the mass air flow and intake air temperature sensor. 3) Measure the resistance between ECM and chassis ground. ***Connector & terminal*** ***(B136) No. 31 — Chassis ground:***	Is the resistance 1 MΩ or more?	Replace the mass air flow and intake air temperature sensor. <Ref. to FU(H4SO)-32, Mass Air Flow and Intake Air Temperature Sensor.>	Repair the short circuit to ground in harness between ECM and mass air flow and intake air temperature sensor connector.

T: DTC P0113 INTAKE AIR TEMPERATURE SENSOR 1 CIRCUIT HIGH

DTC DETECTING CONDITION:

- Immediately at fault recognition
- GENERAL DESCRIPTION <Ref. to GD(H4SO)-41, DTC P0113 INTAKE AIR TEMPERATURE SENSOR 1 CIRCUIT HIGH, Diagnostic Trouble Code (DTC) Detecting Criteria.>

TROUBLE SYMPTOM:

- Improper idling
- Poor driving performance

CAUTION:

After servicing or replacing faulty parts, perform Clear Memory Mode <Ref. to EN(H4SO)(diag)-51, OPERATION, Clear Memory Mode.>, and Inspection Mode <Ref. to EN(H4SO)(diag)-40, PROCEDURE, Inspection Mode.>.

WIRING DIAGRAM:

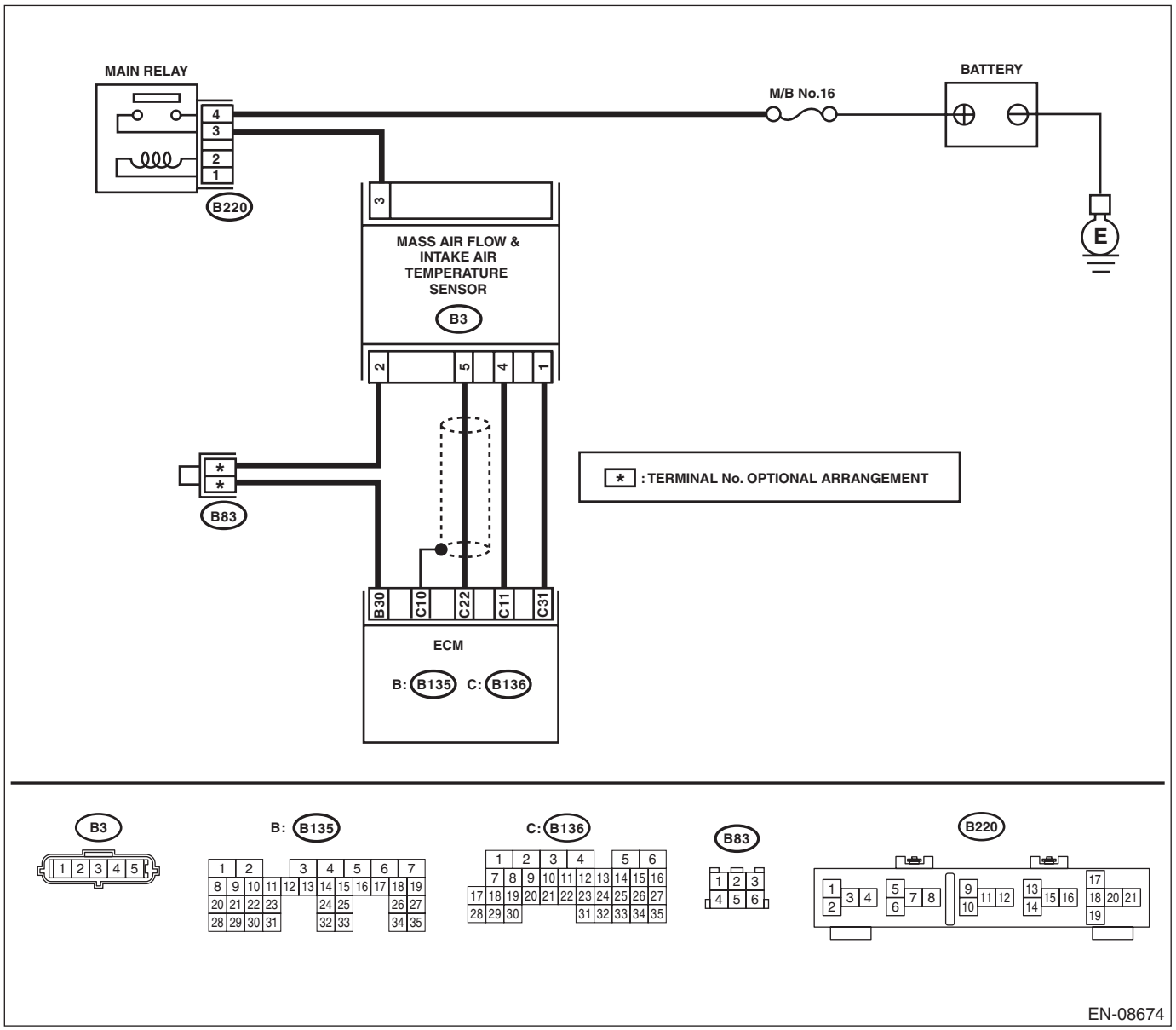

	Step	Check	Yes	No
1	**CHECK CURRENT DATA.** 1) Start the engine. 2) Read the value of «Intake Air Temp.» using the Subaru Select Monitor or a general scan tool. NOTE: • Subaru Select Monitor For detailed operation procedures, refer to "READ CURRENT DATA FOR ENGINE". <Ref. to EN(H4SO)(diag)-33, Subaru Select Monitor.> • General scan tool For detailed operation procedures, refer to the general scan tool operation manual.	Is the value of «Intake Air Temp.» less than –40°C (–40°F)?	Go to step **2**.	Even if DTC is detected, the circuit has returned to a normal condition at this time. Reproduce the failure, and then perform the diagnosis again. NOTE: In this case, temporary poor contact of connector, temporary open or short circuit of harness may be the cause.
2	**CHECK FOR POOR CONTACT.** Check for poor contact of ECM and mass air flow and intake air temperature sensor connector.	Is there poor contact of ECM or mass air flow and intake air temperature sensor connector?	Repair the poor contact of ECM or mass air flow and intake air temperature sensor connector.	Go to step **3**.
3	**CHECK HARNESS BETWEEN ECM AND MASS AIR FLOW AND INTAKE AIR TEMPERATURE SENSOR CONNECTOR.** 1) Turn the ignition switch to OFF. 2) Disconnect the connector from ECM and the mass air flow and intake air temperature sensor. 3) Measure the resistance of harness between ECM and the mass air flow and intake air temperature sensor connector. ***Connector & terminal*** ***(B136) No. 31 — (B3) No. 1:*** ***(B135) No. 30 — (B3) No. 2:***	Is the resistance less than 1 Ω?	Go to step **4**.	Repair the harness and connector. NOTE: In this case, repair the following item: • Open circuit in harness between ECM and mass air flow and intake air temperature sensor connector • Poor contact of joint connector
4	**CHECK HARNESS BETWEEN ECM AND MASS AIR FLOW AND INTAKE AIR TEMPERATURE SENSOR CONNECTOR.** 1) Connect all connectors. 2) Turn the ignition switch to ON. 3) Measure the voltage between ECM and chassis ground. ***Connector & terminal*** ***(B136) No. 31 (+) — Chassis ground (–):***	Is the voltage 5 V or more?	Repair the short circuit of harness to power supply between ECM and mass air flow and intake air temperature sensor connector.	Replace the mass air flow and intake air temperature sensor. <Ref. to FU(H4SO)-32, Mass Air Flow and Intake Air Temperature Sensor.>

U: DTC P0117 ENGINE COOLANT TEMPERATURE CIRCUIT LOW

DTC DETECTING CONDITION:

- Immediately at fault recognition
- GENERAL DESCRIPTION <Ref. to GD(H4SO)-43, DTC P0117 ENGINE COOLANT TEMPERATURE CIRCUIT LOW, Diagnostic Trouble Code (DTC) Detecting Criteria.>

TROUBLE SYMPTOM:

- Hard to start
- Improper idling
- Poor driving performance

CAUTION:
After servicing or replacing faulty parts, perform Clear Memory Mode <Ref. to EN(H4SO)(diag)-51, OPERATION, Clear Memory Mode.>, and Inspection Mode <Ref. to EN(H4SO)(diag)-40, PROCEDURE, Inspection Mode.>.

WIRING DIAGRAM:

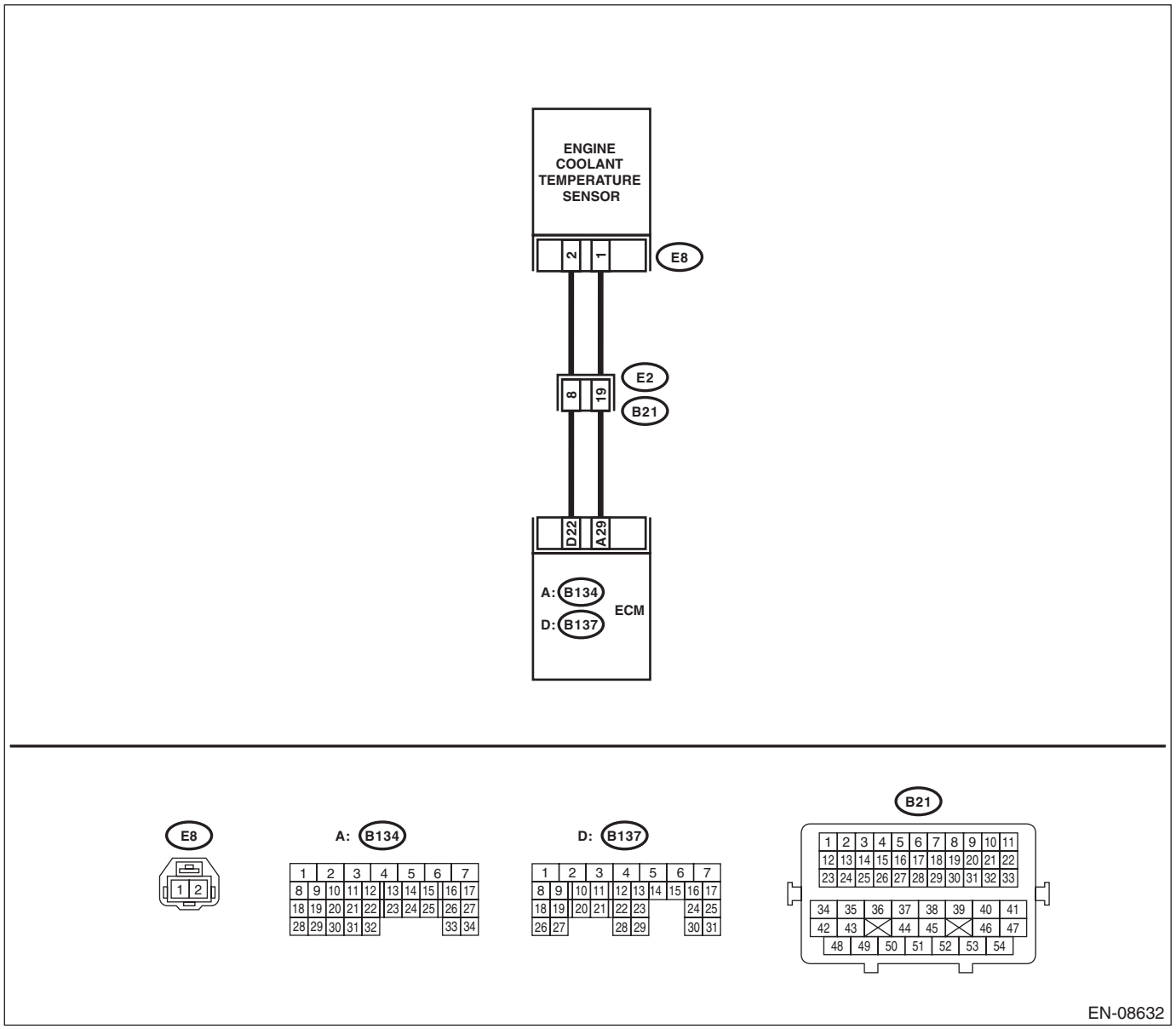

	Step	Check	Yes	No
1	**CHECK CURRENT DATA.** 1) Start the engine. 2) Read the value of «Coolant Temp.» using the Subaru Select Monitor or a general scan tool. NOTE: • Subaru Select Monitor For detailed operation procedures, refer to “READ CURRENT DATA FOR ENGINE”. <Ref. to EN(H4SO)(diag)-33, Subaru Select Monitor.> • General scan tool For detailed operation procedures, refer to the general scan tool operation manual.	Is the value of «Coolant Temp.» 150°C (302°F) or more?	Go to step **2**.	Even if DTC is detected, the circuit has returned to a normal condition at this time. Reproduce the failure, and then perform the diagnosis again. NOTE: In this case, temporary poor contact of connector, temporary open or short circuit of harness may be the cause.
2	**CHECK HARNESS BETWEEN ECM AND ENGINE COOLANT TEMPERATURE SENSOR CONNECTOR.** 1) Turn the ignition switch to OFF. 2) Disconnect the connectors from ECM and engine coolant temperature sensor. 3) Measure the resistance between ECM and chassis ground. ***Connector & terminal*** ***(B137) No. 22 — Chassis ground:***	Is the resistance 1 MΩ or more?	Replace the engine coolant temperature sensor. <Ref. to FU(H4SO)-24, Engine Coolant Temperature Sensor.>	Repair short circuit in harness to ground between ECM and engine coolant temperature sensor connector.

V: DTC P0118 ENGINE COOLANT TEMPERATURE CIRCUIT HIGH

DTC DETECTING CONDITION:

- Immediately at fault recognition
- GENERAL DESCRIPTION <Ref. to GD(H4SO)-45, DTC P0118 ENGINE COOLANT TEMPERATURE CIRCUIT HIGH, Diagnostic Trouble Code (DTC) Detecting Criteria.>

TROUBLE SYMPTOM:

- Hard to start
- Improper idling
- Poor driving performance

CAUTION:
After servicing or replacing faulty parts, perform Clear Memory Mode <Ref. to EN(H4SO)(diag)-51, OPERATION, Clear Memory Mode.>, and Inspection Mode <Ref. to EN(H4SO)(diag)-40, PROCEDURE, Inspection Mode.>.

WIRING DIAGRAM:

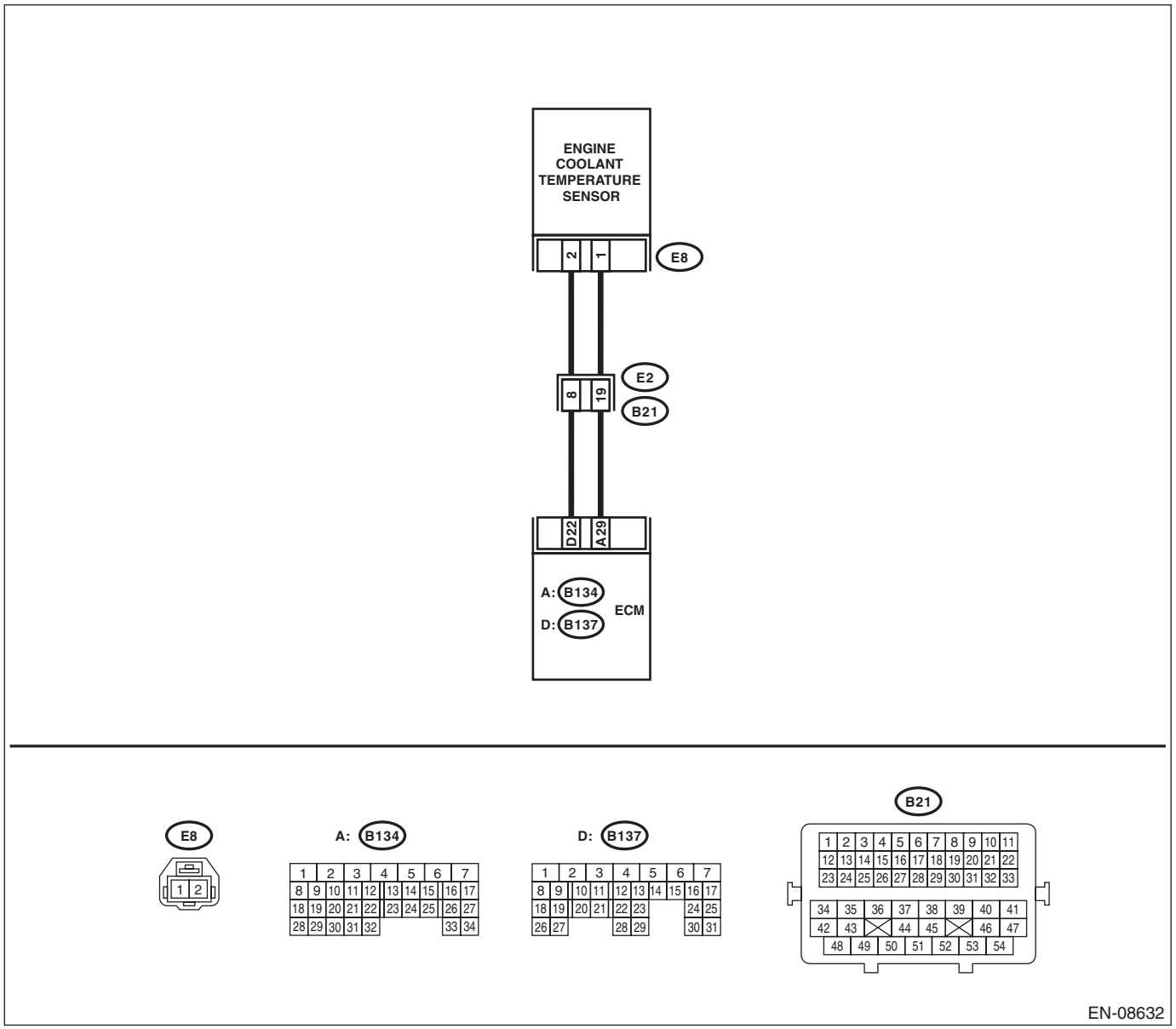

	Step	Check	Yes	No
1	**CHECK CURRENT DATA.** 1) Start the engine. 2) Read the value of «Coolant Temp.» using the Subaru Select Monitor or a general scan tool. NOTE: • Subaru Select Monitor For detailed operation procedures, refer to "READ CURRENT DATA FOR ENGINE". <Ref. to EN(H4SO)(diag)-33, Subaru Select Monitor.> • General scan tool For detailed operation procedures, refer to the general scan tool operation manual.	Is the value of «Coolant Temp.» less than –40°C (–40°F)?	Go to step **2**.	Even if DTC is detected, the circuit has returned to a normal condition at this time. Reproduce the failure, and then perform the diagnosis again. NOTE: In this case, temporary poor contact of connector, temporary open or short circuit of harness may be the cause.
2	**CHECK FOR POOR CONTACT.** Check for poor contact of ECM and engine coolant temperature sensor connector.	Is there poor contact of ECM or engine coolant temperature sensor connector?	Repair the poor contact of ECM or engine coolant temperature sensor connector.	Go to step **3**.
3	**CHECK HARNESS BETWEEN ECM AND ENGINE COOLANT TEMPERATURE SENSOR CONNECTOR.** 1) Turn the ignition switch to OFF. 2) Disconnect the connectors from ECM and engine coolant temperature sensor. 3) Measure the resistance of harness between ECM and engine coolant temperature sensor connector. ***Connector & terminal*** ***(B137) No. 22 — (E8) No. 2:*** ***(B134) No. 29 — (E8) No. 1:***	Is the resistance less than 1 Ω?	Go to step **4**.	Repair the harness and connector. NOTE: In this case, repair the following item: • Open circuit in harness between ECM and engine coolant temperature sensor connector • Poor contact of coupling connector
4	**CHECK HARNESS BETWEEN ECM AND ENGINE COOLANT TEMPERATURE SENSOR CONNECTOR.** 1) Connect all connectors. 2) Turn the ignition switch to ON. 3) Measure the voltage between ECM and chassis ground. ***Connector & terminal*** ***(B137) No. 22 (+) — Chassis ground (–):***	Is the voltage 5 V or more?	Repair the short circuit to power in harness between ECM and engine coolant temperature sensor connector.	Replace the engine coolant temperature sensor. <Ref. to FU(H4SO)-24, Engine Coolant Temperature Sensor.>

W: DTC P0122 THROTTLE/PEDAL POSITION SENSOR/SWITCH “A” CIRCUIT LOW

DTC DETECTING CONDITION:

- Immediately at fault recognition
- GENERAL DESCRIPTION <Ref. to GD(H4SO)-47, DTC P0122 THROTTLE/PEDAL POSITION SENSOR/SWITCH “A” CIRCUIT LOW, Diagnostic Trouble Code (DTC) Detecting Criteria.>

TROUBLE SYMPTOM:

- Improper idling
- Engine stalls.
- Poor driving performance

CAUTION:

After servicing or replacing faulty parts, perform Clear Memory Mode <Ref. to EN(H4SO)(diag)-51, OPERATION, Clear Memory Mode.>, and Inspection Mode <Ref. to EN(H4SO)(diag)-40, PROCEDURE, Inspection Mode.>.

WIRING DIAGRAM:

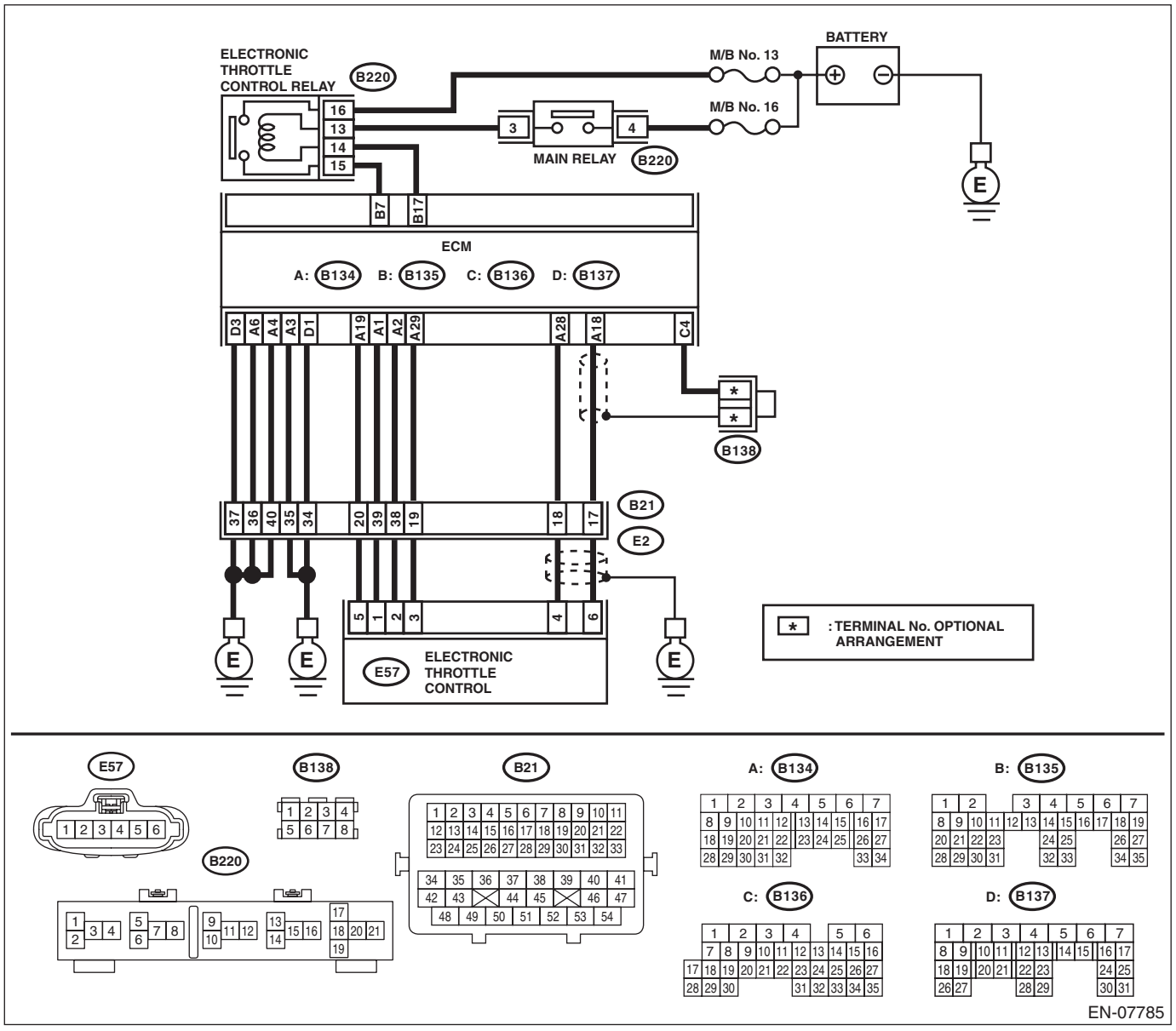

	Step	Check	Yes	No
1	**CHECK HARNESS BETWEEN ECM AND ELECTRONIC THROTTLE CONTROL CONNECTOR.** 1) Turn the ignition switch to OFF. 2) Disconnect the connectors from ECM and electronic throttle control. 3) Measure the resistance between ECM and chassis ground. ***Connector & terminal*** ***(B134) No. 19 — Chassis ground:*** ***(B134) No. 18 — Chassis ground:*** ***(B134) No. 18 — (B136) No. 4:***	Is the resistance 1 MΩ or more?	Go to step **2**.	Repair the short circuit to ground in harness between ECM and electronic throttle control connector.
2	**CHECK SHORT CIRCUIT INSIDE THE ECM.** 1) Connect the connector to ECM. 2) Measure the resistance between electronic throttle control connector and engine ground. ***Connector & terminal*** ***(E57) No. 6 — Engine ground:***	Is the resistance 1 MΩ or more?	Replace the electronic throttle control. <Ref. to FU(H4SO)-15, Throttle Body.>	Repair the short circuit to ground in harness between ECM and electronic throttle control connector. Replace the ECM if defective. <Ref. to FU(H4SO)-46, Engine Control Module (ECM).>

X: DTC P0123 THROTTLE/PEDAL POSITION SENSOR/SWITCH “A” CIRCUIT HIGH

DTC DETECTING CONDITION:

- Immediately at fault recognition
- GENERAL DESCRIPTION <Ref. to GD(H4SO)-49, DTC P0123 THROTTLE/PEDAL POSITION SENSOR/SWITCH “A” CIRCUIT HIGH, Diagnostic Trouble Code (DTC) Detecting Criteria.>

TROUBLE SYMPTOM:

- Improper idling
- Engine stalls.
- Poor driving performance

CAUTION:

After servicing or replacing faulty parts, perform Clear Memory Mode <Ref. to EN(H4SO)(diag)-51, OPERATION, Clear Memory Mode.>, and Inspection Mode <Ref. to EN(H4SO)(diag)-40, PROCEDURE, Inspection Mode.>.

WIRING DIAGRAM:

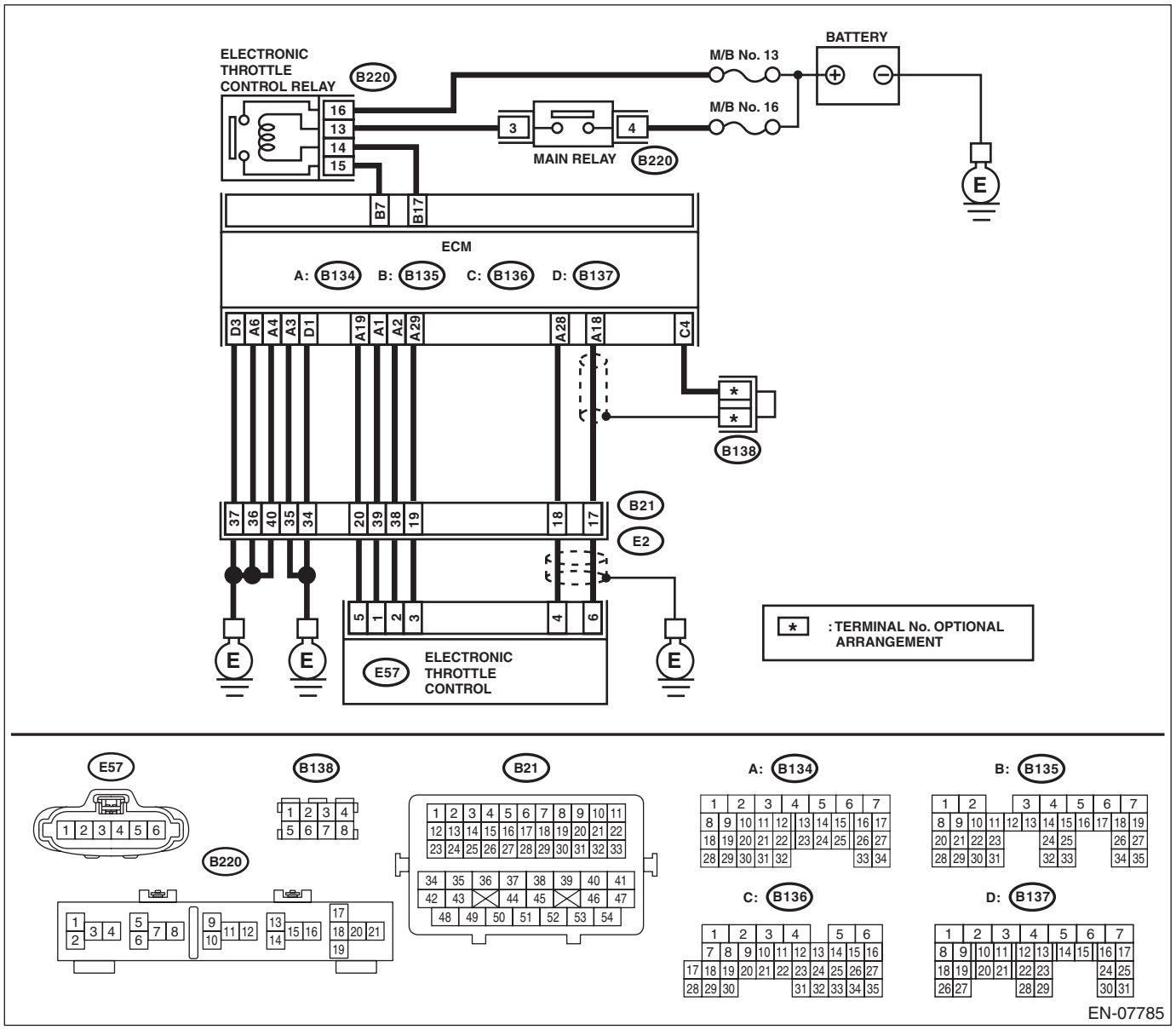

	Step	Check	Yes	No
1	**CHECK HARNESS BETWEEN ECM AND ELECTRONIC THROTTLE CONTROL CONNECTOR.** 1) Turn the ignition switch to OFF. 2) Disconnect the connectors from ECM and electronic throttle control. 3) Measure the resistance of harness between ECM and electronic throttle control connector. ***Connector & terminal*** ***(B134) No. 18 — (E57) No. 6:*** ***(B134) No. 29 — (E57) No. 3:***	Is the resistance less than 1 Ω?	Go to step **2**.	Repair the harness and connector. NOTE: In this case, repair the following item: • Open circuit in harness between ECM and electronic throttle control connector • Poor contact of coupling connector
2	**CHECK HARNESS BETWEEN ECM AND ELECTRONIC THROTTLE CONTROL CONNECTOR.** 1) Connect the connector to ECM. 2) Measure the resistance between electronic throttle control connector and engine ground. ***Connector & terminal*** ***(E57) No. 3 — Engine ground:***	Is the resistance less than 5 Ω?	Go to step **3**.	Repair the harness and connector. NOTE: In this case, repair the following item: • Open circuit of harness between ECM and engine ground • Poor contact of ECM connector • Poor contact of coupling connector
3	**CHECK HARNESS BETWEEN ECM AND ELECTRONIC THROTTLE CONTROL CONNECTOR.** 1) Turn the ignition switch to ON. 2) Measure the voltage between electronic throttle control connector and engine ground. ***Connector & terminal*** ***(E57) No. 6 (+) — Engine ground (–):***	Is the voltage 5 V or more?	Repair the short circuit to power in harness between ECM and electronic throttle control connector.	Go to step **4**.
4	**CHECK HARNESS BETWEEN ECM AND ELECTRONIC THROTTLE CONTROL CONNECTOR.** 1) Turn the ignition switch to OFF. 2) Disconnect the connectors from ECM. 3) Measure the resistance between ECM connectors. ***Connector & terminal*** ***(B134) No. 19 — (B134) No. 18:***	Is the resistance 1 MΩ or more?	Repair the poor contact of electronic throttle control connector. Replace the electronic throttle control if defective. <Ref. to FU(H4SO)-15, Throttle Body.>	Repair the short circuit to power in harness between ECM and electronic throttle control connector.

Y: DTC P0125 INSUFFICIENT COOLANT TEMPERATURE FOR CLOSED LOOP FUEL CONTROL

DTC DETECTING CONDITION:

- Detected when two consecutive driving cycles with fault occur.
- GENERAL DESCRIPTION <Ref. to GD(H4SO)-51, DTC P0125 INSUFFICIENT COOLANT TEMPERATURE FOR CLOSED LOOP FUEL CONTROL, Diagnostic Trouble Code (DTC) Detecting Criteria.>

TROUBLE SYMPTOM:

Engine does not return to idle.

CAUTION:

After servicing or replacing faulty parts, perform Clear Memory Mode <Ref. to EN(H4SO)(diag)-51, OPERATION, Clear Memory Mode.>, and Inspection Mode <Ref. to EN(H4SO)(diag)-40, PROCEDURE, Inspection Mode.>.

	Step	Check	Yes	No
1	**CHECK TIRE SIZE.**	Is the tire size as specified and the same size as three other wheels?	Go to step **2**.	Replace the tire.
2	**CHECK ENGINE COOLANT.** Check the following items: • Amount of engine coolant • Engine coolant freeze • Contamination of engine coolant	Is the engine coolant normal?	Go to step **3**.	Fill or replace the engine coolant. <Ref. to CO(H4SO)-14, REPLACEMENT, Engine Coolant.>
3	**CHECK THERMOSTAT.**	Does the thermostat remain opened?	Replace the thermostat. <Ref. to CO(H4SO)-18, Thermostat.>	Replace the engine coolant temperature sensor. <Ref. to FU(H4SO)-24, Engine Coolant Temperature Sensor.>

Z: DTC P0126 INSUFFICIENT ENGINE COOLANT TEMPERATURE FOR STABLE OPERATION

DTC DETECTING CONDITION:

- Detected when two consecutive driving cycles with fault occur.
- GENERAL DESCRIPTION <Ref. to GD(H4SO)-53, DTC P0126 INSUFFICIENT ENGINE COOLANT TEMPERATURE FOR STABLE OPERATION, Diagnostic Trouble Code (DTC) Detecting Criteria.>

TROUBLE SYMPTOM:

- Hard to start
- Improper idling
- Poor driving performance

CAUTION:
After servicing or replacing faulty parts, perform Clear Memory Mode <Ref. to EN(H4SO)(diag)-51, OPERATION, Clear Memory Mode.>, and Inspection Mode <Ref. to EN(H4SO)(diag)-40, PROCEDURE, Inspection Mode.>.

	Step	Check	Yes	No
1	**CHECK ENGINE COOLANT TEMPERATURE SENSOR.** 1) Disconnect the connectors from the engine coolant temperature sensor. 2) Measure the resistance between engine coolant temperature sensor terminals when the engine coolant is cold and after warmed up. ***Terminals*** ***No. 1 — No. 2:***	Is the resistance of engine coolant temperature sensor different between when engine coolant is cold and after warmed up?	Repair the poor contact of ECM connector.	Replace the engine coolant temperature sensor. <Ref. to FU(H4SO)-24, Engine Coolant Temperature Sensor.>

AA:DTC P0128 COOLANT THERMOSTAT (ENGINE COOLANT TEMPERATURE BELOW THERMOSTAT REGULATING TEMPERATURE)

DTC DETECTING CONDITION:

- Detected when two consecutive driving cycles with fault occur.
- GENERAL DESCRIPTION <Ref. to GD(H4SO)-55, DTC P0128 COOLANT THERMOSTAT (ENGINE COOLANT TEMPERATURE BELOW THERMOSTAT REGULATING TEMPERATURE), Diagnostic Trouble Code (DTC) Detecting Criteria.>

TROUBLE SYMPTOM:
Thermostat remains open.

CAUTION:
After servicing or replacing faulty parts, perform Clear Memory Mode <Ref. to EN(H4SO)(diag)-51, OPERATION, Clear Memory Mode.>, and Inspection Mode <Ref. to EN(H4SO)(diag)-40, PROCEDURE, Inspection Mode.>.

	Step	Check	Yes	No
1	**CHECK ENGINE COOLANT.**	Is the engine coolant amount normal?	Go to step **2**.	Refill the engine coolant. <Ref. to CO(H4SO)-14, Engine Coolant.>
2	**CHECK RADIATOR FAN.** 1) Start the engine. 2) Check the radiator fan operation.	Does the radiator fan continuously rotate for 3 minutes or more during idling?	Repair radiator fan circuit. <Ref. to CO(H4SO)-24, Radiator Main Fan and Fan Motor.> and <Ref. to CO(H4SO)-25, Radiator Sub Fan and Fan Motor.>	Replace the thermostat. <Ref. to CO(H4SO)-18, Thermostat.>

AB:DTC P0131 O2 SENSOR CIRCUIT LOW VOLTAGE (BANK 1 SENSOR 1)

DTC DETECTING CONDITION:

- Immediately at fault recognition
- GENERAL DESCRIPTION <Ref. to GD(H4SO)-59, DTC P0131 O2 SENSOR CIRCUIT LOW VOLTAGE (BANK 1 SENSOR 1), Diagnostic Trouble Code (DTC) Detecting Criteria.>

CAUTION:
After servicing or replacing faulty parts, perform Clear Memory Mode <Ref. to EN(H4SO)(diag)-51, OPERATION, Clear Memory Mode.>, and Inspection Mode <Ref. to EN(H4SO)(diag)-40, PROCEDURE, Inspection Mode.>.
WIRING DIAGRAM:

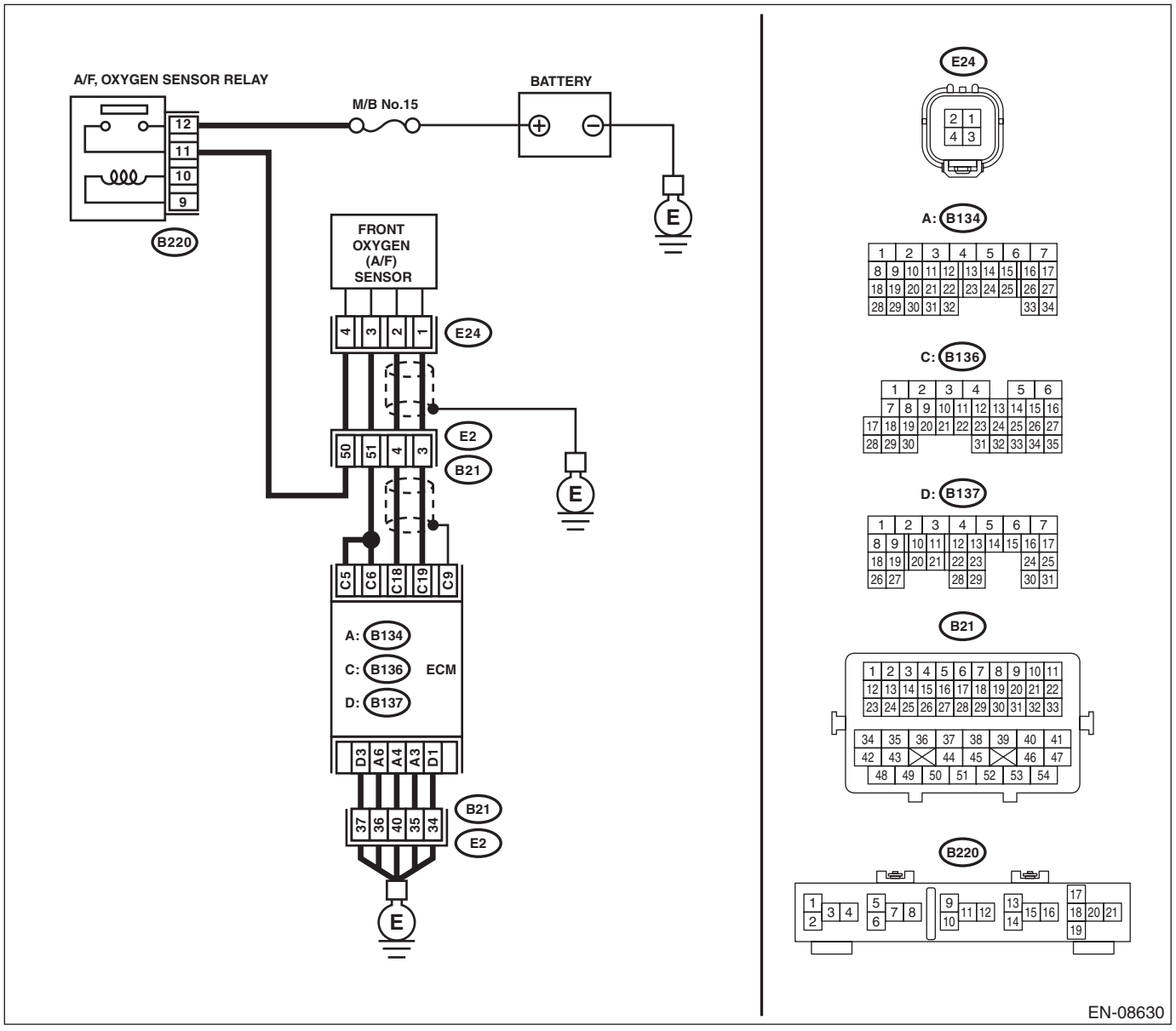

Step		Check	Yes	No
1	**CHECK FRONT OXYGEN (A/F) SENSOR CONNECTOR AND COUPLING CONNECTOR.**	Has water entered the connector?	Completely remove any water inside.	Go to step **2**.

	Step	Check	Yes	No
2	**CHECK HARNESS BETWEEN ECM AND FRONT OXYGEN (A/F) SENSOR CONNECTOR.** 1) Turn the ignition switch to OFF. 2) Disconnect the connectors from ECM and front oxygen (A/F) sensor connector. 3) Measure the resistance between ECM and chassis ground. ***Connector & terminal*** ***(B136) No. 18 — Chassis ground:*** ***(B136) No. 19 — Chassis ground:***	Is the resistance 1 MΩ or more?	Go to step **3**.	Repair the ground short circuit of harness between ECM and front oxygen (A/F) sensor connector.
3	**CHECK FOR POOR CONTACT.** Check for poor contact of the front oxygen (A/F) sensor connector.	Is there poor contact of front oxygen (A/F) sensor connector?	Repair the poor contact of front oxygen (A/F) sensor connector.	Replace the front oxygen (A/F) sensor. <Ref. to FU(H4SO)-42, Front Oxygen (A/F) Sensor.>

AC:DTC P0132 O2 SENSOR CIRCUIT HIGH VOLTAGE (BANK 1 SENSOR 1)

DTC DETECTING CONDITION:

- Immediately at fault recognition
- GENERAL DESCRIPTION <Ref. to GD(H4SO)-61, DTC P0132 O2 SENSOR CIRCUIT HIGH VOLTAGE (BANK 1 SENSOR 1), Diagnostic Trouble Code (DTC) Detecting Criteria.>

CAUTION:
After servicing or replacing faulty parts, perform Clear Memory Mode <Ref. to EN(H4SO)(diag)-51, OPERATION, Clear Memory Mode.>, and Inspection Mode <Ref. to EN(H4SO)(diag)-40, PROCEDURE, Inspection Mode.>.
WIRING DIAGRAM:

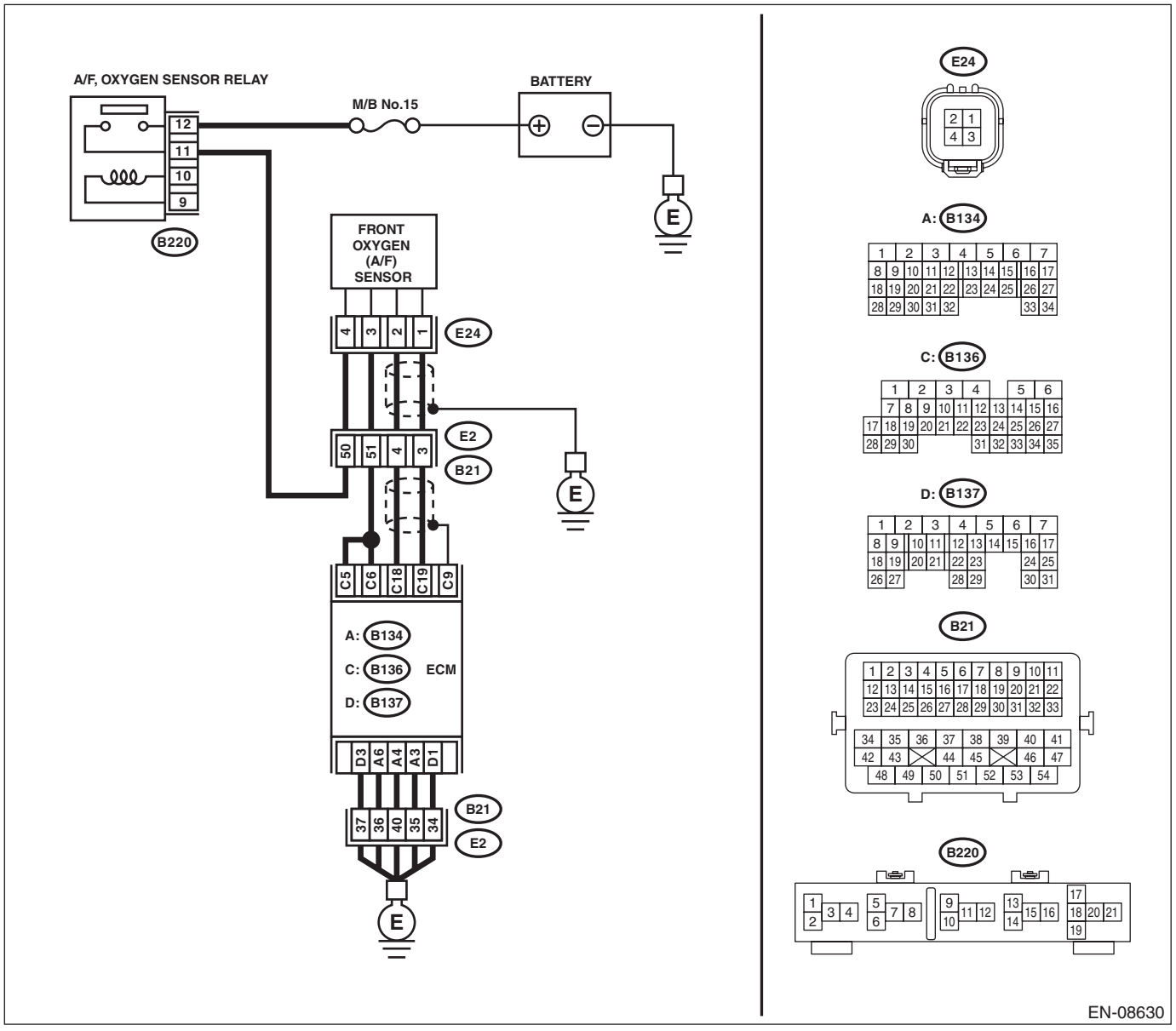

Step		Check	Yes	No
1	**CHECK FRONT OXYGEN (A/F) SENSOR CONNECTOR AND COUPLING CONNECTOR.**	Has water entered the connector?	Completely remove any water inside.	Go to step **2**.

	Step	Check	Yes	No
2	**CHECK HARNESS BETWEEN ECM AND FRONT OXYGEN (A/F) SENSOR CONNECTOR.** 1) Turn the ignition switch to OFF. 2) Disconnect the connectors from front oxygen (A/F) sensor. 3) Turn the ignition switch to ON. 4) Measure the voltage between ECM and chassis ground. ***Connector & terminal*** ***(B136) No. 18 (+) — Chassis ground (–):*** ***(B136) No. 19 (+) — Chassis ground (–):***	Is the voltage 8 V or more?	Repair the short circuit to power in the harness between ECM and front oxygen (A/F) sensor connector.	Replace the front oxygen (A/F) sensor. <Ref. to FU(H4SO)-42, Front Oxygen (A/F) Sensor.>

AD:DTC P0133 O2 SENSOR CIRCUIT SLOW RESPONSE (BANK 1 SENSOR 1)

DTC DETECTING CONDITION:

- Detected when two consecutive driving cycles with fault occur.
- GENERAL DESCRIPTION <Ref. to GD(H4SO)-63, DTC P0133 O2 SENSOR CIRCUIT SLOW RESPONSE (BANK 1 SENSOR 1), Diagnostic Trouble Code (DTC) Detecting Criteria.>

CAUTION:
After servicing or replacing faulty parts, perform Clear Memory Mode <Ref. to EN(H4SO)(diag)-51, OPERATION, Clear Memory Mode.>, and Inspection Mode <Ref. to EN(H4SO)(diag)-40, PROCEDURE, Inspection Mode.>.

	Step	Check	Yes	No
1	**CHECK EXHAUST SYSTEM.** NOTE: Check the following items. • Loose installation of front portion of exhaust pipe onto cylinder heads • Loose connection between front exhaust pipe and front catalytic converter • Damage of exhaust pipe resulting in a hole	Is there any fault in exhaust system?	Repair the exhaust system.	Replace the front oxygen (A/F) sensor. <Ref. to FU(H4SO)-42, Front Oxygen (A/F) Sensor.>

AE:DTC P0134 O2 SENSOR CIRCUIT NO ACTIVITY DETECTED (BANK 1 SENSOR 1)

DTC DETECTING CONDITION:

- Immediately at fault recognition
- GENERAL DESCRIPTION <Ref. to GD(H4SO)-66, DTC P0134 O2 SENSOR CIRCUIT NO ACTIVITY DETECTED (BANK 1 SENSOR 1), Diagnostic Trouble Code (DTC) Detecting Criteria.>

CAUTION:

After servicing or replacing faulty parts, perform Clear Memory Mode <Ref. to EN(H4SO)(diag)-51, OPERATION, Clear Memory Mode.>, and Inspection Mode <Ref. to EN(H4SO)(diag)-40, PROCEDURE, Inspection Mode.>.

WIRING DIAGRAM:

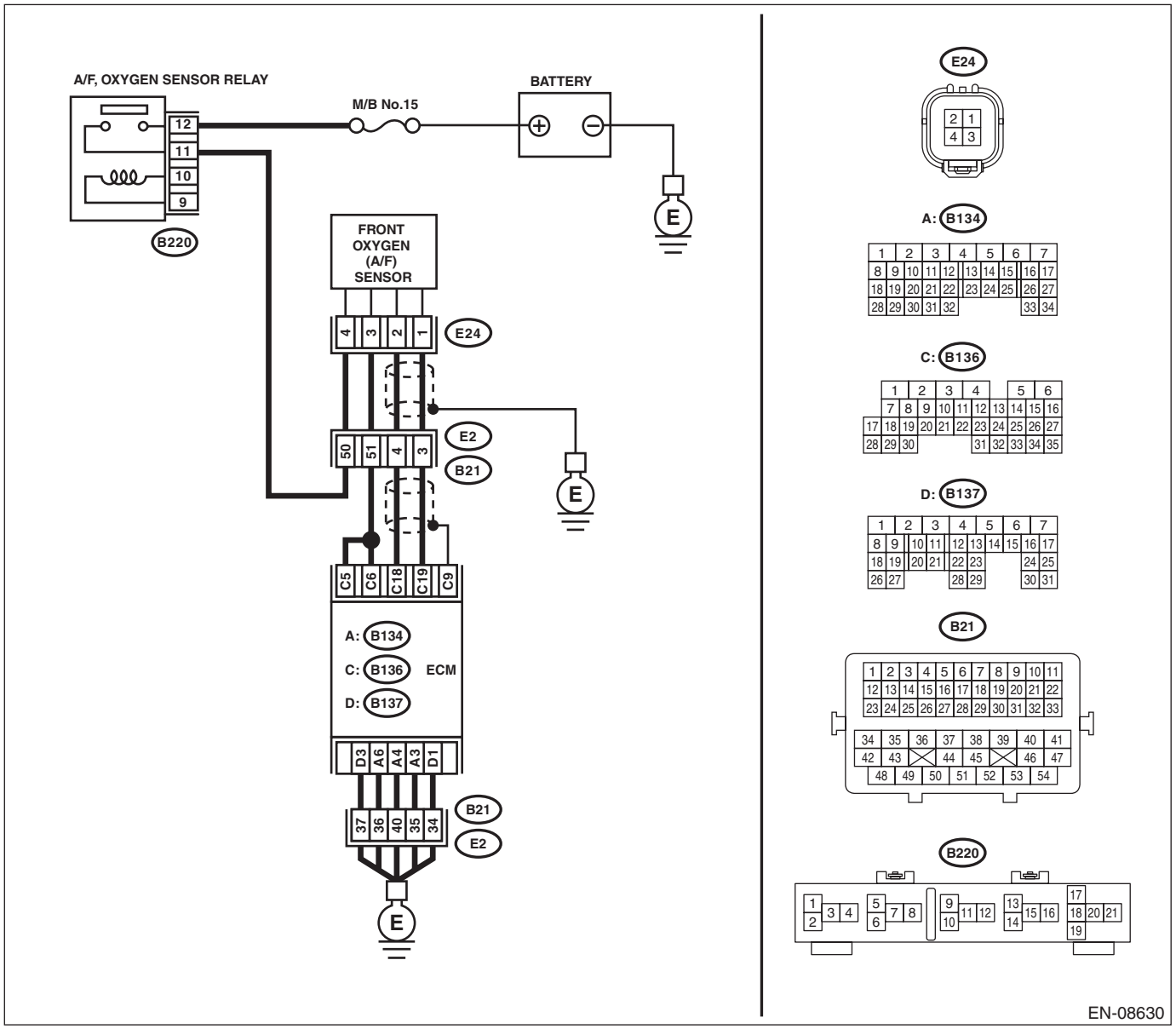

	Step	Check	Yes	No
1	**CHECK HARNESS BETWEEN ECM AND FRONT OXYGEN (A/F) SENSOR CONNECTOR.** 1) Turn the ignition switch to OFF. 2) Disconnect the connectors from ECM and front oxygen (A/F) sensor connector. 3) Measure the resistance of harness between ECM and front oxygen (A/F) sensor connector. ***Connector & terminal*** ***(B136) No. 18 — (E24) No. 2:*** ***(B136) No. 19 — (E24) No. 1:***	Is the resistance less than 1 Ω?	Go to step **2**.	Repair the harness and connector. NOTE: In this case, repair the following item: • Open circuit in harness between ECM and front oxygen (A/F) sensor connector • Poor contact of coupling connector
2	**CHECK FOR POOR CONTACT.** Check for poor contact of ECM and front oxygen (A/F) sensor connector.	Is there poor contact of ECM or front oxygen (A/F) sensor connector?	Repair the poor contact of ECM or front oxygen (A/F) sensor connector.	Replace the front oxygen (A/F) sensor. <Ref. to FU(H4SO)-42, Front Oxygen (A/F) Sensor.>

AF:DTC P0137 O2 SENSOR CIRCUIT LOW VOLTAGE (BANK 1 SENSOR 2)

DTC DETECTING CONDITION:

- Detected when two consecutive driving cycles with fault occur.
- GENERAL DESCRIPTION <Ref. to GD(H4SO)-68, DTC P0137 O2 SENSOR CIRCUIT LOW VOLTAGE (BANK 1 SENSOR 2), Diagnostic Trouble Code (DTC) Detecting Criteria.>

CAUTION:

After servicing or replacing faulty parts, perform Clear Memory Mode <Ref. to EN(H4SO)(diag)-51, OPERATION, Clear Memory Mode.>, and Inspection Mode <Ref. to EN(H4SO)(diag)-40, PROCEDURE, Inspection Mode.>.

WIRING DIAGRAM:

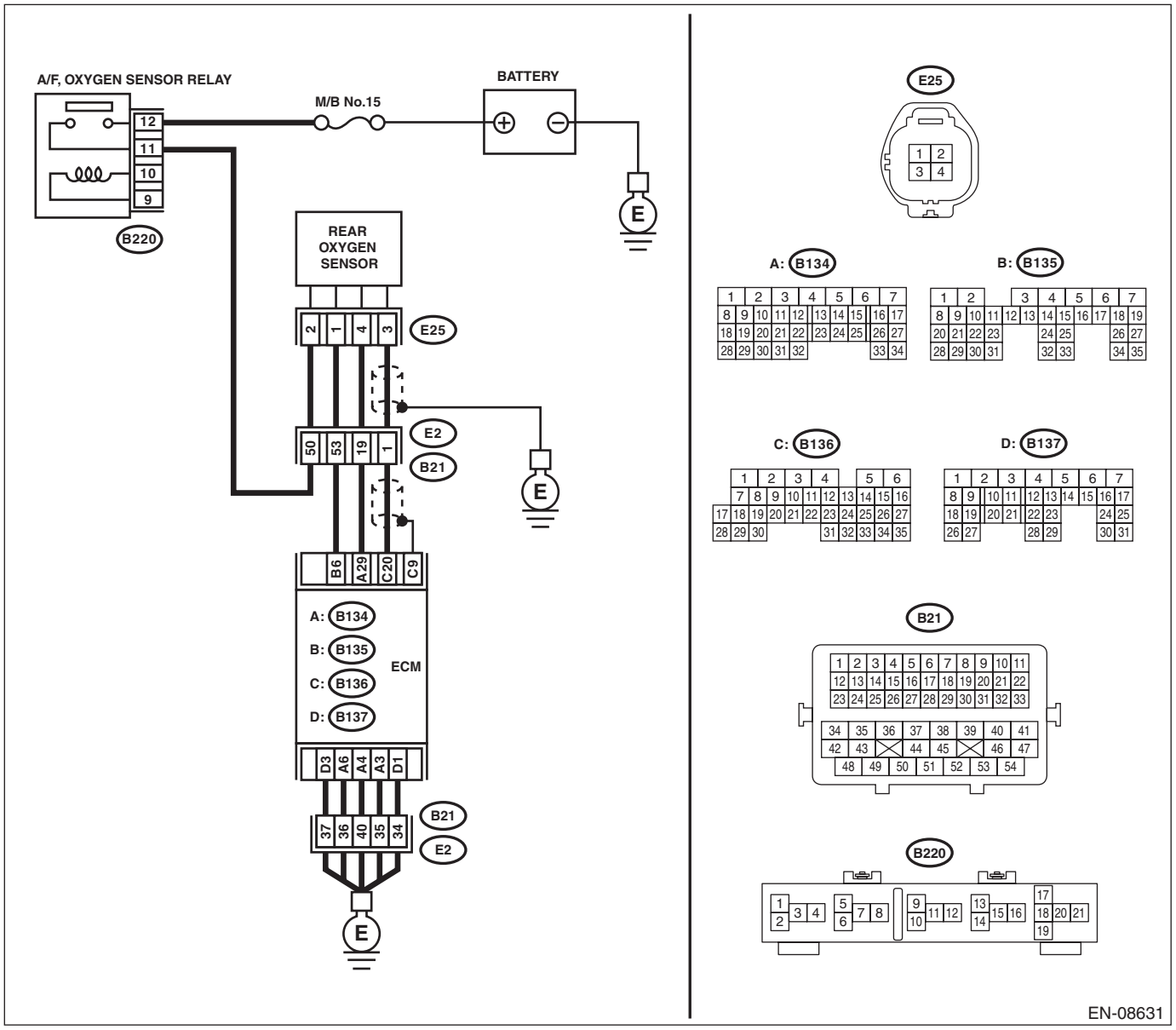

	Step	Check	Yes	No
1	**CHECK REAR OXYGEN SENSOR DATA.** 1) Warm up the engine until engine coolant temperature is higher than 75°C (167°F), and keep the engine speed at 3,000 rpm. (2 minutes maximum) 2) Read the value of «Rear O2 Sensor» using the Subaru Select Monitor or a general scan tool. NOTE: • Subaru Select Monitor For detailed operation procedures, refer to "READ CURRENT DATA FOR ENGINE". <Ref. to EN(H4SO)(diag)-33, Subaru Select Monitor.> • General scan tool For detailed operation procedures, refer to the general scan tool operation manual.	Is the value of «Rear O2 Sensor» 0.490 V or more?	Go to step **5**.	Go to step **2**.
2	**CHECK REAR OXYGEN SENSOR CONNECTOR AND COUPLING CONNECTOR.**	Has water entered the connector?	Completely remove any water inside.	Go to step **3**.
3	**CHECK HARNESS BETWEEN ECM AND REAR OXYGEN SENSOR CONNECTOR.** 1) Turn the ignition switch to OFF. 2) Disconnect the connector from ECM and rear oxygen sensor. 3) Measure the resistance of harness between ECM and rear oxygen sensor connector. ***Connector & terminal*** ***(B136) No. 20 — (E25) No. 3:*** ***(B134) No. 29 — (E25) No. 4:***	Is the resistance less than 1 Ω?	Go to step **4**.	Repair the harness and connector. NOTE: In this case, repair the following item: • Open circuit in harness between ECM and rear oxygen sensor connector • Poor contact of coupling connector
4	**CHECK HARNESS BETWEEN ECM AND REAR OXYGEN SENSOR CONNECTOR.** 1) Connect the connector to ECM. 2) Turn the ignition switch to ON. 3) Measure the voltage between rear oxygen sensor connector and chassis ground. ***Connector & terminal*** ***(E25) No. 3 (+) — Chassis ground (–):***	Is the voltage 0.2 — 0.5 V?	Replace the rear oxygen sensor. <Ref. to FU(H4SO)-44, Rear Oxygen Sensor.>	Repair the harness and connector. NOTE: In this case, repair the following item: • Open circuit in harness between ECM and rear oxygen sensor connector • Poor contact of coupling connector • Poor contact of ECM connector
5	**CHECK EXHAUST SYSTEM.** Check exhaust system parts. NOTE: Check the following items. • Looseness and improper fitting of exhaust system parts • Damage (crack, hole etc.) of parts • Loose part and improper installation between front oxygen (A/F) sensor and rear oxygen sensor	Is there any fault in exhaust system?	Repair or replace faulty parts.	Replace the rear oxygen sensor. <Ref. to FU(H4SO)-44, Rear Oxygen Sensor.>

AG:DTC P0138 O2 SENSOR CIRCUIT HIGH VOLTAGE (BANK 1 SENSOR 2)

DTC DETECTING CONDITION:

- Detected when two consecutive driving cycles with fault occur.
- GENERAL DESCRIPTION <Ref. to GD(H4SO)-71, DTC P0138 O2 SENSOR CIRCUIT HIGH VOLTAGE (BANK 1 SENSOR 2), Diagnostic Trouble Code (DTC) Detecting Criteria.>

CAUTION:
After servicing or replacing faulty parts, perform Clear Memory Mode <Ref. to EN(H4SO)(diag)-51, OPERATION, Clear Memory Mode.>, and Inspection Mode <Ref. to EN(H4SO)(diag)-40, PROCEDURE, Inspection Mode.>.

WIRING DIAGRAM:

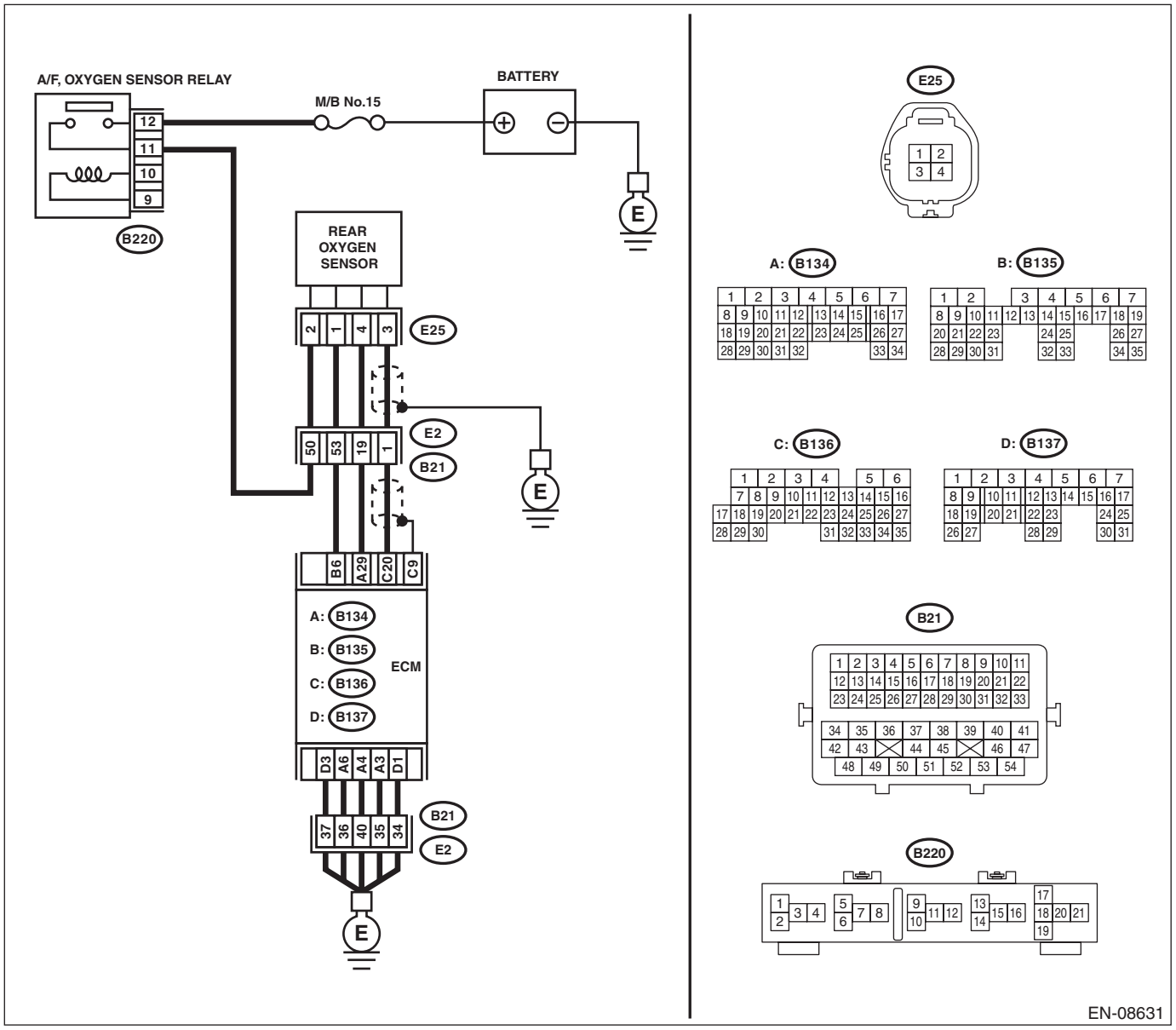

	Step	Check	Yes	No
1	**CHECK REAR OXYGEN SENSOR DATA.** 1) Warm up the engine until engine coolant temperature is higher than 75°C (167°F), and rapidly reduce the engine speed from 3,000 rpm. 2) Read the value of «Rear O2 Sensor» using the Subaru Select Monitor or a general scan tool. NOTE: • Subaru Select Monitor For detailed operation procedures, refer to "READ CURRENT DATA FOR ENGINE". <Ref. to EN(H4SO)(diag)-33, Subaru Select Monitor.> • General scan tool For detailed operation procedures, refer to the general scan tool operation manual.	Is the value of «Rear O2 Sensor» 0.250 V or less?	Go to step **5**.	Go to step **2**.
2	**CHECK REAR OXYGEN SENSOR CONNECTOR AND COUPLING CONNECTOR.**	Has water entered the connector?	Completely remove any water inside.	Go to step **3**.
3	**CHECK HARNESS BETWEEN ECM AND REAR OXYGEN SENSOR CONNECTOR.** 1) Turn the ignition switch to OFF. 2) Disconnect the connector from ECM and rear oxygen sensor. 3) Measure the resistance of harness between ECM and rear oxygen sensor connector. ***Connector & terminal*** ***(B136) No. 20 — (E25) No. 3:*** ***(B134) No. 29 — (E25) No. 4:***	Is the resistance less than 1 Ω?	Go to step **4**.	Repair the harness and connector. NOTE: In this case, repair the following item: • Open circuit in harness between ECM and rear oxygen sensor connector • Poor contact of coupling connector
4	**CHECK HARNESS BETWEEN ECM AND REAR OXYGEN SENSOR CONNECTOR.** 1) Connect the connector to ECM. 2) Turn the ignition switch to ON. 3) Measure the voltage between rear oxygen sensor connector and chassis ground. ***Connector & terminal*** ***(E25) No. 3 (+) — Chassis ground (–):***	Is the voltage 0.2 — 0.5 V?	Replace the rear oxygen sensor. <Ref. to FU(H4SO)-44, Rear Oxygen Sensor.>	Repair the harness and connector. NOTE: In this case, repair the following item: • Open circuit in harness between ECM and rear oxygen sensor connector • Poor contact of coupling connector • Poor contact of ECM connector
5	**CHECK EXHAUST SYSTEM.** Check exhaust system parts. NOTE: Check the following items. • Looseness and improper fitting of exhaust system parts • Damage (crack, hole etc.) of parts • Loose part and improper installation between front oxygen (A/F) sensor and rear oxygen sensor	Is there any fault in exhaust system?	Repair or replace faulty parts.	Replace the rear oxygen sensor. <Ref. to FU(H4SO)-44, Rear Oxygen Sensor.>

AH:DTC P013A O2 SENSOR SLOW RESPONSE - RICH TO LEAN (BANK 1 SENSOR 2)

DTC DETECTING CONDITION:

- Detected when two consecutive driving cycles with fault occur.
- GENERAL DESCRIPTION <Ref. to GD(H4SO)-72, DTC P013A O2 SENSOR SLOW RESPONSE - RICH TO LEAN (BANK 1 SENSOR 2), Diagnostic Trouble Code (DTC) Detecting Criteria.>

CAUTION:

After servicing or replacing faulty parts, perform Clear Memory Mode <Ref. to EN(H4SO)(diag)-51, OPERATION, Clear Memory Mode.>, and Inspection Mode <Ref. to EN(H4SO)(diag)-40, PROCEDURE, Inspection Mode.>.

WIRING DIAGRAM:

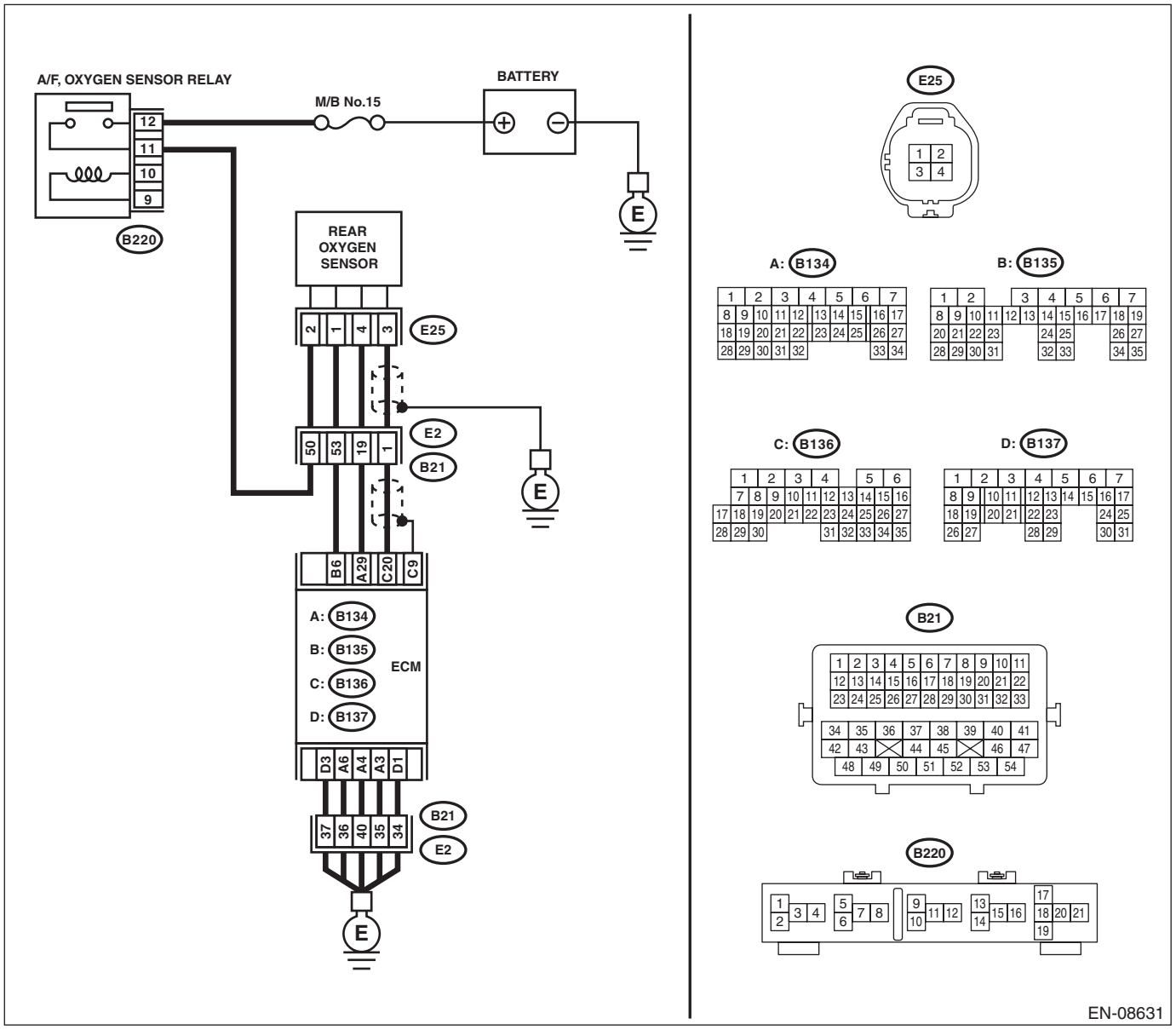

	Step	Check	Yes	No
1	**CHECK HARNESS BETWEEN ECM AND REAR OXYGEN SENSOR CONNECTOR.** 1) Turn the ignition switch to OFF. 2) Disconnect the connector from ECM and rear oxygen sensor. 3) Measure the resistance of harness between ECM and rear oxygen sensor connector. ***Connector & terminal*** ***(B136) No. 20 — (E25) No. 3:***	Is the resistance less than 1 Ω?	Go to step **2**.	Repair the harness and connector. NOTE: In this case, repair the following item: • Open circuit in harness between ECM and rear oxygen sensor connector • Poor contact of coupling connector
2	**CHECK HARNESS BETWEEN ECM AND REAR OXYGEN SENSOR CONNECTOR.** Measure the resistance between rear oxygen sensor connector and chassis ground. ***Connector & terminal*** ***(E25) No. 3 — Chassis ground:***	Is the resistance 1 MΩ or more?	Go to step **3**.	Repair the ground short circuit of harness between ECM and rear oxygen sensor connector.
3	**CHECK REAR OXYGEN SENSOR.** Measure the resistance between rear oxygen sensor terminals. ***Terminals*** ***No. 3 — No. 4***	Is the resistance less than 1 Ω?	Replace the rear oxygen sensor. <Ref. to FU(H4SO)-44, Rear Oxygen Sensor.>	Even if DTC is detected, the circuit has returned to a normal condition at this time. Reproduce the failure, and then perform the diagnosis again. NOTE: In this case, temporary poor contact of connector, temporary open or short circuit of harness may be the cause.

AI: DTC P013B O2 SENSOR SLOW RESPONSE - LEAN TO RICH (BANK 1 SENSOR 2)

NOTE:
For the diagnostic procedure, refer to DTC P013A. <Ref. to EN(H4SO)(diag)-144, DTC P013A O2 SENSOR SLOW RESPONSE - RICH TO LEAN (BANK 1 SENSOR 2), Diagnostic Procedure with Diagnostic Trouble Code (DTC).>

AJ:DTC P013E O2 SENSOR DELAYED RESPONSE - RICH TO LEAN (BANK 1 SENSOR 2)

NOTE:
For the diagnostic procedure, refer to DTC P013A. <Ref. to EN(H4SO)(diag)-144, DTC P013A O2 SENSOR SLOW RESPONSE - RICH TO LEAN (BANK 1 SENSOR 2), Diagnostic Procedure with Diagnostic Trouble Code (DTC).>

AK:DTC P013F O2 SENSOR DELAYED RESPONSE - LEAN TO RICH (BANK 1 SENSOR 2)

NOTE:
For the diagnostic procedure, refer to DTC P013A. <Ref. to EN(H4SO)(diag)-144, DTC P013A O2 SENSOR SLOW RESPONSE - RICH TO LEAN (BANK 1 SENSOR 2), Diagnostic Procedure with Diagnostic Trouble Code (DTC).>

AL:DTC P0140 O2 SENSOR CIRCUIT NO ACTIVITY DETECTED (BANK1 SENSOR2)

DTC DETECTING CONDITION:

- Detected when two consecutive driving cycles with fault occur.
- GENERAL DESCRIPTION <Ref. to GD(H4SO)-80, DTC P0140 O2 SENSOR CIRCUIT NO ACTIVITY DETECTED (BANK1 SENSOR2), Diagnostic Trouble Code (DTC) Detecting Criteria.>

CAUTION:

After servicing or replacing faulty parts, perform Clear Memory Mode <Ref. to EN(H4SO)(diag)-51, OPERATION, Clear Memory Mode.>, and Inspection Mode <Ref. to EN(H4SO)(diag)-40, PROCEDURE, Inspection Mode.>.

WIRING DIAGRAM:

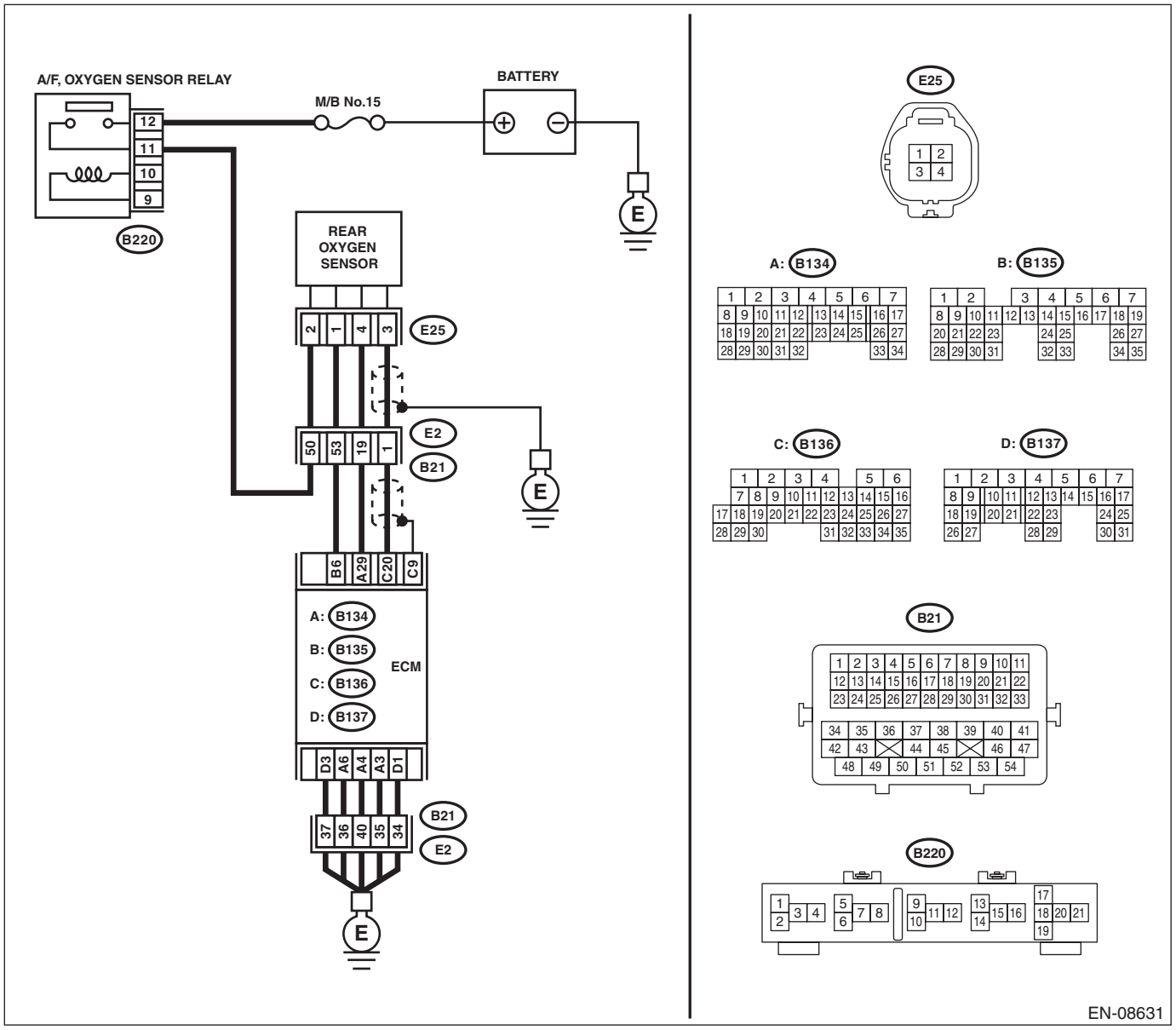

	Step	Check	Yes	No
1	**CHECK REAR OXYGEN SENSOR DATA.** 1) Warm up the engine until engine coolant temperature is higher than 75°C (167°F), and keep the engine speed at 3,000 rpm. (2 minutes maximum) 2) Read the value of «Rear O2 Sensor» using the Subaru Select Monitor or a general scan tool. NOTE: • Subaru Select Monitor For detailed operation procedures, refer to "READ CURRENT DATA FOR ENGINE". <Ref. to EN(H4SO)(diag)-33, Subaru Select Monitor.> • General scan tool For detailed operation procedures, refer to the general scan tool operation manual.	Is the value of «Rear O2 Sensor» 0.490 V or more?	Go to step **6**.	Go to step **2**.
2	**CHECK REAR OXYGEN SENSOR DATA.** 1) Warm up the engine until engine coolant temperature is higher than 75°C (167°F), and rapidly reduce the engine speed from 3,000 rpm. 2) Read the value of «Rear O2 Sensor» using the Subaru Select Monitor or a general scan tool. NOTE: • Subaru Select Monitor For detailed operation procedures, refer to "READ CURRENT DATA FOR ENGINE". <Ref. to EN(H4SO)(diag)-33, Subaru Select Monitor.> • General scan tool For detailed operation procedures, refer to the general scan tool operation manual.	Is the value of «Rear O2 Sensor» 0.250 V or less?	Go to step **6**.	Go to step **3**.
3	**CHECK REAR OXYGEN SENSOR CONNECTOR AND COUPLING CONNECTOR.**	Has water entered the connector?	Completely remove any water inside.	Go to step **4**.
4	**CHECK HARNESS BETWEEN ECM AND REAR OXYGEN SENSOR CONNECTOR.** 1) Turn the ignition switch to OFF. 2) Disconnect the connector from ECM and rear oxygen sensor. 3) Measure the resistance of harness between ECM and rear oxygen sensor connector. ***Connector & terminal*** ***(B136) No. 20 — (E25) No. 3:*** ***(B134) No. 29 — (E25) No. 4:***	Is the resistance less than 1 Ω?	Go to step **5**.	Repair the harness and connector. NOTE: In this case, repair the following item: • Open circuit in harness between ECM and rear oxygen sensor connector • Poor contact of coupling connector

	Step	Check	Yes	No
5	**CHECK HARNESS BETWEEN ECM AND REAR OXYGEN SENSOR CONNECTOR.** 1) Connect the connector to ECM. 2) Turn the ignition switch to ON. 3) Measure the voltage between rear oxygen sensor connector and chassis ground. ***Connector & terminal*** ***(E25) No. 3 (+) — Chassis ground (–):***	Is the voltage 0.2 — 0.5 V?	Replace the rear oxygen sensor. <Ref. to FU(H4SO)-44, Rear Oxygen Sensor.>	Repair the harness and connector. NOTE: In this case, repair the following item: • Open circuit in harness between ECM and rear oxygen sensor connector • Poor contact of coupling connector • Poor contact of ECM connector
6	**CHECK EXHAUST SYSTEM.** Check exhaust system parts. NOTE: Check the following items. • Looseness and improper fitting of exhaust system parts • Damage (crack, hole etc.) of parts • Loose part and improper installation between front oxygen (A/F) sensor and rear oxygen sensor	Is there any fault in exhaust system?	Repair or replace faulty parts.	Replace the rear oxygen sensor. <Ref. to FU(H4SO)-44, Rear Oxygen Sensor.>

AM:DTC P0141 O2 SENSOR HEATER CIRCUIT (BANK1 SENSOR2)

Refer to DTC P0037 for diagnostic procedure. <Ref. to EN(H4SO)(diag)-96, DTC P0037 HO2S HEATER CONTROL CIRCUIT LOW (BANK 1 SENSOR 2), Diagnostic Procedure with Diagnostic Trouble Code (DTC).>

AN:DTC P014C O2 SENSOR SLOW RESPONSE - RICH TO LEAN (BANK 1 SENSOR 1)

DTC DETECTING CONDITION:

- Detected when two consecutive driving cycles with fault occur.
- GENERAL DESCRIPTION <Ref. to GD(H4SO)-84, DTC P014C O2 SENSOR SLOW RESPONSE - RICH TO LEAN (BANK 1 SENSOR 1), Diagnostic Trouble Code (DTC) Detecting Criteria.>

CAUTION:
After servicing or replacing faulty parts, perform Clear Memory Mode <Ref. to EN(H4SO)(diag)-51, OPERATION, Clear Memory Mode.>, and Inspection Mode <Ref. to EN(H4SO)(diag)-40, PROCEDURE, Inspection Mode.>.

	Step	Check	Yes	No
1	**CHECK EXHAUST SYSTEM.** NOTE: Check the following items. • Loose installation of front portion of exhaust pipe onto cylinder heads • Loose connection between front exhaust pipe and front catalytic converter • Damage of exhaust pipe resulting in a hole	Is there any fault in exhaust system?	Repair the exhaust system.	Replace the front oxygen (A/F) sensor. <Ref. to FU(H4SO)-42, Front Oxygen (A/F) Sensor.>

AO:DTC P014D O2 SENSOR SLOW RESPONSE - LEAN TO RICH (BANK 1 SENSOR 1)

NOTE:
For the diagnostic procedure, refer to DTC P014C. <Ref. to EN(H4SO)(diag)-149, DTC P014C O2 SENSOR SLOW RESPONSE - RICH TO LEAN (BANK 1 SENSOR 1), Diagnostic Procedure with Diagnostic Trouble Code (DTC).>

AP:DTC P015A O2 SENSOR DELAYED RESPONSE - RICH TO LEAN (BANK 1 SENSOR 1)

NOTE:
For the diagnostic procedure, refer to DTC P014C. <Ref. to EN(H4SO)(diag)-149, DTC P014C O2 SENSOR SLOW RESPONSE - RICH TO LEAN (BANK 1 SENSOR 1), Diagnostic Procedure with Diagnostic Trouble Code (DTC).>

AQ:DTC P015B O2 SENSOR DELAYED RESPONSE - LEAN TO RICH (BANK 1 SENSOR 1)

NOTE:
For the diagnostic procedure, refer to DTC P014C. <Ref. to EN(H4SO)(diag)-149, DTC P014C O2 SENSOR SLOW RESPONSE - RICH TO LEAN (BANK 1 SENSOR 1), Diagnostic Procedure with Diagnostic Trouble Code (DTC).>

AR:DTC P0171 SYSTEM TOO LEAN (BANK 1)

Refer to DTC P0172 for diagnostic procedure. <Ref. to EN(H4SO)(diag)-150, DTC P0172 SYSTEM TOO RICH (BANK 1), Diagnostic Procedure with Diagnostic Trouble Code (DTC).>

AS:DTC P0172 SYSTEM TOO RICH (BANK 1)

DTC DETECTING CONDITION:

- Detected when two consecutive driving cycles with fault occur.
- GENERAL DESCRIPTION <Ref. to GD(H4SO)-92, DTC P0172 SYSTEM TOO RICH (BANK 1), Diagnostic Trouble Code (DTC) Detecting Criteria.>

TROUBLE SYMPTOM:

- Improper idling
- Engine stalls.
- Poor driving performance

CAUTION:
After servicing or replacing faulty parts, perform Clear Memory Mode <Ref. to EN(H4SO)(diag)-51, OPERATION, Clear Memory Mode.>, and Inspection Mode <Ref. to EN(H4SO)(diag)-40, PROCEDURE, Inspection Mode.>.

	Step	Check	Yes	No
1	**CHECK EXHAUST SYSTEM.**	Are there holes or loose bolts on exhaust system?	Repair the exhaust system.	Go to step **2**.
2	**CHECK AIR INTAKE SYSTEM.**	Are there holes, loose bolts or disconnection of hose on air intake system?	Repair the air intake system.	Go to step **3**.
3	**CHECK FUEL PRESSURE.** **WARNING:** **Place "NO OPEN FLAMES" signs near the working area.** **CAUTION:** **Be careful not to spill fuel.** Measure the fuel pressure. <Ref. to ME(H4SO)-28, INSPECTION, Fuel Pressure.> **CAUTION:** **Release fuel pressure before removing the fuel pressure gauge.**	Is the measured value 340 — 400 kPa (3.5 — 4.1 kg/cm^2, 49 — 58 psi)?	Go to step **4**.	Repair the following item. Fuel pressure is too high: • Clogged fuel line or bent hose Fuel pressure is too low: • Improper fuel pump discharge • Clogged fuel line
4	**CHECK ENGINE COOLANT TEMPERATURE SENSOR.** 1) Start the engine and warm up completely. 2) Read the value of «Coolant Temp.» using the Subaru Select Monitor or a general scan tool. NOTE: • Subaru Select Monitor For detailed operation procedures, refer to "READ CURRENT DATA FOR ENGINE". <Ref. to EN(H4SO)(diag)-33, Subaru Select Monitor.> • General scan tool For detailed operation procedures, refer to the general scan tool operation manual.	Is the value of «Coolant Temp.» 75°C (167°F) or more?	Go to step **5**.	Replace the engine coolant temperature sensor. <Ref. to FU(H4SO)-24, Engine Coolant Temperature Sensor.>

	Step	Check	Yes	No
5	**CHECK MASS AIR FLOW AND INTAKE AIR TEMPERATURE SENSOR.** 1) Start the engine and warm up engine until coolant temperature is higher than 75°C (167°F). 2) For CVT models, set the select lever to "P" range or "N" range, and for MT models, place the shift lever in the neutral position. 3) Turn the A/C switch to OFF. 4) Turn all the accessory switches to OFF. 5) Read the value of «Mass Air Flow» using the Subaru Select Monitor or a general scan tool. NOTE: • Subaru Select Monitor For detailed operation procedures, refer to "READ CURRENT DATA FOR ENGINE". <Ref. to EN(H4SO)(diag)-33, Subaru Select Monitor.> • General scan tool For detailed operation procedures, refer to the general scan tool operation manual.	Is the value of «Mass Air Flow» 2.0 — 5.0 g/s (0.26 — 0.66 lb/m)?	Go to step **6**.	Replace the mass air flow and intake air temperature sensor. <Ref. to FU(H4SO)-32, Mass Air Flow and Intake Air Temperature Sensor.>
6	**CHECK MASS AIR FLOW AND INTAKE AIR TEMPERATURE SENSOR.** 1) Start the engine and warm up engine until coolant temperature is higher than 70°C (158°F). 2) For CVT models, set the select lever to "P" range or "N" range, and for MT models, place the shift lever in the neutral position. 3) Turn the A/C switch to OFF. 4) Turn all the accessory switches to OFF. 5) Open the front hood. 6) Measure the ambient temperature. 7) Read the value of «Intake Air Temp.» using the Subaru Select Monitor or a general scan tool. NOTE: • Subaru Select Monitor For detailed operation procedures, refer to "READ CURRENT DATA FOR ENGINE". <Ref. to EN(H4SO)(diag)-33, Subaru Select Monitor.> • General scan tool For detailed operation procedures, refer to the general scan tool operation manual.	Subtract ambient temperature from «Intake Air Temp.». Is the obtained value –10 — 50°C (–18 — 90°F)?	Repair the poor contact of ECM connector.	Check the mass air flow and intake air temperature sensor. <Ref. to FU(H4SO)-32, Mass Air Flow and Intake Air Temperature Sensor.>

AT:DTC P0181 FUEL TEMPERATURE SENSOR “A” CIRCUIT RANGE/PERFORMANCE

DTC DETECTING CONDITION:

- Detected when two consecutive driving cycles with fault occur.
- GENERAL DESCRIPTION <Ref. to GD(H4SO)-94, DTC P0181 FUEL TEMPERATURE SENSOR “A” CIRCUIT RANGE/PERFORMANCE, Diagnostic Trouble Code (DTC) Detecting Criteria.>

CAUTION:
After servicing or replacing faulty parts, perform Clear Memory Mode <Ref. to EN(H4SO)(diag)-51, OPERATION, Clear Memory Mode.>, and Inspection Mode <Ref. to EN(H4SO)(diag)-40, PROCEDURE, Inspection Mode.>.

Step		Check	Yes	No
1	**CHECK FOR ANY OTHER DTC ON DISPLAY.**	Is any other DTC displayed?	Check the appropriate DTC using the “List of Diagnostic Trouble Code (DTC)”. <Ref. to EN(H4SO)(diag)-78, List of Diagnostic Trouble Code (DTC).>	Replace the fuel temperature sensor. <Ref. to EC(H4SO)-14, Fuel Temperature Sensor.>

AU:DTC P0182 FUEL TEMPERATURE SENSOR “A” CIRCUIT LOW INPUT

DTC DETECTING CONDITION:

- Immediately at fault recognition
- GENERAL DESCRIPTION <Ref. to GD(H4SO)-97, DTC P0182 FUEL TEMPERATURE SENSOR “A” CIRCUIT LOW INPUT, Diagnostic Trouble Code (DTC) Detecting Criteria.>

CAUTION:
After servicing or replacing faulty parts, perform Clear Memory Mode <Ref. to EN(H4SO)(diag)-51, OPERATION, Clear Memory Mode.>, and Inspection Mode <Ref. to EN(H4SO)(diag)-40, PROCEDURE, Inspection Mode.>.
WIRING DIAGRAM:

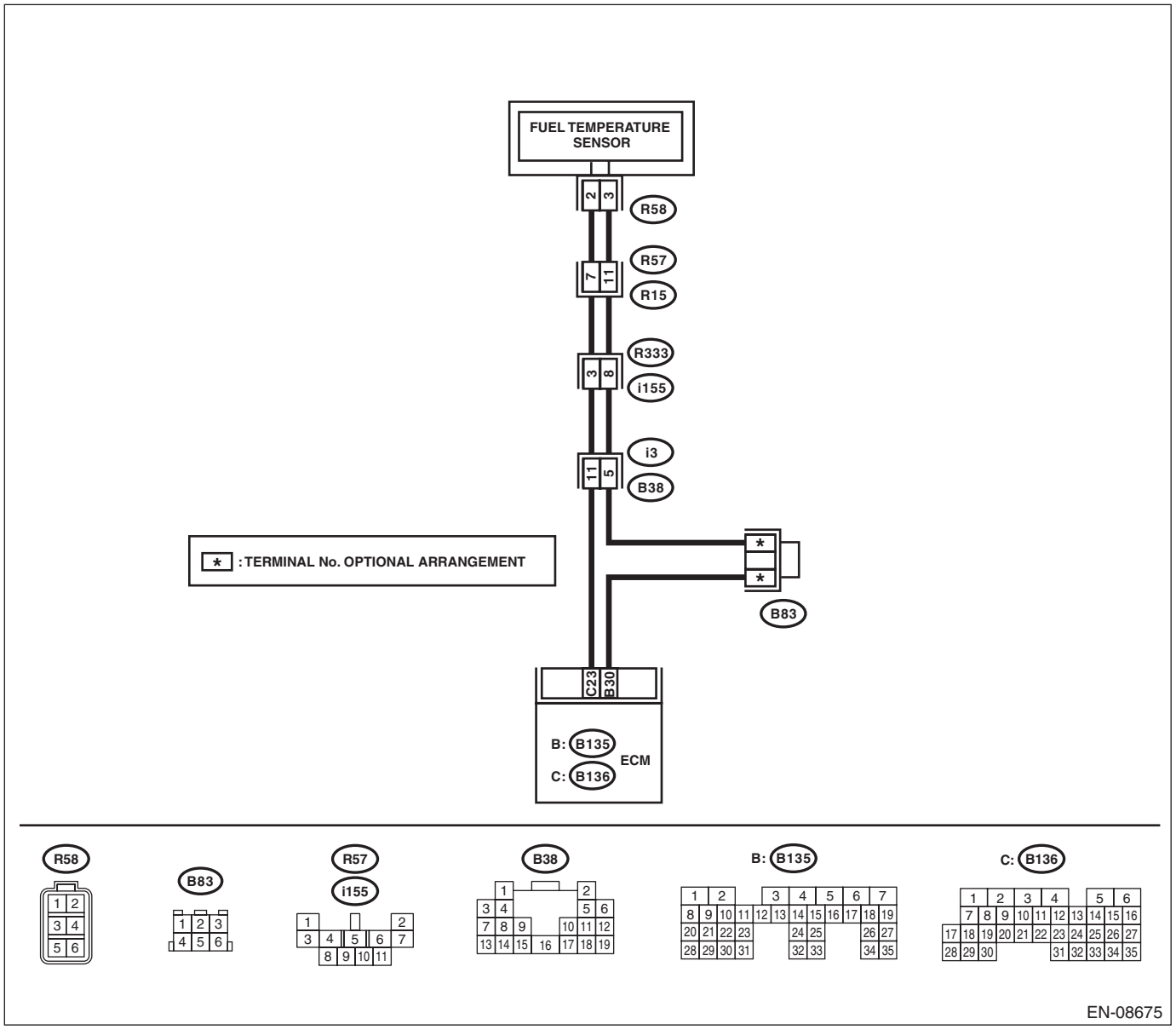

	Step	Check	Yes	No
1	**CHECK CURRENT DATA.** 1) Start the engine. 2) Using the Subaru Select Monitor, read the value in «Fuel Temp.». NOTE: For detailed operation procedures, refer to "READ CURRENT DATA FOR ENGINE". <Ref. to EN(H4SO)(diag)-33, Subaru Select Monitor.>	Is the value in «Fuel Temp.» 120°C (248°F) or more?	Go to step **2**.	Even if DTC is detected, the circuit has returned to a normal condition at this time. Reproduce the failure, and then perform the diagnosis again. NOTE: In this case, temporary poor contact of connector, temporary open or short circuit of harness may be the cause.
2	**CHECK HARNESS BETWEEN ECM AND FUEL TEMPERATURE SENSOR CONNECTOR.** 1) Turn the ignition switch to OFF. 2) Disconnect the connectors from ECM and fuel temperature sensor. 3) Measure the resistance between ECM and chassis ground. ***Connector & terminal*** ***(B136) No. 23 — Chassis ground:***	Is the resistance 1 MΩ or more?	Replace the fuel temperature sensor. <Ref. to EC(H4SO)-14, Fuel Temperature Sensor.>	Repair the ground short circuit of harness between ECM and fuel pump.

AV:DTC P0183 FUEL TEMPERATURE SENSOR “A” CIRCUIT HIGH INPUT

DTC DETECTING CONDITION:

- Immediately at fault recognition
- GENERAL DESCRIPTION <Ref. to GD(H4SO)-99, DTC P0183 FUEL TEMPERATURE SENSOR “A” CIRCUIT HIGH INPUT, Diagnostic Trouble Code (DTC) Detecting Criteria.>

CAUTION:
After servicing or replacing faulty parts, perform Clear Memory Mode <Ref. to EN(H4SO)(diag)-51, OPERATION, Clear Memory Mode.>, and Inspection Mode <Ref. to EN(H4SO)(diag)-40, PROCEDURE, Inspection Mode.>.

WIRING DIAGRAM:

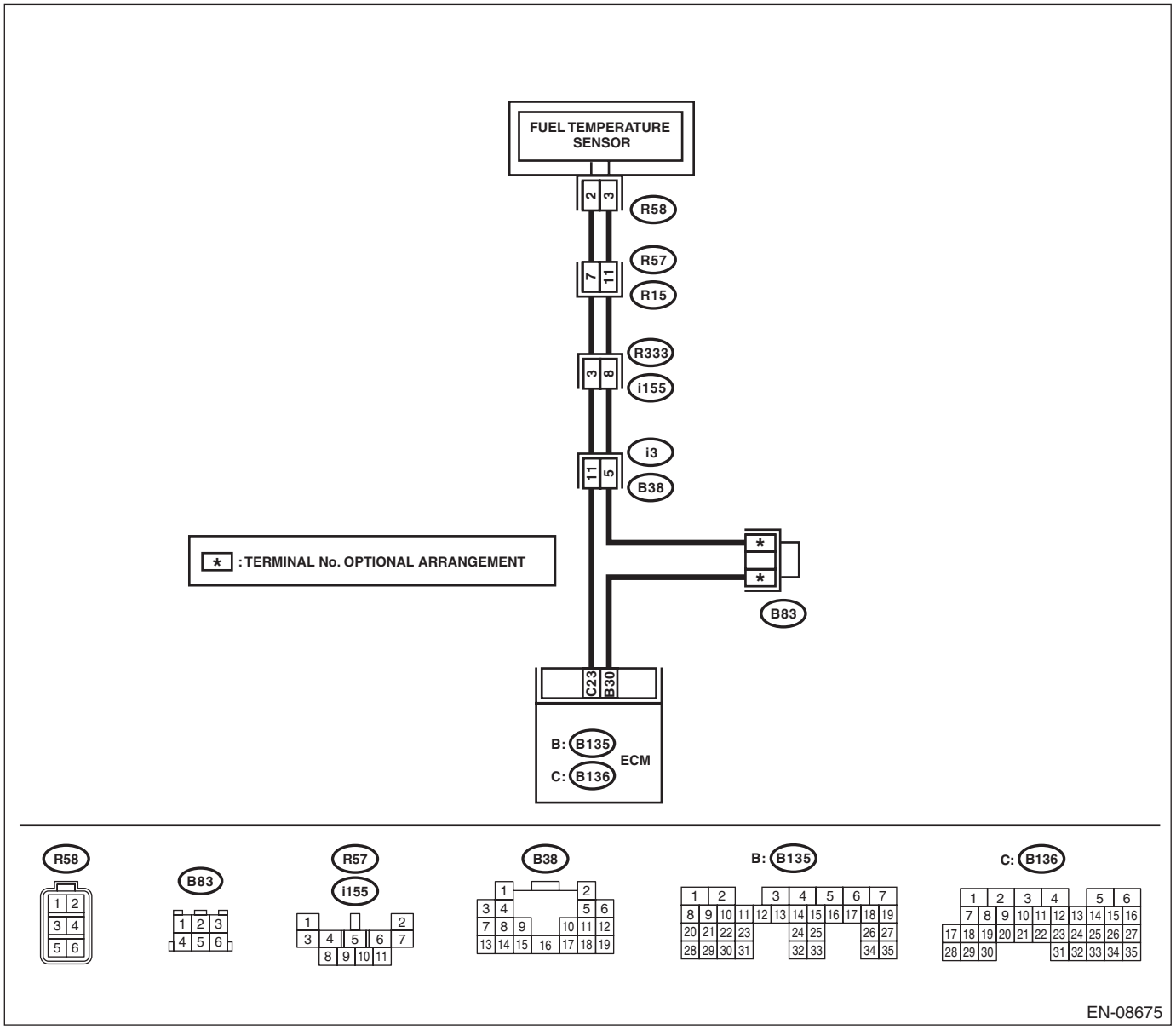

	Step	Check	Yes	No
1	**CHECK CURRENT DATA.** 1) Start the engine. 2) Using the Subaru Select Monitor, read the value in «Fuel Temp.». NOTE: For detailed operation procedures, refer to "READ CURRENT DATA FOR ENGINE". <Ref. to EN(H4SO)(diag)-33, Subaru Select Monitor.>	Is the value in «Fuel Temp.» less than –40°C (–40°F)?	Go to step **2**.	Even if DTC is detected, the circuit has returned to a normal condition at this time. Reproduce the failure, and then perform the diagnosis again. NOTE: In this case, temporary poor contact of connector, temporary open or short circuit of harness may be the cause.
2	**CHECK FOR POOR CONTACT.** Check any poor contact of the ECM and fuel temperature sensor connectors.	Is there poor contact of the ECM or fuel temperature sensor connectors?	Repair any poor contact of the ECM or fuel temperature sensor connectors.	Go to step **3**.
3	**CHECK HARNESS BETWEEN ECM AND FUEL TEMPERATURE SENSOR CONNECTOR.** 1) Turn the ignition switch to OFF. 2) Disconnect the connectors from ECM and fuel temperature sensor. 3) Measure the resistance of the harness between the ECM and fuel temperature sensor connector. ***Connector & terminal*** ***(B136) No. 23 — (R58) No. 2:*** ***(B135) No. 30 — (R58) No. 3:***	Is the resistance less than 1 Ω?	Go to step **4**.	Repair the harness and connector. NOTE: In this case, repair the following item: • Open circuit in harness between ECM and fuel temperature sensor connector • Poor contact of coupling connector • Poor contact of joint connector
4	**CHECK HARNESS BETWEEN ECM AND FUEL TEMPERATURE SENSOR CONNECTOR.** 1) Connect all connectors. 2) Turn the ignition switch to ON. 3) Measure the voltage between ECM and chassis ground. ***Connector & terminal*** ***(B136) No. 23 (+) — Chassis ground (–):***	Is the voltage 5 V or more?	Repair the short circuit to power in the harness between the ECM and fuel temperature sensor connector.	Replace the fuel temperature sensor. <Ref. to EC(H4SO)-14, Fuel Temperature Sensor.>

AW:DTC P0196 ENGINE OIL TEMPERATURE SENSOR CIRCUIT RANGE/PERFORMANCE

DTC DETECTING CONDITION:

- Detected when two consecutive driving cycles with fault occur.
- GENERAL DESCRIPTION <Ref. to GD(H4SO)-101, DTC P0196 ENGINE OIL TEMPERATURE SENSOR CIRCUIT RANGE/PERFORMANCE, Diagnostic Trouble Code (DTC) Detecting Criteria.>

TROUBLE SYMPTOM:

- Hard to start
- Improper idling
- Poor driving performance

CAUTION:

After servicing or replacing faulty parts, perform Clear Memory Mode <Ref. to EN(H4SO)(diag)-51, OPERATION, Clear Memory Mode.>, and Inspection Mode <Ref. to EN(H4SO)(diag)-40, PROCEDURE, Inspection Mode.>.

Step		Check	Yes	No
1	CHECK FOR ANY OTHER DTC ON DISPLAY.	Is any other DTC displayed?	Check the appropriate DTC using the “List of Diagnostic Trouble Code (DTC)”. <Ref. to EN(H4SO)(diag)-78, List of Diagnostic Trouble Code (DTC).>	Replace the engine oil temperature sensor. <Ref. to FU(H4SO)-40, Oil Temperature Sensor.>

AX:DTC P0197 ENGINE OIL TEMPERATURE SENSOR LOW

DTC DETECTING CONDITION:

- Immediately at fault recognition
- GENERAL DESCRIPTION <Ref. to GD(H4SO)-103, DTC P0197 ENGINE OIL TEMPERATURE SENSOR LOW, Diagnostic Trouble Code (DTC) Detecting Criteria.>

TROUBLE SYMPTOM:

- Hard to start
- Improper idling
- Poor driving performance

CAUTION:
After servicing or replacing faulty parts, perform Clear Memory Mode <Ref. to EN(H4SO)(diag)-51, OPERATION, Clear Memory Mode.>, and Inspection Mode <Ref. to EN(H4SO)(diag)-40, PROCEDURE, Inspection Mode.>.

WIRING DIAGRAM:

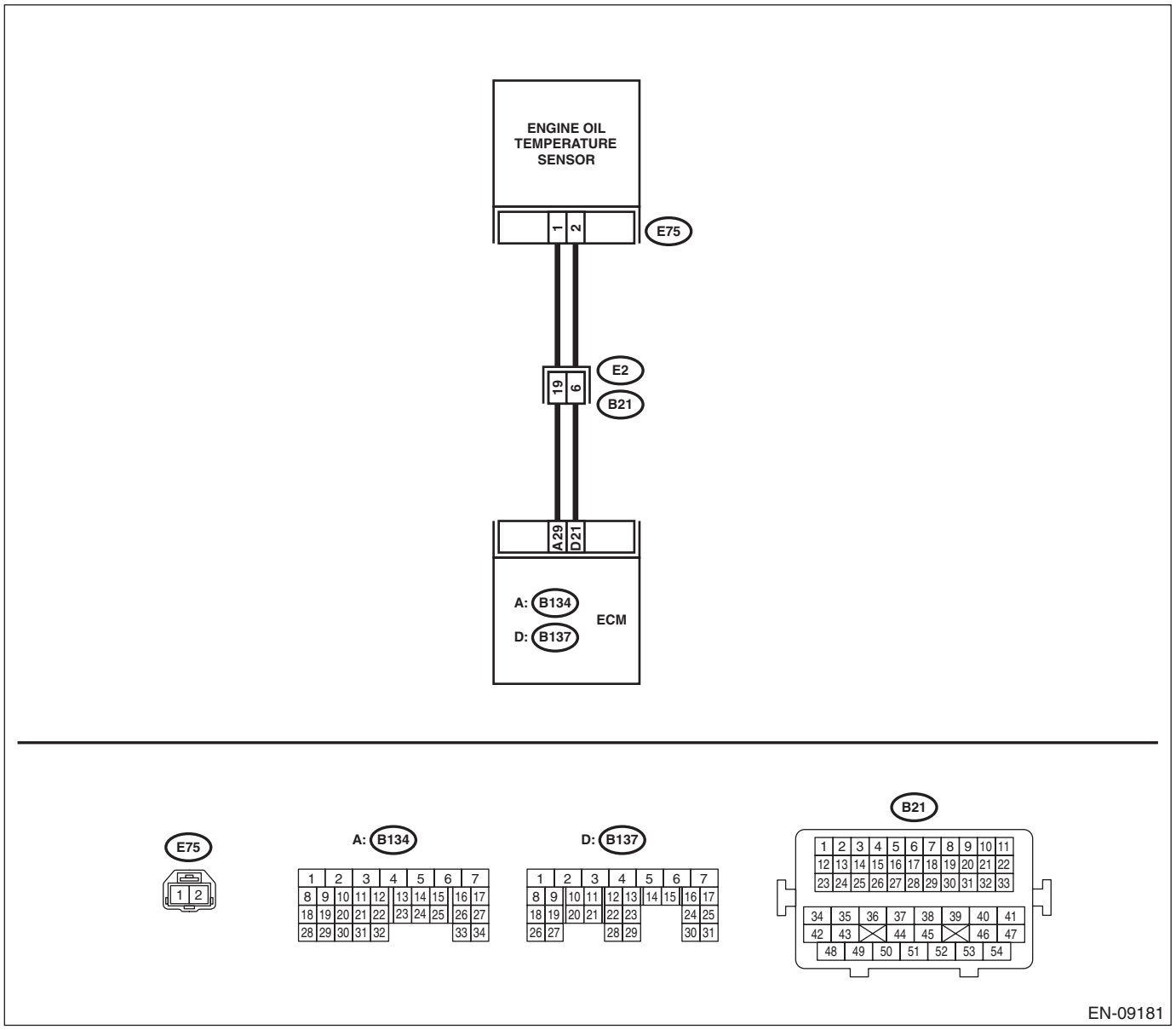

	Step	Check	Yes	No
1	**CHECK CURRENT DATA.** 1) Start the engine. 2) Read the value of «Oil Temperature» using Subaru Select Monitor. NOTE: For detailed operation procedures, refer to "READ CURRENT DATA FOR ENGINE". <Ref. to EN(H4SO)(diag)-33, Subaru Select Monitor.>	Is the value of «Oil Temperature» 215°C (419°F) or more?	Go to step **2**.	Even if DTC is detected, the circuit has returned to a normal condition at this time. Reproduce the failure, and then perform the diagnosis again. NOTE: In this case, temporary poor contact of connector, temporary open or short circuit of harness may be the cause.
2	**CHECK HARNESS BETWEEN ECM AND ENGINE OIL TEMPERATURE SENSOR CONNECTOR.** 1) Turn the ignition switch to OFF. 2) Disconnect the connectors from the ECM and engine oil temperature sensor. 3) Measure the resistance between ECM and chassis ground. ***Connector & terminal*** ***(B137) No. 21 — Chassis ground:***	Is the resistance 1 MΩ or more?	Replace the engine oil temperature sensor. <Ref. to FU(H4SO)-40, Oil Temperature Sensor.>	Repair the short circuit to ground in the harness between the ECM and engine oil temperature sensor connector.

AY:DTC P0198 ENGINE OIL TEMPERATURE SENSOR HIGH

DTC DETECTING CONDITION:

- Immediately at fault recognition
- GENERAL DESCRIPTION <Ref. to GD(H4SO)-104, DTC P0198 ENGINE OIL TEMPERATURE SENSOR HIGH, Diagnostic Trouble Code (DTC) Detecting Criteria.>

TROUBLE SYMPTOM:

- Hard to start
- Improper idling
- Poor driving performance

CAUTION:
After servicing or replacing faulty parts, perform Clear Memory Mode <Ref. to EN(H4SO)(diag)-51, OPERATION, Clear Memory Mode.>, and Inspection Mode <Ref. to EN(H4SO)(diag)-40, PROCEDURE, Inspection Mode.>.

WIRING DIAGRAM:

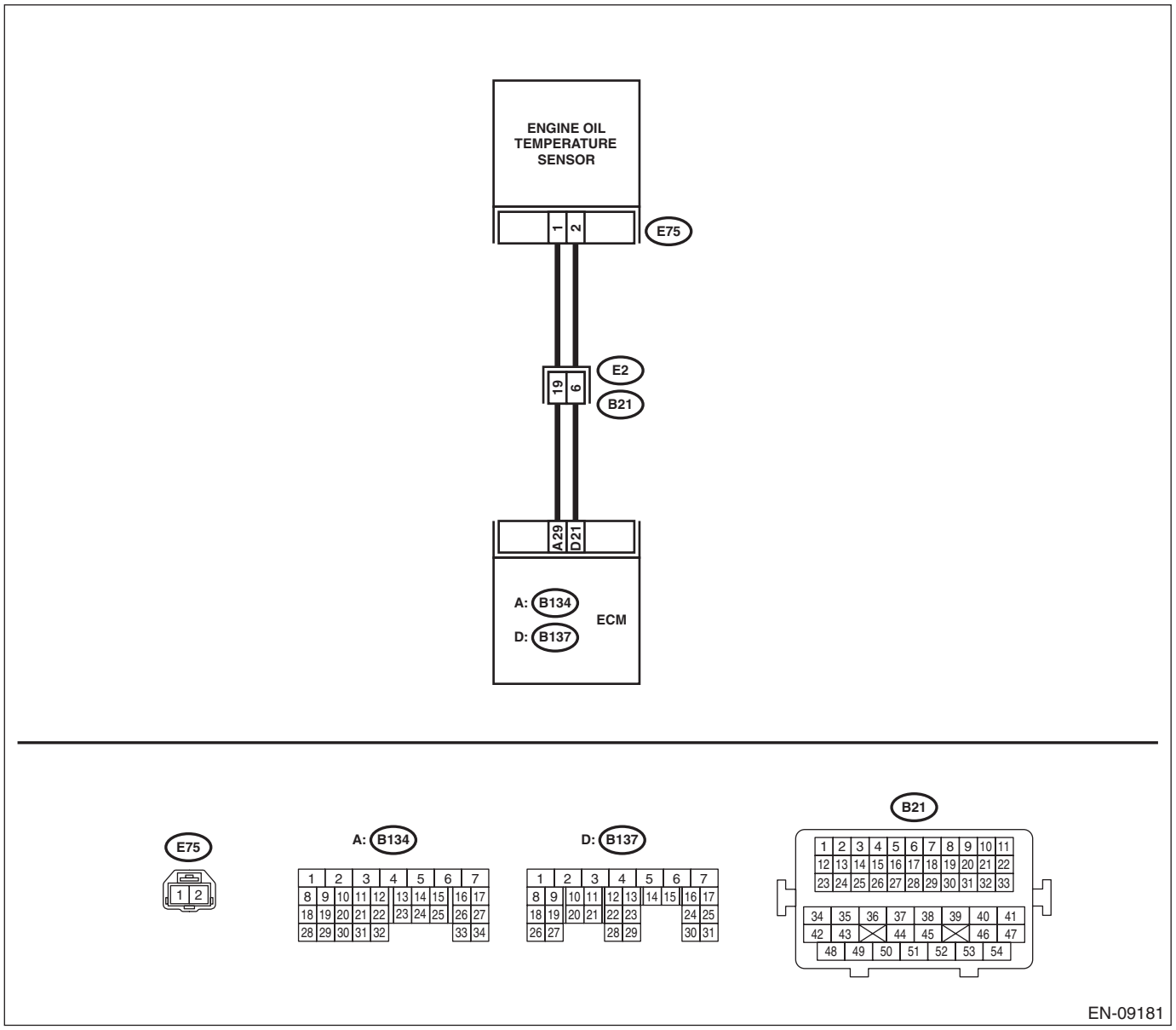

	Step	Check	Yes	No
1	**CHECK CURRENT DATA.** 1) Start the engine. 2) Read the value of «Oil Temperature» using Subaru Select Monitor. NOTE: For detailed operation procedures, refer to "READ CURRENT DATA FOR ENGINE". <Ref. to EN(H4SO)(diag)-33, Subaru Select Monitor.>	Is the value of «Oil Temperature» less than –40°C (–40°F)?	Go to step **2**.	Even if DTC is detected, the circuit has returned to a normal condition at this time. Reproduce the failure, and then perform the diagnosis again. NOTE: In this case, temporary poor contact of connector, temporary open or short circuit of harness may be the cause.
2	**CHECK FOR POOR CONTACT.** Check for poor contact between the ECM and engine oil temperature sensor connectors.	Is there poor contact of the ECM or engine oil temperature sensor connectors?	Repair the poor contact of ECM or engine oil temperature sensor connector.	Go to step **3**.
3	**CHECK HARNESS BETWEEN ECM AND ENGINE OIL TEMPERATURE SENSOR CONNECTOR.** 1) Turn the ignition switch to OFF. 2) Disconnect the connectors from the ECM and engine oil temperature sensor. 3) Measure the resistance of the harness between the ECM and engine oil temperature sensor connector. ***Connector & terminal*** ***(B137) No. 21 — (E75) No. 2:*** ***(B134) No. 29 — (E75) No. 1:***	Is the resistance less than 1 Ω?	Go to step **4**.	Repair the harness and connector. NOTE: In this case, repair the following item: • Open circuit in harness between ECM and engine oil temperature sensor connector • Poor contact of coupling connector
4	**CHECK HARNESS BETWEEN ECM AND ENGINE OIL TEMPERATURE SENSOR CONNECTOR.** 1) Connect all connectors. 2) Turn the ignition switch to ON. 3) Measure the voltage between ECM and chassis ground. ***Connector & terminal*** ***(B137) No. 21 (+) — Chassis ground (–):***	Is the voltage 5 V or more?	Repair the short circuit to power in harness between ECM and engine oil temperature sensor connector.	Replace the engine oil temperature sensor. <Ref. to FU(H4SO)-40, Oil Temperature Sensor.>

AZ:DTC P0201 INJECTOR #1

DTC DETECTING CONDITION:

- Immediately at fault recognition
- GENERAL DESCRIPTION <Ref. to GD(H4SO)-105, DTC P0201 INJECTOR #1, Diagnostic Trouble Code (DTC) Detecting Criteria.>

TROUBLE SYMPTOM:

- Improper idling
- Poor driving performance

CAUTION:

After servicing or replacing faulty parts, perform Clear Memory Mode <Ref. to EN(H4SO)(diag)-51, OPERATION, Clear Memory Mode.>, and Inspection Mode <Ref. to EN(H4SO)(diag)-40, PROCEDURE, Inspection Mode.>.

WIRING DIAGRAM:

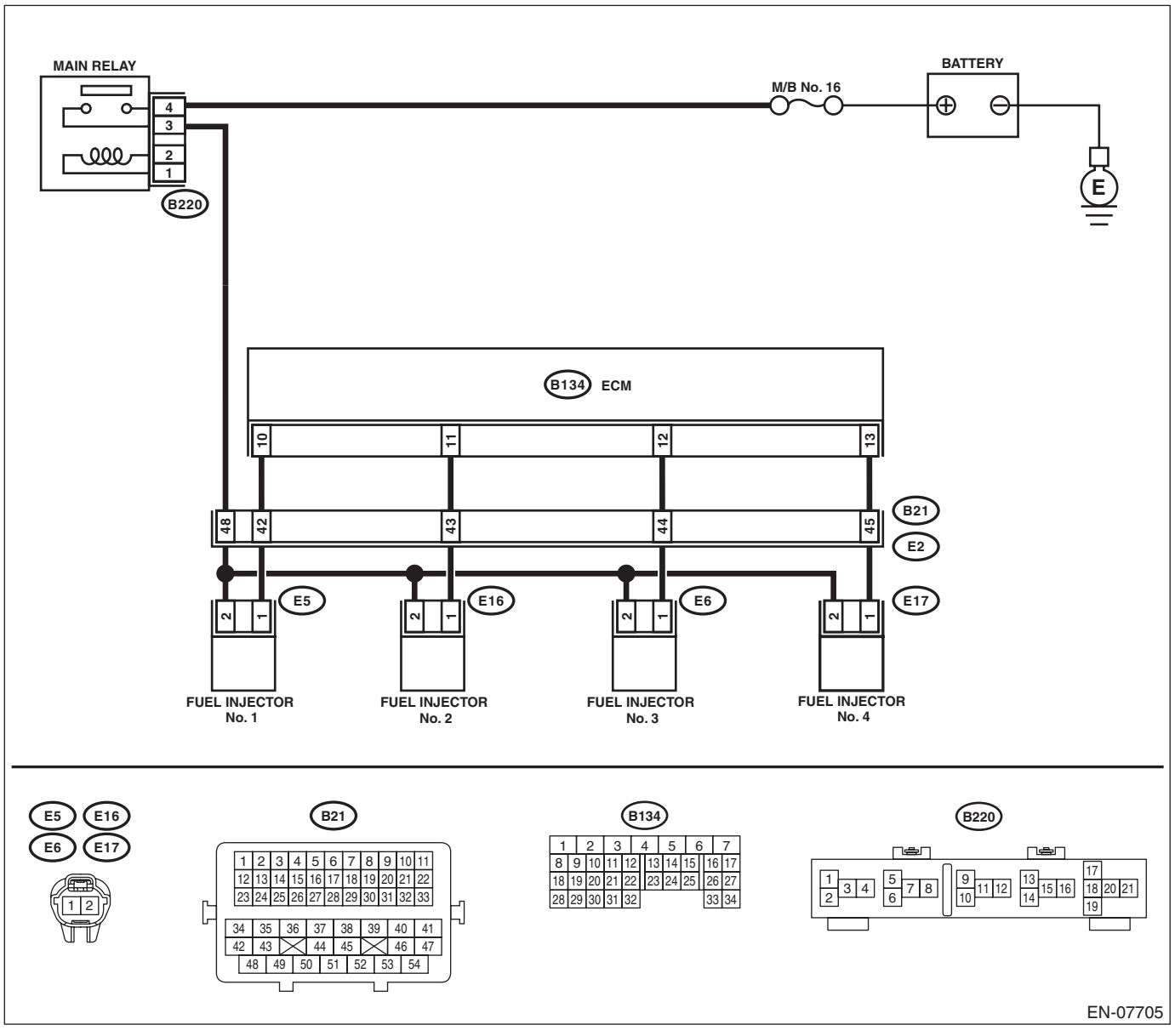

	Step	Check	Yes	No
1	**CHECK POWER SUPPLY TO FUEL INJECTOR.** 1) Turn the ignition switch to OFF. 2) Disconnect the connector from fuel injector. 3) Turn the ignition switch to ON. 4) Measure the voltage between fuel injector connector and the engine ground. ***Connector & terminal*** ***DTC P0201; (E5) No. 2 (+) — Engine ground (–):*** ***DTC P0202; (E16) No. 2 (+) — Engine ground (–):*** ***DTC P0203; (E6) No. 2 (+) — Engine ground (–):*** ***DTC P0204; (E17) No. 2 (+) — Engine ground (–):***	Is the voltage 10 V or more?	Go to step **2**.	Repair the harness and connector. NOTE: In this case, repair the following item: • Open circuit in harness between main relay and fuel injector connector • Poor contact of main relay connector • Poor contact of coupling connector
2	**CHECK HARNESS BETWEEN ECM AND FUEL INJECTOR CONNECTOR.** 1) Turn the ignition switch to OFF. 2) Disconnect the connector from ECM. 3) Measure the resistance between fuel injector connector and engine ground. ***Connector & terminal*** ***DTC P0201; (E5) No. 1 — Engine ground:*** ***DTC P0202; (E16) No. 1 — Engine ground:*** ***DTC P0203; (E6) No. 1 — Engine ground:*** ***DTC P0204; (E17) No. 1 — Engine ground:***	Is the resistance 1 MΩ or more?	Go to step **3**.	Repair the short circuit to ground in harness between ECM connector and fuel injector connector.
3	**CHECK HARNESS BETWEEN ECM AND FUEL INJECTOR CONNECTOR.** Measure the resistance of harness between ECM connector and fuel injector connector. ***Connector & terminal*** ***DTC P0201; (B134) No. 10 — (E5) No. 1:*** ***DTC P0202; (B134) No. 11 — (E16) No. 1:*** ***DTC P0203; (B134) No. 12 — (E6) No. 1:*** ***DTC P0204; (B134) No. 13 — (E17) No. 1:***	Is the resistance less than 1 Ω?	Go to step **4**.	Repair the harness and connector. NOTE: In this case, repair the following item: • Open circuit in harness between ECM connector and fuel injector connector • Poor contact of coupling connector
4	**CHECK FUEL INJECTOR.** Measure the resistance between fuel injector terminals on the corresponding cylinder. ***Terminals*** ***No. 1 — No. 2:***	Is the resistance 5 — 20 Ω?	Go to step **5**.	Replace the fuel injector. <Ref. to FU(H4SO)-37, Fuel Injector.>
5	**CHECK FOR POOR CONTACT.** Check for poor contact of ECM connector.	Is there poor contact of ECM connector?	Repair the poor contact of ECM connector.	Go to step **6**.

	Step	Check	Yes	No
6	**CHECK FUEL INJECTOR OPERATION.** 1) Connect all connectors. 2) Start the engine. 3) Check if the corresponding fuel injector emits operating sound. NOTE: Use a sound scope to check the operating sound.	Does the fuel injector emit operating sound?	Even if DTC is detected, the circuit has returned to a normal condition at this time. Reproduce the failure, and then perform the diagnosis again. NOTE: In this case, temporary poor contact of connector, temporary open or short circuit of harness may be the cause.	Repair the poor contact of fuel injector connector.

BA:DTC P0202 INJECTOR #2

NOTE:
For the diagnostic procedure, refer to DTC P0201. <Ref. to EN(H4SO)(diag)-162, DTC P0201 INJECTOR #1, Diagnostic Procedure with Diagnostic Trouble Code (DTC).>

BB:DTC P0203 INJECTOR #3

NOTE:
For the diagnostic procedure, refer to DTC P0201. <Ref. to EN(H4SO)(diag)-162, DTC P0201 INJECTOR #1, Diagnostic Procedure with Diagnostic Trouble Code (DTC).>

BC:DTC P0204 INJECTOR #4

NOTE:
For the diagnostic procedure, refer to DTC P0201. <Ref. to EN(H4SO)(diag)-162, DTC P0201 INJECTOR #1, Diagnostic Procedure with Diagnostic Trouble Code (DTC).>

BD:DTC P0222 THROTTLE/PEDAL POSITION SENSOR/SWITCH “B” CIRCUIT LOW

DTC DETECTING CONDITION:

- Immediately at fault recognition
- GENERAL DESCRIPTION <Ref. to GD(H4SO)-107, DTC P0222 THROTTLE/PEDAL POSITION SENSOR/SWITCH “B” CIRCUIT LOW, Diagnostic Trouble Code (DTC) Detecting Criteria.>

TROUBLE SYMPTOM:

- Improper idling
- Poor driving performance
- Engine stalls.

CAUTION:

After servicing or replacing faulty parts, perform Clear Memory Mode <Ref. to EN(H4SO)(diag)-51, OPERATION, Clear Memory Mode.>, and Inspection Mode <Ref. to EN(H4SO)(diag)-40, PROCEDURE, Inspection Mode.>.

WIRING DIAGRAM:

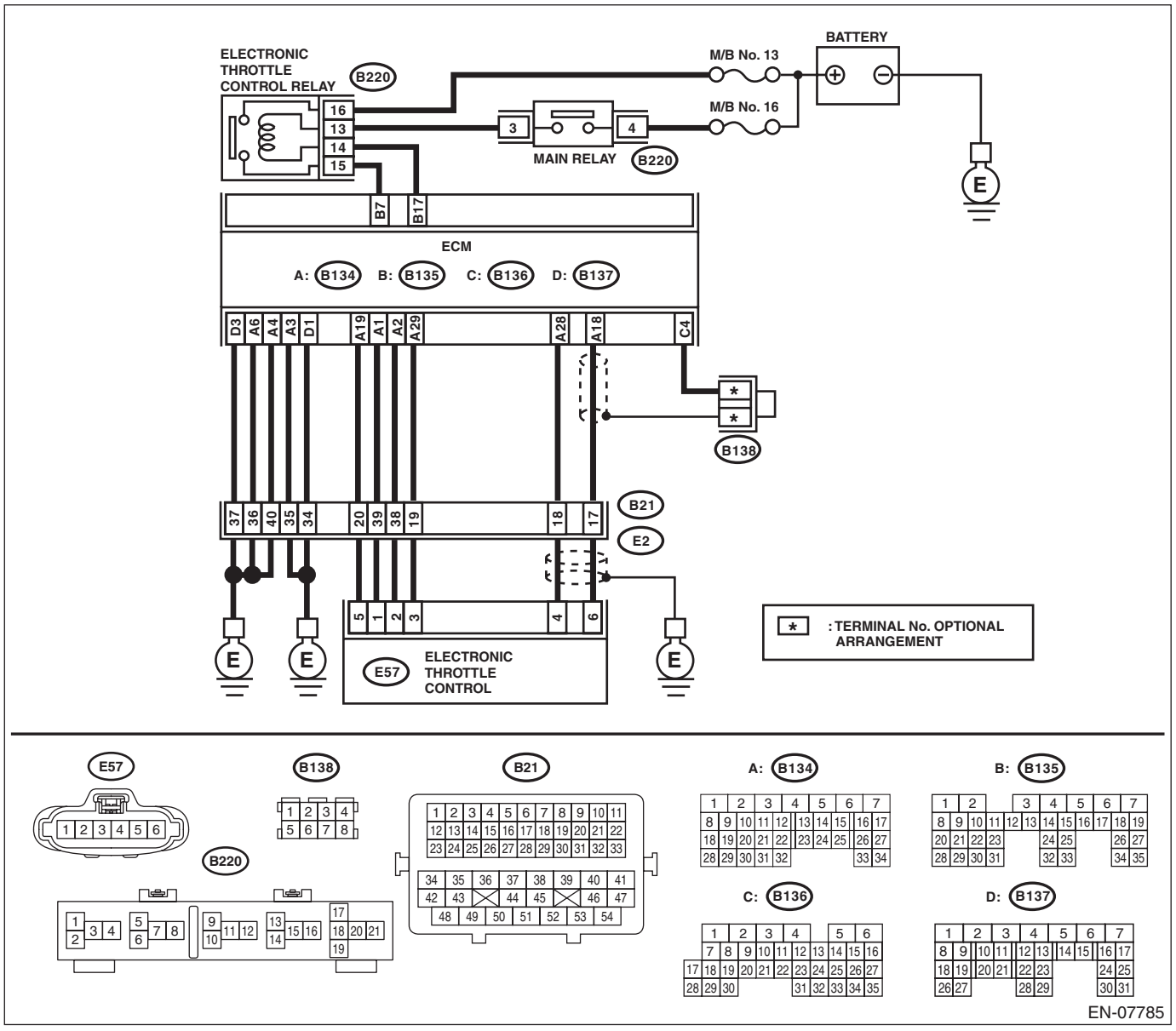

	Step	Check	Yes	No
1	**CHECK HARNESS BETWEEN ECM AND ELECTRONIC THROTTLE CONTROL CONNECTOR.** 1) Turn the ignition switch to OFF. 2) Disconnect the connectors from ECM and electronic throttle control. 3) Measure the resistance between ECM and chassis ground. ***Connector & terminal*** ***(B134) No. 19 — Chassis ground:*** ***(B134) No. 28 — Chassis ground:***	Is the resistance 1 MΩ or more?	Go to step **2**.	Repair the short circuit to ground in harness between ECM and electronic throttle control connector.
2	**CHECK SHORT CIRCUIT INSIDE THE ECM.** 1) Connect the connector to ECM. 2) Measure the resistance between electronic throttle control connector and engine ground. ***Connector & terminal*** ***(E57) No. 4 — Engine ground:***	Is the resistance 1 MΩ or more?	Replace the electronic throttle control. <Ref. to FU(H4SO)-15, Throttle Body.>	Repair the short circuit to ground in harness between ECM and electronic throttle control connector. Replace the ECM if defective. <Ref. to FU(H4SO)-46, Engine Control Module (ECM).>

BE:DTC P0223 THROTTLE/PEDAL POSITION SENSOR/SWITCH “B” CIRCUIT HIGH

DTC DETECTING CONDITION:

- Immediately at fault recognition
- GENERAL DESCRIPTION <Ref. to GD(H4SO)-109, DTC P0223 THROTTLE/PEDAL POSITION SENSOR/SWITCH “B” CIRCUIT HIGH, Diagnostic Trouble Code (DTC) Detecting Criteria.>

TROUBLE SYMPTOM:

- Improper idling
- Poor driving performance
- Engine stalls.

CAUTION:

After servicing or replacing faulty parts, perform Clear Memory Mode <Ref. to EN(H4SO)(diag)-51, OPERATION, Clear Memory Mode.>, and Inspection Mode <Ref. to EN(H4SO)(diag)-40, PROCEDURE, Inspection Mode.>.

WIRING DIAGRAM:

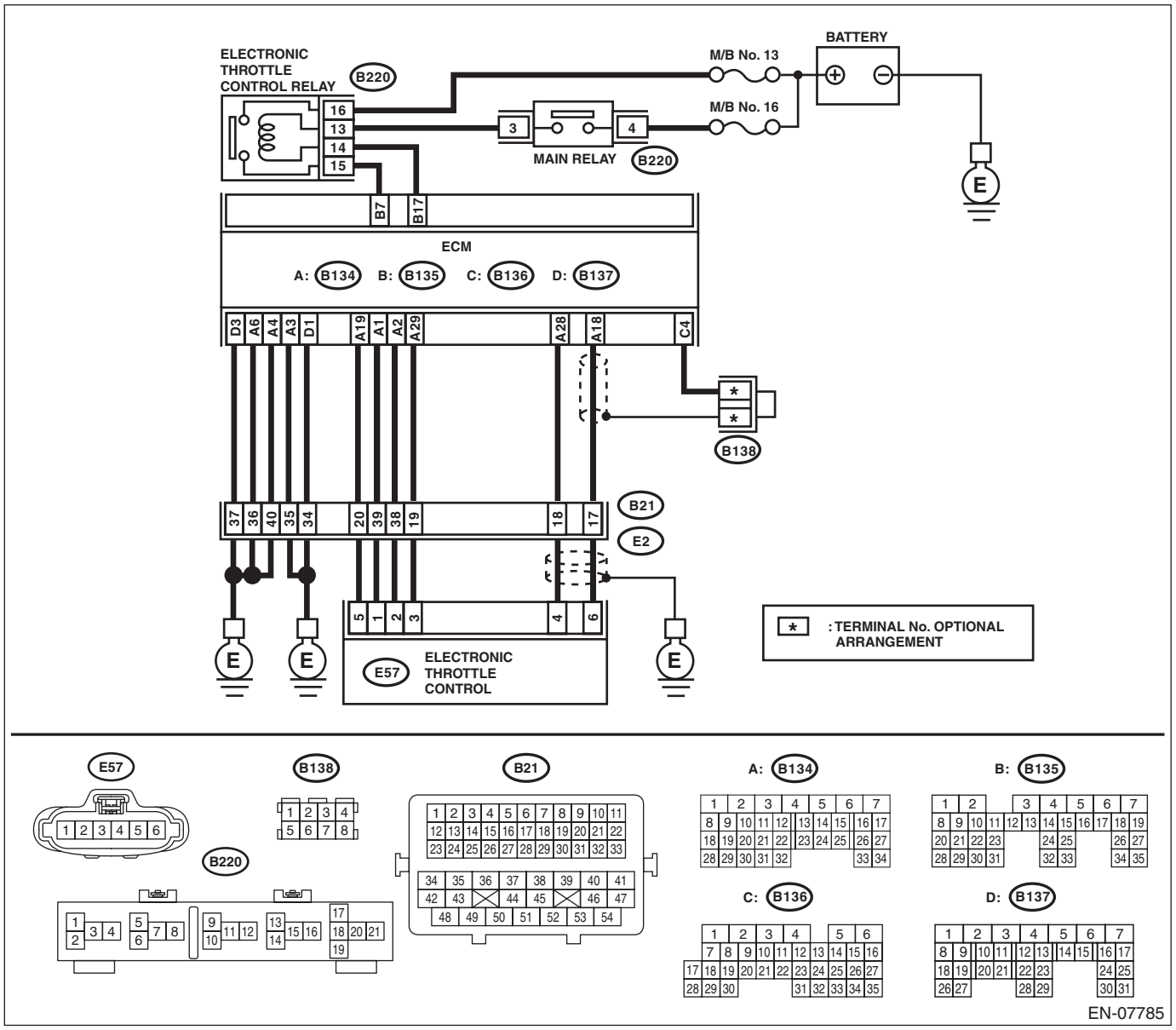

	Step	Check	Yes	No
1	**CHECK HARNESS BETWEEN ECM AND ELECTRONIC THROTTLE CONTROL CONNECTOR.** 1) Turn the ignition switch to OFF. 2) Disconnect the connectors from ECM and electronic throttle control. 3) Measure the resistance of harness between ECM and electronic throttle control connector. ***Connector & terminal*** ***(B134) No. 28 — (E57) No. 4:*** ***(B134) No. 29 — (E57) No. 3:***	Is the resistance less than 1 Ω?	Go to step **2**.	Repair the harness and connector. NOTE: In this case, repair the following item: • Open circuit in harness between ECM and electronic throttle control connector • Poor contact of coupling connector
2	**CHECK HARNESS BETWEEN ECM AND ELECTRONIC THROTTLE CONTROL CONNECTOR.** 1) Connect the connector to ECM. 2) Measure the resistance between electronic throttle control connector and engine ground. ***Connector & terminal*** ***(E57) No. 3 — Engine ground:***	Is the resistance less than 5 Ω?	Go to step **3**.	Repair the harness and connector. NOTE: In this case, repair the following item: • Open circuit of harness between ECM and engine ground • Poor contact of ECM connector • Poor contact of coupling connector
3	**CHECK HARNESS BETWEEN ECM AND ELECTRONIC THROTTLE CONTROL CONNECTOR.** 1) Turn the ignition switch to ON. 2) Measure the voltage between electronic throttle control connector and engine ground. ***Connector & terminal*** ***(E57) No. 4 (+) — Engine ground (–):***	Is the voltage 5 V or more?	Repair the short circuit to power in harness between ECM and electronic throttle control connector.	Go to step **4**.
4	**CHECK HARNESS BETWEEN ECM AND ELECTRONIC THROTTLE CONTROL CONNECTOR.** 1) Turn the ignition switch to OFF. 2) Disconnect the connectors from ECM. 3) Measure the resistance between ECM connectors. ***Connector & terminal*** ***(B134) No. 19 — (B134) No. 28:***	Is the resistance 1 MΩ or more?	Repair the poor contact of electronic throttle control connector. Replace the electronic throttle control if defective. <Ref. to FU(H4SO)-15, Throttle Body.>	Repair the short circuit to power in harness between ECM and electronic throttle control connector.

BF:DTC P0301 CYLINDER 1 MISFIRE DETECTED

NOTE:
For the diagnostic procedure, refer to DTC P0304. <Ref. to EN(H4SO)(diag)-170, DTC P0304 CYLINDER 4 MISFIRE DETECTED, Diagnostic Procedure with Diagnostic Trouble Code (DTC).>

BG:DTC P0302 CYLINDER 2 MISFIRE DETECTED

NOTE:
For the diagnostic procedure, refer to DTC P0304. <Ref. to EN(H4SO)(diag)-170, DTC P0304 CYLINDER 4 MISFIRE DETECTED, Diagnostic Procedure with Diagnostic Trouble Code (DTC).>

BH:DTC P0303 CYLINDER 3 MISFIRE DETECTED

NOTE:
For the diagnostic procedure, refer to DTC P0304. <Ref. to EN(H4SO)(diag)-170, DTC P0304 CYLINDER 4 MISFIRE DETECTED, Diagnostic Procedure with Diagnostic Trouble Code (DTC).>

BI: DTC P0304 CYLINDER 4 MISFIRE DETECTED

DTC DETECTING CONDITION:

- Detected when two consecutive driving cycles with fault occur.
- Immediately at fault recognition (A misfire which could damage catalyst occurs.)
- GENERAL DESCRIPTION <Ref. to GD(H4SO)-121, DTC P0304 CYLINDER 4 MISFIRE DETECTED, Diagnostic Trouble Code (DTC) Detecting Criteria.>

TROUBLE SYMPTOM:

- Engine stalls.
- Improper idling
- Rough driving

CAUTION:

After servicing or replacing faulty parts, perform Clear Memory Mode <Ref. to EN(H4SO)(diag)-51, OPERATION, Clear Memory Mode.>, and Inspection Mode <Ref. to EN(H4SO)(diag)-40, PROCEDURE, Inspection Mode.>.

WIRING DIAGRAM:

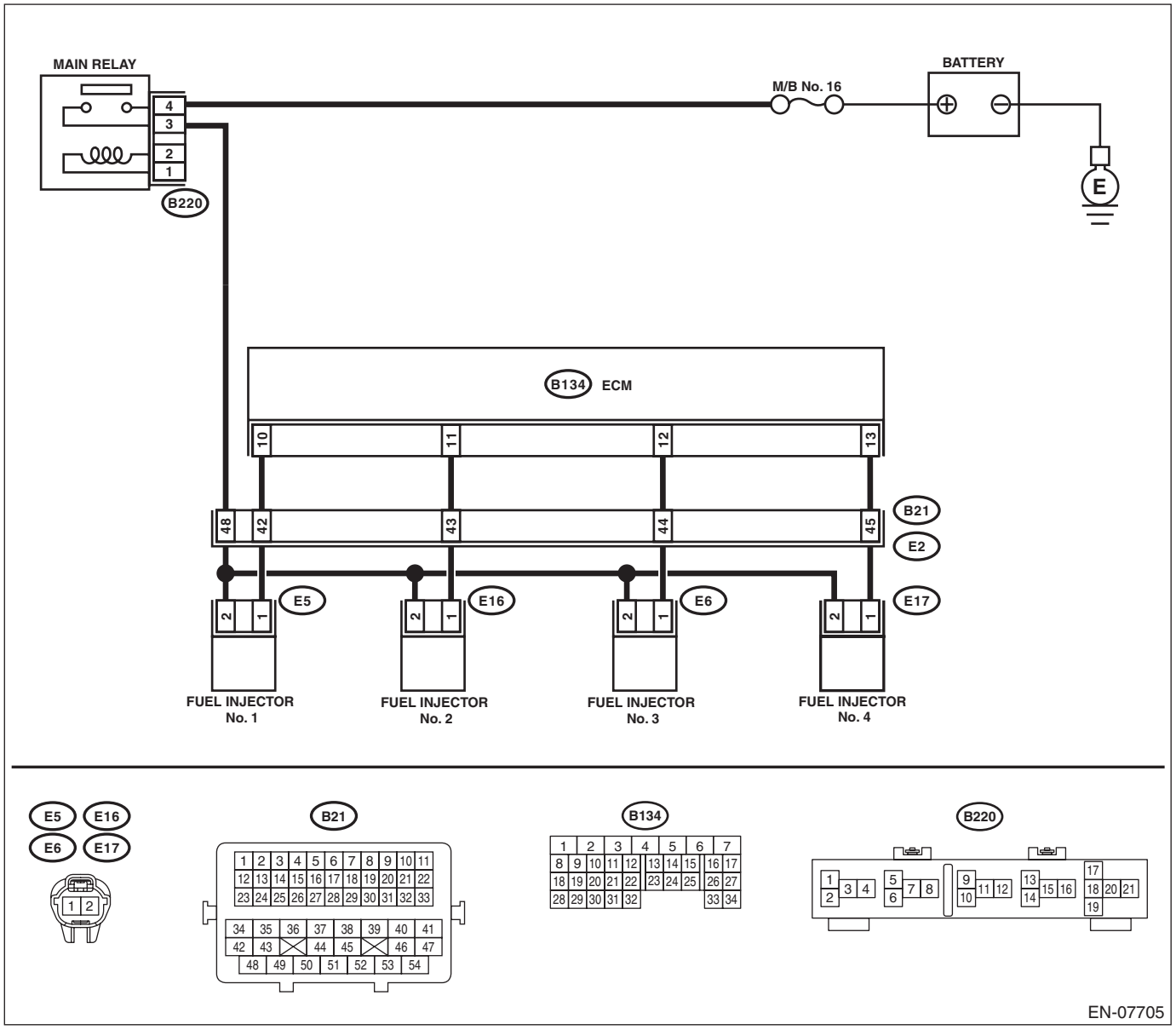

	Step	Check	Yes	No
1	**CHECK OUTPUT SIGNAL OF ECM.** 1) Turn the ignition switch to ON. 2) Measure the voltage between ECM and chassis ground on faulty cylinders. ***Connector & terminal*** ***#1 (B134) No. 10 (+) — Chassis ground (–):*** ***#2 (B134) No. 11 (+) — Chassis ground (–):*** ***#3 (B134) No. 12 (+) — Chassis ground (–):*** ***#4 (B134) No. 13 (+) — Chassis ground (–):***	Is the voltage 10 V or more?	Go to step **6**.	Go to step **2**.
2	**CHECK HARNESS BETWEEN ECM AND FUEL INJECTOR CONNECTOR.** 1) Turn the ignition switch to OFF. 2) Disconnect the connector from fuel injector on faulty cylinders. 3) Measure the resistance between fuel injector connector and engine ground on faulty cylinders. ***Connector & terminal*** ***#1 (E5) No. 1 — Engine ground:*** ***#2 (E16) No. 1 — Engine ground:*** ***#3 (E6) No. 1 — Engine ground:*** ***#4 (E17) No. 1 — Engine ground:***	Is the resistance 1 MΩ or more?	Go to step **3**.	Repair the short circuit to ground in harness between ECM and fuel injector connector.
3	**CHECK HARNESS BETWEEN ECM AND FUEL INJECTOR CONNECTOR.** Measure the resistance of harness between ECM and fuel injector connector on faulty cylinders. ***Connector & terminal*** ***#1 (B134) No. 10 — (E5) No. 1:*** ***#2 (B134) No. 11 — (E16) No. 1:*** ***#3 (B134) No. 12 — (E6) No. 1:*** ***#4 (B134) No. 13 — (E17) No. 1:***	Is the resistance less than 1 Ω?	Go to step **4**.	Repair the harness and connector. NOTE: In this case, repair the following item: • Open circuit in harness between ECM and fuel injector connector • Poor contact of coupling connector
4	**CHECK FUEL INJECTOR.** Measure the resistance between fuel injector terminals on faulty cylinder. ***Terminals*** ***No. 1 — No. 2:***	Is the resistance 5 — 20 Ω?	Go to step **5**.	Replace the faulty fuel injector. <Ref. to FU(H4SO)-37, Fuel Injector.>
5	**CHECK POWER SUPPLY LINE.** 1) Turn the ignition switch to ON. 2) Measure the voltage between fuel injector and engine ground on faulty cylinders. ***Connector & terminal*** ***#1 (E5) No. 2 (+) — Engine ground (–):*** ***#2 (E16) No. 2 (+) — Engine ground (–):*** ***#3 (E6) No. 2 (+) — Engine ground (–):*** ***#4 (E17) No. 2 (+) — Engine ground (–):***	Is the voltage 10 V or more?	Repair the poor contact of all connectors in fuel injector circuit.	Repair the harness and connector. NOTE: In this case, repair the following item: • Open circuit in harness between the main relay connector and fuel injector connector on faulty cylinders • Poor contact of coupling connector • Poor contact of main relay connector

	Step	Check	Yes	No
6	**CHECK HARNESS BETWEEN ECM AND FUEL INJECTOR CONNECTOR.** 1) Turn the ignition switch to OFF. 2) Disconnect the connector from fuel injector on faulty cylinders. 3) Turn the ignition switch to ON. 4) Measure the voltage between ECM and chassis ground on faulty cylinders. ***Connector & terminal*** ***#1 (B134) No. 10 (+) — Chassis ground (–):*** ***#2 (B134) No. 11 (+) — Chassis ground (–):*** ***#3 (B134) No. 12 (+) — Chassis ground (–):*** ***#4 (B134) No. 13 (+) — Chassis ground (–):***	Is the voltage 10 V or more?	Repair the short circuit to power in harness between ECM and fuel injector connector.	Go to step **7**.
7	**CHECK FUEL INJECTOR.** 1) Turn the ignition switch to OFF. 2) Measure the resistance between fuel injector terminals on faulty cylinder. ***Terminals*** ***No. 1 — No. 2:***	Is the resistance 5 — 20 Ω?	Go to step **8**.	Replace the faulty fuel injector. <Ref. to FU(H4SO)-37, Fuel Injector.>
8	**CHECK INSTALLATION CONDITION OF CAMSHAFT POSITION SENSOR/CRANKSHAFT POSITION SENSOR.**	Is the camshaft position sensor or crankshaft position sensor loosely installed?	Tighten the camshaft position sensor or crankshaft position sensor.	Go to step **9**.
9	**CHECK CRANK SPROCKET.** Remove the timing belt cover. <Ref. to ME(H4SO)-47, REMOVAL, Timing Belt Cover.>	Is the crank sprocket rusted or does it have broken teeth?	Replace the crank sprocket. <Ref. to ME(H4SO)-54, Crank Sprocket.>	Go to step **10**.
10	**CHECK INSTALLATION CONDITION OF TIMING BELT.** Turn the crankshaft using ST, and align the alignment mark on crank sprocket with alignment mark on cylinder block. ST 499987500 CRANKSHAFT SOCKET	Is the timing belt dislocated from its proper position?	Repair the installation condition of timing belt. <Ref. to ME(H4SO)-48, Timing Belt.>	Go to step **11**.
11	**CHECK FUEL LEVEL.**	Is the fuel meter indication higher than the “Lower” level?	Go to step **12**.	Refill the fuel so that the fuel meter indication is higher than the “Lower” level, and proceed to the next step. Go to step **12**.
12	**CHECK STATUS OF MALFUNCTION INDICATOR LIGHT.** 1) Clear the memory using the Subaru Select Monitor or general scan tool. <Ref. to EN(H4SO)(diag)-51, Clear Memory Mode.> 2) Start the engine, and drive the vehicle 10 minutes or more.	Does the malfunction indicator light illuminate or blink?	Go to step **14**.	Go to step **13**.

	Step	Check	Yes	No
13	**CHECK CAUSE OF MISFIRE.**	Was the cause of misfire identified when the engine is running?	Finish diagnostics operation, if the engine has no abnormality.	Repair the poor contact of connector. NOTE: In this case, repair the following item: • Poor contact of ignition coil connector • Poor contact of fuel injector connector on faulty cylinders • Poor contact of ECM connector • Poor contact of coupling connector
14	**CHECK AIR INTAKE SYSTEM.**	Is there any fault in air intake system?	Repair the air intake system. NOTE: Check the following items. • Are there air leaks or air suction caused by loose or dislocated nuts and bolts? • Are there cracks or any disconnection of hoses?	Go to step **15**.
15	**CHECK MISFIRE SYMPTOM.** 1) Turn the ignition switch to ON. 2) Check for DTC. <Ref. to EN(H4SO)(diag)-39, Read Diagnostic Trouble Code (DTC).>	Does the Subaru Select Monitor or general scan tool indicate only one DTC?	Go to step **18**.	Go to step **16**.
16	**CHECK DTC.**	Is DTC P0301 and P0303 displayed on the Subaru Select Monitor or general scan tool?	Go to step **19**.	Go to step **17**.
17	**CHECK DTC.**	Is DTC P0302 and P0304 displayed on the Subaru Select Monitor or general scan tool?	Go to step **20**.	Go to step **21**.
18	**ONLY ONE CYLINDER.**	Is there any fault in the cylinder?	Repair or replace faulty parts. NOTE: Check the following items. • Spark plug • Ignition coil • Fuel injector • Compression ratio	Go to DTC P0171. <Ref. to EN(H4SO)(diag)-149, DTC P0171 SYSTEM TOO LEAN (BANK 1), Diagnostic Procedure with Diagnostic Trouble Code (DTC).>

Step		Check	Yes	No
19	GROUP OF #1 AND #3 CYLINDERS.	Are there any faults in #1 and #3 cylinders?	Repair or replace faulty parts. NOTE: Check the following items. • Spark plug • Ignition coil • Fuel injector • Compression ratio • Skipping timing belt teeth	Go to DTC P0171. <Ref. to EN(H4SO)(diag)-149, DTC P0171 SYSTEM TOO LEAN (BANK 1), Diagnostic Procedure with Diagnostic Trouble Code (DTC).>
20	GROUP OF #2 AND #4 CYLINDERS.	Are there any faults in #2 and #4 cylinders?	Repair or replace faulty parts. NOTE: Check the following items. • Spark plug • Ignition coil • Fuel injector • Compression ratio • Skipping timing belt teeth	Go to DTC P0171. <Ref. to EN(H4SO)(diag)-149, DTC P0171 SYSTEM TOO LEAN (BANK 1), Diagnostic Procedure with Diagnostic Trouble Code (DTC).>
21	CYLINDER AT RANDOM.	Is the engine idle rough?	Go to DTC P0171. <Ref. to EN(H4SO)(diag)-149, DTC P0171 SYSTEM TOO LEAN (BANK 1), Diagnostic Procedure with Diagnostic Trouble Code (DTC).>	Repair or replace faulty parts. NOTE: Check the following items. • Spark plug • Ignition coil • Fuel injector • Compression ratio

BJ:DTC P0327 KNOCK SENSOR 1 CIRCUIT LOW (BANK 1 OR SINGLE SENSOR)

DTC DETECTING CONDITION:

- Immediately at fault recognition
- GENERAL DESCRIPTION <Ref. to GD(H4SO)-122, DTC P0327 KNOCK SENSOR 1 CIRCUIT LOW (BANK 1 OR SINGLE SENSOR), Diagnostic Trouble Code (DTC) Detecting Criteria.>

TROUBLE SYMPTOM:

- Poor driving performance
- Knocking occurs.

CAUTION:

After servicing or replacing faulty parts, perform Clear Memory Mode <Ref. to EN(H4SO)(diag)-51, OPERATION, Clear Memory Mode.>, and Inspection Mode <Ref. to EN(H4SO)(diag)-40, PROCEDURE, Inspection Mode.>.

WIRING DIAGRAM:

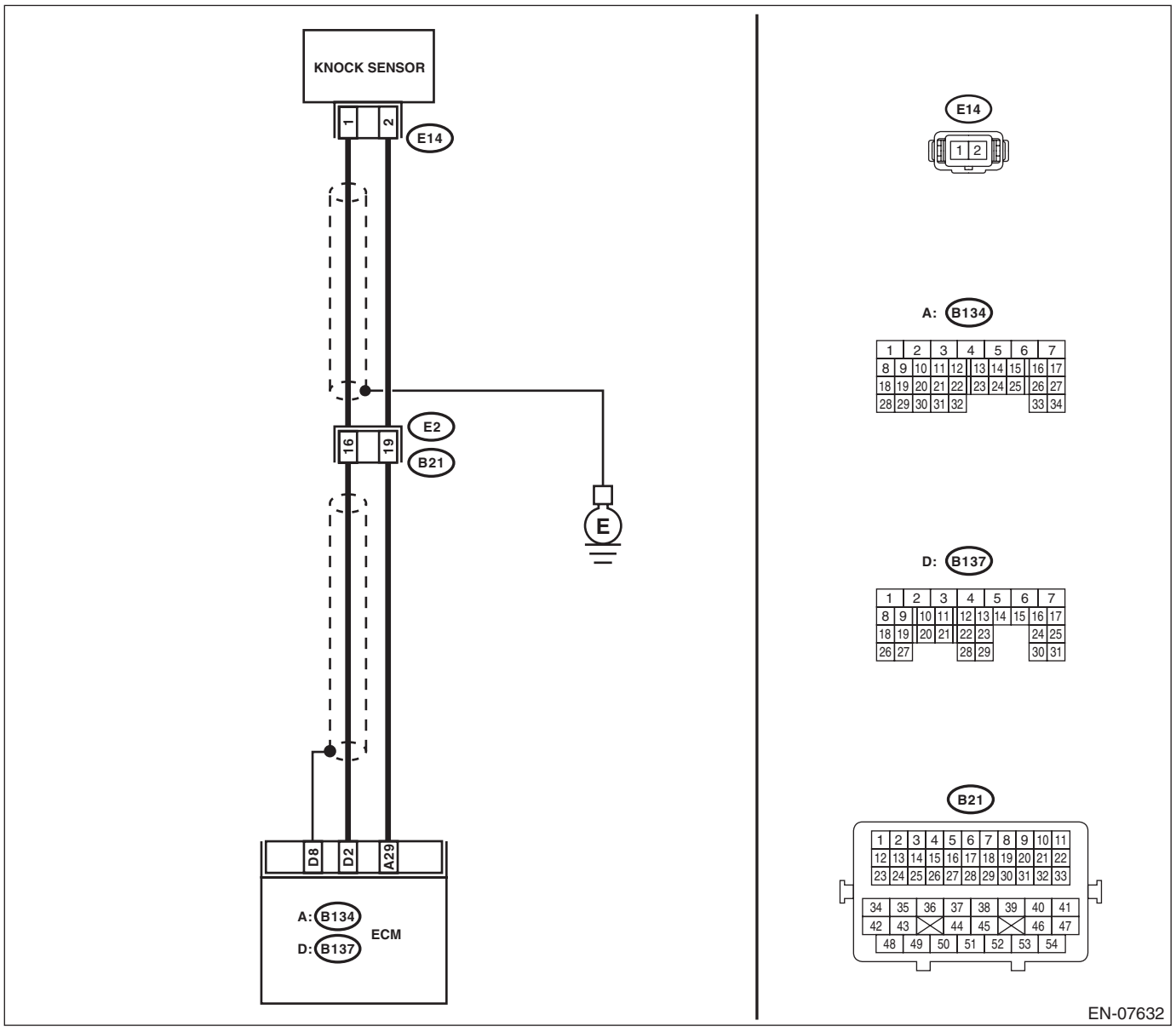

	Step	Check	Yes	No
1	**CHECK HARNESS BETWEEN ECM AND KNOCK SENSOR CONNECTOR.** 1) Turn the ignition switch to OFF. 2) Disconnect the connectors from ECM. 3) Measure the resistance between ECM connectors. ***Connector & terminal*** ***(B137) No. 2 — (B134) No. 29:***	Is the resistance 600 kΩ or more?	Go to step **2**.	Repair the poor contact of ECM connector.
2	**CHECK KNOCK SENSOR.** 1) Disconnect the connector from the knock sensor. 2) Measure the resistance between knock sensor terminals. ***Terminals*** ***No. 1 — No. 2:***	Is the resistance 600 kΩ or more?	Replace the knock sensor. <Ref. to FU(H4SO)-29, Knock Sensor.>	Repair the harness and connector. NOTE: In this case, repair the following item: • Open circuit in harness between ECM and knock sensor connector • Poor contact of knock sensor connector • Poor contact of coupling connector

BK:DTC P0328 KNOCK SENSOR 1 CIRCUIT HIGH (BANK 1 OR SINGLE SENSOR)

DTC DETECTING CONDITION:

- Immediately at fault recognition
- GENERAL DESCRIPTION <Ref. to GD(H4SO)-124, DTC P0328 KNOCK SENSOR 1 CIRCUIT HIGH (BANK 1 OR SINGLE SENSOR), Diagnostic Trouble Code (DTC) Detecting Criteria.>

TROUBLE SYMPTOM:

- Poor driving performance
- Knocking occurs.

CAUTION:

After servicing or replacing faulty parts, perform Clear Memory Mode <Ref. to EN(H4SO)(diag)-51, OPERATION, Clear Memory Mode.>, and Inspection Mode <Ref. to EN(H4SO)(diag)-40, PROCEDURE, Inspection Mode.>.

WIRING DIAGRAM:

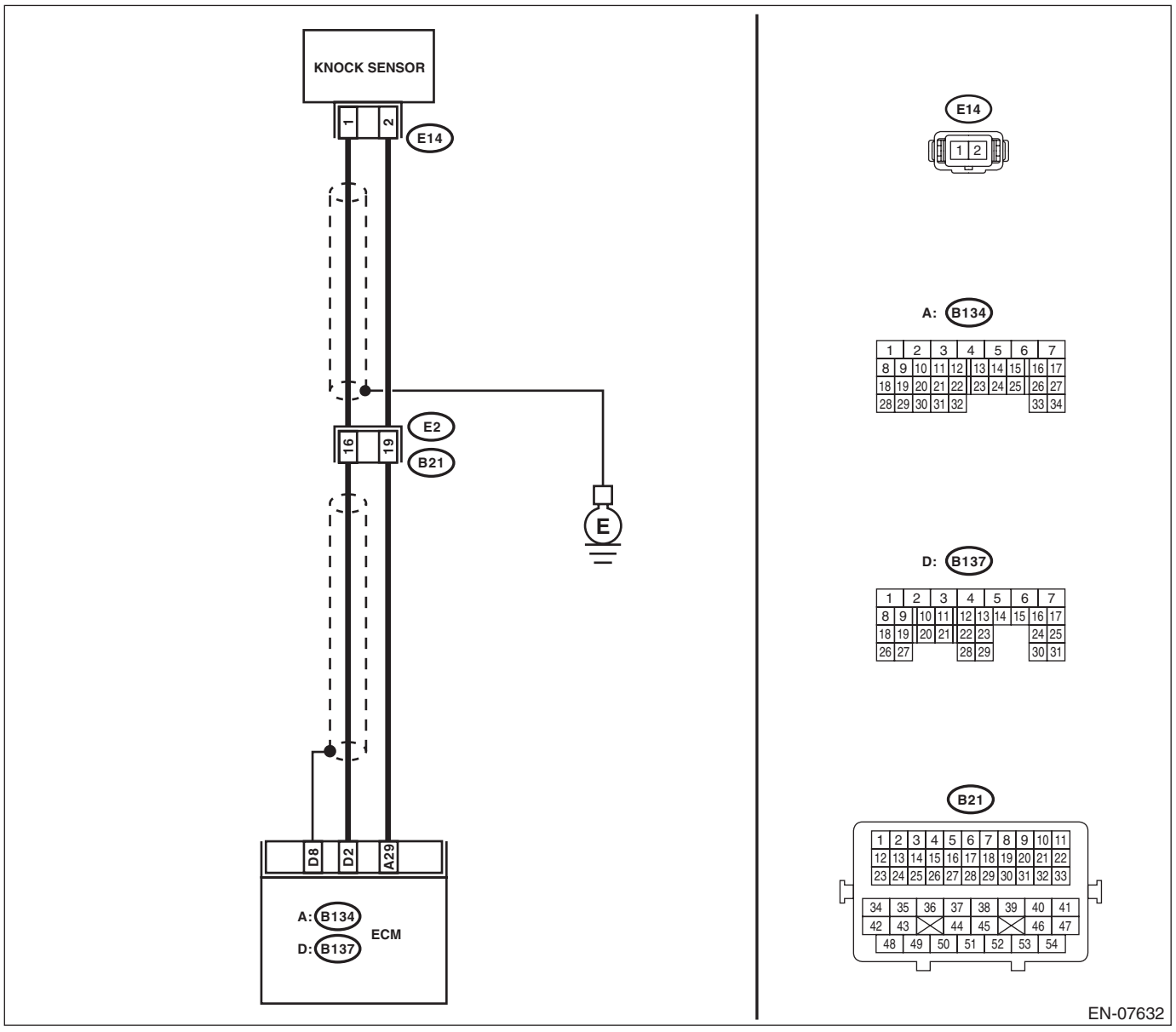

	Step	Check	Yes	No
1	**CHECK HARNESS BETWEEN ECM AND KNOCK SENSOR CONNECTOR.** 1) Turn the ignition switch to OFF. 2) Disconnect the connectors from ECM. 3) Measure the resistance between ECM connectors. ***Connector & terminal*** ***(B137) No. 2 — (B134) No. 29:***	Is the resistance less than 500 kΩ?	Go to step **2**.	Go to step **3**.
2	**CHECK KNOCK SENSOR.** 1) Disconnect the connector from the knock sensor. 2) Measure the resistance between knock sensor terminals. ***Terminals*** ***No. 1 — No. 2:***	Is the resistance less than 500 kΩ?	Replace the knock sensor. <Ref. to FU(H4SO)-29, Knock Sensor.>	Repair the short circuit to ground in harness between ECM and knock sensor connector. NOTE: The harness between both connectors are shielded. Remove the shield and repair the short circuit of harness.
3	**CHECK INPUT SIGNAL OF ECM.** 1) Connect the connector to ECM. 2) Turn the ignition switch to ON. 3) Measure the voltage between ECM and chassis ground. ***Connector & terminal*** ***(B137) No. 2 (+) — Chassis ground (–):***	Is the voltage 2 V or more?	Even if DTC is detected, the circuit has returned to a normal condition at this time. Reproduce the failure, and then perform the diagnosis again. NOTE: In this case, temporary poor contact of connector, temporary open or short circuit of harness may be the cause.	Repair the poor contact of ECM connector.

BL:DTC P0335 CRANKSHAFT POSITION SENSOR “A” CIRCUIT

DTC DETECTING CONDITION:

- Immediately at fault recognition
- GENERAL DESCRIPTION <Ref. to GD(H4SO)-126, DTC P0335 CRANKSHAFT POSITION SENSOR “A” CIRCUIT, Diagnostic Trouble Code (DTC) Detecting Criteria.>

TROUBLE SYMPTOM:

- Engine stalls.
- Failure of engine to start

CAUTION:

After servicing or replacing faulty parts, perform Clear Memory Mode <Ref. to EN(H4SO)(diag)-51, OPERATION, Clear Memory Mode.>, and Inspection Mode <Ref. to EN(H4SO)(diag)-40, PROCEDURE, Inspection Mode.>.

WIRING DIAGRAM:

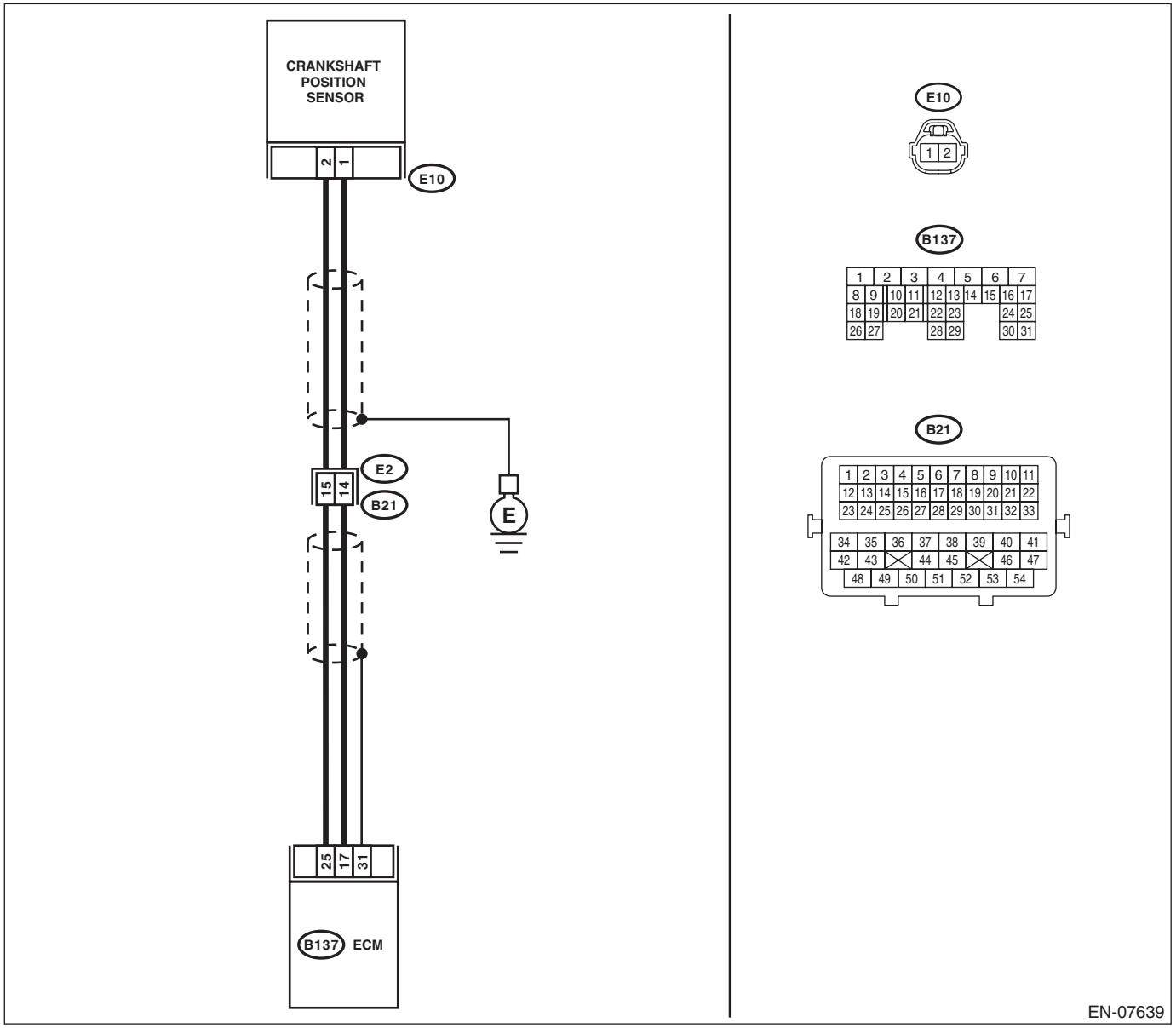

	Step	Check	Yes	No
1	**CHECK INSTALLATION CONDITION OF CRANKSHAFT POSITION SENSOR.**	Is the crankshaft position sensor installation bolt tightened securely?	Go to step **2**.	Tighten the crankshaft position sensor installation bolt securely. <Ref. to FU(H4SO)-25, Crankshaft Position Sensor.>
2	**CHECK CRANKSHAFT POSITION SENSOR.** 1) Turn the ignition switch to OFF. 2) Remove the crankshaft position sensor. 3) Measure the resistance between terminals of crankshaft position sensor connector. ***Terminals*** ***No. 1 — No. 2:***	Is the resistance between 1 and 4 kΩ?	Go to step **3**.	Replace the crankshaft position sensor. <Ref. to FU(H4SO)-25, Crankshaft Position Sensor.>
3	**CHECK HARNESS BETWEEN ECM AND CRANKSHAFT POSITION SENSOR CONNECTOR.** 1) Disconnect the connectors from ECM. 2) Measure the resistance of harness between ECM and crankshaft position sensor connector. ***Connector & terminal*** ***(B137) No. 17 — (E10) No. 1:*** ***(B137) No. 25 — (E10) No. 2:***	Is the resistance less than 1 Ω?	Repair the poor contact of ECM and crankshaft position sensor connector.	Repair the harness and connector. NOTE: In this case, repair the following item: • Open circuit in harness between ECM and crankshaft position sensor connector • Poor contact of coupling connector

BM:DTC P0336 CRANKSHAFT POSITION SENSOR “A” CIRCUIT RANGE/PERFORMANCE

DTC DETECTING CONDITION:

- Detected when two consecutive driving cycles with fault occur.
- GENERAL DESCRIPTION <Ref. to GD(H4SO)-128, DTC P0336 CRANKSHAFT POSITION SENSOR “A” CIRCUIT RANGE/PERFORMANCE, Diagnostic Trouble Code (DTC) Detecting Criteria.>

TROUBLE SYMPTOM:

- Engine stalls.
- Failure of engine to start

CAUTION:

After servicing or replacing faulty parts, perform Clear Memory Mode <Ref. to EN(H4SO)(diag)-51, OPERATION, Clear Memory Mode.>, and Inspection Mode <Ref. to EN(H4SO)(diag)-40, PROCEDURE, Inspection Mode.>.

	Step	Check	Yes	No
1	**CHECK CONDITION OF CRANKSHAFT POSITION SENSOR.** Turn the ignition switch to OFF.	Is the crankshaft position sensor installation bolt tightened securely?	Go to step **2**.	Tighten the crankshaft position sensor installation bolt securely. <Ref. to FU(H4SO)-25, Crankshaft Position Sensor.>
2	**CHECK CRANK SPROCKET.** Remove the timing belt cover.	Are crank sprocket teeth cracked or damaged?	Replace the crank sprocket. <Ref. to ME(H4SO)-54, Crank Sprocket.>	Go to step **3**.
3	**CHECK INSTALLATION CONDITION OF TIMING BELT.** Turn the crankshaft, and align alignment mark on crank sprocket with alignment mark on cylinder block. ST 499987500 CRANKSHAFT SOCKET	Is the timing belt dislocated from its proper position?	Repair the installation condition of timing belt. <Ref. to ME(H4SO)-48, Timing Belt.>	Replace the crankshaft position sensor. <Ref. to FU(H4SO)-25, Crankshaft Position Sensor.>

BN:DTC P0340 CAMSHAFT POSITION SENSOR “A” CIRCUIT (BANK 1 OR SINGLE SENSOR)

DTC DETECTING CONDITION:

- Immediately at fault recognition
- GENERAL DESCRIPTION <Ref. to GD(H4SO)-130, DTC P0340 CAMSHAFT POSITION SENSOR “A” CIRCUIT (BANK 1 OR SINGLE SENSOR), Diagnostic Trouble Code (DTC) Detecting Criteria.>

TROUBLE SYMPTOM:

- Engine stalls.
- Failure of engine to start

CAUTION:
After servicing or replacing faulty parts, perform Clear Memory Mode <Ref. to EN(H4SO)(diag)-51, OPERATION, Clear Memory Mode.>, and Inspection Mode <Ref. to EN(H4SO)(diag)-40, PROCEDURE, Inspection Mode.>.

WIRING DIAGRAM:

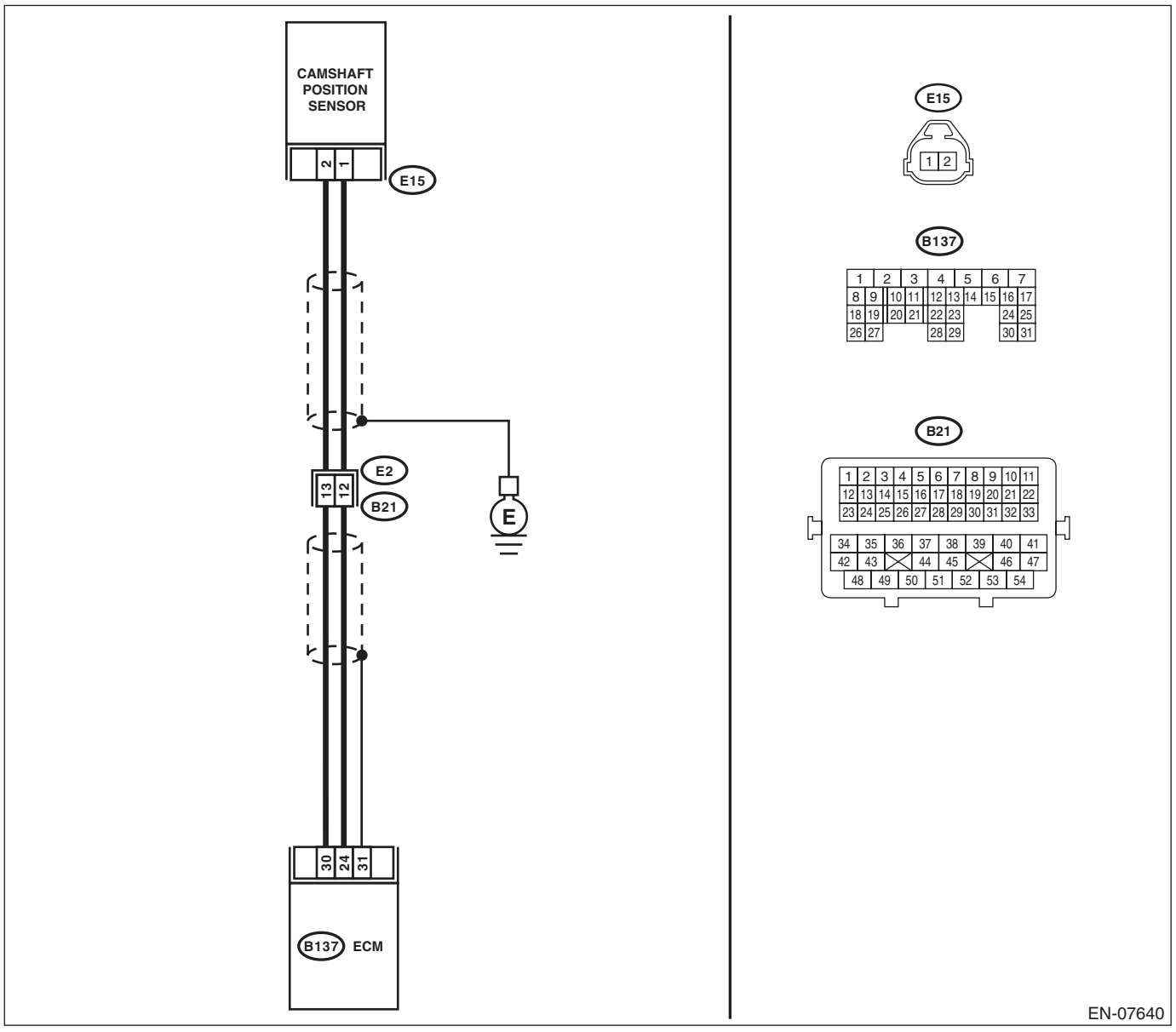

	Step	Check	Yes	No
1	**CHECK HARNESS BETWEEN ECM AND CAMSHAFT POSITION SENSOR CONNECTOR.** 1) Turn the ignition switch to OFF. 2) Disconnect the connectors from ECM and camshaft position sensor. 3) Measure the resistance of harness between ECM and camshaft position sensor connector. ***Connector & terminal*** ***(B137) No. 24 — (E15) No. 1:*** ***(B137) No. 30 — (E15) No. 2:***	Is the resistance less than 1 Ω?	Go to step **2**.	Repair the harness and connector. NOTE: In this case, repair the following item: • Open circuit in harness between ECM and camshaft position sensor connector • Poor contact of ECM connector • Poor contact of coupling connector
2	**CHECK HARNESS BETWEEN ECM AND CAMSHAFT POSITION SENSOR CONNECTOR.** Measure the resistance between camshaft position sensor connector and engine ground. ***Connector & terminal*** ***(E15) No. 1 — Engine ground:***	Is the resistance 1 MΩ or more?	Go to step **3**.	Repair short circuit to ground in harness between ECM and camshaft position sensor connector. NOTE: The harness between both connectors are shielded. Remove the shield and repair the ground short circuit of the harness circuit.
3	**CHECK INSTALLATION CONDITION OF CAMSHAFT POSITION SENSOR.**	Is the camshaft position sensor installation bolt tightened securely?	Go to step **4**.	Tighten the camshaft position sensor installation bolt securely. <Ref. to FU(H4SO)-27, Camshaft Position Sensor.>
4	**CHECK CAMSHAFT POSITION SENSOR.** 1) Remove the camshaft position sensor. 2) Measure the resistance between terminals of camshaft position sensor connector. ***Terminals*** ***No. 1 — No. 2:***	Is the resistance between 1 and 4 kΩ?	Repair the poor contact of ECM or camshaft position sensor connector.	Replace the camshaft position sensor. <Ref. to FU(H4SO)-27, Camshaft Position Sensor.>

BO:DTC P0341 CAMSHAFT POSITION SENSOR “A” CIRCUIT RANGE/PERFORMANCE (BANK 1 OR SINGLE SENSOR)

DTC DETECTING CONDITION:

- Detected when two consecutive driving cycles with fault occur.
- GENERAL DESCRIPTION <Ref. to GD(H4SO)-132, DTC P0341 CAMSHAFT POSITION SENSOR “A” CIRCUIT RANGE/PERFORMANCE (BANK 1 OR SINGLE SENSOR), Diagnostic Trouble Code (DTC) Detecting Criteria.>

TROUBLE SYMPTOM:

- Engine stalls.
- Failure of engine to start

CAUTION:

After servicing or replacing faulty parts, perform Clear Memory Mode <Ref. to EN(H4SO)(diag)-51, OPERATION, Clear Memory Mode.>, and Inspection Mode <Ref. to EN(H4SO)(diag)-40, PROCEDURE, Inspection Mode.>.

WIRING DIAGRAM:

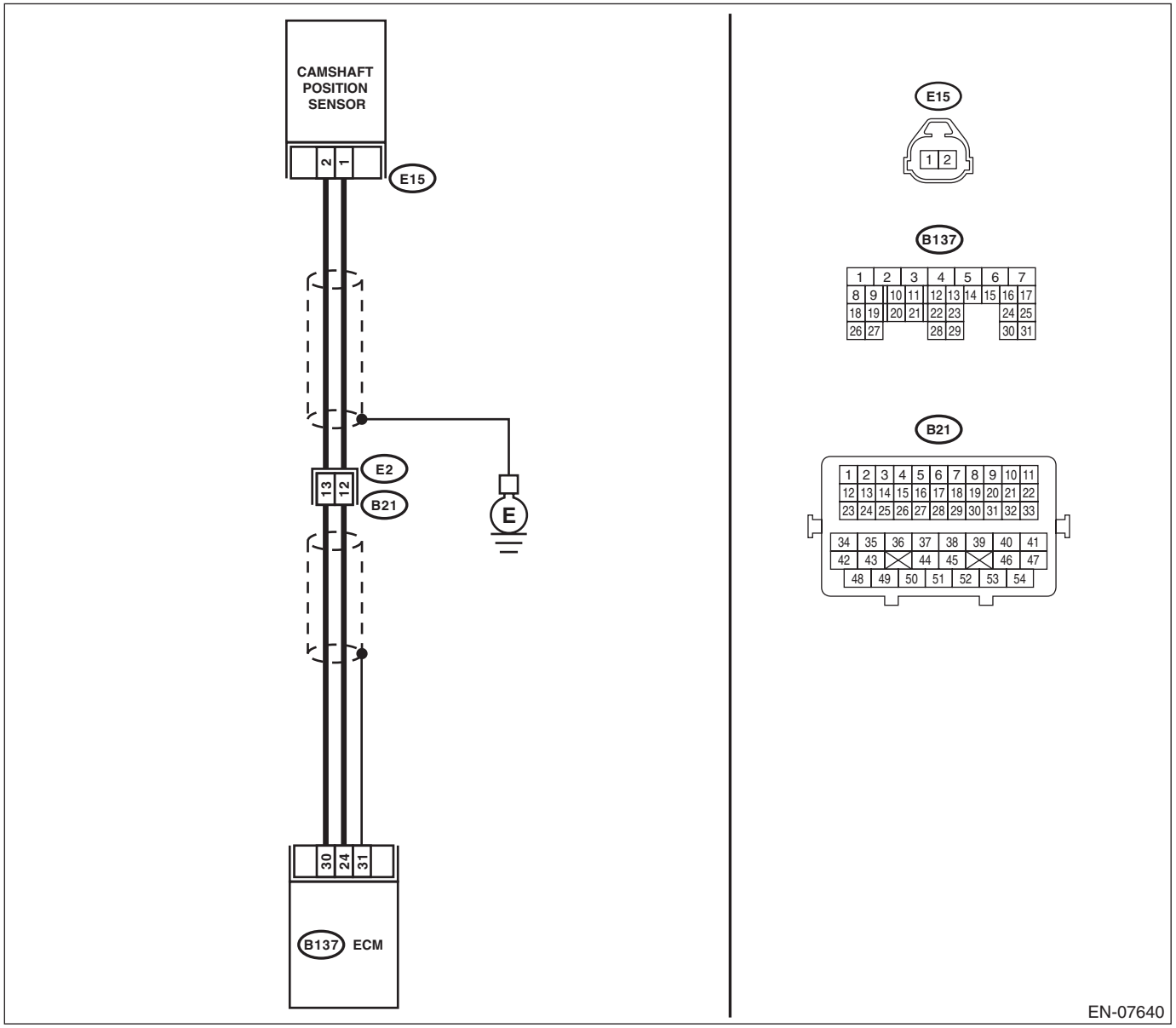

	Step	Check	Yes	No
1	**CHECK HARNESS BETWEEN ECM AND CAMSHAFT POSITION SENSOR CONNECTOR.** 1) Turn the ignition switch to OFF. 2) Disconnect the connectors from ECM and camshaft position sensor. 3) Measure the resistance of harness between ECM and camshaft position sensor connector. ***Connector & terminal*** ***(B137) No. 24 — (E15) No. 1:*** ***(B137) No. 30 — (E15) No. 2:***	Is the resistance less than 1 Ω?	Go to step **2**.	Repair the harness and connector. NOTE: In this case, repair the following item: • Open circuit in harness between ECM and camshaft position sensor connector • Poor contact of ECM connector • Poor contact of coupling connector
2	**CHECK HARNESS BETWEEN ECM AND CAMSHAFT POSITION SENSOR CONNECTOR.** Measure the resistance between camshaft position sensor connector and engine ground. ***Connector & terminal*** ***(E15) No. 1 — Engine ground:***	Is the resistance 1 MΩ or more?	Go to step **3**.	Repair short circuit to ground in harness between ECM and camshaft position sensor connector. NOTE: The harness between both connectors are shielded. Remove the shield and repair the ground short circuit of the harness circuit.
3	**CHECK INSTALLATION CONDITION OF CAMSHAFT POSITION SENSOR.**	Is the camshaft position sensor installation bolt tightened securely?	Go to step **4**.	Tighten the camshaft position sensor installation bolt securely. <Ref. to FU(H4SO)-27, Camshaft Position Sensor.>
4	**CHECK CAMSHAFT POSITION SENSOR.** 1) Remove the camshaft position sensor. 2) Measure the resistance between terminals of camshaft position sensor connector. ***Terminals*** ***No. 1 — No. 2:***	Is the resistance between 1 and 4 kΩ?	Go to step **5**.	Replace the camshaft position sensor. <Ref. to FU(H4SO)-27, Camshaft Position Sensor.>
5	**CHECK CAM SPROCKET.** Remove the timing belt cover. <Ref. to ME(H4SO)-47, Timing Belt Cover.>	Are cam sprocket teeth cracked or damaged?	Replace the cam sprocket. <Ref. to ME(H4SO)-53, Cam Sprocket.>	Go to step **6**.
6	**CHECK INSTALLATION CONDITION OF TIMING BELT.** Turn the crankshaft using the ST, and align the alignment mark on the cam sprocket with the alignment mark on the timing belt cover LH. ST 499987500 CRANKSHAFT SOCKET	Is the timing belt dislocated from its proper position?	Repair the installation condition of timing belt. <Ref. to ME(H4SO)-48, Timing Belt.>	Replace the camshaft position sensor. <Ref. to FU(H4SO)-27, Camshaft Position Sensor.>

BP:DTC P0351 IGNITION COIL A PRIMARY/SECONDARY CIRCUIT

DTC DETECTING CONDITION:

- Immediately at fault recognition
- GENERAL DESCRIPTION <Ref. to GD(H4SO)-134, DTC P0351 IGNITION COIL A PRIMARY/SECONDARY CIRCUIT, Diagnostic Trouble Code (DTC) Detecting Criteria.>

TROUBLE SYMPTOM:

- Improper idling
- Poor driving performance

CAUTION:

After servicing or replacing faulty parts, perform Clear Memory Mode <Ref. to EN(H4SO)(diag)-51, OPERATION, Clear Memory Mode.>, and Inspection Mode <Ref. to EN(H4SO)(diag)-40, PROCEDURE, Inspection Mode.>.

WIRING DIAGRAM:

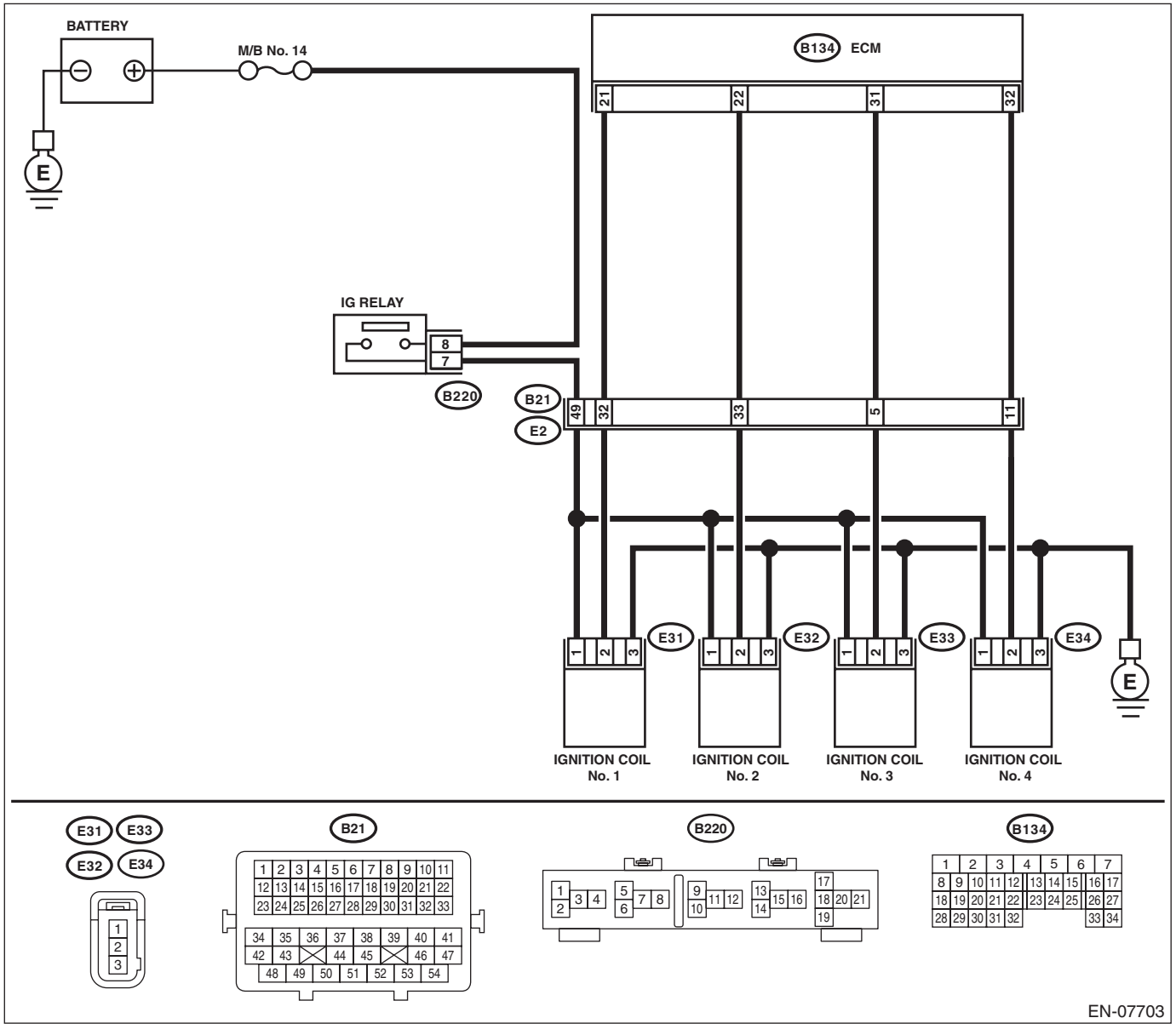

	Step	Check	Yes	No
1	**CHECK IGNITION COIL POWER SUPPLY CIRCUIT.** 1) Turn the ignition switch to OFF. 2) Disconnect the connector from ignition coil. 3) Turn the ignition switch to ON. 4) Measure the voltage between ignition coil connector and engine ground. ***Connector & terminal*** ***DTC P0351; (E31) No. 1 (+) — Engine ground (–):*** ***DTC P0352; (E32) No. 1 (+) — Engine ground (–):*** ***DTC P0353; (E33) No. 1 (+) — Engine ground (–):*** ***DTC P0354; (E34) No. 1 (+) — Engine ground (–):***	Is the voltage 10 V or more?	Go to step **2**.	Repair the harness and connector. NOTE: In this case, repair the following item: • Open circuit or short circuit to ground in harness of power supply circuit • Blown out of fuse (M/B No. 14) • Poor contact of IG relay connector • Poor contact of coupling connector • Faulty IG relay
2	**CHECK HARNESS OF IGNITION COIL GROUND CIRCUIT.** 1) Turn the ignition switch to OFF. 2) Measure the resistance of harness between ignition coil connector and engine ground. ***Connector & terminal*** ***DTC P0351; (E31) No. 3 — Engine ground:*** ***DTC P0352; (E32) No. 3 — Engine ground:*** ***DTC P0353; (E33) No. 3 — Engine ground:*** ***DTC P0354; (E34) No. 3 — Engine ground:***	Is the resistance less than 5 Ω?	Go to step **3**.	Repair the open circuit in harness between ignition coil connector and engine grounding terminal.
3	**CHECK HARNESS BETWEEN ECM AND IGNITION COIL CONNECTOR.** 1) Disconnect the connector from ECM. 2) Measure the resistance between ignition coil connector and engine ground. ***Connector & terminal*** ***DTC P0351; (E31) No. 2 — Engine ground:*** ***DTC P0352; (E32) No. 2 — Engine ground:*** ***DTC P0353; (E33) No. 2 — Engine ground:*** ***DTC P0354; (E34) No. 2 — Engine ground:***	Is the resistance 1 MΩ or more?	Go to step **4**.	Repair the ground short circuit of harness between ECM connector and ignition coil connector.
4	**CHECK HARNESS BETWEEN ECM AND IGNITION COIL CONNECTOR.** Measure the resistance of harness between ECM connector and ignition coil connector. ***Connector & terminal*** ***DTC P0351; (B134) No. 21 — (E31) No. 2:*** ***DTC P0352; (B134) No. 22 — (E32) No. 2:*** ***DTC P0353; (B134) No. 31 — (E33) No. 2:*** ***DTC P0354; (B134) No. 32 — (E34) No. 2:***	Is the resistance less than 1 Ω?	Go to step **5**.	Repair the harness and connector. NOTE: In this case, repair the following item: • Open circuit of harness between ECM connector and the ignition coil connector • Poor contact of coupling connector
5	**CHECK FOR POOR CONTACT.** Check for poor contact of ECM connector.	Is there poor contact of ECM connector?	Repair the poor contact of ECM connector.	Go to step **6**.
6	**CHECK SPARK PLUG CONDITION.** 1) Remove the spark plug of the corresponding cylinder. <Ref. to IG(H4SO)-3, REMOVAL, Spark Plug.> 2) Check the spark plug condition. <Ref. to IG(H4SO)-3, INSPECTION, Spark Plug.>	Is the spark plug condition normal?	Replace the ignition coil. <Ref. to IG(H4SO)-5, Ignition Coil.>	Replace the spark plug. <Ref. to IG(H4SO)-3, Spark Plug.>

BQ:DTC P0352 IGNITION COIL B PRIMARY/SECONDARY CIRCUIT

NOTE:
For the diagnostic procedure, refer to DTC P0351. <Ref. to EN(H4SO)(diag)-186, DTC P0351 IGNITION COIL A PRIMARY/SECONDARY CIRCUIT, Diagnostic Procedure with Diagnostic Trouble Code (DTC).>

BR:DTC P0353 IGNITION COIL C PRIMARY/SECONDARY CIRCUIT

NOTE:
For the diagnostic procedure, refer to DTC P0351. <Ref. to EN(H4SO)(diag)-186, DTC P0351 IGNITION COIL A PRIMARY/SECONDARY CIRCUIT, Diagnostic Procedure with Diagnostic Trouble Code (DTC).>

BS:DTC P0354 IGNITION COIL D PRIMARY/SECONDARY CIRCUIT

NOTE:
For the diagnostic procedure, refer to DTC P0351. <Ref. to EN(H4SO)(diag)-186, DTC P0351 IGNITION COIL A PRIMARY/SECONDARY CIRCUIT, Diagnostic Procedure with Diagnostic Trouble Code (DTC).>

BT:DTC P0400 EXHAUST GAS RECIRCULATION FLOW

DTC DETECTING CONDITION:

- Detected when two consecutive driving cycles with fault occur.
- GENERAL DESCRIPTION <Ref. to GD(H4SO)-135, DTC P0400 EXHAUST GAS RECIRCULATION FLOW, Diagnostic Trouble Code (DTC) Detecting Criteria.>

TROUBLE SYMPTOM:

- Movement performance problem when engine is low speed.
- Improper idling
- Movement performance problem

CAUTION:
After servicing or replacing faulty parts, perform Clear Memory Mode <Ref. to EN(H4SO)(diag)-51, OPERATION, Clear Memory Mode.>, and Inspection Mode <Ref. to EN(H4SO)(diag)-40, PROCEDURE, Inspection Mode.>.

	Step	Check	Yes	No
1	**CHECK CURRENT DATA.** 1) Start the engine. 2) Read the value of «Mani. Absolute Pressure» using the Subaru Select Monitor or a general scan tool. NOTE: • Subaru Select Monitor For detailed operation procedures, refer to “READ CURRENT DATA FOR ENGINE”. <Ref. to EN(H4SO)(diag)-33, Subaru Select Monitor.> • General scan tool For detailed operation procedures, refer to the general scan tool operation manual.	Is the value of «Mani. Absolute Pressure» 53.3 kPa (400 mmHg, 15.75 inHg) or more?	Make sure that the EGR control valve, manifold absolute pressure sensor and throttle body are installed securely.	Go to step **2**.
2	**CHECK EGR CONTROL VALVE.** Remove the EGR control valve.	Are there any holes, clogged lines or foreign matters in the EGR system?	Repair the EGR system.	Replace EGR control valve. <Ref. to FU(H4SO)-36, EGR Valve.>

BU:DTC P0420 CATALYST SYSTEM EFFICIENCY BELOW THRESHOLD (BANK 1)

DTC DETECTING CONDITION:

- Detected when two consecutive driving cycles with fault occur.
- GENERAL DESCRIPTION <Ref. to GD(H4SO)-138, DTC P0420 CATALYST SYSTEM EFFICIENCY BELOW THRESHOLD (BANK 1), Diagnostic Trouble Code (DTC) Detecting Criteria.>

TROUBLE SYMPTOM:

- Engine stalls.
- Idle mixture is out of specifications.

CAUTION:
After servicing or replacing faulty parts, perform Clear Memory Mode <Ref. to EN(H4SO)(diag)-51, OPERATION, Clear Memory Mode.>, and Inspection Mode <Ref. to EN(H4SO)(diag)-40, PROCEDURE, Inspection Mode.>.

WIRING DIAGRAM:

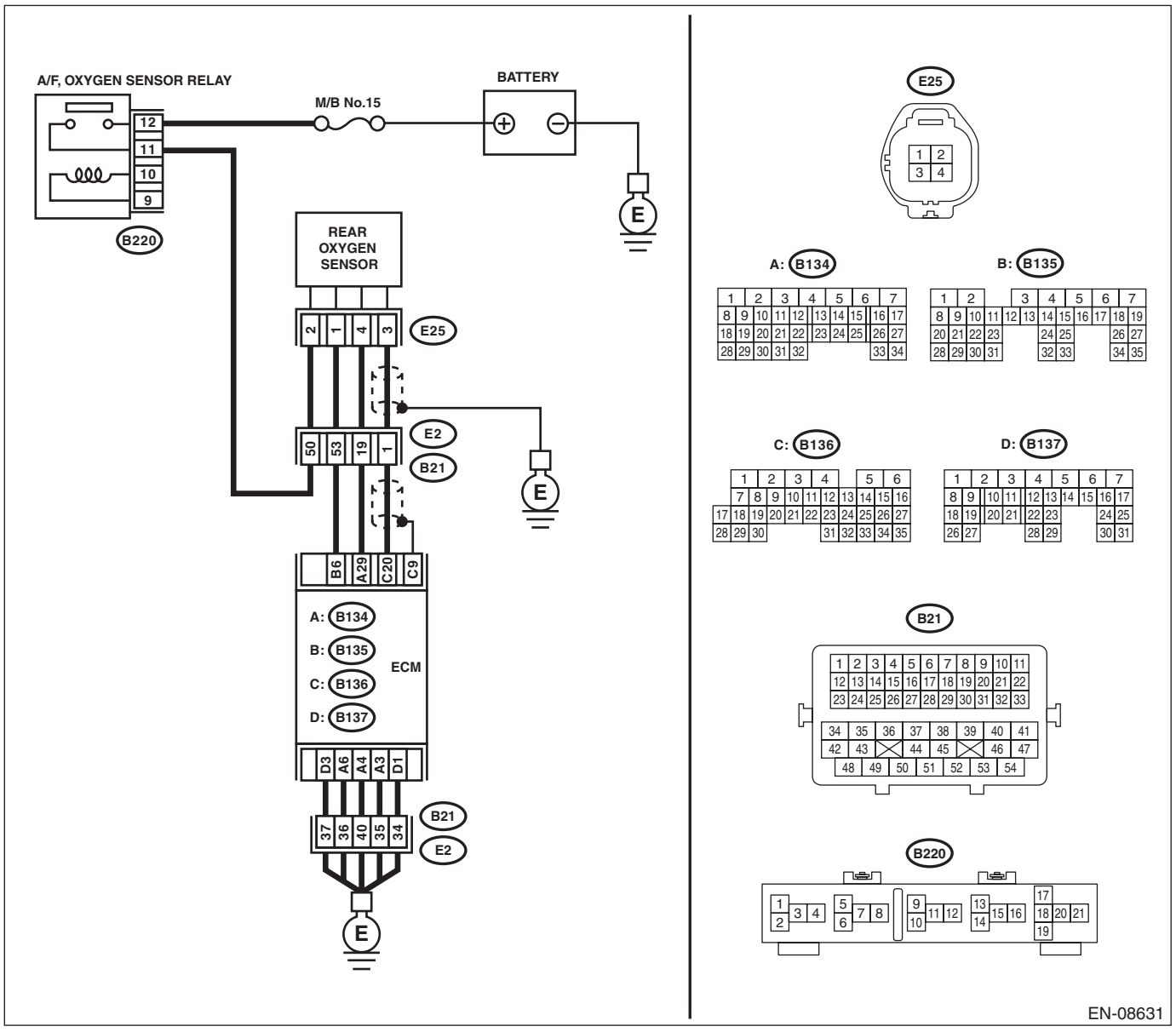

	Step	Check	Yes	No
1	**CHECK EXHAUST SYSTEM.** Check for gas leaks or air suction caused by loose or dislocated nuts and bolts, and open hole at exhaust pipes. NOTE: Check the following positions. • Between cylinder head and front exhaust pipe • Between front exhaust pipe and front catalytic converter • Between front catalytic converter and rear catalytic converter • Loose or improperly attached front oxygen (A/F) sensor or rear oxygen sensor	Is there any fault in exhaust system?	Repair or replace the exhaust system. <Ref. to EX(H4SO)-2, General Description.>	Go to step **2**.
2	**CHECK WAVEFORM DATA ON THE SUBARU SELECT MONITOR (WHILE DRIVING).** 1) Drive at a constant speed between 80 — 112 km/h (50 — 70 MPH). 2) After 5 minutes have elapsed in the condition of step 1), use the Subaru Select Monitor while still driving to read the waveform data. • At normal condition 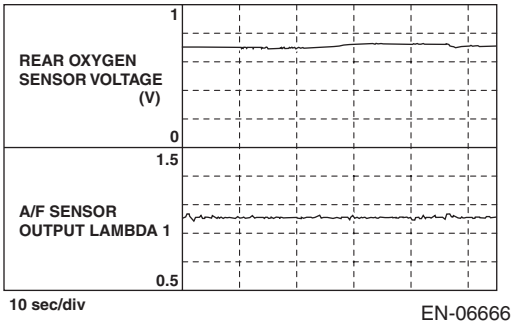 EN-06666 • At abnormal condition (numerous inversion) 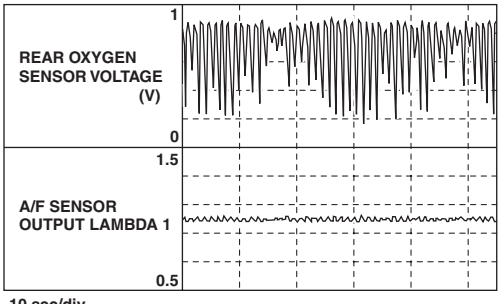 EN-06667	Is a normal waveform displayed?	Even if DTC is detected, the circuit has returned to a normal condition at this time. Reproduce the failure, and then perform the diagnosis again. NOTE: In this case, temporary poor contact of connector, temporary open or short circuit of harness may be the cause.	Go to step **3**.

	Step	Check	Yes	No
3	**CHECK WAVEFORM DATA ON THE SUBARU SELECT MONITOR (WHILE IDLING).** 1) Run the engine at idle. 2) In the condition of step 1), use the Subaru Select Monitor to read the waveform data. • At normal condition 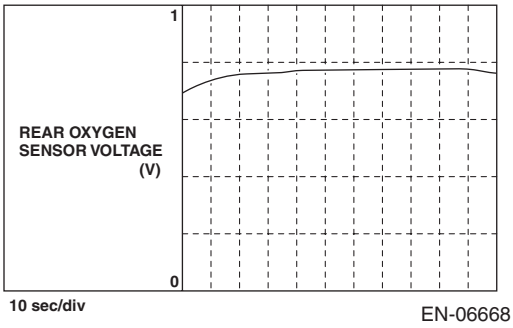 EN-06668 • At abnormal condition 1 (numerous inversion) 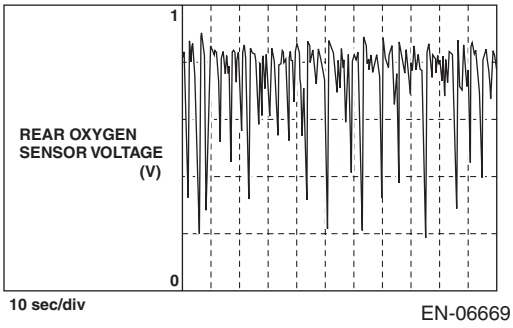 EN-06669 • At abnormal condition 2 (noise input) 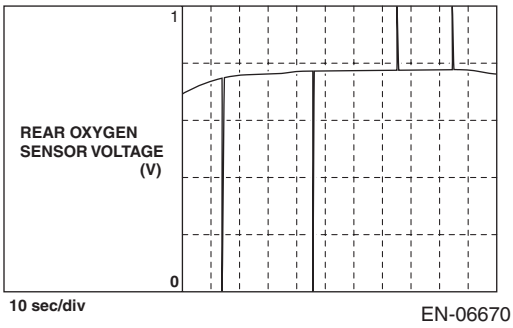 EN-06670	Is a normal waveform displayed?	Go to step **4**.	• The waveform is displayed at abnormal condition 1: Go to step **4**. • The waveform is displayed at abnormal condition 2: Go to step **5**.
4	**CHECK CATALYTIC CONVERTER.**	Is the catalytic converter damaged?	Replace the catalytic converter. <Ref. to EC(H4SO)-3, Front Catalytic Converter.>	Go to step **5**.
5	**CHECK REAR OXYGEN SENSOR CONNECTOR AND COUPLING CONNECTOR.**	Has water entered the connector?	Completely remove any water inside.	Go to step **6**.

	Step	Check	Yes	No
6	**CHECK HARNESS BETWEEN ECM AND REAR OXYGEN SENSOR CONNECTOR.** 1) Turn the ignition switch to OFF. 2) Disconnect the connector from ECM and rear oxygen sensor. 3) Measure the resistance of harness between ECM and rear oxygen sensor connector. ***Connector & terminal*** ***(B136) No. 20 — (E25) No. 3:*** ***(B134) No. 29 — (E25) No. 4:***	Is the resistance less than 1 Ω?	Go to step **7**.	Repair the harness and connector. NOTE: In this case, repair the following item: • Open circuit in harness between ECM and rear oxygen sensor connector • Poor contact of coupling connector
7	**CHECK HARNESS BETWEEN ECM AND REAR OXYGEN SENSOR CONNECTOR.** 1) Connect the connector to ECM. 2) Turn the ignition switch to ON. 3) Measure the voltage between rear oxygen sensor connector and chassis ground. ***Connector & terminal*** ***(E25) No. 3 (+) — Chassis ground (–):***	Is the voltage 0.2 — 0.5 V?	Go to step **8**.	Repair the harness and connector. NOTE: Repair the following locations. • Open circuit in harness between ECM and rear oxygen sensor connector • Poor contact of coupling connector • Poor contact of ECM connector
8	**CHECK REAR OXYGEN SENSOR SHIELD.** 1) Turn the ignition switch to OFF. 2) Expose the rear oxygen sensor connector body side harness sensor shield. 3) Measure the resistance between sensor shield and chassis ground.	Is the resistance less than 1 Ω?	Replace the rear oxygen sensor. <Ref. to FU(H4SO)-44, Rear Oxygen Sensor.>	Repair the open circuit of rear oxygen sensor harness.

BV:DTC P0442 EVAPORATIVE EMISSION CONTROL SYSTEM LEAK DETECTED (SMALL LEAK)

DTC DETECTING CONDITION:

- Detected when two consecutive driving cycles with fault occur.
- GENERAL DESCRIPTION <Ref. to GD(H4SO)-141, DTC P0442 EVAPORATIVE EMISSION CONTROL SYSTEM LEAK DETECTED (SMALL LEAK), Diagnostic Trouble Code (DTC) Detecting Criteria.>

TROUBLE SYMPTOM:

- Fuel odor
- There is a hole of more than 1.0 mm (0.04 in) dia. in evaporation system or fuel tank.

CAUTION:
After servicing or replacing faulty parts, perform Clear Memory Mode <Ref. to EN(H4SO)(diag)-51, OPERATION, Clear Memory Mode.>, and Inspection Mode <Ref. to EN(H4SO)(diag)-40, PROCEDURE, Inspection Mode.>.

	Step	Check	Yes	No
1	**CHECK FUEL FILLER CAP.** 1) Turn the ignition switch to OFF. 2) Check the fuel filler cap. NOTE: The DTC is stored in memory if fuel filler cap is or was loose or if the cap chain has caught while tightening.	Is the fuel filler cap tightened securely?	Go to step **2**.	Tighten fuel filler cap securely.
2	**CHECK FUEL FILLER CAP.**	Is the fuel filler cap genuine?	Go to step **3**.	Replace with a genuine fuel filler cap.
3	**CHECK FUEL FILLER PIPE GASKET.**	Is there any damage to the seal between fuel filler cap and fuel filler pipe?	Repair or replace the fuel filler cap and fuel filler pipe. <Ref. to FU(H4SO)-62, Fuel Filler Pipe.>	Go to step **4**.
4	**CHECK DRAIN VALVE.** 1) Install the delivery (test) mode fuse. **CAUTION:** **Do not use any fuses that are installed on the vehicle.** 2) Turn the ignition switch to ON. 3) Operate the drain valve using the Subaru Select Monitor. NOTE: The drain valve can be operated using Subaru Select Monitor. For detailed procedures, refer to “SYSTEM OPERATION CHECK MODE”. <Ref. to EN(H4SO)(diag)-52, System Operation Check Mode.>	Does the drain valve operate?	Go to step **5**.	Replace the drain valve. <Ref. to EC(H4SO)-19, Drain Valve.>
5	**CHECK PURGE CONTROL SOLENOID VALVE.** Operate the purge control solenoid valve using the Subaru Select Monitor. NOTE: Purge control solenoid valve operation can be executed using Subaru Select Monitor. For detailed procedures, refer to “SYSTEM OPERATION CHECK MODE”. <Ref. to EN(H4SO)(diag)-52, System Operation Check Mode.>	Does the purge control solenoid valve operate?	Go to step **6**.	Replace the purge control solenoid valve. <Ref. to EC(H4SO)-9, Purge Control Solenoid Valve.>

	Step	Check	Yes	No
6	**CHECK EVAPORATIVE EMISSION CONTROL SYSTEM LINE.** 1) Turn the ignition switch to OFF. 2) Check the delivery (test) mode fuse is removed.	Is there any hole of more than 1.0 mm (0.04 in) dia. on evaporation line?	Repair or replace the evaporation line. <Ref. to FU(H4SO)-73, Fuel Delivery and Evaporation Lines.>	Go to step **7**.
7	**CHECK CANISTER.**	Is the canister damaged or is there a hole of more than 1.0 mm (0.04 in) dia. in it?	Repair or replace the canister. <Ref. to EC(H4SO)-5, Canister.>	Go to step **8**.
8	**CHECK FUEL TANK.** Remove the fuel tank. <Ref. to FU(H4SO)-55, Fuel Tank.>	Is the fuel tank damaged or is there any hole of more than 1.0 mm (0.04 in) dia. in it?	Repair or replace the fuel tank. <Ref. to FU(H4SO)-55, Fuel Tank.>	Go to step **9**.
9	**CHECK ANY OTHER MECHANICAL TROUBLE IN EVAPORATIVE EMISSION CONTROL SYSTEM.**	Is there any hole of more than 1.0 mm (0.04 in) dia., crack, clogging, or disconnection, bend, misconnection of hoses or pipes in evaporative emission control system?	Repair or replace the hoses or pipes.	Repair the poor contact of ECM connector.

BW:DTC P0447 EVAPORATIVE EMISSION CONTROL SYSTEM VENT CONTROL CIRCUIT OPEN

DTC DETECTING CONDITION:

- Immediately at fault recognition
- GENERAL DESCRIPTION <Ref. to GD(H4SO)-155, DTC P0447 EVAPORATIVE EMISSION CONTROL SYSTEM VENT CONTROL CIRCUIT OPEN, Diagnostic Trouble Code (DTC) Detecting Criteria.>

CAUTION:

After servicing or replacing faulty parts, perform Clear Memory Mode <Ref. to EN(H4SO)(diag)-51, OPERATION, Clear Memory Mode.>, and Inspection Mode <Ref. to EN(H4SO)(diag)-40, PROCEDURE, Inspection Mode.>.

WIRING DIAGRAM:

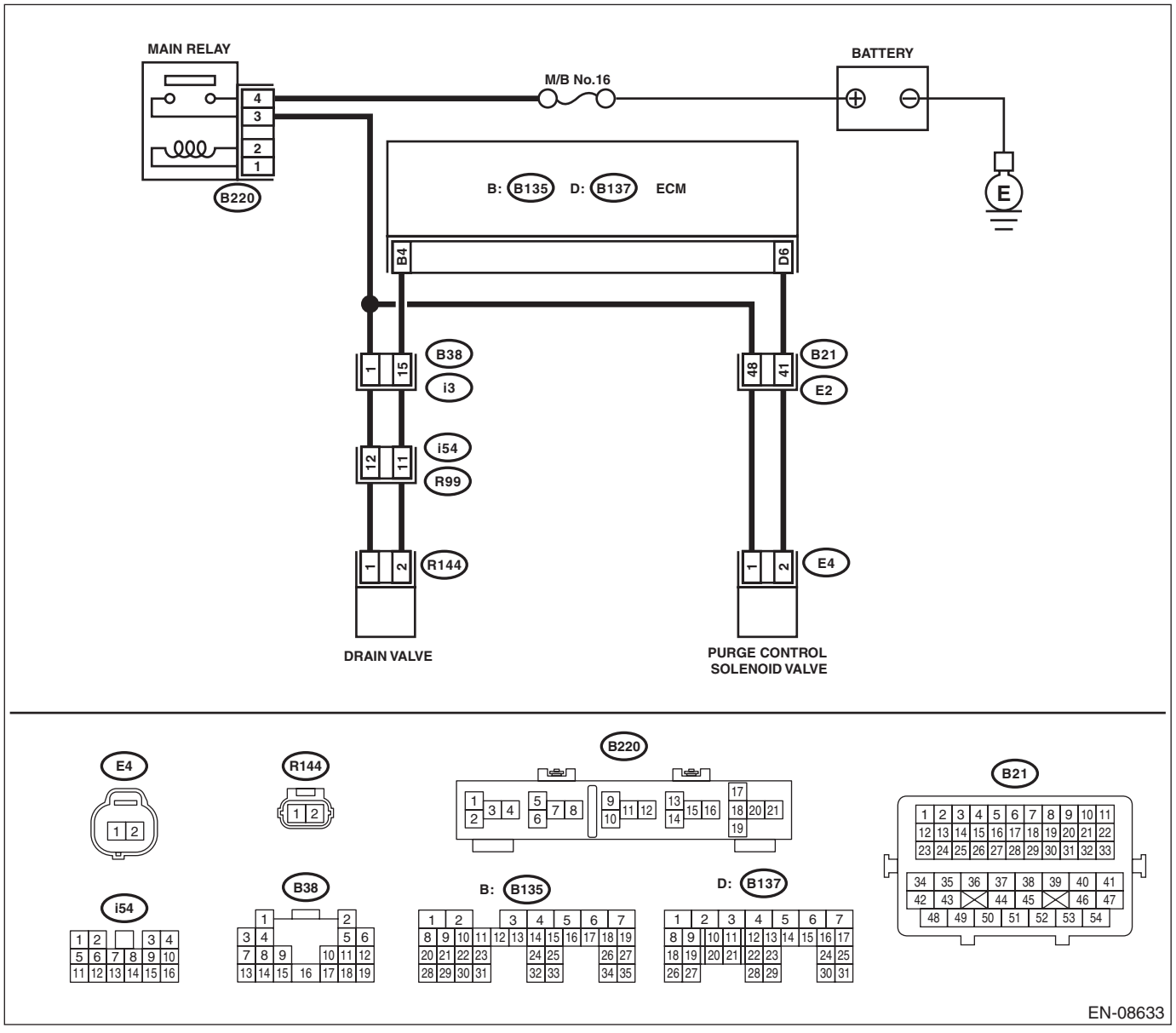

	Step	Check	Yes	No
1	**CHECK OUTPUT SIGNAL OF ECM.** 1) Turn the ignition switch to ON. 2) Measure the voltage between ECM and chassis ground. ***Connector & terminal*** ***(B135) No. 4 (+) — Chassis ground (–):***	Is the voltage 10 V or more?	Go to step **2**.	Go to step **3**.
2	**CHECK FOR POOR CONTACT.** Check for poor contact of ECM connector.	Is there poor contact of ECM connector?	Repair the poor contact of ECM connector.	Even if DTC is detected, the circuit has returned to a normal condition at this time. Reproduce the failure, and then perform the diagnosis again. NOTE: In this case, temporary open or short circuit of harness or temporary poor contact of connector may be the cause.
3	**CHECK POWER SUPPLY TO DRAIN VALVE.** Measure the voltage between drain valve and chassis ground. ***Connector & terminal*** ***(R144) No. 1 (+) — Chassis ground (–):***	Is the voltage 10 V or more?	Go to step **4**.	Repair the power supply circuit.
4	**CHECK HARNESS BETWEEN ECM AND DRAIN VALVE CONNECTOR.** 1) Turn the ignition switch to OFF. 2) Disconnect the connectors from the ECM and drain valve. 3) Measure the resistance between the drain valve connector and chassis ground. ***Connector & terminal*** ***(R144) No. 2 — Chassis ground:***	Is the resistance 1 MΩ or more?	Go to step **5**.	Repair the ground short circuit of harness between ECM and drain valve connector.
5	**CHECK HARNESS BETWEEN ECM AND DRAIN VALVE CONNECTOR.** Measure the resistance of harness between ECM and drain valve connector. ***Connector & terminal*** ***(B135) No. 4 — (R144) No. 2:***	Is the resistance less than 1 Ω?	Go to step **6**.	Repair the harness and connector. NOTE: In this case, repair the following item: • Open circuit of harness between ECM and drain valve connector • Poor contact of coupling connector
6	**CHECK DRAIN VALVE.** Measure the resistance between drain valve terminals. ***Terminals*** ***No. 1 — No. 2:***	Is the resistance 10 — 100 Ω?	Repair the poor contact of drain valve connector.	Replace the drain valve. <Ref. to EC(H4SO)-19, Drain Valve.>

BX:DTC P0448 EVAPORATIVE EMISSION CONTROL SYSTEM VENT CONTROL CIRCUIT SHORTED

DTC DETECTING CONDITION:

- Immediately at fault recognition
- GENERAL DESCRIPTION <Ref. to GD(H4SO)-157, DTC P0448 EVAPORATIVE EMISSION CONTROL SYSTEM VENT CONTROL CIRCUIT SHORTED, Diagnostic Trouble Code (DTC) Detecting Criteria.>

CAUTION:

After servicing or replacing faulty parts, perform Clear Memory Mode <Ref. to EN(H4SO)(diag)-51, OPERATION, Clear Memory Mode.>, and Inspection Mode <Ref. to EN(H4SO)(diag)-40, PROCEDURE, Inspection Mode.>.

WIRING DIAGRAM:

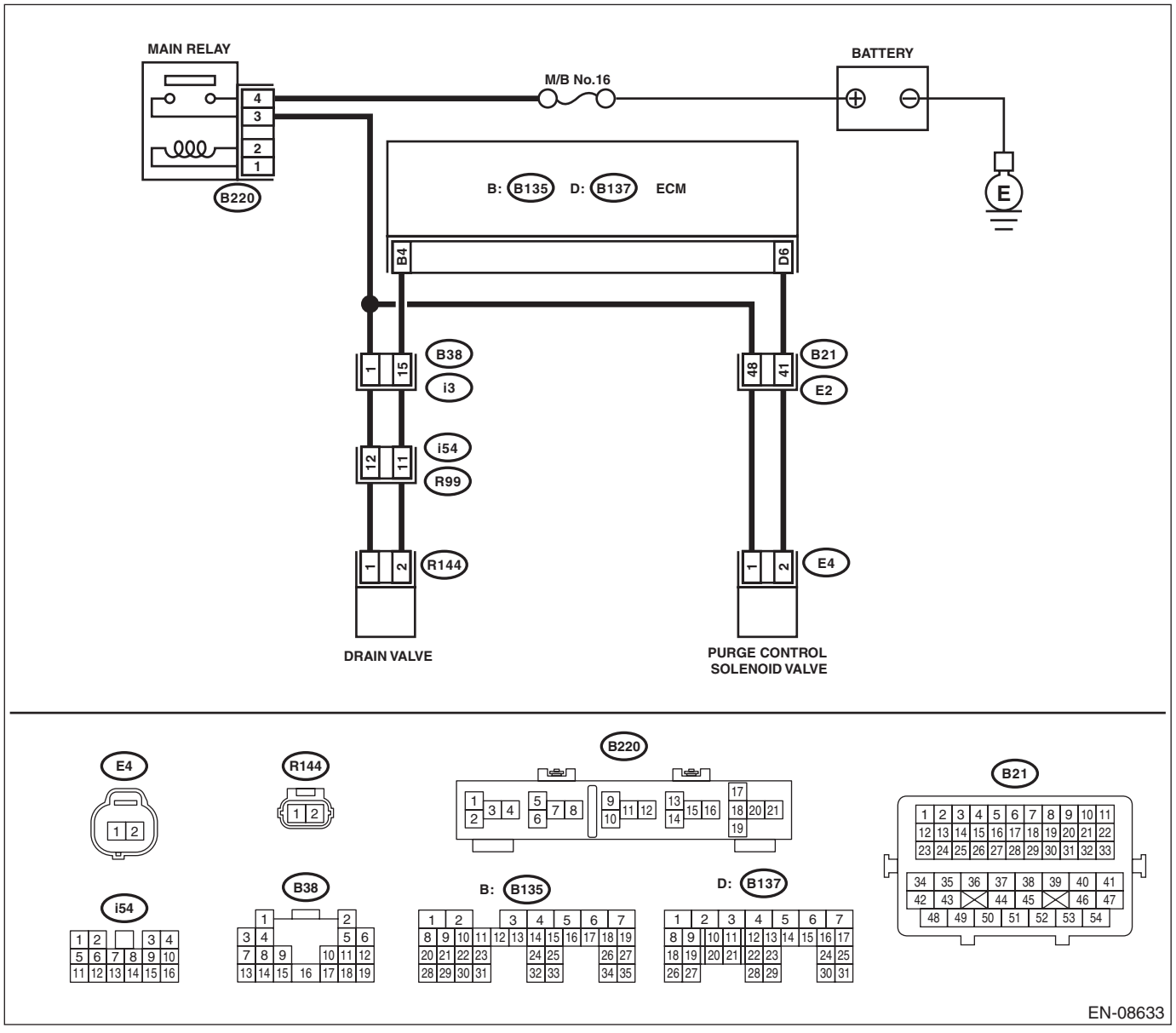

	Step	Check	Yes	No
1	**CHECK HARNESS BETWEEN ECM AND DRAIN VALVE CONNECTOR.** 1) Turn the ignition switch to OFF. 2) Disconnect the connectors from the ECM and drain valve. 3) Turn the ignition switch to ON. 4) Measure the voltage between ECM and chassis ground. ***Connector & terminal*** ***(B135) No. 4 (+) — Chassis ground (–):***	Is the voltage 10 V or more?	Repair the short circuit to power in the harness between ECM and drain valve connector.	Go to step **2**.
2	**CHECK DRAIN VALVE.** 1) Turn the ignition switch to OFF. 2) Measure the resistance between drain valve terminals. ***Terminals*** ***No. 1 — No. 2:***	Is the resistance less than 1 Ω?	Replace the drain valve. <Ref. to EC(H4SO)-19, Drain Valve.>	Repair the poor contact of ECM connector.

BY:DTC P0451 EVAPORATIVE EMISSION CONTROL SYSTEM PRESSURE SENSOR

DTC DETECTING CONDITION:

- Detected when two consecutive driving cycles with fault occur.
- GENERAL DESCRIPTION <Ref. to GD(H4SO)-159, DTC P0451 EVAPORATIVE EMISSION CONTROL SYSTEM PRESSURE SENSOR, Diagnostic Trouble Code (DTC) Detecting Criteria.>

CAUTION:
After servicing or replacing faulty parts, perform Clear Memory Mode <Ref. to EN(H4SO)(diag)-51, OPERATION, Clear Memory Mode.>, and Inspection Mode <Ref. to EN(H4SO)(diag)-40, PROCEDURE, Inspection Mode.>.

	Step	Check	Yes	No
1	**CHECK FUEL FILLER CAP.** 1) Turn the ignition switch to OFF. 2) Open the fuel flap.	Is the fuel filler cap tightened securely?	Go to step **2**.	Tighten fuel filler cap securely.
2	**CHECK PRESSURE VACUUM LINE.** NOTE: Check the following items. • Disconnection, leakage and clogging of the vacuum hoses and pipes between fuel tank pressure sensor and fuel tank • Disconnection, leakage and clogging of air ventilation hoses and pipes between fuel filler pipe and fuel tank	Is there any fault in pressure/ vacuum line?	Repair or replace the hoses and pipes.	Replace the fuel tank pressure sensor. <Ref. to EC(H4SO)-16, Fuel Tank Pressure Sensor.>

BZ:DTC P0452 EVAPORATIVE EMISSION CONTROL SYSTEM PRESSURE SENSOR LOW INPUT

DTC DETECTING CONDITION:

- Immediately at fault recognition
- GENERAL DESCRIPTION <Ref. to GD(H4SO)-163, DTC P0452 EVAPORATIVE EMISSION CONTROL SYSTEM PRESSURE SENSOR LOW INPUT, Diagnostic Trouble Code (DTC) Detecting Criteria.>

CAUTION:

After servicing or replacing faulty parts, perform Clear Memory Mode <Ref. to EN(H4SO)(diag)-51, OPERATION, Clear Memory Mode.>, and Inspection Mode <Ref. to EN(H4SO)(diag)-40, PROCEDURE, Inspection Mode.>.

WIRING DIAGRAM:

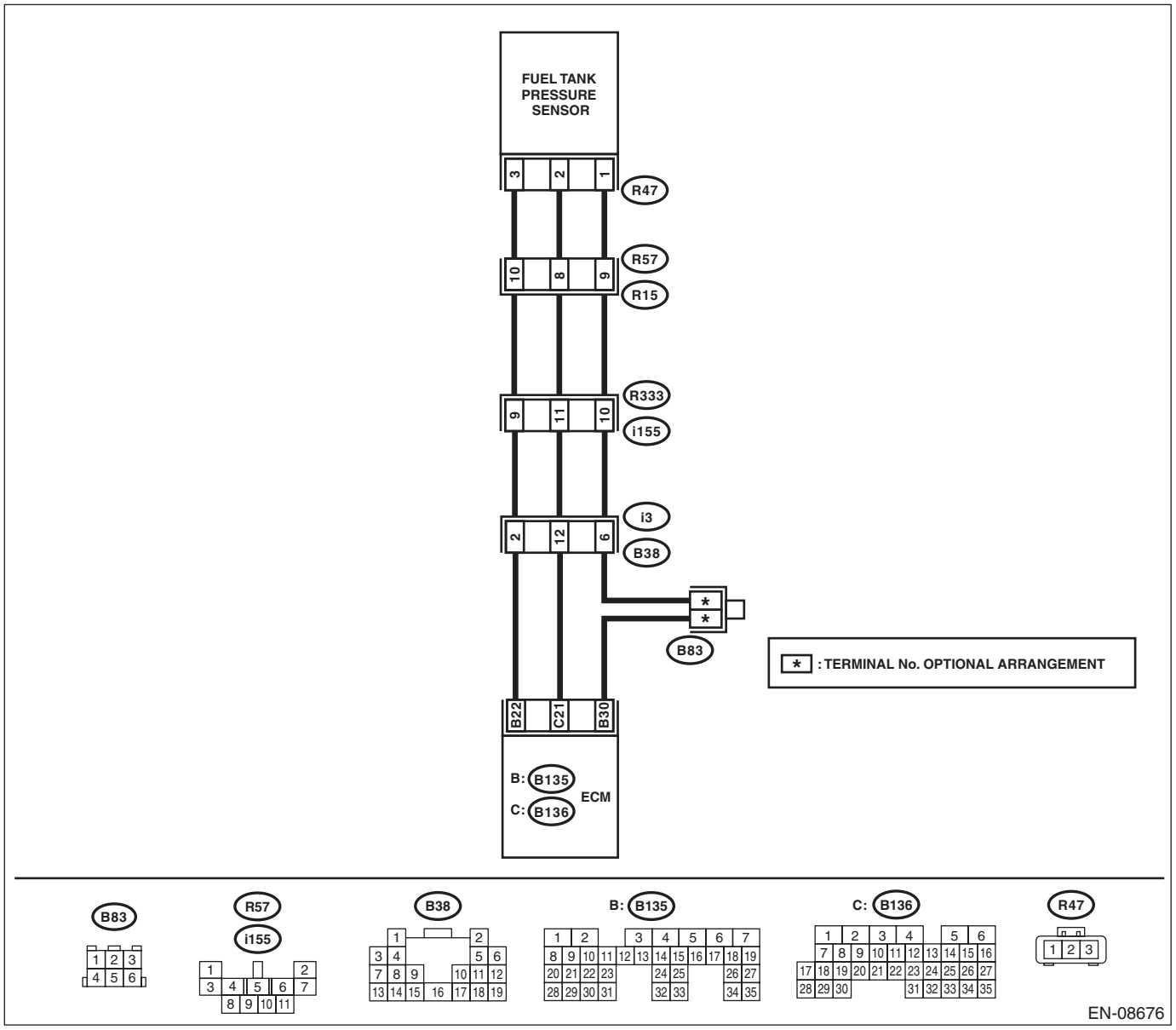

	Step	Check	Yes	No
1	**CHECK CURRENT DATA.** 1) Turn the ignition switch to ON. 2) Using the Subaru Select Monitor or a general scan tool, read the value in «Fuel Tank Pressure». NOTE: • Subaru Select Monitor For detailed operation procedures, refer to "READ CURRENT DATA FOR ENGINE". <Ref. to EN(H4SO)(diag)-33, Subaru Select Monitor.> • General scan tool For detailed operation procedures, refer to the general scan tool operation manual.	Is the value in «Fuel Tank Pressure» less than –7.41 kPa (–55.6 mmHg, –2.19 inHg)?	Go to step **2**.	Even if DTC is detected, the circuit has returned to a normal condition at this time. Reproduce the failure, and then perform the diagnosis again. NOTE: In this case, temporary poor contact of connector, temporary open or short circuit of harness may be the cause.
2	**CHECK FUEL TANK PRESSURE SENSOR POWER SUPPLY.** 1) Turn the ignition switch to OFF. 2) Disconnect the connector from the fuel tank pressure sensor. 3) Turn the ignition switch to ON. 4) Measure the voltage between the fuel tank pressure sensor connector and chassis ground. ***Connector & terminal*** ***(R47) No. 3 (+) — Chassis ground (–):***	Is the voltage 4.5 V or more?	Go to step **3**.	Repair the harness and connector. NOTE: In this case, repair the following item: • Open circuit of harness between ECM and fuel tank pressure sensor connector • Poor contact of ECM connector • Poor contact of coupling connector
3	**CHECK HARNESS BETWEEN ECM AND FUEL TANK PRESSURE SENSOR CONNECTOR.** 1) Turn the ignition switch to OFF. 2) Disconnect the connector from ECM. 3) Measure the resistance of harness between the ECM and fuel tank pressure sensor connector. ***Connector & terminal*** ***(B136) No. 21 — (R47) No. 2:***	Is the resistance less than 1 Ω?	Go to step **4**.	Repair the harness and connector. NOTE: In this case, repair the following item: • Open circuit of harness between ECM and fuel tank pressure sensor connector • Poor contact of coupling connector
4	**CHECK HARNESS BETWEEN ECM AND FUEL TANK PRESSURE SENSOR CONNECTOR.** Measure the resistance between ECM and chassis ground. ***Connector & terminal*** ***(B136) No. 21 — Chassis ground:***	Is the resistance 1 MΩ or more?	Go to step **5**.	Repair the ground short circuit of harness between ECM and fuel tank pressure sensor connector.
5	**CHECK FOR POOR CONTACT.** Check for poor contact between the ECM and fuel tank pressure sensor connector.	Is there poor contact of the ECM or fuel tank pressure sensor connector?	Repair the poor contact of the ECM or fuel tank pressure sensor connector.	Replace the fuel tank pressure sensor. <Ref. to EC(H4SO)-16, Fuel Tank Pressure Sensor.>

CA:DTC P0453 EVAPORATIVE EMISSION CONTROL SYSTEM PRESSURE SENSOR HIGH INPUT

DTC DETECTING CONDITION:

- Immediately at fault recognition
- GENERAL DESCRIPTION <Ref. to GD(H4SO)-165, DTC P0453 EVAPORATIVE EMISSION CONTROL SYSTEM PRESSURE SENSOR HIGH INPUT, Diagnostic Trouble Code (DTC) Detecting Criteria.>

CAUTION:
After servicing or replacing faulty parts, perform Clear Memory Mode <Ref. to EN(H4SO)(diag)-51, OPERATION, Clear Memory Mode.>, and Inspection Mode <Ref. to EN(H4SO)(diag)-40, PROCEDURE, Inspection Mode.>.

WIRING DIAGRAM:

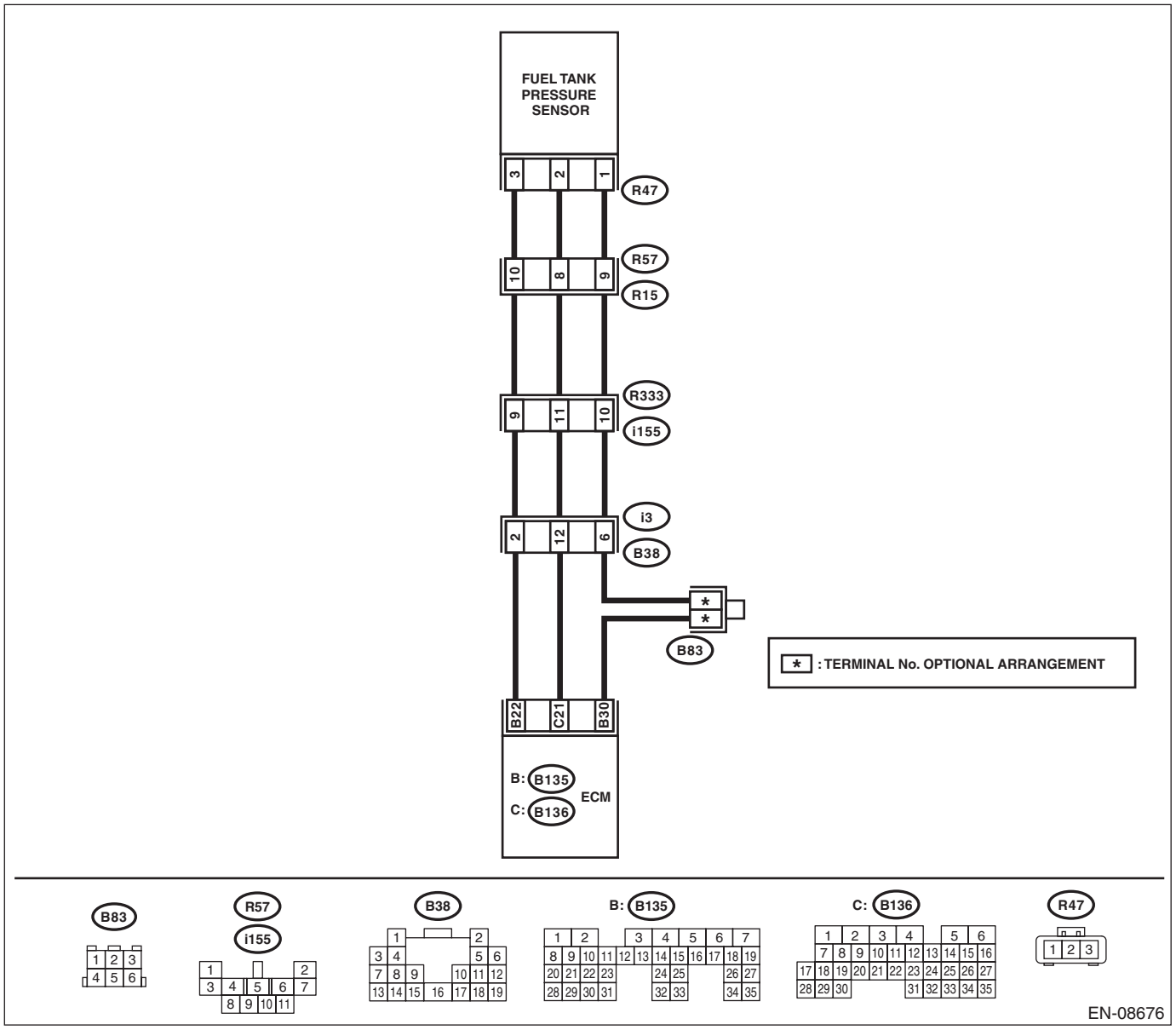

	Step	Check	Yes	No
1	**CHECK CURRENT DATA.** 1) Turn the ignition switch to ON. 2) Using the Subaru Select Monitor or a general scan tool, read the value in «Fuel Tank Pressure». NOTE: • Subaru Select Monitor For detailed operation procedures, refer to "READ CURRENT DATA FOR ENGINE". <Ref. to EN(H4SO)(diag)-33, Subaru Select Monitor.> • General scan tool For detailed operation procedures, refer to the general scan tool operation manual.	Is the value in «Fuel Tank Pressure» 7.95 kPa (59.6 mmHg, 2.35 inHg) or more?	Go to step **2**.	Even if DTC is detected, the circuit has returned to a normal condition at this time. Reproduce the failure, and then perform the diagnosis again. NOTE: In this case, temporary poor contact of connector, temporary open or short circuit of harness may be the cause.
2	**CHECK HARNESS BETWEEN ECM AND FUEL TANK PRESSURE SENSOR CONNECTOR.** 1) Turn the ignition switch to OFF. 2) Disconnect the connector from the fuel tank pressure sensor. 3) Turn the ignition switch to ON. 4) Using the Subaru Select Monitor or a general scan tool, read the value in «Fuel Tank Pressure». NOTE: • Subaru Select Monitor For detailed operation procedures, refer to "READ CURRENT DATA FOR ENGINE". <Ref. to EN(H4SO)(diag)-33, Subaru Select Monitor.> • General scan tool For detailed operation procedures, refer to the general scan tool operation manual.	Is the value in «Fuel Tank Pressure» 7.95 kPa (59.6 mmHg, 2.35 inHg) or more?	Repair the short circuit to power in the harness between ECM and fuel tank pressure sensor connector.	Go to step **3**.
3	**CHECK HARNESS BETWEEN ECM AND FUEL TANK PRESSURE SENSOR CONNECTOR.** 1) Turn the ignition switch to OFF. 2) Measure the resistance of harness between fuel tank pressure sensor connector and engine ground. ***Connector & terminal*** ***(R47) No. 1 — Engine ground:***	Is the resistance less than 5 Ω?	Go to step **4**.	Repair the harness and connector. NOTE: In this case, repair the following item: • Open circuit of harness between ECM and fuel tank pressure sensor connector • Poor contact of ECM connector • Poor contact of coupling connector • Poor contact of joint connector
4	**CHECK FOR POOR CONTACT.** Check for poor contact of the fuel tank pressure sensor connector.	Is there poor contact of fuel tank pressure sensor connector?	Repair the poor contact of fuel tank pressure sensor connector.	Replace the fuel tank pressure sensor. <Ref. to EC(H4SO)-16, Fuel Tank Pressure Sensor.>

CB:DTC P0456 EVAPORATIVE EMISSION CONTROL SYSTEM LEAK DETECTED (VERY SMALL LEAK)

DTC DETECTING CONDITION:

- Detected when two consecutive driving cycles with fault occur.
- GENERAL DESCRIPTION <Ref. to GD(H4SO)-166, DTC P0456 EVAPORATIVE EMISSION CONTROL SYSTEM LEAK DETECTED (VERY SMALL LEAK), Diagnostic Trouble Code (DTC) Detecting Criteria.>

TROUBLE SYMPTOM:

- Fuel odor
- There is a hole of more than 0.5 mm (0.020 in) dia. in evaporation system or fuel tank.

CAUTION:
After servicing or replacing faulty parts, perform Clear Memory Mode <Ref. to EN(H4SO)(diag)-51, OPERATION, Clear Memory Mode.>, and Inspection Mode <Ref. to EN(H4SO)(diag)-40, PROCEDURE, Inspection Mode.>.

	Step	Check	Yes	No
1	**CHECK FUEL FILLER CAP.** 1) Turn the ignition switch to OFF. 2) Check the fuel filler cap. NOTE: The DTC is stored in memory if fuel filler cap is or was loose or if the cap chain has caught while tightening.	Is the fuel filler cap tightened securely?	Go to step **2**.	Tighten fuel filler cap securely.
2	**CHECK FUEL FILLER CAP.**	Is the fuel filler cap genuine?	Go to step **3**.	Replace with a genuine fuel filler cap.
3	**CHECK FUEL FILLER PIPE GASKET.**	Is there any damage to the seal between fuel filler cap and fuel filler pipe?	Repair or replace the fuel filler cap and fuel filler pipe. <Ref. to FU(H4SO)-62, Fuel Filler Pipe.>	Go to step **4**.
4	**CHECK DRAIN VALVE.** 1) Install the delivery (test) mode fuse. **CAUTION:** **Do not use any fuses that are installed on the vehicle.** 2) Turn the ignition switch to ON. 3) Operate the drain valve using the Subaru Select Monitor. NOTE: Drain valve can be operated using the Subaru Select Monitor. For detailed procedures, refer to “SYSTEM OPERATION CHECK MODE”. <Ref. to EN(H4SO)(diag)-52, System Operation Check Mode.>	Does the drain valve operate?	Go to step **5**.	Replace the drain valve. <Ref. to EC(H4SO)-19, Drain Valve.>
5	**CHECK PURGE CONTROL SOLENOID VALVE.** Operate the purge control solenoid valve using the Subaru Select Monitor. NOTE: Purge control solenoid valve operation can be executed using Subaru Select Monitor. For detailed procedures, refer to “SYSTEM OPERATION CHECK MODE”. <Ref. to EN(H4SO)(diag)-52, System Operation Check Mode.>	Does the purge control solenoid valve operate?	Go to step **6**.	Replace the purge control solenoid valve. <Ref. to EC(H4SO)-9, Purge Control Solenoid Valve.>

	Step	Check	Yes	No
6	**CHECK EVAPORATIVE EMISSION CONTROL SYSTEM LINE.** 1) Turn the ignition switch to OFF. 2) Check the delivery (test) mode fuse is removed.	Is there any hole of more than 0.5 mm (0.020 in) dia. on evaporation line?	Repair or replace the evaporation line. <Ref. to FU(H4SO)-73, Fuel Delivery and Evaporation Lines.>	Go to step **7**.
7	**CHECK CANISTER.**	Is the canister damaged or is there a hole of more than 0.5 mm (0.020 in) dia. in it?	Repair or replace the canister. <Ref. to EC(H4SO)-5, Canister.>	Go to step **8**.
8	**CHECK FUEL TANK.** Remove the fuel tank. <Ref. to FU(H4SO)-55, Fuel Tank.>	Is the fuel tank damaged or is there any hole of more than 0.5 mm (0.020 in) dia. in it?	Repair or replace the fuel tank. <Ref. to FU(H4SO)-55, Fuel Tank.>	Go to step **9**.
9	**CHECK ANY OTHER MECHANICAL TROUBLE IN EVAPORATIVE EMISSION CONTROL SYSTEM.**	Is there any hole of more than 0.5 mm (0.020 in) dia., crack, clogging, or disconnection, bend, misconnection of hoses or pipes in evaporative emission control system?	Repair or replace the hoses or pipes.	Repair the poor contact of ECM connector.

CC:DTC P0457 EVAPORATIVE EMISSION CONTROL SYSTEM LEAK DETECTED (FUEL CAP LOOSE/OFF)

DTC DETECTING CONDITION:

- Detected when two consecutive driving cycles with fault occur.
- GENERAL DESCRIPTION <Ref. to GD(H4SO)-166, DTC P0457 EVAPORATIVE EMISSION CONTROL SYSTEM LEAK DETECTED (FUEL CAP LOOSE/OFF), Diagnostic Trouble Code (DTC) Detecting Criteria.>

TROUBLE SYMPTOM:

- Fuel odor
- Fuel filler cap loose or lost

CAUTION:
After servicing or replacing faulty parts, perform Clear Memory Mode <Ref. to EN(H4SO)(diag)-51, OPERATION, Clear Memory Mode.>, and Inspection Mode <Ref. to EN(H4SO)(diag)-40, PROCEDURE, Inspection Mode.>.

	Step	Check	Yes	No
1	**CHECK FUEL FILLER CAP.** 1) Turn the ignition switch to OFF. 2) Check the fuel filler cap. NOTE: The DTC is stored in memory if fuel filler cap is or was loose or if the cap chain has caught while tightening.	Is the fuel filler cap tightened securely?	Go to step **2**.	Tighten fuel filler cap securely.
2	**CHECK FUEL FILLER CAP.**	Is the fuel filler cap genuine?	Go to step **3**.	Replace with a genuine fuel filler cap.
3	**CHECK FUEL FILLER PIPE GASKET.**	Is there any damage to the seal between fuel filler cap and fuel filler pipe?	Repair or replace the fuel filler cap and fuel filler pipe. <Ref. to FU(H4SO)-62, Fuel Filler Pipe.>	Go to step **4**.
4	**CHECK DRAIN VALVE.** 1) Install the delivery (test) mode fuse. **CAUTION:** **Do not use any fuses that are installed on the vehicle.** 2) Turn the ignition switch to ON. 3) Operate the drain valve using the Subaru Select Monitor. NOTE: Drain valve can be operated using the Subaru Select Monitor. For detailed procedures, refer to “SYSTEM OPERATION CHECK MODE”. <Ref. to EN(H4SO)(diag)-52, System Operation Check Mode.>	Does the drain valve operate?	Go to step **5**.	Replace the drain valve. <Ref. to EC(H4SO)-19, Drain Valve.>
5	**CHECK PURGE CONTROL SOLENOID VALVE.** Operate the purge control solenoid valve using the Subaru Select Monitor. NOTE: Purge control solenoid valve operation can be executed using Subaru Select Monitor. For detailed procedures, refer to “SYSTEM OPERATION CHECK MODE”. <Ref. to EN(H4SO)(diag)-52, System Operation Check Mode.>	Does the purge control solenoid valve operate?	Go to step **6**.	Replace the purge control solenoid valve. <Ref. to EC(H4SO)-9, Purge Control Solenoid Valve.>

	Step	Check	Yes	No
6	**CHECK EVAPORATIVE EMISSION CONTROL SYSTEM LINE.** 1) Turn the ignition switch to OFF. 2) Check the delivery (test) mode fuse is removed.	Is there any disconnection, damage or clogging on the evaporation line?	Repair or replace the evaporation line. <Ref. to FU(H4SO)-73, Fuel Delivery and Evaporation Lines.>	Go to step **7**.
7	**CHECK CANISTER.**	Is the canister damaged?	Repair or replace the canister. <Ref. to EC(H4SO)-5, Canister.>	Go to step **8**.
8	**CHECK FUEL TANK.** Remove the fuel tank. <Ref. to FU(H4SO)-55, Fuel Tank.>	Is the fuel tank damaged?	Repair or replace the fuel tank. <Ref. to FU(H4SO)-55, Fuel Tank.>	Go to step **9**.
9	**CHECK ANY OTHER MECHANICAL TROUBLE IN EVAPORATIVE EMISSION CONTROL SYSTEM.**	Are there holes, cracks, clogging, or disconnection, misconnection of hoses or pipes in evaporative emission control system?	Repair or replace the hoses or pipes.	Repair the poor contact of ECM connector.

CD:DTC P0458 EVAPORATIVE EMISSION SYSTEM PURGE CONTROL VALVE CIRCUIT LOW

DTC DETECTING CONDITION:

- Detected when two consecutive driving cycles with fault occur.
- GENERAL DESCRIPTION <Ref. to GD(H4SO)-167, DTC P0458 EVAPORATIVE EMISSION SYSTEM PURGE CONTROL VALVE CIRCUIT LOW, Diagnostic Trouble Code (DTC) Detecting Criteria.>

TROUBLE SYMPTOM:

Improper idling

CAUTION:

After servicing or replacing faulty parts, perform Clear Memory Mode <Ref. to EN(H4SO)(diag)-51, OPERATION, Clear Memory Mode.>, and Inspection Mode <Ref. to EN(H4SO)(diag)-40, PROCEDURE, Inspection Mode.>.

WIRING DIAGRAM:

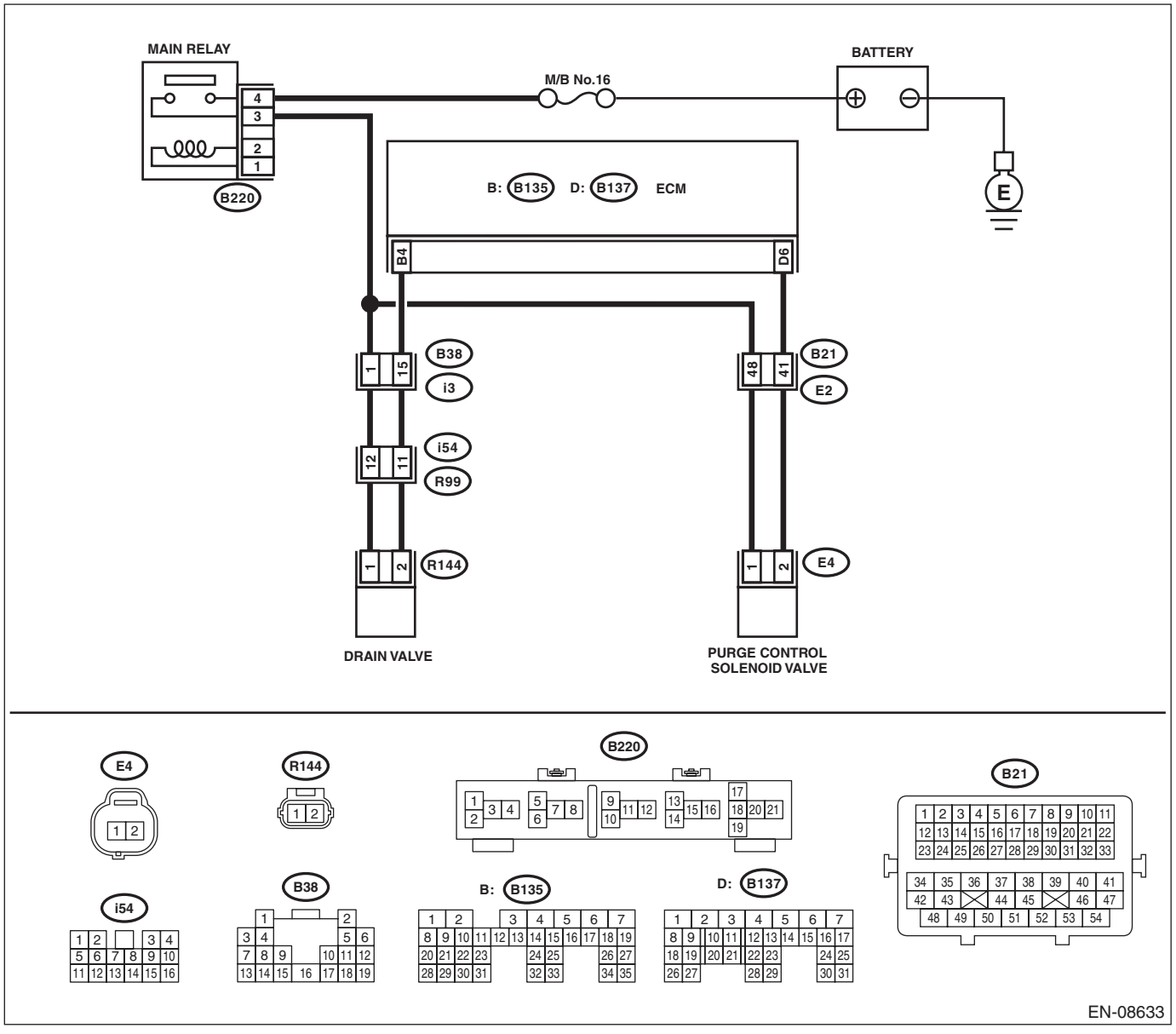

	Step	Check	Yes	No
1	**CHECK OUTPUT SIGNAL OF ECM.** 1) Turn the ignition switch to ON. 2) Measure the voltage between ECM and chassis ground. ***Connector & terminal*** ***(B137) No. 6 (+) — Chassis ground (–):***	Is the voltage 10 V or more?	Go to step **2**.	Go to step **3**.
2	**CHECK FOR POOR CONTACT.** Check for poor contact of ECM connector.	Is there poor contact of ECM connector?	Repair the poor contact of ECM connector.	Even if DTC is detected, the circuit has returned to a normal condition at this time. Reproduce the failure, and then perform the diagnosis again. NOTE: In this case, temporary open or short circuit of harness or temporary poor contact of connector may be the cause.
3	**CHECK POWER SUPPLY TO PURGE CONTROL SOLENOID VALVE.** Measure the voltage between purge control solenoid valve and engine ground. ***Connector & terminal*** ***(E4) No. 1 (+) — Engine ground (–):***	Is the voltage 10 V or more?	Go to step **4**.	Repair the power supply circuit.
4	**CHECK HARNESS BETWEEN ECM AND PURGE CONTROL SOLENOID VALVE CONNECTOR.** 1) Turn the ignition switch to OFF. 2) Disconnect the connectors from ECM and purge control solenoid valve. 3) Measure the resistance between the purge control solenoid valve connector and engine ground. ***Connector & terminal*** ***(E4) No. 2 — Engine ground:***	Is the resistance 1 MΩ or more?	Go to step **5**.	Repair the ground short circuit of harness between ECM and purge control solenoid valve connector.
5	**CHECK HARNESS BETWEEN ECM AND PURGE CONTROL SOLENOID VALVE CONNECTOR.** Measure the resistance of harness between ECM and purge control solenoid valve. ***Connector & terminal*** ***(B137) No. 6 — (E4) No. 2:***	Is the resistance less than 1 Ω?	Go to step **6**.	Repair the harness and connector. NOTE: In this case, repair the following item: • Open circuit in harness between ECM and purge control solenoid valve connector • Poor contact of coupling connector
6	**CHECK PURGE CONTROL SOLENOID VALVE.** 1) Remove the purge control solenoid valve. 2) Measure the resistance between purge control solenoid valve terminals. ***Terminals*** ***No. 1 — No. 2:***	Is the resistance 10 — 100 Ω?	Repair the poor contact of purge control solenoid valve connector.	Replace the purge control solenoid valve. <Ref. to EC(H4SO)-9, Purge Control Solenoid Valve.>

CE:DTC P0459 EVAPORATIVE EMISSION SYSTEM PURGE CONTROL VALVE CIRCUIT HIGH

DTC DETECTING CONDITION:

- Detected when two consecutive driving cycles with fault occur.
- GENERAL DESCRIPTION <Ref. to GD(H4SO)-169, DTC P0459 EVAPORATIVE EMISSION SYSTEM PURGE CONTROL VALVE CIRCUIT HIGH, Diagnostic Trouble Code (DTC) Detecting Criteria.>

TROUBLE SYMPTOM:

Improper idling

CAUTION:

After servicing or replacing faulty parts, perform Clear Memory Mode <Ref. to EN(H4SO)(diag)-51, OPERATION, Clear Memory Mode.>, and Inspection Mode <Ref. to EN(H4SO)(diag)-40, PROCEDURE, Inspection Mode.>.

WIRING DIAGRAM:

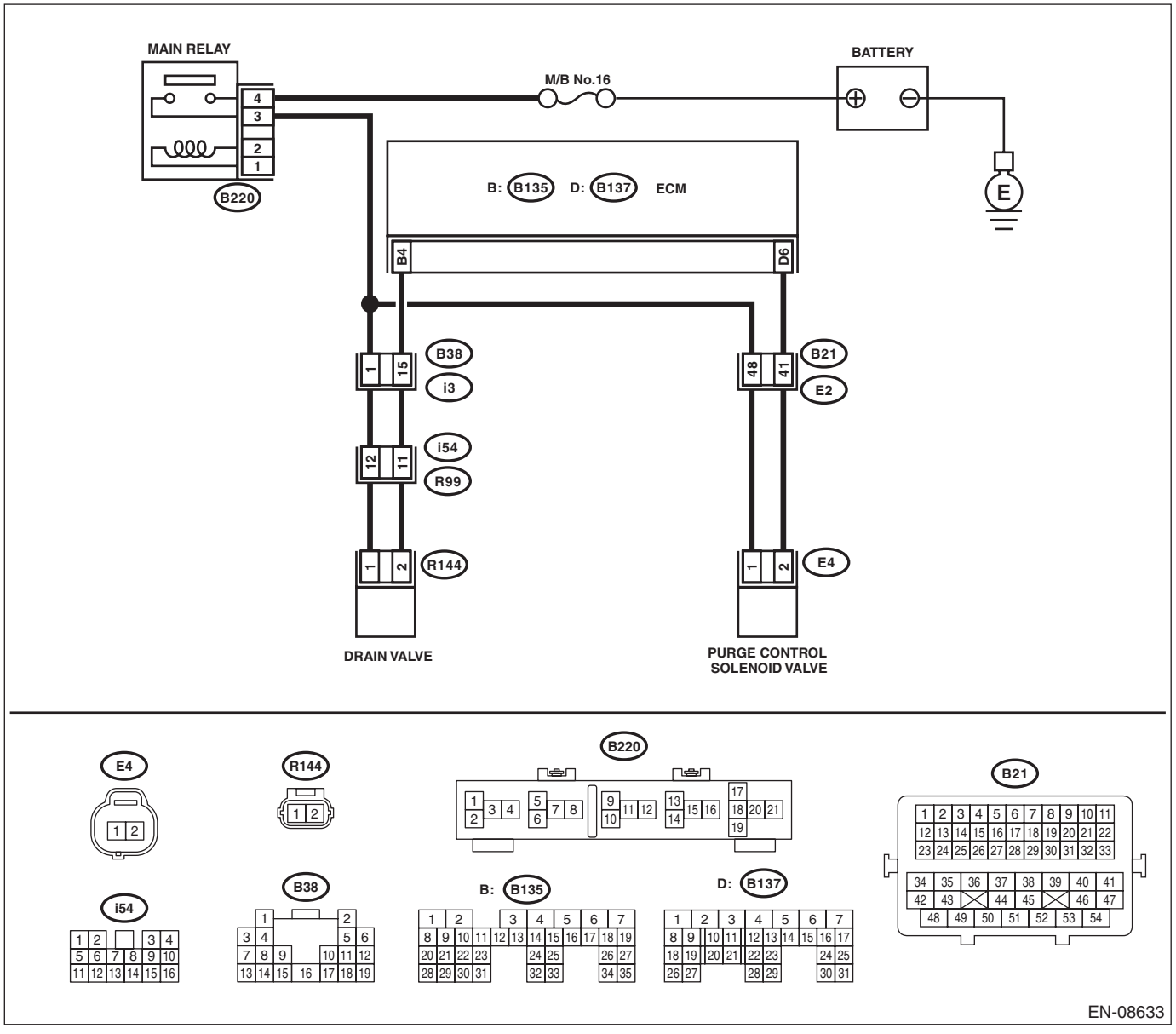

	Step	Check	Yes	No
1	**CHECK HARNESS BETWEEN ECM AND PURGE CONTROL SOLENOID VALVE CONNECTOR.** 1) Turn the ignition switch to OFF. 2) Disconnect the connectors from ECM and purge control solenoid valve. 3) Turn the ignition switch to ON. 4) Measure the voltage between ECM and chassis ground. ***Connector & terminal*** ***(B137) No. 6 (+) — Chassis ground (–):***	Is the voltage 10 V or more?	Repair the short circuit to power in the harness between ECM and purge control solenoid valve connector.	Go to step **2**.
2	**CHECK PURGE CONTROL SOLENOID VALVE.** 1) Turn the ignition switch to OFF. 2) Measure the resistance between purge control solenoid valve terminals. ***Terminals*** ***No. 1 — No. 2:***	Is the resistance less than 1 Ω?	Replace the purge control solenoid valve. <Ref. to EC(H4SO)-9, Purge Control Solenoid Valve.>	Repair the poor contact of ECM connector.

CF:DTC P0461 FUEL LEVEL SENSOR “A” CIRCUIT RANGE/PERFORMANCE

DTC DETECTING CONDITION:

- Detected when two consecutive driving cycles with fault occur.
- GENERAL DESCRIPTION <Ref. to GD(H4SO)-171, DTC P0461 FUEL LEVEL SENSOR “A” CIRCUIT RANGE/PERFORMANCE, Diagnostic Trouble Code (DTC) Detecting Criteria.>

CAUTION:
After servicing or replacing faulty parts, perform Clear Memory Mode <Ref. to EN(H4SO)(diag)-51, OPERATION, Clear Memory Mode.>, and Inspection Mode <Ref. to EN(H4SO)(diag)-40, PROCEDURE, Inspection Mode.>.

Step		Check	Yes	No
1	**CHECK FOR ANY OTHER DTC ON DISPLAY.**	Is any other DTC displayed?	Check the appropriate DTC using the “List of Diagnostic Trouble Code (DTC)”. <Ref. to EN(H4SO)(diag)-78, List of Diagnostic Trouble Code (DTC).>	Replace the fuel level sensor and fuel sub level sensor. <Ref. to FU(H4SO)-67, Fuel Level Sensor.> <Ref. to FU(H4SO)-69, Fuel Sub Level Sensor.>

CG:DTC P0462 FUEL LEVEL SENSOR “A” CIRCUIT LOW

NOTE:
For the diagnostic procedure, refer to DTC P0463. <Ref. to EN(H4SO)(diag)-213, DTC P0463 FUEL LEVEL SENSOR “A” CIRCUIT HIGH, Diagnostic Procedure with Diagnostic Trouble Code (DTC).>

CH:DTC P0463 FUEL LEVEL SENSOR “A” CIRCUIT HIGH

DTC DETECTING CONDITION:

- Detected when two consecutive driving cycles with fault occur.
- GENERAL DESCRIPTION <Ref. to GD(H4SO)-175, DTC P0463 FUEL LEVEL SENSOR “A” CIRCUIT HIGH, Diagnostic Trouble Code (DTC) Detecting Criteria.>

CAUTION:
After servicing or replacing faulty parts, perform Clear Memory Mode <Ref. to EN(H4SO)(diag)-51, OPERATION, Clear Memory Mode.>, and Inspection Mode <Ref. to EN(H4SO)(diag)-40, PROCEDURE, Inspection Mode.>.

Step		Check	Yes	No
1	**CHECK FOR ANY OTHER DTC ON DISPLAY.**	Is DTC P0462 or P0463 displayed on the Subaru Select Monitor?	Check the combination meter. <Ref. to IDI-13, CHECK FUEL LEVEL SENSOR, INSPECTION, Combination Meter System.>	Even if DTC is detected, the circuit has returned to a normal condition at this time. Reproduce the failure, and then perform the diagnosis again. NOTE: In this case, temporary poor contact of connector, temporary open or short circuit of harness may be the cause.

CI: DTC P0464 FUEL LEVEL SENSOR CIRCUIT INTERMITTENT

DTC DETECTING CONDITION:

- Detected when two consecutive driving cycles with fault occur.
- GENERAL DESCRIPTION <Ref. to GD(H4SO)-177, DTC P0464 FUEL LEVEL SENSOR CIRCUIT INTERMITTENT, Diagnostic Trouble Code (DTC) Detecting Criteria.>

CAUTION:
After servicing or replacing faulty parts, perform Clear Memory Mode <Ref. to EN(H4SO)(diag)-51, OPERATION, Clear Memory Mode.>, and Inspection Mode <Ref. to EN(H4SO)(diag)-40, PROCEDURE, Inspection Mode.>.

Step		Check	Yes	No
1	**CHECK FOR ANY OTHER DTC ON DISPLAY.**	Is DTC P0464 displayed on the display?	Check the combination meter. <Ref. to IDI-13, CHECK FUEL LEVEL SENSOR, INSPECTION, Combination Meter System.>	Even if DTC is detected, the circuit has returned to a normal condition at this time. Reproduce the failure, and then perform the diagnosis again. NOTE: In this case, temporary poor contact of connector, temporary open or short circuit of harness may be the cause.

CJ:DTC P0500 VEHICLE SPEED SENSOR “A”

DTC DETECTING CONDITION:

- Immediately at fault recognition
- GENERAL DESCRIPTION <Ref. to GD(H4SO)-180, DTC P0500 VEHICLE SPEED SENSOR “A”, Diagnostic Trouble Code (DTC) Detecting Criteria.>

CAUTION:
After servicing or replacing faulty parts, perform Clear Memory Mode <Ref. to EN(H4SO)(diag)-51, OPERATION, Clear Memory Mode.>, and Inspection Mode <Ref. to EN(H4SO)(diag)-40, PROCEDURE, Inspection Mode.>.

Step		Check	Yes	No
1	**CHECK DTC OF VDC.** Check DTC of VDC.	Is DTC of VDC displayed?	Perform the diagnosis according to DTC. <Ref. to VDC(diag)-35, List of Diagnostic Trouble Code (DTC).>	Repair the poor contact of ECM connector.

CK:DTC P0506 IDLE AIR CONTROL SYSTEM RPM LOWER THAN EXPECTED

DTC DETECTING CONDITION:

- Detected when two consecutive driving cycles with fault occur.
- GENERAL DESCRIPTION <Ref. to GD(H4SO)-181, DTC P0506 IDLE AIR CONTROL SYSTEM RPM LOWER THAN EXPECTED, Diagnostic Trouble Code (DTC) Detecting Criteria.>

TROUBLE SYMPTOM:

- Hard to start the engine.
- Engine does not start.
- Improper idling
- Engine stalls.

CAUTION:

After servicing or replacing faulty parts, perform Clear Memory Mode <Ref. to EN(H4SO)(diag)-51, OPERATION, Clear Memory Mode.>, and Inspection Mode <Ref. to EN(H4SO)(diag)-40, PROCEDURE, Inspection Mode.>.

	Step	Check	Yes	No
1	**CHECK FOR ANY OTHER DTC ON DISPLAY.**	Is any other DTC displayed?	Check the appropriate DTC using the "List of Diagnostic Trouble Code (DTC)". <Ref. to EN(H4SO)(diag)-78, List of Diagnostic Trouble Code (DTC).>	Go to step **2**.
2	**CHECK AIR CLEANER ELEMENT.** 1) Turn the ignition switch to OFF. 2) Check the air cleaner element.	Is there excessive clogging on air cleaner element?	Replace the air cleaner element. <Ref. to IN(H4SO)-4, Air Cleaner Element.>	Go to step **3**.
3	**CHECK ELECTRONIC THROTTLE CONTROL.** 1) Remove the electronic throttle control. <Ref. to FU(H4SO)-15, REMOVAL, Throttle Body.> 2) Check the electronic throttle control.	Are foreign matter found inside electronic throttle control?	Remove foreign matter from electronic throttle control.	Perform the diagnosis of DTC P2101. <Ref. to EN(H4SO)(diag)-267, DTC P2101 THROTTLE ACTUATOR CONTROL MOTOR CIRCUIT RANGE/PERFORMANCE, Diagnostic Procedure with Diagnostic Trouble Code (DTC).>

CL:DTC P0507 IDLE AIR CONTROL SYSTEM RPM HIGHER THAN EXPECTED

DTC DETECTING CONDITION:

- Detected when two consecutive driving cycles with fault occur.
- GENERAL DESCRIPTION <Ref. to GD(H4SO)-182, DTC P0507 IDLE AIR CONTROL SYSTEM RPM HIGHER THAN EXPECTED, Diagnostic Trouble Code (DTC) Detecting Criteria.>

TROUBLE SYMPTOM:

Engine keeps running at higher speed than specified idle speed.

CAUTION:

After servicing or replacing faulty parts, perform Clear Memory Mode <Ref. to EN(H4SO)(diag)-51, OPERATION, Clear Memory Mode.>, and Inspection Mode <Ref. to EN(H4SO)(diag)-40, PROCEDURE, Inspection Mode.>.

	Step	Check	Yes	No
1	**CHECK FOR ANY OTHER DTC ON DISPLAY.**	Is any other DTC displayed?	Check the appropriate DTC using the “List of Diagnostic Trouble Code (DTC)”. <Ref. to EN(H4SO)(diag)-78, List of Diagnostic Trouble Code (DTC).>	Go to step **2**.
2	**CHECK AIR INTAKE SYSTEM.** 1) Start and idle the engine. 2) Check the following items. • Loose installation of intake manifold and throttle body • Cracks of intake manifold gasket and throttle body gasket • Disconnection of vacuum hoses	Is there any fault in air intake system?	Repair air suction and leaks.	Go to step **3**.
3	**CHECK ELECTRONIC THROTTLE CONTROL.** 1) Turn the ignition switch to OFF. 2) Remove the electronic throttle control. <Ref. to FU(H4SO)-15, REMOVAL, Throttle Body.> 3) Check the electronic throttle control.	Are foreign matter found inside electronic throttle control?	Remove foreign matter from electronic throttle control.	Perform the diagnosis of DTC P2101. <Ref. to EN(H4SO)(diag)-267, DTC P2101 THROTTLE ACTUATOR CONTROL MOTOR CIRCUIT RANGE/PERFORMANCE, Diagnostic Procedure with Diagnostic Trouble Code (DTC).>

CM:DTC P050A COLD START IDLE AIR CONTROL SYSTEM PERFORMANCE

DTC DETECTING CONDITION:

- Detected when two consecutive driving cycles with fault occur.
- GENERAL DESCRIPTION <Ref. to GD(H4SO)-183, DTC P050A COLD START IDLE AIR CONTROL SYSTEM PERFORMANCE, Diagnostic Trouble Code (DTC) Detecting Criteria.>

TROUBLE SYMPTOM:

- Engine keeps running at higher speed than specified idle speed.
- Engine keeps running at a lower speed than the specified idle speed.
- Engine stalls.

CAUTION:

After servicing or replacing faulty parts, perform Clear Memory Mode <Ref. to EN(H4SO)(diag)-51, OPERATION, Clear Memory Mode.>, and Inspection Mode <Ref. to EN(H4SO)(diag)-40, PROCEDURE, Inspection Mode.>.

WIRING DIAGRAM:

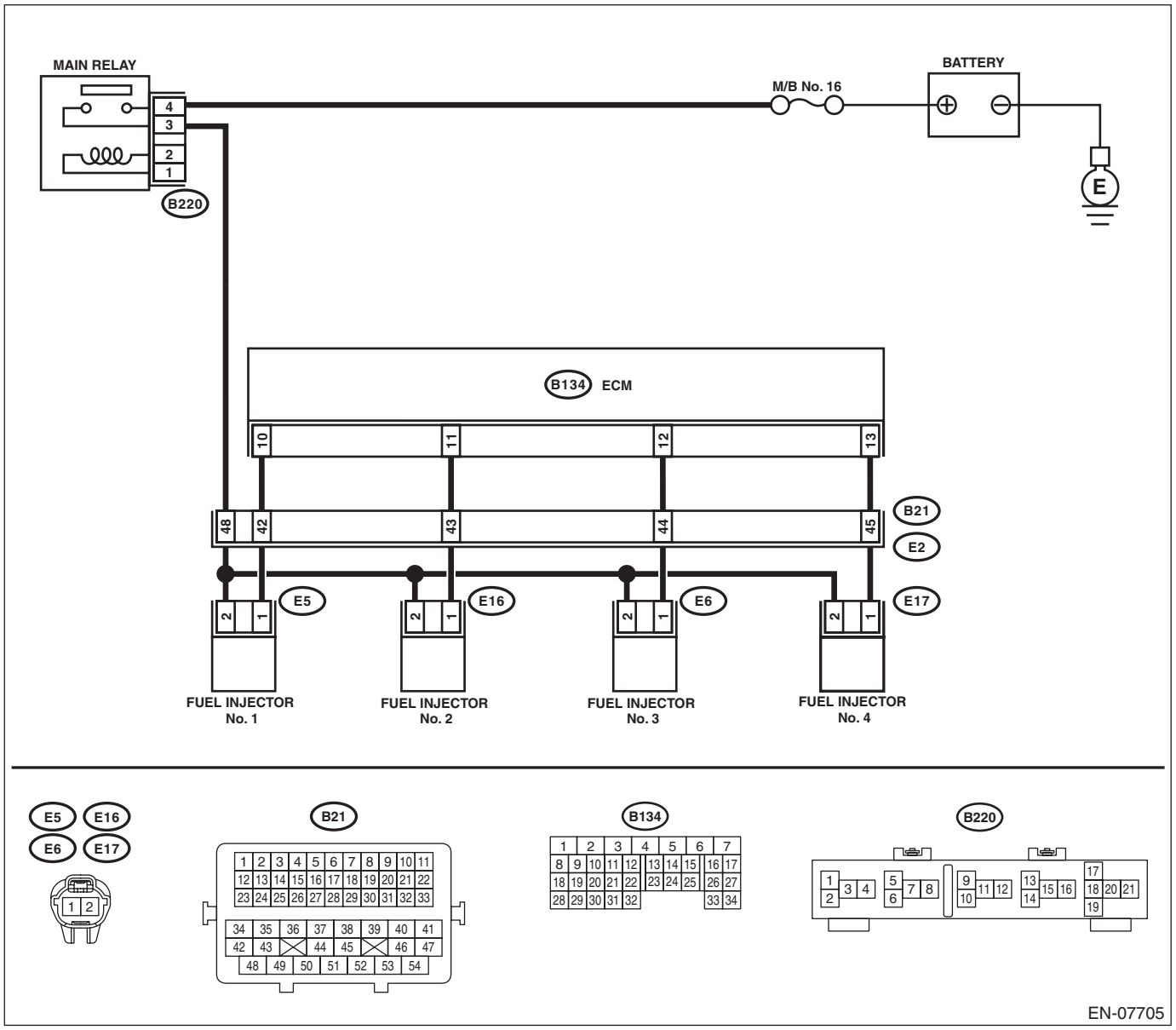

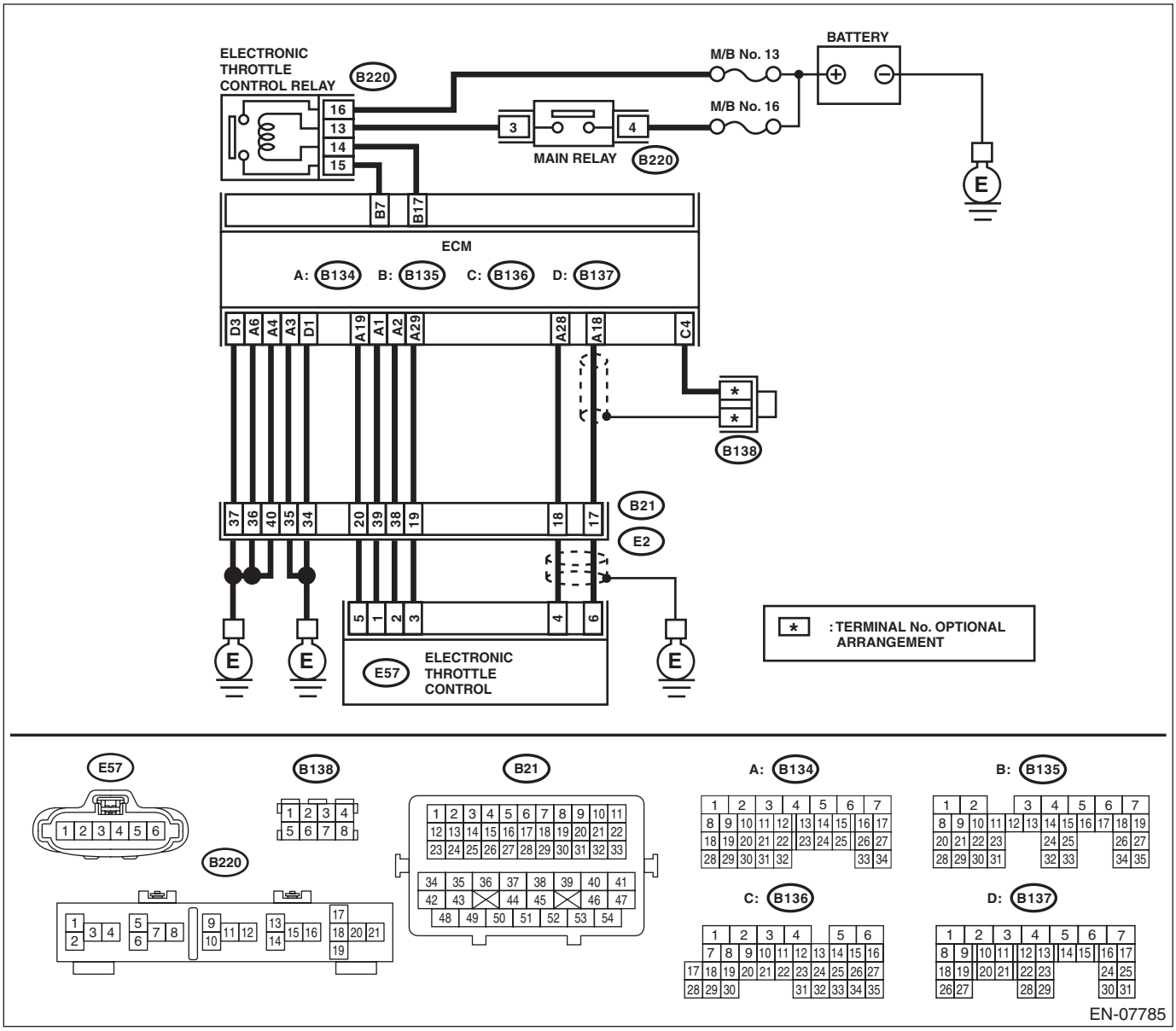

Step		Check	Yes	No
1	**CHECK FOR ANY OTHER DTC ON DISPLAY.**	Is any other DTC displayed?	Check the appropriate DTC using the "List of Diagnostic Trouble Code (DTC)". <Ref. to EN(H4SO)(diag)-78, List of Diagnostic Trouble Code (DTC).>	Go to step **2**.
2	**CHECK ENGINE OIL.**	Is there a proper amount of engine oil?	Go to step **3**.	Replace engine oil. <Ref. to LU(H4SO)-13, REPLACEMENT, Engine Oil.>
3	**CHECK EXHAUST SYSTEM.**	Are there holes or loose bolts on exhaust system?	Repair the exhaust system.	Go to step **4**.

	Step	Check	Yes	No
4	**CHECK AIR INTAKE SYSTEM.**	Are there holes, loose bolts or disconnection of hose on air intake system?	Repair the air intake system.	Go to step **5**.
5	**CHECK FUEL PRESSURE.** **WARNING:** **Place "NO OPEN FLAMES" signs near the working area.** **CAUTION:** **Be careful not to spill fuel.** Measure the fuel pressure. <Ref. to ME(H4SO)-28, INSPECTION, Fuel Pressure.> **CAUTION:** **Release fuel pressure before removing the fuel pressure gauge.**	Is the measured value 340 — 400 kPa (3.5 — 4.1 kg/cm^2, 49 — 58 psi)?	Go to step **6**.	Repair the following item. Fuel pressure is too high: • Clogged fuel line or bent hose Fuel pressure is too low: • Improper fuel pump discharge • Clogged fuel line
6	**CHECK ENGINE COOLANT TEMPERATURE SENSOR.** 1) Start the engine and warm up completely. 2) Read the value of «Coolant Temp.» using the Subaru Select Monitor or a general scan tool. NOTE: • Subaru Select Monitor For detailed operation procedures, refer to "READ CURRENT DATA FOR ENGINE". <Ref. to EN(H4SO)(diag)-33, Subaru Select Monitor.> • General scan tool For detailed operation procedures, refer to the general scan tool operation manual.	Is the value of «Coolant Temp.» 75°C (167°F) or more?	Go to step **7**.	Replace the engine coolant temperature sensor. <Ref. to FU(H4SO)-24, Engine Coolant Temperature Sensor.>
7	**CHECK MASS AIR FLOW AND INTAKE AIR TEMPERATURE SENSOR.** 1) Start the engine and warm up engine until coolant temperature is higher than 75°C (167°F). 2) For CVT models, set the select lever to "P" range or "N" range, and for MT models, place the shift lever in the neutral position. 3) Turn the A/C switch to OFF. 4) Turn all the accessory switches to OFF. 5) Read the value of «Mass Air Flow» using the Subaru Select Monitor or a general scan tool. NOTE: • Subaru Select Monitor For detailed operation procedures, refer to "READ CURRENT DATA FOR ENGINE". <Ref. to EN(H4SO)(diag)-33, Subaru Select Monitor.> • General scan tool For detailed operation procedures, refer to the general scan tool operation manual.	Is the value of «Mass Air Flow» 2.0 — 5.0 g/s (0.26 — 0.66 lb/m)?	Go to step **8**.	Replace the mass air flow and intake air temperature sensor. <Ref. to FU(H4SO)-32, Mass Air Flow and Intake Air Temperature Sensor.>

	Step	Check	Yes	No
8	**CHECK MASS AIR FLOW AND INTAKE AIR TEMPERATURE SENSOR.** 1) Start the engine and warm up engine until coolant temperature is higher than 75°C (167°F). 2) For CVT models, set the select lever to "P" range or "N" range, and for MT models, place the shift lever in the neutral position. 3) Turn the A/C switch to OFF. 4) Turn all the accessory switches to OFF. 5) Open the front hood. 6) Measure the ambient temperature. 7) Read the value of «Intake Air Temp.» using the Subaru Select Monitor or a general scan tool. NOTE: • Subaru Select Monitor For detailed operation procedures, refer to "READ CURRENT DATA FOR ENGINE". <Ref. to EN(H4SO)(diag)-33, Subaru Select Monitor.> • General scan tool For detailed operation procedures, refer to the general scan tool operation manual.	Subtract ambient temperature from «Intake Air Temp.». Is the obtained value –10 — 50°C (–18 — 90°F)?	Go to step **9**.	Check the mass air flow and intake air temperature sensor. <Ref. to FU(H4SO)-32, Mass Air Flow and Intake Air Temperature Sensor.>
9	**CHECK OUTPUT SIGNAL OF ECM.** 1) Turn the ignition switch to ON. 2) Measure the voltage between ECM and chassis ground on faulty cylinders. ***Connector & terminal*** ***#1 (B134) No. 10 (+) — Chassis ground (–):*** ***#2 (B134) No. 11 (+) — Chassis ground (–):*** ***#3 (B134) No. 12 (+) — Chassis ground (–):*** ***#4 (B134) No. 13 (+) — Chassis ground (–):***	Is the voltage 10 V or more?	Go to step **14**.	Go to step **10**.
10	**CHECK HARNESS BETWEEN ECM AND FUEL INJECTOR CONNECTOR.** 1) Turn the ignition switch to OFF. 2) Disconnect the connector from fuel injector on faulty cylinders. 3) Measure the resistance between fuel injector connector and engine ground on faulty cylinders. ***Connector & terminal*** ***#1 (E5) No. 1 — Engine ground:*** ***#2 (E16) No. 1 — Engine ground:*** ***#3 (E6) No. 1 — Engine ground:*** ***#4 (E17) No. 1 — Engine ground:***	Is the resistance 1 MΩ or more?	Go to step **11**.	Repair the short circuit to ground in harness between ECM and fuel injector connector.
11	**CHECK HARNESS BETWEEN ECM AND FUEL INJECTOR CONNECTOR.** Measure the resistance of harness between ECM and fuel injector on faulty cylinders. ***Connector & terminal*** ***#1 (B134) No. 10 — (E5) No. 1:*** ***#2 (B134) No. 11 — (E16) No. 1:*** ***#3 (B134) No. 12 — (E6) No. 1:*** ***#4 (B134) No. 13 — (E17) No. 1:***	Is the resistance less than 1 Ω?	Go to step **12**.	Repair the harness and connector. NOTE: In this case, repair the following item: • Open circuit in harness between ECM and fuel injector connector • Poor contact of coupling connector

	Step	Check	Yes	No
12	**CHECK FUEL INJECTOR.** Measure the resistance between fuel injector terminals on faulty cylinder. ***Terminals*** ***No. 1 — No. 2:***	Is the resistance 5 — 20 Ω?	Go to step **13**.	Replace the faulty fuel injector. <Ref. to FU(H4SO)-37, Fuel Injector.>
13	**CHECK POWER SUPPLY LINE.** 1) Turn the ignition switch to ON. 2) Measure the voltage between fuel injector and engine ground on faulty cylinders. ***Connector & terminal*** ***#1 (E5) No. 2 (+) — Engine ground (–):*** ***#2 (E16) No. 2 (+) — Engine ground (–):*** ***#3 (E6) No. 2 (+) — Engine ground (–):*** ***#4 (E17) No. 2 (+) — Engine ground (–):***	Is the voltage 10 V or more?	Repair the poor contact of all connectors in fuel injector circuit.	Repair the harness and connector. NOTE: In this case, repair the following item: • Open circuit in harness between the main relay connector and fuel injector connector on faulty cylinders • Poor contact of coupling connector • Poor contact of main relay connector
14	**CHECK HARNESS BETWEEN ECM AND FUEL INJECTOR CONNECTOR.** 1) Turn the ignition switch to OFF. 2) Disconnect the connector from fuel injector on faulty cylinders. 3) Turn the ignition switch to ON. 4) Measure the voltage between ECM and chassis ground on faulty cylinders. ***Connector & terminal*** ***#1 (B134) No. 10 (+) — Chassis ground (–):*** ***#2 (B134) No. 11 (+) — Chassis ground (–):*** ***#3 (B134) No. 12 (+) — Chassis ground (–):*** ***#4 (B134) No. 13 (+) — Chassis ground (–):***	Is the voltage 10 V or more?	Repair the short circuit to power in the harness between the ECM and fuel injector.	Go to step **15**.
15	**CHECK FUEL INJECTOR.** 1) Turn the ignition switch to OFF. 2) Measure the resistance between fuel injector terminals on faulty cylinder. ***Terminals*** ***No. 1 — No. 2:***	Is the resistance 5 — 20 Ω?	Go to step **16**.	Replace the faulty fuel injector. <Ref. to FU(H4SO)-37, Fuel Injector.>
16	**CHECK INSTALLATION CONDITION OF CAMSHAFT POSITION SENSOR/CRANKSHAFT POSITION SENSOR.**	Is the camshaft position sensor or crankshaft position sensor loosely installed?	Tighten the camshaft position sensor or crankshaft position sensor. <Ref. to FU(H4SO)-27, Camshaft Position Sensor.> <Ref. to FU(H4SO)-25, Crankshaft Position Sensor.>	Go to step **17**.
17	**CHECK CRANK SPROCKET.** Remove the timing belt cover. <Ref. to ME(H4SO)-47, REMOVAL, Timing Belt Cover.>	Is the crank sprocket rusted or does it have broken teeth?	Replace the crank sprocket. <Ref. to ME(H4SO)-54, Crank Sprocket.>	Go to step **18**.

	Step	Check	Yes	No
18	**CHECK INSTALLATION CONDITION OF TIMING BELT.** Turn the crankshaft using ST, and align the alignment mark on crank sprocket with alignment mark on cylinder block. ST 499987500 CRANKSHAFT SOCKET	Is the timing belt dislocated from its proper position?	Repair the installation condition of timing belt. <Ref. to ME(H4SO)-48, Timing Belt.>	Go to step **19**.
19	**CHECK ELECTRONIC THROTTLE CONTROL RELAY.** 1) Turn the ignition switch to OFF. 2) Remove the electronic throttle control relay. 3) Connect the battery to terminals No. 13 and No. 14 of electronic throttle control relay. 4) Measure the resistance between electronic throttle control relay terminals. ***Terminals*** ***No. 15 — No. 16:***	Is the resistance less than 1 Ω?	Go to step **20**.	Replace the electronic throttle control relay. <Ref. to FU(H4SO)-51, Electronic Throttle Control Relay.>
20	**CHECK POWER SUPPLY OF ELECTRONIC THROTTLE CONTROL RELAY.** Measure the voltage between electronic throttle control relay connector and chassis ground. ***Connector & terminal*** ***(B220) No. 16 (+) — Chassis ground (–):***	Is the voltage 10 V or more?	Go to step **21**.	Repair the open or ground short circuit of power supply circuit.
21	**CHECK HARNESS BETWEEN ECM AND ELECTRONIC THROTTLE CONTROL RELAY CONNECTOR.** 1) Disconnect the connector from ECM. 2) Turn the ignition switch to ON. 3) Measure the voltage between electronic throttle control relay connector and chassis ground. ***Connector & terminal*** ***(B220) No. 14 (+) — Chassis ground (–):***	Is the voltage 10 V or more?	Repair the short circuit to power in the harness between ECM and electronic throttle control relay connector.	Go to step **22**.
22	**CHECK HARNESS BETWEEN ECM AND ELECTRONIC THROTTLE CONTROL RELAY CONNECTOR.** 1) Turn the ignition switch to OFF. 2) Measure the resistance between electronic throttle control relay connector and chassis ground. ***Connector & terminal*** ***(B220) No. 14 — Chassis ground:*** ***(B220) No. 15 — Chassis ground:***	Is the resistance 1 MΩ or more?	Go to step **23**.	Repair the short circuit in harness to ground between ECM and electronic throttle control relay connector.
23	**CHECK HARNESS BETWEEN ECM AND ELECTRONIC THROTTLE CONTROL RELAY CONNECTOR.** Measure the resistance between ECM and electronic throttle control relay connector. ***Connector & terminal*** ***(B135) No. 17 — (B220) No. 14:*** ***(B135) No. 7 — (B220) No. 15:***	Is the resistance less than 1 Ω?	Go to step **24**.	Repair the open circuit in harness between ECM and electronic throttle control relay connector.

	Step	Check	Yes	No
24	**CHECK HARNESS BETWEEN ECM AND ELECTRONIC THROTTLE CONTROL CONNECTOR.** 1) Turn the ignition switch to OFF. 2) Disconnect the connectors from ECM and electronic throttle control. 3) Measure the resistance between ECM and chassis ground. ***Connector & terminal*** ***(B134) No. 19 — Chassis ground:*** ***(B134) No. 18 — Chassis ground:*** ***(B134) No. 18 — (B136) No. 4:*** ***(B134) No. 28 — Chassis ground:***	Is the resistance 1 MΩ or more?	Go to step **25**.	Repair the short circuit to ground in harness between ECM and electronic throttle control connector.
25	**CHECK SHORT CIRCUIT INSIDE THE ECM.** 1) Connect the connector to ECM. 2) Measure the resistance between electronic throttle control connector and engine ground. ***Connector & terminal*** ***(E57) No. 6 — Engine ground:*** ***(E57) No. 4 — Engine ground:***	Is the resistance 1 MΩ or more?	Go to step **26**.	Repair the short circuit to ground in harness between ECM and electronic throttle control connector. Replace the ECM if defective. <Ref. to FU(H4SO)-46, Engine Control Module (ECM).>
26	**CHECK HARNESS BETWEEN ECM AND ELECTRONIC THROTTLE CONTROL CONNECTOR.** 1) Disconnect the connector from ECM. 2) Measure the resistance of harness between ECM and electronic throttle control connector. ***Connector & terminal*** ***(B134) No. 18 — (E57) No. 6:*** ***(B134) No. 28 — (E57) No. 4:*** ***(B134) No. 29 — (E57) No. 3:***	Is the resistance less than 1 Ω?	Go to step **27**.	Repair the harness and connector. NOTE: In this case, repair the following item: • Open circuit in harness between ECM and electronic throttle control connector • Poor contact of coupling connector
27	**CHECK HARNESS BETWEEN ECM AND ELECTRONIC THROTTLE CONTROL CONNECTOR.** 1) Connect the connector to ECM. 2) Measure the resistance between electronic throttle control connector and engine ground. ***Connector & terminal*** ***(E57) No. 3 — Engine ground:***	Is the resistance less than 5 Ω?	Go to step **28**.	Repair the harness and connector. NOTE: In this case, repair the following item: • Open circuit of harness between ECM and engine ground • Poor contact of ECM connector • Poor contact of coupling connector
28	**CHECK HARNESS BETWEEN ECM AND ELECTRONIC THROTTLE CONTROL CONNECTOR.** 1) Turn the ignition switch to ON. 2) Measure the voltage between electronic throttle control connector and engine ground. ***Connector & terminal*** ***(E57) No. 6 (+) — Engine ground (–):*** ***(E57) No. 4 (+) — Engine ground (–):***	Is the voltage 5 V or more?	Repair the short circuit to power in harness between ECM and electronic throttle control connector.	Go to step **29**.

	Step	Check	Yes	No
29	**CHECK HARNESS BETWEEN ECM AND ELECTRONIC THROTTLE CONTROL CONNECTOR.** 1) Turn the ignition switch to OFF. 2) Disconnect the connector from ECM. 3) Measure the resistance between ECM connectors. ***Connector & terminal*** ***(B134) No. 19 — (B134) No. 18:*** ***(B134) No. 19 — (B134) No. 28:***	Is the resistance 1 MΩ or more?	Go to step **30**.	Repair the short circuit to power in harness between ECM and electronic throttle control connector.
30	**CHECK SENSOR OUTPUT.** 1) Connect all connectors. 2) Turn the ignition switch to ON. 3) Read the value of «Main-Throttle Sensor» using Subaru Select Monitor. NOTE: For detailed operation procedures, refer to "READ CURRENT DATA FOR ENGINE". <Ref. to EN(H4SO)(diag)-33, Subaru Select Monitor.>	Is the value of «Main-Throttle Sensor» 0.81 — 0.87 V?	Go to step **31**.	Repair the poor contact of electronic throttle control connector. Replace the electronic throttle control if defective. <Ref. to FU(H4SO)-15, Throttle Body.>
31	**CHECK SENSOR OUTPUT.** Read the value of «Sub-Throttle Sensor» using Subaru Select Monitor. NOTE: For detailed operation procedures, refer to "READ CURRENT DATA FOR ENGINE". <Ref. to EN(H4SO)(diag)-33, Subaru Select Monitor.>	Is the value of «Sub-Throttle Sensor» 1.64 — 1.70 V?	Go to step **32**.	Repair the poor contact of electronic throttle control connector. Replace the electronic throttle control if defective. <Ref. to FU(H4SO)-15, Throttle Body.>
32	**CHECK HARNESS BETWEEN ECM AND ELECTRONIC THROTTLE CONTROL CONNECTOR.** 1) Turn the ignition switch to OFF. 2) Disconnect the connectors from ECM and electronic throttle control. 3) Measure the resistance between ECM and electronic throttle control connector. ***Connector & terminal*** ***(B134) No. 2 — (E57) No. 2:*** ***(B134) No. 1 — (E57) No. 1:***	Is the resistance less than 1 Ω?	Go to step **33**.	Repair the harness and connector. NOTE: In this case, repair the following item: • Open circuit in harness between ECM and electronic throttle control connector • Poor contact of coupling connector
33	**CHECK HARNESS BETWEEN ECM AND ELECTRONIC THROTTLE CONTROL CONNECTOR.** 1) Connect the connector to ECM. 2) Turn the ignition switch to ON. 3) Measure the voltage between electronic throttle control connector and engine ground. ***Connector & terminal*** ***(E57) No. 2 (+) — Engine ground (–):*** ***(E57) No. 1 (+) — Engine ground (–):***	Is the voltage 5 V or more?	Repair the short circuit to power in the harness between ECM and electronic throttle control.	Go to step **34**.

	Step	Check	Yes	No
34	**CHECK HARNESS BETWEEN ECM AND ELECTRONIC THROTTLE CONTROL CONNECTOR.** 1) Turn the ignition switch to OFF. 2) Disconnect the connector from ECM. 3) Measure the resistance between electronic throttle control connector and engine ground. ***Connector & terminal*** ***(E57) No. 2 — Engine ground:*** ***(E57) No. 1 — Engine ground:***	Is the resistance 1 MΩ or more?	Go to step **35**.	Repair the short circuit to ground in harness between ECM and electronic throttle control connector.
35	**CHECK HARNESS BETWEEN ELECTRONIC THROTTLE CONTROL CONNECTOR.** Measure the resistance between electronic throttle control connectors. ***Connector & terminal*** ***(E57) No. 2 — (E57) No. 1:***	Is the resistance 1 MΩ or more?	Go to step **36**.	Repair the short circuit of harness between ECM and electronic throttle control connector.
36	**CHECK ELECTRONIC THROTTLE CONTROL GROUND CIRCUIT.** Measure the resistance between ECM and chassis ground. ***Connector & terminal*** ***(B134) No. 3 — Chassis ground:*** ***(B134) No. 4 — Chassis ground:*** ***(B134) No. 6 — Chassis ground:*** ***(B137) No. 1 — Chassis ground:*** ***(B137) No. 3 — Chassis ground:***	Is the resistance less than 5 Ω?	Go to step **37**.	Repair the harness and connector. NOTE: In this case, repair the following item: • Open circuit of harness between ECM and engine ground • Poor contact of coupling connector
37	**CHECK ELECTRONIC THROTTLE CONTROL.** Measure the resistance between electronic throttle control terminals. ***Terminals*** ***No. 2 — No. 1:***	Is the resistance 50 Ω or less?	Go to step **38**.	Replace the electronic throttle control. <Ref. to FU(H4SO)-15, Throttle Body.>
38	**CHECK ELECTRONIC THROTTLE CONTROL.** Move the throttle valve to the fully open and fully closed positions with fingers. Check that the valve returns to the specified position when releasing fingers.	Does the valve return to the specified position? Standard value: 3 mm (0.12 in) from fully closed position	Repair the poor contact of ECM connector.	Replace the electronic throttle control. <Ref. to FU(H4SO)-15, Throttle Body.>

CN:DTC P050B COLD START IGNITION TIMING PERFORMANCE

NOTE:
For the diagnostic procedure, refer to DTC P050A. <Ref. to EN(H4SO)(diag)-217, DTC P050A COLD START IDLE AIR CONTROL SYSTEM PERFORMANCE, Diagnostic Procedure with Diagnostic Trouble Code (DTC).>

CO:DTC P0512 STARTER REQUEST CIRCUIT

DTC DETECTING CONDITION:

- Immediately at fault recognition
- GENERAL DESCRIPTION <Ref. to GD(H4SO)-189, DTC P0512 STARTER REQUEST CIRCUIT, Diagnostic Trouble Code (DTC) Detecting Criteria.>

TROUBLE SYMPTOM:

Failure of engine to start

CAUTION:

After servicing or replacing faulty parts, perform Clear Memory Mode <Ref. to EN(H4SO)(diag)-51, OPERATION, Clear Memory Mode.>, and Inspection Mode <Ref. to EN(H4SO)(diag)-40, PROCEDURE, Inspection Mode.>.

WIRING DIAGRAM:

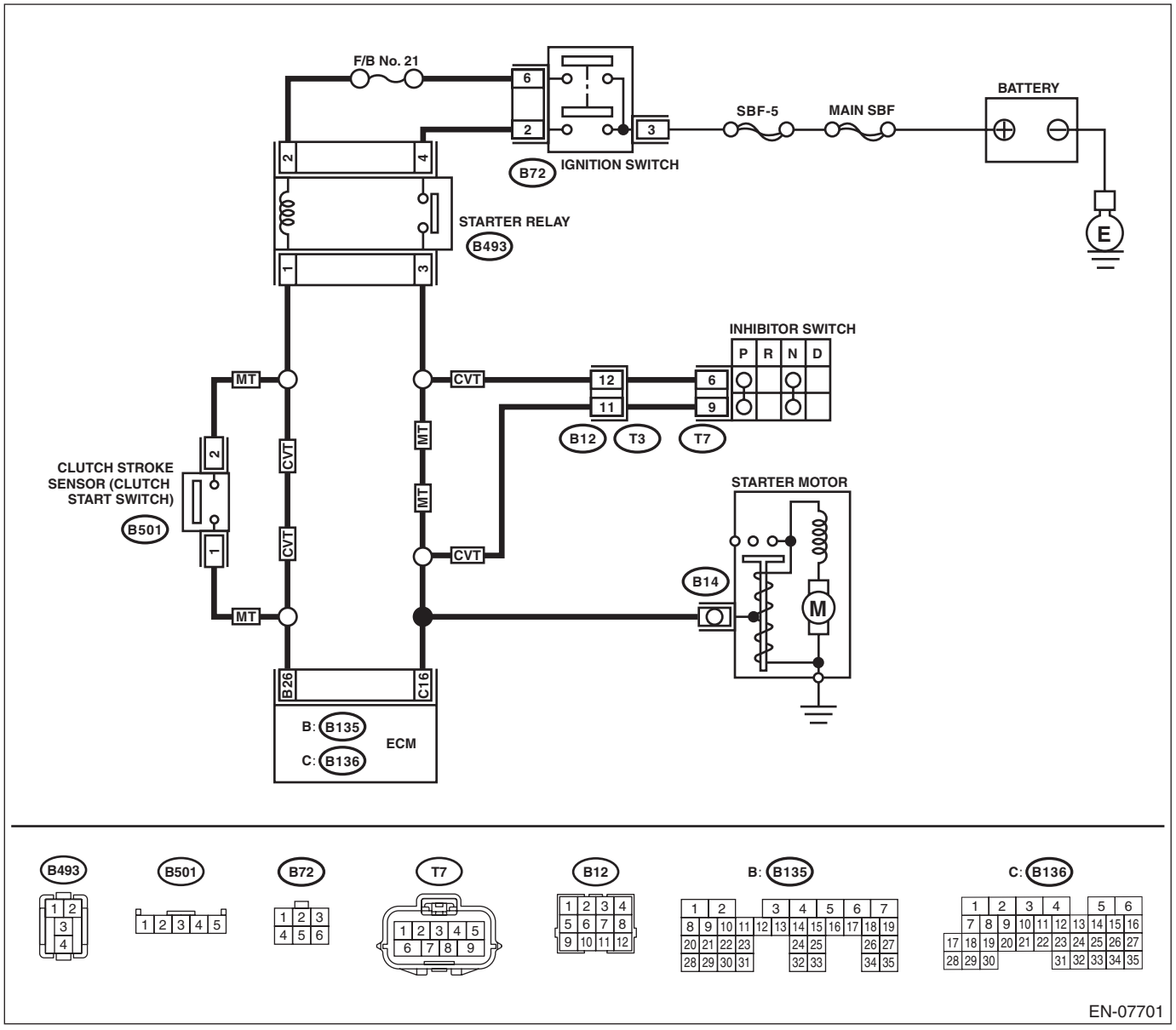

	Step	Check	Yes	No
1	**CHECK FOR ANY OTHER DTC ON DISPLAY.**	Is any other DTC displayed?	Check the appropriate DTC using the “List of Diagnostic Trouble Code (DTC)”. <Ref. to EN(H4SO)(diag)-78, List of Diagnostic Trouble Code (DTC).>	Go to step **2**.
2	**CHECK HARNESS BETWEEN ECM AND STARTER RELAY CONNECTOR.** 1) Turn the ignition switch to OFF. 2) Disconnect the connectors from ECM. 3) Turn the ignition switch to ON. 4) Measure the voltage between ECM and chassis ground. ***Connector & terminal*** ***(B136) No. 16 (+) — Chassis ground (–):*** NOTE: For CVT model, place the select lever in “P” range or “N” range.	Is the voltage 10 V or more?	Repair the short circuit to power supply in harness between ECM and starter relay connector.	Repair the poor contact of ECM connector.

CP:DTC P0604 INTERNAL CONTROL MODULE RANDOM ACCESS MEMORY (RAM) ERROR

DTC DETECTING CONDITION:

- Immediately at fault recognition
- GENERAL DESCRIPTION <Ref. to GD(H4SO)-191, DTC P0604 INTERNAL CONTROL MODULE RANDOM ACCESS MEMORY (RAM) ERROR, Diagnostic Trouble Code (DTC) Detecting Criteria.>

TROUBLE SYMPTOM:

- Engine does not start.
- Engine stalls.

CAUTION:
After servicing or replacing faulty parts, perform Clear Memory Mode <Ref. to EN(H4SO)(diag)-51, OPERATION, Clear Memory Mode.>, and Inspection Mode <Ref. to EN(H4SO)(diag)-40, PROCEDURE, Inspection Mode.>.

Step	Check	Yes	No
1 **CHECK FOR ANY OTHER DTC ON DISPLAY.**	Is any other DTC displayed?	Check the appropriate DTC using the "List of Diagnostic Trouble Code (DTC)". <Ref. to EN(H4SO)(diag)-78, List of Diagnostic Trouble Code (DTC).>	Even if DTC is detected, the circuit has returned to a normal condition at this time. Reproduce the failure, and then perform the diagnosis again. NOTE: In this case, temporary poor contact of connector, temporary open or short circuit of harness may be the cause.

CQ:DTC P0605 INTERNAL CONTROL MODULE READ ONLY MEMORY (ROM) ERROR

NOTE:
For the diagnostic procedure, refer to DTC P0607. <Ref. to EN(H4SO)(diag)-229, DTC P0607 THROTTLE CONTROL SYSTEM CIRCUIT RANGE/PERFORMANCE, Diagnostic Procedure with Diagnostic Trouble Code (DTC).>

CR:DTC P0607 THROTTLE CONTROL SYSTEM CIRCUIT RANGE/PERFORMANCE

DTC DETECTING CONDITION:

- Immediately at fault recognition
- GENERAL DESCRIPTION <Ref. to GD(H4SO)-193, DTC P0607 THROTTLE CONTROL SYSTEM CIRCUIT RANGE/PERFORMANCE, Diagnostic Trouble Code (DTC) Detecting Criteria.>

TROUBLE SYMPTOM:

- Improper idling
- Poor driving performance

CAUTION:

After servicing or replacing faulty parts, perform Clear Memory Mode <Ref. to EN(H4SO)(diag)-51, OPERATION, Clear Memory Mode.>, and Inspection Mode <Ref. to EN(H4SO)(diag)-40, PROCEDURE, Inspection Mode.>.

WIRING DIAGRAM:

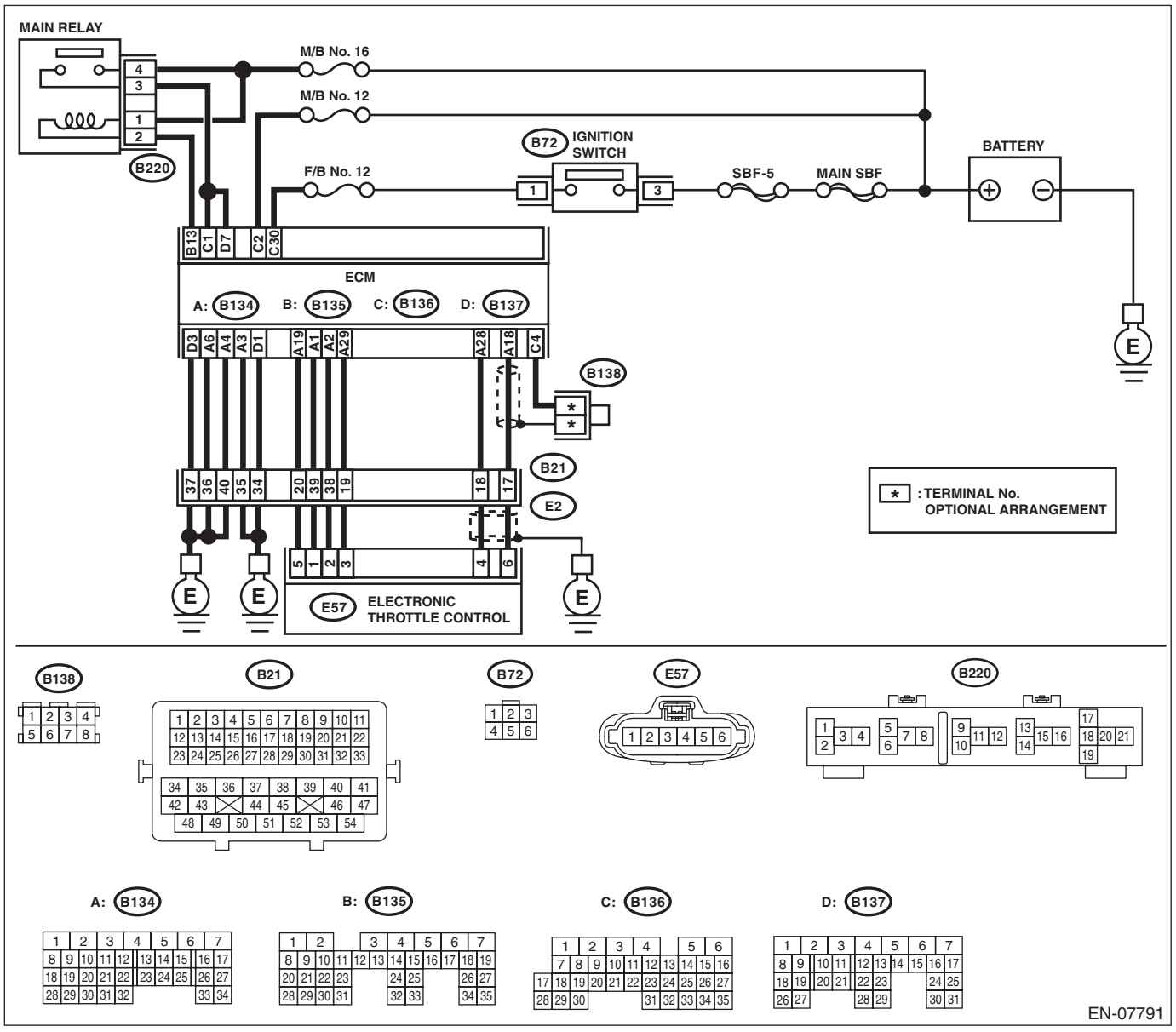

	Step	Check	Yes	No
1	**CHECK INPUT VOLTAGE OF ECM.** 1) Turn the ignition switch to ON. 2) Measure the voltage between ECM and chassis ground. ***Connector & terminal*** ***(B136) No. 1 (+) — Chassis ground (–):*** ***(B137) No. 7 (+) — Chassis ground (–):***	Is the voltage 10 — 13 V?	Go to step **2**.	Repair the open or ground short circuit of power supply circuit.
2	**CHECK INPUT VOLTAGE OF ECM.** 1) Start the engine. 2) Measure the voltage between ECM and chassis ground. ***Connector & terminal*** ***(B136) No. 1 (+) — Chassis ground (–):*** ***(B137) No. 7 (+) — Chassis ground (–):***	Is the voltage 13 — 15 V?	Go to step **3**.	Repair the open or ground short circuit of power supply circuit.
3	**CHECK HARNESS BETWEEN ECM AND ELECTRONIC THROTTLE CONTROL CONNECTOR.** 1) Turn the ignition switch to OFF. 2) Disconnect the connectors from ECM and electronic throttle control. 3) Measure the resistance of harness between ECM and electronic throttle control connector. ***Connector & terminal*** ***(B134) No. 19 — (E57) No. 5:*** ***(B134) No. 29 — (E57) No. 3:***	Is the resistance less than 1 Ω?	Go to step **4**.	Repair the harness and connector. NOTE: In this case, repair the following item: • Open circuit in harness between ECM and electronic throttle control connector • Poor contact of coupling connector
4	**CHECK ECM GROUND HARNESS.** 1) Connect all connectors. 2) Turn the ignition switch to ON. 3) Measure the voltage between ECM and chassis ground. ***Connector & terminal*** ***(B134) No. 3 (+) — Chassis ground (–):*** ***(B134) No. 4 (+) — Chassis ground (–):*** ***(B134) No. 6 (+) — Chassis ground (–):*** ***(B137) No. 1 (+) — Chassis ground (–):*** ***(B137) No. 3 (+) — Chassis ground (–):***	Is the voltage less than 1 V?	Repair the poor contact of ECM connector.	Repair the following item. • Open circuit in ground circuit • Further tightening of the engine ground terminal • Poor contact of coupling connector

CS:DTC P0638 THROTTLE ACTUATOR CONTROL RANGE/PERFORMANCE (BANK 1)

NOTE:
For the diagnostic procedure, refer to DTC P2101. <Ref. to EN(H4SO)(diag)-267, DTC P2101 THROTTLE ACTUATOR CONTROL MOTOR CIRCUIT RANGE/PERFORMANCE, Diagnostic Procedure with Diagnostic Trouble Code (DTC).>

CT:DTC P0700 TRANSMISSION CONTROL SYSTEM (MIL REQUEST)

NOTE:
For the diagnostic procedure, refer to CVT section. <Ref. to CVT(diag)-2, Basic Diagnostic Procedure.>

CU:DTC P0851 PARK/NEUTRAL SWITCH INPUT CIRCUIT LOW (AT MODEL)

DTC DETECTING CONDITION:

- Detected when two consecutive driving cycles with fault occur.
- GENERAL DESCRIPTION <Ref. to GD(H4SO)-198, DTC P0851 PARK/NEUTRAL SWITCH INPUT CIRCUIT LOW (AT MODEL), Diagnostic Trouble Code (DTC) Detecting Criteria.>

TROUBLE SYMPTOM:

Improper idling

CAUTION:

After servicing or replacing faulty parts, perform Clear Memory Mode <Ref. to EN(H4SO)(diag)-51, OPERATION, Clear Memory Mode.>, and Inspection Mode <Ref. to EN(H4SO)(diag)-40, PROCEDURE, Inspection Mode.>.

WIRING DIAGRAM:

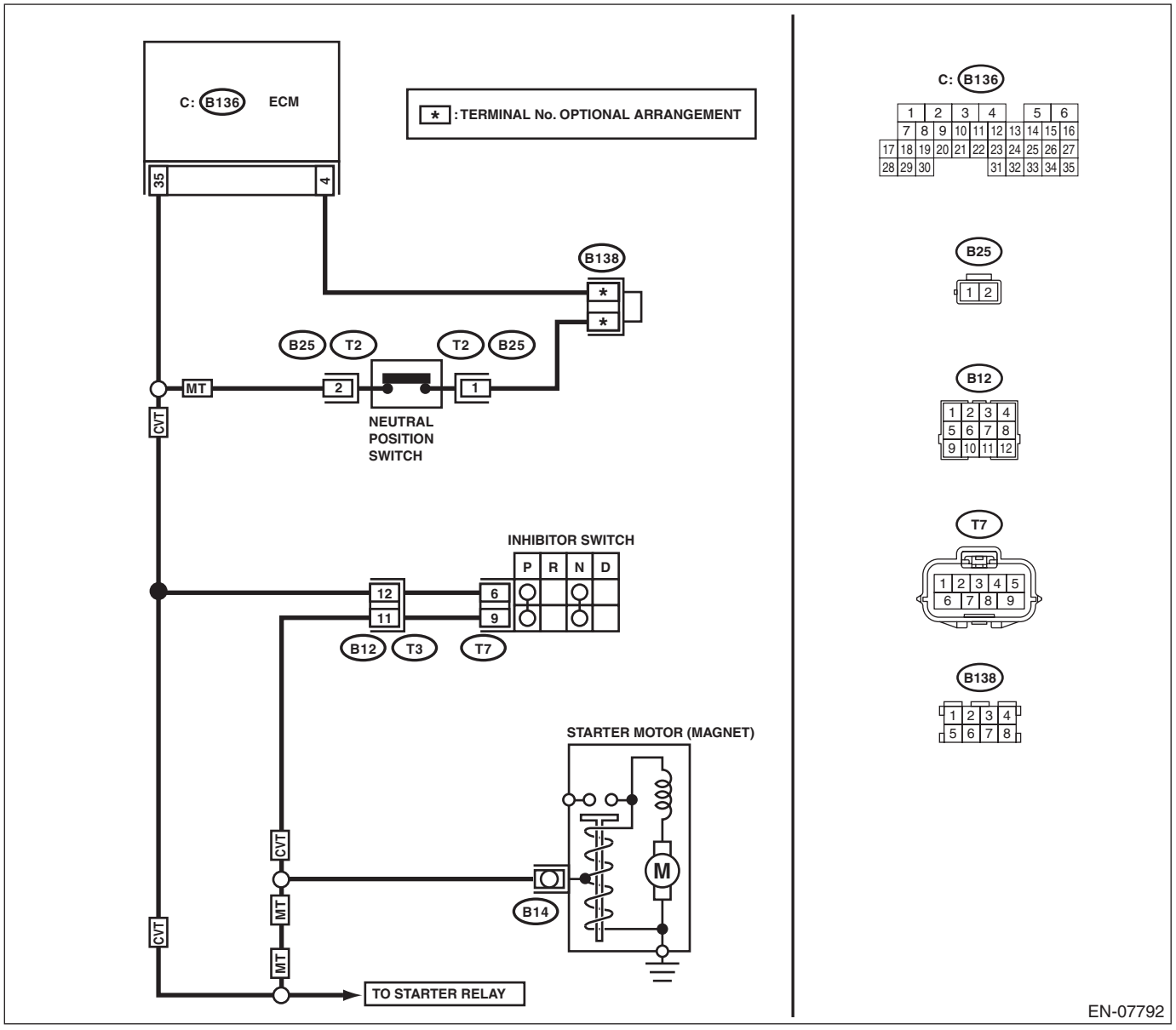

Step		Check	Yes	No
1	**CHECK SELECT CABLE.**	Is there any fault in select cable?	Repair or adjust the select cable. <Ref. to CS-42, Select Cable.>	Go to step **2**.

	Step	Check	Yes	No
2	**CHECK INPUT SIGNAL OF ECM.** 1) Turn the ignition switch to ON. 2) Place the select lever in other than "P" range and "N" range. 3) Measure the voltage between ECM and chassis ground. ***Connector & terminal*** ***(B136) No. 35 (+) — Chassis ground (–):***	Is the voltage 10 V or more?	Repair the poor contact of ECM connector.	Go to step **3**.
3	**CHECK HARNESS BETWEEN ECM AND TRANSMISSION HARNESS CONNECTOR.** 1) Turn the ignition switch to OFF. 2) Disconnect the connectors from ECM and transmission harness connector (T3). 3) Measure the resistance between ECM and chassis ground. ***Connector & terminal*** ***(B136) No. 35 — Chassis ground:***	Is the resistance 1 MΩ or more?	Go to step **4**.	Repair the ground short circuit of harness between ECM and transmission harness connector.
4	**CHECK TRANSMISSION HARNESS CONNECTOR.** 1) Disconnect the connector from inhibitor switch. 2) Measure the resistance between transmission harness connector and engine ground. ***Connector & terminal*** ***(T3) No. 12 — Engine ground:***	Is the resistance 1 MΩ or more?	Replace the inhibitor switch. <Ref. to CVT-95, Inhibitor Switch.>	Repair short circuit to ground in harness between transmission harness connector and inhibitor switch connector.

CV:DTC P0851 NEUTRAL SWITCH INPUT CIRCUIT LOW (MT MODEL)

DTC DETECTING CONDITION:

- Detected when two consecutive driving cycles with fault occur.
- GENERAL DESCRIPTION <Ref. to GD(H4SO)-199, DTC P0851 NEUTRAL SWITCH INPUT CIRCUIT LOW (MT MODEL), Diagnostic Trouble Code (DTC) Detecting Criteria.>

TROUBLE SYMPTOM:

Improper idling

CAUTION:

After servicing or replacing faulty parts, perform Clear Memory Mode <Ref. to EN(H4SO)(diag)-51, OPERATION, Clear Memory Mode.>, and Inspection Mode <Ref. to EN(H4SO)(diag)-40, PROCEDURE, Inspection Mode.>.

WIRING DIAGRAM:

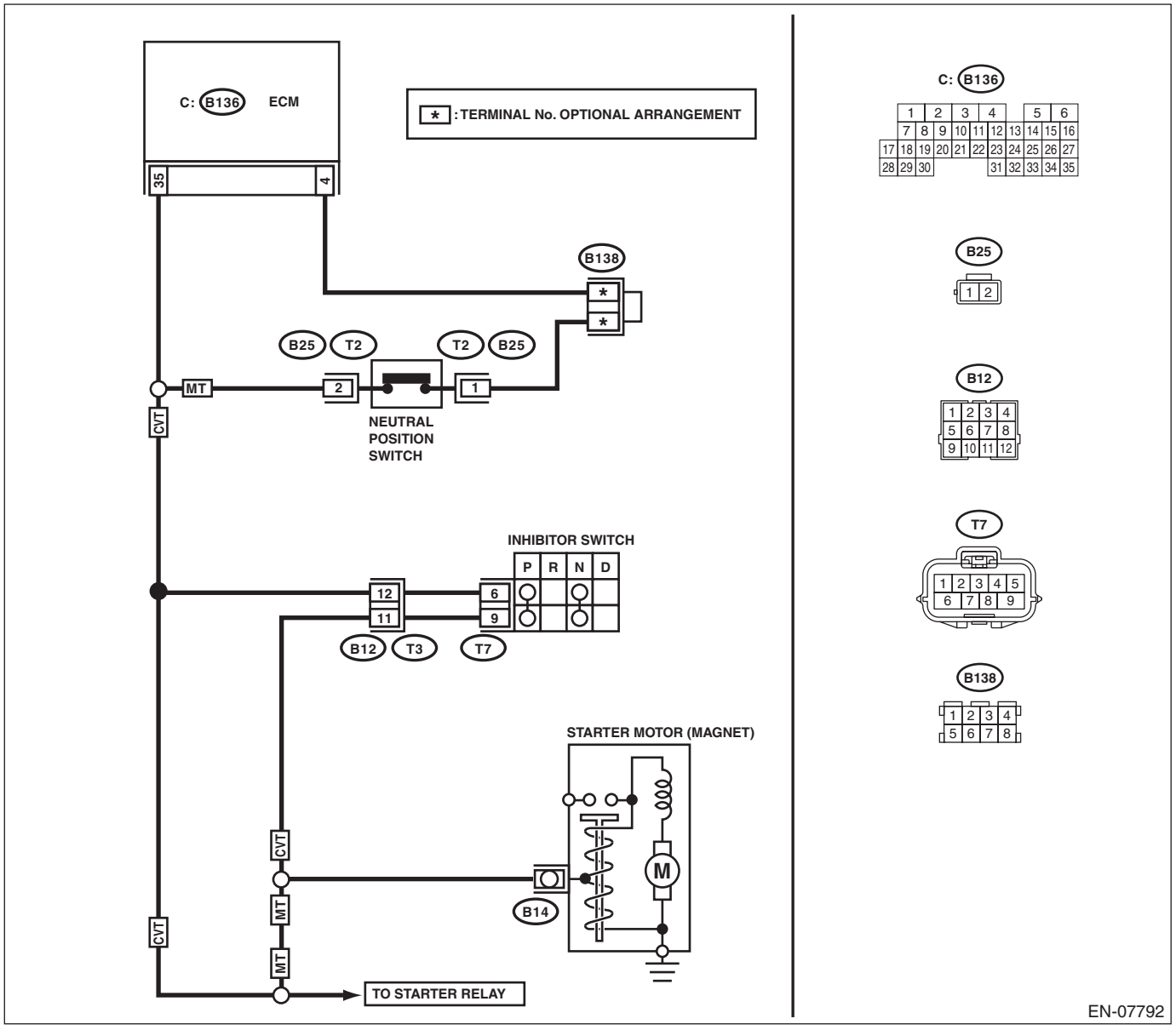

	Step	Check	Yes	No
1	**CHECK INPUT SIGNAL OF ECM.** 1) Turn the ignition switch to ON. 2) Place the shift lever in a position other than neutral. 3) Measure the voltage between ECM and chassis ground. ***Connector & terminal*** ***(B136) No. 35 (+) — Chassis ground (–):***	Is the voltage 10 V or more?	Repair the poor contact of ECM connector.	Go to step **2**.
2	**CHECK HARNESS BETWEEN ECM AND NEUTRAL POSITION SWITCH CONNECTOR.** 1) Turn the ignition switch to OFF. 2) Disconnect the connectors from ECM and neutral position switch. 3) Measure the resistance between ECM and chassis ground. ***Connector & terminal*** ***(B136) No. 35 — Chassis ground:***	Is the resistance 1 MΩ or more?	Replace the neutral position switch. <Ref. to 6MT-37, Switches and Harness.>	Repair the short circuit to ground harness between ECM and neutral position switch connector.

CW:DTC P0852 PARK/NEUTRAL SWITCH INPUT CIRCUIT HIGH (AT MODEL)

DTC DETECTING CONDITION:

- Detected when two consecutive driving cycles with fault occur.
- GENERAL DESCRIPTION <Ref. to GD(H4SO)-200, DTC P0852 PARK/NEUTRAL SWITCH INPUT CIRCUIT HIGH (AT MODEL), Diagnostic Trouble Code (DTC) Detecting Criteria.>

TROUBLE SYMPTOM:

Improper idling

CAUTION:

After servicing or replacing faulty parts, perform Clear Memory Mode <Ref. to EN(H4SO)(diag)-51, OPERATION, Clear Memory Mode.>, and Inspection Mode <Ref. to EN(H4SO)(diag)-40, PROCEDURE, Inspection Mode.>.

WIRING DIAGRAM:

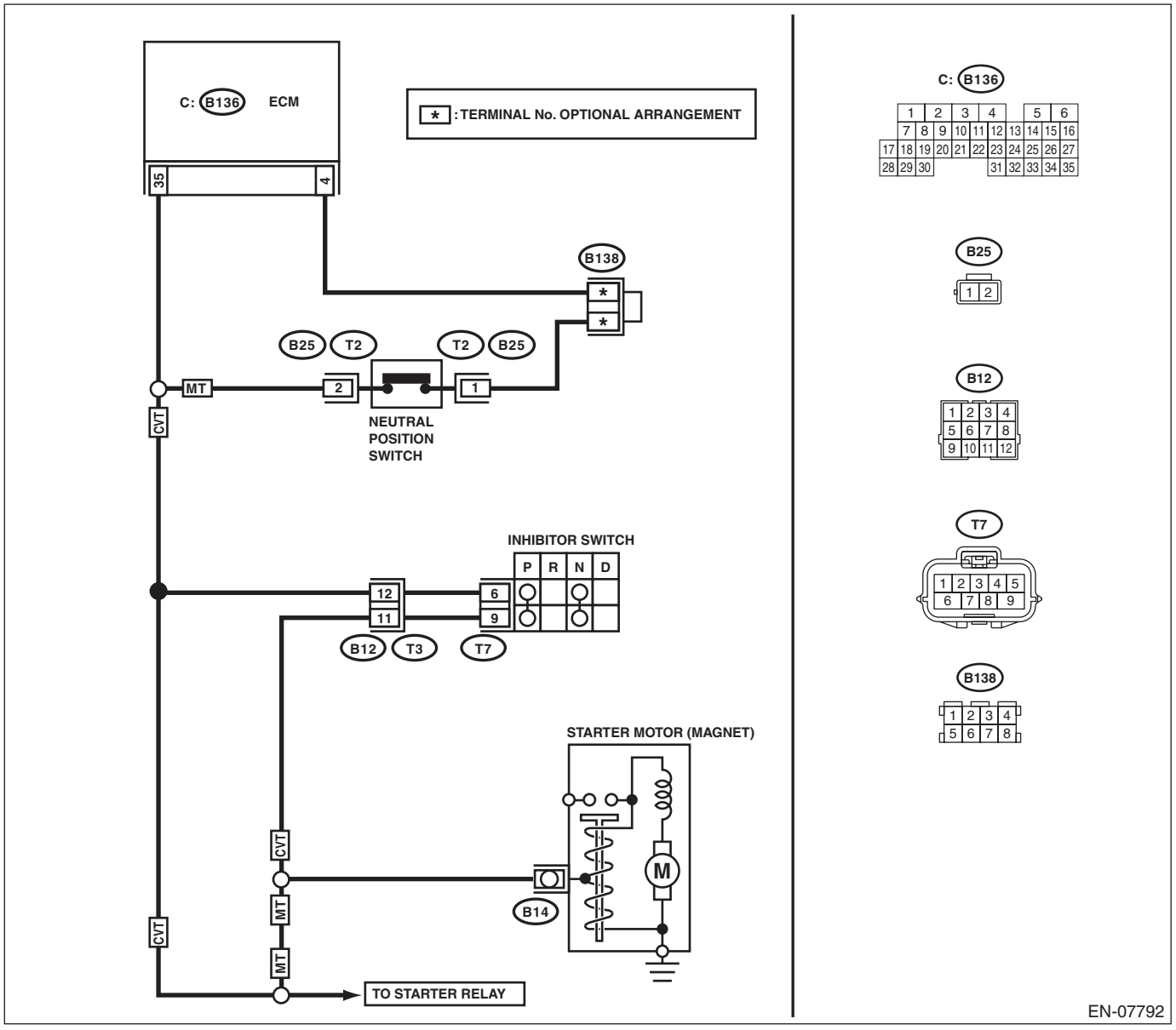

Step		Check	Yes	No
1	**CHECK SELECT CABLE.**	Is there any fault in select cable?	Repair or adjust the select cable. <Ref. to CS-42, Select Cable.>	Go to step **2**.

	Step	Check	Yes	No
2	**CHECK INPUT SIGNAL OF ECM.** 1) Turn the ignition switch to ON. 2) Measure the voltage between ECM and chassis ground with select lever at "P" range and "N" range. ***Connector & terminal*** ***(B136) No. 35 (+) — Chassis ground (–):***	Is the voltage less than 1 V?	Repair the poor contact of ECM connector.	Go to step **3**.
3	**CHECK HARNESS BETWEEN ECM AND INHIBITOR SWITCH CONNECTOR.** 1) Turn the ignition switch to OFF. 2) Disconnect the connectors from ECM and inhibitor switch. 3) Measure the resistance of harness between ECM and inhibitor switch connector. ***Connector & terminal*** ***(B136) No. 35 — (T7) No. 6:***	Is the resistance less than 1 Ω?	Go to step **4**.	Repair the harness and connector. NOTE: In this case, repair the following item: • Open circuit in harness between ECM and inhibitor switch connector • Poor contact of coupling connector
4	**CHECK INHIBITOR SWITCH GROUND LINE.** Measure the resistance of harness between inhibitor switch connector and engine ground. ***Connector & terminal*** ***(T7) No. 9 — Engine ground:***	Is the resistance less than 5 Ω?	Replace the inhibitor switch. <Ref. to CVT-95, Inhibitor Switch.>	Repair the harness and connector. NOTE: In this case, repair the following item: • Open circuit of harness between inhibitor switch connector and starter motor ground line • Poor contact of coupling connector • Poor contact of starter motor connector • Poor contact of starter motor ground • Starter motor

CX:DTC P0852 NEUTRAL SWITCH INPUT CIRCUIT HIGH (MT MODEL)

DTC DETECTING CONDITION:

- Detected when two consecutive driving cycles with fault occur.
- GENERAL DESCRIPTION <Ref. to GD(H4SO)-201, DTC P0852 NEUTRAL SWITCH INPUT CIRCUIT HIGH (MT MODEL), Diagnostic Trouble Code (DTC) Detecting Criteria.>

TROUBLE SYMPTOM:

Improper idling

CAUTION:

After servicing or replacing faulty parts, perform Clear Memory Mode <Ref. to EN(H4SO)(diag)-51, OPERATION, Clear Memory Mode.>, and Inspection Mode <Ref. to EN(H4SO)(diag)-40, PROCEDURE, Inspection Mode.>.

WIRING DIAGRAM:

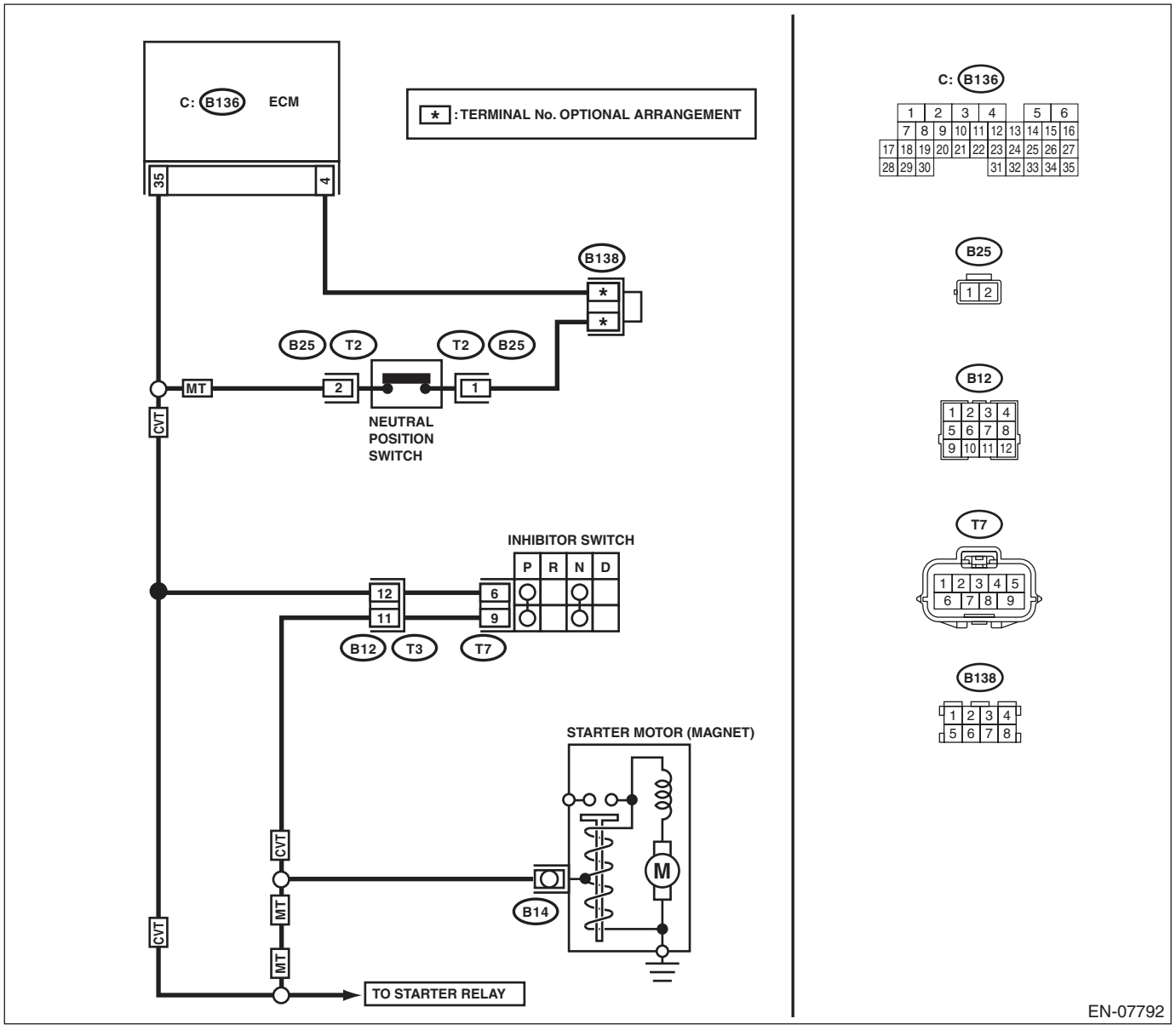

	Step	Check	Yes	No
1	**CHECK INPUT SIGNAL OF ECM.** 1) Turn the ignition switch to ON. 2) Place the shift lever in neutral. 3) Measure the voltage between ECM and chassis ground. ***Connector & terminal*** ***(B136) No. 35 (+) — Chassis ground (–):***	Is the voltage less than 1 V?	Repair the poor contact of ECM connector.	Go to step **2**.
2	**CHECK HARNESS BETWEEN ECM AND NEUTRAL POSITION SWITCH CONNECTOR.** 1) Turn the ignition switch to OFF. 2) Disconnect the connectors from ECM and neutral position switch. 3) Measure the resistance of harness between ECM and neutral position switch connector. ***Connector & terminal*** ***(B136) No. 35 — (B25) No. 2:*** ***(B136) No. 4 — (B25) No. 1:***	Is the resistance less than 1 Ω?	Go to step **3**.	Repair the harness and connector. NOTE: In this case, repair the following item: • Open circuit in harness between ECM and neutral position switch connector • Poor contact of joint connector
3	**CHECK NEUTRAL POSITION SWITCH.** 1) Place the shift lever in neutral. 2) Measure the resistance between neutral position switch terminals. ***Terminals*** ***No. 1 — No. 2:***	Is the resistance less than 1 Ω?	Repair the poor contact of neutral position switch connector.	Replace the neutral position switch. <Ref. to 6MT-37, Switches and Harness.>

CY:DTC P1152 O2 SENSOR CIRCUIT RANGE/PERFORMANCE (LOW) (BANK1 SENSOR1)

DTC DETECTING CONDITION:

- Detected when two consecutive driving cycles with fault occur.
- GENERAL DESCRIPTION <Ref. to GD(H4SO)-202, DTC P1152 O2 SENSOR CIRCUIT RANGE/PERFORMANCE (LOW) (BANK1 SENSOR1), Diagnostic Trouble Code (DTC) Detecting Criteria.>

CAUTION:

After servicing or replacing faulty parts, perform Clear Memory Mode <Ref. to EN(H4SO)(diag)-51, OPERATION, Clear Memory Mode.>, and Inspection Mode <Ref. to EN(H4SO)(diag)-40, PROCEDURE, Inspection Mode.>.

WIRING DIAGRAM:

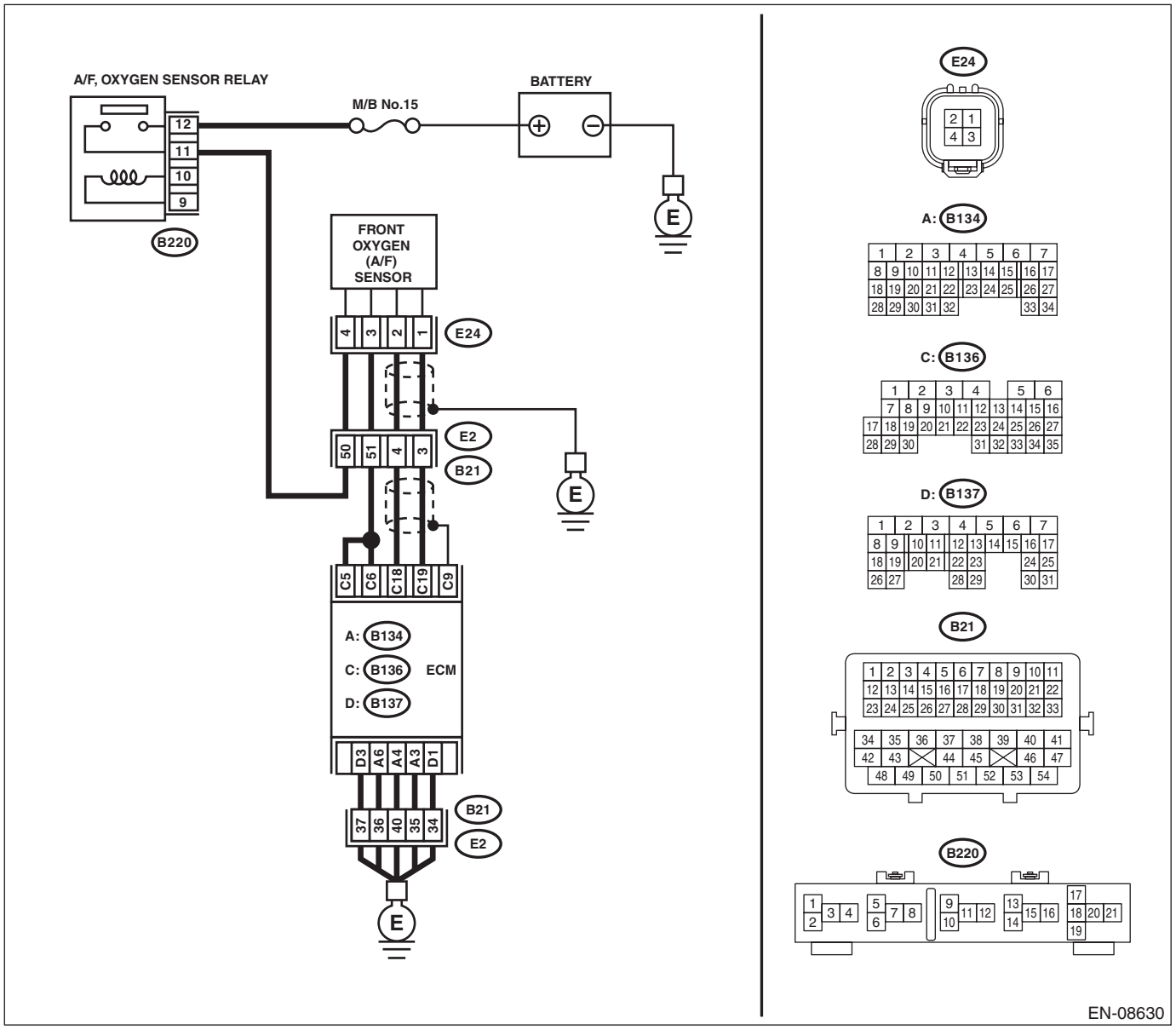

Step		Check	Yes	No
1	**CHECK FRONT OXYGEN (A/F) SENSOR CONNECTOR AND COUPLING CONNECTOR.**	Has water entered the connector?	Completely remove any water inside.	Go to step **2**.

	Step	Check	Yes	No
2	**CHECK HARNESS BETWEEN ECM AND FRONT OXYGEN (A/F) SENSOR CONNECTOR.** 1) Turn the ignition switch to OFF. 2) Disconnect the connectors from ECM and front oxygen (A/F) sensor. 3) Measure the resistance of harness between ECM and front oxygen (A/F) sensor connector. ***Connector & terminal*** ***(B136) No. 18 — (E24) No. 2:*** ***(B136) No. 19 — (E24) No. 1:***	Is the resistance less than 1 Ω?	Go to step **3**.	Repair the harness and connector. NOTE: In this case, repair the following item: • Open circuit in harness between ECM and front oxygen (A/F) sensor connector • Poor contact of coupling connector
3	**CHECK FOR POOR CONTACT.** Check for poor contact of the front oxygen (A/F) sensor connector.	Is there poor contact of front oxygen (A/F) sensor connector?	Repair the poor contact of front oxygen (A/F) sensor connector.	Replace the front oxygen (A/F) sensor. <Ref. to FU(H4SO)-42, Front Oxygen (A/F) Sensor.>

CZ:DTC P1153 O2 SENSOR CIRCUIT RANGE/PERFORMANCE (HIGH) (BANK1 SENSOR1)

DTC DETECTING CONDITION:

- Detected when two consecutive driving cycles with fault occur.
- GENERAL DESCRIPTION <Ref. to GD(H4SO)-204, DTC P1153 O2 SENSOR CIRCUIT RANGE/PERFORMANCE (HIGH) (BANK1 SENSOR1), Diagnostic Trouble Code (DTC) Detecting Criteria.>

CAUTION:

After servicing or replacing faulty parts, perform Clear Memory Mode <Ref. to EN(H4SO)(diag)-51, OPERATION, Clear Memory Mode.>, and Inspection Mode <Ref. to EN(H4SO)(diag)-40, PROCEDURE, Inspection Mode.>.

WIRING DIAGRAM:

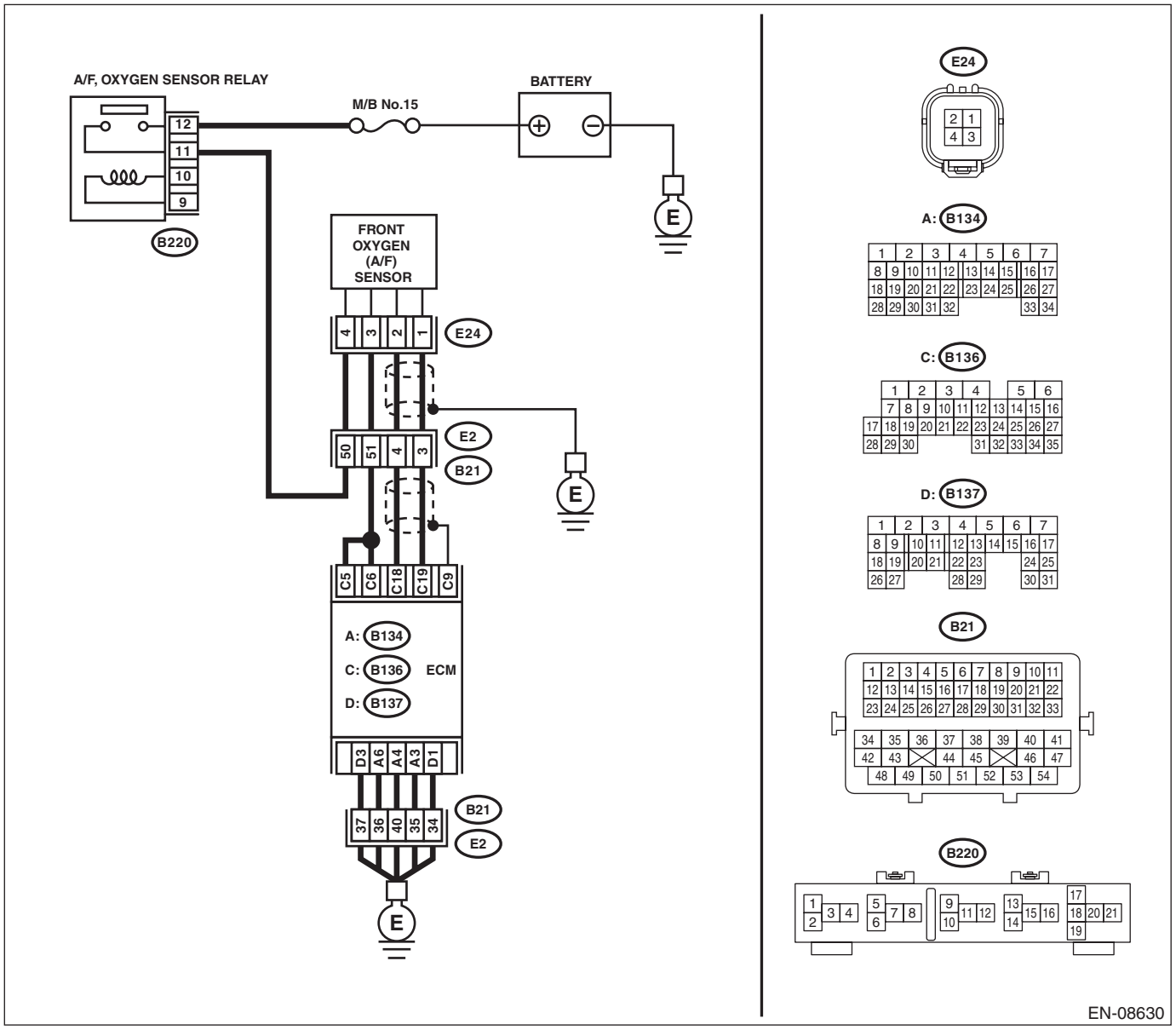

Step		Check	Yes	No
1	**CHECK FRONT OXYGEN (A/F) SENSOR CONNECTOR AND COUPLING CONNECTOR.**	Has water entered the connector?	Completely remove any water inside.	Go to step **2**.

	Step	Check	Yes	No
2	**CHECK HARNESS BETWEEN ECM AND FRONT OXYGEN (A/F) SENSOR CONNECTOR.** 1) Turn the ignition switch to OFF. 2) Disconnect the connector from ECM. 3) Measure the resistance between ECM and chassis ground. ***Connector & terminal*** ***(B136) No. 18 — Chassis ground:*** ***(B136) No. 19 — Chassis ground:***	Is the resistance 1 MΩ or more?	Go to step **3**.	Repair the ground short circuit of harness between ECM and front oxygen (A/F) sensor connector.
3	**CHECK OUTPUT SIGNAL FOR ECM.** 1) Connect the connector to ECM. 2) Turn the ignition switch to ON. 3) Measure the voltage between ECM and chassis ground. ***Connector & terminal*** ***(B136) No. 19 (+) — Chassis ground (–):***	Is the voltage 4.5 V or more?	Go to step **5**.	Go to step **4**.
4	**CHECK OUTPUT SIGNAL FOR ECM.** Measure the voltage between ECM and chassis ground. ***Connector & terminal*** ***(B136) No. 18 (+) — Chassis ground (–):***	Is the voltage 4.95 V or more?	Go to step **5**.	Replace the front oxygen (A/F) sensor. <Ref. to FU(H4SO)-42, Front Oxygen (A/F) Sensor.>
5	**CHECK OUTPUT SIGNAL FOR ECM.** Measure the voltage between ECM and chassis ground. ***Connector & terminal*** ***(B136) No. 18 (+) — Chassis ground (–):*** ***(B136) No. 19 (+) — Chassis ground (–):***	Is the voltage 8 V or more?	Repair the short circuit to power in the harness between ECM and front oxygen (A/F) sensor connector. After repair, replace the ECM. <Ref. to FU(H4SO)-46, Engine Control Module (ECM).>	Repair the poor contact of ECM connector.

DA:DTC P1160 RETURN SPRING FAILURE

NOTE:
For the diagnostic procedure, refer to DTC P2101. <Ref. to EN(H4SO)(diag)-267, DTC P2101 THROTTLE ACTUATOR CONTROL MOTOR CIRCUIT RANGE/PERFORMANCE, Diagnostic Procedure with Diagnostic Trouble Code (DTC).>

DB:DTC P1443 VENT CONTROL SOLENOID VALVE FUNCTION PROBLEM

DTC DETECTING CONDITION:

- Immediately at fault recognition
- GENERAL DESCRIPTION <Ref. to GD(H4SO)-207, DTC P1443 VENT CONTROL SOLENOID VALVE FUNCTION PROBLEM, Diagnostic Trouble Code (DTC) Detecting Criteria.>

TROUBLE SYMPTOM:

Improper fuel supply

CAUTION:

After servicing or replacing faulty parts, perform Clear Memory Mode <Ref. to EN(H4SO)(diag)-51, OPERATION, Clear Memory Mode.>, and Inspection Mode <Ref. to EN(H4SO)(diag)-40, PROCEDURE, Inspection Mode.>.

	Step	Check	Yes	No
1	**CHECK FOR ANY OTHER DTC ON DISPLAY.**	Is any other DTC displayed?	Check the appropriate DTC using the "List of Diagnostic Trouble Code (DTC)". <Ref. to EN(H4SO)(diag)-78, List of Diagnostic Trouble Code (DTC).>	Go to step **2**.
2	**CHECK DRAIN HOSE.** Check the drain hose for clogging.	Is there clogging in the drain hose?	Replace the drain hose.	Go to step **3**.
3	**CHECK DRAIN VALVE OPERATION.** 1) Turn the ignition switch to OFF. 2) Install the delivery (test) mode fuse. **CAUTION:** **Do not use any fuses that are installed on the vehicle.** 3) Turn the ignition switch to ON. 4) Operate the drain valve. NOTE: Drain valve can be operated using the Subaru Select Monitor. For detailed procedures, refer to "SYSTEM OPERATION CHECK MODE". <Ref. to EN(H4SO)(diag)-52, System Operation Check Mode.>	Does the drain valve operate?	Repair the poor contact of ECM connector.	Replace the drain valve. <Ref. to EC(H4SO)-19, Drain Valve.>

DC:DTC P1492 EGR SOLENOID VALVE SIGNAL #1 CIRCUIT MALFUNCTION (LOW INPUT)

NOTE:
For the diagnostic procedure, refer to DTC P1498. <Ref. to EN(H4SO)(diag)-245, DTC P1498 EGR SOLENOID VALVE SIGNAL #4 CIRCUIT MALFUNCTION (LOW INPUT), Diagnostic Procedure with Diagnostic Trouble Code (DTC).>

DD:DTC P1493 EGR SOLENOID VALVE SIGNAL #1 CIRCUIT MALFUNCTION (HIGH INPUT)

NOTE:
For the diagnostic procedure, refer to DTC P1499. <Ref. to EN(H4SO)(diag)-248, DTC P1499 EGR SOLENOID VALVE SIGNAL #4 CIRCUIT MALFUNCTION (HIGH INPUT), Diagnostic Procedure with Diagnostic Trouble Code (DTC).>

DE:DTC P1494 EGR SOLENOID VALVE SIGNAL #2 CIRCUIT MALFUNCTION (LOW INPUT)

NOTE:
For the diagnostic procedure, refer to DTC P1498. <Ref. to EN(H4SO)(diag)-245, DTC P1498 EGR SOLENOID VALVE SIGNAL #4 CIRCUIT MALFUNCTION (LOW INPUT), Diagnostic Procedure with Diagnostic Trouble Code (DTC).>

DF:DTC P1495 EGR SOLENOID VALVE SIGNAL #2 CIRCUIT MALFUNCTION (HIGH INPUT)

NOTE:
For the diagnostic procedure, refer to DTC P1499. <Ref. to EN(H4SO)(diag)-248, DTC P1499 EGR SOLENOID VALVE SIGNAL #4 CIRCUIT MALFUNCTION (HIGH INPUT), Diagnostic Procedure with Diagnostic Trouble Code (DTC).>

DG:DTC P1496 EGR SOLENOID VALVE SIGNAL #3 CIRCUIT MALFUNCTION (LOW INPUT)

NOTE:
For the diagnostic procedure, refer to DTC P1498. <Ref. to EN(H4SO)(diag)-245, DTC P1498 EGR SOLENOID VALVE SIGNAL #4 CIRCUIT MALFUNCTION (LOW INPUT), Diagnostic Procedure with Diagnostic Trouble Code (DTC).>

DH:DTC P1497 EGR SOLENOID VALVE SIGNAL #3 CIRCUIT MALFUNCTION (HIGH INPUT)

NOTE:
For the diagnostic procedure, refer to DTC P1499. <Ref. to EN(H4SO)(diag)-248, DTC P1499 EGR SOLENOID VALVE SIGNAL #4 CIRCUIT MALFUNCTION (HIGH INPUT), Diagnostic Procedure with Diagnostic Trouble Code (DTC).>

DI: DTC P1498 EGR SOLENOID VALVE SIGNAL #4 CIRCUIT MALFUNCTION (LOW INPUT)

DTC DETECTING CONDITION:

- Immediately at fault recognition
- GENERAL DESCRIPTION <Ref. to GD(H4SO)-209, DTC P1492 EGR SOLENOID VALVE SIGNAL #1 CIRCUIT MALFUNCTION (LOW INPUT), Diagnostic Trouble Code (DTC) Detecting Criteria.> <Ref. to GD(H4SO)-213, DTC P1494 EGR SOLENOID VALVE SIGNAL #2 CIRCUIT MALFUNCTION (LOW INPUT), Diagnostic Trouble Code (DTC) Detecting Criteria.> <Ref. to GD(H4SO)-213, DTC P1496 EGR SOLENOID VALVE SIGNAL #3 CIRCUIT MALFUNCTION (LOW INPUT), Diagnostic Trouble Code (DTC) Detecting Criteria.> <Ref. to GD(H4SO)-213, DTC P1498 EGR SOLENOID VALVE SIGNAL #4 CIRCUIT MALFUNCTION (LOW INPUT), Diagnostic Trouble Code (DTC) Detecting Criteria.>

TROUBLE SYMPTOM:

- Improper idling
- Poor driving performance
- Engine breathing

CAUTION:

After servicing or replacing faulty parts, perform Clear Memory Mode <Ref. to EN(H4SO)(diag)-51, OPERATION, Clear Memory Mode.>, and Inspection Mode <Ref. to EN(H4SO)(diag)-40, PROCEDURE, Inspection Mode.>.

WIRING DIAGRAM:

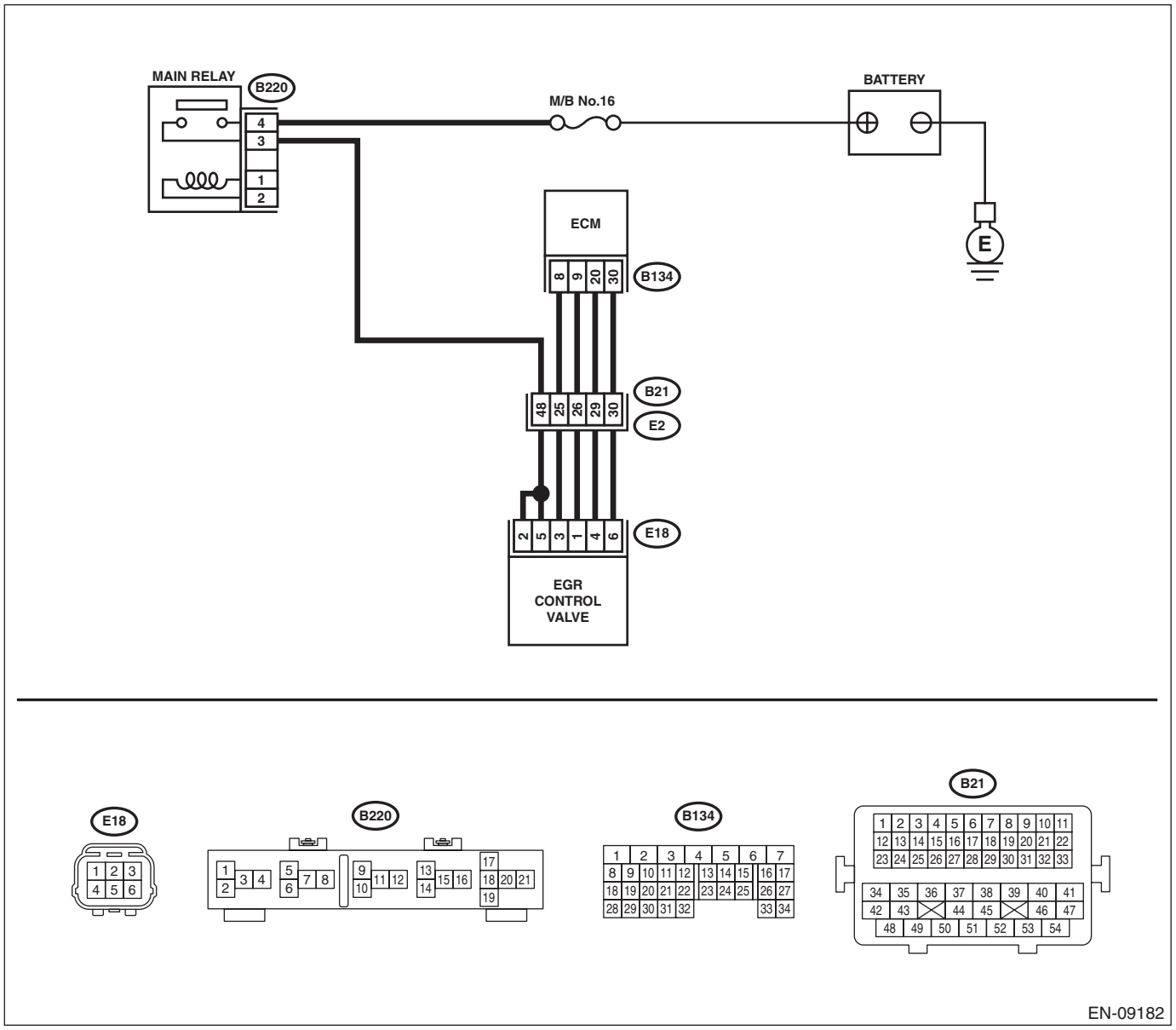

EN-09182

Step		Check	Yes	No
1	**CHECK POWER SUPPLY TO EGR CONTROL VALVE.** 1) Turn the ignition switch to OFF. 2) Disconnect the connector from the EGR control valve. 3) Turn the ignition switch to ON. 4) Measure the voltage between EGR control valve connector and engine ground. ***Connector & terminal*** ***(E18) No. 2 (+) — Engine ground (–):*** ***(E18) No. 5 (+) — Engine ground (–):***	Is the voltage 10 V or more?	Go to step **2**.	Repair the harness and connector. NOTE: In this case, repair the following item: • Open circuit in harness between EGR control valve and main relay connector • Poor contact of coupling connector

	Step	Check	Yes	No
2	**CHECK HARNESS BETWEEN ECM AND EGR CONTROL VALVE CONNECTOR.** 1) Turn the ignition switch to OFF. 2) Disconnect the connector from ECM. 3) Measure the resistance between ECM and EGR control valve connector. ***Connector & terminal*** ***DTC P1492; (B134) No. 8 — (E18) No. 3:*** ***DTC P1494; (B134) No. 9 — (E18) No. 1:*** ***DTC P1496; (B134) No. 20 — (E18) No. 4:*** ***DTC P1498; (B134) No. 30 — (E18) No. 6:***	Is the resistance less than 1 Ω?	Go to step **3**.	Repair the harness and connector. NOTE: In this case, repair the following item: • Open circuit of harness between ECM and EGR control valve connector • Poor contact of coupling connector
3	**CHECK HARNESS BETWEEN ECM AND EGR CONTROL VALVE CONNECTOR.** 1) Disconnect the connector from ECM. 2) Measure the resistance between ECM and chassis ground. ***Connector & terminal*** ***DTC P1492; (B134) No. 8 — Chassis ground:*** ***DTC P1494; (B134) No. 9 — Chassis ground:*** ***DTC P1496; (B134) No. 20 — Chassis ground:*** ***DTC P1498; (B134) No. 30 — Chassis ground:***	Is the resistance 1 MΩ or more?	Go to step **4**.	Repair the ground short in harness between ECM and EGR control valve connector.
4	**CHECK FOR POOR CONTACT.** Check poor contact between ECM and EGR control valve connector.	Is there poor contact in ECM or EGR control valve connector?	Repair the poor contact of ECM or EGR control valve connector.	Replace EGR control valve. <Ref. to FU(H4SO)-36, EGR Valve.>

DJ:DTC P1499 EGR SOLENOID VALVE SIGNAL #4 CIRCUIT MALFUNCTION (HIGH INPUT)

DTC DETECTING CONDITION:

- Immediately at fault recognition
- GENERAL DESCRIPTION <Ref. to GD(H4SO)-211, DTC P1493 EGR SOLENOID VALVE SIGNAL #1 CIRCUIT MALFUNCTION (HIGH INPUT), Diagnostic Trouble Code (DTC) Detecting Criteria.> <Ref. to GD(H4SO)-213, DTC P1495 EGR SOLENOID VALVE SIGNAL #2 CIRCUIT MALFUNCTION (HIGH INPUT), Diagnostic Trouble Code (DTC) Detecting Criteria.> <Ref. to GD(H4SO)-213, DTC P1497 EGR SOLENOID VALVE SIGNAL #3 CIRCUIT MALFUNCTION (HIGH INPUT), Diagnostic Trouble Code (DTC) Detecting Criteria.> <Ref. to GD(H4SO)-213, DTC P1499 EGR SOLENOID VALVE SIGNAL #4 CIRCUIT MALFUNCTION (HIGH INPUT), Diagnostic Trouble Code (DTC) Detecting Criteria.>

TROUBLE SYMPTOM:

- Improper idling
- Poor driving performance
- Engine breathing

CAUTION:

After servicing or replacing faulty parts, perform Clear Memory Mode <Ref. to EN(H4SO)(diag)-51, OPERATION, Clear Memory Mode.>, and Inspection Mode <Ref. to EN(H4SO)(diag)-40, PROCEDURE, Inspection Mode.>.

WIRING DIAGRAM:

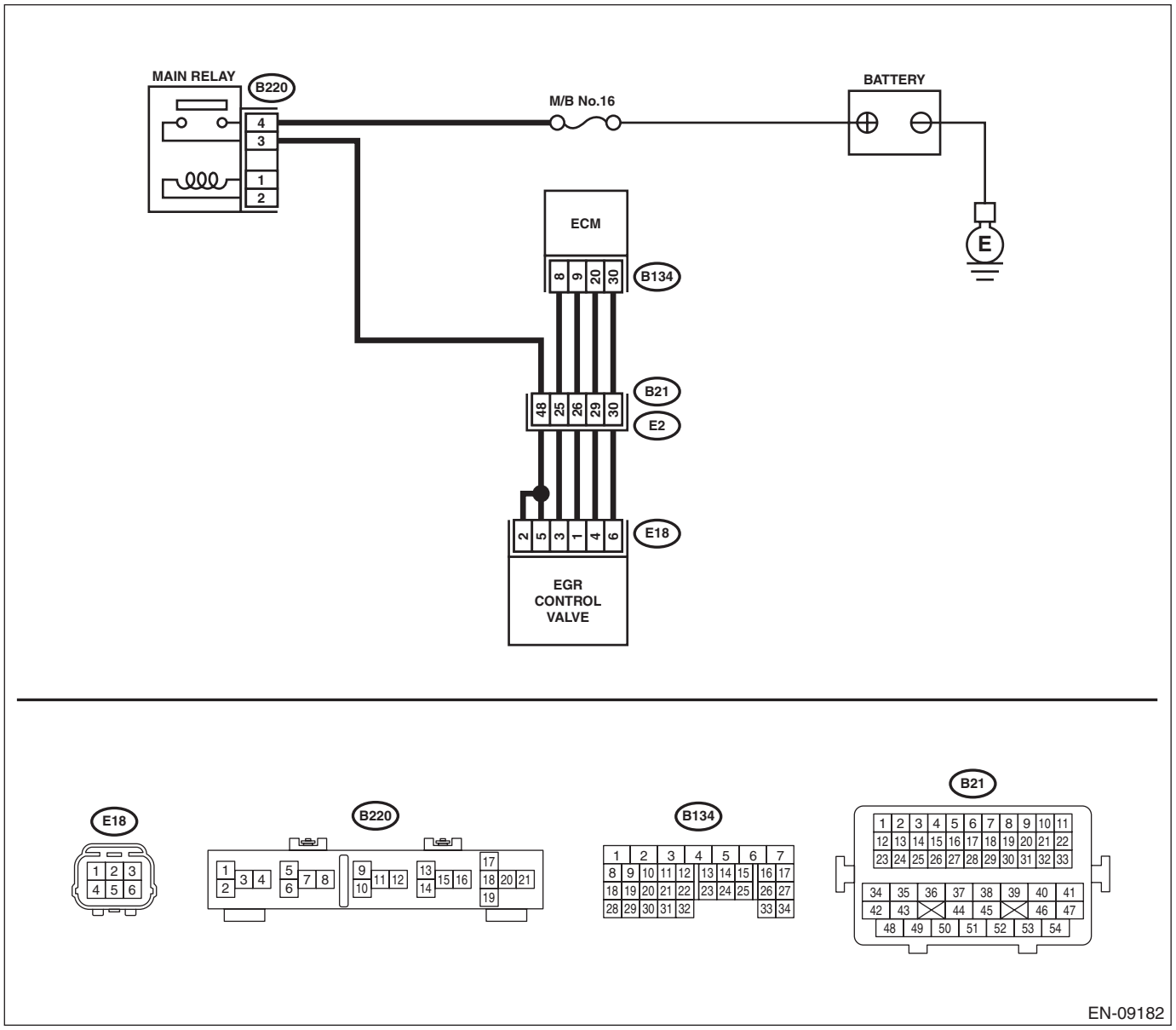

EN-09182

Step		Check	Yes	No
1	**CHECK HARNESS BETWEEN ECM AND EGR CONTROL VALVE CONNECTOR.** 1) Turn the ignition switch to OFF. 2) Disconnect the connector from ECM and EGR control valve. 3) Turn the ignition switch to ON. 4) Measure the voltage between ECM and chassis ground. ***Connector & terminal*** ***DTC P1493; (B134) No. 8 (+) — Chassis ground (–):*** ***DTC P1495; (B134) No. 9 (+) — Chassis ground (–):*** ***DTC P1497; (B134) No. 20 (+) — Chassis ground (–):*** ***DTC P1499; (B134) No. 30 (+) — Chassis ground (–):***	Is the voltage 10 V or more?	Repair the short circuit to power in the harness between the ECM and EGR control valve connector.	Go to step **2**.

Step		Check	Yes	No
2	**CHECK EGR CONTROL VALVE.** Measure the resistance between EGR control valve terminals. ***Terminals*** ***DTC P1493; No. 2 — No. 3:*** ***DTC P1495; No. 2 — No. 1:*** ***DTC P1497; No. 5 — No. 4:*** ***DTC P1499; No. 5 — No. 6:***	Is the resistance 20 Ω or more?	Repair the poor contact of ECM connector.	Replace EGR control valve. <Ref. to FU(H4SO)-36, EGR Valve.>

DK:DTC P1518 STARTER SWITCH CIRCUIT LOW INPUT

DTC DETECTING CONDITION:

- Immediately at fault recognition
- GENERAL DESCRIPTION <Ref. to GD(H4SO)-214, DTC P1518 STARTER SWITCH CIRCUIT LOW INPUT, Diagnostic Trouble Code (DTC) Detecting Criteria.>

CAUTION:

After servicing or replacing faulty parts, perform Clear Memory Mode <Ref. to EN(H4SO)(diag)-51, OPERATION, Clear Memory Mode.>, and Inspection Mode <Ref. to EN(H4SO)(diag)-40, PROCEDURE, Inspection Mode.>.

WIRING DIAGRAM:

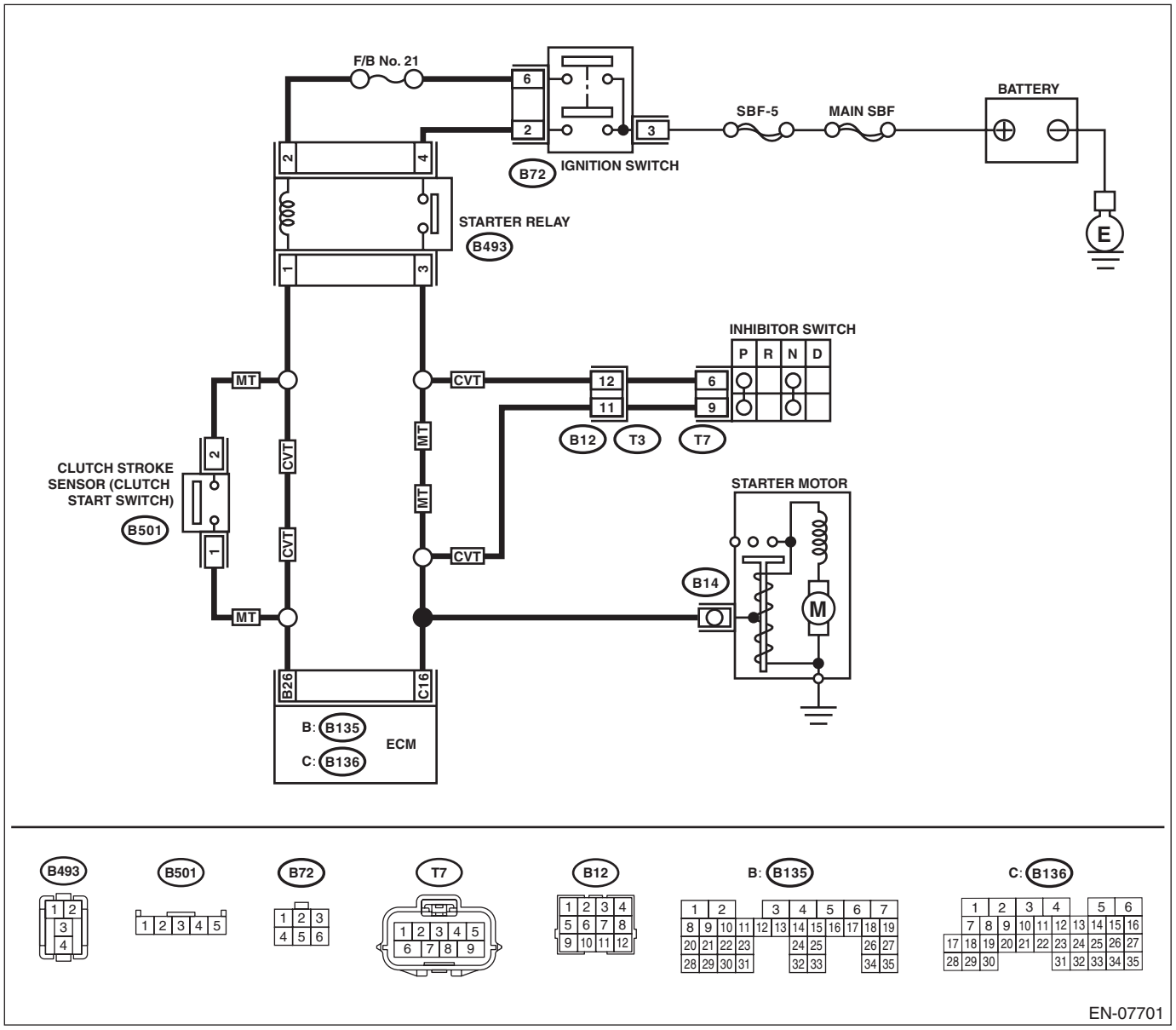

	Step	Check	Yes	No
1	**CHECK FOR ANY OTHER DTC ON DISPLAY.**	Is any other DTC displayed?	Check DTC using "List of Diagnostic Trouble Code (DTC)". <Ref. to EN(H4SO)(diag)-78, List of Diagnostic Trouble Code (DTC).>	Go to step **2**.
2	**CHECK HARNESS BETWEEN ECM AND STARTER RELAY CONNECTOR.** 1) Turn the ignition switch to OFF. 2) Remove the starter relay. 3) Disconnect the connectors from ECM and starter motor. 4) Measure the resistance of harness between ECM and starter relay connector. ***Connector & terminal*** ***(B136) No. 16 — (B493) No. 3:*** NOTE: For CVT model, place the select lever in "P" range or "N" range.	Is the resistance less than 1 Ω?	Go to step **3**.	NOTE: Check the following item and repair or replace if necessary. • Open circuit of harness between ECM and starter relay connector • Poor contact of coupling connector
3	**CHECK HARNESS BETWEEN ECM AND STARTER RELAY CONNECTOR.** Measure the resistance between ECM and chassis ground. ***Connector & terminal*** ***(B136) No. 16 — Chassis ground:***	Is the resistance 1 MΩ or more?	Repair the poor contact of ECM connector.	Repair the short circuit to ground in harness between ECM and starter relay connector.

DL:DTC P1560 BACK-UP VOLTAGE CIRCUIT MALFUNCTION

DTC DETECTING CONDITION:

- Immediately at fault recognition
- GENERAL DESCRIPTION <Ref. to GD(H4SO)-215, DTC P1560 BACK-UP VOLTAGE CIRCUIT MALFUNCTION, Diagnostic Trouble Code (DTC) Detecting Criteria.>

CAUTION:

After servicing or replacing faulty parts, perform Clear Memory Mode <Ref. to EN(H4SO)(diag)-51, OPERATION, Clear Memory Mode.>, and Inspection Mode <Ref. to EN(H4SO)(diag)-40, PROCEDURE, Inspection Mode.>.

WIRING DIAGRAM:

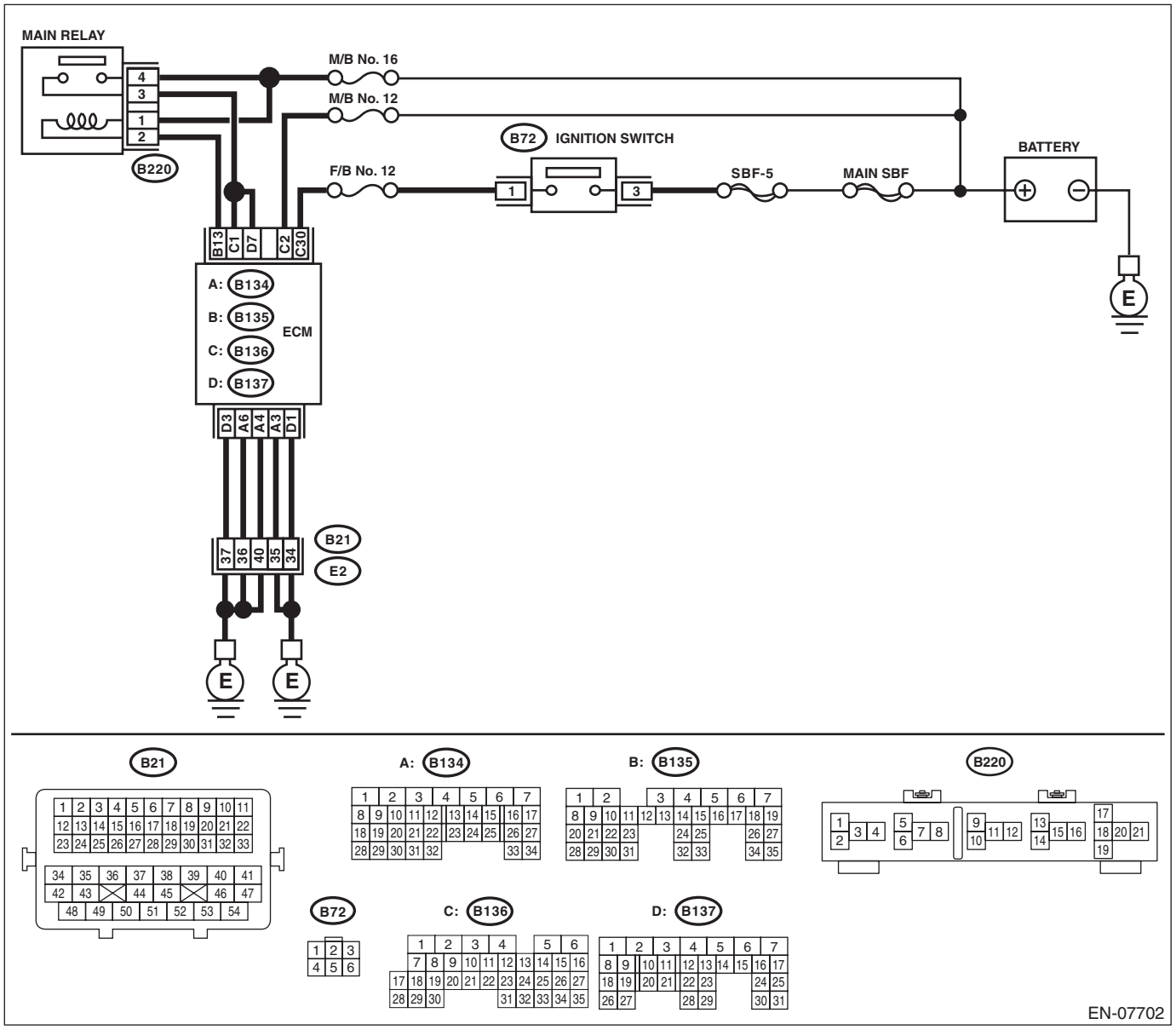

Step		Check	Yes	No
1	**CHECK INPUT SIGNAL OF ECM.** 1) Turn the ignition switch to OFF. 2) Measure the voltage between ECM and chassis ground. ***Connector & terminal*** ***(B136) No. 2 (+) — Chassis ground (–):***	Is the voltage 10 V or more?	Repair the poor contact of ECM connector.	Go to step **2**.

	Step	Check	Yes	No
2	**CHECK HARNESS BETWEEN ECM AND MAIN FUSE BOX CONNECTOR.** 1) Disconnect the connectors from ECM. 2) Measure the resistance between ECM and chassis ground. ***Connector & terminal*** ***(B136) No. 2 — Chassis ground:***	Is the resistance 1 MΩ or more?	Go to step **3**.	Repair the ground short circuit of harness between ECM and battery terminal.
3	**CHECK M/B NO. 12 FUSE.**	Is the fuse blown out?	Replace the fuse.	Repair the harness and connector. NOTE: In this case, repair the following item: • Open circuit in harness between ECM and battery • Poor contact of ECM connector • Poor contact of battery terminal

DM:DTC P2096 POST CATALYST FUEL TRIM SYSTEM TOO LEAN (BANK 1)

DTC DETECTING CONDITION:

- Detected when two consecutive driving cycles with fault occur.
- GENERAL DESCRIPTION <Ref. to GD(H4SO)-217, DTC P2096 POST CATALYST FUEL TRIM SYSTEM TOO LEAN (BANK 1), Diagnostic Trouble Code (DTC) Detecting Criteria.>

CAUTION:
After servicing or replacing faulty parts, perform Clear Memory Mode <Ref. to EN(H4SO)(diag)-51, OPERATION, Clear Memory Mode.>, and Inspection Mode <Ref. to EN(H4SO)(diag)-40, PROCEDURE, Inspection Mode.>.

WIRING DIAGRAM:

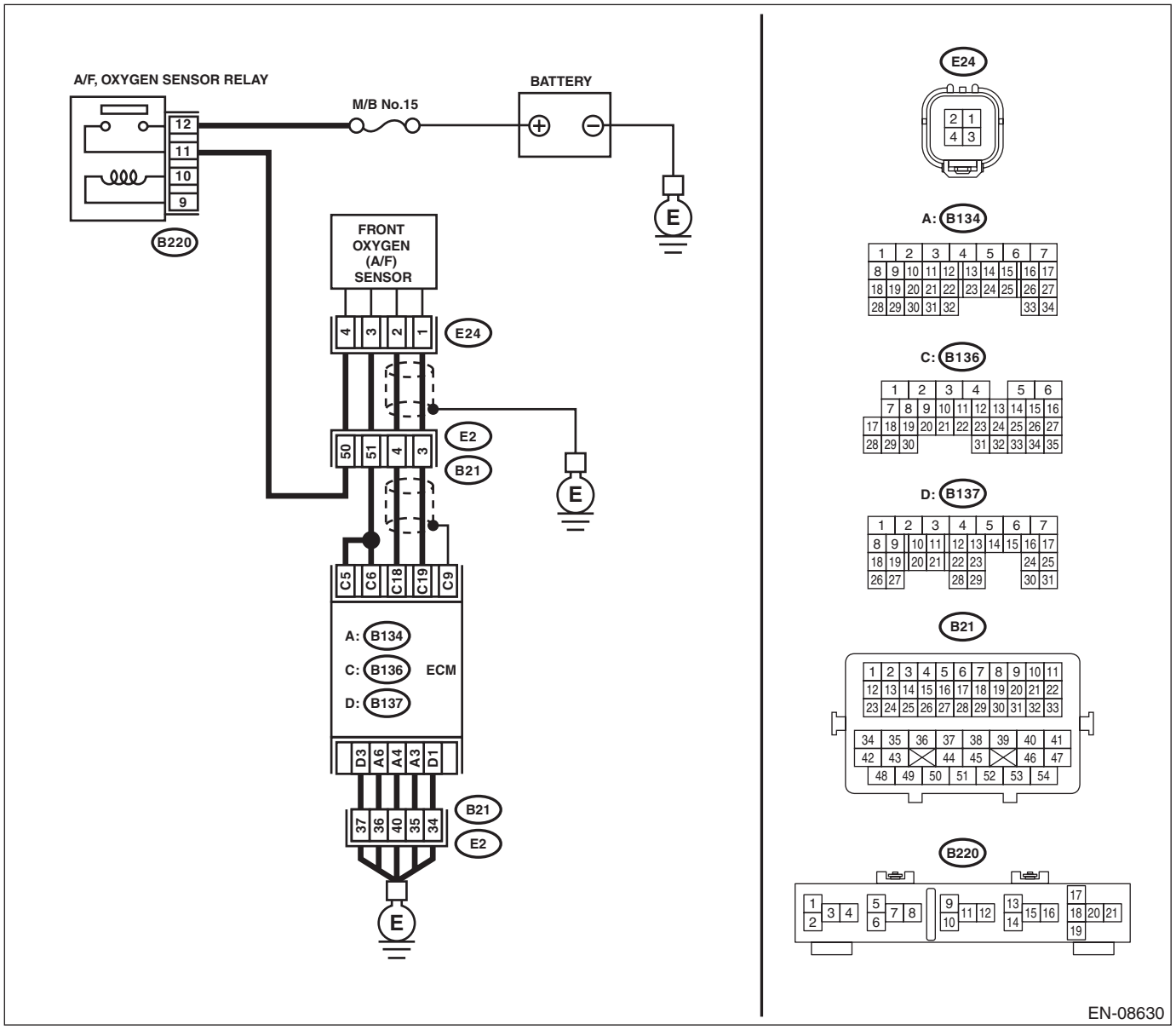

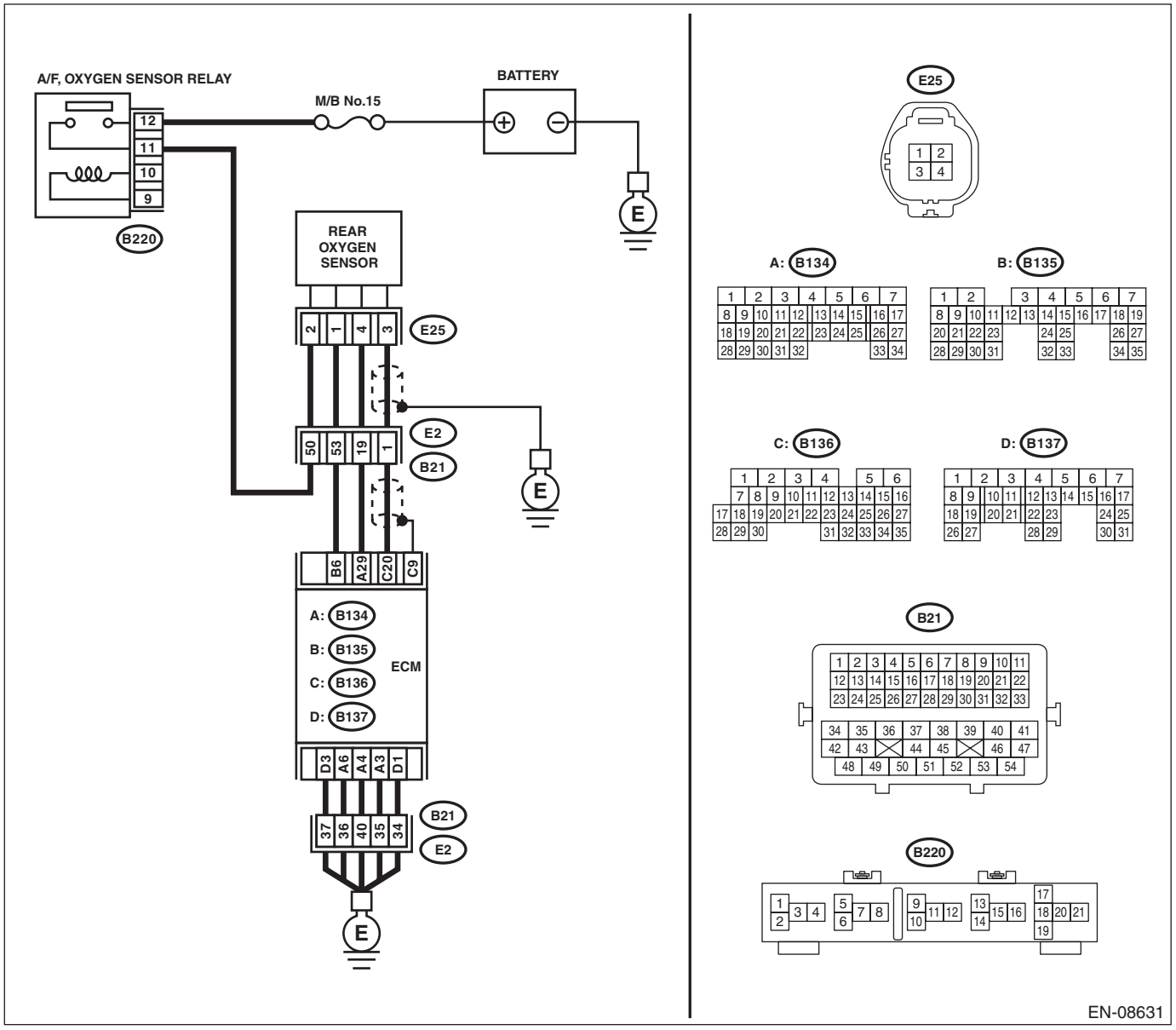

Step		Check	Yes	No
1	**CHECK FOR ANY OTHER DTC ON DISPLAY.**	Is any other DTC displayed?	Check DTC using "List of Diagnostic Trouble Code (DTC)". <Ref. to EN(H4SO)(diag)-78, List of Diagnostic Trouble Code (DTC).>	Go to step **2**.
2	**CHECK FRONT OXYGEN (A/F) SENSOR CONNECTOR AND COUPLING CONNECTOR.**	Has water entered the connector?	Completely remove any water inside.	Go to step **3**.

	Step	Check	Yes	No
3	**CHECK HARNESS BETWEEN ECM AND FRONT OXYGEN (A/F) SENSOR CONNECTOR.** 1) Turn the ignition switch to OFF. 2) Disconnect the connectors from ECM and front oxygen (A/F) sensor. 3) Measure the resistance of harness between ECM and front oxygen (A/F) sensor connector. ***Connector & terminal*** ***(B136) No. 19 — (E24) No. 1:*** ***(B136) No. 18 — (E24) No. 2:***	Is the resistance less than 1 Ω?	Go to step **4**.	Repair the harness and connector. NOTE: In this case, repair the following item: • Open circuit in harness between ECM and front oxygen (A/F) sensor connector • Poor contact of coupling connector
4	**CHECK HARNESS BETWEEN ECM AND FRONT OXYGEN (A/F) SENSOR CONNECTOR.** Measure the resistance between ECM and chassis ground. ***Connector & terminal*** ***(B136) No. 19 — Chassis ground:*** ***(B136) No. 18 — Chassis ground:***	Is the resistance 1 MΩ or more?	Go to step **5**.	Repair the ground short circuit of harness between ECM and front oxygen (A/F) sensor connector.
5	**CHECK OUTPUT SIGNAL FOR ECM.** 1) Connect the connector to ECM. 2) Turn the ignition switch to ON. 3) Measure the voltage between front oxygen (A/F) sensor connector and chassis ground. ***Connector & terminal*** ***(E24) No. 1 (+) — Chassis ground (–):***	Is the voltage 4.5 V or more?	Go to step **7**.	Go to step **6**.
6	**CHECK OUTPUT SIGNAL FOR ECM.** Measure the voltage between front oxygen (A/F) sensor connector and chassis ground. ***Connector & terminal*** ***(E24) No. 2 (+) — Chassis ground (–):***	Is the voltage 4.95 V or more?	Go to step **7**.	Go to step **8**.
7	**CHECK OUTPUT SIGNAL FOR ECM.** Measure the voltage between front oxygen (A/F) sensor connector and chassis ground. ***Connector & terminal*** ***(E24) No. 1 (+) — Chassis ground (–):*** ***(E24) No. 2 (+) — Chassis ground (–):***	Is the voltage 8 V or more?	Repair the short circuit to power in the harness between ECM and front oxygen (A/F) sensor connector. After repair, replace the ECM. <Ref. to FU(H4SO)-46, Engine Control Module (ECM).>	Repair the poor contact of ECM connector.
8	**CHECK EXHAUST SYSTEM.**	Are there holes or loose bolts on exhaust system?	Repair the exhaust system.	Go to step **9**.
9	**CHECK AIR INTAKE SYSTEM.**	Are there holes, loose bolts or disconnection of hose on air intake system?	Repair the air intake system.	Go to step **10**.

	Step	Check	Yes	No
10	**CHECK FUEL PRESSURE.** **WARNING:** **Place "NO OPEN FLAMES" signs near the working area.** **CAUTION:** **Be careful not to spill fuel.** 1) Connect the front oxygen (A/F) sensor connector. 2) Measure the fuel pressure. <Ref. to ME(H4SO)-28, INSPECTION, Fuel Pressure.> **CAUTION:** **Release fuel pressure before removing the fuel pressure gauge.**	Is the measured value 340 — 400 kPa (3.5 — 4.1 kg/cm^2, 49 — 58 psi)?	Go to step **11**.	Repair the following item. Fuel pressure is too high: • Clogged fuel line or bent hose Fuel pressure is too low: • Improper fuel pump discharge • Clogged fuel line
11	**CHECK ENGINE COOLANT TEMPERATURE SENSOR.** 1) Start the engine and warm up completely. 2) Read the value of «Coolant Temp.» using the Subaru Select Monitor or a general scan tool. NOTE: • Subaru Select Monitor For detailed operation procedures, refer to "READ CURRENT DATA FOR ENGINE". <Ref. to EN(H4SO)(diag)-33, Subaru Select Monitor.> • General scan tool For detailed operation procedures, refer to the general scan tool operation manual.	Is the value of «Coolant Temp.» 75°C (167°F) or more?	Go to step **12**.	Replace the engine coolant temperature sensor. <Ref. to FU(H4SO)-24, Engine Coolant Temperature Sensor.>
12	**CHECK MASS AIR FLOW AND INTAKE AIR TEMPERATURE SENSOR.** 1) Start the engine and warm up engine until coolant temperature is higher than 75°C (167°F). 2) For CVT models, set the select lever to "P" range or "N" range, and for MT models, place the shift lever in the neutral position. 3) Turn the A/C switch to OFF. 4) Turn all the accessory switches to OFF. 5) Read the value of «Mass Air Flow» using the Subaru Select Monitor or a general scan tool. NOTE: • Subaru Select Monitor For detailed operation procedures, refer to "READ CURRENT DATA FOR ENGINE". <Ref. to EN(H4SO)(diag)-33, Subaru Select Monitor.> • General scan tool For detailed operation procedures, refer to the general scan tool operation manual.	Is the value of «Mass Air Flow» 2.0 — 5.0 g/s (0.26 — 0.66 lb/m)?	Go to step **13**.	Replace the mass air flow and intake air temperature sensor. <Ref. to FU(H4SO)-32, Mass Air Flow and Intake Air Temperature Sensor.>

	Step	Check	Yes	No
13	**CHECK MASS AIR FLOW AND INTAKE AIR TEMPERATURE SENSOR.** 1) Start the engine and warm up engine until coolant temperature is higher than 75°C (167°F). 2) For CVT models, set the select lever to "P" range or "N" range, and for MT models, place the shift lever in the neutral position. 3) Turn the A/C switch to OFF. 4) Turn all the accessory switches to OFF. 5) Open the front hood. 6) Measure the ambient temperature. 7) Read the value of «Intake Air Temp.» using the Subaru Select Monitor or a general scan tool. NOTE: • Subaru Select Monitor For detailed operation procedures, refer to "READ CURRENT DATA FOR ENGINE". <Ref. to EN(H4SO)(diag)-33, Subaru Select Monitor.> • General scan tool For detailed operation procedures, refer to the general scan tool operation manual.	Subtract ambient temperature from «Intake Air Temp.». Is the obtained value –10 — 50°C (–18 — 90°F)?	Go to step **14**.	Check the mass air flow and intake air temperature sensor. <Ref. to FU(H4SO)-32, Mass Air Flow and Intake Air Temperature Sensor.>
14	**CHECK REAR OXYGEN SENSOR DATA.** 1) Warm up the engine until engine coolant temperature is higher than 75°C (167°F), and keep the engine speed at 3,000 rpm. (2 minutes maximum) 2) Read the value of «Rear O2 Sensor» using the Subaru Select Monitor or a general scan tool. NOTE: • Depress the clutch pedal. (MT model) • Subaru Select Monitor For detailed operation procedures, refer to "READ CURRENT DATA FOR ENGINE". <Ref. to EN(H4SO)(diag)-33, Subaru Select Monitor.> • General scan tool For detailed operation procedures, refer to the general scan tool operation manual.	Is the value of «Rear O2 Sensor» 0.490 V or more?	Go to step **15**.	Go to step **16**.
15	**CHECK REAR OXYGEN SENSOR DATA.** 1) Warm up the engine until engine coolant temperature is higher than 75°C (167°F), and rapidly reduce the engine speed from 3,000 rpm. 2) Read the value of «Rear O2 Sensor» using the Subaru Select Monitor or a general scan tool. NOTE: • Depress the clutch pedal. (MT model) • Subaru Select Monitor For detailed operation procedures, refer to "READ CURRENT DATA FOR ENGINE". <Ref. to EN(H4SO)(diag)-33, Subaru Select Monitor.> • General scan tool For detailed operation procedures, refer to the general scan tool operation manual.	Is the value of «Rear O2 Sensor» 0.250 V or less?	Go to step **17**.	Go to step **16**.

	Step	Check	Yes	No
16	**CHECK REAR OXYGEN SENSOR CONNECTOR AND COUPLING CONNECTOR.**	Has water entered the connector?	Completely remove any water inside.	Go to step **18**.
17	**CHECK FRONT OXYGEN (A/F) SENSOR USING REAR OXYGEN SENSOR SIGNAL.** 1) Warm up the engine until engine coolant temperature is higher than 75°C (167°F), then keep the engine idling for 5 minutes or more. 2) Read the value of «Rear O2 Sensor» using the Subaru Select Monitor or a general scan tool. NOTE: • Subaru Select Monitor For detailed operation procedures, refer to "READ CURRENT DATA FOR ENGINE". <Ref. to EN(H4SO)(diag)-33, Subaru Select Monitor.> • General scan tool For detailed operation procedures, refer to the general scan tool operation manual.	Is the value in «Rear O2 Sensor» kept at 0.250 V or less for 5 minutes or more?	Replace the front oxygen (A/F) sensor. <Ref. to FU(H4SO)-42, Front Oxygen (A/F) Sensor.>	Go to step **18**.
18	**CHECK HARNESS BETWEEN ECM AND REAR OXYGEN SENSOR CONNECTOR.** 1) Turn the ignition switch to OFF. 2) Disconnect the connector from ECM and rear oxygen sensor. 3) Measure the resistance of harness between ECM and rear oxygen sensor connector. ***Connector & terminal*** ***(B136) No. 20 — (E25) No. 3:*** ***(B134) No. 29 — (E25) No. 4:***	Is the resistance less than 1 Ω?	Go to step **19**.	Repair the harness and connector. NOTE: In this case, repair the following item: • Open circuit in harness between ECM and rear oxygen sensor connector • Poor contact of coupling connector
19	**CHECK HARNESS BETWEEN ECM AND REAR OXYGEN SENSOR CONNECTOR.** 1) Connect the connector to ECM. 2) Turn the ignition switch to ON. 3) Measure the voltage between rear oxygen sensor connector and chassis ground. ***Connector & terminal*** ***(E25) No. 3 (+) — Chassis ground (–):***	Is the voltage 0.2 — 0.5 V?	Replace the rear oxygen sensor. <Ref. to FU(H4SO)-44, Rear Oxygen Sensor.>	Repair the harness and connector. NOTE: In this case, repair the following item: • Open circuit in harness between ECM and rear oxygen sensor connector • Poor contact of ECM connector • Poor contact of coupling connector

DN:DTC P2097 POST CATALYST FUEL TRIM SYSTEM TOO RICH (BANK 1)

DTC DETECTING CONDITION:

- Detected when two consecutive driving cycles with fault occur.
- GENERAL DESCRIPTION <Ref. to GD(H4SO)-219, DTC P2097 POST CATALYST FUEL TRIM SYSTEM TOO RICH (BANK 1), Diagnostic Trouble Code (DTC) Detecting Criteria.>

CAUTION:
After servicing or replacing faulty parts, perform Clear Memory Mode <Ref. to EN(H4SO)(diag)-51, OPERATION, Clear Memory Mode.>, and Inspection Mode <Ref. to EN(H4SO)(diag)-40, PROCEDURE, Inspection Mode.>.

WIRING DIAGRAM:

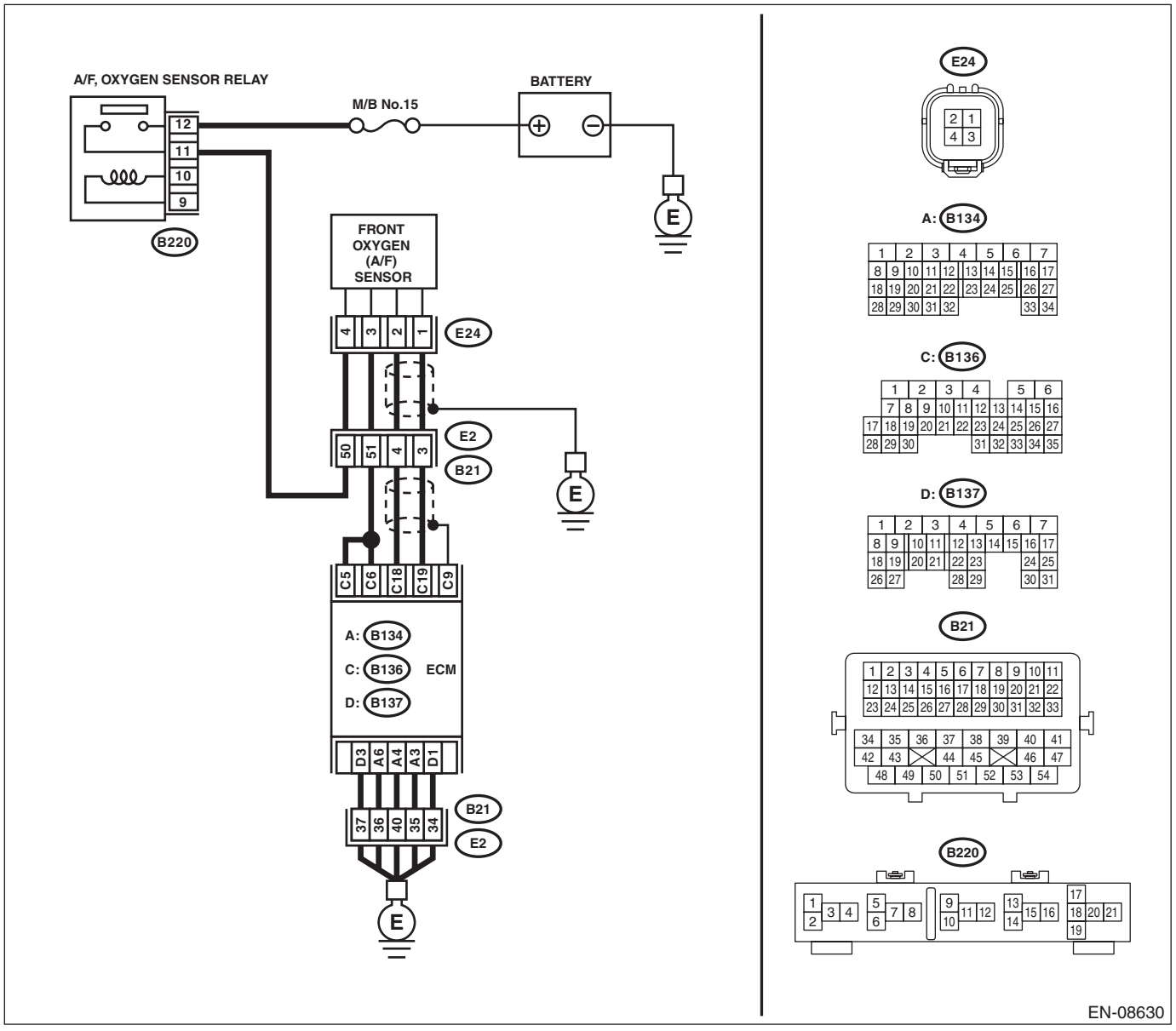

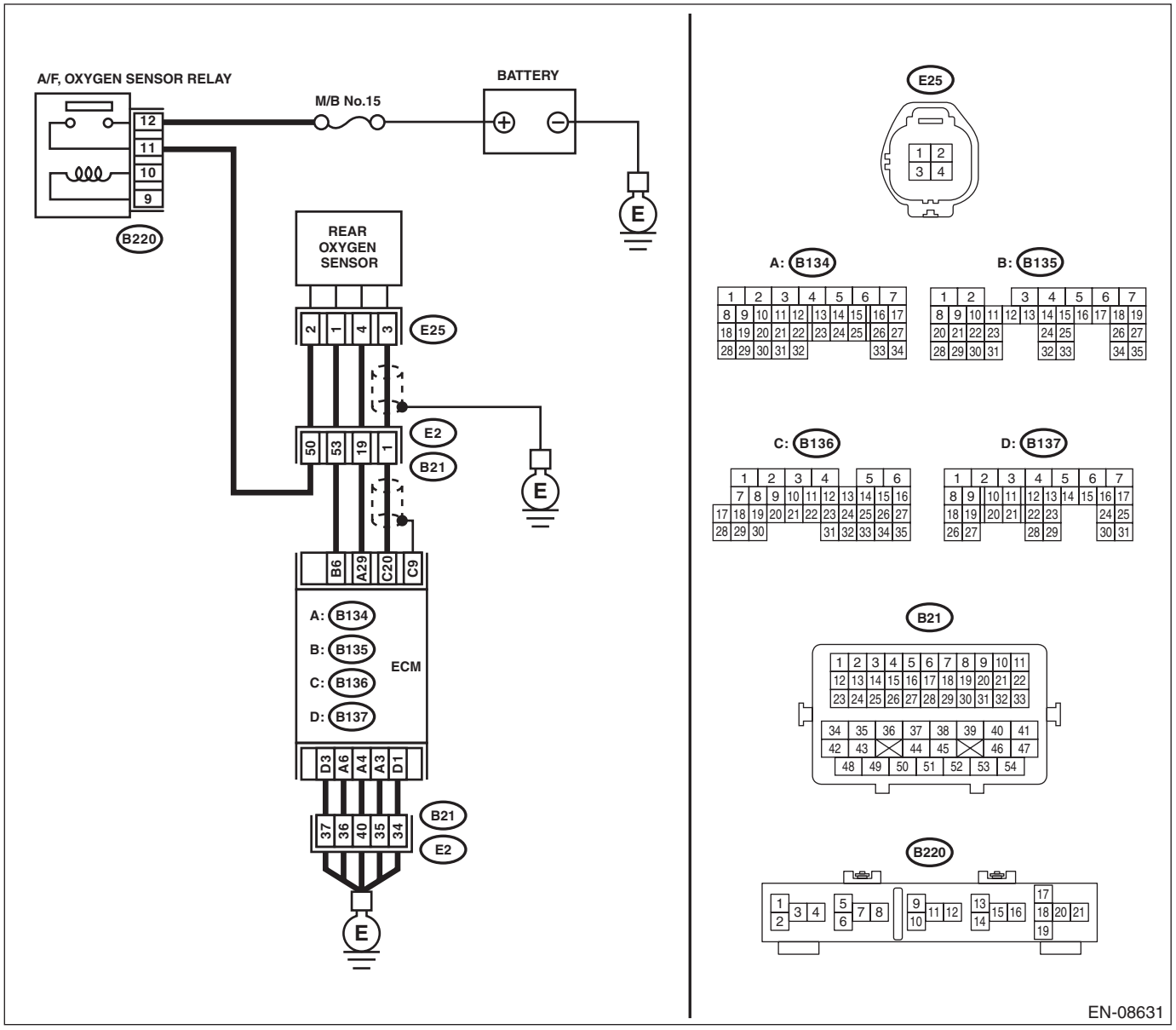

Step		Check	Yes	No
1	**CHECK FOR ANY OTHER DTC ON DISPLAY.**	Is any other DTC displayed?	Check DTC using "List of Diagnostic Trouble Code (DTC)". <Ref. to EN(H4SO)(diag)-78, List of Diagnostic Trouble Code (DTC).>	Go to step **2**.
2	**CHECK FRONT OXYGEN (A/F) SENSOR CONNECTOR AND COUPLING CONNECTOR.**	Has water entered the connector?	Completely remove any water inside.	Go to step **3**.

	Step	Check	Yes	No
3	**CHECK HARNESS BETWEEN ECM AND FRONT OXYGEN (A/F) SENSOR CONNECTOR.** 1) Turn the ignition switch to OFF. 2) Disconnect the connectors from ECM and front oxygen (A/F) sensor. 3) Measure the resistance of harness between ECM and front oxygen (A/F) sensor connector. ***Connector & terminal*** ***(B136) No. 19 — (E24) No. 1:*** ***(B136) No. 18 — (E24) No. 2:***	Is the resistance less than 1 Ω?	Go to step **4**.	Repair the harness and connector. NOTE: In this case, repair the following item: • Open circuit in harness between ECM and front oxygen (A/F) sensor connector • Poor contact of coupling connector
4	**CHECK HARNESS BETWEEN ECM AND FRONT OXYGEN (A/F) SENSOR CONNECTOR.** Measure the resistance between ECM and chassis ground. ***Connector & terminal*** ***(B136) No. 19 — Chassis ground:*** ***(B136) No. 18 — Chassis ground:***	Is the resistance 1 MΩ or more?	Go to step **5**.	Repair the ground short circuit of harness between ECM and front oxygen (A/F) sensor connector.
5	**CHECK OUTPUT SIGNAL FOR ECM.** 1) Connect the connector to ECM. 2) Turn the ignition switch to ON. 3) Measure the voltage between front oxygen (A/F) sensor connector and chassis ground. ***Connector & terminal*** ***(E24) No. 1 (+) — Chassis ground (–):***	Is the voltage 4.5 V or more?	Go to step **7**.	Go to step **6**.
6	**CHECK OUTPUT SIGNAL FOR ECM.** Measure the voltage between front oxygen (A/F) sensor connector and chassis ground. ***Connector & terminal*** ***(E24) No. 2 (+) — Chassis ground (–):***	Is the voltage 4.95 V or more?	Go to step **7**.	Go to step **8**.
7	**CHECK OUTPUT SIGNAL FOR ECM.** Measure the voltage between front oxygen (A/F) sensor connector and chassis ground. ***Connector & terminal*** ***(E24) No. 1 (+) — Chassis ground (–):*** ***(E24) No. 2 (+) — Chassis ground (–):***	Is the voltage 8 V or more?	Repair the short circuit to power in the harness between ECM and front oxygen (A/F) sensor connector. After repair, replace the ECM. <Ref. to FU(H4SO)-46, Engine Control Module (ECM).>	Repair the poor contact of ECM connector.
8	**CHECK EXHAUST SYSTEM.**	Are there holes or loose bolts on exhaust system?	Repair the exhaust system.	Go to step **9**.
9	**CHECK AIR INTAKE SYSTEM.**	Are there holes, loose bolts or disconnection of hose on air intake system?	Repair the air intake system.	Go to step **10**.

	Step	Check	Yes	No
10	**CHECK FUEL PRESSURE.** **WARNING:** **Place "NO OPEN FLAMES" signs near the working area.** **CAUTION:** **Be careful not to spill fuel.** 1) Connect the front oxygen (A/F) sensor connector. 2) Measure the fuel pressure. <Ref. to ME(H4SO)-28, INSPECTION, Fuel Pressure.> **CAUTION:** **Release fuel pressure before removing the fuel pressure gauge.**	Is the measured value 340 — 400 kPa (3.5 — 4.1 kg/cm^2, 49 — 58 psi)?	Go to step **11**.	Repair the following item. Fuel pressure is too high: • Clogged fuel line or bent hose Fuel pressure is too low: • Improper fuel pump discharge • Clogged fuel line
11	**CHECK ENGINE COOLANT TEMPERATURE SENSOR.** 1) Start the engine and warm up completely. 2) Read the value of «Coolant Temp.» using the Subaru Select Monitor or a general scan tool. NOTE: • Subaru Select Monitor For detailed operation procedures, refer to "READ CURRENT DATA FOR ENGINE". <Ref. to EN(H4SO)(diag)-33, Subaru Select Monitor.> • General scan tool For detailed operation procedures, refer to the general scan tool operation manual.	Is the value of «Coolant Temp.» 75°C (167°F) or more?	Go to step **12**.	Replace the engine coolant temperature sensor. <Ref. to FU(H4SO)-24, Engine Coolant Temperature Sensor.>
12	**CHECK MASS AIR FLOW AND INTAKE AIR TEMPERATURE SENSOR.** 1) Start the engine and warm up engine until coolant temperature is higher than 75°C (167°F). 2) For CVT models, set the select lever to "P" range or "N" range, and for MT models, place the shift lever in the neutral position. 3) Turn the A/C switch to OFF. 4) Turn all the accessory switches to OFF. 5) Read the value of «Mass Air Flow» using the Subaru Select Monitor or a general scan tool. NOTE: • Subaru Select Monitor For detailed operation procedures, refer to "READ CURRENT DATA FOR ENGINE". <Ref. to EN(H4SO)(diag)-33, Subaru Select Monitor.> • General scan tool For detailed operation procedures, refer to the general scan tool operation manual.	Is the value of «Mass Air Flow» 2.0 — 5.0 g/s (0.26 — 0.66 lb/m)?	Go to step **13**.	Replace the mass air flow and intake air temperature sensor. <Ref. to FU(H4SO)-32, Mass Air Flow and Intake Air Temperature Sensor.>

	Step	Check	Yes	No
13	**CHECK MASS AIR FLOW AND INTAKE AIR TEMPERATURE SENSOR.** 1) Start the engine and warm up engine until coolant temperature is higher than 75°C (167°F). 2) For CVT models, set the select lever to "P" range or "N" range, and for MT models, place the shift lever in the neutral position. 3) Turn the A/C switch to OFF. 4) Turn all the accessory switches to OFF. 5) Open the front hood. 6) Measure the ambient temperature. 7) Read the value of «Intake Air Temp.» using the Subaru Select Monitor or a general scan tool. NOTE: • Subaru Select Monitor For detailed operation procedures, refer to "READ CURRENT DATA FOR ENGINE". <Ref. to EN(H4SO)(diag)-33, Subaru Select Monitor.> • General scan tool For detailed operation procedures, refer to the general scan tool operation manual.	Subtract ambient temperature from «Intake Air Temp.». Is the obtained value –10 — 50°C (–18 — 90°F)?	Go to step **14**.	Check the mass air flow and intake air temperature sensor. <Ref. to FU(H4SO)-32, Mass Air Flow and Intake Air Temperature Sensor.>
14	**CHECK REAR OXYGEN SENSOR DATA.** 1) Warm up the engine until engine coolant temperature is higher than 75°C (167°F), and keep the engine speed at 3,000 rpm. (2 minutes maximum) 2) Read the value of «Rear O2 Sensor» using the Subaru Select Monitor or a general scan tool. NOTE: • Depress the clutch pedal. (MT model) • Subaru Select Monitor For detailed operation procedures, refer to "READ CURRENT DATA FOR ENGINE". <Ref. to EN(H4SO)(diag)-33, Subaru Select Monitor.> • General scan tool For detailed operation procedures, refer to the general scan tool operation manual.	Is the value of «Rear O2 Sensor» 0.490 V or more?	Go to step **15**.	Go to step **16**.
15	**CHECK REAR OXYGEN SENSOR DATA.** 1) Warm up the engine until engine coolant temperature is higher than 75°C (167°F), and rapidly reduce the engine speed from 3,000 rpm. 2) Read the value of «Rear O2 Sensor» using the Subaru Select Monitor or a general scan tool. NOTE: • Depress the clutch pedal. (MT model) • Subaru Select Monitor For detailed operation procedures, refer to "READ CURRENT DATA FOR ENGINE". <Ref. to EN(H4SO)(diag)-33, Subaru Select Monitor.> • General scan tool For detailed operation procedures, refer to the general scan tool operation manual.	Is the value of «Rear O2 Sensor» 0.250 V or less?	Go to step **17**.	Go to step **16**.

	Step	Check	Yes	No
16	**CHECK REAR OXYGEN SENSOR CONNECTOR AND COUPLING CONNECTOR.**	Has water entered the connector?	Completely remove any water inside.	Go to step **18**.
17	**CHECK FRONT OXYGEN (A/F) SENSOR USING REAR OXYGEN SENSOR SIGNAL.** 1) Warm up the engine until engine coolant temperature is higher than 75°C (167°F), then keep the engine idling for 5 minutes or more. 2) Read the value of «Rear O2 Sensor» using the Subaru Select Monitor or a general scan tool. NOTE: • Subaru Select Monitor For detailed operation procedures, refer to "READ CURRENT DATA FOR ENGINE". <Ref. to EN(H4SO)(diag)-33, Subaru Select Monitor.> • General scan tool For detailed operation procedures, refer to the general scan tool operation manual.	Is the value in «Rear O2 Sensor» kept at 0.8 V or more for 5 minutes or more?	Replace the front oxygen (A/F) sensor. <Ref. to FU(H4SO)-42, Front Oxygen (A/F) Sensor.>	Go to step **18**.
18	**CHECK HARNESS BETWEEN ECM AND REAR OXYGEN SENSOR CONNECTOR.** 1) Turn the ignition switch to OFF. 2) Disconnect the connector from ECM and rear oxygen sensor. 3) Measure the resistance of harness between ECM and rear oxygen sensor connector. ***Connector & terminal*** ***(B136) No. 20 — (E25) No. 3:*** ***(B134) No. 29 — (E25) No. 4:***	Is the resistance less than 1 Ω?	Go to step **19**.	Repair the harness and connector. NOTE: In this case, repair the following item: • Open circuit in harness between ECM and rear oxygen sensor connector • Poor contact of coupling connector
19	**CHECK HARNESS BETWEEN ECM AND REAR OXYGEN SENSOR CONNECTOR.** 1) Connect the connector to ECM. 2) Turn the ignition switch to ON. 3) Measure the voltage between rear oxygen sensor connector and chassis ground. ***Connector & terminal*** ***(E25) No. 3 (+) — Chassis ground (–):***	Is the voltage 0.2 — 0.5 V?	Replace the rear oxygen sensor. <Ref. to FU(H4SO)-44, Rear Oxygen Sensor.>	Repair the harness and connector. NOTE: In this case, repair the following item: • Open circuit in harness between ECM and rear oxygen sensor connector • Poor contact of ECM connector • Poor contact of coupling connector

DO:DTC P2101 THROTTLE ACTUATOR CONTROL MOTOR CIRCUIT RANGE/ PERFORMANCE

DTC DETECTING CONDITION:

- Immediately at fault recognition
- GENERAL DESCRIPTION <Ref. to GD(H4SO)-221, DTC P2101 THROTTLE ACTUATOR CONTROL MOTOR CIRCUIT RANGE/PERFORMANCE, Diagnostic Trouble Code (DTC) Detecting Criteria.>

TROUBLE SYMPTOM:

- Improper idling
- Poor driving performance
- Engine stalls.

CAUTION:

After servicing or replacing faulty parts, perform Clear Memory Mode <Ref. to EN(H4SO)(diag)-51, OPERATION, Clear Memory Mode.>, and Inspection Mode <Ref. to EN(H4SO)(diag)-40, PROCEDURE, Inspection Mode.>.

WIRING DIAGRAM:

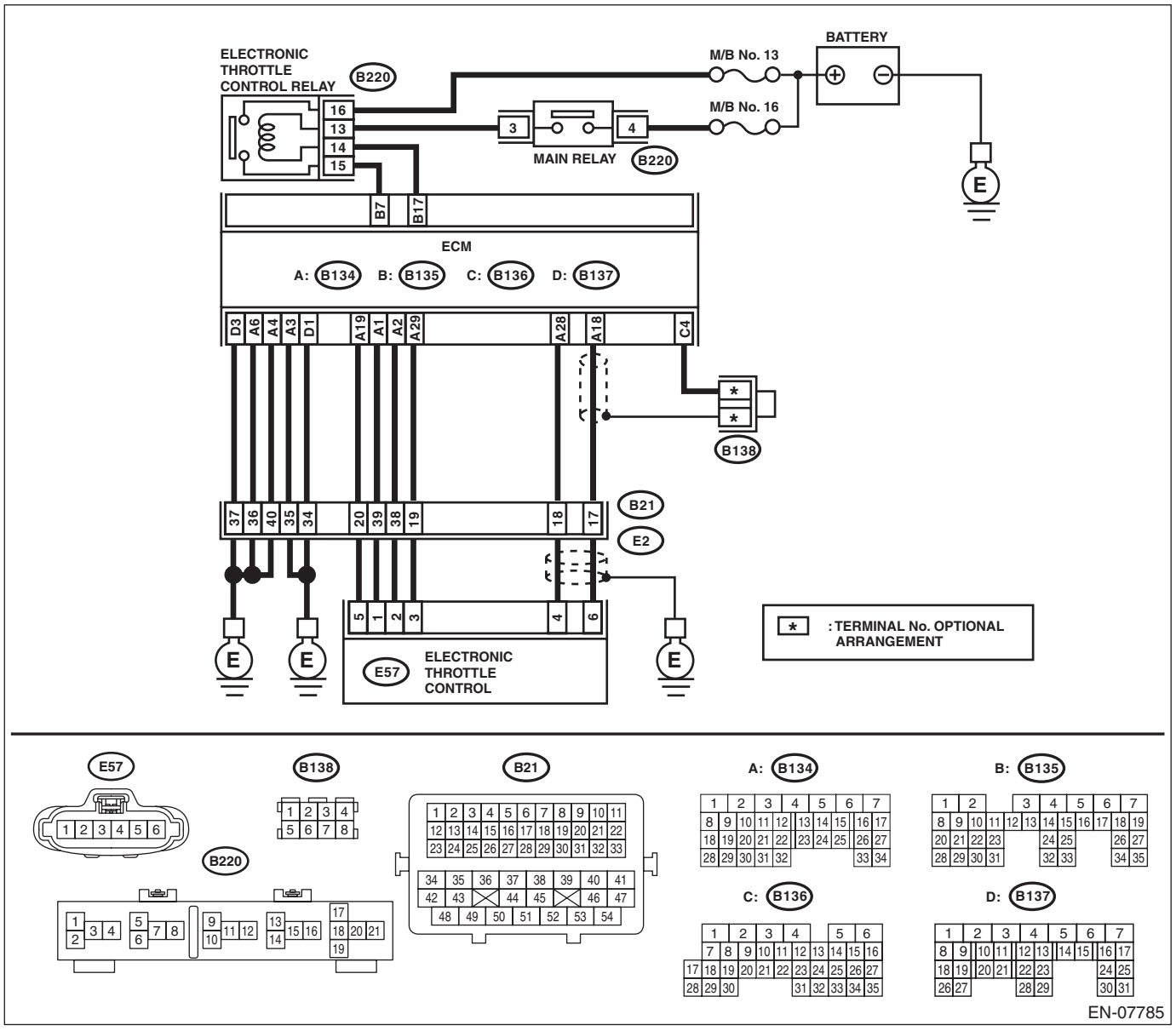

	Step	Check	Yes	No
1	**CHECK ELECTRONIC THROTTLE CONTROL RELAY.** 1) Turn the ignition switch to OFF. 2) Remove the electronic throttle control relay. 3) Connect the battery to terminals No. 13 and No. 14 of electronic throttle control relay. 4) Measure the resistance between electronic throttle control relay terminals. ***Terminals*** ***No. 15 — No. 16:***	Is the resistance less than 1 Ω?	Go to step **2**.	Replace the electronic throttle control relay. <Ref. to FU(H4SO)-51, Electronic Throttle Control Relay.>
2	**CHECK POWER SUPPLY OF ELECTRONIC THROTTLE CONTROL RELAY.** Measure the voltage between electronic throttle control relay connector and chassis ground. ***Connector & terminal*** ***(B220) No. 16 (+) — Chassis ground (–):***	Is the voltage 10 V or more?	Go to step **3**.	Repair the open or ground short circuit of power supply circuit.
3	**CHECK HARNESS BETWEEN ECM AND ELECTRONIC THROTTLE CONTROL RELAY CONNECTOR.** 1) Disconnect the connector from ECM. 2) Turn the ignition switch to ON. 3) Measure the voltage between electronic throttle control relay connector and chassis ground. ***Connector & terminal*** ***(B220) No. 14 (+) — Chassis ground (–):***	Is the voltage 10 V or more?	Repair the short circuit to power in the harness between ECM and electronic throttle control relay connector.	Go to step **4**.
4	**CHECK HARNESS BETWEEN ECM AND ELECTRONIC THROTTLE CONTROL RELAY CONNECTOR.** 1) Turn the ignition switch to OFF. 2) Measure the resistance between electronic throttle control relay connector and chassis ground. ***Connector & terminal*** ***(B220) No. 14 — Chassis ground:*** ***(B220) No. 15 — Chassis ground:***	Is the resistance 1 MΩ or more?	Go to step **5**.	Repair the short circuit in harness to ground between ECM and electronic throttle control relay connector.
5	**CHECK HARNESS BETWEEN ECM AND ELECTRONIC THROTTLE CONTROL RELAY CONNECTOR.** Measure the resistance between ECM and electronic throttle control relay connector. ***Connector & terminal*** ***(B135) No. 17 — (B220) No. 14:*** ***(B135) No. 7 — (B220) No. 15:***	Is the resistance less than 1 Ω?	Go to step **6**.	Repair the open circuit in harness between ECM and electronic throttle control relay connector.
6	**CHECK HARNESS BETWEEN ECM AND ELECTRONIC THROTTLE CONTROL CONNECTOR.** 1) Turn the ignition switch to OFF. 2) Disconnect the connectors from electronic throttle control. 3) Measure the resistance between ECM and chassis ground. ***Connector & terminal*** ***(B134) No. 19 — Chassis ground:*** ***(B134) No. 18 — Chassis ground:*** ***(B134) No. 18 — (B136) No. 4:*** ***(B134) No. 28 — Chassis ground:***	Is the resistance 1 MΩ or more?	Go to step **7**.	Repair the short circuit to ground in harness between ECM and electronic throttle control connector.

	Step	Check	Yes	No
7	**CHECK SHORT CIRCUIT INSIDE THE ECM.** 1) Connect the connector to ECM. 2) Measure the resistance between electronic throttle control connector and engine ground. ***Connector & terminal*** ***(E57) No. 6 — Engine ground:*** ***(E57) No. 4 — Engine ground:***	Is the resistance 1 MΩ or more?	Go to step **8**.	Repair the short circuit to ground in harness between ECM and electronic throttle control connector. Replace the ECM if defective. <Ref. to FU(H4SO)-46, Engine Control Module (ECM).>
8	**CHECK HARNESS BETWEEN ECM AND ELECTRONIC THROTTLE CONTROL CONNECTOR.** 1) Disconnect the connector from ECM. 2) Measure the resistance of harness between ECM and electronic throttle control connector. ***Connector & terminal*** ***(B134) No. 18 — (E57) No. 6:*** ***(B134) No. 28 — (E57) No. 4:*** ***(B134) No. 29 — (E57) No. 3:***	Is the resistance less than 1 Ω?	Go to step **9**.	Repair the harness and connector. NOTE: In this case, repair the following item: • Open circuit in harness between ECM and electronic throttle control connector • Poor contact of coupling connector
9	**CHECK HARNESS BETWEEN ECM AND ELECTRONIC THROTTLE CONTROL CONNECTOR.** 1) Connect the connector to ECM. 2) Measure the resistance between electronic throttle control connector and engine ground. ***Connector & terminal*** ***(E57) No. 3 — Engine ground:***	Is the resistance less than 5 Ω?	Go to step **10**.	Repair the harness and connector. NOTE: In this case, repair the following item: • Open circuit of harness between ECM and engine ground • Poor contact of ECM connector • Poor contact of coupling connector
10	**CHECK HARNESS BETWEEN ECM AND ELECTRONIC THROTTLE CONTROL CONNECTOR.** 1) Turn the ignition switch to ON. 2) Measure the voltage between electronic throttle control connector and engine ground. ***Connector & terminal*** ***(E57) No. 6 (+) — Engine ground (–):*** ***(E57) No. 4 (+) — Engine ground (–):***	Is the voltage 5 V or more?	Repair the short circuit to power in harness between ECM and electronic throttle control connector.	Go to step **11**.
11	**CHECK HARNESS BETWEEN ECM AND ELECTRONIC THROTTLE CONTROL CONNECTOR.** 1) Turn the ignition switch to OFF. 2) Disconnect the connector from ECM. 3) Measure the resistance between ECM connectors. ***Connector & terminal*** ***(B134) No. 19 — (B134) No. 18:*** ***(B134) No. 19 — (B134) No. 28:***	Is the resistance 1 MΩ or more?	Go to step **12**.	Repair the short circuit to power in harness between ECM and electronic throttle control connector.

	Step	Check	Yes	No
12	**CHECK SENSOR OUTPUT.** 1) Connect all connectors. 2) Turn the ignition switch to ON. 3) Read the value of «Main-Throttle Sensor» using Subaru Select Monitor. NOTE: For detailed operation procedures, refer to "READ CURRENT DATA FOR ENGINE". <Ref. to EN(H4SO)(diag)-33, Subaru Select Monitor.>	Is the value of «Main-Throttle Sensor» 0.81 — 0.87 V?	Go to step **13**.	Repair the poor contact of electronic throttle control connector. Replace the electronic throttle control if defective. <Ref. to FU(H4SO)-15, Throttle Body.>
13	**CHECK SENSOR OUTPUT.** Read the value of «Sub-Throttle Sensor» using Subaru Select Monitor. NOTE: For detailed operation procedures, refer to "READ CURRENT DATA FOR ENGINE". <Ref. to EN(H4SO)(diag)-33, Subaru Select Monitor.>	Is the value of «Sub-Throttle Sensor» 1.64 — 1.70 V?	Go to step **14**.	Repair the poor contact of electronic throttle control connector. Replace the electronic throttle control if defective. <Ref. to FU(H4SO)-15, Throttle Body.>
14	**CHECK HARNESS BETWEEN ECM AND ELECTRONIC THROTTLE CONTROL CONNECTOR.** 1) Turn the ignition switch to OFF. 2) Disconnect the connectors from ECM and electronic throttle control. 3) Measure the resistance between ECM and electronic throttle control connector. ***Connector & terminal*** ***(B134) No. 2 — (E57) No. 2:*** ***(B134) No. 1 — (E57) No. 1:***	Is the resistance less than 1 Ω?	Go to step **15**.	Repair the harness and connector. NOTE: In this case, repair the following item: • Open circuit in harness between ECM and electronic throttle control connector • Poor contact of coupling connector
15	**CHECK HARNESS BETWEEN ECM AND ELECTRONIC THROTTLE CONTROL CONNECTOR.** 1) Connect the connector to ECM. 2) Turn the ignition switch to ON. 3) Measure the voltage between electronic throttle control connector and engine ground. ***Connector & terminal*** ***(E57) No. 2 (+) — Engine ground (–):*** ***(E57) No. 1 (+) — Engine ground (–):***	Is the voltage 5 V or more?	Repair the short circuit to power in harness between ECM and electronic throttle control connector.	Go to step **16**.
16	**CHECK HARNESS BETWEEN ECM AND ELECTRONIC THROTTLE CONTROL CONNECTOR.** 1) Turn the ignition switch to OFF. 2) Disconnect the connector from ECM. 3) Measure the resistance between electronic throttle control connector and engine ground. ***Connector & terminal*** ***(E57) No. 2 — Engine ground:*** ***(E57) No. 1 — Engine ground:***	Is the resistance 1 MΩ or more?	Go to step **17**.	Repair the short circuit to ground in harness between ECM and electronic throttle control connector.
17	**CHECK ELECTRONIC THROTTLE CONTROL CONNECTOR HARNESS.** Measure the resistance between electronic throttle control connectors. ***Connector & terminal*** ***(E57) No. 2 — (E57) No. 1:***	Is the resistance 1 MΩ or more?	Go to step **18**.	Repair the short circuit of harness between ECM and electronic throttle control connector.

	Step	Check	Yes	No
18	**CHECK ELECTRONIC THROTTLE CONTROL GROUND CIRCUIT.** Measure the resistance between ECM and chassis ground. ***Connector & terminal*** ***(B134) No. 3 — Chassis ground:*** ***(B134) No. 4 — Chassis ground:*** ***(B134) No. 6 — Chassis ground:*** ***(B137) No. 1 — Chassis ground:*** ***(B137) No. 3 — Chassis ground:***	Is the resistance less than 5 Ω?	Go to step **19**.	Repair the harness and connector. NOTE: In this case, repair the following item: • Open circuit of harness between ECM and engine ground • Poor contact of coupling connector
19	**CHECK ELECTRONIC THROTTLE CONTROL.** Measure the resistance between electronic throttle control terminals. ***Terminals*** ***No. 2 — No. 1:***	Is the resistance 50 Ω or less?	Go to step **20**.	Replace the electronic throttle control. <Ref. to FU(H4SO)-15, Throttle Body.>
20	**CHECK ELECTRONIC THROTTLE CONTROL.** Move the throttle valve to the fully open and fully closed positions with fingers. Check that the valve returns to the specified position when releasing fingers.	Does the valve return to the specified position? Standard value: 3 mm (0.12 in) from fully closed position	Repair the poor contact of ECM connector.	Replace the electronic throttle control. <Ref. to FU(H4SO)-15, Throttle Body.>

DP:DTC P2102 THROTTLE ACTUATOR CONTROL MOTOR CIRCUIT LOW

DTC DETECTING CONDITION:

- Immediately at fault recognition
- GENERAL DESCRIPTION <Ref. to GD(H4SO)-223, DTC P2102 THROTTLE ACTUATOR CONTROL MOTOR CIRCUIT LOW, Diagnostic Trouble Code (DTC) Detecting Criteria.>

TROUBLE SYMPTOM:

- Improper idling
- Poor driving performance
- Engine stalls.

CAUTION:

After servicing or replacing faulty parts, perform Clear Memory Mode <Ref. to EN(H4SO)(diag)-51, OPERATION, Clear Memory Mode.>, and Inspection Mode <Ref. to EN(H4SO)(diag)-40, PROCEDURE, Inspection Mode.>.

WIRING DIAGRAM:

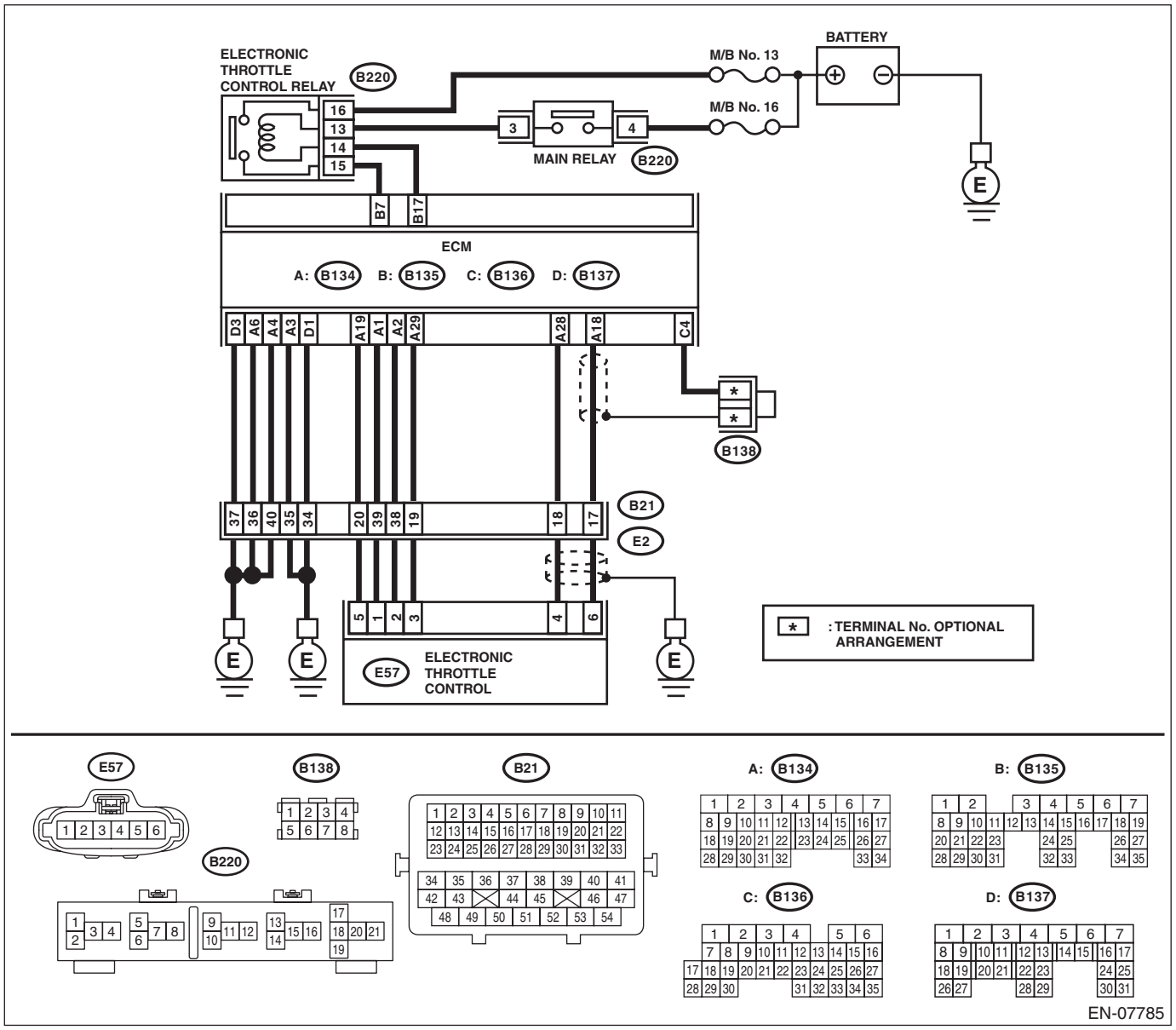

	Step	Check	Yes	No
1	**CHECK ELECTRONIC THROTTLE CONTROL RELAY.** 1) Turn the ignition switch to OFF. 2) Remove the electronic throttle control relay. 3) Connect the battery to terminals No. 13 and No. 14 of electronic throttle control relay. 4) Measure the resistance between electronic throttle control relay terminals. ***Terminals*** ***No. 15 — No. 16:***	Is the resistance less than 1 Ω?	Go to step **2**.	Replace the electronic throttle control relay. <Ref. to FU(H4SO)-51, Electronic Throttle Control Relay.>
2	**CHECK POWER SUPPLY OF ELECTRONIC THROTTLE CONTROL RELAY.** Measure the voltage between electronic throttle control relay connector and chassis ground. ***Connector & terminal*** ***(B220) No. 16 (+) — Chassis ground (–):***	Is the voltage 10 V or more?	Go to step **3**.	Repair the open or ground short circuit of power supply circuit.
3	**CHECK HARNESS BETWEEN ECM AND ELECTRONIC THROTTLE CONTROL RELAY CONNECTOR.** 1) Disconnect the connectors from ECM. 2) Turn the ignition switch to ON. 3) Measure the voltage between electronic throttle control relay connector and chassis ground. ***Connector & terminal*** ***(B220) No. 14 (+) — Chassis ground (–):***	Is the voltage 10 V or more?	Repair the short circuit to power in the harness between ECM and electronic throttle control relay connector.	Go to step **4**.
4	**CHECK HARNESS BETWEEN ECM AND ELECTRONIC THROTTLE CONTROL RELAY CONNECTOR.** 1) Turn the ignition switch to OFF. 2) Measure the resistance between electronic throttle control relay connector and chassis ground. ***Connector & terminal*** ***(B220) No. 14 — Chassis ground:*** ***(B220) No. 15 — Chassis ground:***	Is the resistance 1 MΩ or more?	Go to step **5**.	Repair the short circuit in harness to ground between ECM and electronic throttle control relay connector.
5	**CHECK HARNESS BETWEEN ECM AND ELECTRONIC THROTTLE CONTROL RELAY CONNECTOR.** Measure the resistance between ECM and electronic throttle control relay connector. ***Connector & terminal*** ***(B135) No. 17 — (B220) No. 14:*** ***(B135) No. 7 — (B220) No. 15:***	Is the resistance less than 1 Ω?	Repair the poor contact of ECM connector.	Repair the open circuit in harness between ECM and electronic throttle control relay connector.

DQ:DTC P2103 THROTTLE ACTUATOR CONTROL MOTOR CIRCUIT HIGH

DTC DETECTING CONDITION:

- Immediately at fault recognition
- GENERAL DESCRIPTION <Ref. to GD(H4SO)-224, DTC P2103 THROTTLE ACTUATOR CONTROL MOTOR CIRCUIT HIGH, Diagnostic Trouble Code (DTC) Detecting Criteria.>

CAUTION:

After servicing or replacing faulty parts, perform Clear Memory Mode <Ref. to EN(H4SO)(diag)-51, OPERATION, Clear Memory Mode.>, and Inspection Mode <Ref. to EN(H4SO)(diag)-40, PROCEDURE, Inspection Mode.>.

WIRING DIAGRAM:

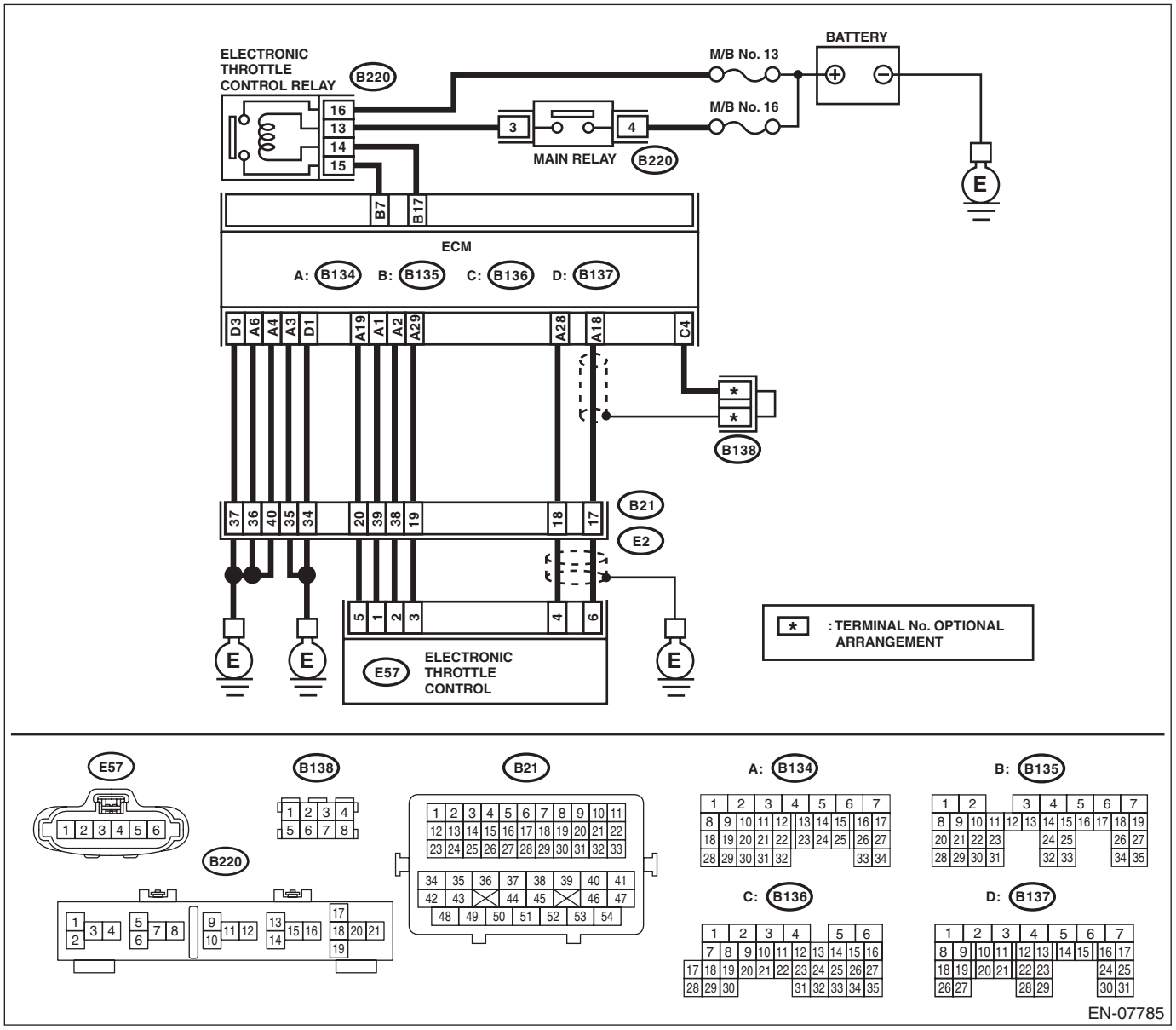

	Step	Check	Yes	No
1	**CHECK ELECTRONIC THROTTLE CONTROL RELAY.** 1) Turn the ignition switch to OFF. 2) Remove the electronic throttle control relay. 3) Measure the resistance between electronic throttle control relay terminals. ***Terminals*** ***No. 15 — No. 16:***	Is the resistance 1 MΩ or more?	Go to step **2**.	Replace the electronic throttle control relay. <Ref. to FU(H4SO)-51, Electronic Throttle Control Relay.>
2	**CHECK SHORT CIRCUIT OF ELECTRONIC THROTTLE CONTROL RELAY POWER SUPPLY.** 1) Turn the ignition switch to ON. 2) Measure the voltage between electronic throttle control relay connector and chassis ground. ***Connector & terminal*** ***(B220) No. 15 (+) — Chassis ground (–):***	Is the voltage 10 V or more?	Repair the short circuit to power in the harness between ECM and electronic throttle control relay connector.	Go to step **3**.
3	**CHECK HARNESS BETWEEN ECM AND ELECTRONIC THROTTLE CONTROL RELAY CONNECTOR.** 1) Turn the ignition switch to OFF. 2) Disconnect the connectors from ECM. 3) Measure the resistance between ECM and chassis ground. ***Connector & terminal*** ***(B135) No. 17 — Chassis ground:***	Is the resistance 1 MΩ or more?	Repair the poor contact of ECM connector.	Repair the short circuit in harness to ground between ECM and electronic throttle control relay connector.

DR:DTC P2109 THROTTLE/PEDAL POSITION SENSOR “A” MINIMUM STOP PERFORMANCE

NOTE:
For the diagnostic procedure, refer to DTC P2101. <Ref. to EN(H4SO)(diag)-267, DTC P2101 THROTTLE ACTUATOR CONTROL MOTOR CIRCUIT RANGE/PERFORMANCE, Diagnostic Procedure with Diagnostic Trouble Code (DTC).>

DS:DTC P2122 THROTTLE/PEDAL POSITION SENSOR/SWITCH “D” CIRCUIT LOW INPUT

DTC DETECTING CONDITION:

- Immediately at fault recognition
- GENERAL DESCRIPTION <Ref. to GD(H4SO)-226, DTC P2122 THROTTLE/PEDAL POSITION SENSOR/SWITCH “D” CIRCUIT LOW INPUT, Diagnostic Trouble Code (DTC) Detecting Criteria.>

TROUBLE SYMPTOM:

- Improper idling
- Poor driving performance

CAUTION:
After servicing or replacing faulty parts, perform Clear Memory Mode <Ref. to EN(H4SO)(diag)-51, OPERATION, Clear Memory Mode.>, and Inspection Mode <Ref. to EN(H4SO)(diag)-40, PROCEDURE, Inspection Mode.>.

WIRING DIAGRAM:

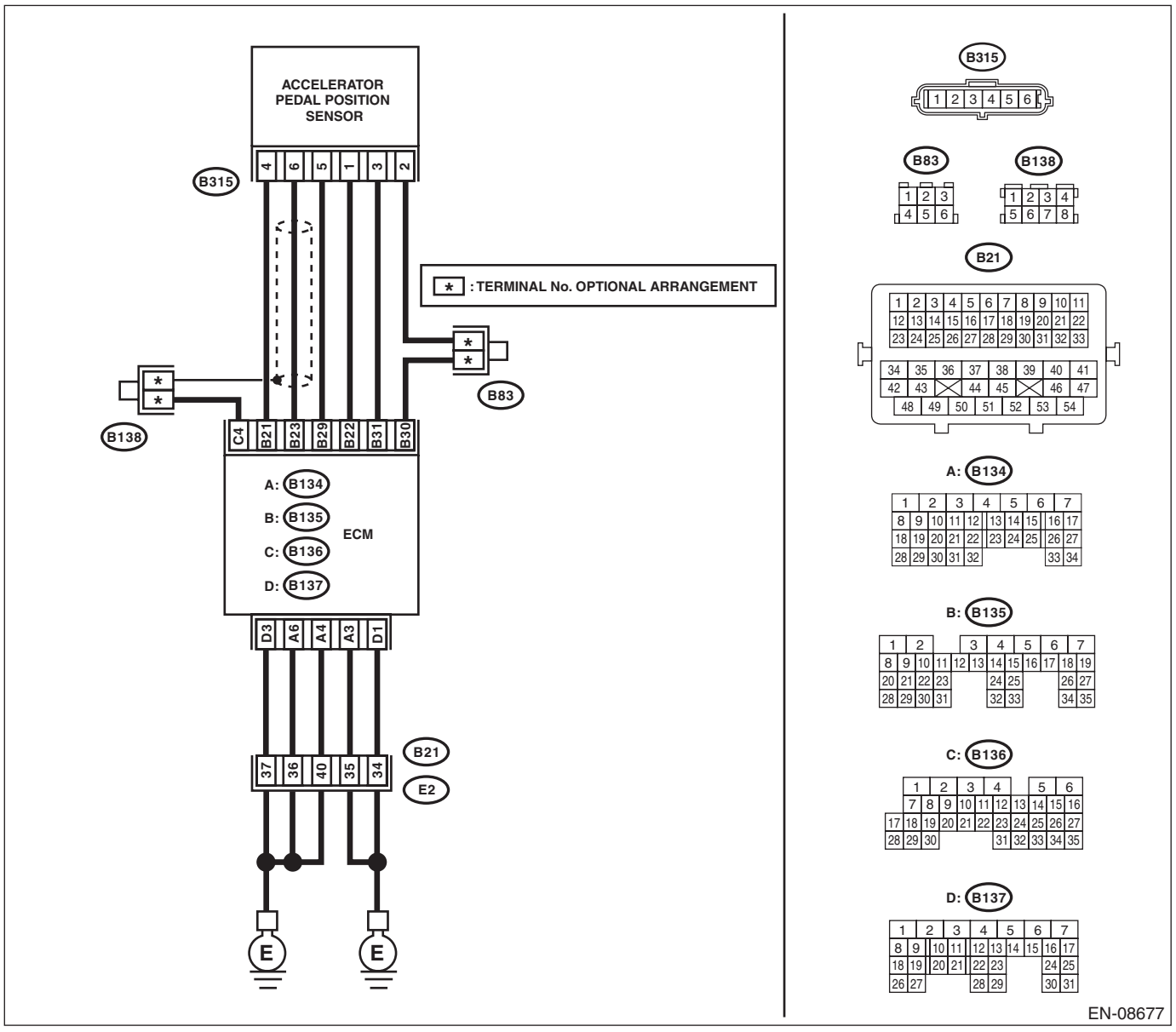

	Step	Check	Yes	No
1	**CHECK HARNESS BETWEEN ECM AND ACCELERATOR PEDAL POSITION SENSOR CONNECTOR.** 1) Turn the ignition switch to OFF. 2) Disconnect the connectors from ECM and accelerator pedal position sensor. 3) Measure the resistance between ECM and chassis ground. ***Connector & terminal*** ***(B135) No. 21 — Chassis ground:*** ***(B135) No. 23 — Chassis ground:*** ***(B135) No. 23 — (B136) No. 4:***	Is the resistance 1 MΩ or more?	Go to step **2**.	Repair the short circuit to ground in harness between ECM and accelerator pedal position sensor connector.
2	**CHECK SHORT CIRCUIT INSIDE THE ECM.** 1) Connect the connector to ECM. 2) Measure the resistance between accelerator pedal position sensor connector and chassis ground. ***Connector & terminal*** ***(B315) No. 6 — Chassis ground:***	Is the resistance 1 MΩ or more?	Replace the accelerator pedal. <Ref. to SP(H4SO)-4, Accelerator Pedal.>	Repair the short circuit to ground in harness between ECM and accelerator pedal position sensor connector. Replace the ECM if defective. <Ref. to FU(H4SO)-46, Engine Control Module (ECM).>

DT:DTC P2123 THROTTLE/PEDAL POSITION SENSOR/SWITCH “D” CIRCUIT HIGH INPUT

DTC DETECTING CONDITION:

- Immediately at fault recognition
- GENERAL DESCRIPTION <Ref. to GD(H4SO)-228, DTC P2123 THROTTLE/PEDAL POSITION SENSOR/SWITCH “D” CIRCUIT HIGH INPUT, Diagnostic Trouble Code (DTC) Detecting Criteria.>

TROUBLE SYMPTOM:

- Improper idling
- Poor driving performance

CAUTION:
After servicing or replacing faulty parts, perform Clear Memory Mode <Ref. to EN(H4SO)(diag)-51, OPERATION, Clear Memory Mode.>, and Inspection Mode <Ref. to EN(H4SO)(diag)-40, PROCEDURE, Inspection Mode.>.

WIRING DIAGRAM:

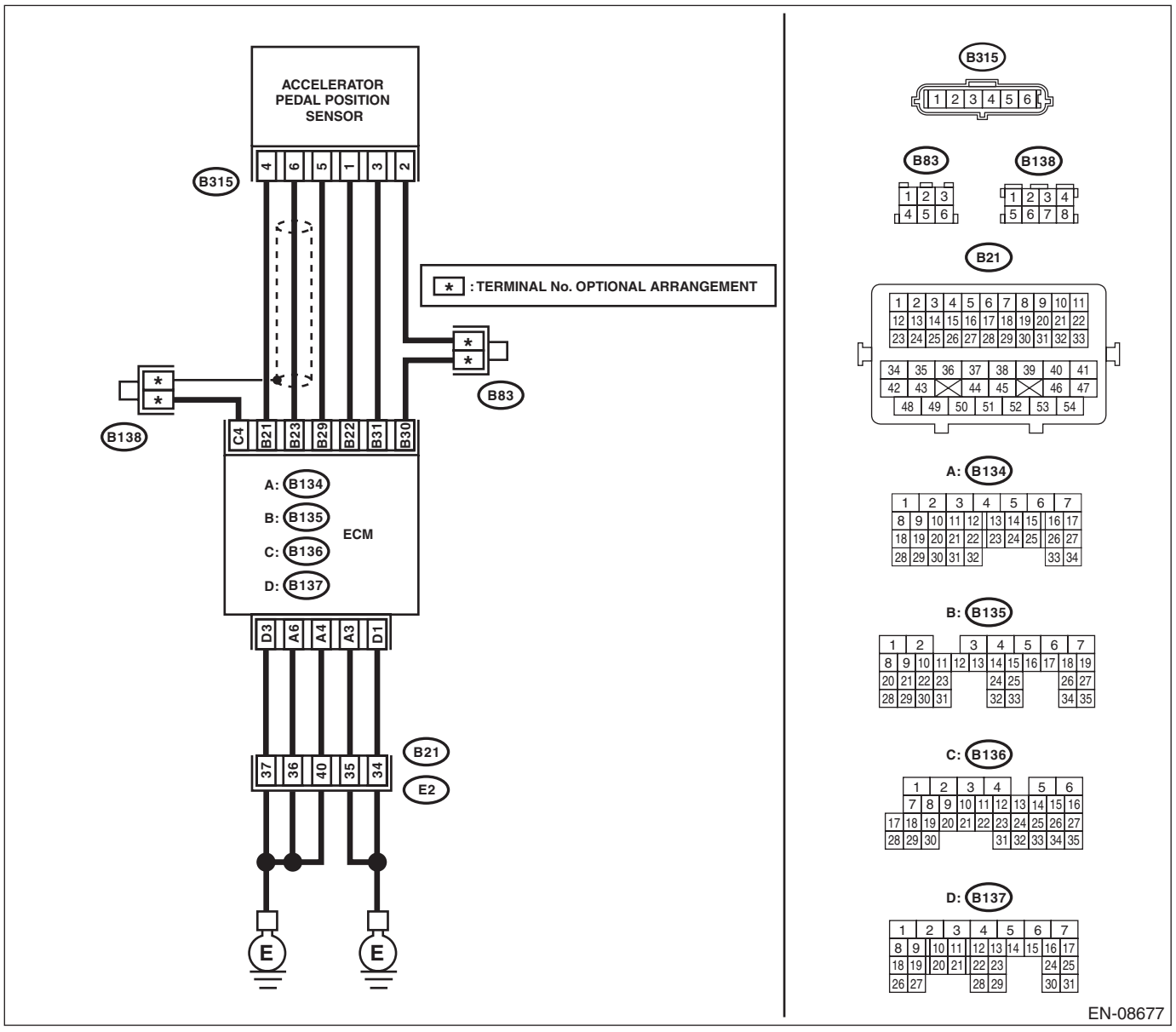

	Step	Check	Yes	No
1	**CHECK HARNESS BETWEEN ECM AND ACCELERATOR PEDAL POSITION SENSOR CONNECTOR.** 1) Turn the ignition switch to OFF. 2) Disconnect the connectors from ECM and accelerator pedal position sensor. 3) Measure the resistance of harness between ECM and accelerator pedal position sensor connector. ***Connector & terminal*** ***(B135) No. 23 — (B315) No. 6:*** ***(B135) No. 29 — (B315) No. 5:***	Is the resistance less than 1 Ω?	Go to step **2**.	Repair the open circuit in harness between ECM and accelerator pedal position sensor connector.
2	**CHECK HARNESS BETWEEN ECM AND ACCELERATOR PEDAL POSITION SENSOR CONNECTOR.** 1) Connect the connector to ECM. 2) Measure the resistance between accelerator pedal position sensor connector and chassis ground. ***Connector & terminal*** ***(B315) No. 5 — Chassis ground:***	Is the resistance less than 5 Ω?	Go to step **3**.	Repair the harness and connector. NOTE: In this case, repair the following item: • Open circuit of harness between ECM and engine ground • Poor contact of ECM connector • Poor contact of coupling connector
3	**CHECK HARNESS BETWEEN ECM AND ACCELERATOR PEDAL POSITION SENSOR CONNECTOR.** 1) Turn the ignition switch to ON. 2) Measure the voltage between accelerator pedal position sensor connector and chassis ground. ***Connector & terminal*** ***(B315) No. 6 (+) — Chassis ground (–):***	Is the voltage 5 V or more?	Repair the short circuit to power supply in the harness between the ECM and accelerator pedal position sensor connector.	Go to step **4**.
4	**CHECK HARNESS BETWEEN ECM AND ACCELERATOR PEDAL POSITION SENSOR CONNECTOR.** 1) Turn the ignition switch to OFF. 2) Disconnect the connectors from ECM. 3) Measure the resistance between ECM connectors. ***Connector & terminal*** ***(B135) No. 21 — (B135) No. 23:***	Is the resistance 1 MΩ or more?	Repair the poor contact of accelerator pedal position sensor connector. Replace the accelerator pedal if defective. <Ref. to SP(H4SO)-4, Accelerator Pedal.>	Repair the short circuit to power supply in the harness between the ECM and accelerator pedal position sensor connector.

DU:DTC P2127 THROTTLE/PEDAL POSITION SENSOR/SWITCH "E" CIRCUIT LOW INPUT

DTC DETECTING CONDITION:

- Immediately at fault recognition
- GENERAL DESCRIPTION <Ref. to GD(H4SO)-230, DTC P2127 THROTTLE/PEDAL POSITION SENSOR/SWITCH "E" CIRCUIT LOW INPUT, Diagnostic Trouble Code (DTC) Detecting Criteria.>

TROUBLE SYMPTOM:

- Improper idling
- Poor driving performance

CAUTION:

After servicing or replacing faulty parts, perform Clear Memory Mode <Ref. to EN(H4SO)(diag)-51, OPERATION, Clear Memory Mode.>, and Inspection Mode <Ref. to EN(H4SO)(diag)-40, PROCEDURE, Inspection Mode.>.

WIRING DIAGRAM:

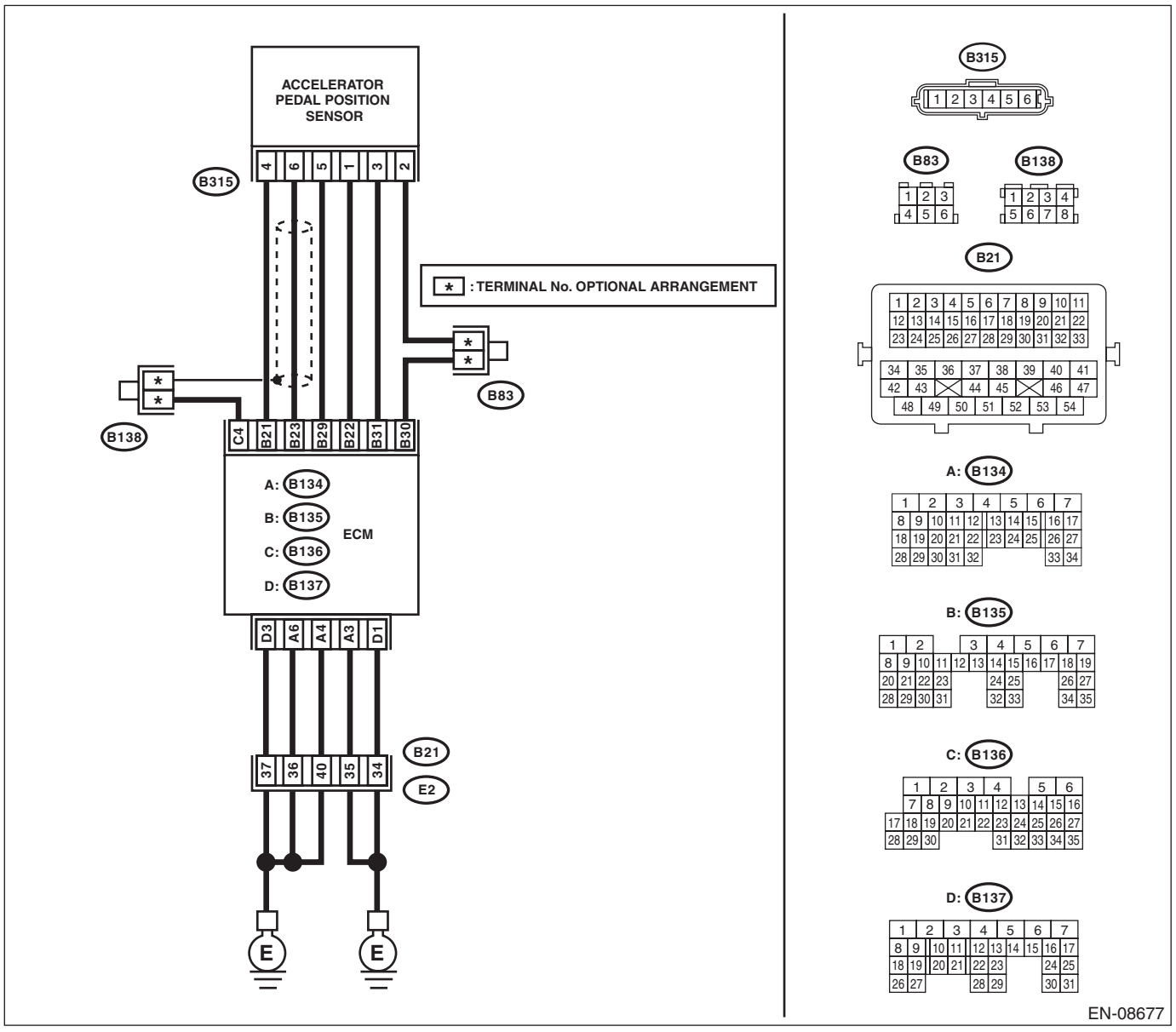

	Step	Check	Yes	No
1	**CHECK HARNESS BETWEEN ECM AND ACCELERATOR PEDAL POSITION SENSOR CONNECTOR.** 1) Turn the ignition switch to OFF. 2) Disconnect the connectors from ECM and accelerator pedal position sensor. 3) Measure the resistance between ECM and chassis ground. ***Connector & terminal*** ***(B135) No. 22 — Chassis ground:*** ***(B135) No. 31 — Chassis ground:***	Is the resistance 1 MΩ or more?	Go to step **2**.	Repair the short circuit to ground in harness between ECM and accelerator pedal position sensor connector.
2	**CHECK SHORT CIRCUIT INSIDE THE ECM.** 1) Connect the connector to ECM. 2) Measure the resistance between accelerator pedal position sensor connector and chassis ground. ***Connector & terminal*** ***(B315) No. 3 — Chassis ground:***	Is the resistance 1 MΩ or more?	Replace the accelerator pedal. <Ref. to SP(H4SO)-4, Accelerator Pedal.>	Repair the short circuit to ground in harness between ECM and accelerator pedal position sensor connector. Replace the ECM if defective. <Ref. to FU(H4SO)-46, Engine Control Module (ECM).>

DV:DTC P2128 THROTTLE/PEDAL POSITION SENSOR/SWITCH "E" CIRCUIT HIGH INPUT

DTC DETECTING CONDITION:

- Immediately at fault recognition
- GENERAL DESCRIPTION <Ref. to GD(H4SO)-232, DTC P2128 THROTTLE/PEDAL POSITION SENSOR/SWITCH "E" CIRCUIT HIGH INPUT, Diagnostic Trouble Code (DTC) Detecting Criteria.>

TROUBLE SYMPTOM:

- Improper idling
- Poor driving performance

CAUTION:

After servicing or replacing faulty parts, perform Clear Memory Mode <Ref. to EN(H4SO)(diag)-51, OPERATION, Clear Memory Mode.>, and Inspection Mode <Ref. to EN(H4SO)(diag)-40, PROCEDURE, Inspection Mode.>.

WIRING DIAGRAM:

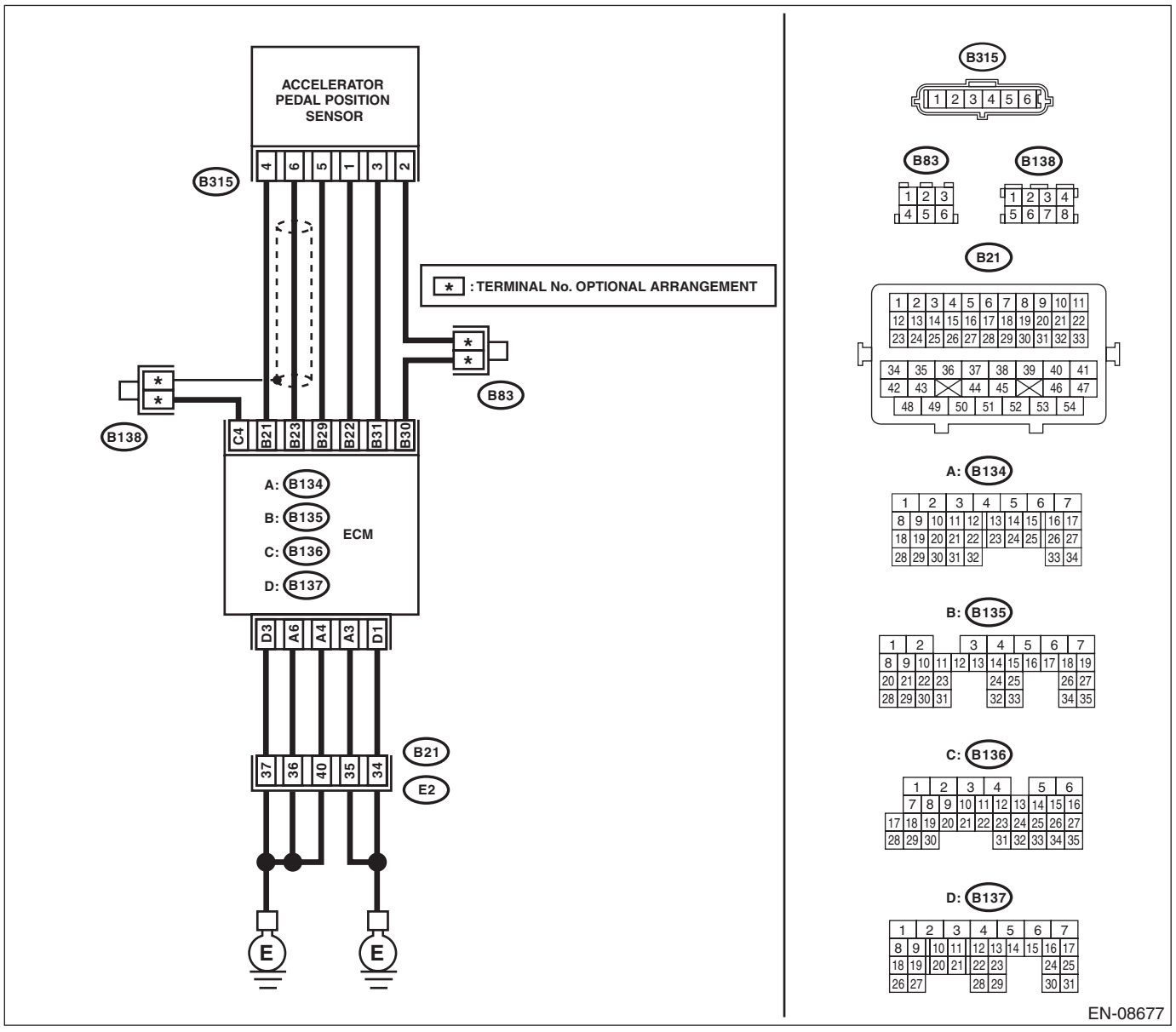

	Step	Check	Yes	No
1	**CHECK HARNESS BETWEEN ECM AND ACCELERATOR PEDAL POSITION SENSOR CONNECTOR.** 1) Turn the ignition switch to OFF. 2) Disconnect the connectors from ECM and accelerator pedal position sensor. 3) Measure the resistance of harness between ECM and accelerator pedal position sensor connector. ***Connector & terminal*** ***(B135) No. 31 — (B315) No. 3:*** ***(B135) No. 30 — (B315) No. 2:***	Is the resistance less than 1 Ω?	Go to step **2**.	Repair the harness and connector. NOTE: In this case, repair the following item: • Open circuit in harness between ECM and accelerator pedal position sensor connector • Poor contact of joint connector
2	**CHECK HARNESS BETWEEN ECM AND ACCELERATOR PEDAL POSITION SENSOR CONNECTOR.** 1) Connect the connector to ECM. 2) Measure the resistance between accelerator pedal position sensor connector and chassis ground. ***Connector & terminal*** ***(B315) No. 2 — Chassis ground:***	Is the resistance less than 1 Ω?	Go to step **3**.	Repair the harness and connector. NOTE: In this case, repair the following item: • Open circuit of harness between ECM and engine ground • Poor contact of ECM connector • Poor contact of joint connector
3	**CHECK HARNESS BETWEEN ECM AND ACCELERATOR PEDAL POSITION SENSOR CONNECTOR.** 1) Turn the ignition switch to ON. 2) Measure the voltage between accelerator pedal position sensor connector and chassis ground. ***Connector & terminal*** ***(B315) No. 3 (+) — Chassis ground (–):***	Is the voltage 5 V or more?	Repair the short circuit to power supply in the harness between the ECM and accelerator pedal position sensor connector.	Go to step **4**.
4	**CHECK HARNESS BETWEEN ECM AND ACCELERATOR PEDAL POSITION SENSOR CONNECTOR.** 1) Turn the ignition switch to OFF. 2) Disconnect the connectors from ECM. 3) Measure the resistance between ECM connectors. ***Connector & terminal*** ***(B135) No. 22 — (B135) No. 31:***	Is the resistance 1 MΩ or more?	Repair the poor contact of accelerator pedal position sensor connector. Replace the accelerator pedal if defective. <Ref. to SP(H4SO)-4, Accelerator Pedal.>	Repair the short circuit to power supply in the harness between the ECM and accelerator pedal position sensor connector.

DW:DTC P2135 THROTTLE/PEDAL POSITION SENSOR/SWITCH “A”/“B” VOLTAGE CORRELATION

DTC DETECTING CONDITION:

- Immediately at fault recognition
- GENERAL DESCRIPTION <Ref. to GD(H4SO)-234, DTC P2135 THROTTLE/PEDAL POSITION SENSOR/SWITCH “A”/“B” VOLTAGE CORRELATION, Diagnostic Trouble Code (DTC) Detecting Criteria.>

TROUBLE SYMPTOM:

- Improper idling
- Poor driving performance

CAUTION:

After servicing or replacing faulty parts, perform Clear Memory Mode <Ref. to EN(H4SO)(diag)-51, OPERATION, Clear Memory Mode.>, and Inspection Mode <Ref. to EN(H4SO)(diag)-40, PROCEDURE, Inspection Mode.>.

WIRING DIAGRAM:

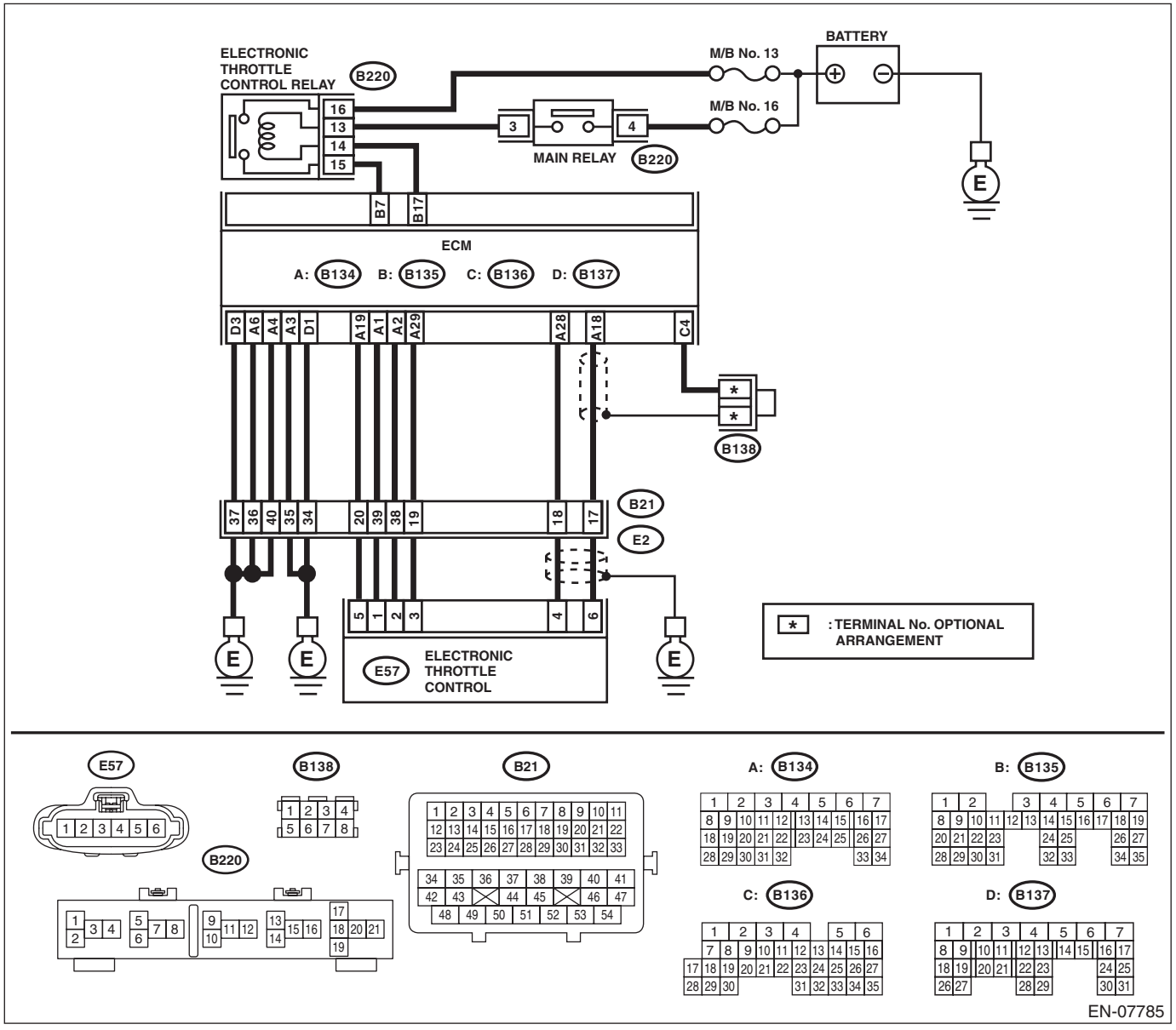

	Step	Check	Yes	No
1	**CHECK HARNESS BETWEEN ECM AND ELECTRONIC THROTTLE CONTROL CONNECTOR.** 1) Turn the ignition switch to OFF. 2) Disconnect the connectors from ECM and electronic throttle control. 3) Measure the resistance between ECM and chassis ground. ***Connector & terminal*** ***(B134) No. 19 — Chassis ground:*** ***(B134) No. 18 — Chassis ground:*** ***(B134) No. 18 — (B136) No. 4:*** ***(B134) No. 28 — Chassis ground:***	Is the resistance 1 MΩ or more?	Go to step **2**.	Repair the short circuit to ground in harness between ECM and electronic throttle control connector.
2	**CHECK SHORT CIRCUIT INSIDE THE ECM.** 1) Connect the connector to ECM. 2) Measure the resistance between electronic throttle control connector and engine ground. ***Connector & terminal*** ***(E57) No. 6 — Engine ground:*** ***(E57) No. 4 — Engine ground:***	Is the resistance 1 MΩ or more?	Go to step **3**.	Repair the short circuit to ground in harness between ECM and electronic throttle control connector. Replace the ECM if defective. <Ref. to FU(H4SO)-46, Engine Control Module (ECM).>
3	**CHECK HARNESS BETWEEN ECM AND ELECTRONIC THROTTLE CONTROL CONNECTOR.** 1) Disconnect the connectors from ECM. 2) Measure the resistance of harness between ECM and electronic throttle control connector. ***Connector & terminal*** ***(B134) No. 18 — (E57) No. 6:*** ***(B134) No. 28 — (E57) No. 4:*** ***(B134) No. 29 — (E57) No. 3:***	Is the resistance less than 1 Ω?	Go to step **4**.	Repair the harness and connector. NOTE: In this case, repair the following item: • Open circuit in harness between ECM and electronic throttle control connector • Poor contact of coupling connector
4	**CHECK HARNESS BETWEEN ECM AND ELECTRONIC THROTTLE CONTROL CONNECTOR.** 1) Connect the connector to ECM. 2) Measure the resistance between electronic throttle control connector and engine ground. ***Connector & terminal*** ***(E57) No. 3 — Engine ground:***	Is the resistance less than 5 Ω?	Go to step **5**.	Repair the harness and connector. NOTE: In this case, repair the following item: • Open circuit of harness between ECM and engine ground • Poor contact of ECM connector • Poor contact of coupling connector
5	**CHECK HARNESS BETWEEN ECM AND ELECTRONIC THROTTLE CONTROL CONNECTOR.** 1) Turn the ignition switch to ON. 2) Measure the voltage between electronic throttle control connector and engine ground. ***Connector & terminal*** ***(E57) No. 6 (+) — Engine ground (–):*** ***(E57) No. 4 (+) — Engine ground (–):***	Is the voltage 5 V or more?	Repair the short circuit to power in harness between ECM and electronic throttle control connector.	Go to step **6**.

	Step	Check	Yes	No
6	**CHECK HARNESS BETWEEN ECM AND ELECTRONIC THROTTLE CONTROL CONNECTOR.** 1) Turn the ignition switch to OFF. 2) Disconnect the connectors from ECM. 3) Measure the resistance between ECM connectors. ***Connector & terminal*** ***(B134) No. 19 — (B134) No. 18:*** ***(B134) No. 19 — (B134) No. 28:***	Is the resistance 1 MΩ or more?	Repair the poor contact of electronic throttle control connector. Replace the electronic throttle control if defective. <Ref. to FU(H4SO)-15, Throttle Body.>	Repair the short circuit to power in harness between ECM and electronic throttle control connector.

DX:DTC P2138 THROTTLE/PEDAL POSITION SENSOR/SWITCH “D”/“E” VOLTAGE CORRELATION

DTC DETECTING CONDITION:

- Immediately at fault recognition
- GENERAL DESCRIPTION <Ref. to GD(H4SO)-236, DTC P2138 THROTTLE/PEDAL POSITION SENSOR/SWITCH “D”/“E” VOLTAGE CORRELATION, Diagnostic Trouble Code (DTC) Detecting Criteria.>

TROUBLE SYMPTOM:

- Improper idling
- Poor driving performance

CAUTION:
After servicing or replacing faulty parts, perform Clear Memory Mode <Ref. to EN(H4SO)(diag)-51, OPERATION, Clear Memory Mode.>, and Inspection Mode <Ref. to EN(H4SO)(diag)-40, PROCEDURE, Inspection Mode.>.

WIRING DIAGRAM:

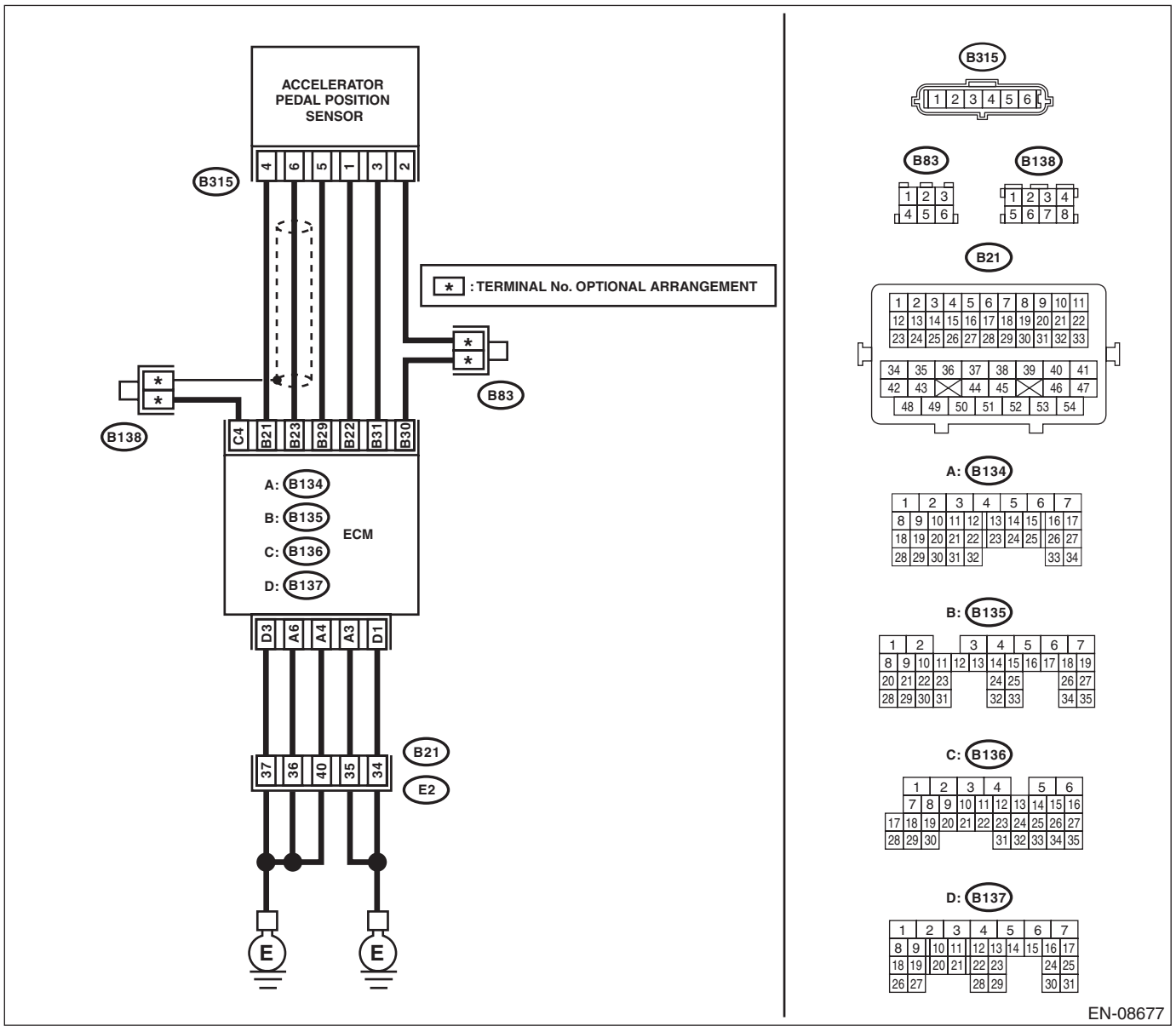

	Step	Check	Yes	No
1	**CHECK ACCELERATOR PEDAL POSITION SENSOR OUTPUT.** 1) Turn the ignition switch to ON. 2) Measure the voltage between ECM and chassis ground. ***Connector & terminal*** ***Main accelerator pedal position sensor signal*** ***(B135) No. 23 (+) — Chassis ground (–):*** ***Sub accelerator pedal position sensor signal*** ***(B135) No. 31 (+) — Chassis ground (–):***	Is the difference in measured values for the main accelerator pedal position sensor signal and the sub accelerator pedal position sensor signal 0 V?	Go to step **3**.	Go to step **2**.
2	**CHECK ACCELERATOR PEDAL POSITION SENSOR OUTPUT.** 1) Measure the voltage between accelerator pedal position sensor connector and chassis ground. ***Connector & terminal*** ***(B315) No. 6 (+) — Chassis ground (–):*** ***(B315) No. 3 (+) — Chassis ground (–):***	Is the difference in measured values for the main accelerator pedal position sensor signal and the sub accelerator pedal position sensor signal 0 V?	Replace the accelerator pedal. <Ref. to SP(H4SO)-4, Accelerator Pedal.>	Repair the harness and connector. NOTE: In this case, repair the following item: • Open circuit in harness between ECM and accelerator pedal position sensor connector • Short circuit to ground in harness between ECM and accelerator pedal position sensor connector
3	**CHECK HARNESS BETWEEN ECM AND ACCELERATOR PEDAL POSITION SENSOR CONNECTOR.** Measure the resistance of harness between the accelerator pedal position sensor connector and chassis ground. ***Connector & terminal*** ***(B315) No. 5 — Chassis ground:*** ***(B315) No. 2 — Chassis ground:***	Is the resistance less than 5 Ω?	Repair the poor contact of ECM connector.	Repair the harness and connector. NOTE: In this case, repair the following item: • Open circuit in harness between ECM and accelerator pedal position sensor connector • Open circuit of harness between ECM and engine ground • Poor contact of ECM connector • Poor contact of joint connector

DY:DTC P2227 BAROMETRIC PRESSURE CIRCUIT RANGE/PERFORMANCE

DTC DETECTING CONDITION:

- Detected when two consecutive driving cycles with fault occur.
- GENERAL DESCRIPTION <Ref. to GD(H4SO)-238, DTC P2227 BAROMETRIC PRESSURE CIRCUIT RANGE/PERFORMANCE, Diagnostic Trouble Code (DTC) Detecting Criteria.>

CAUTION:
After servicing or replacing faulty parts, perform Clear Memory Mode <Ref. to EN(H4SO)(diag)-51, OPERATION, Clear Memory Mode.>, and Inspection Mode <Ref. to EN(H4SO)(diag)-40, PROCEDURE, Inspection Mode.>.

Step		Check	Yes	No
1	**CHECK FOR ANY OTHER DTC ON DISPLAY.**	Is any other DTC displayed?	Check DTC using "List of Diagnostic Trouble Code (DTC)". <Ref. to EN(H4SO)(diag)-78, List of Diagnostic Trouble Code (DTC).>	Replace the ECM. <Ref. to FU(H4SO)-46, Engine Control Module (ECM).> NOTE: The barometric pressure sensor is built into the ECM.

DZ:DTC P2228 BAROMETRIC PRESSURE CIRCUIT LOW

DTC DETECTING CONDITION:

- Immediately at fault recognition
- GENERAL DESCRIPTION <Ref. to GD(H4SO)-239, DTC P2228 BAROMETRIC PRESSURE CIRCUIT LOW, Diagnostic Trouble Code (DTC) Detecting Criteria.>

CAUTION:
After servicing or replacing faulty parts, perform Clear Memory Mode <Ref. to EN(H4SO)(diag)-51, OPERATION, Clear Memory Mode.>, and Inspection Mode <Ref. to EN(H4SO)(diag)-40, PROCEDURE, Inspection Mode.>.

Step		Check	Yes	No
1	**CHECK FOR ANY OTHER DTC ON DISPLAY.**	Is any other DTC displayed?	Check DTC using "List of Diagnostic Trouble Code (DTC)". <Ref. to EN(H4SO)(diag)-78, List of Diagnostic Trouble Code (DTC).>	Replace the ECM. <Ref. to FU(H4SO)-46, Engine Control Module (ECM).> NOTE: The barometric pressure sensor is built into the ECM.

EA:DTC P2229 BAROMETRIC PRESSURE CIRCUIT HIGH

DTC DETECTING CONDITION:

- Immediately at fault recognition
- GENERAL DESCRIPTION <Ref. to GD(H4SO)-240, DTC P2229 BAROMETRIC PRESSURE CIRCUIT HIGH, Diagnostic Trouble Code (DTC) Detecting Criteria.>

CAUTION:
After servicing or replacing faulty parts, perform Clear Memory Mode <Ref. to EN(H4SO)(diag)-51, OPERATION, Clear Memory Mode.>, and Inspection Mode <Ref. to EN(H4SO)(diag)-40, PROCEDURE, Inspection Mode.>.

Step		Check	Yes	No
1	**CHECK FOR ANY OTHER DTC ON DISPLAY.**	Is any other DTC displayed?	Check DTC using "List of Diagnostic Trouble Code (DTC)". <Ref. to EN(H4SO)(diag)-78, List of Diagnostic Trouble Code (DTC).>	Replace the ECM. <Ref. to FU(H4SO)-46, Engine Control Module (ECM).> NOTE: The barometric pressure sensor is built into the ECM.

EB:DTC P2610 ECM/PCM INTERNAL ENGINE OFF TIMER PERFORMANCE

DTC DETECTING CONDITION:

- Detected when two consecutive driving cycles with fault occur.
- GENERAL DESCRIPTION <Ref. to GD(H4SO)-241, DTC P2610 ECM/PCM INTERNAL ENGINE OFF TIMER PERFORMANCE, Diagnostic Trouble Code (DTC) Detecting Criteria.>

CAUTION:
After servicing or replacing faulty parts, perform Clear Memory Mode <Ref. to EN(H4SO)(diag)-51, OPERATION, Clear Memory Mode.>, and Inspection Mode <Ref. to EN(H4SO)(diag)-40, PROCEDURE, Inspection Mode.>.

Step		Check	Yes	No
1	**CHECK FOR ANY OTHER DTC ON DISPLAY.**	Is any other DTC displayed?	Check DTC using "List of Diagnostic Trouble Code (DTC)". <Ref. to EN(H4SO)(diag)-78, List of Diagnostic Trouble Code (DTC).>	Replace the ECM. <Ref. to FU(H4SO)-46, Engine Control Module (ECM).> NOTE: The soak timer IC is built into the ECM.

EC:DTC U0073 CAN FAILURE, BUS 'OFF' DETECTION

NOTE:
For the diagnostic procedure, refer to LAN section. <Ref. to LAN(diag)-2, Basic Diagnostic Procedure.>

ED:DTC U0101 CAN (TCU) DATA NOT LOADED

NOTE:
For the diagnostic procedure, refer to LAN section. <Ref. to LAN(diag)-2, Basic Diagnostic Procedure.>

EE:DTC U0122 CAN (VDC) DATA NOT LOADED

NOTE:
For the diagnostic procedure, refer to LAN section. <Ref. to LAN(diag)-2, Basic Diagnostic Procedure.>

EF:DTC U0140 CAN (BCU) DATA NOT LOADED

NOTE:
For the diagnostic procedure, refer to LAN section. <Ref. to LAN(diag)-2, Basic Diagnostic Procedure.>

EG:DTC U0402 CAN (TCU) DATA ABNORMAL

NOTE:
For the diagnostic procedure, refer to LAN section. <Ref. to LAN(diag)-2, Basic Diagnostic Procedure.>

EH:DTC U0416 CAN (VDC) DATA ABNORMAL

NOTE:
For the diagnostic procedure, refer to LAN section. <Ref. to LAN(diag)-2, Basic Diagnostic Procedure.>

EI: DTC U0422 CAN (BCU) DATA ABNORMAL

NOTE:
For the diagnostic procedure, refer to LAN section. <Ref. to LAN(diag)-2, Basic Diagnostic Procedure.>

20.General Diagnostic Table

A: INSPECTION

1. ENGINE

NOTE:
Malfunction of parts other than those listed is also possible. <Ref. to ME(H4SO)-102, Engine Trouble in General.>

Symptoms	Faulty parts
1. Engine stalls during idling.	1) Manifold absolute pressure sensor 2) Mass air flow and intake air temperature sensor 3) Ignition parts (*1) 4) Engine coolant temperature sensor (*2) 5) Crankshaft position sensor (*3) 6) Camshaft position sensor (*3) 7) Fuel injection parts (*4) 8) Electronic throttle control
2. Rough idling	1) Manifold absolute pressure sensor 2) Mass air flow and intake air temperature sensor 3) Engine coolant temperature sensor (*2) 4) Ignition parts (*1) 5) Air intake system (*5) 6) Fuel injection parts (*4) 7) Electronic throttle control 8) Crankshaft position sensor (*3) 9) Camshaft position sensor (*3) 10) Oxygen sensor 11) Fuel pump and fuel pump relay 12) EGR control valve 13) Oil switching solenoid valve
3. Engine does not return to idle.	1) Engine coolant temperature sensor 2) Electronic throttle control 3) Manifold absolute pressure sensor 4) Mass air flow and intake air temperature sensor 5) EGR control valve 6) Accelerator pedal position sensor 7) Engine oil temperature sensor
4. Poor acceleration	1) Manifold absolute pressure sensor 2) Mass air flow and intake air temperature sensor 3) Electronic throttle control 4) Fuel injection parts (*4) 5) Fuel pump and fuel pump relay 6) Engine coolant temperature sensor (*2) 7) Crankshaft position sensor (*3) 8) Camshaft position sensor (*3) 9) Engine torque control signal circuit 10) Ignition parts (*1) 11) EGR control valve 12) Accelerator pedal position sensor 13) Engine oil temperature sensor 14) Oil switching solenoid valve

Symptoms	Faulty parts
5. Engine stalls, hesitates, or sputters at acceleration.	1) Manifold absolute pressure sensor 2) Mass air flow and intake air temperature sensor 3) Engine coolant temperature sensor (*2) 4) Crankshaft position sensor (*3) 5) Camshaft position sensor (*3) 6) Purge control solenoid valve 7) Fuel injection parts (*4) 8) Electronic throttle control 9) Fuel pump and fuel pump relay 10) EGR control valve
6. Surging	1) Mass air flow and intake air temperature sensor 2) Manifold absolute pressure sensor 3) Engine coolant temperature sensor (*2) 4) Crankshaft position sensor (*3) 5) Camshaft position sensor (*3) 6) Fuel injection parts (*4) 7) Electronic throttle control 8) Fuel pump and fuel pump relay 9) EGR control valve
7. Spark knock	1) Mass air flow and intake air temperature sensor 2) Manifold absolute pressure sensor 3) Engine coolant temperature sensor 4) Knock sensor 5) Fuel injection parts (*4) 6) Fuel pump and fuel pump relay 7) EGR control valve 8) Oil switching solenoid valve
8. After burning in exhaust system	1) Mass air flow and intake air temperature sensor 2) Manifold absolute pressure sensor 3) Engine coolant temperature sensor (*2) 4) Fuel injection parts (*4) 5) Fuel pump and fuel pump relay

*1: Check ignition coil and spark plug.
*2: Indicate the symptom occurring only in cold temperatures.
*3: Ensure the secure installation.
*4: Check fuel injector, fuel pressure regulator and fuel filter.
*5: Inspect air leak in air intake system.

GENERAL DESCRIPTION

GD(H4SO)

Page

1. List of Diagnostic Trouble Code (DTC) 2
2. Diagnostic Trouble Code (DTC) Detecting Criteria 9

1. List of Diagnostic Trouble Code (DTC)

A: LIST

DTC	Item	Index
P0026	Intake Valve Control Solenoid Circuit Range/Performance (Bank 1)	<Ref. to GD(H4SO)-9, DTC P0026 INTAKE VALVE CONTROL SOLENOID CIRCUIT RANGE/PERFORMANCE (BANK 1), Diagnostic Trouble Code (DTC) Detecting Criteria.>
P0028	Intake Valve Control Solenoid Circuit Range/Performance (Bank 2)	<Ref. to GD(H4SO)-10, DTC P0028 INTAKE VALVE CONTROL SOLENOID CIRCUIT RANGE/PERFORMANCE (BANK 2), Diagnostic Trouble Code (DTC) Detecting Criteria.>
P0030	HO2S Heater Control Circuit (Bank 1 Sensor 1)	<Ref. to GD(H4SO)-11, DTC P0030 HO2S HEATER CONTROL CIRCUIT (BANK 1 SENSOR 1), Diagnostic Trouble Code (DTC) Detecting Criteria.>
P0031	HO2S Heater Control Circuit Low (Bank 1 Sensor 1)	<Ref. to GD(H4SO)-13, DTC P0031 HO2S HEATER CONTROL CIRCUIT LOW (BANK 1 SENSOR 1), Diagnostic Trouble Code (DTC) Detecting Criteria.>
P0032	HO2S Heater Control Circuit High (Bank 1 Sensor 1)	<Ref. to GD(H4SO)-15, DTC P0032 HO2S HEATER CONTROL CIRCUIT HIGH (BANK 1 SENSOR 1), Diagnostic Trouble Code (DTC) Detecting Criteria.>
P0037	HO2S Heater Control Circuit Low (Bank 1 Sensor 2)	<Ref. to GD(H4SO)-17, DTC P0037 HO2S HEATER CONTROL CIRCUIT LOW (BANK 1 SENSOR 2), Diagnostic Trouble Code (DTC) Detecting Criteria.>
P0038	HO2S Heater Control Circuit High (Bank 1 Sensor 2)	<Ref. to GD(H4SO)-19, DTC P0038 HO2S HEATER CONTROL CIRCUIT HIGH (BANK 1 SENSOR 2), Diagnostic Trouble Code (DTC) Detecting Criteria.>
P0068	MAP/MAF - Throttle Position Correlation	<Ref. to GD(H4SO)-21, DTC P0068 MAP/MAF - THROTTLE POSITION CORRELATION, Diagnostic Trouble Code (DTC) Detecting Criteria.>
P0076	Intake Valve Control Solenoid Circuit Low (Bank 1)	<Ref. to GD(H4SO)-23, DTC P0076 INTAKE VALVE CONTROL SOLENOID CIRCUIT LOW (BANK 1), Diagnostic Trouble Code (DTC) Detecting Criteria.>
P0077	Intake Valve Control Solenoid Circuit High (Bank 1)	<Ref. to GD(H4SO)-24, DTC P0077 INTAKE VALVE CONTROL SOLENOID CIRCUIT HIGH (BANK 1), Diagnostic Trouble Code (DTC) Detecting Criteria.>
P0082	Intake Valve Control Solenoid Circuit Low (Bank 2)	<Ref. to GD(H4SO)-24, DTC P0082 INTAKE VALVE CONTROL SOLENOID CIRCUIT LOW (BANK 2), Diagnostic Trouble Code (DTC) Detecting Criteria.>
P0083	Intake Valve Control Solenoid Circuit High (Bank 2)	<Ref. to GD(H4SO)-24, DTC P0083 INTAKE VALVE CONTROL SOLENOID CIRCUIT HIGH (BANK 2), Diagnostic Trouble Code (DTC) Detecting Criteria.>
P0101	Mass or Volume Air Flow Circuit Range/Performance	<Ref. to GD(H4SO)-25, DTC P0101 MASS OR VOLUME AIR FLOW CIRCUIT RANGE/PERFORMANCE, Diagnostic Trouble Code (DTC) Detecting Criteria.>
P0102	Mass or Volume Air Flow Circuit Low Input	<Ref. to GD(H4SO)-28, DTC P0102 MASS OR VOLUME AIR FLOW CIRCUIT LOW INPUT, Diagnostic Trouble Code (DTC) Detecting Criteria.>
P0103	Mass or Volume Air Flow Circuit High Input	<Ref. to GD(H4SO)-30, DTC P0103 MASS OR VOLUME AIR FLOW CIRCUIT HIGH INPUT, Diagnostic Trouble Code (DTC) Detecting Criteria.>
P0107	Manifold Absolute Pressure/Barometric Pressure Circuit Low Input	<Ref. to GD(H4SO)-32, DTC P0107 MANIFOLD ABSOLUTE PRESSURE/BAROMETRIC PRESSURE CIRCUIT LOW INPUT, Diagnostic Trouble Code (DTC) Detecting Criteria.>
P0108	Manifold Absolute Pressure/Barometric Pressure Circuit High Input	<Ref. to GD(H4SO)-34, DTC P0108 MANIFOLD ABSOLUTE PRESSURE/BAROMETRIC PRESSURE CIRCUIT HIGH INPUT, Diagnostic Trouble Code (DTC) Detecting Criteria.>
P0111	Intake Air Temperature Sensor 1 Circuit Range/Performance	<Ref. to GD(H4SO)-36, DTC P0111 INTAKE AIR TEMPERATURE SENSOR 1 CIRCUIT RANGE/PERFORMANCE, Diagnostic Trouble Code (DTC) Detecting Criteria.>
P0112	Intake Air Temperature Sensor 1 Circuit Low	<Ref. to GD(H4SO)-39, DTC P0112 INTAKE AIR TEMPERATURE SENSOR 1 CIRCUIT LOW, Diagnostic Trouble Code (DTC) Detecting Criteria.>

DTC	Item	Index
P0113	Intake Air Temperature Sensor 1 Circuit High	<Ref. to GD(H4SO)-41, DTC P0113 INTAKE AIR TEMPERATURE SENSOR 1 CIRCUIT HIGH, Diagnostic Trouble Code (DTC) Detecting Criteria.>
P0117	Engine Coolant Temperature Circuit Low	<Ref. to GD(H4SO)-43, DTC P0117 ENGINE COOLANT TEMPERATURE CIRCUIT LOW, Diagnostic Trouble Code (DTC) Detecting Criteria.>
P0118	Engine Coolant Temperature Circuit High	<Ref. to GD(H4SO)-45, DTC P0118 ENGINE COOLANT TEMPERATURE CIRCUIT HIGH, Diagnostic Trouble Code (DTC) Detecting Criteria.>
P0122	Throttle/Pedal Position Sensor/ Switch “A” Circuit Low	<Ref. to GD(H4SO)-47, DTC P0122 THROTTLE/PEDAL POSITION SENSOR/SWITCH “A” CIRCUIT LOW, Diagnostic Trouble Code (DTC) Detecting Criteria.>
P0123	Throttle/Pedal Position Sensor/ Switch “A” Circuit High	<Ref. to GD(H4SO)-49, DTC P0123 THROTTLE/PEDAL POSITION SENSOR/SWITCH “A” CIRCUIT HIGH, Diagnostic Trouble Code (DTC) Detecting Criteria.>
P0125	Insufficient Coolant Temperature for Closed Loop Fuel Control	<Ref. to GD(H4SO)-51, DTC P0125 INSUFFICIENT COOLANT TEMPERATURE FOR CLOSED LOOP FUEL CONTROL, Diagnostic Trouble Code (DTC) Detecting Criteria.>
P0126	Insufficient Engine Coolant Temperature for Stable Operation	<Ref. to GD(H4SO)-53, DTC P0126 INSUFFICIENT ENGINE COOLANT TEMPERATURE FOR STABLE OPERATION, Diagnostic Trouble Code (DTC) Detecting Criteria.>
P0128	Coolant Thermostat (Engine Coolant Temperature Below Thermostat Regulating Temperature)	<Ref. to GD(H4SO)-55, DTC P0128 COOLANT THERMOSTAT (ENGINE COOLANT TEMPERATURE BELOW THERMOSTAT REGULATING TEMPERATURE), Diagnostic Trouble Code (DTC) Detecting Criteria.>
P0131	O2 Sensor Circuit Low Voltage (Bank 1 Sensor 1)	<Ref. to GD(H4SO)-59, DTC P0131 O2 SENSOR CIRCUIT LOW VOLTAGE (BANK 1 SENSOR 1), Diagnostic Trouble Code (DTC) Detecting Criteria.>
P0132	O2 Sensor Circuit High Voltage (Bank 1 Sensor 1)	<Ref. to GD(H4SO)-61, DTC P0132 O2 SENSOR CIRCUIT HIGH VOLTAGE (BANK 1 SENSOR 1), Diagnostic Trouble Code (DTC) Detecting Criteria.>
P0133	O2 Sensor Circuit Slow Response (Bank 1 Sensor 1)	<Ref. to GD(H4SO)-63, DTC P0133 O2 SENSOR CIRCUIT SLOW RESPONSE (BANK 1 SENSOR 1), Diagnostic Trouble Code (DTC) Detecting Criteria.>
P0134	O2 Sensor Circuit No Activity Detected (Bank 1 Sensor 1)	<Ref. to GD(H4SO)-66, DTC P0134 O2 SENSOR CIRCUIT NO ACTIVITY DETECTED (BANK 1 SENSOR 1), Diagnostic Trouble Code (DTC) Detecting Criteria.>
P0137	O2 Sensor Circuit Low Voltage (Bank 1 Sensor 2)	<Ref. to GD(H4SO)-68, DTC P0137 O2 SENSOR CIRCUIT LOW VOLTAGE (BANK 1 SENSOR 2), Diagnostic Trouble Code (DTC) Detecting Criteria.>
P0138	O2 Sensor Circuit High Voltage (Bank 1 Sensor 2)	<Ref. to GD(H4SO)-71, DTC P0138 O2 SENSOR CIRCUIT HIGH VOLTAGE (BANK 1 SENSOR 2), Diagnostic Trouble Code (DTC) Detecting Criteria.>
P013A	O2 Sensor Slow Response - Rich to Lean (Bank 1 Sensor 2)	<Ref. to GD(H4SO)-72, DTC P013A O2 SENSOR SLOW RESPONSE - RICH TO LEAN (BANK 1 SENSOR 2), Diagnostic Trouble Code (DTC) Detecting Criteria.>
P013B	O2 Sensor Slow Response - Lean to Rich (Bank 1 Sensor 2)	<Ref. to GD(H4SO)-74, DTC P013B O2 SENSOR SLOW RESPONSE - LEAN TO RICH (BANK 1 SENSOR 2), Diagnostic Trouble Code (DTC) Detecting Criteria.>
P013E	O2 Sensor Delayed Response - Rich to Lean (Bank 1 Sensor 2)	<Ref. to GD(H4SO)-76, DTC P013E O2 SENSOR DELAYED RESPONSE - RICH TO LEAN (BANK 1 SENSOR 2), Diagnostic Trouble Code (DTC) Detecting Criteria.>
P013F	O2 Sensor Delayed Response - Lean to Rich (Bank 1 Sensor 2)	<Ref. to GD(H4SO)-78, DTC P013F O2 SENSOR DELAYED RESPONSE - LEAN TO RICH (BANK 1 SENSOR 2), Diagnostic Trouble Code (DTC) Detecting Criteria.>
P0140	O2 Sensor Circuit No Activity Detected (Bank1 Sensor2)	<Ref. to GD(H4SO)-80, DTC P0140 O2 SENSOR CIRCUIT NO ACTIVITY DETECTED (BANK1 SENSOR2), Diagnostic Trouble Code (DTC) Detecting Criteria.>
P0141	O2 Sensor Heater Circuit (Bank1 Sensor2)	<Ref. to GD(H4SO)-82, DTC P0141 O2 SENSOR HEATER CIRCUIT (BANK1 SENSOR2), Diagnostic Trouble Code (DTC) Detecting Criteria.>
P014C	O2 Sensor Slow Response - Rich to Lean (Bank 1 Sensor 1)	<Ref. to GD(H4SO)-84, DTC P014C O2 SENSOR SLOW RESPONSE - RICH TO LEAN (BANK 1 SENSOR 1), Diagnostic Trouble Code (DTC) Detecting Criteria.>

DTC	Item	Index
P014D	O2 Sensor Slow Response - Lean to Rich (Bank 1 Sensor 1)	<Ref. to GD(H4SO)-86, DTC P014D O2 SENSOR SLOW RESPONSE - LEAN TO RICH (BANK 1 SENSOR 1), Diagnostic Trouble Code (DTC) Detecting Criteria.>
P015A	O2 Sensor Delayed Response - Rich to Lean (Bank 1 Sensor 1)	<Ref. to GD(H4SO)-87, DTC P015A O2 SENSOR DELAYED RESPONSE - RICH TO LEAN (BANK 1 SENSOR 1), Diagnostic Trouble Code (DTC) Detecting Criteria.>
P015B	O2 Sensor Delayed Response - Lean to Rich (Bank 1 Sensor 1)	<Ref. to GD(H4SO)-89, DTC P015B O2 SENSOR DELAYED RESPONSE - LEAN TO RICH (BANK 1 SENSOR 1), Diagnostic Trouble Code (DTC) Detecting Criteria.>
P0171	System Too Lean (Bank 1)	<Ref. to GD(H4SO)-90, DTC P0171 SYSTEM TOO LEAN (BANK 1), Diagnostic Trouble Code (DTC) Detecting Criteria.>
P0172	System Too Rich (Bank 1)	<Ref. to GD(H4SO)-92, DTC P0172 SYSTEM TOO RICH (BANK 1), Diagnostic Trouble Code (DTC) Detecting Criteria.>
P0181	Fuel Temperature Sensor “A” Circuit Range/Performance	<Ref. to GD(H4SO)-94, DTC P0181 FUEL TEMPERATURE SENSOR “A” CIRCUIT RANGE/PERFORMANCE, Diagnostic Trouble Code (DTC) Detecting Criteria.>
P0182	Fuel Temperature Sensor “A” Circuit Low Input	<Ref. to GD(H4SO)-97, DTC P0182 FUEL TEMPERATURE SENSOR “A” CIRCUIT LOW INPUT, Diagnostic Trouble Code (DTC) Detecting Criteria.>
P0183	Fuel Temperature Sensor “A” Circuit High Input	<Ref. to GD(H4SO)-99, DTC P0183 FUEL TEMPERATURE SENSOR “A” CIRCUIT HIGH INPUT, Diagnostic Trouble Code (DTC) Detecting Criteria.>
P0196	Engine Oil Temperature Sensor Circuit Range/Performance	<Ref. to GD(H4SO)-101, DTC P0196 ENGINE OIL TEMPERATURE SENSOR CIRCUIT RANGE/PERFORMANCE, Diagnostic Trouble Code (DTC) Detecting Criteria.>
P0197	Engine Oil Temperature Sensor Low	<Ref. to GD(H4SO)-103, DTC P0197 ENGINE OIL TEMPERATURE SENSOR LOW, Diagnostic Trouble Code (DTC) Detecting Criteria.>
P0198	Engine Oil Temperature Sensor High	<Ref. to GD(H4SO)-104, DTC P0198 ENGINE OIL TEMPERATURE SENSOR HIGH, Diagnostic Trouble Code (DTC) Detecting Criteria.>
P0201	Injector #1	<Ref. to GD(H4SO)-105, DTC P0201 INJECTOR #1, Diagnostic Trouble Code (DTC) Detecting Criteria.>
P0202	Injector #2	<Ref. to GD(H4SO)-106, DTC P0202 INJECTOR #2, Diagnostic Trouble Code (DTC) Detecting Criteria.>
P0203	Injector #3	<Ref. to GD(H4SO)-106, DTC P0203 INJECTOR #3, Diagnostic Trouble Code (DTC) Detecting Criteria.>
P0204	Injector #4	<Ref. to GD(H4SO)-106, DTC P0204 INJECTOR #4, Diagnostic Trouble Code (DTC) Detecting Criteria.>
P0222	Throttle/Pedal Position Sensor/ Switch “B” Circuit Low	<Ref. to GD(H4SO)-107, DTC P0222 THROTTLE/PEDAL POSITION SENSOR/SWITCH “B” CIRCUIT LOW, Diagnostic Trouble Code (DTC) Detecting Criteria.>
P0223	Throttle/Pedal Position Sensor/ Switch “B” Circuit High	<Ref. to GD(H4SO)-109, DTC P0223 THROTTLE/PEDAL POSITION SENSOR/SWITCH “B” CIRCUIT HIGH, Diagnostic Trouble Code (DTC) Detecting Criteria.>
P0301	Cylinder 1 Misfire Detected	<Ref. to GD(H4SO)-111, DTC P0301 CYLINDER 1 MISFIRE DETECTED, Diagnostic Trouble Code (DTC) Detecting Criteria.>
P0302	Cylinder 2 Misfire Detected	<Ref. to GD(H4SO)-121, DTC P0302 CYLINDER 2 MISFIRE DETECTED, Diagnostic Trouble Code (DTC) Detecting Criteria.>
P0303	Cylinder 3 Misfire Detected	<Ref. to GD(H4SO)-121, DTC P0303 CYLINDER 3 MISFIRE DETECTED, Diagnostic Trouble Code (DTC) Detecting Criteria.>
P0304	Cylinder 4 Misfire Detected	<Ref. to GD(H4SO)-121, DTC P0304 CYLINDER 4 MISFIRE DETECTED, Diagnostic Trouble Code (DTC) Detecting Criteria.>
P0327	Knock Sensor 1 Circuit Low (Bank 1 or Single Sensor)	<Ref. to GD(H4SO)-122, DTC P0327 KNOCK SENSOR 1 CIRCUIT LOW (BANK 1 OR SINGLE SENSOR), Diagnostic Trouble Code (DTC) Detecting Criteria.>
P0328	Knock Sensor 1 Circuit High (Bank 1 or Single Sensor)	<Ref. to GD(H4SO)-124, DTC P0328 KNOCK SENSOR 1 CIRCUIT HIGH (BANK 1 OR SINGLE SENSOR), Diagnostic Trouble Code (DTC) Detecting Criteria.>

DTC	Item	Index
P0335	Crankshaft Position Sensor “A” Circuit	<Ref. to GD(H4SO)-126, DTC P0335 CRANKSHAFT POSITION SENSOR “A” CIRCUIT, Diagnostic Trouble Code (DTC) Detecting Criteria.>
P0336	Crankshaft Position Sensor “A” Circuit Range/Performance	<Ref. to GD(H4SO)-128, DTC P0336 CRANKSHAFT POSITION SENSOR “A” CIRCUIT RANGE/PERFORMANCE, Diagnostic Trouble Code (DTC) Detecting Criteria.>
P0340	Camshaft Position Sensor “A” Circuit (Bank 1 or Single Sensor)	<Ref. to GD(H4SO)-130, DTC P0340 CAMSHAFT POSITION SENSOR “A” CIRCUIT (BANK 1 OR SINGLE SENSOR), Diagnostic Trouble Code (DTC) Detecting Criteria.>
P0341	Camshaft Position Sensor “A” Circuit Range/Performance (Bank 1 or Single Sensor)	<Ref. to GD(H4SO)-132, DTC P0341 CAMSHAFT POSITION SENSOR “A” CIRCUIT RANGE/PERFORMANCE (BANK 1 OR SINGLE SENSOR), Diagnostic Trouble Code (DTC) Detecting Criteria.>
P0351	Ignition Coil A Primary/Secondary Circuit	<Ref. to GD(H4SO)-134, DTC P0351 IGNITION COIL A PRIMARY/SECONDARY CIRCUIT, Diagnostic Trouble Code (DTC) Detecting Criteria.>
P0352	Ignition Coil B Primary/Secondary Circuit	<Ref. to GD(H4SO)-134, DTC P0352 IGNITION COIL B PRIMARY/SECONDARY CIRCUIT, Diagnostic Trouble Code (DTC) Detecting Criteria.>
P0353	Ignition Coil C Primary/Secondary Circuit	<Ref. to GD(H4SO)-134, DTC P0353 IGNITION COIL C PRIMARY/SECONDARY CIRCUIT, Diagnostic Trouble Code (DTC) Detecting Criteria.>
P0354	Ignition Coil D Primary/Secondary Circuit	<Ref. to GD(H4SO)-134, DTC P0354 IGNITION COIL D PRIMARY/SECONDARY CIRCUIT, Diagnostic Trouble Code (DTC) Detecting Criteria.>
P0400	Exhaust Gas Recirculation Flow	<Ref. to GD(H4SO)-135, DTC P0400 EXHAUST GAS RECIRCULATION FLOW, Diagnostic Trouble Code (DTC) Detecting Criteria.>
P0420	Catalyst System Efficiency Below Threshold (Bank 1)	<Ref. to GD(H4SO)-138, DTC P0420 CATALYST SYSTEM EFFICIENCY BELOW THRESHOLD (BANK 1), Diagnostic Trouble Code (DTC) Detecting Criteria.>
P0442	Evaporative Emission Control System Leak Detected (Small Leak)	<Ref. to GD(H4SO)-141, DTC P0442 EVAPORATIVE EMISSION CONTROL SYSTEM LEAK DETECTED (SMALL LEAK), Diagnostic Trouble Code (DTC) Detecting Criteria.>
P0447	Evaporative Emission Control System Vent Control Circuit Open	<Ref. to GD(H4SO)-155, DTC P0447 EVAPORATIVE EMISSION CONTROL SYSTEM VENT CONTROL CIRCUIT OPEN, Diagnostic Trouble Code (DTC) Detecting Criteria.>
P0448	Evaporative Emission Control System Vent Control Circuit Shorted	<Ref. to GD(H4SO)-157, DTC P0448 EVAPORATIVE EMISSION CONTROL SYSTEM VENT CONTROL CIRCUIT SHORTED, Diagnostic Trouble Code (DTC) Detecting Criteria.>
P0451	Evaporative Emission Control System Pressure Sensor	<Ref. to GD(H4SO)-159, DTC P0451 EVAPORATIVE EMISSION CONTROL SYSTEM PRESSURE SENSOR, Diagnostic Trouble Code (DTC) Detecting Criteria.>
P0452	Evaporative Emission Control System Pressure Sensor Low Input	<Ref. to GD(H4SO)-163, DTC P0452 EVAPORATIVE EMISSION CONTROL SYSTEM PRESSURE SENSOR LOW INPUT, Diagnostic Trouble Code (DTC) Detecting Criteria.>
P0453	Evaporative Emission Control System Pressure Sensor High Input	<Ref. to GD(H4SO)-165, DTC P0453 EVAPORATIVE EMISSION CONTROL SYSTEM PRESSURE SENSOR HIGH INPUT, Diagnostic Trouble Code (DTC) Detecting Criteria.>
P0456	Evaporative Emission Control System Leak Detected (Very Small Leak)	<Ref. to GD(H4SO)-166, DTC P0456 EVAPORATIVE EMISSION CONTROL SYSTEM LEAK DETECTED (VERY SMALL LEAK), Diagnostic Trouble Code (DTC) Detecting Criteria.>
P0457	Evaporative Emission Control System Leak Detected (Fuel Cap Loose/Off)	<Ref. to GD(H4SO)-166, DTC P0457 EVAPORATIVE EMISSION CONTROL SYSTEM LEAK DETECTED (FUEL CAP LOOSE/OFF), Diagnostic Trouble Code (DTC) Detecting Criteria.>
P0458	Evaporative Emission System Purge Control Valve Circuit Low	<Ref. to GD(H4SO)-167, DTC P0458 EVAPORATIVE EMISSION SYSTEM PURGE CONTROL VALVE CIRCUIT LOW, Diagnostic Trouble Code (DTC) Detecting Criteria.>
P0459	Evaporative Emission System Purge Control Valve Circuit High	<Ref. to GD(H4SO)-169, DTC P0459 EVAPORATIVE EMISSION SYSTEM PURGE CONTROL VALVE CIRCUIT HIGH, Diagnostic Trouble Code (DTC) Detecting Criteria.>

DTC	Item	Index
P0461	Fuel Level Sensor “A” Circuit Range/Performance	<Ref. to GD(H4SO)-171, DTC P0461 FUEL LEVEL SENSOR “A” CIRCUIT RANGE/PERFORMANCE, Diagnostic Trouble Code (DTC) Detecting Criteria.>
P0462	Fuel Level Sensor “A” Circuit Low	<Ref. to GD(H4SO)-173, DTC P0462 FUEL LEVEL SENSOR “A” CIRCUIT LOW, Diagnostic Trouble Code (DTC) Detecting Criteria.>
P0463	Fuel Level Sensor “A” Circuit High	<Ref. to GD(H4SO)-175, DTC P0463 FUEL LEVEL SENSOR “A” CIRCUIT HIGH, Diagnostic Trouble Code (DTC) Detecting Criteria.>
P0464	Fuel Level Sensor Circuit Intermittent	<Ref. to GD(H4SO)-177, DTC P0464 FUEL LEVEL SENSOR CIRCUIT INTERMITTENT, Diagnostic Trouble Code (DTC) Detecting Criteria.>
P0500	Vehicle Speed Sensor “A”	<Ref. to GD(H4SO)-180, DTC P0500 VEHICLE SPEED SENSOR “A”, Diagnostic Trouble Code (DTC) Detecting Criteria.>
P0506	Idle Air Control System RPM Lower Than Expected	<Ref. to GD(H4SO)-181, DTC P0506 IDLE AIR CONTROL SYSTEM RPM LOWER THAN EXPECTED, Diagnostic Trouble Code (DTC) Detecting Criteria.>
P0507	Idle Air Control System RPM Higher Than Expected	<Ref. to GD(H4SO)-182, DTC P0507 IDLE AIR CONTROL SYSTEM RPM HIGHER THAN EXPECTED, Diagnostic Trouble Code (DTC) Detecting Criteria.>
P050A	Cold Start Idle Air Control System Performance	<Ref. to GD(H4SO)-183, DTC P050A COLD START IDLE AIR CONTROL SYSTEM PERFORMANCE, Diagnostic Trouble Code (DTC) Detecting Criteria.>
P050B	Cold Start Ignition Timing Performance	<Ref. to GD(H4SO)-188, DTC P050B COLD START IGNITION TIMING PERFORMANCE, Diagnostic Trouble Code (DTC) Detecting Criteria.>
P0512	Starter Request Circuit	<Ref. to GD(H4SO)-189, DTC P0512 STARTER REQUEST CIRCUIT, Diagnostic Trouble Code (DTC) Detecting Criteria.>
P0513	Incorrect Immobilizer Key	<Ref. to GD(H4SO)-190, DTC P0513 INCORRECT IMMOBILIZER KEY, Diagnostic Trouble Code (DTC) Detecting Criteria.>
P0604	Internal Control Module Random Access Memory (RAM) Error	<Ref. to GD(H4SO)-191, DTC P0604 INTERNAL CONTROL MODULE RANDOM ACCESS MEMORY (RAM) ERROR, Diagnostic Trouble Code (DTC) Detecting Criteria.>
P0605	Internal Control Module Read Only Memory (ROM) Error	<Ref. to GD(H4SO)-192, DTC P0605 INTERNAL CONTROL MODULE READ ONLY MEMORY (ROM) ERROR, Diagnostic Trouble Code (DTC) Detecting Criteria.>
P0607	Throttle Control System Circuit Range/Performance	<Ref. to GD(H4SO)-193, DTC P0607 THROTTLE CONTROL SYSTEM CIRCUIT RANGE/PERFORMANCE, Diagnostic Trouble Code (DTC) Detecting Criteria.>
P0638	Throttle Actuator Control Range/Performance (Bank 1)	<Ref. to GD(H4SO)-195, DTC P0638 THROTTLE ACTUATOR CONTROL RANGE/PERFORMANCE (BANK 1), Diagnostic Trouble Code (DTC) Detecting Criteria.>
P0700	Transmission Control System (MIL Request)	<Ref. to GD(H4SO)-197, DTC P0700 TRANSMISSION CONTROL SYSTEM (MIL REQUEST), Diagnostic Trouble Code (DTC) Detecting Criteria.>
P0851	Park/Neutral Switch Input Circuit Low (AT Model)	<Ref. to GD(H4SO)-198, DTC P0851 PARK/NEUTRAL SWITCH INPUT CIRCUIT LOW (AT MODEL), Diagnostic Trouble Code (DTC) Detecting Criteria.>
P0851	Neutral Switch Input Circuit Low (MT Model)	<Ref. to GD(H4SO)-199, DTC P0851 NEUTRAL SWITCH INPUT CIRCUIT LOW (MT MODEL), Diagnostic Trouble Code (DTC) Detecting Criteria.>
P0852	Park/Neutral Switch Input Circuit High (AT Model)	<Ref. to GD(H4SO)-200, DTC P0852 PARK/NEUTRAL SWITCH INPUT CIRCUIT HIGH (AT MODEL), Diagnostic Trouble Code (DTC) Detecting Criteria.>
P0852	Neutral Switch Input Circuit High (MT Model)	<Ref. to GD(H4SO)-201, DTC P0852 NEUTRAL SWITCH INPUT CIRCUIT HIGH (MT MODEL), Diagnostic Trouble Code (DTC) Detecting Criteria.>
P1152	O2 Sensor Circuit Range/Performance (Low) (Bank1 Sensor1)	<Ref. to GD(H4SO)-202, DTC P1152 O2 SENSOR CIRCUIT RANGE/PERFORMANCE (LOW) (BANK1 SENSOR1), Diagnostic Trouble Code (DTC) Detecting Criteria.>
P1153	O2 Sensor Circuit Range/Performance (High) (Bank1 Sensor1)	<Ref. to GD(H4SO)-204, DTC P1153 O2 SENSOR CIRCUIT RANGE/PERFORMANCE (HIGH) (BANK1 SENSOR1), Diagnostic Trouble Code (DTC) Detecting Criteria.>

DTC	Item	Index
P1160	Return Spring Failure	<Ref. to GD(H4SO)-206, DTC P1160 RETURN SPRING FAILURE, Diagnostic Trouble Code (DTC) Detecting Criteria.>
P1443	Vent Control Solenoid Valve Function Problem	<Ref. to GD(H4SO)-207, DTC P1443 VENT CONTROL SOLENOID VALVE FUNCTION PROBLEM, Diagnostic Trouble Code (DTC) Detecting Criteria.>
P1492	EGR Solenoid Valve Signal #1 Circuit Malfunction (Low Input)	<Ref. to GD(H4SO)-209, DTC P1492 EGR SOLENOID VALVE SIGNAL #1 CIRCUIT MALFUNCTION (LOW INPUT), Diagnostic Trouble Code (DTC) Detecting Criteria.>
P1493	EGR Solenoid Valve Signal #1 Circuit Malfunction (High Input)	<Ref. to GD(H4SO)-211, DTC P1493 EGR SOLENOID VALVE SIGNAL #1 CIRCUIT MALFUNCTION (HIGH INPUT), Diagnostic Trouble Code (DTC) Detecting Criteria.>
P1494	EGR Solenoid Valve Signal #2 Circuit Malfunction (Low Input)	<Ref. to GD(H4SO)-213, DTC P1494 EGR SOLENOID VALVE SIGNAL #2 CIRCUIT MALFUNCTION (LOW INPUT), Diagnostic Trouble Code (DTC) Detecting Criteria.>
P1495	EGR Solenoid Valve Signal #2 Circuit Malfunction (High Input)	<Ref. to GD(H4SO)-213, DTC P1495 EGR SOLENOID VALVE SIGNAL #2 CIRCUIT MALFUNCTION (HIGH INPUT), Diagnostic Trouble Code (DTC) Detecting Criteria.>
P1496	EGR Solenoid Valve Signal #3 Circuit Malfunction (Low Input)	<Ref. to GD(H4SO)-213, DTC P1496 EGR SOLENOID VALVE SIGNAL #3 CIRCUIT MALFUNCTION (LOW INPUT), Diagnostic Trouble Code (DTC) Detecting Criteria.>
P1497	EGR Solenoid Valve Signal #3 Circuit Malfunction (High Input)	<Ref. to GD(H4SO)-213, DTC P1497 EGR SOLENOID VALVE SIGNAL #3 CIRCUIT MALFUNCTION (HIGH INPUT), Diagnostic Trouble Code (DTC) Detecting Criteria.>
P1498	EGR Solenoid Valve Signal #4 Circuit Malfunction (Low Input)	<Ref. to GD(H4SO)-213, DTC P1498 EGR SOLENOID VALVE SIGNAL #4 CIRCUIT MALFUNCTION (LOW INPUT), Diagnostic Trouble Code (DTC) Detecting Criteria.>
P1499	EGR Solenoid Valve Signal #4 Circuit Malfunction (High Input)	<Ref. to GD(H4SO)-213, DTC P1499 EGR SOLENOID VALVE SIGNAL #4 CIRCUIT MALFUNCTION (HIGH INPUT), Diagnostic Trouble Code (DTC) Detecting Criteria.>
P1518	Starter Switch Circuit Low Input	<Ref. to GD(H4SO)-214, DTC P1518 STARTER SWITCH CIRCUIT LOW INPUT, Diagnostic Trouble Code (DTC) Detecting Criteria.>
P1560	Back-Up Voltage Circuit Malfunction	<Ref. to GD(H4SO)-215, DTC P1560 BACK-UP VOLTAGE CIRCUIT MALFUNCTION, Diagnostic Trouble Code (DTC) Detecting Criteria.>
P1570	Antenna	<Ref. to GD(H4SO)-216, DTC P1570 ANTENNA, Diagnostic Trouble Code (DTC) Detecting Criteria.>
P1571	Reference Code Incompatibility	<Ref. to GD(H4SO)-216, DTC P1571 REFERENCE CODE INCOMPATIBILITY, Diagnostic Trouble Code (DTC) Detecting Criteria.>
P1572	IMM Circuit Failure (Except Antenna Circuit)	<Ref. to GD(H4SO)-216, DTC P1572 IMM CIRCUIT FAILURE (EXCEPT ANTENNA CIRCUIT), Diagnostic Trouble Code (DTC) Detecting Criteria.>
P1574	Key Communication Failure	<Ref. to GD(H4SO)-216, DTC P1574 KEY COMMUNICATION FAILURE, Diagnostic Trouble Code (DTC) Detecting Criteria.>
P1576	EGI Control Module EEPROM	<Ref. to GD(H4SO)-216, DTC P1576 EGI CONTROL MODULE EEPROM, Diagnostic Trouble Code (DTC) Detecting Criteria.>
P1577	IMM Control Module EEPROM	<Ref. to GD(H4SO)-216, DTC P1577 IMM CONTROL MODULE EEPROM, Diagnostic Trouble Code (DTC) Detecting Criteria.>
P1578	Meter Failure	<Ref. to GD(H4SO)-216, DTC P1578 METER FAILURE, Diagnostic Trouble Code (DTC) Detecting Criteria.>
P2096	Post Catalyst Fuel Trim System Too Lean (Bank 1)	<Ref. to GD(H4SO)-217, DTC P2096 POST CATALYST FUEL TRIM SYSTEM TOO LEAN (BANK 1), Diagnostic Trouble Code (DTC) Detecting Criteria.>
P2097	Post Catalyst Fuel Trim System Too Rich (Bank 1)	<Ref. to GD(H4SO)-219, DTC P2097 POST CATALYST FUEL TRIM SYSTEM TOO RICH (BANK 1), Diagnostic Trouble Code (DTC) Detecting Criteria.>
P2101	Throttle Actuator Control Motor Circuit Range/Performance	<Ref. to GD(H4SO)-221, DTC P2101 THROTTLE ACTUATOR CONTROL MOTOR CIRCUIT RANGE/PERFORMANCE, Diagnostic Trouble Code (DTC) Detecting Criteria.>

DTC	Item	Index
P2102	Throttle Actuator Control Motor Circuit Low	<Ref. to GD(H4SO)-223, DTC P2102 THROTTLE ACTUATOR CONTROL MOTOR CIRCUIT LOW, Diagnostic Trouble Code (DTC) Detecting Criteria.>
P2103	Throttle Actuator Control Motor Circuit High	<Ref. to GD(H4SO)-224, DTC P2103 THROTTLE ACTUATOR CONTROL MOTOR CIRCUIT HIGH, Diagnostic Trouble Code (DTC) Detecting Criteria.>
P2109	Throttle/Pedal Position Sensor “A” Minimum Stop Performance	<Ref. to GD(H4SO)-225, DTC P2109 THROTTLE/PEDAL POSITION SENSOR “A” MINIMUM STOP PERFORMANCE, Diagnostic Trouble Code (DTC) Detecting Criteria.>
P2122	Throttle/Pedal Position Sensor/ Switch “D” Circuit Low Input	<Ref. to GD(H4SO)-226, DTC P2122 THROTTLE/PEDAL POSITION SENSOR/SWITCH “D” CIRCUIT LOW INPUT, Diagnostic Trouble Code (DTC) Detecting Criteria.>
P2123	Throttle/Pedal Position Sensor/ Switch “D” Circuit High Input	<Ref. to GD(H4SO)-228, DTC P2123 THROTTLE/PEDAL POSITION SENSOR/SWITCH “D” CIRCUIT HIGH INPUT, Diagnostic Trouble Code (DTC) Detecting Criteria.>
P2127	Throttle/Pedal Position Sensor/ Switch “E” Circuit Low Input	<Ref. to GD(H4SO)-230, DTC P2127 THROTTLE/PEDAL POSITION SENSOR/SWITCH “E” CIRCUIT LOW INPUT, Diagnostic Trouble Code (DTC) Detecting Criteria.>
P2128	Throttle/Pedal Position Sensor/ Switch “E” Circuit High Input	<Ref. to GD(H4SO)-232, DTC P2128 THROTTLE/PEDAL POSITION SENSOR/SWITCH “E” CIRCUIT HIGH INPUT, Diagnostic Trouble Code (DTC) Detecting Criteria.>
P2135	Throttle/Pedal Position Sensor/ Switch “A”/“B” Voltage Correlation	<Ref. to GD(H4SO)-234, DTC P2135 THROTTLE/PEDAL POSITION SENSOR/SWITCH “A”/“B” VOLTAGE CORRELATION, Diagnostic Trouble Code (DTC) Detecting Criteria.>
P2138	Throttle/Pedal Position Sensor/ Switch “D”/“E” Voltage Correlation	<Ref. to GD(H4SO)-236, DTC P2138 THROTTLE/PEDAL POSITION SENSOR/SWITCH “D”/“E” VOLTAGE CORRELATION, Diagnostic Trouble Code (DTC) Detecting Criteria.>
P2227	Barometric Pressure Circuit Range/Performance	<Ref. to GD(H4SO)-238, DTC P2227 BAROMETRIC PRESSURE CIRCUIT RANGE/PERFORMANCE, Diagnostic Trouble Code (DTC) Detecting Criteria.>
P2228	Barometric Pressure Circuit Low	<Ref. to GD(H4SO)-239, DTC P2228 BAROMETRIC PRESSURE CIRCUIT LOW, Diagnostic Trouble Code (DTC) Detecting Criteria.>
P2229	Barometric Pressure Circuit High	<Ref. to GD(H4SO)-240, DTC P2229 BAROMETRIC PRESSURE CIRCUIT HIGH, Diagnostic Trouble Code (DTC) Detecting Criteria.>
P2610	ECM/PCM Internal Engine Off Timer Performance	<Ref. to GD(H4SO)-241, DTC P2610 ECM/PCM INTERNAL ENGINE OFF TIMER PERFORMANCE, Diagnostic Trouble Code (DTC) Detecting Criteria.>
U0073	CAN Failure, Bus ‘Off’ Detection	<Ref. to GD(H4SO)-250, DTC U0073 CAN FAILURE, BUS ‘OFF’ DETECTION, Diagnostic Trouble Code (DTC) Detecting Criteria.>
U0101	CAN (TCU) Data Not Loaded	<Ref. to GD(H4SO)-251, DTC U0101 CAN (TCU) DATA NOT LOADED, Diagnostic Trouble Code (DTC) Detecting Criteria.>
U0122	CAN (VDC) Data Not Loaded	<Ref. to GD(H4SO)-252, DTC U0122 CAN (VDC) DATA NOT LOADED, Diagnostic Trouble Code (DTC) Detecting Criteria.>
U0140	CAN (BCU) Data Not Loaded	<Ref. to GD(H4SO)-252, DTC U0140 CAN (BCU) DATA NOT LOADED, Diagnostic Trouble Code (DTC) Detecting Criteria.>
U0402	CAN (TCU) Data Abnormal	<Ref. to GD(H4SO)-253, DTC U0402 CAN (TCU) DATA ABNORMAL, Diagnostic Trouble Code (DTC) Detecting Criteria.>
U0416	CAN (VDC) Data Abnormal	<Ref. to GD(H4SO)-254, DTC U0416 CAN (VDC) DATA ABNORMAL, Diagnostic Trouble Code (DTC) Detecting Criteria.>
U0422	CAN (BCU) Data Abnormal	<Ref. to GD(H4SO)-254, DTC U0422 CAN (BCU) DATA ABNORMAL, Diagnostic Trouble Code (DTC) Detecting Criteria.>

2. Diagnostic Trouble Code (DTC) Detecting Criteria

A: DTC P0026 INTAKE VALVE CONTROL SOLENOID CIRCUIT RANGE/PERFORMANCE (BANK 1)

1. OUTLINE OF DIAGNOSIS

Judge as NG with either Low NG or High NG.
A variable valve lift diagnosis oil pressure switch is installed for diagnosis. It is possible to determine whether the intake valve is in high mode (increase the amount of lift) or in low mode (suppressing the amount of lift) when the variable valve lift diagnosis oil pressure switch is turned ON or OFF.

- **Normal**

Oil switching solenoid valve duty	Intake valve	Variable valve lift diagnosis oil pressure switch
Large	High mode	OFF
Minimum	Low mode	ON

- **Low NG**

When the variable valve lift diagnosis oil pressure switch remains ON even though the intake valve tried to enter high mode (oil switching solenoid valve duty is large), this is judged as a Low NG.

- **High NG**

When the variable valve lift diagnosis oil pressure switch remains OFF even though the intake valve tried to enter low mode (oil switching solenoid valve duty is small), this is judged as a High NG.

2. COMPONENT DESCRIPTION

The variable valve lift system optimizes the intake valve lift by switching between the low lift cam and the high lift cam according to the engine speed. The amount of intake valve lift is varied by controlling the oil switching solenoid valve duty according to signals from the ECM.

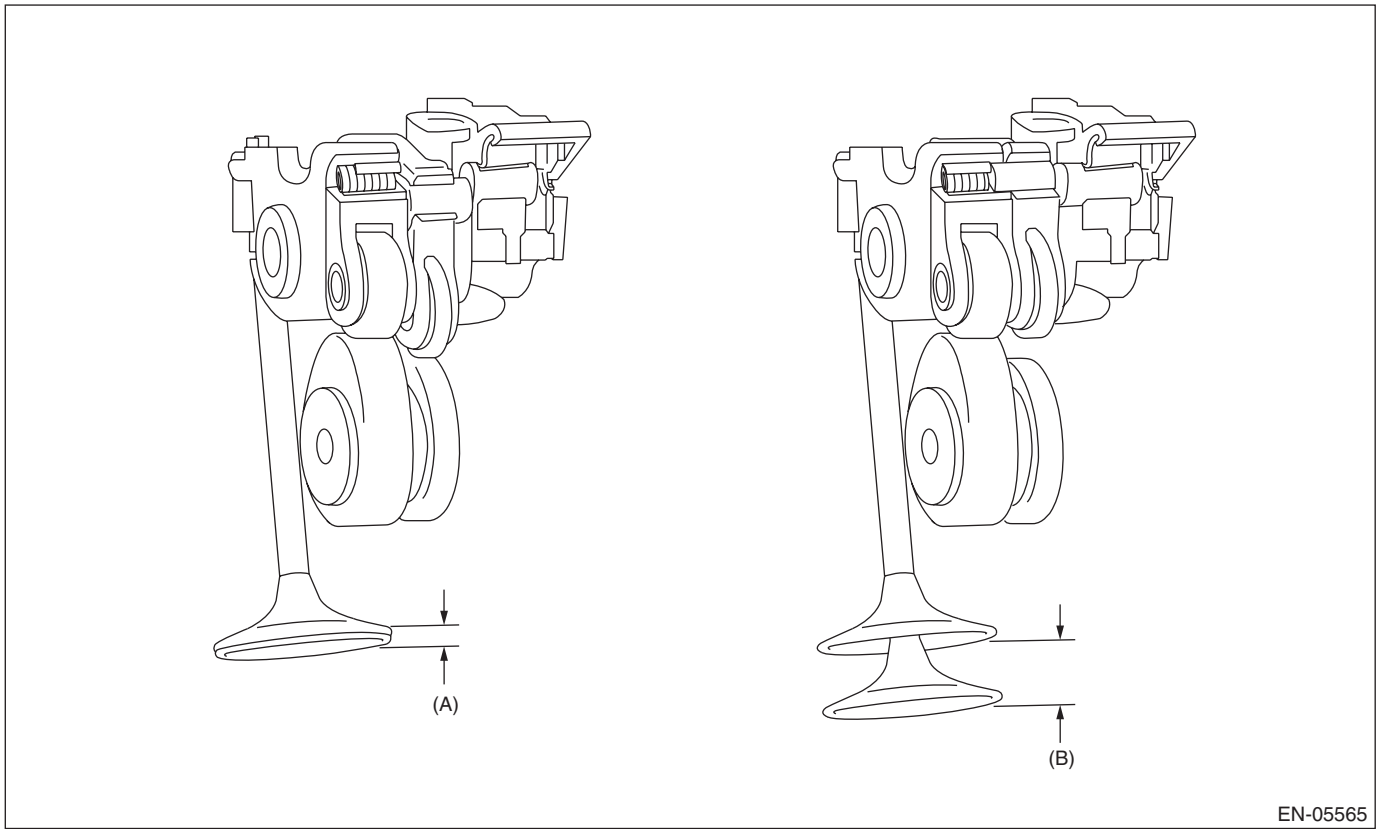

(A) Low lift (B) High lift

3. ENABLE CONDITION

Secondary Parameters	Enable Conditions
Battery voltage	≥ 10.9 V
After engine starting	≥ 6000 ms
Engine oil temperature	≥ 15 °C (59 °F)
Variable valve lift control	Operation

4. GENERAL DRIVING CYCLE

Perform the diagnosis continuously 6 seconds after engine start while variable valve lift is being controlled.

5. DIAGNOSTIC METHOD

• Abnormality Judgment

If the duration of time while the following conditions are met is longer than the time indicated, judge as NG.

Judgment Value

Malfunction Criteria	Threshold Value
Low	
Duty ratio	≥ 62 %
Variable valve lift diagnosis oil pressure switch	ON
High	
Duty ratio	< 33 %
Variable valve lift diagnosis oil pressure switch	OFF

Time Needed for Diagnosis:
Low side: 784 ms
High side: 3000 ms
Malfunction Indicator Light Illumination: Illuminates as soon as a malfunction occurs.

• Normality Judgment

Judge as OK and clear the NG if the continuous time while the following conditions are established is more than the predetermined time.

Judgment Value

Malfunction Criteria	Threshold Value
Low	
Duty ratio	≥ 62 %
Variable valve lift diagnosis oil pressure switch	OFF
High	
Duty ratio	< 33 %
Variable valve lift diagnosis oil pressure switch	ON

Time Needed for Diagnosis:
Low side: 208 ms
High side: 3000 ms

B: DTC P0028 INTAKE VALVE CONTROL SOLENOID CIRCUIT RANGE/PERFORMANCE (BANK 2)

1. OUTLINE OF DIAGNOSIS

NOTE:
For the detection standard, refer to DTC P0026. <Ref. to GD(H4SO)-9, DTC P0026 INTAKE VALVE CONTROL SOLENOID CIRCUIT RANGE/PERFORMANCE (BANK 1), Diagnostic Trouble Code (DTC) Detecting Criteria.>

C: DTC P0030 HO2S HEATER CONTROL CIRCUIT (BANK 1 SENSOR 1)

1. OUTLINE OF DIAGNOSIS

Detect functional errors of the front oxygen (A/F) sensor heater.
Judge as NG when it is determined that the front oxygen (A/F) sensor impedance is large when looking at engine status such as deceleration fuel cut.

2. COMPONENT DESCRIPTION

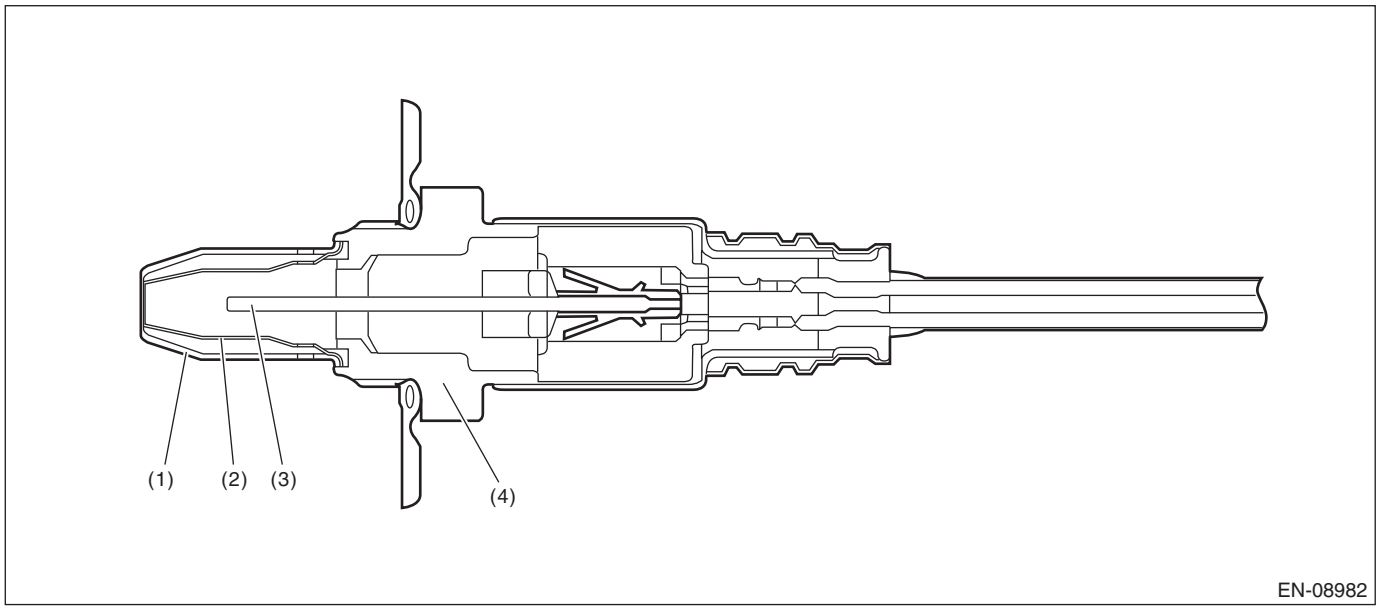

(1) Element cover (outer)
(2) Element cover (inner)
(3) Sensor element
(4) Sensor housing

3. ENABLE CONDITION

Secondary Parameters	Enable Conditions
Condition established time	≥ 42000 ms
Battery voltage	≥ 10.9 V
Heater current	Permitted
A/F sensor heater final control	Main energization status
After fuel cut	≥ 20000 ms

4. GENERAL DRIVING CYCLE

Perform the diagnosis continuously after 42000 ms or more have passed since the engine started.

5. DIAGNOSTIC METHOD

• Abnormality Judgment

If the duration of time while the following conditions are met is longer than the time indicated, judge as NG.

Judgment Value

Malfunction Criteria	Threshold Value
Front oxygen (A/F) sensor impedance	> 50 Ω

Time Needed for Diagnosis: 10000 ms
Malfunction Indicator Light Illumination: Illuminates when malfunction occurs in 2 continuous driving cycles.

• Normality Judgment

Judge as OK and clear the NG if the continuous time while the following conditions are established is more than the predetermined time.

Judgment Value

Malfunction Criteria	Threshold Value
Front oxygen (A/F) sensor impedance	≤ 50 Ω

Time Needed for Diagnosis: 10000 ms

D: DTC P0031 HO2S HEATER CONTROL CIRCUIT LOW (BANK 1 SENSOR 1)

1. OUTLINE OF DIAGNOSIS

Detect front oxygen (A/F) sensor heater open or short circuit.
The front oxygen (A/F) sensor heater performs duty control, and the output terminal voltage at ON is 0 V, and the output terminal voltage at OFF is the battery voltage.
Judge as NG when the terminal voltage remains Low.

2. COMPONENT DESCRIPTION

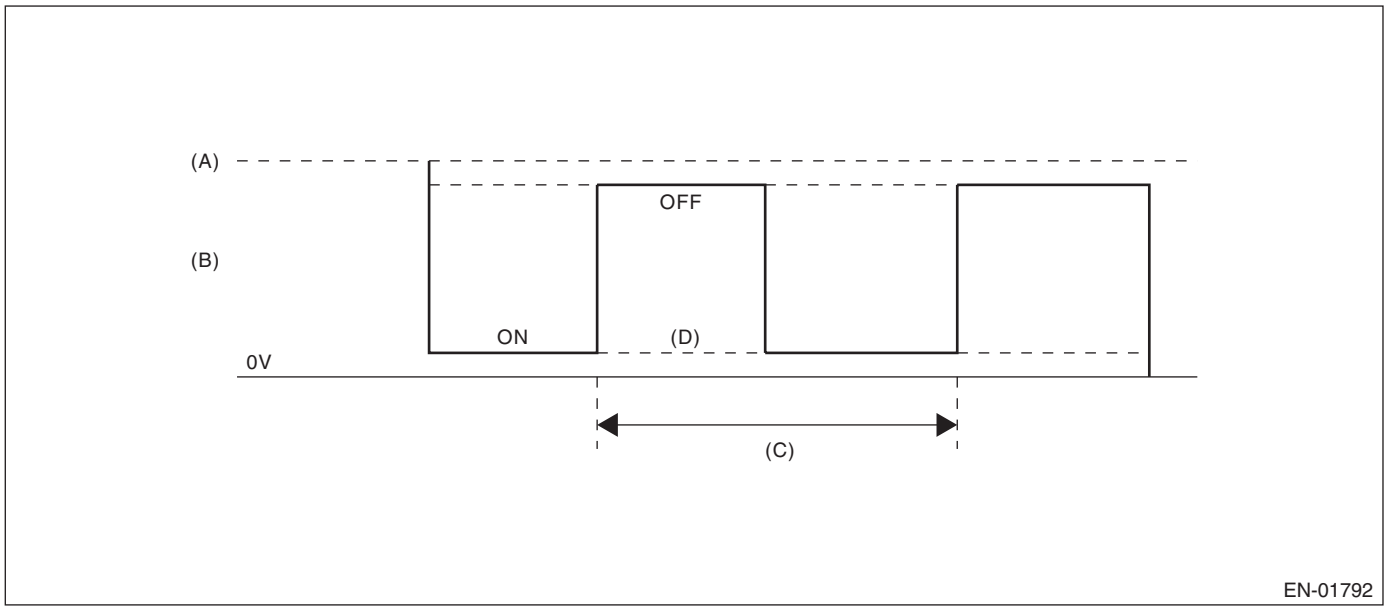

(A) Battery voltage
(B) Front oxygen (A/F) sensor heater output voltage
(C) 128 ms
(D) Low error

3. ENABLE CONDITION

Secondary Parameters	Enable Conditions
Battery voltage	≥ 10.9 V

4. GENERAL DRIVING CYCLE

Always perform the diagnosis continuously.

5. DIAGNOSTIC METHOD

- **Abnormality Judgment**

If the duration of time while the following conditions are met is longer than the time indicated, judge as NG.

Judgment Value

Malfunction Criteria	Threshold Value
Output voltage level Front oxygen (A/F) sensor heater control duty	Low < 87.5 %

Time Needed for Diagnosis: 4 ms × 250 time(s)
Malfunction Indicator Light Illumination: Illuminates as soon as a malfunction occurs.

- **Normality Judgment**

Judge as OK and clear the NG if the continuous time while the following conditions are established is more than the predetermined time.

Judgment Value

Malfunction Criteria	Threshold Value
Output voltage level	High

Time Needed for Diagnosis: Less than 1 second

E: DTC P0032 HO2S HEATER CONTROL CIRCUIT HIGH (BANK 1 SENSOR 1)

1. OUTLINE OF DIAGNOSIS

Detect front oxygen (A/F) sensor heater open or short circuit.
The front oxygen (A/F) sensor heater performs duty control, and the output terminal voltage at ON is 0 V, and the output terminal voltage at OFF is the battery voltage.
Judge as NG when the terminal voltage remains High.

2. COMPONENT DESCRIPTION

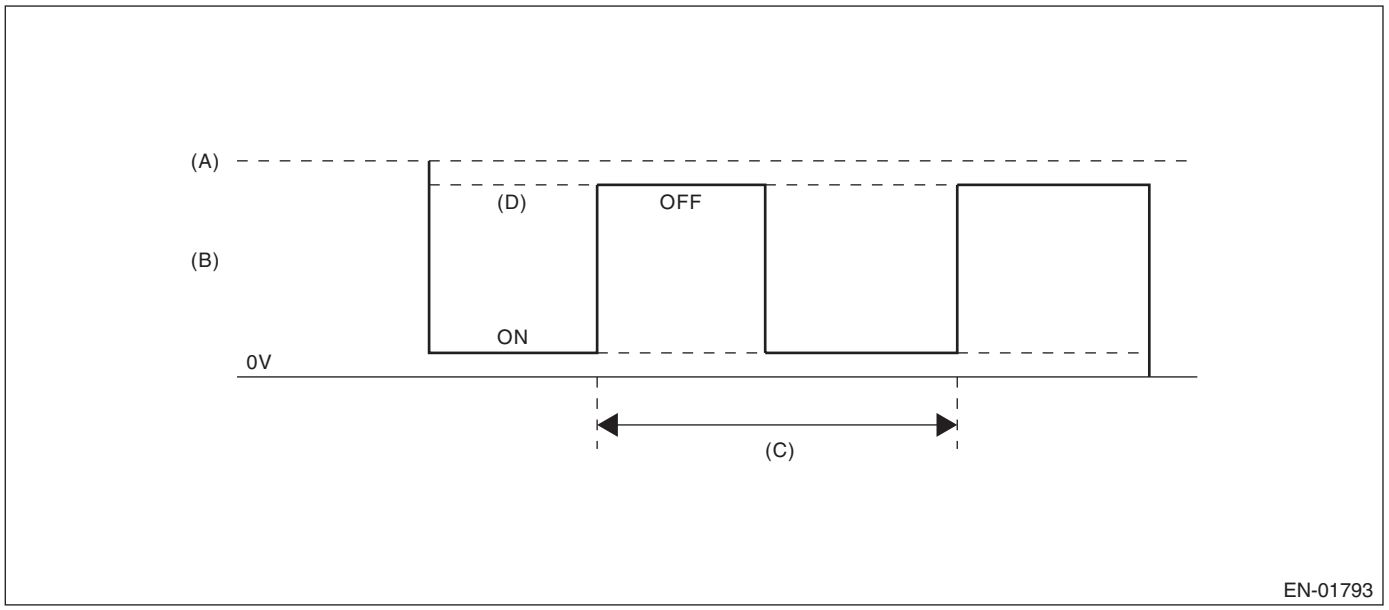

(A) Battery voltage
(B) Front oxygen (A/F) sensor heater output voltage
(C) 128 ms
(D) High error

3. ENABLE CONDITION

Secondary Parameters	Enable Conditions
Battery voltage	≥ 10.9 V

4. GENERAL DRIVING CYCLE

Always perform the diagnosis continuously.

5. DIAGNOSTIC METHOD

- **Abnormality Judgment**

If the duration of time while the following conditions are met is longer than the time indicated, judge as NG.

Judgment Value

Malfunction Criteria	Threshold Value
Output voltage level Front oxygen (A/F) sensor heater control duty	High ≥ 12.5 %

Time Needed for Diagnosis: 4 ms × 500 time(s)
Malfunction Indicator Light Illumination: Illuminates as soon as a malfunction occurs.

- **Normality Judgment**

Judge as OK and clear the NG if the continuous time while the following conditions are established is more than the predetermined time.

Judgment Value

Malfunction Criteria	Threshold Value
Output voltage level	Low

Time Needed for Diagnosis: Less than 1 second

F: DTC P0037 HO2S HEATER CONTROL CIRCUIT LOW (BANK 1 SENSOR 2)

1. OUTLINE OF DIAGNOSIS

Detect the rear oxygen sensor heater open or short circuit.
The rear oxygen sensor heater performs duty control, and the output terminal voltage at ON is 0 V, and the output terminal voltage at OFF is the battery voltage.
Judge as NG when the terminal voltage remains Low.

2. COMPONENT DESCRIPTION

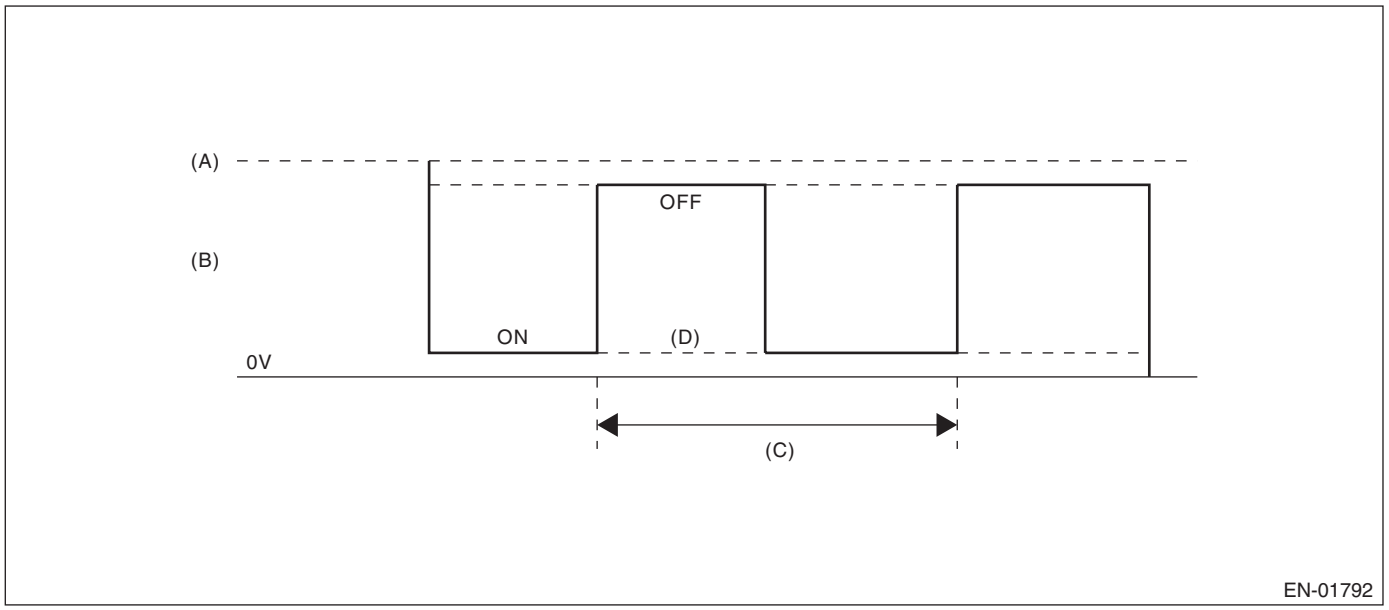

(A) Battery voltage
(B) Output voltage of the rear oxygen sensor heater
(C) 256 ms (cycle)
(D) Low error

3. ENABLE CONDITION

Secondary Parameters	Enable Conditions
Battery voltage	≥ 10.9 V
Elapsed time after starting the engine	≥ 1 second
Engine speed	< 8000 rpm

4. GENERAL DRIVING CYCLE

After starting the engine, perform the diagnosis continuously when engine is low speed.

5. DIAGNOSTIC METHOD

- **Abnormality Judgment**

If the duration of time while the following conditions are met is longer than the time indicated, judge as NG.

Judgment Value

Malfunction Criteria	Threshold Value
Output voltage level	Low
Rear oxygen sensor heater control duty	< 75 %

Time Needed for Diagnosis: 8 ms × 1250 time(s)
Malfunction Indicator Light Illumination: Illuminates when malfunction occurs in 2 continuous driving cycles.

- **Normality Judgment**

Judge as OK and clear the NG if the continuous time while the following conditions are established is more than the predetermined time.

Judgment Value

Malfunction Criteria	Threshold Value
Output voltage level	High

Time Needed for Diagnosis: Less than 1 second

G: DTC P0038 HO2S HEATER CONTROL CIRCUIT HIGH (BANK 1 SENSOR 2)

1. OUTLINE OF DIAGNOSIS

Detect the rear oxygen sensor heater open or short circuit.
The rear oxygen sensor heater performs duty control, and the output terminal voltage at ON is 0 V, and the output terminal voltage at OFF is the battery voltage.
Judge as NG when the terminal voltage remains High.

2. COMPONENT DESCRIPTION

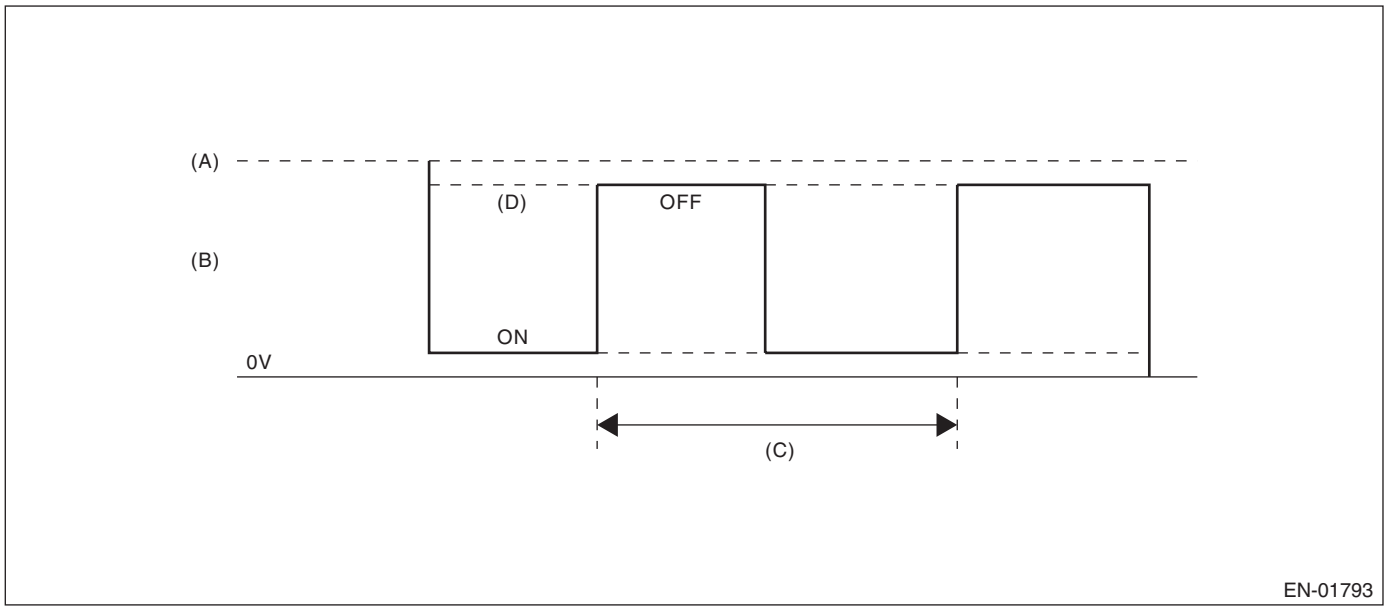

(A) Battery voltage
(B) Output voltage of the rear oxygen sensor heater
(C) 256 ms (cycle)
(D) High error

3. ENABLE CONDITION

Secondary Parameters	Enable Conditions
Battery voltage	≥ 10.9 V
Elapsed time after starting the engine	≥ 1 second
Engine speed	< 8000 rpm

4. GENERAL DRIVING CYCLE

After starting the engine, perform the diagnosis continuously when engine is low speed.

5. DIAGNOSTIC METHOD

- **Abnormality Judgment**

If the duration of time while the following conditions are met is longer than the time indicated, judge as NG.

Judgment Value

Malfunction Criteria	Threshold Value
Output voltage level	High
Rear oxygen sensor heater control duty	≥ 20 %

Time Needed for Diagnosis: 8 ms × 1250 time(s)
Malfunction Indicator Light Illumination: Illuminates when malfunction occurs in 2 continuous driving cycles.

- **Normality Judgment**

Judge as OK and clear the NG if the continuous time while the following conditions are established is more than the predetermined time.

Judgment Value

Malfunction Criteria	Threshold Value
Output voltage level	Low

Time Needed for Diagnosis: Less than 1 second

H: DTC P0068 MAP/MAF - THROTTLE POSITION CORRELATION

1. OUTLINE OF DIAGNOSIS

Detect problems in the intake manifold pressure sensor output properties.
Judge as NG when the intake air pressure AD value is Low whereas it seemed to be High from the viewpoint of engine condition, or when it is High whereas it seemed to be Low from the engine condition.

2. COMPONENT DESCRIPTION

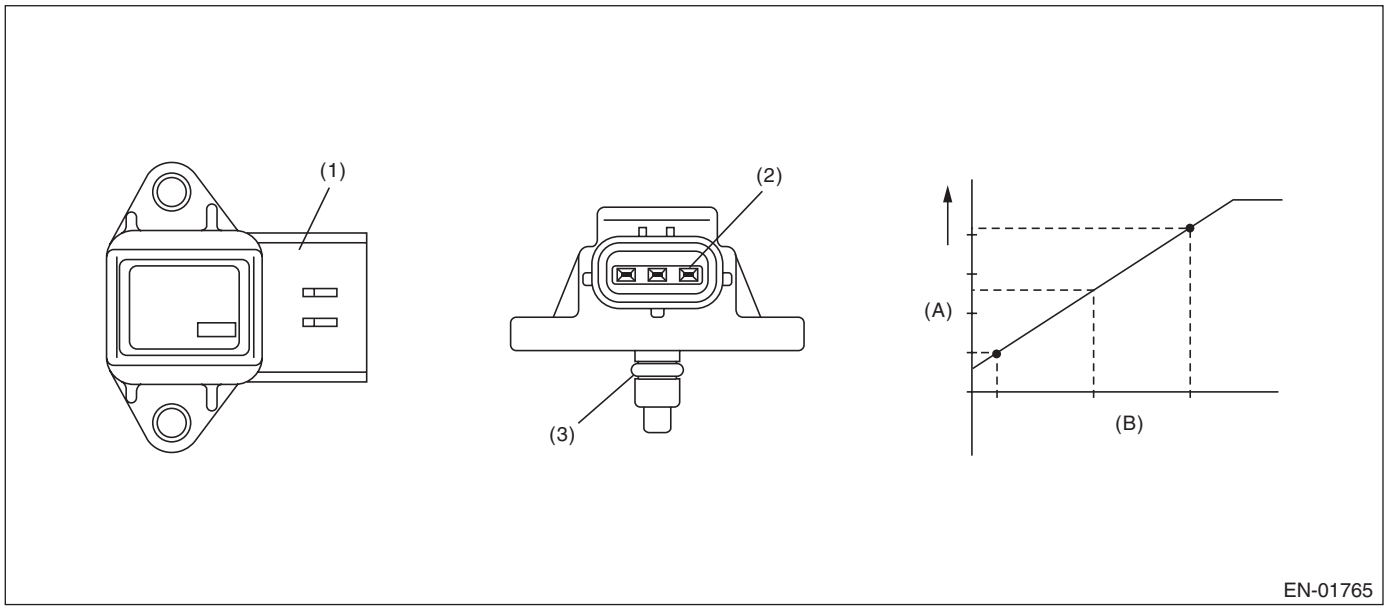

(A) Output voltage
(B) Absolute pressure
(1) Connector
(2) Terminals
(3) O-ring

3. ENABLE CONDITION

Secondary Parameters	Enable Conditions
Engine coolant temperature	≥ 60 °C (140 °F)

4. GENERAL DRIVING CYCLE

Perform the diagnosis continuously after idling.

5. DIAGNOSTIC METHOD

• Abnormality Judgment

Judge as NG when Low side or High side becomes NG.
If the duration of time while the following conditions are met is longer than the time indicated, judge as NG.

Judgment Value

Malfunction Criteria	Threshold Value
Low	
Engine speed	< 2500 rpm
Throttle position	≥ 12 °
Output voltage	< 1.46 V
Engine load	> 0.5 g/rev (0.02 oz/rev) (CVT model) > 0.45 g/rev (0.02 oz/rev) (MT model)
High	
Engine speed	550 rpm — 900 rpm
Throttle position	< 4.4 ° (CVT model) < 3.6 ° (MT model)
Output voltage	≥ 2.5 V
Engine load	< 0.4 g/rev (0.01 oz/rev)

Time Needed for Diagnosis:
Low side: 5000 ms
High side: 5000 ms
Malfunction Indicator Light Illumination: Illuminates when malfunction occurs in 2 continuous driving cycles.

• Normality Judgment

Judge as OK and clear the NG when both Low side and High side become OK.
If the duration of time while the following conditions are met is longer than the time indicated, judge as OK.

Judgment Value

Malfunction Criteria	Threshold Value
Low	
Engine speed	< 2500 rpm
Throttle position	≥ 12 °
Output voltage	≥ 1.46 V
Engine load	> 0.5 g/rev (0.02 oz/rev) (CVT model) > 0.45 g/rev (0.02 oz/rev) (MT model)
High	
Engine speed	550 rpm — 900 rpm
Throttle position	< 4.4 ° (CVT model) < 3.6 ° (MT model)
Output voltage	< 2.5 V
Engine load	< 0.4 g/rev (0.01 oz/rev)

Time Needed for Diagnosis:
Low side: Less than 1 second
High side: Less than 1 second

I: DTC P0076 INTAKE VALVE CONTROL SOLENOID CIRCUIT LOW (BANK 1)

1. OUTLINE OF DIAGNOSIS

Detect the open circuit of the oil switching solenoid valve.
Judge as NG when the current is small even though the output duty is large.

2. ENABLE CONDITION

Secondary Parameters	Enable Conditions
Battery voltage	≥ 10.9 V

3. GENERAL DRIVING CYCLE

Always perform the diagnosis continuously.

4. DIAGNOSTIC METHOD

- **Abnormality Judgment**

If the duration of time while the following conditions are met is longer than the time indicated, judge as NG.

Judgment Value

Malfunction Criteria	Threshold Value
Duty ratio	≥ 30 %
Control current	< 0.026 A

Time Needed for Diagnosis: 2000 ms
Malfunction Indicator Light Illumination: Illuminates as soon as a malfunction occurs.

- **Normality Judgment**

Judge as OK and clear the NG if the continuous time while the following conditions are established is more than the predetermined time.

Judgment Value

Malfunction Criteria	Threshold Value
|Oil switching solenoid valve target current value – Oil switching solenoid valve current value|	< 0.08 A
Target current	≥ 0.11 A

Time Needed for Diagnosis: 2000 ms

J: DTC P0077 INTAKE VALVE CONTROL SOLENOID CIRCUIT HIGH (BANK 1)

1. OUTLINE OF DIAGNOSIS

Detect short circuits of the oil switching solenoid valve.
Judge as a short NG when the current is large even though the output duty is small.

2. ENABLE CONDITION

Secondary Parameters	Enable Conditions
Battery voltage	≥ 10.9 V

3. GENERAL DRIVING CYCLE

Always perform the diagnosis continuously.

4. DIAGNOSTIC METHOD

• Abnormality Judgment

If the duration of time while the following conditions are met is longer than the time indicated, judge as NG.

Judgment Value

Malfunction Criteria	Threshold Value
Duty ratio	< 7 %
Control current	≥ 0.465 A

Time Needed for Diagnosis: 2000 ms
Malfunction Indicator Light Illumination: Illuminates as soon as a malfunction occurs.

• Normality Judgment

Judge as OK and clear the NG if the continuous time while the following conditions are established is more than the predetermined time.

Judgment Value

Malfunction Criteria	Threshold Value
|Oil switching solenoid valve target current value – Oil switching solenoid valve current value|	< 0.08 A

Time Needed for Diagnosis: 2000 ms

K: DTC P0082 INTAKE VALVE CONTROL SOLENOID CIRCUIT LOW (BANK 2)

1. OUTLINE OF DIAGNOSIS

NOTE:
For the detection standard, refer to DTC P0076. <Ref. to GD(H4SO)-23, DTC P0076 INTAKE VALVE CONTROL SOLENOID CIRCUIT LOW (BANK 1), Diagnostic Trouble Code (DTC) Detecting Criteria.>

L: DTC P0083 INTAKE VALVE CONTROL SOLENOID CIRCUIT HIGH (BANK 2)

1. OUTLINE OF DIAGNOSIS

NOTE:
For the detection standard, refer to DTC P0077. <Ref. to GD(H4SO)-24, DTC P0077 INTAKE VALVE CONTROL SOLENOID CIRCUIT HIGH (BANK 1), Diagnostic Trouble Code (DTC) Detecting Criteria.>

M: DTC P0101 MASS OR VOLUME AIR FLOW CIRCUIT RANGE/PERFORMANCE

1. OUTLINE OF DIAGNOSIS

Detect the malfunction of air flow sensor output properties.
Judge as a low side NG when the air flow voltage indicates a small value regardless of running in a state where the air flow voltage increases. Judge as a high side NG when the air flow voltage indicates a large value regardless of running in a state where the air flow voltage decreases. Judge air flow sensor property NG when the Low side or High side becomes NG.

2. COMPONENT DESCRIPTION

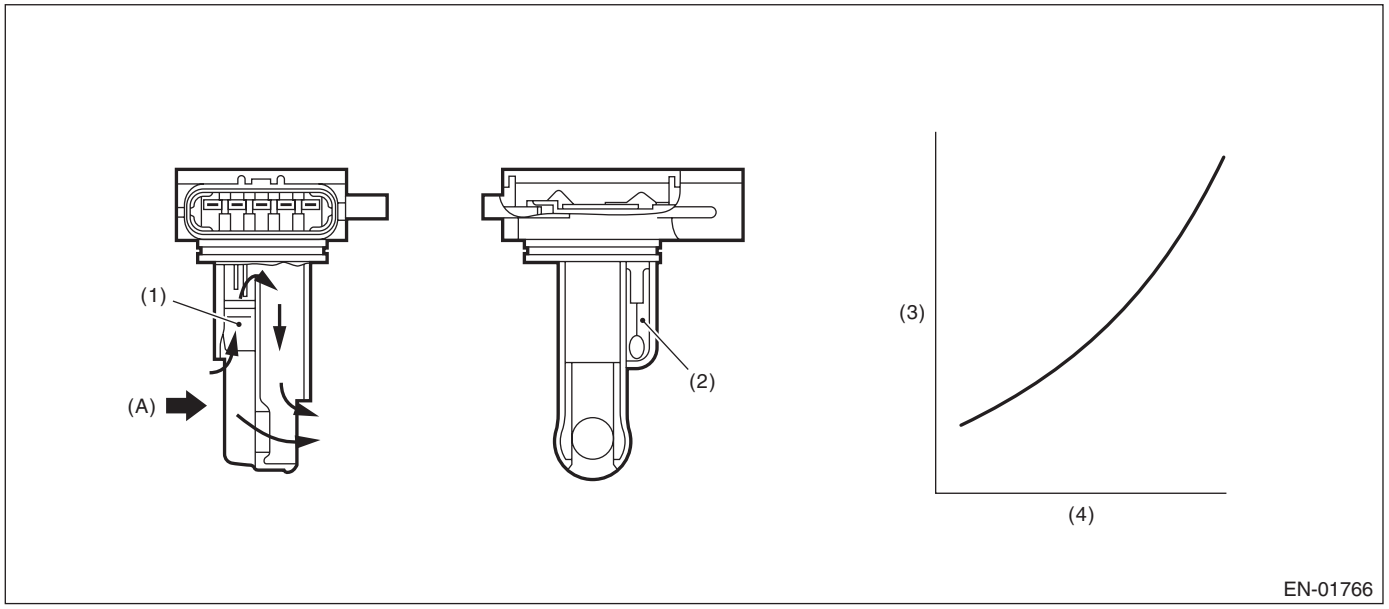

(A) Air

(1) Air flow sensor
(2) Intake air temperature sensor
(3) Voltage (V)
(4) Amount of intake air (kg (lb)/s)

3. ENABLE CONDITION

Secondary Parameters	Enable Conditions
Engine coolant temperature	≥ 60 °C (140 °F)

4. GENERAL DRIVING CYCLE

Perform the diagnosis continuously after idling.

5. DIAGNOSTIC METHOD

• Abnormality Judgment

Judge as NG when Low side or High side becomes NG.
If the duration of time while the following conditions are met is longer than the time indicated, judge as NG.

Judgment Value

Malfunction Criteria	Threshold Value
Low	
Output voltage	< 1.49 V (CVT model) < 1.47 V (MT model)
Engine speed	≥ 2500 rpm (CVT model) ≥ 2000 rpm (MT model)
Throttle opening angle	≥ 12 °
Intake manifold pressure	≥ 66.7 kPa (500 mmHg, 19.7 inHg)
High (1)	
Output voltage	≥ 2.66 V
Engine speed	550 rpm — 900 rpm
Throttle opening angle	< 4.4 ° (CVT model) < 3.6 ° (MT model)
Intake manifold pressure	≥ 40 kPa (300 mmHg, 11.8 inHg)
High (2)	
Output voltage	≥ 1.55 V (CVT model) ≥ 1.45 V (MT model)
Engine speed	550 rpm — 900 rpm
Throttle opening angle	< 4.4 ° (CVT model) < 3.6 ° (MT model)
Intake manifold pressure	≥ 40 kPa (300 mmHg, 11.8 inHg)
Fuel system diagnosis	Rich side malfunction

Time Needed for Diagnosis:
Low: 5000 ms
High: 5000 ms
Malfunction Indicator Light Illumination: Illuminates when malfunction occurs in 2 continuous driving cycles.

• **Normality Judgment**

Judge as OK and clear the NG when both Low side and High side become OK.
Judge as OK and clear the NG if the continuous time while the following conditions are established is more than the predetermined time.

Judgment Value

Malfunction Criteria	Threshold Value
Low	
Output voltage	≥ 1.49 V (CVT model) ≥ 1.47 V (MT model)
Engine speed	≥ 2500 rpm (CVT model) ≥ 2000 rpm (MT model)
Throttle opening angle	≥ 12 °
Intake manifold pressure	≥ 66.7 kPa (500 mmHg, 19.7 inHg)
High	
Output voltage	< 2.66 V
Engine speed	550 rpm — 900 rpm
Throttle opening angle	< 4.4 ° (CVT model) < 3.6 ° (MT model)
Intake manifold pressure	< 40 kPa (300 mmHg, 11.8 inHg)
Fuel system diagnosis	Rich side normal

Time Needed for Diagnosis:
Low: Less than 1 second
High: Less than 1 second

N: DTC P0102 MASS OR VOLUME AIR FLOW CIRCUIT LOW INPUT

1. OUTLINE OF DIAGNOSIS

Detect open or short circuits of the air flow sensor.
Judge as NG if out of specification.

2. COMPONENT DESCRIPTION

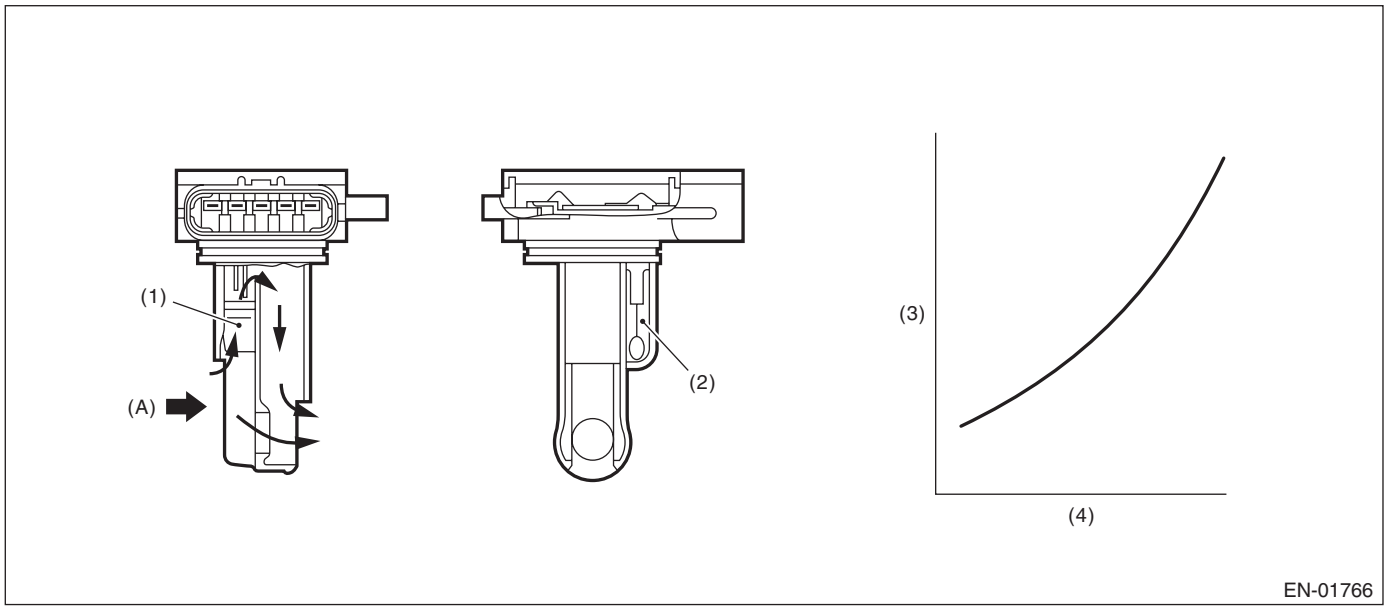

(A) Air

(1) Air flow sensor
(2) Intake air temperature sensor
(3) Voltage (V)
(4) Amount of intake air (kg (lb)/s)

3. ENABLE CONDITION

Secondary Parameters	Enable Conditions
None	

4. GENERAL DRIVING CYCLE

Always perform the diagnosis continuously.

5. DIAGNOSTIC METHOD

- **Abnormality Judgment**

If the duration of time while the following conditions are met is longer than the time indicated, judge as NG.

Judgment Value

Malfunction Criteria	Threshold Value
Output voltage	≤ 0.22 V

Time Needed for Diagnosis: 500 ms
Malfunction Indicator Light Illumination: Illuminates as soon as a malfunction occurs.

- **Normality Judgment**

Judge as OK and clear the NG if the continuous time while the following conditions are established is more than the predetermined time.

Judgment Value

Malfunction Criteria	Threshold Value
Output voltage	> 0.22 V

Time Needed for Diagnosis: Less than 1 second

O: DTC P0103 MASS OR VOLUME AIR FLOW CIRCUIT HIGH INPUT

1. OUTLINE OF DIAGNOSIS

Detect open or short circuits of the air flow sensor.
Judge as NG if out of specification.

2. COMPONENT DESCRIPTION

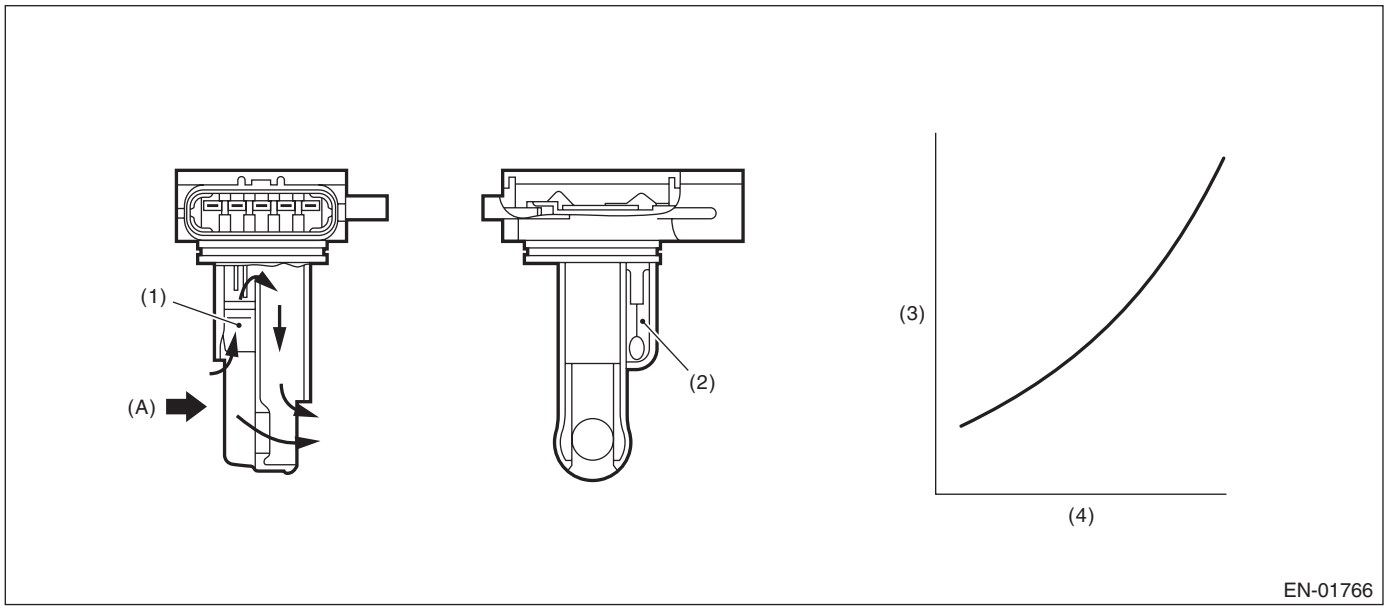

(A) Air

(1) Air flow sensor
(2) Intake air temperature sensor
(3) Voltage (V)
(4) Amount of intake air (kg (lb)/s)

3. ENABLE CONDITION

Secondary Parameters	Enable Conditions
None	

4. GENERAL DRIVING CYCLE

Always perform the diagnosis continuously.

5. DIAGNOSTIC METHOD

- **Abnormality Judgment**

If the duration of time while the following conditions are met is longer than the time indicated, judge as NG.

Judgment Value

Malfunction Criteria	Threshold Value
Output voltage	≥ 4.071 V

Time Needed for Diagnosis: 500 ms
Malfunction Indicator Light Illumination: Illuminates as soon as a malfunction occurs.

- **Normality Judgment**

Judge as OK and clear the NG if the continuous time while the following conditions are established is more than the predetermined time.

Judgment Value

Malfunction Criteria	Threshold Value
Output voltage	< 4.071 V

Time Needed for Diagnosis: Less than 1 second

P: DTC P0107 MANIFOLD ABSOLUTE PRESSURE/BAROMETRIC PRESSURE CIRCUIT LOW INPUT

1. OUTLINE OF DIAGNOSIS

Detect the open or short circuit of intake manifold pressure sensor.
Judge as NG if out of specification.

2. COMPONENT DESCRIPTION

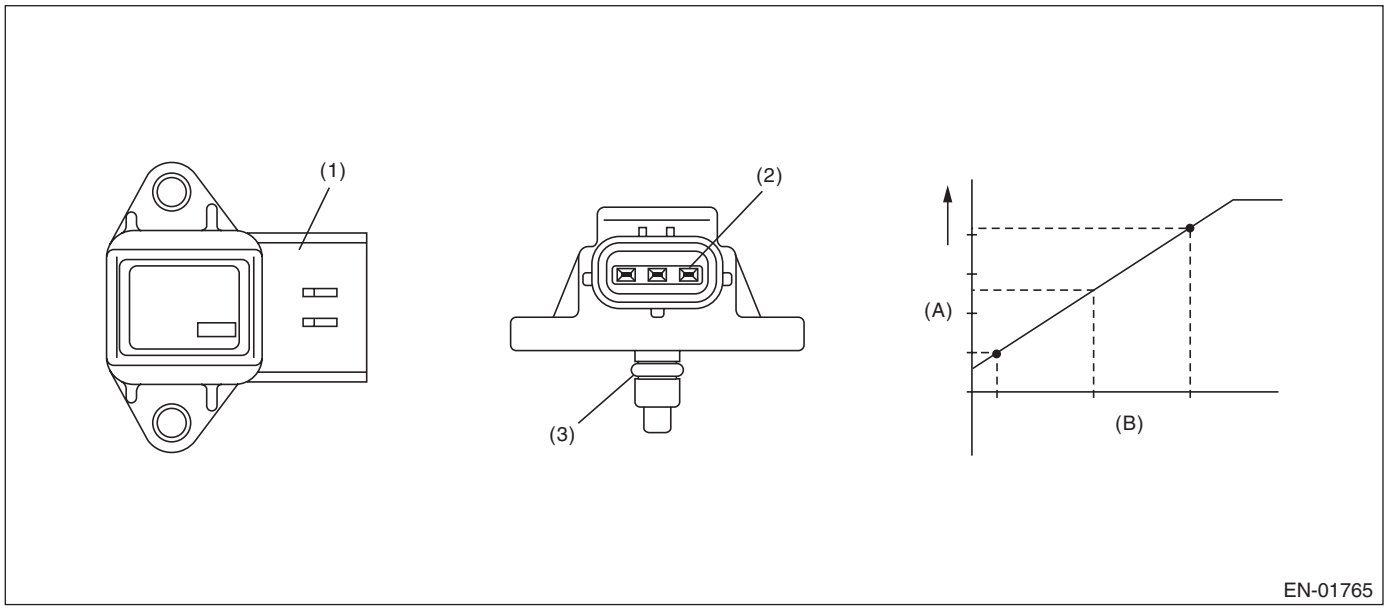

(A) Output voltage
(B) Absolute pressure
(1) Connector
(2) Terminals
(3) O-ring

3. ENABLE CONDITION

Secondary Parameters	Enable Conditions
None	

4. GENERAL DRIVING CYCLE

Always perform the diagnosis continuously.

5. DIAGNOSTIC METHOD

• Abnormality Judgment

If the duration of time while the following conditions are met is longer than the time indicated, judge as NG.

Judgment Value

Malfunction Criteria	Threshold Value
Output voltage	≤ 0.606 V

Time Needed for Diagnosis: 500 ms
Malfunction Indicator Light Illumination: Illuminates as soon as a malfunction occurs.

• Normality Judgment

Judge as OK and clear the NG if the continuous time while the following conditions are established is more than the predetermined time.

Judgment Value

Malfunction Criteria	Threshold Value
Output voltage	> 0.606 V

Time Needed for Diagnosis: Less than 1 second

Q: DTC P0108 MANIFOLD ABSOLUTE PRESSURE/BAROMETRIC PRESSURE CIRCUIT HIGH INPUT

1. OUTLINE OF DIAGNOSIS

Detect the open or short circuit of intake manifold pressure sensor.
Judge as NG if out of specification.

2. COMPONENT DESCRIPTION

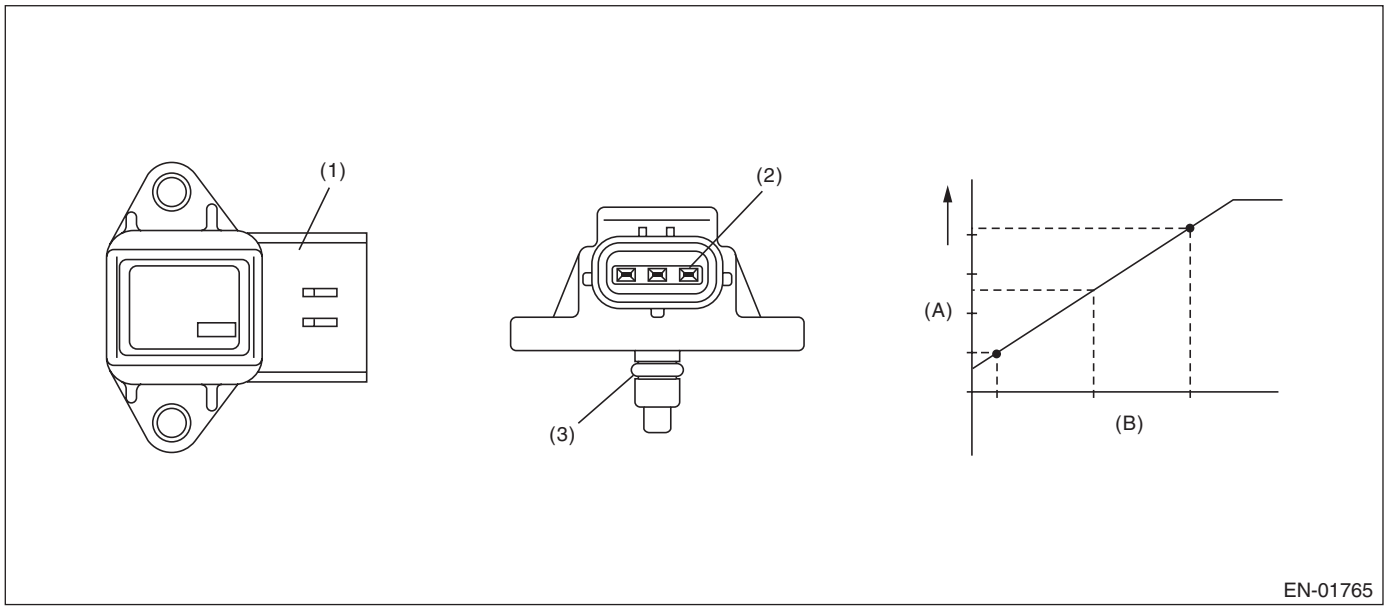

(A) Output voltage
(B) Absolute pressure
(1) Connector
(2) Terminals
(3) O-ring

3. ENABLE CONDITION

Secondary Parameters	Enable Conditions
None	

4. GENERAL DRIVING CYCLE

Always perform the diagnosis continuously.

5. DIAGNOSTIC METHOD

- **Abnormality Judgment**

If the duration of time while the following conditions are met is longer than the time indicated, judge as NG.

Judgment Value

Malfunction Criteria	Threshold Value
Output voltage	≥ 3.906 V

Time Needed for Diagnosis: 500 ms
Malfunction Indicator Light Illumination: Illuminates as soon as a malfunction occurs.

- **Normality Judgment**

Judge as OK and clear the NG if the continuous time while the following conditions are established is more than the predetermined time.

Judgment Value

Malfunction Criteria	Threshold Value
Output voltage	< 3.906 V

Time Needed for Diagnosis: Less than 1 second

R: DTC P0111 INTAKE AIR TEMPERATURE SENSOR 1 CIRCUIT RANGE/PERFORMANCE

1. OUTLINE OF DIAGNOSIS

Detect the malfunction of intake air temperature sensor output property.
Judge as NG when the intake air temperature is not varied whereas it seemed to be varied from the viewpoint of engine condition.

2. COMPONENT DESCRIPTION

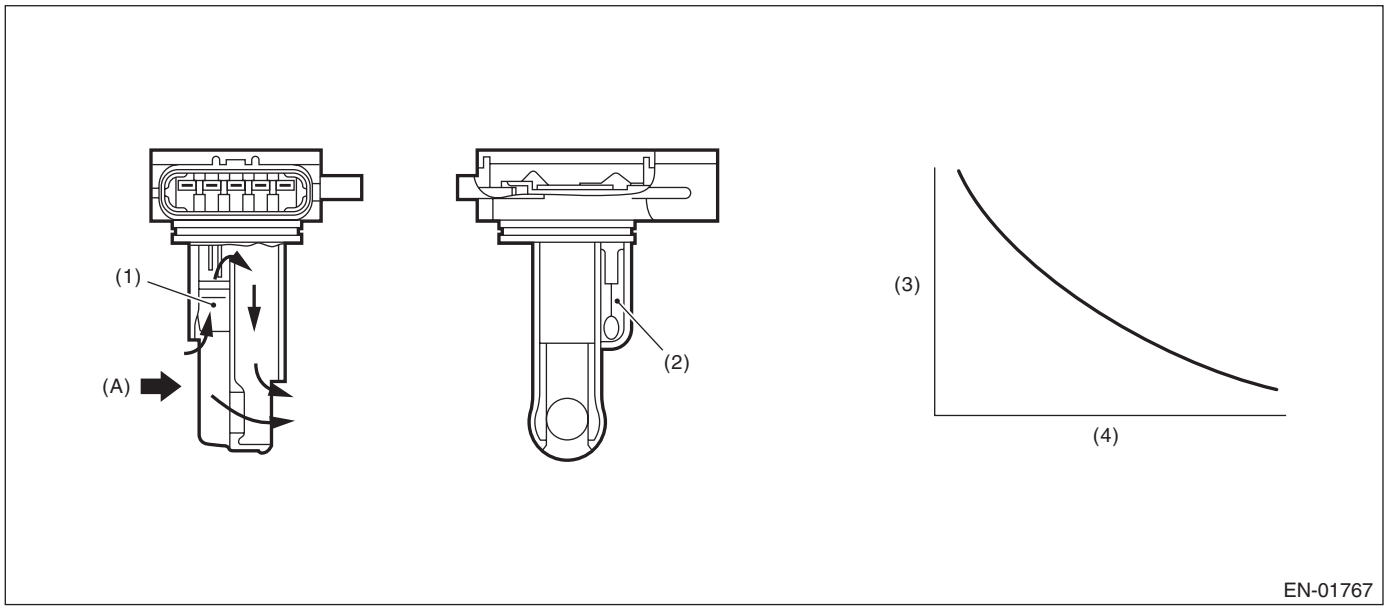

(A) Air

(1) Air flow sensor
(2) Intake air temperature sensor
(3) Resistance value (Ω)
(4) Intake air temperature °C (°F)

3. ENABLE CONDITION

Secondary Parameters	Enable Conditions
Engine coolant temperature at engine starting	< 35 °C (95 °F)
Battery voltage	≥ 10.9 V
Continuous time when the vehicle speed is less than 140 km/h (87 MPH)	≥ 600 s
Engine coolant temperature	≥ 75 °C (167 °F)
Intake air amount sum value	≥ Value of Map 1
Number of experiences under conditions below	≥ 3 time(s)
• Continuous time when vehicle speed is less than 4 km/h (2.5 MPH)	≥ Value from Map 2
• Continuous time when vehicle speed is 40 km/h (24.9 MPH) or more	≥ 15 s
and	
Establishing time of 1, 2	≥ 15 s
1. Intake air amount	≥ 10 g/s (0.35 oz/s)
2. Vehicle speed	≥ 4 km/h (2.5 MPH)

Map 1

Engine coolant temperature °C (°F)	–20 (–4)	–10 (14)	0 (32)	10 (50)	20 (68)
Intake air amount sum value (g (oz))	50000 (1763.5)	7400 (261)	6600 (232.78)	5800 (204.57)	4500 (158.72)

Map 2

Engine coolant temperature °C (°F)	–30 (–22)	0 (32)	10 (50)	20 (68)
Continuous time (s) when vehicle speed is less than 4 km/h (2.5 MPH)	250	40	32	24

4. GENERAL DRIVING CYCLE

Perform the diagnosis when the vehicle speed condition is met after warming up from a cold condition.

5. DIAGNOSTIC METHOD

• Abnormality Judgment

Judge as NG when the following conditions are established.

Judgment Value

Malfunction Criteria	Threshold Value
Output voltage difference between Max. and Min.	< 0.02 V(Equivalent to approximately 0.5°C (0.9°F) near 25°C)

Time Needed for Diagnosis: Less than 1 second
Malfunction Indicator Light Illumination: Illuminates when malfunction occurs in 2 continuous driving cycles.

• Normality Judgment

Judge as OK and clear the NG if the following conditions are established.

Judgment Value

Malfunction Criteria	Threshold Value
Output voltage difference between Max. and Min.	≥ 0.02 V

Time Needed for Diagnosis: Less than 1 second

S: DTC P0112 INTAKE AIR TEMPERATURE SENSOR 1 CIRCUIT LOW

1. OUTLINE OF DIAGNOSIS

Detect open or short circuit of the intake air temperature sensor.
Judge as NG if out of specification.

2. COMPONENT DESCRIPTION

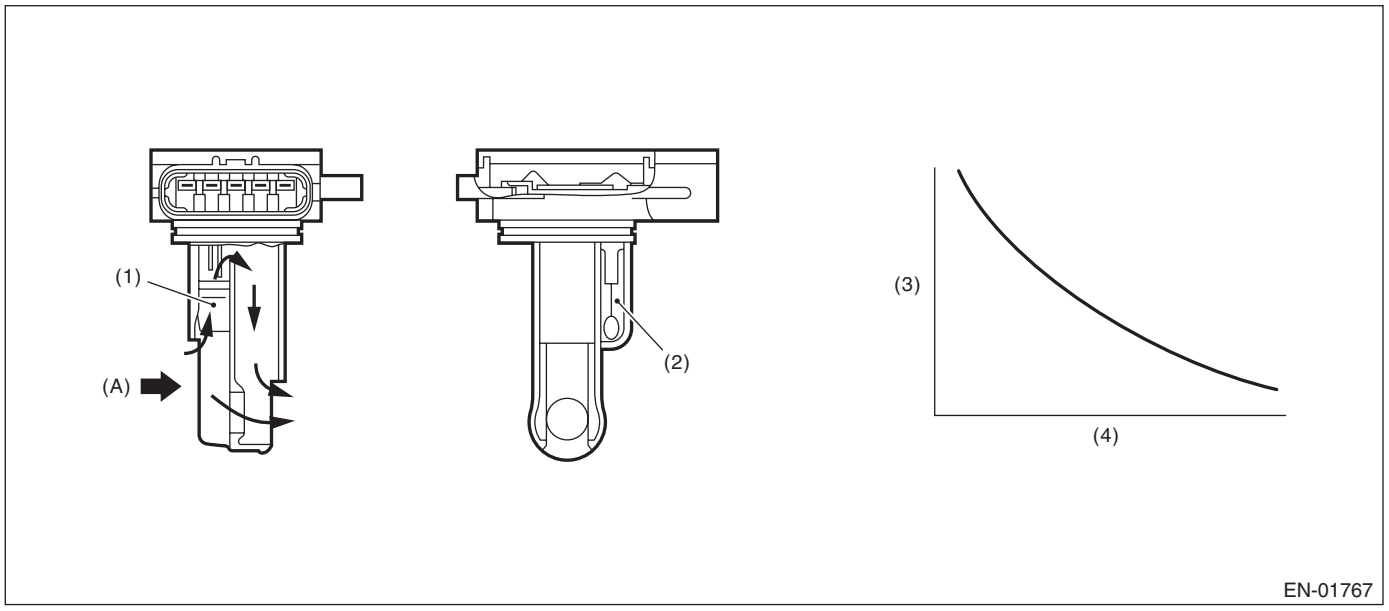

(A) Air

(1) Air flow sensor
(2) Intake air temperature sensor
(3) Resistance value (Ω)
(4) Intake air temperature °C (°F)

3. ENABLE CONDITION

Secondary Parameters	Enable Conditions
None	

4. GENERAL DRIVING CYCLE

Always perform the diagnosis continuously.

5. DIAGNOSTIC METHOD

- **Abnormality Judgment**

If the duration of time while the following conditions are met is longer than the time indicated, judge as NG.

Judgment Value

Malfunction Criteria	Threshold Value
Output voltage	< 0.395 V

Time Needed for Diagnosis: 500 ms
Malfunction Indicator Light Illumination: Illuminates as soon as a malfunction occurs.

- **Normality Judgment**

Judge as OK and clear the NG if the continuous time while the following conditions are established is more than the predetermined time.

Judgment Value

Malfunction Criteria	Threshold Value
Output voltage	≥ 0.395 V

Time Needed for Diagnosis: Less than 1 second

T: DTC P0113 INTAKE AIR TEMPERATURE SENSOR 1 CIRCUIT HIGH

1. OUTLINE OF DIAGNOSIS

Detect open or short circuit of the intake air temperature sensor.
Judge as NG if out of specification.

2. COMPONENT DESCRIPTION

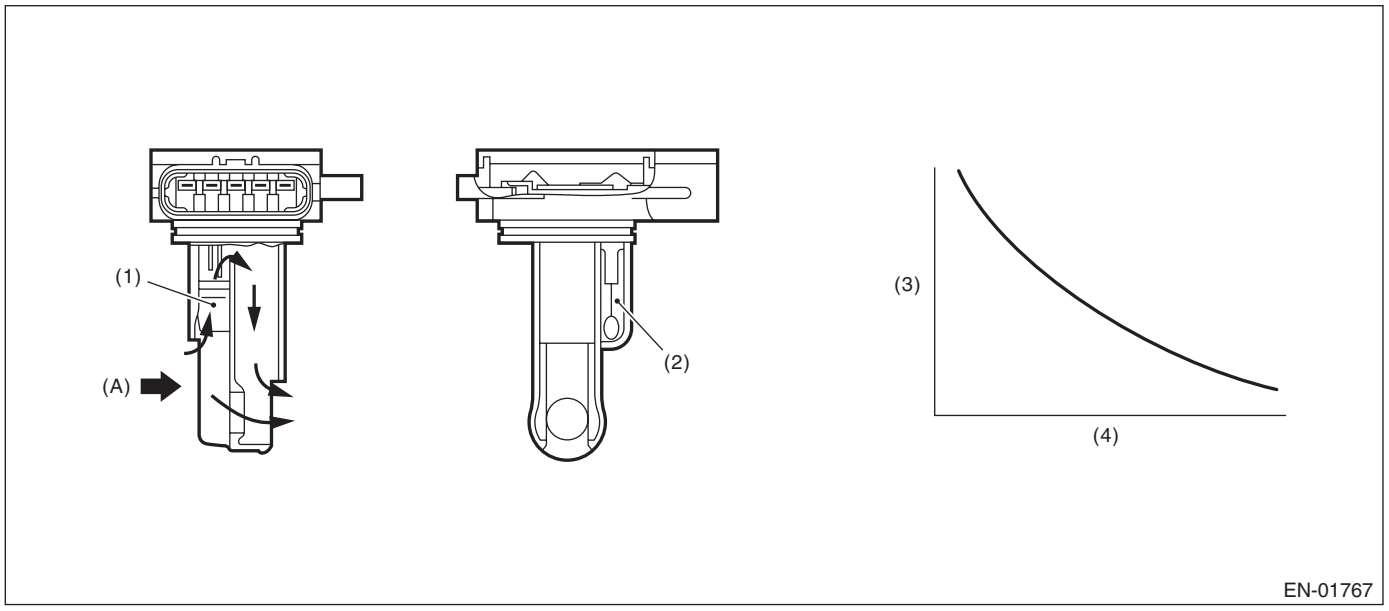

(A) Air

(1) Air flow sensor
(2) Intake air temperature sensor
(3) Resistance value (Ω)
(4) Intake air temperature °C (°F)

3. ENABLE CONDITION

Secondary Parameters	Enable Conditions
None	

4. GENERAL DRIVING CYCLE

Always perform the diagnosis continuously.

5. DIAGNOSTIC METHOD

- **Abnormality Judgment**

If the duration of time while the following conditions are met is longer than the time indicated, judge as NG.

Judgment Value

Malfunction Criteria	Threshold Value
Output voltage	≥ 4.712 V

Time Needed for Diagnosis: 500 ms
Malfunction Indicator Light Illumination: Illuminates as soon as a malfunction occurs.

- **Normality Judgment**

Judge as OK and clear the NG if the continuous time while the following conditions are established is more than the predetermined time.

Judgment Value

Malfunction Criteria	Threshold Value
Output voltage	< 4.712 V

Time Needed for Diagnosis: Less than 1 second

U: DTC P0117 ENGINE COOLANT TEMPERATURE CIRCUIT LOW

1. OUTLINE OF DIAGNOSIS

Detect the open or short circuit of the engine coolant temperature sensor.
Judge as NG if out of specification.

2. COMPONENT DESCRIPTION

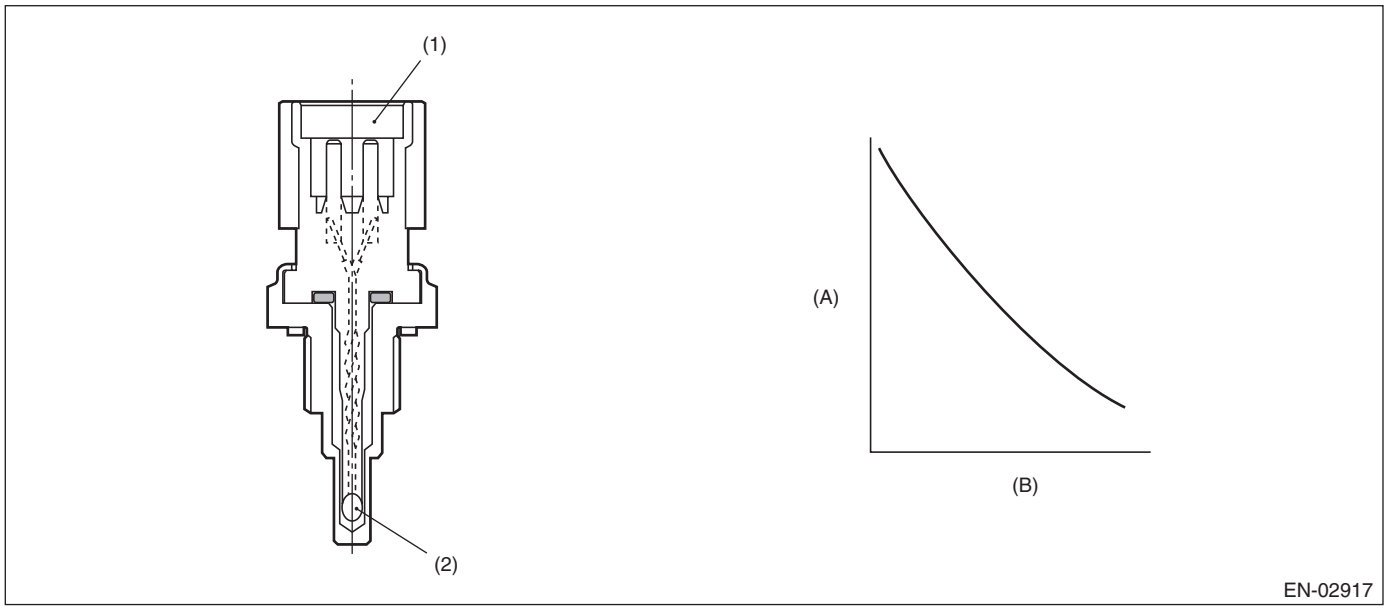

(A) Resistance value (kΩ)
(B) Temperature °C (°F)
(1) Connector
(2) Thermistor element

3. ENABLE CONDITION

Secondary Parameters	Enable Conditions
None	

4. GENERAL DRIVING CYCLE

Always perform the diagnosis continuously.

5. DIAGNOSTIC METHOD

- **Abnormality Judgment**

If the duration of time while the following conditions are met is longer than the time indicated, judge as NG.

Judgment Value

Malfunction Criteria	Threshold Value
Output voltage	< 0.464 V

Time Needed for Diagnosis: 500 ms
Malfunction Indicator Light Illumination: Illuminates as soon as a malfunction occurs.

- **Normality Judgment**

Judge as OK and clear the NG if the continuous time while the following conditions are established is more than the predetermined time.

Judgment Value

Malfunction Criteria	Threshold Value
Output voltage	≥ 0.464 V

Time Needed for Diagnosis: Less than 1 second

V: DTC P0118 ENGINE COOLANT TEMPERATURE CIRCUIT HIGH

1. OUTLINE OF DIAGNOSIS

Detect the open or short circuit of the engine coolant temperature sensor.
Judge as NG if out of specification.

2. COMPONENT DESCRIPTION

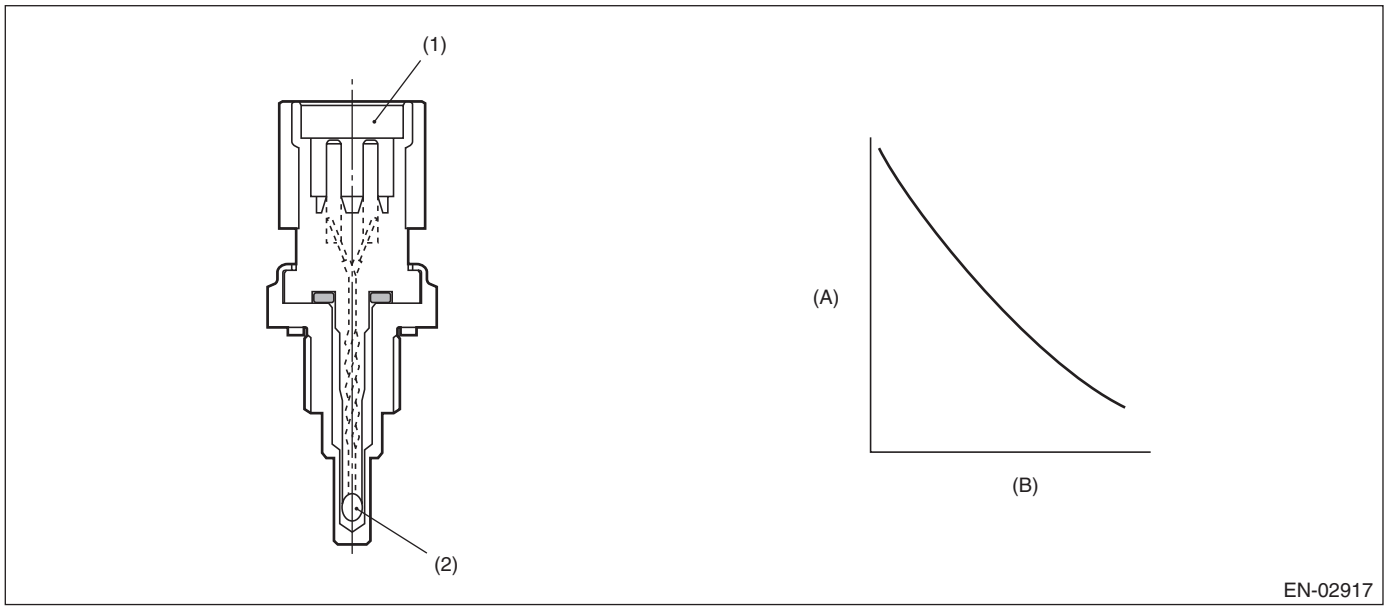

(A) Resistance value (kΩ)
(B) Temperature °C (°F)
(1) Connector
(2) Thermistor element

3. ENABLE CONDITION

Secondary Parameters	Enable Conditions
None	

4. GENERAL DRIVING CYCLE

Always perform the diagnosis continuously.

5. DIAGNOSTIC METHOD

- **Abnormality Judgment**

If the duration of time while the following conditions are met is longer than the time indicated, judge as NG.

Judgment Value

Malfunction Criteria	Threshold Value
Output voltage	≥ 4.702 V

Time Needed for Diagnosis: 500 ms
Malfunction Indicator Light Illumination: Illuminates as soon as a malfunction occurs.

- **Normality Judgment**

Judge as OK and clear the NG if the continuous time while the following conditions are established is more than the predetermined time.

Judgment Value

Malfunction Criteria	Threshold Value
Output voltage	< 4.702 V

Time Needed for Diagnosis: Less than 1 second

W: DTC P0122 THROTTLE/PEDAL POSITION SENSOR/SWITCH “A” CIRCUIT LOW

1. OUTLINE OF DIAGNOSIS

Detect the open or short circuit of throttle position sensor 1.
Judge as NG if out of specification.

2. COMPONENT DESCRIPTION

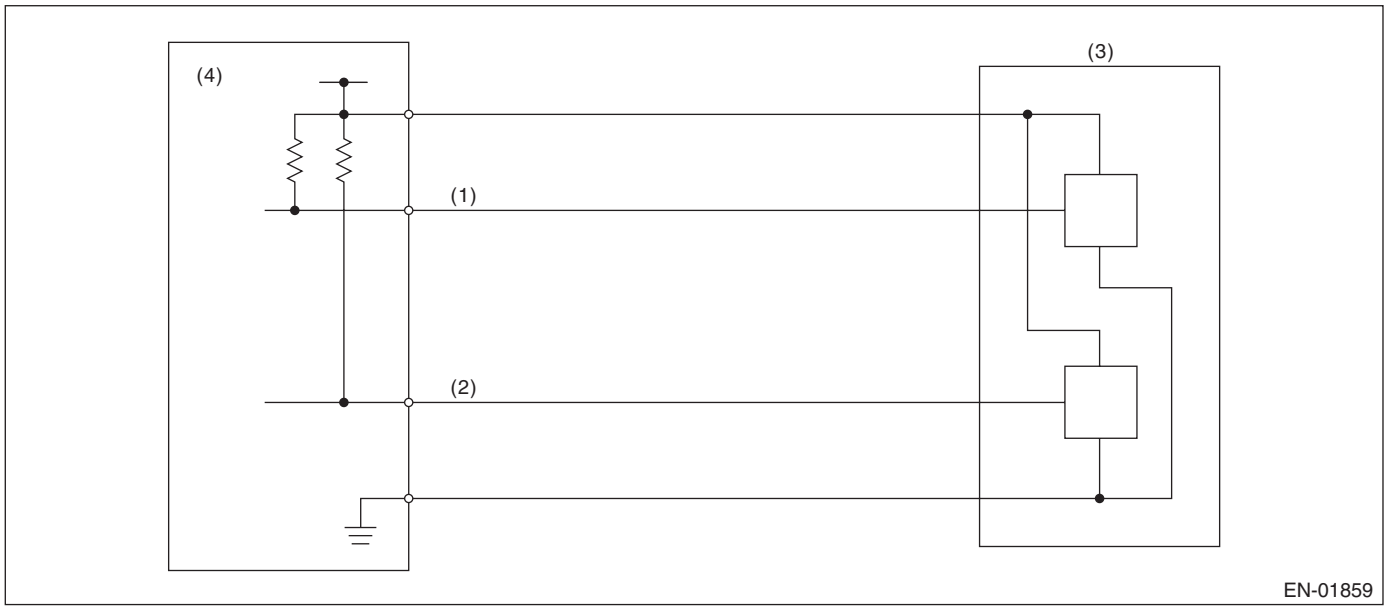

(1) Throttle position sensor 1 signal
(2) Throttle position sensor 2 signal
(3) Throttle position sensor
(4) Engine control module (ECM)

3. ENABLE CONDITION

Secondary Parameters	Enable Conditions
Ignition switch	ON
Battery voltage	≥ 6 V

4. GENERAL DRIVING CYCLE

Always perform the diagnosis continuously.

5. DIAGNOSTIC METHOD

- **Abnormality Judgment**

If the duration of time while the following conditions are met is longer than the time indicated, judge as NG.

Judgment Value

Malfunction Criteria	Threshold Value
Sensor 1 input voltage	≤ 0.23 V

Time Needed for Diagnosis: 24 ms
Malfunction Indicator Light Illumination: Illuminates as soon as a malfunction occurs.

- **Normality Judgment**

Judge as OK and clear the NG if the continuous time while the following conditions are established is more than the predetermined time.

Judgment Value

Malfunction Criteria	Threshold Value
Sensor 1 input voltage	> 0.23 V

Time Needed for Diagnosis: 24 ms

X: DTC P0123 THROTTLE/PEDAL POSITION SENSOR/SWITCH “A” CIRCUIT HIGH

1. OUTLINE OF DIAGNOSIS

Detect the open or short circuit of throttle position sensor 1.
Judge as NG if out of specification.

2. COMPONENT DESCRIPTION

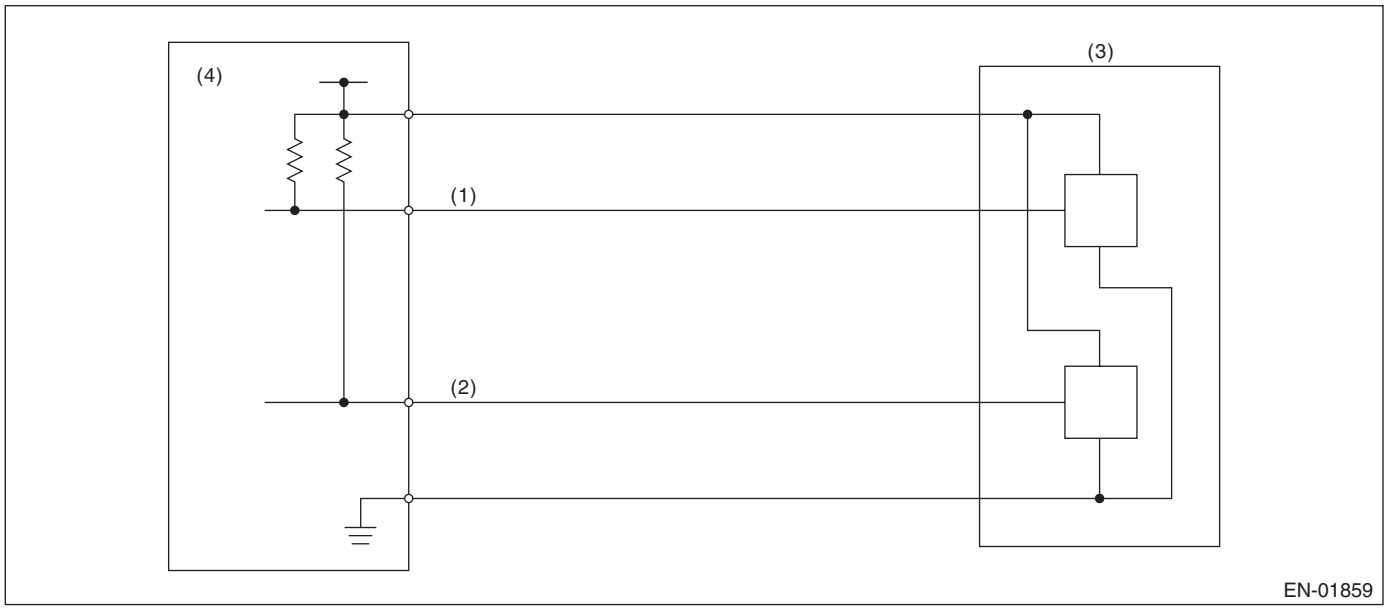

(1) Throttle position sensor 1 signal
(2) Throttle position sensor 2 signal
(3) Throttle position sensor
(4) Engine control module (ECM)

3. ENABLE CONDITION

Secondary Parameters	Enable Conditions
Ignition switch	ON
Battery voltage	≥ 6 V

4. GENERAL DRIVING CYCLE

Always perform the diagnosis continuously.

5. DIAGNOSTIC METHOD

- **Abnormality Judgment**

If the duration of time while the following conditions are met is longer than the time indicated, judge as NG.

Judgment Value

Malfunction Criteria	Threshold Value
Sensor 1 input voltage	≥ 4.858 V

Time Needed for Diagnosis: 24 ms
Malfunction Indicator Light Illumination: Illuminates as soon as a malfunction occurs.

- **Normality Judgment**

Judge as OK and clear the NG if the continuous time while the following conditions are established is more than the predetermined time.

Judgment Value

Malfunction Criteria	Threshold Value
Sensor 1 input voltage	< 4.858 V

Time Needed for Diagnosis: 24 ms

Y: DTC P0125 INSUFFICIENT COOLANT TEMPERATURE FOR CLOSED LOOP FUEL CONTROL

1. OUTLINE OF DIAGNOSIS

Detect the malfunction of engine coolant temperature output property.
Judge as NG when the engine coolant temperature does not rise in driving conditions where it should.

2. COMPONENT DESCRIPTION

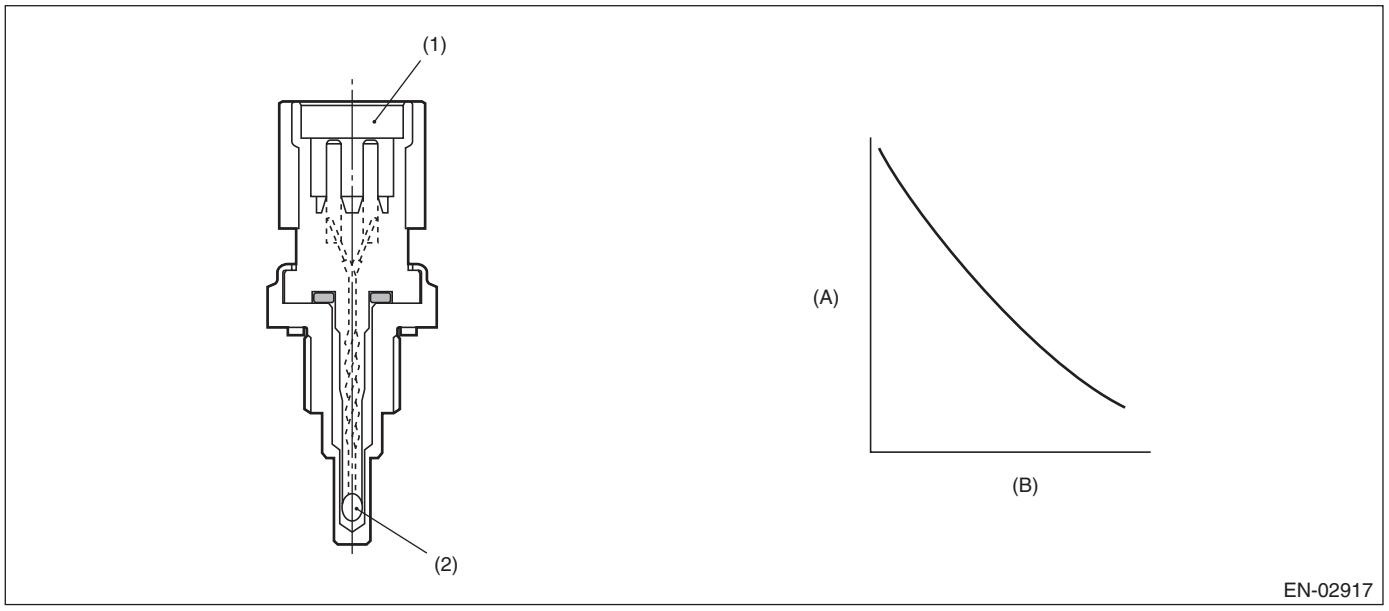

(A) Resistance value (kΩ)
(B) Temperature °C (°F)
(1) Connector
(2) Thermistor element

3. ENABLE CONDITION

Secondary Parameters	Enable Conditions
Engine speed	≥ Value from Map
Battery voltage	≥ 10.9 V

Map

Engine coolant temperature °C (°F)	–40 (–40)	–30 (–22)	–20 (–4)	–10 (14)	0 (32)	10 (50)	20 (68)	30 (86)
Engine speed rpm	500	500	500	500	500	500	500	500

Engine coolant temperature °C (°F)	40 (104)	50 (122)	60 (140)	70 (158)	80 (176)	90 (194)	100 (212)	110 (230)
Engine speed rpm	500	500	500	500	500	500	500	500

4. GENERAL DRIVING CYCLE

Perform the diagnosis only once after engine start.

5. DIAGNOSTIC METHOD

• Abnormality Judgment

Judge as NG if the criteria below are met.

Judgment Value

Malfunction Criteria	Threshold Value
Engine coolant temperature	< 20 °C (68 °F)
Timer for diagnosis after engine start	≥ Judgment value of timer after engine start

Timer for diagnosis after engine start
a. Timer stop at fuel cut
b. During the driving conditions except a) above, timer counts up as follows.
64 ms + TWCNT ms (when at 64 ms)
TWCNT is defined as follows,
TWCNT = 0 at idle switch ON,
TWCNT show on the following table at idle switch OFF.

		Vehicle speed km/h (MPH)							
		0 (0)	8 (5)	16 (9.9)	24 (14.9)	32 (19.9)	40 (24.9)	48 (29.8)	56 (34.8)
Temperature °C (°F)	–20 (–4)	0 ms	33.4152 ms	43.6878 ms	53.9604 ms	89.076 ms	124.1916 ms	163.3671 ms	202.5426 ms
	–10 (14)	0 ms	33.4152 ms	43.6878 ms	53.9604 ms	89.076 ms	124.1916 ms	163.3671 ms	202.5426 ms
	0 (32)	0 ms	21.1752 ms	30.6576 ms	40.14 ms	64.3824 ms	88.626 ms	116.544 ms	144.4632 ms
	10 (50)	0 ms	12.6416 ms	25.2832 ms	37.9264 ms	60.7056 ms	83.4832 ms	109.7168 ms	123.807 ms
	20 (68)	0 ms	10.2713 ms	20.5426 ms	30.8152 ms	49.3233 ms	67.8301 ms	89.1449 ms	99.0456 ms

Judgment value of timer after engine starting
t = 573669 ms – 33924 ms × Ti
Ti : The lowest coolant temperature after engine start
Time Needed for Diagnosis: Less than 1 second
Malfunction Indicator Light Illumination: Illuminates when malfunction occurs in 2 continuous driving cycles.

• Normality Judgment

Judge as OK and clear the NG when the malfunction criteria below are met.

Judgment Value

Malfunction Criteria	Threshold Value
Engine coolant temperature	≥ 20 °C (68 °F)

Time Needed for Diagnosis: Less than 1 second

Z: DTC P0126 INSUFFICIENT ENGINE COOLANT TEMPERATURE FOR STABLE OPERATION

1. OUTLINE OF DIAGNOSIS

Detect the malfunction of the engine coolant temperature sensor characteristics.
When the ignition is ON after the specified period of soaking time has elapsed, compare the engine coolant temperature with intake air temperature. Judge as NG if the difference between two temperatures is larger than the predetermined value and the engine coolant temperature becomes the specified value or more.

2. COMPONENT DESCRIPTION

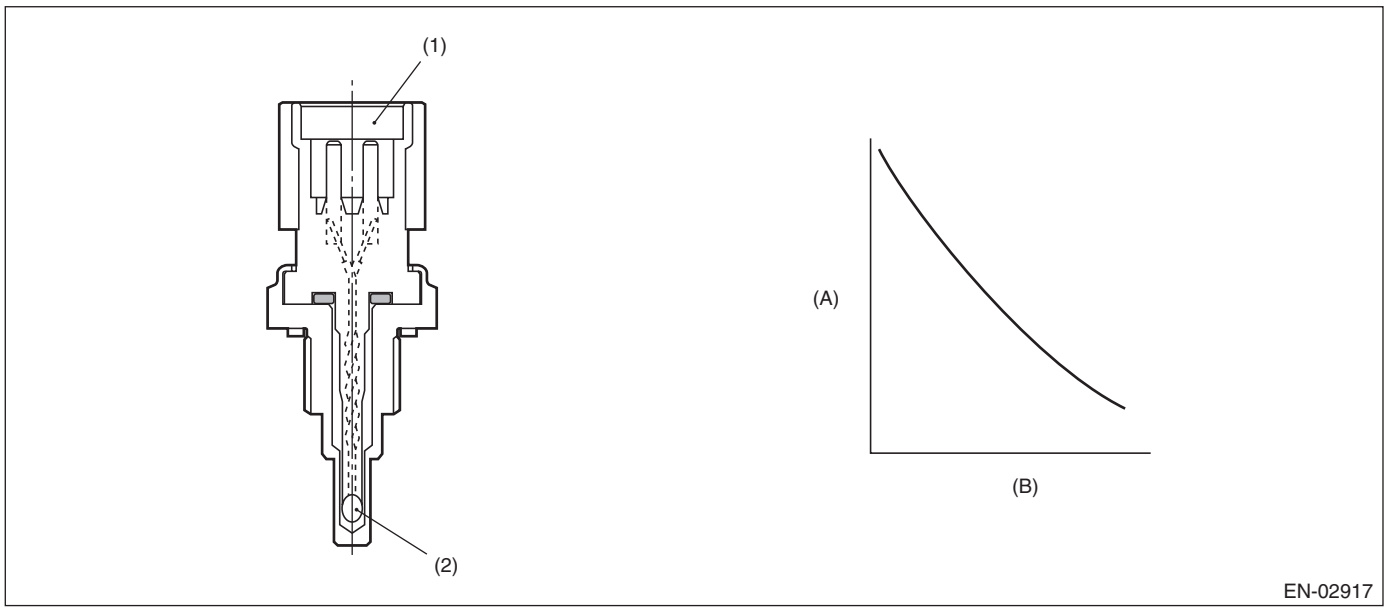

(A) Resistance value (kΩ)
(B) Temperature °C (°F)
(1) Connector
(2) Thermistor element

3. ENABLE CONDITION

Secondary Parameters	Enable Conditions
Battery voltage	≥ 10.9 V
Soaking time	≥ 21600 s
Engine coolant temperature at the last engine stop	≥ Value from Map

Map

Estimate ambient temperature °C (°F)	–7 (19.4)	8 (46.4)	10 (50)	25 (77)
Engine coolant temperature at the last engine stop °C (°F)	76.2 (169.2)	80.5 (176.9)	80.5 (176.9)	80.5 (176.9)

4. GENERAL DRIVING CYCLE

Perform the diagnosis only once after starting the engine.

5. DIAGNOSTIC METHOD

- **Abnormality Judgment**

If the duration of time while the following conditions are met is longer than the time indicated, judge as NG.

Judgment Value

Malfunction Criteria	Threshold Value
All of the following conditions are established.	
Engine coolant temperature – intake air temperature	> 15°C (27°F)
Engine coolant temperature	> 40 °C (104 °F)

Time Needed for Diagnosis: 512 ms
Malfunction Indicator Light Illumination: Illuminates when malfunction occurs in 2 continuous driving cycles.

- **Normality Judgment**

Judge as OK and clear the NG if the continuous time while the following conditions are established is more than the predetermined time.

Judgment Value

Malfunction Criteria	Threshold Value
When any one of the followings is established.	
Engine coolant temperature – intake air temperature	≤ 15°C (27°F)
Engine coolant temperature	≤ 40 °C (104 °F)

Time Needed for Diagnosis: Less than 1 second

AA:DTC P0128 COOLANT THERMOSTAT (ENGINE COOLANT TEMPERATURE BELOW THERMOSTAT REGULATING TEMPERATURE)

1. OUTLINE OF DIAGNOSIS

Detect malfunctions of the thermostat function.
Judge as NG when any one of the following conditions is established.

- When the actual engine coolant temperature does not reach the maximum temperature necessary to perform other OBDII diagnosis and Σ (Estimated engine coolant temperature – actual engine coolant temperature) exceeded the predetermined value. (Judgment 1)
- When the actual engine coolant temperature does not reach the range within –11°C (–19.8°F) from the regulated temperature and Σ (Estimated engine coolant temperature – actual engine coolant temperature) exceeded the predetermined value. (Judgment 2)
- When the difference between the estimated coolant temperature and the actual engine coolant temperature exceeds the predetermined value, and Σ (Estimated engine coolant temperature – actual engine coolant temperature) exceeded the predetermined value. (Judgment 3)

2. COMPONENT DESCRIPTION

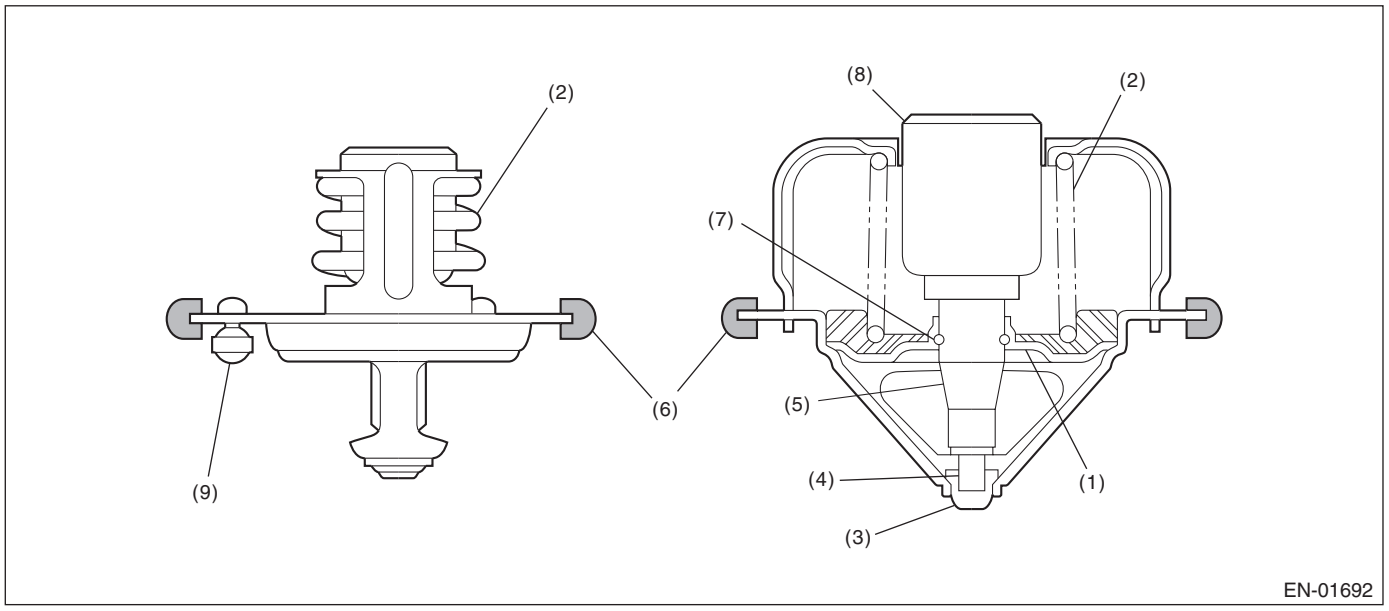

(1) Valve
(2) Spring
(3) Stopper
(4) Piston
(5) Guide
(6) Rubber seal
(7) Stop ring
(8) Wax element
(9) Jiggle valve

3. ENABLE CONDITION

Secondary Parameters	Enable Conditions
<Judgment 1>	
Battery voltage	≥ 10.9 V
Estimate ambient temperature	≥ –7 °C (19.4 °F)
Vehicle speed	≥ 30 km/h (18.6 MPH)
Estimated coolant temperature	≥ Value of Map 1
<Judgment 2>	
Battery voltage	≥ 10.9 V
Estimate ambient temperature	≥ –7 °C (19.4 °F)
Vehicle speed	≥ 30 km/h (18.6 MPH)
Estimated coolant temperature	≥ Value from Map 2
<Judgment 3>	
Battery voltage	≥ 10.9 V
Estimate ambient temperature	≥ –7 °C (19.4 °F)
Vehicle speed	≥ 30 km/h (18.6 MPH)
Estimated coolant temperature	≥ Value from Map 3

Map 1

Engine coolant temperature at engine starting °C (°F)	–7 (19.4)	8 (46.4)	10 (50)	25 (77)
Estimated coolant temperature °C (°F)	75 (167)	75 (167)	75 (167)	75 (167)

Map 2

Engine coolant temperature at engine starting °C (°F)	–7 (19.4)	8 (46.4)	10 (50)	25 (77)
Estimated coolant temperature °C (°F)	76.2 (169.2)	80.5 (176.9)	80.5 (176.9)	80.5 (176.9)

Map 3

Engine coolant temperature at engine starting °C (°F)	–7 (19.4)	10 (50)	25 (77)	66 (150.8)
Estimated coolant temperature °C (°F)	54.9 (130.8)	60.8 (141.4)	66 (150.8)	80.5 (176.9)

4. GENERAL DRIVING CYCLE

Perform the diagnosis only once after starting the engine.

5. DIAGNOSTIC METHOD

• Abnormality Judgment

If the duration of time while the following conditions are met is longer than the time indicated, judge as NG.

Judgment Value

Malfunction Criteria	Threshold Value
When any one of the followings is established.	
<Judgment 1>	
Actual engine coolant temperature and Σ (Estimated engine coolant temperature – actual engine coolant temperature)	< Value of Map 4 > Value of Map 5
<Judgment 2>	
Actual engine coolant temperature and Σ (Estimated engine coolant temperature – actual engine coolant temperature)	< Regulated temperature – Value of Map 6 > Value of Map 7
<Judgment 3>	
Estimated engine coolant temperature – actual engine coolant temperature and Σ (Estimated engine coolant temperature – actual engine coolant temperature)	> Value of Map 8 > Value of Map 9

Map 4

Estimate ambient temperature °C (°F)	–7 (19.4)	8 (46.4)	10 (50)	25 (77)
Threshold Value °C (°F)	75 (167)	75 (167)	75 (167)	75 (167)

Map 5

Engine coolant temperature at engine starting °C (°F)	–7 (19.4)	0 (32)	8 (46.4)	10 (50)	25 (77)	35 (95)
Threshold Value °C (°F)	1731.6 (3116.9)	1731.6 (3116.9)	1731.6 (3116.9)	1731.6 (3116.9)	1731.6 (3116.9)	1200 (2160)

Map 6

Estimate ambient temperature °C (°F)	–7 (19.4)	8 (46.4)	10 (50)	25 (77)
Threshold Value °C (°F)	15.4 (27.7)	11.1 (20)	11.1 (20)	11.1 (20)

Map 7

Engine coolant temperature at engine starting °C (°F)	–7 (19.4)	0 (32)	8 (46.4)	10 (50)	25 (77)	40 (104)	45 (113)
Threshold Value °C (°F)	1731.6 (3116.9)	1731.6 (3116.9)	1731.6 (3116.9)	1731.6 (3116.9)	1731.6 (3116.9)	1731.6 (3116.9)	1500 (2700)

Map 8

Estimate ambient temperature °C (°F)	–7 (19.4)	8 (46.4)	10 (50)	25 (77)
Threshold Value °C (°F)	11.1 (20)	11.1 (20)	11.1 (20)	11.1 (20)

Map 9

Engine coolant temperature at engine starting °C (°F)	–7 (19.4)	8 (46.4)	10 (50)	25 (77)
Threshold Value °C (°F)	1731.6 (3116.9)	1731.6 (3116.9)	1731.6 (3116.9)	1731.6 (3116.9)

Time Needed for Diagnosis: 300 — 700 seconds
Malfunction Indicator Light Illumination: Illuminates when malfunction occurs in 2 continuous driving cycles.

- **Normality Judgment**

Judge as OK and clear the NG if the continuous time while the following conditions are established is more than the predetermined time.

Judgment Value

Malfunction Criteria	Threshold Value
All of the following conditions are established.	
<Judgment 1>	
Actual engine coolant temperature and Σ (Estimated engine coolant temperature – actual engine coolant temperature)	≥ Value of Map 4 ≤ Value of Map 5
<Judgment 2>	
Actual engine coolant temperature and Σ (Estimated engine coolant temperature – actual engine coolant temperature)	≥ Regulated temperature – Value of Map 6 ≤ Value of Map 7
<Judgment 3>	
Estimated engine coolant temperature – actual engine coolant temperature and Σ (Estimated engine coolant temperature – actual engine coolant temperature) and Actual engine coolant temperature	≤ Value of Map 8 ≤ Value of Map 9 ≥ Regulated temperature – Value of Map 10

Map 10

Estimate ambient temperature °C (°F)	–7 (19.4)	8 (46.4)	10 (50)	25 (77)
Threshold Value °C (°F)	15.4 (27.7)	11.1 (20)	11.1 (20)	11.1 (20)

Time Needed for Diagnosis: 300 — 700 seconds

AB:DTC P0131 O2 SENSOR CIRCUIT LOW VOLTAGE (BANK 1 SENSOR 1)

1. OUTLINE OF DIAGNOSIS

Detect the open or short circuit of sensor.
Judge as NG, when the element voltage is out of the specified range.

2. COMPONENT DESCRIPTION

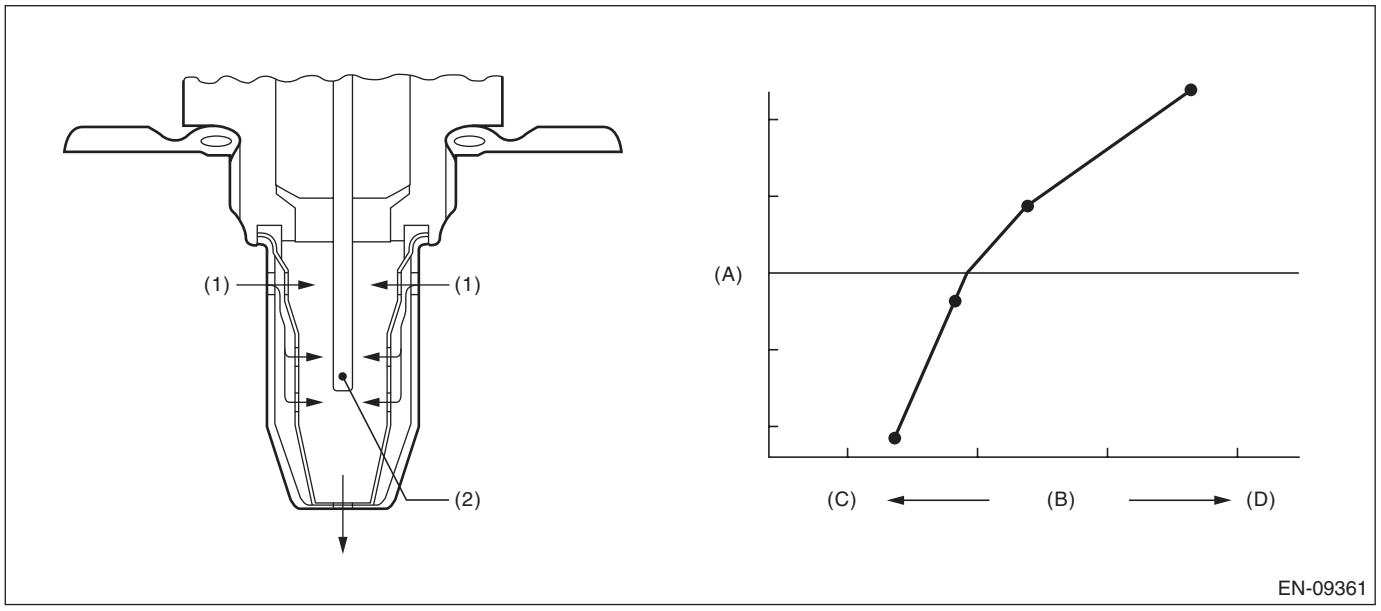

(A) Electromotive force (B) Air fuel ratio (C) Lean
(D) Rich

(1) Exhaust gas (2) ZrO_2

3. ENABLE CONDITION

Secondary Parameters	Enable Conditions
Battery voltage	≥ 10.9 V

4. GENERAL DRIVING CYCLE

Always perform the diagnosis continuously.

5. DIAGNOSTIC METHOD

- **Abnormality Judgment**

If the duration of time while the following conditions are met is longer than the time indicated, judge as NG.

Judgment Value

Malfunction Criteria	Threshold Value
Input voltage (+)	< 1.128 V
or	
Input voltage (–)	< 0.23 V
or	
|Input voltage (+) – Input voltage (–)|	< 0.644 V

Time Needed for Diagnosis:
Input voltage (+): 1000 ms
Input voltage (–): 1000 ms
|Input voltage (+) – Input voltage (–)|: 1000 ms
Malfunction Indicator Light Illumination: Illuminates as soon as a malfunction occurs.

- **Normality Judgment**

Judge as OK and clear the NG if the continuous time while the following conditions are established is more than the predetermined time.

Judgment Value

Malfunction Criteria	Threshold Value
Input voltage (+)	≥ 1.128 V
Input voltage (–)	≥ 0.23 V
|Input voltage (+) – Input voltage (–)|	≥ 0.644 V

Time Needed for Diagnosis: Less than 1 second

AC:DTC P0132 O2 SENSOR CIRCUIT HIGH VOLTAGE (BANK 1 SENSOR 1)

1. OUTLINE OF DIAGNOSIS

Detect the open or short circuit of sensor.
Judge as NG, when the element voltage is out of the specified range.

2. COMPONENT DESCRIPTION

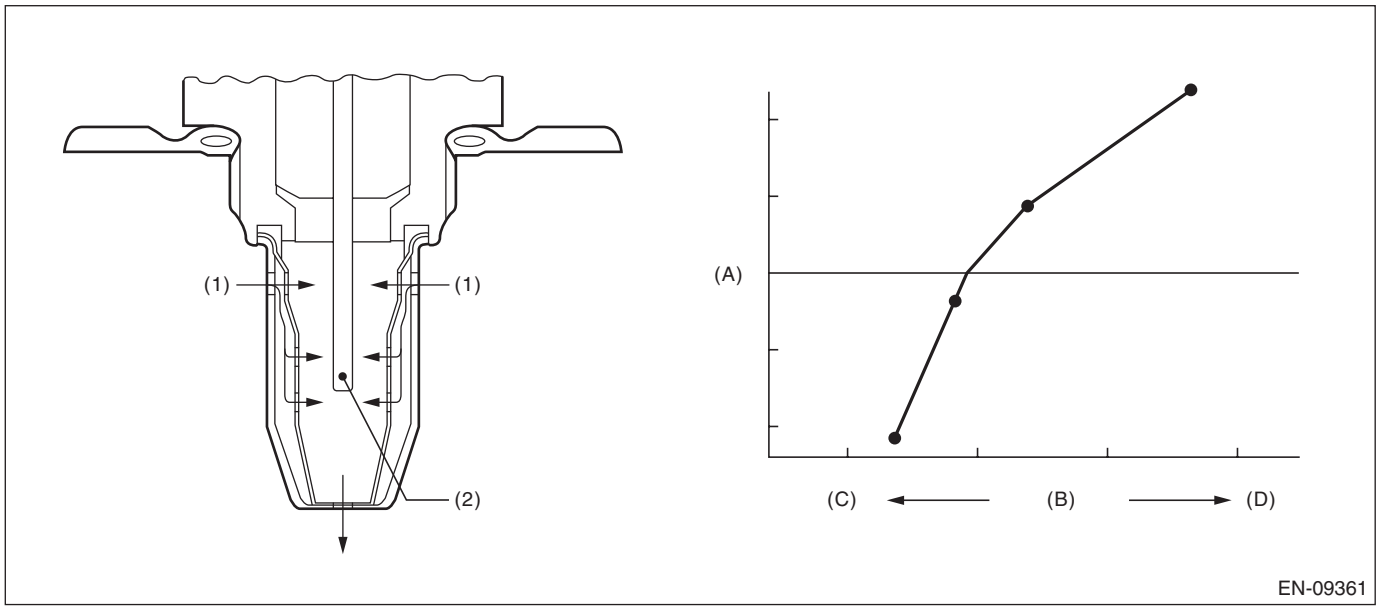

(A) Electromotive force (B) Air fuel ratio (C) Lean
(D) Rich

(1) Exhaust gas (2) ZrO_2

3. ENABLE CONDITION

Secondary Parameters	Enable Conditions
Battery voltage	≥ 10.9 V

4. GENERAL DRIVING CYCLE

Always perform the diagnosis continuously.

5. DIAGNOSTIC METHOD

- **Abnormality Judgment**

If the duration of time while the following conditions are met is longer than the time indicated, judge as NG.

Judgment Value

Malfunction Criteria	Threshold Value
Input voltage (+)	> 3.589 V
or	
Input voltage (–)	> 3.541 V

Time Needed for Diagnosis:
Input voltage (+): 1000 ms
Input voltage (–): 1000 ms
Malfunction Indicator Light Illumination: Illuminates as soon as a malfunction occurs.

- **Normality Judgment**

Judge as OK and clear the NG if the continuous time while the following conditions are established is more than the predetermined time.

Judgment Value

Malfunction Criteria	Threshold Value
Input voltage (+)	≤ 3.589 V
Input voltage (–)	≤ 3.541 V

Time Needed for Diagnosis: Less than 1 second

AD:DTC P0133 O2 SENSOR CIRCUIT SLOW RESPONSE (BANK 1 SENSOR 1)

1. OUTLINE OF DIAGNOSIS

Detect the slow response of front oxygen (A/F) sensor.
Front oxygen (A/F) sensor cover has some ventilation holes for exhaust gas. Clogged ventilation holes are diagnosed.
When the holes are clogged, the A/F output variation becomes slow comparing with the actual A/F variation because oxygen which reaches the zirconia layer is insufficient. Therefore, if the sensor cover holes are clogged, the rich to lean judgment in the ECM is delayed when the actual change from rich to lean occurs.
Judge as NG when the actual movement in comparison to the ECM control amount is slow.

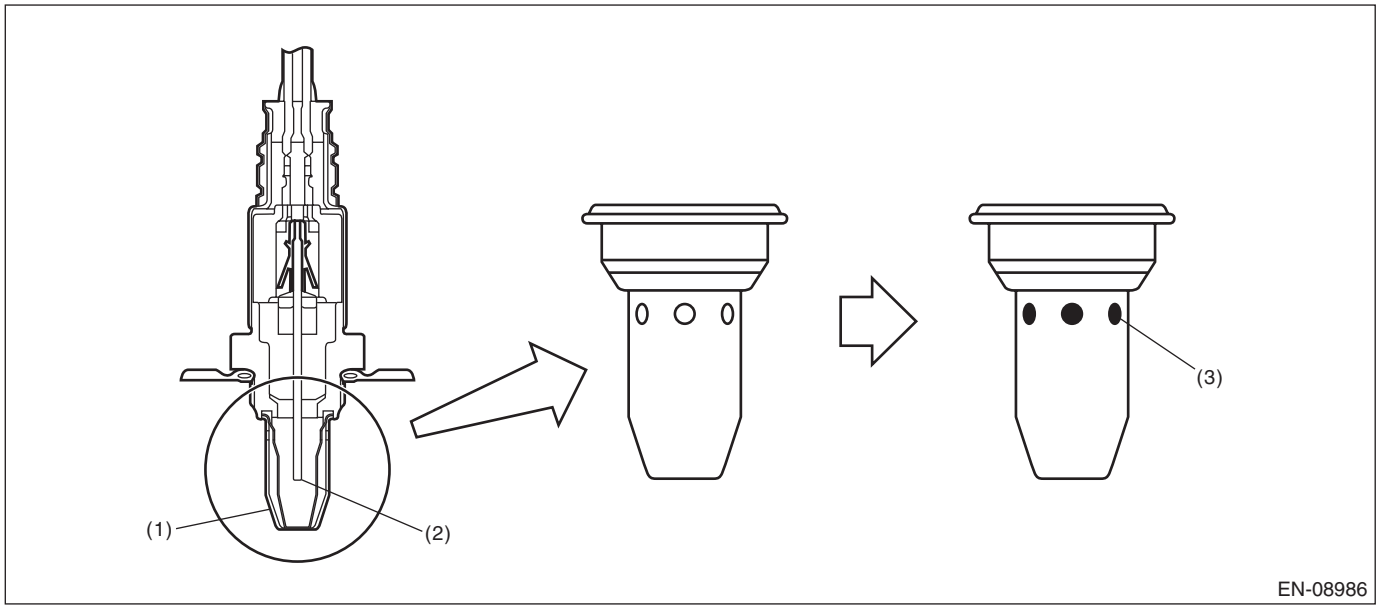

(1) Cover (2) Zirconia (3) Clogging

2. COMPONENT DESCRIPTION

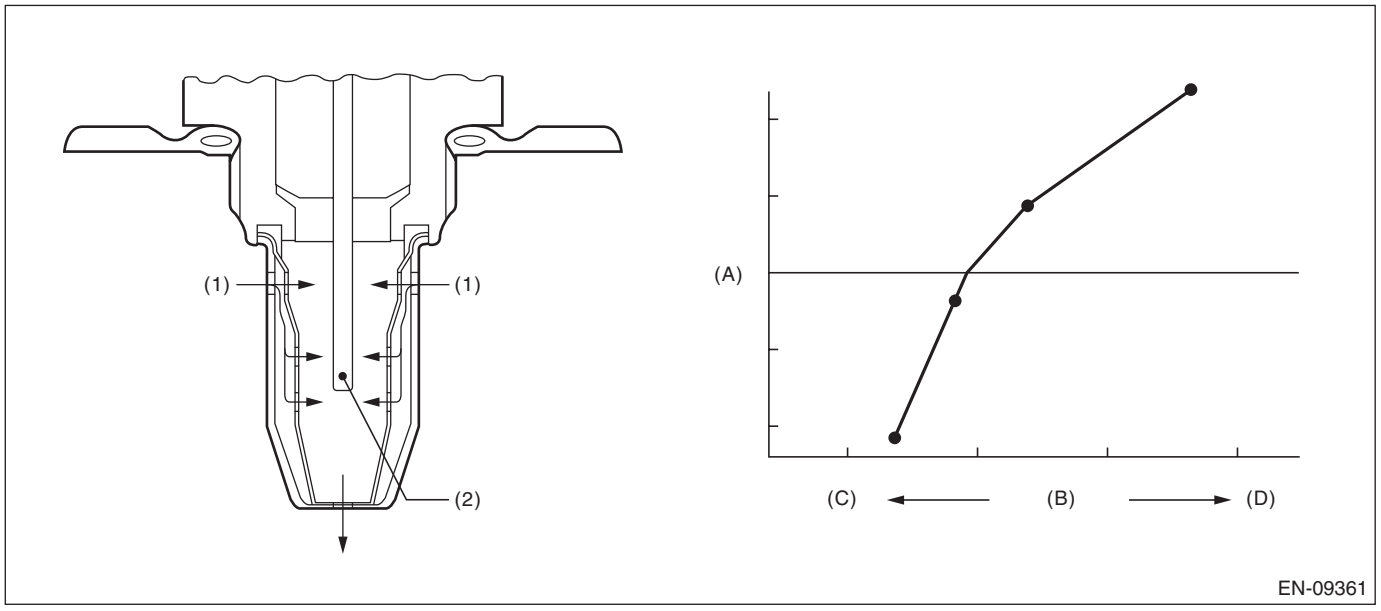

(A) Electromotive force (B) Air fuel ratio (C) Lean
(D) Rich

(1) Exhaust gas (2) ZrO_2

3. ENABLE CONDITION

Secondary Parameters	Enable Conditions
Time needed for all secondary parameters to be in enable conditions	≥ 1024 ms
Battery voltage	≥ 10.9 V
Barometric pressure	> 75 kPa (563 mmHg, 22.2 inHg)
Closed loop control with main feedback	Operation
Front oxygen (A/F) sensor impedance	0 Ω — 50 Ω
Elapsed time after starting the engine	≥ 120000 ms
Engine coolant temperature	≥ 75 °C (167 °F)
Engine speed	1000 rpm — 10000 rpm
Vehicle speed	10 km/h — 200 km/h (6.2 MPH — 124.3 MPH)
Amount of intake air	10 g/s — 40 g/s (0.35 oz/s — 1.41 oz/s)
Engine load	< 0.02 g/rev (0 oz/rev)
Learning value of EVAP conc. during purge	< 0.2
Total time of operating canister purge	≥ 19.9 s

4. GENERAL DRIVING CYCLE

Perform diagnosis only once at a constant speed of 10 km/h — 200 km/h (6.2 MPH — 124.3 MPH) 120000 ms or more after starting the engine.

5. DIAGNOSTIC METHOD

Calculate faf difference every 32 ms × 4 , and the λ value difference. Calculate the diagnostic value after calculating 820 time(s).

- **Abnormality Judgment**

If the duration of time while the following conditions are met is longer than the time indicated, judge as NG.

Judgment Value

Malfunction Criteria	Threshold Value
parafca = td2faf/td2lmd where, td2faf (N) = td2faf (n–1) + |d2faf (n)| td2lmd (N) = td2lmd (n–1) + |d2lmd (n)| add up to 32 ms × 4 × 820 time(s). d2faf (n) = (faf (n) – faf (n–1)) – (faf (n–1) – faf (n–2)) d2lmd (n) = (lmd (n) – lmd (n–1)) – (lmd (n–1) – lmd (n–2)) faf = main feedback compensation coefficient every 128 milliseconds lmd = output lambda every 128 milliseconds	> 0.3

Time Needed for Diagnosis: 32 ms × 4 × 820 time(s)
Malfunction Indicator Light Illumination: Illuminates when malfunction occurs in 2 continuous driving cycles.

- **Normality Judgment**

Judge as OK and clear the NG if the continuous time while the following conditions are established is more than the predetermined time.

Judgment Value

Malfunction Criteria	Threshold Value
parafca = td2faf/td2lmd where, td2faf (N) = td2faf (n–1) + |d2faf (n)| td2lmd (N) = td2lmd (n–1) + |d2lmd (n)| add up to 32 ms × 4 × 820 time(s). d2faf (n) = (faf (n) – faf (n–1)) – (faf (n–1) – faf (n–2)) d2lmd (n) = (lmd (n) – lmd (n–1)) – (lmd (n–1) – lmd (n–2)) faf = main feedback compensation coefficient every 128 milliseconds lmd = output lambda every 128 milliseconds	≤ 0.3

Time Needed for Diagnosis: 32 ms × 4 × 820 time(s)

AE:DTC P0134 O2 SENSOR CIRCUIT NO ACTIVITY DETECTED (BANK 1 SENSOR 1)

1. OUTLINE OF DIAGNOSIS

Detect open circuits of the sensor.
Judge as NG when the impedance of the element is large.

2. COMPONENT DESCRIPTION

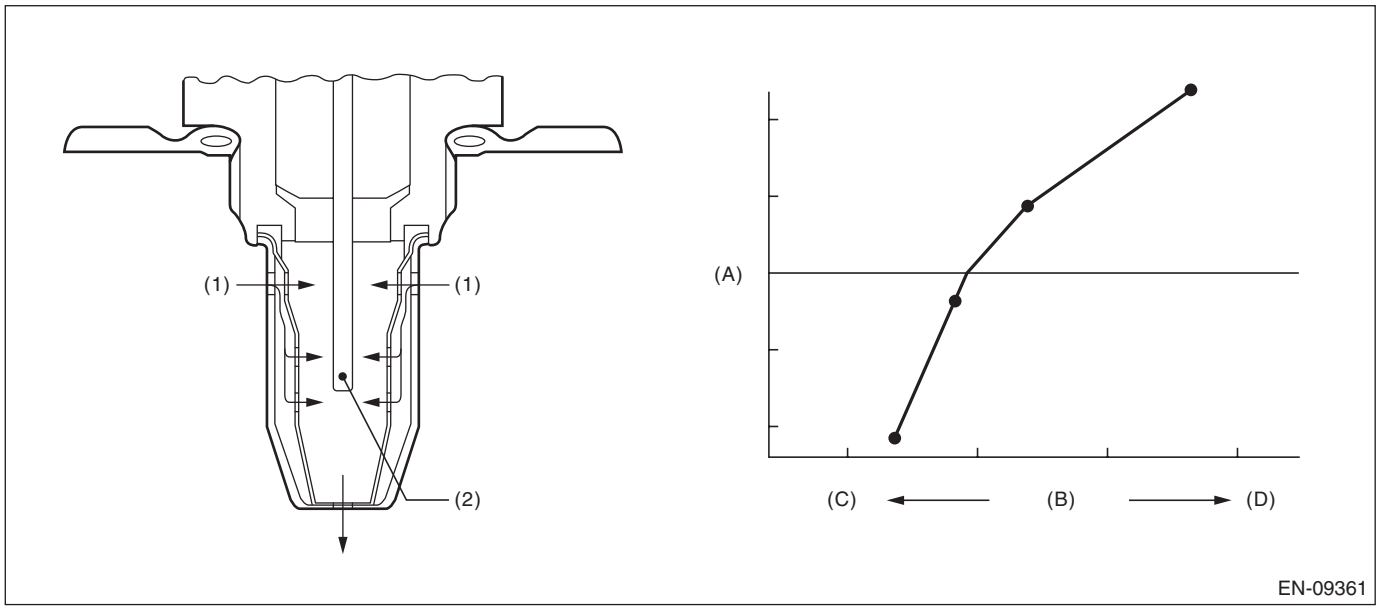

(A) Electromotive force (B) Air fuel ratio (C) Lean
(D) Rich

(1) Exhaust gas (2) ZrO_2

3. ENABLE CONDITION

Secondary Parameters	Enable Conditions
None	

4. GENERAL DRIVING CYCLE

Always perform the diagnosis continuously.

5. DIAGNOSTIC METHOD

- **Abnormality Judgment**

If the duration of time while the following conditions are met is longer than the time indicated, judge as NG.

Judgment Value

Malfunction Criteria	Threshold Value
Battery voltage	≥ 10.9 V
Time of heater control duty at 70 % or more	≥ 36000 ms
Front oxygen (A/F) sensor impedance.	> 500 Ω

Time Needed for Diagnosis: 5000 ms
Malfunction Indicator Light Illumination: Illuminates as soon as a malfunction occurs.

- **Normality Judgment**

Judge as OK and clear the NG if the continuous time while the following conditions are established is more than the predetermined time.

Judgment Value

Malfunction Criteria	Threshold Value
Battery voltage	≥ 10.9 V
Front oxygen (A/F) sensor impedance.	≤ 500 Ω

Time Needed for Diagnosis: Less than 1 second

AF:DTC P0137 O2 SENSOR CIRCUIT LOW VOLTAGE (BANK 1 SENSOR 2)

1. OUTLINE OF DIAGNOSIS

Detect continuity NG of the oxygen sensor. If the oxygen sensor voltage reading is not within the probable range considering the operating conditions, judge as NG.

2. COMPONENT DESCRIPTION

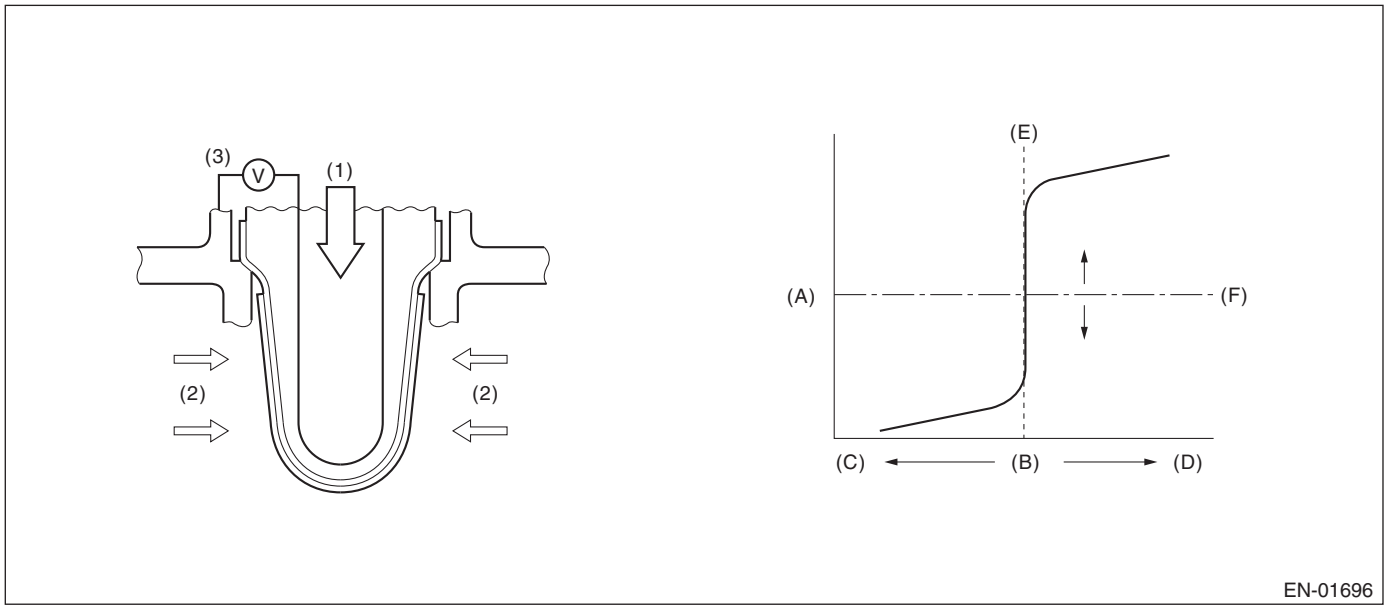

(A)	Electromotive force	(B)	Air fuel ratio	(C)	Rich
(D)	Lean	(E)	Theoretical air fuel ratio	(F)	Comparative voltage
(1)	Atmosphere	(2)	Exhaust gas	(3)	Electromotive force

3. ENABLE CONDITION

Used for abnormality judgment

Secondary Parameters	Enable Conditions
High	
Secondary air system	Not in operation
Closed loop control at the oxygen sensor	In operation
Misfire detection every 200 rotations	< 65535 time(s)
Front oxygen (A/F) sensor compensation coefficient	Not in limit value
Battery voltage	≥ 10.9 V
Engine coolant temperature	≥ 75 °C (167 °F)
Low (1)	
Secondary air system	Not in operation
Closed loop control at the oxygen sensor	In operation
Misfire detection every 200 rotations	< 65535 time(s)
Front oxygen (A/F) sensor compensation coefficient	Not in limit value
Battery voltage	≥ 10.9 V
Engine coolant temperature	≥ 75 °C (167 °F)
Amount of intake air	≥ 10 g/s (0.35 oz/s)
Low (2)	
Secondary air system	Not in operation
Closed loop control at the oxygen sensor	In operation
Misfire detection every 200 rotations	< 65535 time(s)
Front oxygen (A/F) sensor compensation coefficient	Not in limit value
Battery voltage	≥ 10.9 V
Engine coolant temperature	≥ 75 °C (167 °F)
Amount of intake air	< 10 g/s (0.35 oz/s)
Current continuation time of the rear oxygen sensor heater	≥ 30000 ms
Low (3)	
Secondary air system	Not in operation
Closed loop control at the oxygen sensor	In operation
Misfire detection every 200 rotations	< 65535 time(s)
Front oxygen (A/F) sensor compensation coefficient	Not in limit value
Battery voltage	≥ 10.9 V
Engine coolant temperature	≥ 75 °C (167 °F)
Amount of intake air	< 10 g/s (0.35 oz/s)
Current continuation time of the rear oxygen sensor heater	≥ 30000 ms
Fuel cut	Experienced

Used for normality judgment

Secondary Parameters	Enable Conditions
Secondary air system	Not in operation
Closed loop control at the oxygen sensor	In operation
Misfire detection every 200 rotations	< 65535 time(s)
Front oxygen (A/F) sensor compensation coefficient	Not in limit value
Battery voltage	≥ 10.9 V
Engine coolant temperature	≥ 75 °C (167 °F)

4. GENERAL DRIVING CYCLE

After starting the engine, continuously perform the diagnosis with the same engine condition.

5. DIAGNOSTIC METHOD

- **Abnormality Judgment**

If the duration of time while the following conditions are met is longer than the time indicated, judge as NG.

Judgment Value

Malfunction Criteria	Threshold Value	DTC
High		P0138
Sensor output voltage	> 1.2 V	
Low		P0137
Sensor output voltage	< 0.03 V	

Time Needed for Diagnosis:

High: 2500 ms
Low (1): 20000 ms
Low (2): 40000 ms
Low (3): Value from Map

Map

Fuel cut time (ms)	0	2000	10000
Time Needed for Diagnosis (ms)	40000	40000	60000

Malfunction Indicator Light Illumination: Illuminates when malfunction occurs in 2 continuous driving cycles.

- **Normality Judgment**

Judge as OK and clear the NG if the continuous time while the following conditions are established is more than the predetermined time.

Judgment Value

Malfunction Criteria	Threshold Value	DTC
High		P0138
Sensor output voltage	≤ 1.2 V	
Low		P0137
Sensor output voltage	≥ 0.03 V	

Time Needed for Diagnosis:

High: Less than 1 second
Low (1): Less than 1 second
Low (2): Less than 1 second
Low (3): Less than 1 second

AG:DTC P0138 O2 SENSOR CIRCUIT HIGH VOLTAGE (BANK 1 SENSOR 2)

1. OUTLINE OF DIAGNOSIS

NOTE:
For the detection standard, refer to DTC P0137. <Ref. to GD(H4SO)-68, DTC P0137 O2 SENSOR CIRCUIT LOW VOLTAGE (BANK 1 SENSOR 2), Diagnostic Trouble Code (DTC) Detecting Criteria.>

AH:DTC P013A O2 SENSOR SLOW RESPONSE - RICH TO LEAN (BANK 1 SENSOR 2)

1. OUTLINE OF DIAGNOSIS

Detect the slow response of rich → lean for rear oxygen sensor output.
When the deceleration fuel cut has occurred, detect the trouble by calculating the time when the rear oxygen sensor output passes through the predetermined range of voltages.
Judge as NG when the response time is larger than the threshold value.

2. COMPONENT DESCRIPTION

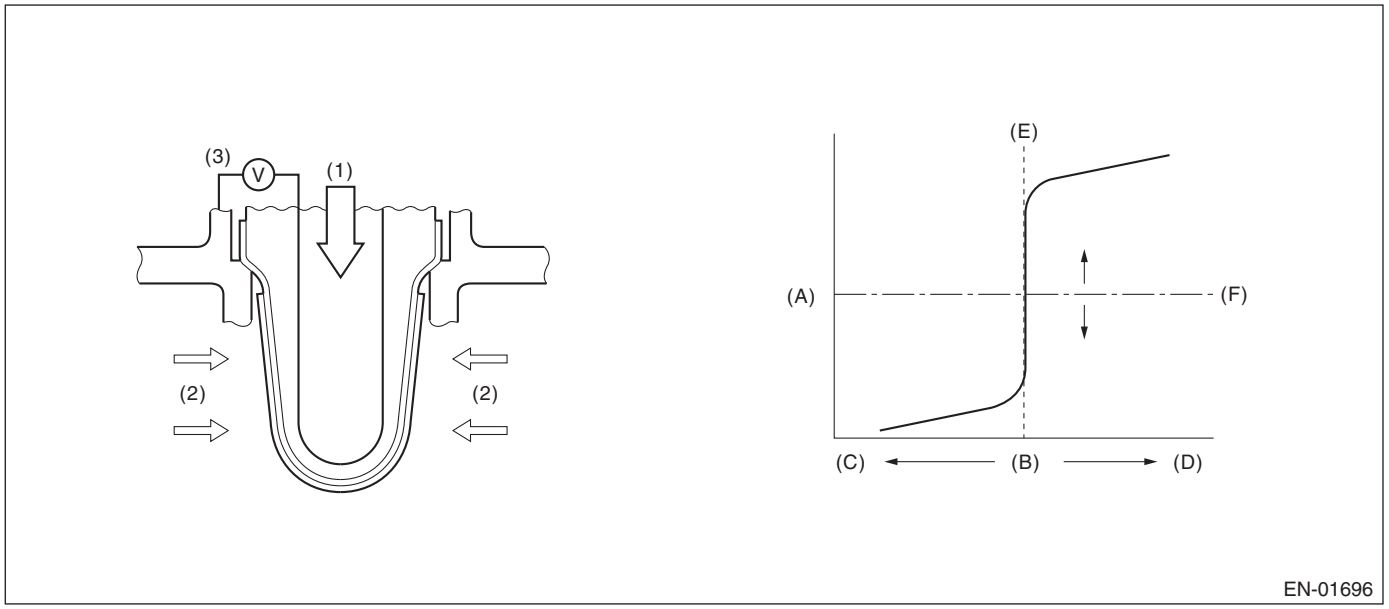

(A)	Electromotive force	(B)	Air fuel ratio	(C)	Rich
(D)	Lean	(E)	Theoretical air fuel ratio	(F)	Comparative voltage
(1)	Atmosphere	(2)	Exhaust gas	(3)	Electromotive force

3. ENABLE CONDITIONS

Secondary Parameters	Enable Conditions
Battery voltage	> 10.9 V
Rear oxygen sensor closed loop control	Operation
Current calculation time of the rear oxygen sensor heater after starting	≥ 180000 ms
Engine speed when fuel cut starts	≥ 1300 rpm
Rear oxygen sensor voltage when fuel cut starts	≥ 0.55 V
Fuel cut time	≥ 5000 ms
Engine coolant temperature when fuel cut starts	≥ 75 °C (167 °F)
Estimated temperature of rear oxygen sensor element when fuel cut starts	≥ 500 °C (932 °F)

4. GENERAL DRIVING CYCLE

Perform diagnosis once during deceleration fuel cut from a constant and high speed driving, when rear oxygen sensor is warmed up sufficiently.

5. DIAGNOSTIC METHOD

Detect the trouble by calculating the response time of the rear oxygen sensor during fuel cut.

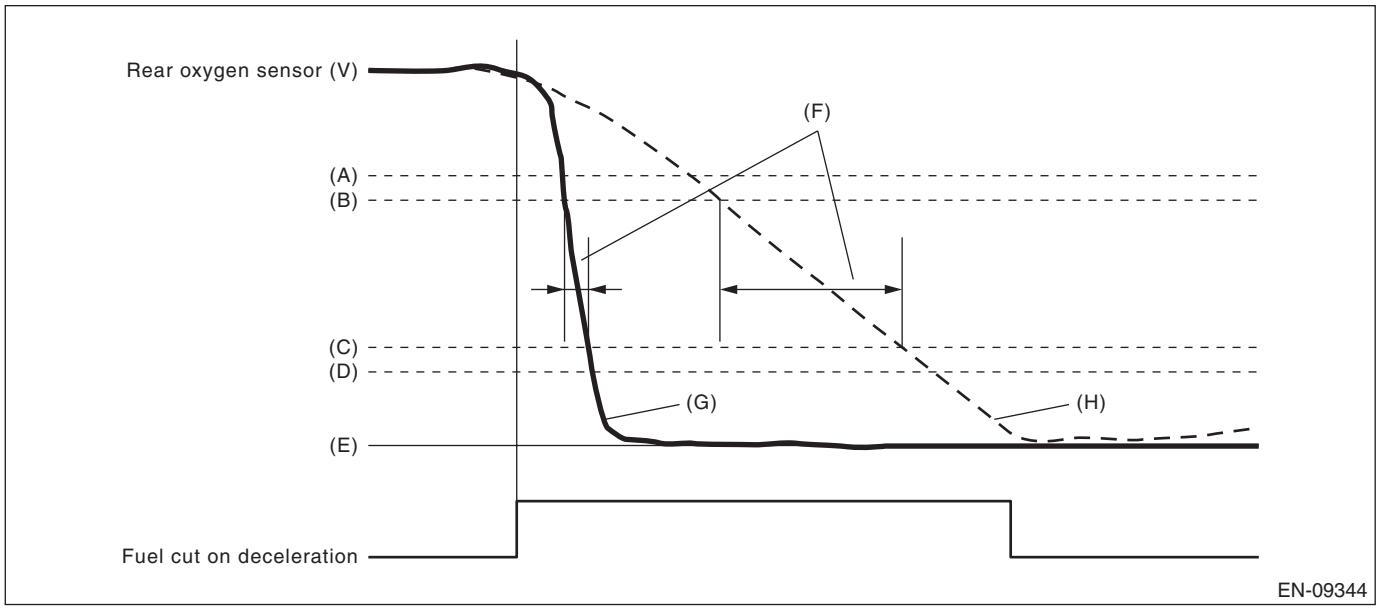

(A) 0.55 V
(B) 0.50 V
(C) 0.20 V
(D) 0.15 V
(E) 0 V
(F) Diagnostic parameter
(G) Normal
(H) Malfunction

- **Abnormality Judgment**

Judge as NG when the following conditions are established.

Judgment Value

Malfunction Criteria	Threshold Value
Time when rear oxygen sensor voltage changed from 0.5 V to 0.2 V.	> 491 ms

Time Needed for Diagnosis: 10 seconds
Malfunction Indicator Light Illumination: Illuminates when malfunction occurs in 2 continuous driving cycles.

- **Normality Judgment**

Judge as OK and clear the NG if the following conditions are established.

Judgment Value

Malfunction Criteria	Threshold Value
Time when rear oxygen sensor voltage changed from 0.5 V to 0.2 V.	≤ 491 ms

Time Needed for Diagnosis: 10 seconds

AI: DTC P013B O2 SENSOR SLOW RESPONSE - LEAN TO RICH (BANK 1 SENSOR 2)

1. OUTLINE OF DIAGNOSIS

Detect the slow response of lean → rich for rear oxygen sensor output.
After the deceleration fuel cut has occurred, detect the trouble by calculating the time when the rear oxygen sensor output passes through the predetermined range of voltages.
Judge as NG when the response time is larger than the threshold value.

2. COMPONENT DESCRIPTION

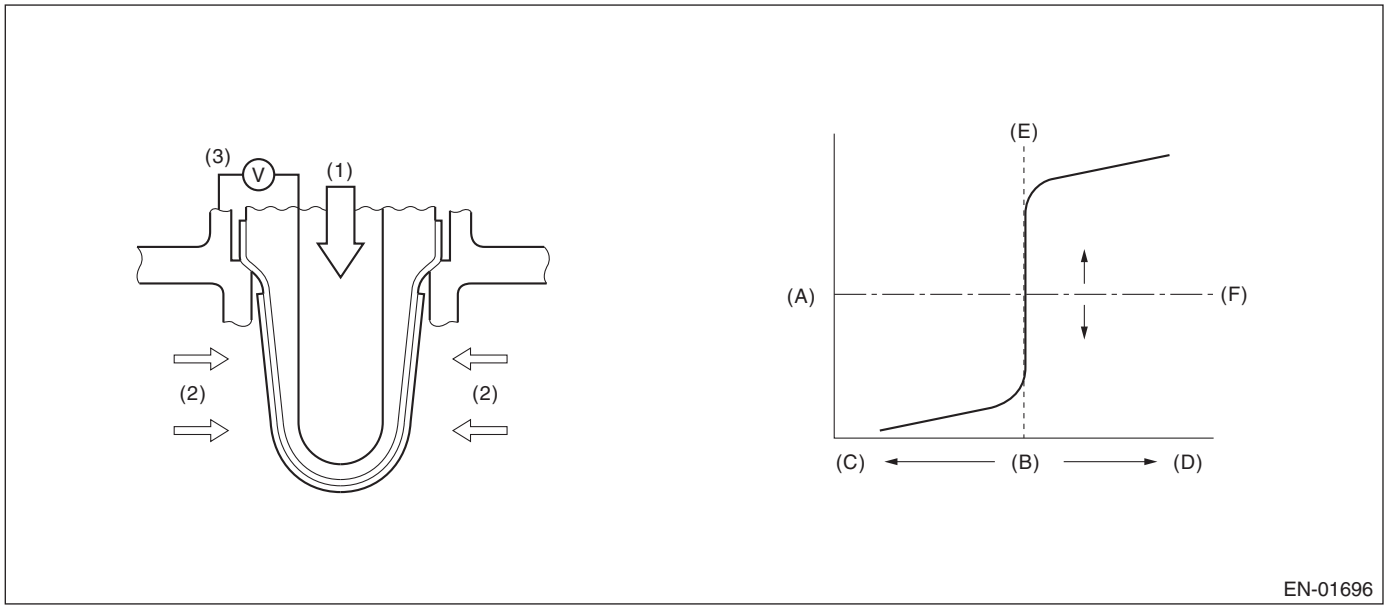

(A)	Electromotive force	(B)	Air fuel ratio	(C)	Rich
(D)	Lean	(E)	Theoretical air fuel ratio	(F)	Comparative voltage
(1)	Atmosphere	(2)	Exhaust gas	(3)	Electromotive force

3. ENABLE CONDITIONS

Secondary Parameters	Enable Conditions
Battery voltage	> 10.9 V
Rear oxygen sensor closed loop control	Operation
Fuel cut time	≥ 5000 ms

4. GENERAL DRIVING CYCLE

Perform diagnosis only once after recovering from a deceleration fuel cut continued for more than predetermined time.

5. DIAGNOSTIC METHOD

Detect the trouble by calculating the response time of the rear oxygen sensor after fuel cut.

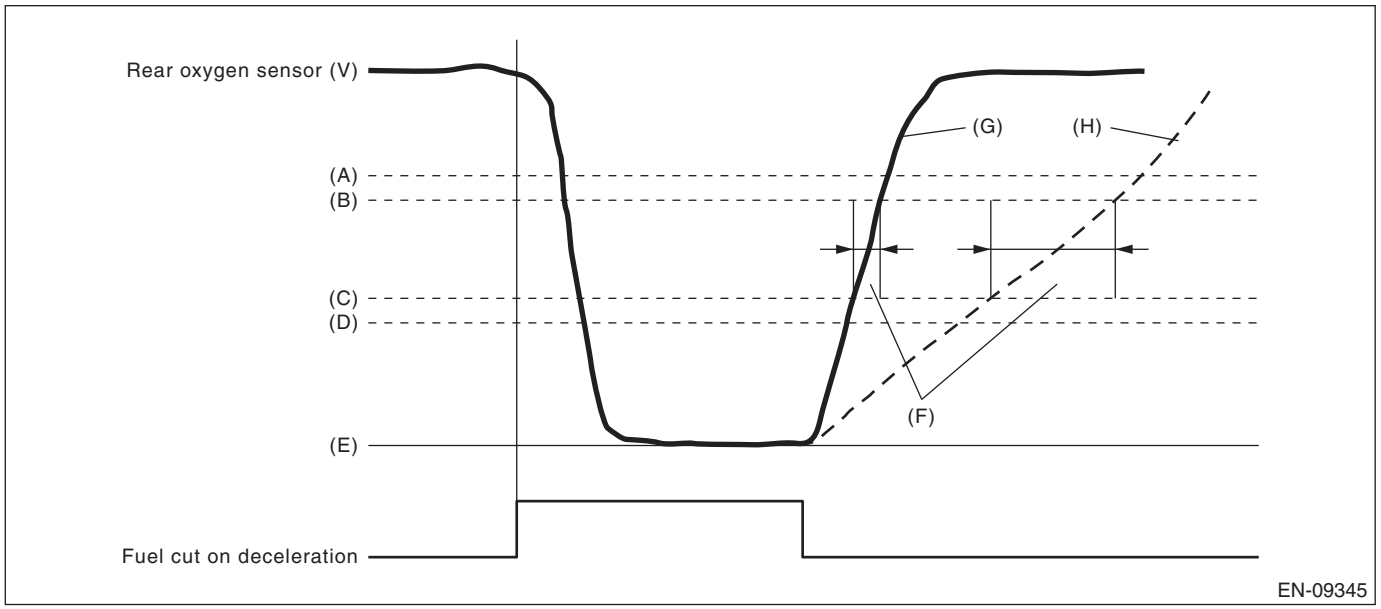

(A) 0.55 V
(B) 0.50 V
(C) 0.30 V
(D) 0.25 V
(E) 0 V
(F) Diagnostic parameter
(G) Normal
(H) Malfunction

- **Abnormality Judgment**

Judge as NG when the following conditions are established.

Judgment Value

Malfunction Criteria	Threshold Value
Time when rear oxygen sensor voltage changed from 0.3 V to 0.5 V.	> 4000 ms

Time Needed for Diagnosis: 10 seconds
Malfunction Indicator Light Illumination: Illuminates when malfunction occurs in 2 continuous driving cycles.

- **Normality Judgment**

Judge as OK and clear the NG if the following conditions are established.

Judgment Value

Malfunction Criteria	Threshold Value
Time when rear oxygen sensor voltage changed from 0.3 V to 0.5 V.	≤ 4000 ms

Time Needed for Diagnosis: 10 seconds

AJ:DTC P013E O2 SENSOR DELAYED RESPONSE - RICH TO LEAN (BANK 1 SENSOR 2)

1. OUTLINE OF DIAGNOSIS

Detect the delayed response of rear oxygen sensor output for rich → lean.
After the deceleration fuel cut has started, detect the trouble by calculating the time when the rear oxygen sensor output decreases to the predetermined voltages.
Judge as NG when the response time is larger than the threshold value.

2. COMPONENT DESCRIPTION

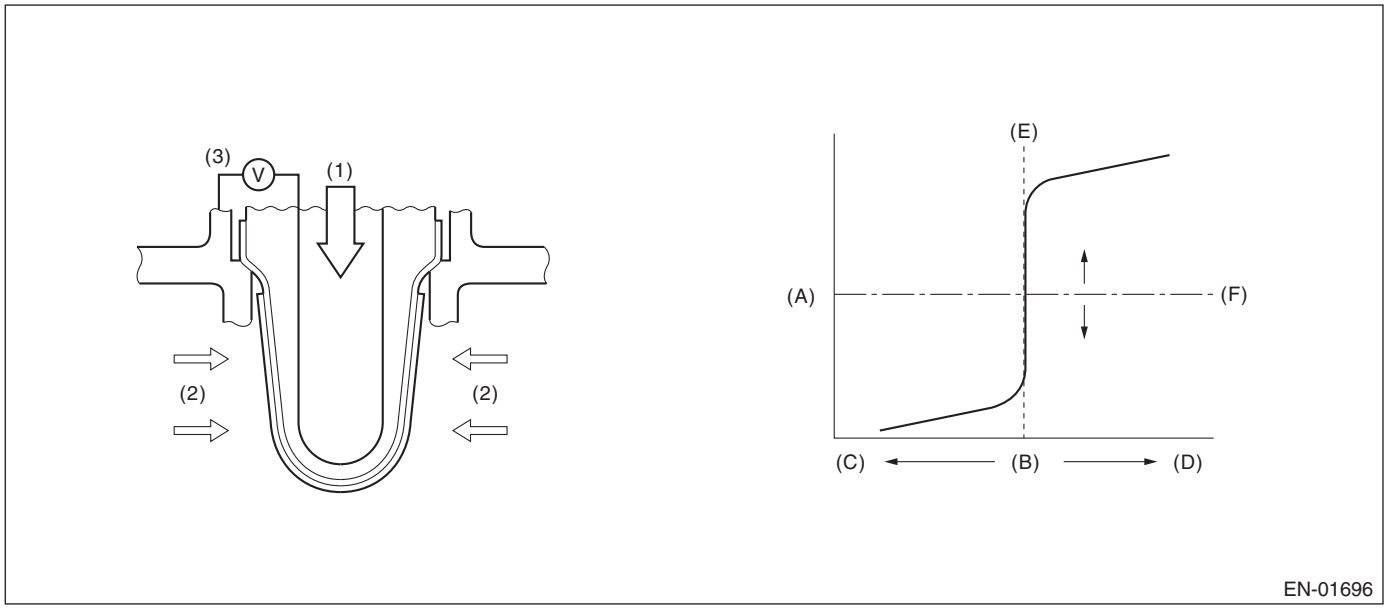

(A)	Electromotive force	(B)	Air fuel ratio	(C)	Rich
(D)	Lean	(E)	Theoretical air fuel ratio	(F)	Comparative voltage
(1)	Atmosphere	(2)	Exhaust gas	(3)	Electromotive force

3. ENABLE CONDITIONS

Secondary Parameters	Enable Conditions
Battery voltage	> 10.9 V
Rear oxygen sensor closed loop control	Operation
Engine speed when fuel cut starts	≥ 1300 rpm
Rear oxygen sensor voltage when fuel cut starts	≥ 0.55 V
Fuel cut time	≥ 5000 ms
Engine coolant temperature when fuel cut starts	≥ 75 °C (167 °F)
Estimated temperature of rear oxygen sensor element when fuel cut starts	≥ 500 °C (932 °F)

4. GENERAL DRIVING CYCLE

Perform diagnosis once during deceleration fuel cut from a constant and high speed driving, when rear oxygen sensor is warmed up sufficiently.

5. DIAGNOSTIC METHOD

Detect the trouble by calculating the time from the beginning of the fuel cut to the beginning of the rear oxygen sensor voltage starting to drop.

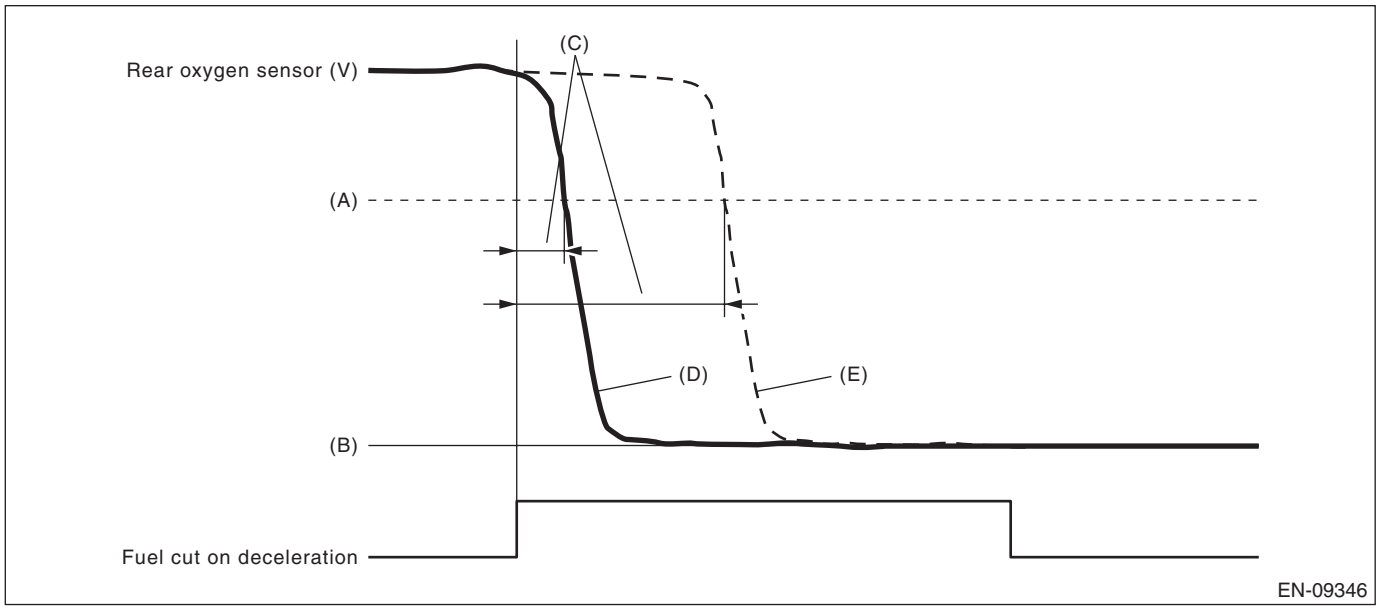

(A) 0.5 V
(B) 0 V
(C) Diagnostic parameter
(D) Normal
(E) Malfunction

• Abnormality Judgment

Judge as NG when the following conditions are established.

Judgment Value

Malfunction Criteria	Threshold Value
Time when rear oxygen sensor voltage changed to 0.5 V after the fuel cut started.	> 4000 ms

Time Needed for Diagnosis: 10 seconds
Malfunction Indicator Light Illumination: Illuminates when malfunction occurs in 2 continuous driving cycles.

• Normality Judgment

Judge as OK and clear the NG if the following conditions are established.

Judgment Value

Malfunction Criteria	Threshold Value
Time when rear oxygen sensor voltage changed to 0.5 V after the fuel cut started.	≤ 4000 ms

Time Needed for Diagnosis: 10 seconds

AK:DTC P013F O2 SENSOR DELAYED RESPONSE - LEAN TO RICH (BANK 1 SENSOR 2)

1. OUTLINE OF DIAGNOSIS

Detect the delayed response of rear oxygen sensor output for lean → rich.
After the deceleration fuel cut has completed, detect the trouble by calculating the time when the rear oxygen sensor output increases to the predetermined voltages.
Judge as NG when the response time is larger than the threshold value.

2. COMPONENT DESCRIPTION

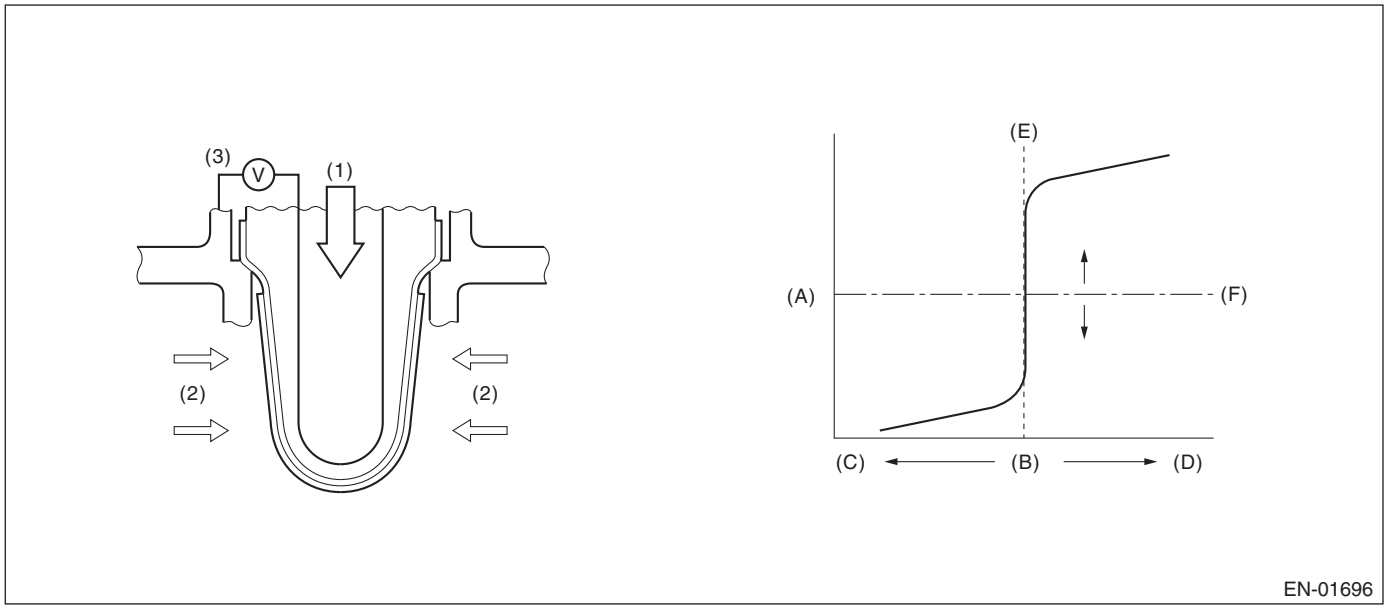

(A)	Electromotive force	(B)	Air fuel ratio	(C)	Rich
(D)	Lean	(E)	Theoretical air fuel ratio	(F)	Comparative voltage
(1)	Atmosphere	(2)	Exhaust gas	(3)	Electromotive force

3. ENABLE CONDITIONS

Secondary Parameters	Enable Conditions
Battery voltage	> 10.9 V
Rear oxygen sensor closed loop control	Operation
Engine speed	≥ 500 rpm
Rear oxygen sensor voltage when fuel cut has completed	< 0.15 V
Fuel cut time	≥ 5000 ms
Engine coolant temperature when fuel cut has completed	≥ 75 °C (167 °F)
Estimated element temperature of rear oxygen sensor when fuel cut has completed	≥ 500 °C (932 °F)

4. GENERAL DRIVING CYCLE

Perform diagnosis only once when recovering from the deceleration fuel cut continued for more than predetermined time with the rear oxygen sensor warmed up sufficiently.

5. DIAGNOSTIC METHOD

Detect the trouble by calculating the time from the completion of the fuel cut to the beginning of the rear oxygen sensor voltage starting to rise.

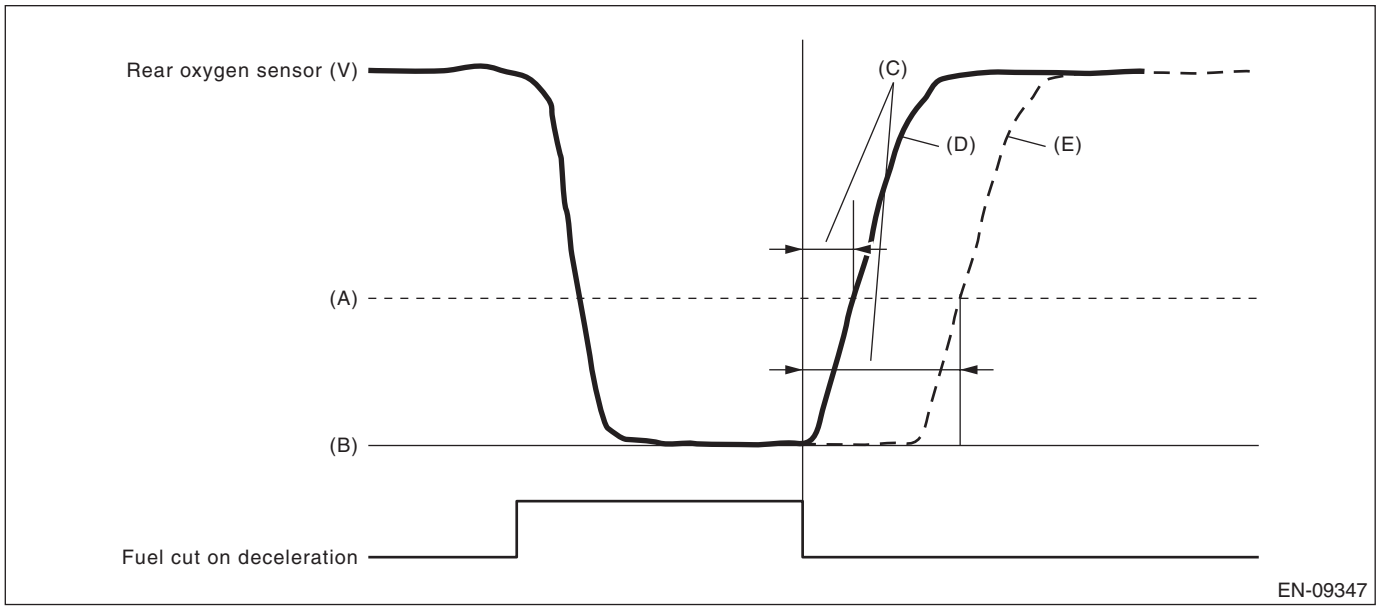

(A) 0.3 V
(B) 0 V
(C) Diagnostic parameter
(D) Normal
(E) Malfunction

• Abnormality Judgment

Judge as NG when the following conditions are established.

Judgment Value

Malfunction Criteria	Threshold Value
The number of times that the rear oxygen sensor voltage changed to 0.3 V after the fuel cut has completed (time counter)	> 3750 time(s)

Time Needed for Diagnosis: 10 seconds
Malfunction Indicator Light Illumination: Illuminates when malfunction occurs in 2 continuous driving cycles.

• Normality Judgment

Judge as OK and clear the NG if the following conditions are established.

Judgment Value

Malfunction Criteria	Threshold Value
The number of times that the rear oxygen sensor voltage changed to 0.3 V after the fuel cut has completed (time counter)	≤ 3750 time(s)

Time Needed for Diagnosis: 10 seconds

AL:DTC P0140 O2 SENSOR CIRCUIT NO ACTIVITY DETECTED (BANK1 SENSOR2)

1. OUTLINE OF DIAGNOSIS

Detect the rear oxygen sensor open or short circuit. Judge as NG when the rear oxygen sensor voltage can be determined to be abnormal considering conditions such as intake air amount, engine coolant temperature, main feedback control and deceleration fuel cut.

2. COMPONENT DESCRIPTION

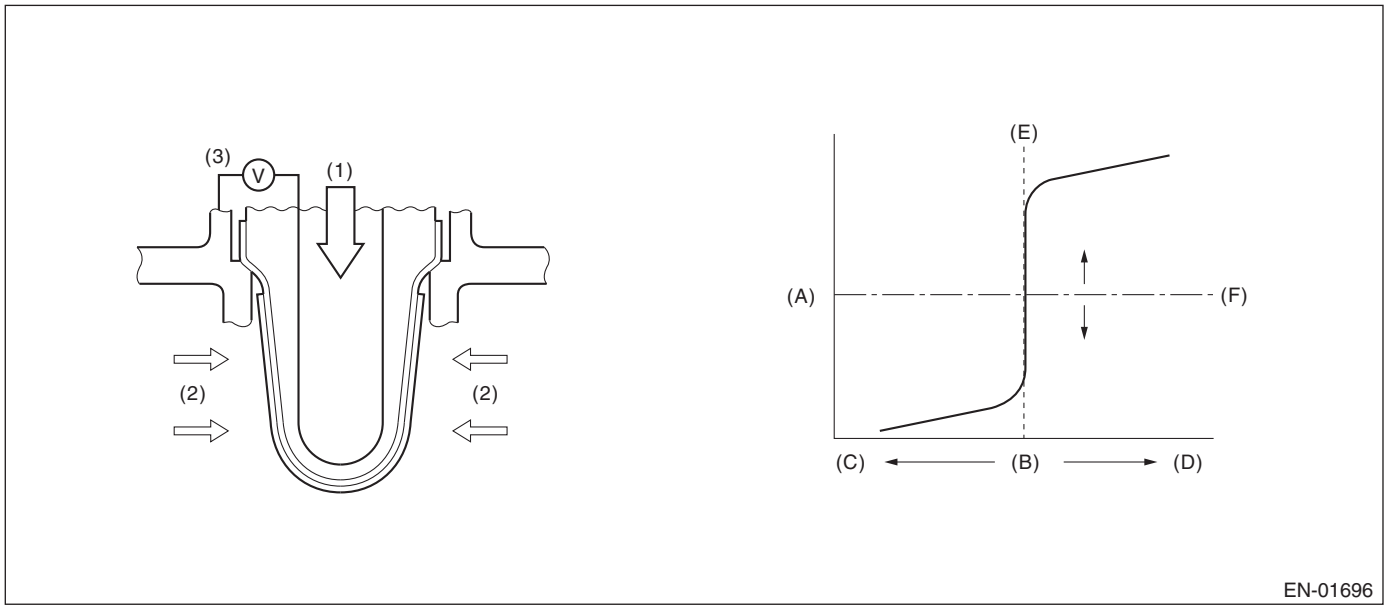

(A) Electromotive force
(B) Air fuel ratio
(C) Rich
(D) Lean
(E) Theoretical air fuel ratio
(F) Comparative voltage

(1) Atmosphere
(2) Exhaust gas
(3) Electromotive force

3. ENABLE CONDITION (USED ONLY FOR MALFUNCTION JUDGMENT)

Secondary Parameters	Enable Conditions
Closed loop control at the rear oxygen sensor	In operation
Target output voltage of rear oxygen sensor	≥ 0.55 V + 0.05 V
Amount of intake air	≥ 10 g/s (0.35 oz/s)
Engine coolant temperature	≥ 75 °C (167 °F)
Misfire detection every 200 rotations	< 65535 time(s)
Front oxygen (A/F) sensor compensation coefficient	Not in limit value
Battery voltage	≥ 10.9 V
Deceleration fuel cut of 5000 ms or more.	Experienced

4. GENERAL DRIVING CYCLE

Perform the diagnosis once after starting the engine.

5. DIAGNOSTIC METHOD

• Abnormality Judgment

If the duration of time while the following conditions are met is longer than the time indicated, judge as NG.

Judgment Value

Malfunction Criteria	Threshold Value
Minimum output voltage	> 0.15 V
or	
Maximum output voltage	< 0.55 V

Time Needed for Diagnosis: 200000 ms
Malfunction Indicator Light Illumination: Illuminates when malfunction occurs in 2 continuous driving cycles.

• Normality Judgment

Judge as OK and clear the NG if the following conditions are established.

Judgment Value

Malfunction Criteria	Threshold Value
Diagnosis of the rear oxygen sensor voltage low side	Incomplete
Minimum output voltage	≤ 0.15 V
Maximum output voltage	≥ 0.55 V

AM:DTC P0141 O2 SENSOR HEATER CIRCUIT (BANK1 SENSOR2)

1. OUTLINE OF DIAGNOSIS

Detect the malfunction of rear oxygen sensor heater.
While observing the engine condition, judge as NG if the rear oxygen sensor impedance is great.

2. COMPONENT DESCRIPTION

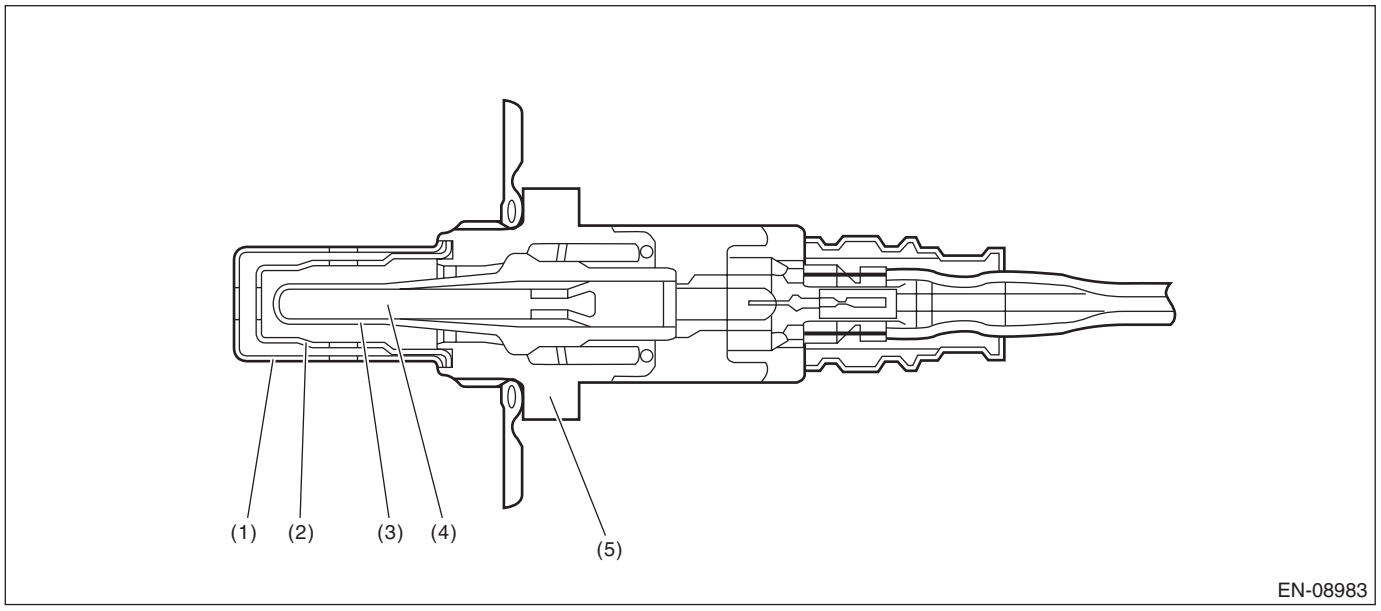

(1) Element cover (outer)
(2) Element cover (inner)
(3) Sensor element
(4) Ceramic heater
(5) Sensor housing

3. ENABLE CONDITIONS

Secondary Parameters	Enable Conditions
Battery voltage	≥ 10.9 V
Elapsed time after starting the engine	≥ 1000 ms
Engine coolant temperature	≥ 75 °C (167 °F)
A/F sensor element impedance	≤ 50 Ω
A/F sensor heater control duty	≤ 75 %
Rear oxygen sensor heater control duty	< 70 %

4. GENERAL DRIVING CYCLE

Perform the diagnosis continuously after 1000 ms seconds or more have passed since the engine started.

5. DIAGNOSTIC METHOD

• Abnormality Judgment

If the duration of time while the following conditions are met is longer than the time indicated, judge as NG.

Judgment Value

Malfunction Criteria	Threshold Value
Output terminal for heater characteristics failure detection	Low

Time Needed for Diagnosis: 4 ms × 2500 time(s)
Malfunction Indicator Light Illumination: Illuminates when malfunction occurs in 2 continuous driving cycles.

• Normality Judgment

Judge as OK and clear the NG if the continuous time while the following conditions are established is more than the predetermined time.

Judgment Value

Malfunction Criteria	Threshold Value
Output terminal for heater characteristics failure detection	High

Time Needed for Diagnosis: 4 ms × 2500 time(s)

AN:DTC P014C O2 SENSOR SLOW RESPONSE - RICH TO LEAN (BANK 1 SENSOR 1)

1. OUTLINE OF DIAGNOSIS

Detect the slow response of front oxygen (A/F) sensor.
For diagnosis, detect the trouble by processing the λ waveform in normal driving without forcibly changing the target air fuel ratio.

2. COMPONENT DESCRIPTION

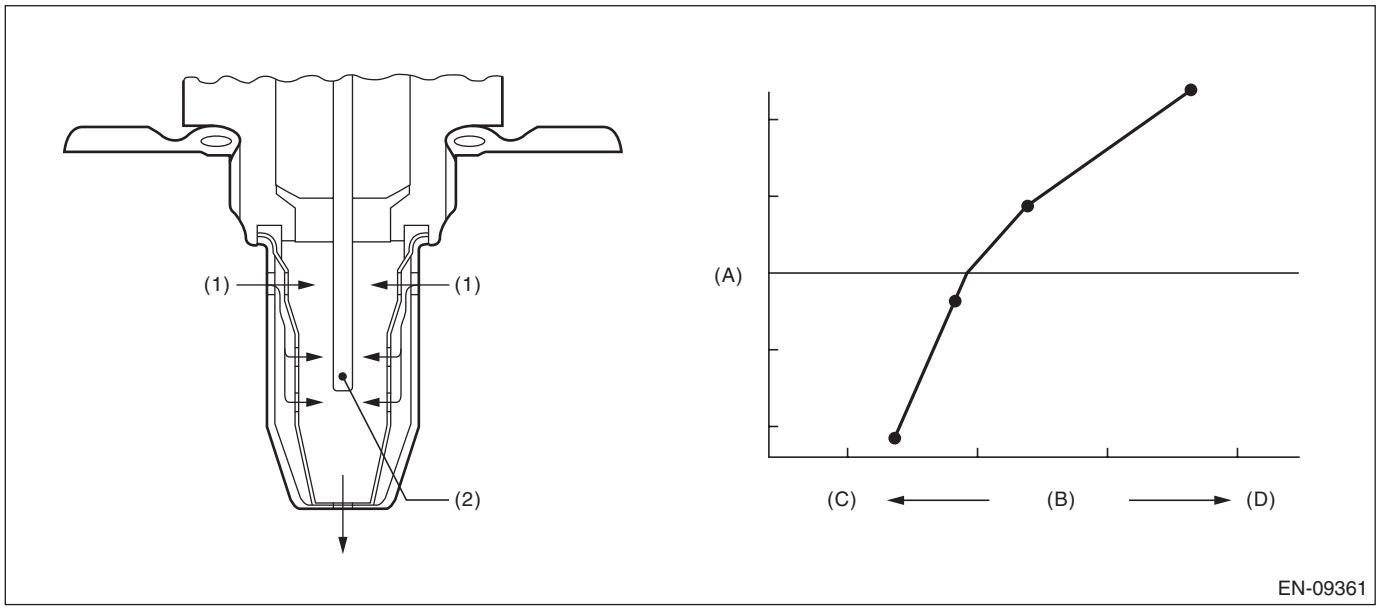

(A) Electromotive force (B) Air fuel ratio (C) Lean
(D) Rich

(1) Exhaust gas (2) ZrO_2

3. ENABLE CONDITIONS

Secondary Parameters	Enable Conditions
Battery voltage	> 10.9 V
Closed loop control with main feedback	Operation
Front oxygen (A/F) sensor impedance	≥ 0 Ω and < 50 Ω
Elapsed time after starting the engine	≥ 40000 ms
Engine coolant temperature	≥ 0 °C (32 °F)
Engine speed	≥ 1000 rpm
Amount of intake air	≥ 10 g/s (0.35 oz/s)
After fuel cut	≥ 3000 ms
Learning value of EVAP conc. during purge	< 0.2
Total time of operating canister purge	≥ 20 s
Engine load change	< 0.02 g/rev (0 oz/rev)
Idle switch	OFF

4. GENERAL DRIVING CYCLE

Perform diagnosis only once in a city driving including normal acceleration and deceleration.

5. DIAGNOSTIC METHOD 1

Detect the malfunction by checking “Cumulative value of time when λ changes from lean → rich” in comparison to “Time during which diagnosis is in progress”.

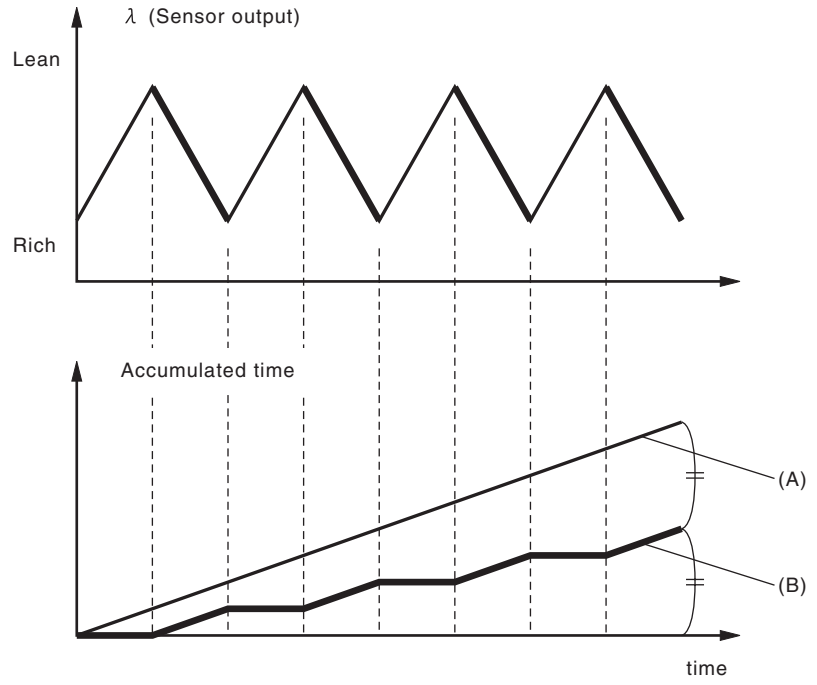

(A) Time during which diagnosis is in progress
(B) Cumulative value of time when λ changes from lean → rich

• Abnormality Judgment

Judge as NG when the following conditions are established.

Judgment Value

Malfunction Criteria	Threshold Value	DTC
(Cumulative value of time when λ changes from lean → rich) / (Time during which diagnosis is in progress)	< 0.39	P014C
	> 0.63	P014D

Time Needed for Diagnosis: 90 seconds
Malfunction Indicator Light Illumination: Illuminates when malfunction occurs in 2 continuous driving cycles.

• Normality Judgment

Judge as OK and clear the NG if the following conditions are established.

Judgment Value

Malfunction Criteria	Threshold Value	DTC
(Cumulative value of time when λ changes from lean → rich) / (Time during which diagnosis is in progress)	≥ 0.39	P014C
	≤ 0.63	P014D

Time Needed for Diagnosis: 90 seconds

6. DIAGNOSTIC METHOD 2

Detect the malfunction by the cumulative value obtained from the amount of variation in λ change.

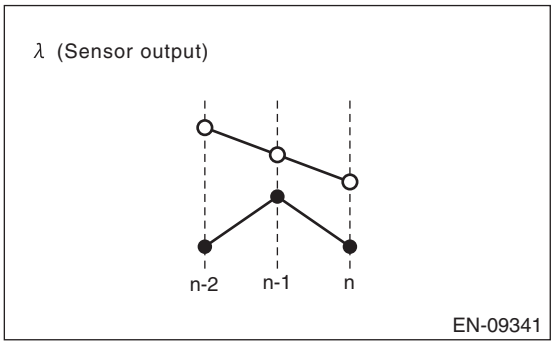

- **Abnormality Judgment**

Judge as NG when the following conditions are established.

Judgment Value

Malfunction Criteria	Threshold Value	DTC
Cumulative value obtained from the amount of variation in λ change Σ |(lambda(n) – lambda(n-1)) – (lambda(n-1) – lambda(n-2))|	< Value from Map	P014C and P014D

Map

Cumulative value obtained from the amount of variation in λ Σ |lambda(n) – lambda(n-1)|	0	2.5
Cumulative value obtained from the amount of variation in λ change	0.3	1.2

Time Needed for Diagnosis: 90 seconds
Malfunction Indicator Light Illumination: Illuminates when malfunction occurs in 2 continuous driving cycles.

- **Normality Judgment**

Judge as OK and clear the NG if the following conditions are established.

Judgment Value

Malfunction Criteria	Threshold Value	DTC
Cumulative value obtained from the amount of variation in λ change Σ |(lambda(n) – lambda(n-1)) – (lambda(n-1) – lambda(n-2))|	≥ Value from Map	P014C and P014D

Time Needed for Diagnosis: 90 seconds

AO:DTC P014D O2 SENSOR SLOW RESPONSE - LEAN TO RICH (BANK 1 SENSOR 1)

1. OUTLINE OF DIAGNOSIS

NOTE:
For the detection standard, refer to DTC P014C. <Ref. to GD(H4SO)-84, DTC P014C O2 SENSOR SLOW RESPONSE - RICH TO LEAN (BANK 1 SENSOR 1), Diagnostic Trouble Code (DTC) Detecting Criteria.>

AP:DTC P015A O2 SENSOR DELAYED RESPONSE - RICH TO LEAN (BANK 1 SENSOR 1)

1. OUTLINE OF DIAGNOSIS

Detect the slow response of front oxygen (A/F) sensor.
For diagnosis, detect the trouble by processing the λ waveform in normal driving without forcibly changing the target air fuel ratio.

2. COMPONENT DESCRIPTION

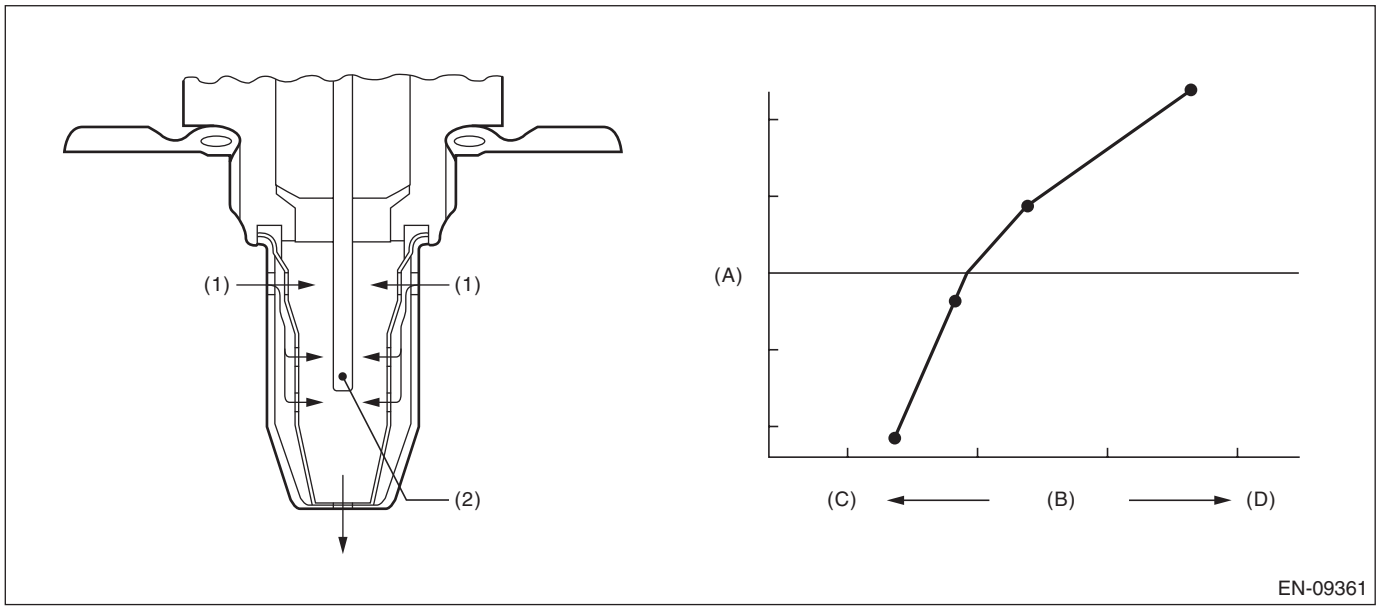

(A) Electromotive force
(B) Air fuel ratio
(C) Lean
(D) Rich

(1) Exhaust gas
(2) ZrO_2

3. ENABLE CONDITIONS

Secondary Parameters	Enable Conditions
Battery voltage	> 10.9 V
Closed loop control with main feedback	Operation
Front oxygen (A/F) sensor impedance	≥ 0 Ω and < 50 Ω
Elapsed time after starting the engine	≥ 40000 ms
Engine coolant temperature	≥ 0 °C (32 °F)
Engine speed	≥ 1000 rpm
Amount of intake air	≥ 10 g/s (0.35 oz/s)
After fuel cut	≥ 3000 ms
Learning value of EVAP conc. during purge	< 0.2
Total time of operating canister purge	≥ 20 s
Engine load change	< 0.02 g/rev (0 oz/rev)
Idle switch	OFF

4. GENERAL DRIVING CYCLE

Perform diagnosis only once in a city driving including normal acceleration and deceleration.

5. DIAGNOSTIC METHOD 1

Detect the malfunction depending on the average value of time necessary for λ to inverse the air fuel ratio from “Lean → Rich → Lean” to “Rich → Lean → Rich”.

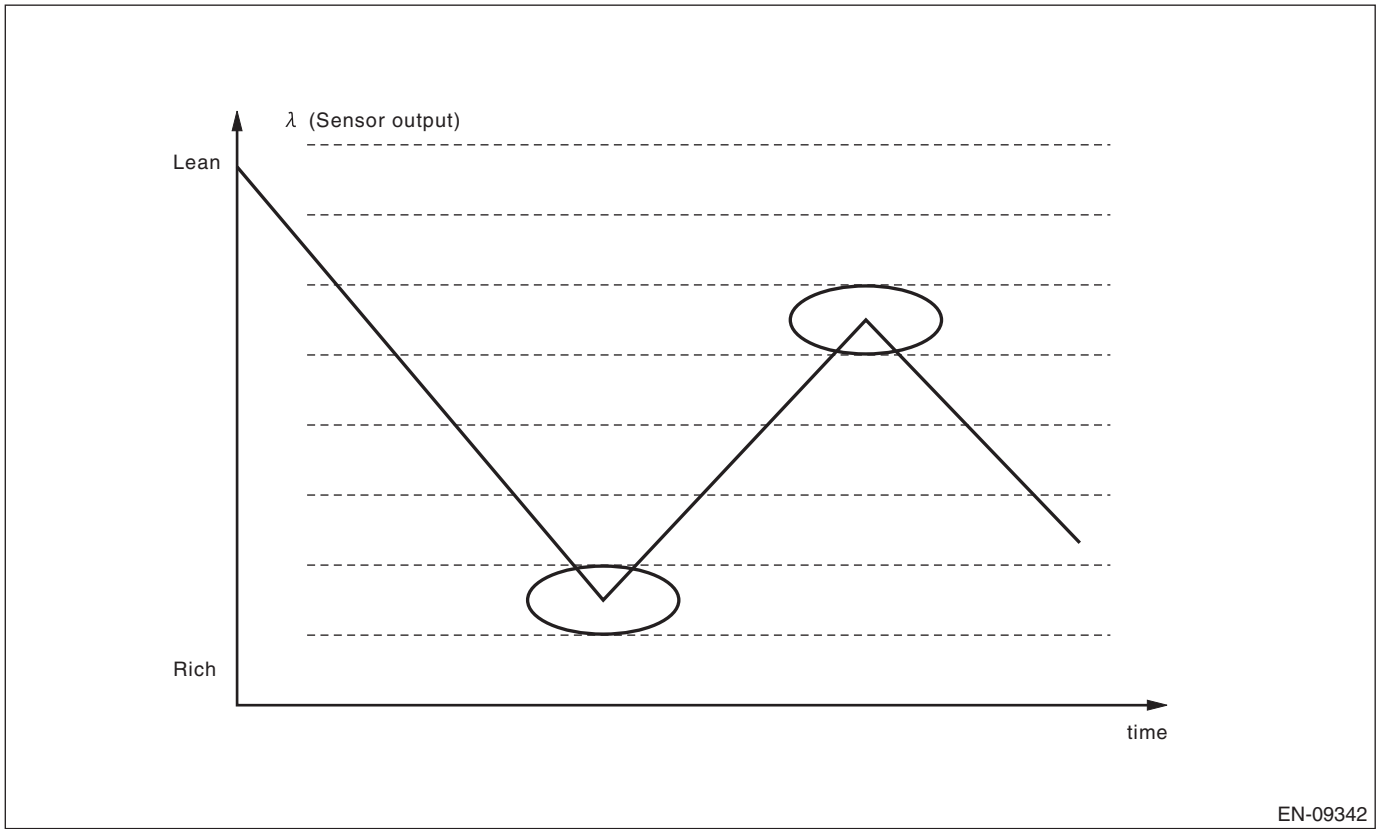

- **Abnormality Judgment**

Judge as NG when the following conditions are established.

Judgment Value

Malfunction Criteria	Threshold Value	DTC
Average value of time necessary for λ to inverse the air fuel ratio to Lean → Rich → Lean.	> 300 ms	P015A
Average value of time necessary for λ to inverse the air fuel ratio to Rich → Lean → Rich.	> 400 ms	P015B

Time Needed for Diagnosis: 50 times of inversion
Malfunction Indicator Light Illumination: Illuminates when malfunction occurs in 2 continuous driving cycles.

- **Normality Judgment**

Judge as OK and clear the NG if the following conditions are established.

Judgment Value

Malfunction Criteria	Threshold Value	DTC
Average value of time necessary for λ to inverse the air fuel ratio to Lean → Rich → Lean.	≤ 300 ms	P015A
Average value of time necessary for λ to inverse the air fuel ratio to Rich → Lean → Rich.	≤ 400 ms	P015B

Time Needed for Diagnosis: 50 times of inversion

6. DIAGNOSTIC METHOD 2

Detect the malfunction by calculating the average amplitude of λ.

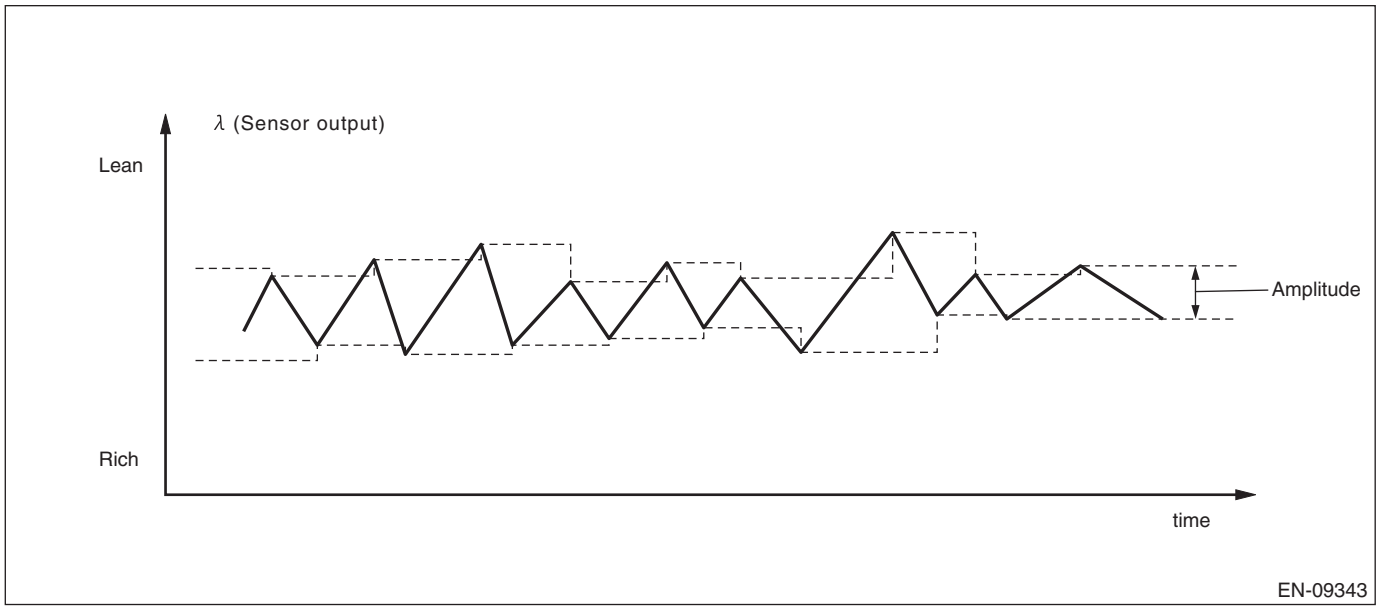

- **Abnormality Judgment**

Judge as NG when the following conditions are established.

Judgment Value

Malfunction Criteria	Threshold Value	DTC
Average value for λ amplitude	> 0.055	P015A and P015B

Time Needed for Diagnosis: 60 seconds
Malfunction Indicator Light Illumination: Illuminates when malfunction occurs in 2 continuous driving cycles.

- **Normality Judgment**

Judge as OK and clear the NG if the following conditions are established.

Judgment Value

Malfunction Criteria	Threshold Value	DTC
Average value for λ amplitude	≤ 0.055	P015A and P015B

Time Needed for Diagnosis: 60 seconds

AQ:DTC P015B O2 SENSOR DELAYED RESPONSE - LEAN TO RICH (BANK 1 SENSOR 1)

1. OUTLINE OF DIAGNOSIS

NOTE:
For the detection standard, refer to DTC P015A. <Ref. to GD(H4SO)-87, DTC P015A O2 SENSOR DELAYED RESPONSE - RICH TO LEAN (BANK 1 SENSOR 1), Diagnostic Trouble Code (DTC) Detecting Criteria.>

AR:DTC P0171 SYSTEM TOO LEAN (BANK 1)

1. OUTLINE OF DIAGNOSIS

Detect fuel system malfunction by the amount of main feedback control.

Diagnostic method

Fuel system is diagnosed by comparing the target air fuel ratio calculated by ECM with the actual air fuel ratio measured by sensor.

2. ENABLE CONDITION

Secondary Parameters	Enable Conditions
A/F main learning system	In operation
Engine coolant temperature	≥ 75 °C (167 °F)
Engine load change	< 0.02 g/rev (0 oz/rev)
Engine load	≥ Value of Map 1

Map 1

Engine speed (rpm)	Idling	650	1000	1500	2000	2500	3000	3500	4000	4500
Measured value (g (oz)/rev)	na	0.208 (0.01)	0.201 (0.01)	0.185 (0.01)	0.183 (0.01)	0.193 (0.01)	0.206 (0.01)	0.206 (0.01)	0.225 (0.01)	0.245 (0.01)

3. GENERAL DRIVING CYCLE

Perform the diagnosis continuously at idling or at a constant speed after warming up the engine.

4. DIAGNOSTIC METHOD

• Abnormality Judgment

Compare the diagnostic value (fsobd) with the threshold value, and if a condition meeting the malfunction criteria below continues for 10 s × 5 time(s) or more, judge that there is a fault in the fuel system.

Judgment Value

Malfunction Criteria	Threshold Value
fsobd = (sglmd – tglmda) + faf + flaf In this case: sglmd = measured lambda tglmda = target lambda faf = main feedback compensation coefficient (every 64 milliseconds) flaf = main feedback learning compensation coefficient	≥ Value from Map 2

Map 2

Amount of air (g (oz)/s)	0 (0)	3.2 (0.11)	6.4 (0.23)	9.6 (0.34)	12.8 (0.45)	16 (0.56)	19.2 (0.68)
fsobdL1 (%)	1.4	1.4	1.332	1.25	1.25	1.25	1.25

Time Needed for Diagnosis: 10 s × 5 time(s)
Malfunction Indicator Light Illumination: Illuminates when malfunction occurs in 2 continuous driving cycles.

• Normality Judgment

Judge as OK and clear the NG if the continuous time while the following conditions are established is more than the predetermined time.

Judgment Value

Malfunction Criteria	Threshold Value
fsobd = (sglmd – tglmda) + faf + flaf	< 1.15

Time Needed for Diagnosis: 10 s

AS:DTC P0172 SYSTEM TOO RICH (BANK 1)

1. OUTLINE OF DIAGNOSIS

Detect fuel system malfunction by the amount of main feedback control.

Diagnostic method

Fuel system is diagnosed by comparing the target air fuel ratio calculated by ECM with the actual air fuel ratio measured by sensor.

2. ENABLE CONDITION

Secondary Parameters	Enable Conditions
A/F main learning system	In operation
Engine coolant temperature	≥ 75 °C (167 °F)
Engine load change	≤ 0.02 g/rev (0 oz/rev)
Learning value of EVAP conc.	< 0.2
Cumulative time of canister purge after engine start	≥ 20 s
Continuous period after canister purge starting	≥ 5000 ms
Engine load	≥ Value of Map 1

Map 1

Engine speed (rpm)	Idling	650	1000	1500	2000	2500	3000	3500	4000	4500
Measured value (g (oz)/rev)	na	0.208 (0.01)	0.201 (0.01)	0.185 (0.01)	0.183 (0.01)	0.193 (0.01)	0.206 (0.01)	0.206 (0.01)	0.225 (0.01)	0.245 (0.01)

3. GENERAL DRIVING CYCLE

Perform the diagnosis continuously at idling or at a constant speed after warming up the engine.

4. DIAGNOSTIC METHOD

• Abnormality Judgment

Compare the diagnostic value (fsobd) with the threshold value, and if a condition meeting the malfunction criteria below continues for 10 s × 5 time(s) or more, judge that there is a fault in the fuel system.

Judgment Value

Malfunction Criteria	Threshold Value
fsobd = (sglmd – tglmda) + faf + flaf In this case: sglmd = measured lambda tglmda = target lambda faf = main feedback compensation coefficient (every 64 milliseconds) flaf = main feedback learning compensation coefficient	< Value of Map 2

Map 2

Amount of air (g (oz)/s)	0 (0)	3.2 (0.11)	6.4 (0.23)	9.6 (0.34)	12.8 (0.45)	16 (0.56)	19.2 (0.68)
fsobdL1 (%)	0.6	0.6	0.668	0.735	0.735	0.735	0.735

Time Needed for Diagnosis: 10 s × 5 time(s)
Malfunction Indicator Light Illumination: Illuminates when malfunction occurs in 2 continuous driving cycles.

• Normality Judgment

Judge as OK if the status that the criteria below are met continues for 10 seconds.

Judgment Value

Malfunction Criteria	Threshold Value
fsobd = (sglmd – tglmda) + faf + flaf	≥ 0.85

Time Needed for Diagnosis: 10 s

AT:DTC P0181 FUEL TEMPERATURE SENSOR “A” CIRCUIT RANGE/PERFORMANCE

1. OUTLINE OF DIAGNOSIS

Detect faults in the fuel temperature sensor output properties.
Diagnosis is performed in two methods (drift diagnosis and stuck diagnosis). If either is NG, judge as NG. If both are OK, Judge as OK and clear the NG.

Drift Diagnosis

Normally fuel temperature is lower than engine coolant temperature. When the fuel temperature becomes higher than the engine coolant temperature, the range is considered to be shifted, and judged as NG.

Stuck Diagnosis

As the engine warms up (cumulative amount of intake air after starting is large), if the fuel temperature which should rise does not, determine as being stuck and NG.

2. COMPONENT DESCRIPTION

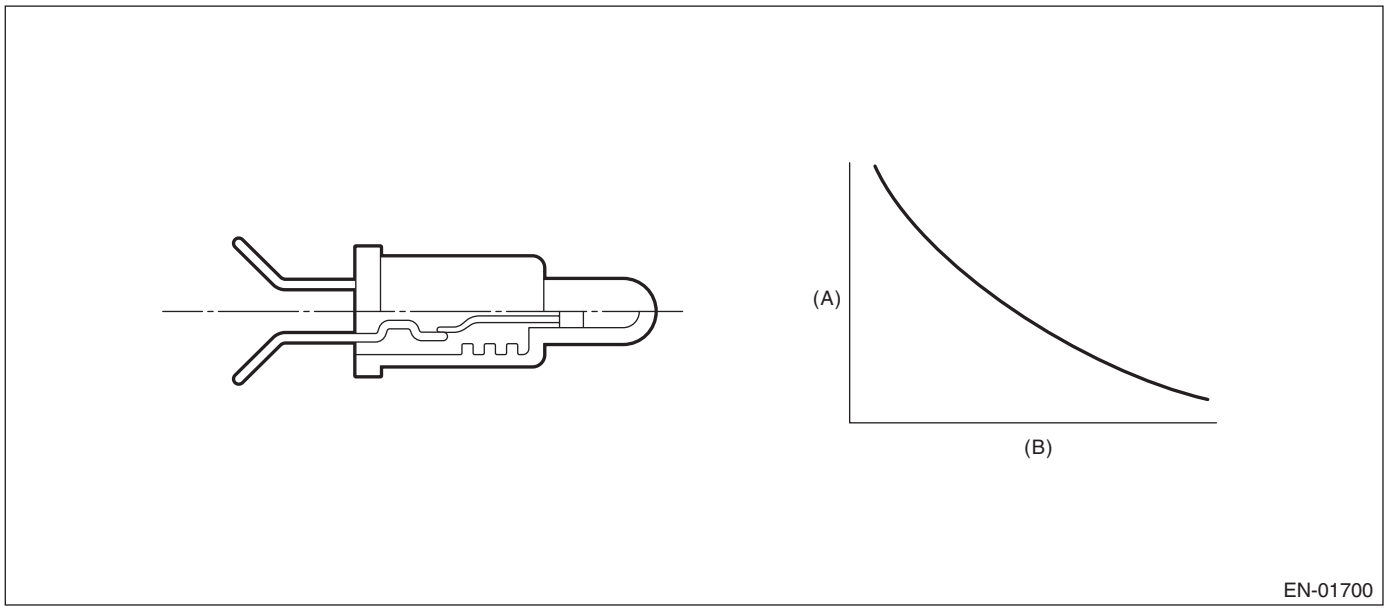

(A) Resistance value (Ω) (B) Fuel temperature °C (°F)

3. ENABLE CONDITION

DRIFT DIAGNOSIS

Secondary Parameters	Enable Conditions
None	

4. GENERAL DRIVING CYCLE

Always perform the diagnosis continuously.

5. DIAGNOSTIC METHOD

• Abnormality Judgment

If the duration of time while the following conditions are met is longer than the time indicated, judge as NG.

Judgment Value

Malfunction Criteria	Threshold Value
Fuel level	≥ 9.6 ℓ (2.54 US gal, 2.11 Imp gal)
Elapsed time after starting the engine	≥ 20 s
Engine coolant temperature – Engine coolant temperature at engine start	> 10 °C (18°F)
Fuel temperature – Engine coolant temperature	≥ 10 °C (18°F)
Battery voltage	≥ 10.9 V

Time Needed for Diagnosis: 120 s
Malfunction Indicator Light Illumination: Illuminates when malfunction occurs in 2 continuous driving cycles.

• Normality Judgment

Judge as OK and clear the NG if the continuous time while the following conditions are established is more than the predetermined time.

Judgment Value

Malfunction Criteria	Threshold Value
Fuel level	≥ 9.6 ℓ (2.54 US gal, 2.11 Imp gal)
Elapsed time after starting the engine	≥ 20 s
Engine coolant temperature – Engine coolant temperature at engine start	> 10 °C (18°F)
Fuel temperature – Engine coolant temperature	< 10 °C (18°F)
Battery voltage	≥ 10.9 V
Engine coolant temperature	< 75 °C (167 °F)

Time Needed for Diagnosis: Less than 1 second

6. ENABLE CONDITION

Stuck Diagnosis

Secondary Parameters	Enable Conditions
Elapsed time after starting the engine	≥ 20000 ms
Battery voltage	≥ 10.9 V

7. GENERAL DRIVING CYCLE

Perform the diagnosis continuously 20 seconds after starting engine.

8. DIAGNOSTIC METHOD

- **Abnormality Judgment**

Judge as NG when the following conditions are established.

Judgment Value

Malfunction Criteria	Threshold Value
Accumulated amount of intake air	≥ 551043 g (19435.29 oz)
Fuel temperature difference between Max. and Min.	< 2 °C (3.6°F)

Time Needed for Diagnosis: Less than 1 second
Malfunction Indicator Light Illumination: Illuminates when malfunction occurs in 2 continuous driving cycles.

- **Normality Judgment**

Judge as OK and clear the NG if the following conditions are established.

Judgment Value

Malfunction Criteria	Threshold Value
Fuel temperature difference between Max. and Min.	≥ 2 °C (3.6°F)

Time Needed for Diagnosis: Less than 1 second

AU:DTC P0182 FUEL TEMPERATURE SENSOR “A” CIRCUIT LOW INPUT

1. OUTLINE OF DIAGNOSIS

Detect the open or short circuit of fuel temperature sensor.
Judge as NG if out of specification.

2. COMPONENT DESCRIPTION

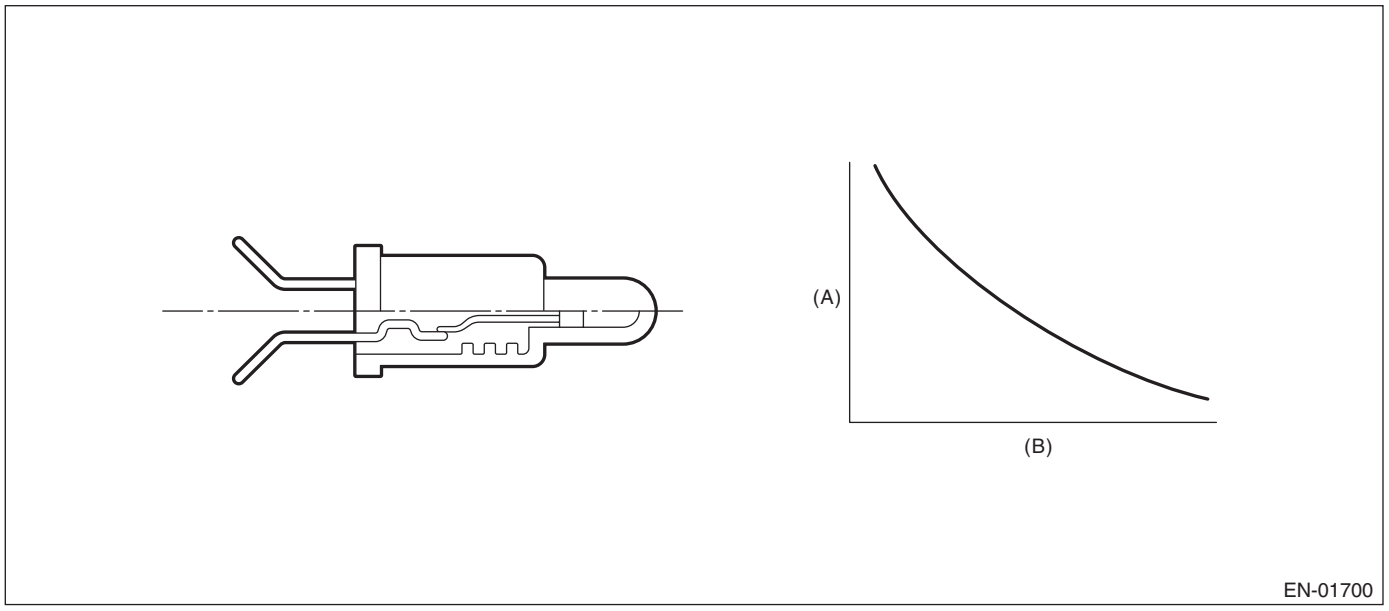

(A) Resistance value (Ω) (B) Fuel temperature °C (°F)

3. ENABLE CONDITION

Secondary Parameters	Enable Conditions
None	

4. GENERAL DRIVING CYCLE

Always perform the diagnosis continuously.

5. DIAGNOSTIC METHOD

- **Abnormality Judgment**

If the duration of time while the following conditions are met is longer than the time indicated, judge as NG.

Judgment Value

Malfunction Criteria	Threshold Value
Output voltage	< 0.748 V
Battery voltage	≥ 10.9 V

Time Needed for Diagnosis: 2500 ms
Malfunction Indicator Light Illumination: Illuminates as soon as a malfunction occurs.

- **Normality Judgment**

Judge as OK and clear the NG if the continuous time while the following conditions are established is more than the predetermined time.

Judgment Value

Malfunction Criteria	Threshold Value
Output voltage	≥ 0.748 V
Battery voltage	≥ 10.9 V

Time Needed for Diagnosis: Less than 1 second

AV:DTC P0183 FUEL TEMPERATURE SENSOR “A” CIRCUIT HIGH INPUT

1. OUTLINE OF DIAGNOSIS

Detect the open or short circuit of fuel temperature sensor.
Judge as NG if out of specification.

2. COMPONENT DESCRIPTION

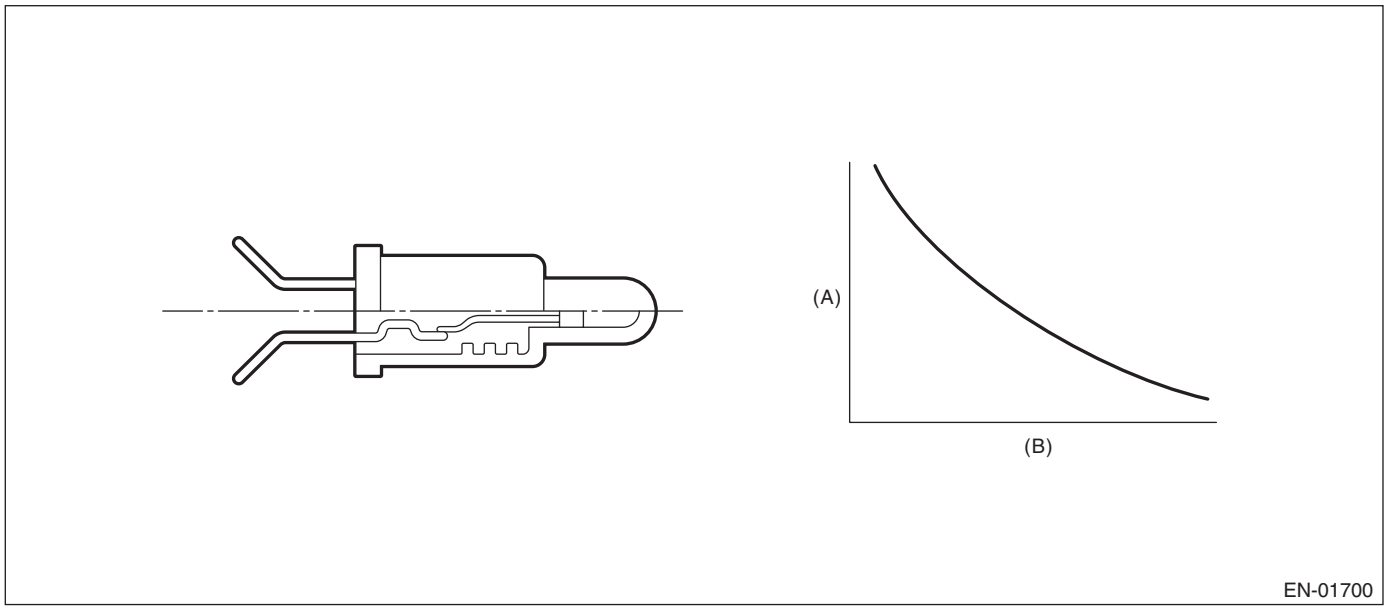

(A) Resistance value (Ω) (B) Fuel temperature °C (°F)

3. ENABLE CONDITION

Secondary Parameters	Enable Conditions
None	

4. GENERAL DRIVING CYCLE

Always perform the diagnosis continuously.

5. DIAGNOSTIC METHOD

- **Abnormality Judgment**

If the duration of time while the following conditions are met is longer than the time indicated, judge as NG.

Judgment Value

Malfunction Criteria	Threshold Value
Output voltage	≥ 4.714 V
Battery voltage	≥ 10.9 V

Time Needed for Diagnosis: 2500 ms
Malfunction Indicator Light Illumination: Illuminates as soon as a malfunction occurs.

- **Normality Judgment**

Judge as OK and clear the NG if the continuous time while the following conditions are established is more than the predetermined time.

Judgment Value

Malfunction Criteria	Threshold Value
Output voltage	< 4.714 V
Battery voltage	≥ 10.9 V

Time Needed for Diagnosis: Less than 1 second

AW:DTC P0196 ENGINE OIL TEMPERATURE SENSOR CIRCUIT RANGE/PERFORMANCE

1. OUTLINE OF DIAGNOSIS

Detect for abnormal values in the oil temperature sensor output properties.
Judge as NG when the oil temperature does not rise even though the engine is running under a condition where it should rise.

2. ENABLE CONDITION

Secondary Parameters	Enable Conditions
Battery voltage	≥ 10.9 V
Engine speed	≥ Value from Map

Map

Engine coolant temperature °C (°F)	–40 (–40)	–30 (–22)	–20 (–4)	–10 (14)	0 (32)	10 (50)	20 (68)	30 (86)
Engine speed rpm	500	500	500	500	500	500	500	500

Engine coolant temperature °C (°F)	40 (104)	50 (122)	60 (140)	70 (158)	80 (176)	90 (194)	100 (212)	110 (230)
Engine speed rpm	500	500	500	500	500	500	500	500

3. GENERAL DRIVING CYCLE

Perform the diagnosis continuously after starting the engine.

4. DIAGNOSTIC METHOD

• Abnormality Judgment

Judge as NG when the following conditions are established.

Judgment Value

Malfunction Criteria	Threshold Value
Engine oil temperature After engine start oil temperature sensor characteristic diagnosis timer.	< 15 °C (59 °F) ≥ Judgment value for after engine start oil temperature sensor characteristic diagnosis timer

After engine start oil temperature sensor characteristic diagnosis timer (timer for diagnosis).
a. Timer stop at fuel cut
b. During the driving conditions except a) above, timer counts up as follows.
64 ms + TOILCNT ms (when at 64 ms)
Where, TOILCNT is determined as follows,
TOILCNT = 0 at idle switch ON
For TOILCNT at Idle switch off, refer to the following table.

		Vehicle speed km/h (MPH)							
		0 (0)	8 (5)	16 (9.9)	24 (14.9)	32 (19.9)	40 (24.9)	48 (29.8)	56 (34.8)
Temperature °C (°F)	–30 (–22)	64 ms	73.2 ms	83.9 ms	96.3 ms	113.2 ms	133.9 ms	160.2 ms	194.6 ms
	–20 (–4)	64 ms	73.3 ms	84 ms	96.6 ms	113.7 ms	135 ms	162 ms	197.4 ms
	–10 (14)	64 ms	73.4 ms	84.2 ms	96.9 ms	114.5 ms	136.4 ms	164.4 ms	201.5 ms
	0 (32)	64 ms	73.5 ms	84.5 ms	97.4 ms	115.6 ms	138.5 ms	168 ms	207.6 ms
	10 (50)	102.2 ms	114.8 ms	129.4 ms	146.7 ms	171.7 ms	203.4 ms	245.1 ms	302.1 ms

After engine start oil temperature characteristic diagnosis timer judgment value (t).
$t = 1882940 \text{ ms} - 43302 \text{ ms} \times Ti$ ($t \geq 2400000$)
Ti = The lowest coolant temperature after starting the engine.
Time Needed for Diagnosis: Less than 1 second
Malfunction Indicator Light Illumination: Illuminates when malfunction occurs in 2 continuous driving cycles.

• Normality Judgment

Judge as OK and clear the NG if the following conditions are established.

Judgment Value

Malfunction Criteria	Threshold Value
Engine oil temperature	≥ 15 °C (59 °F)

Time Needed for Diagnosis: Less than 1 second

AX:DTC P0197 ENGINE OIL TEMPERATURE SENSOR LOW

1. OUTLINE OF DIAGNOSIS

Detect the open or short circuit of the oil temperature sensor.
Judge as NG when outside of the judgment value.

2. ENABLE CONDITION

Secondary Parameters	Enable Conditions
None	

3. GENERAL DRIVING CYCLE

Always perform the diagnosis continuously.

4. DIAGNOSTIC METHOD

- **Abnormality Judgment**

If the duration of time while the following conditions are met is longer than the time indicated, judge as NG.

Judgment Value

Malfunction Criteria	Threshold Value
Output voltage	< 0.197 V

Time Needed for Diagnosis: 500 ms
Malfunction Indicator Light Illumination: Illuminates as soon as a malfunction occurs.

- **Normality Judgment**

Judge as OK and clear the NG if the continuous time while the following conditions are established is more than the predetermined time.

Judgment Value

Malfunction Criteria	Threshold Value
Output voltage	≥ 0.197 V

Time Needed for Diagnosis: Less than 1 second

AY:DTC P0198 ENGINE OIL TEMPERATURE SENSOR HIGH

1. OUTLINE OF DIAGNOSIS

Detect the open or short circuit of the oil temperature sensor.
Judge as NG when outside of the judgment value.

2. ENABLE CONDITION

Secondary Parameters	Enable Conditions
None	

3. GENERAL DRIVING CYCLE

Always perform the diagnosis continuously.

4. DIAGNOSTIC METHOD

- **Abnormality Judgment**

If the duration of time while the following conditions are met is longer than the time indicated, judge as NG.

Judgment Value

Malfunction Criteria	Threshold Value
Output voltage	≥ 4.702 V

Time Needed for Diagnosis: 500 ms
Malfunction Indicator Light Illumination: Illuminates as soon as a malfunction occurs.

- **Normality Judgment**

Judge as OK and clear the NG if the continuous time while the following conditions are established is more than the predetermined time.

Judgment Value

Malfunction Criteria	Threshold Value
Output voltage	< 4.702 V

Time Needed for Diagnosis: Less than 1 second

AZ:DTC P0201 INJECTOR #1

1. OUTLINE OF DIAGNOSIS

Based on the self-diagnostic result of the injector driving IC, judge the injector driving circuit as normal or abnormal.
Injector driving IC detects the status of “fuel remains injected” or “fuel is not injected” as a malfunction.

2. ENABLE CONDITIONS

Secondary Parameters	Enable Conditions
Battery voltage	≥ 10.9 V
Elapsed time after starting the engine	> 1 s
Engine speed	> 500 rpm
Injection time	≥ 1000 µs and < 120000000/engine speed – 1000 µs
Injection status	Not during fuel cut and Not during asynchronous injection controlled by crankshaft position sensor

3. GENERAL DRIVING CYCLE

Always perform the diagnosis continuously.

4. DIAGNOSTIC METHOD

- **Abnormality Judgment**

Judge as NG when the following conditions are established.

Judgment Value

Malfunction Criteria	Threshold Value
Injector driving IC information	Malfunction

Time Needed for Diagnosis: 2500 ms
Malfunction Indicator Light Illumination: Illuminates as soon as a malfunction occurs.

- **Normality Judgment**

Judge as OK and clear the NG if the following conditions are established.

Judgment Value

Malfunction Criteria	Threshold Value
Injector driving IC information	Normal

Time Needed for Diagnosis: Less than 1 second

BA:DTC P0202 INJECTOR #2

1. OUTLINE OF DIAGNOSIS

NOTE:
For the detection standard, refer to DTC P0201. <Ref. to GD(H4SO)-105, DTC P0201 INJECTOR #1, Diagnostic Trouble Code (DTC) Detecting Criteria.>

BB:DTC P0203 INJECTOR #3

1. OUTLINE OF DIAGNOSIS

NOTE:
For the detection standard, refer to DTC P0201. <Ref. to GD(H4SO)-105, DTC P0201 INJECTOR #1, Diagnostic Trouble Code (DTC) Detecting Criteria.>

BC:DTC P0204 INJECTOR #4

1. OUTLINE OF DIAGNOSIS

NOTE:
For the detection standard, refer to DTC P0201. <Ref. to GD(H4SO)-105, DTC P0201 INJECTOR #1, Diagnostic Trouble Code (DTC) Detecting Criteria.>

BD:DTC P0222 THROTTLE/PEDAL POSITION SENSOR/SWITCH “B” CIRCUIT LOW

1. OUTLINE OF DIAGNOSIS

Detect the open or short circuit of throttle position sensor 2.
Judge as NG if out of specification.

2. COMPONENT DESCRIPTION

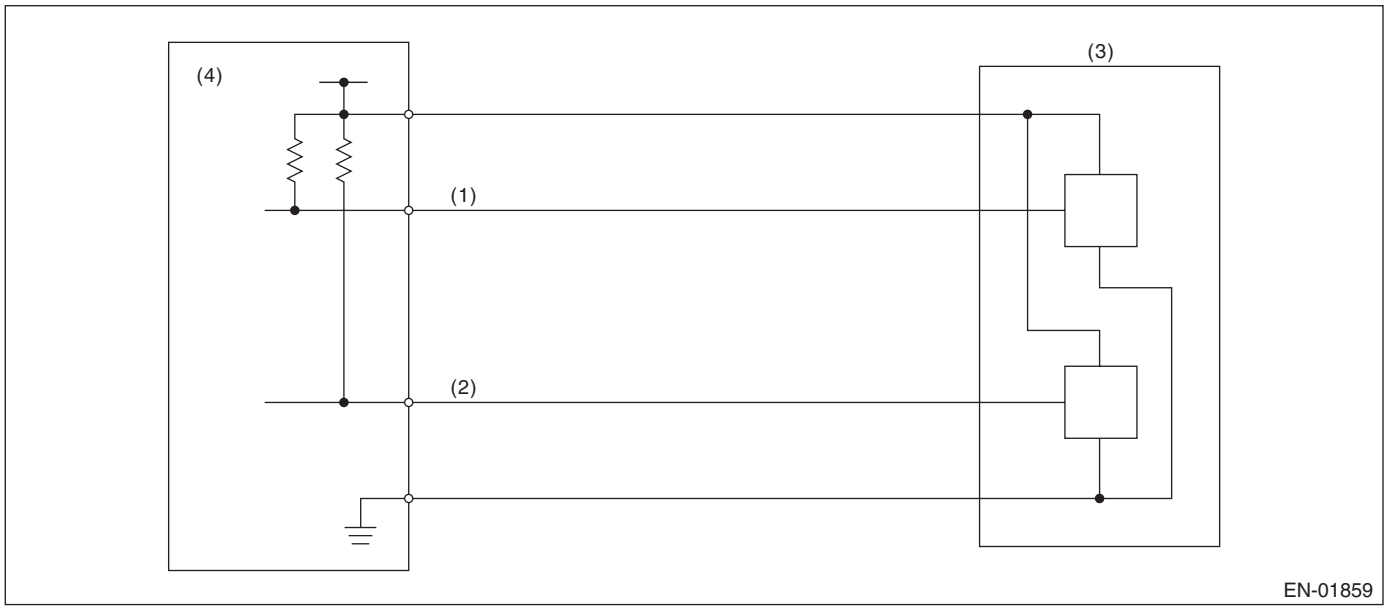

(1) Throttle position sensor 1 signal
(2) Throttle position sensor 2 signal
(3) Throttle position sensor
(4) Engine control module (ECM)

3. ENABLE CONDITION

Secondary Parameters	Enable Conditions
Ignition switch	ON
Battery voltage	≥ 6 V

4. GENERAL DRIVING CYCLE

Always perform the diagnosis continuously.

5. DIAGNOSTIC METHOD

- **Abnormality Judgment**

If the duration of time while the following conditions are met is longer than the time indicated, judge as NG.

Judgment Value

Malfunction Criteria	Threshold Value
Sensor 2 input voltage	≤ 1.07 V

Time Needed for Diagnosis: 24 ms
Malfunction Indicator Light Illumination: Illuminates as soon as a malfunction occurs.

- **Normality Judgment**

Judge as OK and clear the NG if the continuous time while the following conditions are established is more than the predetermined time.

Judgment Value

Malfunction Criteria	Threshold Value
Sensor 2 input voltage	> 1.07 V

Time Needed for Diagnosis: 24 ms

BE:DTC P0223 THROTTLE/PEDAL POSITION SENSOR/SWITCH “B” CIRCUIT HIGH

1. OUTLINE OF DIAGNOSIS

Detect the open or short circuit of throttle position sensor 2.
Judge as NG if out of specification.

2. COMPONENT DESCRIPTION

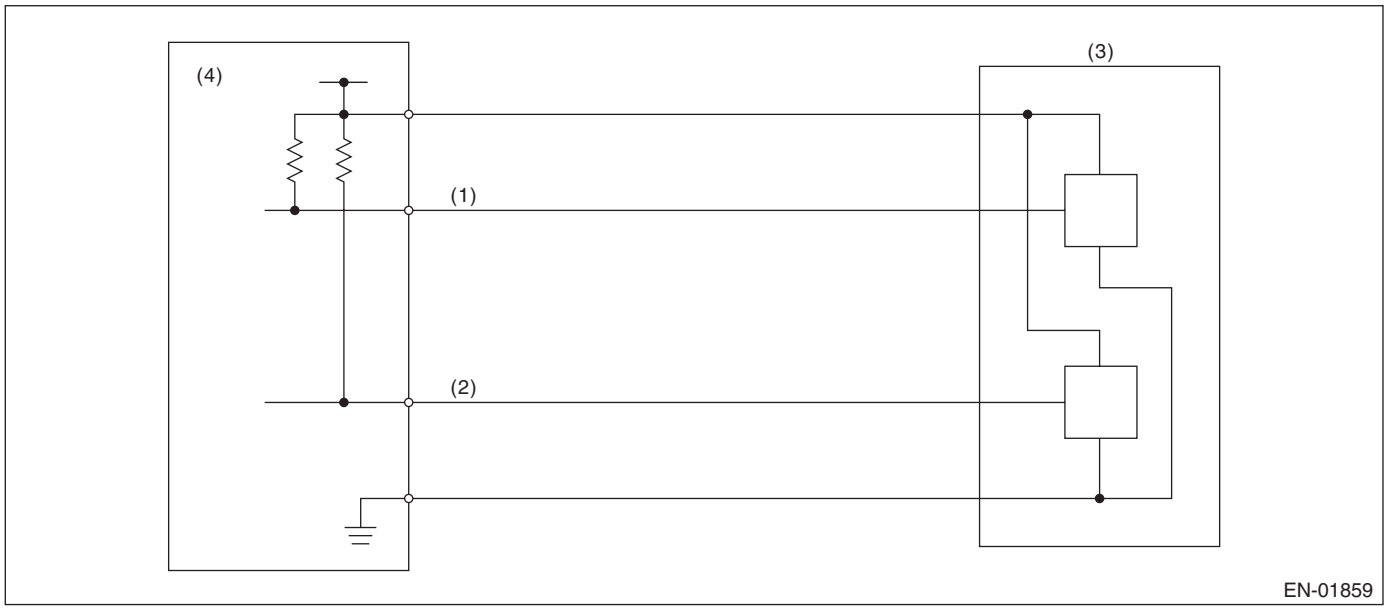

(1) Throttle position sensor 1 signal
(2) Throttle position sensor 2 signal
(3) Throttle position sensor
(4) Engine control module (ECM)

3. ENABLE CONDITION

Secondary Parameters	Enable Conditions
Ignition switch	ON
Battery voltage	≥ 6 V

4. GENERAL DRIVING CYCLE

Always perform the diagnosis continuously.

5. DIAGNOSTIC METHOD

- **Abnormality Judgment**

If the duration of time while the following conditions are met is longer than the time indicated, judge as NG.

Judgment Value

Malfunction Criteria	Threshold Value
Sensor 2 input voltage	≥ 4.858 V

Time Needed for Diagnosis: 24 ms
Malfunction Indicator Light Illumination: Illuminates as soon as a malfunction occurs.

- **Normality Judgment**

Judge as OK and clear the NG if the continuous time while the following conditions are established is more than the predetermined time.

Judgment Value

Malfunction Criteria	Threshold Value
Sensor 2 input voltage	< 4.858 V

Time Needed for Diagnosis: 24 ms

BF:DTC P0301 CYLINDER 1 MISFIRE DETECTED

1. OUTLINE OF DIAGNOSIS

Detect the presence of misfire occurrence. (Revolution fluctuation method)
Monitoring Misfire which influences exhaust deterioration (1.5 times of FTP) and catalyst damage is made obligatory by the law. Misfire affecting these two has two patterns below. :

- Intermittent misfire (The same cylinder misfires in random, or different cylinders misfire in random.): FTP 1.5 times misfire
- Every time misfire (The same cylinder misfires every time.): FTP 1.5 times misfire, Catalyst damage misfire

The following detecting methods are adopted for these detection.
1) Intermittent misfire: FTP 1.5 times misfire

- 180° Interval Difference Method (MT: 1,800 rpm or less; CVT: None)
- 360° Interval Difference Method (whole range)
- 720° Interval Difference Method (3,000 rpm or more)

2) Misfire every time: FTP 1.5 times misfire, Catalyst damage misfire

- 360° Interval Difference Method

2. ENABLE CONDITION

Secondary Parameters	Enable Conditions
All secondary parameters enable conditions	≥ 1024 ms
Intake manifold pressure change at 180°CA	< Value of Map 1
Throttle position change during 16 milliseconds	< 21 °
Fuel shut-off function	Not in operation
Fuel level	≥ 9.6 ℓ (2.54 US gal, 2.11 Imp gal)
Vehicle dynamic control or AT torque control	Not in operation
Evaporative system leak check	Not in operation
Engine speed	500 rpm — 6300 rpm
Intake manifold pressure	≥ Value from Map 2
Battery voltage	≥ 8 V
Fuel parameter determination	Not extremely low volatility
Elapsed time after starting the engine	≥ 0 ms
Engine speed change during 32 milliseconds	< 1000 rpm

Map 1

- CVT model

rpm	700	1000	1500	2000	2500	3000	3500	4000	4500	5000	5500	6000	6300
kPa (mmHg, inHg)	13.3 (100, 3.9)	13.3 (100, 3.9)	13.3 (100, 3.9)	13.3 (100, 3.9)	13.3 (100, 3.9)	13.3 (100, 3.9)	13.3 (100, 3.9)	13.3 (100, 3.9)	13.3 (100, 3.9)	13.3 (100, 3.9)	13.3 (100, 3.9)	13.3 (100, 3.9)	13.3 (100, 3.9)

- MT model

rpm	650	1000	1500	2000	2500	3000	3500	4000	4500	5000	5500	6000	6300
kPa (mmHg, inHg)	13.3 (100, 3.9)	13.3 (100, 3.9)	13.3 (100, 3.9)	13.3 (100, 3.9)	13.3 (100, 3.9)	13.3 (100, 3.9)	13.3 (100, 3.9)	13.3 (100, 3.9)	13.3 (100, 3.9)	13.3 (100, 3.9)	13.3 (100, 3.9)	13.3 (100, 3.9)	13.3 (100, 3.9)

Map 2 (PZEV CVT model)

- Normal ignition

		Barometric pressure (kPa (mmHg, inHg))						
		66.7 (500.0 , 19.7)	76.4 (573.0 , 22.6)	80 (600.0 , 23.6)	83.7 (628.0 , 24.7)	86.2 (647.0 , 25.5)	91.3 (685.0 , 27)	100.4 (753.0 , 29.6)
Engine speed (rpm)	680	21.3 (160.0 , 6.3)	21.3 (160.0 , 6.3)	22.1 (166.1 , 6.5)	22.8 (171.0 , 6.7)	24.2 (181.8 , 7.2)	25.4 (190.5 , 7.5)	27.7 (208.1 , 8.2)
	1200	19.5 (146.4 , 5.8)	19.5 (146.4 , 5.8)	20.6 (154.5 , 6.1)	22.8 (170.8 , 6.7)	21.8 (163.9 , 6.5)	23.2 (174.2 , 6.9)	24.7 (185.6 , 7.3)
	1500	18 (135.2 , 5.3)	18 (135.2 , 5.3)	18.7 (140.6 , 5.5)	21.6 (162.2 , 6.4)	19.8 (148.2 , 5.8)	21 (157.2 , 6.2)	23.1 (173.1 , 6.8)
	2000	17.9 (134.4 , 5.3)	17.9 (134.4 , 5.3)	18.4 (138.2 , 5.4)	21.6 (162.2 , 6.4)	21.8 (163.8 , 6.4)	22.8 (171.3 , 6.7)	24.1 (180.8 , 7.1)
	2500	20.3 (152.4 , 6)	20.3 (152.4 , 6)	21.4 (160.4 , 6.3)	22.1 (166.0 , 6.5)	22 (164.9 , 6.5)	23.5 (176.4 , 6.9)	24.8 (186.1 , 7.3)
	3000	21.3 (159.7 , 6.3)	21.3 (159.7 , 6.3)	22 (165.2 , 6.5)	22.4 (167.8 , 6.6)	23.1 (173.2 , 6.8)	24.1 (180.6 , 7.1)	25.2 (189.2 , 7.4)
	3500	24.5 (183.8 , 7.2)	24.5 (183.8 , 7.2)	25.6 (192.1 , 7.6)	25.7 (193.1 , 7.6)	26.2 (196.5 , 7.7)	27.7 (208.1 , 8.2)	28.5 (213.6 , 8.4)
	4000	25.3 (190.1 , 7.5)	25.3 (190.1 , 7.5)	26.5 (198.5 , 7.8)	26.3 (197.2 , 7.8)	27.1 (203.1 , 8)	28.2 (211.9 , 8.3)	28.7 (215.4 , 8.5)
	4500	27.4 (205.2 , 8.1)	27.4 (205.2 , 8.1)	28.5 (213.6 , 8.4)	28.3 (212.4 , 8.4)	29.1 (218.3 , 8.6)	30.3 (227.0 , 8.9)	30.7 (230.5 , 9.1)
	5000	29.4 (220.4 , 8.7)	29.4 (220.4 , 8.7)	30.5 (228.8 , 9)	30.3 (227.5 , 9)	31.1 (233.4 , 9.2)	32.3 (242.2 , 9.5)	32.7 (245.7 , 9.7)
	5500	31.4 (235.5 , 9.3)	31.4 (235.5 , 9.3)	32.5 (243.9 , 9.6)	32.3 (242.7 , 9.6)	33.1 (248.6 , 9.8)	34.3 (257.3 , 10.1)	34.8 (260.8 , 10.3)
	6000	33.4 (250.7 , 9.9)	33.4 (250.7 , 9.9)	34.5 (259.1 , 10.2)	34.4 (257.8 , 10.2)	35.2 (263.7 , 10.4)	36.3 (272.5 , 10.7)	36.8 (276.0 , 10.9)
	6300	34.6 (259.8 , 10.2)	34.6 (259.8 , 10.2)	35.7 (268.2 , 10.6)	35.6 (266.9 , 10.5)	36.4 (272.8 , 10.7)	37.5 (281.6 , 11.1)	38 (285.1 , 11.2)
kPa (mmHg, inHg)								

- Idling ignition

		Barometric pressure (kPa (mmHg, inHg))						
		66.7 (500.0 , 19.7)	76.4 (573.0 , 22.6)	80 (600.0 , 23.6)	83.7 (628.0 , 24.7)	86.2 (647.0 , 25.5)	91.3 (685.0 , 27)	100.4 (753.0 , 29.6)
Engine speed (rpm)	680	21.3 (160.0 , 6.3)	21.3 (160.0 , 6.3)	22.1 (166.1 , 6.5)	22.8 (171.0 , 6.7)	24.2 (181.8 , 7.2)	25.4 (190.5 , 7.5)	27.7 (208.1 , 8.2)
	1200	20.9 (156.7 , 6.2)	20.9 (156.7 , 6.2)	22 (164.8 , 6.5)	23 (172.7 , 6.8)	23.4 (175.5 , 6.9)	24.9 (186.5 , 7.3)	27.2 (204.3 , 8)
	1500	19.8 (148.2 , 5.8)	19.8 (148.2 , 5.8)	20.4 (153.1 , 6)	25.8 (193.3 , 7.6)	21.5 (161.1 , 6.3)	23 (172.9 , 6.8)	24 (180.1 , 7.1)
	2000	18.2 (136.6 , 5.4)	18.2 (136.6 , 5.4)	20 (150.3 , 5.9)	25.1 (188.5 , 7.4)	22.3 (167.3 , 6.6)	21.7 (163.0 , 6.4)	24.2 (181.9 , 7.2)
	2500	20.5 (153.8 , 6.1)	20.5 (153.8 , 6.1)	21.3 (159.7 , 6.3)	24.3 (182.4 , 7.2)	22.8 (170.7 , 6.7)	23.7 (178.1 , 7)	24.8 (185.8 , 7.3)
	3000	20.9 (156.7 , 6.2)	20.9 (156.7 , 6.2)	21.7 (163.1 , 6.4)	22.8 (170.7 , 6.7)	22.8 (170.8 , 6.7)	24.3 (181.9 , 7.2)	25.3 (190.1 , 7.5)
	3500	24.7 (185.3 , 7.3)	24.7 (185.3 , 7.3)	25.4 (190.5 , 7.5)	26 (194.8 , 7.7)	26.5 (198.7 , 7.8)	28 (209.8 , 8.3)	28.9 (216.6 , 8.5)
	4000	25.3 (189.7 , 7.5)	25.3 (189.7 , 7.5)	26.3 (197.3 , 7.8)	26.5 (199.1 , 7.8)	26.7 (200.5 , 7.9)	28.1 (211.0 , 8.3)	28.7 (215.7 , 8.5)
	4500	27.3 (204.9 , 8.1)	27.3 (204.9 , 8.1)	28.3 (212.5 , 8.4)	28.6 (214.3 , 8.4)	28.7 (215.6 , 8.5)	30.1 (226.1 , 8.9)	30.8 (230.8 , 9.1)
	5000	29.3 (220.0 , 8.7)	29.3 (220.0 , 8.7)	30.3 (227.6 , 9)	30.6 (229.4 , 9)	30.8 (230.8 , 9.1)	32.2 (241.3 , 9.5)	32.8 (246.0 , 9.7)
	5500	31.4 (235.2 , 9.3)	31.4 (235.2 , 9.3)	32.4 (242.8 , 9.6)	32.6 (244.6 , 9.6)	32.8 (246.0 , 9.7)	34.2 (256.4 , 10.1)	34.8 (261.1 , 10.3)
	6000	33.4 (250.3 , 9.9)	33.4 (250.3 , 9.9)	34.4 (257.9 , 10.2)	34.6 (259.7 , 10.2)	34.8 (261.1 , 10.3)	36.2 (271.6 , 10.7)	36.8 (276.3 , 10.9)
	6300	34.6 (259.4 , 10.2)	34.6 (259.4 , 10.2)	35.6 (267.0 , 10.5)	35.8 (268.8 , 10.6)	36 (270.2 , 10.6)	37.4 (280.7 , 11.1)	38 (285.4 , 11.2)
kPa (mmHg, inHg)								

Map 2 (PZEV MT model)

- Normal ignition

		Barometric pressure (kPa (mmHg, inHg))						
		66.7 (500.0 , 19.7)	75.8 (569.0 , 22.4)	79.4 (596.0 , 23.5)	84.2 (632.0 , 24.9)	85.7 (643.0 , 25.3)	90.9 (682.0 , 26.9)	99.3 (745.0 , 29.3)
Engine speed (rpm)	680	20.2 (151.9 , 6)	20.2 (151.9 , 6)	21.3 (159.6 , 6.3)	22.6 (169.6 , 6.7)	23.2 (173.7 , 6.8)	23.8 (178.3 , 7)	24.4 (183.2 , 7.2)
	1200	18.9 (141.8 , 5.6)	18.9 (141.8 , 5.6)	19.9 (149.1 , 5.9)	20.9 (156.7 , 6.2)	21.4 (160.5 , 6.3)	22.3 (167.4 , 6.6)	23.3 (175.0 , 6.9)
	1500	16.5 (123.9 , 4.9)	16.5 (123.9 , 4.9)	17.2 (128.9 , 5.1)	18 (134.9 , 5.3)	18.7 (140.0 , 5.5)	18.8 (141.4 , 5.6)	19.6 (147.0 , 5.8)
	2000	16.2 (121.7 , 4.8)	16.2 (121.7 , 4.8)	17.1 (128.5 , 5.1)	17.7 (132.9 , 5.2)	18.2 (136.3 , 5.4)	18.9 (142.0 , 5.6)	19.9 (149.6 , 5.9)
	2500	17.2 (128.9 , 5.1)	17.2 (128.9 , 5.1)	17.9 (134.3 , 5.3)	18.6 (139.7 , 5.5)	18.7 (140.2 , 5.5)	19.4 (145.2 , 5.7)	20.7 (155.4 , 6.1)
	3000	17.2 (128.8 , 5.1)	17.2 (128.8 , 5.1)	17.8 (133.2 , 5.2)	18.6 (139.3 , 5.5)	19.2 (144.0 , 5.7)	20.2 (151.4 , 6)	21.2 (159.2 , 6.3)
	3500	20.6 (154.5 , 6.1)	20.6 (154.5 , 6.1)	21.1 (158.1 , 6.2)	22.3 (167.1 , 6.6)	22.4 (168.4 , 6.6)	23.2 (173.7 , 6.8)	24.5 (184.0 , 7.2)
	4000	21.3 (160.0 , 6.3)	21.3 (160.0 , 6.3)	22 (165.1 , 6.5)	22.6 (169.7 , 6.7)	22.8 (171.2 , 6.7)	23.8 (178.9 , 7)	24.2 (181.5 , 7.1)
	4500	23.8 (178.5 , 7)	23.8 (178.5 , 7)	24.5 (183.9 , 7.2)	25.2 (188.8 , 7.4)	25.7 (192.7 , 7.6)	26.2 (196.6 , 7.7)	26.9 (202.2 , 8)
	5000	27.4 (205.3 , 8.1)	27.4 (205.3 , 8.1)	27.8 (208.4 , 8.2)	28.7 (215.0 , 8.5)	28.9 (216.8 , 8.5)	29.4 (220.7 , 8.7)	30.3 (227.1 , 8.9)
	5500	30.8 (230.8 , 9.1)	30.8 (230.8 , 9.1)	31.4 (235.2 , 9.3)	32 (240.2 , 9.5)	32.5 (243.8 , 9.6)	33 (247.6 , 9.7)	34.1 (256.1 , 10.1)
	6000	35.9 (269.4 , 10.6)	35.9 (269.4 , 10.6)	37.6 (282.2 , 11.1)	37.8 (283.3 , 11.2)	36.7 (275.0 , 10.8)	38.7 (290.0 , 11.4)	39.2 (294.2 , 11.6)
	6300	37.1 (278.5 , 11)	37.1 (278.5 , 11)	38.8 (291.3 , 11.5)	39 (292.4 , 11.5)	37.9 (284.1 , 11.2)	39.9 (299.1 , 11.8)	40.4 (303.3 , 11.9)
kPa (mmHg, inHg)								

- Idling ignition

		Barometric pressure (kPa (mmHg, inHg))						
		66.7 (500.0 , 19.7)	75.8 (569.0 , 22.4)	79.4 (596.0 , 23.5)	84.2 (632.0 , 24.9)	85.7 (643.0 , 25.3)	90.9 (682.0 , 26.9)	99.3 (745.0 , 29.3)
Engine speed (rpm)	680	20.8 (156.2 , 6.1)	20.8 (156.2 , 6.1)	21.3 (160.1 , 6.3)	22.9 (171.8 , 6.8)	23.4 (175.3 , 6.9)	24.2 (181.3 , 7.1)	25.1 (188.0 , 7.4)
	1200	20.7 (155.5 , 6.1)	20.7 (155.5 , 6.1)	21.4 (160.7 , 6.3)	22.4 (167.8 , 6.6)	22.9 (171.9 , 6.8)	23.9 (179.6 , 7.1)	24 (180.0 , 7.1)
	1500	19.7 (147.9 , 5.8)	19.7 (147.9 , 5.8)	20.2 (151.7 , 6)	21.3 (159.5 , 6.3)	21.3 (160.1 , 6.3)	22 (164.8 , 6.5)	23.8 (178.5 , 7)
	2000	19.6 (146.9 , 5.8)	19.6 (146.9 , 5.8)	20.5 (153.9 , 6.1)	21.4 (160.6 , 6.3)	21.6 (162.3 , 6.4)	22.3 (167.2 , 6.6)	23.9 (179.6 , 7.1)
	2500	21 (157.6 , 6.2)	21 (157.6 , 6.2)	21.7 (162.7 , 6.4)	23.1 (173.1 , 6.8)	23.2 (173.9 , 6.8)	23.7 (177.9 , 7)	25.5 (191.1 , 7.5)
	3000	22.2 (166.6 , 6.6)	22.2 (166.6 , 6.6)	23.1 (173.5 , 6.8)	24.3 (182.6 , 7.2)	24.4 (183.2 , 7.2)	25.2 (189.0 , 7.4)	26.9 (201.9 , 7.9)
	3500	25.9 (194.3 , 7.7)	25.9 (194.3 , 7.7)	26.8 (201.0 , 7.9)	27.6 (207.4 , 8.2)	29.7 (222.8 , 8.8)	28.4 (212.8 , 8.4)	30.3 (227.3 , 9)
	4000	25.3 (190.1 , 7.5)	25.3 (190.1 , 7.5)	26.1 (195.6 , 7.7)	26.8 (200.8 , 7.9)	26.9 (202.1 , 8)	27.4 (205.5 , 8.1)	28.7 (215.2 , 8.5)
	4500	27.1 (203.4 , 8)	27.1 (203.4 , 8)	27.8 (208.2 , 8.2)	28.9 (217.1 , 8.5)	28.3 (212.6 , 8.4)	28.4 (212.8 , 8.4)	29.9 (224.1 , 8.8)
	5000	28.3 (212.6 , 8.4)	28.3 (212.6 , 8.4)	28.8 (216.3 , 8.5)	29.6 (222.0 , 8.7)	29.7 (222.4 , 8.8)	29.9 (224.5 , 8.8)	31.3 (234.6 , 9.2)
	5500	31.3 (234.7 , 9.2)	31.3 (234.7 , 9.2)	32.1 (241.0 , 9.5)	32.6 (244.8 , 9.6)	32.6 (244.2 , 9.6)	33.1 (248.1 , 9.8)	34.6 (259.4 , 10.2)
	6000	36.2 (271.4 , 10.7)	36.2 (271.4 , 10.7)	35.9 (269.2 , 10.6)	37.2 (279.3 , 11)	37.1 (278.0 , 10.9)	38.8 (291.2 , 11.5)	39.6 (297.3 , 11.7)
	6300	37.4 (280.5 , 11)	37.4 (280.5 , 11)	37.1 (278.3 , 11)	38.4 (288.4 , 11.4)	38.3 (287.1 , 11.3)	40 (300.3 , 11.8)	40.8 (306.4 , 12.1)
kPa (mmHg, inHg)								

Map 2 (CVT model except for PZEV)

- Normal ignition

		Barometric pressure (kPa (mmHg, inHg))	
		66.7 (500.0 , 19.7)	100.4 (753.0 , 29.6)
Engine speed (rpm)	700	27.6 (207.0 , 8.1)	27.6 (207.0 , 8.1)
	1000	25.6 (192.0 , 7.6)	25.6 (192.0 , 7.6)
	1500	22.9 (172.0 , 6.8)	22.9 (172.0 , 6.8)
	2000	23.2 (174.0 , 6.9)	23.2 (174.0 , 6.9)
	2500	23.9 (179.0 , 7)	23.9 (179.0 , 7)
	3000	23.6 (177.0 , 7)	23.6 (177.0 , 7)
	3500	26.8 (201.0 , 7.9)	26.8 (201.0 , 7.9)
	4000	29.7 (223.0 , 8.8)	29.7 (223.0 , 8.8)
	4500	32.3 (242.0 , 9.5)	32.3 (242.0 , 9.5)
	5000	34.1 (256.0 , 10.1)	34.1 (256.0 , 10.1)
	5500	36 (270.0 , 10.6)	36 (270.0 , 10.6)
	6000	37.9 (284.0 , 11.2)	37.9 (284.0 , 11.2)
	6300	40 (300.0 , 11.8)	40 (300.0 , 11.8)
kPa (mmHg, inHg)			

- Idling ignition

		Barometric pressure (kPa (mmHg, inHg))	
		66.7 (500.0 , 19.7)	100.4 (753.0 , 29.6)
Engine speed (rpm)	700	27.6 (207.0 , 8.1)	27.6 (207.0 , 8.1)
	1000	25.6 (192.0 , 7.6)	25.6 (192.0 , 7.6)
	1500	22.9 (172.0 , 6.8)	22.9 (172.0 , 6.8)
	2000	23.2 (174.0 , 6.9)	23.2 (174.0 , 6.9)
	2500	23.9 (179.0 , 7)	23.9 (179.0 , 7)
	3000	23.6 (177.0 , 7)	23.6 (177.0 , 7)
	3500	26.8 (201.0 , 7.9)	26.8 (201.0 , 7.9)
	4000	29.7 (223.0 , 8.8)	29.7 (223.0 , 8.8)
	4500	32.3 (242.0 , 9.5)	32.3 (242.0 , 9.5)
	5000	34.1 (256.0 , 10.1)	34.1 (256.0 , 10.1)
	5500	36 (270.0 , 10.6)	36 (270.0 , 10.6)
	6000	37.9 (284.0 , 11.2)	37.9 (284.0 , 11.2)
	6300	40 (300.0 , 11.8)	40 (300.0 , 11.8)
kPa (mmHg, inHg)			

Map 2 (MT model except for PZEV)

- Normal ignition

		Barometric pressure (kPa (mmHg, inHg))	
		66.7 (500.0 , 19.7)	100.4 (753.0 , 29.6)
Engine speed (rpm)	650	26.4 (198.0 , 7.8)	26.4 (198.0 , 7.8)
	1000	24.8 (186.0 , 7.3)	24.8 (186.0 , 7.3)
	1500	21.1 (158.0 , 6.2)	21.1 (158.0 , 6.2)
	2000	20.1 (151.0 , 5.9)	20.1 (151.0 , 5.9)
	2500	20.3 (152.0 , 6)	20.3 (152.0 , 6)
	3000	20.9 (157.0 , 6.2)	20.9 (157.0 , 6.2)
	3500	26.2 (196.7 , 7.7)	26.2 (196.7 , 7.7)
	4000	30.2 (226.3 , 8.9)	30.2 (226.3 , 8.9)
	4500	34.1 (256.0 , 10.1)	34.1 (256.0 , 10.1)
	5000	34.7 (260.0 , 10.2)	34.7 (260.0 , 10.2)
	5500	34.7 (260.0 , 10.2)	34.7 (260.0 , 10.2)
	6000	34.7 (260.0 , 10.2)	34.7 (260.0 , 10.2)
	6300	34.7 (260.0 , 10.2)	34.7 (260.0 , 10.2)
kPa (mmHg, inHg)			

- Idling ignition

		Barometric pressure (kPa (mmHg, inHg))	
		66.7 (500.0 , 19.7)	100.4 (753.0 , 29.6)
Engine speed (rpm)	650	26.4 (198.0 , 7.8)	26.4 (198.0 , 7.8)
	1000	24.8 (186.0 , 7.3)	24.8 (186.0 , 7.3)
	1500	21.1 (158.0 , 6.2)	21.1 (158.0 , 6.2)
	2000	20.1 (151.0 , 5.9)	20.1 (151.0 , 5.9)
	2500	20.3 (152.0 , 6)	20.3 (152.0 , 6)
	3000	20.9 (157.0 , 6.2)	20.9 (157.0 , 6.2)
	3500	26.2 (196.7 , 7.7)	26.2 (196.7 , 7.7)
	4000	30.2 (226.3 , 8.9)	30.2 (226.3 , 8.9)
	4500	34.1 (256.0 , 10.1)	34.1 (256.0 , 10.1)
	5000	34.7 (260.0 , 10.2)	34.7 (260.0 , 10.2)
	5500	34.7 (260.0 , 10.2)	34.7 (260.0 , 10.2)
	6000	34.7 (260.0 , 10.2)	34.7 (260.0 , 10.2)
	6300	34.7 (260.0 , 10.2)	34.7 (260.0 , 10.2)
kPa (mmHg, inHg)			

3. GENERAL DRIVING CYCLE

- If conditions are met, it is possible to detect the misfires from idling to high engine speed. However, to avoid excessive load or harm to the engine, perform diagnosis at idle.
- Perform the diagnosis continuously.

4. DIAGNOSTIC METHOD

When a misfire occurs, the engine speed will decrease and the crankshaft position speed will change. Calculate the interval difference value (diagnostic value) from crankshaft position speed by the following formula, and judge whether a misfire is occurring or not comparing the calculated result with judgment value. Count the number of misfires, if the misfire ratio is higher during 1000 revs. or 200 revs., judge corresponding cylinders as NG.

Diagnostic value calculation (Calculate from angle speed) →	Misfire detection every single ignition (Compare diagnostic value with judgment value) →	NG judgment (Misfire occurrence judgment required by the law) (Compare number of misfire with judgment value)
	• 180° Interval Difference Method • 360° Interval Difference Method • 720° Interval Difference Method	• FTP 1.5 times misfire NG judgment • Catalyst damage misfire NG judgment

As shown in the following figure, pick a cylinder as the standard and name it omg 0. And the former crankshaft position speed is named omg 1, the second former crankshaft position speed is named omg 2, the third is named omg 3, etc.

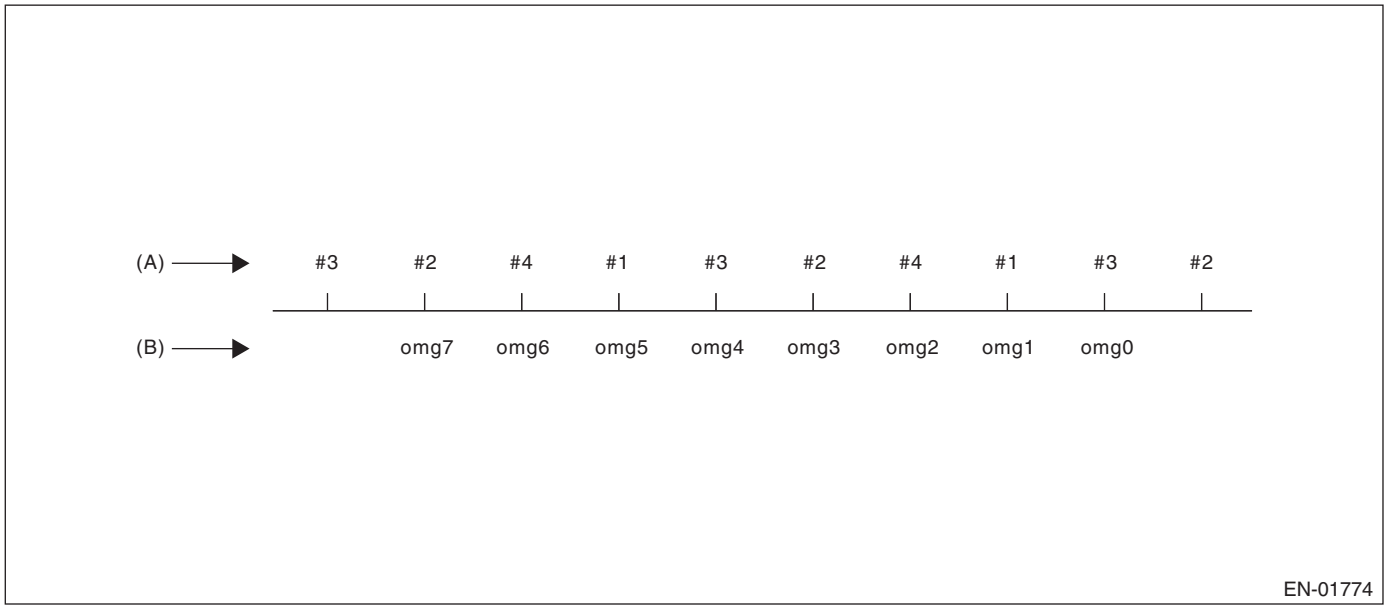

(A) Ignition order (B) Crankshaft position speed

180° Interval Difference Method

Diagnostic value	domg 180 = (omg 1 – omg 0) – (omg 5 – omg 1)/4
Judge as a misfire in the following cases. • domg 180 > judgment value of positive side • domg 180 ≤ judgment value of negative side (Diagnostic value before 180° CA)	

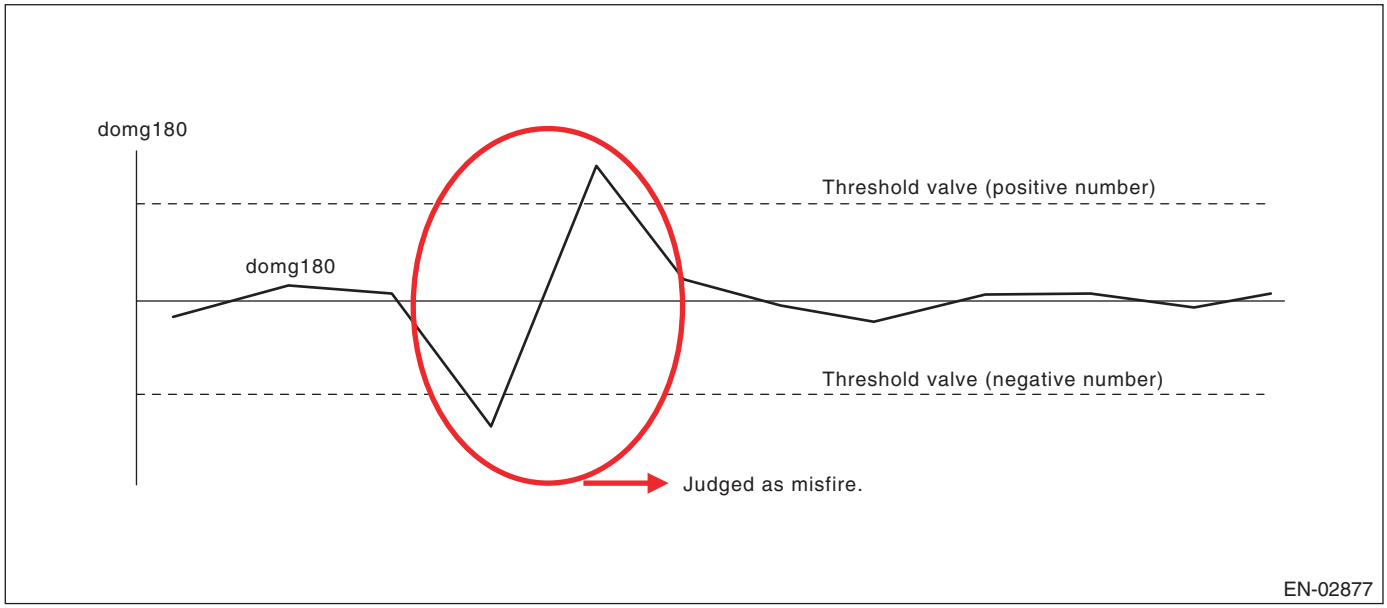

360° Interval Difference Method

Diagnostic value	domg 360 = (omg 1 – omg 0) – (omg 3 – omg 2)
Misfire judgment	domg 360 > Judgment value → Judge as misfire

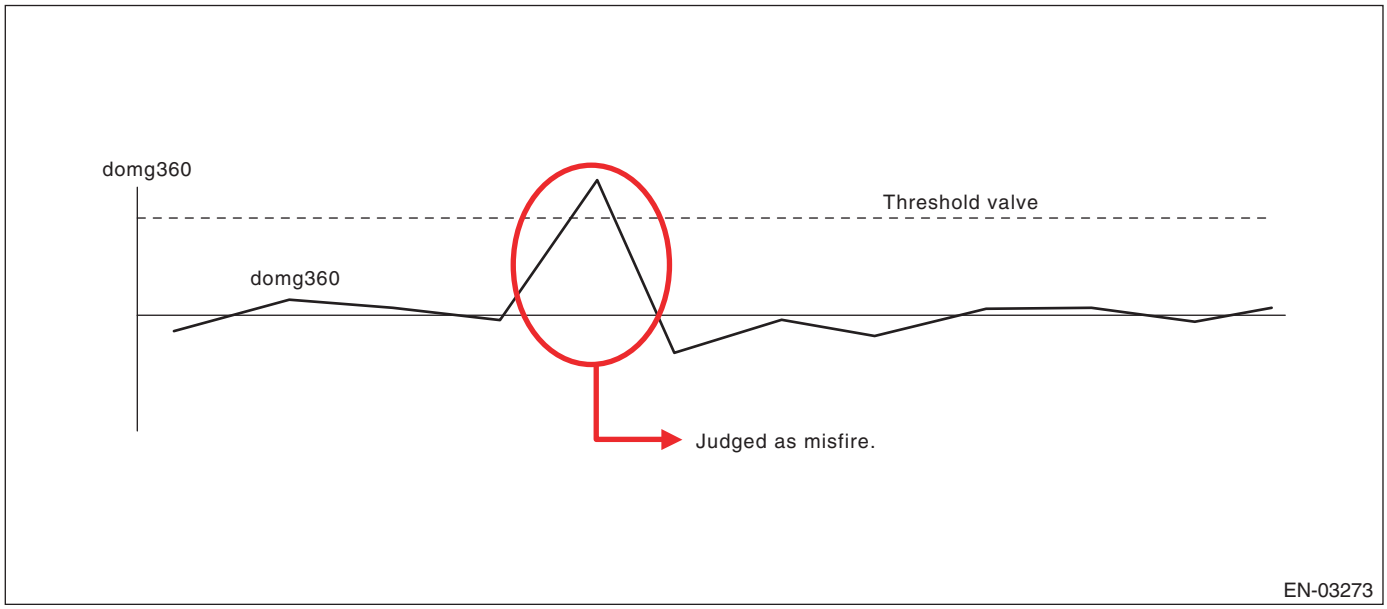

720° Interval Difference Method

Diagnostic value	domg 720 = (omg 1 – omg 0) – (omg 5 – omg 4)
Misfire judgment	domg 720 > Judgment value → Judge as misfire

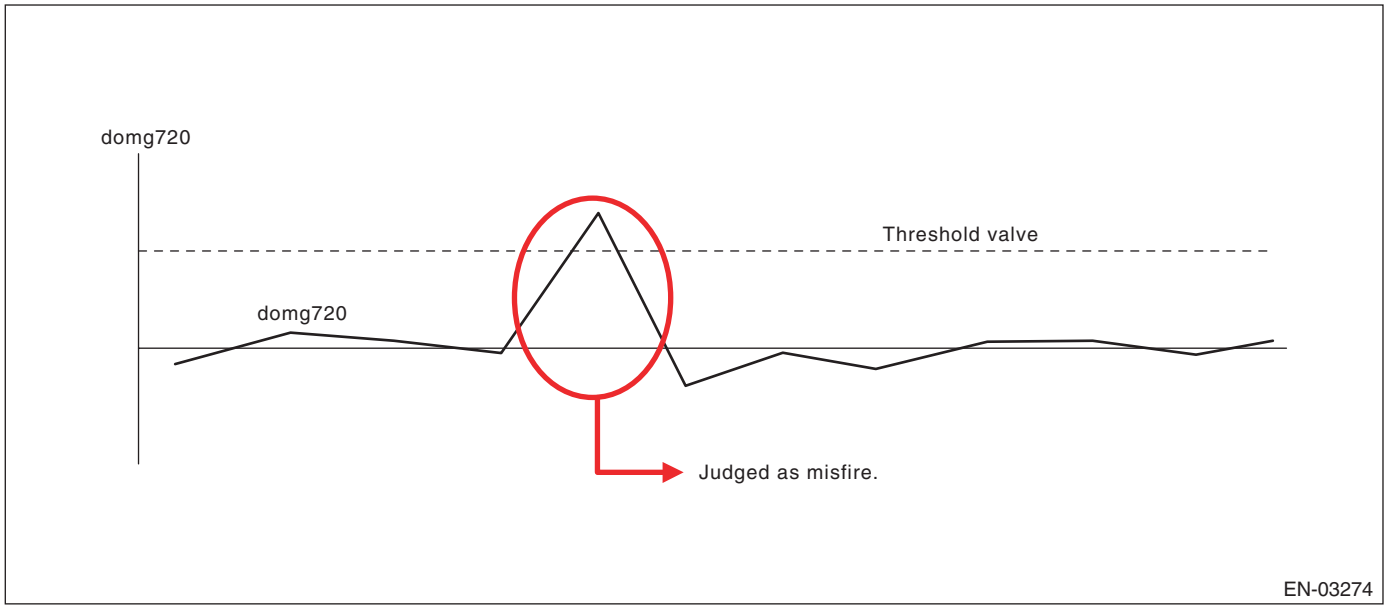

- **FTP 1.5 times misfire (Misfire occurrence level which influences exhaust gas)**
- **Abnormality Judgment**

Judgment Value (Judge that malfunction occurs when the misfire ratio is high in 1000 engine revs.)

Malfunction Criteria	Threshold Value
FTP emission diagnostic value	≥ 17 × 100/2000% in 1000 revs. (PZEV model) ≥ 30 × 100/2000% in 1000 revs. (except for PZEV model)

Time Needed for Diagnosis: 1000 engine revs.
Malfunction Indicator Light Illumination: Illuminates when malfunction occurs in 2 continuous driving cycles.

- **Normality Judgment**

Judgment Value

Malfunction Criteria	Threshold Value
FTP emission diagnostic value	< 17 × 100/2000% in 1000 revs. (PZEV model) < 30 × 100/2000% in 1000 revs. (except for PZEV model)

Time Needed for Diagnosis: 1000 engine revs.

- **Catalyst damage misfire (Misfire occurrence level damaging catalyst)**
- **Abnormality Judgment**

Judgment Value

Malfunction Criteria	Threshold Value
Catalyst damage misfire diagnostic value	≥ Value from Map 3

Map 3

		Intake air (g(oz)/rev)							
		0.16 (0.01)	0.28 (0.01)	0.4 (0.01)	0.52 (0.02)	0.64 (0.02)	0.76 (0.03)	0.92 (0.03)	1.1 (0.04)
Engine speed (rpm)	700	100	100	100	100	90	80	64	48
	1000	100	100	100	100	90	80	63	44
	1500	100	100	90	80	73	67	54	40
	2000	80	80	80	80	68	57	51	44
	2500	80	80	73	67	62	57	51	44
	3000	67	67	62	57	51	44	44	44
	3500	67	67	56	44	40	36	34	31
	4000	57	57	44	31	24	20	20	20
	4500	44	44	33	31	20	20	20	20
	5000	44	44	38	31	20	20	20	20
	5500	36	36	31	27	20	20	20	20
	6000	20	20	20	20	20	20	20	20
	6300	20	20	20	20	20	20	20	20

Time Needed for Diagnosis: 200 engine revs.
Malfunction Indicator Light Illumination: Illuminates as soon as a malfunction occurs.

- **Normality Judgment**

Judgment Value

Malfunction Criteria	Threshold Value
Catalyst damage misfire diagnostic value	< Value of Map 3

Time Needed for Diagnosis: 200 engine revs.

BG:DTC P0302 CYLINDER 2 MISFIRE DETECTED

1. OUTLINE OF DIAGNOSIS

NOTE:
For the detection standard, refer to DTC P0301. <Ref. to GD(H4SO)-111, DTC P0301 CYLINDER 1 MISFIRE DETECTED, Diagnostic Trouble Code (DTC) Detecting Criteria.>

BH:DTC P0303 CYLINDER 3 MISFIRE DETECTED

1. OUTLINE OF DIAGNOSIS

NOTE:
For the detection standard, refer to DTC P0301. <Ref. to GD(H4SO)-111, DTC P0301 CYLINDER 1 MISFIRE DETECTED, Diagnostic Trouble Code (DTC) Detecting Criteria.>

BI: DTC P0304 CYLINDER 4 MISFIRE DETECTED

1. OUTLINE OF DIAGNOSIS

NOTE:
For the detection standard, refer to DTC P0301. <Ref. to GD(H4SO)-111, DTC P0301 CYLINDER 1 MISFIRE DETECTED, Diagnostic Trouble Code (DTC) Detecting Criteria.>

BJ:DTC P0327 KNOCK SENSOR 1 CIRCUIT LOW (BANK 1 OR SINGLE SENSOR)

1. OUTLINE OF DIAGNOSIS

Detect the open or short circuit of knock sensor.
Judge as NG if out of specification.

2. COMPONENT DESCRIPTION

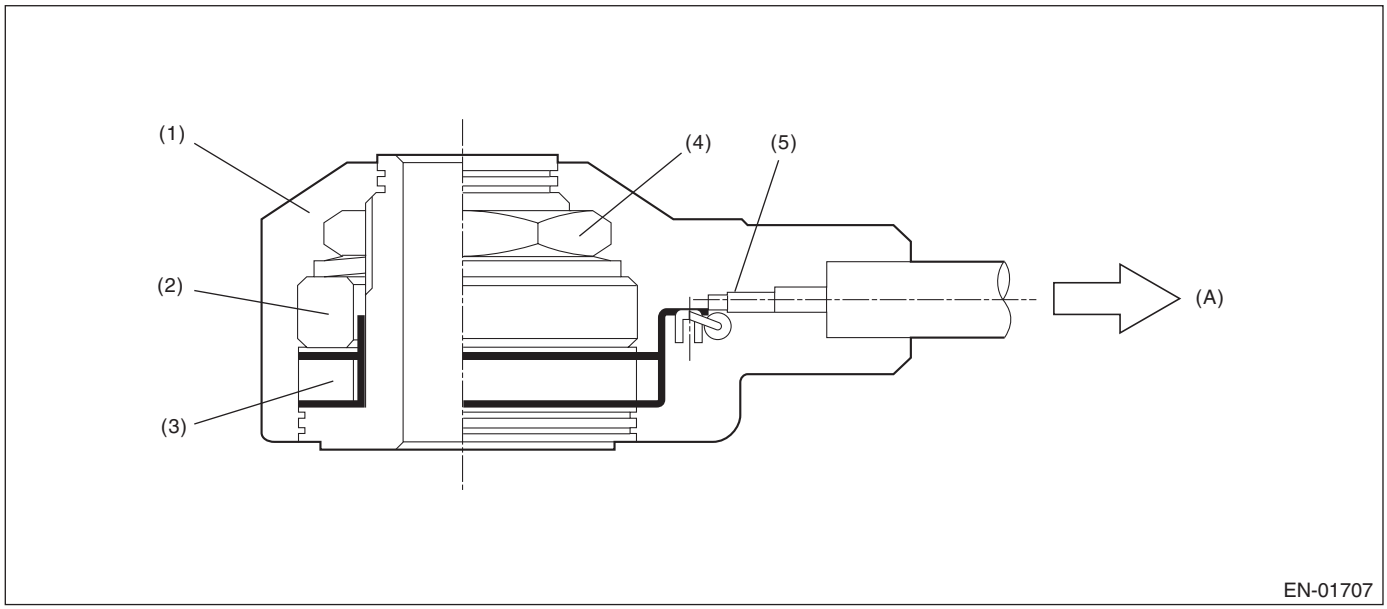

(A) To knock sensor harness

(1) Case
(2) Weight
(3) Piezoelectric element
(4) Nut
(5) Resistance

3. ENABLE CONDITION

Secondary Parameters	Enable Conditions
None	

4. GENERAL DRIVING CYCLE

Always perform the diagnosis continuously.

5. DIAGNOSTIC METHOD

• Abnormality Judgment

If the duration of time while the following conditions are met is longer than the time indicated, judge as NG.

Judgment Value

Malfunction Criteria	Threshold Value
Output voltage	< 0.243 V

Time Needed for Diagnosis: 1000 ms
Malfunction Indicator Light Illumination: Illuminates as soon as a malfunction occurs.

• Normality Judgment

Judge as OK and clear the NG if the continuous time while the following conditions are established is more than the predetermined time.

Judgment Value

Malfunction Criteria	Threshold Value
Output voltage	≥ 0.243 V

Time Needed for Diagnosis: Less than 1 second

BK:DTC P0328 KNOCK SENSOR 1 CIRCUIT HIGH (BANK 1 OR SINGLE SENSOR)

1. OUTLINE OF DIAGNOSIS

Detect the open or short circuit of knock sensor.
Judge as NG if out of specification.

2. COMPONENT DESCRIPTION

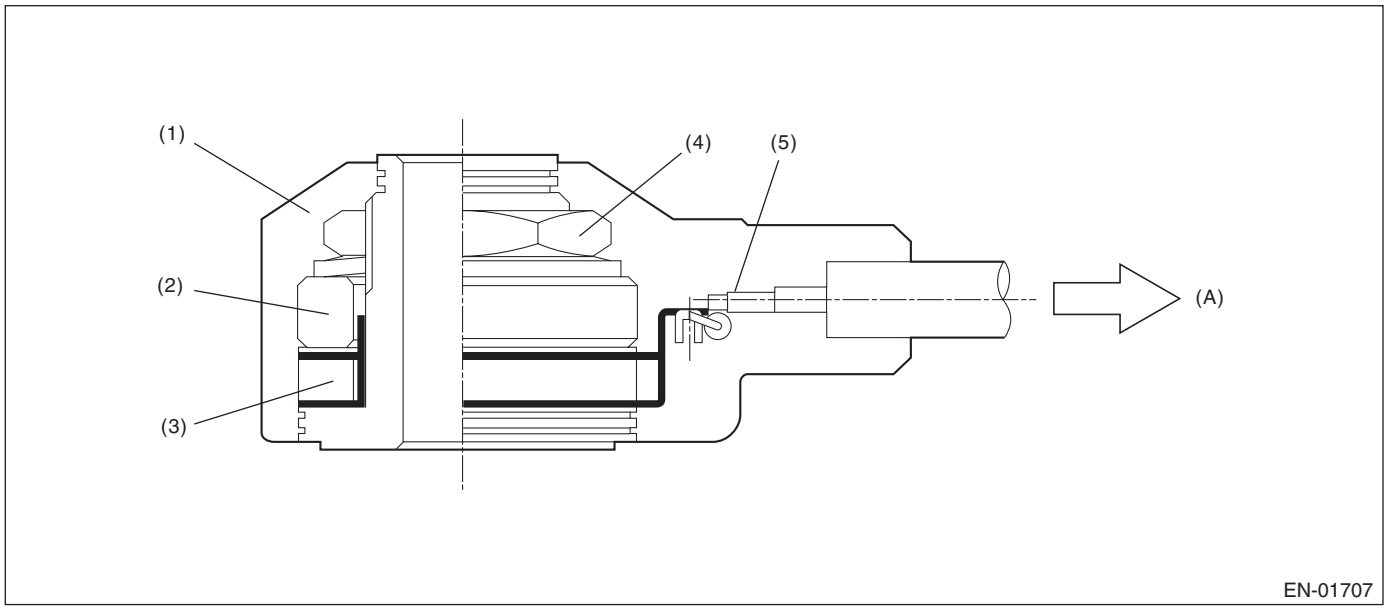

(A) To knock sensor harness

(1) Case
(2) Weight
(3) Piezoelectric element
(4) Nut
(5) Resistance

3. ENABLE CONDITION

Secondary Parameters	Enable Conditions
None	

4. GENERAL DRIVING CYCLE

Always perform the diagnosis continuously.

5. DIAGNOSTIC METHOD

• Abnormality Judgment

If the duration of time while the following conditions are met is longer than the time indicated, judge as NG.

Judgment Value

Malfunction Criteria	Threshold Value
Output voltage	≥ 4.709 V

Time Needed for Diagnosis: 1000 ms
Malfunction Indicator Light Illumination: Illuminates as soon as a malfunction occurs.

• Normality Judgment

Judge as OK and clear the NG if the continuous time while the following conditions are established is more than the predetermined time.

Judgment Value

Malfunction Criteria	Threshold Value
Output voltage	< 4.709 V

Time Needed for Diagnosis: Less than 1 second

BL:DTC P0335 CRANKSHAFT POSITION SENSOR “A” CIRCUIT

1. OUTLINE OF DIAGNOSIS

Detect the open or short circuit of the crankshaft position sensor.
Judge as NG when the crank signal is not input even though the starter was rotated.

2. COMPONENT DESCRIPTION

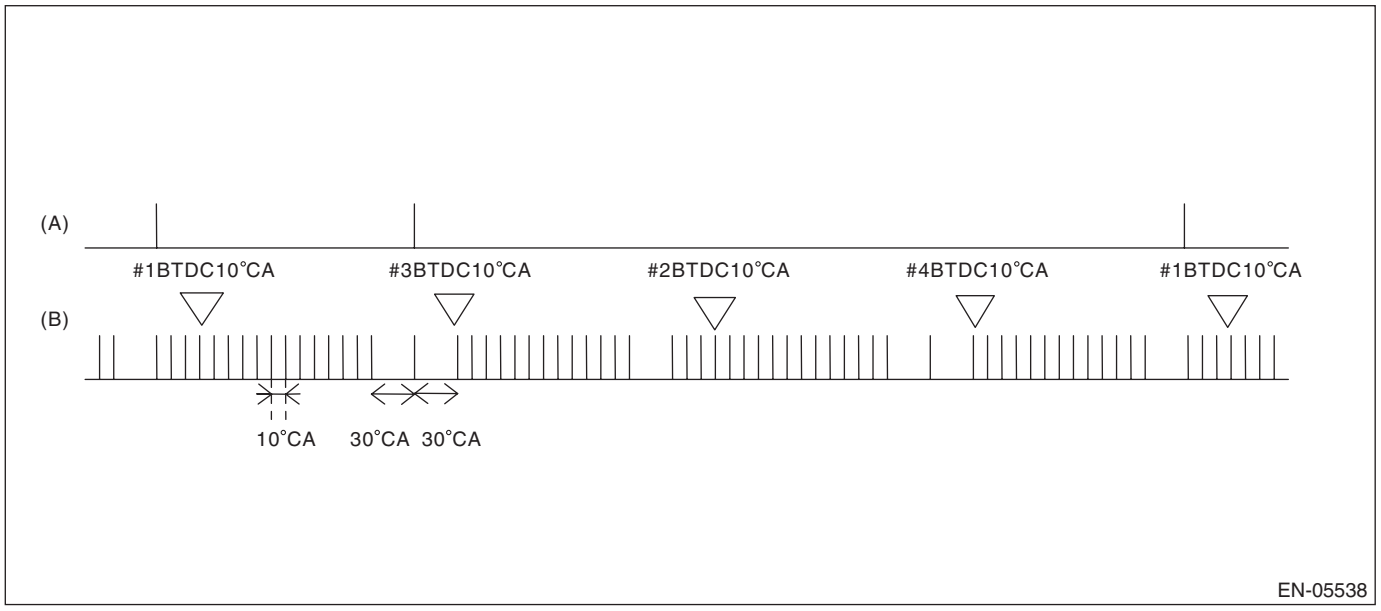

(A) Cam signal (B) Crankshaft signal

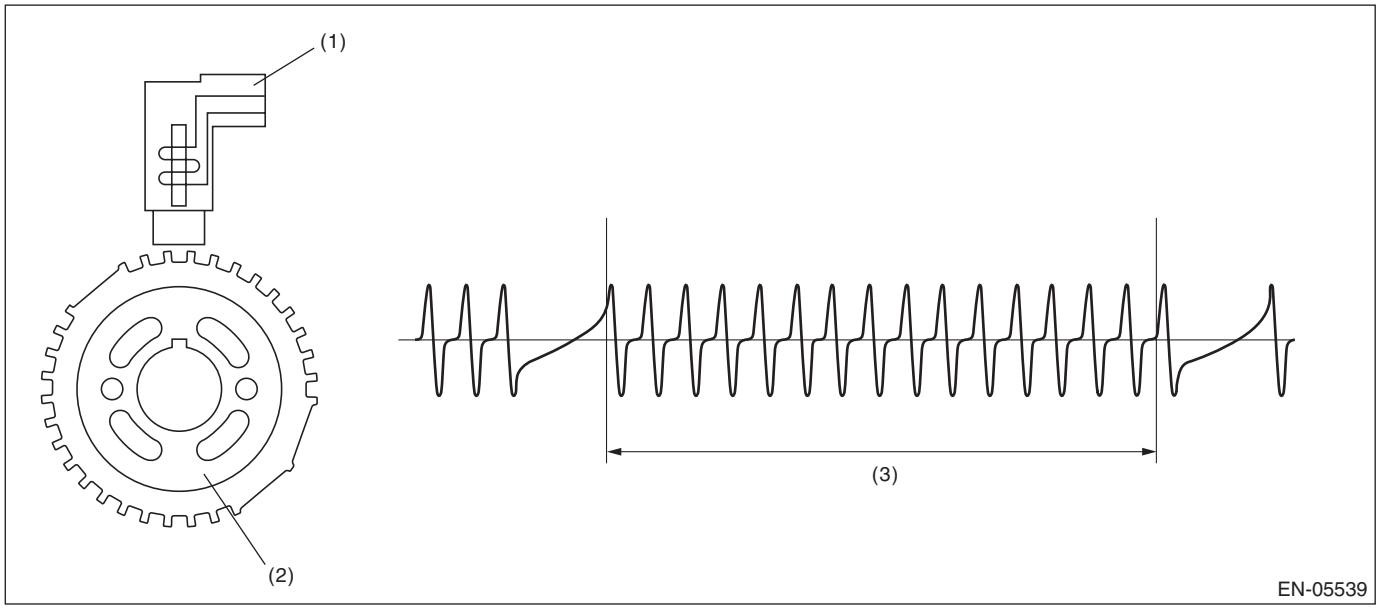

(1) Crankshaft position sensor (2) Crank sprocket (3) Crankshaft half-turn

3. ENABLE CONDITION

Secondary Parameters	Enable Conditions
None	

4. GENERAL DRIVING CYCLE

Always perform the diagnosis continuously.

5. DIAGNOSTIC METHOD

• Abnormality Judgment

If the duration of time while the following conditions are met is longer than the time indicated, judge as NG.

Judgment Value

Malfunction Criteria	Threshold Value
Starter switch	ON
Crankshaft position sensor signal	Not detected
Battery voltage	≥ 8 V

Time Needed for Diagnosis: 3000 ms
Malfunction Indicator Light Illumination: Illuminates as soon as a malfunction occurs.

• Normality Judgment

Judge as OK and clear the NG if the continuous time while the following conditions are established is more than the predetermined time.

Judgment Value

Malfunction Criteria	Threshold Value
Crankshaft position sensor signal	Input exists
Battery voltage	≥ 8 V

Time Needed for Diagnosis: Less than 1 second

BM:DTC P0336 CRANKSHAFT POSITION SENSOR “A” CIRCUIT RANGE/PERFORMANCE

1. OUTLINE OF DIAGNOSIS

Detect for faults in crankshaft position sensor output properties.
Judge as NG when there is a problem in the number of crankshaft signals for every revolution of crankshaft.

2. COMPONENT DESCRIPTION

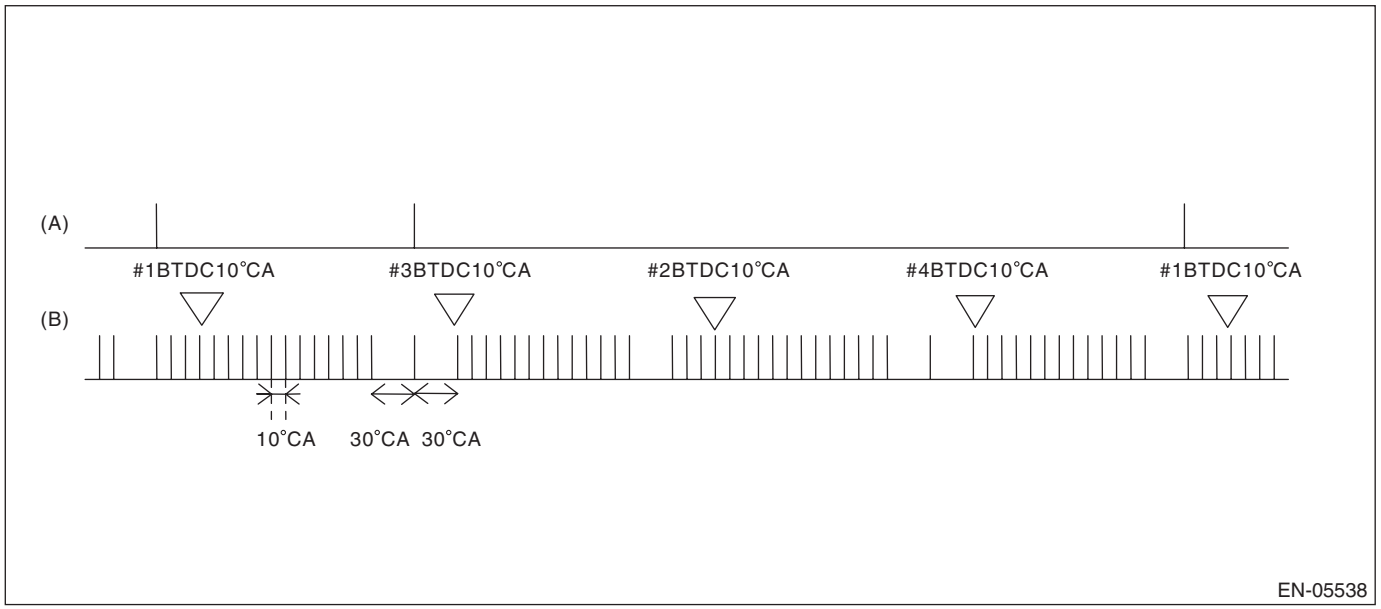

(A) Cam signal (B) Crankshaft signal

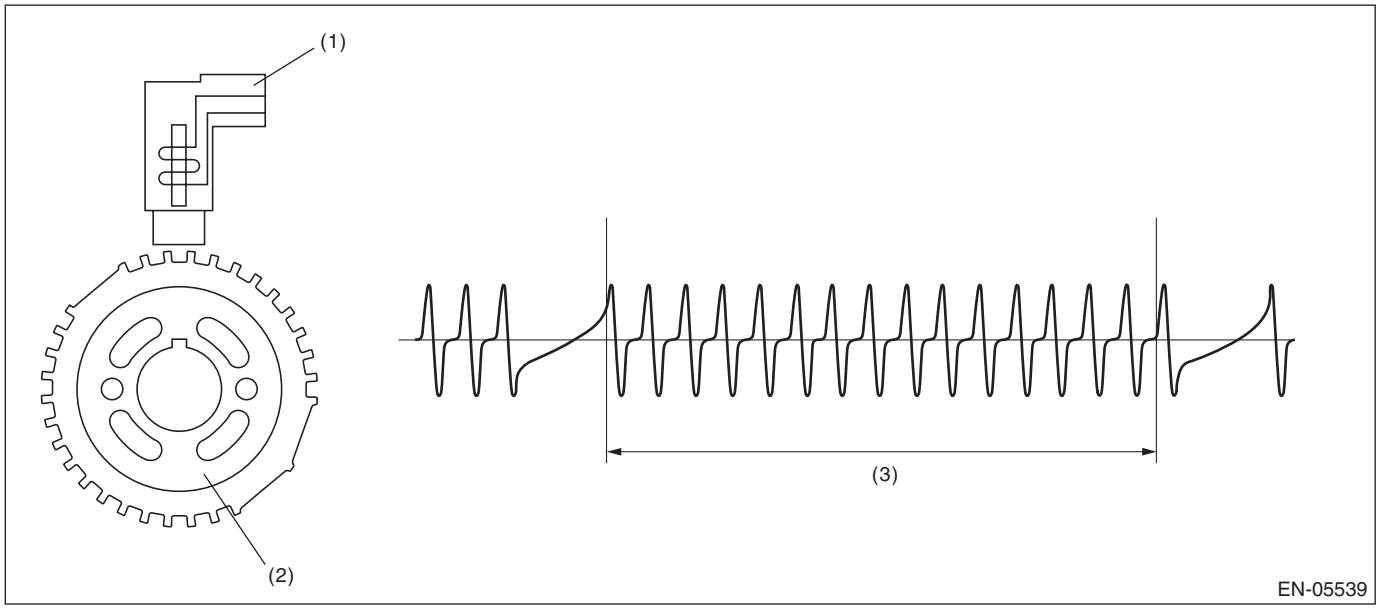

(1) Crankshaft position sensor (2) Crank sprocket (3) Crankshaft half-turn

3. ENABLE CONDITION

Secondary Parameters	Enable Conditions
Battery voltage	≥ 8 V
Engine speed	< 4000 rpm

4. GENERAL DRIVING CYCLE

Perform the diagnosis continuously under 3000 rpm engine speed.

5. DIAGNOSTIC METHOD

- **Abnormality Judgment**

Judge as NG when the following conditions are established.

Judgment Value

Malfunction Criteria	Threshold Value
Cylinder number identification	Completed
Amount of crank sensor signal during 1 rev of crankshaft.	Not = 30

Time Needed for Diagnosis: 10 engine revs.
Malfunction Indicator Light Illumination: Illuminates when malfunction occurs in 2 continuous driving cycles.

- **Normality Judgment**

Judge as OK and clear the NG if the continuous time while the following conditions are established is more than the predetermined time.

Judgment Value

Malfunction Criteria	Threshold Value
Cylinder number identification	Completed
Amount of crank sensor signal during 1 rev of crankshaft.	= 30

Time Needed for Diagnosis: Less than 1 second

BN:DTC P0340 CAMSHAFT POSITION SENSOR “A” CIRCUIT (BANK 1 OR SINGLE SENSOR)

1. OUTLINE OF DIAGNOSIS

Detect the open or short circuit of the camshaft position sensor.
Judge as NG when the number of camshaft signals remains abnormal.

2. COMPONENT DESCRIPTION

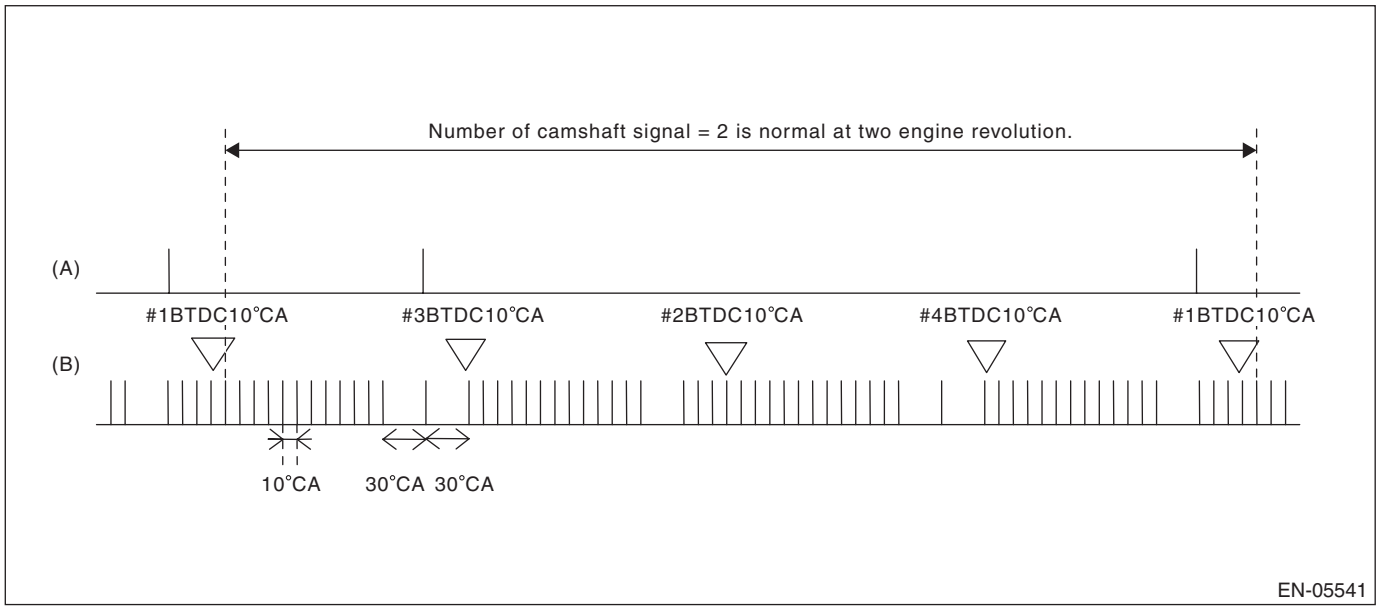

(A) Camshaft signal (B) Crankshaft signal

3. ENABLE CONDITION

Secondary Parameters	Enable Conditions
None	

4. GENERAL DRIVING CYCLE

Always perform the diagnosis continuously.

5. DIAGNOSTIC METHOD

Abnormality Judgment

If the duration of time while the following conditions are met is longer than the time indicated, judge as NG.

Judgment Value

Malfunction Criteria	Threshold Value
Battery voltage	≥ 8 V
Amount of camshaft sensor signal during 2 revs of crankshaft.	Not = 2

Time Needed for Diagnosis: Two engine revs. × 4 time(s)
Malfunction Indicator Light Illumination: Illuminates as soon as a malfunction occurs.

Normality Judgment

Judge as OK and clear the NG if the continuous time while the following conditions are established is more than the predetermined time.

Judgment Value

Malfunction Criteria	Threshold Value
Voltage	≥ 8 V
Amount of camshaft sensor signal during 2 revs.	= 2

Time Needed for Diagnosis: Two engine revs.

BO:DTC P0341 CAMSHAFT POSITION SENSOR "A" CIRCUIT RANGE/PERFORMANCE (BANK 1 OR SINGLE SENSOR)

1. OUTLINE OF DIAGNOSIS

Detect the malfunction of camshaft position sensor output property.
Judge as NG when the camshaft line signal input timing is shifted from the crankshaft signal because of timing belt tooth chip etc.

2. COMPONENT DESCRIPTION

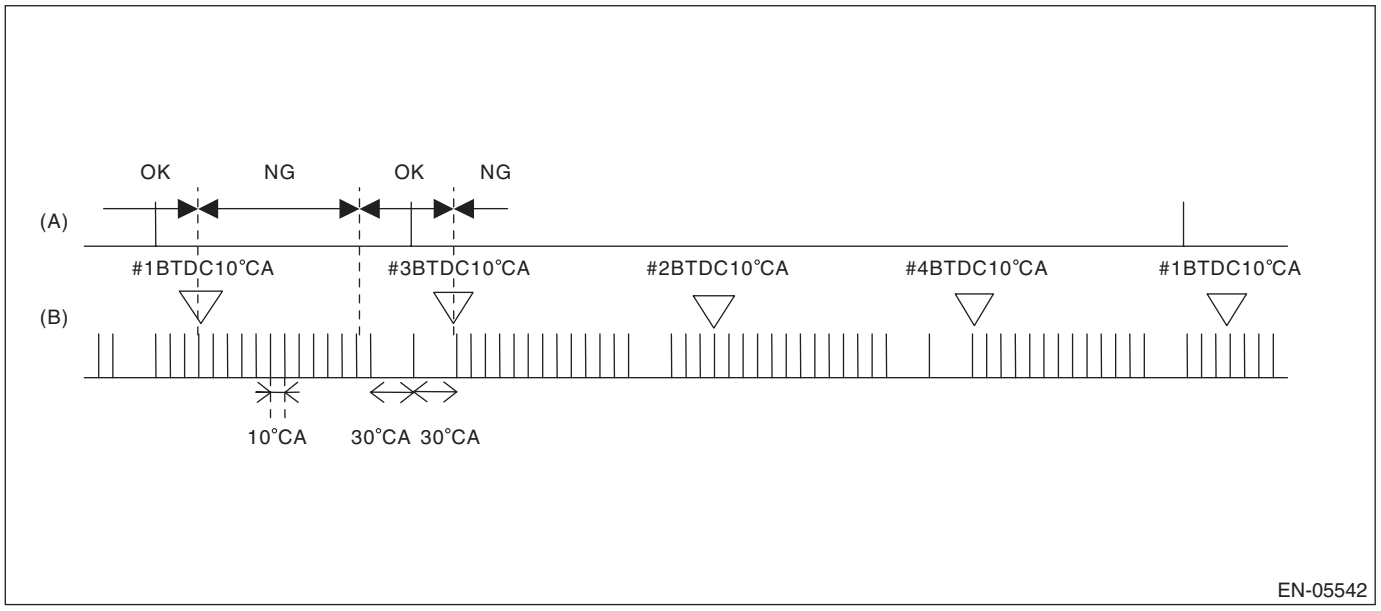

(A) Cam signal
(B) Crankshaft signal

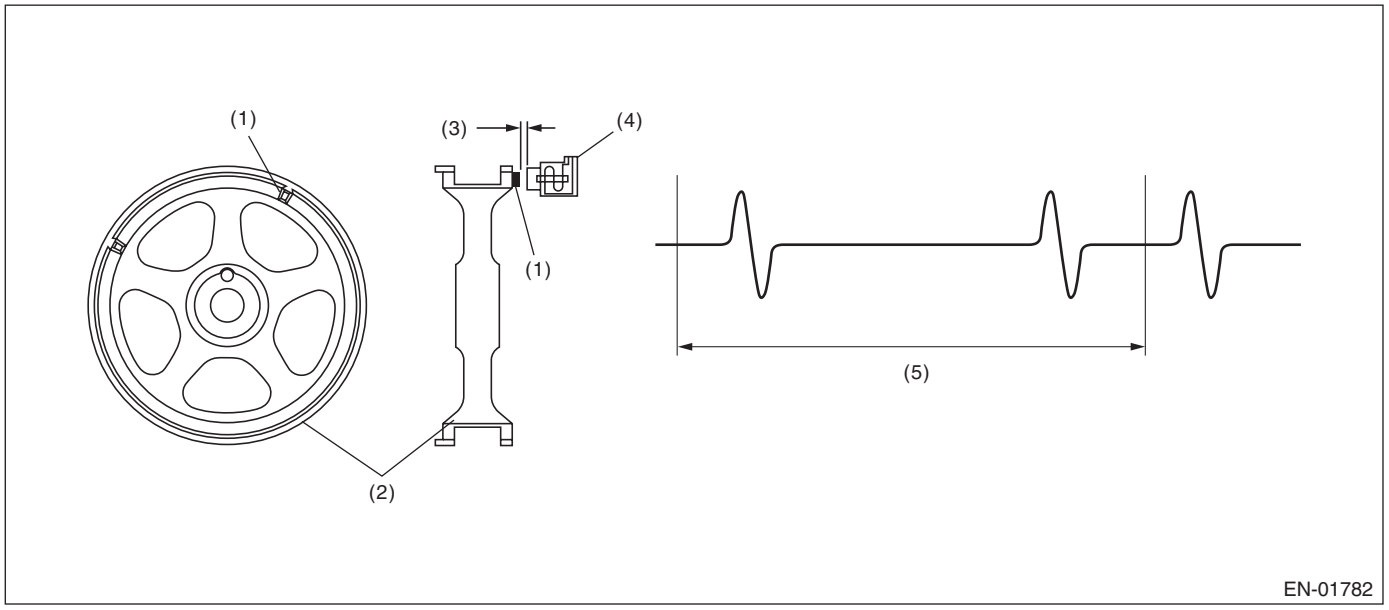

(1) Boss
(2) Cam sprocket
(3) Air gap
(4) Camshaft position sensor
(5) Camshaft one revolution (crankshaft two revolutions)

3. ENABLE CONDITION

Secondary Parameters	Enable Conditions
Cylinder number identification	Completed
Battery voltage	≥ 8 V
Engine speed	550 rpm — 1000 rpm
Engine operation	Idling
Misfire	Not detected
Engine speed variation for 4 ms	≤ 12799.8 rpm

4. GENERAL DRIVING CYCLE

Always perform the diagnosis continuously at idle speed.

5. DIAGNOSTIC METHOD

- **Abnormality Judgment**

If the duration of time while the following conditions are met is longer than the time indicated, judge as NG.

Judgment Value

Malfunction Criteria	Threshold Value
Position of camshaft position sensor signal	Not between BTDC 10°CA and BTDC 80°CA

Time Needed for Diagnosis: 10 time(s) engine revolutions
Malfunction Indicator Light Illumination: Illuminates when malfunction occurs in 2 continuous driving cycles.

- **Normality Judgment**

Judge as OK and clear the NG if the continuous time while the following conditions are established is more than the predetermined time.

Judgment Value

Malfunction Criteria	Threshold Value
Position of camshaft position sensor signal	Between BTDC10°CA and BTDC80°CA

Time Needed for Diagnosis: 2 engine revs.

BP:DTC P0351 IGNITION COIL A PRIMARY/SECONDARY CIRCUIT

1. OUTLINE OF DIAGNOSIS

Based on the self-diagnostic result of the ignition coil driving IC, judge the ignition coil driving circuit as normal or abnormal.
The ignition coil driving IC detects “no ignition” status as a malfunction.

2. ENABLE CONDITIONS

Secondary Parameters	Enable Conditions
Battery voltage	≥ 10.9 V
Elapsed time after starting the engine	> 1 s
Engine speed	> 500 rpm
Ignition energization time	> 2000 μs
Ignition status	Not during ignition cut

3. GENERAL DRIVING CYCLE

Always perform the diagnosis continuously.

4. DIAGNOSTIC METHOD

- **Abnormality Judgment**

Judge as NG when the following conditions are established.

Judgment Value

Malfunction Criteria	Threshold Value
Ignition driving IC information	Malfunction

Time Needed for Diagnosis: 2500 ms
Malfunction Indicator Light Illumination: Illuminates as soon as a malfunction occurs.

- **Normality Judgment**

Judge as OK and clear the NG if the following conditions are established.

Judgment Value

Malfunction Criteria	Threshold Value
Ignition driving IC information	Normal

Time Needed for Diagnosis: Less than 1 second

BQ:DTC P0352 IGNITION COIL B PRIMARY/SECONDARY CIRCUIT

1. OUTLINE OF DIAGNOSIS

NOTE:
For the detection standard, refer to DTC P0351. <Ref. to GD(H4SO)-134, DTC P0351 IGNITION COIL A PRIMARY/SECONDARY CIRCUIT, Diagnostic Trouble Code (DTC) Detecting Criteria.>

BR:DTC P0353 IGNITION COIL C PRIMARY/SECONDARY CIRCUIT

1. OUTLINE OF DIAGNOSIS

NOTE:
For the detection standard, refer to DTC P0351. <Ref. to GD(H4SO)-134, DTC P0351 IGNITION COIL A PRIMARY/SECONDARY CIRCUIT, Diagnostic Trouble Code (DTC) Detecting Criteria.>

BS:DTC P0354 IGNITION COIL D PRIMARY/SECONDARY CIRCUIT

1. OUTLINE OF DIAGNOSIS

NOTE:
For the detection standard, refer to DTC P0351. <Ref. to GD(H4SO)-134, DTC P0351 IGNITION COIL A PRIMARY/SECONDARY CIRCUIT, Diagnostic Trouble Code (DTC) Detecting Criteria.>

BT:DTC P0400 EXHAUST GAS RECIRCULATION FLOW

1. OUTLINE OF DIAGNOSIS

Detect EGR system malfunction.
Intake manifold pressure (negative pressure) is constant because the throttle valve is fully closed during deceleration fuel cut. At this time, when the EGR valve is opened/closed, the intake manifold pressure will change. EGR System OK/NG is judged by the range of this change.

2. COMPONENT DESCRIPTION

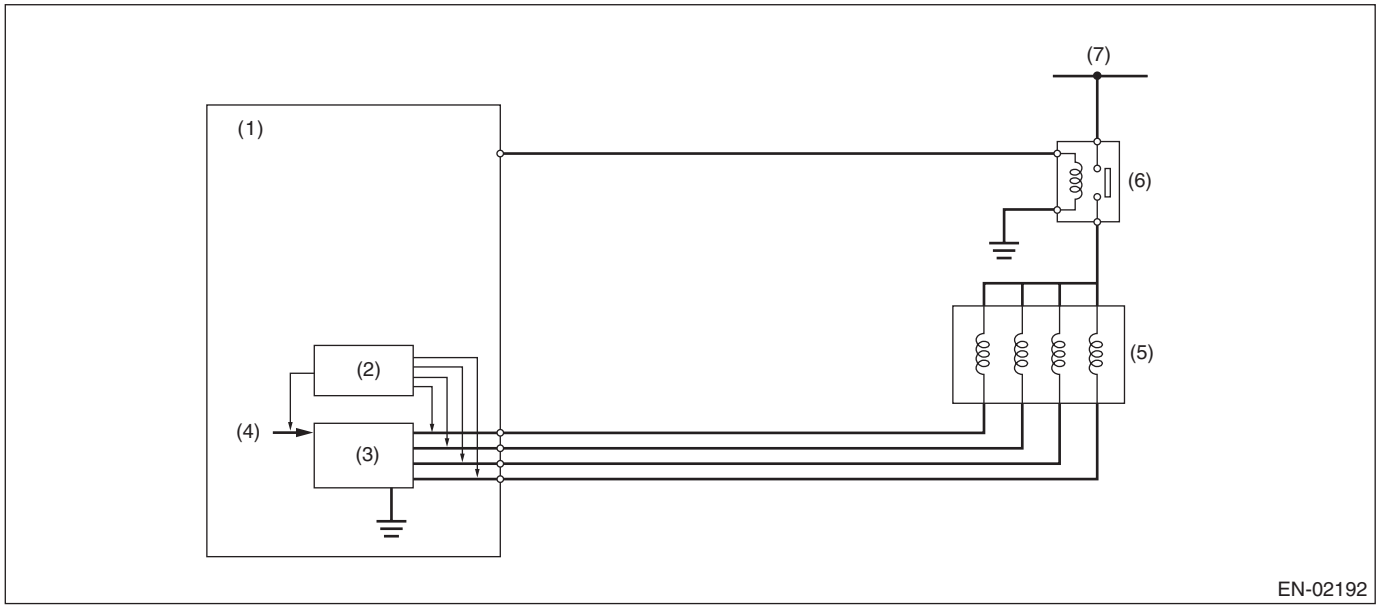

(1) ECM
(2) Detecting circuit
(3) Switching circuit
(4) CPU
(5) EGR valve
(6) Main relay
(7) Battery power supply

3. ENABLE CONDITION

Secondary Parameters	Enable Conditions
Elapsed time after starting the engine	≥ 40 s
Engine coolant temperature	≥ 75 °C(167 °F)
Engine speed	1200 rpm — 2950 rpm
Intake manifold pressure (absolute pressure)	< 44 kPa (330 mmHg, 13 inHg)
Ambient air temperature	≥ 5 °C(41 °F)
Throttle position	< 0.25 °
Battery voltage	≥ 10.9 V
Atmospheric pressure	≥ 75 kPa (563 mmHg, 22.2 inHg)
Vehicle speed	≥53 km/h (32.9 MPH)
Fuel shut-off function	In operation
Neutral switch	OFF
After neutral switch ON/OFF change	≥ Value from Map
No load change (A/C, power steering, lighting, rear defogger, heater fan and radiator fan)	≥ 5000 ms

Map

Engine coolant temperature °C (°F)	–40 (–40)	–30 (–22)	–20 (–4)	–10 (14)	0 (32)	10 (50)	20 (68)	30 (86)
After neutral switch change msec	0	0	0	0	0	0	0	0

Engine coolant temperature °C (°F)	40 (104)	50 (122)	60 (140)	70 (158)	80 (176)	90 (194)	100 (212)	110 (230)
After neutral switch change msec	0	0	0	0	0	0	0	0

4. GENERAL DRIVING CYCLE

During deceleration fuel cut from 53 km/h (approx. 33 MPH) or more, perform diagnosis once.
Be careful of vehicle speed and engine speed. (Diagnosis will not be completed if the vehicle speed and engine speed conditions become out of specification due to deceleration.)

5. DIAGNOSTIC METHOD

Measure the pressure values when the enable conditions are established, and perform diagnosis by calculating those results.
1. Label the intake manifold pressure value as PMOF1, which is observed when enable conditions are established, and set the EGR target step to 50 steps (nearly full open).
2. Label the intake manifold pressure value as PMON, which is observed after one second has passed since EGR target step was set to 50 steps (when the enable conditions were established), and set the EGR target step to 0.
3. Label the intake manifold pressure as PMOF2, which is observed after one second has passed since EGR target step was set to 0 (after two seconds have passed since the enable conditions were established).

- **Abnormality Judgment**

Judge as NG when the following conditions are established.

Judgment Value

Malfunction Criteria	Threshold Value
PMON – (PMOF1 + PMOF2)/2	< 2.5 kPa (18.63 mmHg, 0.7 inHg)

Time Needed for Diagnosis: 1 time

Malfunction Indicator Light Illumination: Illuminates when malfunction occurs in 2 continuous driving cycles.

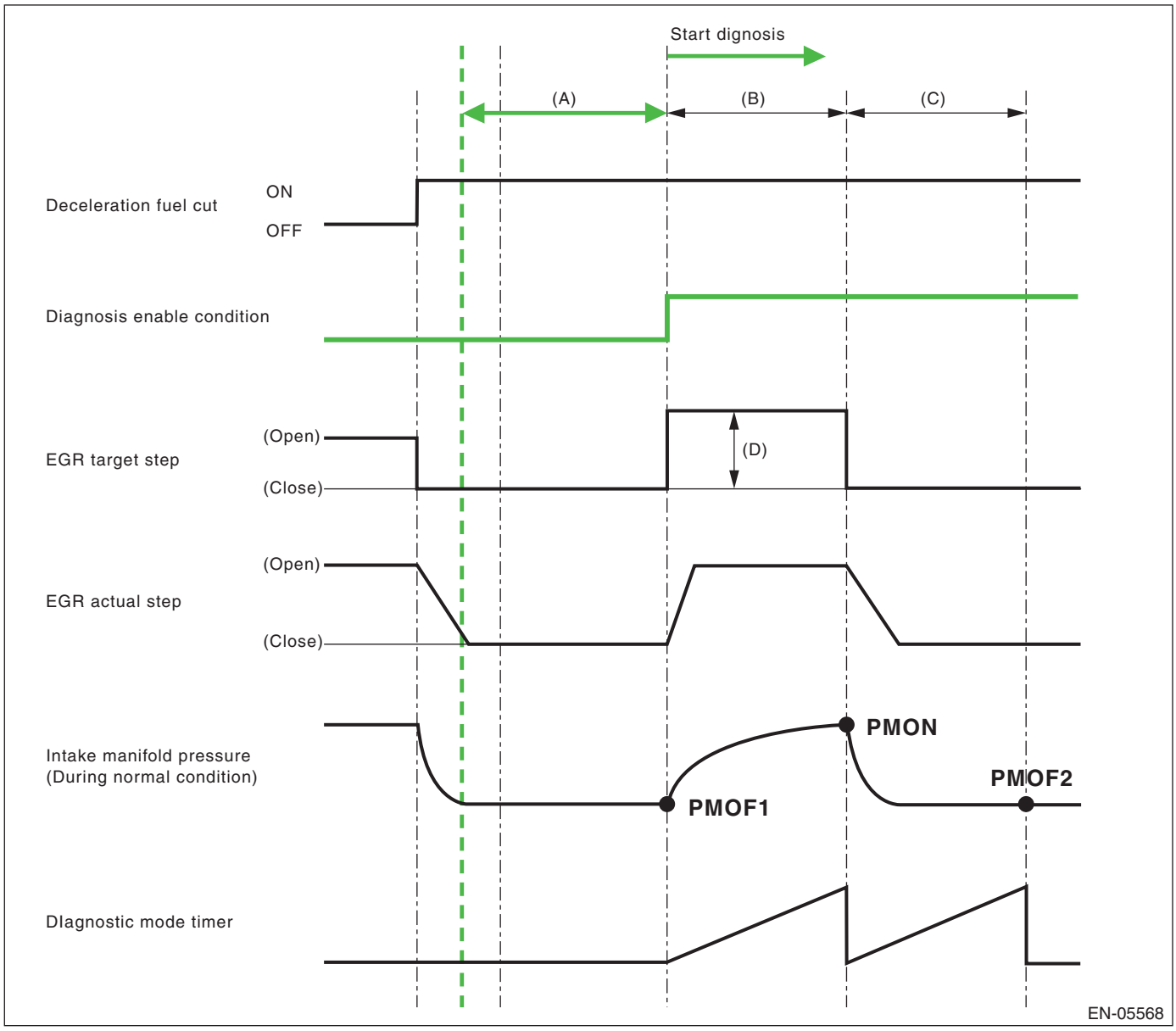

(A) 3000 ms (B) 1000 ms (C) 1000 ms
(D) 45 step(s)

- **Normality Judgment**

Judge as OK and clear the NG if the following conditions are established.

Judgment Value

Malfunction Criteria	Threshold Value
PMON – (PMOF1 + PMOF2)/2	≥ 2.5 kPa (18.63 mmHg, 0.7 inHg)

Time Needed for Diagnosis: 1 time

BU:DTC P0420 CATALYST SYSTEM EFFICIENCY BELOW THRESHOLD (BANK 1)

1. OUTLINE OF DIAGNOSIS

Detect the deterioration of the catalyst function.
Though the front oxygen sensor output would change slowly with a new catalyst, the sensor output with a deteriorated catalyst becomes high and the inversion time is shortened.
For this reason, the catalyst diagnosis is carried out by monitoring the front oxygen sensor output and comparing it with the front oxygen (A/F) sensor output.

2. COMPONENT DESCRIPTION

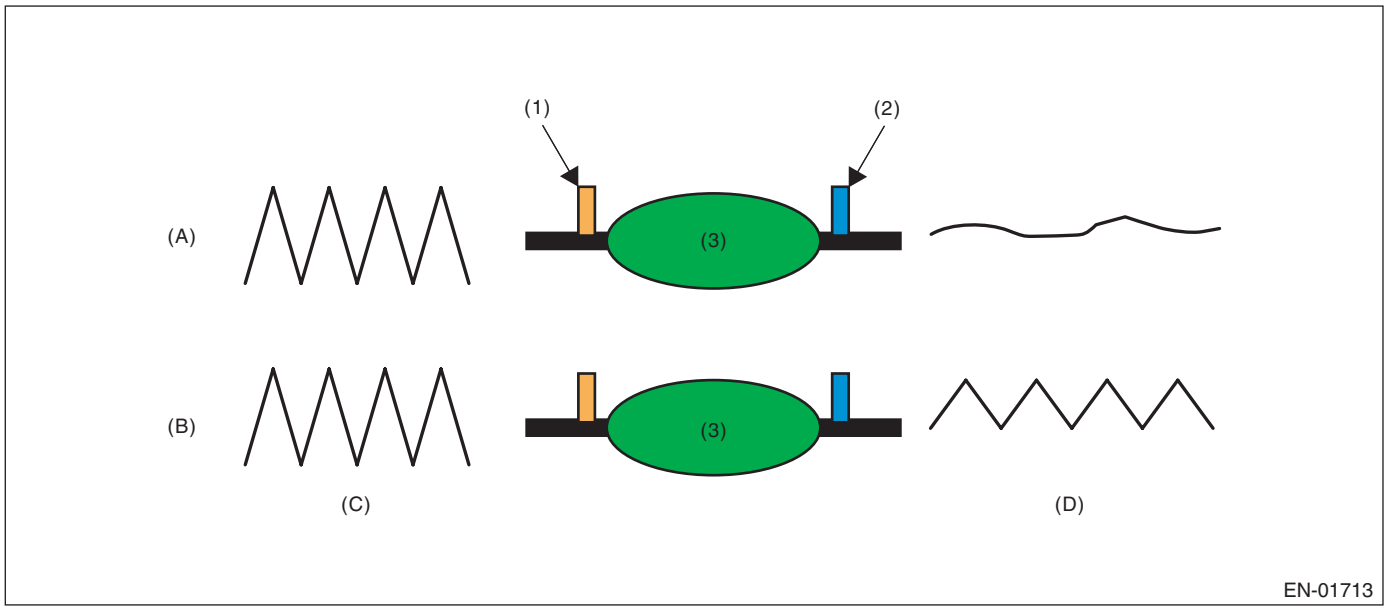

(A) Normal
(B) Deterioration
(C) Output waveform from the front oxygen (A/F) sensor
(D) Output waveform from the front oxygen sensor
(1) Front oxygen (A/F) sensor
(2) Front oxygen sensor
(3) Catalytic converter

3. ENABLE CONDITION

Secondary Parameters	Enable Conditions
Battery voltage	≥ 10.9 V
Atmospheric pressure	≥ 75 kPa (563 mmHg, 22.2 inHg)
Engine coolant temperature	≥ 75 °C (167 °F) (PZEV model) ≥ 70 °C (158 °F) (CVT model except for PZEV) ≥ 75 °C (167 °F) (MT model except for PZEV)
Estimated catalyst temperature	≥ 580 °C (1076 °F) (CVT model) ≥ 600 °C (1112 °F) (MT model)
Misfire detection every 200 rotations	< 65535 time(s)
Learning value of evaporation gas density	< 0.2
Sub feedback	In operation
Evaporative system diagnosis	Not in operation
Time of difference (< 0.10) between actual lambda and target lambda	≥ 1000 ms
Vehicle speed	> 75 km/h (46.6 MPH)
Amount of intake air	≥ 5 g/s (0.18 oz/s) (PZEV CVT model) ≥ 7 g/s (0.25 oz/s) (except for PZEV CVT model) and < 40 g/s (1.41 oz/s)
Engine load change every 0.5 engine revs.	< 0.02 g/rev (0 oz/rev)
Rear oxygen output change from 660 mV or less to 660 mV or more	Experienced after fuel cut
Elapsed time after starting the engine	≥ 225 s (PZEV model) ≥ 218 s (except for PZEV model)
Purge execution calculated time	≥ 0 s

4. GENERAL DRIVING CYCLE

Perform the diagnosis only once at a constant 75 km/h (46.6 MPH) or higher.

5. DIAGNOSTIC METHOD

After the enable conditions have been established, calculate the front oxygen (A/F) sensor lambda value deviation sum value (Σ |($sglmd_n$ – $sglmd_{n-1}$)|), and rear oxygen sensor output voltage deviation sum value (Σ |($ro2sad_n$ – $ro2sad_{n-1}$)|) in every 32 ms × 4 times. If the front oxygen (A/F) sensor lambda value deviation sum value (Σ |($sglmd_n$ – $sglmd_{n-1}$)|) is the predetermined value or more, calculate the diagnostic value.

• Abnormality Judgment

If the duration of time while the following conditions are met is within the time indicated, judge as NG.

Judgment Value

Malfunction Criteria	Threshold Value
Σ |($ro2sad_n$ – $ro2sad_{n-1}$)| / Σ |($sglmd_n$ – $sglmd_{n-1}$)|	> 11 (PZEV model) > 19.5 (CVT model except for PZEV) > 16 (MT model except for PZEV)

Time Needed for Diagnosis: 30 — 55 seconds
Malfunction Indicator Light Illumination: Illuminates when malfunction occurs in 2 continuous driving cycles.

• Normality Judgment

Judge as OK and clear the NG if the continuous time while the following conditions are established is within the predetermined time.

Judgment Value

Malfunction Criteria	Threshold Value
Σ |($ro2sad_n$ – $ro2sad_{n-1}$)| / Σ |($sglmd_n$ – $sglmd_{n-1}$)|	≤ 11 (PZEV model) ≤ 19.5 (CVT model except for PZEV) ≤ 16 (MT model except for PZEV)

Time Needed for Diagnosis: 30 — 55 seconds

BV:DTC P0442 EVAPORATIVE EMISSION CONTROL SYSTEM LEAK DETECTED (SMALL LEAK)

1. OUTLINE OF DIAGNOSIS

The evaporative system monitor detects leak up to 0.020 inch in the fuel tank and evaporative emissions system. If the fuel cap is not present or has not been correctly tightened after a refueling event, a malfunction is also detected. These malfunctions are detected by monitoring the fuel tank and system pressure during an intrusive pull-down pressure test. Pull down is accomplished via the purge valve while the engine is running. Monitors run during the first idle after engine start and while driving.
The diagnostic is classified into two monitors. The first monitor detects a 0.040 inch leak, fuel cap loose/off, and canister purge valve stuck open/close whilst the other monitor detects a 0.020 inch leak when the vehicle is moving or during the first idle. Failures, DTCs and monitor methods are as follows.

P0457	Fuel cap loose/off or CPC valve stuck open/close	Monitor 1
P0442	0.040 inch leak	Monitor 1
P0456	0.020 inch leak	Monitor 2

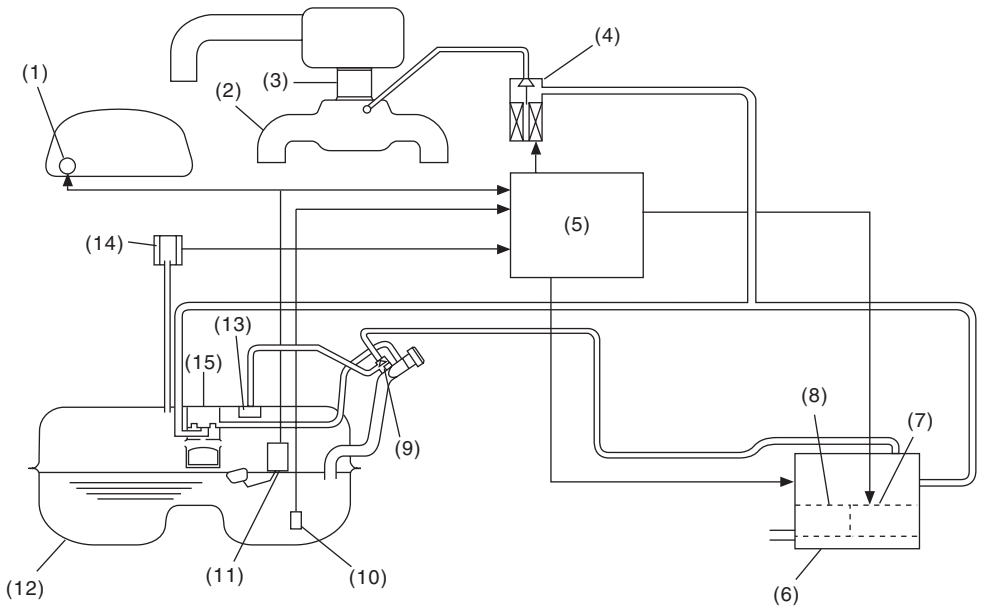

EN-07995

(1) Fuel gauge
(2) Intake manifold
(3) Throttle body
(4) Purge control solenoid valve (CPC valve)
(5) Engine control module (ECM)
(6) Canister
(7) Drain valve (CCV)
(8) Drain filter
(9) Shut-off valve
(10) Fuel temperature sensor
(11) Fuel level sensor
(12) Fuel tank
(13) Fuel cut valve
(14) Fuel tank pressure sensor
(15) Vent valve

Monitor 1

- **P0457 Fuel cap loose/off or CPC valve stuck open/close**
- **P0442 0.040 inch leak check**

This monitor detects CPC valve stuck open/close, fuel cap loose/off, and 0.040 inch leak in the evaporative emission system by monitoring the fuel tank system pressure an intrusive pull-down pressure test. The monitor consists of Modes Z, A, B, C and D. There are three judgment times for these malfunctions. CPC valve stuck open is performed in Mode Z, CPC valve stuck closed or fuel cap loose/off is in Mode B, 0.040 inch leak is in Mode D.

Mode	Description of each mode	Required time for each mode
Mode Z (Monitoring of CPC stuck open)	CPC valve: Closed CCV: Closed The system requires 3000 ms to measure the pressure difference. (1) Pressure difference < 0.9 kPa (6.5 mmHg, 0.3 inHg) → Judged as “Fail of CPC stuck open” **[P0457]** (2) Pressure difference ≥ 0.4 kPa (3 mmHg, 0.1 inHg) → Move to Mode A	3000 ms
Mode A (Estimation of Evap. Generation)	The system requires 10000 ms to measure the pressure increase (evpp1), and then move to Mode B.	10000 ms
Mode B (Negative Pressure Introduction/ Monitoring of Fuel cap off or CPC stuck close)	CPC valve: Open Negative pressure is introduced to the fuel tank. (1) Elapsed time in Mode B ≥ 10000 ms and (Minimum tank pressure) – (Initial tank pressure) > –0.5 kPa (–4 mmHg, –0.2 inHg) → Judged as “Fail of Fuel cap off or CPC stuck close” **[P0457]** (2) Elapsed time in Mode B ≥ 10000 ms + 25000 ms → Judged as “Fail of Fuel cap off or CPC stuck close” **[P0457]** (3) Fuel tank pressure ≤ –1.4 kPa (–10.5 mmHg, –0.4 inHg) → Move to Mode C	Average: 7 s (Depends on the tank condition)
Mode C (Keeping Negative Pressure / Pass in Mode C)	CPC valve: Closed When the tank pressure comes up to the target pressure (–1.3 kPa (–9.75 mmHg, –0.4 inHg)), the monitor moves to Mode D. If the fuel tank pressure does not exceed the –1.3 kPa (–9.75 mmHg, –0.4 inHg) after 14013 ms, the system judges as “Pass in Mode C” and moves to “Final Judgment”.	Average: 7 s (Depends on the tank condition)
Mode D (Pressure Measurement / Pass Fail in Mode D)	The monitor requires 10000 ms to measure the pressure change (evpp2) and calculates the monitor value (evpp2 – 1.5 × evpp1), where Mode A (evpp1) is the generated vapor pressure. The calculated value (evpp2 – 1.5 × evpp1) is then compared to a calibrated threshold table as a function of fuel temperature and fuel level. The system judges as a “Pass/Fail in Mode D” and then moves to “Final Judgment”. (1) evpp2 – 1.5 × evpp1 > Fail Threshold (Map 1) → “Fail in Mode D” (2) evpp2 – 1.5 × evpp1 ≤ Pass Threshold (Map 1) → “Pass in Mode D”	10000 ms
Final Judgment (Pass / Fail)	The monitor is completed in the following order (1) Judged as “Fail in Mode D” → “Fail of 0.040 inch leak” **[P0442]** (2) Judged as “Pass in Mode C / Mode D” → “Pass of 0.040 inch leak”	0.128 s

Map 1 (Threshold value for 0.040 inch leak)

		Fuel temperature (°C (°F))			
		15 (59)	25 (77)	35 (95)	45 (113)
Fuel Level ℓ (US gal, Imp gal)	10.5 (2.77, 2.31)	0.3 (2.1, 0.1)	0.3 (2.1, 0.1)	0.3 (2.3, 0.1)	0.3 (2.4, 0.1)
	27 (7.13, 5.94)	0.3 (2.32, 0.1)	0.3 (2.5, 0.1)	0.4 (2.73, 0.1)	0.4 (2.88, 0.1)
	43 (11.36, 9.46)	0.4 (2.88, 0.1)	0.4 (2.97, 0.1)	0.4 (3.23, 0.1)	0.5 (3.43, 0.1)
	59.5 (15.72, 13.09)	0.5 (3.5, 0.1)	0.5 (3.5, 0.1)	0.5 (3.5, 0.1)	0.5 (3.7, 0.1)
kPa (mmHg, inHg)					

Monitor 2

P0456 0.020 inch leak check

This monitor detects a very small leak (0.020 inch) in the evaporative emissions system by monitoring the fuel tank and system pressure during an intrusive pull-down pressure test. Pull down is accomplished via the purge valve while the engine is running. The monitor runs during the first idle after engine start and also while the vehicle is running.

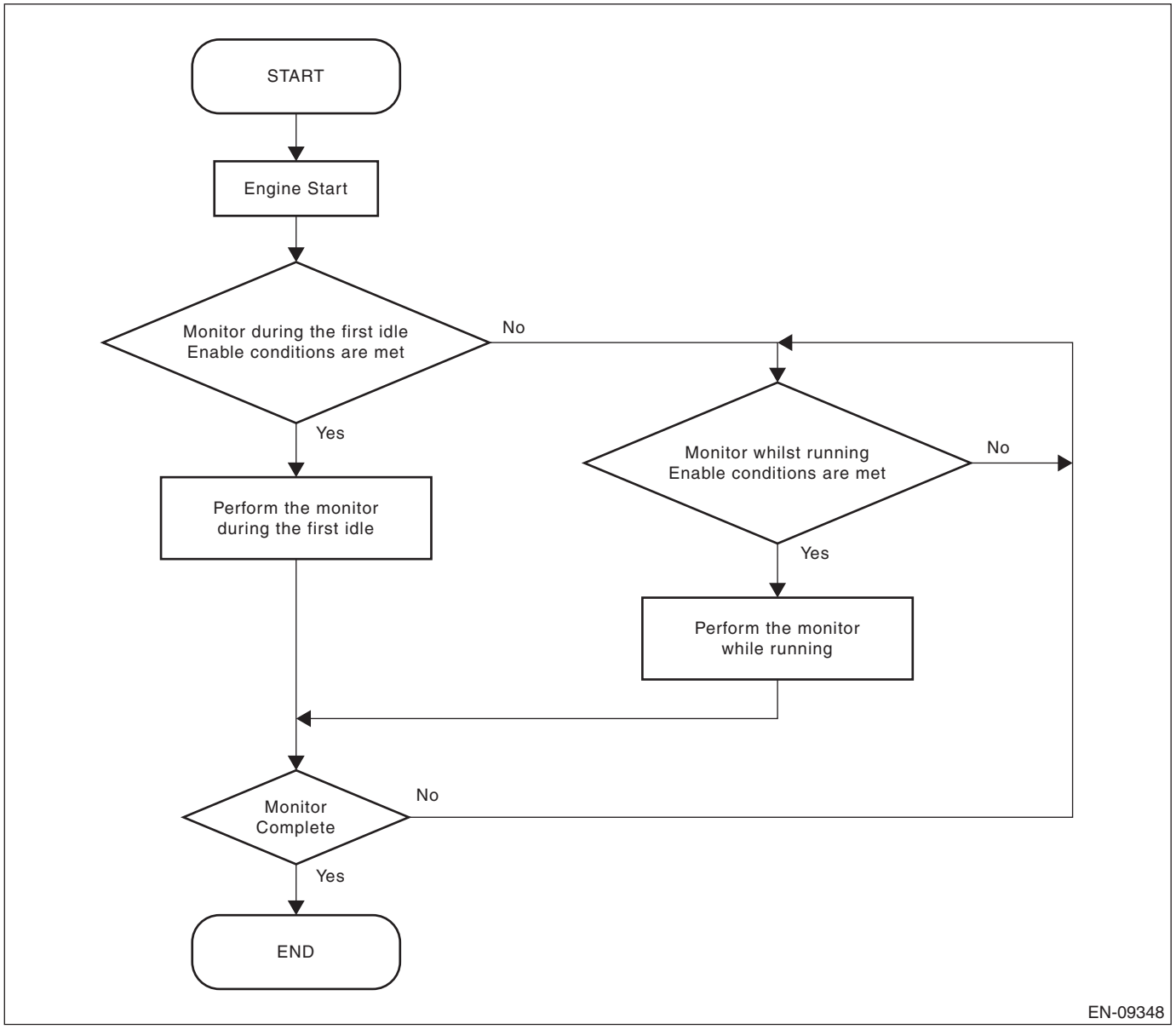

Monitor 2 (first idle condition)

Mode	Description of each mode	Required time for each mode
Mode A (Estimation of Evap. Generation)	CPC valve: Closed CCV: Closed Low vapor flag At the beginning of the monitor test when; → Fuel temperature is lower than Map 2 listed value → Intake air temperature is lower than Map 3 listed value The system sets “Low vapor flag = ON”. Low vapor flag is used in Mode A, Mode C, and Mode D. The system measures the generated vapor pressure increase (△ P1) in the specific time period (*1), and then moves to Mode B. (*1) Low vapor flag OFF: 10000 ms, Low vapor flag ON: 128 ms	Low vapor flag OFF 10000 ms Low vapor flag ON 128 ms
Mode B (Negative Pressure Introduction)	CPC valve: Open Negative pressure is introduced to the fuel tank via engine manifold vacuum. When the fuel tank pressure reaches the target pressure (–1.3 kPa (–10 mmHg, –0.4 inHg)), the monitor moves to Mode C.	Average: 13 s (Depends on the tank condition)
Mode C (Keeping Negative Pressure / Pass in Mode C)	CPC valve: Closed After a calibrated time period (*2) has elapsed since the tank pressure comes up to the target pressure (–1.3 kPa (–10 mmHg, –0.4 inHg)), move to Mode D. If the fuel tank pressure does not exceed the target pressure (–1.3 kPa (–10 mmHg, –0.4 inHg)) after Map 4 (ms), the system is judged as “Pass in Mode C” and moves to “Final Judgment”. (*2) Low vapor flag OFF: 10000 ms, Low vapor flag ON: 2000 ms	Low vapor flag OFF Average: 21 s Low vapor flag ON Average: 10 s (Depends on the tank condition)
Mode D (Pressure Measurement / Fail or Pass in Mode D)	The monitor requires 10000 ms to measure the pressure change (△ P2) and calculates the monitor value (△ P2- △ P1), where Mode A (△ P1) is the generated vapor pressure. The calculated value (△ P2- △ P1) is then compared to a calibrated threshold table as a function of fuel temperature and fuel level. The system judges as a “Pass/Fail in Mode D” and then moves to “Final Judgment”. (1) △ P2 – △ P1 > Fail Threshold (*3) → “Fail in Mode D” (2) △ P2 – △ P1 ≤ Pass Threshold (*4) → “Pass in Mode D” (*3) Low vapor flag OFF: Map 5, Low vapor flag ON: Map 7 (*4) Low vapor flag OFF: Map 6, Low vapor flag ON: Map 8	10000 ms
Final Judgment (Pass / Fail)	The monitor is completed in the following order (1) Judged as “Fail in Mode D” → “Fail of 0.020 inch leak” **[P0456]** (2) Judged as “Pass in Mode C / Mode D” → “Pass of 0.020 inch leak”	0.128 s

Map 2 (Fuel temperature threshold for “Low vapor flag”)

Fuel Level ℓ (US gal, Imp gal)	10.5 (2.77, 2.31)	35 (9.25, 7.7)	59.5 (15.72, 13.09)
Fuel temperature threshold °C (°F)	5 (41)	10 (50)	15 (59)

Map 3 (intake air temperature threshold for “Low Vapor Flag”)

Fuel Level ℓ (US gal, Imp gal)	10.5 (2.77, 2.31)	35 (9.25, 7.7)	59.5 (15.72, 13.09)
Intake air temperature threshold °C (°F)	5 (41)	10 (50)	15 (59)

Map 4 (Period for judgment of Pass in Mode C)

Fuel Level ℓ (US gal, Imp gal)	10.5 (2.77, 2.31)	35 (9.25, 7.7)	50 (13.21, 11)	59.5 (15.72, 13.09)
Period for Pass in Mode C (ms)	23000	16000	12000	9500

Map 5 (Threshold value for 0.020 inch leak in Mode D under normal condition)

		Fuel temperature (°C (°F))									
		0 (32)	10 (50)	15 (59)	20 (68)	25 (77)	30 (86)	35 (95)	40 (104)	45 (113)	50 (122)
Fuel Level ℓ (US gal, Imp gal)	10.5 (2.77, 2.31)	0.1 (0.70, 0)	0.1 (0.70, 0)	0.1 (0.70, 0)	0.1 (0.70, 0)	0.1 (0.90, 0)	0.1 (1.10, 0)	0.1 (1.10, 0)	0.1 (1.10, 0)	0.1 (1.10, 0)	0.1 (1.10, 0)
	35 (9.25, 7.7)	0.1 (0.80, 0)	0.1 (0.80, 0)	0.1 (0.80, 0)	0.1 (0.80, 0)	0.1 (1.00, 0)	0.2 (1.20, 0)	0.2 (1.20, 0)	0.2 (1.20, 0)	0.2 (1.20, 0)	0.2 (1.20, 0)
	59.5 (15.72, 13.09)	0.1 (0.90, 0)	0.1 (0.90, 0)	0.1 (0.90, 0)	0.1 (0.90, 0)	0.1 (1.10, 0)	0.2 (1.30, 0.1)	0.2 (1.30, 0.1)	0.2 (1.30, 0.1)	0.2 (1.30, 0.1)	0.2 (1.30, 0.1)
kPa (mmHg, inHg)											

Map 6 (Threshold value for Pass in Mode D under normal conditions)

		Fuel temperature (°C (°F))									
		0 (32)	10 (50)	15 (59)	20 (68)	25 (77)	30 (86)	35 (95)	40 (104)	45 (113)	50 (122)
Fuel Level ℓ (US gal, Imp gal)	10.5 (2.77, 2.31)	0.1 (0.60, 0)	0.1 (0.60, 0)	0.1 (0.60, 0)	0.1 (0.60, 0)	0.1 (0.60, 0)	0.1 (0.60, 0)	0.1 (0.60, 0)	0.1 (0.60, 0)	0.1 (0.60, 0)	0.1 (0.60, 0)
	35 (9.25, 7.7)	0.1 (0.60, 0)	0.1 (0.60, 0)	0.1 (0.60, 0)	0.1 (0.60, 0)	0.1 (0.60, 0)	0.1 (0.60, 0)	0.1 (0.60, 0)	0.1 (0.60, 0)	0.1 (0.60, 0)	0.1 (0.60, 0)
	59.5 (15.72, 13.09)	0.1 (0.80, 0)	0.1 (0.80, 0)	0.1 (0.80, 0)	0.1 (0.80, 0)	0.1 (0.80, 0)	0.1 (0.80, 0)	0.1 (0.80, 0)	0.1 (0.80, 0)	0.1 (0.80, 0)	0.1 (0.80, 0)
kPa (mmHg, inHg)											

Map 7 (Threshold value for 0.020 inch leak in Mode D with under low vapor conditions)

		Fuel temperature (°C (°F))			
		0 (32)	10 (50)	15 (59)	20 (68)
Fuel Level ℓ (US gal, Imp gal)	10.5 (2.77, 2.31)	0.1 (0.80, 0)	0.1 (0.80, 0)	0.1 (0.80, 0)	0.1 (0.80, 0)
	35 (9.25, 7.7)	0.1 (0.90, 0)	0.1 (0.90, 0)	0.1 (0.90, 0)	0.1 (0.90, 0)
	59.5 (15.72, 13.09)	0.1 (1, 0)	0.1 (1, 0)	0.1 (1, 0)	0.1 (1, 0)
kPa (mmHg, inHg)					

Map 8 (Threshold value for Pass in Mode D with under low vapor conditions)

		Fuel temperature (°C (°F))			
		0 (32)	10 (50)	15 (59)	20 (68)
Fuel Level ℓ (US gal, Imp gal)	10.5 (2.77, 2.31)	0.1 (0.60, 0)	0.1 (0.60, 0)	0.1 (0.60, 0)	0.1 (0.60, 0)
	35 (9.25, 7.7)	0.1 (0.7, 0)	0.1 (0.7, 0)	0.1 (0.7, 0)	0.1 (0.7, 0)
	59.5 (15.72, 13.09)	0.1 (0.80, 0)	0.1 (0.80, 0)	0.1 (0.80, 0)	0.1 (0.80, 0)
kPa (mmHg, inHg)					

Monitor 2 (vehicle running condition)

Mode	Description of each mode	Required time for each mode
Mode A-1 (Zero adjust)	CPC valve: Closed Fuel tank pressure is adjusted to zero. If the fuel tank pressure is close to the ambient pressure, the system waits 5000 ms for stabilization of the tank pressure prior to moving to Mode A-2.	Average: 7 s (Depends on the tank condition)
Mode A-2 (Estimation of Evap. Generation)	CCV: Closed The system requires 30000 ms to measure the pressure increase (P1), and then move to Mode B.	30000 ms
Mode B (Negative Pressure Introduction)	CPC valve: Open Negative pressure is introduced to the fuel tank via engine manifold vacuum. When the fuel tank pressure reaches the target pressure (–2 kPa (–15 mmHg, –0.6 inHg)), the monitor moves to Mode C.	Average: 22 s (Depends on the tank condition)
Mode C (Keeping Negative Pressure)	CPC valve: Closed When the tank pressure comes up to target pressure (–2 kPa (–15 mmHg, –0.6 inHg)) or the calibrated period (Map 9) has passed, move to Mode D.	Average: 5 s (Depends on the tank condition)
Mode D (Pressure Measurement / Pass Fail in Mode D)	The system calculates the integrated pressure change (ptepap1sum) which is compensated by “P1” (the generated vapor pressure), ptepap1sum (n) = ptepap1sum (n–1) + ptepap1 – (–2 kPa (–15 mmHg, –0.6 inHg)) ptepap1 = (Fuel tank pressure) – (“P1”) / (Mode A-2 time) × (Elapsed time in Mode D) When the calibrated period (Map 10) has passed or the tank pressure reaches the Ambient pressure (0 kPa (0 mmHg, 0 inHg)), the system compares the monitor value (ptepap1sum) to a calibrated threshold table as a function of elapsed time in Mode D and fuel level. The system judges as “Pass/Fail in Mode D” and then moves to “Final Judgment”. (1) ptepap1sum > Fail Threshold (Map 11) → “Fail in Mode D” (2) ptepap1sum ≤ Pass Threshold (Map 12) → “Pass in Mode D”	Average: 134 s (Depends on the tank condition)
Final Judgment (Pass / Fail)	The monitor is completed in the following order (1) Judged as “Fail in Mode D” → Fail of 0.020 inch leak **[P0456]** (2) Judged as “Pass in Mode D” → Pass of 0.020 inch leak	0.128 s

Map 9 (Maximum time of Mode C)

Fuel Level ℓ (US gal, Imp gal)	10.5 (2.77, 2.31)	27 (7.13, 5.94)	43 (11.36, 9.46)	59.5 (15.72, 13.09)
Maximum time of Mode C (ms)	21208	19288	9742	8057

Map 10 (Maximum time of Mode D)

Fuel Level ℓ (US gal, Imp gal)	10.5 (2.77, 2.31)	35 (9.25, 7.7)	60 (15.85, 13.2)
Maximum time of Mode D (ms)	210000	153000	92000

Map 11 (Threshold value for 0.020 inch leak in Mode D)

		Elapsed time in Mode D (ms)							
		15104	30080	45056	60032	75008	89984	104960	119936
Fuel Level ℓ (US gal, Imp gal)	10.5 (2.77, 2.31)	12.9 (97 , 3.8)	46.2 (347 , 13.6)	95.8 (719 , 28.3)	160.2 (1202 , 47.3)	238.2 (1787 , 70.3)	328.5 (2464 , 97)	430.3 (3228 , 127.1)	542.9 (4073 , 160.4)
	35 (9.25, 7.7)	17.6 (132 , 5.2)	62.3 (467 , 18.4)	128.8 (966 , 38)	213.7 (1603 , 63.1)	314.8 (2361 , 93)	430.4 (3229 , 127.1)	559.3 (4196 , 165.2)	700.2 (5252 , 206.8)
	60 (15.85, 13.2)	23.9 (179 , 7.1)	85.8 (644 , 25.4)	178.4 (1338 , 52.7)	296.5 (2225 , 87.6)	436.5 (3274 , 128.9)	594.8 (4462 , 175.7)	768.5 (5766 , 227)	954.5 (7161 , 281.9)
kPa (mmHg, inHg)									

		Elapsed time in Mode D (ms)						
		135040	150016	164992	179968	194944	209920	225024
Fuel Level ℓ (US gal, Imp gal)	10.5 (2.77, 2.31)	667.3 (5006 , 197.1)	799.9 (6000.557386, 236.2)	941.4 (7062.512067, 278.1)	1091.6 (8188.783117, 322.4)	1248.9 (9368.900911, 368.9)	1413.1 (10601.09904, 417.4)	1585.2 (11891.64027, 468.2)
	35 (9.25, 7.7)	852.9 (6399 , 251.9)	1014.1 (7607.513887, 299.5)	1183.7 (8880.01467, 349.6)	1360.8 (10208.32601, 401.9)	1544.8 (11588.8928, 456.3)	1734.4 (13010.99648, 512.2)	1930.4 (14481.68432, 570.1)
	60 (15.85, 13.2)	1151.6 (8639 , 340.1)	1353.7 (10155.06483, 399.8)	1560 (11702.76626, 460.7)	1768.6 (13267.6991, 522.3)	1978.5 (14842.44065, 584.3)	2186.7 (16404.00719, 645.8)	2394.6 (17963.98126, 707.2)
kPa (mmHg, inHg)								

Map 12 (Threshold value for Pass in Mode D)

		Elapsed time in Mode D (ms)							
		15104	30080	45056	60032	75008	89984	104960	119936
Fuel Level ℓ (US gal, Imp gal)	10.5 (2.77, 2.31)	11.1 (83 , 3.3)	39.9 (300 , 11.8)	82.8 (621 , 24.5)	138.5 (1039 , 40.9)	205.8 (1544 , 60.8)	283.9 (2130 , 83.8)	371.8 (2789 , 109.8)	469.2 (3520 , 138.6)
	35 (9.25, 7.7)	15.2 (114 , 4.5)	53.8 (404 , 15.9)	111.3 (835 , 32.9)	184.7 (1385 , 54.5)	272 (2041 , 80.3)	372 (2790 , 109.9)	483.4 (3626 , 142.8)	605.1 (4539 , 178.7)
	60 (15.85, 13.2)	20.7 (155 , 6.1)	74.2 (557 , 21.9)	154.1 (1156 , 45.5)	256.3 (1922 , 75.7)	377.2 (2830 , 111.4)	514.1 (3856 , 151.8)	664.2 (4983 , 196.2)	824.9 (6188 , 243.6)
kPa (mmHg, inHg)									

		Elapsed time in Mode D (ms)						
		135040	150016	164992	179968	194944	209920	225024
Fuel Level ℓ (US gal, Imp gal)	10.5 (2.77, 2.31)	576.7 (4326 , 170.3)	691.2 (5186 , 204.2)	813.6 (6103 , 240.3)	943.3 (7077 , 278.6)	1079.3 (8097 , 318.8)	1221.2 (9161 , 360.7)	1369.9 (10277 , 404.6)
	35 (9.25, 7.7)	737.1 (5530 , 217.7)	876.4 (6574 , 258.8)	1023 (7674 , 302.1)	1176 (8822 , 347.3)	1335 (10015 , 394.3)	1498.8 (11244 , 442.7)	1668.3 (12515 , 492.7)
	60 (15.85, 13.2)	995.2 (7466 , 293.9)	1169.8 (8776 , 345.5)	1348.1 (10114 , 398.2)	1528.4 (11466 , 451.4)	1709.8 (12827 , 505)	1889.7 (14176 , 558.1)	2069.4 (15524 , 611.2)
kPa (mmHg, inHg)								

2. ENABLE CONDITION

Monitor 1

Secondary Parameters	Enable Conditions
Battery voltage	≥ 10.9 V
Ambient pressure	≥ 75 kPa (563 mmHg, 22.2 inHg)
Fuel tank pressure	≥ –4 kPa (–30 mmHg, –1.2 inHg) and < 2.7 kPa (20 mmHg, 0.8 inHg)
Elapsed time after previous EVAP monitor was finished/canceled	≥ 230000 ms
Total time of canister purge operation	≥ 120000 ms
Learning value of EVAP concentration	< 0.08
Engine speed	≥ 1050 rpm and < 4000 rpm
Intake manifold vacuum (= ambient pressure – intake manifold pressure)	≥ 13.3 kPa (100 mmHg, 3.9 inHg)
Vehicle speed	≥ 32 km/h (19.9 MPH)
Closed loop air fuel ratio control	Active
Fuel temperature	< 45 °C (113 °F)
Intake air temperature	≥ –10 °C (14 °F)
Fuel level	≥ 10.5 ℓ (2.77 US gal, 2.31 Imp gal) and < 59.5 ℓ (15.72 US gal, 13.09 Imp gal)

Monitor 2 (first idle condition)

Secondary Parameters	Enable Conditions
Battery voltage	≥ 10.9 V
Ambient pressure	≥ 75 kPa (563 mmHg, 22.2 inHg)
Soak time	≥ 18000 s
Accumulated intake air mass after engine start	≥ Map 13
Closed loop air fuel ratio control	Active
Fuel level	≥ 10.5 ℓ (2.77 US gal, 2.31 Imp gal) and < 59.5 ℓ (15.72 US gal, 13.09 Imp gal)
Fuel temperature	< 35 °C (95 °F)
Fuel tank pressure	≥ –0.7 kPa (–5.106 mmHg, –0.2 inHg) and < 0.7 kPa (5.106 mmHg, 0.2 inHg)
Adapted fuel tank pressure	≥ –0.3 kPa (–2.507 mmHg, –0.1 inHg) and < 0.3 kPa (2.507 mmHg, 0.1 inHg)
Engine speed	≥ 1000 rpm and < 2000 rpm
Intake manifold vacuum (= ambient pressure – intake manifold pressure)	≥ 13.3 kPa (100 mmHg, 3.9 inHg)
Vehicle speed	< 2 km/h (1.2 MPH)
Idle switch	ON
Intake air temperature	≥ –10 °C (14 °F)

Monitor 2 (vehicle running condition)

Secondary Parameters	Enable Conditions
Battery voltage	≥ 10.9 V
Ambient pressure	≥ 75 kPa (563 mmHg, 22.2 inHg)
Elapsed time after previous EVAP monitor was finished/canceled	≥ 60000 ms
Total time of canister purge operation	≥ 120000 ms
Fuel temperature	< 55 °C (131 °F)
Fuel level	≥ 10.5 ℓ (2.77 US gal, 2.31 Imp gal) and < 59.5 ℓ (15.72 US gal, 13.09 Imp gal)
Intake air temperature	≥ –10 °C (14 °F)
Vehicle speed	≥ 30 km/h (18.6 MPH)
All conditions below are satisfied	≥ 5000 ms
• Fuel tank pressure	≥ –0.7 kPa (–5 mmHg, –0.2 inHg) and < 0.4 kPa (2.9 mmHg, 0.1 inHg)
• Engine speed	≥ 1050 rpm and < 4000 rpm
• Intake manifold vacuum (= ambient pressure – intake manifold pressure)	≥ 8 kPa (60 mmHg, 2.4 inHg)
• Closed loop air fuel ratio control	Active
• Short term fuel trim	> 0.9
• Fuel level with large smoothing coefficient – Fuel level with small smoothing coefficient	< Map 14
• Learning value of EVAP density	< 0.08

Map 13 (Accumulated intake air mass after engine start)

Engine coolant temperature at start °C (°F)	–10 (14)	0 (32)	10 (50)	20 (68)	30 (86)	40 (104)	50 (122)	60 (140)
Accumulated intake air mass after engine start g (oz)	520 (18.34)	520 (18.34)	500 (17.64)	480 (16.93)	440 (15.52)	310 (10.93)	280 (9.88)	270 (9.52)

Map 14 (Threshold value the fuel slosh detection)

Fuel Level ℓ (US gal, Imp gal)	10 (2.64, 2.2)	20 (5.28, 4.4)	25 (6.61, 5.5)	30 (7.93, 6.6)	43 (11.36, 9.46)	45 (11.89, 9.9)	50 (13.21, 11)	60 (15.85, 13.2)
Fuel level change for detection of fuel slosh ℓ (US gal, Imp gal)	5 (1.32, 1.1)	5 (1.32, 1.1)	5 (1.32, 1.1)	5 (1.32, 1.1)	5 (1.32, 1.1)	5 (1.32, 1.1)	6 (1.59, 1.32)	8 (2.11, 1.76)

3. GENERAL DRIVING CYCLE

Monitor 1

Perform the diagnosis when the cumulative time of canister purge after engine start becomes 120 seconds or more, at a vehicle speed of 32 km/h (20 MPH) or more.
If judgment cannot be made, repeat the diagnosis after a predetermined interval has passed.

Monitor 2 (first idle condition)

Perform the diagnosis only once at the fast idle (the idling before starting to move) after soaking of 5 hours or more, in conditions that A/F feedback has been executed and catalytic converter has been warmed up (approx. 25 seconds after engine start).
If judgment cannot be made, or the diagnosis cannot be performed at fast idle, do not repeat the diagnosis in this driving cycle.

Monitor 2 (vehicle running condition)

Perform this procedure only when the diagnosis cannot be completed at fast idle.
Perform the diagnosis when the cumulative time of canister purge after engine start becomes 120 seconds or more, at a vehicle speed of 30 km/h (18.6 MPH) or more.
If judgment cannot be made, repeat the diagnosis after a predetermined interval has passed.

4. DIAGNOSTIC METHOD

- **Monitor 1**

• CPC valve stuck open

At the beginning of the Monitor 1, system performs CPC valve stuck open monitor in Mode Z. CPC valve and CCV are closed and the fuel tank pressure is monitored. The pressure transition over a calibrated time is then used to determine if the CPC valve is stuck open.

CPC valve stuck open test at Mode Z of Monitor 1

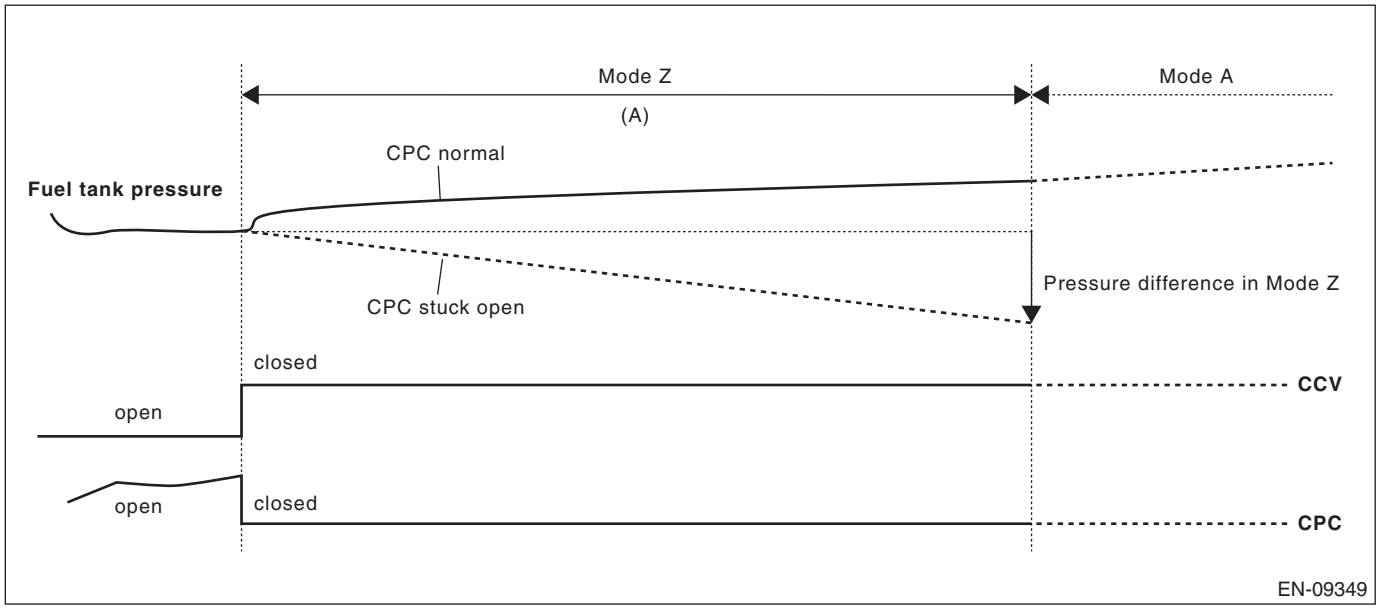

(A) 3000 ms

Judgment

- Pressure difference in Mode Z < 0.9 kPa (6.5 mmHg, 0.3 inHg) → Fail [CPC valve stuck open]: **P0457**
- Pressure difference in Mode Z ≥ 0.4 kPa (3 mmHg, 0.1 inHg) → Pass → move to **Mode A**

• Fuel cap loose/off and CPC valve stuck close

Fuel cap loose/off and CPC valve stuck close monitor is performed in Mode B of Monitor 1. The engine lowers the fuel tank pressure using intake manifold vacuum via the operation of the CPC valve. The pressure transition over a calibrated time is then used to determine if the Fuel cap loose/off or CPC valve stuck closed.

Fuel cap off or CPC stuck close at Mode B of Monitor 1

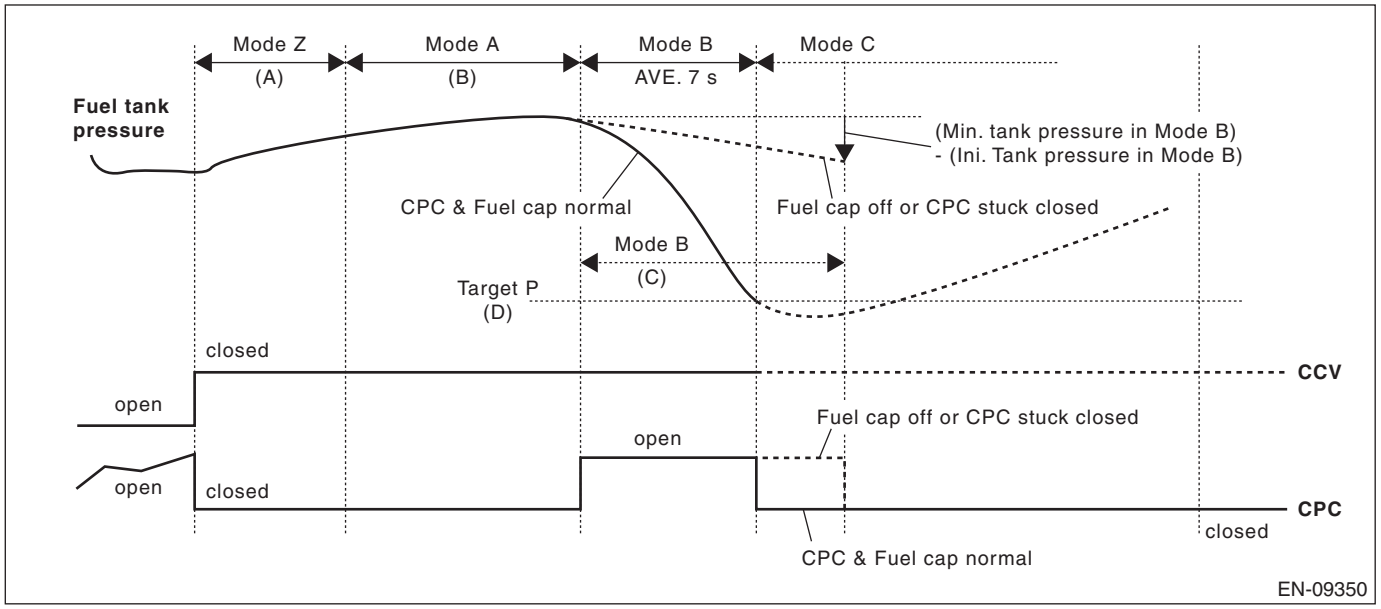

(A) 3000 ms (B) 10000 ms (C) 10000 ms

(D) –1.4 kPa (–10.5 mmHg, –0.4 inHg)

Judgment

- Elapsed time in Mode B ≥ 10000 ms and (Minimum tank pressure in Mode B) – (Initial tank pressure in Mode B) > –0.5 kPa (–4 mmHg, –0.2 inHg) → Fail [Fuel cap off or CPC valve stuck close]: **P0457**
- Fuel tank pressure ≤ –1.4 kPa (–10.5 mmHg, –0.4 inHg) → Pass → move to **Mode C**

Fuel cap loose at Mode B of Monitor 1

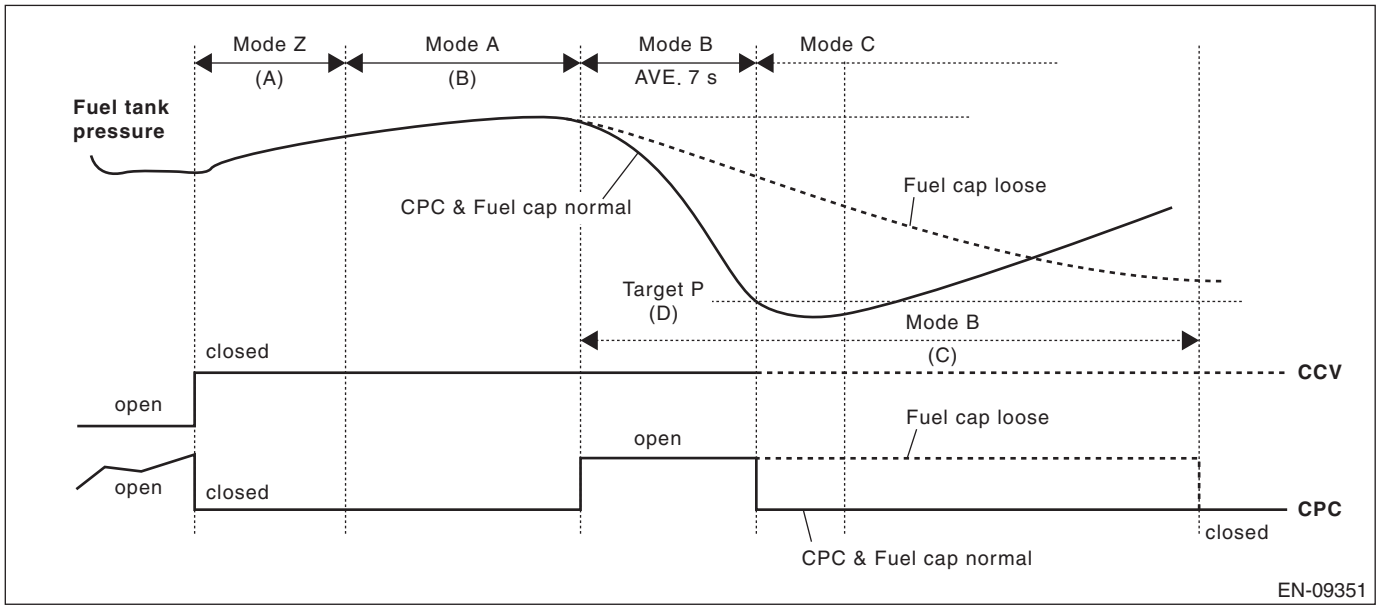

(A) 3000 ms (B) 10000 ms (C) 10000 ms + 25000 ms

(D) –1.4 kPa (–10.5 mmHg, –0.4 inHg)

Judgment
- Elapsed time in Mode B ≥ 10000 ms + 25000 ms → Fail [Fuel cap loose]: **P0457**
- Fuel tank pressure ≤ –1.4 kPa (–10.5 mmHg, –0.4 inHg) → Pass → move to **Mode C**

• 0.040 inch leak check

0.040 inch evaporative leak monitor is executed through Mode A to Mode D of Monitor 1. The engine lowers the fuel tank pressure using intake manifold vacuum via the canister purge operation during engine running. Once the tank pressure reaches a calibrated target (below atmospheric pressure) the purge valve is closed and the fuel tank pressure is monitored. The pressure transition over a calibrated time period is then used to determine if the fuel tank system has a leak.

0.040 inch EVAP monitor test

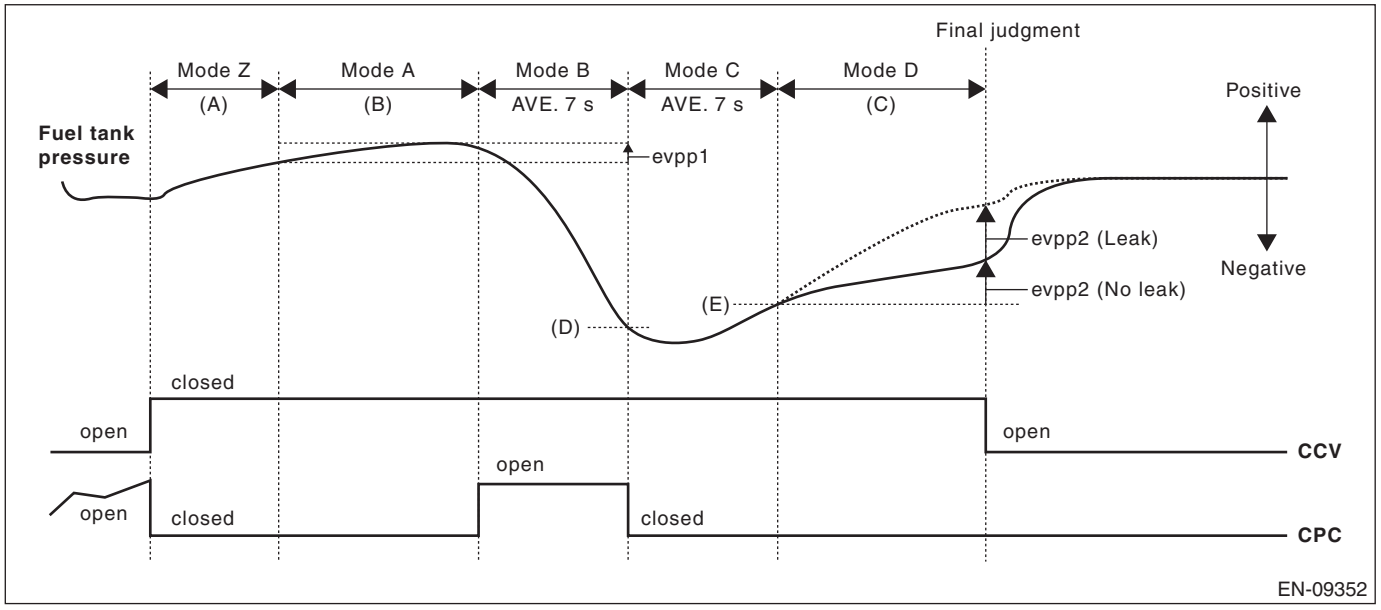

(A) 3000 ms
(B) 10000 ms
(C) 10000 ms
(D) –1.4 kPa (–10.5 mmHg, –0.4 inHg)
(E) –1.3 kPa (–9.75 mmHg, –0.4 inHg)

Judgment
- evpp2 – 1.5 × evpp1 > Map 1 → Fail [0.040 inch Leak]: **P0442**
- evpp2 – 1.5 × evpp1 ≤ Map 1 → Pass [No Leak]

- **Monitor 2 (first idle condition)**

0.020 inch leak check at first idle condition

An intrusive evaporative leak monitor test is run following the first engine start after a calibrated engine off soak period. The engine lowers the fuel tank pressure using intake manifold vacuum via the purge valve operation during engine idle. Once the tank pressure reaches a calibrated target (below atmospheric pressure) the purge valve is closed and the fuel tank pressure is monitored. The pressure transition over a calibrated time period is then used to determine if the fuel tank system has a leak.

Intrusive EVAP Monitor test at first Idle

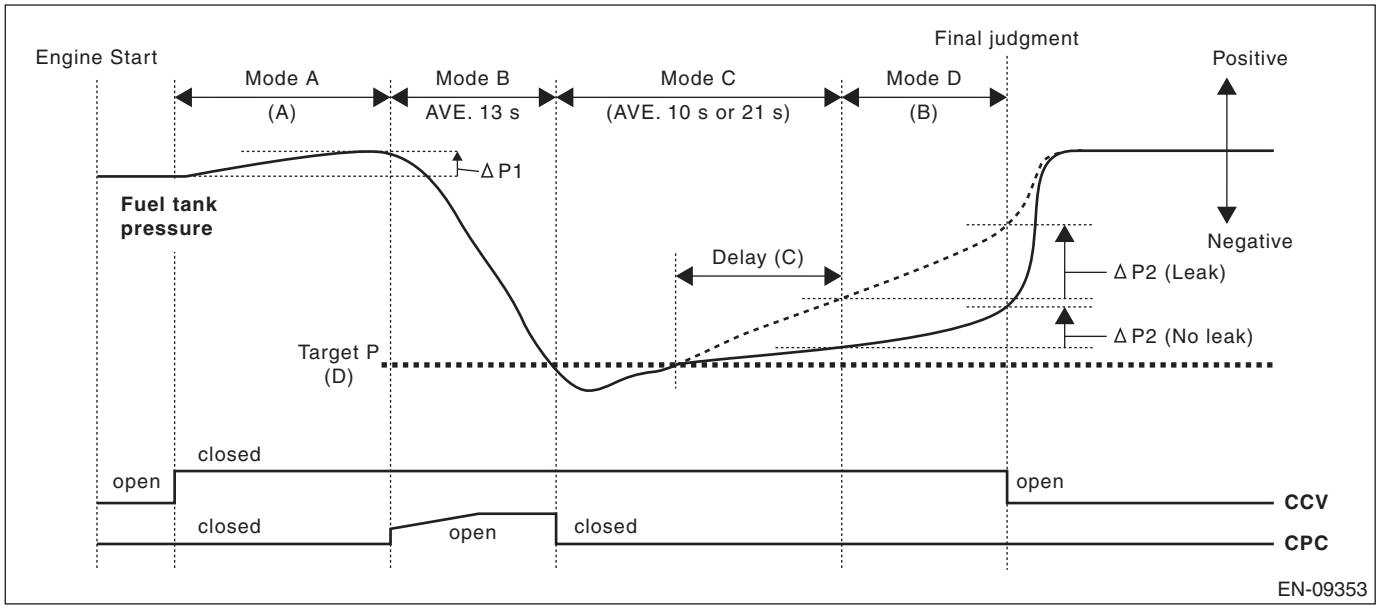

(A) 128 ms or 10000 ms (B) 10000 ms (C) 2000 ms or 10000 ms

(D) –1.3 kPa (–10 mmHg, –0.4 inHg)

Judgment

- $\triangle$P2 – $\triangle$P1 > Map 5 or Map 7 → Fail [0.020 inch Leak]: **P0456**
- $\triangle$P2 – $\triangle$P1 ≤ Map 6 or Map 8 → Pass [No Leak]

- **Monitor 2 (vehicle running condition)**

0.020 inch Monitor during Vehicle Running (moving) Conditions
While the vehicle is vehicle running, the diagnostic intrusively pulls-down the fuel tank pressure using manifold vacuum via the purge valve. Once the tank pressure reaches a calibrated target (below atmospheric pressure) the purge valve is closed and the fuel tank pressure is monitored. The pressure transition over a calibrated time period is then used to determine if the fuel tank system has a leak.

Intrusive EVAP Monitor Test (Vehicle Running)

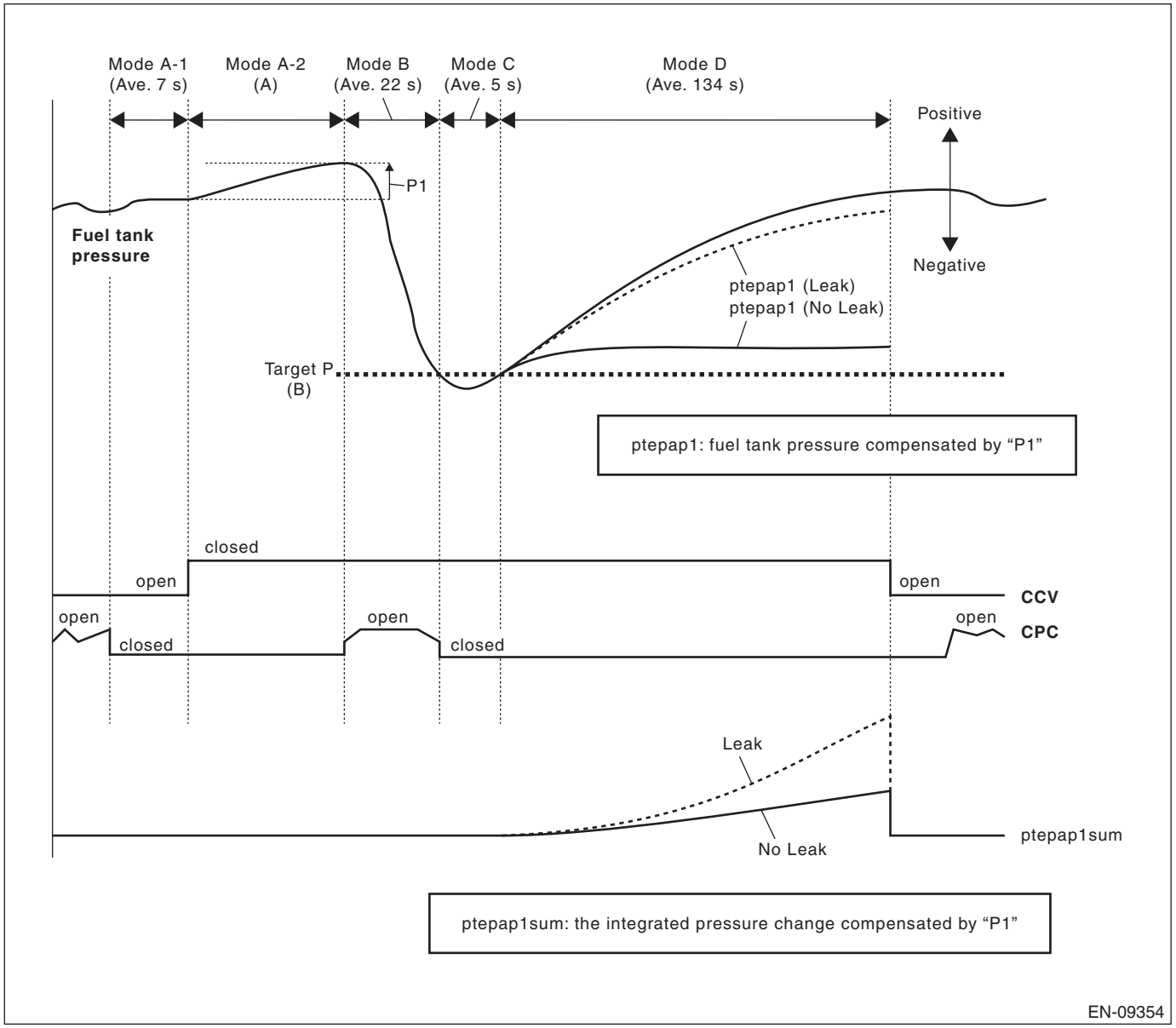

(A) 30000 ms (B) –2 kPa (–15 mmHg, –0.6 inHg)

Judgment
- ptepap1sum > Map 11 → Fail [0.020 inch Leak]: **P0456**
- ptepap1sum ≤ Map 12 → Pass [No Leak]

BW:DTC P0447 EVAPORATIVE EMISSION CONTROL SYSTEM VENT CONTROL CIRCUIT OPEN

1. OUTLINE OF DIAGNOSIS

Detect open or short circuit of the drain valve.
Judge as NG when the ECM output level differs from the actual terminal level.

2. COMPONENT DESCRIPTION

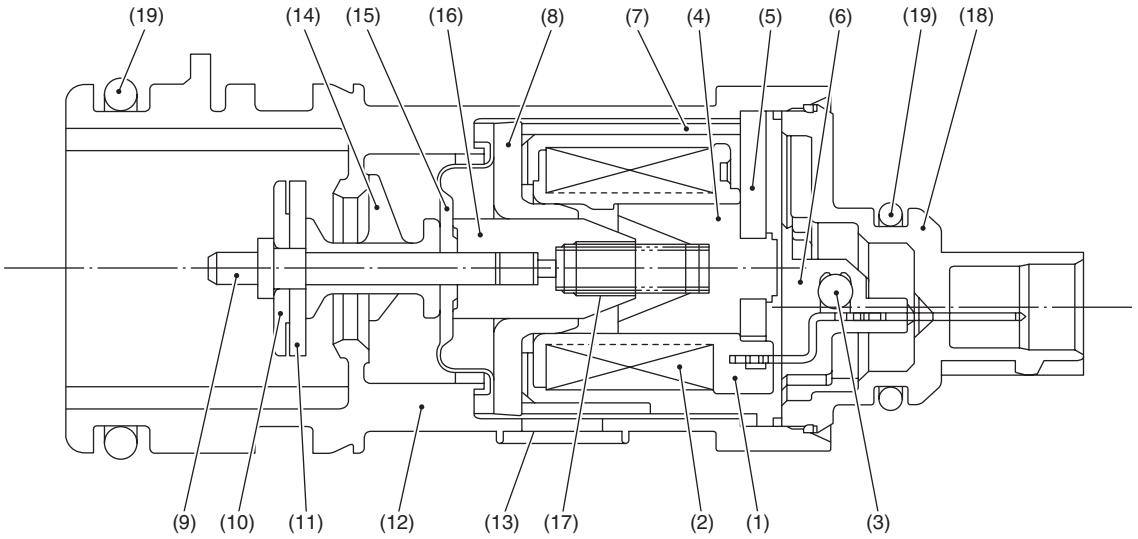

(1) Bobbin
(2) Coil
(3) Diode
(4) Stator core
(5) End plate
(6) Body
(7) Yoke
(8) Magnetic plate
(9) Shaft
(10) Plate
(11) Valve
(12) Housing
(13) Filter
(14) Retainer
(15) Diaphragm
(16) Movable core
(17) Spring
(18) Cover
(19) O-ring

3. ENABLE CONDITION

Secondary Parameters	Enable Conditions
None	

4. GENERAL DRIVING CYCLE

Always perform the diagnosis continuously.

5. DIAGNOSTIC METHOD

• Abnormality Judgment

If the duration of time while the following conditions are met is longer than the time indicated, judge as NG.

Judgment Value

Malfunction Criteria	Threshold Value
Battery voltage	≥ 10.9 V
Elapsed time after starting the engine	≥ 1 second
Terminal output voltage when ECM outputs OFF signal	Low

Time Needed for Diagnosis: 2500 ms
Malfunction Indicator Light Illumination: Illuminates as soon as a malfunction occurs.

• Normality Judgment

Judge as OK and clear the NG if the continuous time while the following conditions are established is more than the predetermined time.

Judgment Value

Malfunction Criteria	Threshold Value
Battery voltage	≥ 10.9 V
Elapsed time after starting the engine	≥ 1 second
Terminal output voltage when ECM outputs OFF signal	High

Time Needed for Diagnosis: Less than 1 second

BX:DTC P0448 EVAPORATIVE EMISSION CONTROL SYSTEM VENT CONTROL CIRCUIT SHORTED

1. OUTLINE OF DIAGNOSIS

Detect open or short circuit of the drain valve.
Judge as NG when the ECM output level differs from the actual terminal level.

2. COMPONENT DESCRIPTION

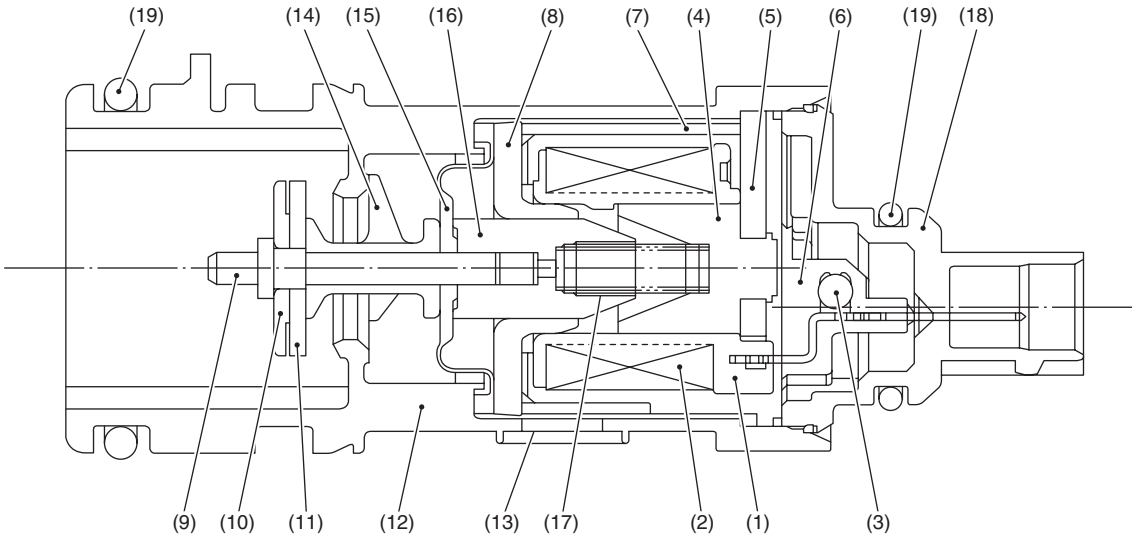

(1) Bobbin
(2) Coil
(3) Diode
(4) Stator core
(5) End plate
(6) Body
(7) Yoke
(8) Magnetic plate
(9) Shaft
(10) Plate
(11) Valve
(12) Housing
(13) Filter
(14) Retainer
(15) Diaphragm
(16) Movable core
(17) Spring
(18) Cover
(19) O-ring

3. ENABLE CONDITION

Secondary Parameters	Enable Conditions
None	

4. GENERAL DRIVING CYCLE

Always perform the diagnosis continuously.

5. DIAGNOSTIC METHOD

• Abnormality Judgment

If the duration of time while the following conditions are met is longer than the time indicated, judge as NG.

Judgment Value

Malfunction Criteria	Threshold Value
Battery voltage	≥ 10.9 V
Elapsed time after starting the engine	≥ 1 second
Terminal output voltage when ECM outputs ON signal	High

Time Needed for Diagnosis: 2500 ms

Malfunction Indicator Light Illumination: Illuminates as soon as a malfunction occurs.

- **Normality Judgment**

Judge as OK and clear the NG if the continuous time while the following conditions are established is more than the predetermined time.

Judgment Value

Malfunction Criteria	Threshold Value
Battery voltage	≥ 10.9 V
Elapsed time after starting the engine	≥ 1 second
Terminal output voltage when ECM outputs ON signal	Low

Time Needed for Diagnosis: Less than 1 second

BY:DTC P0451 EVAPORATIVE EMISSION CONTROL SYSTEM PRESSURE SENSOR

1. OUTLINE OF DIAGNOSIS

Detect malfunctions of tank pressure sensor output property by the following two diagnoses.

- **DRIFT DIAGNOSIS**

To detect drift malfunction and offset malfunction of tank pressure sensor, activate ECM in the predetermined soaking time after turning the ignition switch OFF, and check that the tank pressure sensor input value is equivalent to the barometric pressure.

For vehicles equipped with pressure control valve, be sure to open the pressure control valve when performing the diagnosis, because the pressure inside the tank increases if the ambient temperature rises during soaking.

- **Stuck Diagnosis**

When there is no pressure variation, which should have occurred in the tank considering the operation status, judge as NG.

2. COMPONENT DESCRIPTION

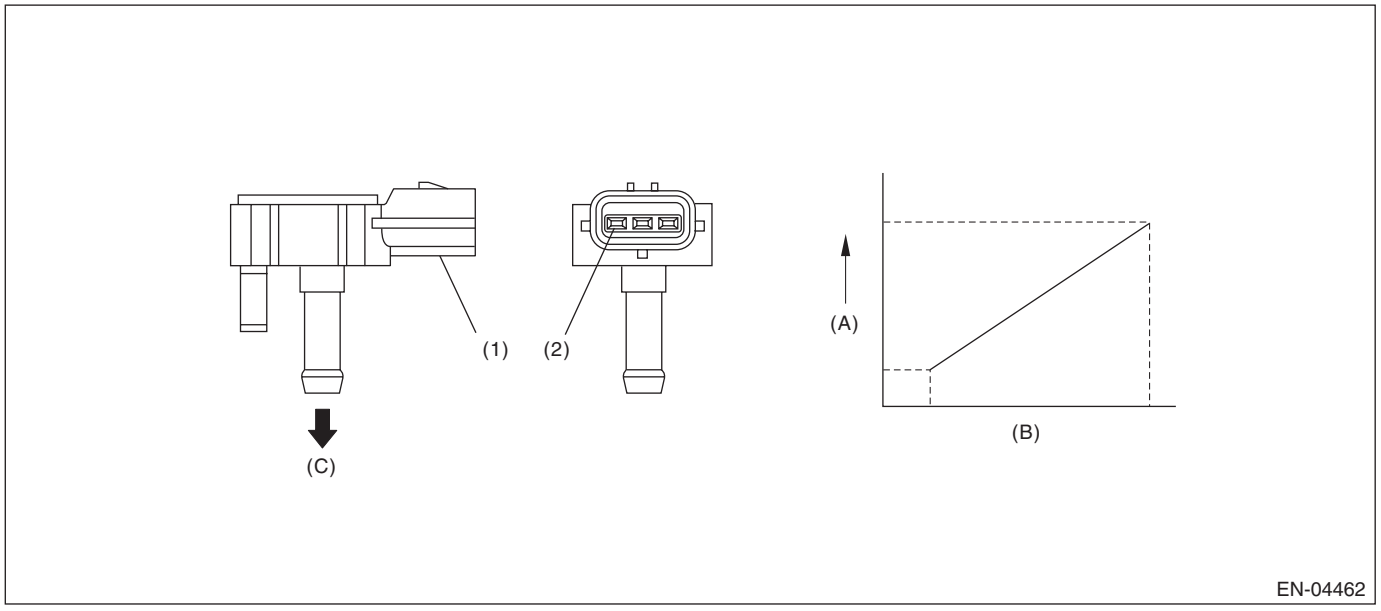

(A) Output voltage
(B) Input voltage
(C) To fuel tank
(1) Connector
(2) Terminals

3. ENABLE CONDITION

<DRIFT DIAGNOSIS>

Secondary Parameters	Enable Conditions
Soaking time	≥ 3600 s × 2 time(s)
Ignition switch	OFF
Battery voltage	≥ 10.9 V
Atmospheric pressure	≥ 75 kPa (563 mmHg, 22.2 inHg)
Fuel temperature	< 55 °C (131 °F)
Intake air temperature	> –10 °C (14 °F) and < 55 °C (131 °F)
Cumulative amount of purge during previous driving cycle	≥ Value from Map
Fuel level when the ignition switch is OFF	≥ 10.5 ℓ (2.77 US gal, 2.31 Imp gal) and < 59.5 ℓ (15.72 US gal, 13.09 Imp gal)

Map

Ambient air temperature °C (°F)	25 (77)	35 (95)	40 (104)	45 (113)
Cumulative amount of purge during previous driving cycle g (oz)	0 (0)	0 (0)	0 (0)	0 (0)

<Stuck Diagnosis>

Secondary Parameters	Enable Conditions
Elapsed time after starting the engine	≥ 60 s
Fuel level	≥ 9.6 ℓ (2.54 US gal, 2.11 Imp gal)
Fuel temperature	< 55 °C (131 °F)
Battery voltage	≥ 10.9 V
Atmospheric pressure	≥ 75 kPa (563 mmHg, 22.2 inHg)

4. GENERAL DRIVING CYCLE

<DRIFT DIAGNOSIS>

Perform the diagnosis only once when 3600 s × 2 time(s) has passed after the ignition switch is OFF.

<Stuck Diagnosis>

- Perform the diagnosis continuously after 60 s have passed since the engine started.
- Pay attention to the fuel level and temperature.

5. DIAGNOSTIC METHOD

<DRIFT DIAGNOSIS>

Abnormality Judgment
Judge as NG when one of the following conditions is established.

Judgment Value

Malfunction Criteria	Threshold Value
Tank pressure sensor learning value	≥ 0.7 kPa (5.106 mmHg, 0.2 inHg) or < –0.7 kPa (–5.106 mmHg, –0.2 inHg)
Tank pressure sensor measured value – Tank pressure sensor learning value	≥ 0.3 kPa (2.507 mmHg, 0.1 inHg) or < –0.3 kPa (–2.507 mmHg, –0.1 inHg)

Time Needed for Diagnosis: 10 seconds
Malfunction Indicator Light Illumination: Illuminates when malfunction occurs in 2 continuous driving cycles.

Normality Judgment
Judge as OK and clear the NG if the following conditions are established.

Judgment Value

Malfunction Criteria	Threshold Value
Tank pressure sensor learning value	< 0.7 kPa (5.106 mmHg, 0.2 inHg) and ≥ –0.7 kPa (–5.106 mmHg, –0.2 inHg)
Tank pressure sensor measured value – Tank pressure sensor learning value	< 0.3 kPa (2.507 mmHg, 0.1 inHg) and ≥ –0.3 kPa (–2.507 mmHg, –0.1 inHg)

Time Needed for Diagnosis: 10 seconds

<Stuck Diagnosis>

Abnormality Judgment

If the duration of time while the following conditions are met is longer than the time indicated, judge as NG.

Judgment Value

Malfunction Criteria	Threshold Value
Number of times that the difference between the Max. fuel level every 60 s and Min. fuel level every 60 s is 2 ℓ (0.53 US gal, 0.44 Imp gal) or more (with enable condition established)	≥ 16 time(s)
Maximum – Minimum tank pressure (with enable condition completed)	< 0 kPa (0.375 mmHg, 0 inHg)
Maximum – Minimum fuel temperature (with enable condition completed)	≥ 7 °C (12.6°F)

If the difference between the Max. fuel level every 60 s and Min. fuel level every 60 s is less than 2 ℓ (0.53 US gal, 0.44 Imp gal), extend 60 s and make judgment with the Max. and Min. values for the fuel level in 60 s × 2. If there is no difference after the extension of 60 s, extend the time (60 s × 3, 60 s × 4, 60 s × 5) and continue the judgment. If the difference between the Max. fuel level every 60 s and Min. fuel level every 60 s is 2 ℓ (0.53 US gal, 0.44 Imp gal) or more, the diagnosis counter counts up.

Time Needed for Diagnosis: 60 s × 16 time(s) or more

Malfunction Indicator Light Illumination: Illuminates when malfunction occurs in 2 continuous driving cycles.

Normality Judgment

Judge as OK and clear the NG if the continuous time while the following conditions are established is more than the predetermined time.

Judgment Value

Malfunction Criteria	Threshold Value
Maximum – Minimum tank pressure	≥ 0 kPa (0.375 mmHg, 0 inHg)

Time Needed for Diagnosis: Less than 1 second

BZ:DTC P0452 EVAPORATIVE EMISSION CONTROL SYSTEM PRESSURE SENSOR LOW INPUT

1. OUTLINE OF DIAGNOSIS

Detect the open or short circuit of the fuel tank pressure sensor.
Judge as NG if out of specification.

2. COMPONENT DESCRIPTION

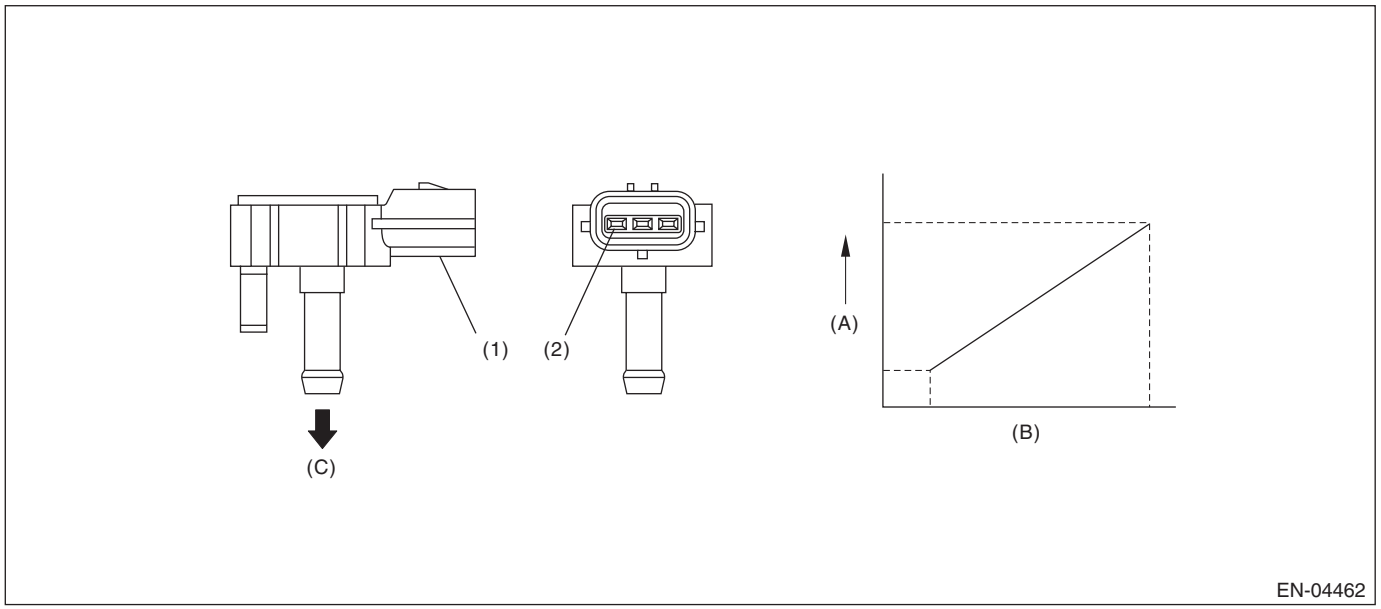

(A) Output voltage
(B) Input voltage
(C) To fuel tank
(1) Connector
(2) Terminals

3. ENABLE CONDITION

Secondary Parameters	Enable Conditions
None	

4. GENERAL DRIVING CYCLE

Always perform the diagnosis continuously.

5. DIAGNOSTIC METHOD

- **Abnormality Judgment**

If the duration of time while the following conditions are met is longer than the time indicated, judge as NG.

Judgment Value

Malfunction Criteria	Threshold Value
Fuel tank pressure	< –7.4 kPa (–55.6 mmHg, –2.2 inHg)
Battery voltage	≥ 10.9 V

Time Needed for Diagnosis: 15000 ms
Malfunction Indicator Light Illumination: Illuminates as soon as a malfunction occurs.

- **Normality Judgment**

Judge as OK and clear the NG if the continuous time while the following conditions are established is more than the predetermined time.

Judgment Value

Malfunction Criteria	Threshold Value
Fuel tank pressure	≥ –7.4 kPa (–55.6 mmHg, –2.2 inHg)
Battery voltage	≥ 10.9 V

Time Needed for Diagnosis: Less than 1 second

CA:DTC P0453 EVAPORATIVE EMISSION CONTROL SYSTEM PRESSURE SENSOR HIGH INPUT

1. OUTLINE OF DIAGNOSIS

Detect the open or short circuit of the fuel tank pressure sensor.
Judge as NG if out of specification.

2. COMPONENT DESCRIPTION

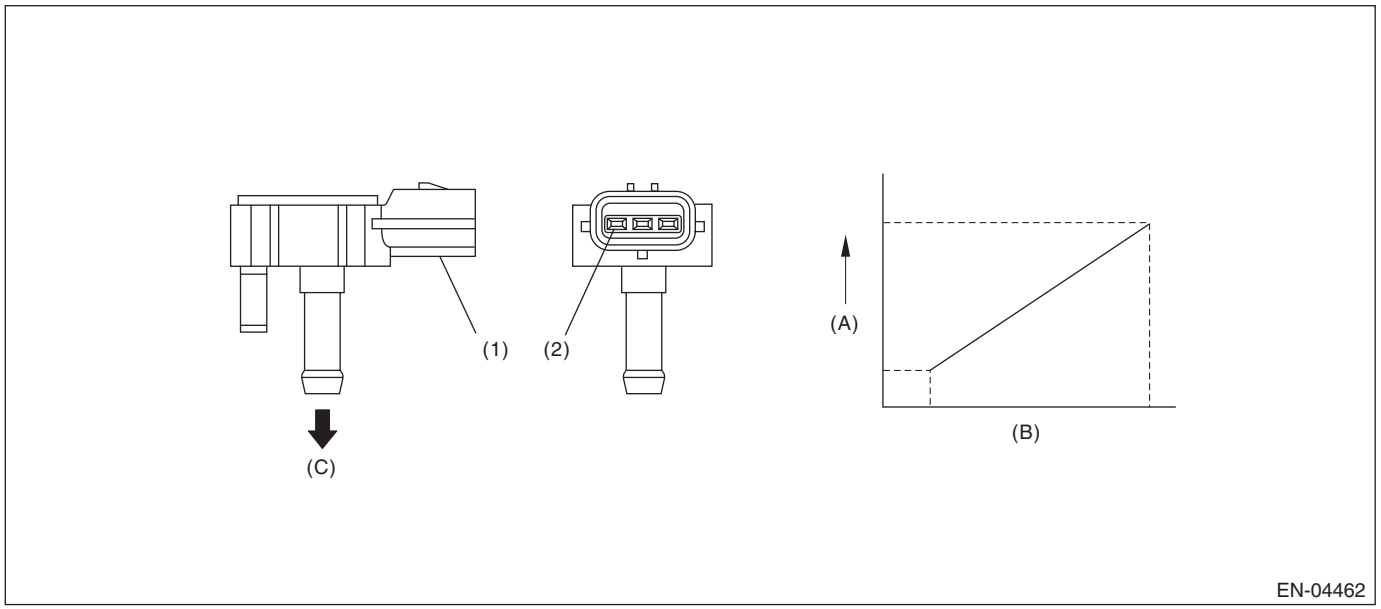

(A) Output voltage
(B) Input voltage
(C) To fuel tank
(1) Connector
(2) Terminals

3. ENABLE CONDITION

Secondary Parameters	Enable Conditions
Time needed for all secondary parameters to be in enable conditions	≥ 5000 ms
Vehicle speed	≥ 2 km/h (1.2 MPH)
All conditions of EVAP canister purge	Completed
Learning value of evaporation gas concentration (left and right)	< 0.08
Main feedback compensation coefficient (left and right)	≥ 0.9
Battery voltage	≥ 10.9 V

4. GENERAL DRIVING CYCLE

Perform the diagnosis when purging enable conditions are met without idling.

5. DIAGNOSTIC METHOD

• Abnormality Judgment

If the duration of time while the following conditions are met is longer than the time indicated, judge as NG.

Judgment Value

Malfunction Criteria	Threshold Value
Fuel tank pressure	≥ 7.9 kPa (59.6 mmHg, 2.3 inHg)
Fuel temperature	< 55 °C (131 °F)
Atmospheric pressure	≥ 75 kPa (563 mmHg, 22.2 inHg)

Time Needed for Diagnosis: 15000 ms
Malfunction Indicator Light Illumination: Illuminates as soon as a malfunction occurs.

• Normality Judgment

Judge as OK and clear the NG if the continuous time while the following conditions are established is more than the predetermined time.

Judgment Value

Malfunction Criteria	Threshold Value
Fuel tank pressure	< 7.9 kPa (59.6 mmHg, 2.3 inHg)

Time Needed for Diagnosis: Less than 1 second

CB:DTC P0456 EVAPORATIVE EMISSION CONTROL SYSTEM LEAK DETECTED (VERY SMALL LEAK)

1. OUTLINE OF DIAGNOSIS

NOTE:
For the detection standard, refer to DTC P0442. <Ref. to GD(H4SO)-141, DTC P0442 EVAPORATIVE EMISSION CONTROL SYSTEM LEAK DETECTED (SMALL LEAK), Diagnostic Trouble Code (DTC) Detecting Criteria.>

CC:DTC P0457 EVAPORATIVE EMISSION CONTROL SYSTEM LEAK DETECTED (FUEL CAP LOOSE/OFF)

1. OUTLINE OF DIAGNOSIS

NOTE:
For the detection standard, refer to DTC P0442. <Ref. to GD(H4SO)-141, DTC P0442 EVAPORATIVE EMISSION CONTROL SYSTEM LEAK DETECTED (SMALL LEAK), Diagnostic Trouble Code (DTC) Detecting Criteria.>

CD:DTC P0458 EVAPORATIVE EMISSION SYSTEM PURGE CONTROL VALVE CIRCUIT LOW

1. OUTLINE OF DIAGNOSIS

Detect open or short circuit of the purge control solenoid valve.
Judge as NG when the ECM output level differs from the actual terminal level.

2. COMPONENT DESCRIPTION

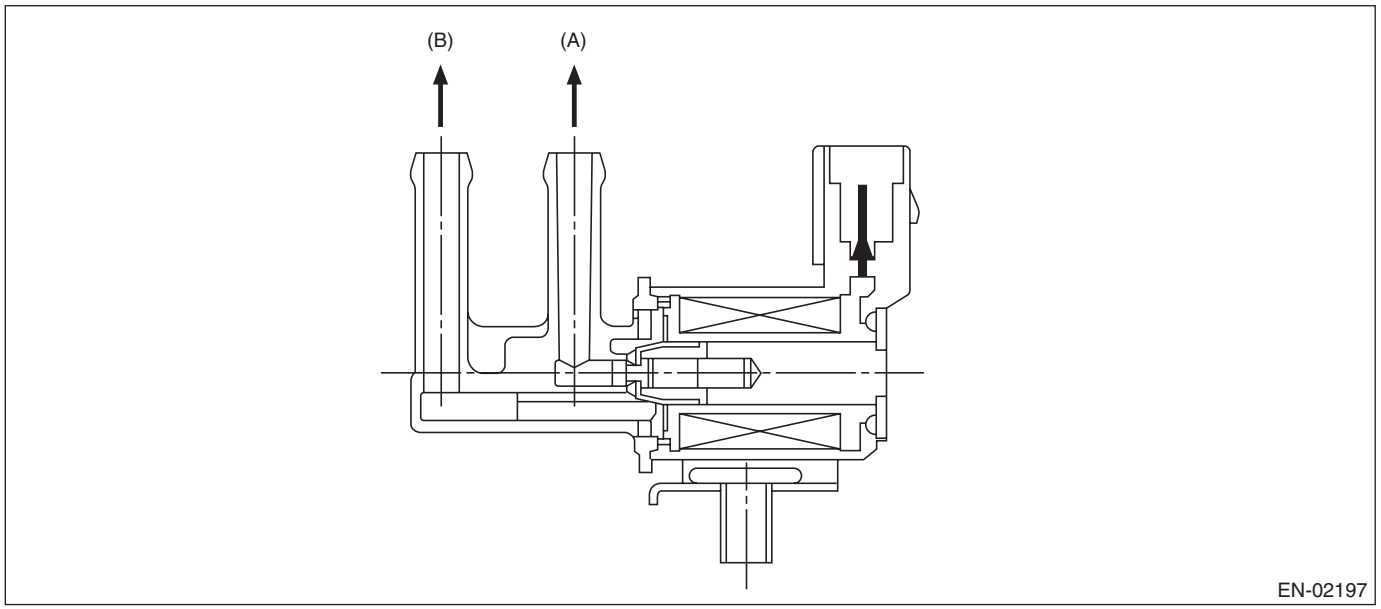

(A) To canister
(B) To intake manifold

3. ENABLE CONDITION

Secondary Parameters	Enable Conditions
Battery voltage	≥ 10.9 V
Elapsed time after starting the engine	≥ 1 second

4. GENERAL DRIVING CYCLE

Always perform the diagnosis after starting the engine.

5. DIAGNOSTIC METHOD

- **Abnormality Judgment**

If the duration of time while the following conditions are met is longer than the time indicated, judge as NG.

Judgment Value

Malfunction Criteria	Threshold Value
Duty ratio of “ON”	< 0.75
Terminal output voltage	Low

Time Needed for Diagnosis: 2500 ms
Malfunction Indicator Light Illumination: Illuminates when malfunction occurs in 2 continuous driving cycles.

- **Normality Judgment**

Judge as OK and clear the NG if the continuous time while the following conditions are established is more than the predetermined time.

Judgment Value

Malfunction Criteria	Threshold Value
Terminal output voltage	High

Time Needed for Diagnosis: Less than 1 second

CE:DTC P0459 EVAPORATIVE EMISSION SYSTEM PURGE CONTROL VALVE CIRCUIT HIGH

1. OUTLINE OF DIAGNOSIS

Detect open or short circuit of the purge control solenoid valve.
Judge as NG when the ECM output level differs from the actual terminal level.

2. COMPONENT DESCRIPTION

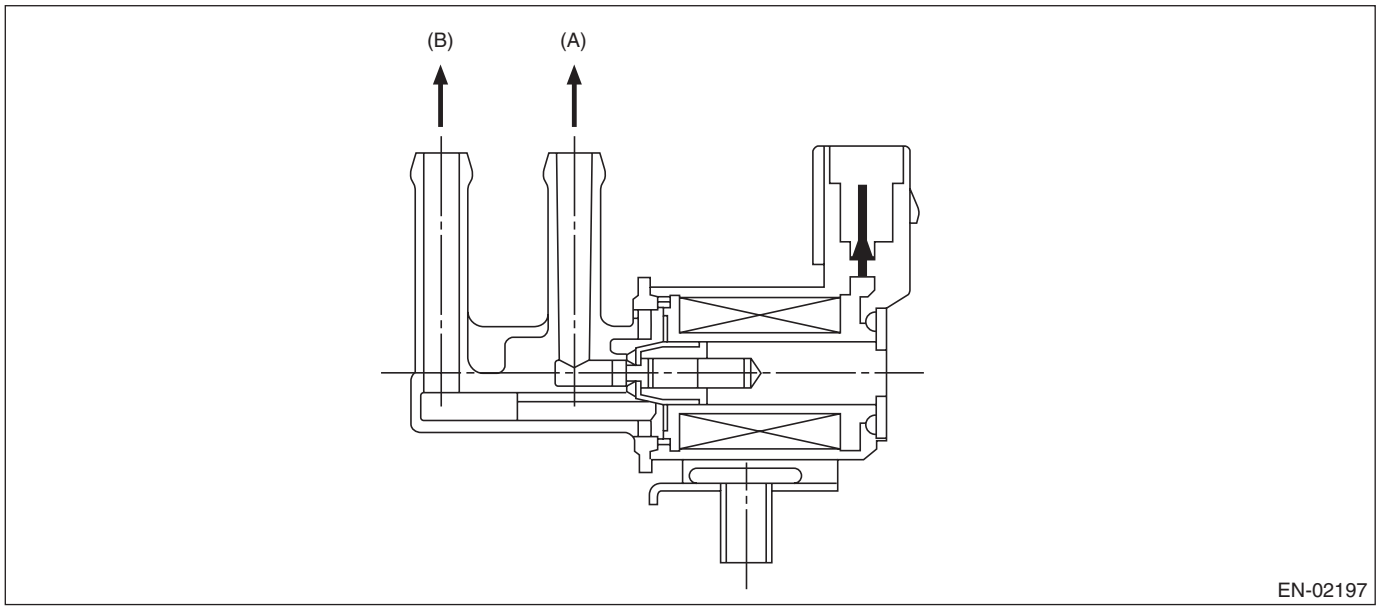

(A) To canister
(B) To intake manifold

3. ENABLE CONDITION

Secondary Parameters	Enable Conditions
Battery voltage	≥ 10.9 V
Elapsed time after starting the engine	≥ 1 second

4. GENERAL DRIVING CYCLE

Always perform the diagnosis after starting the engine.

5. DIAGNOSTIC METHOD

- **Abnormality Judgment**

If the duration of time while the following conditions are met is longer than the time indicated, judge as NG.

Judgment Value

Malfunction Criteria	Threshold Value
Duty ratio of “ON”	≥ 0.25
Terminal output voltage	High

Time Needed for Diagnosis: 2500 ms
Malfunction Indicator Light Illumination: Illuminates when malfunction occurs in 2 continuous driving cycles.

- **Normality Judgment**

Judge as OK and clear the NG if the continuous time while the following conditions are established is more than the predetermined time.

Judgment Value

Malfunction Criteria	Threshold Value
Terminal output voltage	Low

Time Needed for Diagnosis: Less than 1 second

CF:DTC P0461 FUEL LEVEL SENSOR “A” CIRCUIT RANGE/PERFORMANCE

1. OUTLINE OF DIAGNOSIS

Detect malfunctions of the fuel level sensor output property.
If the fuel level does not vary in a particular driving condition / engine condition where it should, judge as NG.

2. COMPONENT DESCRIPTION

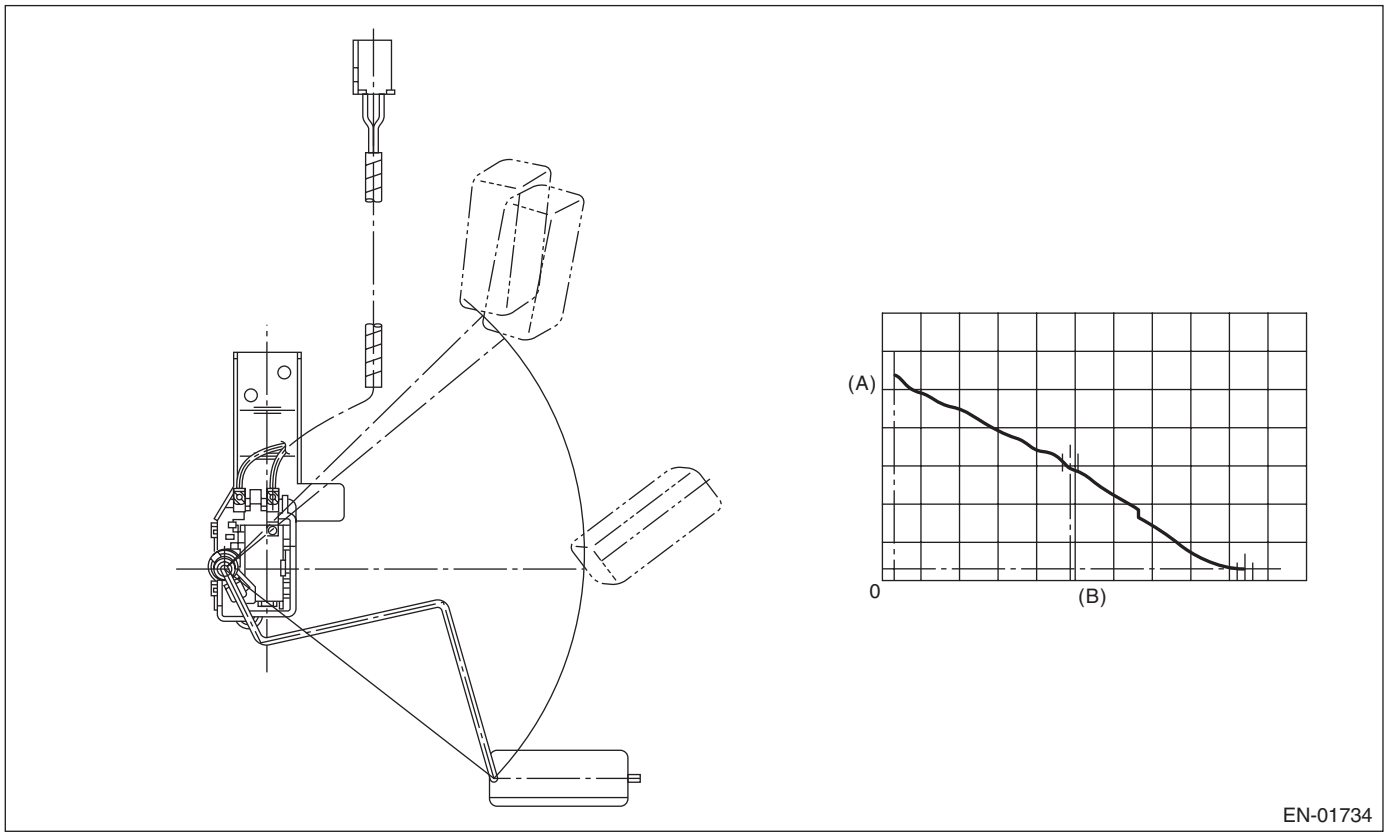

(A) Fuel level (B) Resistance

3. ENABLE CONDITION

Secondary Parameters	Enable Conditions
None	

4. GENERAL DRIVING CYCLE

Always perform the diagnosis continuously.

5. DIAGNOSTIC METHOD

• Abnormality Judgment

Judge as NG when the following conditions are established.

Judgment Value

Malfunction Criteria	Threshold Value
Accumulated amount of intake air	≥ 165375 g (5832.78 oz)
Max. – min. values of fuel level output	< 2.6 ℓ (0.69 US gal, 0.57 Imp gal)
Battery voltage	≥ 10.9 V
Engine speed	< 4000 rpm
Elapsed time after starting the engine	≥ 5000 ms

Time Needed for Diagnosis: Less than 1 second
Malfunction Indicator Light Illumination: Illuminates when malfunction occurs in 2 continuous driving cycles.

• Normality Judgment

Judge as OK and clear the NG if the following conditions are established.

Judgment Value

Malfunction Criteria	Threshold Value
Accumulated amount of intake air	≥ 165375 g (5832.78 oz)
Max. – min. values of fuel level output	≥ 2.6 ℓ (0.69 US gal, 0.57 Imp gal)
Battery voltage	≥ 10.9 V
Engine speed	< 4000 rpm
Elapsed time after starting the engine	≥ 5000 ms

Time Needed for Diagnosis: Less than 1 second

CG:DTC P0462 FUEL LEVEL SENSOR “A” CIRCUIT LOW

1. OUTLINE OF DIAGNOSIS

Detect the open or short circuit of fuel level sensor. Judge as NG if out of specification.

2. COMPONENT DESCRIPTION

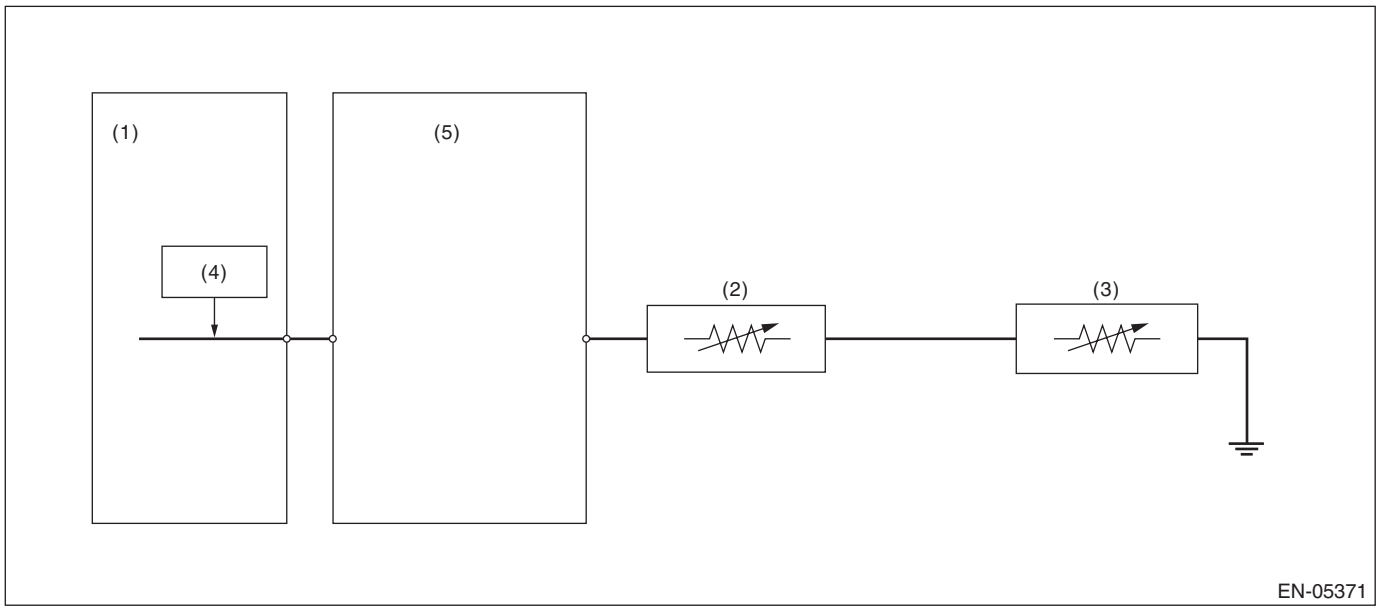

(1) Engine control module (ECM)
(2) Fuel level sensor
(3) Fuel sub level sensor
(4) Detecting circuit
(5) Body integrated unit

3. ENABLE CONDITION

Secondary Parameters	Enable Conditions
None	

4. GENERAL DRIVING CYCLE

Always perform the diagnosis continuously.

5. DIAGNOSTIC METHOD

• Abnormality Judgment

If the duration of time while the following conditions are met is longer than the time indicated, judge as NG.

Judgment Value

Malfunction Criteria	Threshold Value
Battery voltage	≥ 10.9 V
Elapsed time after starting the engine	≥ 3000 ms
Output voltage	< 0.173 V

Time Needed for Diagnosis: 2500 ms
Malfunction Indicator Light Illumination: Illuminates when malfunction occurs in 2 continuous driving cycles.

• Normality Judgment

Judge as OK and clear the NG if the continuous time while the following conditions are established is more than the predetermined time.

Judgment Value

Malfunction Criteria	Threshold Value
Battery voltage	≥ 10.9 V
Elapsed time after starting the engine	≥ 3000 ms
Output voltage	≥ 0.173 V

Time Needed for Diagnosis: Less than 1 second

CH:DTC P0463 FUEL LEVEL SENSOR “A” CIRCUIT HIGH

1. OUTLINE OF DIAGNOSIS

Detect the open or short circuit of fuel level sensor. Judge as NG if out of specification.

2. COMPONENT DESCRIPTION

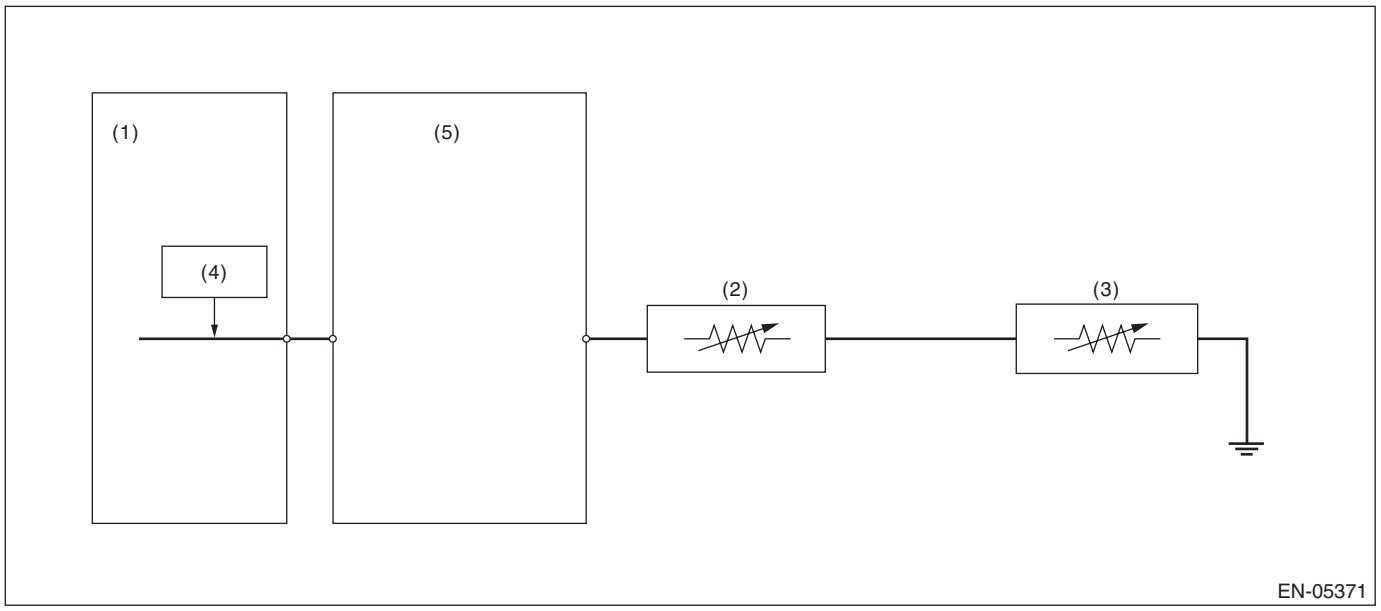

(1) Engine control module (ECM)
(2) Fuel level sensor
(3) Fuel sub level sensor
(4) Detecting circuit
(5) Body integrated unit

3. ENABLE CONDITION

Secondary Parameters	Enable Conditions
None	

4. GENERAL DRIVING CYCLE

Always perform the diagnosis continuously.

5. DIAGNOSTIC METHOD

• Abnormality Judgment

If the duration of time while the following conditions are met is longer than the time indicated, judge as NG.

Judgment Value

Malfunction Criteria	Threshold Value
Battery voltage	≥ 10.9 V
Elapsed time after starting the engine	≥ 3000 ms
Output voltage	≥ 7.212 V

Time Needed for Diagnosis: 1000 ms
Malfunction Indicator Light Illumination: Illuminates when malfunction occurs in 2 continuous driving cycles.

• Normality Judgment

Judge as OK and clear the NG if the continuous time while the following conditions are established is more than the predetermined time.

Judgment Value

Malfunction Criteria	Threshold Value
Battery voltage	≥ 10.9 V
Elapsed time after starting the engine	≥ 3000 ms
Output voltage	< 7.212 V

Time Needed for Diagnosis: Less than 1 second

CI: DTC P0464 FUEL LEVEL SENSOR CIRCUIT INTERMITTENT

1. OUTLINE OF DIAGNOSIS

Detect the unstable output faults from the fuel level sensor caused by noise. Judge as NG when the max. value and cumulative value of output voltage variation of the fuel level sensor is larger than the threshold value.

2. ENABLE CONDITION

Malfunction Criteria	Threshold Value
Engine speed	≥ 500 rpm
Elapsed time after starting the engine	≥ 1 s
Battery voltage	≥ 10.9 V
Idle switch	ON
Fuel level	≥ 10.5 ℓ (2.77 US gal, 2.31 Imp gal) and < 59.5 ℓ (15.72 US gal, 13.09 Imp gal)
Vehicle speed = 0 km/h (0 MPH)	≥ 10000 ms

3. GENERAL DRIVING CYCLE

- Always perform the diagnosis continuously at idle speed.
- Pay attention to the fuel level.

4. DIAGNOSTIC METHOD

Calculate the Max. value (DELFLMAX) and cumulative value (SUMFL) of output voltage variation of fuel level sensor during 12.2 seconds. Judge it normal when both max. and cumulative values are not over the threshold value. Otherwise, when either of them is over the threshold value, the diagnosis counter counts up. Judge as NG if the counter indicated 4 time(s).

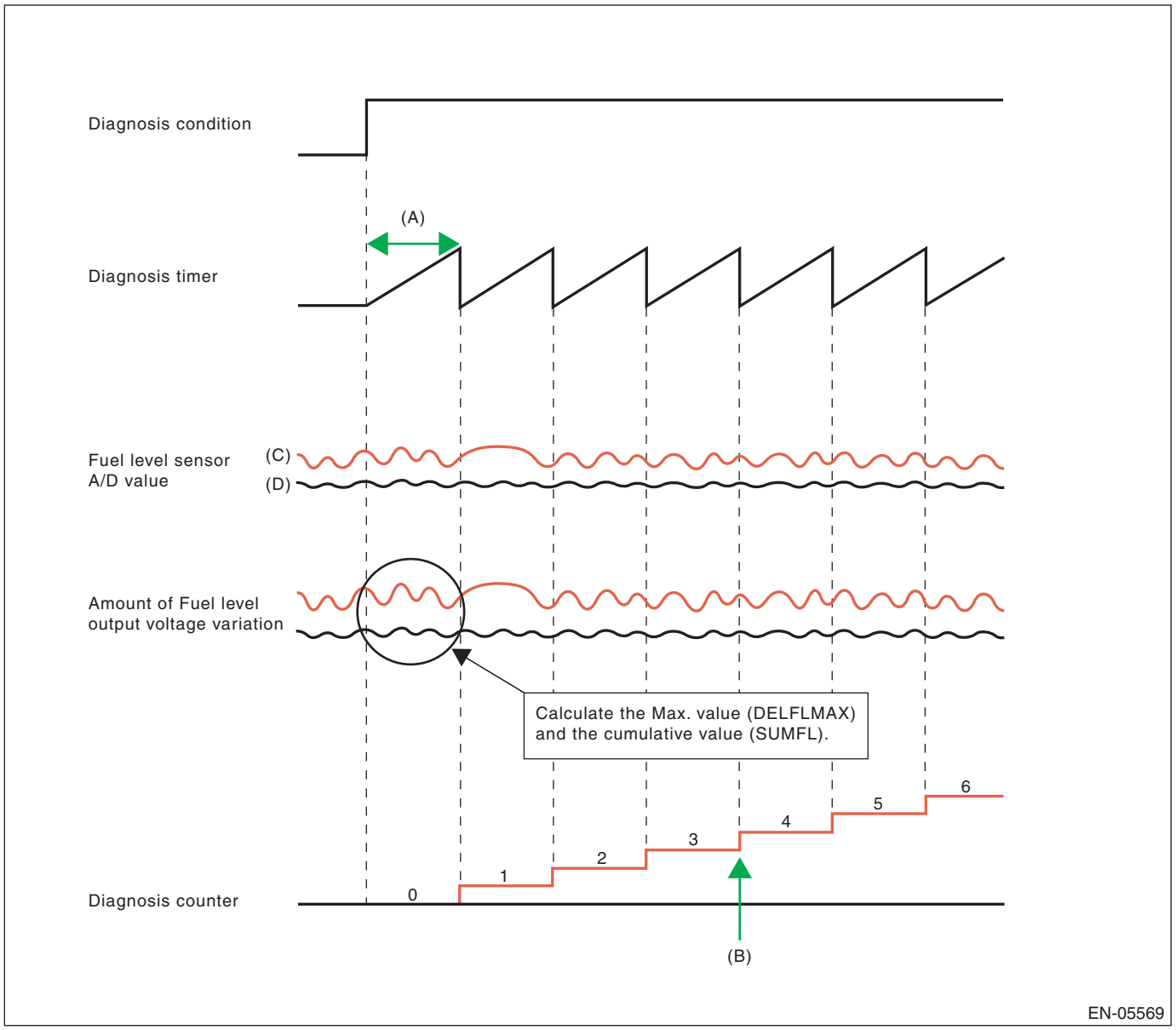

(A) 12288 ms
(B) NG at 4 time(s) counts
(C) Malfunction
(D) Normal

• Abnormality Judgment

If the duration of time while the following conditions are met is longer than the time indicated, judge as NG.

Judgment Value

Malfunction Criteria	Threshold Value
Integrated times of the condition reaching follows,	≥ 4 time(s)
DELFLMAX	≥ Value from Map
or	
SUMFL	≥ 23.8 V
At this time,	
DELFLMAX: Maximum difference of sensor output for 12288 ms	
SUMFL: Integrated value of the sensor output deviation for 12288 ms	

Map

Fuel level (ℓ , US gal, Imp gal)	10, 2.64, 2.2	20, 5.28, 4.4	25, 6.61, 5.5	30, 7.93, 6.6	43, 11.36, 9.46	45, 11.89, 9.9	50, 13.21, 11
Measured voltage (V)	0.248	0.519	0.796	0.6	1.025	1.069	1.402

The diagnosis counter does not count up when the following conditions are completed within 12288 ms.

Maximum value – minimum value of change of tank pressure during 12288 ms	≥ 0 kPa (0.375 mmHg, 0 inHg)
Maximum value – minimum value of battery voltage during 12288 ms	≥ 1.09 V

Time Needed for Diagnosis: 12288 ms × 4 time(s)
Malfunction Indicator Light Illumination: Illuminates when malfunction occurs in 2 continuous driving cycles.

• Normality Judgment

Judge as OK and clear the NG if the continuous time while the following conditions are established is more than the predetermined time.

Judgment Value

Malfunction Criteria	Threshold Value
DELFLMAX	< Value from Map
SUMFL	< 23.8 V
At this time,	
DELFLMAX: Maximum difference of sensor output for 12288 ms	
SUMFL: Integrated value of the sensor output deviation for 12288 ms	

Time Needed for Diagnosis: 12288 ms

CJ:DTC P0500 VEHICLE SPEED SENSOR “A”

1. OUTLINE OF DIAGNOSIS

Judge as NG when outside of the judgment value.
Judge NG when the received data from VDCCM&H/U is abnormal vehicle speed, and the vehicle speed data is impossible.

2. COMPONENT DESCRIPTION

Vehicle speed signals are taken in to the VDC control module and hydraulic control unit, and normal/erroneous data of the ABS wheel speed sensor is received by CAN communication from the VDC control module and hydraulic control unit.

3. ENABLE CONDITION

Secondary Parameters	Enable Conditions
Battery voltage	≥ 10.9 V
Elapsed time after starting the engine	≥ 2000 ms

4. GENERAL DRIVING CYCLE

Always perform diagnosis more than 2000 ms after starting the engine.

5. DIAGNOSTIC METHOD

- **Abnormality Judgment**

If the duration of time while the following conditions are met is longer than the time indicated, judge as NG.

Judgment Value

Malfunction Criteria	Threshold Value
Front ABS wheel speed sensor status	Malfunction
Either of the following is established	
Front left wheel speed	≥ 300 km/h (186.4 MPH)
Front right wheel speed	≥ 300 km/h (186.4 MPH)

Time Needed for Diagnosis: 2500 ms
Malfunction Indicator Light Illumination: Illuminates as soon as a malfunction occurs.

- **Normality Judgment**

Judge as OK and clear the NG if the continuous time while the following conditions are established is more than the predetermined time.

Judgment Value

Malfunction Criteria	Threshold Value
Front left wheel speed	> 0 km/h (0 MPH) and < 300 km/h (186.4 MPH)
Front right wheel speed	> 0 km/h (0 MPH) and < 300 km/h (186.4 MPH)

Time Needed for Diagnosis: 2500 ms

CK:DTC P0506 IDLE AIR CONTROL SYSTEM RPM LOWER THAN EXPECTED

1. OUTLINE OF DIAGNOSIS

Detect the malfunction that actual engine speed is not close to target engine speed during idling. Judge as NG when actual engine speed is not close to target engine speed during idling.

2. ENABLE CONDITION

Secondary Parameters	Enable Conditions
Engine coolant temperature	≥ 75 °C (167 °F)
Battery voltage	≥ 10.9 V
Atmospheric pressure	≥ 75 kPa (563 mmHg, 22.2 inHg)
Fuel level	≥ 9.6 ℓ (2.54 US gal, 2.11 Imp gal)
Elapsed time after starting the engine	≥ 10.49 s
Feedback of ISC	In operation
Lambda value (left and right)	≥ 0.81 and < 1.1
After switching air conditioner to ON/OFF	≥ 5.1 s
After intake manifold pressure changes by 4 kPa (30 mmHg, 1.2 inHg) or more.	> 5.1 s
Elapsed time after switching neutral position switch to ON/OFF	> 5.1 s
Vehicle speed	0 km/h (0 MPH)

3. GENERAL DRIVING CYCLE

Perform the diagnosis continuously at idling after warming up engine.

4. DIAGNOSTIC METHOD

- **Abnormality Judgment**

If the duration of time while the following conditions are met is longer than the time indicated, judge as NG.

Judgment Value

Malfunction Criteria	Threshold Value
Actual engine speed – Targeted engine speed	< –100 rpm
Feedback compensation for ISC	Max.

Time Needed for Diagnosis: 10 s × 3 time(s)
Malfunction Indicator Light Illumination: Illuminates when malfunction occurs in 2 continuous driving cycles.

- **Normality Judgment**

Judge as OK and clear the NG if the continuous time while the following conditions are established is more than the predetermined time.

Judgment Value

Malfunction Criteria	Threshold Value
Actual engine speed – Targeted engine speed	≥ –100 rpm

Time Needed for Diagnosis: 10 s

CL:DTC P0507 IDLE AIR CONTROL SYSTEM RPM HIGHER THAN EXPECTED

1. OUTLINE OF DIAGNOSIS

Detect the malfunction that actual engine speed is not close to target engine speed during idling. Judge as NG when actual engine speed is not close to target engine speed during idling.

2. ENABLE CONDITION

Secondary Parameters	Enable Conditions
Engine coolant temperature	≥ 75 °C (167 °F)
Battery voltage	≥ 10.9 V
Atmospheric pressure	≥ 75 kPa (563 mmHg, 22.2 inHg)
Fuel level	≥ 9.6 ℓ (2.54 US gal, 2.11 Imp gal)
Elapsed time after starting the engine	≥ 10.49 s
Feedback of ISC	In operation
Lambda value (left and right)	≥ 0.81 and < 1.1
After switching air conditioner to ON/OFF	≥ 5.1 s
After intake manifold pressure changes by 4 kPa (30 mmHg, 1.2 inHg) or more.	> 5.1 s
Elapsed time after switching neutral position switch to ON/OFF	> 5.1 s
Vehicle speed	0 km/h (0 MPH)

3. GENERAL DRIVING CYCLE

Perform the diagnosis continuously at idling after warming up engine.

4. DIAGNOSTIC METHOD

- **Abnormality Judgment**

If the duration of time while the following conditions are met is longer than the time indicated, judge as NG.

Judgment Value

Malfunction Criteria	Threshold Value
Actual – Target engine speed	≥ 200 rpm
Feedback compensation for ISC	Min.

Time Needed for Diagnosis: 10 s × 3 time(s)
Malfunction Indicator Light Illumination: Illuminates when malfunction occurs in 2 continuous driving cycles.

- **Normality Judgment**

Judge as OK and clear the NG if the continuous time while the following conditions are established is more than the predetermined time.

Judgment Value

Malfunction Criteria	Threshold Value
Actual – Target engine speed	< 200 rpm

Time Needed for Diagnosis: 10 s

CM:DTC P050A COLD START IDLE AIR CONTROL SYSTEM PERFORMANCE

1. OUTLINE OF DIAGNOSIS

• When cold, the abnormality in the control of target engine speed increase is detected. (P050A)

Judge as NG if the exhaust gas temperature diagnosis or idle speed diagnosis is NG.

- Exhaust gas temperature diagnosis

Judge as NG when the estimated exhausted gas temperature in 14 seconds after the cold start is below the specified value.

- Idle speed diagnosis

Judge as NG when actual engine speed is not close to target engine speed at cold start.

• Detect malfunctions of the catalyst advanced idling retard angle control. (P050B)

Judge as NG when ECM is not controlling the angle properly during catalyst advanced idling retard angle control.

- Final ignition timing diagnosis

Judge as NG when actual retard amount is under the specified value at cold start.

2. ENABLE CONDITIONS

Secondary Parameters	Enable Conditions
<Exhaust gas temperature diagnosis>	
Atmospheric pressure	≥ 75 kPa (563 mmHg, 22.2 inHg)
Battery voltage	> 10.9 V
Engine condition	In operation
Vehicle speed	≤ 2 km/h (1.2 MPH)
Elapsed time after gear position change (P ←→ D or N ←→ D)	≥ 3000 ms
ISC feedback	In operation
Throttle opening angle	< 0.37 °
Fuel property	Not extremely low volatility
Target retard amount	≥ 8 °CA (CVT model) ≥ 8 °CA (MT model)
<Idle speed diagnosis>	
Atmospheric pressure	≥ 75 kPa (563 mmHg, 22.2 inHg)
Battery voltage	> 10.9 V
Engine condition	In operation
Vehicle speed	≤ 2 km/h (1.2 MPH)
Engine coolant temperature	≤ 60 °C (140 °F)
Intake air amount sum value	≤ Value of Map 1
Elapsed time after gear position change (P ←→ D or N ←→ D)	≥ 3000 ms
Throttle opening angle	< 0.37 °
Fuel property	Not extremely low volatility
Elapsed time after starting the engine	≥ 2000 ms
<Final ignition timing diagnosis>	
Atmospheric pressure	≥ 75 kPa (563 mmHg, 22.2 inHg)
Battery voltage	> 10.9 V
Engine condition	In operation
Vehicle speed	≤ 2 km/h (1.2 MPH)
Engine coolant temperature	≤ 60 °C (140 °F)
Intake air amount sum value	≤ Value of Map 2
Elapsed time after gear position change (P ←→ D or N ←→ D)	≥ 3000 ms
Throttle opening angle	< 0.37 °
Fuel property	Not extremely low volatility
Target retard amount	≥ Value from Map 3

Map 1 (PZEV model)

Engine coolant temperature at engine starting °C (°F)	–40 (–40)	–30 (–22)	–20 (–4)	–10 (14)	0 (32)	10 (50)	20 (68)	30 (86)
Intake air amount sum value g (oz)	1070 (37.74)	840 (29.63)	680 (23.98)	570 (20.1)	500 (17.64)	480 (16.93)	480 (16.93)	480 (16.93)

Engine coolant temperature at engine starting °C (°F)	40 (104)	50 (122)	60 (140)	70 (158)	80 (176)	90 (194)	100 (212)	110 (230)
Intake air amount sum value g (oz)	480 (16.93)	450 (15.87)	360 (12.7)	360 (12.7)	360 (12.7)	360 (12.7)	360 (12.7)	360 (12.7)

Map 1 (except for PZEV model)

Engine coolant temperature at engine starting °C (°F)	–40 (–40)	–30 (–22)	–20 (–4)	–10 (14)	0 (32)	10 (50)	20 (68)	30 (86)
Intake air amount sum value g (oz)	1170 (41.27)	1010 (35.62)	860 (30.33)	730 (25.75)	640 (22.57)	570 (20.1)	540 (19.05)	530 (18.69)

Engine coolant temperature at engine starting °C (°F)	40 (104)	50 (122)	60 (140)	70 (158)	80 (176)	90 (194)	100 (212)	110 (230)
Intake air amount sum value g (oz)	510 (17.99)	470 (16.58)	410 (14.46)	410 (14.46)	410 (14.46)	410 (14.46)	410 (14.46)	410 (14.46)

Map 2 (PZEV model)

Engine coolant temperature at engine starting °C (°F)	–40 (–40)	–30 (–22)	–20 (–4)	–10 (14)	0 (32)	10 (50)	20 (68)	30 (86)
Intake air amount sum value g (oz)	1070 (37.74)	840 (29.63)	680 (23.98)	570 (20.1)	500 (17.64)	480 (16.93)	480 (16.93)	480 (16.93)

Engine coolant temperature at engine starting °C (°F)	40 (104)	50 (122)	60 (140)	70 (158)	80 (176)	90 (194)	100 (212)	110 (230)
Intake air amount sum value g (oz)	480 (16.93)	450 (15.87)	360 (12.7)	360 (12.7)	360 (12.7)	360 (12.7)	360 (12.7)	360 (12.7)

Map 2 (except for PZEV model)

Engine coolant temperature at engine starting °C (°F)	–40 (–40)	–30 (–22)	–20 (–4)	–10 (14)	0 (32)	10 (50)	20 (68)	30 (86)
Intake air amount sum value g (oz)	1170 (41.27)	1010 (35.62)	860 (30.33)	730 (25.75)	640 (22.57)	570 (20.1)	540 (19.05)	530 (18.69)

Engine coolant temperature at engine starting °C (°F)	40 (104)	50 (122)	60 (140)	70 (158)	80 (176)	90 (194)	100 (212)	110 (230)
Intake air amount sum value g (oz)	510 (17.99)	470 (16.58)	410 (14.46)	410 (14.46)	410 (14.46)	410 (14.46)	410 (14.46)	410 (14.46)

Map 3

Engine coolant temperature	–40 °C (–40 °F)	–30 °C (–22 °F)	–20 °C (–4 °F)	–10 °C (14 °F)	0 °C (32 °F)	10 °C (50 °F)	20 °C (68 °F)	30 °C (86 °F)	40 °C (104 °F)	50 °C (122 °F)	60 °C (140 °F)
Target retard amount	3.5 °CA	3.5 °CA	3.5 °CA	3.5 °CA	3.5 °CA	3.5 °CA	3.5 °CA	3.5 °CA	3.5 °CA	3.5 °CA	3.5 °CA

3. GENERAL DRIVING CYCLE

Perform the diagnosis at cold start.

4. DIAGNOSTIC METHOD

- **Exhaust gas temperature diagnosis**

Abnormality Judgment
Calculate the estimated exhaust gas temperature when the diagnostic enable condition is established. Judge as NG when the following conditions are established.

Judgment Value

Malfunction Criteria	Threshold Value
Estimated exhaust gas temperature	< Value of Map 4

Map 4 (PZEV model)

Engine coolant temperature at engine starting	–40 °C (–40 °F)	–30 °C (–22 °F)	–20 °C (–4 °F)	–10 °C (14 °F)	0 °C (32 °F)	10 °C (50 °F)	20 °C (68 °F)	30 °C (86 °F)	40 °C (104 °F)	50 °C (122 °F)
Threshold value (CVT model)	140 °C (284 °F)	140 °C (284 °F)	140 °C (284 °F)	140 °C (284 °F)	140 °C (284 °F)	138 °C (280.4 °F)	138 °C (280.4 °F)	138 °C (280.4 °F)	138 °C (280.4 °F)	138 °C (280.4 °F)
Threshold value (MT model)	140 °C (284 °F)	140 °C (284 °F)	140 °C (284 °F)	140 °C (284 °F)	138 °C (280.4 °F)	138 °C (280.4 °F)	138 °C (280.4 °F)	138 °C (280.4 °F)	125 °C (257 °F)	115 °C (239 °F)

Map 4 (except for PZEV model)

Engine coolant temperature at engine starting	–40 °C (–40 °F)	–30 °C (–22 °F)	–20 °C (–4 °F)	–10 °C (14 °F)	0 °C (32 °F)	10 °C (50 °F)	20 °C (68 °F)	30 °C (86 °F)	40 °C (104 °F)	50 °C (122 °F)
Threshold value (CVT model)	140 °C (284 °F)	140 °C (284 °F)	140 °C (284 °F)	140 °C (284 °F)	140 °C (284 °F)	140 °C (284 °F)	135 °C (275 °F)	130 °C (266 °F)	125 °C (257 °F)	125 °C (257 °F)
Threshold value (MT model)	140 °C (284 °F)	140 °C (284 °F)	140 °C (284 °F)	140 °C (284 °F)	140 °C (284 °F)	140 °C (284 °F)	135 °C (275 °F)	130 °C (266 °F)	120 °C (248 °F)	115 °C (239 °F)

Time Needed for Diagnosis: 14 seconds
Malfunction Indicator Light Illumination: Illuminates when malfunction occurs in 2 continuous driving cycles.
Normality Judgment
Judge as OK and clear the NG if the following conditions are established.

Judgment Value

Malfunction Criteria	Threshold Value
Estimated exhaust gas temperature	≥ Value of Map 4

Time Needed for Diagnosis: Less than 1 second

• Idle speed diagnosis

Abnormality Judgment
Judge as NG when the following conditions are established.

Judgment Value

Malfunction Criteria	Threshold Value
Actual engine speed – Target engine speed	< – 125 rpm

Time Needed for Diagnosis: 5000 ms
Malfunction Indicator Light Illumination: Illuminates when malfunction occurs in 2 continuous driving cycles.

Normality Judgment
Judge as OK and clear the NG if the following conditions are established.

Judgment Value

Malfunction Criteria	Threshold Value
Actual engine speed – Target engine speed	≥ – 125 rpm

Time Needed for Diagnosis: 5000 ms

• Final ignition timing diagnosis

Abnormality Judgment
Judge as NG when the following conditions are established.

Judgment Value

Malfunction Criteria	Threshold Value
Final ignition timing – ignition timing during CSERS* *: Ignition timing during CSERS (Cold Start Emission Reduction Strategy) = Base ignition timing – retard amount	> Value of Map 5

Map 5

Engine coolant temperature	–40 °C (–40 °F)	–30 °C (–22 °F)	–20 °C (–4 °F)	–10 °C (14 °F)	0 °C (32 °F)	10 °C (50 °F)	20 °C (68 °F)	30 °C (86 °F)	40 °C (104 °F)	50 °C (122 °F)	60 °C (140 °F)
Threshold Value	3.5 °CA	3.5 °CA	3.5 °CA	3.5 °CA	3.5 °CA	3.5 °CA	3.5 °CA	3.5 °CA	3.5 °CA	3.5 °CA	3.5 °CA

Time Needed for Diagnosis: 5000 ms
Malfunction Indicator Light Illumination: Illuminates when malfunction occurs in 2 continuous driving cycles.

Normality Judgment
Judge as OK and clear the NG if the following conditions are established.

Judgment Value

Malfunction Criteria	Threshold Value
Final ignition timing – ignition timing during CSERS* *: Ignition timing during CSERS (Cold Start Emission Reduction Strategy) = Base ignition timing – retard amount	≤ Value of Map 5

Time Needed for Diagnosis: 5000 ms

CN:DTC P050B COLD START IGNITION TIMING PERFORMANCE

1. OUTLINE OF DIAGNOSIS

NOTE:
For the detection standard, refer to DTC P050A. <Ref. to GD(H4SO)-183, DTC P050A COLD START IDLE AIR CONTROL SYSTEM PERFORMANCE, Diagnostic Trouble Code (DTC) Detecting Criteria.>

CO:DTC P0512 STARTER REQUEST CIRCUIT

1. OUTLINE OF DIAGNOSIS

Detect the open or short circuit of starter SW.
Judge as ON NG when the starter SW signal remains ON.

2. ENABLE CONDITION

Secondary Parameters	Enable Conditions
None	

3. GENERAL DRIVING CYCLE

Always perform the diagnosis continuously.

4. DIAGNOSTIC METHOD

- **Abnormality Judgment**

If the duration of time while the following conditions are met is longer than the time indicated, judge as NG.

Judgment Value

Malfunction Criteria	Threshold Value
Engine condition	After engine starting
Starter OFF signal	Not detected
Battery voltage	≥ 8 V

Time Needed for Diagnosis: 30000 ms
Malfunction Indicator Light Illumination: Illuminates when malfunction occurs in 2 continuous driving cycles.

- **Normality Judgment**

Judge as OK and clear the NG if the continuous time while the following conditions are established is more than the predetermined time.

Judgment Value

Malfunction Criteria	Threshold Value
Starter OFF signal	Detected
Battery voltage	≥ 8 V

Time Needed for Diagnosis: Less than 1 second

CP:DTC P0513 INCORRECT IMMOBILIZER KEY

1. OUTLINE OF DIAGNOSIS

DTC	Item	Outline of Diagnosis
P0513	Incorrect Immobilizer Key	Incorrect immobilizer key (Use of unregistered key in body integrated unit)
P1570	Antenna	Faulty antenna
P1571	Reference Code Incompatibility	Reference code incompatibility between body integrated unit and ECM
P1572	IMM Circuit Failure (Except Antenna Circuit)	Communication failure between body integrated unit and ECM
P1574	Key Communication Failure	Failure of body integrated unit to verify key (transponder) ID code or transponder failure
P1576	EGI Control Module EEPROM	ECM malfunctioning
P1577	IMM Control Module EEPROM	Body integrated unit malfunctioning
P1578	Meter Failure	Reference code incompatibility between body integrated unit and combination meter

2. ENABLE CONDITION

When starting the engine.

3. GENERAL DRIVING CYCLE

Perform the diagnosis only after starting the engine.

4. DIAGNOSTIC METHOD

Judge as NG when the conditions for the outline of the diagnosis of the top are established.

CQ:DTC P0604 INTERNAL CONTROL MODULE RANDOM ACCESS MEMORY (RAM) ERROR

1. OUTLINE OF DIAGNOSIS

Detect the malfunction of microcomputer (RAM).
When there is a problem in the CPU normal RAM, judge as NG.
If it is possible to write data to the whole area of RAM in the initial routine, and is possible to read the same data, it is judged as OK, and if not, NG.

2. ENABLE CONDITION

Secondary Parameters	Enable Conditions
None	

Diagnosis with the initial routine.

3. GENERAL DRIVING CYCLE

Perform the diagnosis as soon as the ignition switch is turned to ON.

4. DIAGNOSTIC METHOD

- **Abnormality Judgment**

Judge as NG when the following conditions are established.

Judgment Value

Malfunction Criteria	Threshold Value
Write the specified value into the RAM.	The written value cannot be read.

Time Needed for Diagnosis: Less than 1 second
Malfunction Indicator Light Illumination: Illuminates as soon as a malfunction occurs.

- **Normality Judgment**

Judge as OK and clear the NG if the following conditions are established.

Judgment Value

Malfunction Criteria	Threshold Value
Write the specified value into the RAM.	The written value can be read.

Time Needed for Diagnosis: Less than 1 second

CR:DTC P0605 INTERNAL CONTROL MODULE READ ONLY MEMORY (ROM) ERROR

1. OUTLINE OF DIAGNOSIS

Judge as NG when SUM value of ROM is outside the standard value.

2. ENABLE CONDITION

Secondary Parameters	Enable Conditions
Ignition switch	ON

3. GENERAL DRIVING CYCLE

Always perform the diagnosis continuously.

4. DIAGNOSTIC METHOD

Abnormality Judgment

Judge as NG if the criteria below are met.

Judgment Value

Malfunction Criteria	Threshold Value
SUM value of ROM	Standard

Time Needed for Diagnosis: Undetermined
Malfunction Indicator Light Illumination: Illuminates as soon as a malfunction occurs.

CS:DTC P0607 THROTTLE CONTROL SYSTEM CIRCUIT RANGE/PERFORMANCE

1. OUTLINE OF DIAGNOSIS

Judge as NG when any one of the followings is established.
(1) Monitoring IC operates abnormally. (Monitoring IC malfunction)
(2) Input amplifier circuit of throttle position sensor 1 operates abnormally. (fourfold amplifier malfunction)
(3) CPU operates abnormally. (Instruction/flow check)
(4) A/D converter operates abnormally. (ADC malfunction)
(5) EEPROM operates abnormally. (EEPROM malfunction)
(6) Output IC operates abnormally. (Output driver malfunction)

2. COMPONENT DESCRIPTION

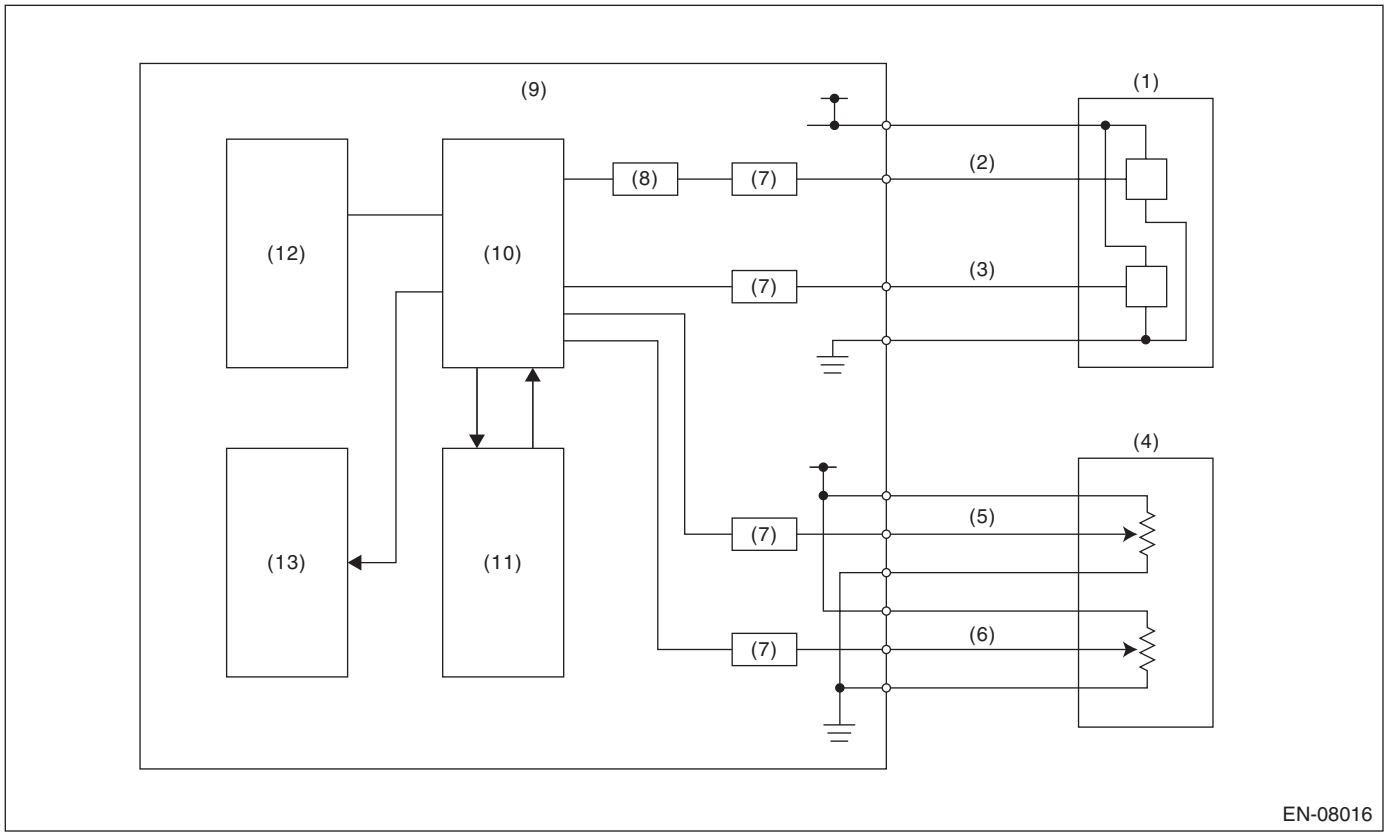

(1)	Throttle position sensor	(6)	Accelerator pedal position sensor 2	(10)	CPU
(2)	Throttle position sensor 1	(7)	I/F circuit	(11)	Monitoring IC
(3)	Throttle position sensor 2	(8)	Amplifier circuit	(12)	EEPROM
(4)	Accelerator pedal position sensor	(9)	Engine control module (ECM)	(13)	Output IC
(5)	Accelerator pedal position sensor 1				

3. ENABLE CONDITION

Secondary Parameters	Enable Conditions
(1) Battery voltage	≥ 6 V
(2) Ignition switch	ON
(2) Battery voltage	≥ 6 V
(3) Ignition switch	ON
(3) ETC control	Permitted
(4) Ignition switch	ON
(4) Battery voltage	≥ 6 V
(5) Starter switch	OFF
(5) Battery voltage	> 6 V
(6) Ignition switch	ON
(6) Battery voltage	≥ 10.9 V

4. GENERAL DRIVING CYCLE

Always perform the diagnosis continuously.

5. DIAGNOSTIC METHOD

Judge as OK and clear the NG when the malfunction criteria below are met.

Judgment Value

Malfunction Criteria	Threshold Value
(1) Monitoring IC operation	The result and estimated value match.
(2) | Throttle position sensor 1 opening angle – (Throttle position sensor 1 opening angle after passing amplifier)/4 |	< 3 °
(3) Main CPU calculation result	The result and estimated value match.
(4) | Standard voltage – Voltage reading |	< 0.078125 V
(5) EEPROM writing	Writing completed
(6) Communication with output IC	Possible to communicate

Time Needed for Diagnosis:
(1): 200 ms
(2): 24 ms
(3): 192 ms
(4): 200 ms
(5): 48 ms
(6): 2500 ms
Malfunction Indicator Light Illumination: Illuminates as soon as a malfunction occurs.

CT:DTC P0638 THROTTLE ACTUATOR CONTROL RANGE/PERFORMANCE (BANK 1)

1. OUTLINE OF DIAGNOSIS

Judge as NG when the target opening angle and actual opening angle is mismatched or the current to motor is the specified duty or more for specified time continuously.

2. COMPONENT DESCRIPTION

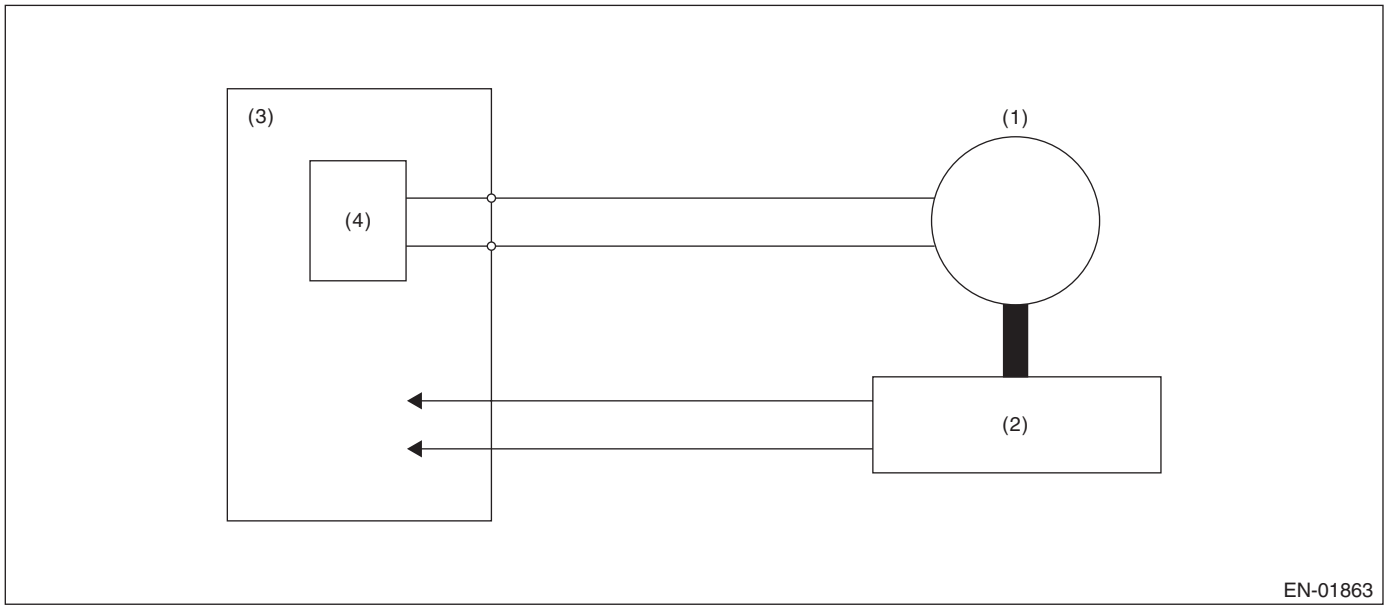

(1) Motor
(2) Throttle position sensor
(3) Engine control module (ECM)
(4) Drive circuit

3. ENABLE CONDITION

Secondary Parameters	Enable Conditions
Ignition switch	ON
Normal operation of electronic throttle control	ON

4. GENERAL DRIVING CYCLE

Always perform the diagnosis continuously when the electronic throttle control is operating.

5. DIAGNOSTIC METHOD

Judge as OK and clear the NG when the malfunction criteria below are met.

Judgment Value

Malfunction Criteria	Threshold Value
Difference between target opening angle and actual opening angle	Within the OK range of **judgment value detail**
Output duty to drive circuit	< 95 %

Time Needed for Diagnosis:

- Difference between target opening angle and actual opening angle:
  - NG judgment: Refer to the **judgment time detail**.
  - OK judgment: 2000 ms
- Output duty to drive circuit: 2000 ms

Details of Judgment Value

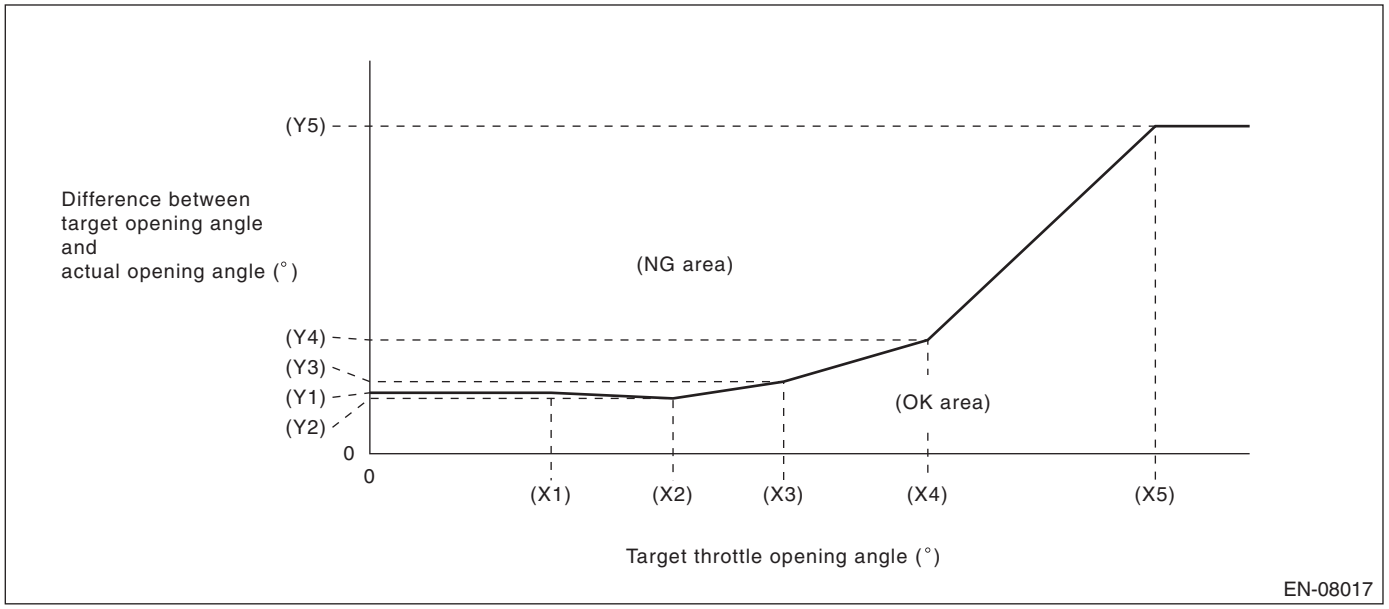

(X1) 6.915 °
(X2) 11.565 °
(X3) 15.785 °
(X4) 21.285 °
(X5) 29.965 °

(Y1) 4.65 °
(Y2) 4.22 °
(Y3) 5.5 °
(Y4) 8.68 °
(Y5) 25 °

Judgment time detail

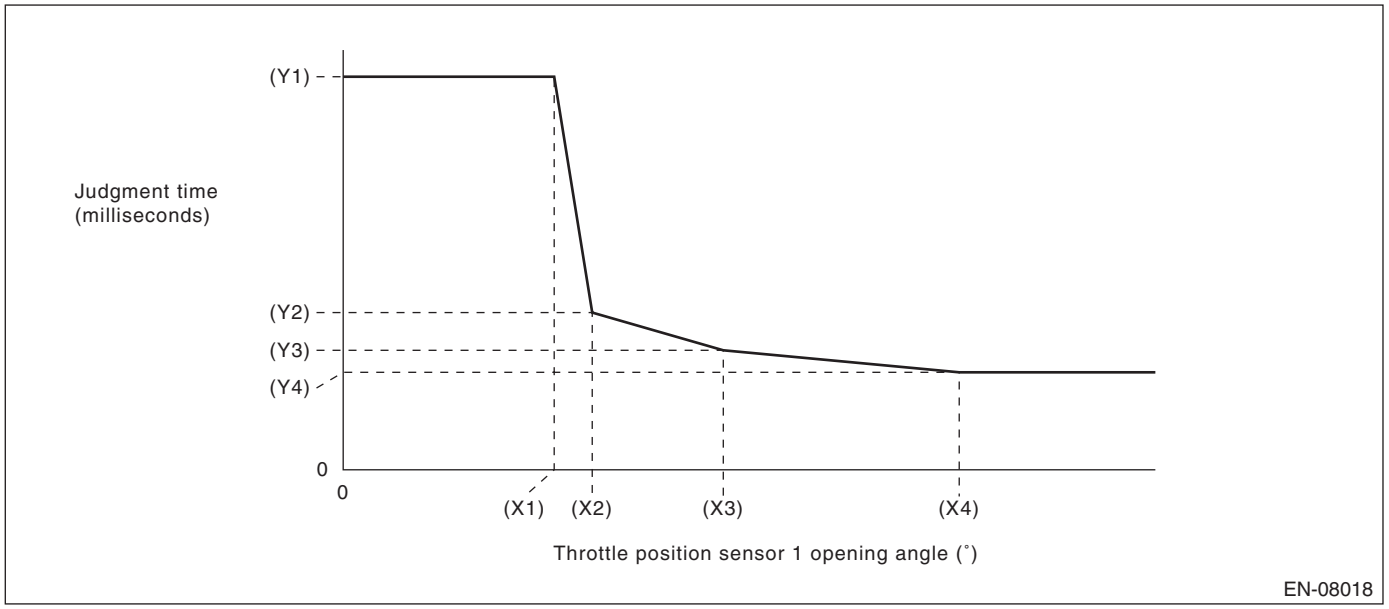

(X1) 8.049999237 °
(X2) 9.5 °
(X3) 14.5 °
(X4) 23.5 °

(Y1) 1000 ms
(Y2) 400 ms
(Y3) 304 ms
(Y4) 248 ms

NOTE:
Judgment time is constantly 1000 ms with Actual opening angle ≤ Target opening angle.
Malfunction Indicator Light Illumination: Illuminates as soon as a malfunction occurs.

CU:DTC P0700 TRANSMISSION CONTROL SYSTEM (MIL REQUEST)

1. OUTLINE OF DIAGNOSIS

Judge as NG when there is CAN communication with the TCM and there is a MIL lighting request.

2. ENABLE CONDITION

Secondary Parameters	Enable Conditions
None	

3. GENERAL DRIVING CYCLE

Always perform the diagnosis continuously.

4. DIAGNOSTIC METHOD

- **Abnormality Judgment**

If the duration of time while the following conditions are met is longer than the time indicated, judge as NG.

Judgment Value

Malfunction Criteria	Threshold Value
Battery voltage	≥ 10.9 V
MIL lighting request from TCM	Yes

Time Needed for Diagnosis: 2500 ms
Malfunction Indicator Light Illumination: Illuminates as soon as a malfunction occurs.

- **Normality Judgment**

If the duration of time while the following conditions are met is longer than the time indicated, judge as NG.

Judgment Value

Malfunction Criteria	Threshold Value
Battery voltage	≥ 10.9 V
MIL lighting request from TCM	None

Time Needed for Diagnosis: Less than 1 second

CV:DTC P0851 PARK/NEUTRAL SWITCH INPUT CIRCUIT LOW (AT MODEL)

1. OUTLINE OF DIAGNOSIS

Judge the open or short circuit of the neutral SW.
Judge as NG when the ECM neutral terminal input differs from the reception data from TCM.

2. ENABLE CONDITION

Secondary Parameters	Enable Conditions
Battery voltage	≥ 10.9 V
Starter relay	OFF

3. GENERAL DRIVING CYCLE

Perform the diagnosis continuously in 2 seconds after starting the engine.

4. DIAGNOSTIC METHOD

- **Abnormality Judgment**

If the duration of time while the following conditions are met is longer than the time indicated, judge as NG.

Judgment Value

Malfunction Criteria	Threshold Value
Neutral switch signal in ECM when “P”/“N” range in TCM are “OFF” and when the other switches are “ON”	LOW (ON)

Time Needed for Diagnosis: 100 time(s)
Malfunction Indicator Light Illumination: Illuminates when malfunction occurs in 2 continuous driving cycles.

- **Normality Judgment**

Judge as OK and clear the NG if the continuous time while the following conditions are established is more than the predetermined time.

Judgment Value

Malfunction Criteria	Threshold Value
Neutral switch signal in ECM when “P”/“N” range in TCM are “OFF” and when the other switches are “ON”	HIGH (OFF)

Time Needed for Diagnosis: Less than 1 second

CW:DTC P0851 NEUTRAL SWITCH INPUT CIRCUIT LOW (MT MODEL)

1. OUTLINE OF DIAGNOSIS

Detect the open or short circuit of neutral SW.
Judge as NG when there is no change in the neutral SW even if the driving shift was applied. (There is neutral SW ON/OFF inversion from the vehicle speed and engine speed.)

2. ENABLE CONDITION

Secondary Parameters	Enable Conditions
Battery voltage	≥ 10.9 V
Starter relay	OFF

3. GENERAL DRIVING CYCLE

Perform the diagnosis continuously in 2 seconds after starting the engine.

4. DIAGNOSTIC METHOD

• Abnormality Judgment

Judge NG when the malfunction criteria below are completed determined times or more after the neutral SW change.

Judgment Value

Malfunction Criteria	Threshold Value
Neutral switch signal (while changing from a to b below)	LOW (ON) continues.
Driving condition change	From a) to b)
a) Engine speed 550 rpm — 900 rpm & Vehicle speed = 0 km/h (0 MPH)	
b) Engine speed 1600 rpm — 2550 rpm & Vehicle speed ≥ 64 km/h (39.8 MPH)	

Time Needed for Diagnosis: 3 time(s)
Malfunction Indicator Light Illumination: Illuminates when malfunction occurs in 2 continuous driving cycles.

• Normality Judgment

Judge as OK and clear NG when there is change in the neutral SW.

Judgment Value

Malfunction Criteria	Threshold Value
Neutral switch signal (while changing from a to b below)	Changes to HIGH (OFF).
Driving condition change	From a) to b)
a) Engine speed 550 rpm — 900 rpm & Vehicle speed = 0 km/h (0 MPH)	
b) Engine speed 1600 rpm — 2550 rpm & Vehicle speed ≥ 64 km/h (39.8 MPH)	

Time Needed for Diagnosis: Less than 1 second

CX:DTC P0852 PARK/NEUTRAL SWITCH INPUT CIRCUIT HIGH (AT MODEL)

1. OUTLINE OF DIAGNOSIS

Judge the open or short circuit of the neutral SW.
Judge as NG when the ECM neutral terminal input differs from the reception data from TCM.

2. ENABLE CONDITION

Secondary Parameters	Enable Conditions
Battery voltage	≥ 10.9 V
Starter relay	OFF

3. GENERAL DRIVING CYCLE

Perform the diagnosis continuously in 2 seconds after starting the engine.

4. DIAGNOSTIC METHOD

- **Abnormality Judgment**

If the duration of time while the following conditions are met is longer than the time indicated, judge as NG.

Judgment Value

Malfunction Criteria	Threshold Value
Neutral switch signal in ECM when “P”/“N” range in TCM are “ON” and when the other switches are “OFF”	HIGH (OFF)

Time Needed for Diagnosis: 100 time(s)
Malfunction Indicator Light Illumination: Illuminates when malfunction occurs in 2 continuous driving cycles.

- **Normality Judgment**

Judge as OK and clear the NG if the continuous time while the following conditions are established is more than the predetermined time.

Judgment Value

Malfunction Criteria	Threshold Value
Neutral switch signal in ECM when “P”/“N” range in TCM are “ON” and when the other switches are “OFF”	LOW (ON)

Time Needed for Diagnosis: Less than 1 second

CY:DTC P0852 NEUTRAL SWITCH INPUT CIRCUIT HIGH (MT MODEL)

1. OUTLINE OF DIAGNOSIS

Detect the open or short circuit of neutral SW.
Judge as NG when there is no change in the neutral SW even if the driving shift was applied. (There is neutral SW ON/OFF inversion from the vehicle speed and engine speed.)

2. ENABLE CONDITION

Secondary Parameters	Enable Conditions
Battery voltage	≥ 10.9 V
Starter relay	OFF

3. GENERAL DRIVING CYCLE

Perform the diagnosis continuously in 2 seconds after starting the engine.

4. DIAGNOSTIC METHOD

• Abnormality Judgment

Judge NG when the malfunction criteria below are completed determined times or more after the neutral SW change.

Judgment Value

Malfunction Criteria	Threshold Value
Neutral switch signal (while changing from a to b below)	HIGH (OFF) continues.
Driving condition change	From a) to b)
a) Engine speed 550 rpm — 900 rpm & Vehicle speed = 0 km/h (0 MPH)	
b) Engine speed 1600 rpm — 2550 rpm & Vehicle speed ≥ 64 km/h (39.8 MPH)	

Time Needed for Diagnosis: 3 time(s)
Malfunction Indicator Light Illumination: Illuminates when malfunction occurs in 2 continuous driving cycles.

• Normality Judgment

Judge as OK and clear NG when there is change in the neutral SW.

Judgment Value

Malfunction Criteria	Threshold Value
Neutral switch signal (while changing from a to b below)	Changes to LOW (ON).
Driving condition change	From a) to b)
a) Engine speed 550 rpm — 900 rpm & Vehicle speed = 0 km/h (0 MPH)	
b) Engine speed 1600 rpm — 2550 rpm & Vehicle speed ≥ 64 km/h (39.8 MPH)	

Time Needed for Diagnosis: Less than 1 second

CZ:DTC P1152 O2 SENSOR CIRCUIT RANGE/PERFORMANCE (LOW) (BANK1 SENSOR1)

1. OUTLINE OF DIAGNOSIS

Detect that λ value remains low.
Judge as NG when lambda value is abnormal in accordance with λ value of front oxygen (A/F) sensor and running conditions such as vehicle speed, amount of intake air, engine coolant temperature, sub feedback control, etc.

λ value = Actual air fuel ratio/Theoretical air fuel ratio
λ > 1: Lean
λ < 1: Rich

2. COMPONENT DESCRIPTION

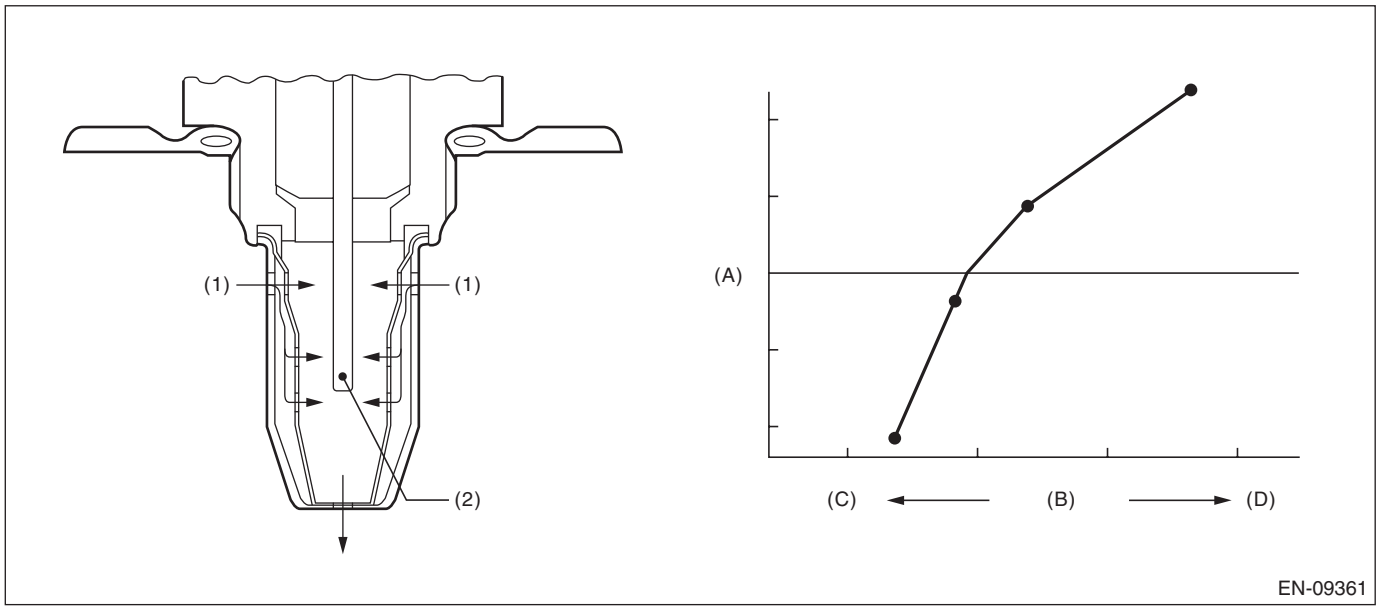

(A) Electromotive force (B) Air fuel ratio (C) Lean
(D) Rich

(1) Exhaust gas (2) ZrO_2

3. ENABLE CONDITION

Secondary Parameters	Enable Conditions
Time needed for all secondary parameters to be in enable conditions	≥ 4096 ms
Battery voltage	≥ 10.9 V
Atmospheric pressure	≥ 75 kPa (563 mmHg, 22.2 inHg)
Rear oxygen sensor sub feedback	Execution
Rear oxygen sensor output voltage – Feedback target voltage	– 0.2 V — 0.1 V
or rear oxygen sensor sub feedback compensation coefficient	On Min.
or rear oxygen sensor sub feedback compensation coefficient	On Max.
Elapsed time after starting the engine	≥ 60000 ms
Engine coolant temperature	≥ 75 °C (167 °F)
Vehicle speed	≥ 20 km/h (12.4 MPH)
Amount of intake air	≥ 6 g/s (0.21 oz/s)
Load change at 180° CA	< 0.02 g/rev (0 oz/rev)
Front oxygen (A/F) sensor impedance	0 Ω — 50 Ω
Learning value of evaporation gas density	< 0.2
Total time of operating canister purge	≥ 19.9 s
Targeted lambda value load compensation coefficient	–0.03 — 0.000

4. GENERAL DRIVING CYCLE

Perform diagnosis continuously at a constant speed of 20 km/h (12.4 MPH) or more after 60000 ms have passed since the engine started.

5. DIAGNOSTIC METHOD

- **Abnormality Judgment**

If the duration of time while the following conditions are met is longer than the time indicated, judge as NG.

Judgment Value

Malfunction Criteria	Threshold Value
λ value	< 0.85

Time Needed for Diagnosis: 10000 ms
Malfunction Indicator Light Illumination: Illuminates when malfunction occurs in 2 continuous driving cycles.

- **Normality Judgment**

Judge as OK and clear the NG if the continuous time while the following conditions are established is more than the predetermined time.

Judgment Value

Malfunction Criteria	Threshold Value
λ value	≥ 0.85

Time Needed for Diagnosis: Less than 1 second

DA:DTC P1153 O2 SENSOR CIRCUIT RANGE/PERFORMANCE (HIGH) (BANK1 SENSOR1)

1. OUTLINE OF DIAGNOSIS

Detect that λ value remains high.
Judge as NG when lambda value is abnormal in accordance with λ value of front oxygen (A/F) sensor and running conditions such as vehicle speed, amount of intake air, engine coolant temperature, sub feedback control, etc.

λ value = Actual air fuel ratio/Theoretical air fuel ratio
λ > 1: Lean
λ < 1: Rich

2. COMPONENT DESCRIPTION

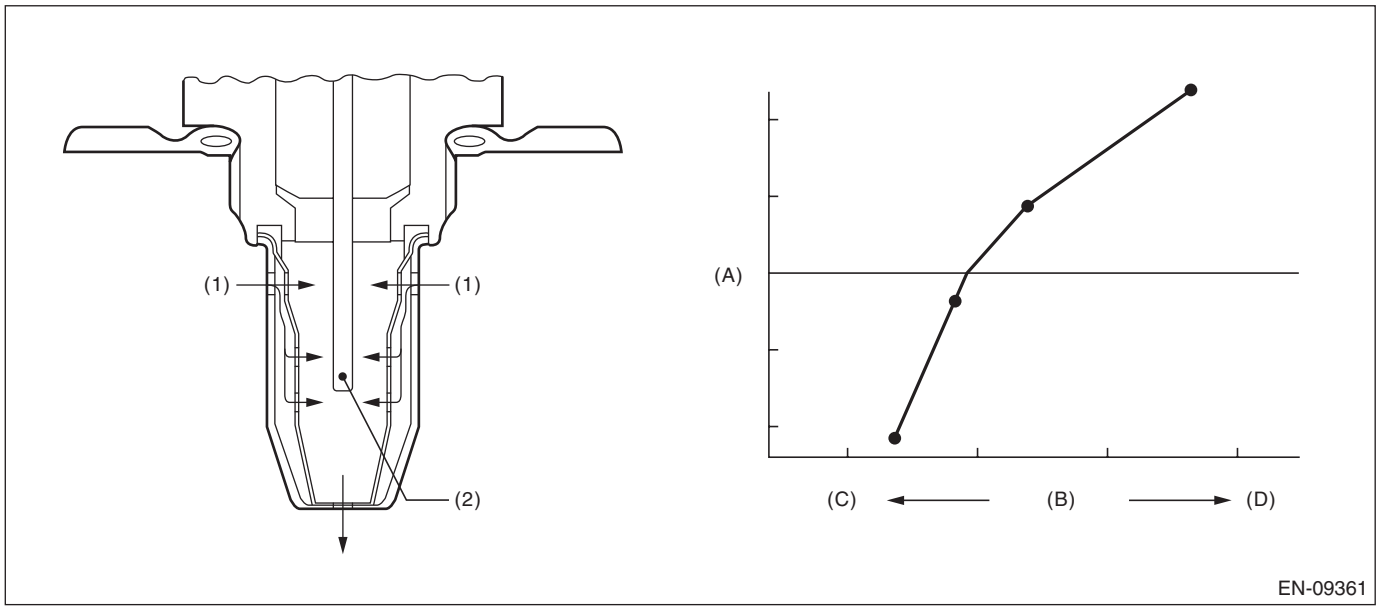

(A) Electromotive force (B) Air fuel ratio (C) Lean
(D) Rich

(1) Exhaust gas (2) ZrO_2

3. ENABLE CONDITION

Secondary Parameters	Enable Conditions
Time needed for all secondary parameters to be in enable conditions	≥ 4096 ms
Battery voltage	≥ 10.9 V
Atmospheric pressure	≥ 75 kPa (563 mmHg, 22.2 inHg)
Rear oxygen sensor sub feedback	Execution
Rear oxygen sensor output voltage – Feedback target voltage	– 0.2 V — 0.1 V
or rear oxygen sensor sub feedback compensation coefficient	On Min.
or rear oxygen sensor sub feedback compensation coefficient	On Max.
Elapsed time after starting the engine	≥ 60000 ms
Engine coolant temperature	≥ 75 °C (167 °F)
Vehicle speed	≥ 20 km/h (12.4 MPH)
Amount of intake air	≥ 6 g/s (0.21 oz/s)
Load change at 180° CA	< 0.02 g/rev (0 oz/rev)
Front oxygen (A/F) sensor impedance	0 Ω — 50 Ω
Learning value of evaporation gas density	< 0.2
Total time of operating canister purge	≥ 19.9 s
Targeted lambda value load compensation coefficient	–0.03 — 0.000

4. GENERAL DRIVING CYCLE

Perform diagnosis continuously at a constant speed of 20 km/h (12.4 MPH) or more after 60000 ms have passed since the engine started.

5. DIAGNOSTIC METHOD

- **Abnormality Judgment**

If the duration of time while the following conditions are met is longer than the time indicated, judge as NG.

Judgment Value

Malfunction Criteria	Threshold Value
λ value	> 1.15

Time Needed for Diagnosis: 10000 ms
Malfunction Indicator Light Illumination: Illuminates when malfunction occurs in 2 continuous driving cycles.

- **Normality Judgment**

Judge as OK and clear the NG if the continuous time while the following conditions are established is more than the predetermined time.

Judgment Value

Malfunction Criteria	Threshold Value
λ value	≤ 1.15

Time Needed for Diagnosis: Less than 1 second

DB:DTC P1160 RETURN SPRING FAILURE

1. OUTLINE OF DIAGNOSIS

Judge as NG when the valve is opened more than the default opening angle, but does not move to the close direction with the motor power stopped.

2. COMPONENT DESCRIPTION

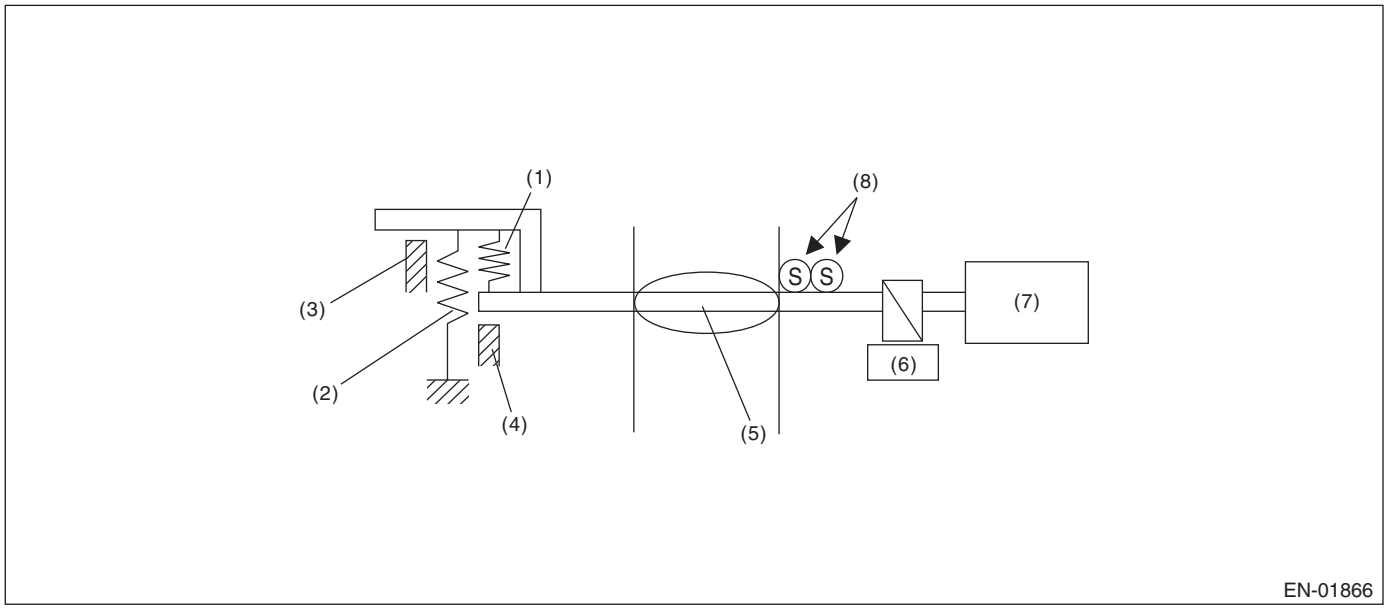

(1) Opener spring
(2) Return spring
(3) Intermediate stopper
(4) Full closed stopper
(5) Throttle valve
(6) Gear
(7) DC motor
(8) Main and sub throttle sensor

3. ENABLE CONDITION

Secondary Parameters	Enable Conditions
Motor continuity	OFF

4. GENERAL DRIVING CYCLE

- Ignition switch ON → OFF
- Ignition switch OFF → ON (Only after clearing memory)

5. DIAGNOSTIC METHOD

Judge as OK and clear the NG when the malfunction criteria below are met.

Judgment Value

Malfunction Criteria	Threshold Value
Opening variation after continuity is set to OFF	≥ 2°

Time Needed for Diagnosis: 1880 ms
Malfunction Indicator Light Illumination: Illuminates as soon as a malfunction occurs.

DC:DTC P1443 VENT CONTROL SOLENOID VALVE FUNCTION PROBLEM

1. OUTLINE OF DIAGNOSIS

Detect the abnormal function (stuck closed) of the drain valve.
Judge as NG when fuel tank pressure is low.

2. COMPONENT DESCRIPTION

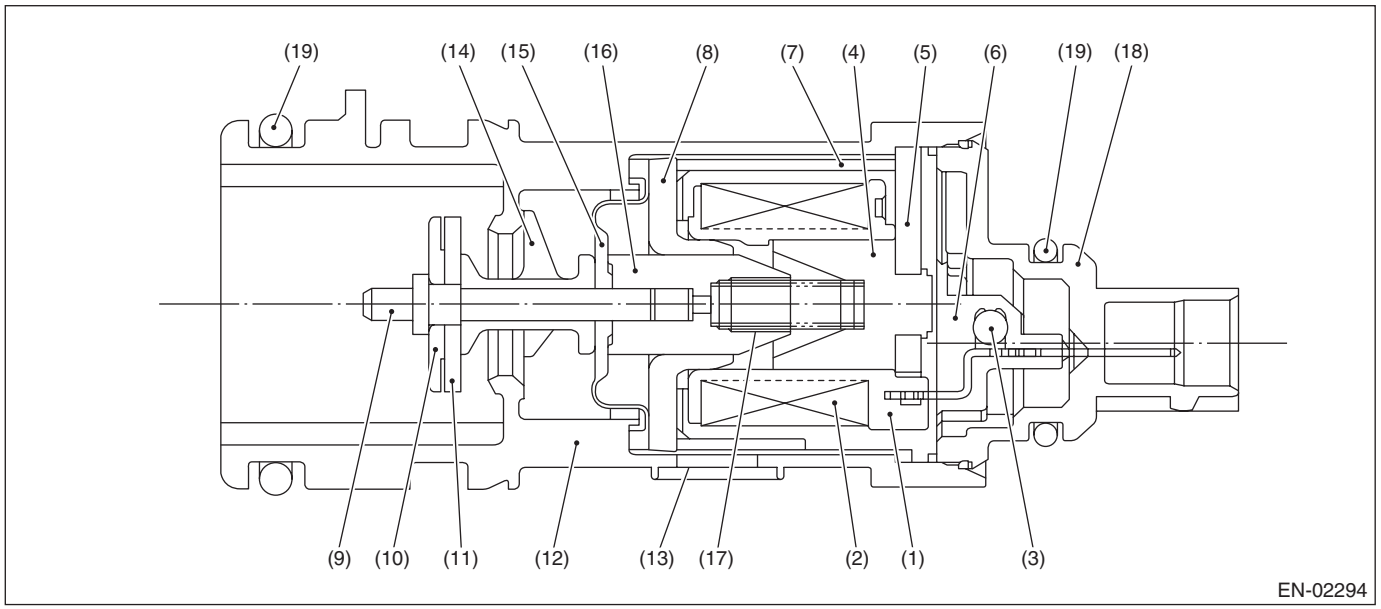

(1) Bobbin
(2) Coil
(3) Diode
(4) Stator core
(5) End plate
(6) Body
(7) Yoke
(8) Magnetic plate
(9) Shaft
(10) Plate
(11) Valve
(12) Housing
(13) Filter
(14) Retainer
(15) Diaphragm
(16) Movable core
(17) Spring
(18) Cover
(19) O-ring

3. ENABLE CONDITION

Secondary Parameters	Enable Conditions
Drain valve	Open
Battery voltage	≥ 10.9 V
Atmospheric pressure	≥ 75 kPa (563 mmHg, 22.2 inHg)
Tank pressure when starter is OFF → ON	–0.7 kPa (–5 mmHg, –0.2 inHg) and 0.4 kPa (2.9 mmHg, 0.1 inHg)

4. GENERAL DRIVING CYCLE

Always perform the diagnosis continuously.

5. DIAGNOSTIC METHOD

- **Abnormality Judgment**

If the duration of time while the following conditions are met is longer than the time indicated, judge as NG.

Judgment Value

Malfunction Criteria	Threshold Value
Fuel tank pressure	≤ –4 kPa (–30 mmHg, –1.2 inHg)

Time Needed for Diagnosis: 3000 s
Malfunction Indicator Light Illumination: Illuminates as soon as a malfunction occurs.

- **Normality Judgment**

Judge as OK and clear the NG if the continuous time while the following conditions are established is more than the predetermined time.

Judgment Value

Malfunction Criteria	Threshold Value
Fuel tank pressure	> –4 kPa (–30 mmHg, –1.2 inHg)
Cumulative time when all the malfunction criteria below are met.	≥ 30000 s
Purge control solenoid valve duty	Not = 0
Fuel temperature	–10 °C (14 °F) — 70 °C (158 °F)
Intake manifold relative pressure	≥ – 26.7 kPa (– 200 mmHg, – 7.9 inHg)

Time Needed for Diagnosis: Less than 1 second

DD:DTC P1492 EGR SOLENOID VALVE SIGNAL #1 CIRCUIT MALFUNCTION (LOW INPUT)

1. OUTLINE OF DIAGNOSIS

- Detects open or short circuit of EGR.
- Judge as NG when the ECM output level differs from the actual terminal level.

2. COMPONENT DESCRIPTION

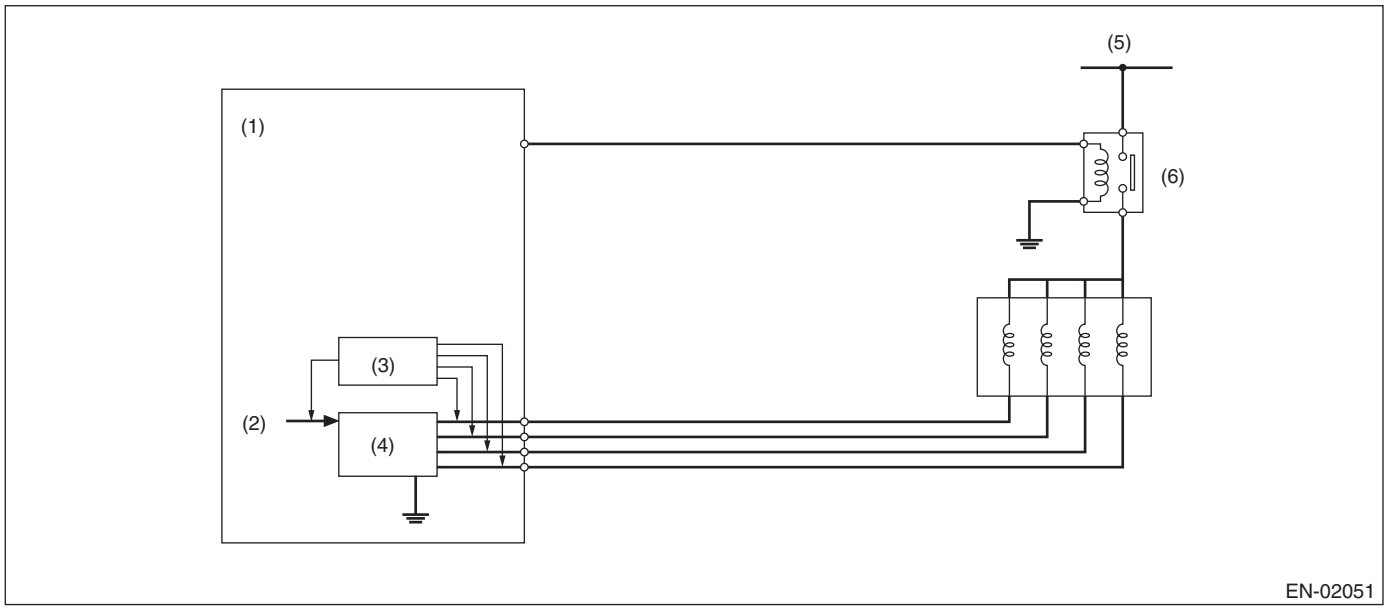

(1) Engine control module (ECM)
(2) Computer unit (CPU)
(3) Detecting circuit
(4) Switch circuit
(5) Battery voltage
(6) Main relay

3. ENABLE CONDITION

Secondary Parameters	Enable Conditions
Elapsed time after starting the engine	≥ 1 second
EGR valve target position	> 0 step
Battery voltage	≥ 10.9 V

4. GENERAL DRIVING CYCLE

Perform diagnosis continuously during EGR operation.

5. DIAGNOSTIC METHOD

- **Abnormality Judgment**

If the duration of time while the following conditions are met is longer than the time indicated, judge as NG.

Judgment Value

Malfunction Criteria	Threshold Value
Terminal voltage level when ECM outputs OFF signal or Terminal voltage level when EGR operates	Low level Low level

Time Needed for Diagnosis: 2500 ms
Malfunction Indicator Light: Illuminates as soon as a malfunction occurs.

- **Normality Judgment**

Judge as OK and clear the NG if the continuous time while the following conditions are established is more than the predetermined time.

Judgment Value

Malfunction Criteria	Threshold Value
Terminal voltage level when ECM outputs OFF signal	High level
Terminal voltage level when EGR operates	High level

Time Needed for Diagnosis: 256 ms

DE:DTC P1493 EGR SOLENOID VALVE SIGNAL #1 CIRCUIT MALFUNCTION (HIGH INPUT)

1. OUTLINE OF DIAGNOSIS

- Detects open or short circuit of EGR.
- Judge as NG when the ECM output level differs from the actual terminal level.

2. COMPONENT DESCRIPTION

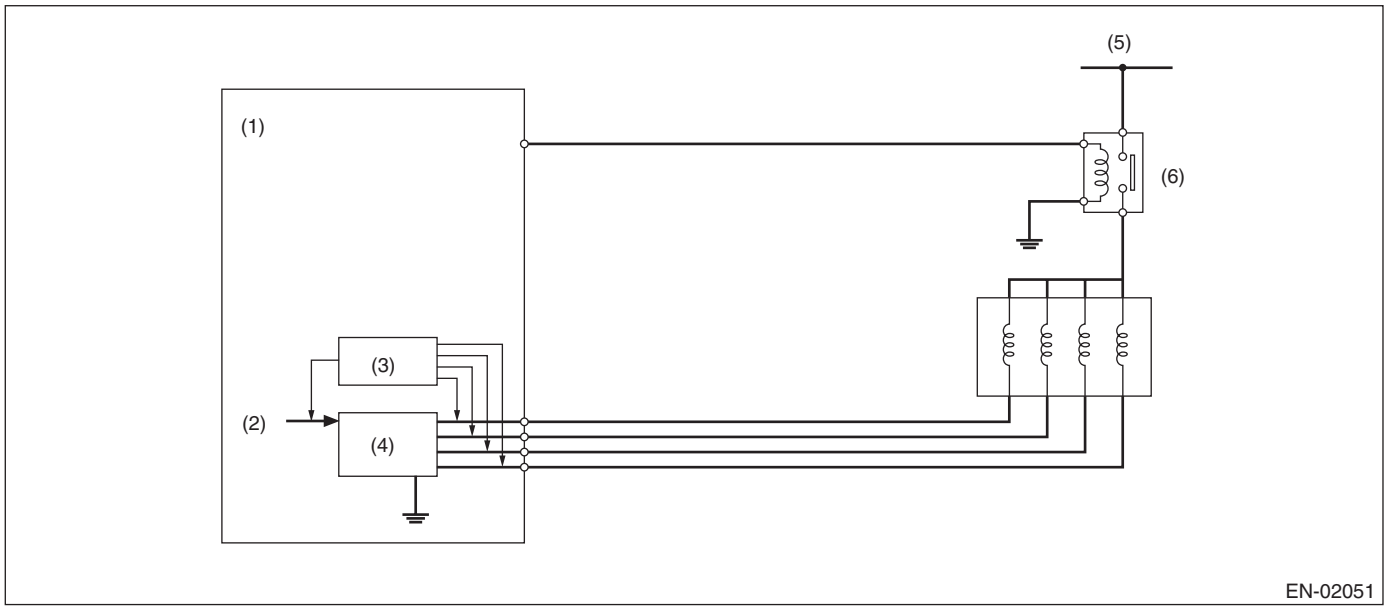

(1) Engine control module (ECM)
(2) Computer unit (CPU)
(3) Detecting circuit
(4) Switch circuit
(5) Battery voltage
(6) Main relay

3. ENABLE CONDITION

Secondary Parameters	Enable Conditions
Elapsed time after starting the engine	≥ 1 second
EGR valve target position	> 0 step
Battery voltage	≥ 10.9 V

4. GENERAL DRIVING CYCLE

Always perform the diagnosis continuously.

5. DIAGNOSTIC METHOD

• Abnormality Judgment

If the duration of time while the following conditions are met is longer than the time indicated, judge as NG.

Judgment Value

Malfunction Criteria	Threshold Value
Terminal voltage level when ECM outputs ON signal	High level
or	
Terminal voltage level when EGR operates	High level

Time Needed for Diagnosis: 2500 ms
Malfunction Indicator Light Illumination: Illuminates as soon as a malfunction occurs.

• Normality Judgment

Judge as OK and clear the NG if the continuous time while the following conditions are established is more than the predetermined time.

Judgment Value

Malfunction Criteria	Threshold Value
Terminal voltage level when ECM outputs ON signal	Low level
Terminal voltage level when EGR operates	Low level

Time Needed for Diagnosis: 256 ms

DF:DTC P1494 EGR SOLENOID VALVE SIGNAL #2 CIRCUIT MALFUNCTION (LOW INPUT)

1. OUTLINE OF DIAGNOSIS

NOTE:
For the detection standard, refer to DTC P1492. <Ref. to GD(H4SO)-209, DTC P1492 EGR SOLENOID VALVE SIGNAL #1 CIRCUIT MALFUNCTION (LOW INPUT), Diagnostic Trouble Code (DTC) Detecting Criteria.>

DG:DTC P1495 EGR SOLENOID VALVE SIGNAL #2 CIRCUIT MALFUNCTION (HIGH INPUT)

1. OUTLINE OF DIAGNOSIS

NOTE:
For the detection standard, refer to DTC P1493. <Ref. to GD(H4SO)-211, DTC P1493 EGR SOLENOID VALVE SIGNAL #1 CIRCUIT MALFUNCTION (HIGH INPUT), Diagnostic Trouble Code (DTC) Detecting Criteria.>

DH:DTC P1496 EGR SOLENOID VALVE SIGNAL #3 CIRCUIT MALFUNCTION (LOW INPUT)

1. OUTLINE OF DIAGNOSIS

NOTE:
For the detection standard, refer to DTC P1492. <Ref. to GD(H4SO)-209, DTC P1492 EGR SOLENOID VALVE SIGNAL #1 CIRCUIT MALFUNCTION (LOW INPUT), Diagnostic Trouble Code (DTC) Detecting Criteria.>

DI: DTC P1497 EGR SOLENOID VALVE SIGNAL #3 CIRCUIT MALFUNCTION (HIGH INPUT)

1. OUTLINE OF DIAGNOSIS

NOTE:
For the detection standard, refer to DTC P1493. <Ref. to GD(H4SO)-211, DTC P1493 EGR SOLENOID VALVE SIGNAL #1 CIRCUIT MALFUNCTION (HIGH INPUT), Diagnostic Trouble Code (DTC) Detecting Criteria.>

DJ:DTC P1498 EGR SOLENOID VALVE SIGNAL #4 CIRCUIT MALFUNCTION (LOW INPUT)

1. OUTLINE OF DIAGNOSIS

NOTE:
For the detection standard, refer to DTC P1492. <Ref. to GD(H4SO)-209, DTC P1492 EGR SOLENOID VALVE SIGNAL #1 CIRCUIT MALFUNCTION (LOW INPUT), Diagnostic Trouble Code (DTC) Detecting Criteria.>

DK:DTC P1499 EGR SOLENOID VALVE SIGNAL #4 CIRCUIT MALFUNCTION (HIGH INPUT)

1. OUTLINE OF DIAGNOSIS

NOTE:
For the detection standard, refer to DTC P1493. <Ref. to GD(H4SO)-211, DTC P1493 EGR SOLENOID VALVE SIGNAL #1 CIRCUIT MALFUNCTION (HIGH INPUT), Diagnostic Trouble Code (DTC) Detecting Criteria.>

DL:DTC P1518 STARTER SWITCH CIRCUIT LOW INPUT

1. OUTLINE OF DIAGNOSIS

Detect the open or short circuit of starter SW.
Judge as OFF NG when it becomes after engine start despite no starter ON experience.

2. ENABLE CONDITIONS

Secondary Parameters	Enable Conditions
None	

3. GENERAL DRIVING CYCLE

Always perform the diagnosis continuously.

4. DIAGNOSTIC METHOD

- **Abnormality Judgment**

Judge as OFF NG when the following conditions are established.

Judgment Value

Malfunction Criteria	Threshold Value
Vehicle speed	< 1 km/h (0.6 MPH)
Starter ON signal	Not detected
Engine condition	Change from pre-start to post-start
Battery voltage	≥ 8 V

Time Needed for Diagnosis: Less than 1 second
Malfunction Indicator Light Illumination: Illuminates when malfunction occurs in 2 continuous driving cycles.

- **Normality Judgment**

Judge as OFF OK and clear the NG if the following conditions are established.

Judgment Value

Malfunction Criteria	Threshold Value
Starter ON	Experienced
Starter ON diagnosis	No diagnosis experience
Battery voltage	≥ 8 V

Time Needed for Diagnosis: Less than 1 second

DM:DTC P1560 BACK-UP VOLTAGE CIRCUIT MALFUNCTION

1. OUTLINE OF DIAGNOSIS

Detect the open/short circuit of back-up power supply circuit.
Judge as NG when the backup power voltage is low.

2. ENABLE CONDITION

Secondary Parameters	Enable Conditions
None	

3. GENERAL DRIVING CYCLE

Always perform the diagnosis continuously.

4. DIAGNOSTIC METHOD

- **Abnormality Judgment**

If the duration of time while the following conditions are met is longer than the time indicated, judge as NG.

Judgment Value

Malfunction Criteria	Threshold Value
Voltage of back-up power supply	Low
Battery voltage	≥ 10.9 V
Engine condition	After engine starting

Time Needed for Diagnosis: 2500 ms
Malfunction Indicator Light Illumination: Illuminates as soon as a malfunction occurs.

- **Normality Judgment**

Judge as OK and clear the NG if the continuous time while the following conditions are established is more than the predetermined time.

Judgment Value

Malfunction Criteria	Threshold Value
Voltage of back-up power supply	High
Battery voltage	≥ 10.9 V
Engine condition	After engine starting

Time Needed for Diagnosis: Less than 1 second

DN:DTC P1570 ANTENNA

1. OUTLINE OF DIAGNOSIS

NOTE:
For the detection standard, refer to DTC P0513. <Ref. to GD(H4SO)-190, DTC P0513 INCORRECT IMMOBILIZER KEY, Diagnostic Trouble Code (DTC) Detecting Criteria.>

DO:DTC P1571 REFERENCE CODE INCOMPATIBILITY

1. OUTLINE OF DIAGNOSIS

NOTE:
For the detection standard, refer to DTC P0513. <Ref. to GD(H4SO)-190, DTC P0513 INCORRECT IMMOBILIZER KEY, Diagnostic Trouble Code (DTC) Detecting Criteria.>

DP:DTC P1572 IMM CIRCUIT FAILURE (EXCEPT ANTENNA CIRCUIT)

1. OUTLINE OF DIAGNOSIS

NOTE:
For the detection standard, refer to DTC P0513. <Ref. to GD(H4SO)-190, DTC P0513 INCORRECT IMMOBILIZER KEY, Diagnostic Trouble Code (DTC) Detecting Criteria.>

DQ:DTC P1574 KEY COMMUNICATION FAILURE

1. OUTLINE OF DIAGNOSIS

NOTE:
For the detection standard, refer to DTC P0513. <Ref. to GD(H4SO)-190, DTC P0513 INCORRECT IMMOBILIZER KEY, Diagnostic Trouble Code (DTC) Detecting Criteria.>

DR:DTC P1576 EGI CONTROL MODULE EEPROM

1. OUTLINE OF DIAGNOSIS

NOTE:
For the detection standard, refer to DTC P0513. <Ref. to GD(H4SO)-190, DTC P0513 INCORRECT IMMOBILIZER KEY, Diagnostic Trouble Code (DTC) Detecting Criteria.>

DS:DTC P1577 IMM CONTROL MODULE EEPROM

1. OUTLINE OF DIAGNOSIS

NOTE:
For the detection standard, refer to DTC P0513. <Ref. to GD(H4SO)-190, DTC P0513 INCORRECT IMMOBILIZER KEY, Diagnostic Trouble Code (DTC) Detecting Criteria.>

DT:DTC P1578 METER FAILURE

1. OUTLINE OF DIAGNOSIS

NOTE:
For the detection standard, refer to DTC P0513. <Ref. to GD(H4SO)-190, DTC P0513 INCORRECT IMMOBILIZER KEY, Diagnostic Trouble Code (DTC) Detecting Criteria.>

DU:DTC P2096 POST CATALYST FUEL TRIM SYSTEM TOO LEAN (BANK 1)

1. OUTLINE OF DIAGNOSIS

Detect the malfunction of fuel system from the size of the sub feedback learning value.
Control the sub feedback learning and judge as NG when the learning value is in the lean zone.

2. COMPONENT DESCRIPTION

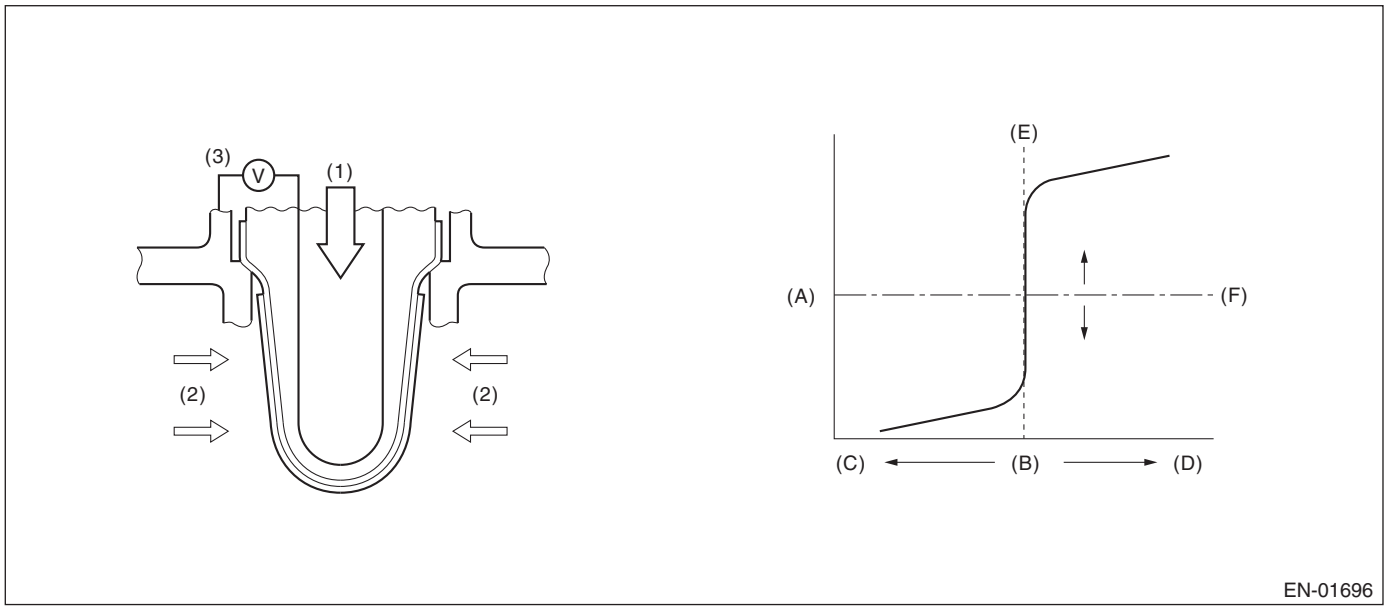

(A)	Electromotive force	(B)	Air fuel ratio	(C)	Rich
(D)	Lean	(E)	Theoretical air fuel ratio	(F)	Comparative voltage
(1)	Atmosphere	(2)	Exhaust gas	(3)	Electromotive force

3. ENABLE CONDITION

Secondary Parameters	Enable Conditions
Conditions for carrying out the sub feedback learning	Completed
Continuous time when all conditions are established.	≥ 1 s

4. GENERAL DRIVING CYCLE

Perform the diagnosis continuously when the vehicle is idling or running at a constant speed of 80 km/h (50 MPH) or more.

5. DIAGNOSTIC METHOD

• Abnormality Judgment

If the duration of time while the following conditions are met is longer than the time indicated, judge as NG.

Judgment Value

Malfunction Criteria	Threshold Value
Sub feedback learning value	< –0.032

Time Needed for Diagnosis: 1 s × 1 time(s)
Malfunction Indicator Light Illumination: Illuminates when malfunction occurs in 2 continuous driving cycles.

• Normality Judgment

Judge as OK and clear the NG if the continuous time while the following conditions are established is more than the predetermined time.

Judgment Value

Malfunction Criteria	Threshold Value
Sub feedback learning value	≥ –0.032 + 0

Time Needed for Diagnosis: 1 s

DV:DTC P2097 POST CATALYST FUEL TRIM SYSTEM TOO RICH (BANK 1)

1. OUTLINE OF DIAGNOSIS

Detect the malfunction of fuel system from the size of the sub feedback learning value.
Sub feedback learning is being performed. When the learning value goes to the rich side, judge as NG.

2. COMPONENT DESCRIPTION

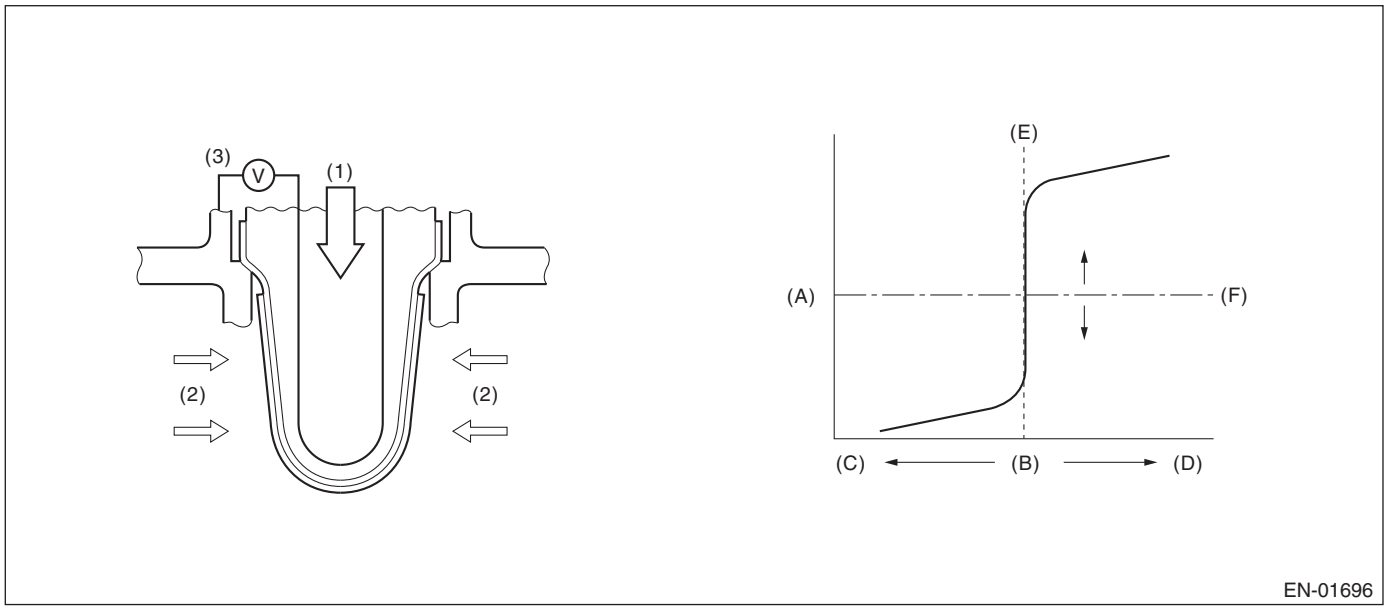

(A)	Electromotive force	(B)	Air fuel ratio	(C)	Rich
(D)	Lean	(E)	Theoretical air fuel ratio	(F)	Comparative voltage
(1)	Atmosphere	(2)	Exhaust gas	(3)	Electromotive force

3. ENABLE CONDITION

Secondary Parameters	Enable Conditions
Conditions for carrying out the sub feedback learning	Completed
Continuous time when all conditions are established.	≥ 1 s

4. GENERAL DRIVING CYCLE

Perform the diagnosis continuously when the vehicle is idling or running at a constant speed of 80 km/h (50 MPH) or more.

5. DIAGNOSTIC METHOD

• Abnormality Judgment

If the duration of time while the following conditions are met is longer than the time indicated, judge as NG.

Judgment Value

Malfunction Criteria	Threshold Value
Sub feedback learning value	≥ 0.032 (PZEV model) ≥ 0.02 (except for PZEV model)

Time Needed for Diagnosis: 1 s × 1 time(s)
Malfunction Indicator Light Illumination: Illuminates when malfunction occurs in 2 continuous driving cycles.

• Normality Judgment

Judge as OK and clear the NG if the continuous time while the following conditions are established is more than the predetermined time.

Judgment Value

Malfunction Criteria	Threshold Value
Sub feedback learning value	< 0.032 + 0 (PZEV model) < 0.02 + 0 (except for PZEV model)

Time Needed for Diagnosis: 1 s

DW:DTC P2101 THROTTLE ACTUATOR CONTROL MOTOR CIRCUIT RANGE/ PERFORMANCE

1. OUTLINE OF DIAGNOSIS

Judge as NG when the motor current becomes large or drive circuit is heated.

2. COMPONENT DESCRIPTION

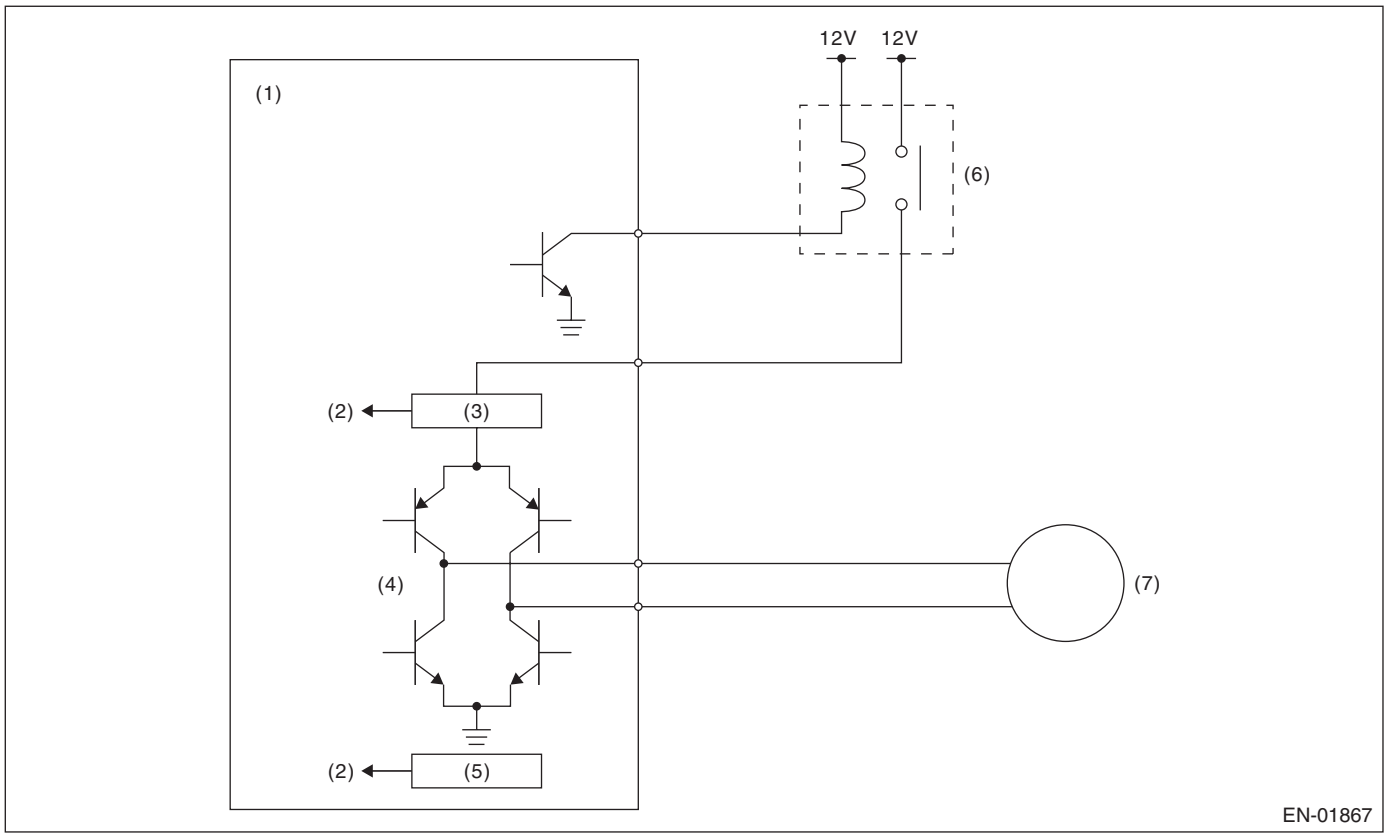

(1) Engine control module (ECM)
(2) Detecting circuit
(3) Overcurrent detection circuit
(4) Drive circuit
(5) Temperature detection circuit
(6) Electronic throttle control relay
(7) Motor

3. ENABLE CONDITION

Secondary Parameters	Enable Conditions
Under control of electronic throttle control	ON

4. GENERAL DRIVING CYCLE

Always perform the diagnosis continuously.

5. DIAGNOSTIC METHOD

Judge as OK and clear the NG when the malfunction criteria below are met.

Judgment Value

Malfunction Criteria	Threshold Value
Motor current	≤ 8 A
Drive circuit inner temperature	≤ 175°C (347°F)

Time Needed for Diagnosis:

- 500 ms (NG judgment)
- 2000 ms (OK judgment)

Malfunction Indicator Light Illumination: Illuminates as soon as a malfunction occurs.

DX:DTC P2102 THROTTLE ACTUATOR CONTROL MOTOR CIRCUIT LOW

1. OUTLINE OF DIAGNOSIS

Judge as NG when the electronic throttle control power is not supplied even when ECM sets the electronic throttle control relay to ON.

2. COMPONENT DESCRIPTION

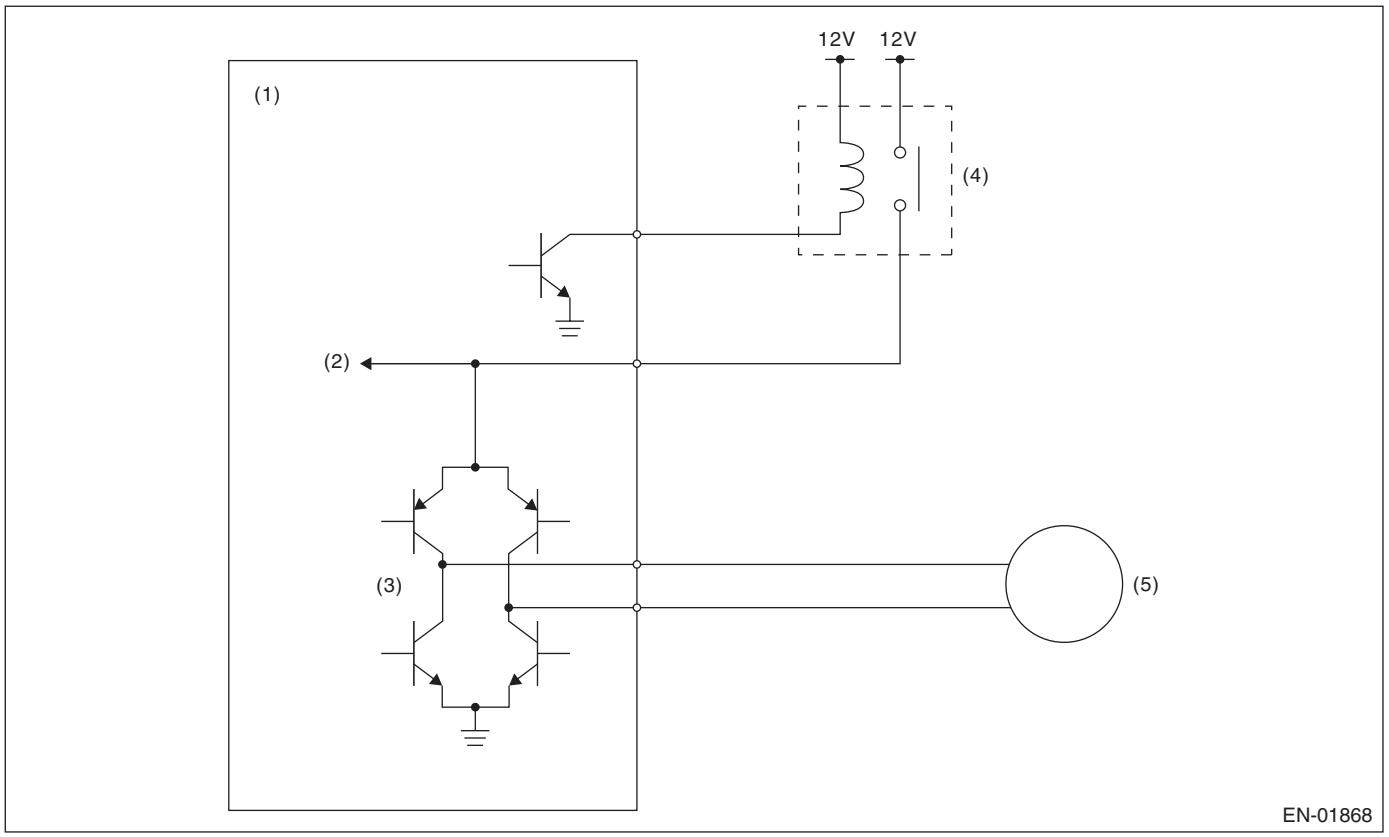

(1) Engine control module (ECM)
(2) Voltage detection circuit
(3) Drive circuit
(4) Electronic throttle control relay
(5) Motor

3. ENABLE CONDITION

Secondary Parameters	Enable Conditions
Electronic throttle control relay output	ON

4. GENERAL DRIVING CYCLE

Always perform the diagnosis continuously.

5. DIAGNOSTIC METHOD

Judge as OK and clear the NG when the malfunction criteria below are met.

Judgment Value

Malfunction Criteria	Threshold Value
Motor power voltage	≥ 5 V

Time Needed for Diagnosis:

- 400 ms (NG judgment)
- 2000 ms (OK judgment)

Malfunction Indicator Light Illumination: Illuminates as soon as a malfunction occurs.

DY:DTC P2103 THROTTLE ACTUATOR CONTROL MOTOR CIRCUIT HIGH

1. OUTLINE OF DIAGNOSIS

Judge as NG when the electronic throttle control power is supplied even when ECM sets the electronic throttle control relay to OFF.

2. COMPONENT DESCRIPTION

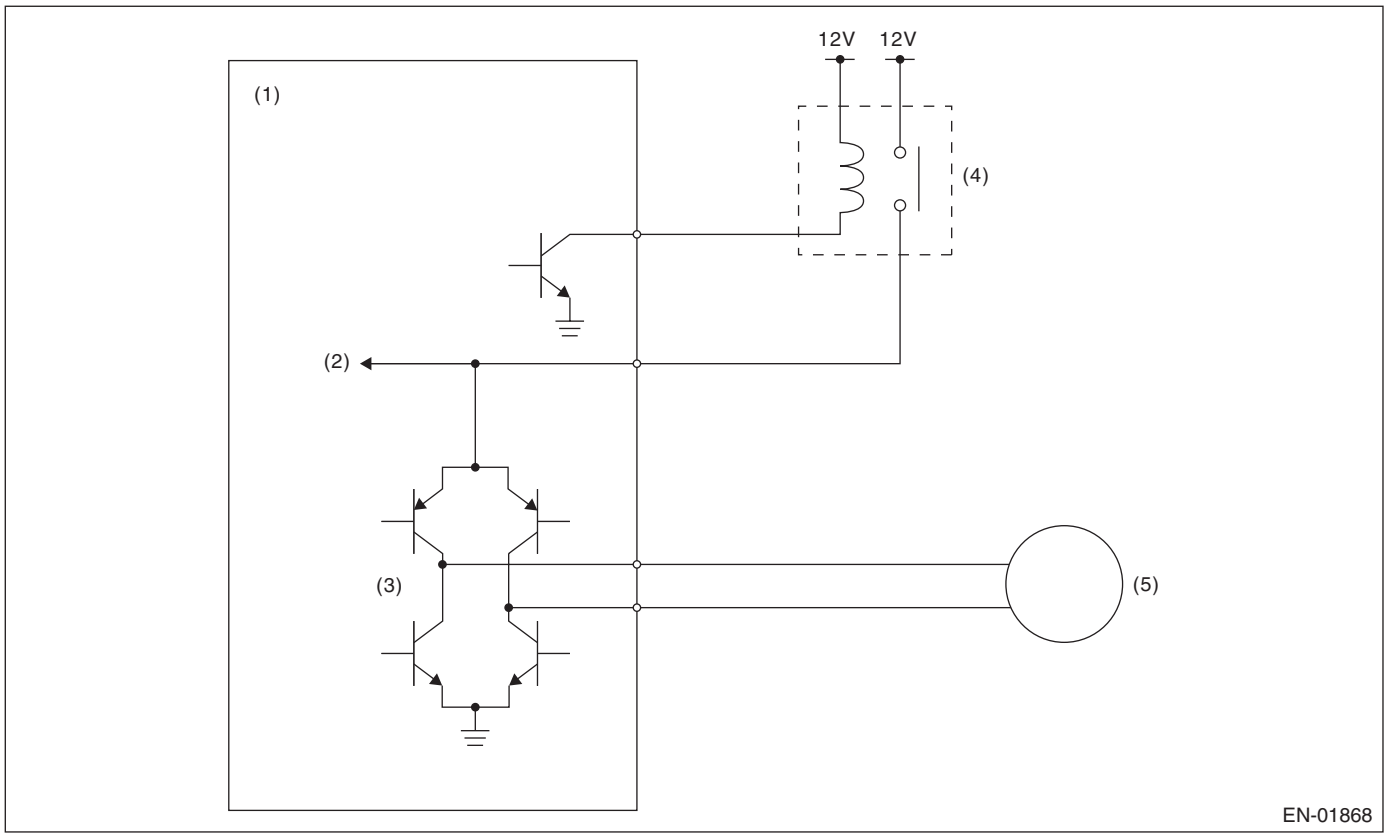

(1) Engine control module (ECM)
(2) Voltage detection circuit
(3) Drive circuit
(4) Electronic throttle control relay
(5) Motor

3. ENABLE CONDITION

Secondary Parameters	Enable Conditions
Electronic throttle control relay output	OFF

4. GENERAL DRIVING CYCLE

- When ignition switch ON → OFF
- Ignition switch OFF → ON (Only after clearing memory)

5. DIAGNOSTIC METHOD

Judge as OK and clear the NG when the malfunction criteria below are met.

Judgment Value

Malfunction Criteria	Threshold Value
Motor power voltage	≤ 5 V

Time Needed for Diagnosis:

- 600 ms (NG judgment)
- 400 ms (OK judgment)

Malfunction Indicator Light Illumination: Illuminates as soon as a malfunction occurs.

DZ:DTC P2109 THROTTLE/PEDAL POSITION SENSOR “A” MINIMUM STOP PERFORMANCE

1. OUTLINE OF DIAGNOSIS

Judge as NG when full close point learning cannot conducted or abnormal value is detected.

2. COMPONENT DESCRIPTION

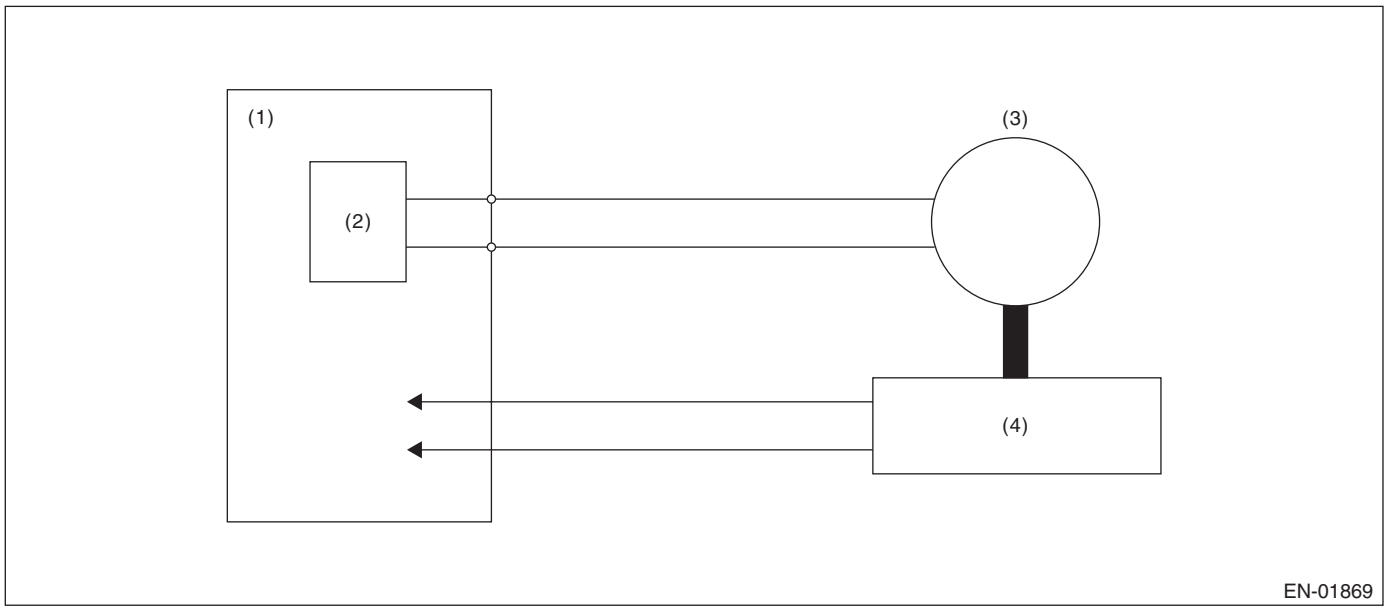

(1) Engine control module (ECM)
(2) Drive circuit
(3) Motor
(4) Throttle position sensor

3. ENABLE CONDITION

Secondary Parameters	Enable Conditions
Ignition switch	ON → OFF
Ignition switch (only after clear memory)	OFF → ON

4. GENERAL DRIVING CYCLE

Perform the diagnosis at full closed point learning.

5. DIAGNOSTIC METHOD

Judge as OK and clear the NG when the malfunction criteria below are met.

Judgment Value

Malfunction Criteria	Threshold Value
Throttle sensor opening angle at full close point learning	10.127° or more, 19.872° or less
Throttle opening angle when the ignition switch is ON – Throttle minimum stop position	≥ 1.683°

Time Needed for Diagnosis: 8 — 80 ms
Malfunction Indicator Light Illumination: Illuminates as soon as a malfunction occurs.

EA:DTC P2122 THROTTLE/PEDAL POSITION SENSOR/SWITCH “D” CIRCUIT LOW INPUT

1. OUTLINE OF DIAGNOSIS

Detect the open or short circuit of accelerator pedal position sensor 1.
Judge as NG if out of specification.

2. COMPONENT DESCRIPTION

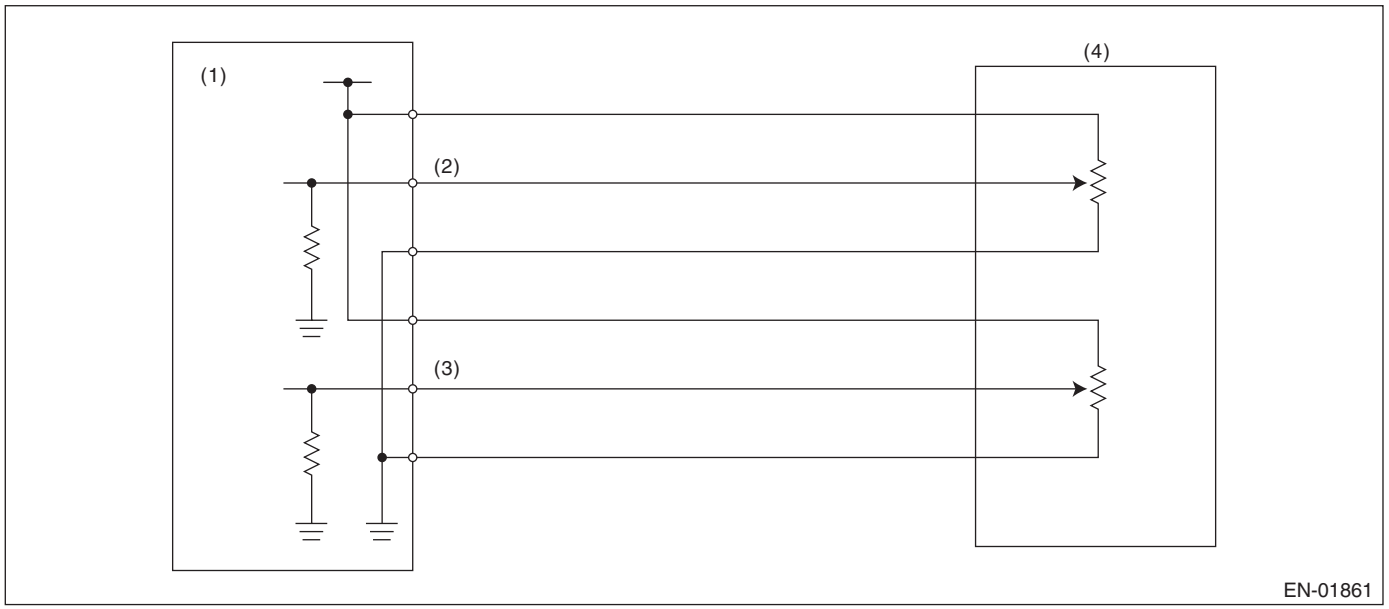

(1) Engine control module (ECM)
(2) Accelerator pedal position sensor 1 signal
(3) Accelerator pedal position sensor 2 signal
(4) Accelerator pedal position sensor

3. ENABLE CONDITION

Secondary Parameters	Enable Conditions
Ignition switch	ON
Battery voltage	≥ 6 V

4. GENERAL DRIVING CYCLE

Always perform the diagnosis continuously.

5. DIAGNOSTIC METHOD

• Abnormality Judgment

If the duration of time while the following conditions are met is longer than the time indicated, judge as NG.

Judgment Value

Malfunction Criteria	Threshold Value
Sensor 1 input voltage	< 0.295 V

Time Needed for Diagnosis: 100 ms
Malfunction Indicator Light Illumination: Illuminates as soon as a malfunction occurs.

• Normality Judgment

Judge as OK and clear the NG if the continuous time while the following conditions are established is more than the predetermined time.

Judgment Value

Malfunction Criteria	Threshold Value
Sensor 1 input voltage	≥ 0.295 V

Time Needed for Diagnosis: 100 ms

EB:DTC P2123 THROTTLE/PEDAL POSITION SENSOR/SWITCH “D” CIRCUIT HIGH INPUT

1. OUTLINE OF DIAGNOSIS

Detect the open or short circuit of accelerator pedal position sensor 1.
Judge as NG if out of specification.

2. COMPONENT DESCRIPTION

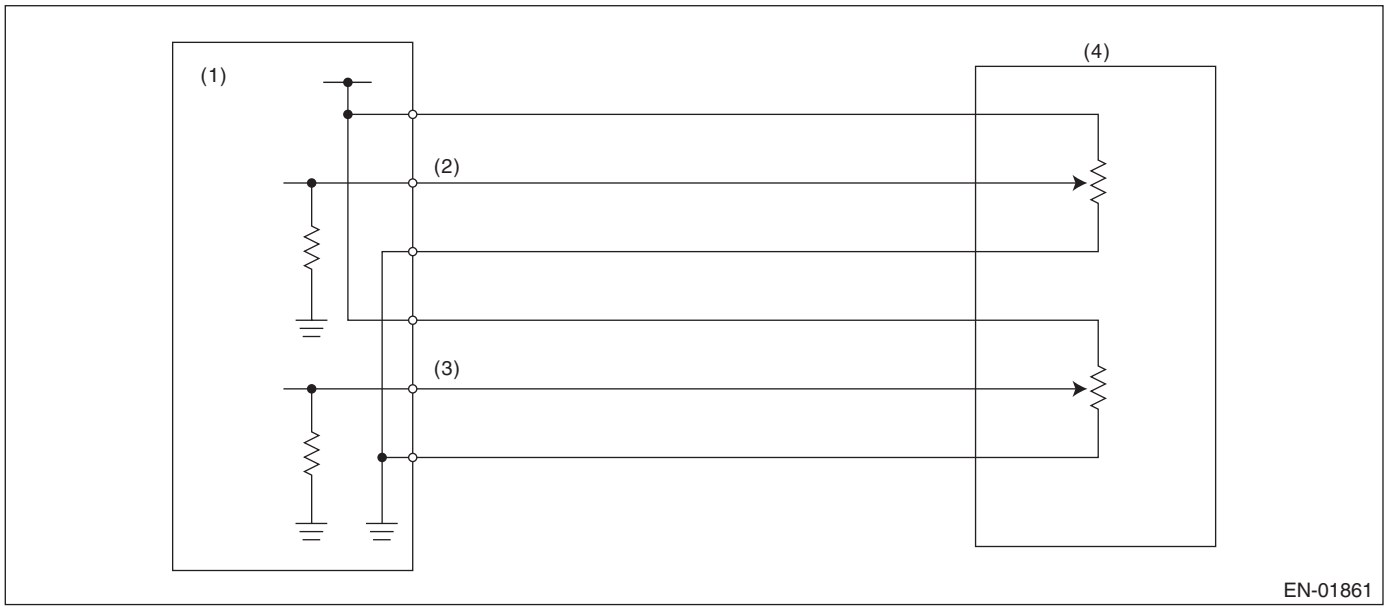

(1) Engine control module (ECM)
(2) Accelerator pedal position sensor 1 signal
(3) Accelerator pedal position sensor 2 signal
(4) Accelerator pedal position sensor

3. ENABLE CONDITION

Secondary Parameters	Enable Conditions
Ignition switch	ON
Battery voltage	≥ 6 V

4. GENERAL DRIVING CYCLE

Always perform the diagnosis continuously.

5. DIAGNOSTIC METHOD

• Abnormality Judgment

If the duration of time while the following conditions are met is longer than the time indicated, judge as NG.

Judgment Value

Malfunction Criteria	Threshold Value
Sensor 1 input voltage	≥ 4.783 V

Time Needed for Diagnosis: 32 ms
Malfunction Indicator Light Illumination: Illuminates as soon as a malfunction occurs.

• Normality Judgment

Judge as OK and clear the NG if the continuous time while the following conditions are established is more than the predetermined time.

Judgment Value

Malfunction Criteria	Threshold Value
Sensor 1 input voltage	< 4.783 V

Time Needed for Diagnosis: 32 ms

EC:DTC P2127 THROTTLE/PEDAL POSITION SENSOR/SWITCH “E” CIRCUIT LOW INPUT

1. OUTLINE OF DIAGNOSIS

Detect the open or short circuit of accelerator pedal position sensor 2.
Judge as NG if out of specification.

2. COMPONENT DESCRIPTION

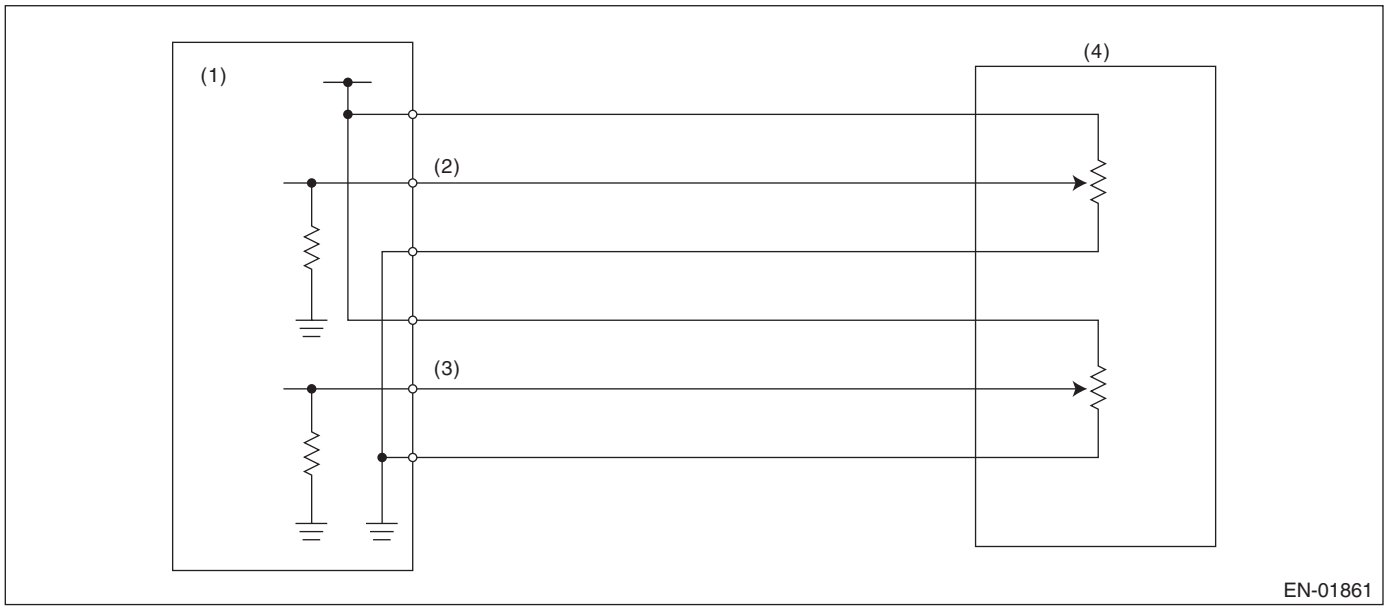

(1) Engine control module (ECM)
(2) Accelerator pedal position sensor 1 signal
(3) Accelerator pedal position sensor 2 signal
(4) Accelerator pedal position sensor

3. ENABLE CONDITION

Secondary Parameters	Enable Conditions
Ignition switch	ON
Battery voltage	≥ 6 V

4. GENERAL DRIVING CYCLE

Always perform the diagnosis continuously.

5. DIAGNOSTIC METHOD

• Abnormality Judgment

If the duration of time while the following conditions are met is longer than the time indicated, judge as NG.

Judgment Value

Malfunction Criteria	Threshold Value
Sensor 2 input voltage	< 0.295 V

Time Needed for Diagnosis: 100 ms
Malfunction Indicator Light Illumination: Illuminates as soon as a malfunction occurs.

• Normality Judgment

Judge as OK and clear the NG if the continuous time while the following conditions are established is more than the predetermined time.

Judgment Value

Malfunction Criteria	Threshold Value
Sensor 2 input voltage	≥ 0.295 V

Time Needed for Diagnosis: 100 ms

ED:DTC P2128 THROTTLE/PEDAL POSITION SENSOR/SWITCH “E” CIRCUIT HIGH INPUT

1. OUTLINE OF DIAGNOSIS

Detect the open or short circuit of accelerator pedal position sensor 2.
Judge as NG if out of specification.

2. COMPONENT DESCRIPTION

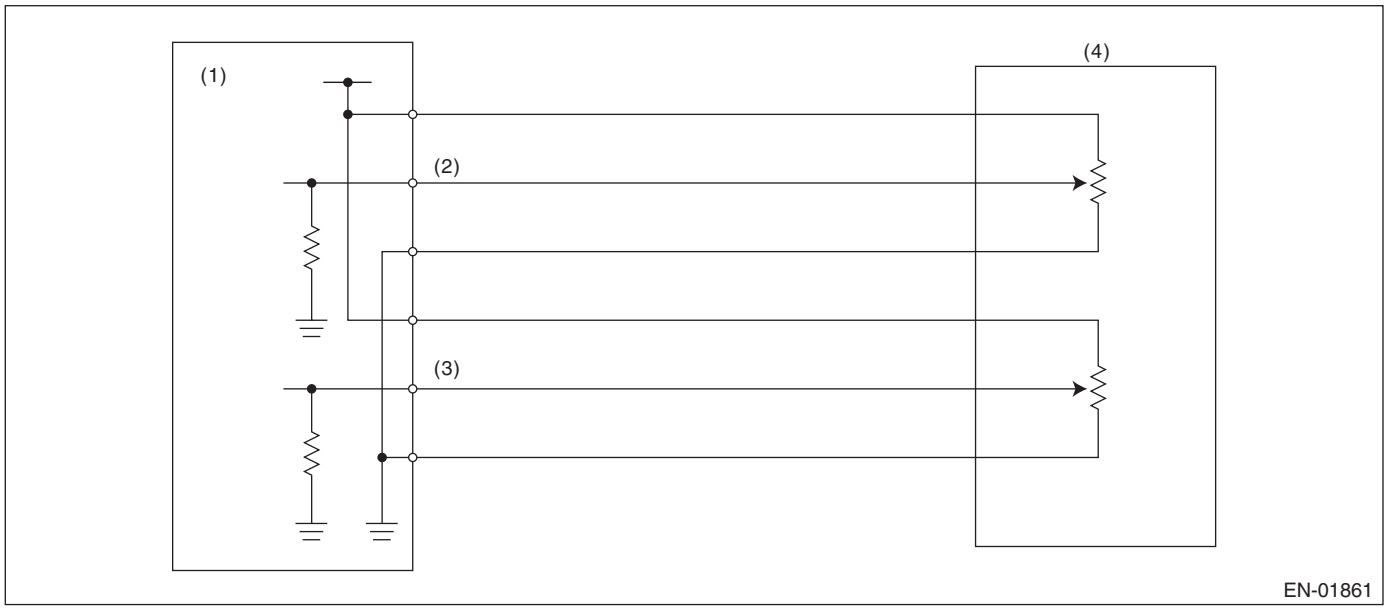

(1) Engine control module (ECM)
(2) Accelerator pedal position sensor 1 signal
(3) Accelerator pedal position sensor 2 signal
(4) Accelerator pedal position sensor

3. ENABLE CONDITION

Secondary Parameters	Enable Conditions
Ignition switch	ON
Battery voltage	≥ 6 V

4. GENERAL DRIVING CYCLE

Always perform the diagnosis continuously.

5. DIAGNOSTIC METHOD

• Abnormality Judgment

If the duration of time while the following conditions are met is longer than the time indicated, judge as NG.

Judgment Value

Malfunction Criteria	Threshold Value
Sensor 2 input voltage	≥ 4.783 V

Time Needed for Diagnosis: 100 ms
Malfunction Indicator Light Illumination: Illuminates as soon as a malfunction occurs.

• Normality Judgment

Judge as OK and clear the NG if the continuous time while the following conditions are established is more than the predetermined time.

Judgment Value

Malfunction Criteria	Threshold Value
Sensor 2 input voltage	< 4.783 V

Time Needed for Diagnosis: 100 ms

EE:DTC P2135 THROTTLE/PEDAL POSITION SENSOR/SWITCH “A”/“B” VOLTAGE CORRELATION

1. OUTLINE OF DIAGNOSIS

Judge as NG when the signal level of throttle position sensor 1 is different from the throttle position sensor 2.

2. COMPONENT DESCRIPTION

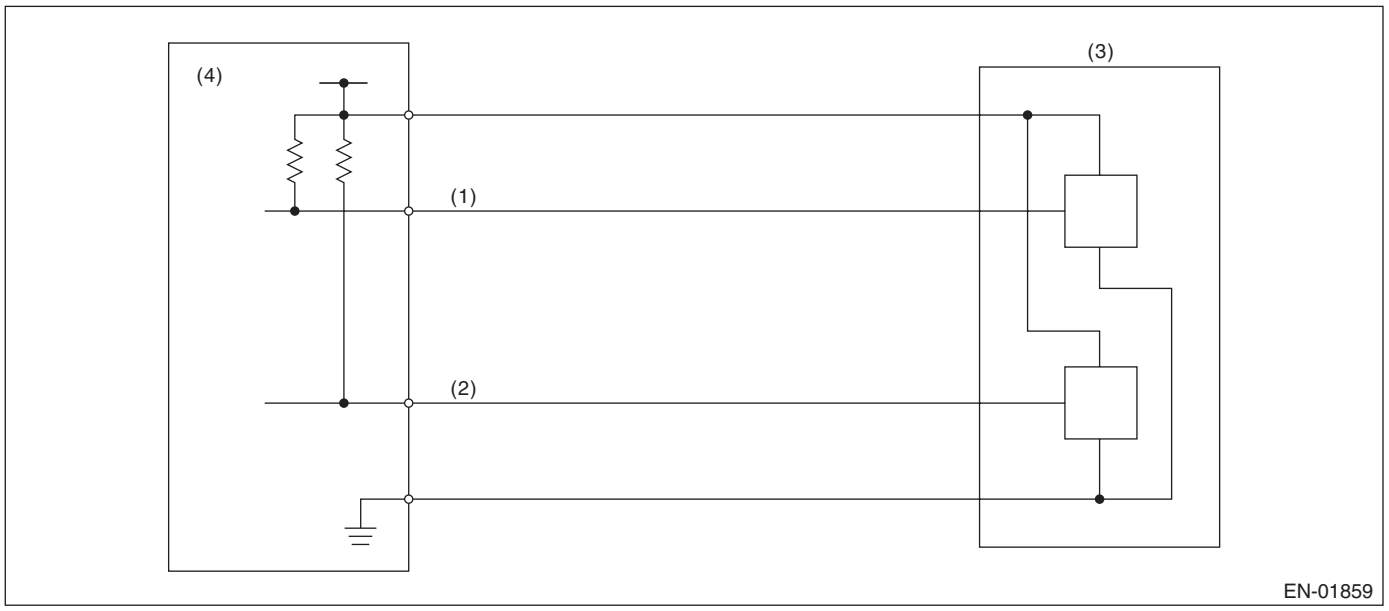

(1) Throttle position sensor 1 signal
(2) Throttle position sensor 2 signal
(3) Throttle position sensor
(4) Engine control module (ECM)

3. ENABLE CONDITION

Secondary Parameters	Enable Conditions
Ignition switch	ON
Battery voltage	≥ 6 V

4. GENERAL DRIVING CYCLE

Always perform the diagnosis continuously.

5. DIAGNOSTIC METHOD

• Abnormality Judgment

If the duration of time while the following conditions are met is longer than the time indicated, judge as NG.

Judgment Value

Malfunction Criteria	Threshold Value
Signal difference between two sensors	Within the NG range of **judgment value detail**

Details of Judgment Value

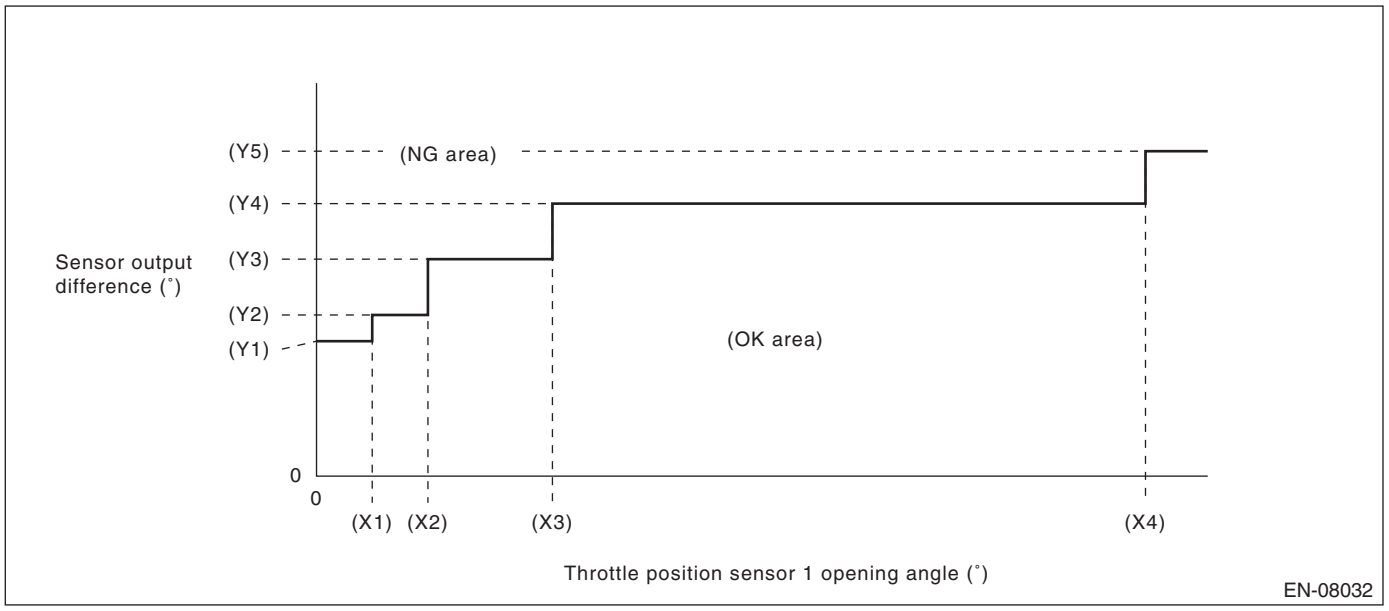

(X1) 2.125 °
(X2) 4.25 °
(X3) 9 °
(X4) 31.625 °

(Y1) 5.15 °
(Y2) 6.15 °
(Y3) 8.28 °
(Y4) 10.4 °
(Y5) 12.4 °

Time Needed for Diagnosis: 212 ms
Malfunction Indicator Light Illumination: Illuminates as soon as a malfunction occurs.

• Normality Judgment

Judge as OK and clear the NG if the continuous time while the following conditions are established is more than the predetermined time.

Judgment Value

Malfunction Criteria	Threshold Value
Signal difference between two sensors	Within the OK range of **judgment value detail**

Time Needed for Diagnosis: 24 ms

EF:DTC P2138 THROTTLE/PEDAL POSITION SENSOR/SWITCH “D”/“E” VOLTAGE CORRELATION

1. OUTLINE OF DIAGNOSIS

Judge as NG when the signal level of throttle position sensor 1 is different from the throttle position sensor 2.

2. COMPONENT DESCRIPTION

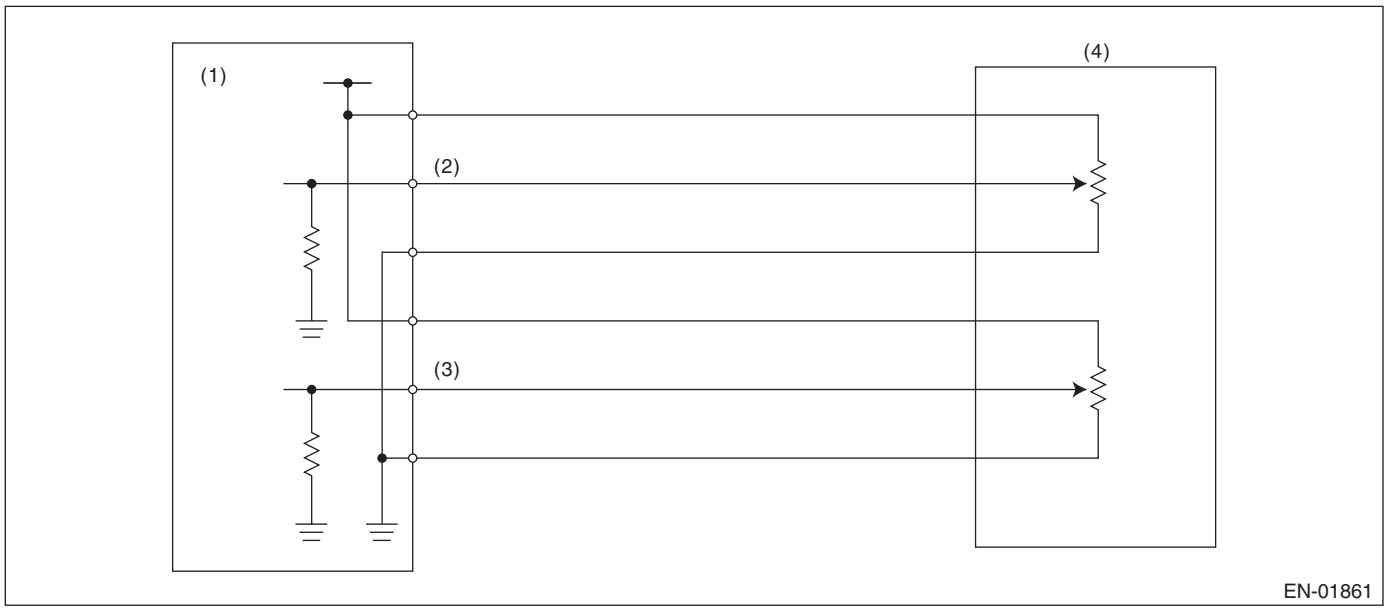

(1) Engine control module (ECM)
(2) Accelerator pedal position sensor 1 signal
(3) Accelerator pedal position sensor 2 signal
(4) Accelerator pedal position sensor

3. ENABLE CONDITION

Secondary Parameters	Enable Conditions
Ignition switch	ON
Battery voltage	≥ 6 V

4. GENERAL DRIVING CYCLE

Always perform the diagnosis continuously.

5. DIAGNOSTIC METHOD

• Abnormality Judgment

If the duration of time while the following conditions are met is longer than the time indicated, judge as NG.

Judgment Value

Malfunction Criteria	Threshold Value
Signal difference between two sensors	Within the NG range of **judgment value detail**

Details of Judgment Value

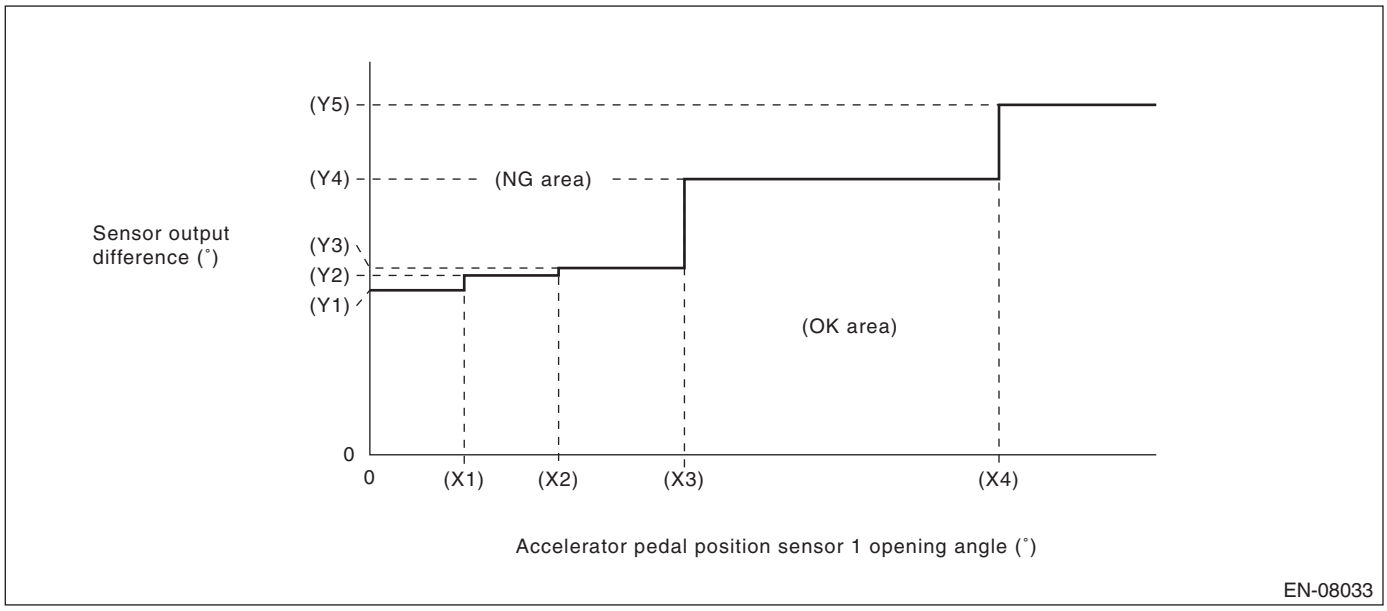

(X1) 0.6 °
(X2) 1.2 °
(X3) 2 °
(X4) 4 °

(Y1) 1.465 °
(Y2) 1.597 °
(Y3) 1.663 °
(Y4) 2.455 °
(Y5) 3.116 °

Time Needed for Diagnosis: 116 ms
Malfunction Indicator Light Illumination: Illuminates as soon as a malfunction occurs.

• Normality Judgment

Judge as OK and clear the NG if the continuous time while the following conditions are established is more than the predetermined time.

Judgment Value

Malfunction Criteria	Threshold Value
Signal difference between two sensors	Within the OK range of **judgment value detail**

Time Needed for Diagnosis: 116 ms

EG:DTC P2227 BAROMETRIC PRESSURE CIRCUIT RANGE/PERFORMANCE

1. OUTLINE OF DIAGNOSIS

Detect the malfunction of barometric pressure sensor output property.
Judge as NG when the barometric pressure sensor output is largely different from the intake manifold pressure at engine start.

2. COMPONENT DESCRIPTION

The barometric pressure sensor is built into the ECM.

3. ENABLE CONDITION

Secondary Parameters	Enable Conditions
Engine speed	< 300 rpm
Vehicle speed	< 1 km/h (0.6 MPH)

4. GENERAL DRIVING CYCLE

Perform the diagnosis once at ignition switch ON.

5. DIAGNOSTIC METHOD

- **Abnormality Judgment**

If the duration of time while the following conditions are met is longer than the time indicated, judge as NG.

Judgment Value

Malfunction Criteria	Threshold Value
|Barometric pressure – Intake manifold pressure|	≥ 26.7 kPa (200 mmHg, 7.9 inHg)
|Intake manifold pressure at engine start – Intake manifold pressure|	< 1.3 kPa (9.99 mmHg, 0.4 inHg)

Time Needed for Diagnosis: 328 ms
Malfunction Indicator Light Illumination: Illuminates when malfunction occurs in 2 continuous driving cycles.

- **Normality Judgment**

Judge as OK and clear the NG if the continuous time while the following conditions are established is more than the predetermined time.

Judgment Value

Malfunction Criteria	Threshold Value
|Barometric pressure – Intake manifold pressure|	< 26.7 kPa (200 mmHg, 7.9 inHg)

Time Needed for Diagnosis: 262 ms

EH:DTC P2228 BAROMETRIC PRESSURE CIRCUIT LOW

1. OUTLINE OF DIAGNOSIS

Detect the open/short circuit of the barometric pressure sensor.
Judge as NG if out of specification.

2. COMPONENT DESCRIPTION

The barometric pressure sensor is built into the ECM.

3. ENABLE CONDITION

Secondary Parameters	Enable Conditions
None	

4. GENERAL DRIVING CYCLE

Always perform the diagnosis continuously.

5. DIAGNOSTIC METHOD

- **Abnormality Judgment**

If the duration of time while the following conditions are met is longer than the time indicated, judge as NG.

Judgment Value

Malfunction Criteria	Threshold Value
Output voltage	< 2.146 V

Time Needed for Diagnosis: 500 ms
Malfunction Indicator Light Illumination: Illuminates as soon as a malfunction occurs.

- **Normality Judgment**

Judge as OK and clear the NG if the continuous time while the following conditions are established is more than the predetermined time.

Judgment Value

Malfunction Criteria	Threshold Value
Output voltage	≥ 2.146 V

Time Needed for Diagnosis: Less than 1 second

EI: DTC P2229 BAROMETRIC PRESSURE CIRCUIT HIGH

1. OUTLINE OF DIAGNOSIS

Detect the open/short circuit of the barometric pressure sensor.
Judge as NG if out of specification.

2. COMPONENT DESCRIPTION

The barometric pressure sensor is built into the ECM.

3. ENABLE CONDITION

Secondary Parameters	Enable Conditions
None	

4. GENERAL DRIVING CYCLE

Always perform the diagnosis continuously.

5. DIAGNOSTIC METHOD

- **Abnormality Judgment**

If the duration of time while the following conditions are met is longer than the time indicated, judge as NG.

Judgment Value

Malfunction Criteria	Threshold Value
Output voltage	≥ 3.875 V

Time Needed for Diagnosis: 500 ms
Malfunction Indicator Light Illumination: Illuminates as soon as a malfunction occurs.

- **Normality Judgment**

Judge as OK and clear the NG if the continuous time while the following conditions are established is more than the predetermined time.

Judgment Value

Malfunction Criteria	Threshold Value
Output voltage	< 3.875 V

Time Needed for Diagnosis: Less than 1 second

EJ:DTC P2610 ECM/PCM INTERNAL ENGINE OFF TIMER PERFORMANCE

1. OUTLINE OF DIAGNOSIS

Detect malfunction of soaking timer IC by the five diagnoses below.

Monitor Number	Explanation	Time required for diagnosis
Monitor #1 <Timer diagnosis>	Perform diagnosis of the soaking timer IC accuracy	196 ms
Monitor #2 <Full count diagnosis>	Perform diagnosis of the soaking timer IC counter function	4000 ms
Monitor #3 <Soaking timer IC setting diagnosis>	Perform diagnosis of communication between ECM and soaking timer IC	196 ms
Monitor #4 <Timer diagnosis (during soaking)>	Perform diagnosis of the soaking timer IC accuracy during soaking	3000 ms
Monitor #5 <Wake-up diagnosis>	Perform diagnosis of wake-up function	64 ms

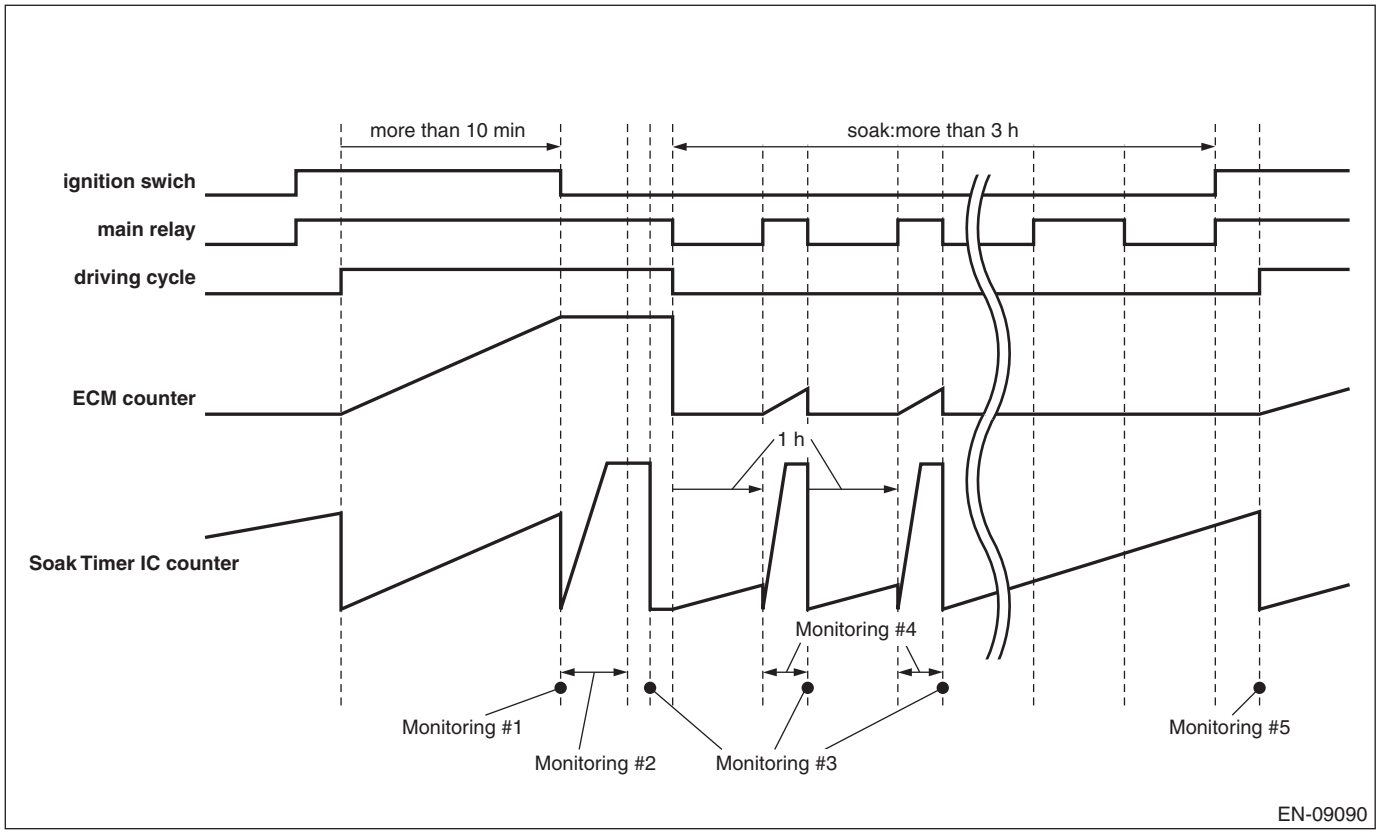

2. COMPONENT DESCRIPTION

The soaking timer IC is built into the ECM.

3. ENABLE CONDITIONS

Secondary Parameters	Enable Conditions
<Timer diagnosis>	
Battery voltage	≥ 10.9 V
Ignition switch	OFF
Elapsed time after starting the engine	> 600 s
< Full count diagnosis & soaking timer IC setting diagnosis>	
Battery voltage	≥ 10.9 V
Ignition switch	OFF
<Timer diagnosis (during soaking)>	
Battery voltage	≥ 10.9 V
Ignition switch	OFF
Number of wake-up	< 2 time(s)
<Wake-up diagnosis>	
Ignition switch	ON
Wake-up activation time setting	Completed
Time in the soaking timer IC	> 3600 s × 2 time(s)

4. GENERAL DRIVING CYCLE

Perform the diagnosis only once when 10 minutes have passed after the engine start and the ignition switch is OFF, and also when the ignition switch is ON after the soaking of five hours or more.

5. DIAGNOSTIC METHOD

<Timer diagnosis>

Start the count up operation of counters in ECM and in soaking timer IC when the engine is started.
Judge as timer malfunction if the difference between the counter in ECM and counter in soaking timer IC exceeds the allowable limit when the ignition switch is OFF.

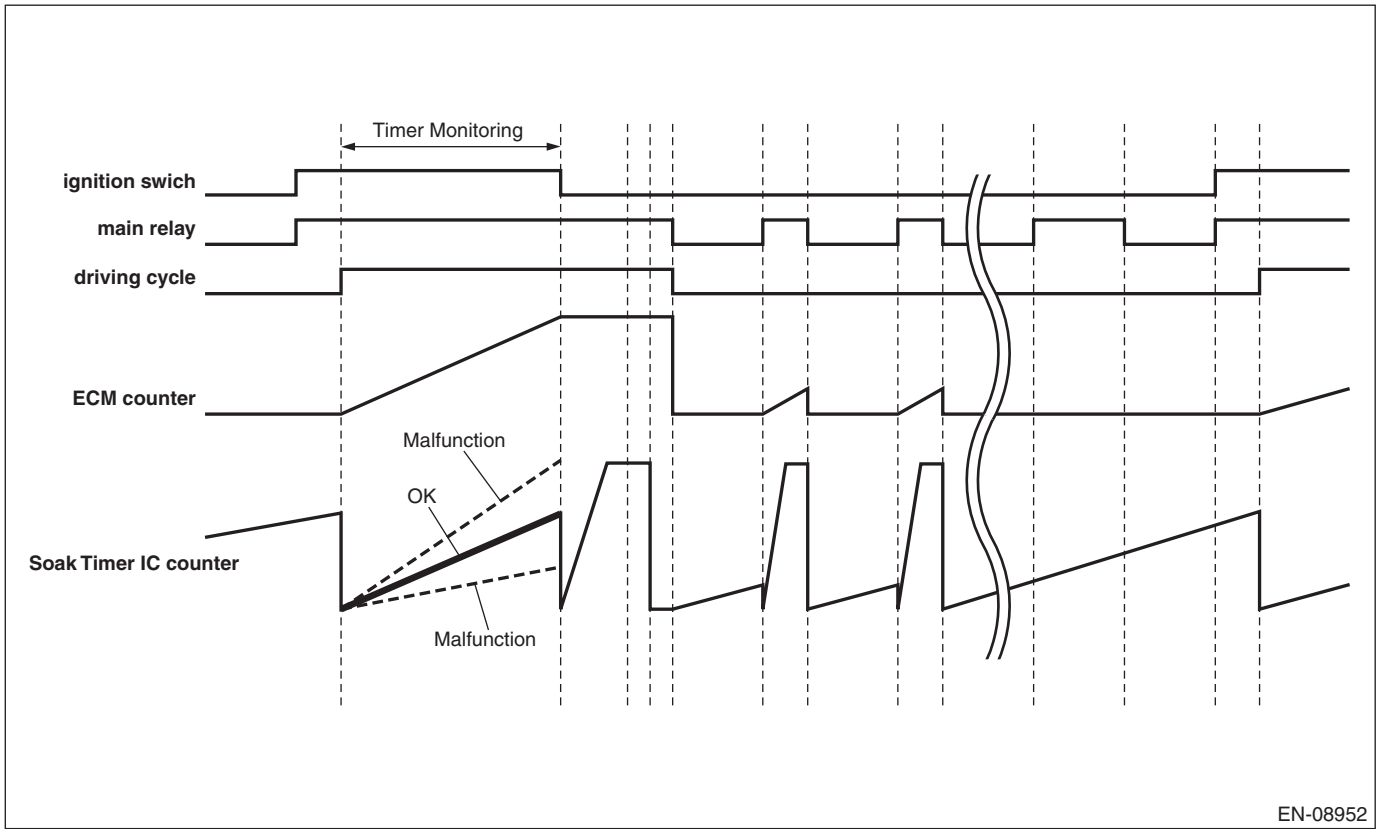

- **Abnormality Judgment**

Judge as NG when the following conditions are established.

Judgment Value

Malfunction Criteria	Threshold Value
|osoaktimcpu – osoaktimic| / osoaktimcpu osoaktimcpu = Counter in ECM osoaktimic = Counter in soaking timer IC	> 0.24

- **Normality Judgment**

Judge as OK when the following conditions are established.

Judgment Value

Malfunction Criteria	Threshold Value
|osoaktimcpu – osoaktimic| / osoaktimcpu	≤ 0.24

<Full count diagnosis>

After the timer diagnosis is completed, reset the counter in soaking timer IC and start the count up operation. Judge as full count diagnosis malfunction if counter in soaking timer IC is not $3FF (1023 count) after 4 seconds.

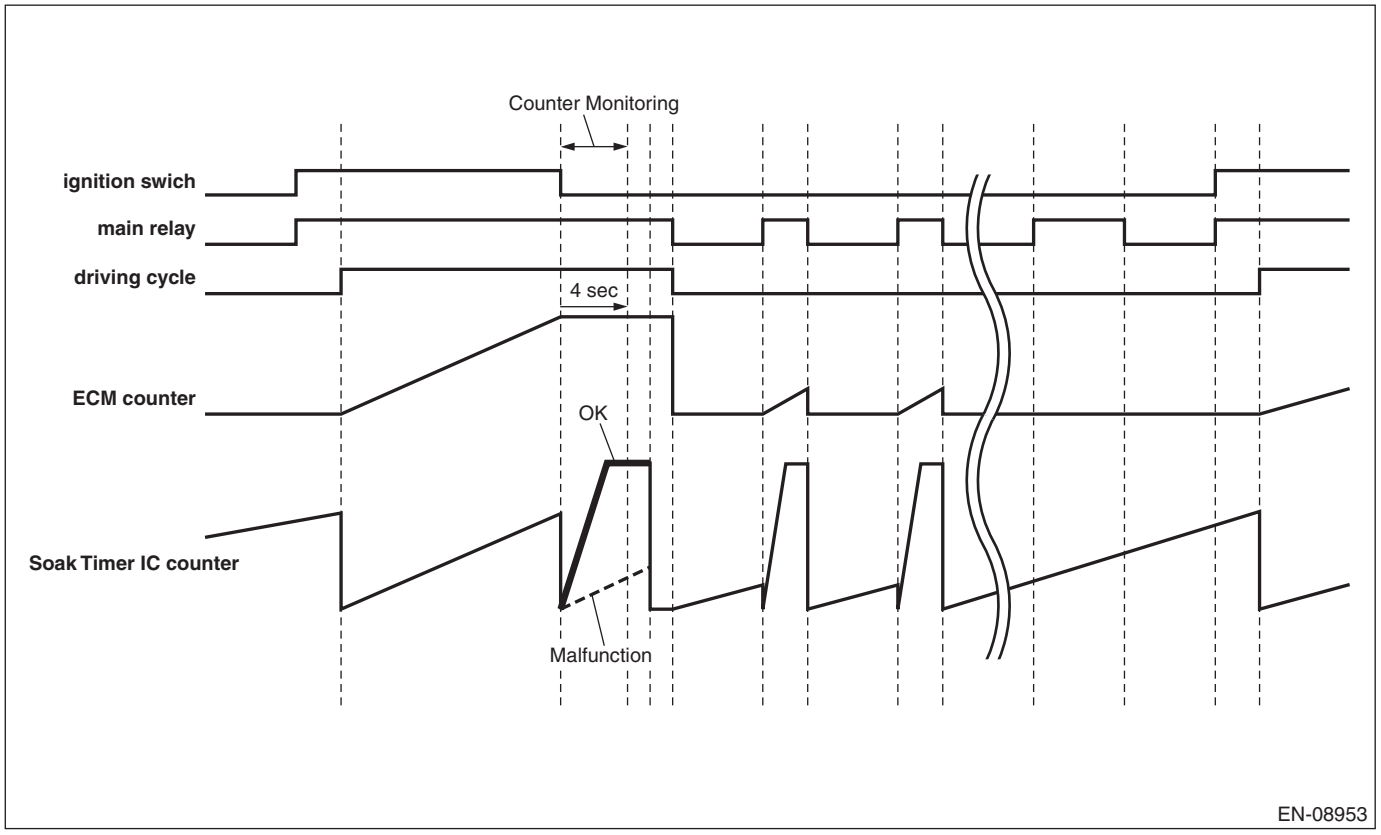

- **Abnormality Judgment**

Judge as NG when the following conditions are established.

Judgment Value

Malfunction Criteria	Threshold Value
osoakfcntic osoakfcntic = Counter in soaking timer IC	≠ $3FF (1023 count)

- **Normality Judgment**

Judge as OK when the following conditions are established.

Judgment Value

Malfunction Criteria	Threshold Value
osoakfcntic	= $3FF (1023 count)

<Soaking timer IC setting diagnosis>

When setting the activation setting time to soaking timer IC, compare the writing value to soaking timer IC with read out value. Judge as malfunction if the values do not match 3 times in a row.

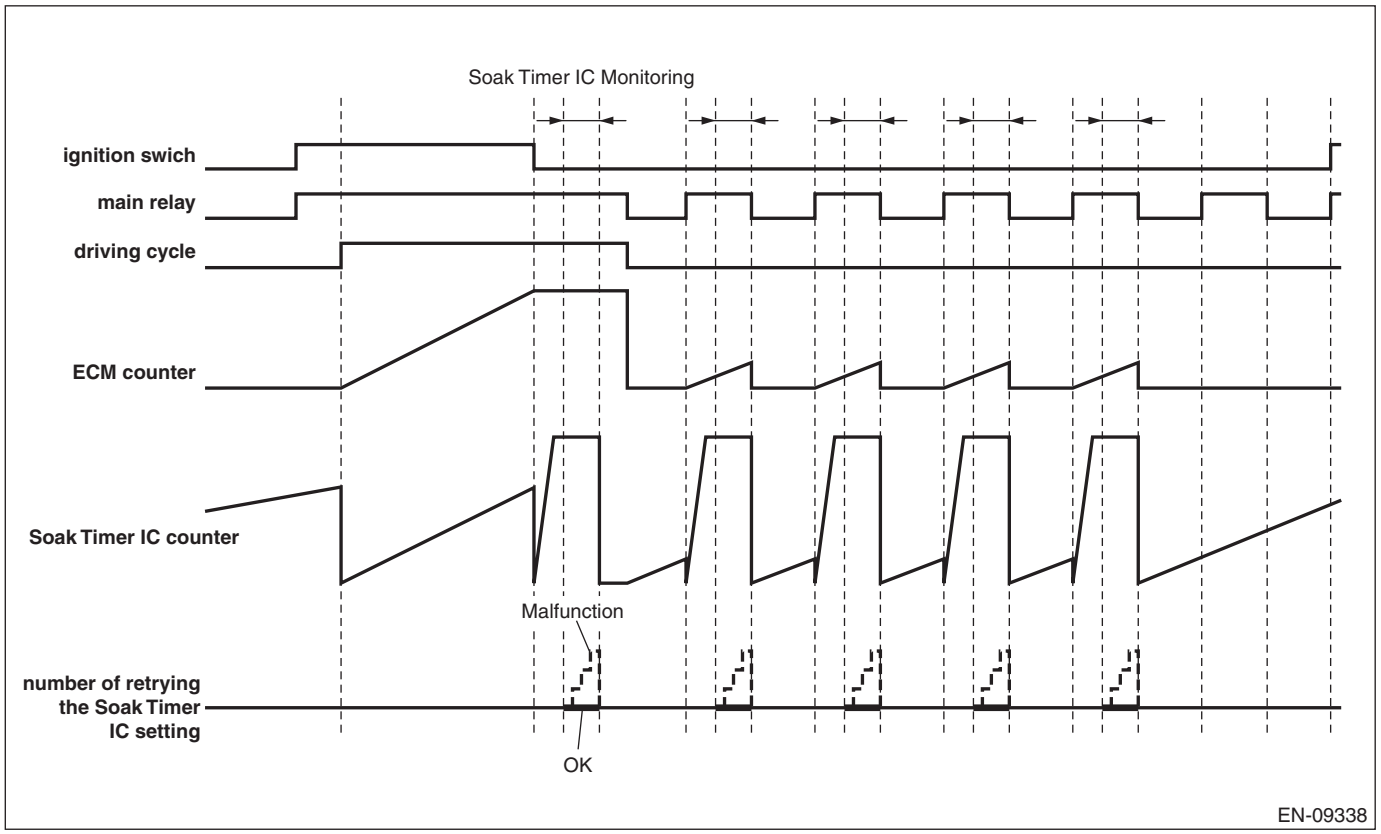

- **Abnormality Judgment**

Judge as NG when the following conditions are established.

Judgment Value

Malfunction Criteria	Threshold Value
Writing value and read out value when setting the soaking timer	Unmatch
Number of retrying the soaking timer setting	≥ 3 times

- **Normality Judgment**

Judge as OK when the following conditions are established.

Judgment Value

Malfunction Criteria	Threshold Value
Writing value and read out value when setting the soaking timer	Match

<Timer diagnosis (during soaking)>

Wake-up at the predetermined interval until five hours have passed after the ignition switch is OFF, and compare the counter in soaking timer IC with the counter in ECM.
Judge as malfunction if the counter in soaking timer IC is counted up to maximum value (1023 count) when the counter in ECM is 1637 ms, or if the counter in soaking timer IC is not counted up to maximum value (1023 count) when the counter in ECM is 2455 ms.

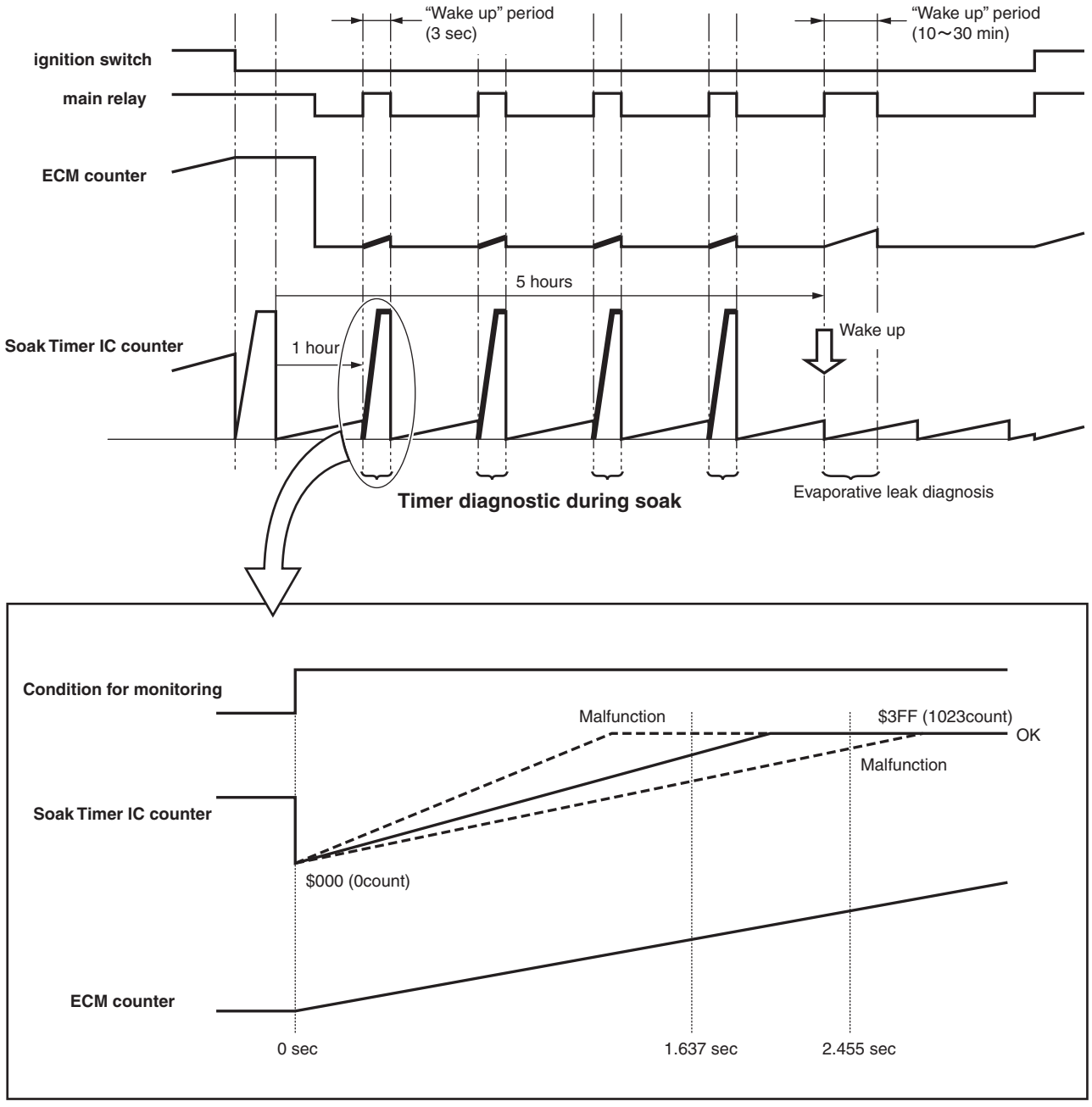

EN-08981

- **Abnormality Judgment**

Judge as NG when the following conditions are established.

Judgment Value

Malfunction Criteria	Threshold Value
When any one of the followings is established.	
• All of the following conditions are established.	
Counter in ECM	≤ 1637 ms
Counter in soaking timer IC	= $3FF (1023 count)
• All of the following conditions are established.	
Counter in ECM	≥ 2455 ms
Counter in soaking timer IC	≠ $3FF (1023 count)

- **Normality Judgment**

Judge as OK when the following conditions are established.

Judgment Value

Malfunction Criteria	Threshold Value
Following conditions are established.	
• All of the following conditions are established.	
Counter in ECM	≤ 1637 ms
Counter in soaking timer IC	≠ $3FF (1023 count)
• All of the following conditions are established.	
Counter in ECM	≥ 2455 ms
Counter in soaking timer IC	= $3FF (1023 count)

<Wake-up diagnosis>

Store the number of wake-up activation when the ECM wakes up by the soaking timer IC.

Next time when the ignition switch is ON, if the number of wake-up activation does not reach the predetermined value even though the counter in soaking timer IC exceeds the activation setting time, judge as wake-up malfunction.

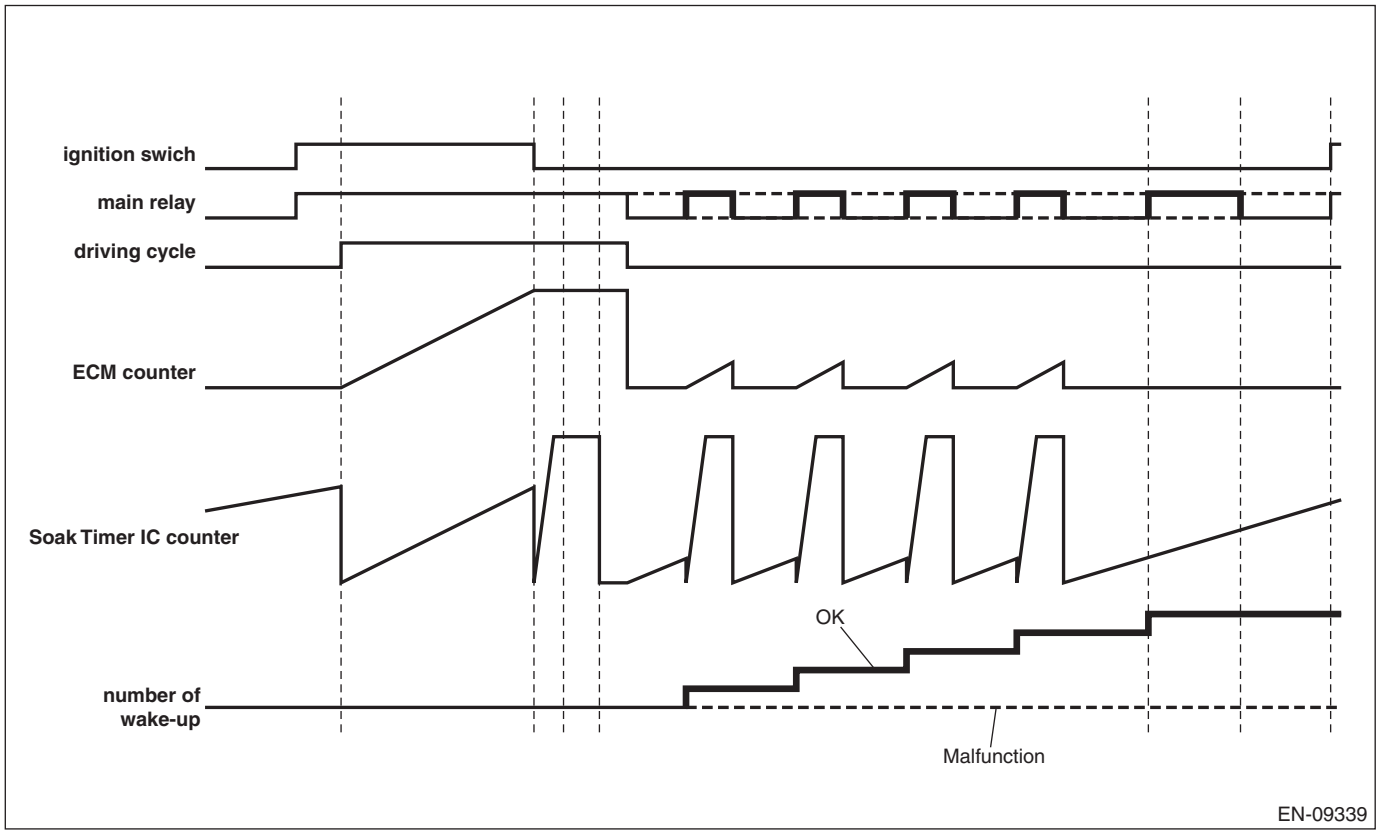

- **Abnormality Judgment**

Judge as NG when the following conditions are established.

Judgment Value

Malfunction Criteria	Threshold Value
Number of wake-up	< 2 time(s)

- **Normality Judgment**

Judge as OK when the following conditions are established.

Judgment Value

Malfunction Criteria	Threshold Value
Number of wake-up	≥ 2 time(s)

- **Abnormality Judgment**

Judge as NG when the following conditions are established.

Judgment Value

Malfunction Criteria	Threshold Value
Ignition switch	ON
Driving cycle	Completed
When any one of the followings is established.	
• Timer diagnosis	NG
• Full count diagnosis	NG
• Soaking timer IC setting diagnosis	NG
• Timer diagnosis (during soaking)	NG
• Wake-up diagnosis	NG

Time Needed for Diagnosis: 18620 s (Approx. 5 hours)
Malfunction Indicator Light Illumination: Illuminates when malfunction occurs in 2 continuous driving cycles.

- **Normality Judgment**

Judge as OK and clear the NG if the following conditions are established.

Judgment Value

Malfunction Criteria	Threshold Value
Ignition switch	ON
Driving cycle	Completed
All of the following conditions are established.	
• Timer diagnosis	OK
• Full count diagnosis	OK
• Soaking timer IC setting diagnosis	OK
• Timer diagnosis (during soaking)	OK
• Wake-up diagnosis	OK

Time Needed for Diagnosis: 18620 s (Approx. 5 hours)

EK:DTC U0073 CAN FAILURE, BUS 'OFF' DETECTION

1. OUTLINE OF DIAGNOSIS

Detect malfunction of CAN communication.
Judge as NG when CAN communication failure has occurred.

2. COMPONENT DESCRIPTION

(Common Specifications)
CAN Protocol 2.0 B (Active)
Frame Format: 11 Bit ID Frame (Standard Frame)
Conforms to ISO11898
Communication Speed: 500 kbps

3. ENABLE CONDITIONS

Secondary Parameters	Enable Conditions
None	

4. GENERAL DRIVING CYCLE

Perform the diagnosis continuously after starting the engine.

5. DIAGNOSTIC METHOD

• Abnormality Judgment

Judge as NG when the following conditions are established.

Judgment Value

Malfunction Criteria	Threshold Value
Battery voltage	> 10.9 V
Starter switch	OFF
Engine	run
bus off flag or error warning flag	set (error)

Time Needed for Diagnosis: 436 ms
Malfunction Indicator Light Illumination: Illuminates as soon as a malfunction occurs.

• Normality Judgment

Judge as OK and clear the NG if the continuous time while the following conditions are established is more than the predetermined time.

Judgment Value

Malfunction Criteria	Threshold Value
Engine	run
bus off flag or error warning flag	clear (No error)

Time Needed for Diagnosis: 1000 ms

EL:DTC U0101 CAN (TCU) DATA NOT LOADED

1. OUTLINE OF DIAGNOSIS

Detect malfunction of CAN communication.
Judge as NG when CAN communication failure has occurred between TCM, VDC CM and body integrated unit.

2. COMPONENT DESCRIPTION

(Common Specifications)
CAN Protocol 2.0 B (Active)
Frame Format: 11 Bit ID Frame (Standard Frame)
Conforms to ISO11898
Communication Speed: 500 kbps

3. ENABLE CONDITIONS

Secondary Parameters	Enable Conditions
None	

4. GENERAL DRIVING CYCLE

Perform the diagnosis continuously after starting the engine.

5. DIAGNOSTIC METHOD

• Abnormality Judgment

Judge as NG when the following conditions are established.

Judgment Value

Malfunction Criteria	Threshold Value
Battery voltage	> 10.9 V
Starter switch	OFF
Engine	run
ID received from control module connected to CAN	None during 500 milliseconds

Time Needed for Diagnosis: 500 ms
Malfunction Indicator Light Illumination: Illuminates as soon as a malfunction occurs.

• Normality Judgment

Judge as OK and clear the NG if the continuous time while the following conditions are established is more than the predetermined time.

Judgment Value

Malfunction Criteria	Threshold Value
Engine	run
ID received from control module connected to CAN	Yes

Time Needed for Diagnosis: 1000 ms

EM:DTC U0122 CAN (VDC) DATA NOT LOADED

1. OUTLINE OF DIAGNOSIS

NOTE:
For the detection standard, refer to DTC U0101. <Ref. to GD(H4SO)-251, DTC U0101 CAN (TCU) DATA NOT LOADED, Diagnostic Trouble Code (DTC) Detecting Criteria.>

EN:DTC U0140 CAN (BCU) DATA NOT LOADED

1. OUTLINE OF DIAGNOSIS

NOTE:
For the detection standard, refer to DTC U0101. <Ref. to GD(H4SO)-251, DTC U0101 CAN (TCU) DATA NOT LOADED, Diagnostic Trouble Code (DTC) Detecting Criteria.>

EO:DTC U0402 CAN (TCU) DATA ABNORMAL

1. OUTLINE OF DIAGNOSIS

Detect malfunction of CAN communication.
Judge as NG when data received from TCM, VDC CM and body integrated unit is not normal.

2. COMPONENT DESCRIPTION

(Common Specifications)
CAN Protocol 2.0 B (Active)
Frame Format: 11 Bit ID Frame (Standard Frame)
Conforms to ISO11898
Communication Speed: 500 kbps

3. ENABLE CONDITIONS

Secondary Parameters	Enable Conditions
None	

4. GENERAL DRIVING CYCLE

Perform the diagnosis continuously after starting the engine.

5. DIAGNOSTIC METHOD

• Abnormality Judgment

Judge as NG when the following conditions are established.

Judgment Value

Malfunction Criteria	Threshold Value
Battery voltage	> 10.9 V
Starter switch	OFF
Engine	run
Data updated from control module connected to CAN	None during 2000 milliseconds

Time Needed for Diagnosis: 2 seconds
Malfunction Indicator Light Illumination: Illuminates as soon as a malfunction occurs.

• Normality Judgment

Judge as OK and clear the NG if the continuous time while the following conditions are established is more than the predetermined time.

Judgment Value

Malfunction Criteria	Threshold Value
Engine	run
Data updated from control module connected to CAN	Yes

Time Needed for Diagnosis: 1000 ms

EP:DTC U0416 CAN (VDC) DATA ABNORMAL

1. OUTLINE OF DIAGNOSIS

NOTE:
For the detection standard, refer to DTC U0402. <Ref. to GD(H4SO)-253, DTC U0402 CAN (TCU) DATA ABNORMAL, Diagnostic Trouble Code (DTC) Detecting Criteria.>

EQ:DTC U0422 CAN (BCU) DATA ABNORMAL

1. OUTLINE OF DIAGNOSIS

NOTE:
For the detection standard, refer to DTC U0402. <Ref. to GD(H4SO)-253, DTC U0402 CAN (TCU) DATA ABNORMAL, Diagnostic Trouble Code (DTC) Detecting Criteria.>

ENGINE 2 SECTION

This service manual has been prepared to provide SUBARU service personnel with the necessary information and data for the correct maintenance and repair of SUBARU vehicles.
This manual includes the procedures for maintenance, disassembling, reassembling, inspection and adjustment of components and diagnostics for guidance of experienced mechanics.
Please peruse and utilize this manual fully to ensure complete repair work for satisfying our customers by keeping their vehicle in optimum condition. When replacement of parts during repair work is needed, be sure to use SUBARU genuine parts.

All information, illustration and specifications contained in this manual are based on the latest product information available at the time of publication approval.

FUEL INJECTION (FUEL SYSTEMS)	FU(H4DOTC)
EMISSION CONTROL (AUX. EMISSION CONTROL DEVICES)	EC(H4DOTC)
INTAKE (INDUCTION)	IN(H4DOTC)
MECHANICAL	ME(H4DOTC)
EXHAUST	EX(H4DOTC)
COOLING	CO(H4DOTC)
LUBRICATION	LU(H4DOTC)
SPEED CONTROL SYSTEMS	SP(H4DOTC)
IGNITION	IG(H4DOTC)
STARTING/CHARGING SYSTEMS	SC(H4DOTC)
ENGINE (DIAGNOSTICS)	EN(H4DOTC) (diag)
GENERAL DESCRIPTION	GD(H4DOTC)

FUEL INJECTION (FUEL SYSTEMS)

FU(H4DOTC)

		Page
1.	General Description	2
2.	Throttle Body	15
3.	Intake Manifold	18
4.	Engine Coolant Temperature Sensor	34
5.	Crankshaft Position Sensor	35
6.	Camshaft Position Sensor	37
7.	Knock Sensor	39
8.	Throttle Position Sensor	41
9.	Mass Air Flow and Intake Air Temperature Sensor	42
10.	Manifold Absolute Pressure Sensor	43
11.	Fuel Injector	45
12.	Tumble Generator Valve Assembly	48
13.	Tumble Generator Valve Actuator	49
14.	Oil Flow Control Solenoid Valve	50
15.	Wastegate Control Solenoid Valve	52
16.	Front Oxygen (A/F) Sensor	54
17.	Rear Oxygen Sensor	56
18.	Engine Control Module (ECM)	58
19.	Main Relay	59
20.	Fuel Pump Relay	61
21.	Electronic Throttle Control Relay	63
22.	Fuel Pump Control Unit	65
23.	Fuel	66
24.	Fuel Tank	68
25.	Fuel Filler Pipe	75
26.	Fuel Pump	79
27.	Fuel Level Sensor	81
28.	Fuel Sub Level Sensor	83
29.	Fuel Filter	85
30.	Fuel Damper	87
31.	Fuel Delivery, Return and Evaporation Lines	88
32.	Fuel System Trouble in General	94

1. General Description

A: SPECIFICATION

Fuel tank	Capacity	70 ℓ (18.5 US gal, 15.4 Imp gal)
	Install locations	Under rear seat
Fuel pump	Type	Impeller
	Shutoff discharge pressure	850 kPa (8.67 kgf/cm^2, 123.3 psi) or less
	Discharge rate	175 ℓ (46.2 US gal, 38.5 Imp gal)/h or more. [12 V at 300 kPa (3.06 kgf/cm^2, 43.5 psi)]
Fuel filter		In-tank type

B: COMPONENT

1. INTAKE MANIFOLD 1

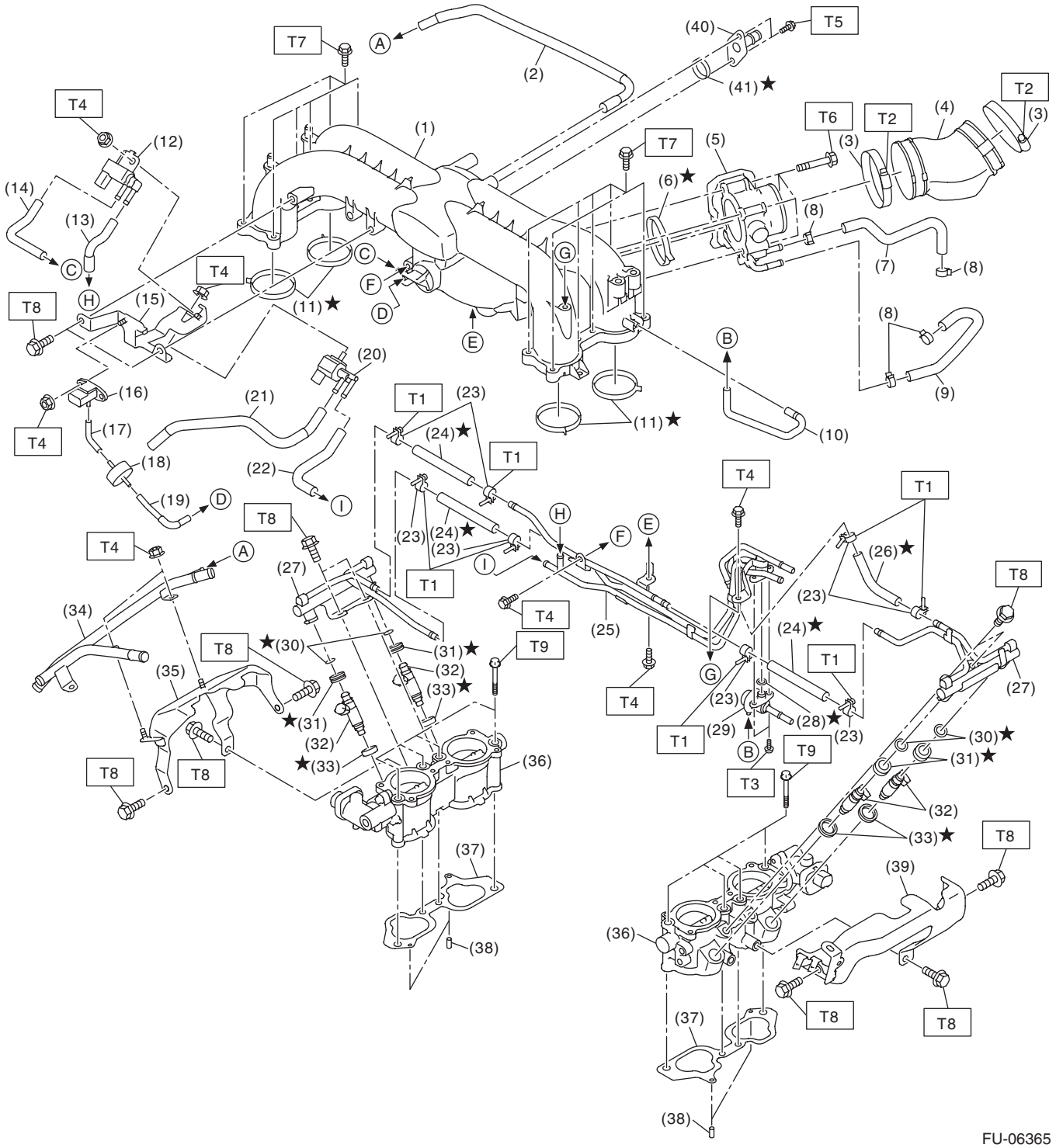

FU-06365

(1) Intake manifold
(2) Vacuum control hose
(3) Clamp
(4) Intake duct
(5) Throttle body
(6) O-ring
(7) Preheater hose A
(8) Clip
(9) Preheater hose B
(10) Pressure regulator vacuum hose
(11) O-ring
(12) Purge control solenoid valve 1
(13) Vacuum hose A
(14) Vacuum hose B
(15) Solenoid valve bracket
(16) Manifold absolute pressure sensor
(17) Vacuum hose C
(18) Filter
(19) Vacuum hose D
(20) Purge control solenoid valve 2
(21) Vacuum hose E
(22) Vacuum hose F
(23) Clamp
(24) Fuel hose A
(25) Fuel delivery pipe
(26) Fuel hose B
(27) Fuel pipe
(28) O-ring
(29) Pressure regulator
(30) O-ring
(31) Grommet
(32) Fuel injector
(33) Seal ring
(34) PCV pipe
(35) Intake manifold protector RH
(36) Tumble generator valve ASSY
(37) Gasket
(38) Knock pin
(39) Intake manifold protector LH
(40) Nipple
(41) O-ring

Tightening torque:N·m (kgf-m, ft-lb)
T1: 1.25 (0.1, 0.9)
T2: 3 (0.3, 2.2)
T3: 3.45 (0.4, 2.5)
T4: 6.4 (0.7, 4.7)
T5: 7.8 (0.8, 5.8)
T6: 8 (0.8, 5.9)
T7: 8.3 (0.8, 6.1)
T8: 19 (1.9, 14.0)
T9: 25 (2.5, 18.4)

2. INTAKE MANIFOLD 2

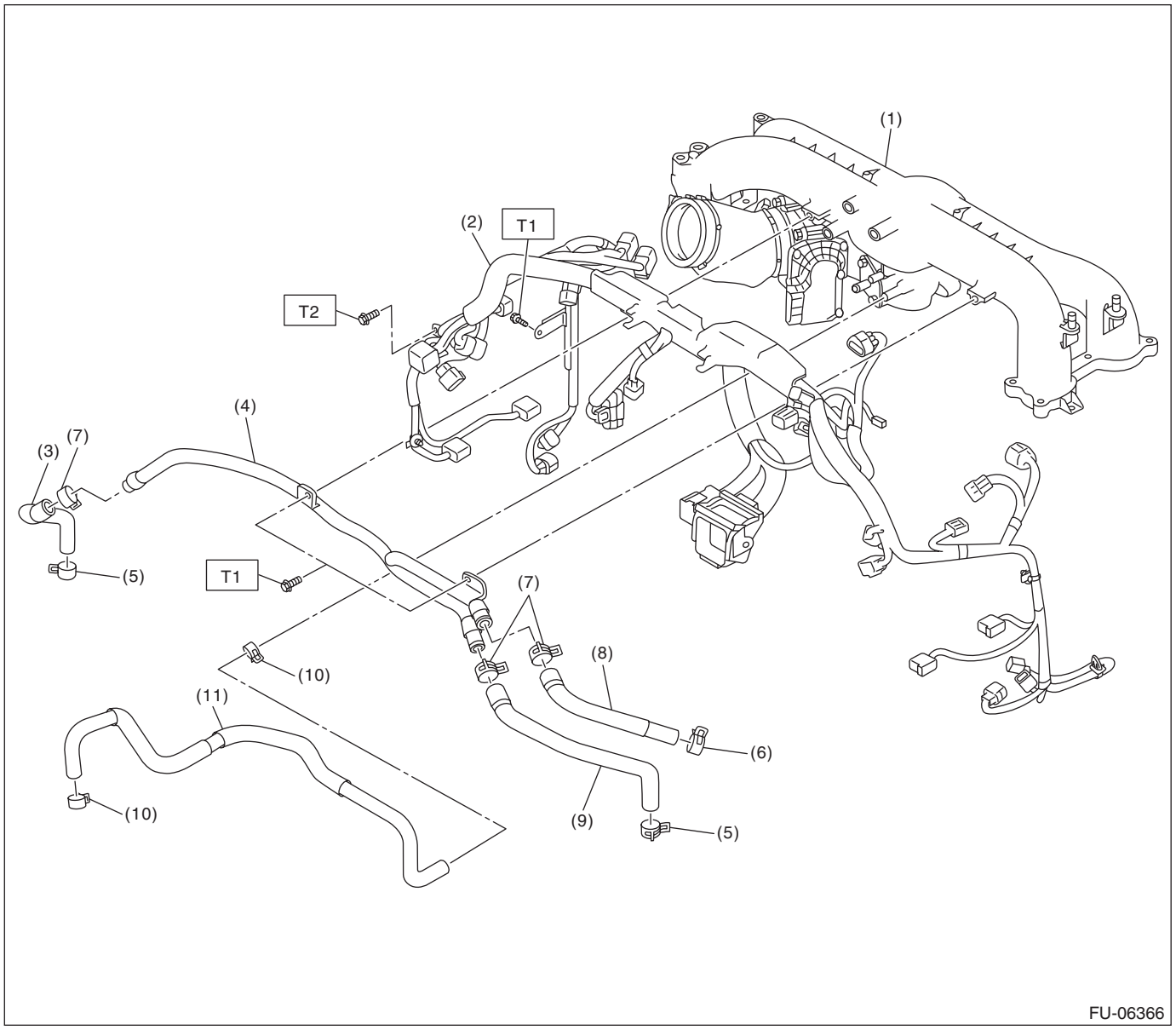

(1)	Intake manifold	(6)	Clip	(11)	Brake booster vacuum hose
(2)	Engine harness	(7)	Clip		
(3)	Vacuum hose A	(8)	Vacuum hose B	***Tightening torque:N·m (kgf-m, ft-lb)***	
(4)	PCV pipe	(9)	Vacuum hose C	***T1: 6.4 (0.7, 4.7)***	
(5)	Clip	(10)	Clip	***T2: 19 (1.9, 14.0)***	

3. CRANKSHAFT POSITION, CAMSHAFT POSITION AND KNOCK SENSORS

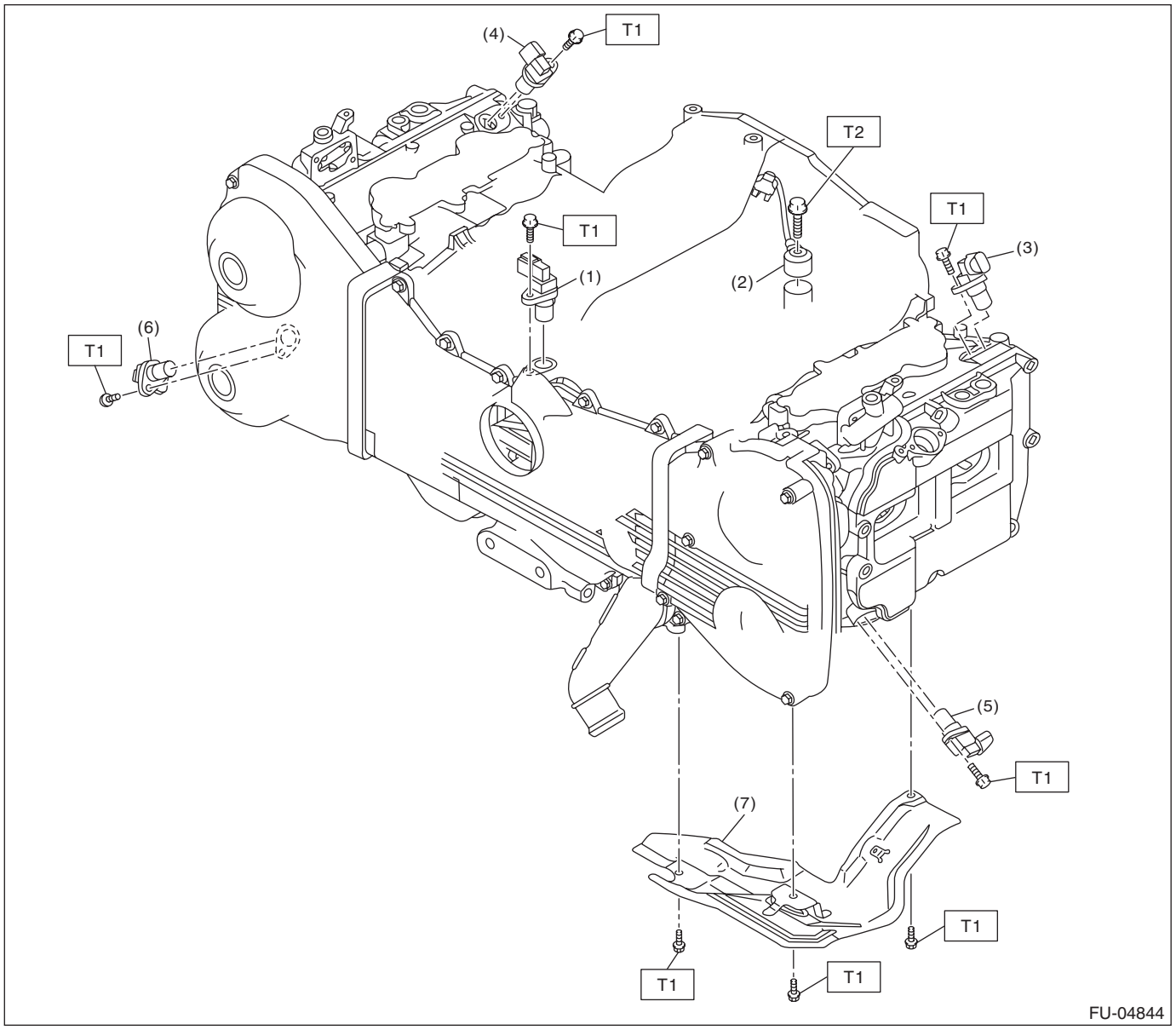

(1) Crankshaft position sensor
(2) Knock sensor
(3) Intake camshaft position sensor LH
(4) Intake camshaft position sensor RH
(5) Exhaust camshaft position sensor LH
(6) Exhaust camshaft position sensor RH
(7) Engine harness cover

Tightening torque:N·m (kgf-m, ft-lb)

T1: 6.4 (0.7, 4.7)

T2: 24 (2.4, 17.7)

4. FUEL TANK

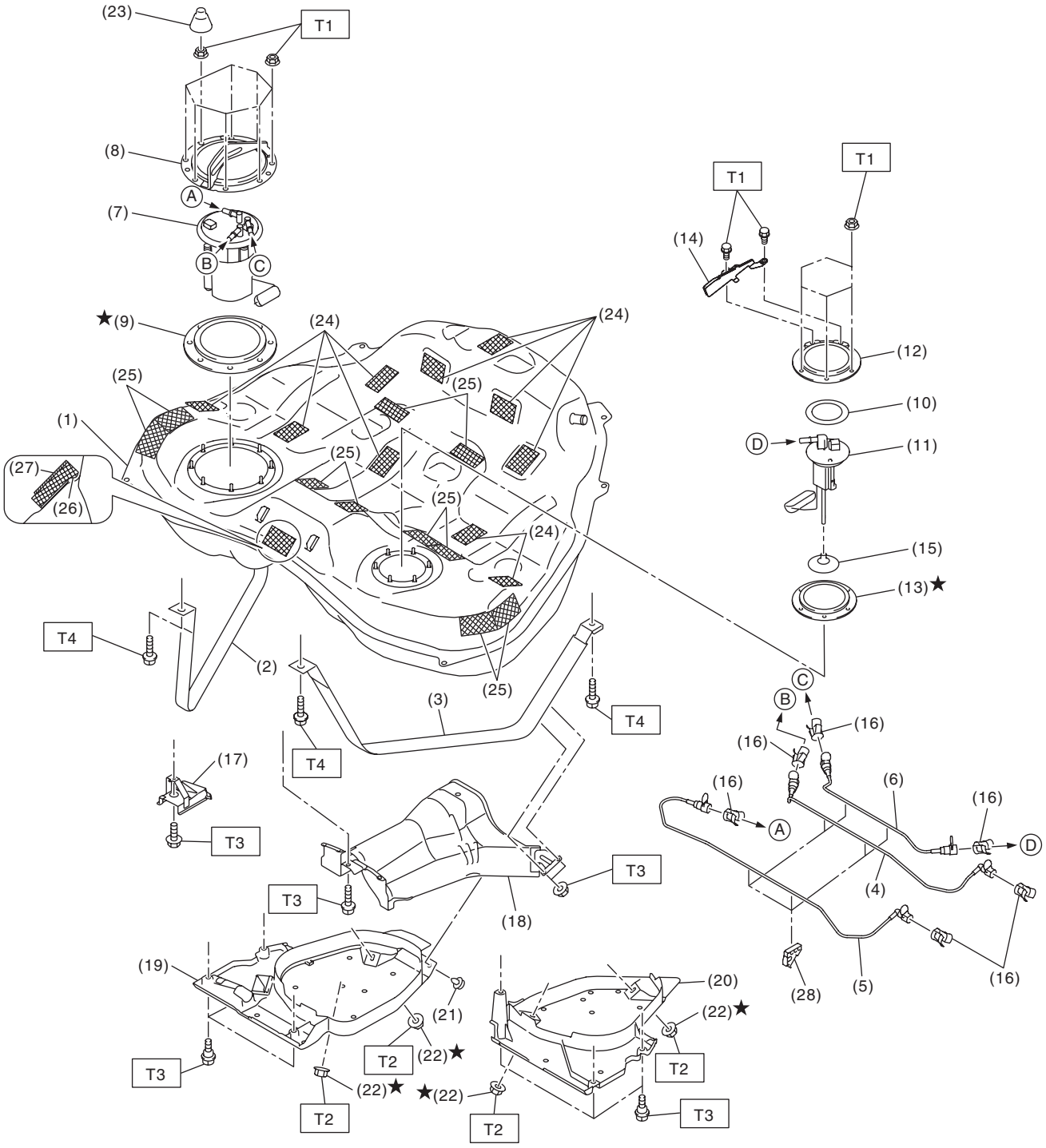

FU-06367

(1) Fuel tank
(2) Fuel tank band RH
(3) Fuel tank band LH
(4) Fuel delivery tube
(5) Fuel return tube
(6) Fuel sub delivery tube
(7) Fuel pump assembly
(8) Fuel pump upper plate
(9) Fuel pump gasket
(10) Fuel sub level sensor upper plate cushion
(11) Fuel sub level sensor
(12) Fuel sub level sensor upper plate
(13) Fuel sub level sensor gasket
(14) Fuel sub level sensor protector
(15) Fuel sub level sensor filter
(16) Retainer
(17) Stopper
(18) Heat shield cover
(19) Fuel tank protector RH
(20) Fuel tank protector LH
(21) Clip
(22) Self-locking nut
(23) Rubber cap
(24) Cushion
(25) Cushion
(26) Cushion
(27) Cushion
(28) Tube clamp

Tightening torque:N·m (kgf-m, ft-lb)
T1: 4.4 (0.4, 3.2)
T2: 9 (0.9, 6.6)
T3: 18 (1.8, 13.3)
T4: 33 (3.4, 24.3)

5. FUEL LINE

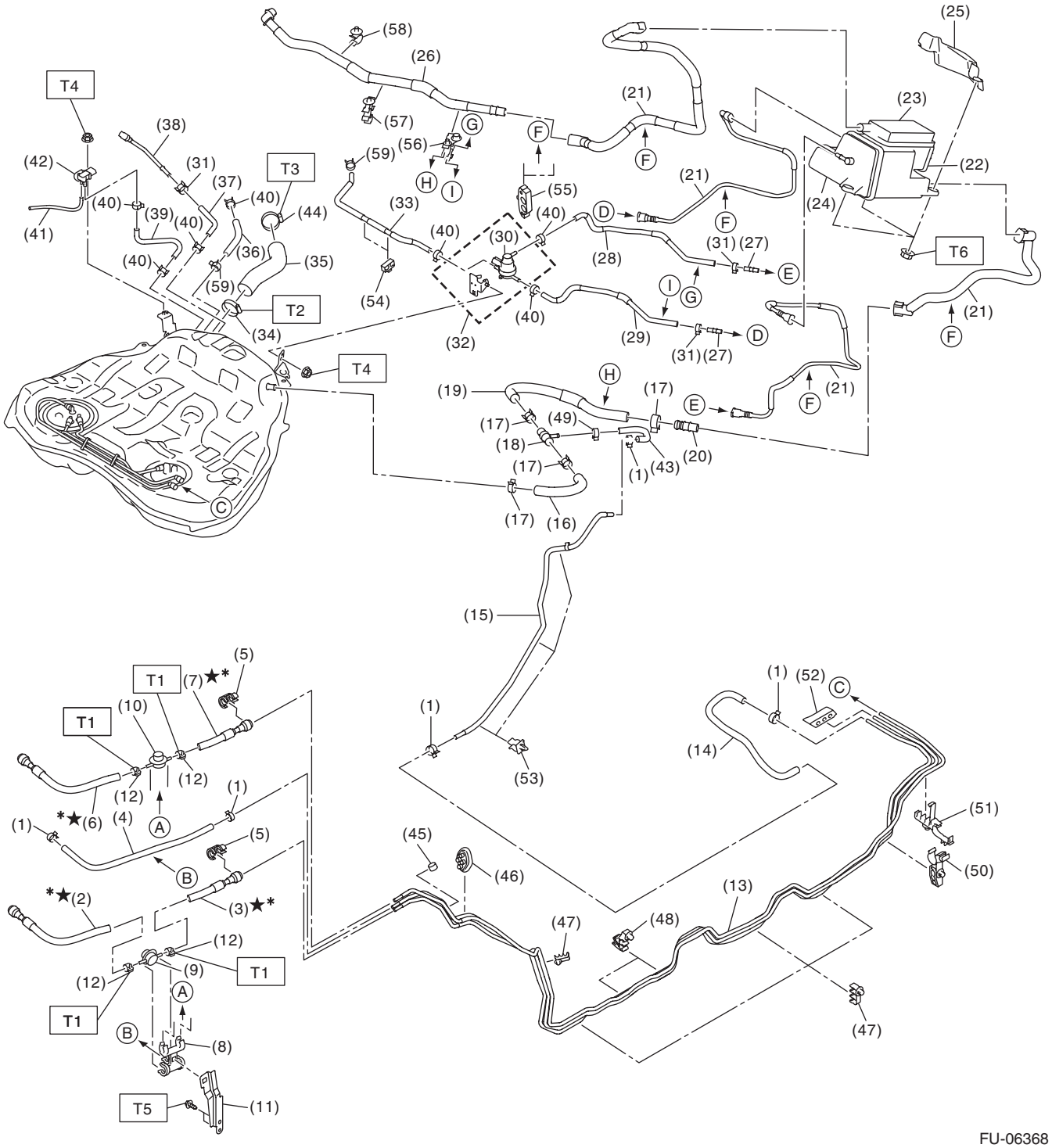

(1) Clip
(2) Fuel return hose A
(3) Fuel return hose B
(4) Evaporation hose
(5) Connect check cover
(6) Fuel delivery hose A
(7) Fuel delivery hose B
(8) Fuel damper holder
(9) Fuel damper
(10) Fuel damper
(11) Fuel damper bracket
(12) Clamp
(13) Fuel pipe ASSY
(14) Purge hose A
(15) Purge pipe
(16) Air vent hose A
(17) Clip
(18) Connector
(19) Air vent hose B
(20) Connector
(21) Canister tube ASSY
(22) Drain valve
(23) Drain filter
(24) Canister
(25) Canister protector
(26) Drain tube ASSY
(27) Connector
(28) PCV drain hose
(29) PCV outlet hose
(30) Pressure control solenoid valve
(31) Clip
(32) Pressure control solenoid valve ASSY
(33) PCV inlet hose
(34) Clamp
(35) Fuel filler hose
(36) Charge hose
(37) Circulate hose
(38) Circulate tube
(39) Pressure hose
(40) Clip
(41) Vacuum hose
(42) Fuel tank pressure sensor
(43) Purge hose B
(44) Clamp
(45) Bushing
(46) Fuel pipe front grommet
(47) Pipe clamp
(48) Pipe clamp
(49) Clip
(50) Pipe clamp
(51) Pipe clamp
(52) Fuel pipe rear grommet
(53) Pipe clamp
(54) Hose clamp
(55) Tube clamp
(56) Tube clamp
(57) Tube clamp
(58) Tube clamp
(59) Clip

* It can be reused if the quick connector side is disconnected.

Tightening torque:N·m (kgf-m, ft-lb)

T1:	***1.25 (0.1, 0.9)***
T2:	***2.0 (0.2, 1.5)***
T3:	***2.5 (0.3, 1.8)***
T4:	***7.35 (0.7, 5.4)***
T5:	***7.5 (0.8, 5.5)***
T6:	***8 (0.8, 5.9)***

6. FUEL FILLER PIPE

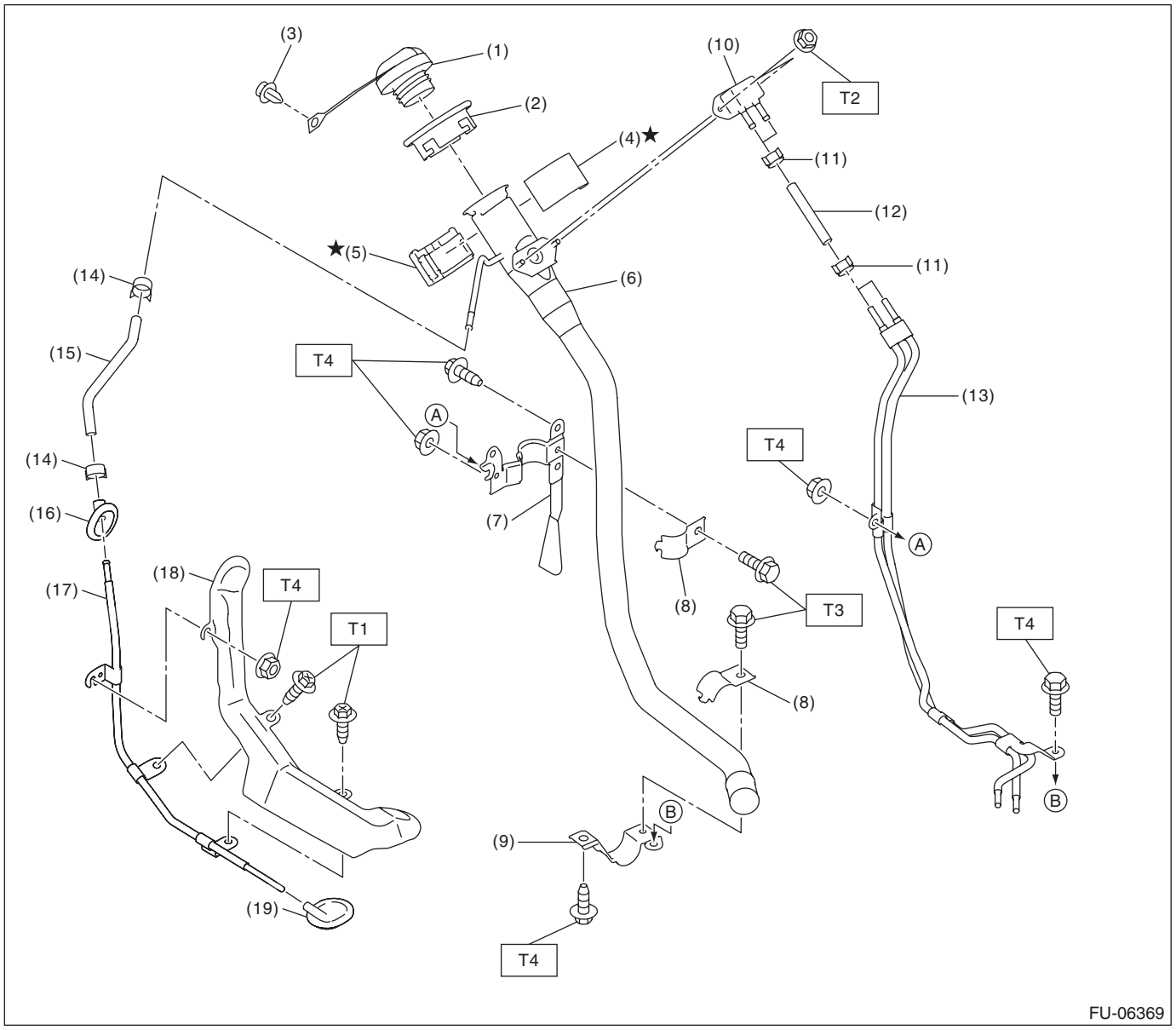

(1) Fuel filler cap
(2) Fuel filler pipe protector
(3) Clip
(4) Neck holder A
(5) Neck holder B
(6) Fuel filler pipe
(7) Fuel filler pipe bracket A
(8) Fuel filler pipe bracket B
(9) Fuel filler pipe bracket C
(10) Shut valve
(11) Clip
(12) Evaporation hose A
(13) Evaporation pipe A
(14) Clip
(15) Evaporation hose B
(16) Grommet
(17) Evaporation pipe B
(18) Evaporation pipe protector
(19) Grommet

Tightening torque:N·m (kgf-m, ft-lb)
T1: 1 (0.1, 0.7)
T2: 4.5 (0.5, 3.3)
T3: 7.35 (0.7, 5.4)
T4: 7.5 (0.8, 5.5)

7. FUEL PUMP

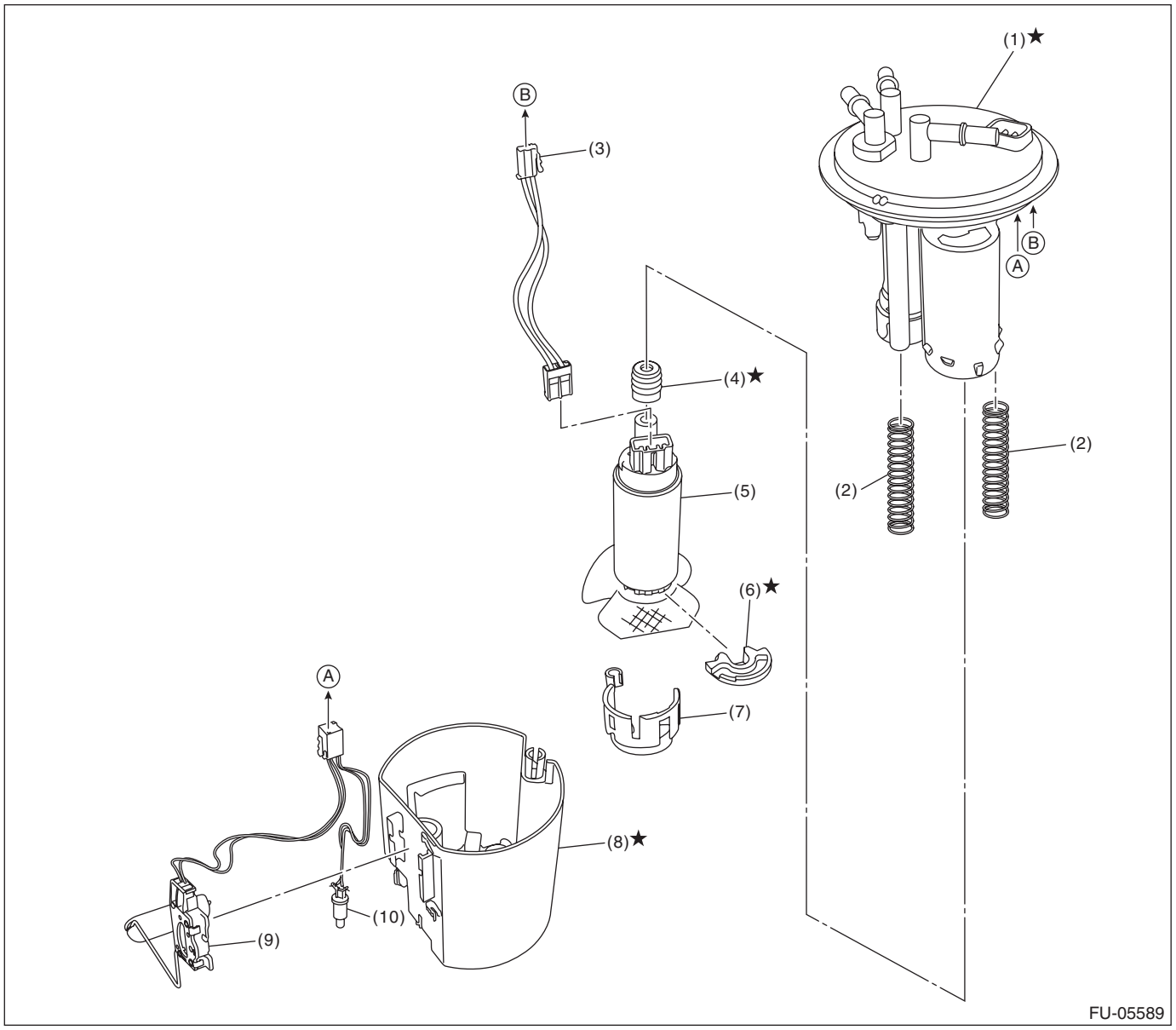

(1) Fuel filter ASSY
(2) Pump module spring
(3) Fuel pump harness
(4) Gasket spacer
(5) Fuel pump
(6) Support rubber cushion
(7) Fuel pump holder
(8) Fuel chamber ASSY
(9) Fuel level sensor
(10) Fuel temperature sensor

C: CAUTION

- Wear appropriate work clothing, including a cap, protective goggles and protective shoes when performing any work.
- Remove contamination including dirt and corrosion before removal, installation or disassembly.
- Keep the disassembled parts in order and protect them from dust and dirt.
- Before removal, installation or disassembly, be sure to clarify the failure. Avoid unnecessary removal, installation, disassembly and replacement.
- Vehicle components are extremely hot after driving. Be wary of receiving burns from heated parts.
- Be sure to tighten fasteners including bolts and nuts to the specified torque.
- Place shop jacks or rigid racks at the specified points.
- Before disconnecting connectors of sensors or units, be sure to disconnect the ground cable from the battery.
- Place “NO OPEN FLAMES” signs near the working area.
- Prepare a container and cloth to prevent scattering of fuels when performing work where fuels can be spilled. If the fuel spills, wipe it off immediately to prevent from penetrating into floor or flowing out for environmental protection.
- Follow all government and local regulations concerning disposal of refuse when disposing fuel.

D: PREPARATION TOOL

1. SPECIAL TOOL

ILLUSTRATION	TOOL NUMBER	DESCRIPTION	REMARKS
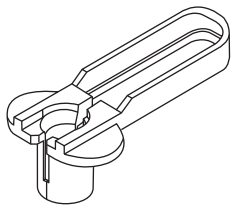 ST18371AA000	18371AA000	CONNECTOR REMOVER	Used for disconnecting the quick connector on the fuel return hose side of the engine compartment (intake manifold).
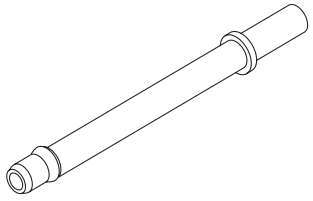 ST18471AA000	18471AA000	FUEL PIPE ADAPTER	Used for draining fuel.
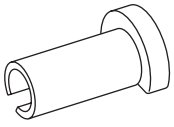 ST42099AE000	42099AE000	QUICK CONNECTOR RELEASE	Used for removing the quick connector.

ILLUSTRATION	TOOL NUMBER	DESCRIPTION	REMARKS
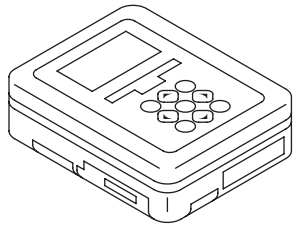 ST1B022XU0	1B022XU0	SUBARU SELECT MONITOR III KIT	Used for draining fuel and each inspection.

2. GENERAL TOOL

TOOL NAME	REMARKS
Circuit tester	Used for measuring resistance and voltage.
Oscilloscope	Used for inspecting the waveform of each sensor.
Sensor socket	Used for removing and installing the front oxygen (A/F) sensor and rear oxygen sensor.

2. Throttle Body

A: REMOVAL

1) Remove the collector cover.
2) Disconnect the ground cable from battery.

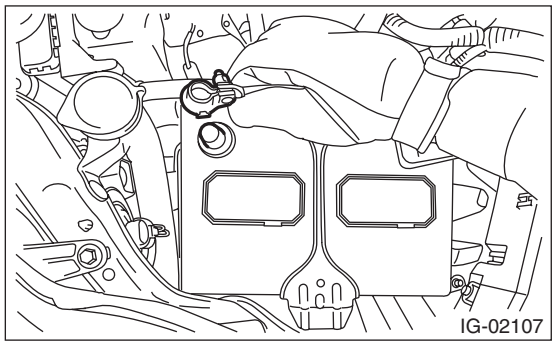

3) Lift up the vehicle.
4) Remove the under cover. <Ref. to EI-35, REMOVAL, Front Under Cover.>
5) Drain approximately 2.0 ℓ (2.1 US qt, 1.8 Imp qt) of coolant. <Ref. to CO(H4DOTC)-14, DRAINING OF ENGINE COOLANT, REPLACEMENT, Engine Coolant.>
6) Remove the intercooler. <Ref. to IN(H4DOTC)-17, REMOVAL, Intercooler.>
7) Remove the bolts which secure the engine harness and PCV pipe to the intake manifold, and remove the intake duct from the throttle body.

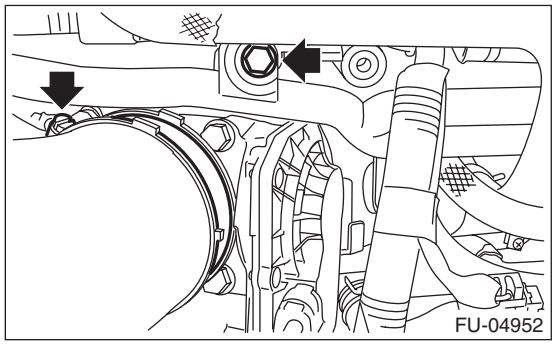

8) Disconnect the connector from the throttle position sensor, and disconnect the preheater hose from the throttle body.

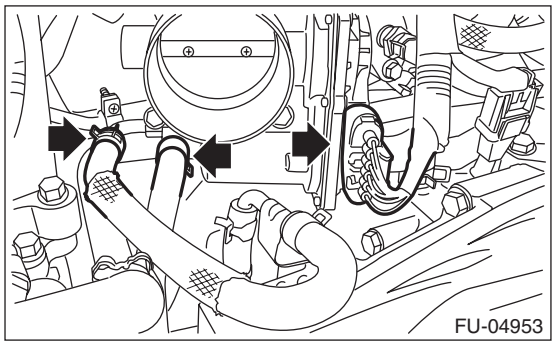

9) Remove the bolts which secure the throttle body to the intake manifold and remove the throttle body.

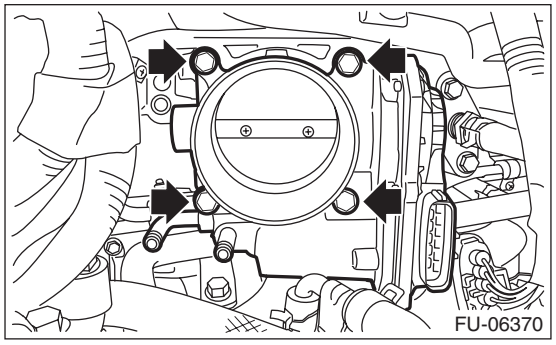

B: INSTALLATION

Install in the reverse order of removal.

NOTE:
- Use new O-rings.
- When installing the intake duct to the throttle body, align the protrusion (a) on the intake duct to the installation position mark (b) on the throttle body to install.

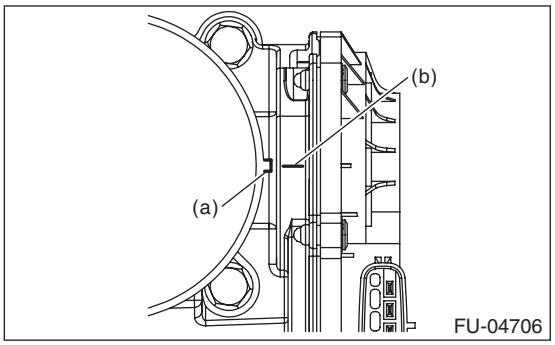

Tightening torque:
8 N·m (0.8 kgf-m, 5.9 ft-lb)

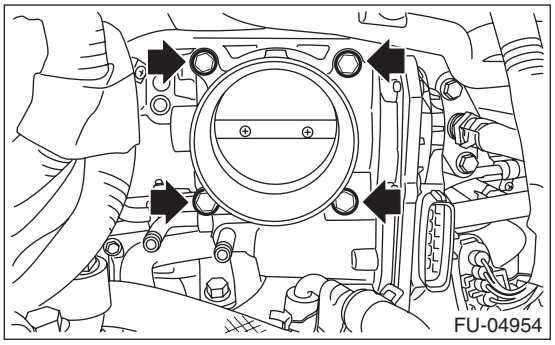

Tightening torque:
T1: 3 N·m (0.3 kgf-m, 2.2 ft-lb)
T2: 6.4 N·m (0.7 kgf-m, 4.7 ft-lb)

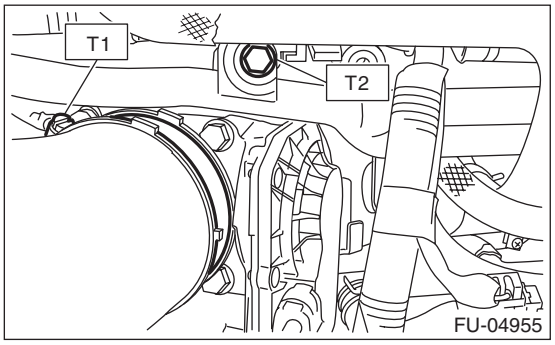

C: INSPECTION

1. THROTTLE SENSOR INSPECTION (METHOD WITH CIRCUIT TESTER)

1) Remove the glove box lid assembly. <Ref. to EI-66, REMOVAL, Glove Box.>
2) Turn the ignition switch to ON. (engine OFF)
3) Check the voltage between ECM connector terminals.

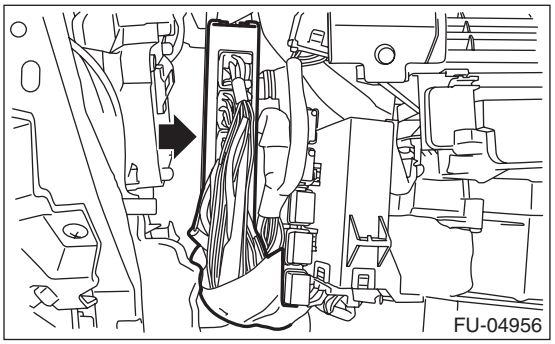

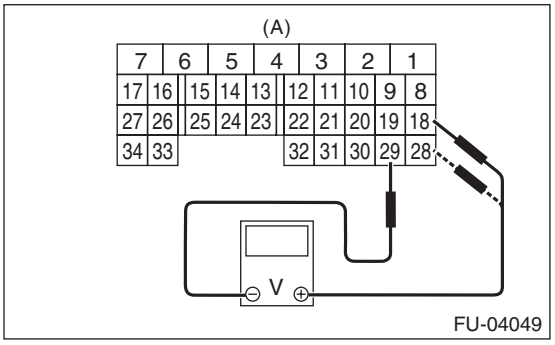

(A) To ECM connector

Throttle sensor	Accelerator pedal	Terminal No.	Standard
Main	Not depressed (Full closed)	18 (+) and 29 (–)	Approx. 0.6 V
	Depressed (Full opened)		Approx. 4.04 V
Sub	Not depressed (Full closed)	28 (+) and 29 (–)	Approx. 1.48 V
	Depressed (Full opened)		Approx. 4.23 V

2. THROTTLE SENSOR INSPECTION (METHOD WITH SUBARU SELECT MONITOR)

1) Turn the ignition switch to ON. (engine OFF)
2) Read the throttle opening angle signal and voltage of throttle sensor using Subaru Select Monitor. <Ref. to EN(H4DOTC)(diag)-34, READ CURRENT DATA FOR ENGINE (NORMAL MODE), OPERATION, Subaru Select Monitor.>

Throttle sensor	Throttle opening angle signal	Standard
Main	0.0%	Approx. 0.6 V
	100.0%	Approx. 4.04 V
Sub	0.0%	Approx. 1.48 V
	100.0%	Approx. 4.23 V

3. OTHER INSPECTIONS

1) Check that the throttle body has no deformation, cracks or other damages.
2) Check that the preheater hose has no cracks, damage or loose part.

3. Intake Manifold

A: REMOVAL

1) Remove the collector cover.
2) Collect the refrigerant from A/C system. <Ref. to AC-24, PROCEDURE, Refrigerant Recovery Procedure.>
3) Release the fuel pressure. <Ref. to FU(H4DOTC)-66, RELEASING OF FUEL PRESSURE, PROCEDURE, Fuel.>
4) Disconnect the ground cable from battery.

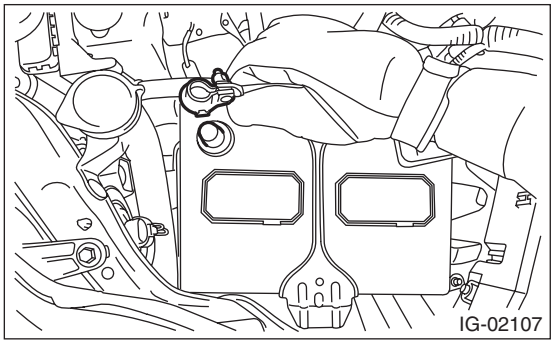

5) Open the fuel filler lid and remove the fuel filler cap.
6) Lift up the vehicle.
7) Remove the under cover. <Ref. to EI-35, REMOVAL, Front Under Cover.>
8) Drain approximately 2.0 ℓ (2.1 US qt, 1.8 Imp qt) of coolant. <Ref. to CO(H4DOTC)-14, DRAINING OF ENGINE COOLANT, REPLACEMENT, Engine Coolant.>
9) Disconnect the connector (A) from the exhaust camshaft position sensor and the connector (B) form the exhaust oil flow control solenoid valve.

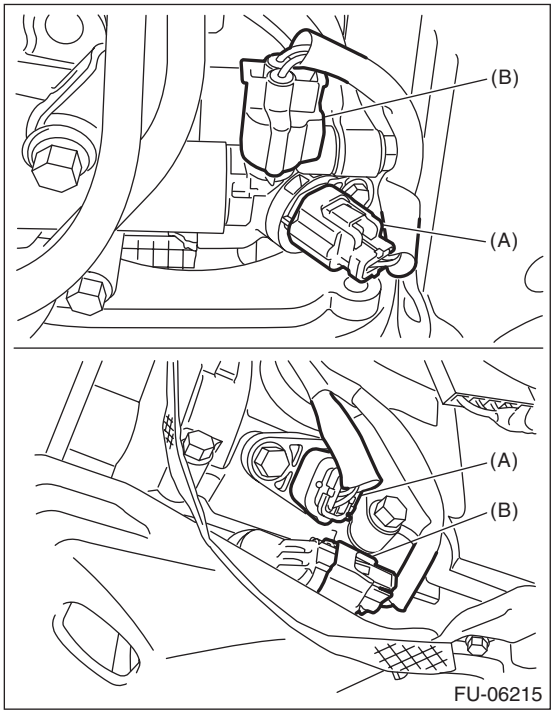

10) Disconnect the connectors from wastegate control solenoid valve, and remove the clip (A) which secure the engine harness.

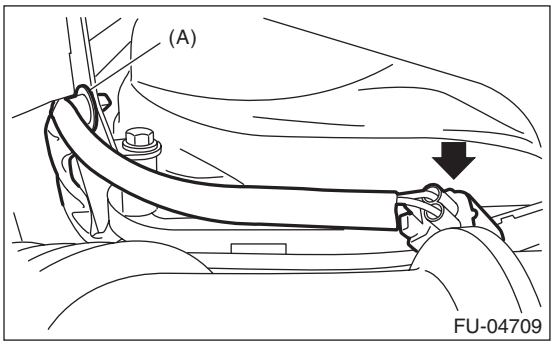

11) Lower the vehicle.
12) Remove the air intake duct. <Ref. to IN(H4DOTC)-12, REMOVAL, Air Intake Duct.>
13) Remove the intercooler. <Ref. to IN(H4DOTC)-17, REMOVAL, Intercooler.>
14) Disconnect the A/C pressure hoses from A/C compressor. <Ref. to AC-76, REMOVAL, Hose and Pipe.>
15) Disconnect the brake booster vacuum hose.

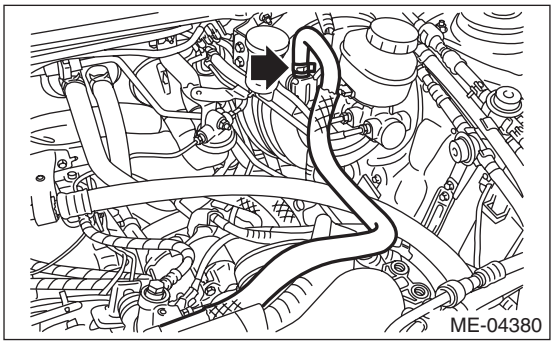

16) Remove the brake booster vacuum hose from the clip (A).
17) Remove the bolts (B) which secure the engine harness and PCV pipe to the intake manifold, and remove the intake duct from the throttle body.

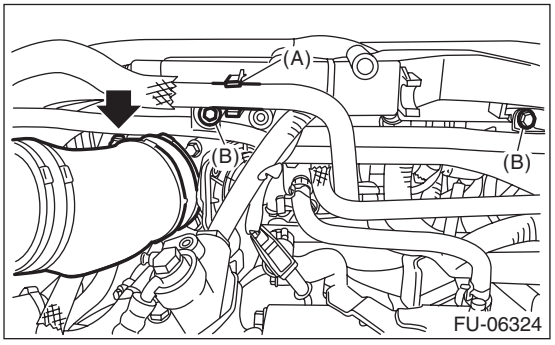

18) Disconnect the connector from the throttle position sensor, and disconnect the preheater hose from the throttle body.

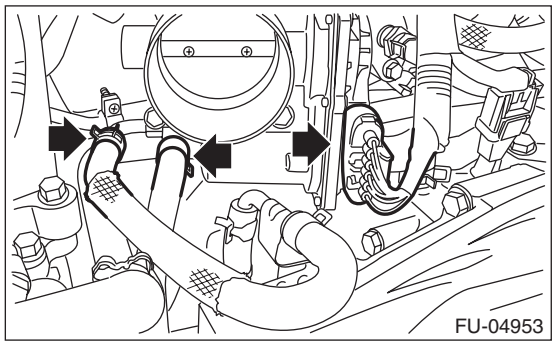

19) Disconnect the vacuum hose from the PCV valve.

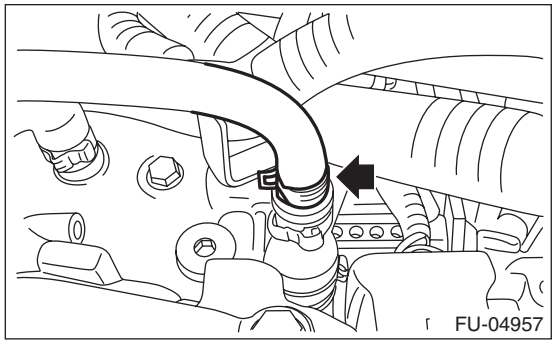

20) Disconnect the vacuum hose from blow-by pipe, and remove the bolt securing the blow-by pipe to the PCV pipe.

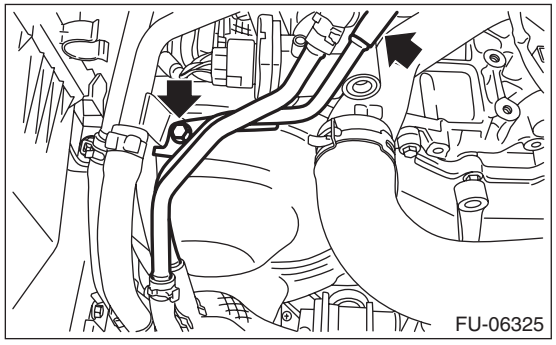

21) Disconnect the vacuum control hose (A) from PCV pipe, and remove the PCV pipe from the intake manifold protector RH.

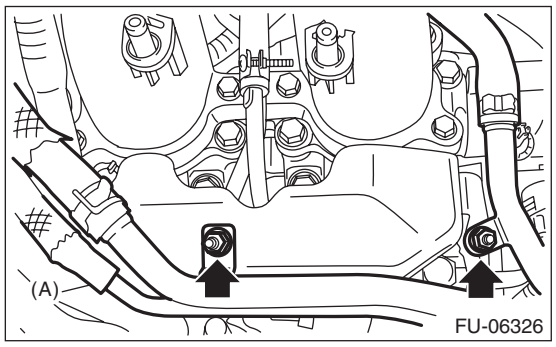

22) Disconnect the bulkhead harness connector from the engine harness connector (brown).

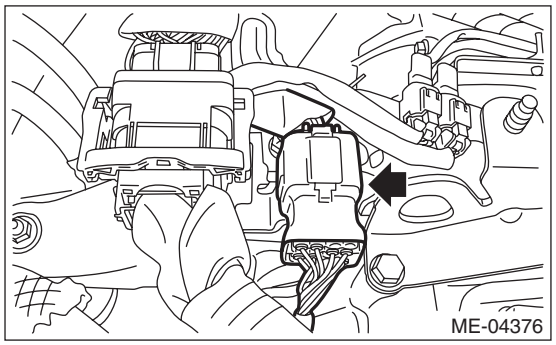

23) Remove the bolt securing the bulkhead harness connector bracket, and disconnect the bulkhead harness connector from the engine harness connector (black).

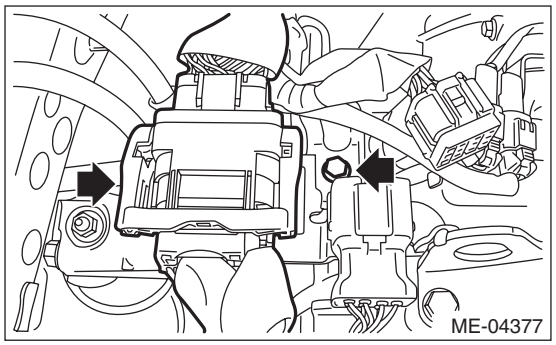

24) Remove the engine harness connector from the engine rear hanger.

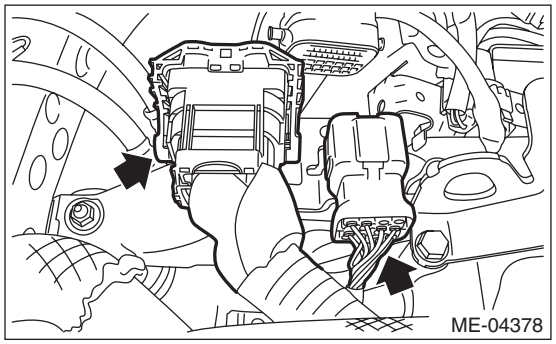

25) Disconnect the connector (A) from the engine coolant temperature sensor, connector (B) from the oil pressure switch, and connector (C) from the crankshaft position sensor.

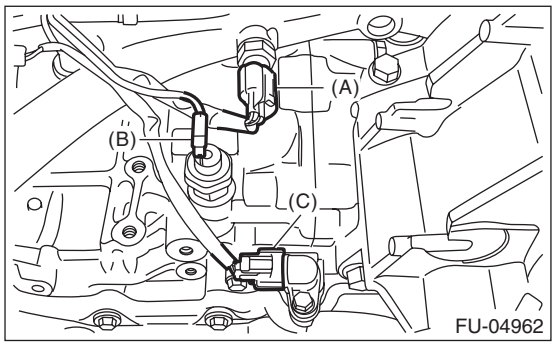

26) Disconnect the connector (A) from front oxygen (A/F) sensor and the connector (B) from the rear oxygen sensor.

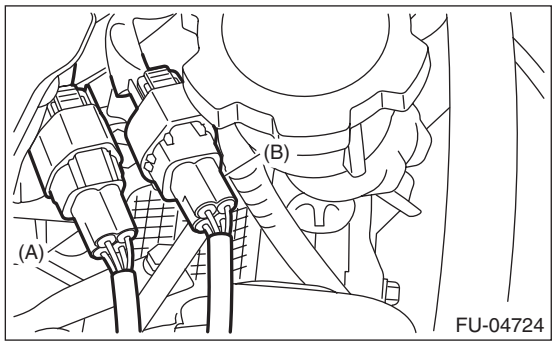

27) Remove the clip which secure the generator cord to the intake manifold protector LH.

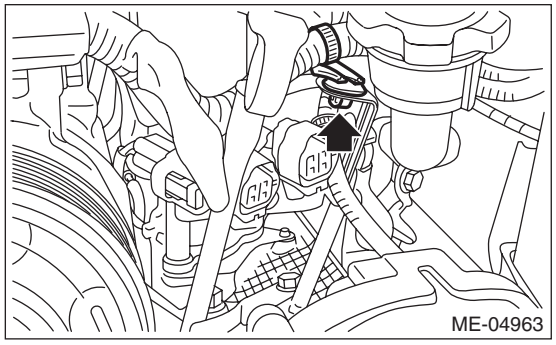

28) Disconnect the connector from the knock sensor.

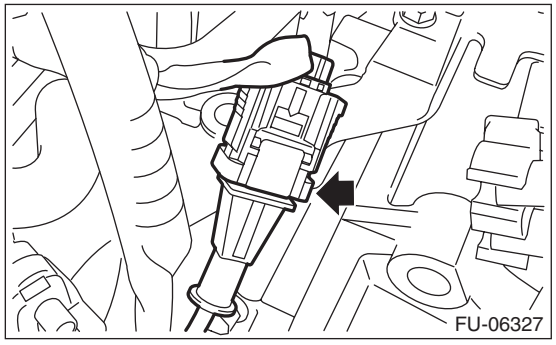

29) Disconnect the connector from the intake camshaft position sensor.

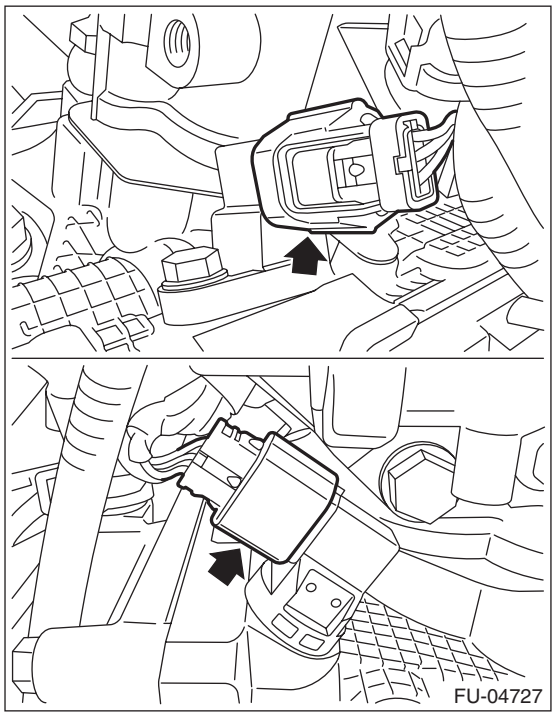

30) Disconnect the connector from the intake oil flow control solenoid valve.

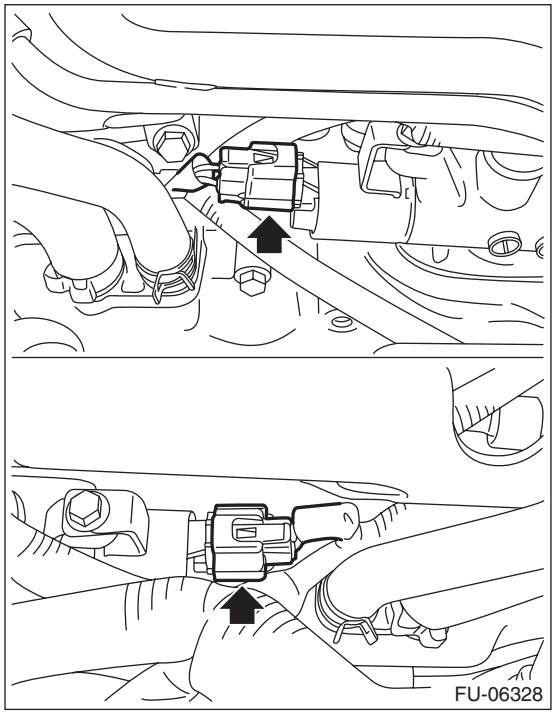

31) Disconnect the connector (A) from oil level switch.

32) Disconnect the connector (B) from ignition coil, and remove the clips (C) and bolt (D) securing the engine harness or oil level switch harness to the rocker cover.

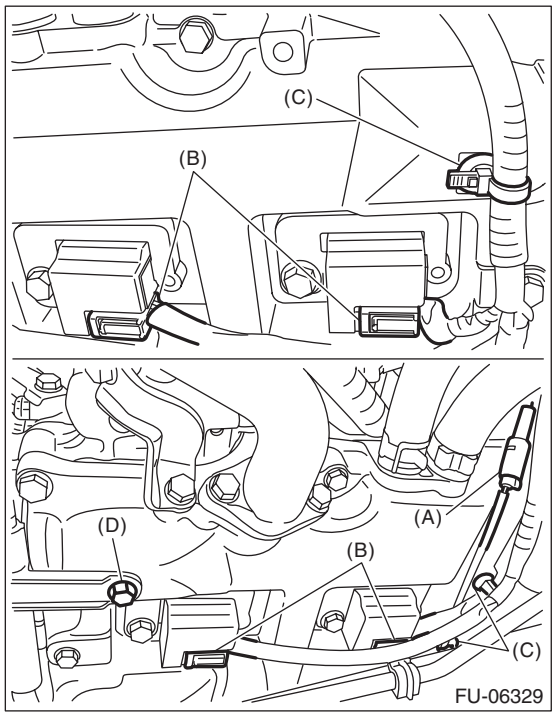

33) Attach ST to the fuel delivery pipe and push ST in the direction of arrow mark to disconnect the fuel delivery hose.
ST 42099AE000 QUICK CONNECTOR RELEASE

CAUTION:
- **Be careful not to spill fuel.**
- **Catch the fuel from hoses using a container or cloth.**

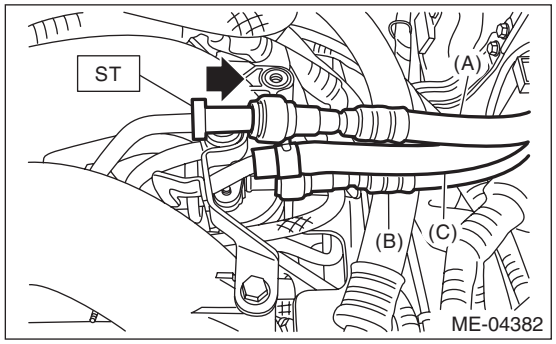

(A) Fuel delivery hose
(B) Fuel return hose
(C) Evaporation hose

34) Disconnect the fuel return hose using the ST.
ST 18371AA000 CONNECTOR REMOVER

CAUTION:
- **Be careful not to spill fuel.**
- **Catch the fuel from hoses using a container or cloth.**

(1) Attach ST to the fuel return pipe as shown in the figure.

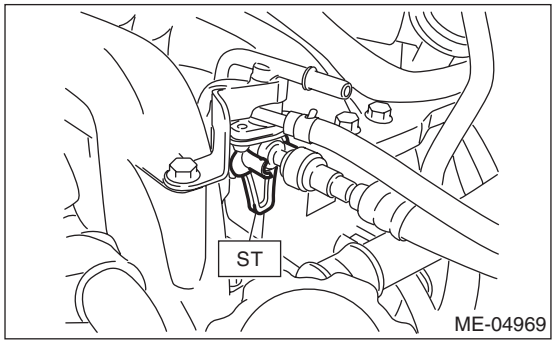

(2) Insert the front side of ST into the quick connector.

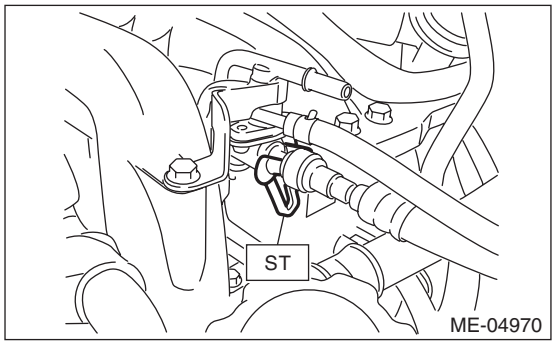

(3) Insert the back side of ST into the quick connector and push ST in the direction of arrow mark to disconnect the fuel return hose.

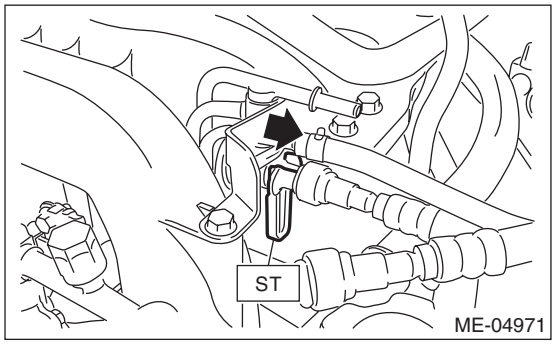

35) Remove the clip and disconnect the evaporation hose from the fuel pipe.

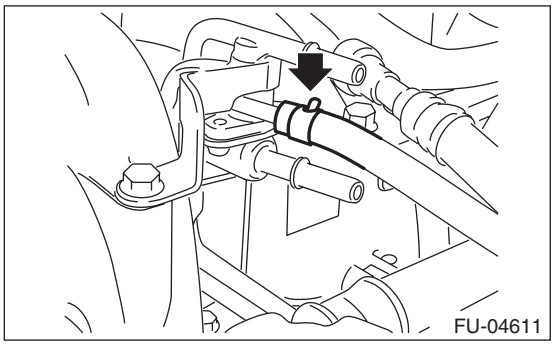

36) Remove the intake manifold from cylinder head.

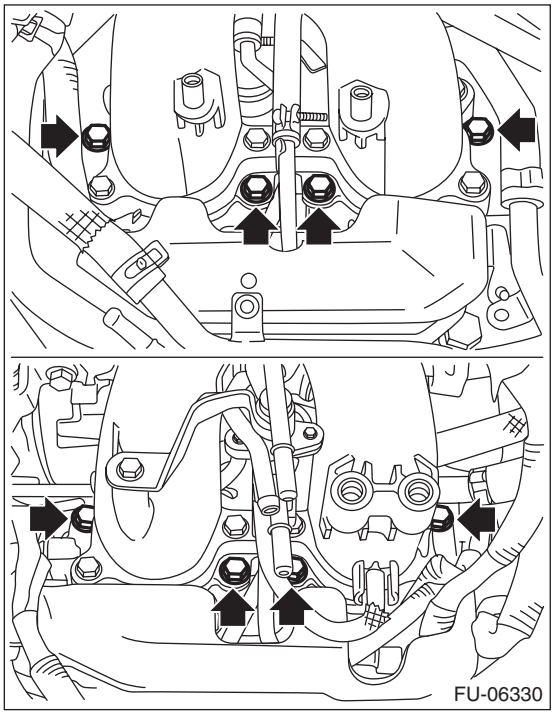

B: INSTALLATION

1) Install the intake manifold onto cylinder heads.

NOTE:
Use a new gasket.

Tightening torque:
25 N·m (2.5 kgf-m, 18.4 ft-lb)

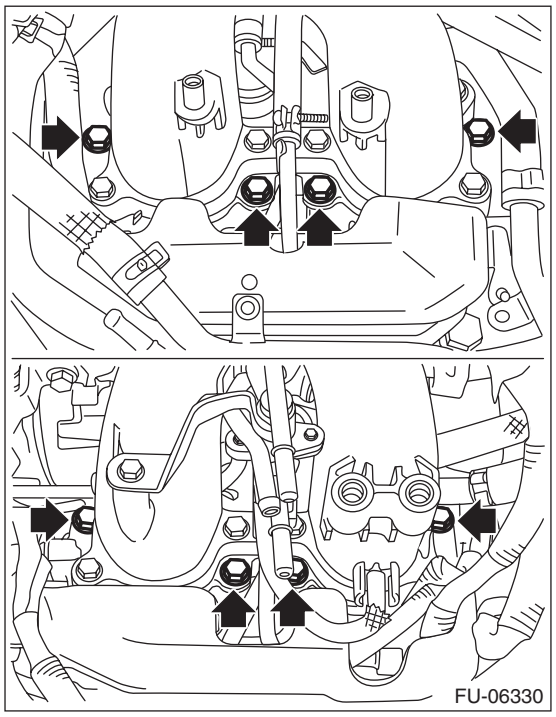

2) Connect the fuel delivery hose, fuel return hose, and evaporation hose.

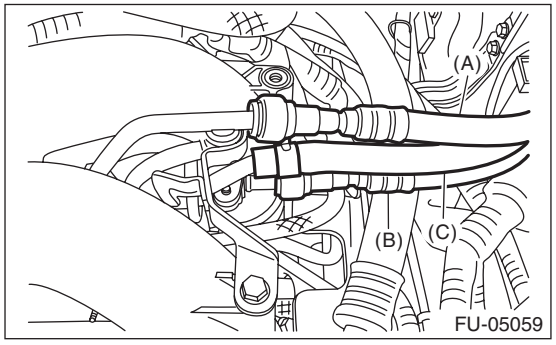

(A) Fuel delivery hose
(B) Fuel return hose
(C) Evaporation hose

3) Connect the connector (A) to the oil level switch.

4) Connect the connector (B) to ignition coil, and secure the engine harness or oil level switch harness to the rocker cover with clips (C) and bolt (D).

Tightening torque:
6.4 N·m (0.7 kgf-m, 4.7 ft-lb)

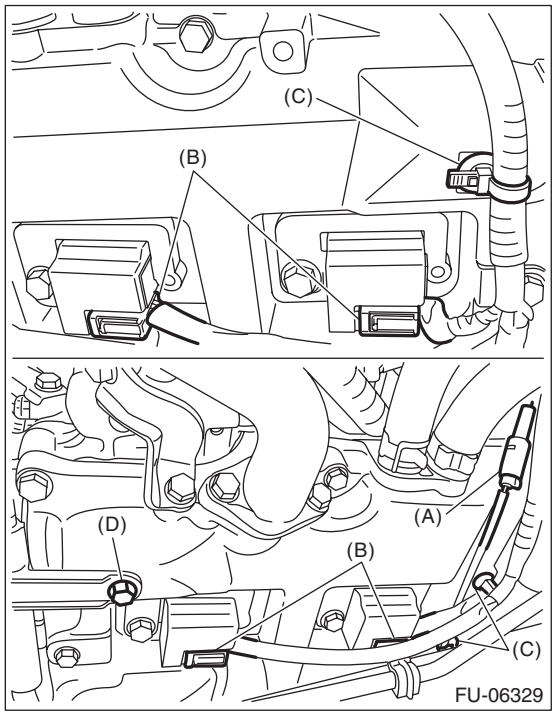

5) Connect the connector to the intake oil flow control solenoid valve.

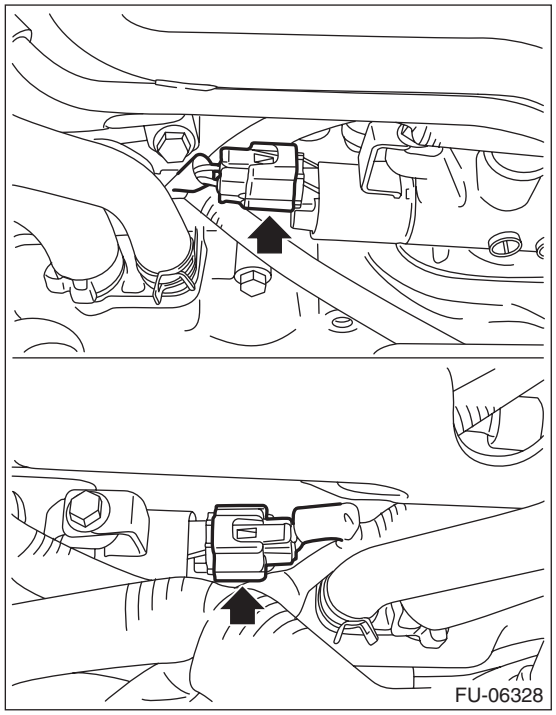

6) Connect the connector to the intake camshaft position sensor.

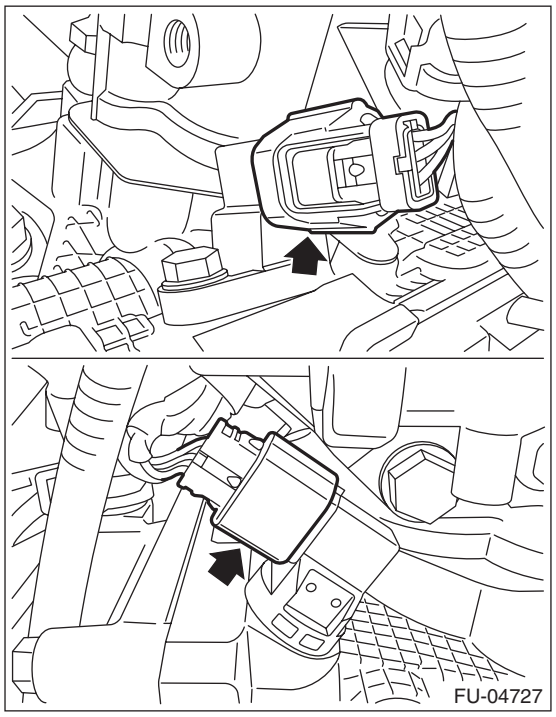

7) Connect the connector to the knock sensor.

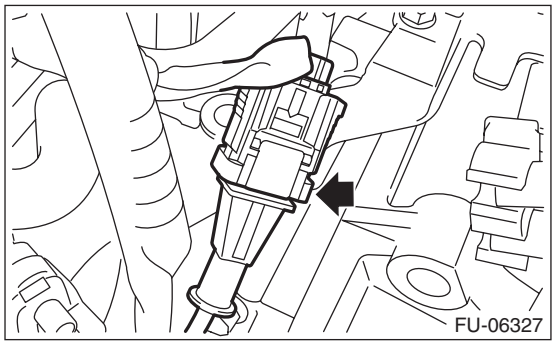

8) Secure the generator cord to the intake manifold protector LH with a clip.

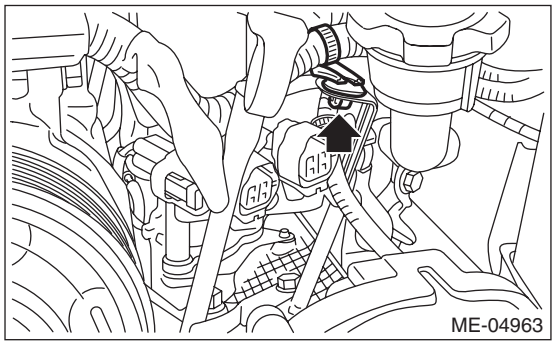

9) Connect the connector (A) to the front oxygen (A/F) sensor and the connector (B) from to the rear oxygen sensor.

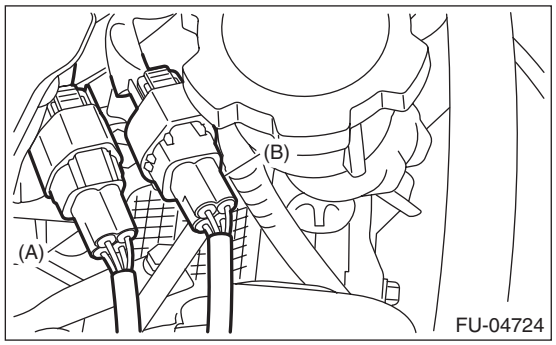

10) Connect the connector (A) to the engine coolant temperature sensor, connector (B) to the oil pressure switch, and the connector (C) to the crankshaft position sensor.

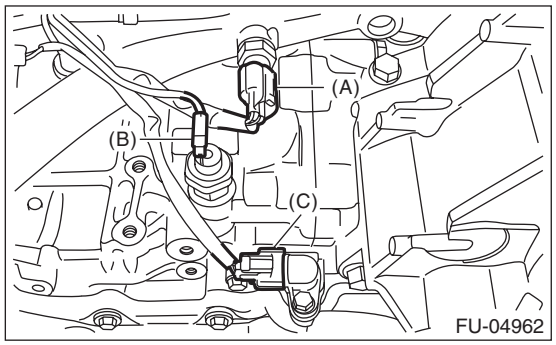

11) Install the engine harness connector to the engine rear hanger.

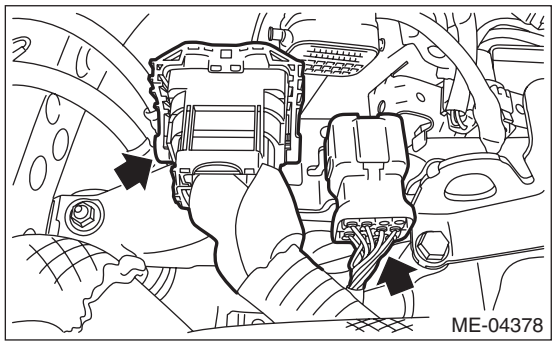

12) Connect the bulkhead harness connector to the engine harness connector (black), and install the bolt securing the bulkhead harness connector bracket.

Tightening torque:
6.4 N·m (0.7 kgf-m, 4.7 ft-lb)

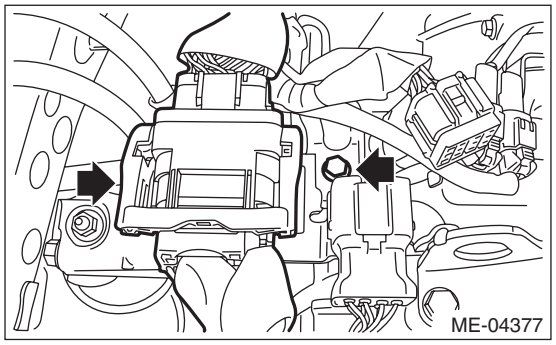

13) Connect the bulkhead harness connector to the engine harness connector (brown).

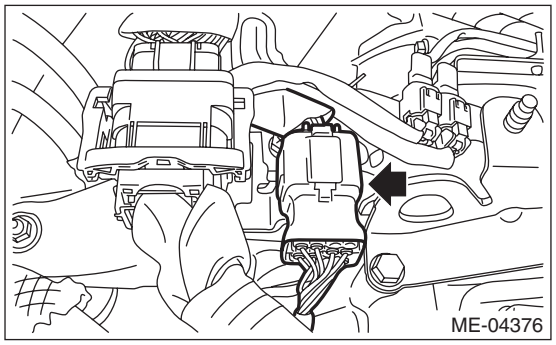

14) Install the PCV pipe to the intake manifold protector RH, and connect vacuum control hose (A) to the PCV pipe.

Tightening torque:
6.4 N·m (0.7 kgf-m, 4.7 ft-lb)

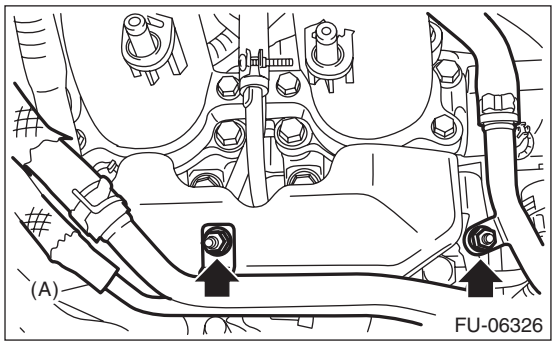

15) Install the blow-by pipe to the PCV pipe, and connect vacuum hose to the blow-by pipe.

Tightening torque:
6.4 N·m (0.7 kgf-m, 4.7 ft-lb)

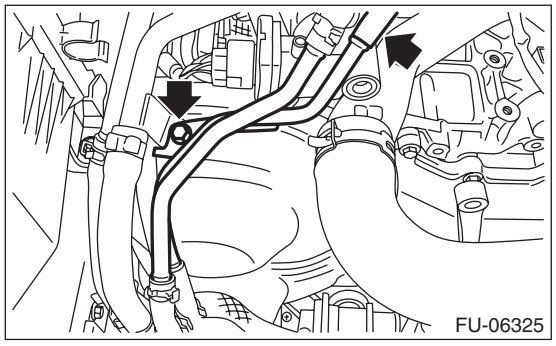

16) Connect the vacuum hose to PCV valve.

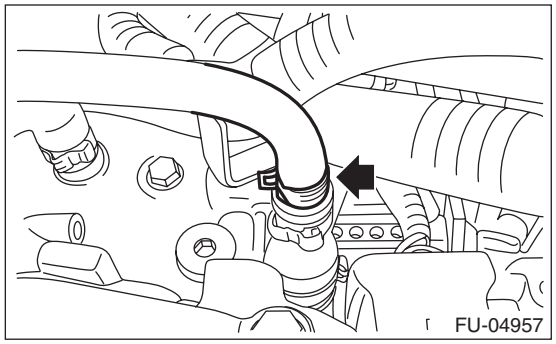

17) Connect the preheater hose to the throttle body, and connect the connector to the throttle position sensor.

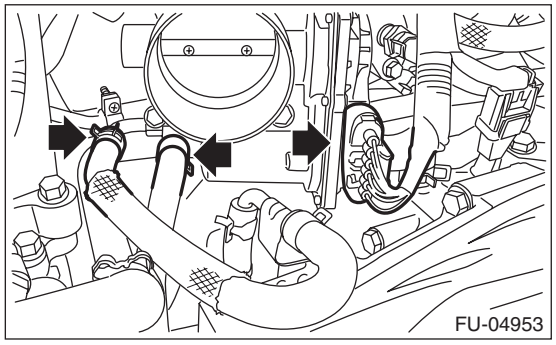

18) Install the intake duct to the throttle body.

NOTE:
When installing the intake duct to the throttle body, align the protrusion (a) on the intake duct to the installation position mark (b) on the throttle body to install.

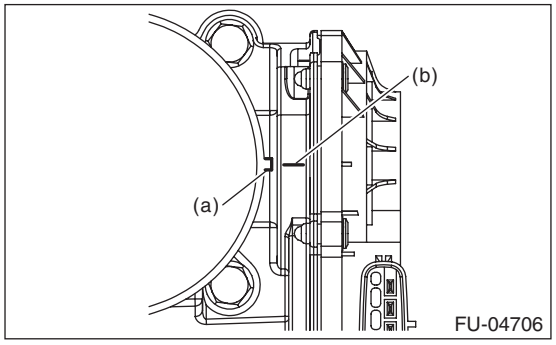

Tightening torque:
3 N·m (0.3 kgf-m, 2.2 ft-lb)

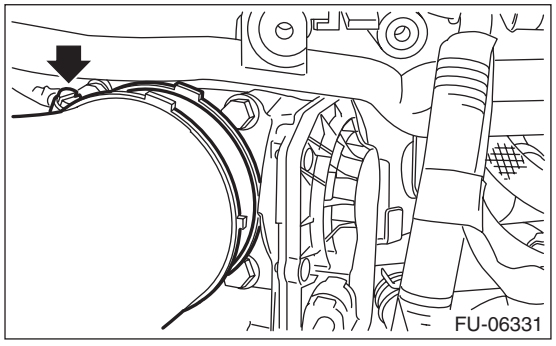

19) Install the bolts which secure the engine harness and PCV pipe to the intake manifold, and install the brake booster vacuum hose to the clip (A).

Tightening torque:
6.4 N·m (0.7 kgf-m, 4.7 ft-lb)

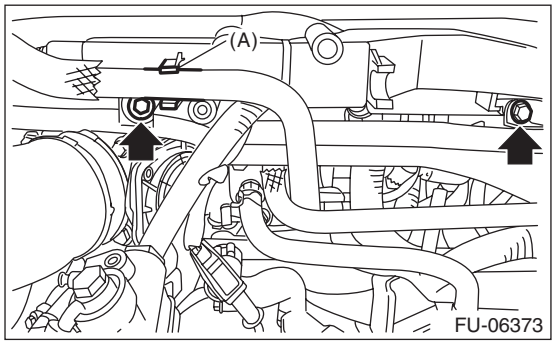

20) Connect the brake booster vacuum hose.

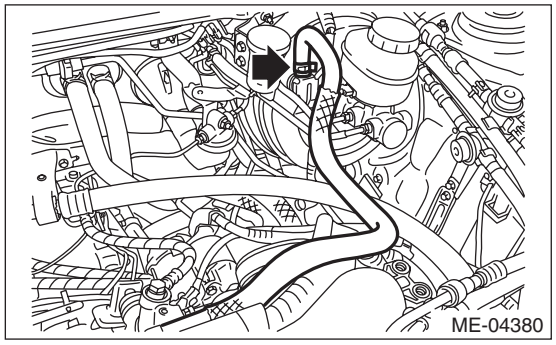

21) Install the A/C pressure hoses to A/C compressor. <Ref. to AC-76, INSTALLATION, Hose and Pipe.>
22) Install the intercooler. <Ref. to IN(H4DOTC)-18, INSTALLATION, Intercooler.>
23) Install the air intake duct. <Ref. to IN(H4DOTC)-12, INSTALLATION, Air Intake Duct.>
24) Lift up the vehicle.
25) Connect the connectors to the wastegate control solenoid valve, and secure the engine harness with clip (A).

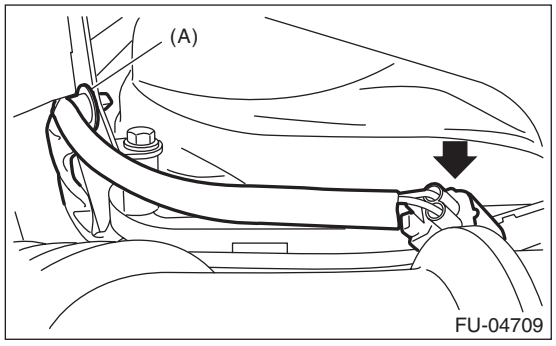

26) Connect the connector (A) to the exhaust camshaft position sensor and the connector (B) to the exhaust oil flow control solenoid valve.

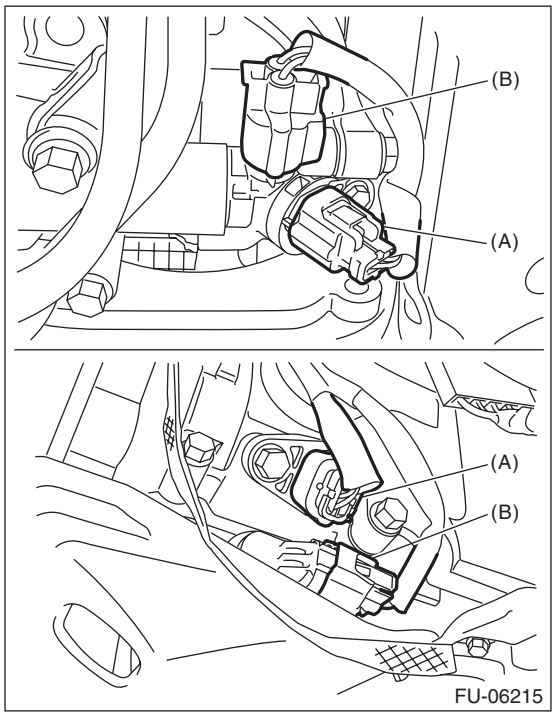

27) Install the under cover. <Ref. to EI-35, INSTALLATION, Front Under Cover.>
28) Lower the vehicle.
29) Connect the battery ground terminal.

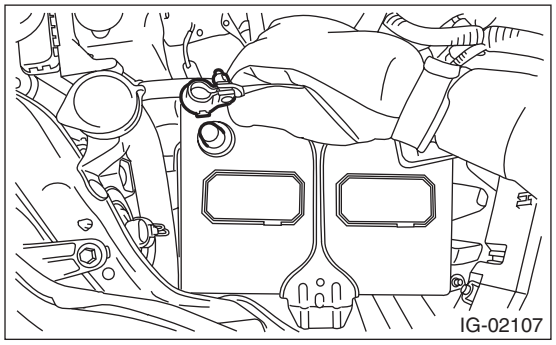

30) Fill engine coolant. <Ref. to CO(H4DOTC)-14, FILLING OF ENGINE COOLANT, REPLACEMENT, Engine Coolant.>
31) Charge the A/C system with refrigerant. <Ref. to AC-25, PROCEDURE, Refrigerant Charging Procedure.>
32) Install the collector cover.

C: DISASSEMBLY

1) Remove the intake manifold protector RH from intake manifold.

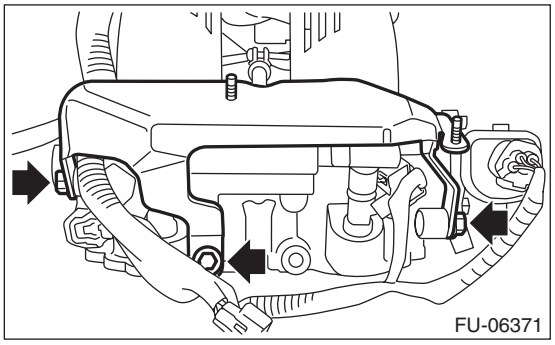

2) Remove the gray connector (A), the black connector (B), and the clip (C) which holds the engine harness from the intake manifold protector LH.

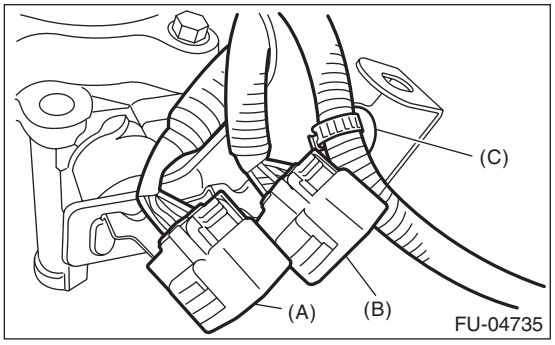

3) Remove the engine ground terminal from the intake manifold protector LH, and remove the intake manifold protector LH from the intake manifold.

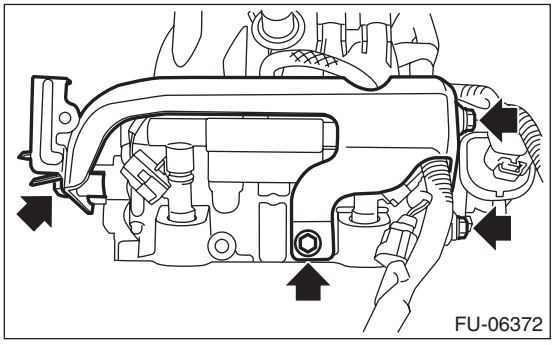

4) Remove the filter assembly.

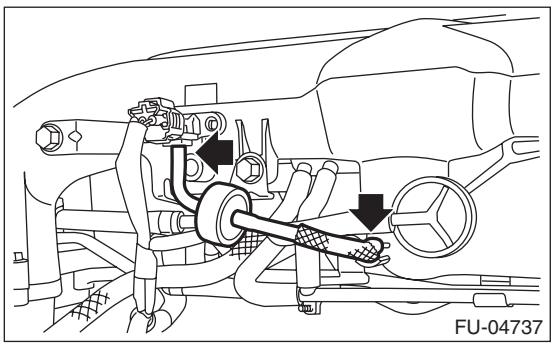

5) Disconnect the vacuum hose from the intake manifold and fuel delivery pipe.

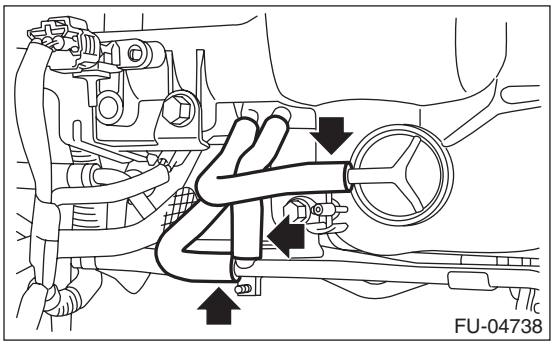

6) Disconnect the connector from the manifold absolute pressure sensor, and remove the solenoid valve bracket assembly from the intake manifold.

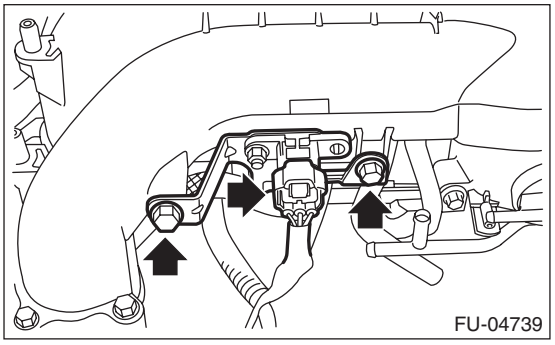

7) Disconnect the connectors from the purge control solenoid valves 1 and 2.

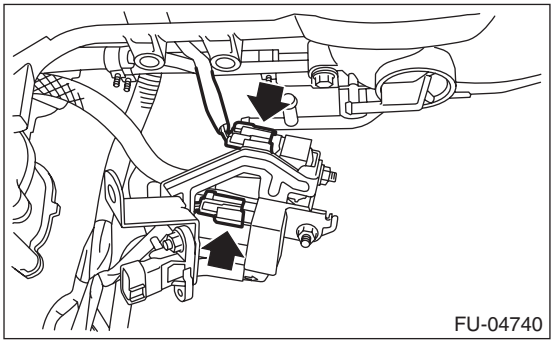

8) Remove the throttle body from the intake manifold.

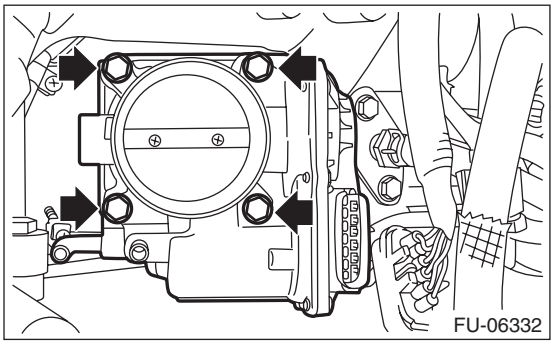

9) Disconnect the connector from the fuel injector and tumble generator valve assembly, and remove the engine harness from the intake manifold.

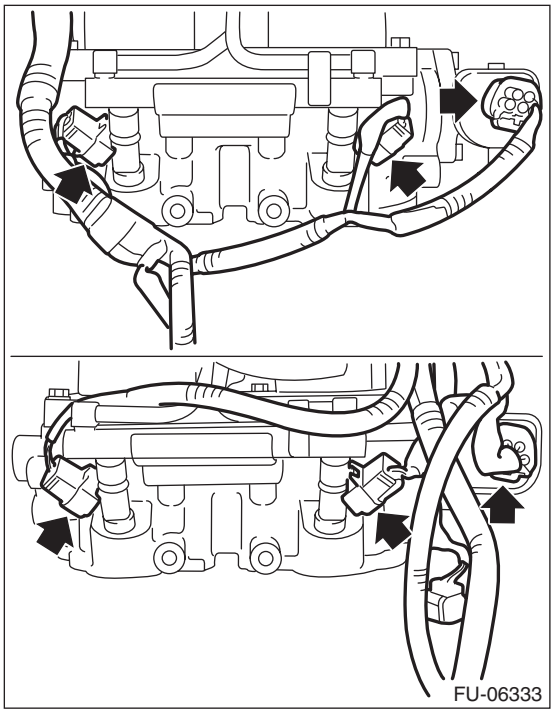

10) Remove the bolts which secure the fuel delivery pipe assembly to the intake manifold, and disconnect the pressure regulator vacuum hose from the intake manifold.

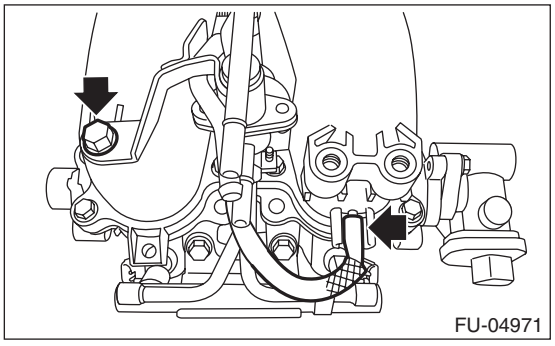

11) Remove the bolts which hold fuel pipe onto intake manifold.

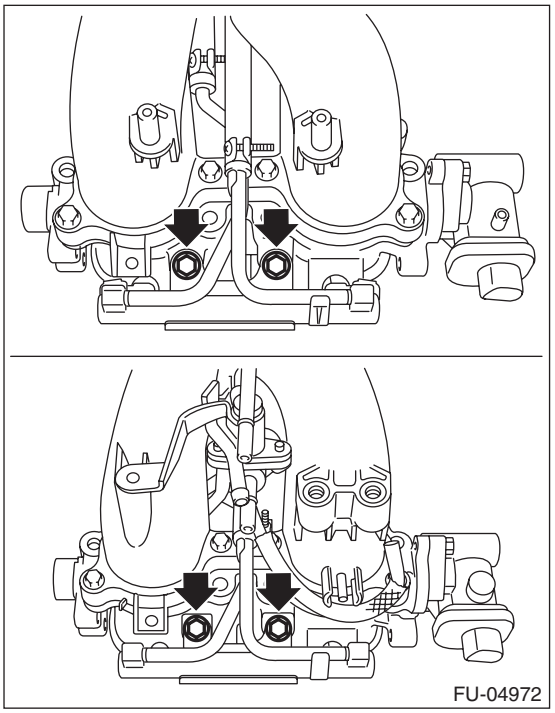

12) Remove the fuel injector.

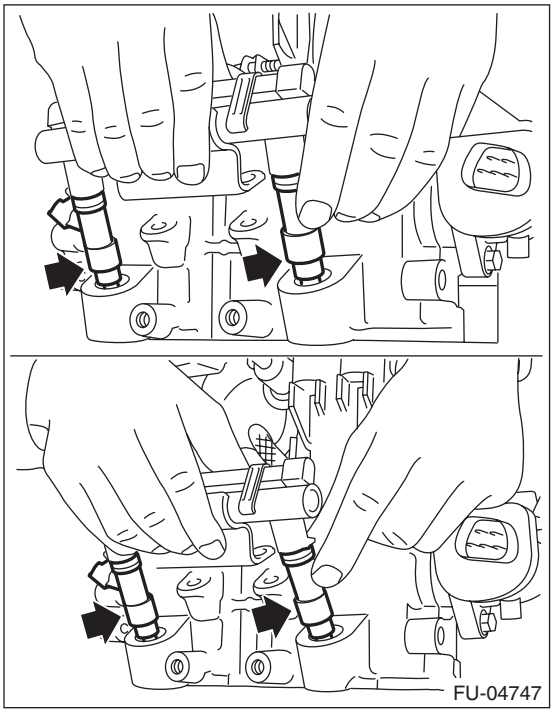

13) Disconnect vacuum hose (A), vacuum control hose (B) and brake booster vacuum hose (C) from the intake manifold.

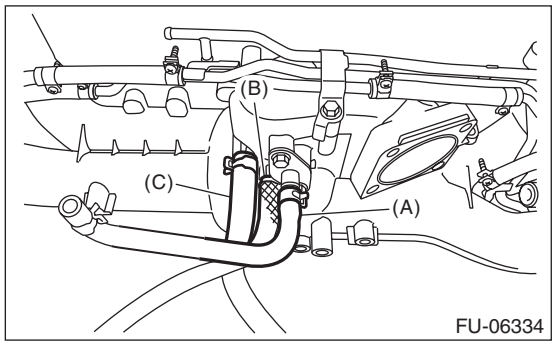

14) Remove the bolts which secure the fuel delivery pipe to the intake manifold, loosen the clamps which hold the fuel hose to the fuel delivery pipe, and remove the fuel delivery pipe and fuel pipe.

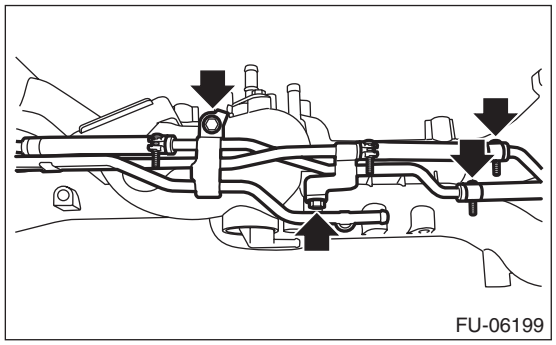

15) Remove the nipple from the intake manifold.

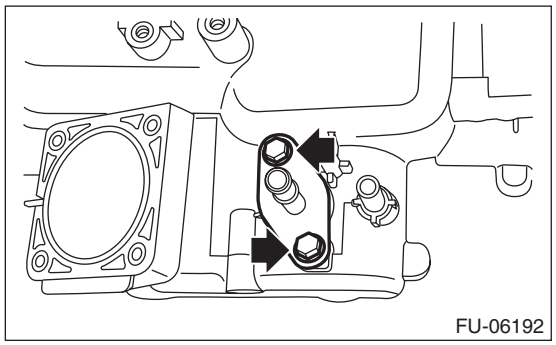

16) Remove the tumble generator valve assembly from the intake manifold.

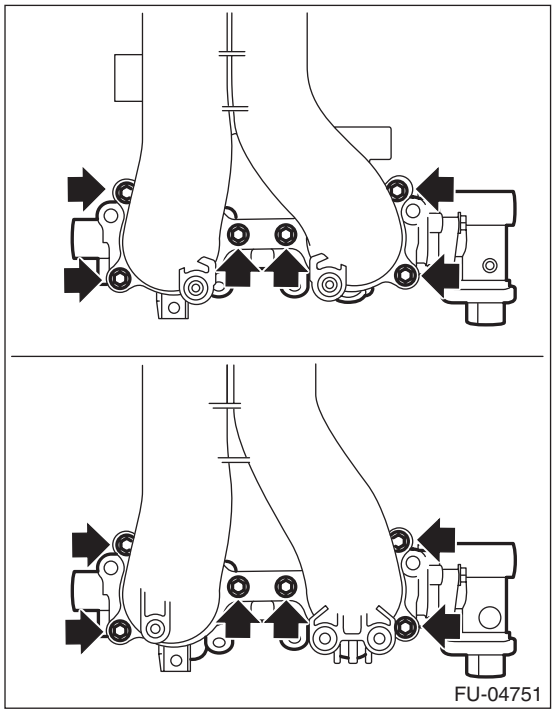

D: ASSEMBLY

1) Install the tumble generator valve assembly onto intake manifold.

NOTE:
Use new O-rings.

Tightening torque:
8.3 N·m (0.8 kgf-m, 6.1 ft-lb)

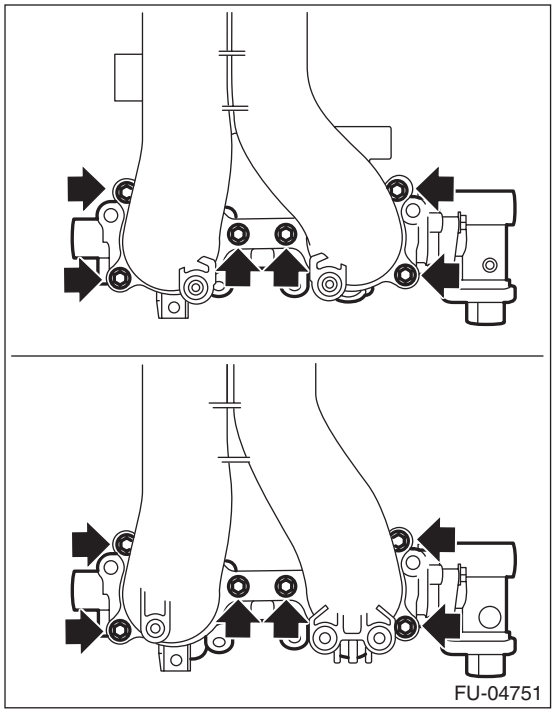

2) Install the nipple to the intake manifold.

NOTE:
Use new O-rings.

Tightening torque:
7.8 N·m (0.8 kgf-m, 5.8 ft-lb)

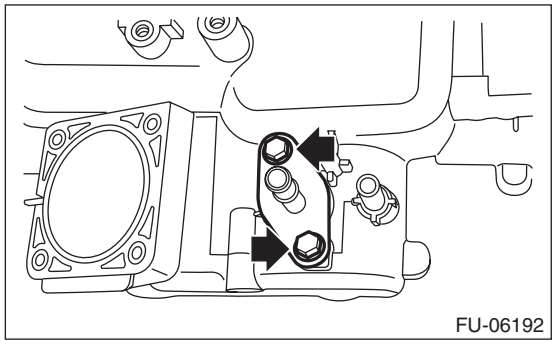

3) Set the fuel delivery pipe and fuel pipe, and connect the fuel hose to the fuel delivery pipe. <Ref. to FU(H4DOTC)-93, CONNECTING THE FUEL DELIVERY HOSE, FUEL RETURN HOSE AND FUEL HOSE, INSTALLATION, Fuel Delivery, Return and Evaporation Lines.>

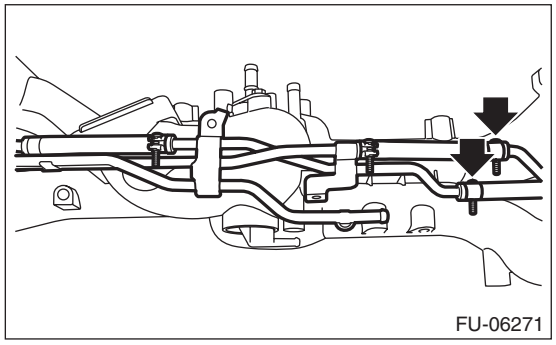

4) Install the fuel delivery pipe to the intake manifold.

Tightening torque:
6.4 N·m (0.7 kgf-m, 4.7 ft-lb)

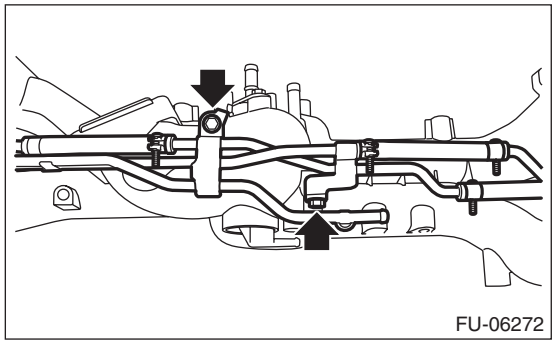

5) Connect vacuum hose (A), vacuum control hose (B) and brake booster vacuum hose (C) to the intake manifold.

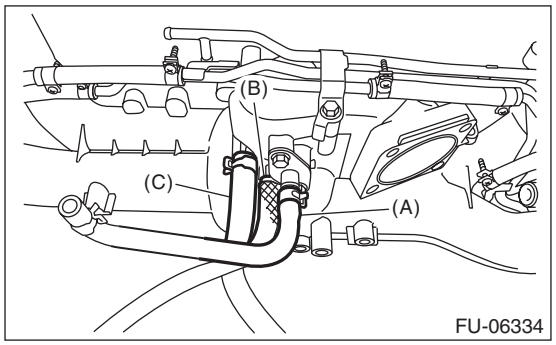

6) Install the fuel injector.

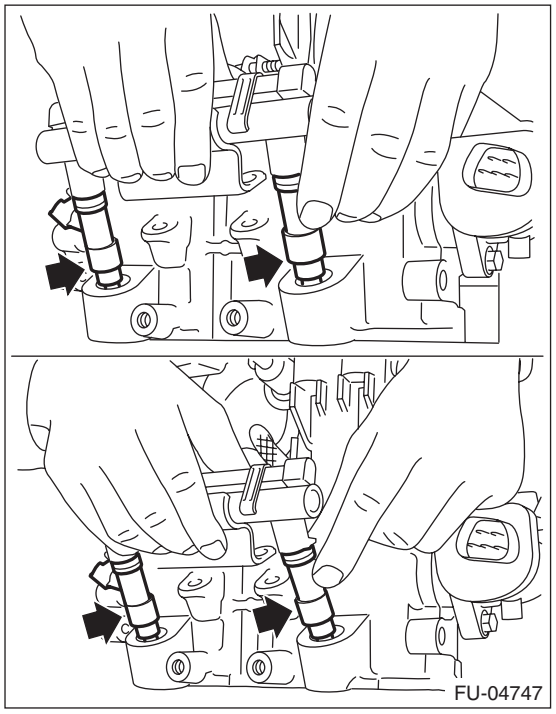

7) Install the bolts which secure fuel pipe to the intake manifold.

Tightening torque:
19 N·m (1.9 kgf-m, 14.0 ft-lb)

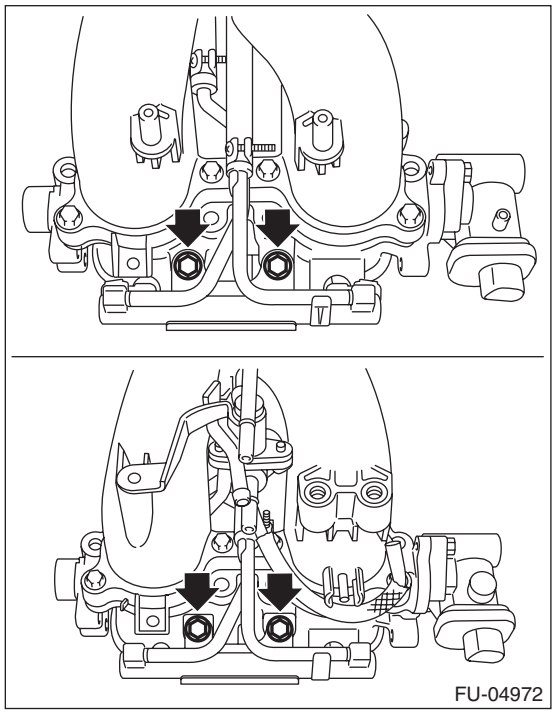

8) Install the bolts which secure fuel delivery pipe to the intake manifold, and connect the pressure regulator vacuum hose to the intake manifold.

Tightening torque:
6.4 N·m (0.7 kgf-m, 4.7 ft-lb)

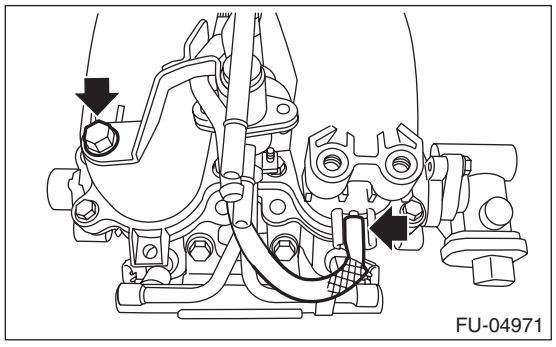

9) Set the engine harness to the intake manifold, and connect the connector to the fuel injector and tumble generator valve assembly.

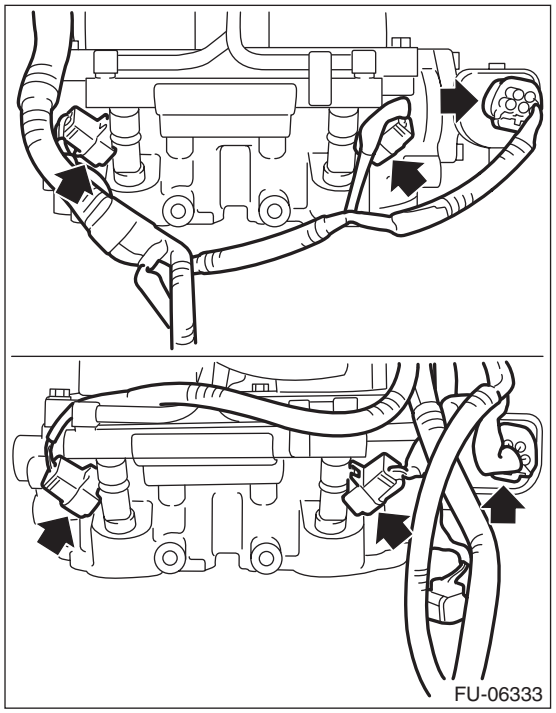

10) Install the throttle body to the intake manifold.

NOTE:
Use new O-rings.

Tightening torque:
8 N·m (0.8 kgf-m, 5.9 ft-lb)

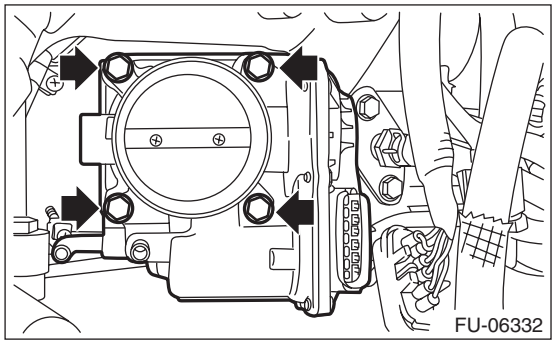

11) Connect the connectors to the purge control solenoid valves 1 and 2.

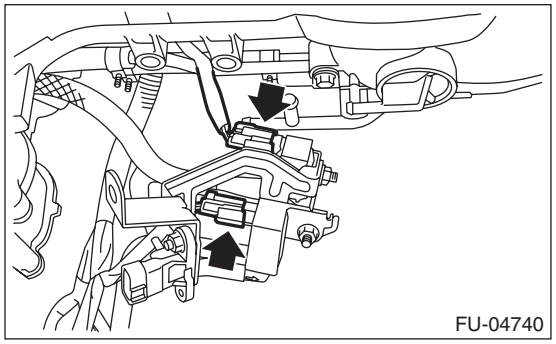

12) Install the solenoid valve bracket assembly to the intake manifold, and connect the connector to the manifold absolute pressure sensor.

Tightening torque:
19 N·m (1.9 kgf-m, 14.0 ft-lb)

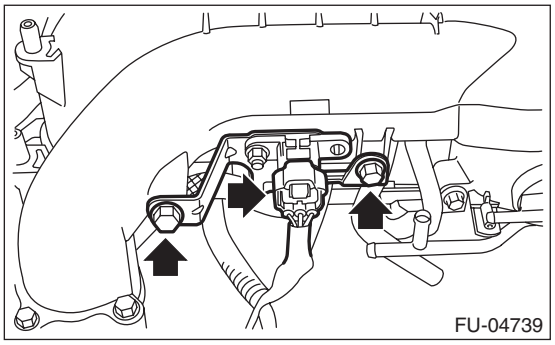

13) Connect the vacuum hose to the intake manifold and fuel delivery pipe.

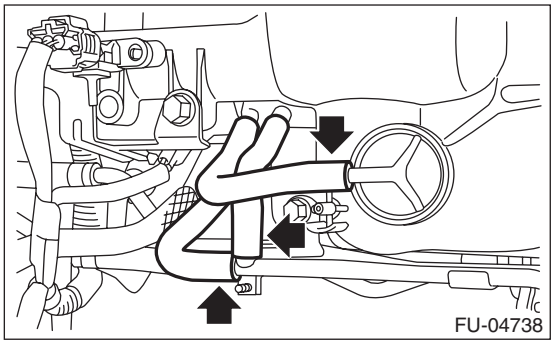

14) Install the filter assembly.

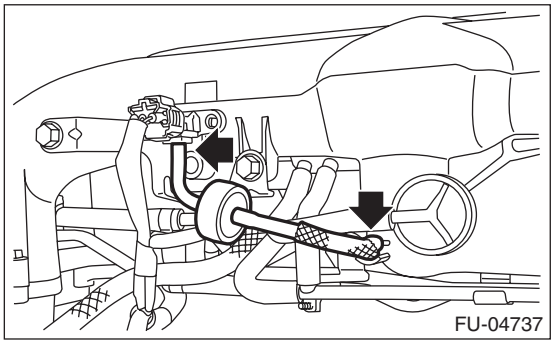

15) Install the intake manifold protector LH to the intake manifold, and install the engine ground terminal to the intake manifold protector.

NOTE:
Route the gray connector and black connector under the intake manifold protector as shown in the figure.

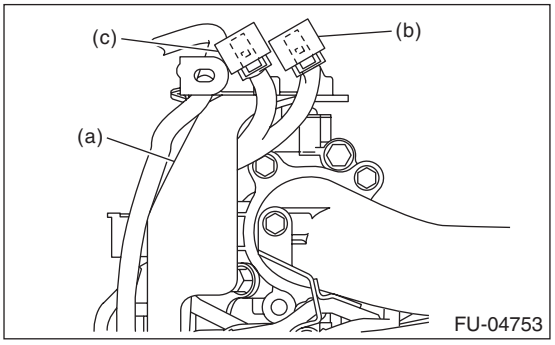

(a) Intake manifold protector
(b) Gray connector
(c) Black connector

Tightening torque:
19 N·m (1.9 kgf-m, 14.0 ft-lb)

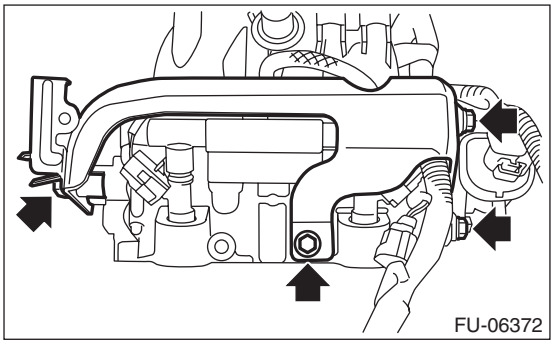

16) Install the gray connector (A), the black connector (B), and the clip (C) which holds the engine harness to the intake manifold protector LH.

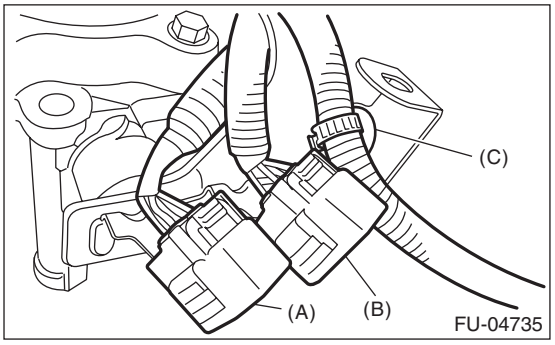

17) Install the intake manifold protector RH to the intake manifold.

Tightening torque:
19 N·m (1.9 kgf-m, 14.0 ft-lb)

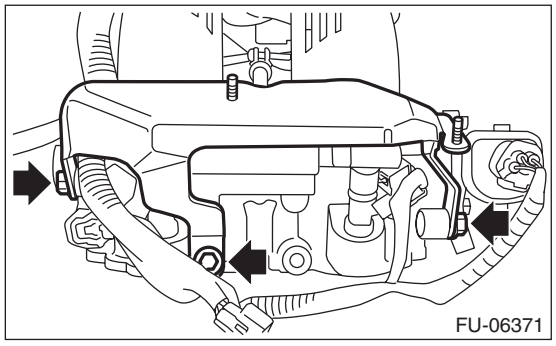

E: INSPECTION

1) Check that the intake manifold and fuel pipe have no deformation, cracks and other damages.
2) Check that the hose has no cracks, damage or loose part.

4. Engine Coolant Temperature Sensor

A: REMOVAL

1) Remove the collector cover.
2) Disconnect the ground cable from battery.

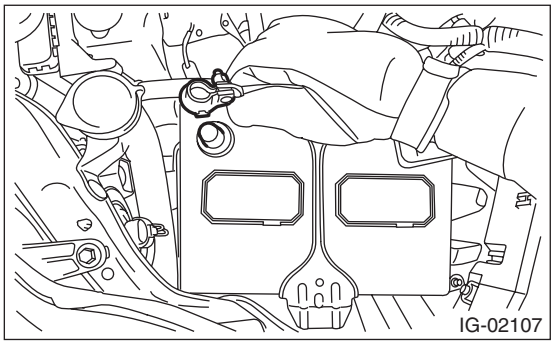

3) Remove the generator. <Ref. to SC(H4SO)-18, REMOVAL, Generator.>
4) Drain engine coolant. <Ref. to CO(H4DOTC)-14, DRAINING OF ENGINE COOLANT, REPLACEMENT, Engine Coolant.>
5) Disconnect the connector (A) from the engine coolant temperature sensor, and remove the engine coolant temperature sensor.

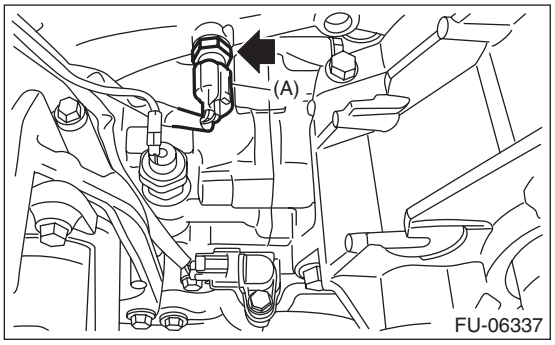

B: INSTALLATION

Install in the reverse order of removal.

NOTE:
Use a new gasket.

Tightening torque:
18 N·m (1.8 kgf-m, 13.3 ft-lb)

C: INSPECTION

1) Check that the engine coolant temperature sensor has no deformation, cracks or other damages.
2) Immerse the engine coolant temperature sensor and a thermometer in water.

CAUTION:
Take care not to allow water to get into the engine coolant temperature sensor connector. Completely remove any water inside.

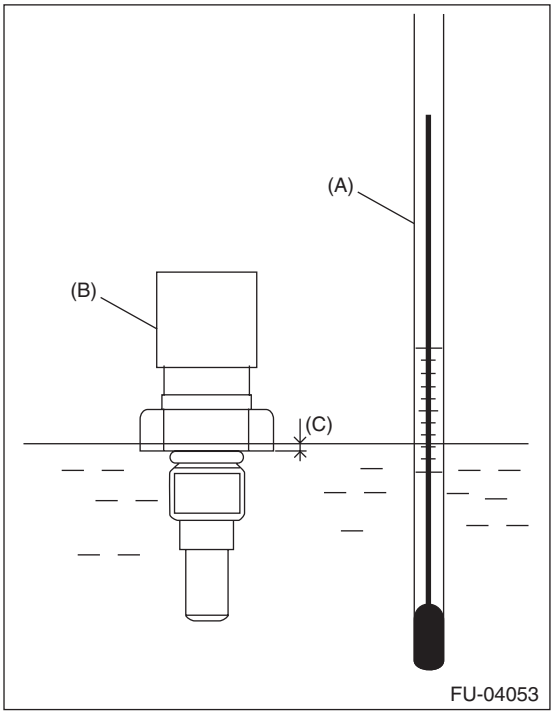

(A) Thermometer
(B) Engine coolant temperature sensor
(C) Hexagonal part height: To approx. $^{1}/_{3}$

3) Raise water temperature gradually, measure the resistance between the engine coolant temperature sensor terminals when the temperature is 20°C (68°F) and 80°C (176°F).

NOTE:
Agitate the water for even temperature distribution.

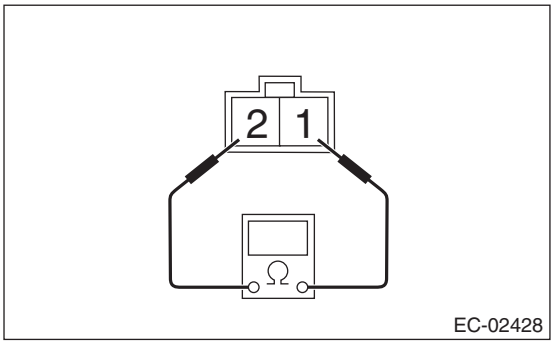

Water temperature	Terminal No.	Standard
20°C (68°F)	1 and 2	2.45±0.2 kΩ
80°C (176°F)		0.318±0.013 kΩ

5. Crankshaft Position Sensor

A: REMOVAL

1) Remove the collector cover.
2) Disconnect the ground cable from battery.

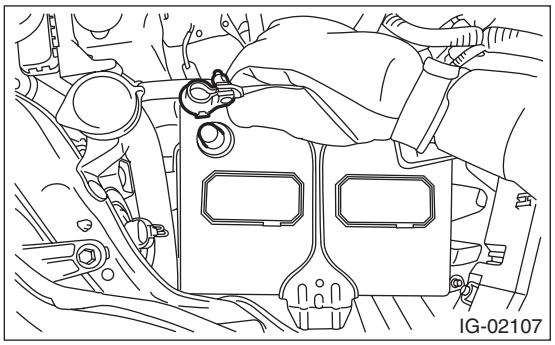

3) Remove the bolt which secures crankshaft position sensor to oil pump.

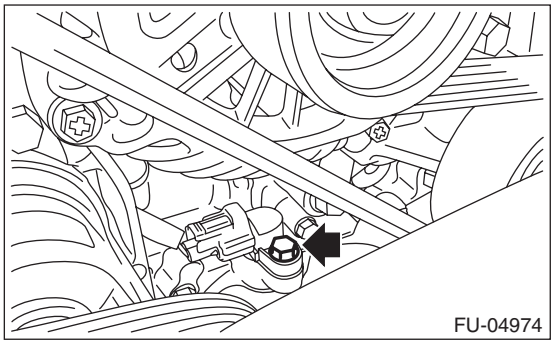

4) Remove the crankshaft position sensor, and disconnect the connector from the crankshaft position sensor.

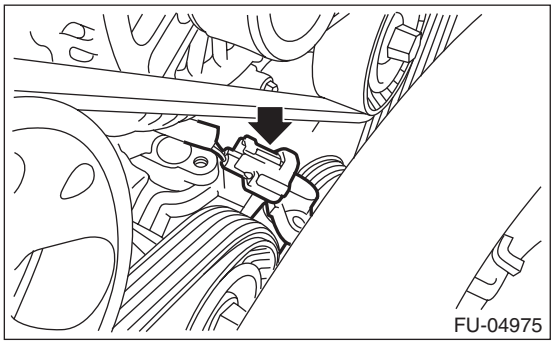

B: INSTALLATION

Install in the reverse order of removal.

Tightening torque:
6.4 N·m (0.7 kgf-m, 4.7 ft-lb)

C: INSPECTION

1. CRANKSHAFT POSITION SENSOR (METHOD WITH CIRCUIT TESTER)

1) Measure the resistance between crankshaft position sensor terminals.

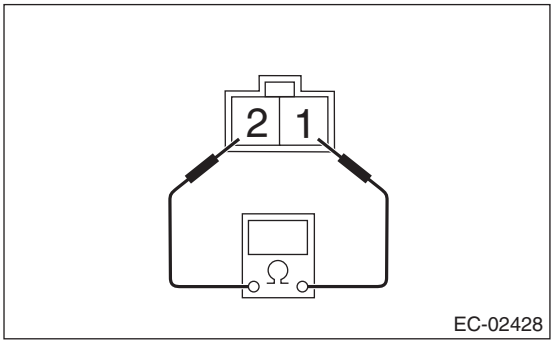

Terminal No.	Standard
1 and 2	2.04±0.204 kΩ

2. CRANKSHAFT POSITION SENSOR (METHOD WITH OSCILLOSCOPE)

1) Prepare an oscilloscope.
2) Remove the glove box lid assembly. <Ref. to EI-66, REMOVAL, Glove Box.>
3) Connect the probe to ECM connector.

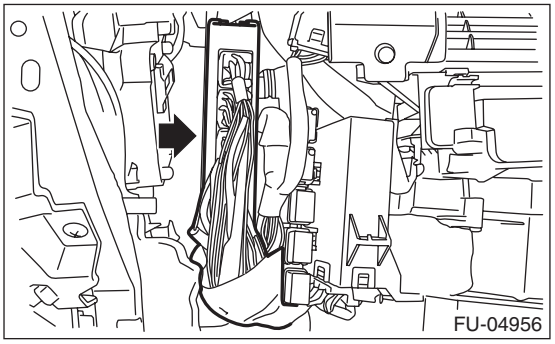

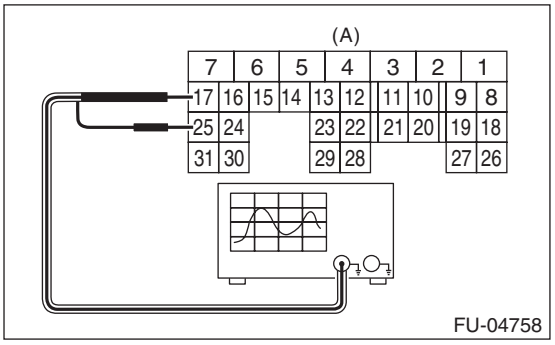

(A) To ECM connector

Terminal No.	Probe
17	+
25	–

4) Start the engine and let it idle.

5) Check that the pattern is the same as the waveform and voltage shown below.

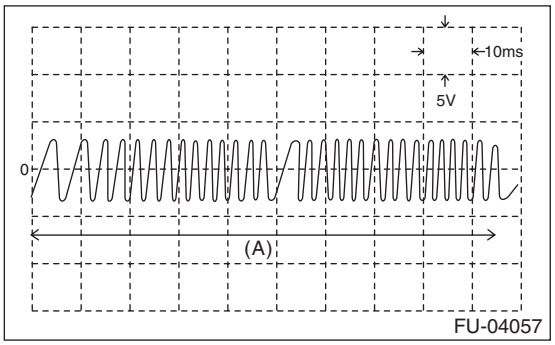

(A) One crankshaft rotation

6) After inspection, install the related parts in the reverse order of removal.

3. OTHER INSPECTIONS

Check that the crankshaft position sensor has no deformation, cracks or other damages.

6. Camshaft Position Sensor

A: REMOVAL

1. INTAKE SIDE

• Camshaft position sensor RH

1) Disconnect the ground cable from battery.

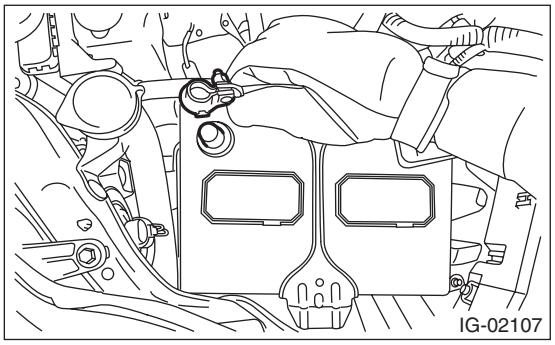

2) Disconnect the connector (A) from the camshaft position sensor RH, and remove the camshaft position sensor RH.

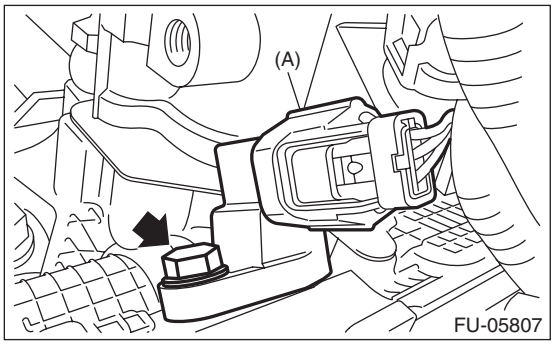

• Camshaft position sensor LH

1) Disconnect the ground cable from battery.

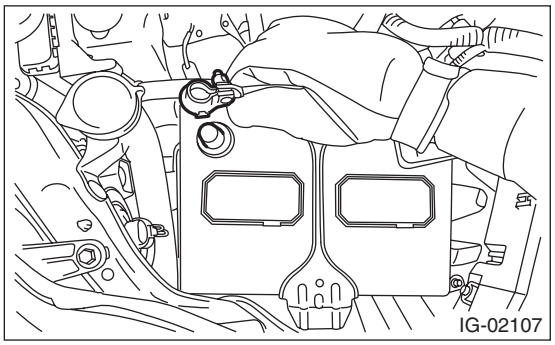

2) Remove the intake manifold. <Ref. to FU(H4DOTC)-18, REMOVAL, Intake Manifold.>

3) Remove the camshaft position sensor LH.

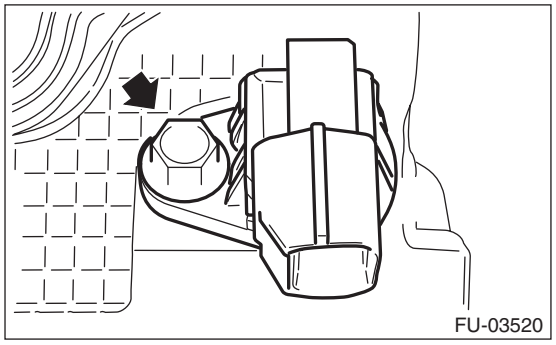

2. EXHAUST SIDE

1) Disconnect the ground cable from battery.

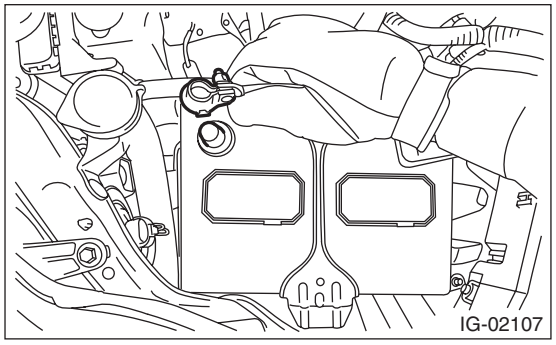

2) Lift up the vehicle.

3) Remove the under cover. <Ref. to EI-35, REMOVAL, Front Under Cover.>

4) Disconnect the connector (A) from the camshaft position sensor, and remove the camshaft position sensor.

• RH side

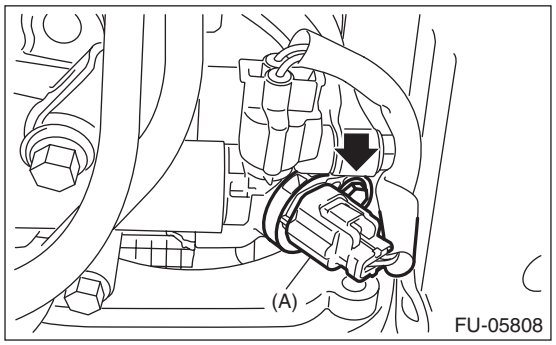

• LH side

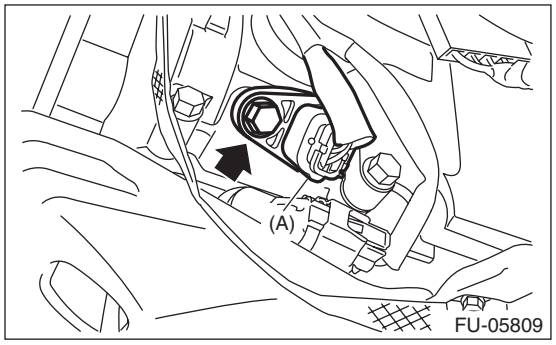

B: INSTALLATION

1. INTAKE SIDE

Install in the reverse order of removal.

Tightening torque:
6.4 N·m (0.7 kgf-m, 4.7 ft-lb)

2. EXHAUST SIDE

Install in the reverse order of removal.

Tightening torque:
6.4 N·m (0.7 kgf-m, 4.7 ft-lb)

C: INSPECTION

1. CAMSHAFT POSITION SENSOR (METHOD WITH OSCILLOSCOPE)

1) Prepare an oscilloscope.
2) Remove the glove box lid assembly. <Ref. to EI-66, REMOVAL, Glove Box.>
3) Connect the probe to ECM connector.

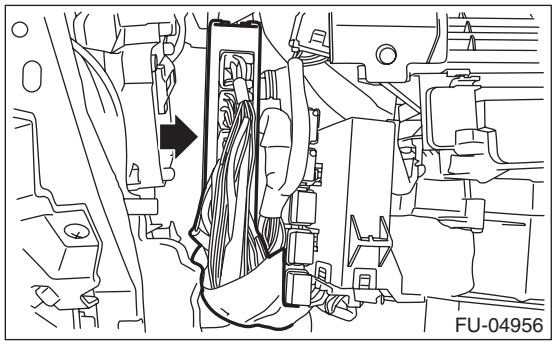

- Intake camshaft position sensor

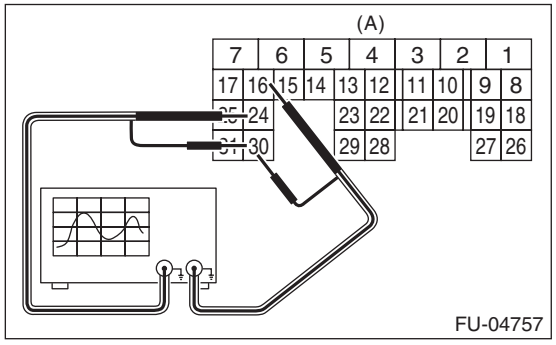

(A) To ECM connector

- Exhaust camshaft position sensor

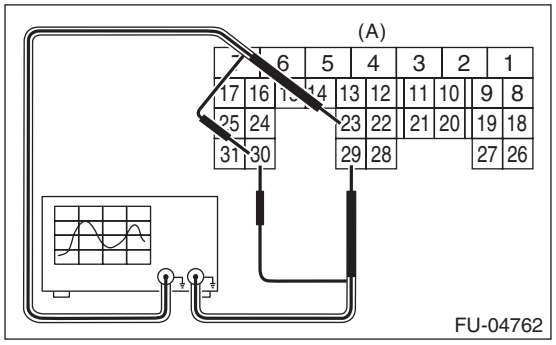

(A) To ECM connector

Camshaft position sensor		Terminal No.	Probe
Intake	RH	24	+
	LH	16	+
Exhaust	RH	23	+
	LH	29	+
RH and LH		30	–

4) Start the engine and let it idle.
5) Check that the pattern is the same as the waveform and voltage shown below.

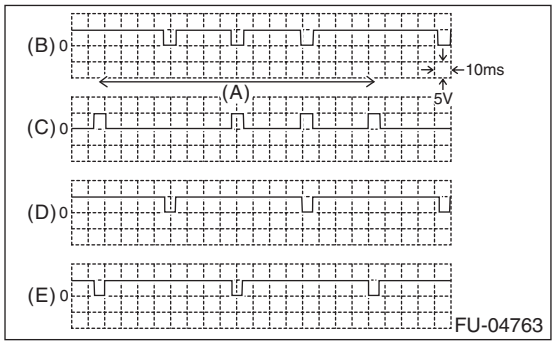

(A) One camshaft rotation
(B) Intake camshaft position sensor RH
(C) Intake camshaft position sensor LH
(D) Exhaust camshaft position sensor RH
(E) Exhaust camshaft position sensor LH

6) After inspection, install the related parts in the reverse order of removal.

2. OTHER INSPECTIONS

Check that the camshaft position sensor has no deformation, cracks or other damages.

7. Knock Sensor

A: REMOVAL

1) Remove the collector cover.
2) Disconnect the ground cable from battery.

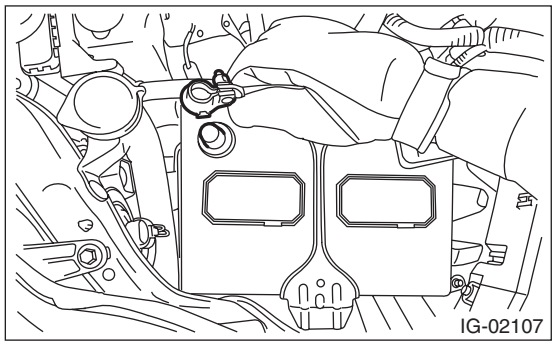

3) Remove the intercooler. <Ref. to IN(H4DOTC)-17, REMOVAL, Intercooler.>
4) Disconnect the connector from the knock sensor.

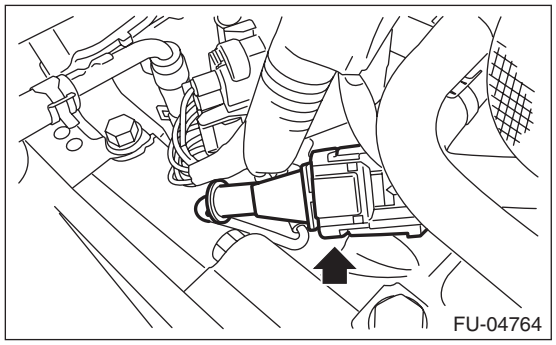

5) Remove the knock sensor from cylinder block.

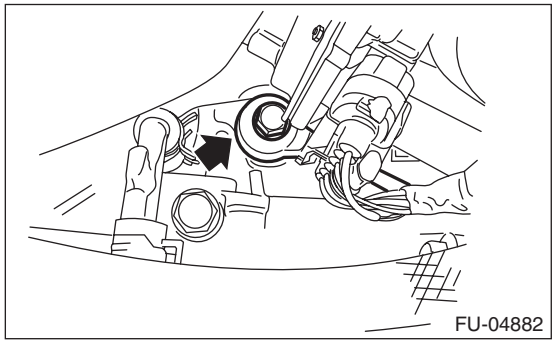

B: INSTALLATION

1) Install the knock sensor to the cylinder block.

NOTE:
The portion of the knock sensor cord that is pulled out must be positioned at a 60° angle relative to the engine rear.

Tightening torque:
24 N·m (2.4 kgf-m, 17.7 ft-lb)

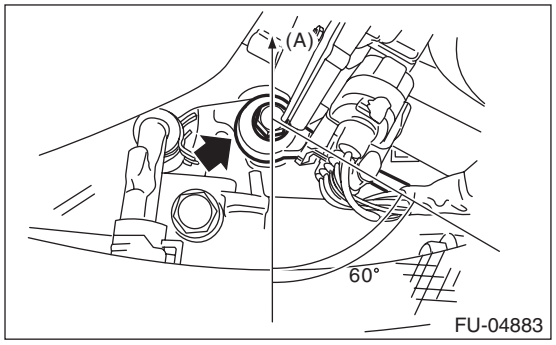

(A) Front side of vehicle

2) Connect the connector to the knock sensor.

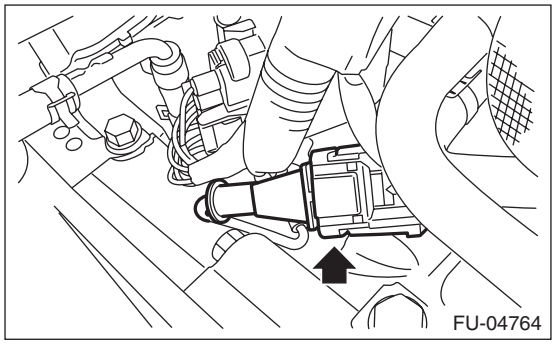

3) Install the intercooler. <Ref. to IN(H4DOTC)-18, INSTALLATION, Intercooler.>
4) Connect the ground cable to battery.

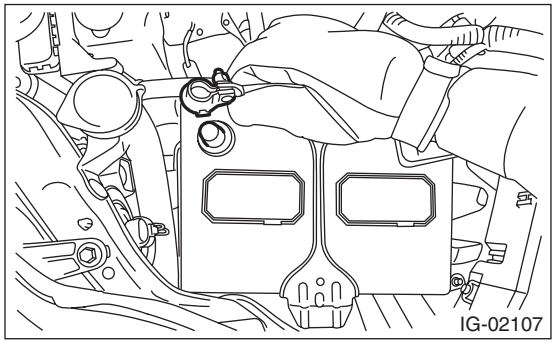

5) Install the collector cover.

C: INSPECTION

1) Check that the knock sensor has no deformation, cracks or other damages.
2) Measure the resistance between knock sensor terminals.

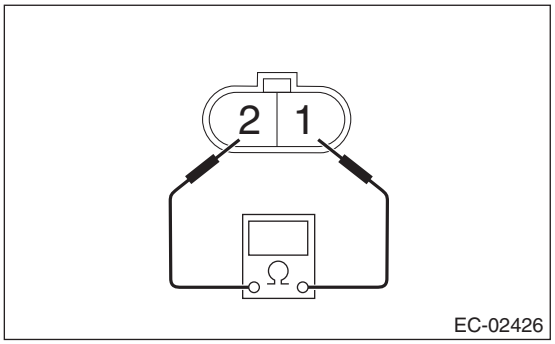

Terminal No.	Standard
1 and 2	560±28 kΩ

8. Throttle Position Sensor

A: SPECIFICATION

Throttle body is a non-disassembled part, so do not remove the throttle position sensor from throttle body.
Refer to “Throttle Body” for removal and installation procedure. <Ref. to FU(H4DOTC)-15, REMOVAL, Throttle Body.> <Ref. to FU(H4DOTC)-16, INSTALLATION, Throttle Body.>

9. Mass Air Flow and Intake Air Temperature Sensor

A: REMOVAL

1) Disconnect the ground cable from battery.

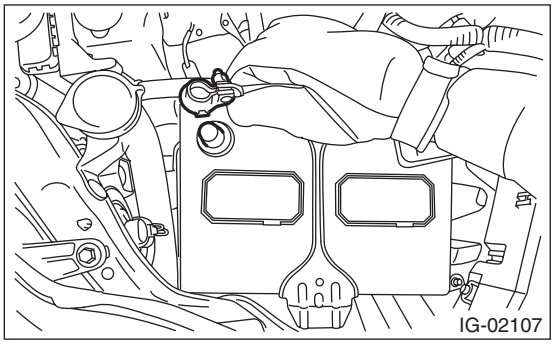

2) Disconnect the connector (A) from the mass air flow and intake air temperature sensor, and remove the mass air flow and intake air temperature sensor.

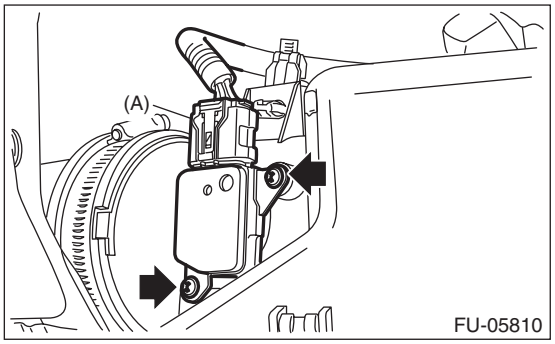

B: INSTALLATION

Install in the reverse order of removal.

Tightening torque:
1 N·m (0.1 kgf-m, 0.7 ft-lb)

C: INSPECTION

1. CHECK MASS AIR FLOW SENSOR UNIT

1) Connect battery positive terminal to terminal No. 3 and battery ground terminal to terminal No. 4, circuit tester positive terminal to terminal No. 5 and the circuit tester negative terminal to terminal No. 4.

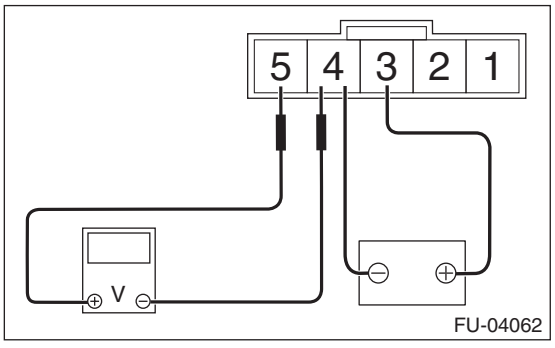

2) Check that the voltage changes when air is blown to the mass air flow sensor unit from arrow direction.

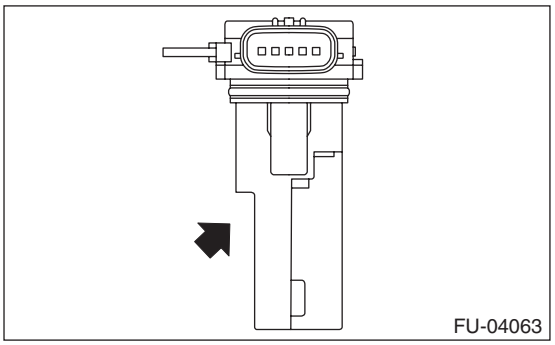

2. CHECK INTAKE AIR TEMPERATURE SENSOR UNIT

Measure the resistance between intake air temperature sensor terminals.

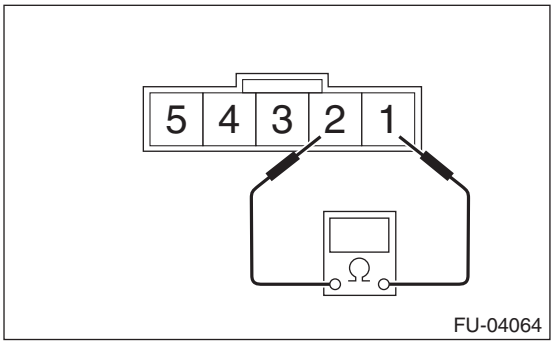

Temperature	Terminal No.	Standard
–20°C (–4°F)	1 and 2	16.0±2.4 kΩ
20°C (68°F)		2.45±0.24 kΩ
60°C (140°F)		0.580±0.087 kΩ

3. OTHER INSPECTIONS

1) Check that the mass air flow and intake air temperature sensor has no deformation, cracks or other damages.
2) Check that the mass air flow and intake air temperature sensor has no dirt.

10.Manifold Absolute Pressure Sensor

A: REMOVAL

1) Remove the collector cover.
2) Disconnect the ground cable from battery.

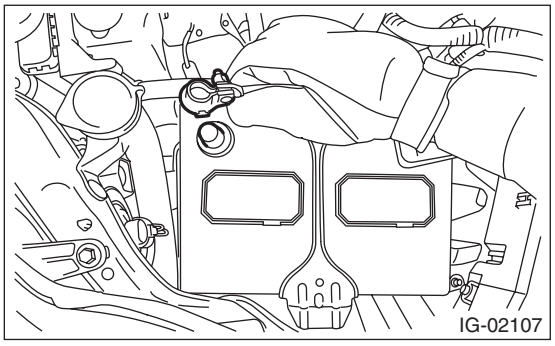

3) Disconnect the connector (A) from manifold absolute pressure sensor, and remove the filter assembly (B) from intake manifold.
4) Remove the manifold absolute pressure sensor from the solenoid valve bracket.

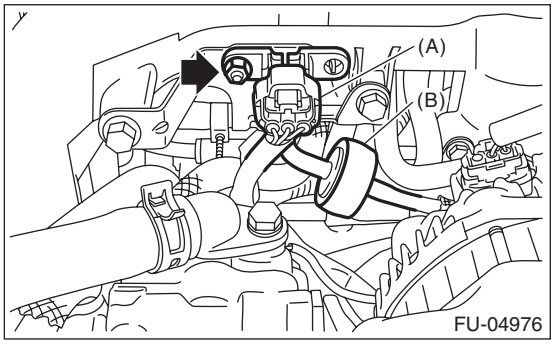

B: INSTALLATION

Install in the reverse order of removal.

Tightening torque:
6.4 N·m (0.7 kgf-m, 4.7 ft-lb)

C: INSPECTION

1) Check that the manifold absolute pressure sensor has no deformation, cracks or other damages.
2) Connect dry-cell battery positive terminal to terminal No. 3 and dry-cell battery ground terminal to terminal No. 1, circuit tester positive terminal to terminal No. 2 and the circuit tester negative terminal to terminal No. 1.

NOTE:
- Use new dry-cell batteries.
- Using circuit tester, check the voltage of a single dry-cell battery is 1.6 V or more. And also check the voltage of three batteries in series is between 4.8 V and 5.2 V.

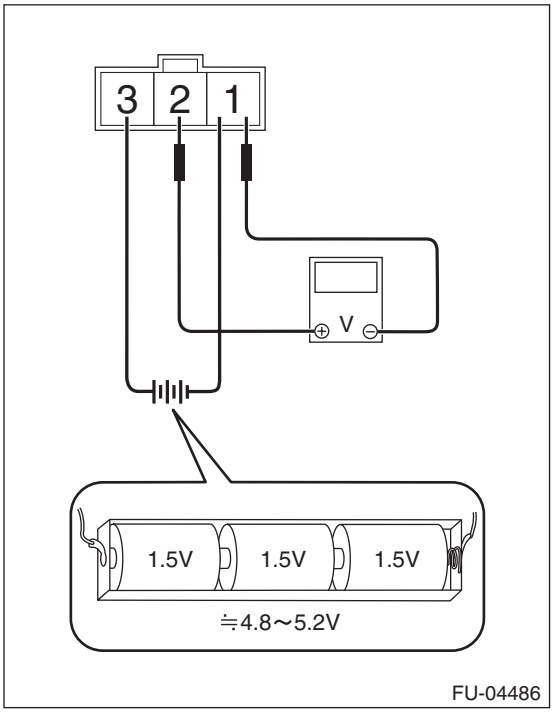

3) Check the voltage at a normal atmospheric pressure.

NOTE:
The atmospheric pressure at higher altitude is lower than normal. Therefore, the voltage is lower than the standard value.

Terminal No.	Standard
2 (+) and 1 (–)	Approx. 2.2 V (when 25°C (77°F))

4) Connect the Mighty Vac to the pressure port (A) of manifold absolute pressure sensor.

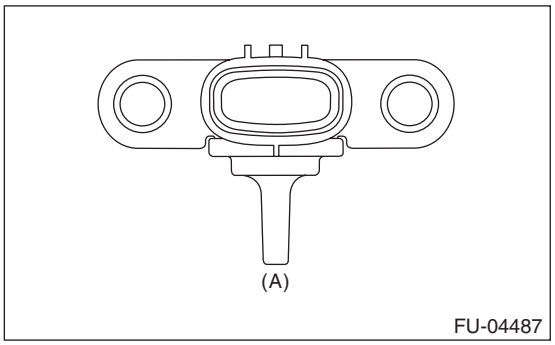

5) Check the voltage when generating vacuum and positive pressure using Mighty Vac.

CAUTION:
Do not apply vacuum of less than –88 — 200 kPa (–0.9 — 2.04 kgf/cm^2, –12.8 — 29.0 psi). Doing so may damage the manifold absolute pressure sensor.

NOTE:
When vacuum occurs at the pressure port of manifold absolute pressure sensor, the voltage will drop from the value as in step 3). When positive pressure occurs, on the other hand, the voltage will rise.

Pressure	Terminal No.	Standard
–88 kPa (–0.9 kgf/cm^2, –12.8 psi)	2 (+) and 1 (–)	Approx. 1.0 V (when 25°C (77°F))
152 kPa (1.55 kgf/cm^2, 22.0 psi)		Approx. 4.5 V (when 25°C (77°F))

11.Fuel Injector

A: REMOVAL

1. RH SIDE

1) Release the fuel pressure. <Ref. to FU(H4DOTC)-66, RELEASING OF FUEL PRESSURE, PROCEDURE, Fuel.>
2) Remove the collector cover.
3) Disconnect the ground cable from battery.

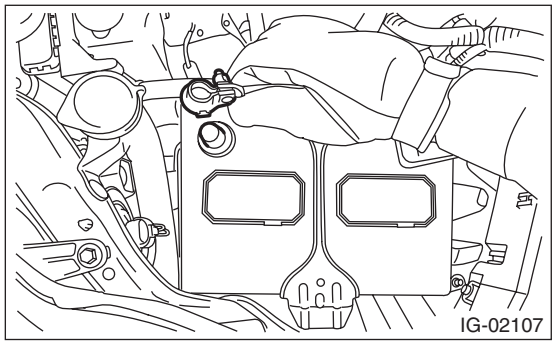

4) Open the fuel filler lid and remove the fuel filler cap.
5) Remove the intake manifold. <Ref. to FU(H4DOTC)-18, REMOVAL, Intake Manifold.>
6) Remove the intake manifold protector RH from intake manifold.

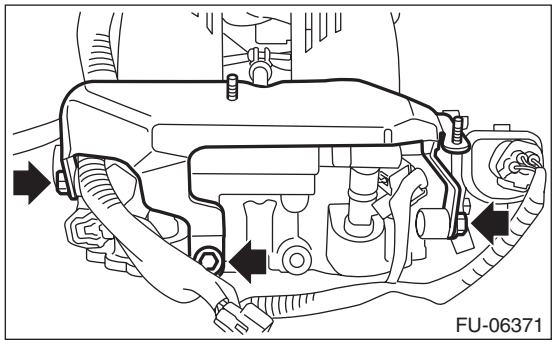

7) Disconnect the connector from the fuel injector and tumble generator valve assembly.

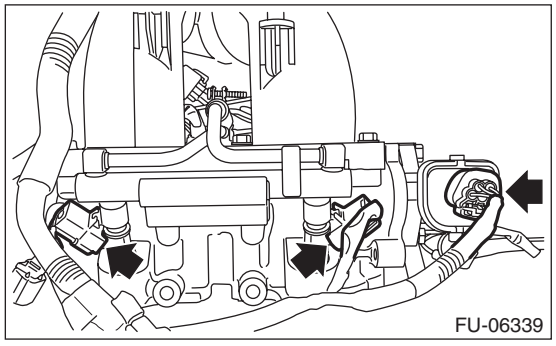

8) Remove the bolts which hold fuel pipe onto intake manifold.

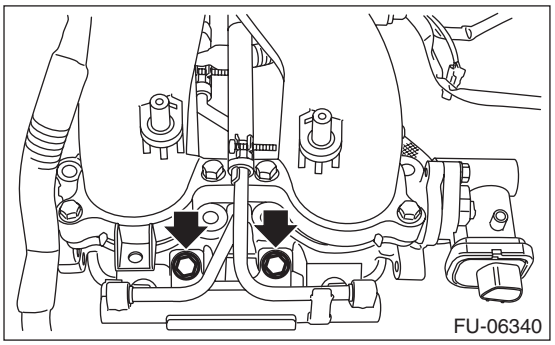

9) Remove the fuel injector.

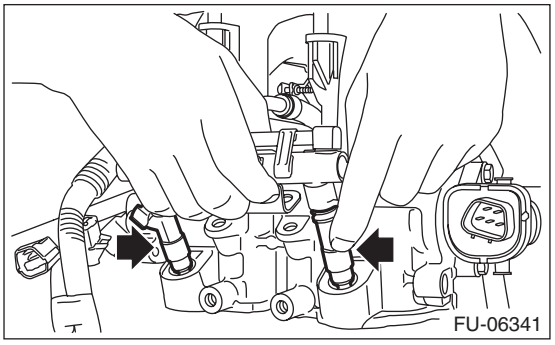

2. LH SIDE

1) Release the fuel pressure. <Ref. to FU(H4DOTC)-66, RELEASING OF FUEL PRESSURE, PROCEDURE, Fuel.>
2) Remove the collector cover.
3) Disconnect the ground cable from battery.

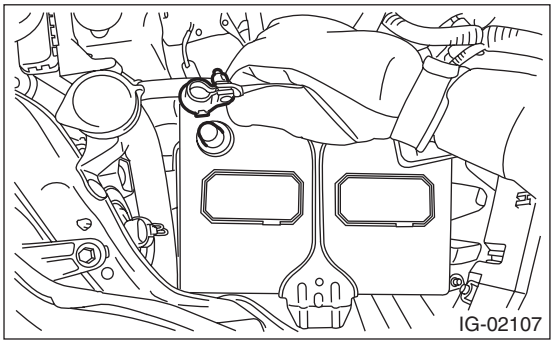

4) Open the fuel filler lid and remove the fuel filler cap.
5) Remove the intake manifold. <Ref. to FU(H4DOTC)-18, REMOVAL, Intake Manifold.>

6) Remove the gray connector (A), the black connector (B), and the clip (C) which holds the engine harness from the intake manifold protector LH.

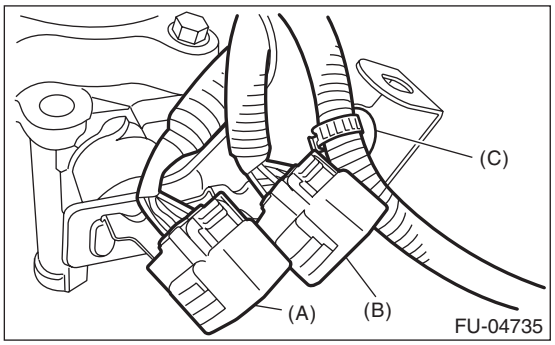

7) Remove the engine ground terminal from the intake manifold protector LH, and remove the intake manifold protector LH from the intake manifold.

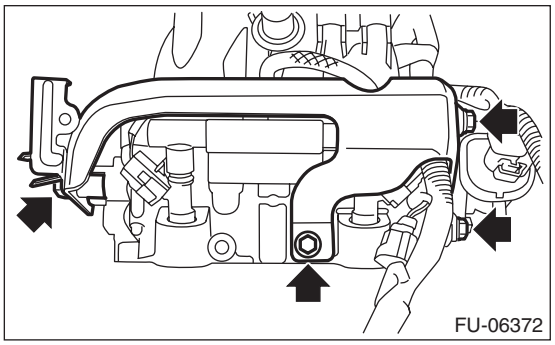

8) Disconnect the connector from fuel injector.

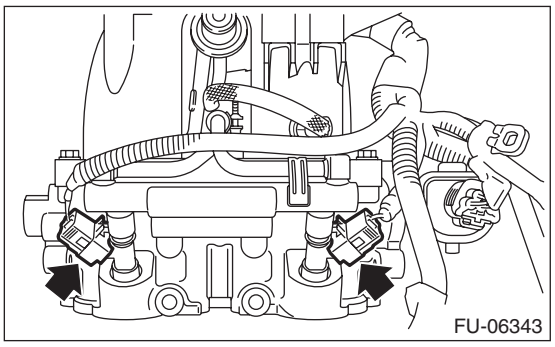

9) Remove the bolt which secures the fuel delivery pipe to the intake manifold.

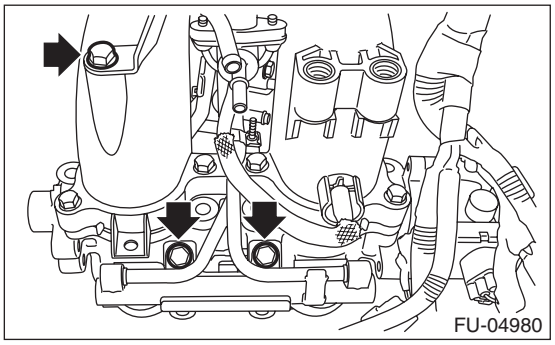

10) Remove the fuel injector.

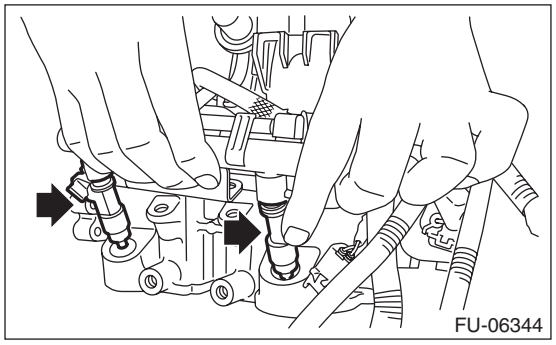

B: INSTALLATION

1. RH SIDE

Install in the reverse order of removal.

NOTE:
Use new O-rings, grommets, and seal rings.

Tightening torque:
19 N·m (1.9 kgf-m, 14.0 ft-lb)

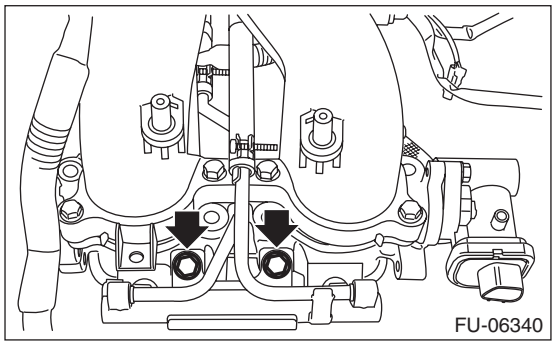

Tightening torque:
19 N·m (1.9 kgf-m, 14.0 ft-lb)

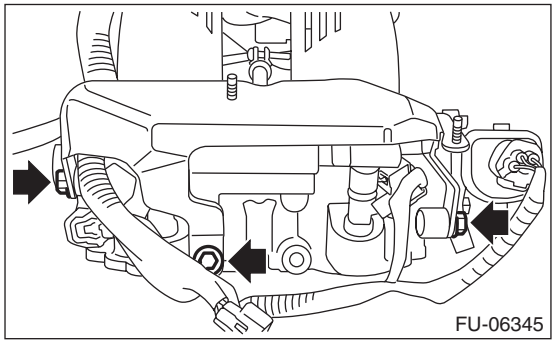

2. LH SIDE

Install in the reverse order of removal.

NOTE:
Use new O-rings, grommets, and seal rings.

Tightening torque:
T1: 6.4 N·m (0.7 kgf-m, 4.7 ft-lb)
T2: 19 N·m (1.9 kgf-m, 14.0 ft-lb)

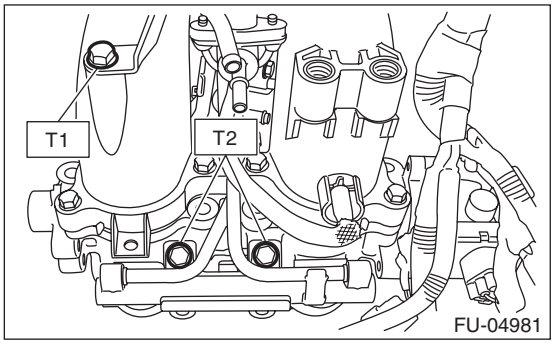

Tightening torque:
19 N·m (1.9 kgf-m, 14.0 ft-lb)

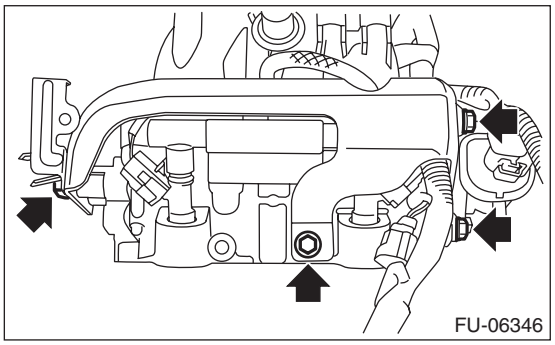

C: INSPECTION

1) Check that the fuel injector has no deformation, cracks or other damages.
2) Measure the resistance between fuel injector terminals.

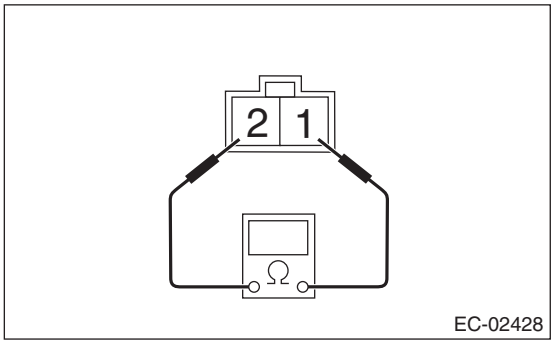

Terminal No.	Standard
1 and 2	Approx. 12.0 Ω (when 20°C (68°F))

12. Tumble Generator Valve Assembly

A: REMOVAL

1) Release the fuel pressure. <Ref. to FU(H4DOTC)-66, RELEASING OF FUEL PRESSURE, PROCEDURE, Fuel.>
2) Remove the collector cover.
3) Disconnect the ground cable from battery.

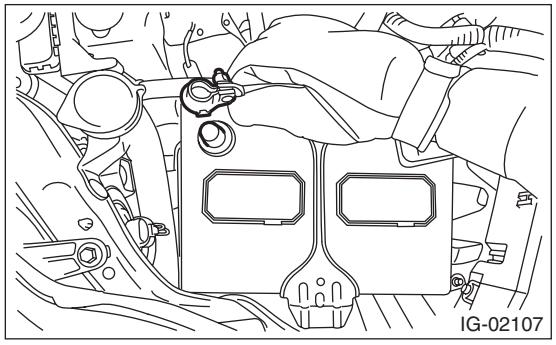

4) Open the fuel filler lid and remove the fuel filler cap.
5) Remove the intake manifold. <Ref. to FU(H4DOTC)-18, REMOVAL, Intake Manifold.>
6) Disconnect the connector from the tumble generator valve assembly.

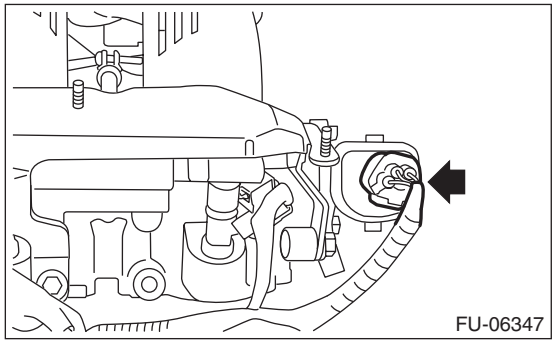

7) Remove the fuel injector. <Ref. to FU(H4DOTC)-45, REMOVAL, Fuel Injector.>
8) Remove the tumble generator valve assembly from the intake manifold.

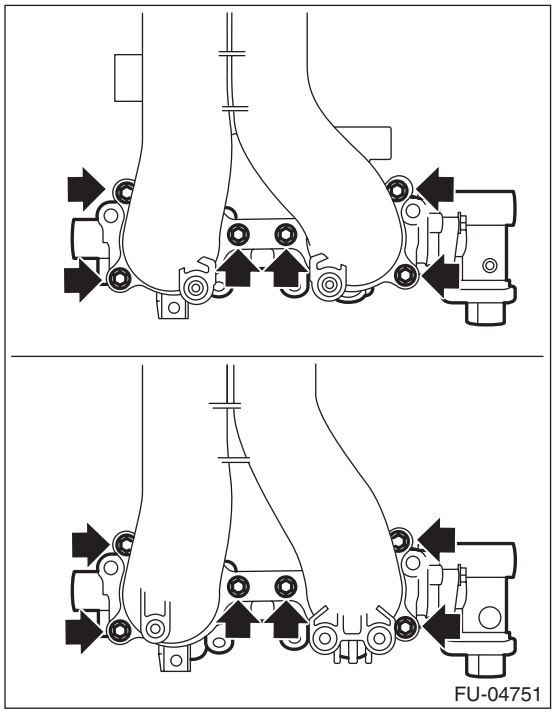

B: INSTALLATION

Install in the reverse order of removal.

NOTE:
Use a new gasket.

Tightening torque:
8.3 N·m (0.8 kgf-m, 6.1 ft-lb)

C: INSPECTION

1) Check that the tumble generator valve assembly has no deformation, cracks or other damages.
2) Check tumble generator valve for contamination or clogging.

13. Tumble Generator Valve Actuator

A: SPECIFICATION

The tumble generator valve assembly cannot be disassembled.
Refer to “Tumble Generator Valve Assembly” for removal and installation procedures. <Ref. to FU(H4DOTC)-48, REMOVAL, Tumble Generator Valve Assembly.> <Ref. to FU(H4DOTC)-48, INSTALLATION, Tumble Generator Valve Assembly.>

14. Oil Flow Control Solenoid Valve

A: REMOVAL

1. INTAKE SIDE

Oil flow control solenoid valve is a unit with front camshaft cap.
Refer to “Camshaft” for the removal procedure. <Ref. to ME(H4DOTC)-63, REMOVAL, Camshaft.>

2. EXHAUST SIDE

1) Disconnect the ground cable from battery.

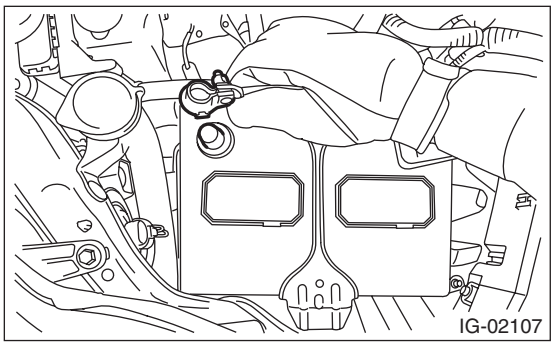
IG-02107

2) Lift up the vehicle.
3) Remove the under cover. <Ref. to EI-35, REMOVAL, Front Under Cover.>
4) Remove the center exhaust pipe. (LH side only) <Ref. to EX(H4DOTC)-12, REMOVAL, Center Exhaust Pipe.>
5) Remove ground cable (A) from the engine harness cover, and remove the engine harness cover from the engine. (LH side only)

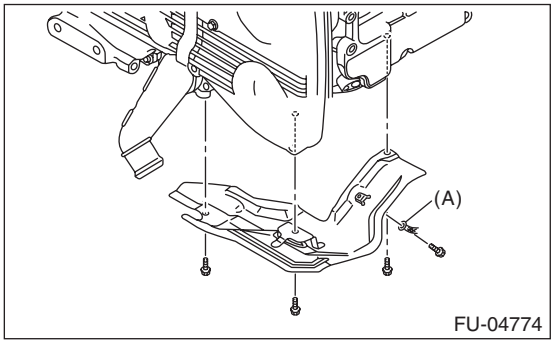

FU-04774

6) Disconnect the connector (A) from the oil flow control solenoid valve, and remove the oil flow control solenoid valve from the cylinder head.

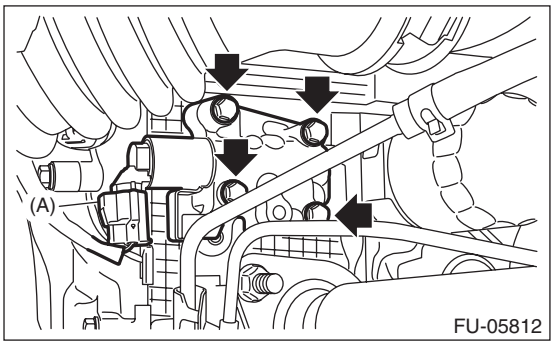

FU-05812

B: INSTALLATION

1. INTAKE SIDE

Refer to “Camshaft” for installation procedure. <Ref. to ME(H4DOTC)-66, INSTALLATION, Camshaft.>

2. EXHAUST SIDE

Install in the reverse order of removal.

NOTE:
Use a new gasket.

Tightening torque:
10 N·m (1.0 kgf-m, 7.4 ft-lb)

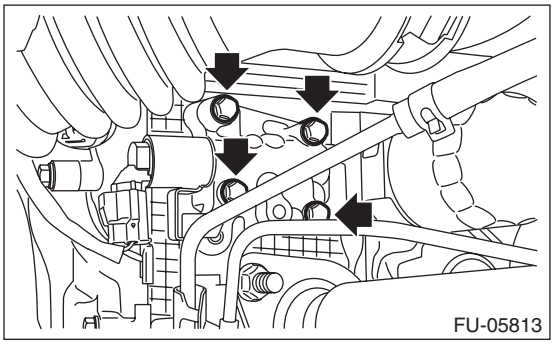
FU-05813

Tightening torque:
T1: 6.4 N·m (0.7 kgf-m, 4.7 ft-lb)
T2: 7 N·m (0.7 kgf-m, 5.2 ft-lb)

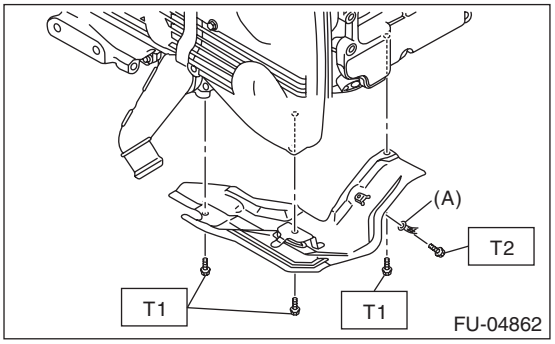

FU-04862

C: DISASSEMBLY

1. INTAKE SIDE

1) Remove the two mounting bolts securing oil return cover, and remove the oil return cover and gasket.
2) Remove the bolt securing oil flow control solenoid valve, and remove the oil flow control solenoid valve.

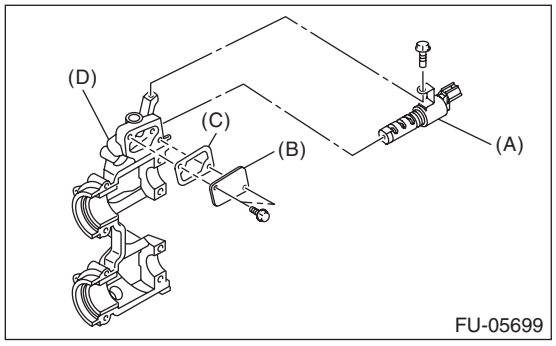

(A) Oil flow control solenoid valve
(B) Oil return cover
(C) Gasket
(D) Front camshaft cap

2. EXHAUST SIDE

The oil flow control solenoid valve on exhaust side cannot be disassembled.

D: ASSEMBLY

1. INTAKE SIDE

1) Install the oil flow control solenoid valve.

Tightening torque:
6.4 N·m (0.7 kgf-m, 4.7 ft-lb)

2) Apply liquid gasket to the two bolts securing oil return cover.

Liquid gasket:
THREE BOND 1324 (Part No. 004403042) or equivalent

3) Attach the oil return cover and gasket.

NOTE:
Use a new gasket.

Tightening torque:
9 N·m (0.9 kgf-m, 6.6 ft-lb)

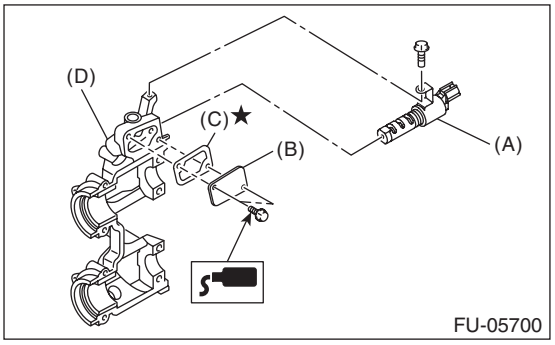

(A) Oil flow control solenoid valve
(B) Oil return cover
(C) Gasket
(D) Front camshaft cap

2. EXHAUST SIDE

The oil flow control solenoid valve on exhaust side cannot be disassembled.

E: INSPECTION

1) Check that the oil flow control solenoid valve has no deformation, cracks or other damages.
2) Measure the resistance between the oil flow control solenoid valve terminals.

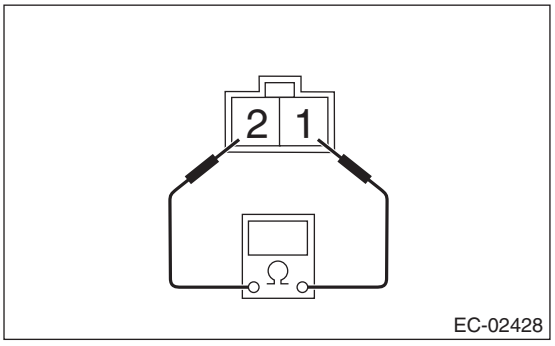

Terminal No.	Standard
1 and 2	7.4±0.5 Ω (when 20°C (68°F))

15. Wastegate Control Solenoid Valve

A: REMOVAL

1) Disconnect the ground cable from battery.

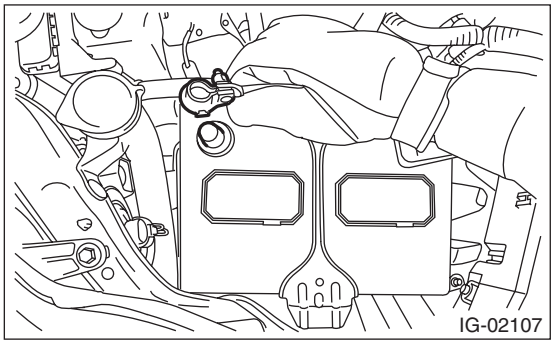

2) Remove the radiator sub fan motor assembly. <Ref. to CO(H4DOTC)-27, REMOVAL, Radiator Sub Fan and Fan Motor.>
3) Remove the screws which hold the wastegate control solenoid valve to the intake duct.

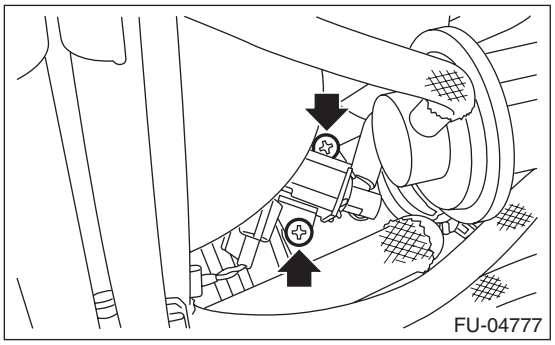

4) Lift up the vehicle.
5) Remove the under cover. <Ref. to EI-35, REMOVAL, Front Under Cover.>
6) Disconnect the connector and air control hose from the wastegate control solenoid valve, and remove the wastegate control solenoid valve from the intake duct.

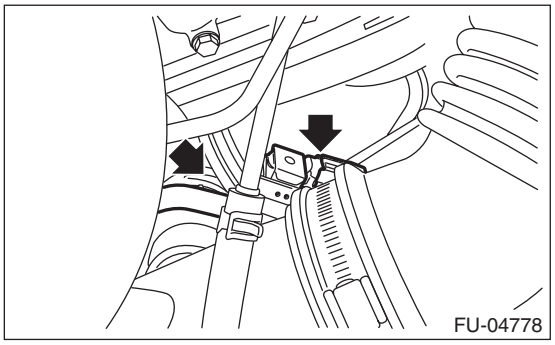

B: INSTALLATION

Install in the reverse order of removal.

NOTE:
- Use new O-rings.
- When tightening the boost control solenoid valve, check that it is securely seated.

Tightening torque:
4 N·m (0.4 kgf-m, 3.0 ft-lb)

C: INSPECTION

1. WASTEGATE CONTROL SOLENOID VALVE

1) Check that the wastegate control solenoid valve has no deformation, cracks or other damages.
2) Check the resistance between the wastegate control solenoid valve terminals.

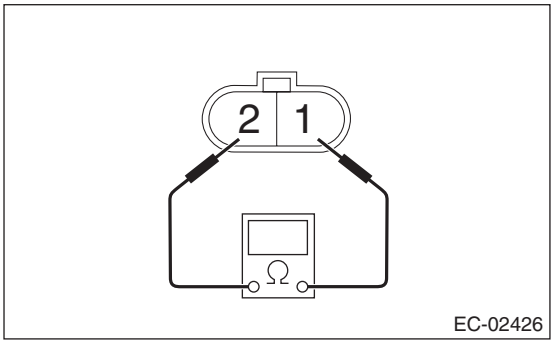

Terminal No.	Standard
1 and 2	24±3 Ω (when 20°C (68°F))

3) Check that air does not come out from (B) when air is blown into (A).

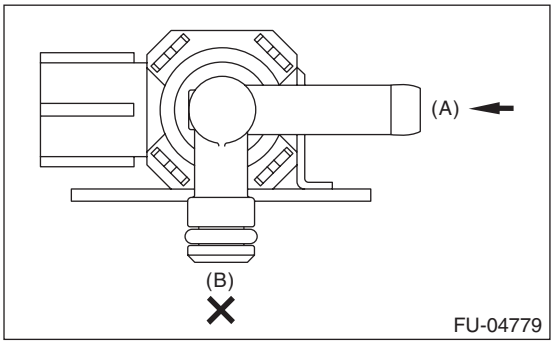

4) Connect the battery positive terminal to the terminal No. 1 and the battery negative terminal to the terminal No. 2. Check that air is discharged from (B), when supplying air to (A).

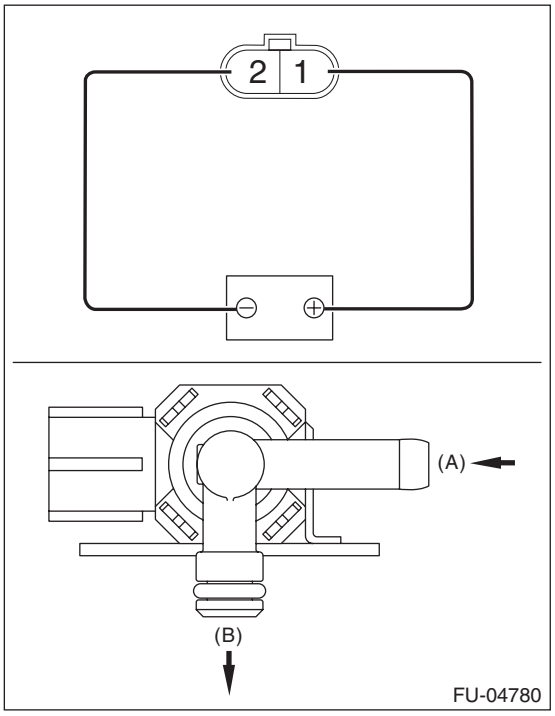

2. OTHER INSPECTIONS

Check that the air control hose has no cracks, damage or loose part.

16.Front Oxygen (A/F) Sensor

A: REMOVAL

1) Disconnect the ground cable from battery.

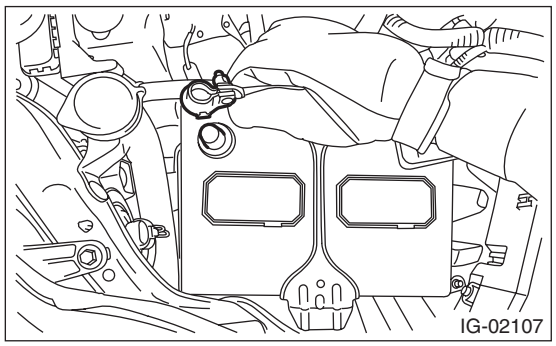

2) Remove the radiator main fan motor assembly. <Ref. to CO(H4DOTC)-27, REMOVAL, Radiator Sub Fan and Fan Motor.>

3) Disconnect the connector from the front oxygen (A/F) sensor, and remove the clip (A) holding the front oxygen (A/F) sensor harness.

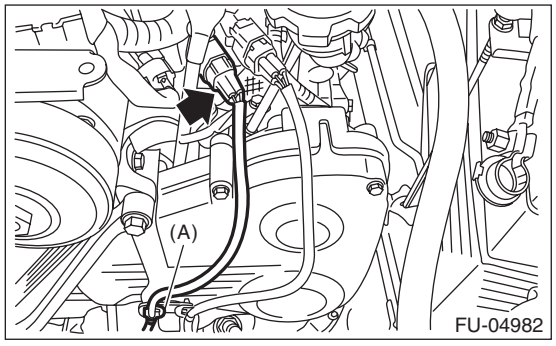

4) Apply spray-type lubricant to the threaded portion of front oxygen (A/F) sensor, and leave it for one minute or more.

5) Remove the front oxygen (A/F) sensor by using a sensor socket.

CAUTION:
When removing the front oxygen (A/F) sensor, wait until exhaust pipe cools, otherwise it will damage the exhaust pipe.

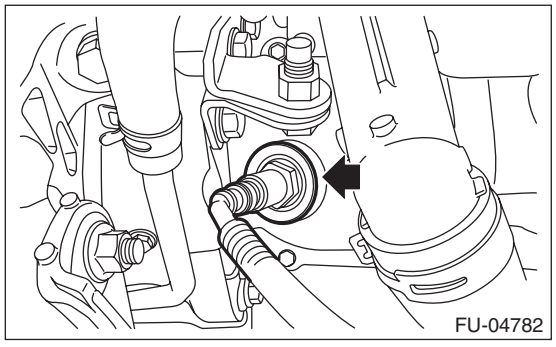

B: INSTALLATION

CAUTION:
If lubricant is spilt over the exhaust pipe, wipe it off with cloth to avoid emission of smoke or causing a fire.

1) Before installing front oxygen (A/F) sensor, apply anti-seize compound only to the threaded portion of front oxygen (A/F) sensor to make the next removal easier.

CAUTION:
Never apply anti-seize compound to the protector of front oxygen (A/F) sensor.

Anti-seize compound:
NEVER-SEEZ NSN, JET LUBE SS-30 or equivalent

2) Install the front oxygen (A/F) sensor.

Tightening torque:
30 N·m (3.1 kgf-m, 22.1 ft-lb)

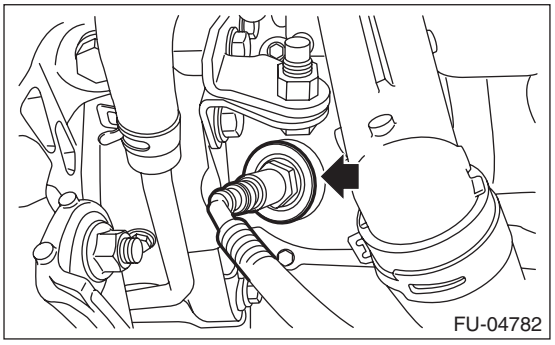

3) Connect the front oxygen (A/F) sensor connector, and secure the front oxygen (A/F) sensor harness by using the clip (A).

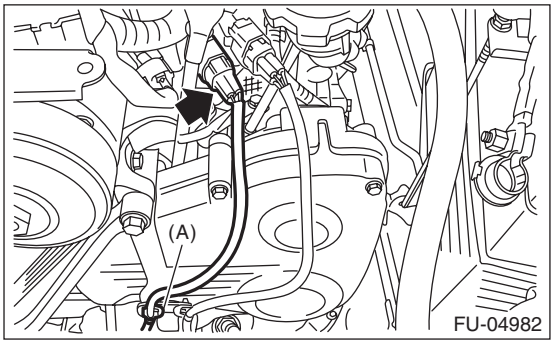

4) Install the radiator main fan motor assembly. <Ref. to CO(H4DOTC)-27, INSTALLATION, Radiator Sub Fan and Fan Motor.>

5) Connect the ground cable to battery.

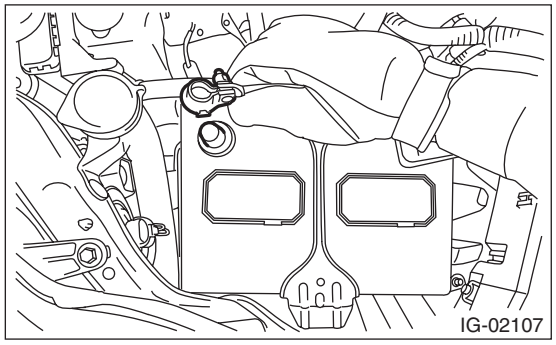

C: INSPECTION

1) Check that the front oxygen (A/F) sensor has no deformation, cracks or other damages.
2) Measure the resistance between front oxygen (A/F) sensor terminals.

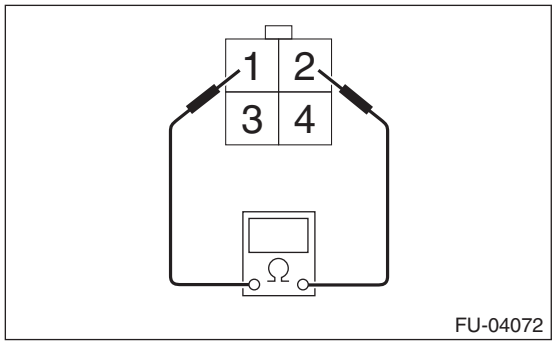

Terminal No.	Standard
1 and 2	2.4±0.24 Ω (when 20°C (68°F))

17.Rear Oxygen Sensor

A: REMOVAL

1) Disconnect the ground cable from battery.

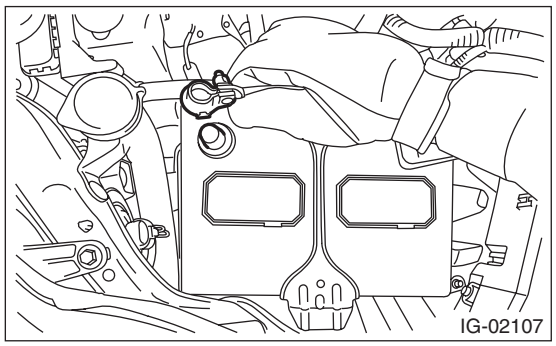

2) Remove the radiator main fan motor assembly. <Ref. to CO(H4DOTC)-27, REMOVAL, Radiator Sub Fan and Fan Motor.>

3) Disconnect the connector from the rear oxygen sensor, and remove the clip (A) holding the rear oxygen sensor harness.

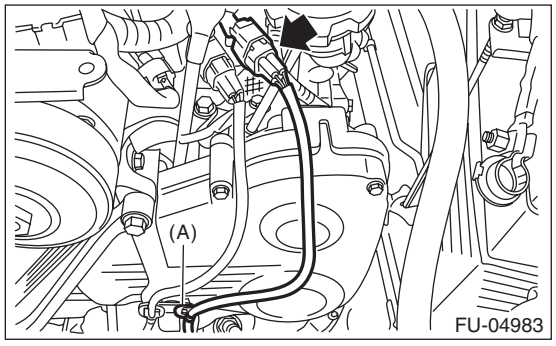

4) Apply spray-type lubricant to the threaded portion of rear oxygen sensor, and leave it for one minute or more.

5) Remove the rear oxygen (A/F) sensor by using a sensor socket.

CAUTION:
When removing the rear oxygen sensor, wait until exhaust pipe cools, otherwise it will damage the exhaust pipe.

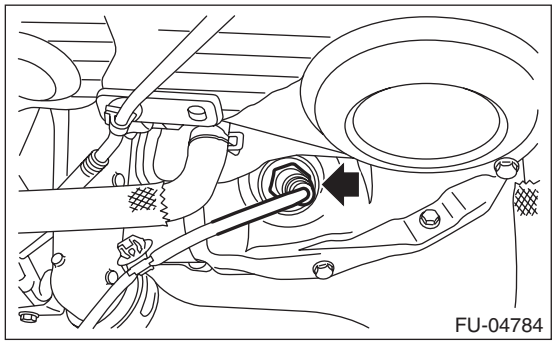

B: INSTALLATION

CAUTION:
If lubricant is spilt over the exhaust pipe, wipe it off with cloth to avoid emission of smoke or causing a fire.

1) Before installing rear oxygen sensor, apply the anti-seize compound only to the threaded portion of rear oxygen sensor to make the next removal easier.

CAUTION:
Never apply anti-seize compound to the protector of rear oxygen sensor.

Anti-seize compound:
NEVER-SEEZ NSN, JET LUBE SS-30 or equivalent

2) Install the rear oxygen sensor.

Tightening torque:
30 N·m (3.1 kgf-m, 22.1 ft-lb)

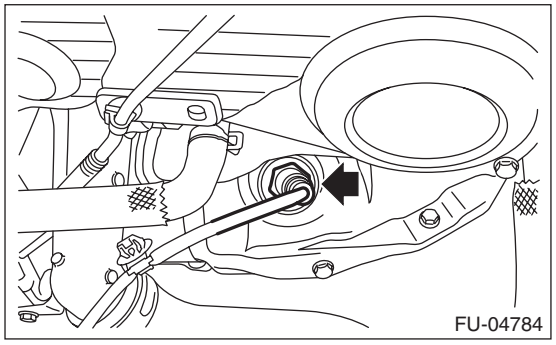

3) Connect the connector to the rear oxygen sensor, and hold the rear oxygen sensor harness with clip (A).

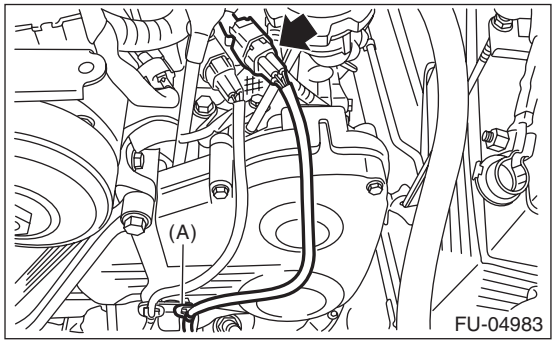

4) Install the radiator main fan motor assembly. <Ref. to CO(H4DOTC)-27, INSTALLATION, Radiator Sub Fan and Fan Motor.>

5) Connect the ground cable to battery.

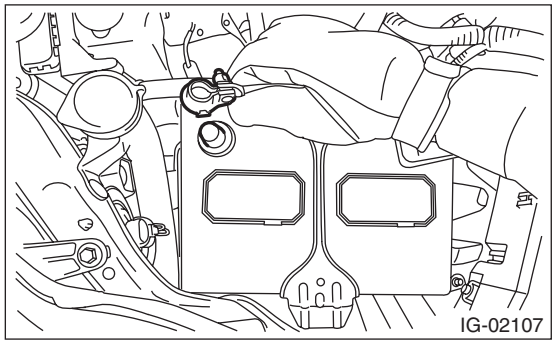

C: INSPECTION

1) Check that the rear oxygen sensor has no deformation, cracks or other damages.
2) Measure the resistance between rear oxygen sensor terminals.

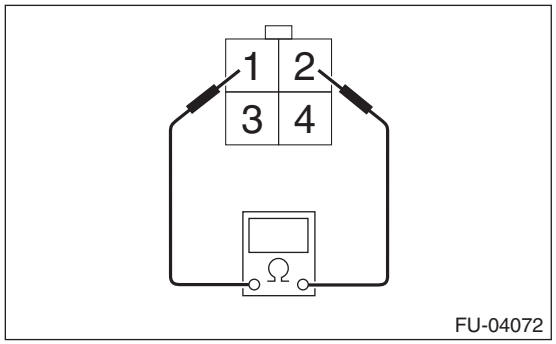

Terminal No.	Standard
1 and 2	$5.6^{+0.8}_{-0.6}$ Ω (when 20°C (68°F))

18.Engine Control Module (ECM)

A: REMOVAL

1) Disconnect the ground cable from battery.

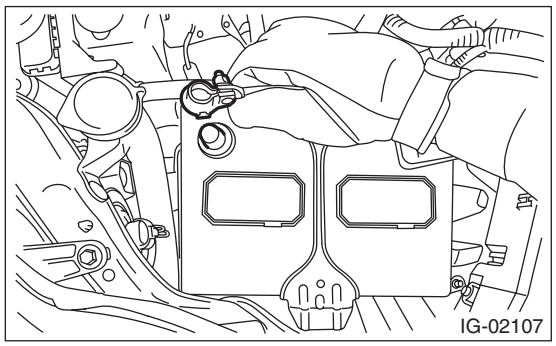

2) Remove the glove box lid assembly. <Ref. to EI-66, REMOVAL, Glove Box.>
3) Remove the connectors from ECM.

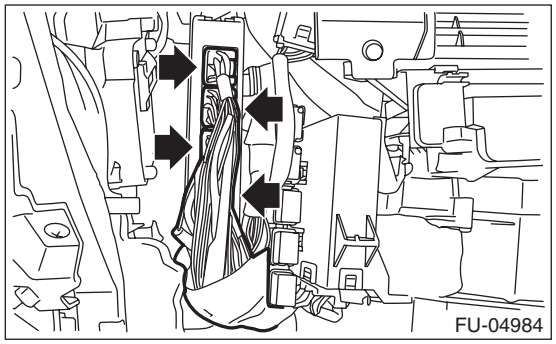

4) Remove the ECM from vehicle.

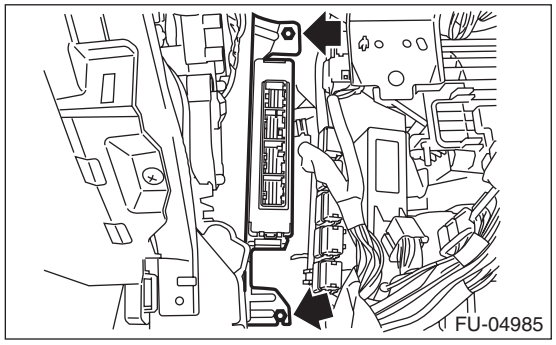

B: INSTALLATION

Install in the reverse order of removal.

CAUTION:
• When the ECM of model with immobilizer has been replaced, be sure to perform the registration of immobilizer system. (Refer to "PC application help for Subaru Select Monitor".)
• If replacing ECM or the bracket, replace both parts with new parts at a time.
• After installing the bracket to ECM, do not separate the bracket.
• If the bracket has been installed to ECM in the wrong direction, replace both parts to new parts.

NOTE:
When replacing the ECM, be careful not to use the wrong spec. ECM to avoid any damage on the fuel injection system.

Tightening torque:
7.5 N·m (0.8 kgf-m, 5.5 ft-lb)

C: INSPECTION

Check that the ECM has no deformation, cracks or other damages.

19.Main Relay

A: REMOVAL

1) Disconnect the ground cable from battery.

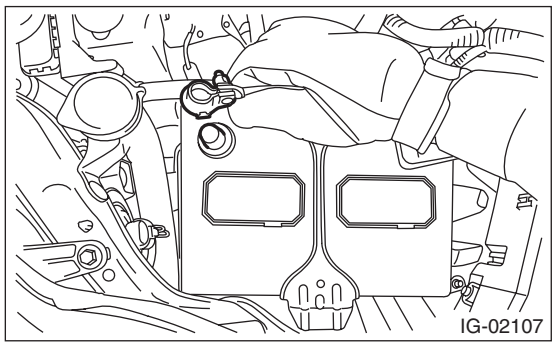

2) Remove the glove box lid assembly. <Ref. to EI-66, REMOVAL, Glove Box.>
3) Remove the main relay from the relay holder.

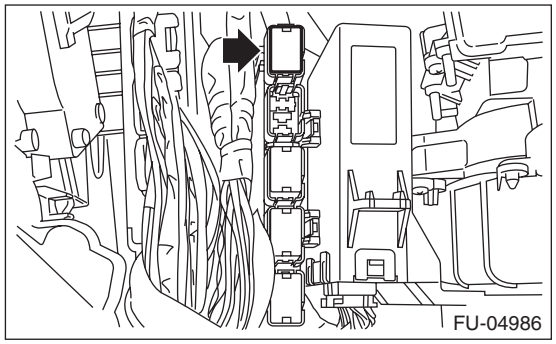

B: INSTALLATION

Install in the reverse order of removal.

C: INSPECTION

1) Check that the main relay has no deformation, cracks or other damages.
2) Measure the resistance between main relay terminals.

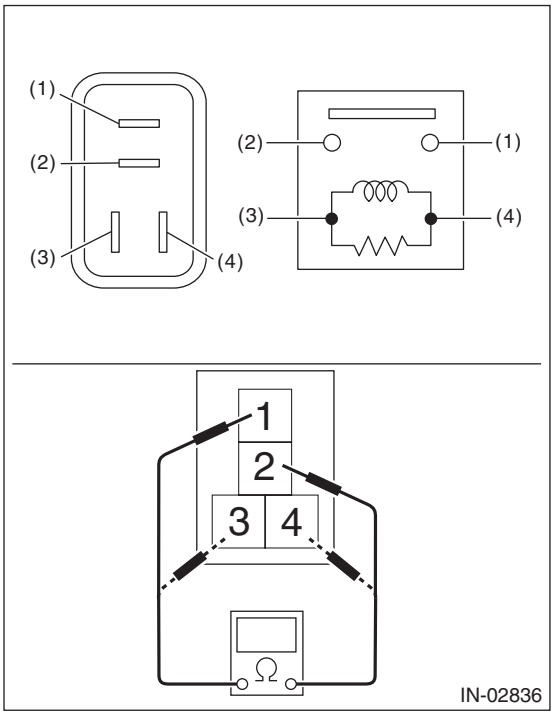

Terminal No.	Standard
1 and 2	1 MΩ or more
3 and 4	130.4 — 230.8 Ω (when 20°C (68°F))

3) Connect battery positive terminal to terminal No. 3 and battery ground terminal to terminal No. 4, and measure the resistance between the main relay terminals.

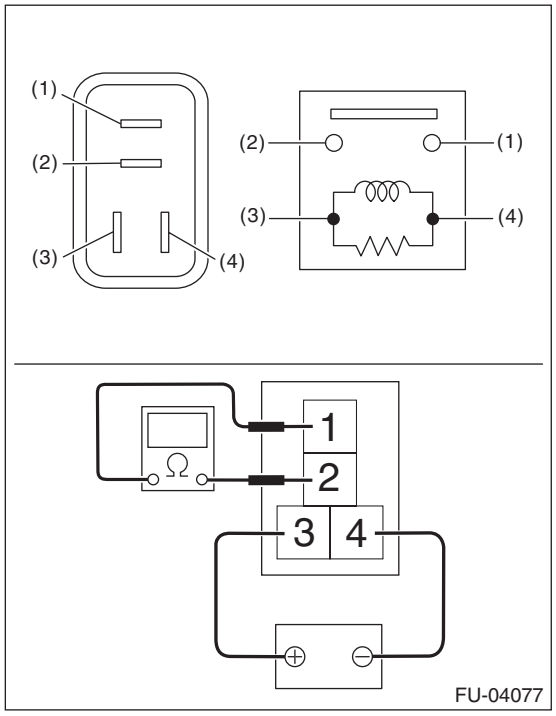

Terminal No.	Standard
1 and 2	Less than 1 Ω

20.Fuel Pump Relay

A: REMOVAL

1) Disconnect the ground cable from battery.

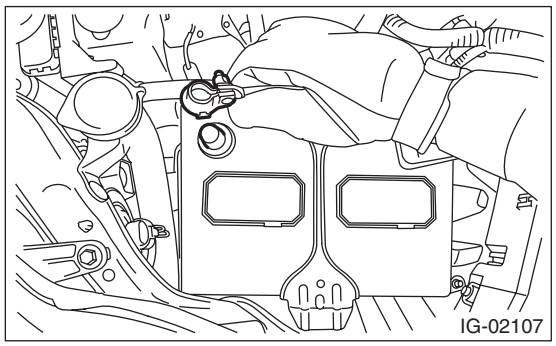

2) Remove the glove box lid assembly. <Ref. to EI-66, REMOVAL, Glove Box.>
3) Remove the fuel pump relay from the relay holder.

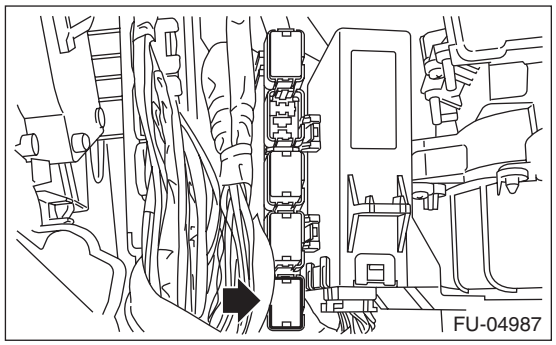

B: INSTALLATION

Install in the reverse order of removal.

C: INSPECTION

1) Check that the fuel pump relay has no deformation, cracks or other damages.
2) Measure the resistance between fuel pump relay terminals.

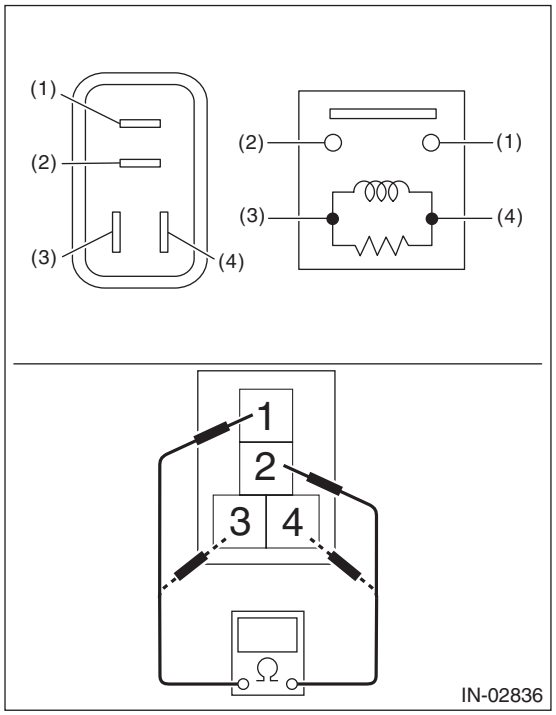

Terminal No.	Standard
1 and 2	1 MΩ or more
3 and 4	93.8 — 136.4 Ω (when 20°C (68°F))

3) Connect battery positive terminal to terminal No. 3 and battery ground terminal to terminal No. 4, and measure the resistance between the fuel pump relay terminals.

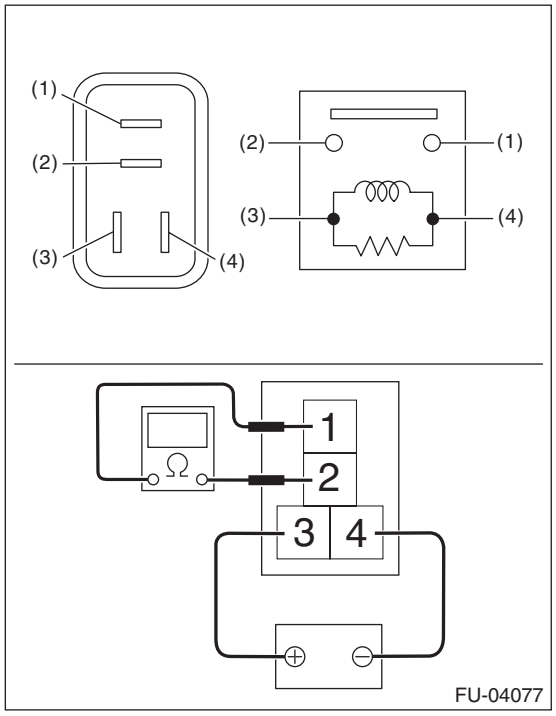

Terminal No.	Standard
1 and 2	Less than 1 Ω

21.Electronic Throttle Control Relay

A: REMOVAL

1) Disconnect the ground cable from battery.

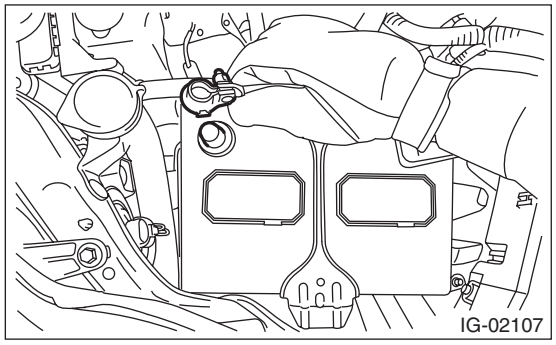

2) Remove the glove box lid assembly. <Ref. to EI-66, REMOVAL, Glove Box.>
3) Remove the electronic throttle control relay from the relay holder.

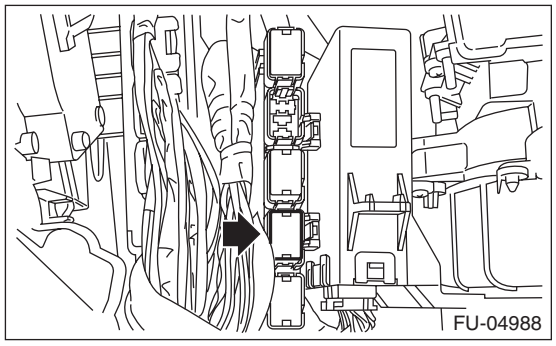

B: INSTALLATION

Install in the reverse order of removal.

C: INSPECTION

1) Check that the electronic throttle control relay has no deformation, cracks or other damages.
2) Measure the resistance between electronic throttle control relay terminals.

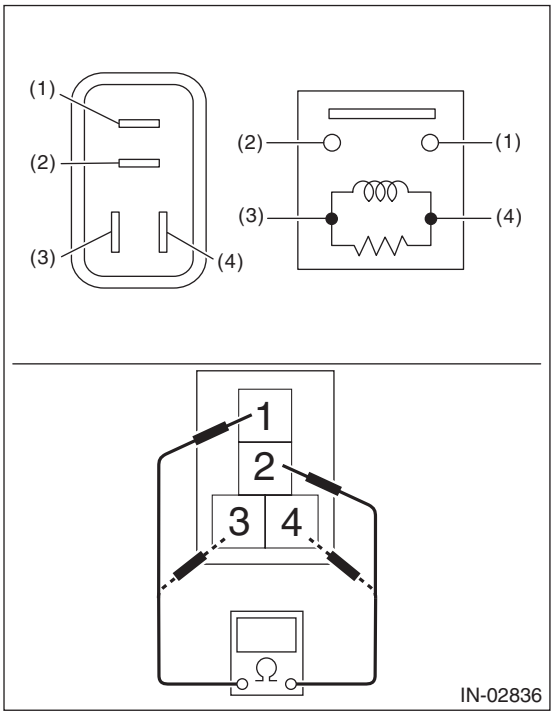

Terminal No.	Standard
1 and 2	1 MΩ or more
3 and 4	93.8 — 136.4 Ω (when 20°C (68°F))

3) Connect battery positive terminal to terminal No. 3 and battery ground terminal to terminal No. 4, and measure the resistance between the electronic throttle control relay terminals.

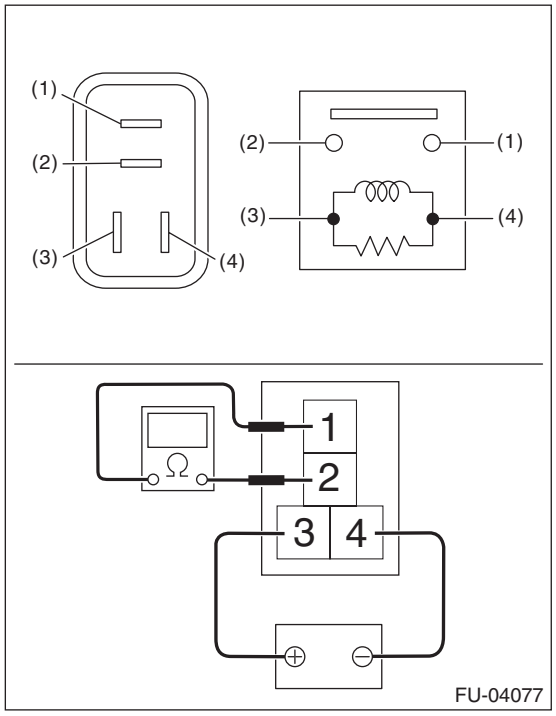

Terminal No.	Standard
1 and 2	Less than 1 Ω

22.Fuel Pump Control Unit

A: REMOVAL

1) Disconnect the ground cable from battery.

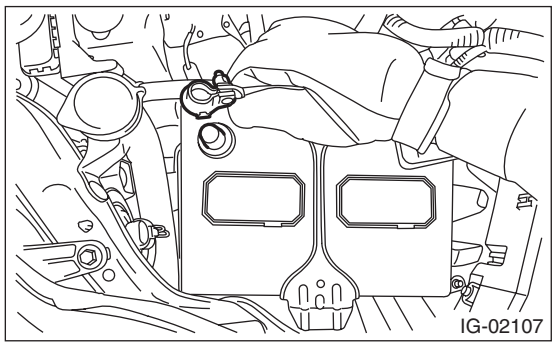

2) Remove the trunk trim panel assembly - side on the RH side. <Ref. to EI-110, REMOVAL, Rear Quarter Trim.>

3) Remove the fuel pump control unit.

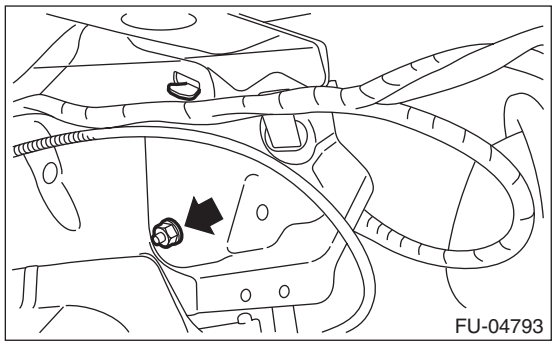

4) Disconnect the connector from fuel pump control unit.

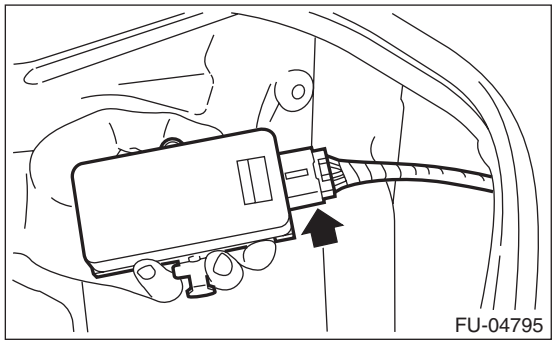

B: INSTALLATION

Install in the reverse order of removal.

Tightening torque:
5 N·m (0.5 kgf-m, 3.7 ft-lb)

C: INSPECTION

Check that the fuel pump control unit has no deformation, cracks or other damages.

23.Fuel

A: PROCEDURE

1. RELEASING OF FUEL PRESSURE

WARNING:
Place "NO OPEN FLAMES" signs near the working area.

CAUTION:
Be careful not to spill fuel.
1) Remove the fuse of fuel pump from main fuse box.

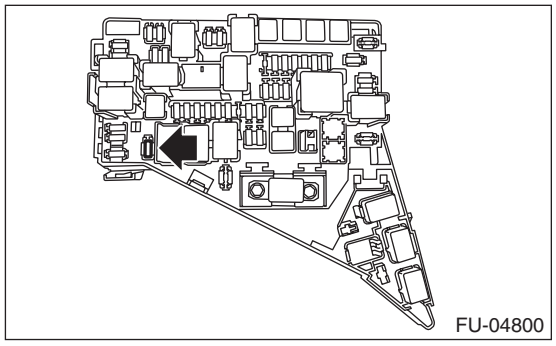

2) Start the engine and run it until it stalls.
3) After the engine stalls, crank it for five more seconds.
4) Turn the ignition switch to OFF.
5) Install the fuse of fuel pump to the main fuse box.

2. DRAINING FUEL (WITH SUBARU SELECT MONITOR)

WARNING:
Place "NO OPEN FLAMES" signs near the working area.

CAUTION:
Be careful not to spill fuel.

NOTE:
• If the fuel pump cannot be driven, refer to the procedures for draining from the fuel filler hose. <Ref. to FU(H4DOTC)-67, DRAINING FUEL (THROUGH THE FUEL FILLER HOSE), PROCEDURE, Fuel.>
• Be careful not to let the battery run-out.
1) Release the fuel pressure. <Ref. to FU(H4DOTC)-66, RELEASING OF FUEL PRESSURE, PROCEDURE, Fuel.>
2) Attach ST to the fuel delivery pipe and push ST in the direction of arrow mark to disconnect the fuel delivery hose.
ST 42099AE000 QUICK CONNECTOR RELEASE

CAUTION:
• Be careful not to spill fuel.
• Catch the fuel from hoses using a container or cloth.

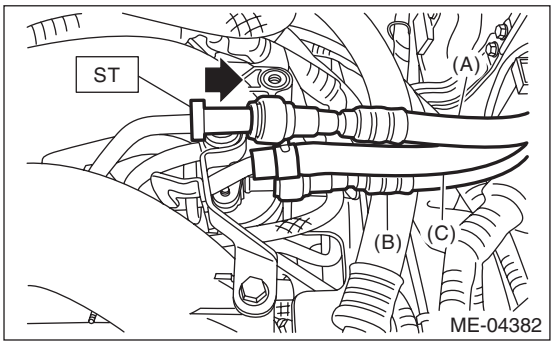

(A) Fuel delivery hose
(B) Fuel return hose
(C) Evaporation hose

3) Connect ST to the fuel delivery hose.
ST 18471AA000 FUEL PIPE ADAPTER
4) Connect the gasoline proof hose to ST and put the end of the hose in the container.
5) Drive the fuel pump and drain the fuel using Subaru Select Monitor. (Refer to "PC application help for Subaru Select Monitor".)

CAUTION:
Be careful not to spill fuel.
6) Install the related parts in the reverse order after draining the fuel.

3. DRAINING FUEL (THROUGH THE FUEL FILLER HOSE)

WARNING:
Place "NO OPEN FLAMES" signs near the working area.

CAUTION:
- **Be careful not to spill fuel.**
- **Fuel may remain in the fuel filler pipe. Draining the fuel from the fuel filler pipe through the fill opening using the gasoline proof pump and the gasoline proof hose (ø10 or less) before the operation.**

1) Lift up the vehicle.
2) Remove the rear exhaust pipe and muffler. <Ref. to EX(H4DOTC)-15, REMOVAL, Rear Exhaust Pipe.> <Ref. to EX(H4DOTC)-17, REMOVAL, Muffler.>
3) Remove the rear sub frame. <Ref. to RS-16, REMOVAL, Rear Sub Frame.>
4) Open the fuel filler lid and remove the fuel filler cap.
5) Drain the fuel from the fuel filler pipe through the filler opening using the gasoline proof pump and the gasoline proof hose (ø10 or less).
6) Disconnect the fuel filler hose from the fuel filler pipe assembly.

CAUTION:
- **Be careful not to spill fuel.**
- **Catch the fuel from hoses using a container or cloth.**

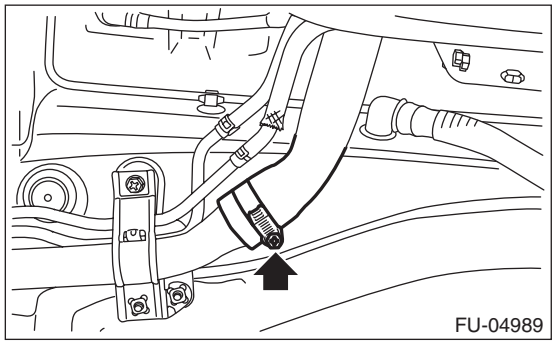

7) Set the container under the vehicle and insert the gasoline proof hose (ø10 or less) into the fuel filler hose to drain the fuel.

CAUTION:
Be careful not to spill fuel.

8) Install the related parts in the reverse order after draining the fuel.

NOTE:
Correctly insert the fuel filler hose to the spool, and then install the clamp as shown.

Tightening torque:
2.5 N·m (0.3 kgf-m, 1.8 ft-lb)

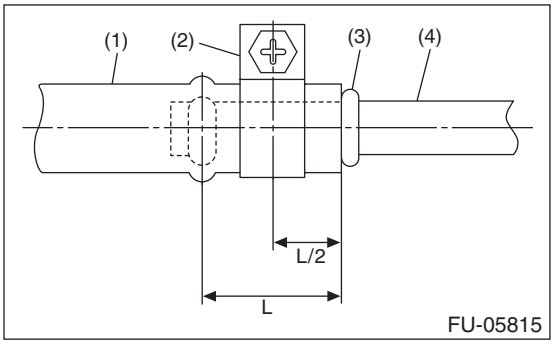

(1) Fuel filler hose
(2) Clamp
(3) Spool
(4) Fuel filler pipe

24.Fuel Tank

A: REMOVAL

WARNING:
Place "NO OPEN FLAMES" signs near the working area.

CAUTION:
Be careful not to spill fuel.

1) Release the fuel pressure. <Ref. to FU(H4DOTC)-66, RELEASING OF FUEL PRESSURE, PROCEDURE, Fuel.>
2) Drain fuel. <Ref. to FU(H4DOTC)-66, DRAINING FUEL (WITH SUBARU SELECT MONITOR), PROCEDURE, Fuel.>
3) Disconnect the ground cable from battery.

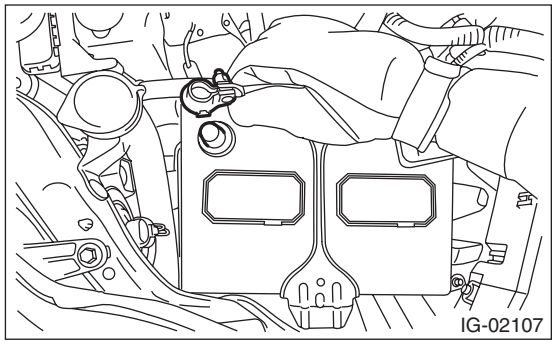

4) Remove the rear seat cushion. <Ref. to SE-34, REMOVAL, Rear Seat.>
5) Remove the clips (A) and seat cushion hooks (B), and turn over the floor mat (C).

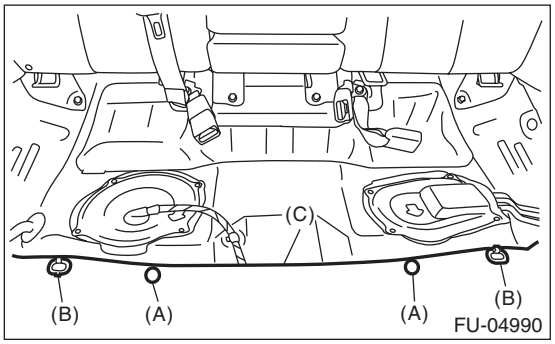

6) Remove the service hole cover of fuel pump.
(1) Disconnect the fuel cord connector (A), and remove the clip (B).
(2) Remove the screw (C).
(3) Push the grommet (D) down and remove the service hole cover.

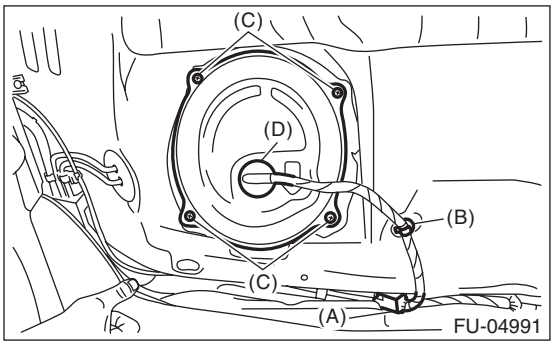

7) Remove the service hole cover of fuel sub level sensor.

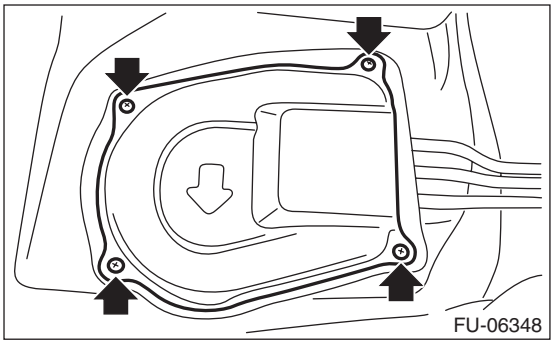

8) Disconnect the quick connector of fuel delivery tube (A) and fuel return tube (B). <Ref. to FU(H4DOTC)-88, REMOVAL, Fuel Delivery, Return and Evaporation Lines.>

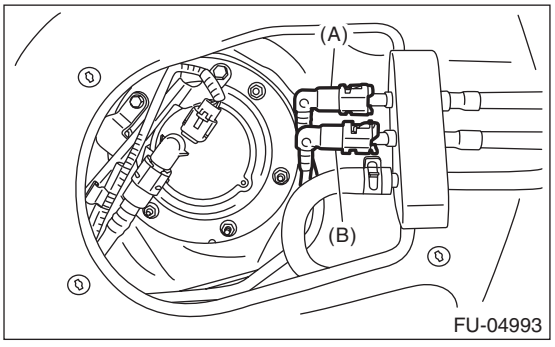

9) Remove the rear wheels.
10) Lift up the vehicle.
11) Remove the rear ABS wheel speed sensor from the rear housing.

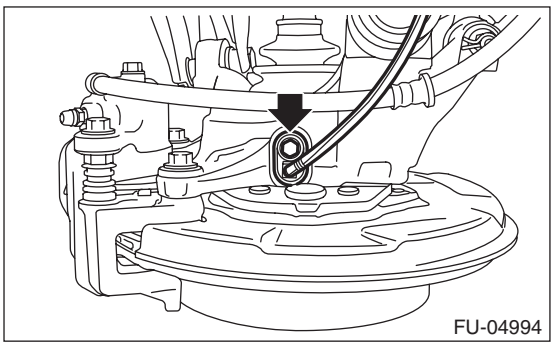

12) Remove the rear ABS wheel speed sensor harness bracket from the upper arm.

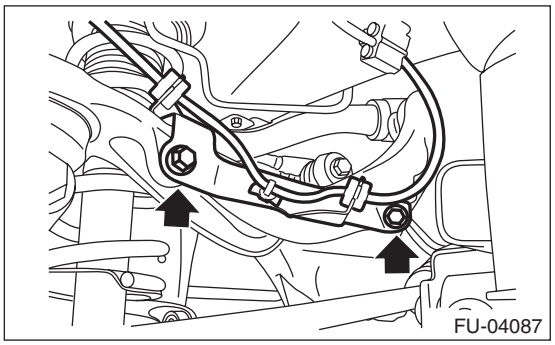

13) Remove the rear brake hose bracket from rear housing.

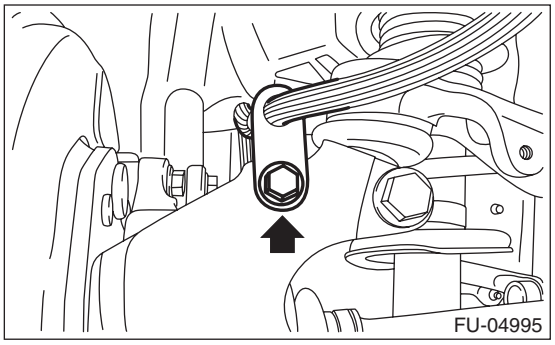

14) Remove the rear disc brake assembly and tie it to the body side of the vehicle.

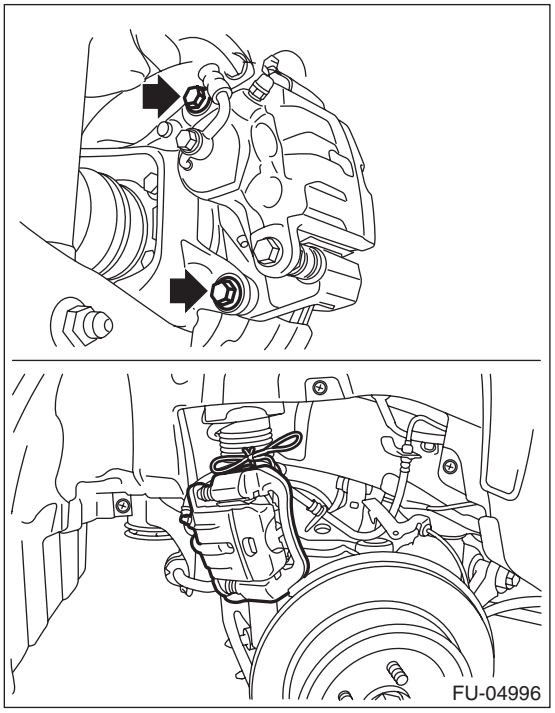

15) Remove the parking brake cable from parking brake assembly. <Ref. to PB-10, REMOVAL, Parking Brake Assembly (Rear Disc Brake).>

16) Remove the rear exhaust pipe and muffler. <Ref. to EX(H4DOTC)-15, REMOVAL, Rear Exhaust Pipe.> <Ref. to EX(H4DOTC)-17, REMOVAL, Muffler.>

17) Remove the propeller shaft. <Ref. to DS-10, REMOVAL, Propeller Shaft.>

18) Remove the clip (A) securing the fuel tank protector and heat shield cover.

19) Remove the bolts (B) and nuts (C) securing the fuel tank protector, and remove the fuel tank protector.

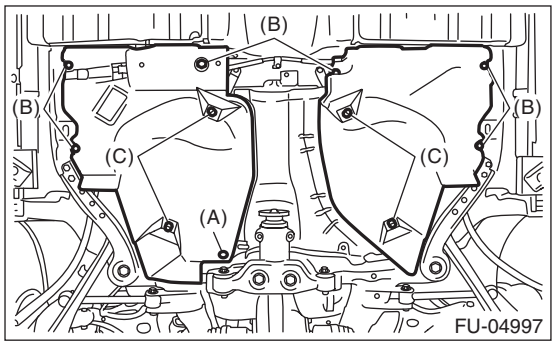

20) Remove the bolts and nuts securing the heat shield cover and remove the heat shield cover.

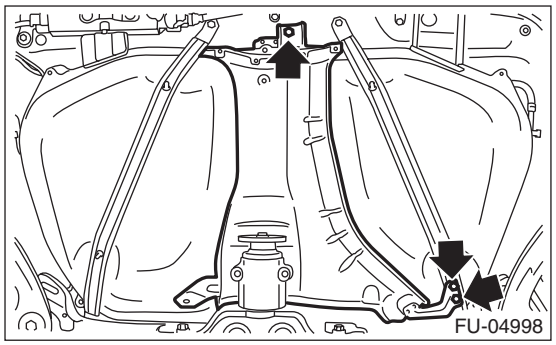

21) Remove the rear suspension assembly.

WARNING:
A helper is required to perform this work.

(1) Support the rear differential with the transmission jack.

(2) Remove the bolt and nut which secures rear shock absorber to rear suspension arm.

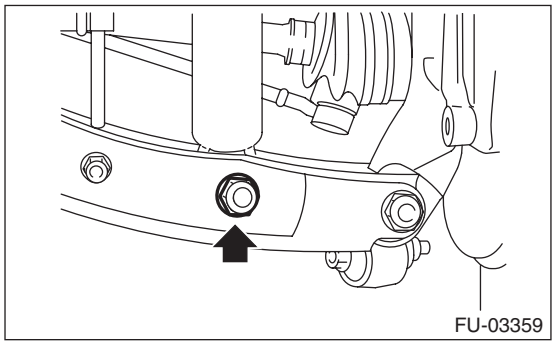

(3) Remove the bolts which secure the rear suspension assembly to the body.

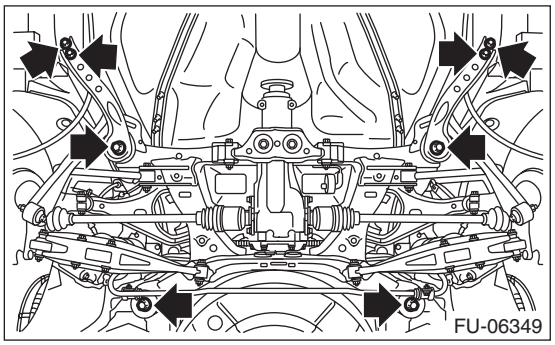

(4) Remove the rear suspension assembly.

22) Disconnect the PCV drain hose (A) and PCV outlet hose (B) from the pressure control solenoid valve.

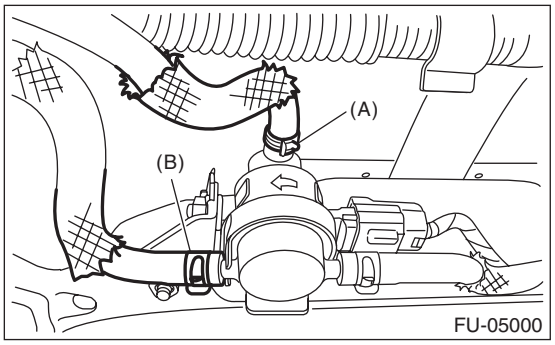

23) Disconnect the air vent hose from the fuel tank.

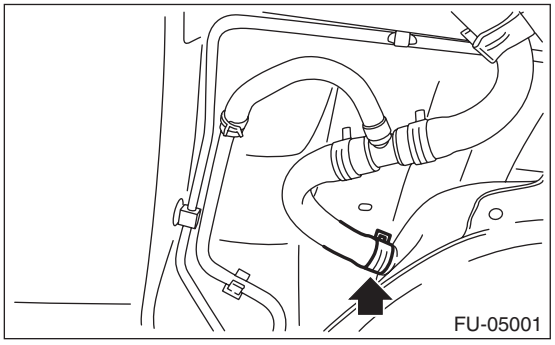

24) Disconnect the quick connector of the circulate tube from evaporation pipe.

NOTE:
Disconnect the quick connector as shown in the figure.

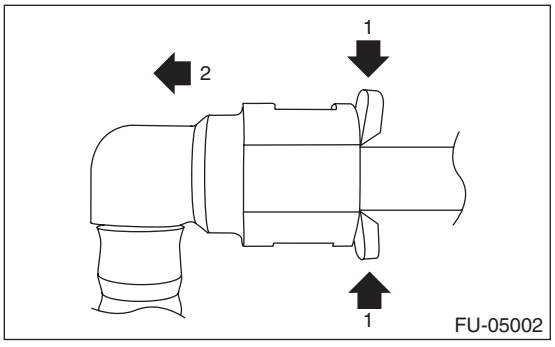

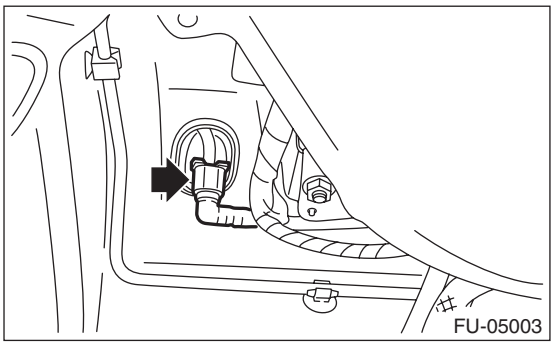

25) Disconnect the fuel filler hose (A), PCV inlet hose (B) and circulate hose (C) from the fuel filler pipe assembly.

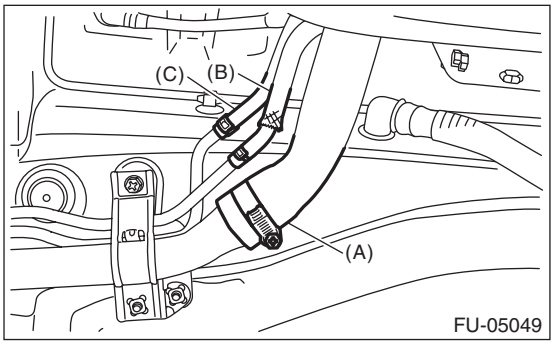

26) Support the fuel tank with a transmission jack, remove the fuel tank band, and remove the fuel tank from the vehicle.

WARNING:
- **A helper is required to perform this work.**
- **Fuel may remain in the fuel tank. This will cause the left and right sides to be unbalanced. Be careful not to drop the fuel tank.**

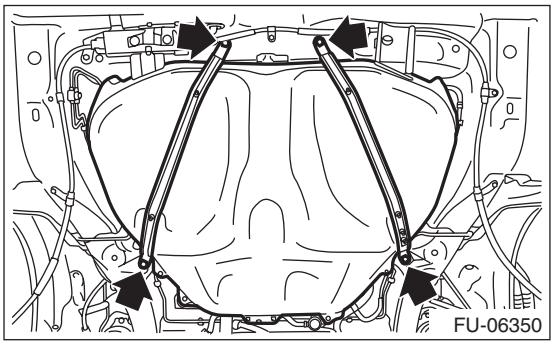

B: INSTALLATION

1) Support the fuel tank with a transmission jack, set the fuel tank and the fuel tank band in place, and temporarily tighten the bolts of the fuel tank band.

WARNING:
A helper is required to perform this work.

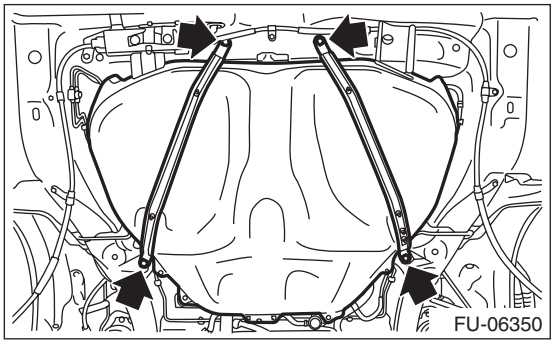

2) Securely insert the fuel filler hose (A), PCV inlet hose (B) and circulate hose (C) to the spool or stopper, then attach the clamp or clip as shown in the figure.

Tightening torque:
2.5 N·m (0.3 kgf-m, 1.8 ft-lb)

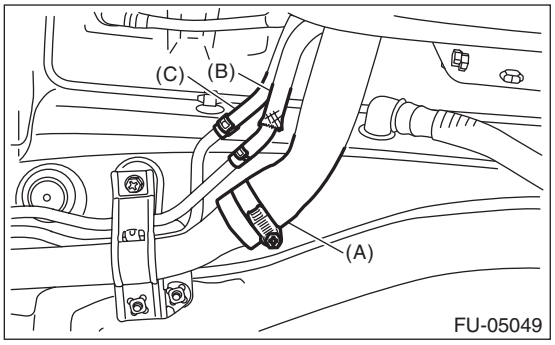

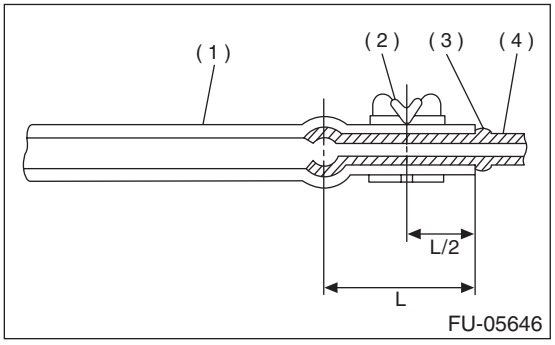

(1) Hose
(2) Clamp or clip
(3) Spool or bump
(4) Pipe

3) Connect the quick connector of the circulate tube to the evaporation pipe as shown in the figure.

CAUTION:
• Check that there is no damage or dust on the quick connector. If necessary, clean the seal surface of the pipe.
• Make sure that the quick connector is securely connected.

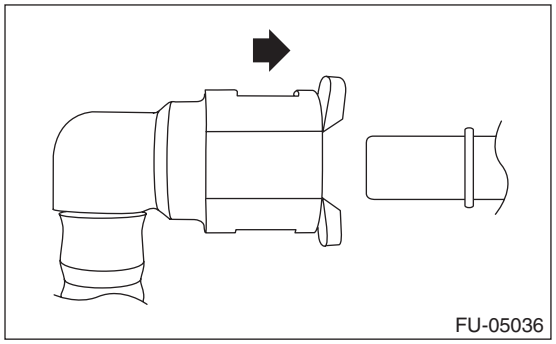

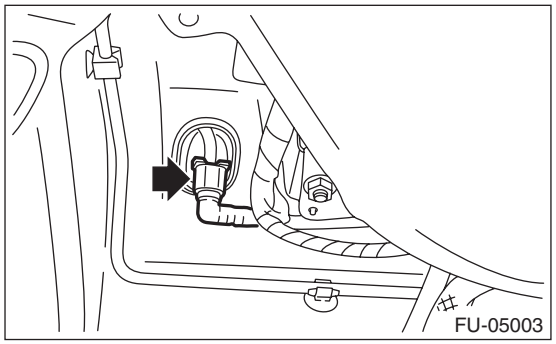

4) Connect the air vent hose to fuel tank.

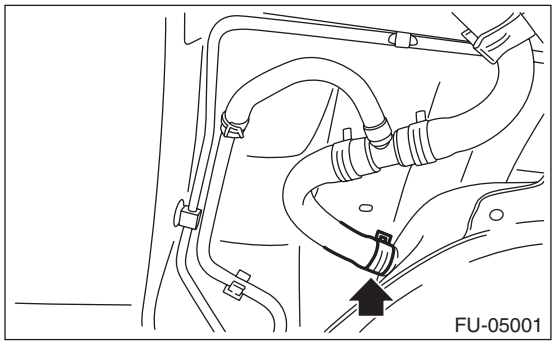

5) Connect the PCV drain hose (A) and PCV outlet hose (B) to the pressure control solenoid valve.

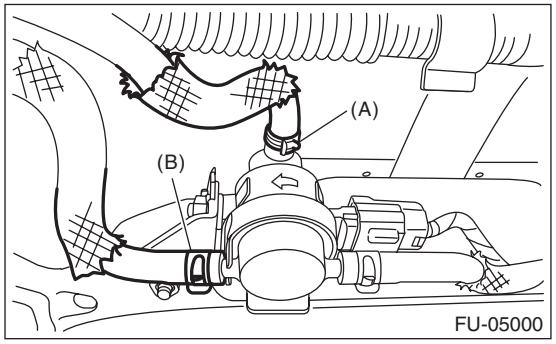

6) Move the fuel tank so that the distance between the center of the positioning hole for the body (A) and the front end of the fuel tank flange (B) becomes L, and tighten the bolts of the fuel tank bands in the sequence shown in the figure.

CAUTION:
To prevent the fuel tank from damage, after tightening the bolts of the fuel tank bands, make sure that the distance between the center of the positioning hole for the body (A) and the front end of the fuel tank flange (B) is L.

Distance L: Center of the positioning hole for the body (A) — Front end of the fuel tank flange (B)
14.5 mm (0.571 in) or less

Tightening torque:
33 N·m (3.4 kgf-m, 24.3 ft-lb)

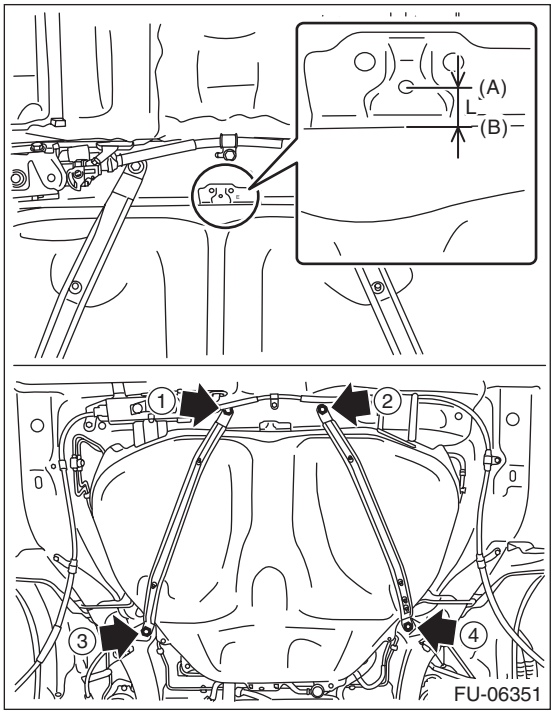

7) Install the rear suspension assembly.

WARNING:
A helper is required to perform this work.
(1) Support the rear differential with the transmission jack.
(2) Support the rear suspension assembly and install the rear suspension assembly to the body.

Tightening torque:
T1: 70 N·m (7.1 kgf-m, 51.6 ft-lb)
T2: 200 N·m (20.4 kgf-m, 147.5 ft-lb)

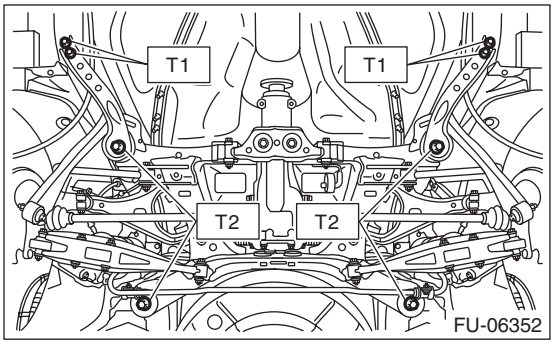

(3) Install the rear shock absorber to the rear suspension arm.

NOTE:
Use a new self-locking nut.

Tightening torque:
120 N·m (12.2 kgf-m, 88.5 ft-lb)

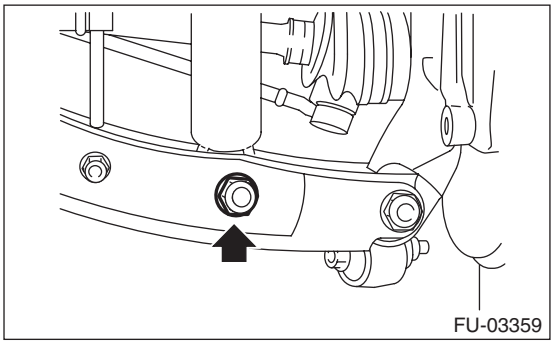

8) Install the heat shield cover.

Tightening torque:
18 N·m (1.8 kgf-m, 13.3 ft-lb)

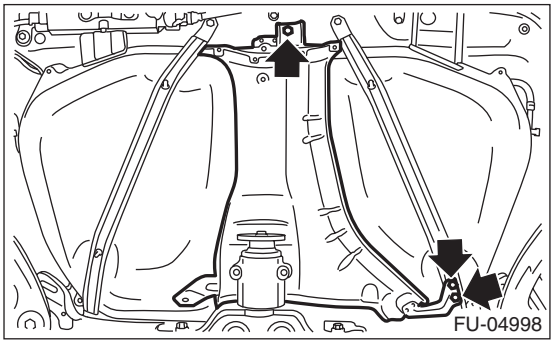

9) Install the bolts (B) and nuts (C) securing the fuel tank protector and install the clip (A) securing the fuel tank protector and heat shield cover.

Tightening torque:
Nut (C): 9 N·m (0.9 kgf-m, 6.6 ft-lb)
Bolt (B): 18 N·m (1.8 kgf-m, 13.3 ft-lb)

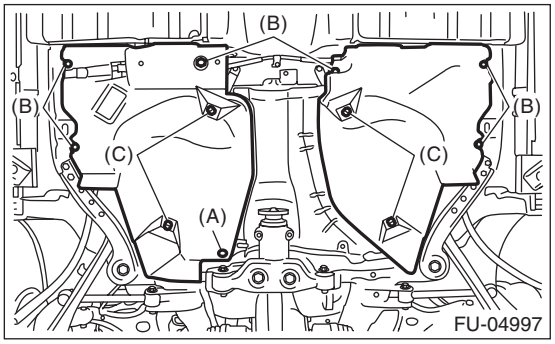

10) Install the propeller shaft. <Ref. to DS-11, INSTALLATION, Propeller Shaft.>
11) Install the rear exhaust pipe and muffler. <Ref. to EX(H4DOTC)-15, INSTALLATION, Rear Exhaust Pipe.> <Ref. to EX(H4DOTC)-17, INSTALLATION, Muffler.>
12) Lower the vehicle.
13) Connect the parking brake cable to the parking brake assembly. <Ref. to PB-14, INSTALLATION, Parking Brake Assembly (Rear Disc Brake).>
14) Install the rear disc brake assembly.

Tightening torque:
66 N·m (6.7 kgf-m, 48.7 ft-lb)

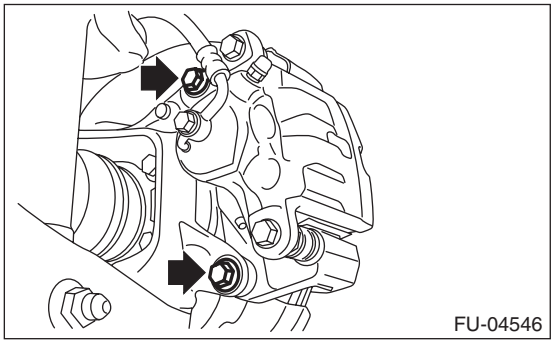

15) Install the rear brake hose bracket to the rear housing.

Tightening torque:
33 N·m (3.4 kgf-m, 24.3 ft-lb)

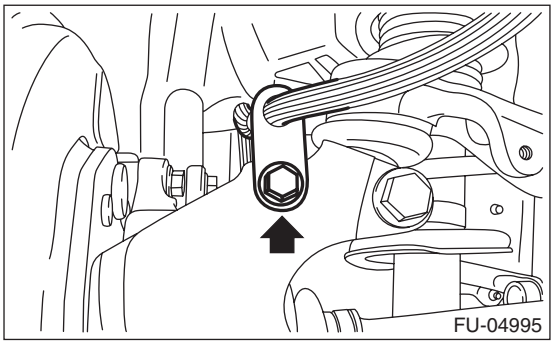

16) Install the rear ABS wheel speed sensor harness bracket to the upper arm.

NOTE:
Prevent the harness identification (line) from being twisted when installing. <Ref. to VDC-2, SPECIFICATION, General Description.>

Tightening torque:
7.5 N·m (0.8 kgf-m, 5.5 ft-lb)

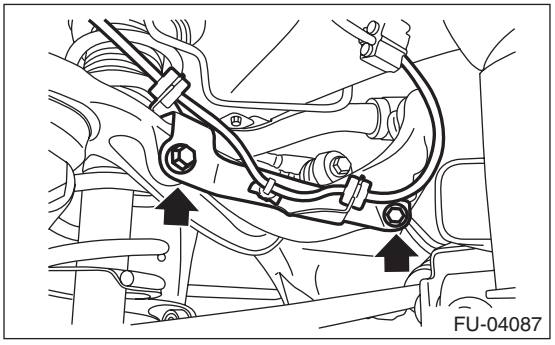

17) Attach the rear ABS wheel speed sensor to the rear housing.

NOTE:
Prevent the harness identification (line) from being twisted when installing. <Ref. to VDC-2, SPECIFICATION, General Description.>

Tightening torque:
7.5 N·m (0.8 kgf-m, 5.5 ft-lb)

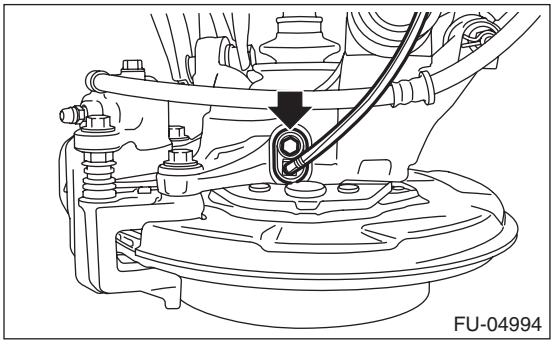

18) Install the rear wheels.

Tightening torque:
120 N·m (12.2 kgf-m, 88.5 ft-lb)

19) Connect the quick connector of fuel delivery tube (A) and fuel return tube (B). <Ref. to FU(H4DOTC)-91, INSTALLATION, Fuel Delivery, Return and Evaporation Lines.>

NOTE:
When connecting, be careful not to reverse the delivery side and return side.

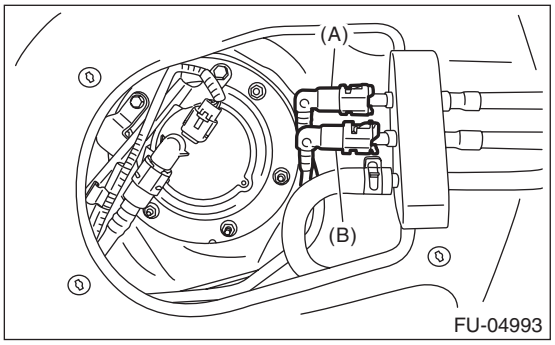

20) Install the service hole cover of fuel sub level sensor.

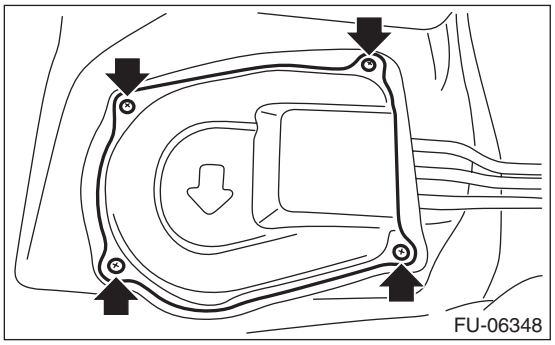

21) Attach the service hole cover of the fuel pump, and attach the connector and clip.

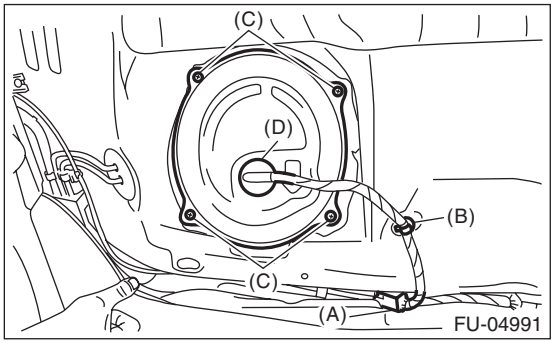

(A) Connector
(B) Clip
(C) Screw
(D) Grommet

22) Set the floor mat (C), and install clips (A) and seat cushion hooks (B).

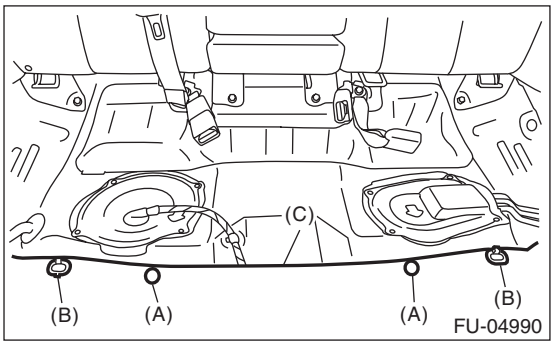

23) Install the rear seat cushion. <Ref. to SE-49, INSTALLATION, Rear Seat.>

24) Connect the battery ground terminal.

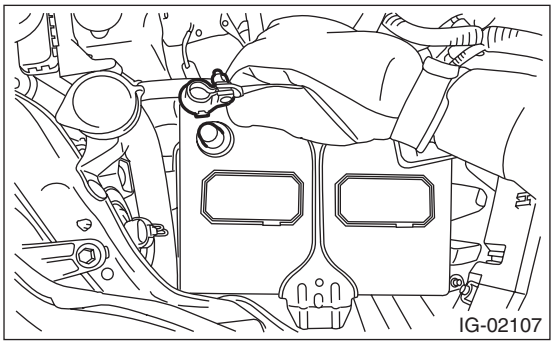

25) Inspect the wheel alignment and adjust if necessary.

C: INSPECTION

1) Check that the fuel tank and fuel pipe have no deformation, cracks and other damages.
2) Check that the fuel hose has no cracks, damage or loose part.

25.Fuel Filler Pipe

A: REMOVAL

WARNING:
Place "NO OPEN FLAMES" signs near the working area.

CAUTION:
Be careful not to spill fuel.

1) Release the fuel pressure. <Ref. to FU(H4DOTC)-66, RELEASING OF FUEL PRESSURE, PROCEDURE, Fuel.>
2) Drain fuel. <Ref. to FU(H4DOTC)-66, DRAINING FUEL (WITH SUBARU SELECT MONITOR), PROCEDURE, Fuel.>
3) Disconnect the ground cable from battery.

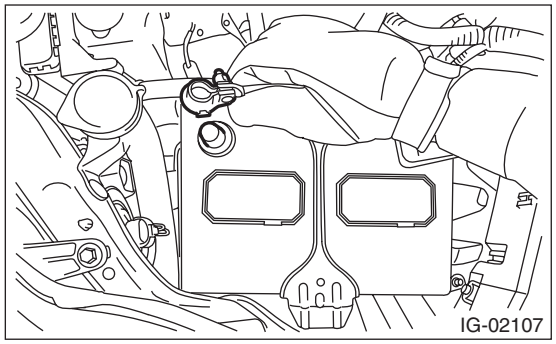

4) Open the fuel filler lid, and remove the filler cap.
5) Turn the fuel filler pipe protector in the direction of the arrow to unlock and remove it.

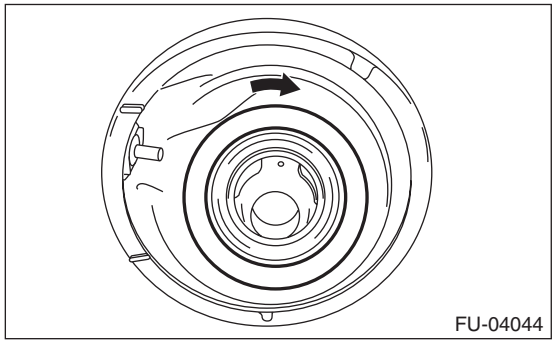

6) Remove the rear wheel RH.
7) Lift up the vehicle.
8) Remove the rear mud guard RH. <Ref. to EI-38, REMOVAL, Mud Guard.>
9) Remove the rear sub frame. <Ref. to RS-16, REMOVAL, Rear Sub Frame.>
10) Disconnect the fuel filler hose (A), PCV inlet hose (B) and circulate hose (C) from the fuel filler pipe assembly.

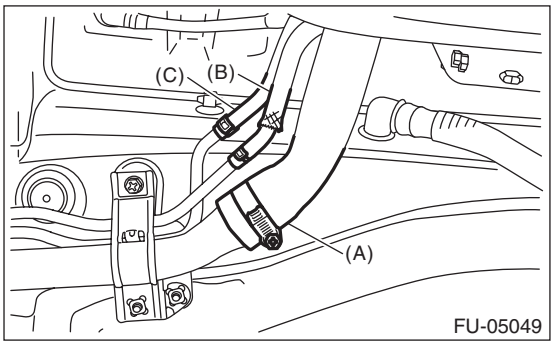

11) Disconnect the evaporation hose (A) from fuel filler pipe assembly and remove the bolts and nuts securing the fuel filler pipe assembly to the vehicle body.

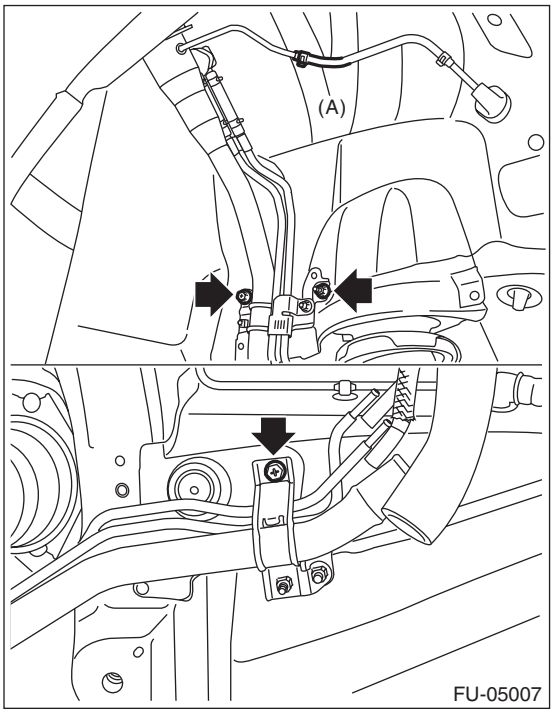

12) Remove the fuel filler pipe assembly from the underside of the vehicle.

B: INSTALLATION

1) Open the fuel filler lid.
2) Insert the fuel filler pipe assembly into the rubber saucer from inside of the rear fender.
3) Install the fuel filler pipe assembly to the vehicle body and connect the evaporation hose (A) to the fuel filler pipe assembly.

Tightening torque:
7.5 N·m (0.8 kgf-m, 5.5 ft-lb)

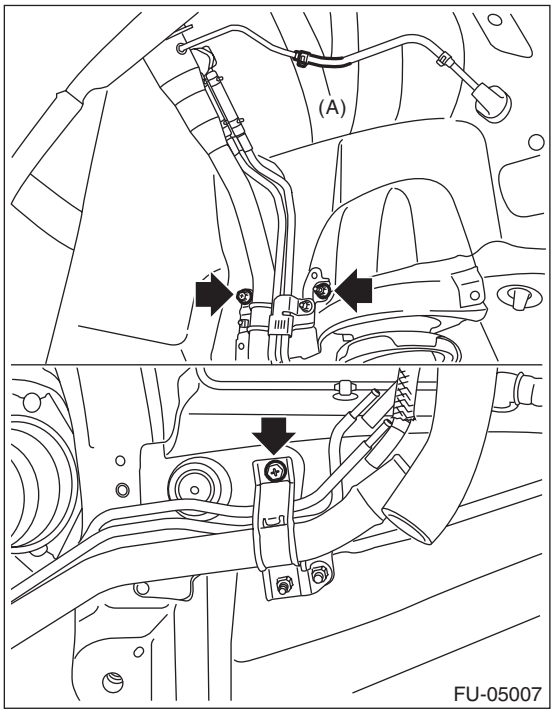

4) Align the cutout on the fuel filler pipe protector and the protrusion of the neck holder and insert them all the way, and then turn the fuel filler pipe protector in the direction of the arrow until it is locked.

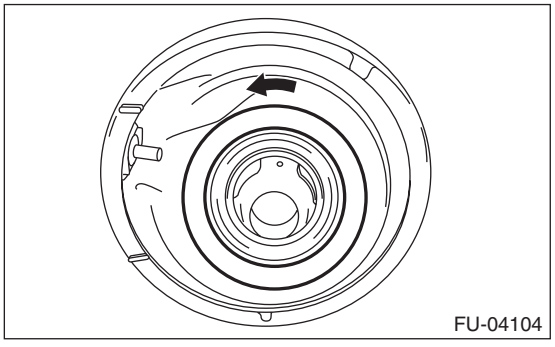

5) Securely insert the fuel filler hose (A), PCV inlet hose (B) and circulate hose (C) to the spool or stopper, then attach the clamp or clip as shown in the figure.

Tightening torque:
2.5 N·m (0.3 kgf-m, 1.8 ft-lb)

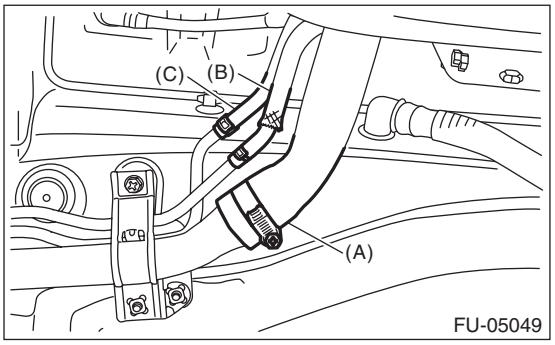

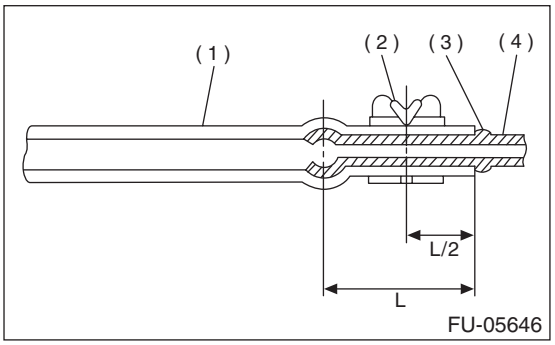

(1) Hose
(2) Clamp or clip
(3) Spool or bump
(4) Pipe

6) Install the rear sub frame. <Ref. to RS-18, INSTALLATION, Rear Sub Frame.>
7) Install the rear mud guard RH. <Ref. to EI-38, INSTALLATION, Mud Guard.>
8) Lower the vehicle.
9) Install the rear wheel RH.

Tightening torque:
120 N·m (12.2 kgf-m, 88.5 ft-lb)

10) Connect the battery ground terminal.

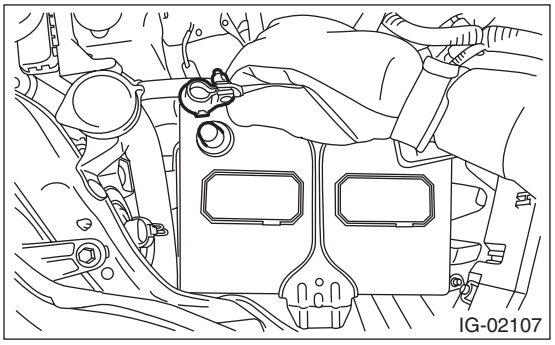

11) Inspect the wheel alignment and adjust if necessary.

C: DISASSEMBLY

1) Remove the shut valve from the fuel filler pipe. <Ref. to EC(H4DOTC)-21, REMOVAL, Shut Valve.>
2) Remove the evaporation pipe from the fuel filler pipe.

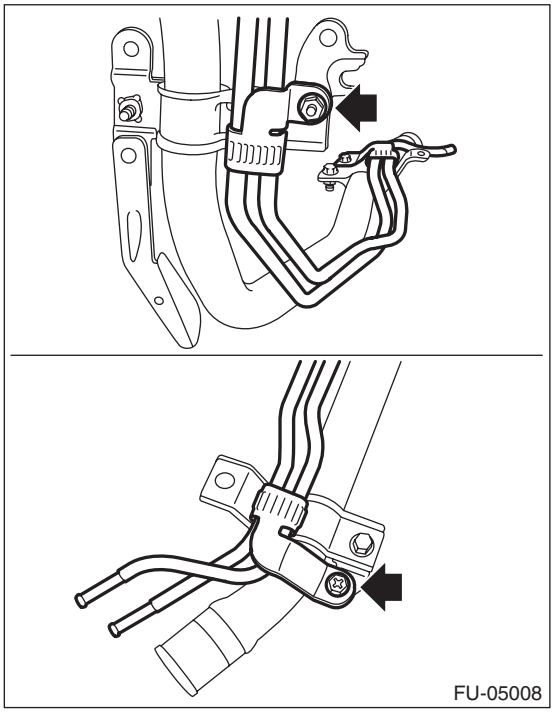

3) Remove the fuel filler pipe bracket from the fuel filler pipe.

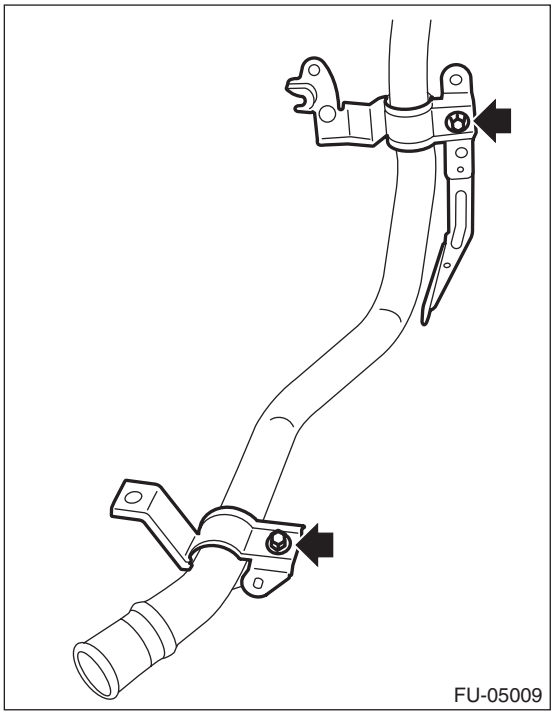

D: ASSEMBLY

1) Temporarily tighten the bolts securing the fuel filler pipe bracket to the fuel filler pipe.

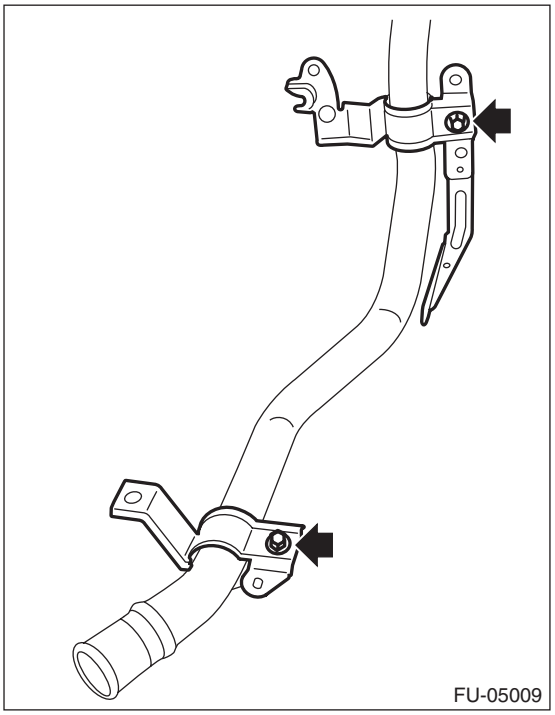

2) Install the evaporation pipe to the fuel filler pipe.

Tightening torque:
7.5 N·m (0.8 kgf-m, 5.5 ft-lb)

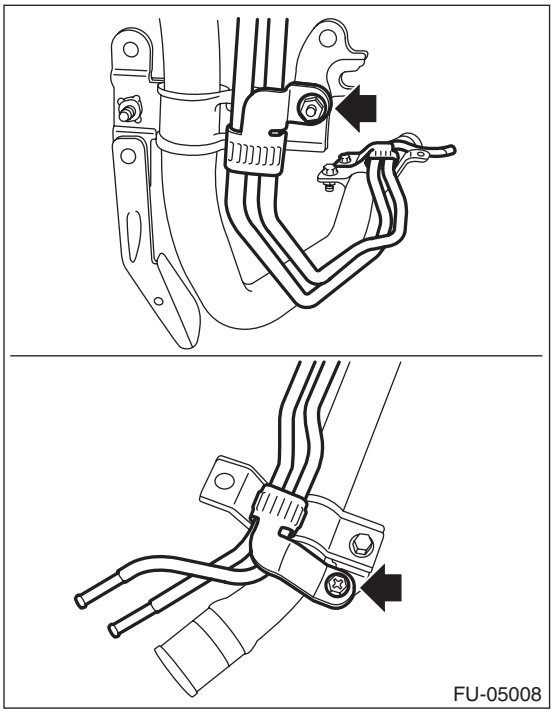

3) Tighten the bolts securing the fuel filler pipe bracket to the fuel filler pipe.

Tightening torque:
7.35 N·m (0.7 kgf-m, 5.4 ft-lb)

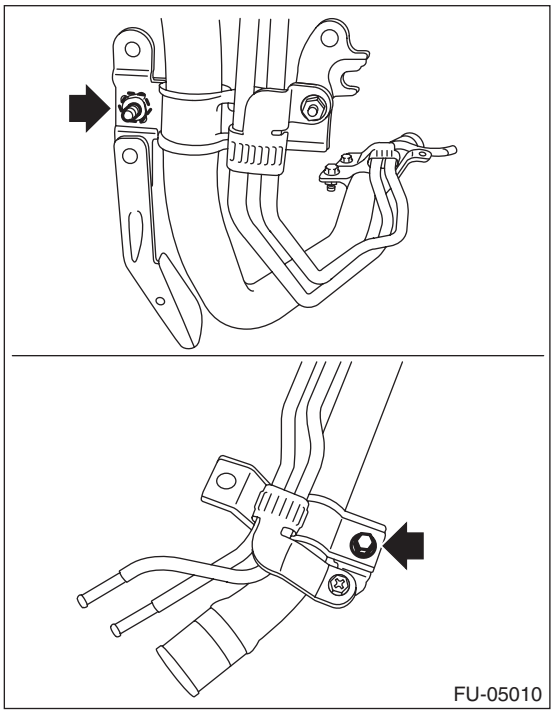

4) Install the shut valve to the fuel filler pipe. <Ref. to EC(H4DOTC)-21, INSTALLATION, Shut Valve.>

E: INSPECTION

1) Check that the fuel filler pipe and evaporation pipe do not have deformation, cracks or other damages.
2) Check that the hose has no cracks, damage or loose part.

26.Fuel Pump

A: REMOVAL

WARNING:
Place "NO OPEN FLAMES" signs near the working area.

CAUTION:
- **Be careful not to spill fuel.**
- **If the fuel gauge indicates that two thirds or more of the fuel is remaining, be sure to drain fuel before starting work to avoid the fuel to spill.**

NOTE:
Fuel pump assembly consists of fuel pump, fuel filter, fuel chamber and fuel level sensor.

1) Release the fuel pressure. <Ref. to FU(H4DOTC)-66, RELEASING OF FUEL PRESSURE, PROCEDURE, Fuel.>
2) Drain fuel. <Ref. to FU(H4DOTC)-66, DRAINING FUEL (WITH SUBARU SELECT MONITOR), PROCEDURE, Fuel.>
3) Disconnect the ground cable from battery.

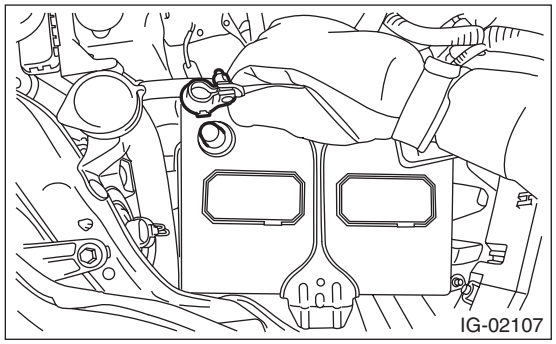

4) Remove the rear seat cushion. <Ref. to SE-34, REMOVAL, Rear Seat.>
5) Remove the clips (A) and seat cushion hooks (B), and turn over the floor mat (C).

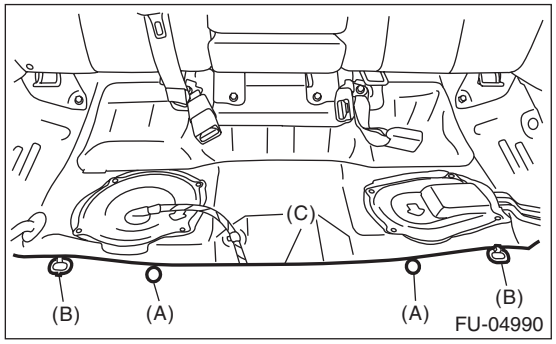

6) Remove the service hole cover.
(1) Disconnect the fuel cord connector (A), and remove the clip (B).
(2) Remove the screw (C).
(3) Push the grommet (D) down and remove the service hole cover.

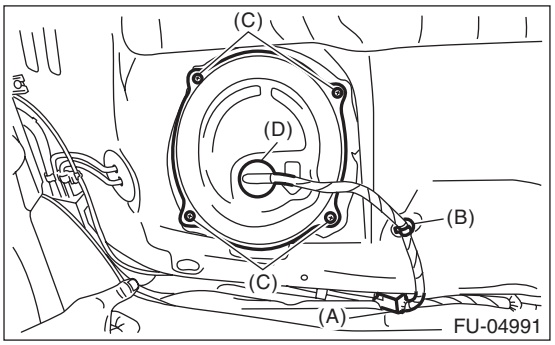

7) Disconnect the connector (A) from fuel pump, and remove the clip (B) securing the harness.
8) Disconnect the quick connector of fuel delivery tube (C), fuel return tube (D) and fuel sub delivery tube (E). <Ref. to FU(H4DOTC)-88, REMOVAL, Fuel Delivery, Return and Evaporation Lines.>
9) Remove the rubber cap (F) from nut.

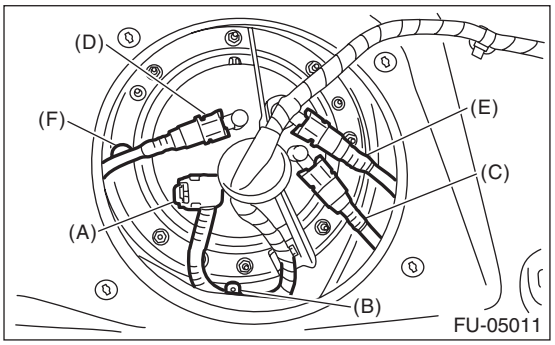

10) Remove the nuts securing the fuel pump upper plate to the fuel tank and remove the fuel pump upper plate.

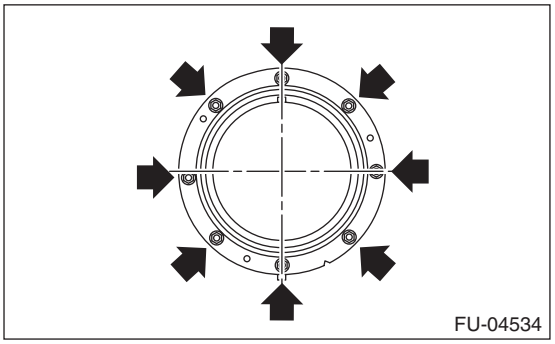

11) Remove the fuel pump assembly from the fuel tank.

B: INSTALLATION

Install in the reverse order of removal while being careful of the following.
- Make sure the sealing portion is free from fuel or foreign matter before installation.
- Align protrusion (A) of the gasket to the position shown in the figure.
- Insert the protrusion (B) of gasket to the fuel pump upper plate. (3 places)
- Align the protrusion (C) of fuel pump assembly with the cutout on the fuel pump upper plate.
- Tighten the nuts to the specified torque in the order as shown in the figure.
- After assembly, install the rubber cap (D) to the position shown in the figure.

NOTE:
- Use a new gasket.
- Do not forget to install the rubber cap (D).

Tightening torque:
4.4 N·m (0.4 kgf-m, 3.2 ft-lb)

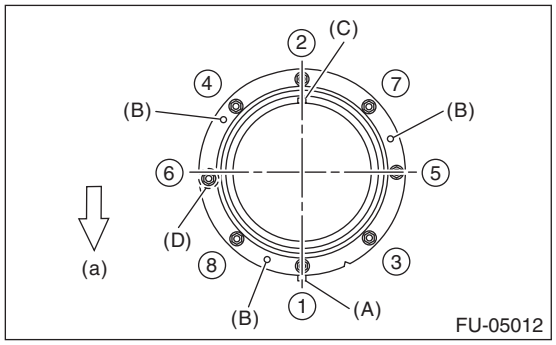

(a) Front side of vehicle

C: INSPECTION

1) Check that the fuel pump has no deformation, cracks or other damages.
2) Connect battery positive terminal to terminal No. 5 and battery ground terminal to terminal No. 6, and inspect the fuel pump operation.

WARNING:
- **Wipe off fuel completely.**
- **Keep the battery as far apart from fuel pump as possible.**
- **Do not run the fuel pump for a long time under non-load condition.**

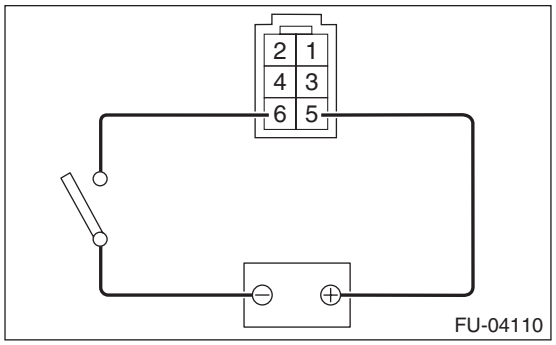

27.Fuel Level Sensor

A: REMOVAL

WARNING:
Place "NO OPEN FLAMES" signs near the working area.

CAUTION:
- **Be careful not to spill fuel.**
- **If the fuel gauge indicates that two thirds or more of the fuel is remaining, be sure to drain fuel before starting work to avoid the fuel to spill.**

NOTE:
The fuel level sensor is built in fuel pump assembly.
1) Remove the fuel pump assembly. <Ref. to FU(H4DOTC)-79, REMOVAL, Fuel Pump.>
2) Disconnect the connector from the fuel filter assembly.

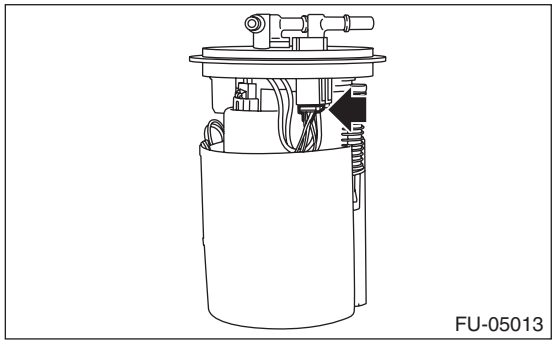
FU-05013

3) Remove the harness from the hooks (A) on the fuel chamber assembly and remove the fuel temperature sensor (B) from fuel chamber assembly.

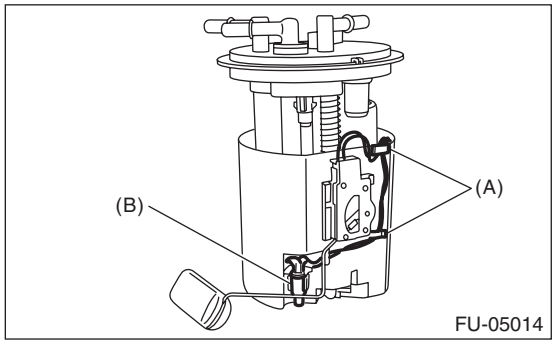

FU-05014

4) Press two claws (A) of the fuel level sensor, and slide the fuel level sensor in the direction of the arrow to remove the fuel level sensor.

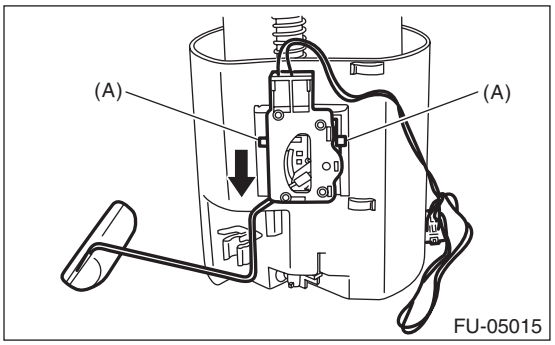

FU-05015

B: INSTALLATION

Install in the reverse order of removal.

C: INSPECTION

1) Check that the fuel level sensor has no damage.
2) Measure the fuel level sensor float position.

NOTE:
When inspecting the fuel level sensor, perform the work with the sensor installed to the fuel pump.

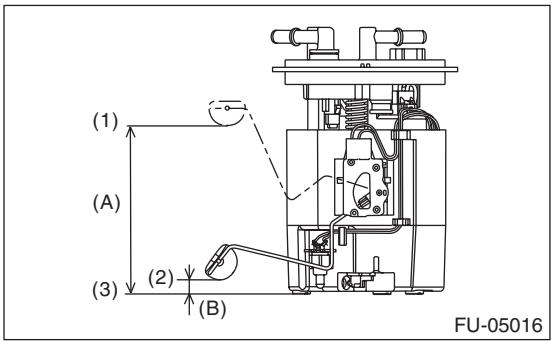

FU-05016

(1) FULL
(2) EMPTY
(3) Fuel tank seating surface

Float position	Standard
FULL to Fuel tank seating surface (A)	126.4±4 mm (4.976±0.157 in)
EMPTY to Fuel tank seating surface (B)	11.0±4 mm (0.433±0.157 in)

3) Measure the resistance between fuel level sensor terminals.

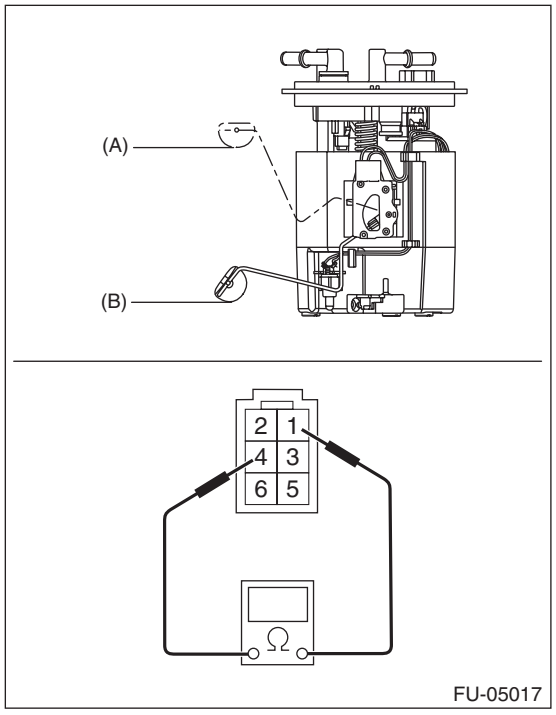

Float position	Terminal No.	Standard
FULL (A)	1 and 4	8.7±1.0 Ω
EMPTY (B)		139.1±2.0 Ω

28.Fuel Sub Level Sensor

A: REMOVAL

WARNING:
Place "NO OPEN FLAMES" signs near the working area.

CAUTION:
- **Be careful not to spill fuel.**
- **If the fuel gauge indicates that two thirds or more of the fuel is remaining, be sure to drain fuel before starting work to avoid the fuel to spill.**

1) Release the fuel pressure. <Ref. to FU(H4DOTC)-66, RELEASING OF FUEL PRESSURE, PROCEDURE, Fuel.>
2) Drain fuel. <Ref. to FU(H4DOTC)-66, DRAINING FUEL (WITH SUBARU SELECT MONITOR), PROCEDURE, Fuel.>
3) Disconnect the ground cable from battery.

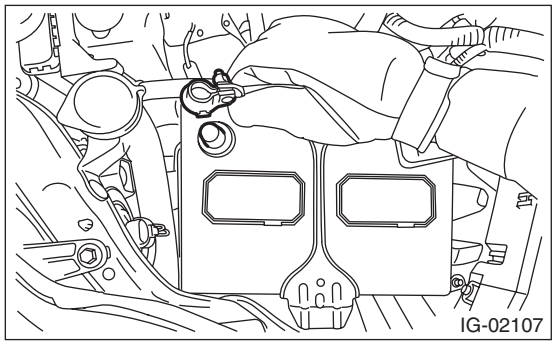
IG-02107

4) Remove the rear seat cushion. <Ref. to SE-34, REMOVAL, Rear Seat.>
5) Remove the service hole cover.

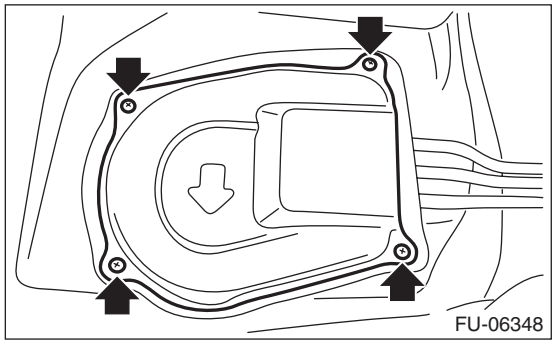
FU-06348

6) Disconnect the connector (A) from fuel sub level sensor, and remove the clip (B) securing the fuel cord from fuel sub level sensor protector.

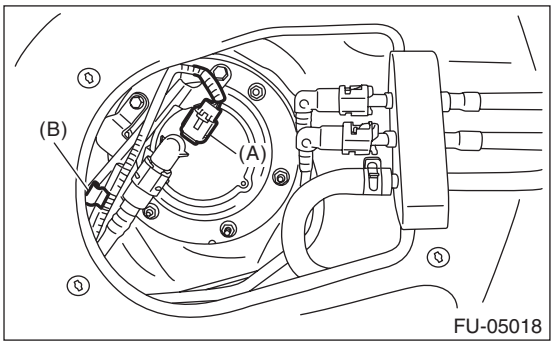

FU-05018

7) Remove the bolts (A) securing the fuel sub level sensor protector to the fuel sub level sensor upper plate, and remove the fuel sub level sensor protector.
8) Disconnect the quick connector on the fuel sub delivery tube (B). <Ref. to FU(H4DOTC)-88, REMOVAL, Fuel Delivery, Return and Evaporation Lines.>

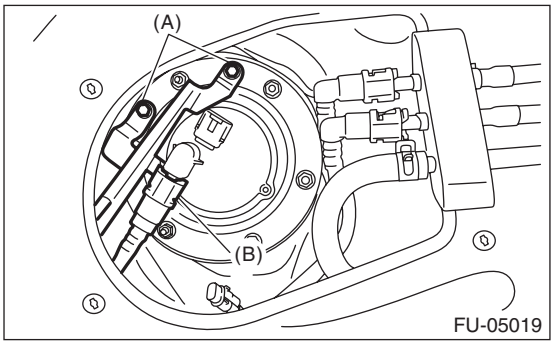

FU-05019

9) Remove the nuts securing the fuel sub level sensor upper plate to the fuel tank and remove the fuel sub level sensor upper plate.

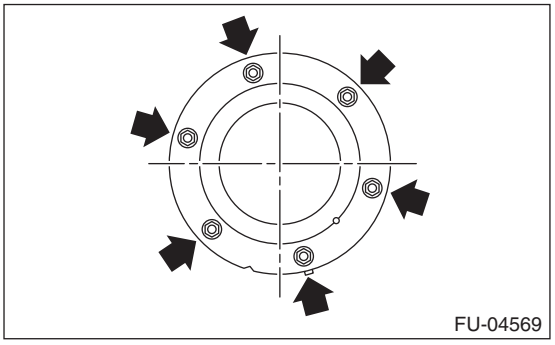
FU-04569

10) Remove the fuel sub level sensor from the fuel tank.

B: INSTALLATION

Install in the reverse order of removal while being careful of the following.
- Make sure the sealing portion is free from fuel or foreign matter before installation.
- Align protrusion (A) of the gasket to the position shown in the figure.
- Align protrusion (B) of the fuel sub level sensor to the cutout in the fuel sub level sensor upper plate.
- After tightening the bolts to the specified torque in the order indicated in the figure, install the fuel sub level sensor protector.

NOTE:
Use a new gasket.

Tightening torque:
4.4 N·m (0.4 kgf-m, 3.2 ft-lb)

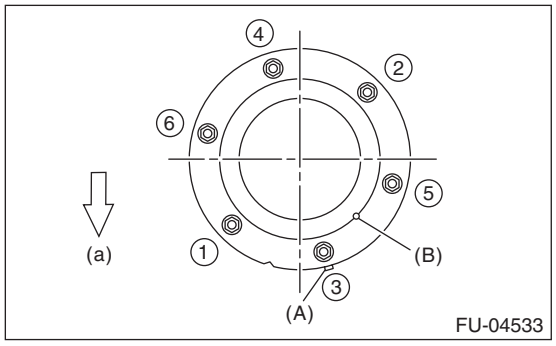

(a) Front side of vehicle

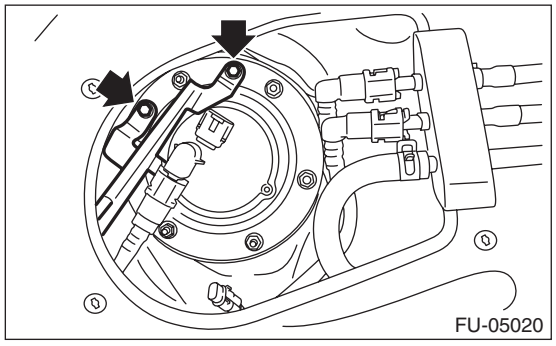

C: INSPECTION

1) Check that the fuel sub level sensor has no damage.
2) Measure the fuel sub level sensor float position.

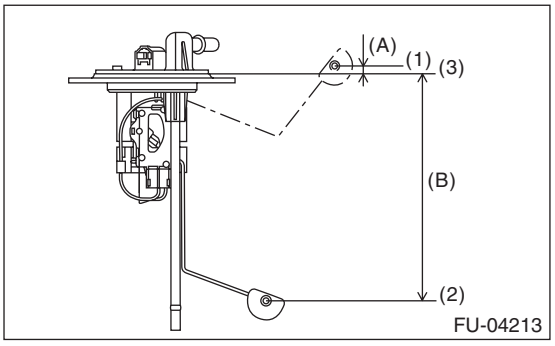

(1) FULL
(2) EMPTY
(3) Datum points

Float position	Standard
FULL to Datum point (A)	6.4±3.5 mm (0.252±0.138 in)
EMPTY to Datum point (B)	163.3±3.5 mm (6.429±0.138 in)

3) Measure the resistance between fuel sub level sensor terminals.

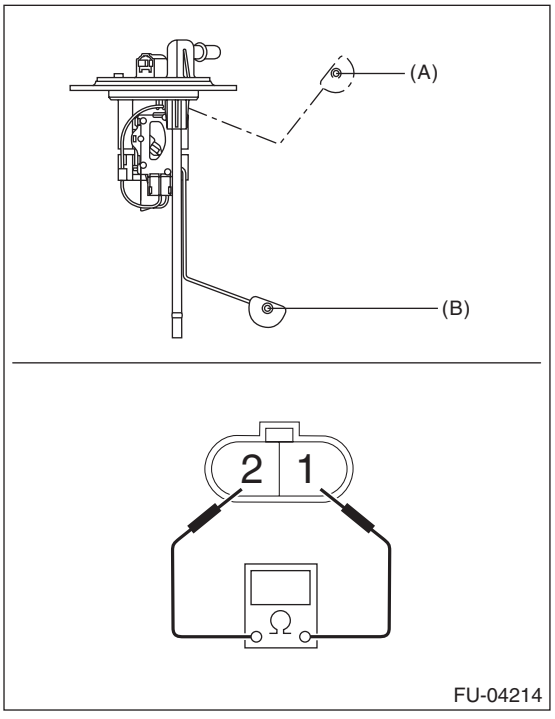

Float position	Terminal No.	Standard
FULL (A)	1 and 2	8.7±1.0 Ω
EMPTY (B)		270.9±4.0 Ω

29.Fuel Filter

A: REMOVAL

WARNING:
Place "NO OPEN FLAMES" signs near the working area.

CAUTION:
- **Be careful not to spill fuel.**
- **If the fuel gauge indicates that two thirds or more of the fuel is remaining, be sure to drain fuel before starting work to avoid the fuel to spill.**
- **Be careful not to drop or apply any impact to the fuel pump during work. This may deteriorate its performance.**

NOTE:
The fuel filter is built in fuel pump assembly.
1) Remove the fuel pump assembly. <Ref. to FU(H4DOTC)-79, REMOVAL, Fuel Pump.>
2) Remove the fuel level sensor and fuel temperature sensor. <Ref. to FU(H4DOTC)-81, REMOVAL, Fuel Level Sensor.>
3) Disconnect the connector from the fuel filter assembly.

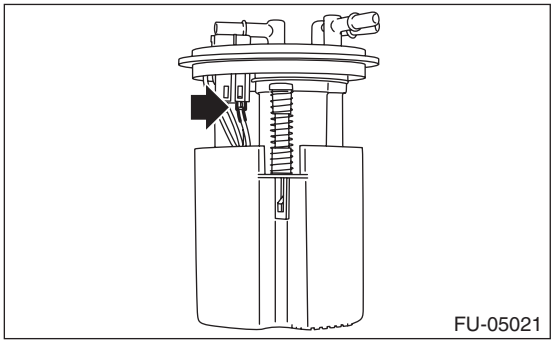
FU-05021

4) Disengage the claw connecting the fuel filter assembly and fuel chamber assembly, and separate fuel filter assembly and fuel chamber assembly.

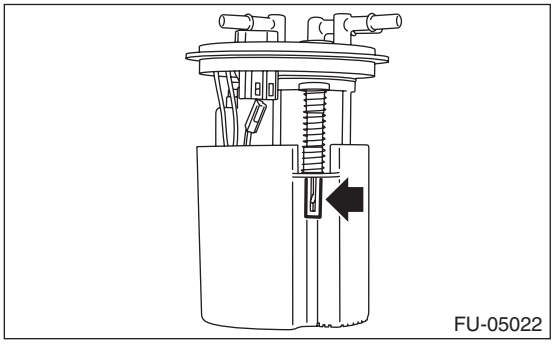
FU-05022

5) Remove the fuel pump holder from the fuel filter assembly.

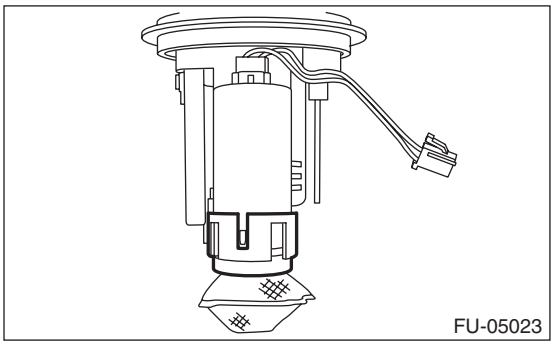
FU-05023

6) Remove the fuel pump from the fuel filter assembly.

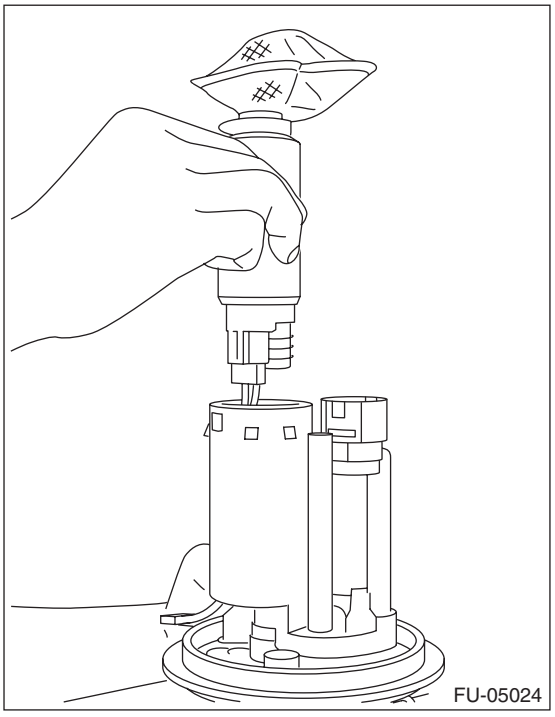
FU-05024

B: INSTALLATION

1) Assemble the gasket spacer (A) and support rubber cushion (B) to the fuel pump, and install the fuel pump to the fuel filter assembly.

NOTE:
- Use a new gasket spacer.
- Use a new support rubber cushion.
- Apply gasoline to the surface of gasket spacer and support rubber cushion.

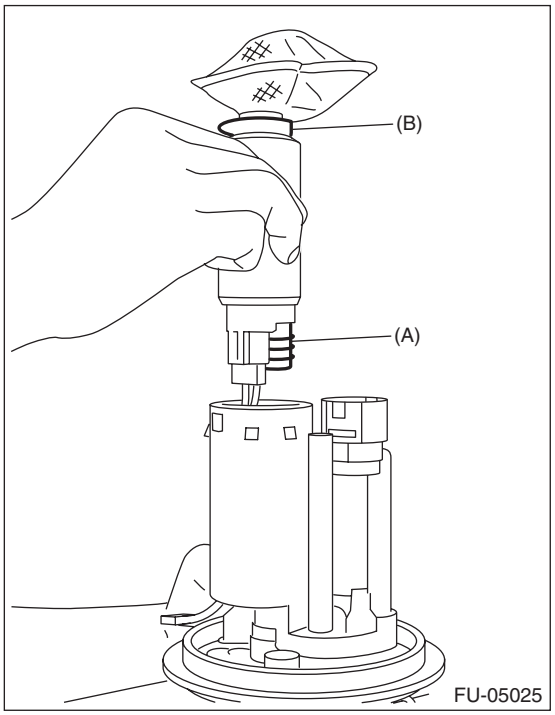

2) Install the fuel pump holder to the fuel filter assembly.

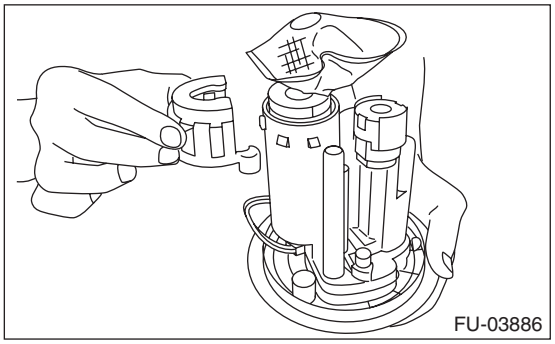

3) Install the pump module spring (A) to fuel filter assembly, and install the fuel chamber assembly (B).

NOTE:
- Use a new fuel chamber assembly.
- Check that the claw connecting the fuel filter assembly and fuel chamber assembly is securely fastened.

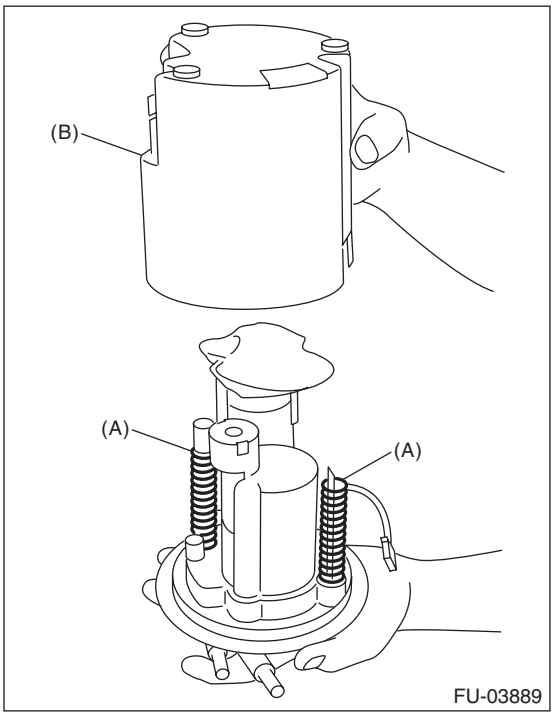

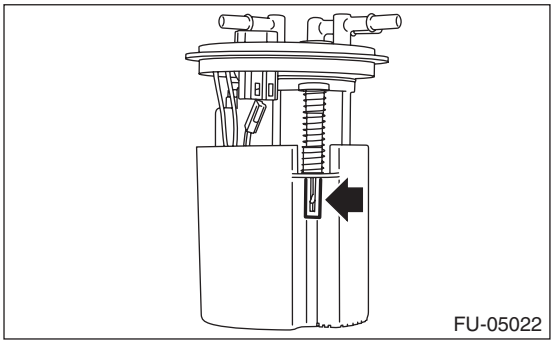

4) Connect the fuel pump connector.

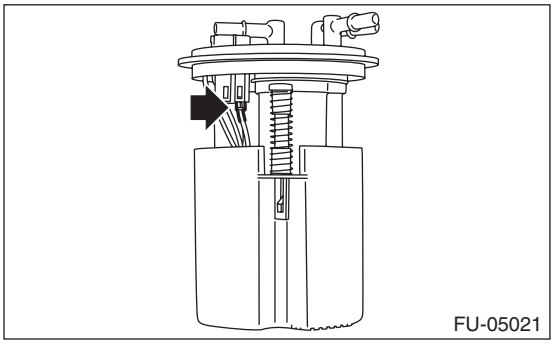

5) Install the fuel level sensor and fuel temperature sensor. <Ref. to FU(H4DOTC)-81, INSTALLATION, Fuel Level Sensor.>

6) Inspect the fuel level sensor. <Ref. to FU(H4DOTC)-81, INSPECTION, Fuel Level Sensor.>

7) Install the fuel pump assembly. <Ref. to FU(H4DOTC)-80, INSTALLATION, Fuel Pump.>

30.Fuel Damper

A: REMOVAL

WARNING:
Place "NO OPEN FLAMES" signs near the working area.

CAUTION:
- **Be careful not to spill fuel.**
- **Catch the fuel from hoses using a container or cloth.**

1) Release the fuel pressure. <Ref. to FU(H4DOTC)-66, RELEASING OF FUEL PRESSURE, PROCEDURE, Fuel.>
2) Disconnect the fuel delivery hose (A) and fuel return hose (B) from the fuel damper, and remove the fuel damper.

NOTE:
Be careful not to confuse the delivery side with the return side of the fuel damper.

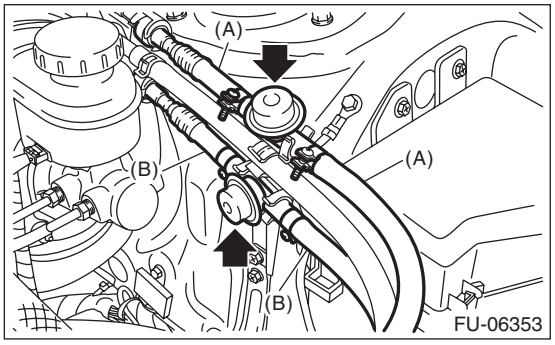

B: INSTALLATION

Install in the reverse order of removal.

NOTE:
- Be careful not to confuse the delivery side with the return side of the fuel damper.
- For information about connecting fuel delivery hose and fuel return hose, refer to "Fuel Delivery, Return & Evaporation Lines". <Ref. to FU(H4DOTC)-93, CONNECTING THE FUEL DELIVERY HOSE, FUEL RETURN HOSE AND FUEL HOSE, INSTALLATION, Fuel Delivery, Return and Evaporation Lines.>

C: INSPECTION

1) Check that the fuel damper has no deformation, cracks or other damages.
2) Check that the fuel hose has no cracks, damage or loose part.

31.Fuel Delivery, Return and Evaporation Lines

A: REMOVAL

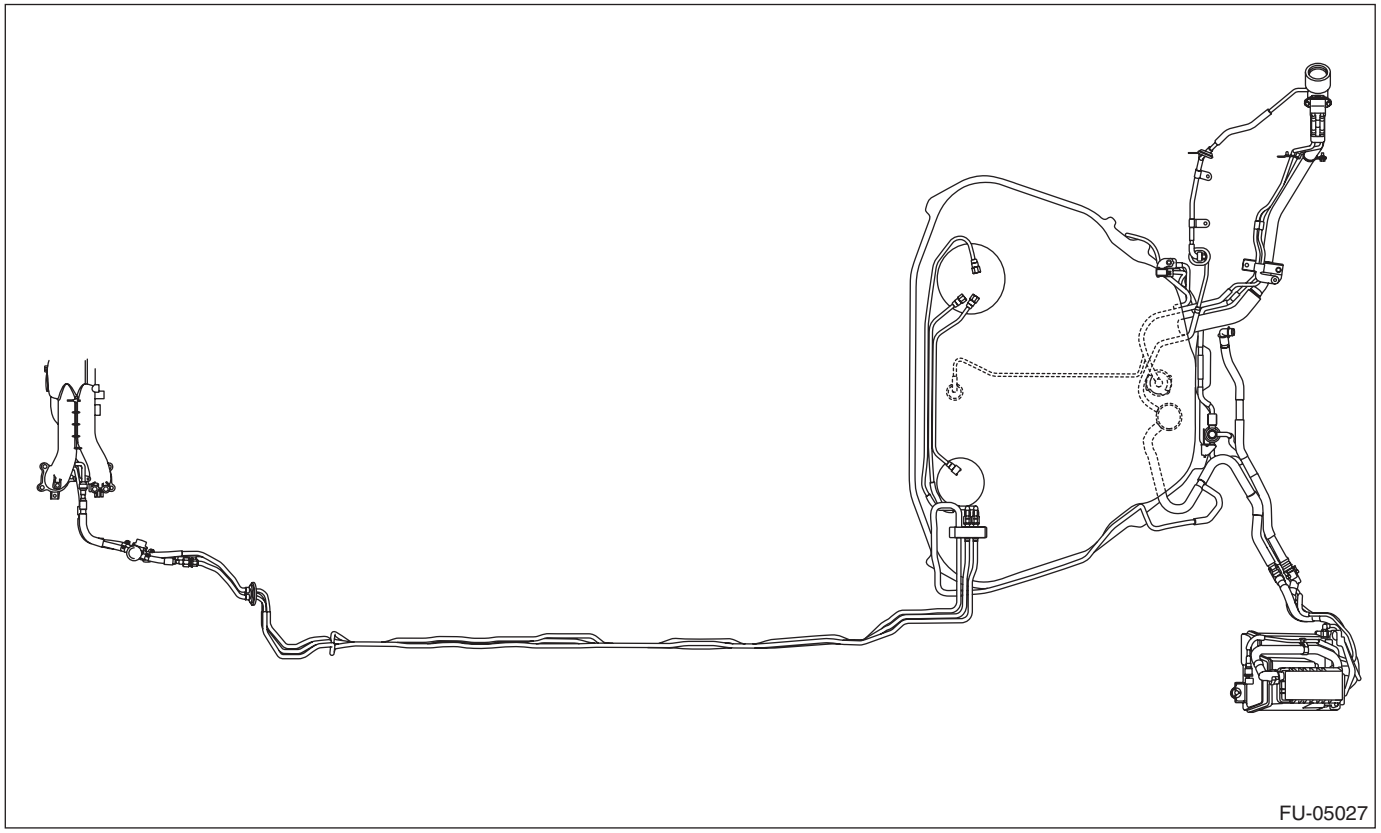

WARNING:
Place "NO OPEN FLAMES" signs near the working area.

CAUTION:
Be careful not to spill fuel.

1) Release the fuel pressure. <Ref. to FU(H4DOTC)-66, RELEASING OF FUEL PRESSURE, PROCEDURE, Fuel.>
2) Open the fuel filler lid and remove the fuel filler cap.
3) Remove the floor mat. <Ref. to EI-162, REMOVAL, Floor Mat.>
4) In the engine compartment, disconnect the fuel delivery hoses, fuel return hoses and evaporation hoses.

CAUTION:
- **Be careful not to spill fuel.**
- **Catch the fuel from hoses using a container or cloth.**

(1) Remove the connect check cover from the fuel delivery hose and fuel return hose.

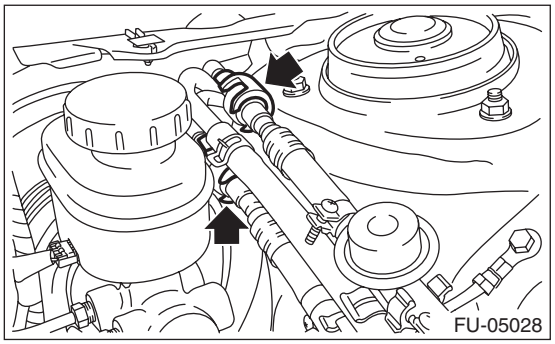

(2) Set the ST to the fuel pipe.

ST 42099AE000 QUICK CONNECTOR RELEASE

(3) Disconnect the quick connector of the fuel delivery hose and fuel return hose by pushing the ST in the direction of the arrow.
(4) Remove the clip and disconnect the evaporation hose from the fuel pipe.

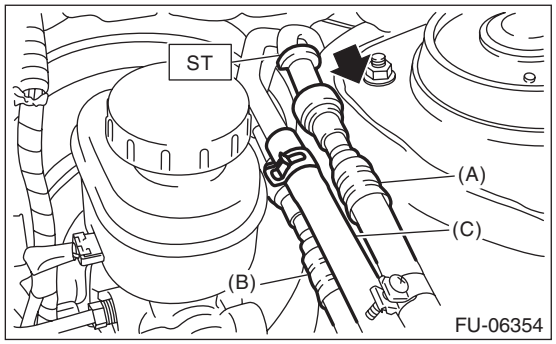

(A) Fuel delivery hose
(B) Fuel return hose
(C) Evaporation hose

5) Remove the fuel tank. <Ref. to FU(H4DOTC)-68, REMOVAL, Fuel Tank.>
6) Remove the rear mud guard LH. <Ref. to EI-38, REMOVAL, Mud Guard.>
7) Remove the purge hose (A), purge pipe (B), air vent hose (C), PCV outlet hose (D), PCV drain hose (E) and drain tube assembly (F).

NOTE:
Disconnect the quick connector as shown in the figure.

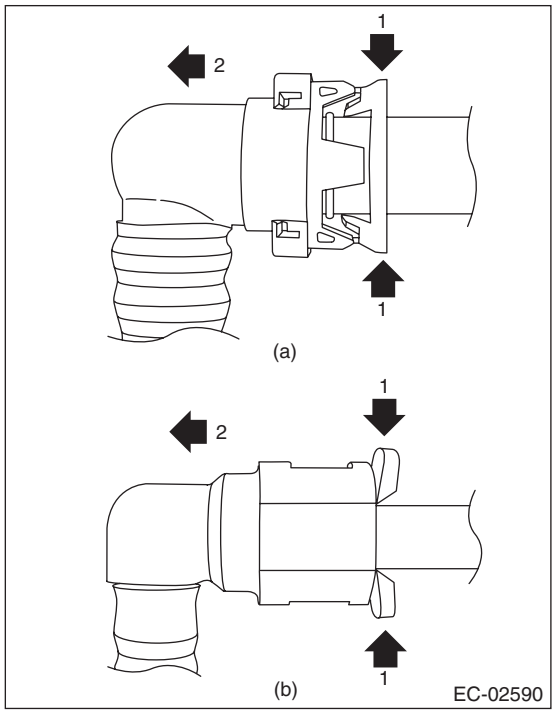

(a) Air vent hose (C), drain tube ASSY (F)
(b) PCV outlet hose (D), PCV drain hose (E)

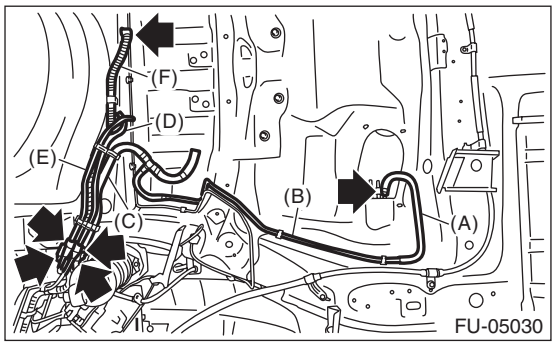

8) Remove the fuel pipe assembly from vehicle.
9) Disconnect the quick connector, then disconnect the fuel delivery tube, fuel return tube and fuel sub delivery tube.
• When using ST
1. Attach ST to the pipe and push ST in the direction of arrow mark to disconnect the quick connector.
ST 42099AE000 QUICK CONNECTOR RELEASE

CAUTION:
• Be careful not to spill fuel.
• Catch the fuel from hoses using a container or cloth.
• To disconnect the connector, hold (C) shown in the figure and pull in axial direction.
• If the connector and pipe are sticking to each other, push and pull the connector with ST pushed, and then pull the connector after it starts moving freely.
• When disconnecting the connector, do not bend or twist the tube forcibly. If the tube is bent, replace with a new part.

NOTE:
Clean the pipe and quick connector, if they are covered with dust.

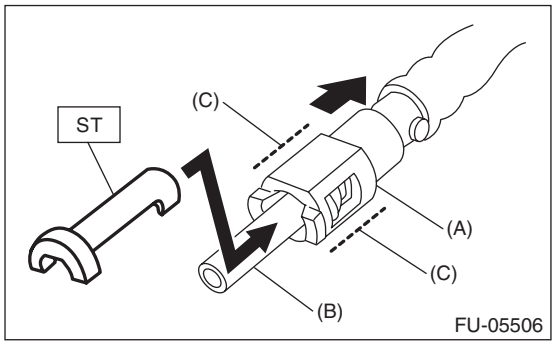

(A) Quick connector
(B) Pipe
(C) Connector holding position

2. To prevent from damaging or entering foreign matter, wrap the pipes and quick connectors with plastic bag etc.

CAUTION:
When reusing the retainer, do not disconnect the retainer from the connector.

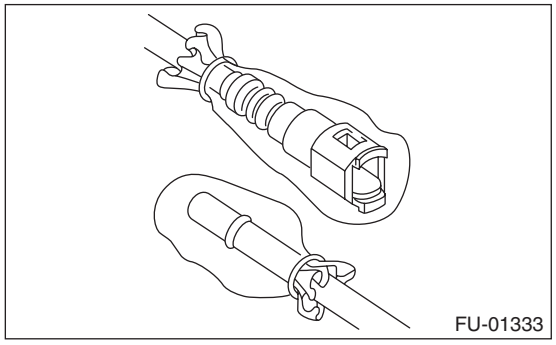

- When not using ST

1. Push the retainer in the direction of the arrow, disconnect the quick connector from pipe.

CAUTION:
- **Be careful not to spill fuel.**
- **Catch the fuel from hoses using a container or cloth.**
- **To disconnect the connector, hold (D) shown in the figure and pull in axial direction.**
- **If the connector and pipe are sticking to each other, push and pull the connector with the retainer pushed in the direction of the arrow, and then pull the connector after it starts moving freely.**
- **When disconnecting the connector, do not bend or twist the tube forcibly. If the tube is bent, replace with a new part.**

NOTE:
Clean the pipe and quick connector, if they are covered with dust.

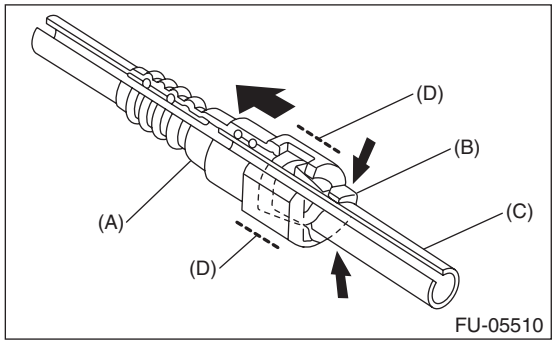

(A) Quick connector
(B) Retainer
(C) Pipe
(D) Connector holding position

2. To prevent from damaging or entering foreign matter, wrap the pipes and quick connectors with plastic bag etc.

CAUTION:
When reusing the retainer, do not disconnect the retainer from the pipe.

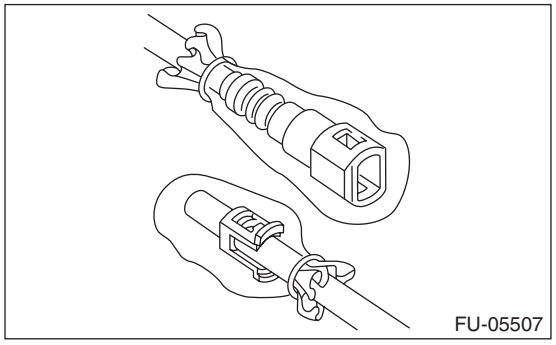

10) Remove the evaporation pipe.
(1) Remove the rear mud guard RH. <Ref. to EI-38, REMOVAL, Mud Guard.>
(2) Remove the evaporation hose.

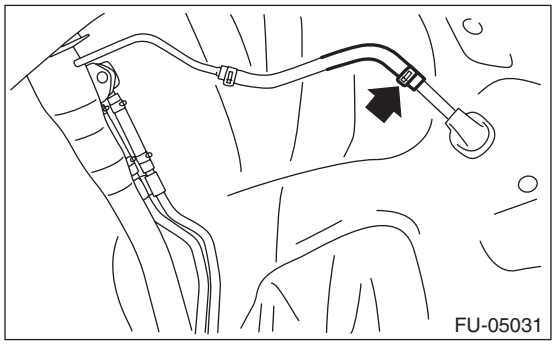

(3) Remove the trunk side trim panel assembly - side on the RH side. <Ref. to EI-110, REMOVAL, Rear Quarter Trim.>
(4) Remove the evaporation pipe protector.

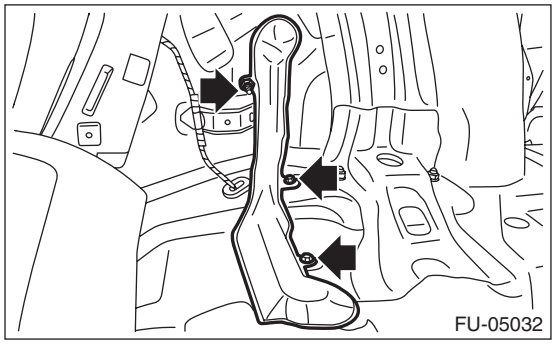

(5) Remove the evaporation pipe from vehicle.

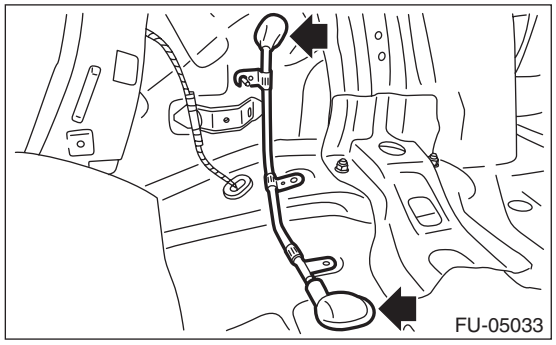

B: INSTALLATION

Install in the reverse order of removal while being careful of the following.

1. INSTALLATION OF EVAPORATION PIPE

1) Install the evaporation pipe to the vehicle.

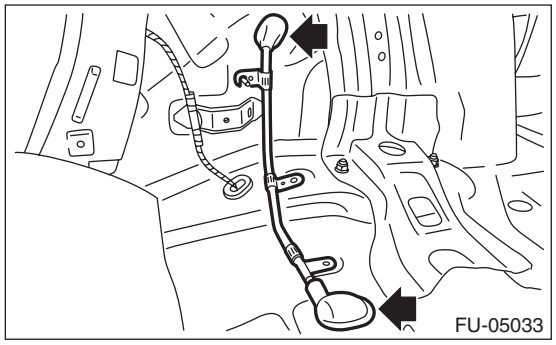

2) Install the evaporation pipe protector.

Tightening torque:
T1: 1 N·m (0.1 kgf-m, 0.7 ft-lb)
T2: 7.5 N·m (0.7 kgf-m, 5.4 ft-lb)

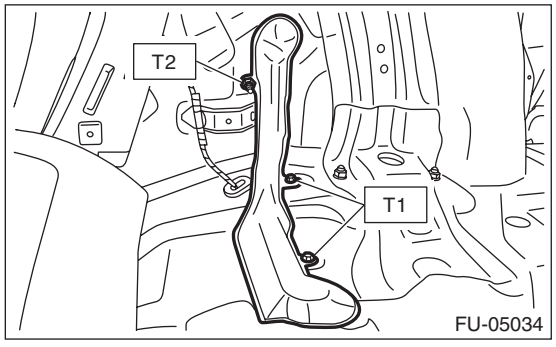

3) Install the trunk side trim panel assembly - side on RH side. <Ref. to EI-119, INSTALLATION, Rear Quarter Trim.>

4) Install the evaporation hose.

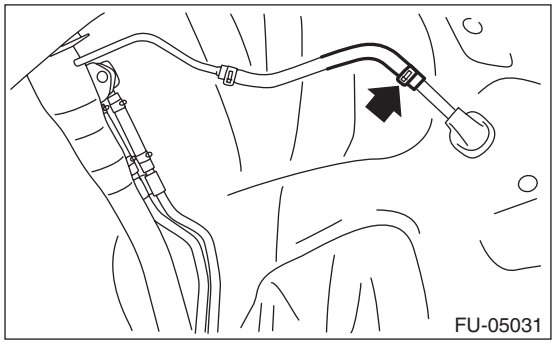

5) Install the rear mud guard RH. <Ref. to EI-38, INSTALLATION, Mud Guard.>

2. CONNECTING THE FUEL LINE QUICK CONNECTOR

CAUTION:
• Make sure there are no damage or dust on connections. If necessary, clean seal surface of pipe.

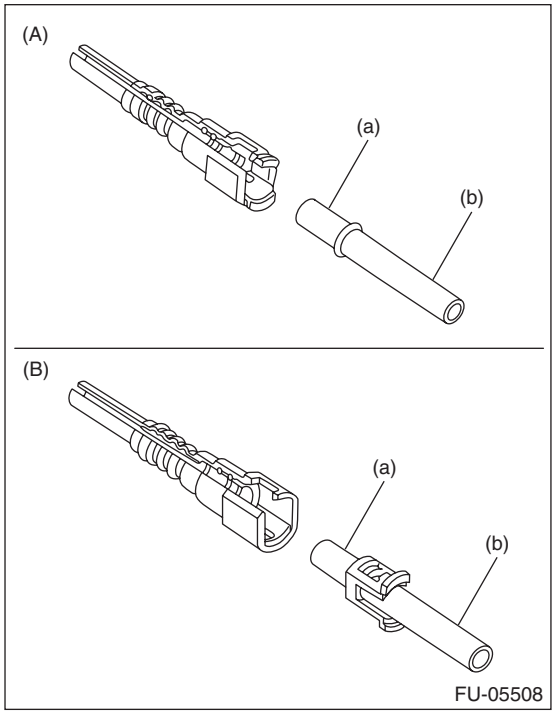

(A) When removed using ST
(B) When removed without using ST
(a) Seal surface
(b) Pipe

• When reusing the retainer, make sure that neither scratches nor deformation exist on the retainer. If it is faulty, use a new part.

1) Connect the quick connector to pipe.

CAUTION:
• Make sure that the quick connector is securely connected.

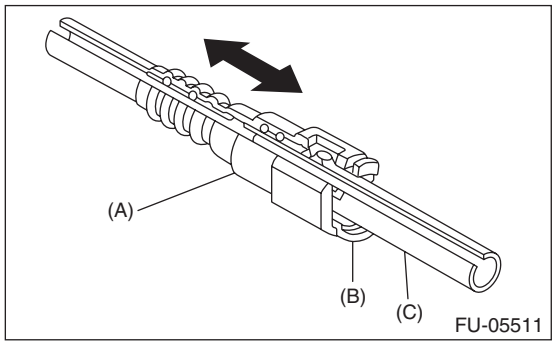

(A) Quick connector
(B) Retainer
(C) Pipe

• Make sure the two retainer pawls are engaged in their mating positions in the quick connector.
• Be sure to inspect tubes and their connections for any leakage of fuel.
• To connect the connector, hold (d) shown in the figure and push in axial direction.
• When connecting the connector, do not bend or twist the tube forcibly. If the tube is bent, replace with a new part.

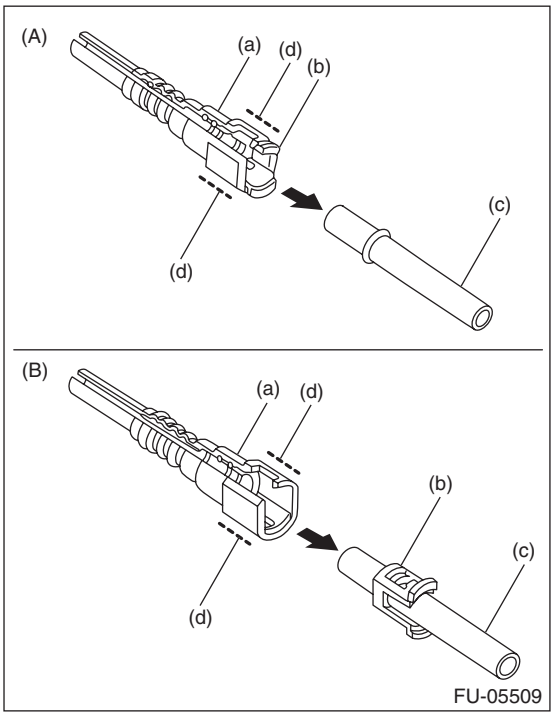

(A) When removed using ST
(B) When removed without using ST
(a) Quick connector
(b) Retainer
(c) Pipe
(d) Connector holding position

3. CONNECTING THE FUEL DELIVERY HOSE, FUEL RETURN HOSE AND FUEL HOSE

Connect the fuel delivery hose, fuel return hose, and fuel hose as shown in the figure.

CAUTION:
• If the connection portion has a spool or stopper, do not allow the end of the hose to bend or ride over by inserting the hose too deep.
• Be sure to inspect hoses and their connections for any leakage of fuel.

NOTE:
Use new fuel delivery hose, fuel return hose, and fuel hose.

Tightening torque:
1.25 N·m (0.1 kgf-m, 0.9 ft-lb)

L1: 2.5±1.5 mm (0.098±0.059 in)

L2: 22.5±2.5 mm (0.886±0.098 in)

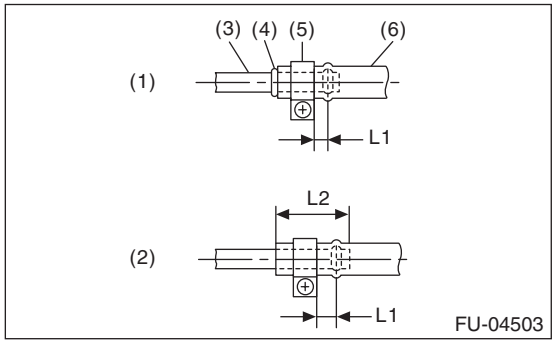

(1) When there is a spool or bump
(2) When there is no spool or bump
(3) Pipe
(4) Spool or bump
(5) Clamp
(6) Hose

4. EVAPORATION HOSE CONNECTION

Connect the evaporation hose to the pipe with an overlap of 15 to 20 mm (0.59 to 0.79 in).

L = 17.5±2.5 mm (0.689±0.098 in)

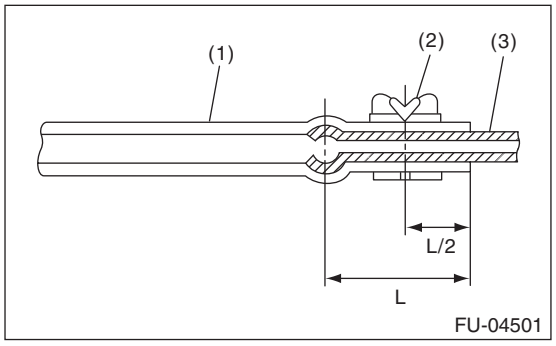

(1) Hose
(2) Clip
(3) Pipe

5. CONNECTING THE EVAPORATION LINE QUICK CONNECTOR

CAUTION:
• Make sure there are no damage or dust on connections. If necessary, clean the seal surface of the pipe.
• Make sure that the quick connector is securely connected.

Connect the quick connector as shown in the figure.

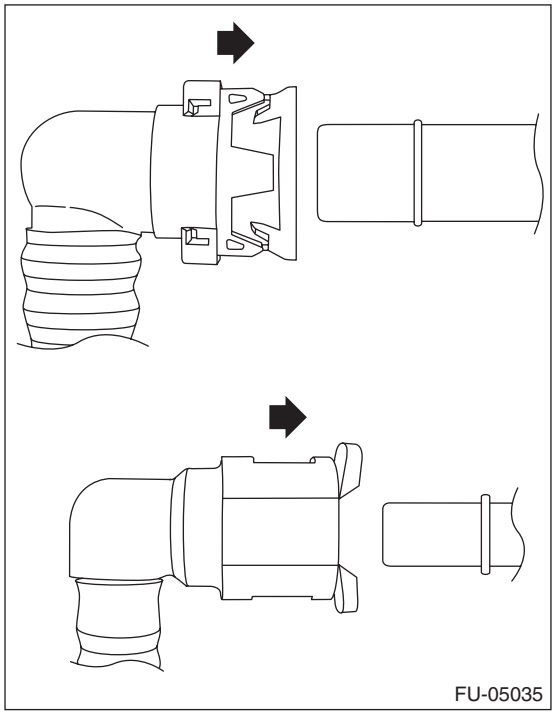

C: INSPECTION

1) Check that the fuel pipe has no deformation, cracks or other damages.
2) Check that the hose and tube have no cracks, damage or loose part.

32.Fuel System Trouble in General

A: INSPECTION

Trouble	Possible cause	Corrective action
Insufficient fuel supply to injector	a. Fuel pump does not operate.	
	❍ Defective terminal contact	Inspect contact, especially ground, and tighten it securely.
	❍ Trouble in electromagnetic or electronic circuit parts	Replace the faulty parts.
	b. Decline of fuel pump function	Replace the fuel pump.
	c. Clogged fuel filter	Replace the fuel filter. Clean or replace the fuel tank if necessary.
	d. Clogged or bent pipe, hose or tube of fuel line	Clean, correct or replace the pipe, hose or tube of the fuel line.
	e. Air is mixed in fuel system.	Check the fuel line connections, and repair or replace the defective part.
	f. Damaged diaphragm of pressure regulator	Replace the pressure regulator.
Leakage or run-out of fuel	a. Loose connection in pipe, hose or tube of fuel line	Check the fuel line connections, and repair or replace the defective part.
	b. Cracks in pipe, hose or tube of fuel line	Replace the pipe, hose or tube of the fuel line.
	c. Cracks or defective welded part of fuel tank	Replace the fuel tank.
	d. Clogged or bent pipe, hose or tube of fuel line	Clean, correct or replace the pipe, hose or tube of the fuel line.
Gasoline smell inside of compartment	a. Loose connection in pipe, hose or tube of fuel line	Check the fuel line connections, and repair or replace the defective part.
	b. Improper installation of rubber saucer	Correct or replace the rubber saucer.
	c. Defective canister	Replace the canister.
Defective fuel gauge	a. Defective operation of fuel level sensor	Replace the fuel level sensor.
	b. Defective operation of combination meter	Replace the combination meter.
Noise	a. Big operation noise or vibration from fuel pump	Replace the fuel pump.

NOTE:
• When the vehicle is left unattended for an extended period of time, water may accumulate in the fuel tank. Fill fuel fully to prevent the problem.
• In snow-covered areas, mountainous areas, skiing areas, etc. where ambient temperatures drop to 0°C (32°F) or less throughout the winter season, use a water removing agent in the fuel system to prevent freezing fuel system and accumulating water.
• When water is accumulated in fuel filter, fill the water removing agent in the fuel tank.
• Before using water removing agent, follow the cautions noted on the bottle.

EMISSION CONTROL (AUX. EMISSION CONTROL DEVICES)

EC(H4DOTC)

		Page
1.	General Description	2
2.	Front Catalytic Converter	3
3.	Rear Catalytic Converter	4
4.	Canister	5
5.	Purge Control Solenoid Valve	9
6.	Fuel Level Sensor	14
7.	Fuel Temperature Sensor	15
8.	Fuel Sub Level Sensor	16
9.	Fuel Tank Pressure Sensor	17
10.	Pressure Control Solenoid Valve Assembly	19
11.	Drain Filter	20
12.	Shut Valve	21
13.	Drain Valve	22
14.	PCV Hose Assembly	23
15.	PCV Valve	24

1. General Description

A: CAUTION

• Wear appropriate work clothing, including a cap, protective goggles and protective shoes when performing any work.
• Remove contamination including dirt and corrosion before removal, installation or disassembly.
• Keep the disassembled parts in order and protect them from dust and dirt.
• Before removal, installation or disassembly, be sure to clarify the failure. Avoid unnecessary removal, installation, disassembly and replacement.
• Vehicle components are extremely hot after driving. Be wary of receiving burns from heated parts.
• Be sure to tighten fasteners including bolts and nuts to the specified torque.
• Place shop jacks or rigid racks at the specified points.
• Before disconnecting connectors of sensors or units, be sure to disconnect the ground cable from the battery.

B: PREPARATION TOOL

1. SPECIAL TOOL

ILLUSTRATION	TOOL NUMBER	DESCRIPTION	REMARKS
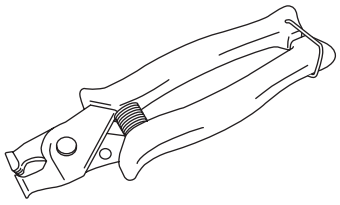 ST18353AA000	18353AA000	CLAMP PLIERS	• Used for removing and installing the PCV hose. • This tool is made by the French company CAILLAU. (code) 54.0.000.205 To make it easier to obtain, it has been provided with a tool number.

2. GENERAL TOOL

TOOL NAME	REMARKS
Circuit tester	Used for measuring resistance and voltage.
Mighty Vac	Used for inspecting the fuel tank pressure sensor.

2. Front Catalytic Converter

A: REMOVAL

The front catalytic converter is integrated into the center exhaust pipe (front). Refer to “Center Exhaust Pipe” for removal procedures. <Ref. to EX(H4DOTC)-12, REMOVAL, Center Exhaust Pipe.>

B: INSTALLATION

The front catalytic converter is integrated into the center exhaust pipe (front). Refer to “Center Exhaust Pipe” for installation procedures. <Ref. to EX(H4DOTC)-13, INSTALLATION, Center Exhaust Pipe.>

C: INSPECTION

1) Check the connections and welds for exhaust leaks.
2) Make sure there are no holes or rusting.

3. Rear Catalytic Converter

A: REMOVAL

The rear catalytic converter is integrated into the center exhaust pipe (front). Refer to “Center Exhaust Pipe” for removal procedures. <Ref. to EX(H4DOTC)-12, REMOVAL, Center Exhaust Pipe.>

B: INSTALLATION

The rear catalytic converter is integrated into the center exhaust pipe (front). Refer to “Center Exhaust Pipe” for installation procedures. <Ref. to EX(H4DOTC)-13, INSTALLATION, Center Exhaust Pipe.>

C: INSPECTION

1) Check the connections and welds for exhaust leaks.
2) Make sure there are no holes or rusting.

4. Canister

A: REMOVAL

1) Remove the rear wheel LH.
2) Lift up the vehicle.
3) Remove the rear mud guard LH. <Ref. to EI-38, REMOVAL, Mud Guard.>
4) Disconnect the quick connectors of the vent tube (A), canister drain tube (B), charge tube (C) and PCV drain tube (D), and remove the tubes from tube clamp (E).

NOTE:
Disconnect the quick connector as shown in the figure.

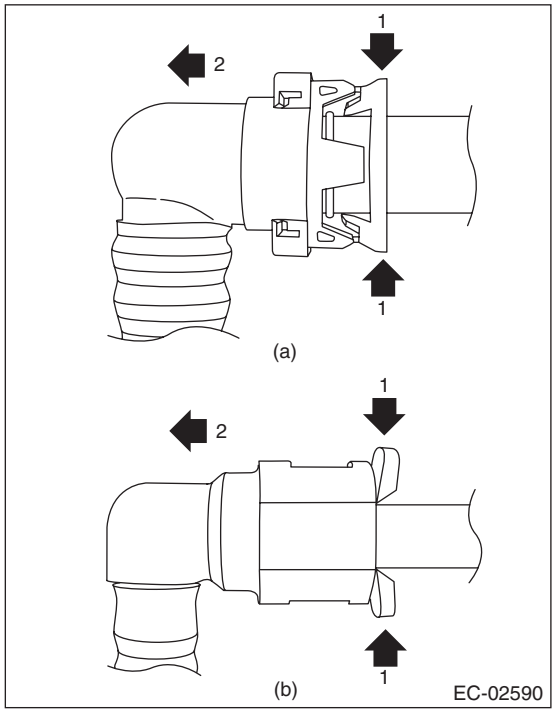

(a) Vent tube (A) and canister drain tube (B)
(b) Charge tube (C) and PCV drain tube (D)

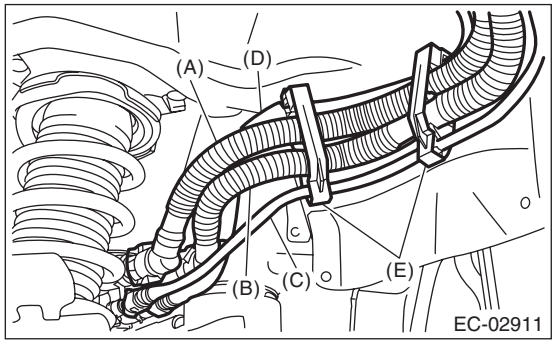

5) Remove the clip holding the rear wiring harness.

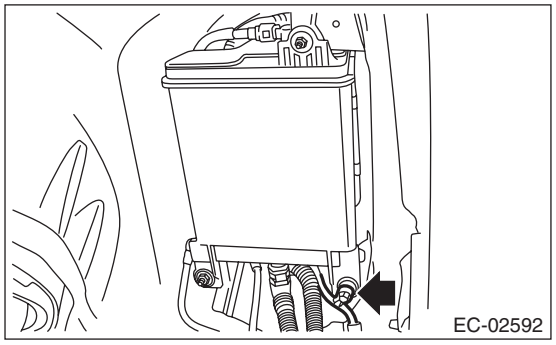

6) Remove the canister from vehicle.

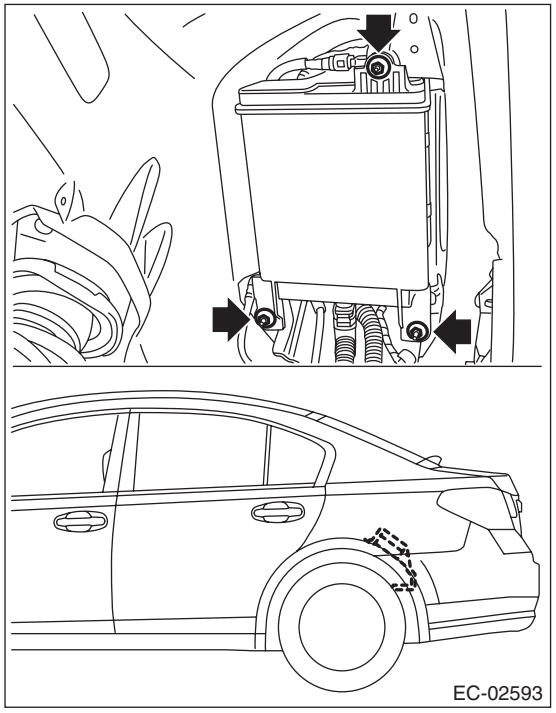

7) Disconnect the connector from drain valve.

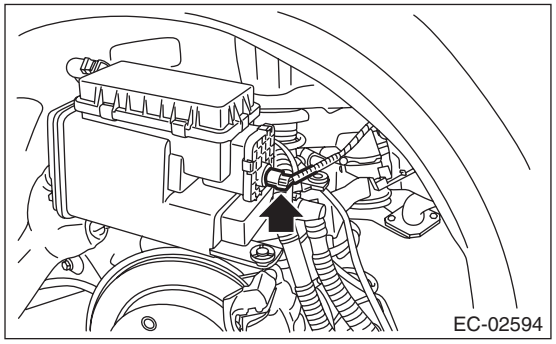

8) Disconnect the vent tube (A), canister drain tube (B), charge tube (C) and PCV drain tube (D) from canister, and remove the canister drain tube (B) and PCV drain tube (D) from canister clip (E).

NOTE:
Disconnect the quick connector as shown in the figure.

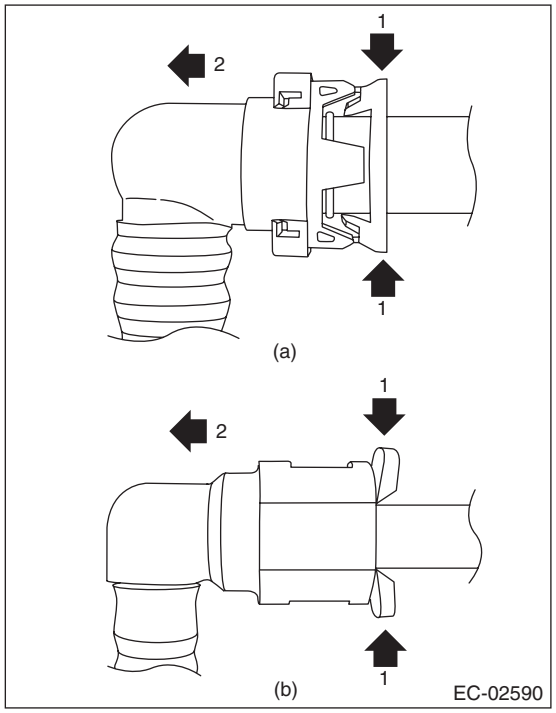

(a) Vent tube (A) and canister drain tube (B)
(b) Charge tube (C) and PCV drain tube (D)

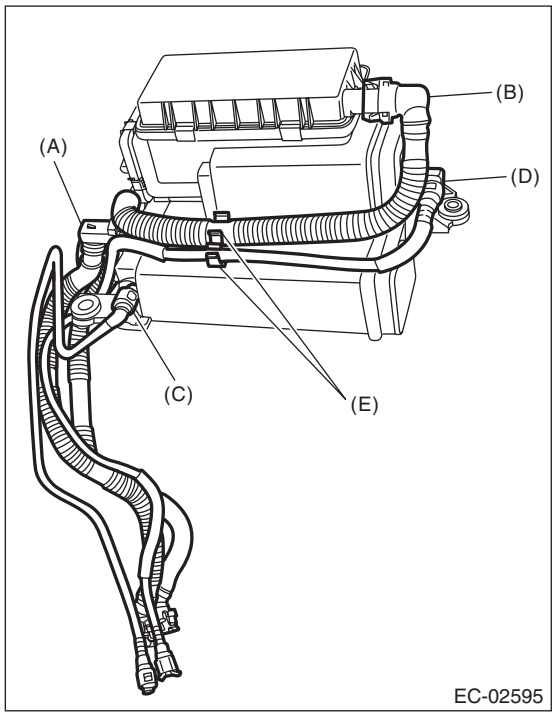

B: INSTALLATION

1) Connect the vent tube (A), canister drain tube (B), charge tube (C) and PCV drain tube (D) to canister, and install the canister drain tube (B) and PCV drain tube (D) to canister clip (E).

CAUTION:
• Make sure there are no damage or dust on connections. If necessary, clean the seal surface of the pipe.
• Make sure that the quick connector is securely connected.

NOTE:
Connect the quick connector as shown in the figure.

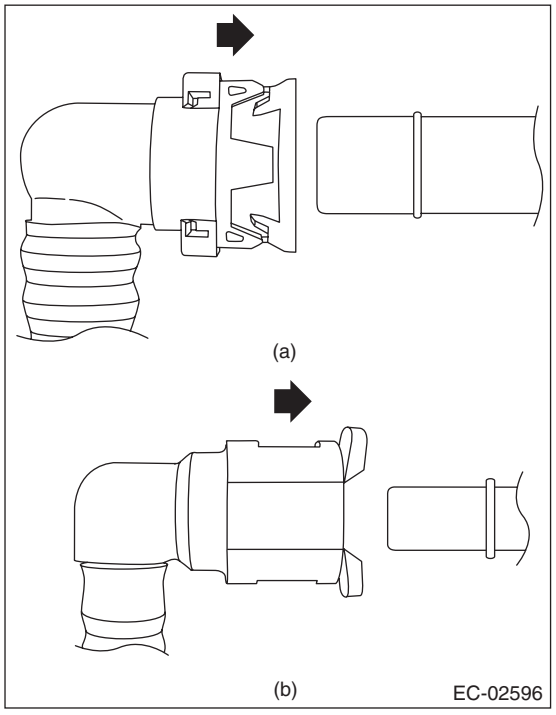

(a) Vent tube (A) and canister drain tube (B)
(b) Charge tube (C) and PCV drain tube (D)

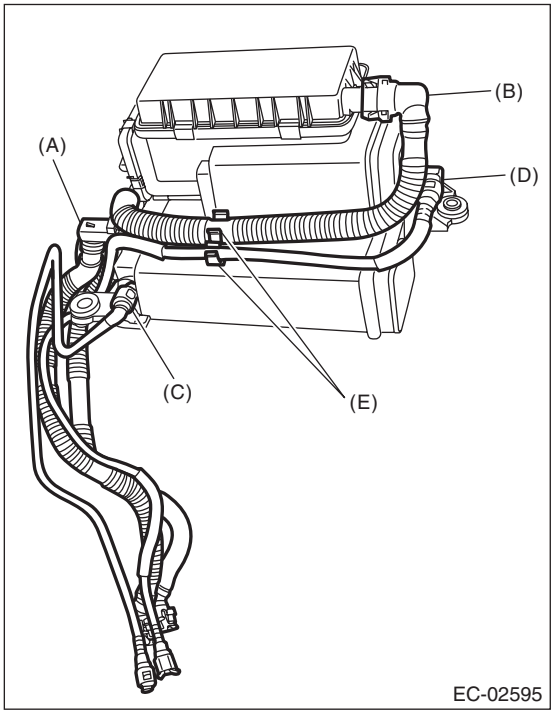

2) Connect the connector to the drain valve.

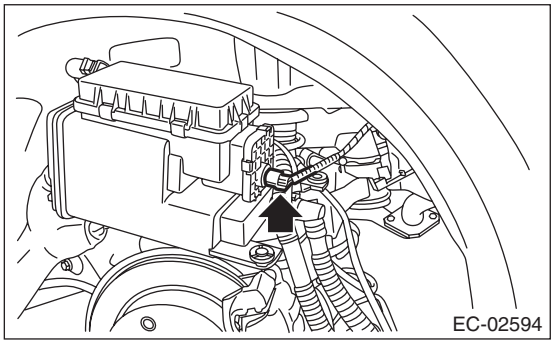

3) Install the canister to the vehicle.

Tightening torque:
8 N·m (0.8 kgf-m, 5.9 ft-lb)

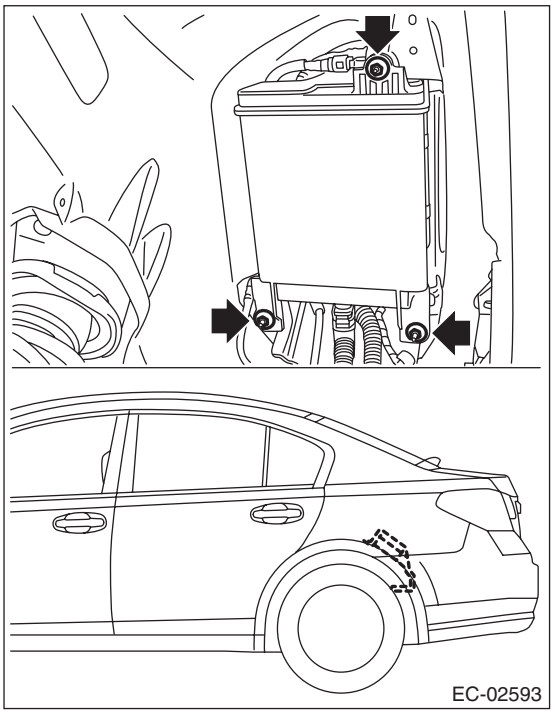

4) Secure the rear wiring harness with clip.

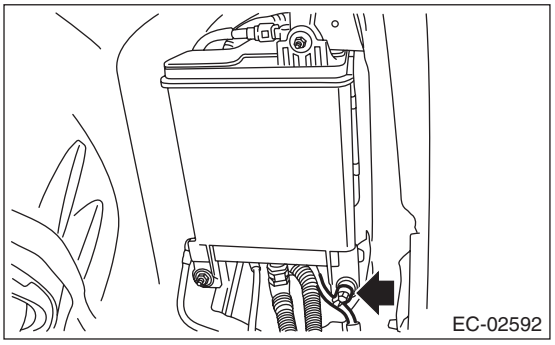

5) Attach all tubes to tube clamp (E), and connect the quick connectors of the vent tube (A), canister drain tube (B), charge tube (C) and PCV drain tube (D).

CAUTION:
• Make sure there are no damage or dust on connections. If necessary, clean the seal surface of the pipe.
• Make sure that the quick connector is securely connected.

NOTE:
Connect the quick connector as shown in the figure.

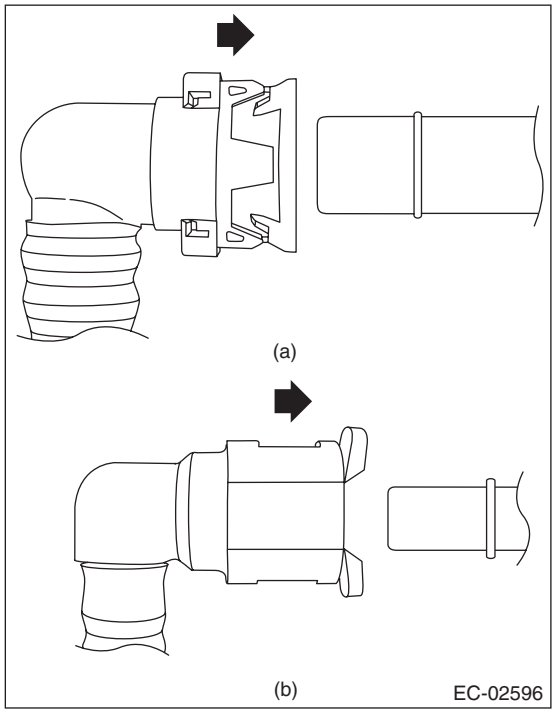

(a) Vent tube (A) and canister drain tube (B)
(b) Charge tube (C) and PCV drain tube (D)

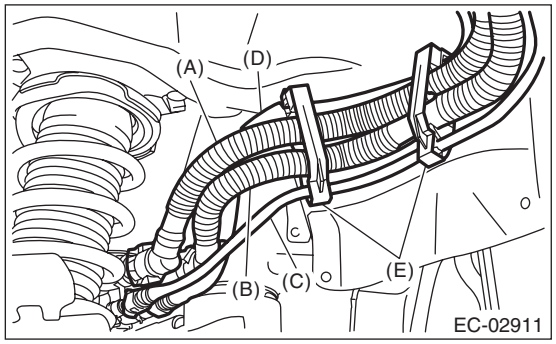

6) Install the rear mud guard LH. <Ref. to EI-38, INSTALLATION, Mud Guard.>
7) Lower the vehicle.
8) Install the rear wheel LH.

Tightening torque:
120 N·m (12.2 kgf-m, 88.5 ft-lb)

C: INSPECTION

1) Check that the canister has no deformation, cracks or other damages.
2) Check that the tube has no cracks, damage or loose part.

5. Purge Control Solenoid Valve

A: REMOVAL

1. PURGE CONTROL SOLENOID VALVE 1

1) Remove the collector cover.
2) Disconnect the ground cable from battery.

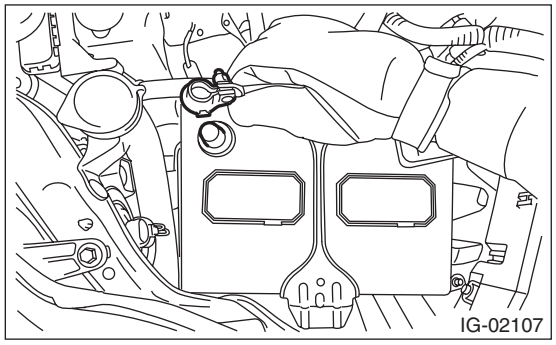

3) Remove the intercooler. <Ref. to IN(H4DOTC)-17, REMOVAL, Intercooler.>
4) Remove the bolt securing the solenoid valve bracket assembly from intake manifold.

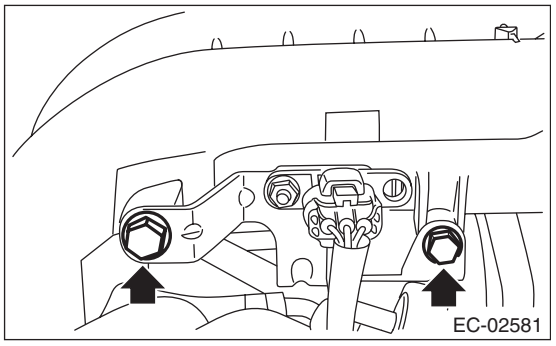

5) Remove the bolts securing the PCV pipe and engine harness from intake manifold.

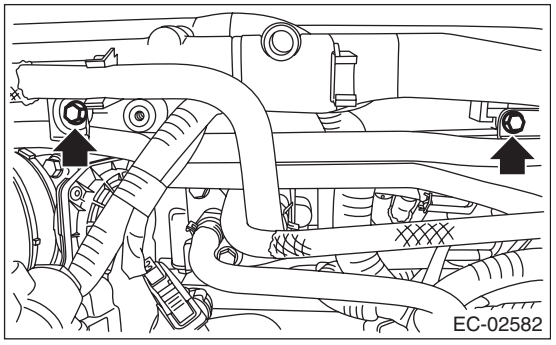

6) Remove the nut securing the purge control solenoid valve 1 to the solenoid valve bracket assembly.

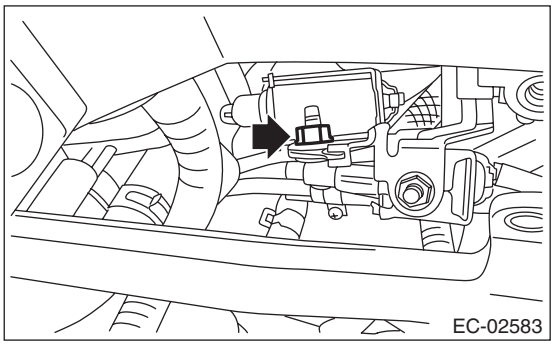

7) Disconnect the connector (A) and vacuum hose (B) from the purge control solenoid valve 1, and remove the purge control solenoid valve 1.

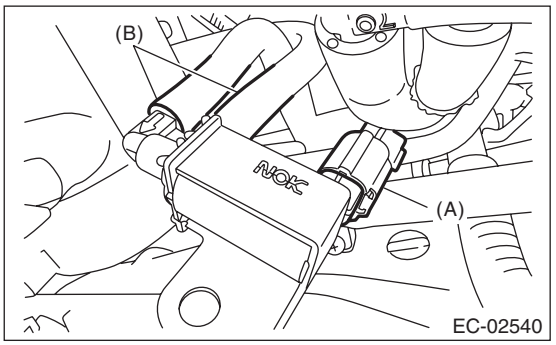

2. PURGE CONTROL SOLENOID VALVE 2

1) Remove the collector cover.
2) Disconnect the ground cable from battery.

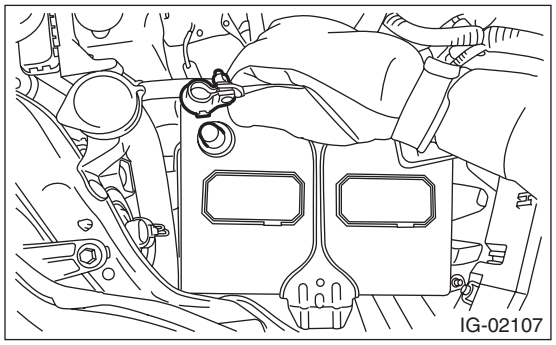

3) Remove the intercooler. <Ref. to IN(H4DOTC)-17, REMOVAL, Intercooler.>

4) Remove the bolt securing the solenoid valve bracket assembly from intake manifold.

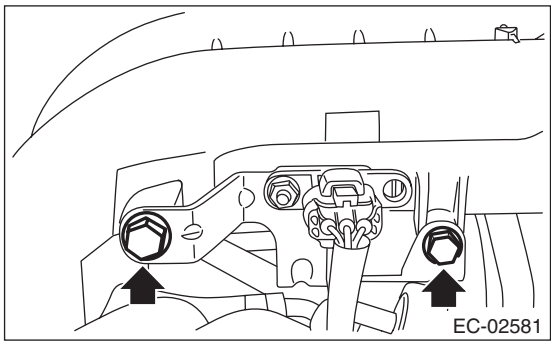

5) Remove the bolts securing the PCV pipe and engine harness from intake manifold.

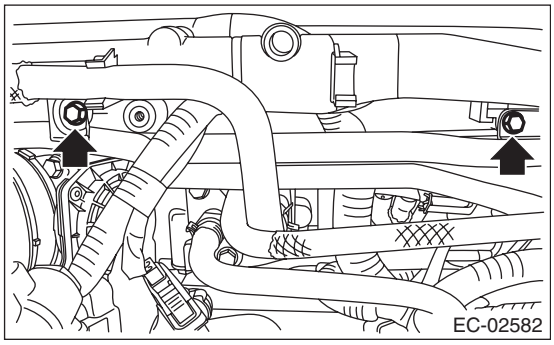

6) Remove the nut securing the purge control solenoid valve 2 to the solenoid valve bracket assembly.

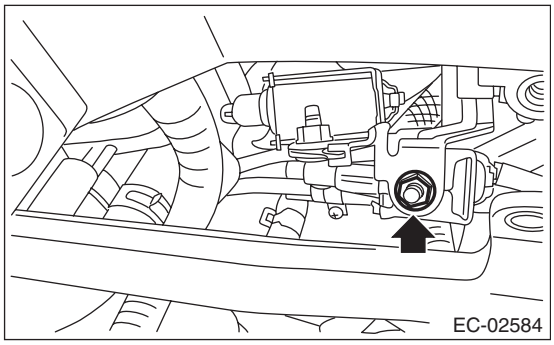

7) Disconnect the connector (A) and vacuum hose (B) from the purge control solenoid valve 2, and remove the purge control solenoid valve 2.

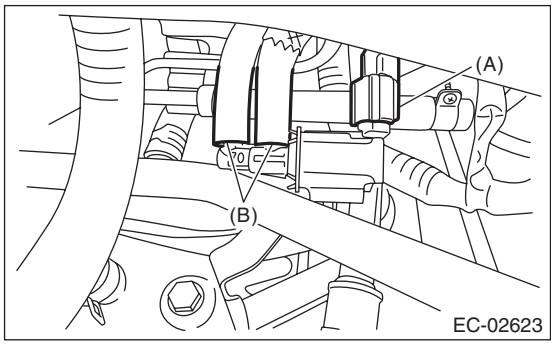

B: INSTALLATION

1. PURGE CONTROL SOLENOID VALVE 1

Install in the reverse order of removal.

NOTE:
Connect the vacuum hose as shown in the figure.

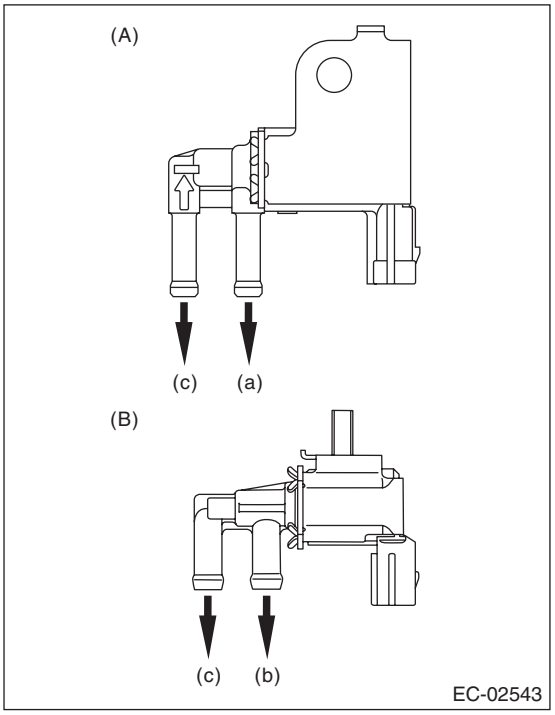

(A) Purge control solenoid valve 1
(B) Purge control solenoid valve 2
(a) To intake manifold
(b) To intake duct
(c) To fuel pipe

Tightening torque:
6.4 N·m (0.7 kgf-m, 4.7 ft-lb)

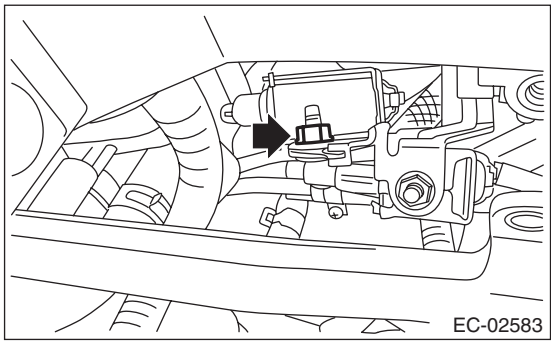

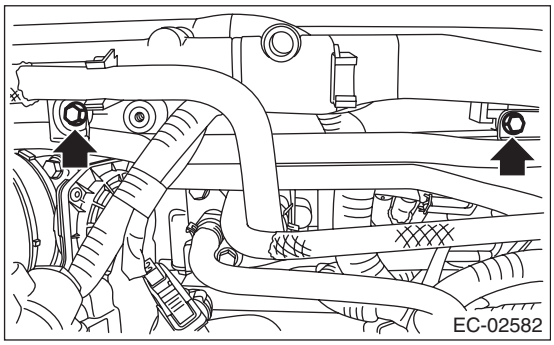

Tightening torque:
19 N·m (1.9 kgf-m, 14.0 ft-lb)

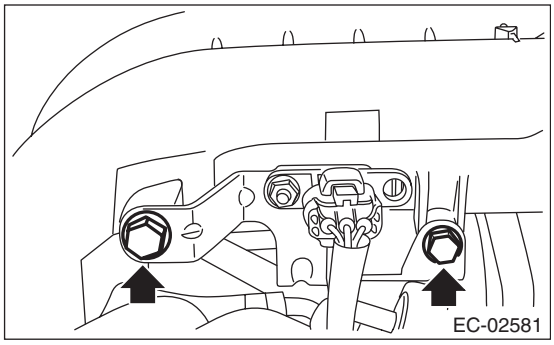

2. PURGE CONTROL SOLENOID VALVE 2

Install in the reverse order of removal.

NOTE:
Connect the vacuum hose as shown in the figure.

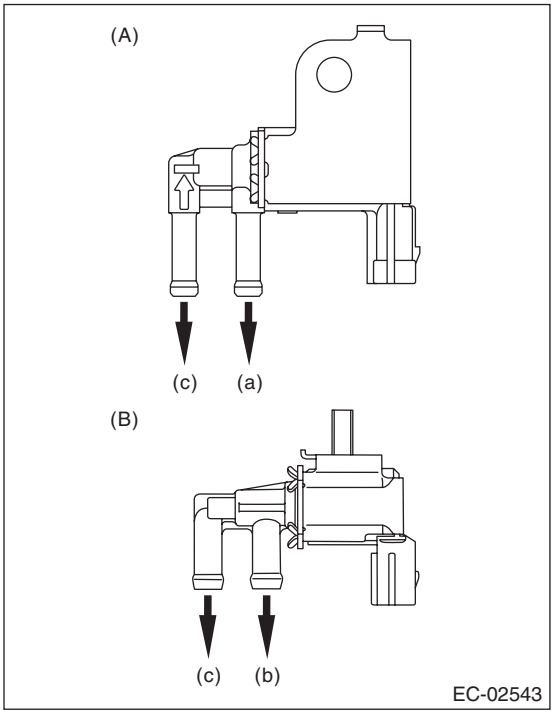

(A) Purge control solenoid valve 1
(B) Purge control solenoid valve 2
(a) To intake manifold
(b) To intake duct
(c) To fuel pipe

Tightening torque:
6.4 N·m (0.7 kgf-m, 4.7 ft-lb)

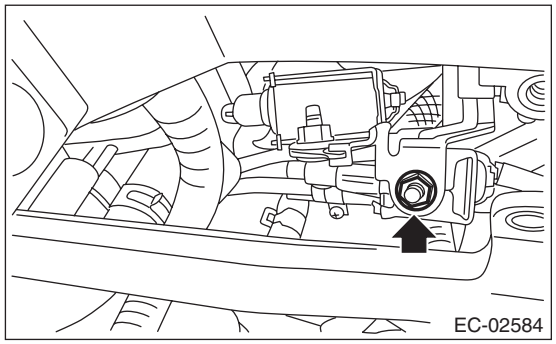

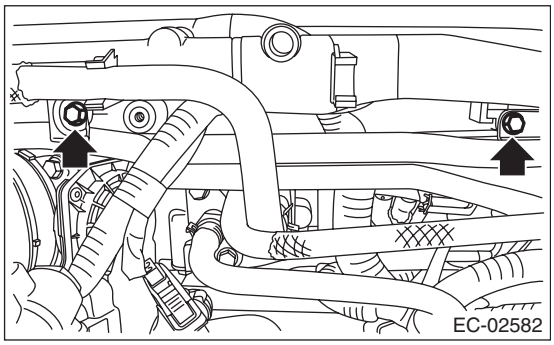

Tightening torque:
19 N·m (1.9 kgf-m, 14.0 ft-lb)

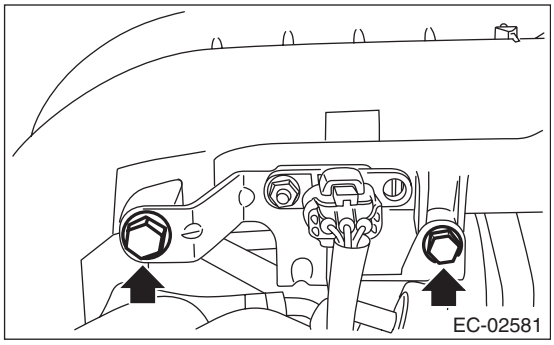

C: INSPECTION

1. PURGE CONTROL SOLENOID VALVE

1) Check that the purge control solenoid valve has no deformation, cracks or other damages.
2) Measure the resistance between the purge control solenoid valve terminals.

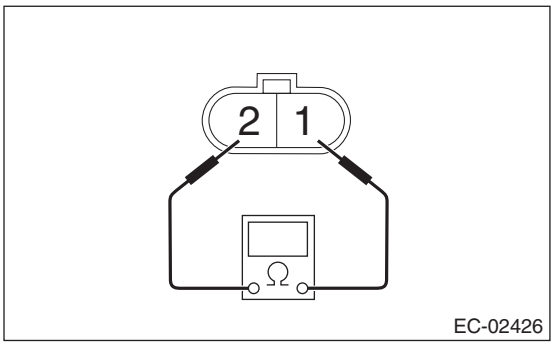

	Terminal No.	Standard
Purge control solenoid valve 1	1 and 2	32 ±2 Ω (when 20°C (68°F))
Purge control solenoid valve 2		24 ±3 Ω (when 20°C (68°F))

3) Check that air does not come out from (B) when air is blown into (A).

- Purge control solenoid valve 1

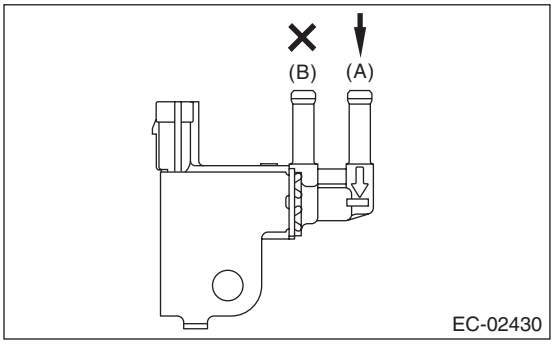

- Purge control solenoid valve 2

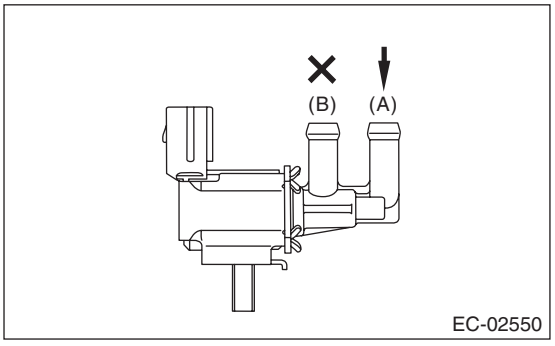

4) With terminal No. 1 connected to the battery positive terminal and terminal No. 2 to the battery ground terminal, check that air comes out from (B) when air is blown into (A).

- Purge control solenoid valve 1

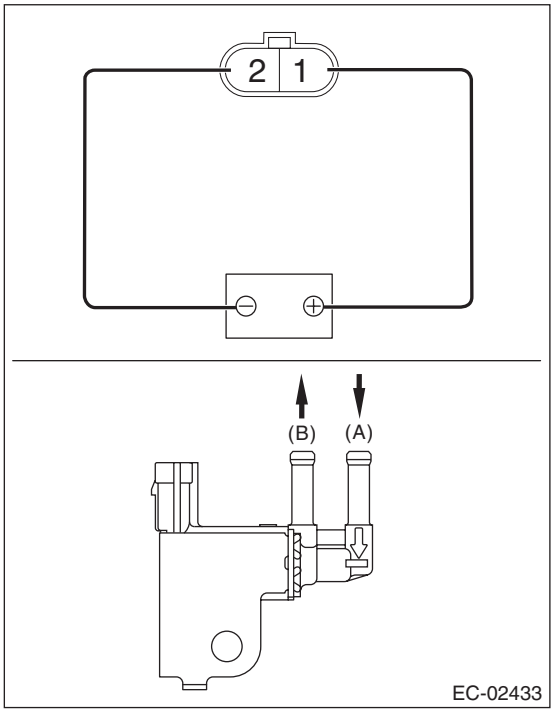

- Purge control solenoid valve 2

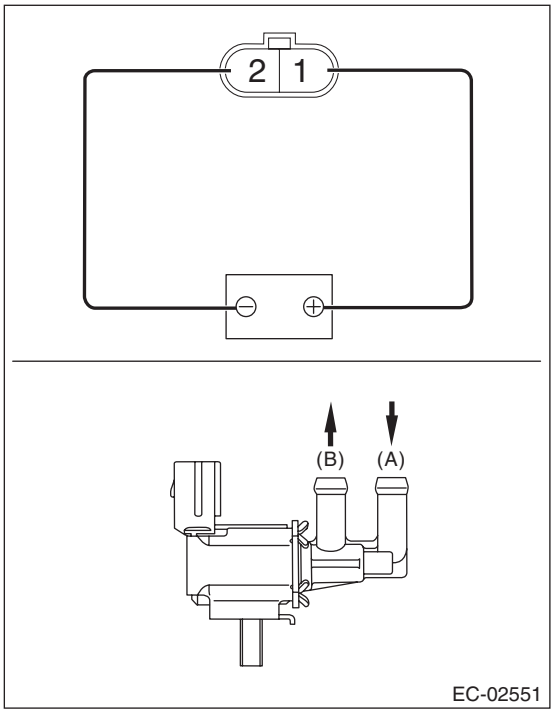

2. OTHER INSPECTIONS

Check the vacuum hose for cracks, damage or looseness.

6. Fuel Level Sensor

A: REMOVAL

For removal procedures, refer to the “FU (H4DOTC)” section. <Ref. to FU(H4DOTC)-81, REMOVAL, Fuel Level Sensor.>

B: INSTALLATION

For installation procedures, refer to the “FU (H4DOTC)” section. <Ref. to FU(H4DOTC)-81, INSTALLATION, Fuel Level Sensor.>

C: INSPECTION

For inspection procedures, refer to the “FU(H4DOTC)” section. <Ref. to FU(H4DOTC)-81, INSPECTION, Fuel Level Sensor.>

7. Fuel Temperature Sensor

A: REMOVAL

Fuel temperature sensor is integrated with the fuel level sensor. Refer to “Fuel Level Sensor” for removal procedure. <Ref. to FU(H4DOTC)-81, REMOVAL, Fuel Level Sensor.>

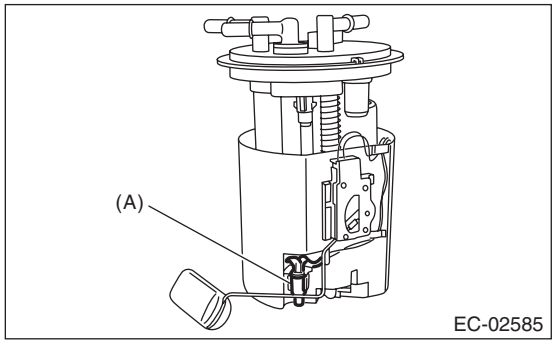

(A) Fuel temperature sensor

B: INSTALLATION

Refer to “Fuel Level Sensor” for the installation procedure. <Ref. to FU(H4DOTC)-81, INSTALLATION, Fuel Level Sensor.>

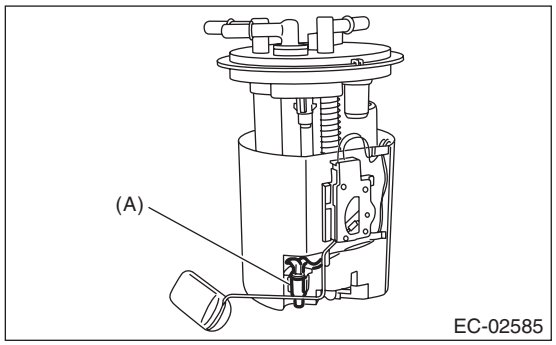

(A) Fuel temperature sensor

C: INSPECTION

1) Check that the fuel temperature sensor has no deformation, cracks or other damages.
2) Check the resistance between the fuel temperature sensor terminals.

CAUTION:
When measuring the resistance, check the circuit tester specification and be careful not to turn on electricity 3 V or more to prevent damaging the fuel temperature sensor.

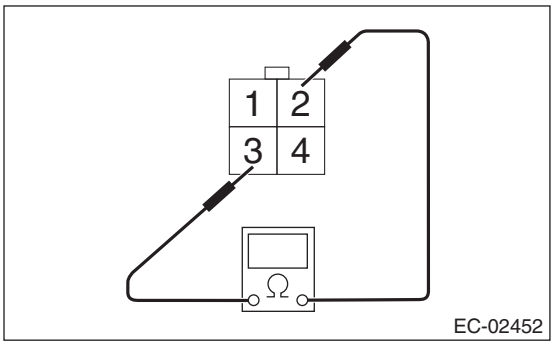

Temperature	Terminal No.	Standard
–10°C (14°F)	2 and 3	9.2±2.2 kΩ (when the measured current is 0.5 mA)
20°C (68°F)		2.5±0.2 kΩ (when the measured current is 1.0 mA)
50°C (122°F)		$0.84^{+0.06}_{-0.05}$ kΩ (when the measured current is 1.0 mA)

8. Fuel Sub Level Sensor

A: REMOVAL

For removal procedures, refer to the “FU (H4DOTC)” section. <Ref. to FU(H4DOTC)-83, REMOVAL, Fuel Sub Level Sensor.>

B: INSTALLATION

For installation procedures, refer to the “FU(H4DOTC)” section. <Ref. to FU(H4DOTC)-84, INSTALLATION, Fuel Sub Level Sensor.>

C: INSPECTION

For inspection procedures, refer to the “FU(H4DOTC)” section. <Ref. to FU(H4DOTC)-84, INSPECTION, Fuel Sub Level Sensor.>

9. Fuel Tank Pressure Sensor

A: REMOVAL

WARNING:
Place "NO OPEN FLAMES" signs near the working area.

1) Disconnect the ground cable from battery.

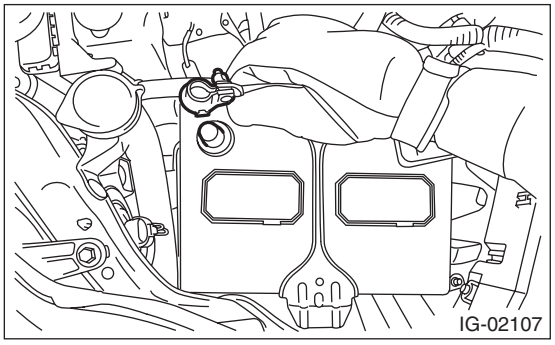

2) Open the fuel filler lid and remove the fuel filler cap.
3) Lift up the vehicle.
4) Disconnect connector (A) from fuel tank pressure sensor.
5) Pull out the vacuum hose (B) from vehicle.
6) Remove the fuel tank pressure sensor from the bracket.

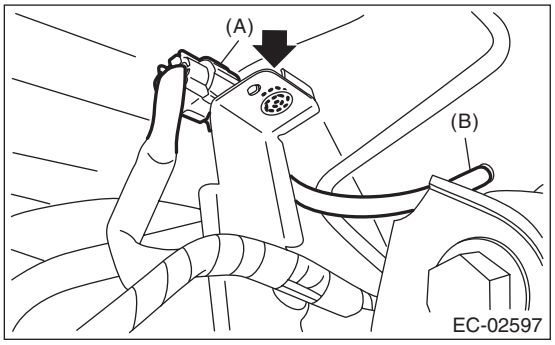

7) Disconnect the pressure hose from fuel tank pressure sensor and remove the fuel tank pressure sensor.

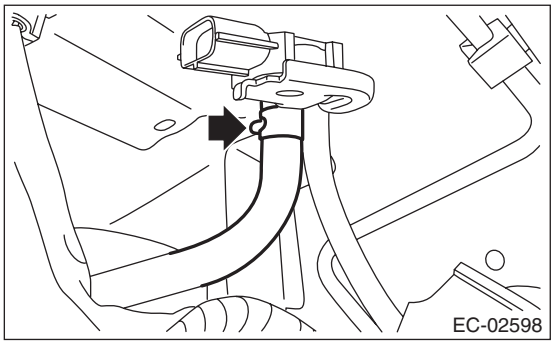

B: INSTALLATION

Install in the reverse order of removal.

Tightening torque:
7.35 N·m (0.7 kgf-m, 5.4 ft-lb)

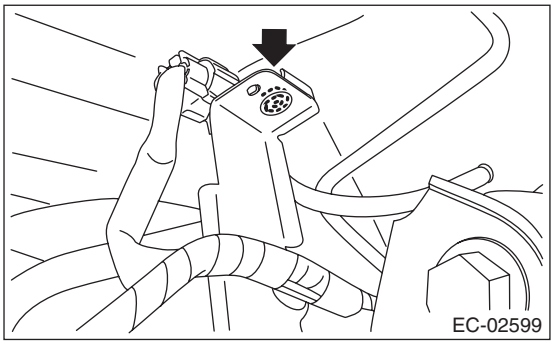

C: INSPECTION

1. FUEL TANK PRESSURE SENSOR

1) Check that the fuel tank pressure sensor does not have deformation, cracks or other damages.
2) Connect dry-cell battery positive terminal to terminal No. 3 and dry-cell battery ground terminal to terminal No. 1, circuit tester positive terminal to terminal No. 2 and the circuit tester negative terminal to terminal No. 1.

NOTE:
- Use new dry-cell batteries.
- Using circuit tester, check the voltage of a single dry-cell battery is 1.6 V or more. And also check the voltage of three batteries in series is between 4.8 V and 5.2 V.

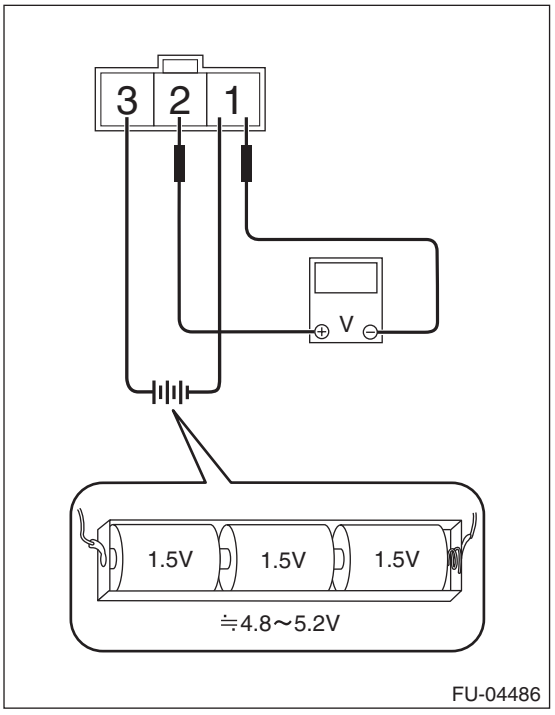

3) Check the voltage at a normal atmospheric pressure.

NOTE:
The atmospheric pressure at higher altitude is lower than normal. Therefore, the voltage is lower than the standard value.

Terminal No.	Standard
2 (+) and 1 (–)	Approx. 2.5 V (when 25°C (77°F))

4) Connect the Mighty Vac to the pressure port (A) on the fuel tank pressure sensor.

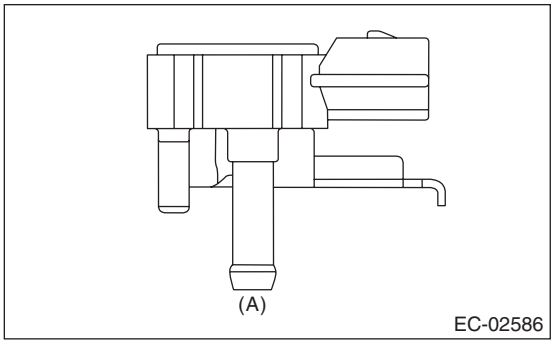

5) Check the voltage when generating vacuum and positive pressure using Mighty Vac.

CAUTION:
Be sure to apply pressure within a range of –10 — 20 kPa (–0.1 — 0.2 kgf/cm^2, –1.45 — 2.90 psi). Otherwise the fuel tank pressure sensor will be damaged.

Pressure	Terminal No.	Standard
–6.67 kPa (–0.07 kgf/cm^2, –0.97 psi)	2 (+) and 1 (–)	Approx. 0.5 V (when 25°C (77°F))
6.67 kPa (0.07 kgf/cm^2, 0.97 psi)		Approx. 4.5 V (when 25°C (77°F))

2. OTHER INSPECTIONS

Check that the hose has no cracks, damage or loose part.

10.Pressure Control Solenoid Valve Assembly

A: REMOVAL

1) Disconnect the ground cable from battery.

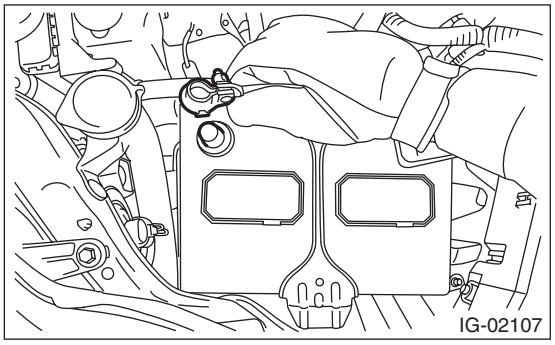

2) Lift up the vehicle.
3) Disconnect connector (A) from the pressure control solenoid valve assembly.
4) Disconnect the PCV drain hose (B), PCV inlet hose (C) and PCV outlet hose (D) from the pressure control solenoid valve assembly.
5) Remove the nut (E) securing the bracket to the fuel tank and remove the pressure control solenoid valve assembly.

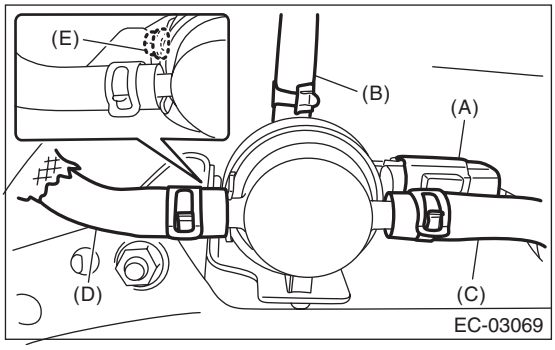

6) Remove the pressure control solenoid valve from the bracket.

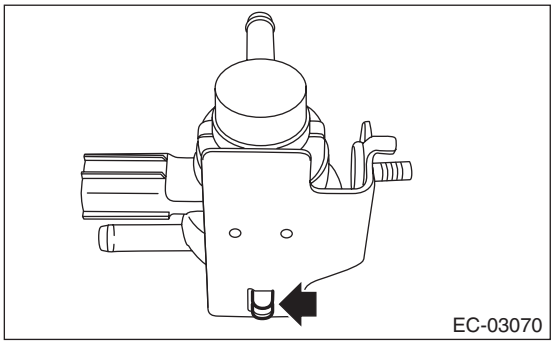

B: INSTALLATION

Install in the reverse order of removal.

Tightening torque:
2.5 N·m (0.3 kgf-m, 1.8 ft-lb)

C: INSPECTION

1. PRESSURE CONTROL SOLENOID VALVE ASSEMBLY

1) Check that the pressure control solenoid valve assembly has no deformation, cracks or other damages.
2) Check the resistance between the pressure control solenoid valve assembly terminals.

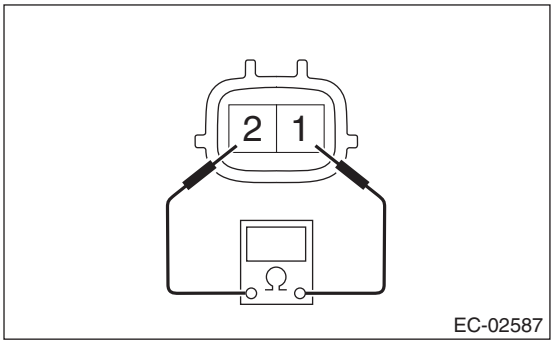

Terminal No.	Standard
1 and 2	20 — 30 Ω

2. OTHER INSPECTIONS

Check that the hose has no cracks, damage or loose part.

11.Drain Filter

A: SPECIFICATION

Drain valve is a non-disassembled part, so do not remove the drain filter from drain valve. Refer to “Canister” for removal and installation procedures. <Ref. to EC(H4DOTC)-5, REMOVAL, Canister.> <Ref. to EC(H4DOTC)-6, INSTALLATION, Canister.>

12.Shut Valve

A: REMOVAL

WARNING:
Place “NO OPEN FLAMES” signs near the working area.

CAUTION:
Be careful not to spill fuel.

1) Remove the fuel filler pipe. <Ref. to FU(H4DOTC)-75, REMOVAL, Fuel Filler Pipe.>
2) Remove the shut valve from the fuel filler pipe.

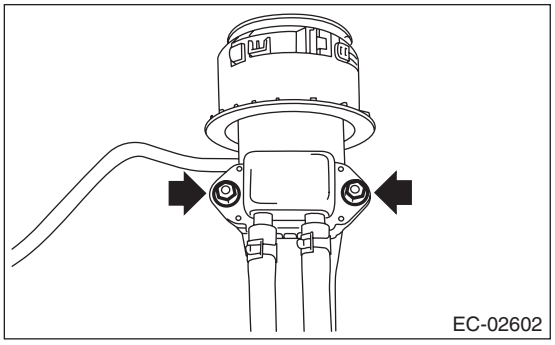

3) Disconnect the evaporation hose from shut valve and remove the shut valve.

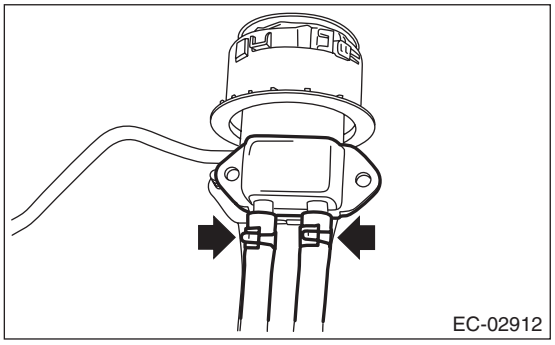

B: INSTALLATION

Install in the reverse order of removal.

Tightening torque:
4.5 N·m (0.5 kgf-m, 3.3 ft-lb)

C: INSPECTION

1) Check that the shut valve does not have deformation, cracks or other damages.
2) Check that the evaporation hose has no cracks, damage or loose part.

13.Drain Valve

A: REMOVAL

Drain valve is integrated with canister. Refer to “Canister” for removal procedure. <Ref. to EC(H4DOTC)-5, REMOVAL, Canister.>

B: INSTALLATION

Refer to “Canister” for the installation procedure. <Ref. to EC(H4DOTC)-6, INSTALLATION, Canister.>

C: INSPECTION

Check the resistance between drain valve terminals.

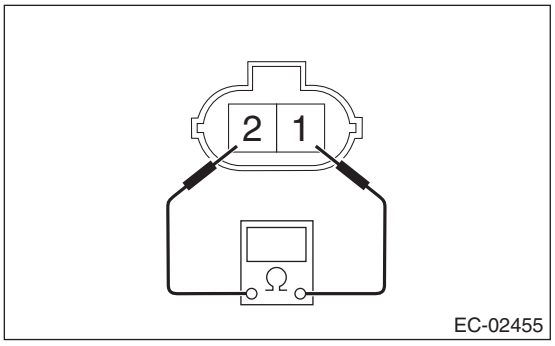

Terminal No.	Standard
1 and 2	20 — 30 Ω

14.PCV Hose Assembly

A: REMOVAL

CAUTION:
Do not remove except when the hose is broken.
1) Remove the collector cover.
2) Remove the intercooler. <Ref. to IN(H4DOTC)-17, REMOVAL, Intercooler.>
3) Disconnect the vacuum hose from intake manifold and remove the PCV hose assembly from cylinder block RH and blow-by pipe assembly.

NOTE:
Pinch the clamp of the PCV hose assembly by fitting the cut out in the ST with the protrusion on the clamp as shown in the figure, and unlock the clamp.
ST 18353AA000 CLAMP PLIERS

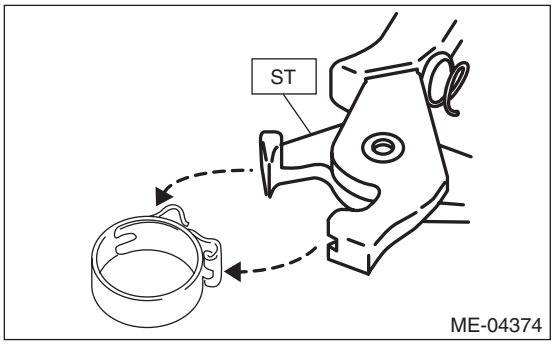

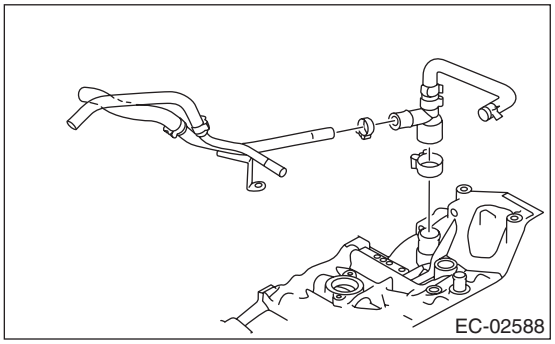

B: INSTALLATION

1) Install the PCV hose assembly to the cylinder block RH and blow-by pipe assembly and connect the vacuum hose to the intake manifold.

NOTE:
Use a new clamp for the PCV hose assembly, fit the cut out in the ST with the protrusion on the clamp as shown in the figure, and lock the clamp.
ST 18353AA000 CLAMP PLIERS

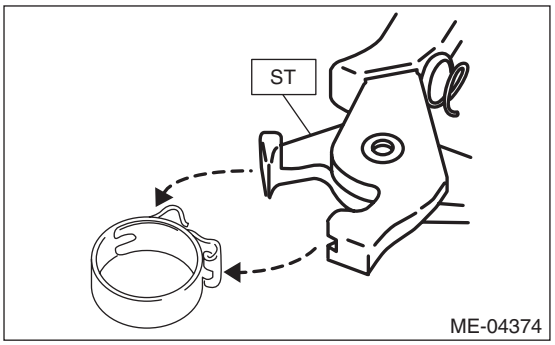

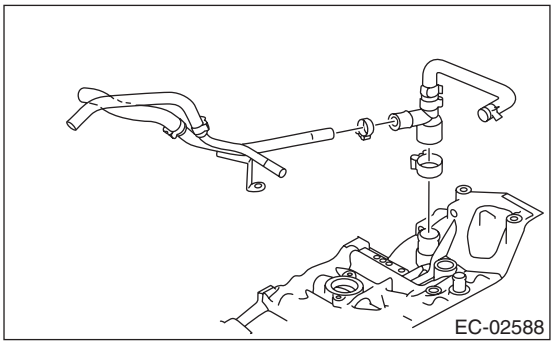

2) Install the intercooler. <Ref. to IN(H4DOTC)-18, INSTALLATION, Intercooler.>
3) Install the collector cover.

C: INSPECTION

Check the PCV hose assembly for cracks, damage or looseness.

15.PCV Valve

A: REMOVAL

CAUTION:
Do not remove unless the PCV valve is broken.
1) Remove the collector cover.
2) Remove the intercooler. <Ref. to IN(H4DOTC)-17, REMOVAL, Intercooler.>
3) Disconnect the vacuum hose (A) and vacuum hose (B) from the PCV valve and remove the PCV valve.

NOTE:
Pinch the clamp of the vacuum hose (B) by fitting the cut out in the ST with the protrusion on the clamp as shown in the figure, and unlock the clamp.
ST 18353AA000 CLAMP PLIERS

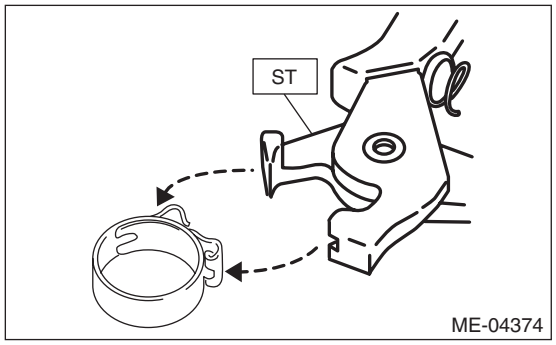

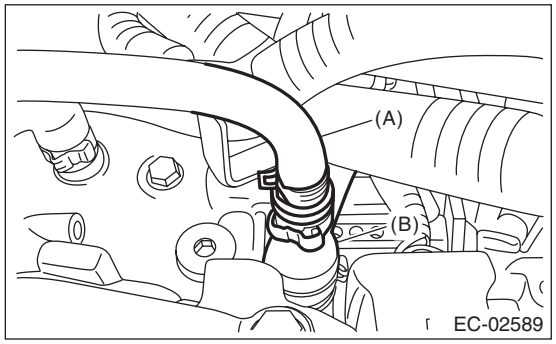

B: INSTALLATION

1) Connect the vacuum hose (A) and vacuum hose (B) to the PCV valve.

NOTE:
Use a new clamp for the vacuum hose (B), fit the cut out in the ST with the protrusion on the clamp as shown in the figure, and lock the clamp.
ST 18353AA000 CLAMP PLIERS

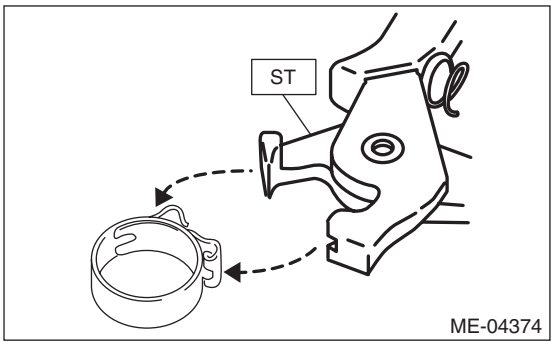

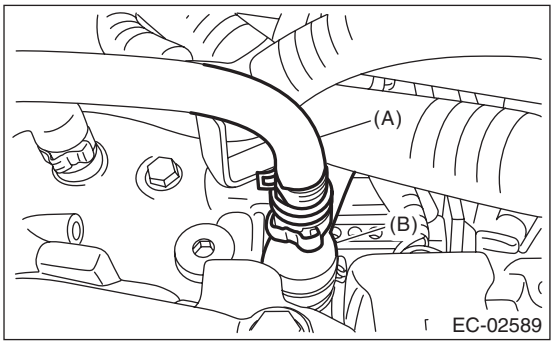

2) Install the intercooler. <Ref. to IN(H4DOTC)-18, INSTALLATION, Intercooler.>
3) Install the collector cover.

C: INSPECTION

1. PCV VALVE

1) Check that the PCV valve has no deformation, cracks or other damages.
2) Check that air is discharged from (B) when air is blown into (A).

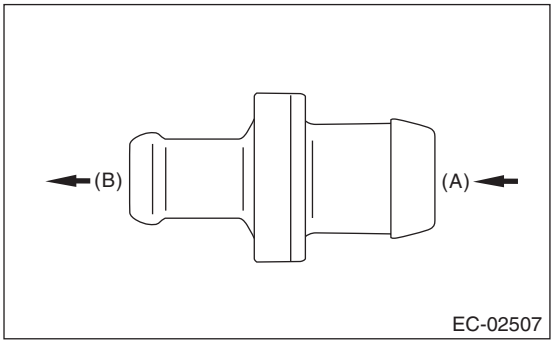

3) Check that air does not come out from (B) when air is blown into (A).

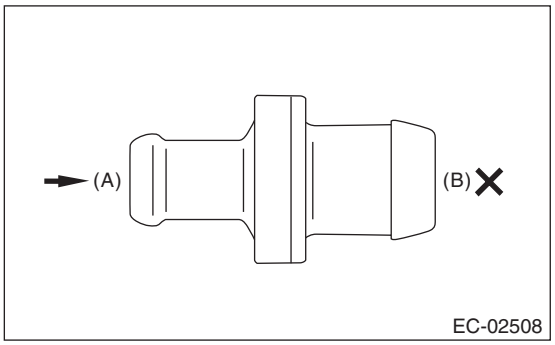

2. OTHER INSPECTIONS

Check the vacuum hose for cracks, damage or looseness.

INTAKE (INDUCTION)

IN(H4DOTC)

		Page
1.	General Description	2
2.	Air Cleaner Element	7
3.	Air Cleaner Case	8
4.	Air Intake Boot	10
5.	Air Intake Duct	12
6.	Intake Duct	13
7.	Intercooler	17
8.	Turbocharger	20
9.	Oil Catch Tank	23
10.	Scavenge Pump	25
11.	Air By-pass Valve	26
12.	Resonator Chamber	28

1. General Description

A: COMPONENT

1. AIR CLEANER

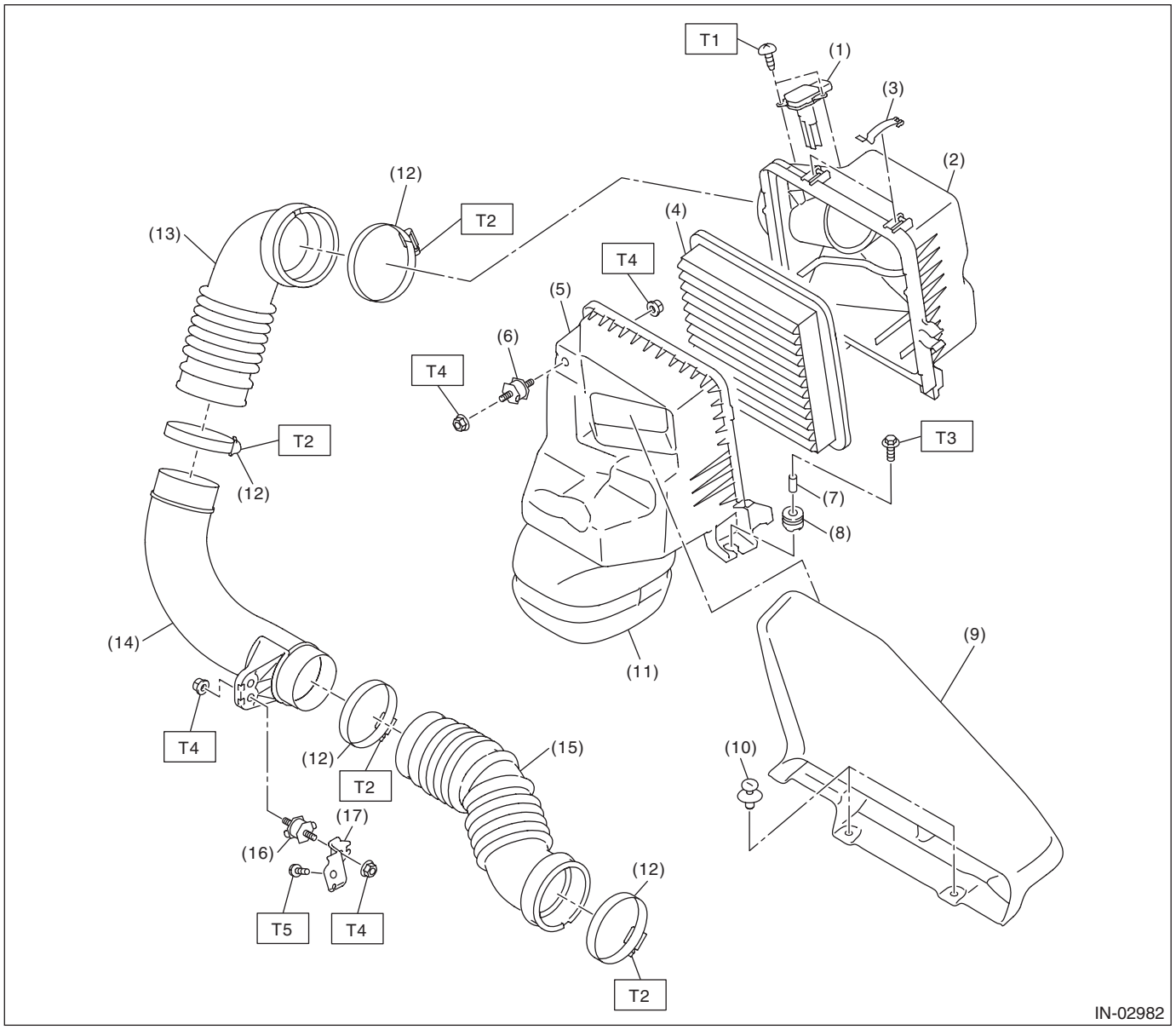

(1)	Mass air flow and intake air temperature sensor	(9)	Air intake duct	(17)	Duct bracket
(2)	Air cleaner case (rear)	(10)	Clip		
(3)	Clip	(11)	Resonator chamber	***Tightening torque:N·m (kgf-m, ft-lb)***	
(4)	Air cleaner element	(12)	Clamp	***T1:***	***1 (0.1, 0.7)***
(5)	Air cleaner case (front)	(13)	Air intake boot A	***T2:***	***2.5 (0.3, 1.8)***
(6)	Cushion	(14)	Turbo duct	***T3:***	***6 (0.6, 4.4)***
(7)	Spacer	(15)	Air intake boot B	***T4:***	***7.5 (0.8, 5.5)***
(8)	Cushion	(16)	Cushion	***T5:***	***33 (3.4, 24.3)***

2. INTAKE DUCT

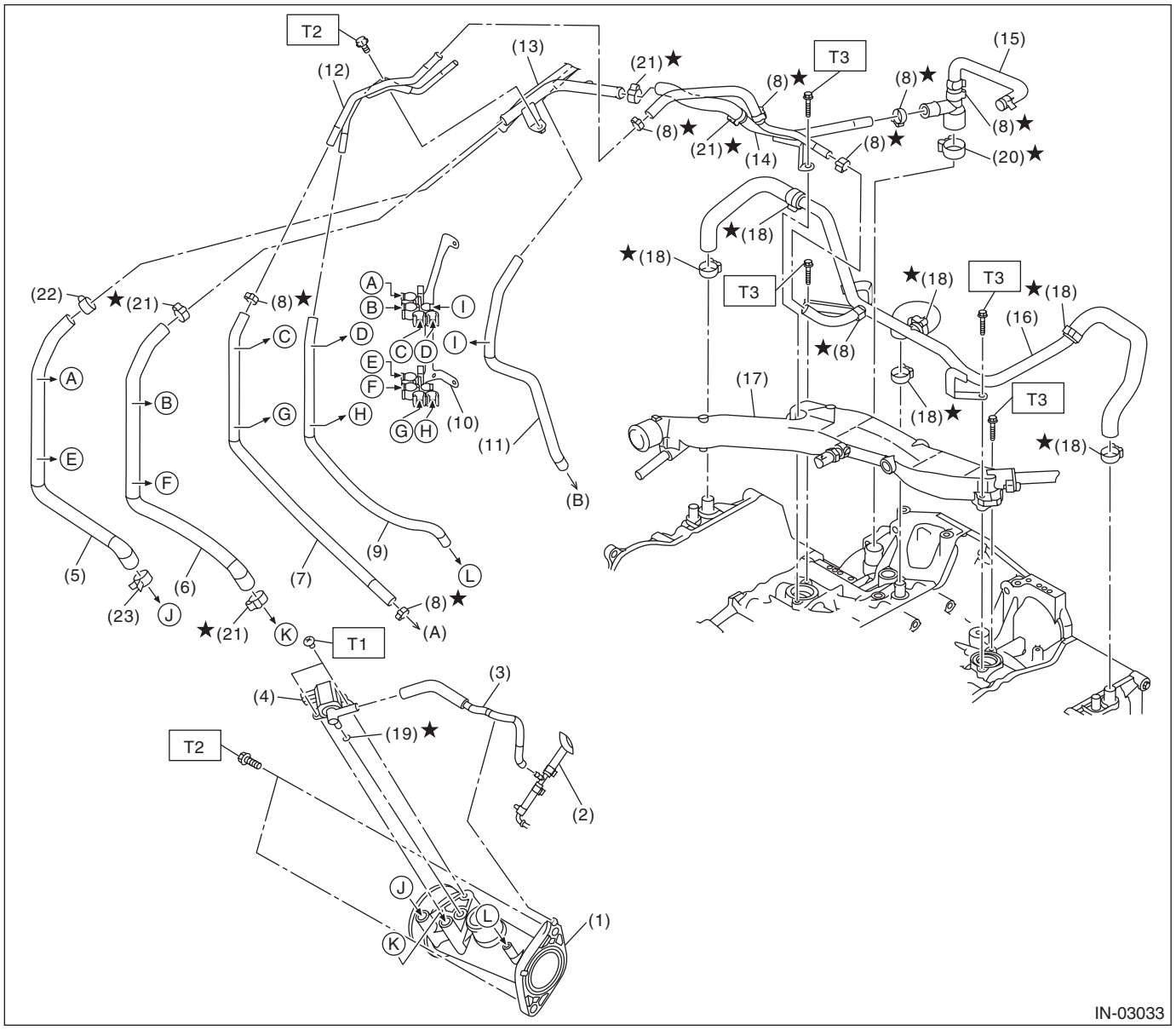

(A)	To oil catch tank	(B)	To air by-pass valve		
(1)	Intake duct	(11)	Vacuum control hose	(21)	Clamp
(2)	Boost hose ASSY	(12)	Blow-by pipe	(22)	Clip
(3)	Air control hose	(13)	PCV pipe	(23)	Clip
(4)	Wastegate control solenoid valve	(14)	Blow-by pipe ASSY A		
(5)	Vacuum hose A	(15)	PCV hose ASSY		
(6)	Vacuum hose B	(16)	Blow-by pipe ASSY B		
(7)	Vacuum hose C	(17)	Water pipe ASSY		
(8)	Clamp	(18)	Clamp		
(9)	Vacuum hose D	(19)	O-ring		
(10)	Hose clip stay ASSY	(20)	Clamp		

Tightening torque:N·m (kgf-m, ft-lb)
T1: 4 (0.4, 3.0)
T2: 6.4 (0.7, 4.7)
T3: 6.5 (0.7, 4.8)

3. INTERCOOLER

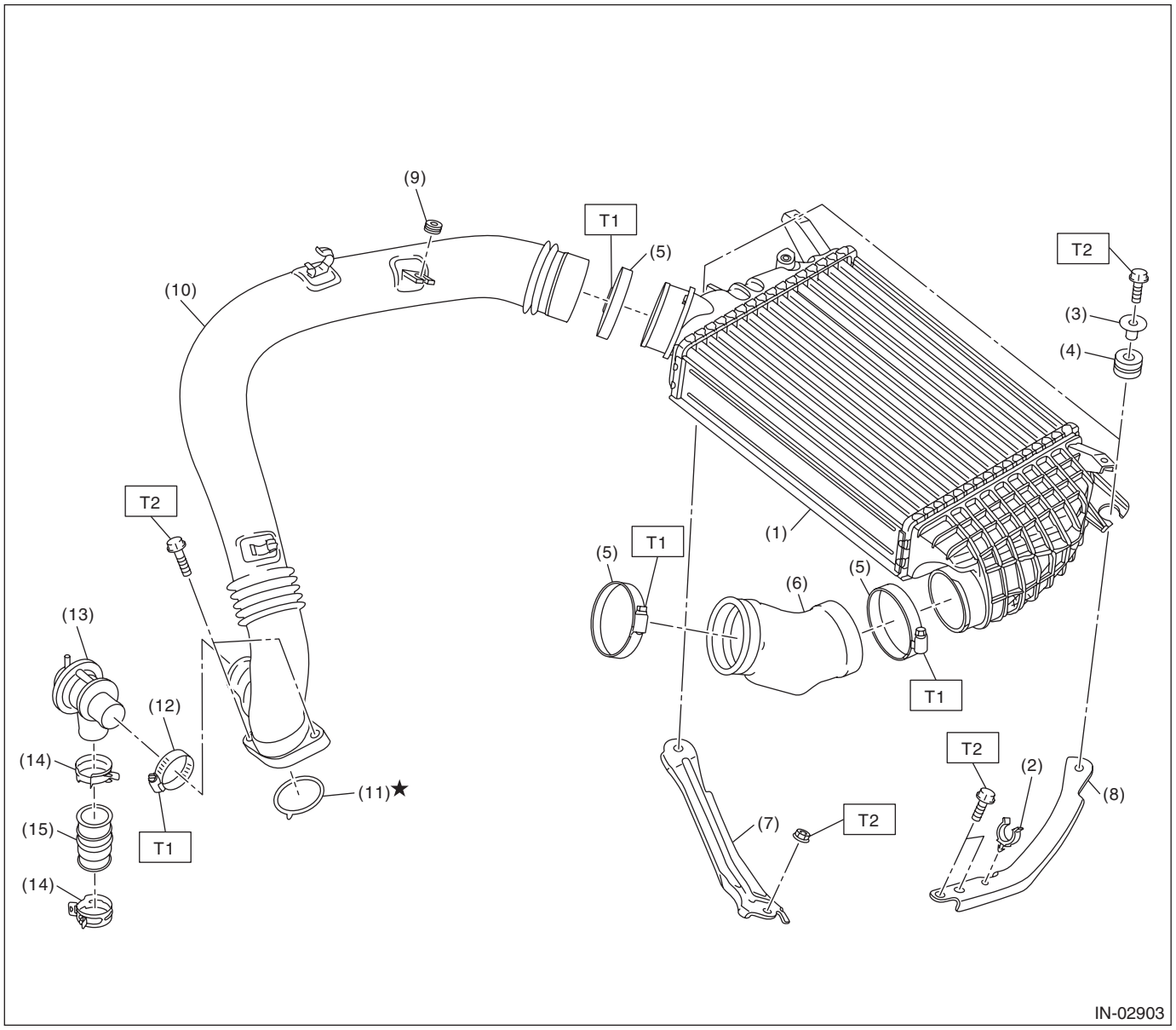

(1) Intercooler
(2) Clip
(3) Spacer
(4) Cushion
(5) Clamp
(6) Intake duct A
(7) Intercooler stay RH
(8) Intercooler stay LH
(9) Cushion
(10) Intake duct B
(11) O-ring
(12) Clamp
(13) Air by-pass valve
(14) Clip
(15) Intake boot

Tightening torque:N·m (kgf-m, ft-lb)
T1: 3 (0.3, 2.2)
T2: 16 (1.6, 11.8)

4. TURBOCHARGER

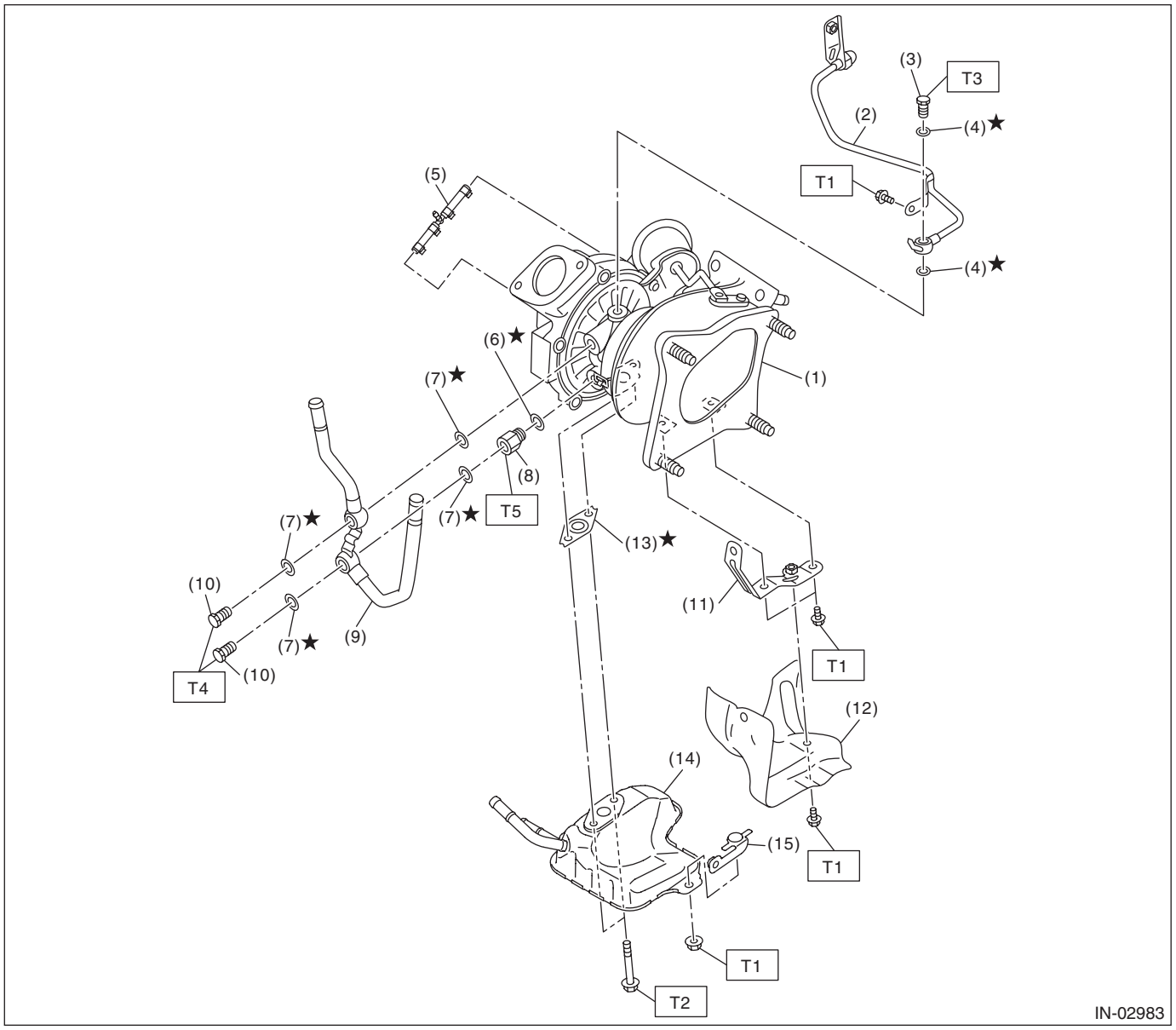

(1) Turbocharger
(2) Oil inlet pipe
(3) Union bolt
(4) Gasket
(5) Boost hose ASSY
(6) Gasket
(7) Gasket
(8) Water pipe connector
(9) Water pipe
(10) Union bolt
(11) Exhaust stay
(12) Exhaust cover
(13) Gasket
(14) Oil catch tank
(15) Oil catch tank stay

Tightening torque:N·m (kgf-m, ft-lb)
T1: 6.4 (0.7, 4.7)
T2: 10.5 (1.1, 7.7)
T3: 16 (1.6, 11.8)
T4: 31.5 (3.2, 23.2)
T5: 36.5 (3.7, 26.9)

B: CAUTION

• Wear appropriate work clothing, including a cap, protective goggles and protective shoes when performing any work.
• Remove contamination including dirt and corrosion before removal, installation or disassembly.
• Keep the disassembled parts in order and protect them from dust and dirt.
• Before removal, installation or disassembly, be sure to clarify the failure. Avoid unnecessary removal, installation, disassembly and replacement.
• Vehicle components are extremely hot after driving. Be wary of receiving burns from heated parts.
• Be sure to tighten fasteners including bolts and nuts to the specified torque.
• Place shop jacks or rigid racks at the specified points.
• Before disconnecting connectors of sensors or units, be sure to disconnect the ground cable from the battery.

C: PREPARATION TOOL

1. SPECIAL TOOL

ILLUSTRATION	TOOL NUMBER	DESCRIPTION	REMARKS
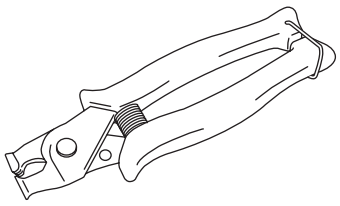 ST18353AA000	18353AA000	CLAMP PLIERS	• Used for removing and installing the PCV hose. • This tool is made by the French company CAILLAU. (code) 54.0.000.205 To make it easier to obtain, it has been provided with a tool number.

2. GENERAL TOOL

TOOL NAME	REMARKS
Mighty Vac	Used for checking waste gate actuator and air by-pass valve.

2. Air Cleaner Element

A: REMOVAL

1) Remove the suction hose from intake duct and air cleaner case (rear).

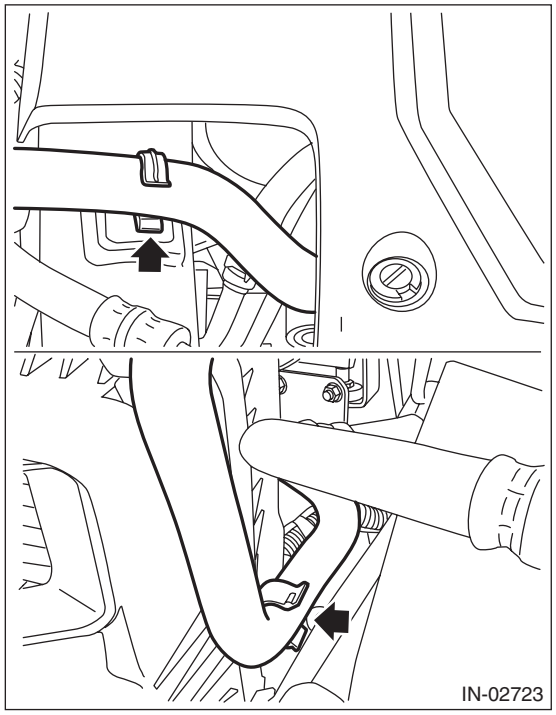

2) Remove the clip (A) from the air cleaner case (front).

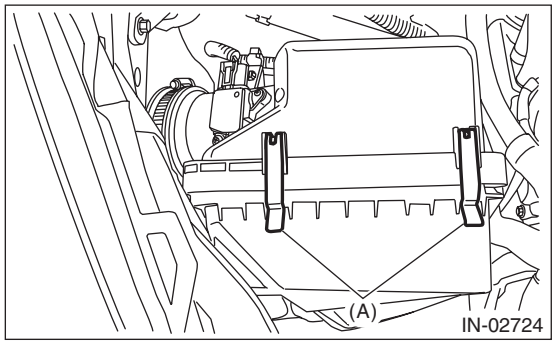

3) Open the air cleaner case to remove the air cleaner element.

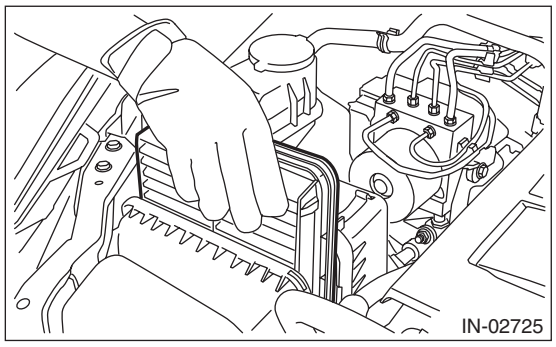

B: INSTALLATION

Install in the reverse order of removal.

CAUTION:
Be sure to use SUBARU genuine air cleaner element depending on the engine type when replacing the air cleaner elements. Using other air cleaner element may affect the engine performance.

NOTE:
• Check that there are no foreign objects in the air cleaner case.
• If the protrusion of the air cleaner case (rear) is removed when removing the air cleaner element, align the protrusion of the air cleaner case (rear) to the hole on the air cleaner case (front) to install.

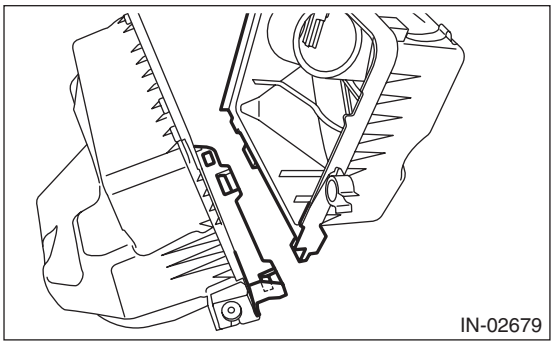

C: INSPECTION

1) Check that the air cleaner element has no deformation, cracks or other damages.
2) Check the air cleaner element for excessive dirt.

3. Air Cleaner Case

A: REMOVAL

1) Disconnect the ground cable from battery.

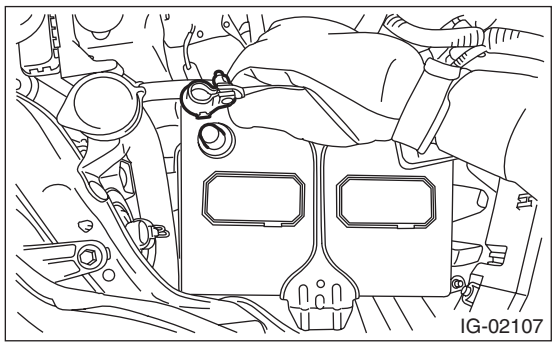

2) Remove the air intake duct. <Ref. to IN(H4DOTC)-12, REMOVAL, Air Intake Duct.>
3) Remove the suction hose from intake duct and air cleaner case (rear).

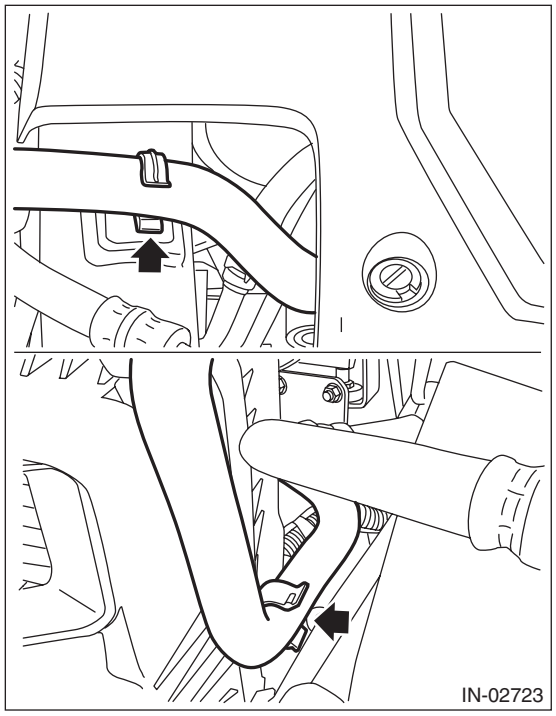

4) Disconnect the connector (A) from the mass air flow and intake air temperature sensor, and remove the clip (B) which holds the mass air flow and intake air temperature sensor harness.
5) Loosen the clamp (C) securing the air intake boot, and remove the clip (D) from the air cleaner case (front).

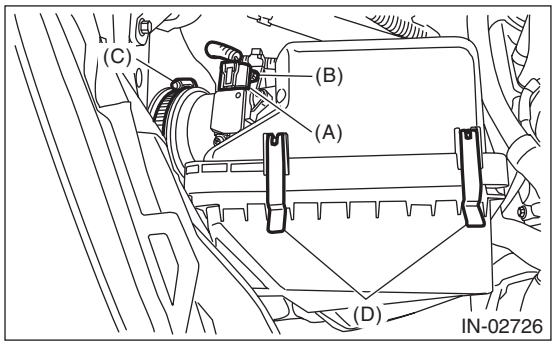

6) Remove the air cleaner case (rear) and air cleaner element.
7) Remove bolts (A) and nuts (B) which secure the air cleaner case (front) to the body, and remove the air cleaner case (front).

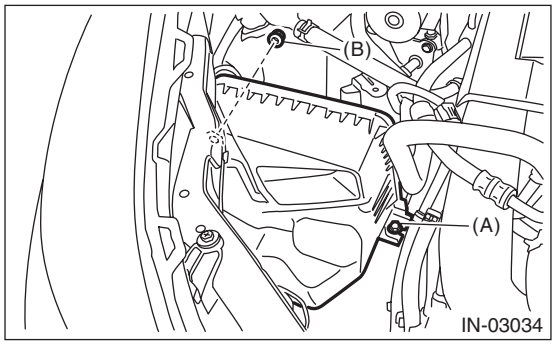

B: INSTALLATION

1) Install the bolt (A) and nut (B) which secure the air cleaner case (front) to the body.

Tightening torque:
Bolt (A)
6 N·m (0.6 kgf-m, 4.4 ft-lb)
Nut (B)
7.5 N·m (0.8 kgf-m, 5.5 ft-lb)

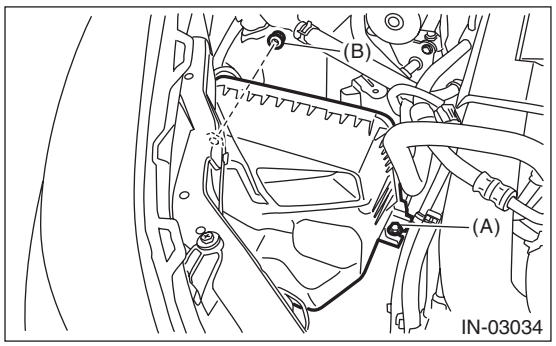

2) Set the air cleaner element to the air cleaner case (front), and install the air cleaner case (rear).

NOTE:
When installing the air cleaner case (rear), align the protrusion of the air cleaner case (rear) to the hole on the air cleaner case (front) to install.

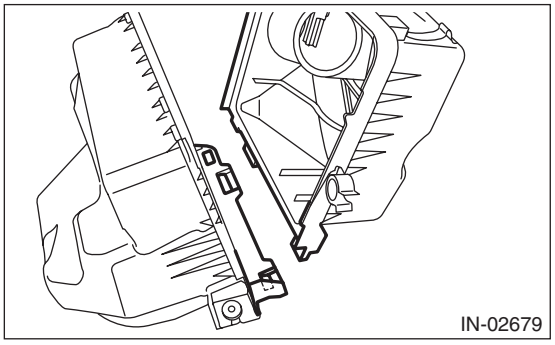

3) Install the clip (A) to the air cleaner case (front).
4) Hold the mass air flow and intake air temperature sensor harness with the clip (B), and connect the connector (C) to the mass air flow and intake air temperature sensor.

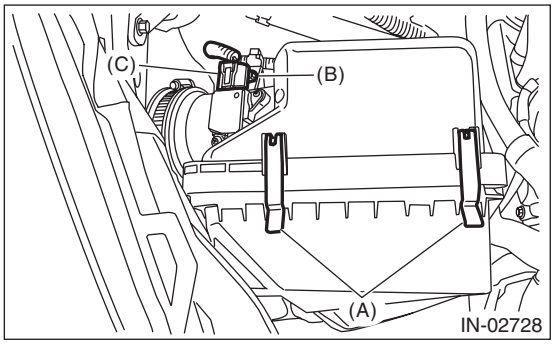

5) Tighten the clamp which secures the air intake boot.

Tightening torque:
2.5 N·m (0.3 kgf-m, 1.8 ft-lb)

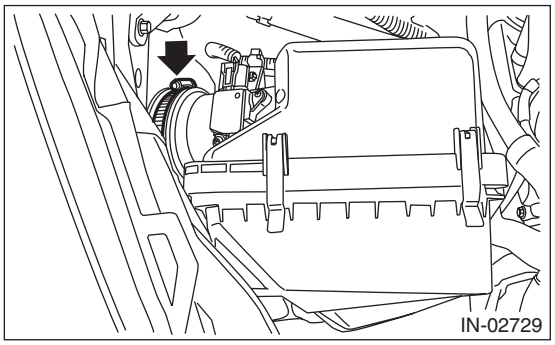

6) Install the suction hose to intake duct and air cleaner case (rear).

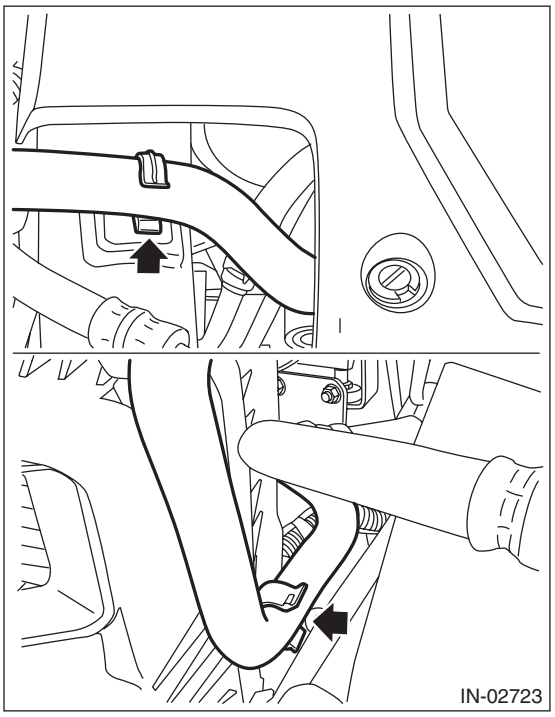

7) Install the air intake duct. <Ref. to IN(H4DOTC)-12, INSTALLATION, Air Intake Duct.>
8) Connect the battery ground terminal.

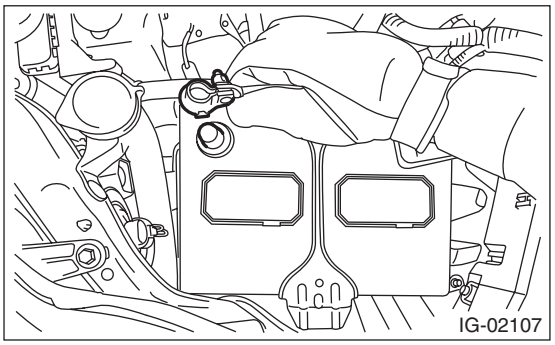

C: INSPECTION

Check that the air cleaner case has no deformation, cracks or other damages.

4. Air Intake Boot

A: REMOVAL

1) Disconnect the ground cable from battery.

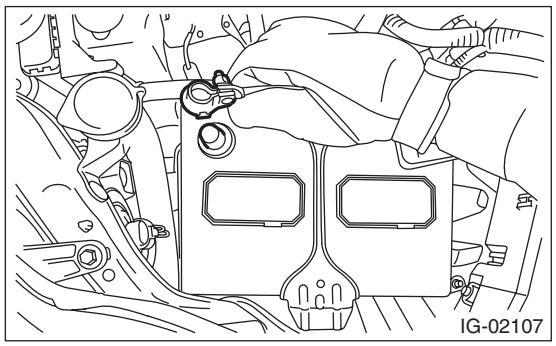

2) Remove the air intake duct. <Ref. to IN(H4DOTC)-12, REMOVAL, Air Intake Duct.>
3) Remove the air cleaner case. <Ref. to IN(H4DOTC)-8, REMOVAL, Air Cleaner Case.>
4) Lift up the vehicle.
5) Remove the under cover. <Ref. to EI-35, REMOVAL, Front Under Cover.>
6) Remove the air intake boot from the intake duct.

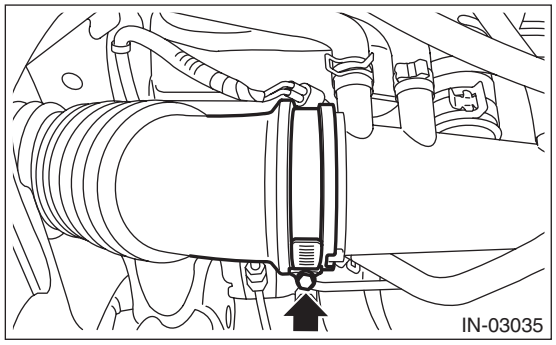

7) Lower the vehicle.
8) Remove the nuts which secure the air intake boot to the vehicle, and remove the air intake boot from the upper side of the vehicle.

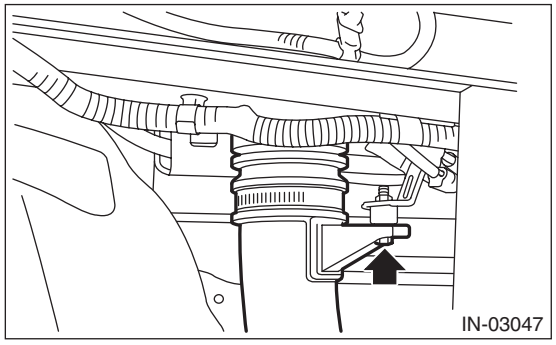

B: INSTALLATION

Install in the reverse order of removal.

NOTE:
When installing the air intake boot to the vehicle, pay attention to the mounting hole position, and align the protrusion for stopping rotation of cushion to the cutout portion on the turbo duct.

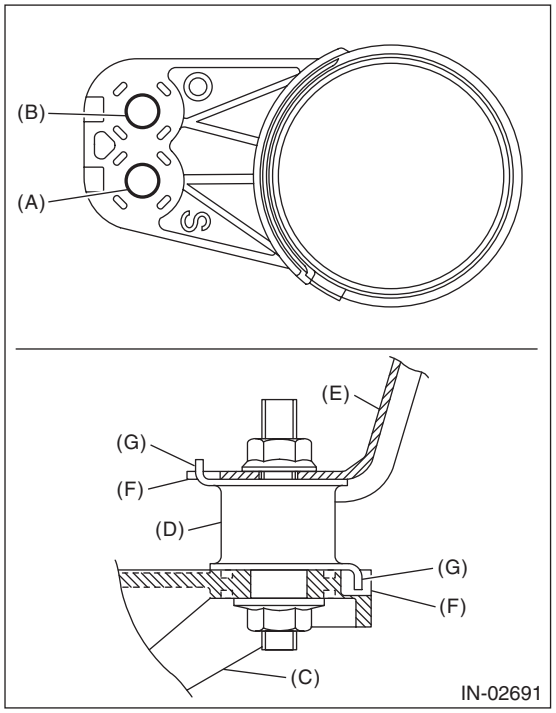

(A) Attachment hole
(B) Not used
(C) Turbo duct
(D) Cushion
(E) Duct bracket
(F) Cutout portion
(G) Protrusion portion

Tightening torque:
7.5 N·m (0.8 kgf-m, 5.5 ft-lb)

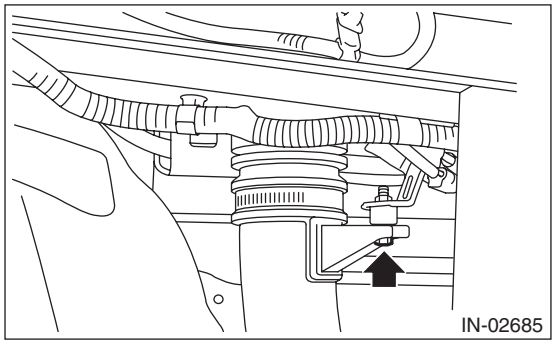

Tightening torque:
2.5 N·m (0.3 kgf-m, 1.8 ft-lb)

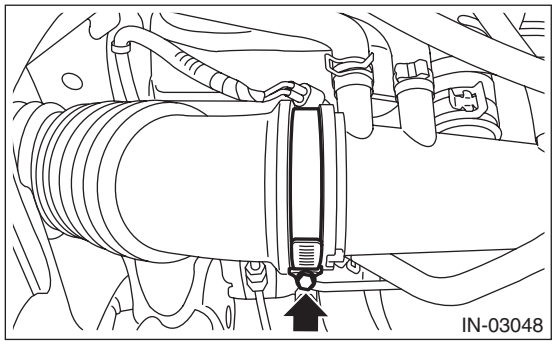

C: DISASSEMBLY

Remove the air intake boot from the turbo duct.

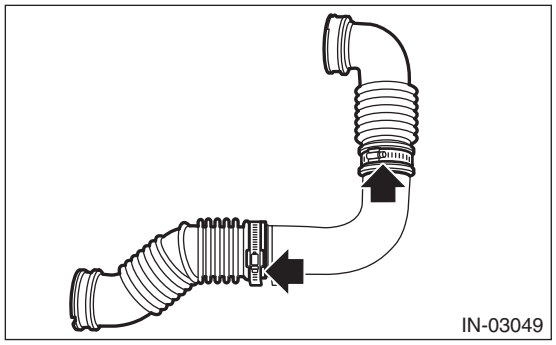

D: ASSEMBLY

Assemble in the reverse order of disassembly.

Tightening torque:
2.5 N·m (0.3 kgf-m, 1.8 ft-lb)

E: INSPECTION

Check that the air intake boot and turbo duct have no cracks, damage or loose part.

5. Air Intake Duct

A: REMOVAL

Remove the clip which secures air intake duct then remove the air intake duct.

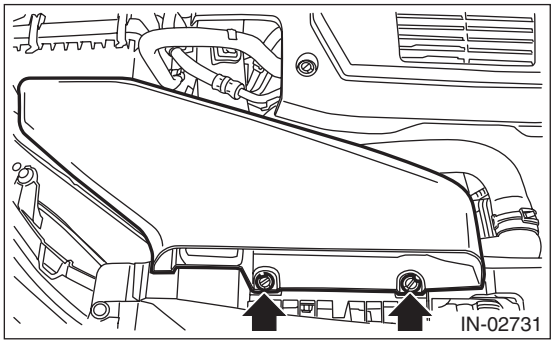

B: INSTALLATION

Install in the reverse order of removal.

C: INSPECTION

1) Check that the air intake duct has no deformation, cracks or other damages.
2) Inspect that no foreign objects are mixed in the air intake duct.

6. Intake Duct

A: REMOVAL

CAUTION:
Do not remove except when the intake duct is broken.

1) Remove the collector cover.
2) Disconnect the ground cable from battery.

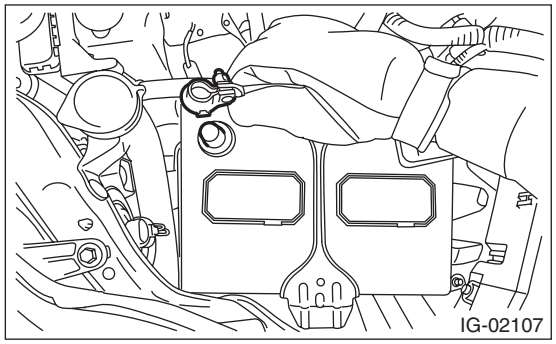

3) Disconnect the vacuum hose from PCV pipe.

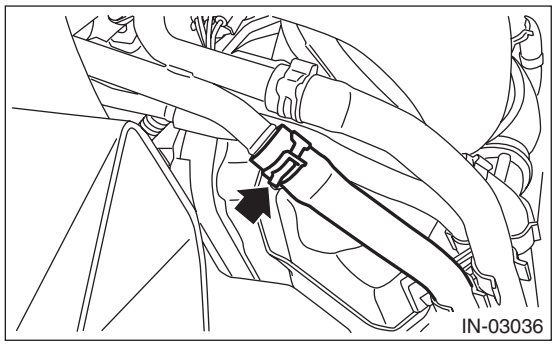

4) Disconnect the vacuum hose (A) from blow-by pipe and remove the vacuum hose (A) and vacuum hose (C) from clip (B).

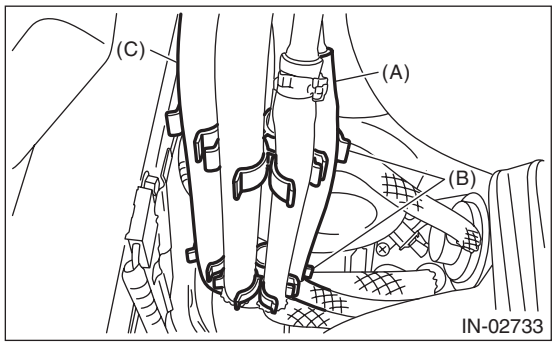

5) Lift up the vehicle.
6) Remove the under cover. <Ref. to EI-35, REMOVAL, Front Under Cover.>
7) Disconnect the connector from the wastegate control solenoid valve.

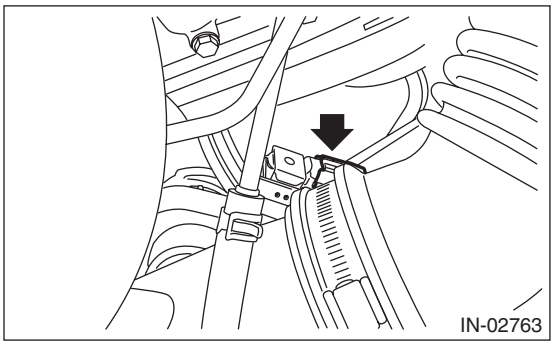

8) Loosen the clamp securing the air intake boot (A) to the intake duct, and remove the air intake boot (A) from intake duct.
9) Disconnect the vacuum hose (B) from intake duct, and unlock the clip securing the air by-pass valve (C) to the intake duct.

NOTE:
Pinch the clamp of the vacuum hose (B) by fitting the cut out in the ST with the protrusion on the clamp as shown in the figure, and unlock the clamp.
ST 18353AA000 CLAMP PLIERS

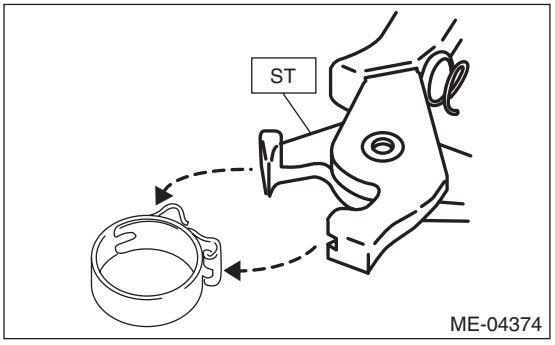

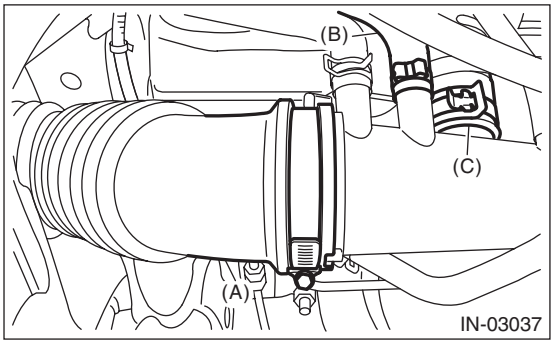

10) Disconnect the air control hose (A).

11) Remove the bolts which secure the intake duct to the turbocharger, and remove the intake duct.

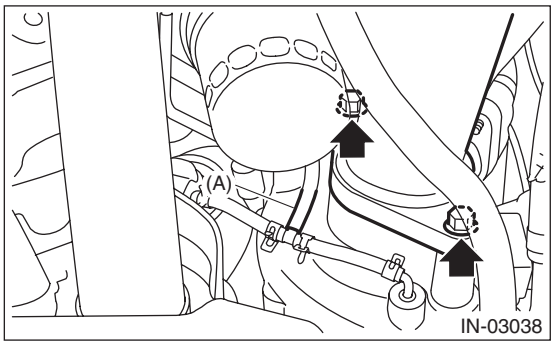

B: INSTALLATION

1) Install the bolts which secure the intake duct to the turbocharger, and connect the air control hose (A).

NOTE:
- Use new O-rings.
- Be careful not to pinch the O-ring.

Tightening torque:
6.4 N·m (0.7 kgf-m, 4.7 ft-lb)

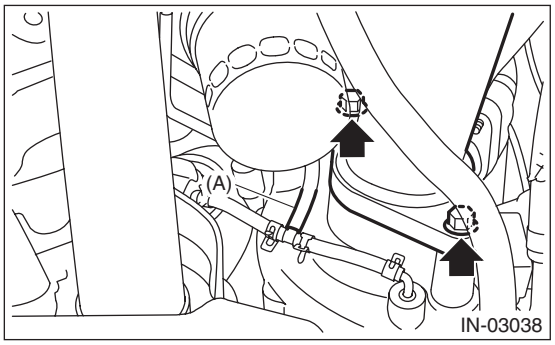

2) Install the air by-pass valve (C) and air intake boot (A) to the intake duct, and connect the vacuum hose (B) to the intake duct.

NOTE:
Use a new clamp for the vacuum hose (B), fit the cut out in the ST with the protrusion on the clamp as shown in the figure, and lock the clamp.
ST 18353AA000 CLAMP PLIERS

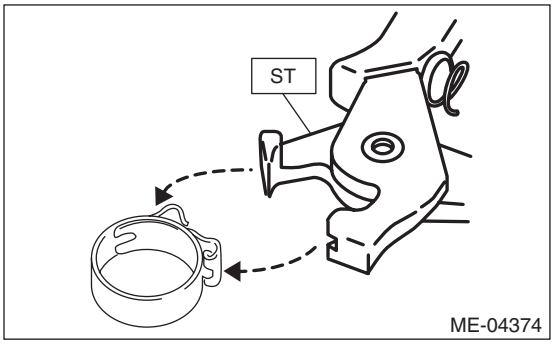

Tightening torque:
2.5 N·m (0.3 kgf-m, 1.8 ft-lb)

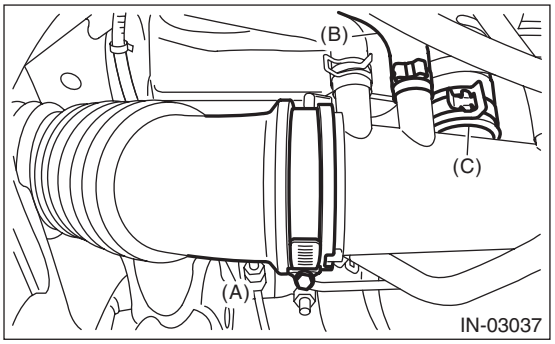

3) Connect the connector to the wastegate control solenoid valve.

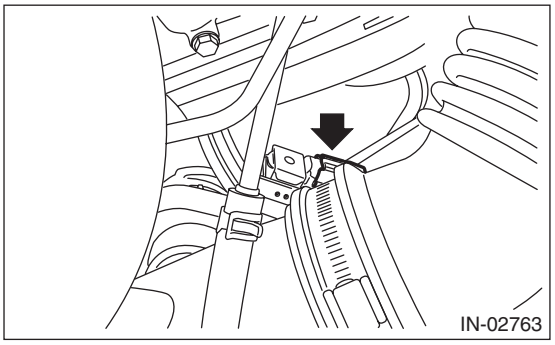

4) Install the under cover. <Ref. to EI-35, INSTALLATION, Front Under Cover.>
5) Lower the vehicle.

6) Install the vacuum hose (A) and vacuum hose (C) to the clip (B), and connect the vacuum hose (A) to the blow-by pipe.

NOTE:
Install the vacuum hose as shown in the figure.

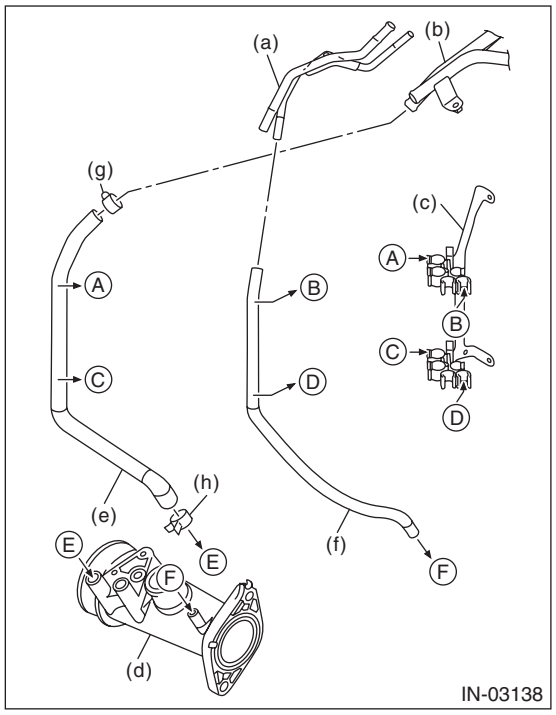

(a) Blow-by pipe
(b) PCV pipe
(c) Hose clip stay ASSY
(d) Intake duct
(e) Vacuum hose (C)
(f) Vacuum hose (A)
(g) Clip
(h) Clip

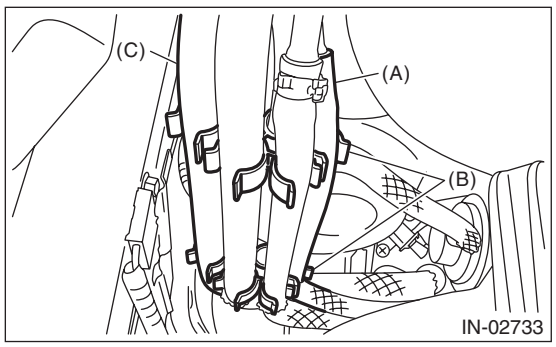

7) Connect the vacuum hose to PCV pipe.

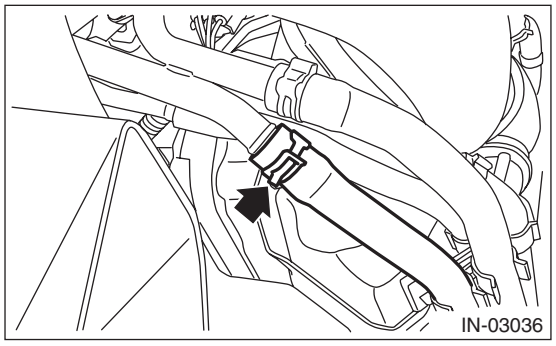

8) Connect the battery ground terminal.

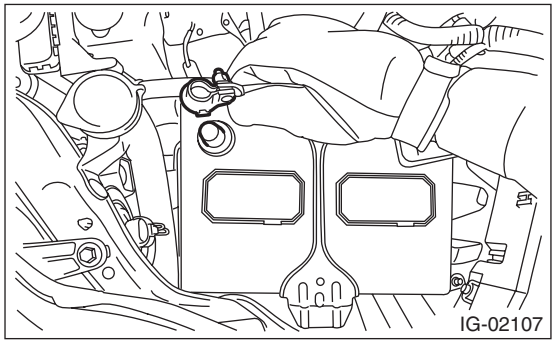

9) Install the collector cover.

C: DISASSEMBLY

1) Remove the vacuum hose (A) and vacuum hose (B) from intake duct.

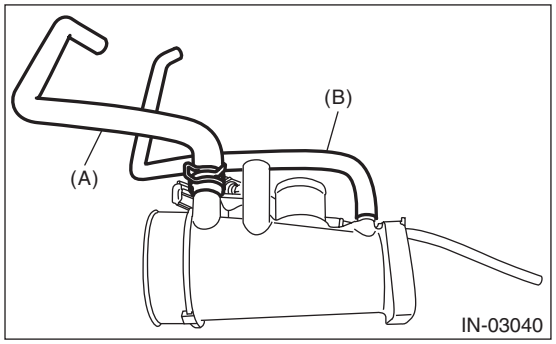

2) Remove the wastegate control solenoid valve and air control hose from the intake duct.

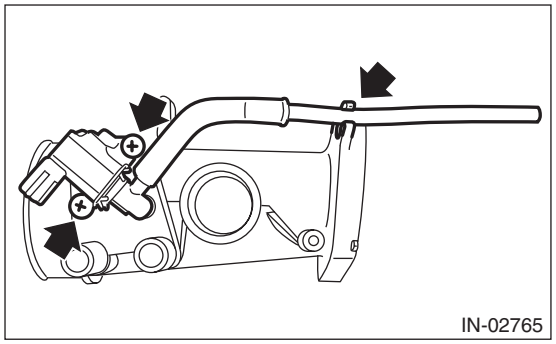

D: ASSEMBLY

1) Install the wastegate control solenoid valve and air control hose to the intake duct.
- Use new O-rings.
- When tightening the boost control solenoid valve, check that it is securely seated.

Tightening torque:
4 N·m (0.4 kgf-m, 3.0 ft-lb)

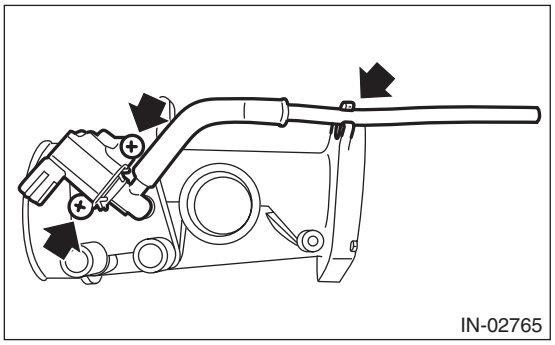

2) Install the vacuum hose (A) and vacuum hose (B) from intake duct.

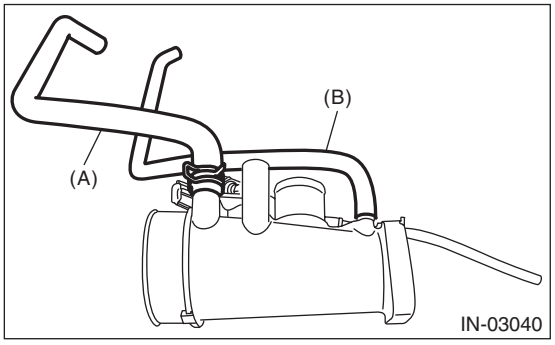

E: INSPECTION

1) Check that the intake duct, PCV pipe and blow-by pipe have no deformation, cracks or other damages.
2) Check that the vacuum hose and air control hose have no cracks, damage or loose part.

7. Intercooler

A: REMOVAL

1) Remove the collector cover.
2) Remove the clamp (A) which holds the intake duct to the intercooler, and remove bolts which secure the intercooler to the intercooler stay LH.

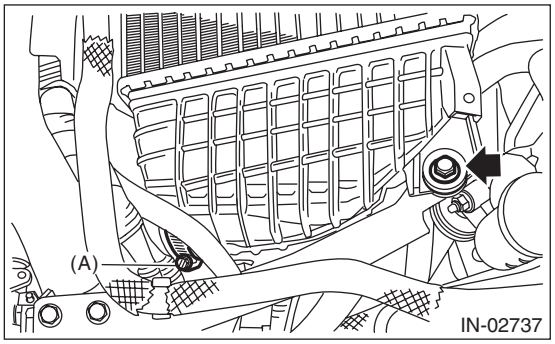

3) Loosen the clamp (A) securing the intake duct to the intercooler, and remove the bolt securing the intercooler to the intercooler stay RH to remove the intercooler.

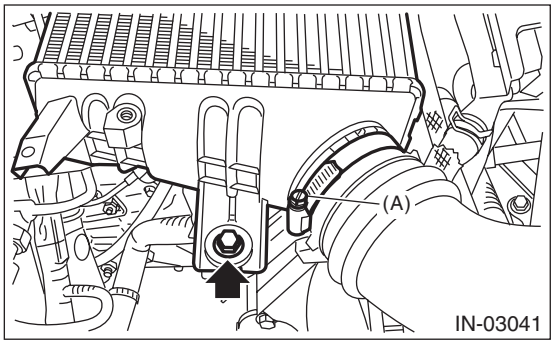

4) Remove the brake booster vacuum hose from the clip (A), and remove the intercooler stay RH and intercooler stay LH.

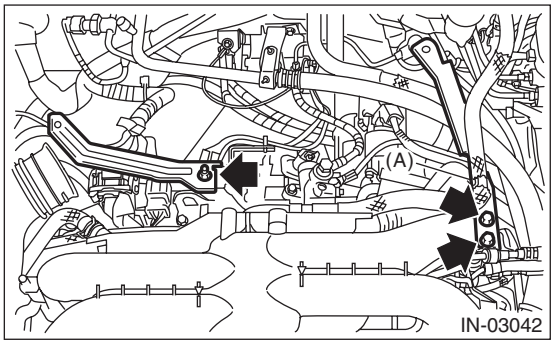

5) Remove the V-belts. <Ref. to ME(H4DOTC)-42, REMOVAL, V-belt.>
6) Remove the generator. <Ref. to SC(H4SO)-18, REMOVAL, Generator.>
7) Remove the power steering pump.
(1) Remove the suction hose from intake duct.

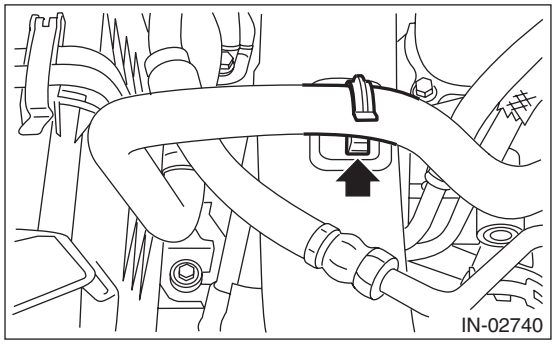

(2) Disconnect the connector (A) from power steering pump, and remove the power steering pump together with the power steering pump bracket from engine and stopper rod.

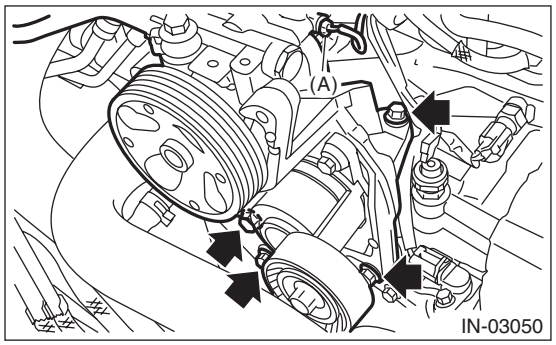

(3) Mount the power steering pump together with the power steering pump bracket on RH side wheel apron.
8) Remove the radiator sub fan motor assembly. <Ref. to CO(H4DOTC)-27, REMOVAL, Radiator Sub Fan and Fan Motor.>
9) Remove the engine coolant hose from the clip (A).
10) Remove the bolts which secure the intake duct to the turbocharger, and remove the air by-pass valve from the intake duct.

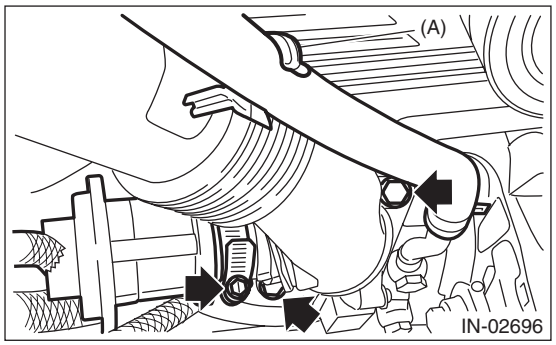

11) Remove the intake duct from intake manifold.

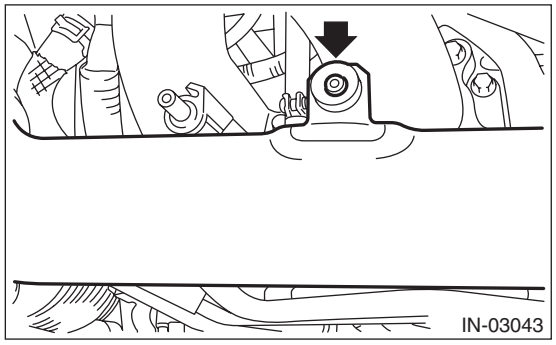

B: INSTALLATION

1) Install the intake duct to the intake manifold.

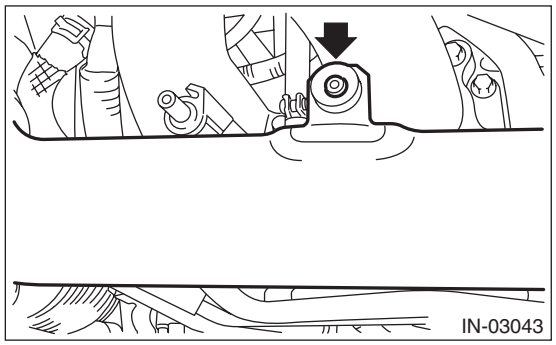

2) Attach the engine coolant hose to the clip (A).
3) Install the air by-pass valve to the intake duct, and install the bolts which secure the intake duct to the turbocharger.

NOTE:
- Use new O-rings.
- Be careful not to pinch the O-ring.

Tightening torque:
T1: 3 N·m (0.3 kgf-m, 2.2 ft-lb)
T2: 16 N·m (1.6 kgf-m, 11.8 ft-lb)

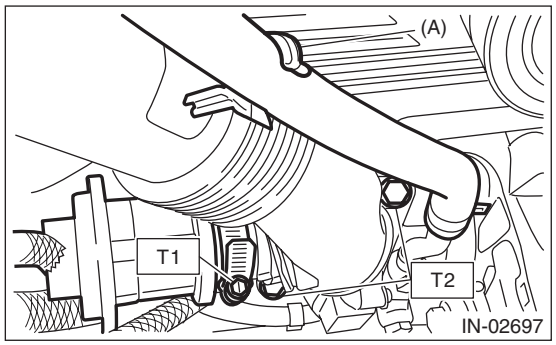

4) Install the radiator sub fan motor assembly. <Ref. to CO(H4DOTC)-27, INSTALLATION, Radiator Sub Fan and Fan Motor.>

5) Install the power steering pump.
(1) Install the power steering pump together with the power steering pump bracket to engine and stopper rod, and connect the connector (A) to the power steering pump.

Tightening torque:
Refer to "COMPONENT" of "STARTING/ CHARGING SYSTEMS" for the tightening torque. <Ref. to SC(H4SO)-7, GENERATOR BRACKET, COMPONENT, General Description.>

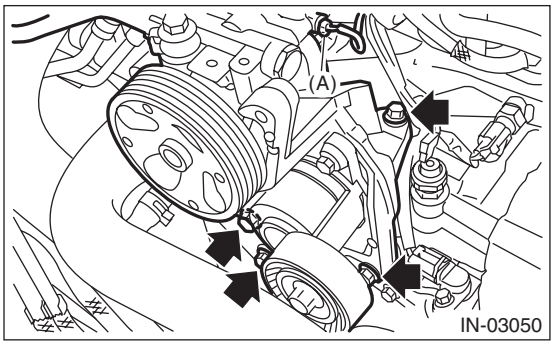

(2) Install the suction hose to the intake duct.

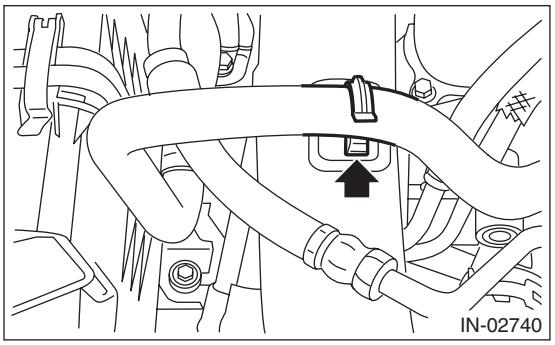

6) Install the generator. <Ref. to SC(H4SO)-18, INSTALLATION, Generator.>
7) Install the V-belts. <Ref. to ME(H4DOTC)-42, INSTALLATION, V-belt.>
8) Install the intercooler stay RH and intercooler stay LH, and install the brake booster vacuum hose to the clip (A).

Tightening torque:
16 N·m (1.6 kgf-m, 11.8 ft-lb)

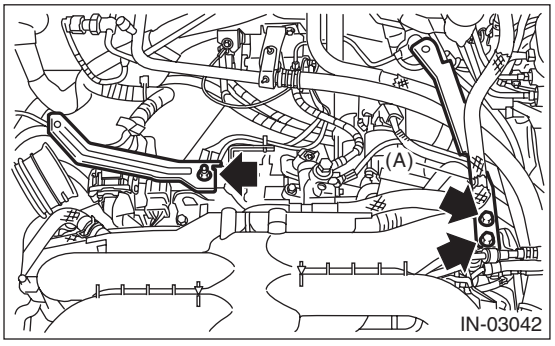

9) Place the intercooler and attach the bolt to secure the intercooler to the intercooler stay RH. And tighten the clamp to secure the intake duct to the intercooler.

Tightening torque:
T1: 3 N·m (0.3 kgf-m, 2.2 ft-lb)
T2: 16 N·m (1.6 kgf-m, 11.8 ft-lb)

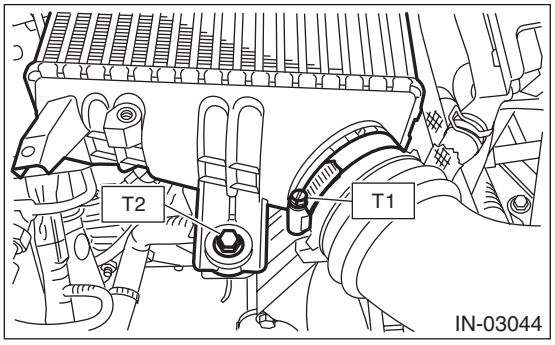

10) Install the bolts which secure the intercooler to the intercooler stay LH, and tighten the clamp which holds the intake duct to the intercooler.

Tightening torque:
T1: 3 N·m (0.3 kgf-m, 2.2 ft-lb)
T2: 16 N·m (1.6 kgf-m, 11.8 ft-lb)

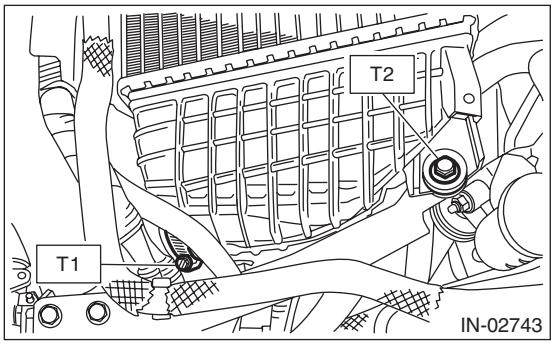

11) Install the collector cover.

C: INSPECTION

1) Check that the intercooler and intercooler stay have no deformation, cracks or other damages.
2) Check that the intake duct has no cracks, damage or loose part.

8. Turbocharger

A: REMOVAL

Remove the turbo charger and front exhaust pipe as a unit. Refer to “Front Exhaust Pipe” for the removal procedure. <Ref. to EX(H4DOTC)-5, REMOVAL, Front Exhaust Pipe.> <Ref. to EX(H4DOTC)-10, DISASSEMBLY, Front Exhaust Pipe.>

B: INSTALLATION

Refer to “Front Exhaust Pipe” for the installation procedure. <Ref. to EX(H4DOTC)-7, INSTALLATION, Front Exhaust Pipe.> <Ref. to EX(H4DOTC)-11, ASSEMBLY, Front Exhaust Pipe.>

C: DISASSEMBLY

1) Remove the oil inlet pipe from the turbocharger.

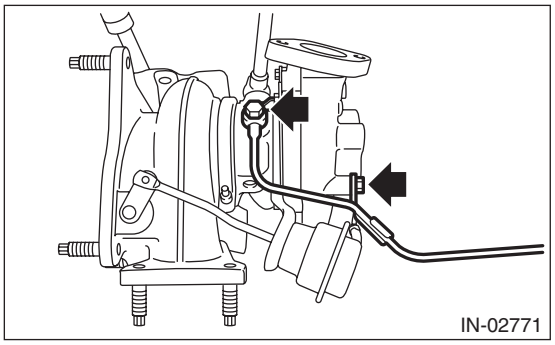

2) Remove the water pipe from the turbocharger.

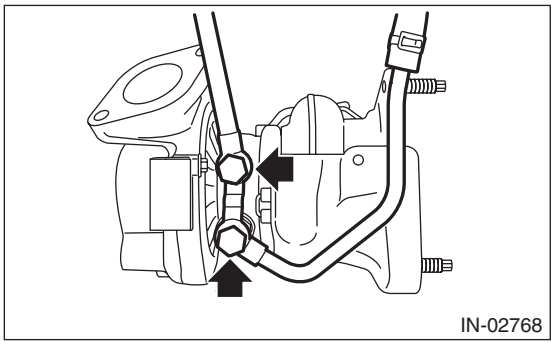

3) Remove the water pipe connector from the turbocharger.

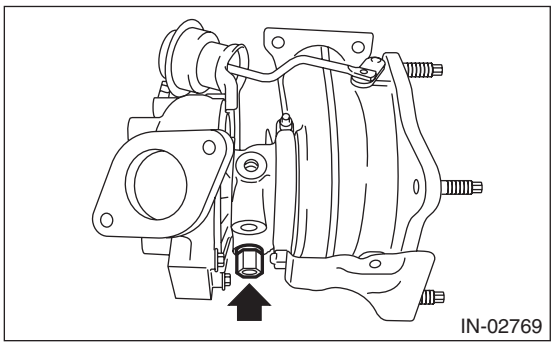

4) Remove the exhaust cover from the turbocharger.

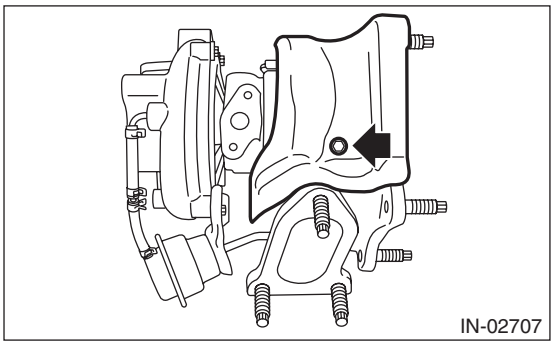

5) Remove the exhaust stay from the turbocharger.

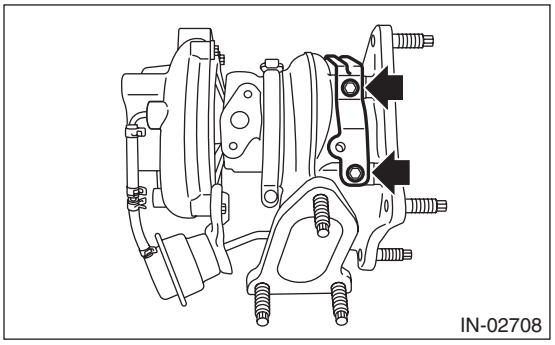

D: ASSEMBLY

1) Install the exhaust stay to the turbocharger.

Tightening torque:
6.4 N·m (0.7 kgf-m, 4.7 ft-lb)

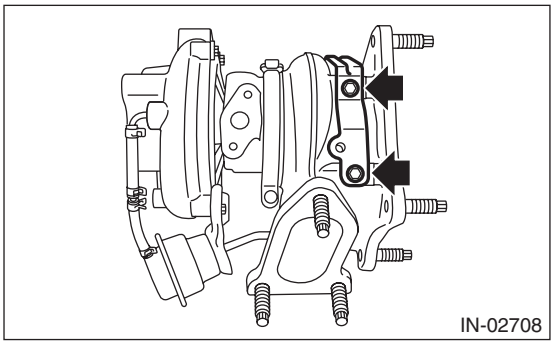

2) Install the exhaust cover to the turbocharger.

Tightening torque:
6.4 N·m (0.7 kgf-m, 4.7 ft-lb)

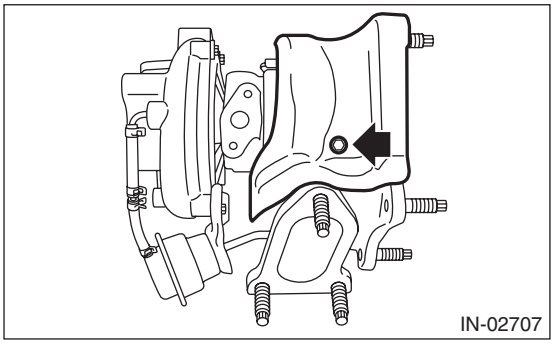

3) Install the water pipe connector to the turbocharger.

NOTE:
Use a new gasket.

Tightening torque:
36.5 N·m (3.7 kgf-m, 26.9 ft-lb)

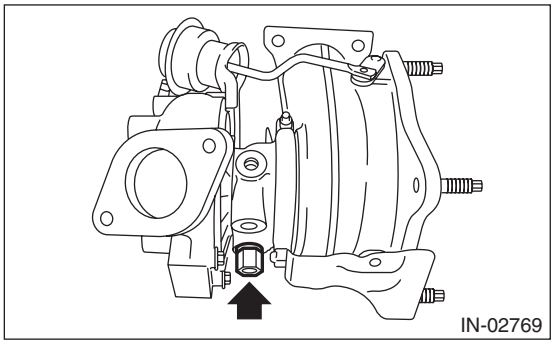

4) Install the water pipe to the turbocharger.

NOTE:
Use a new gasket.

Tightening torque:
31.5 N·m (3.2 kgf-m, 23.2 ft-lb)

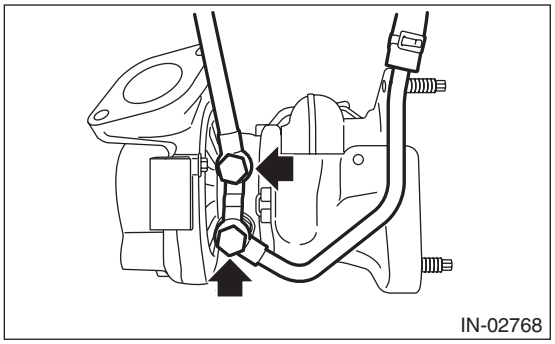

5) Install the oil inlet pipe to the turbocharger.

NOTE:
Use a new gasket.

Tightening torque:
T1: 6.4 N·m (0.7 kgf-m, 4.7 ft-lb)
T2: 16 N·m (1.6 kgf-m, 11.8 ft-lb)

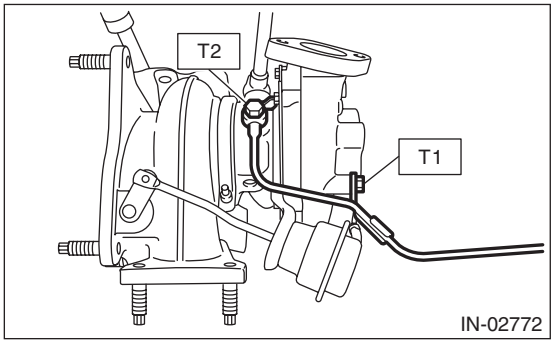

E: INSPECTION

1. WASTE GATE ACTUATOR

1) Remove the collector cover.
2) Remove the front exhaust pipe. <Ref. to EX(H4DOTC)-5, REMOVAL, Front Exhaust Pipe.>
3) Remove the exhaust pipe cover.

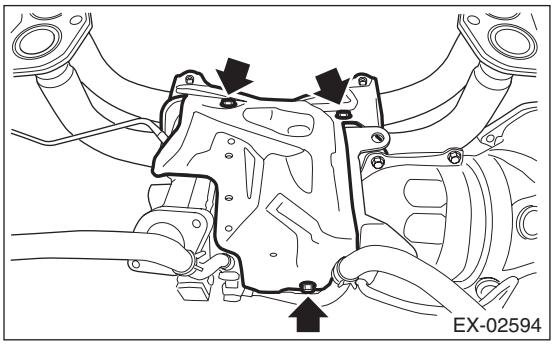

4) Remove the boost hose (B) from the waste gate actuator (A) of the turbocharger, and connect the Mighty Vac to the waste gate actuator (A).

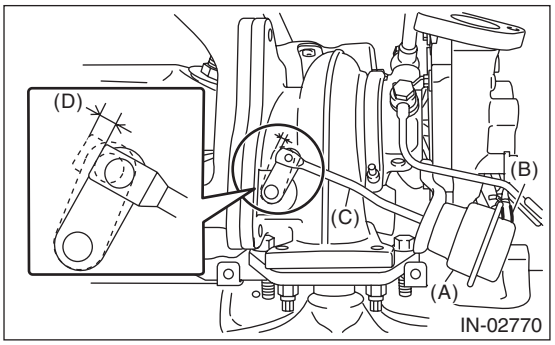

(A) Waste gate actuator
(B) Boost hose
(C) Control rod
(D) Control rod stroke

5) Pressurize slowly with the Mighty Vac, and check the pressure when the control rod stroke (D) becomes 2 mm (0.08 in). If it is not within the standard, replace the turbocharger assembly.

CAUTION:
Do not pressurize over 85.2 kPa (0.87 kgf/cm^2, 12.35 psi) to prevent damaging the waste gate actuator.

Operating pressure (control rod stroke 2 mm (0.08 in)):
Standard
70.8 — 76.7 kPa (0.72 — 0.78 kgf/cm^2, 10.27 — 11.12 psi)

6) After inspection, install the related parts in the reverse order of removal.

Tightening torque:
6.4 N·m (0.7 kgf-m, 4.7 ft-lb)

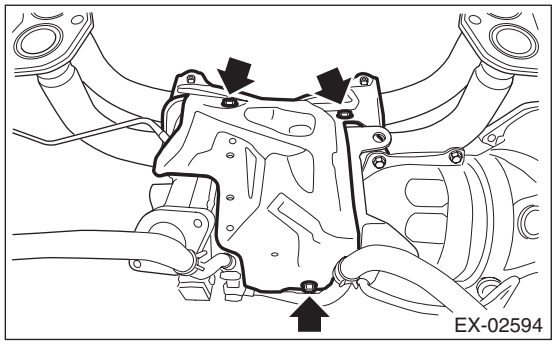

2. OTHER INSPECTIONS

1) Check that the turbocharger and pipe have no deformation, cracks or other damages.
2) Check that the hose has no cracks, damage or loose part.
3) Check that there are no oil leaks or water leaks from the pipe attachment section.

9. Oil Catch Tank

A: REMOVAL

CAUTION:
Do not remove except when the oil catch tank is broken.

1) Lift up the vehicle.
2) Remove the under cover. <Ref. to EI-35, REMOVAL, Front Under Cover.>
3) Remove the engine cover.

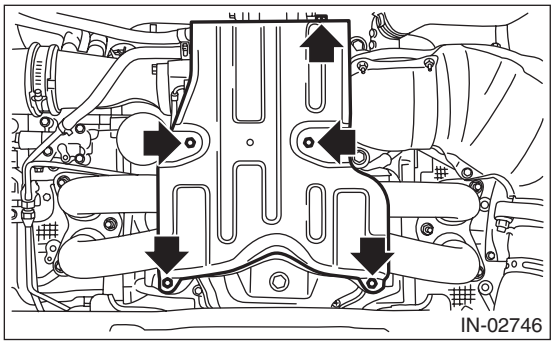

4) Disconnect vacuum hose (A) and oil outlet hose (B) from the oil catch tank.

NOTE:
Pinch the clamp of the vacuum hose (A) by fitting the cut out in the ST with the protrusion on the clamp as shown in the figure, and unlock the clamp.
ST 18353AA000 CLAMP PLIERS

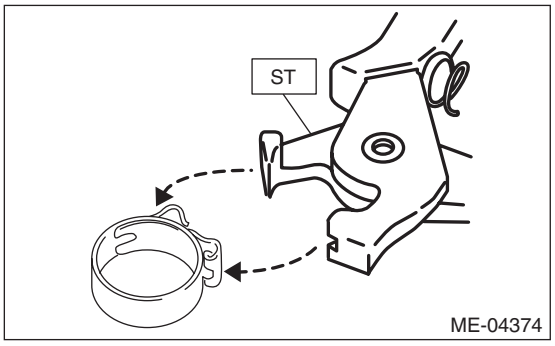

5) Remove bolts and nuts which secure the oil catch tank to the turbocharger and oil catch tank stay, and remove the oil catch tank.

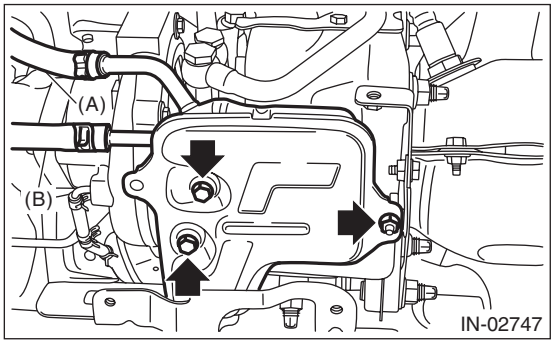

B: INSTALLATION

Install in the reverse order of removal.

NOTE:
- Use a new gasket.
- When installing the oil catch tank, tighten to the specified torque in the alphabetical order shown in the figure.

Tightening torque:
T1: 6.4 N·m (0.7 kgf-m, 4.7 ft-lb)
T2: 10.5 N·m (1.1 kgf-m, 7.7 ft-lb)

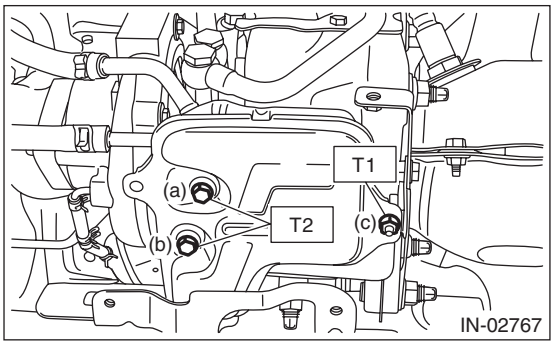

- Use a new clamp for the vacuum hose, fit the cut out in the ST with the protrusion on the clamp as shown in the figure, and lock the clamp.

ST 18353AA000 CLAMP PLIERS

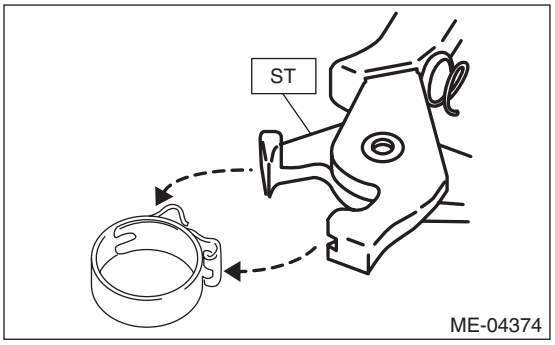

- After installing, check the engine oil level and replenish it if necessary. <Ref. to LU(H4SO)-13, INSPECTION, Engine Oil.>

Tightening torque:
6.4 N·m (0.7 kgf-m, 4.7 ft-lb)

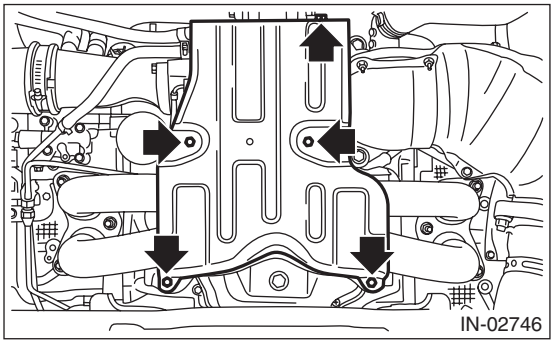

C: INSPECTION

1) Check that the oil catch tank does not have deformation, cracks or damage.
2) Check that the vacuum hose and oil outlet hose have no cracks, damage or loose part.

10.Scavenge Pump

A: REMOVAL

For removal procedures, refer to LU (H4SO) section. <Ref. to LU(H4SO)-30, REMOVAL, Scavenge Pump.>

B: INSTALLATION

For installation procedures, refer to LU (H4SO) section. <Ref. to LU(H4SO)-30, INSTALLATION, Scavenge Pump.>

C: INSPECTION

Refer to LU (H4SO) for inspection procedures. <Ref. to LU(H4SO)-30, INSPECTION, Scavenge Pump.>

11.Air By-pass Valve

A: REMOVAL

1) Remove the collector cover.
2) Disconnect the vacuum control hose from the PCV pipe, and remove the vacuum control hose from the clip (A).

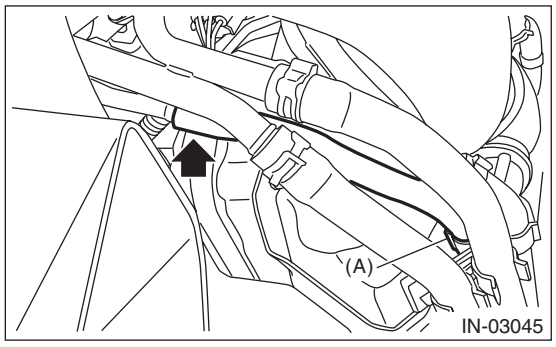

3) Loosen the clamp which holds the air by-pass valve to the intake duct.

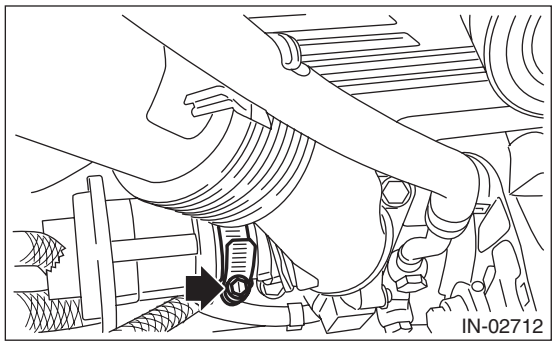

4) Lift up the vehicle.
5) Remove the under cover. <Ref. to EI-35, REMOVAL, Front Under Cover.>
6) Remove the air by-pass valve from the intake duct.

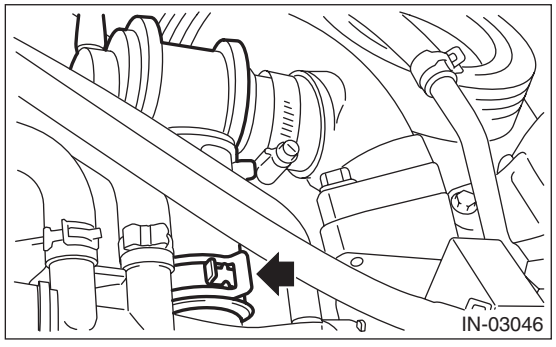

B: INSTALLATION

Install in the reverse order of removal.

Tightening torque:
3 N·m (0.3 kgf-m, 2.2 ft-lb)

C: INSPECTION

1. AIR BY-PASS VALVE

1) Check that the air by-pass valve has no deformation, cracks or other damages.
2) Connect the Mighty Vac to the nipple (A) of the air by-pass valve.

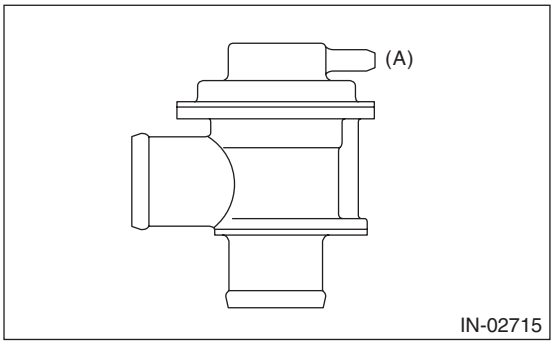

3) Using the Mighty Vac, generate the negative pressure to –93.3 kPa (–0.95 kgf/cm^2, –13.5 psi). Check that the Mighty Vac gauge needle holds 10 seconds without falling by –92.6 kPa (–0.94 kgf/cm^2, –13.4 psi).
4) Set a dial gauge to the end of valve rod of the air by-pass valve.

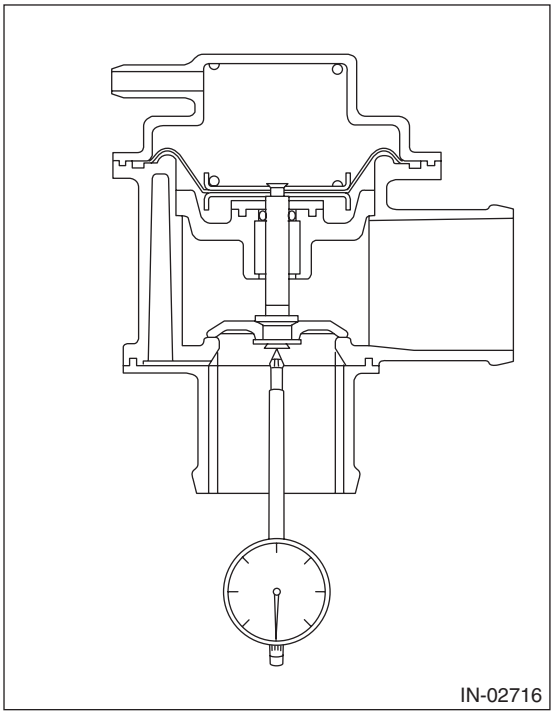

5) Using the Mighty Vac, generate the negative pressure, and check the pressure when dial gauge needle (valve stroke) shows 0.5 mm (0.02 in). If it is not within the standard, replace the air by-pass valve.

Opening pressure (valve stroke 0.5 mm (0.02 in)):

Standard

–49.3 — –57.3 kPa (–0.50 — –0.58 kgf/cm^2, –7.15 — –8.31 psi)

2. OTHER INSPECTIONS

Check that the vacuum hose and air by-pass pipe have no cracks, damage or loose part.

12.Resonator Chamber

A: REMOVAL

The resonator chamber and air cleaner case are integrated into one unit; therefore, refer to “Air Cleaner Case” for removal procedure. <Ref. to IN(H4DOTC)-8, REMOVAL, Air Cleaner Case.>

B: INSTALLATION

The resonator chamber and air cleaner case are integrated into one unit; therefore, refer to “Air Cleaner Case” for installation procedure. <Ref. to IN(H4DOTC)-8, INSTALLATION, Air Cleaner Case.>

C: INSPECTION

Check that the resonator chamber has no deformation, cracks or other damages.

MECHANICAL

ME(H4DOTC)

		Page
1.	General Description	2
2.	Compression	21
3.	Idle Speed	22
4.	Ignition Timing	23
5.	Intake Manifold Vacuum	24
6.	Engine Oil Pressure	25
7.	Fuel Pressure	26
8.	Valve Clearance	27
9.	Engine Assembly	31
10.	Engine Mounting	38
11.	Preparation for Overhaul	41
12.	V-belt	42
13.	Crank Pulley	44
14.	Timing Belt Cover	46
15.	Timing Belt	52
16.	Cam Sprocket	61
17.	Crank Sprocket	62
18.	Camshaft	63
19.	Cylinder Head	74
20.	Cylinder Block	83
21.	Intake and Exhaust Valve	107
22.	Piston	108
23.	Connecting Rod	109
24.	Crankshaft	110
25.	Engine Trouble in General	111
26.	Engine Noise	117

1. General Description

A: SPECIFICATION

Engine	Model				2.5 L
	Cylinder arrangement				Horizontally opposed, liquid cooled, 4-cylinder, 4-stroke gasoline engine
	Valve system mechanism				Belt driven, double overhead camshaft, 4-valve/cylinder
	Bore × Stroke			mm (in)	99.5 × 79.0 (3.92 × 3.11)
	Displacement			cm^3 (cu in)	2,457 (149.94)
	Compression ratio				9.5
	Compression pressure (at 200 — 300 rpm)			kPa (kg/cm^2, psi) Standard	981 — 1,177 (10 — 12, 142 — 171)
	Number of piston rings				Pressure ring: 2, Oil ring: 1
	Intake valve timing		Open	Max. retard	ATDC 5°
				Min. advance	BTDC 35°
			Close	Max. retard	ABDC 65°
				Min. advance	ABDC 25°
	Exhaust valve timing		Open	Max. retard	BBDC 24°
				Min. advance	BBDC 64°
			Close	Max. retard	ATDC 26°
				Min. advance	BTDC 14°
	Valve clearance mm (in)	Inspection value	Intake		$0.20^{+0.04}_{-0.06}$ ($0.0079^{+0.0016}_{-0.0024}$)
			Exhaust		0.35±0.05 (0.0138±0.0020)
		Adjustment value	Intake		$0.20^{+0.01}_{-0.03}$ ($0.0079^{+0.0004}_{-0.0012}$)
			Exhaust		0.35±0.02 (0.0138±0.0008)
	Idle speed (gear shift lever in neutral position) rpm		No load	Standard	700±100
			A/C ON	Standard	700 — 850±100
	Ignition order				1 → 3 → 2 → 4
	Ignition timing			BTDC/rpm Standard	15°±10°/700

NOTE:
OS: Oversize US: Undersize

Belt tension adjuster	Adjuster rod protrusion amount		mm (in)	5.2 — 6.2 (0.205 — 0.244)
Camshaft	Bending limit		mm (in)	0.020 (0.00079)
	Cam lobe height mm (in)	Intake	Standard	46.55 — 46.65 (1.833 — 1.837)
		Exhaust	Standard	45.85 — 45.95 (1.805 — 1.809)
	Cam base circle diameter mm (in)		Standard	37.0 (1.457)
	Journal O.D. mm (in)	Front	Standard	37.946 — 37.963 (1.4939 — 1.4946)
		Center, rear	Standard	29.946 — 29.963 (1.1790 — 1.1796)
	Oil clearance mm (in)		Standard	0.037 — 0.072 (0.0015 — 0.0028)
	Thrust clearance mm (in)		Standard	0.068 — 0.116 (0.0027 — 0.0047)
Cylinder head	Warping limit (mating surface with cylinder block)		mm (in)	0.035 (0.0014)
	Grinding limit		mm (in)	0.3 (0.012)
	Standard height		mm (in)	127.5 (5.02)
Valve seat	Seating angle between valve and valve seat			90°
	Contacting width between valve and valve seat mm (in)	Intake	Standard	0.6 — 1.4 (0.024 — 0.055)
		Exhaust	Standard	1.2 — 1.8 (0.047 — 0.071)
Valve guide	Clearance between the valve guide and valve stem mm (in)	Intake	Standard	0.030 — 0.057 (0.0012 — 0.0022)
		Exhaust	Standard	0.040 — 0.067 (0.0016 — 0.0026)
	Inside diameter		mm (in)	6.000 — 6.012 (0.2362 — 0.2367)
	Valve stem outer diameters mm (in)	Intake		5.955 — 5.970 (0.2344 — 0.2350)
		Exhaust		5.945 — 5.960 (0.2341 — 0.2346)
	Valve guide protrusion amount		mm (in)	15.8 — 16.2 (0.622 — 0.638)
Valve	Head edge thickness mm (in)	Intake	Standard	1.0 — 1.4 (0.039 — 0.055)
		Exhaust	Standard	1.3 — 1.7 (0.051 — 0.067)
	Overall length mm (in)	Intake		104.4 (4.110)
		Exhaust		104.65 (4.1201)
Valve spring	Free length		mm (in)	47.32 (1.863)
	Tension/spring height N (kgf, lb)/mm (in)		Set	205 — 235 (20.90 — 23.96, 46.09 — 52.84)/36.0 (1.417)
			Lift	426 — 490 (43.44 — 49.96, 95.78 — 110.17)/26.5 (1.043)
	Squareness			2.5°, 2.1 mm (0.083 in) or less
Valve lifter	Outer diameter mm (in)		Standard	34.959 — 34.975 (1.3763 — 1.3770)
	Valve lifter mating surface inner diameter mm (in)		Standard	34.994 — 35.016 (1.3777 — 1.3786)
	Valve lifter and valve lifter mating surface clearance mm (in)		Standard	0.019 — 0.057 (0.0007 — 0.0022)
Cylinder block	Warping limit (mating surface with cylinder head)		mm (in)	0.025 (0.0098)
	Grinding limit		mm (in)	0.1 (0.004)
	Standard height		mm (in)	201.0 (7.91)
	Cylindricality mm (in)		Limit	0.015 (0.0006)
	Out-of-roundness mm (in)		Limit	0.010 (0.0004)
	Clearance between cylinder and piston at 20°C (68°F) mm (in)		Standard	–0.010 — 0.010 (–0.00039 — 0.00039)
	Cylinder inner diameter boring limit (diameter)		mm (in)	To 100.005 (3.9372)

Piston	Piston grade point			mm (in)	38.2 (1.50)
	Outer diameter mm (in)	Standard	A		99.505 — 99.515 (3.9175 — 3.9179)
			B		99.495 — 99.505 (3.9171 — 3.9175)
		0.25 (0.0098) OS			99.745 — 99.765 (3.9270 — 3.9278)
		0.50 (0.0197) OS			99.995 — 100.015 (3.9368 — 3.9376)
Piston pin	Degree of fit				Piston pin must be fitted into position with thumb at 20°C (68°F).
	Clearance between piston pin hole and piston pin			mm (in) Standard	0.004 — 0.008 (0.0002 — 0.0003)
Piston ring	Piston ring gap mm (in)	Top ring		Standard	0.20 — 0.25 (0.0079 — 0.0098)
		Second ring		Standard	0.37 — 0.52 (0.015 — 0.0203)
		Oil ring		Standard	0.20 — 0.50 (0.0079 — 0.0197)
	Clearance between piston ring and piston ring groove mm (in)	Top ring		Standard	0.040 — 0.080 (0.0016 — 0.0031)
		Second ring		Standard	0.030 — 0.070 (0.0012 — 0.0028)
Connecting rod and connecting rod bearing	Bend or twist per 100 mm (3.94 in) in length			mm (in) Limit	0.1 (0.0039)
	Thrust clearance			mm (in) Standard	0.070 — 0.330 (0.0028 — 0.0130)
	Oil clearance			mm (in) Standard	0.017 — 0.045 (0.0007 — 0.0018)
	Bearing size (Thickness at center) mm (in)	Standard			1.490 — 1.506 (0.0587 — 0.0593)
		0.03 (0.0012) US			1.504 — 1.512 (0.0592 — 0.0595)
		0.05 (0.0020) US			1.514 — 1.522 (0.0596 — 0.0599)
		0.25 (0.0098) US			1.614 — 1.622 (0.0635 — 0.0639)
Bushing of small end	Clearance between piston pin and bushing			mm (in) Standard	0 — 0.022 (0 — 0.0009)
Crankshaft and crankshaft bearing	Bending limit				mm (in) 0.035 (0.0014)
	Crank pin	Cylindricality		mm (in) Limit	0.004 (0.0002)
		Out-of-roundness		mm (in) Limit	0.003 (0.0001)
		Grinding limit (dia.)			mm (in) To 51.750 (2.0374)
	Crank journal	Cylindricality		mm (in) Limit	0.006 (0.0002)
		Out-of-roundness		mm (in) Limit	0.005 (0.0002)
		Grinding limit (dia.)			mm (in) To 59.758 (2.3527)
	Crank pin outer diameter mm (in)	Standard			51.976 — 52.000 (2.0463 — 2.0472)
		0.03 (0.0012) US			51.954 — 51.970 (2.0454 — 2.0461)
		0.05 (0.0020) US			51.934 — 51.950 (2.0447 — 2.0453)
		0.25 (0.0098) US			51.734 — 51.750 (2.0368 — 2.0374)
	Crank journal outer diameter mm (in)	Standard			59.984 — 60.008 (2.3616 — 2.3625)
		0.03 (0.0012) US			59.962 — 59.978 (2.3607 — 2.3613)
		0.05 (0.0020) US			59.942 — 59.958 (2.3599 — 2.3605)
		0.25 (0.0098) US			59.742 — 59.758 (2.3520 — 2.3527)
	Bearing size (Thickness at center) mm (in)	#1, #3	Standard		1.998 — 2.015 (0.0787 — 0.0793)
			0.03 (0.0012) US		2.017 — 2.020 (0.0794 — 0.0795)
			0.05 (0.0020) US		2.027 — 2.030 (0.0798 — 0.0799)
			0.25 (0.0098) US		2.127 — 2.130 (0.0837 — 0.0839)
		#2, #4, #5	Standard		2.000 — 2.017 (0.0787 — 0.0794)
			0.03 (0.0012) US		2.019 — 2.022 (0.0795 — 0.0796)
			0.05 (0.0020) US		2.029 — 2.032 (0.0799 — 0.0800)
			0.25 (0.0098) US		2.129 — 2.132 (0.0838 — 0.0839)
	Thrust clearance			mm (in) Standard	0.030 — 0.115 (0.0012 — 0.0045)
	Oil clearance			mm (in) Standard	0.010 — 0.030 (0.00039 — 0.0012)

B: COMPONENT

1. V-BELT

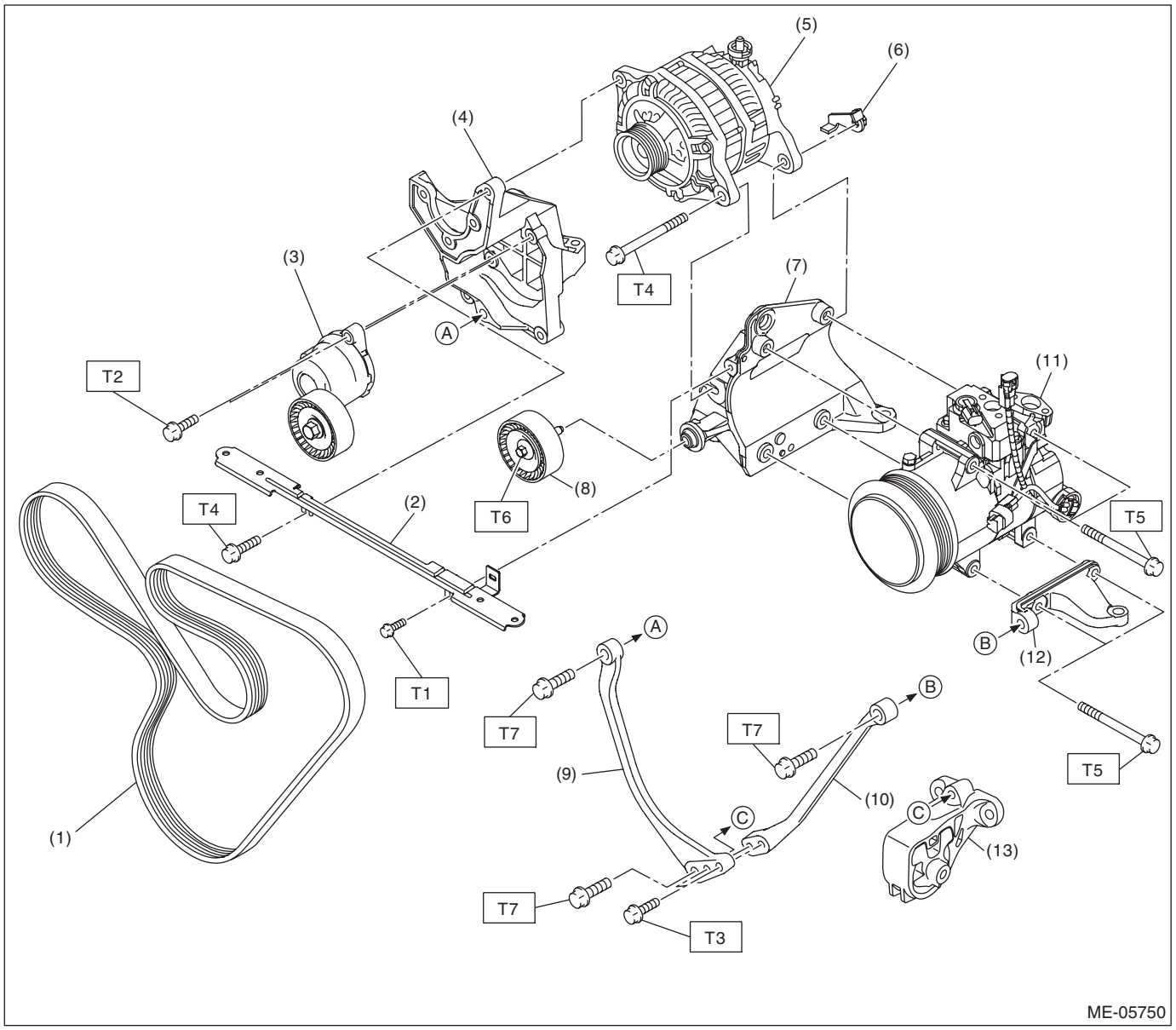

(1)	V-belt	(8)	Idler pulley ASSY
(2)	Collector cover bracket	(9)	Stopper rod RH
(3)	V-belt tensioner ASSY	(10)	Stopper rod LH
(4)	Power steering pump bracket	(11)	A/C compressor
(5)	Generator	(12)	A/C compressor bracket B
(6)	Generator plate	(13)	Front cushion rubber
(7)	A/C compressor bracket A		

Tightening torque:N·m (kgf-m, ft-lb)

T1: 6.4 (0.7, 4.7)
T2: 20 (2.0, 14.8)
T3: 22 (2.2, 16.2)
T4: 25 (2.5, 18.4)
T5: 26.5 (2.7, 19.5)
T6: 33 (3.4, 24.3)
T7: 36 (3.7, 26.6)

2. TIMING BELT

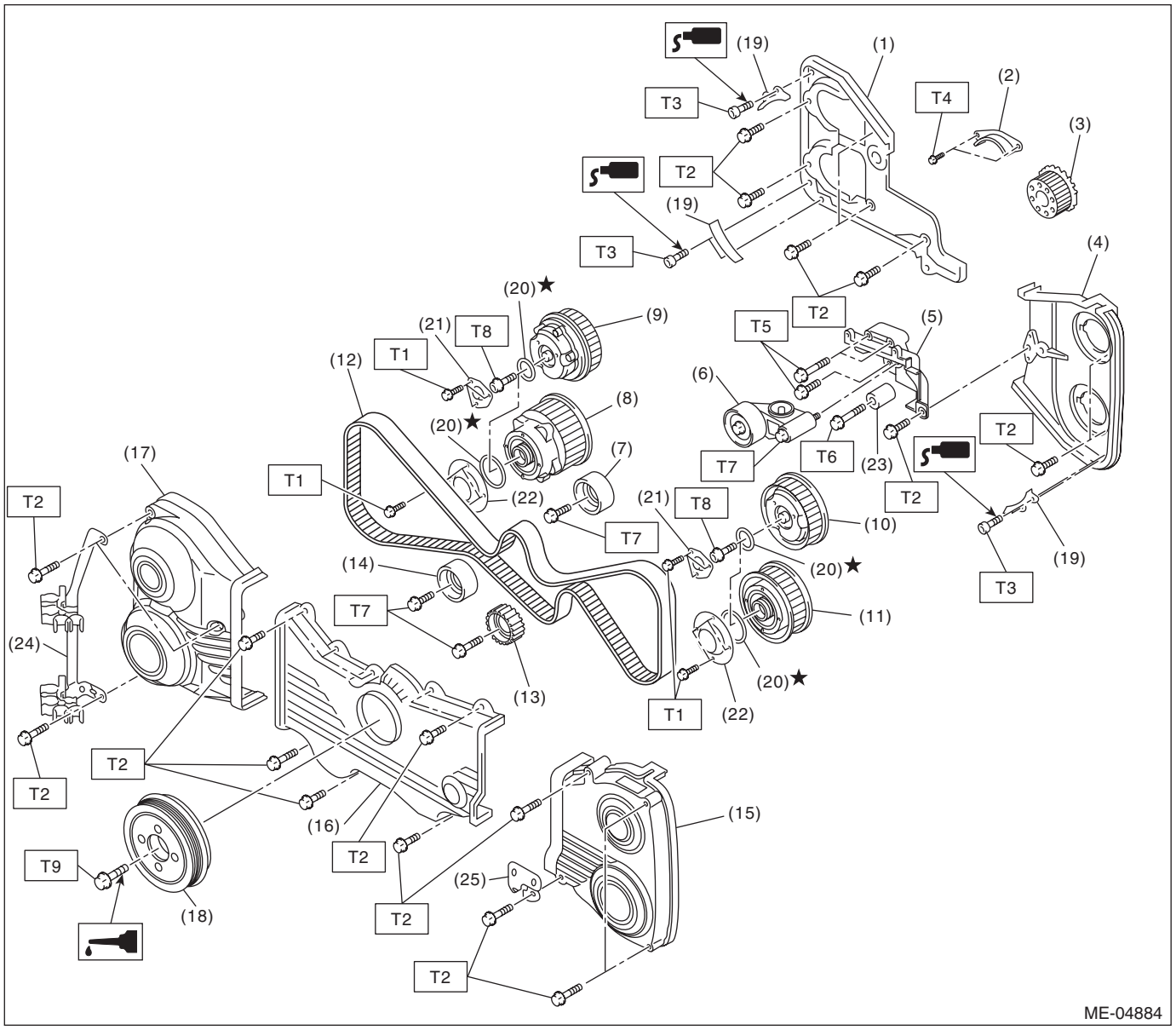

(1)	Timing belt cover No. 2 RH	(13)	Belt idler No. 2	(25)	Oxygen sensor bracket
(2)	Timing belt guide	(14)	Belt idler		
(3)	Crank sprocket	(15)	Timing belt cover LH	***Tightening torque:N·m (kgf-m, ft-lb)***	
(4)	Timing belt cover No. 2 LH	(16)	Front belt cover	***T1:***	***3.4 (0.3, 2.5)***
(5)	Tensioner bracket	(17)	Timing belt cover RH	***T2:***	***5 (0.5, 3.7)***
(6)	Automatic belt tension adjuster ASSY	(18)	Crank pulley	***T3:***	***6.4 (0.7, 4.7)***
(7)	Belt idler	(19)	Timing belt guide	***T4:***	***9.75 (1.0, 7.2)***
(8)	Exhaust cam sprocket RH	(20)	O-ring	***T5:***	***24.5 (2.5, 18.1)***
(9)	Intake cam sprocket RH	(21)	Intake actuator cover	***T6:***	***25 (2.5, 18.4)***
(10)	Intake cam sprocket LH	(22)	Exhaust actuator cover	***T7:***	***39 (4.0, 28.8)***
(11)	Exhaust cam sprocket LH	(23)	Belt idler	***T8:***	***<Ref. to ME(H4DOTC)-61, INSTALLATION, Cam Sprocket.>***
(12)	Timing belt	(24)	Hose clip stay ASSY	***T9:***	***<Ref. to ME(H4DOTC)-44, INSTALLATION, Crank Pulley.>***

3. CYLINDER HEAD AND CAMSHAFT

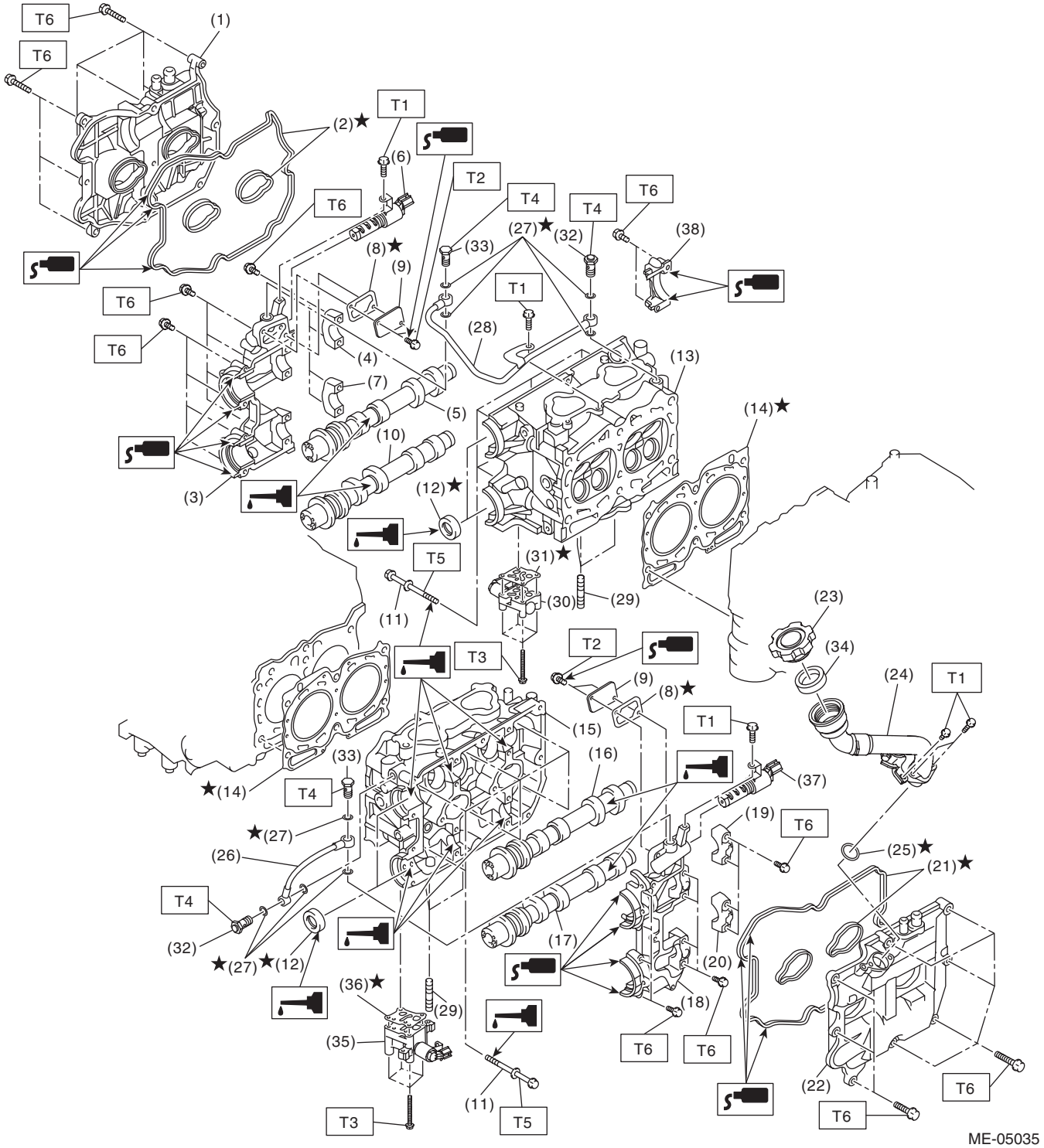

(1) Rocker cover RH
(2) Rocker cover gasket RH
(3) Front camshaft cap RH
(4) Intake camshaft cap RH
(5) Intake camshaft RH
(6) Intake oil flow control solenoid valve RH
(7) Exhaust camshaft cap RH
(8) Gasket
(9) Oil return cover
(10) Exhaust camshaft RH
(11) Cylinder head bolt
(12) Oil seal
(13) Cylinder head RH
(14) Cylinder head gasket
(15) Cylinder head LH
(16) Intake camshaft LH
(17) Exhaust camshaft LH
(18) Front camshaft cap LH
(19) Intake camshaft cap LH
(20) Exhaust camshaft cap LH
(21) Rocker cover gasket LH
(22) Rocker cover LH
(23) Oil filler cap
(24) Oil filler duct
(25) O-ring
(26) Oil pipe LH
(27) Gasket
(28) Oil pipe RH
(29) Stud bolt
(30) Exhaust oil flow control solenoid valve RH
(31) Gasket RH
(32) Union bolt with filter (with protrusion)
(33) Union bolt without filter (without protrusion)
(34) Gasket
(35) Exhaust oil flow control solenoid valve LH
(36) Gasket LH
(37) Intake oil flow control solenoid valve LH
(38) Rear camshaft cap

Tightening torque:N·m (kgf-m, ft-lb)

T1: 6.4 (0.7, 4.7)
T2: 9 (0.9, 6.6)
T3: 10 (1.0, 7.4)
T4: 29 (3.0, 21.4)
T5: <Ref. to ME(H4DOTC)-75, INSTALLATION, Cylinder Head.>
T6: <Ref. to ME(H4DOTC)-66, INSTALLATION, Camshaft.>

4. CYLINDER HEAD AND VALVE ASSEMBLY

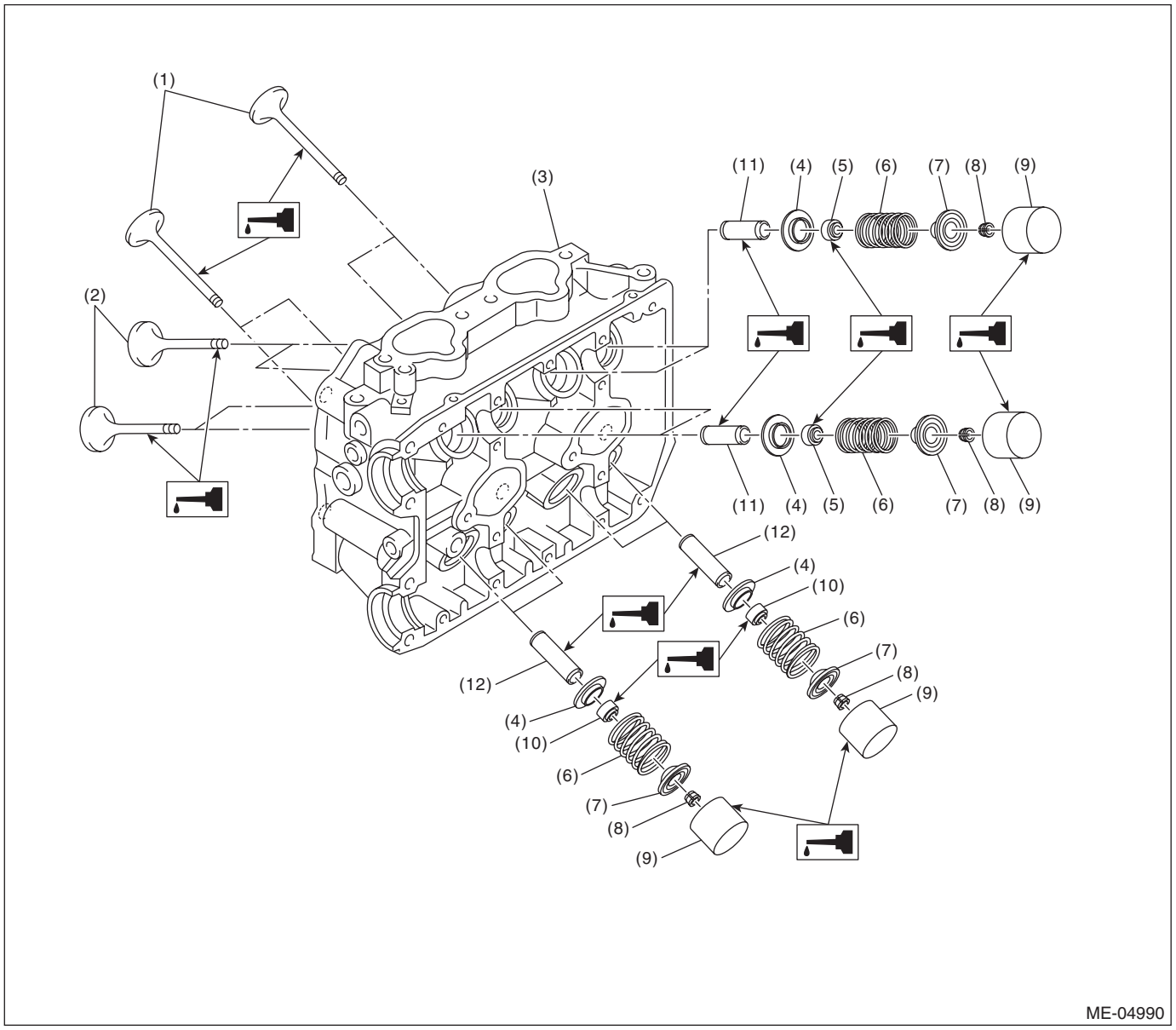

(1) Exhaust valve
(2) Intake valve
(3) Cylinder head
(4) Valve spring seat
(5) Intake valve oil seal
(6) Valve spring
(7) Valve spring retainer
(8) Valve spring retainer key
(9) Valve lifter
(10) Exhaust valve oil seal
(11) Intake valve guide
(12) Exhaust valve guide

5. CYLINDER BLOCK

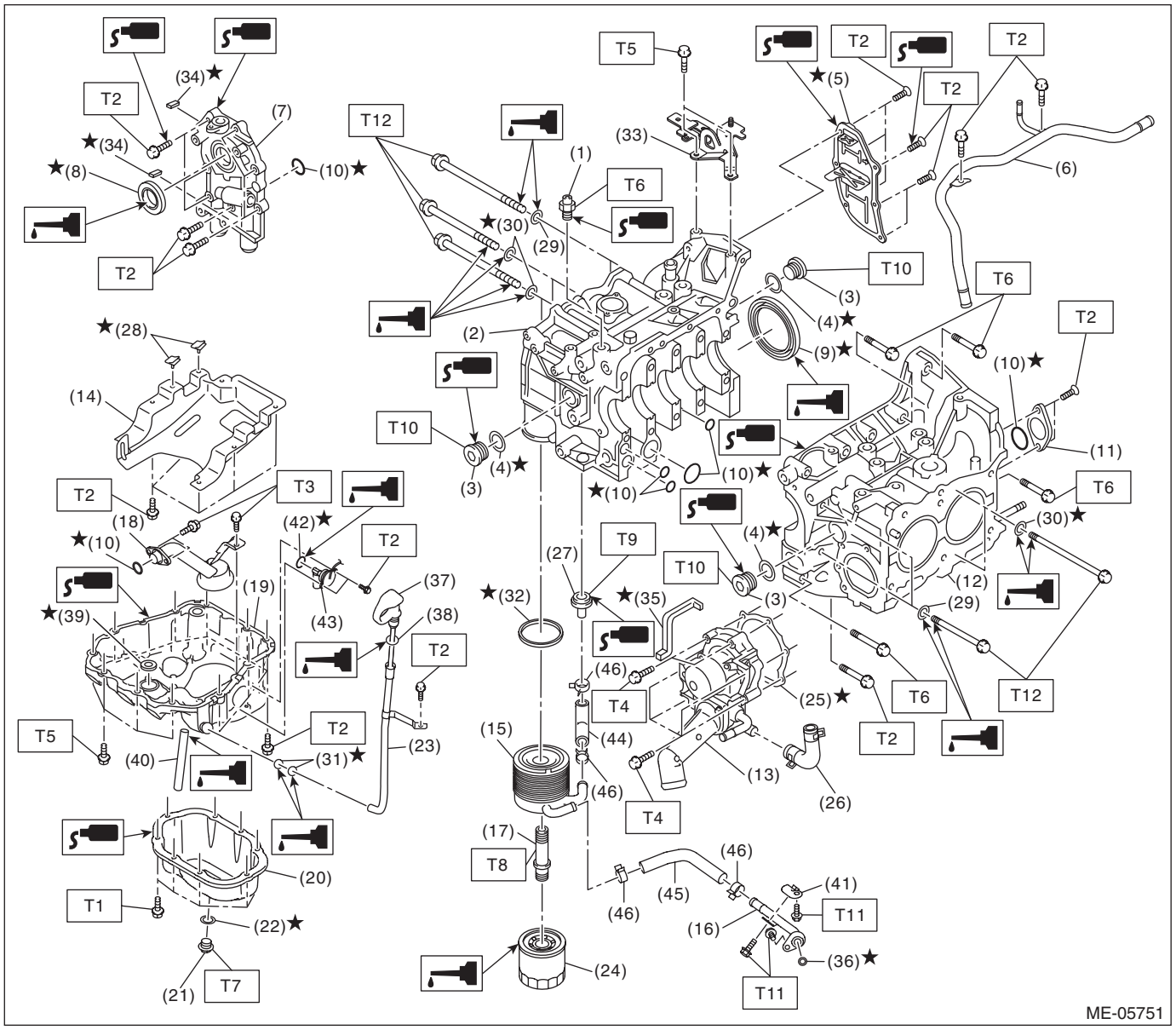

(1) Oil pressure switch
(2) Cylinder block RH
(3) Service hole plug
(4) Gasket
(5) Oil separator cover
(6) Water by-pass pipe
(7) Oil pump
(8) Front oil seal
(9) Rear oil seal
(10) O-ring
(11) Service hole cover
(12) Cylinder block LH
(13) Water pump
(14) Baffle plate
(15) Oil cooler
(16) Oil cooler pipe
(17) Connector
(18) Oil strainer
(19) Cylinder block lower
(20) Oil pan
(21) Drain plug
(22) Drain plug gasket
(23) Oil level gauge guide
(24) Oil filter
(25) Gasket
(26) Water pump hose
(27) Nipple
(28) Seal
(29) Washer
(30) Seal washer
(31) O-ring
(32) Gasket
(33) Engine rear hanger
(34) Oil pump seal
(35) Water pump sealing
(36) O-ring
(37) Oil level gauge
(38) O-ring
(39) O-ring
(40) Oil drain pipe
(41) Oil cooler pipe stay
(42) O-ring
(43) Oil level switch
(44) Oil cooler hose A
(45) Oil cooler hose B
(46) Clip

Tightening torque:N·m (kgf-m, ft-lb)

T1:	***5 (0.5, 3.7)***
T2:	***6.4 (0.7, 4.7)***
T3:	***10 (1.0, 7.4)***
T4:	***First 12 (1.2, 8.9)***
	Second 12 (1.2, 8.9)
T5:	***16 (1.6, 11.8)***
T6:	***25 (2.5, 18.4)***
T7:	***41.7 (4.3, 30.8)***
T8:	***54 (5.5, 39.8)***
T9:	***69 (7.0, 50.9)***
T10:	***70 (7.1, 51.6)***
T11:	***<Ref. to LU(H4SO)-28, INSTALLATION, Engine Oil Cooler.>***
T12:	***<Ref. to ME(H4DOTC)-87, INSTALLATION, Cylinder Block.>***

6. CRANKSHAFT AND PISTON

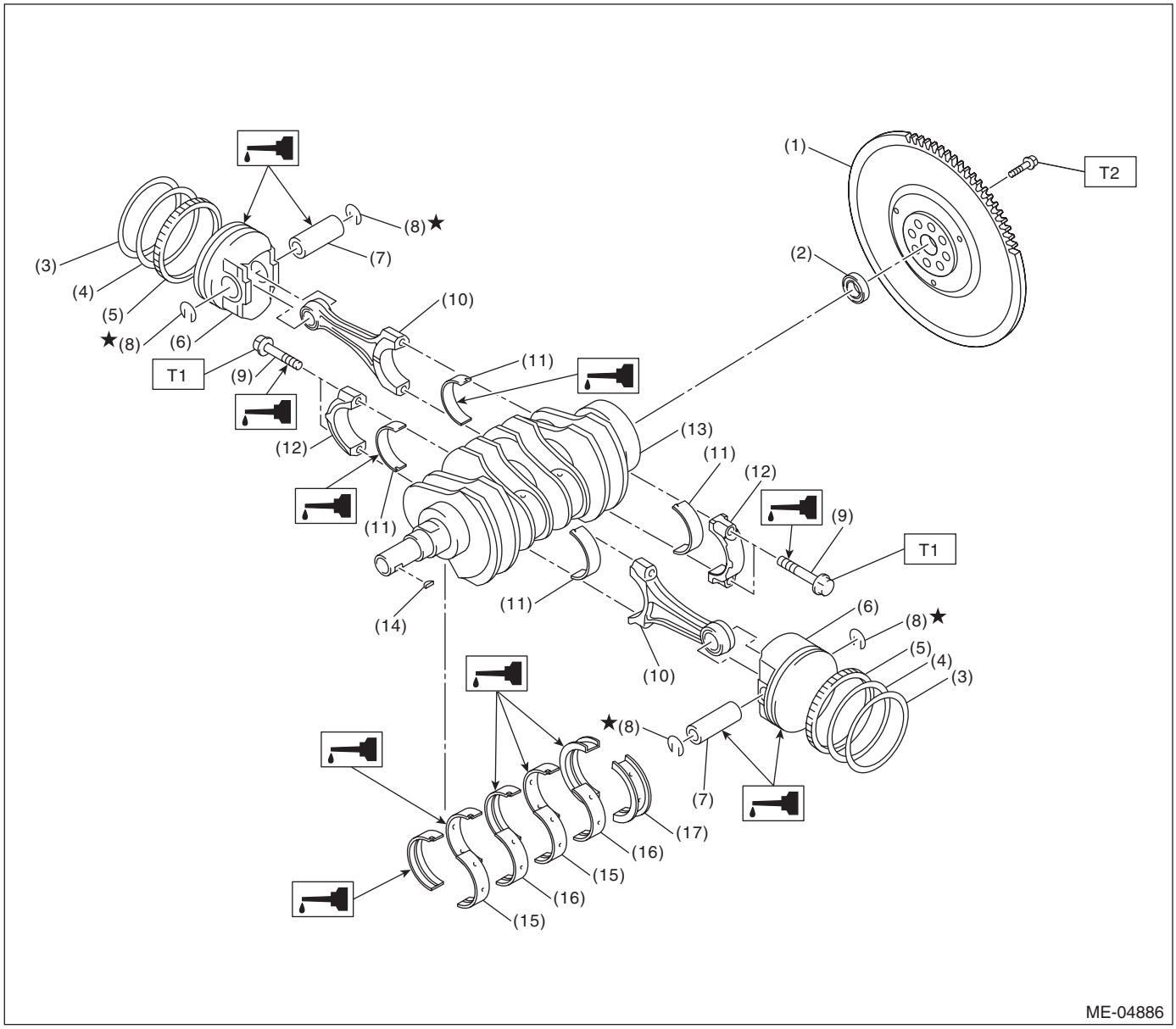

(1) Flywheel
(2) Ball bearing
(3) Top ring
(4) Second ring
(5) Oil ring
(6) Piston
(7) Piston pin
(8) Snap ring
(9) Connecting rod bolt
(10) Connecting rod
(11) Connecting rod bearing
(12) Connecting rod cap
(13) Crankshaft
(14) Woodruff key
(15) Crankshaft bearing #1, #3
(16) Crankshaft bearing #2, #4
(17) Crankshaft bearing #5

Tightening torque:N·m (kgf-m, ft-lb)
T1: 52 (5.3, 38.4)
T2: <Ref. to CL-14, INSTALLATION, Flywheel.>

7. ENGINE MOUNTING

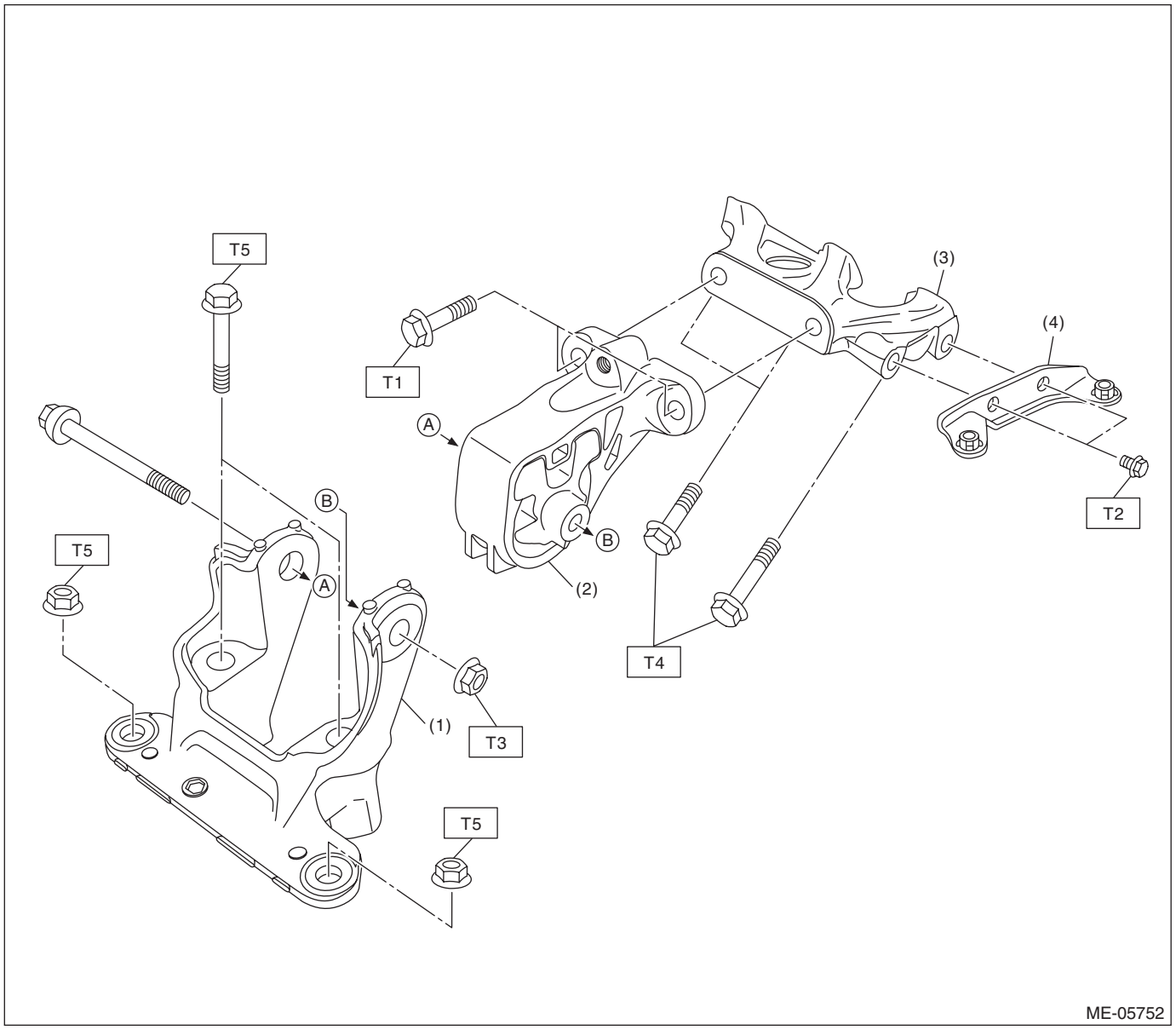

(1) Front mounting bracket
(2) Front cushion rubber
(3) Engine mounting bracket
(4) Turbocharger upper stay

Tightening torque:N·m (kgf-m, ft-lb)
T1: 25 (2.5, 18.4)
T2: 33 (3.4, 24.3)
T3: 45 (4.6, 33.2)
T4: 58 (5.9, 42.8)
T5: 60 (6.1, 44.3)

C: CAUTION

• Wear appropriate work clothing, including a cap, protective goggles and protective shoes when performing any work.
• Remove contamination including dirt and corrosion before removal, installation or disassembly.
• Keep the disassembled parts in order and protect them from dust and dirt.
• Before removal, installation or disassembly, be sure to clarify the failure. Avoid unnecessary removal, installation, disassembly and replacement.
• Vehicle components are extremely hot after driving. Be wary of receiving burns from heated parts.
• Be sure to tighten fasteners including bolts and nuts to the specified torque.
• Place shop jacks or rigid racks at the specified points.
• Before disconnecting connectors of sensors or units, be sure to disconnect the ground cable from the battery.
• All parts should be thoroughly cleaned, paying special attention to engine oil passages, pistons and bearings.
• Rotating parts and sliding parts such as piston, bearing and gear should be coated with oil prior to assembly.
• Be careful not to let oil, grease or engine coolant contact the timing belt, clutch disc and flywheel.
• All removed parts, if to be reused, should be reinstalled in the original positions and directions.
• Bolts, nuts and washers should be replaced with new parts as required.
• Even if necessary inspections have been made in advance, proceed with assembly work while making rechecks.
• Remove or install the engine in an area where chain hoists, lifting devices, etc. are available for ready use.
• Be sure not to damage coated surfaces of body panels with tools, or not to stain seats and windows with coolant or oil. Place a cover over fender, as required, for protection.
• Prior to starting work, prepare the following:
Service tools, clean cloth, containers to catch coolant and oil, wire ropes, chain hoist, transmission jacks, etc.
• Lift up or lower the vehicle when necessary. Make sure to support the correct positions.

D: PREPARATION TOOL

1. SPECIAL TOOL

ILLUSTRATION	TOOL NUMBER	DESCRIPTION	REMARKS
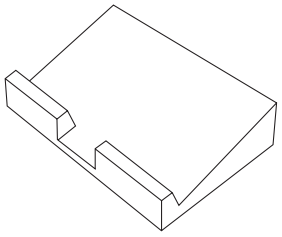 ST-498267600	498267600	CYLINDER HEAD TABLE	• Used for replacing valve guides. • Used for removing and installing valve spring.
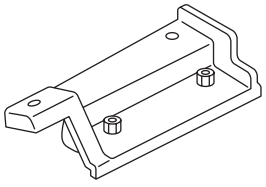 ST-498457000	498457000	ENGINE STAND ADAPTER RH	Used together with ENGINE STAND (499817100).

ILLUSTRATION	TOOL NUMBER	DESCRIPTION	REMARKS
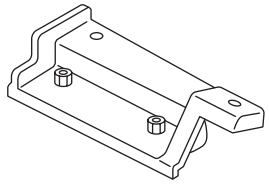 ST-498457100	498457100	ENGINE STAND ADAPTER LH	Used together with ENGINE STAND (499817100).
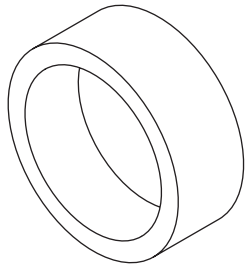 ST-498747300	498747300	PISTON GUIDE	Used for installing the piston into the cylinder.
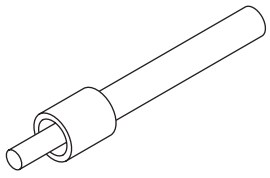 ST-498857100	498857100	VALVE OIL SEAL GUIDE	Used for press-fitting of intake valve guide oil seals and exhaust valve guide oil seals.
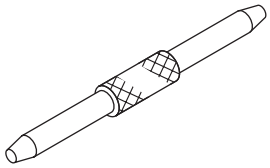 ST-499017100	499017100	PISTON PIN GUIDE	Used for installing piston pin, piston and connecting rod.
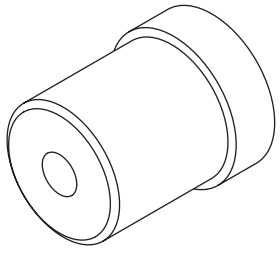 ST-499587100	499587100	OIL SEAL INSTALLER	Used for installing oil pump oil seal.

ILLUSTRATION	TOOL NUMBER	DESCRIPTION	REMARKS
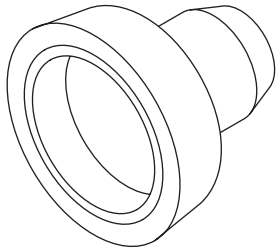 ST-499587200	499587200	CRANKSHAFT OIL SEAL INSTALLER	• Used for installing crankshaft oil seal. • Used together with CRANKSHAFT OIL SEAL GUIDE (499597100).
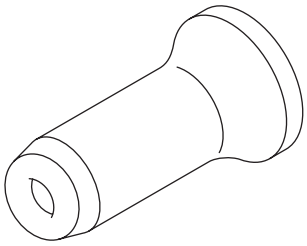 ST-499587600	499587600	OIL SEAL INSTALLER	Used for installing the camshaft oil seal.
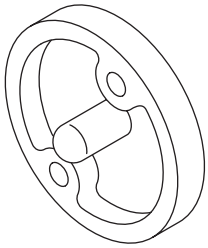 ST-499597100	499597100	CRANKSHAFT OIL SEAL GUIDE	• Used for installing crankshaft oil seal. • Used together with CRANKSHAFT OIL SEAL INSTALLER (499587200).
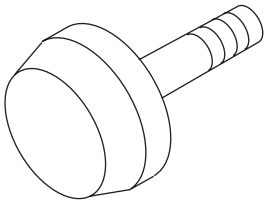 ST-499597200	499597200	OIL SEAL GUIDE	• Used for installing the camshaft oil seal. • Used together with OIL SEAL INSTALLER (499587600).
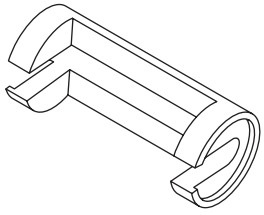 ST-499718000	499718000	VALVE SPRING REMOVER	Used for removing and installing valve spring.

ILLUSTRATION	TOOL NUMBER	DESCRIPTION	REMARKS
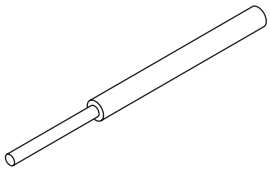 ST-499767200	499767200	VALVE GUIDE REMOVER	Used for removing valve guides.
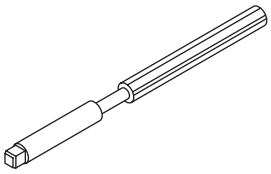 ST-499767400	499767400	VALVE GUIDE REAMER	Used for reaming valve guides.
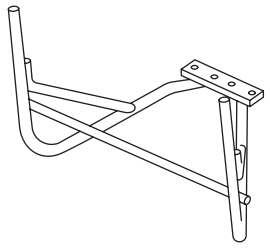 ST-499817100	499817100	ENGINE STAND	• Used for disassembling and assembling engine. • Used together with ENGINE STAND ADAPTER RH (498457000) & LH (498457100).
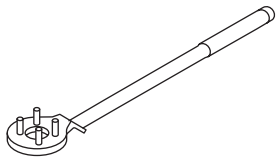 ST-499977100	499977100	CRANK PULLEY WRENCH	Used for removing and installing the crank pulley.
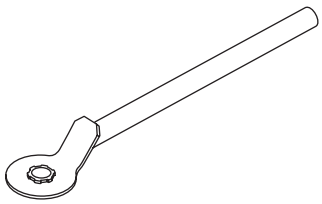 ST-499977500	499977500	CAM SPROCKET WRENCH	Used for removing and installing intake cam sprocket and exhaust cam sprocket.

ILLUSTRATION	TOOL NUMBER	DESCRIPTION	REMARKS
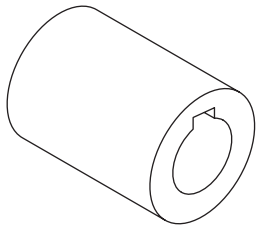 ST-499987500	499987500	CRANKSHAFT SOCKET	Used for rotating crankshaft.
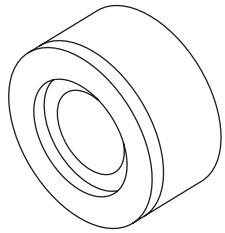 ST18251AA020	18251AA020	VALVE GUIDE ADJUSTER	Used for installing intake valve guides and exhaust valve guides.
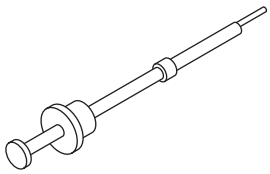 ST-499097700	499097700	PISTON PIN REMOVER ASSY	Used for removing piston pin.
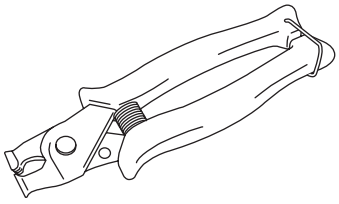 ST18353AA000	18353AA000	CLAMP PLIERS	• Used for removing and installing the PCV hose. • This tool is made by the French company CAILLAU. (code) 54.0.000.205 To make it easier to obtain, it has been provided with a tool number.
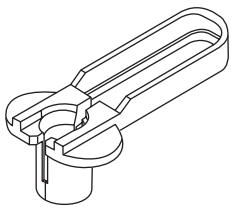 ST18371AA000	18371AA000	CONNECTOR REMOVER	Used for disconnecting the quick connector on the fuel return hose side of the engine compartment (intake manifold).

ILLUSTRATION	TOOL NUMBER	DESCRIPTION	REMARKS
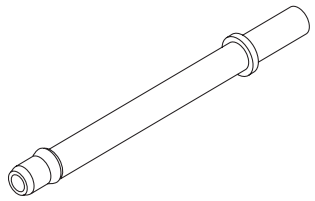 ST18471AA000	18471AA000	FUEL PIPE ADAPTER	Used for inspecting the fuel pressure.
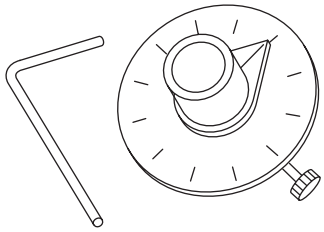 ST18854AA000	18854AA000	ANGLE GAUGE	Used for installing the crank pulley.
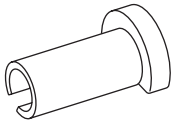 ST42099AE000	42099AE000	QUICK CONNECTOR RELEASE	Used for removing the quick connector.
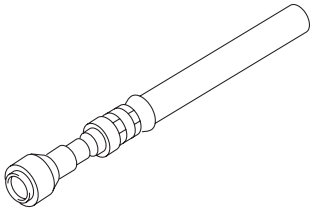 ST42075AG690	42075AG690	FUEL HOSE	Used for inspecting the fuel pressure. NOTE: This is the SUBARU genuine part.
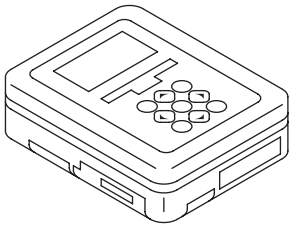 ST1B022XU0	1B022XU0	SUBARU SELECT MONITOR III KIT	Used for various inspections.

2. GENERAL TOOL

TOOL NAME	REMARKS
Compression gauge	Used for measuring compression.
Vacuum gauge	Used for measuring intake manifold vacuum.
Oil pressure gauge	Used for measuring engine oil pressure.
Fuel pressure gauge	Used for measuring fuel pressure.

2. Compression

A: INSPECTION

CAUTION:
After warming-up, engine becomes very hot. Be careful not to burn yourself during measurement.

1) Remove the collector cover.
2) After warming-up the engine, turn the ignition switch to OFF.
3) Make sure that the battery is fully charged.
4) Remove the fuse of fuel pump from main fuse box.

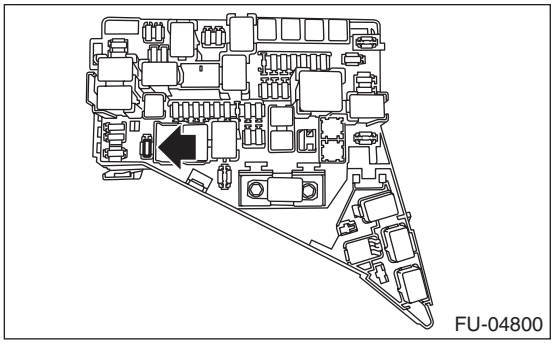
FU-04800

5) Start the engine and run it until it stalls.
6) After the engine stalls, crank it for five more seconds.
7) Turn the ignition switch to OFF.
8) Remove all spark plugs. <Ref. to IG(H4DOTC)-4, REMOVAL, Spark Plug.>
9) Fully open the throttle valve.
10) Check the starter motor for satisfactory performance and operation.
11) Install the compression gauge to the spark plug hole.

NOTE:
When using a screw-in type compression gauge, the screw should be less than 18 mm (0.71 in) long.

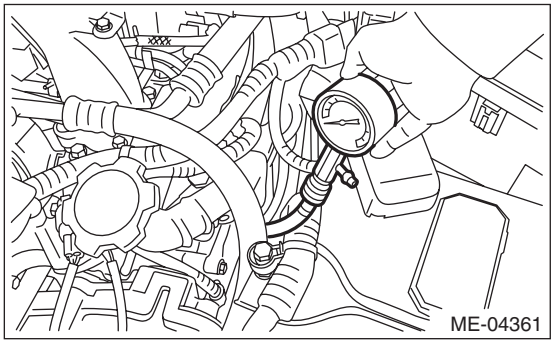
ME-04361

12) Crank the engine by starter motor and read the value when the needle of the compression gauge becomes stable.

NOTE:
- Perform at least two measurements per cylinder, and make sure that the values are correct.
- If the compression pressure is out of standard, check or adjust the pistons, valves and cylinders.

Compression (fully open throttle):
Standard
981 — 1,177 kPa (10 — 12 kgf/cm^2, 142 — 171 psi)
Difference between cylinders
49 kPa (0.5 kgf/cm^2, 7 psi) or less

13) After inspection, install the related parts in the reverse order of removal.

3. Idle Speed

A: INSPECTION

1) Before checking the idle speed, check the following item:
   (1) Check the air cleaner element is free from clogging, ignition timing is correct, spark plugs are in good condition, and hoses are connected properly.
   (2) Check the malfunction indicator light does not illuminate.
2) Warm up the engine.
3) Read the engine idle speed using Subaru Select Monitor. <Ref. to EN(H4DOTC)(diag)-34, READ CURRENT DATA FOR ENGINE (NORMAL MODE), OPERATION, Subaru Select Monitor.>

NOTE:
• Idle speed cannot be adjusted manually, because the idle speed is automatically adjusted.
• If idle speed is out of standard, refer to the General Diagnosis Table under “Engine Control System”. <Ref. to EN(H4DOTC)(diag)-2, Basic Diagnostic Procedure.>
   (1) Check the idle speed when no-loaded. (Headlight, heater fan, rear defroster, radiator fan, A/C and etc. are OFF)

Idle speed (No load and gear shift lever in neutral position):
Standard
700±100 rpm
   (2) Check the idle speed when loaded. (Turn the A/C switch to “ON” and operate the compressor for at least one minute before measurement.)

Idle speed (A/C ON and gear shift lever in neutral position):
Standard
700 — 850±100 rpm

4. Ignition Timing

A: INSPECTION

CAUTION:
After warming-up, engine becomes very hot. Be careful not to burn yourself at measurement.

1) Before checking the ignition timing, check the following item:
   (1) Check the air cleaner element is free from clogging, spark plugs are in good condition, and hoses are connected properly.
   (2) Check the malfunction indicator light does not illuminate.
2) Warm up the engine.
3) Read the ignition timing using Subaru Select Monitor. <Ref. to EN(H4DOTC)(diag)-34, READ CURRENT DATA FOR ENGINE (NORMAL MODE), OPERATION, Subaru Select Monitor.>

NOTE:
If ignition timing is out of standard, check the ignition control system. Refer to “Engine Control System”. <Ref. to EN(H4DOTC)(diag)-2, Basic Diagnostic Procedure.>

Ignition timing [BTDC/rpm]:
Standard
15°±10°/700

5. Intake Manifold Vacuum

A: INSPECTION

1) Warm up the engine.
2) Remove the collector cover.
3) Remove the intercooler. <Ref. to IN(H4DOTC)-17, REMOVAL, Intercooler.>
4) Disconnect the brake booster vacuum hose from the intake manifold, and attach the vacuum gauge.

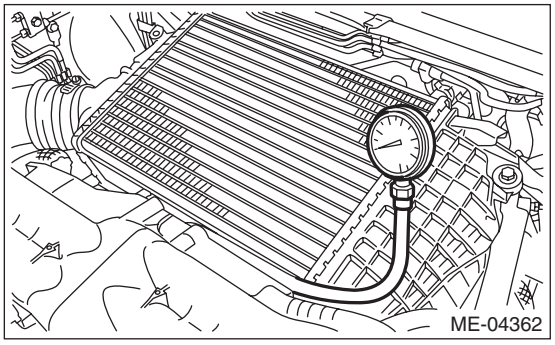

5) Install the intercooler. <Ref. to IN(H4DOTC)-18, INSTALLATION, Intercooler.>
6) Keep the engine at idle speed and read the vacuum gauge indication.

NOTE:
Condition of engine inside can be diagnosed by observing the behavior of the vacuum gauge needle as described in table below.

Intake manifold vacuum (at idling, A/C OFF):
Standard
–66.7 kPa (–500 mmHg, –19.70 inHg) or more

7) After inspection, install the related parts in the reverse order of removal.

Diagnosis of engine condition by inspection of intake manifold vacuum	
Vacuum gauge needle behavior	Possible engine condition
1. Needle is steady but lower than standard value. This tendency becomes more evident as engine temperature rises.	Leakage around intake manifold gasket, disconnection or damage of vacuum hose
2. Needle intermittently drops to position lower than standard value.	Leakage around cylinder
3. Needle drops suddenly and intermittently from standard value.	Sticky valve
4. When engine speed is gradually increased, needle begins to vibrate rapidly at certain speed, and then vibration increases as engine speed increases.	Weak or broken valve springs
5. Needle vibrates above and below standard value in narrow range.	Defective ignition system

6. Engine Oil Pressure

A: INSPECTION

1) Remove the collector cover.
2) Disconnect the ground cable from battery.

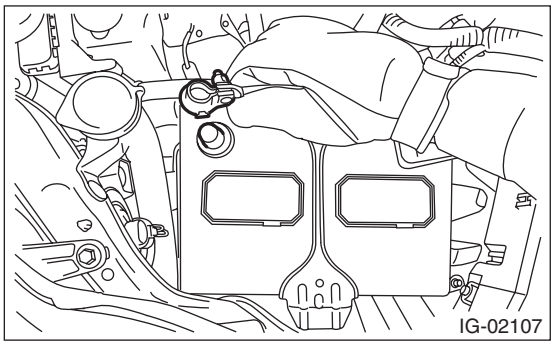

3) Remove the oil pressure switch. <Ref. to LU(H4SO)-25, REMOVAL, Oil Pressure Switch.>
4) Install the oil pressure gauge to cylinder block.

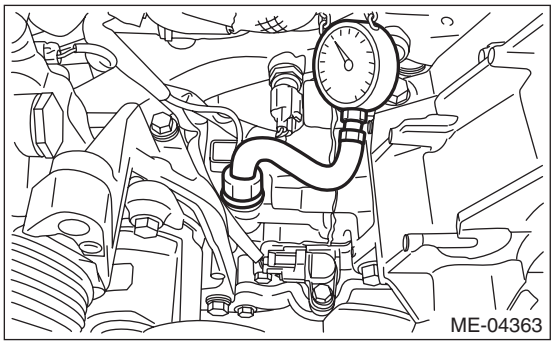

5) Connect the battery ground terminal.

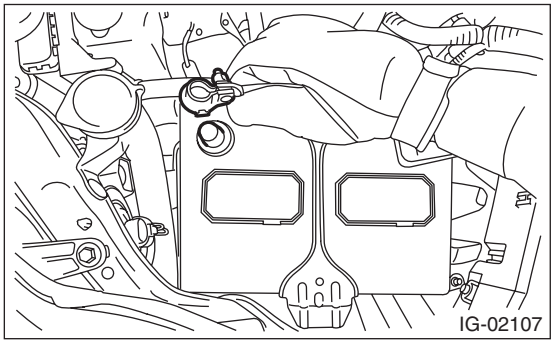

6) Start the engine, and check the oil pressure.

NOTE:
• Standard value is based on an engine oil temperature of 80°C (176°F).
• If the oil pressure is out of specification, check oil pump, oil filter and lubrication line. <Ref. to LU(H4SO)-45, INSPECTION, Engine Lubrication System Trouble in General.>
• If the oil pressure warning light is ON and oil pressure is within specification, check the oil pressure switch. <Ref. to LU(H4SO)-45, INSPECTION, Engine Lubrication System Trouble in General.>

Engine oil pressure:
Standard
98 kPa (1.0 kgf/cm^2, 14 psi) or more (at 600 rpm)
392 kPa (4.0 kgf/cm^2, 57 psi) or more (at 6,000 rpm)

7) After inspection, install the related parts in the reverse order of removal.

7. Fuel Pressure

A: INSPECTION

CAUTION:
• Before removing the fuel pressure gauge, release the fuel pressure.
• Be careful not to spill fuel.
• Catch the fuel from hoses using a container or cloth.

1) Remove the collector cover.
2) Release the fuel pressure. <Ref. to FU(H4DOTC)-66, RELEASING OF FUEL PRESSURE, PROCEDURE, Fuel.>
3) Open the fuel filler lid and remove the fuel filler cap.
4) Disconnect the fuel delivery hose from the fuel delivery pipe, and connect the fuel pressure gauge.

CAUTION:
• Be careful not to spill fuel.
• Catch the fuel from hoses using a container or cloth.

(1) Attach ST to the fuel delivery pipe and push ST in the direction of arrow mark to disconnect the quick connector of the fuel delivery hose.

ST 42099AE000 QUICK CONNECTOR RELEASE

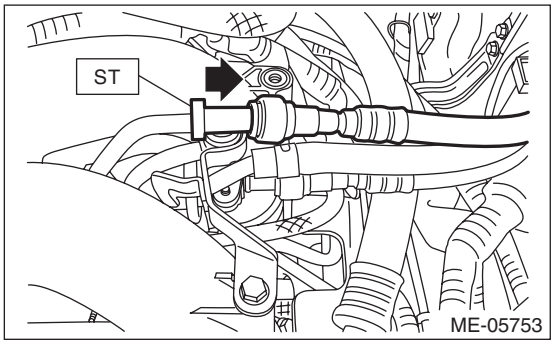

(2) Connect the fuel pressure gauge with ST1 and ST2.

NOTE:
ST1 is a SUBARU genuine part.
ST1 42075AG690 FUEL HOSE
ST2 18471AA000 FUEL PIPE ADAPTER

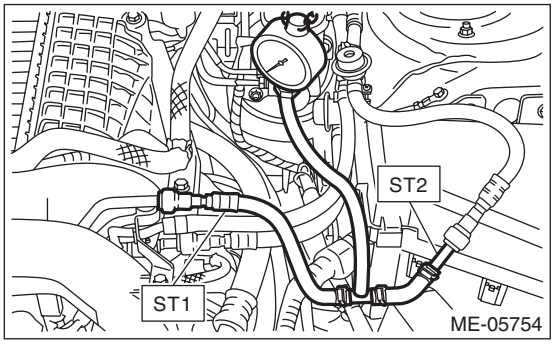

5) Start the engine.
6) Check the fuel pressure while disconnecting pressure regulator vacuum hose from intake manifold.

NOTE:
• The fuel pressure gauge registers 10 to 20 kPa (0.1 to 0.2 kgf/cm^2, 1 to 3 psi) higher than standard values during high-altitude operations.
• If the fuel pressure is out of specification, check or replace the fuel pump, fuel line, pressure regulator and pressure regulator vacuum hose.

Fuel pressure:
Standard
328 — 358 kPa (3.3 — 3.7 kgf/cm^2, 48 — 52 psi)

7) After connecting the vacuum hose to the pressure regulator, check the fuel pressure again.

NOTE:
• The fuel pressure gauge registers 10 to 20 kPa (0.1 to 0.2 kgf/cm^2, 1 to 3 psi) higher than standard values during high-altitude operations.
• If the fuel pressure is out of specification, check or replace the fuel pump, fuel line, pressure regulator and pressure regulator vacuum hose.

Fuel pressure:
Standard
274 — 304 kPa (2.8 — 3.1 kgf/cm^2, 40 — 44 psi)

8) After inspection, install the related parts in the reverse order of removal.

8. Valve Clearance

A: INSPECTION

1) Remove the engine from the vehicle. <Ref. to ME(H4DOTC)-31, REMOVAL, Engine Assembly.>
2) When inspecting #1 and #3 cylinders
(1) Remove the timing belt cover RH. <Ref. to ME(H4DOTC)-52, TIMING BELT, REMOVAL, Timing Belt.>
(2) Disconnect the connector (A) from the exhaust camshaft position sensor RH and the connector (B) form the exhaust oil flow control solenoid valve RH.

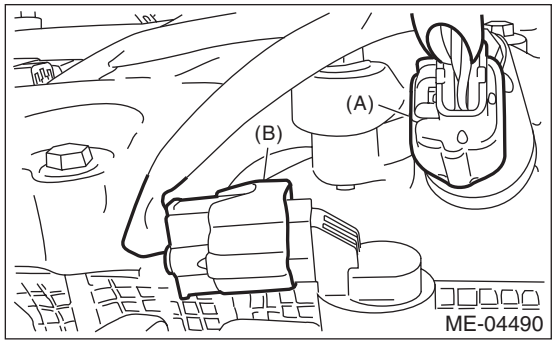

(3) Remove the clip which holds the engine harness to the rocker cover.

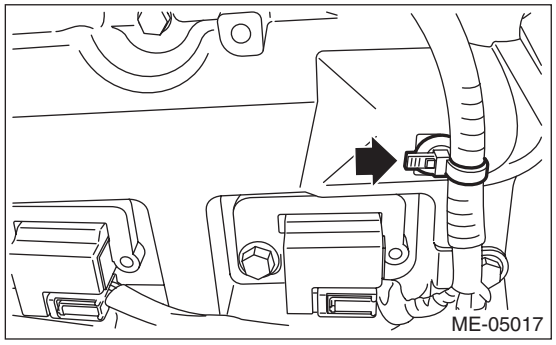

(4) Remove the ignition coil. <Ref. to IG(H4DOTC)-6, REMOVAL, Ignition Coil.>
(5) Disconnect PCV hose (A) and vacuum hose (B) from the rocker cover RH.

NOTE:
Pinch the clamp of the PCV hose (A) by fitting the cut out in the ST with the protrusion on the clamp as shown in the figure, and unlock the clamp.
ST 18353AA000 CLAMP PLIERS

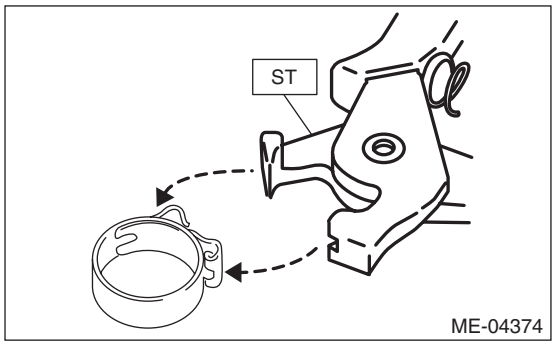

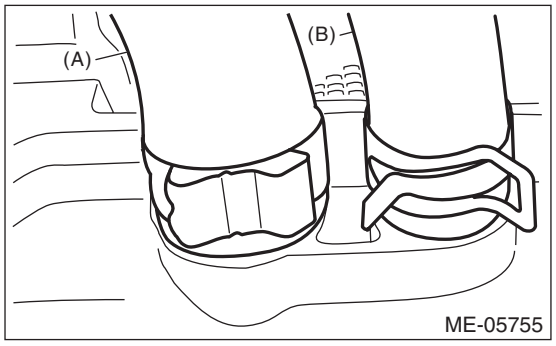

(6) Remove the rocker cover RH.

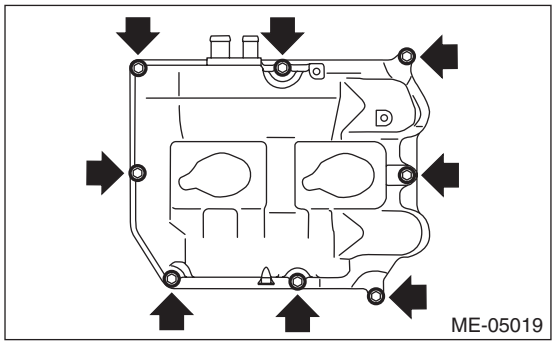

3) When inspecting #2 and #4 cylinders
(1) Remove the timing belt cover RH. <Ref. to ME(H4DOTC)-52, REMOVAL, Timing Belt.>
(2) Disconnect the connector (A) from the exhaust camshaft position sensor LH and the connector (B) form the exhaust oil flow control solenoid valve LH.

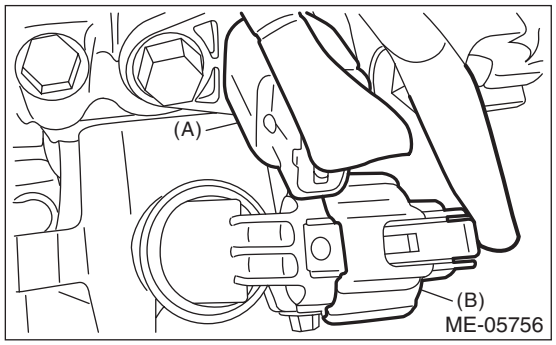

(3) Disconnect the oil level switch connector.

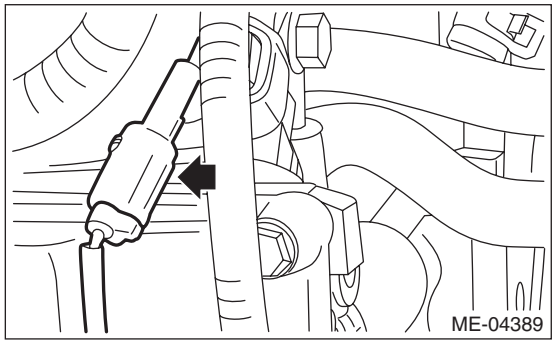

(4) Remove the clip (A) and bolt (B) securing the engine harness or oil level switch harness to the rocker cover LH.

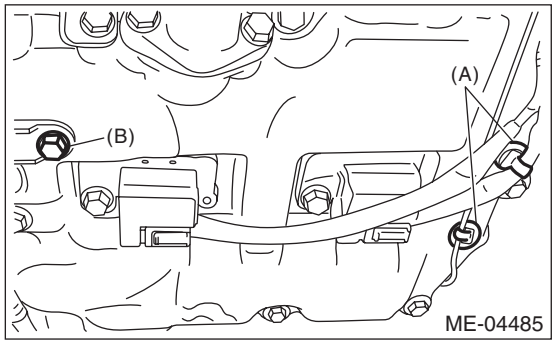

(5) Remove the ignition coil. <Ref. to IG(H4DOTC)-6, REMOVAL, Ignition Coil.>
(6) Disconnect PCV hose (A) and vacuum hose (B) from the rocker cover LH.

NOTE:
Pinch the clamp of the PCV hose (A) by fitting the cut out in the ST with the protrusion on the clamp as shown in the figure, and unlock the clamp.
ST 18353AA000 CLAMP PLIERS

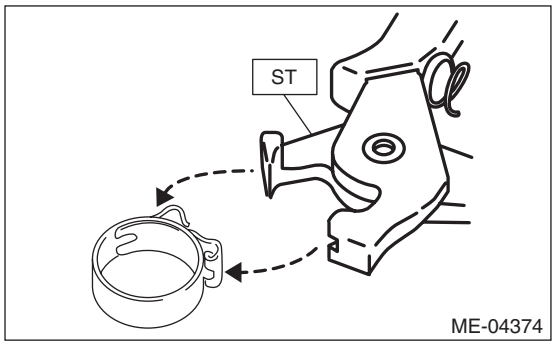

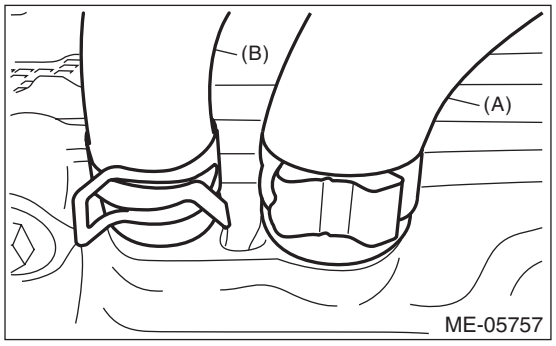

(7) Remove the rocker cover LH.

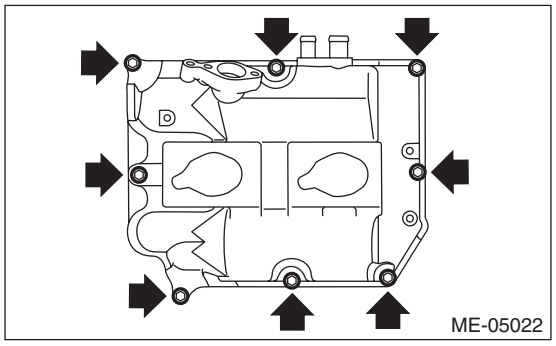

4) Turn the crank pulley clockwise until the round mark on the camshaft sprocket is set to position shown in the figure.

NOTE:
Turn the crank pulley using a socket wrench.

• Measurement of clearance of #1 cylinder intake valve and #3 cylinder exhaust valve

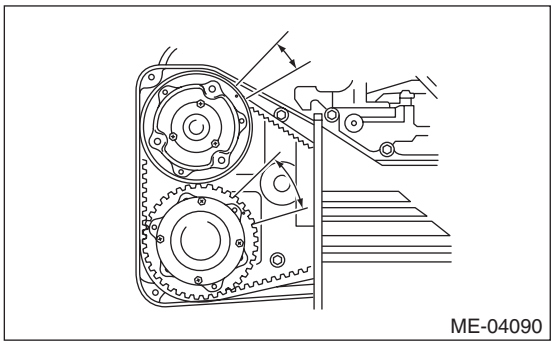
ME-04090

• Measurement of clearance of #2 cylinder exhaust valve and #3 cylinder intake valve

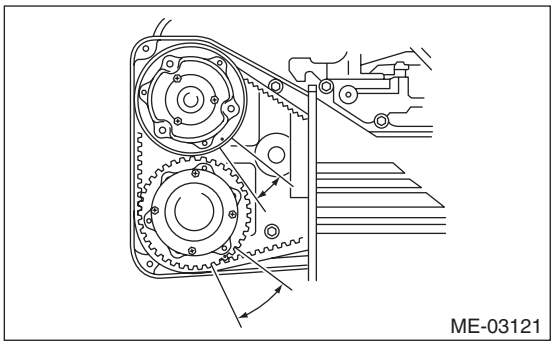
ME-03121

• Measurement of clearance of #2 cylinder intake valve and #4 cylinder exhaust valve

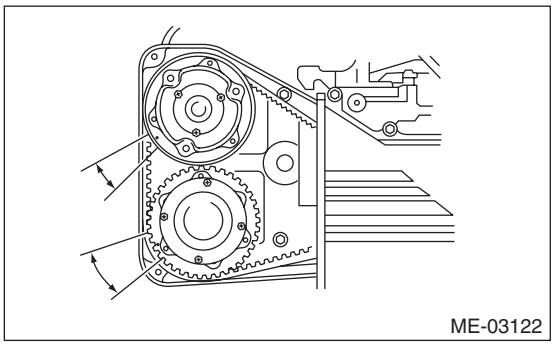
ME-03122

• Measurement of clearance of #1 cylinder exhaust valve and #4 cylinder intake valve

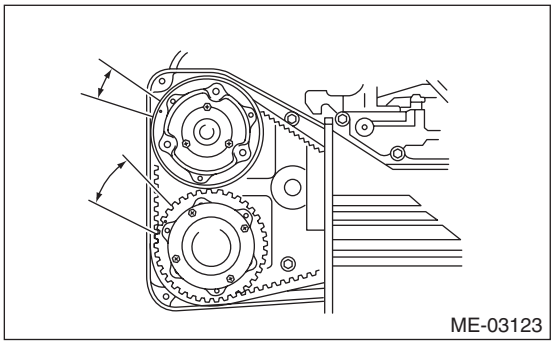
ME-03123

5) Measure the clearance of intake valve and exhaust valve using thickness gauge (A).

NOTE:
• Insert a thickness gauge in a direction as horizontal as possible with respect to the valve lifter.
• Lift up the vehicle, and then measure the exhaust valve clearances.
• If the measured value is not within the inspection value, take notes of the value in order to adjust the valve clearance later on.

Valve clearance (inspection value):
Intake
$0.20^{+0.04}_{-0.06}$ mm ($0.0079^{+0.0016}_{-0.0024}$ in)
Exhaust
0.35±0.05 mm (0.0138±0.0020 in)

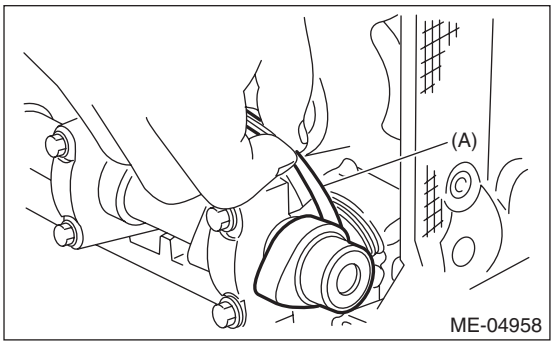

ME-04958

6) If necessary, adjust the valve clearance. <Ref. to ME(H4DOTC)-30, ADJUSTMENT, Valve Clearance.>

7) After inspection, install the related parts in the reverse order of removal.

NOTE:
• Refer to “Camshaft” when installing the rocker cover. <Ref. to ME(H4DOTC)-66, INSTALLATION, Camshaft.>
• Use a new clamp for the PCV hose clamp, fit the cut out in the ST with the protrusion on the clamp as shown in the figure, and lock the clamp.
ST 18353AA000 CLAMP PLIERS

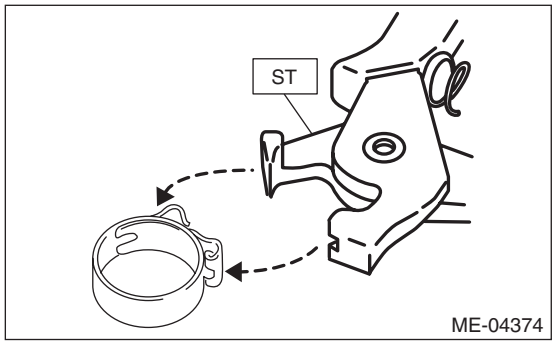

Tightening torque:
6.4 N·m (0.7 kgf-m, 4.7 ft-lb)

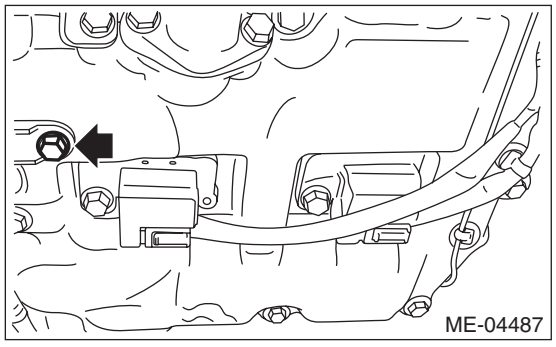

B: ADJUSTMENT

1) Measure all the valve clearances. <Ref. to ME(H4DOTC)-27, INSPECTION, Valve Clearance.>

NOTE:
Record the measured value of each valve clearance.

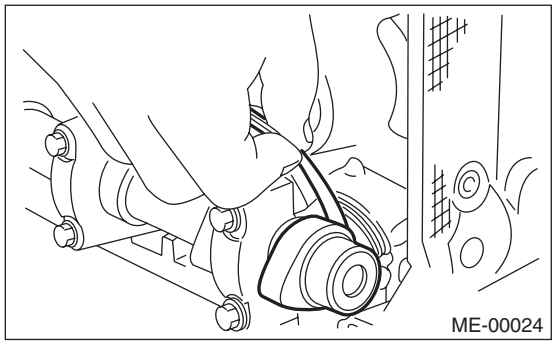

2) Remove the camshaft. <Ref. to ME(H4DOTC)-63, REMOVAL, Camshaft.>
3) Remove the valve lifter.
4) Measure the thickness of valve lifter using micrometer.

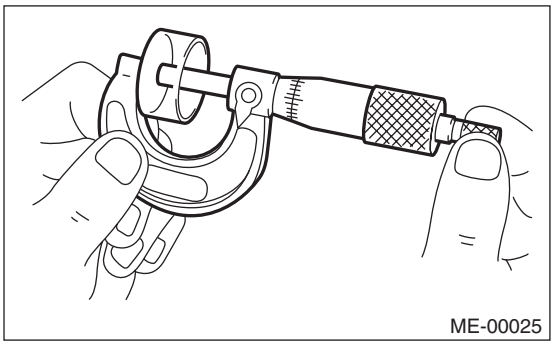

5) Select a valve lifter of suitable thickness using the measured valve clearance and valve lifter thickness, and install it.

NOTE:
Use a new valve lifter.

Unit: mm (in)
Intake valve: S = (V + T) – 0.19 (0.0075) Exhaust valve: S = (V + T) – 0.35 (0.0138)
S: Valve lifter thickness required V: Measured valve clearance T: Valve lifter thickness to be used

6) Install the camshaft. <Ref. to ME(H4DOTC)-66, INSTALLATION, Camshaft.>
7) Install the cam sprocket. <Ref. to ME(H4DOTC)-61, INSTALLATION, Cam Sprocket.>
8) Install the timing belt. <Ref. to ME(H4DOTC)-55, TIMING BELT, INSTALLATION, Timing Belt.>
9) Measure all valves for valve clearance again at this time. If the valve clearance is not within the adjustment value, repeat the procedure over again from the first step.

Valve clearance (adjustment value):
Intake
$0.20^{+0.01}_{-0.03}$ mm ($0.0079^{+0.0004}_{-0.0012}$ in)
Exhaust
0.35 ± 0.02 mm (0.0138 ± 0.0008 in)

10) After adjustment, install the related parts in the reverse order of removal.

9. Engine Assembly

A: REMOVAL

1) Change the front hood damper mounting position from (A) to (B), and completely open the front hood.

Tightening torque:
20 N·m (2.0 kgf-m, 14.8 ft-lb)

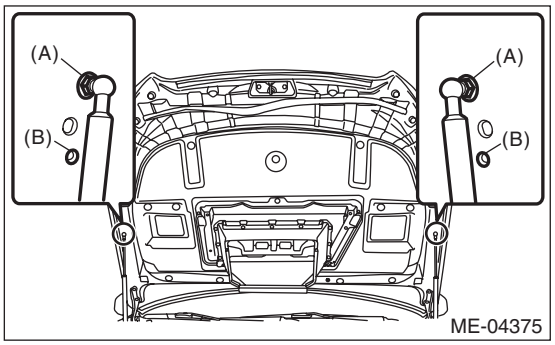

2) Remove the collector cover.
3) Collect the refrigerant from A/C system. <Ref. to AC-24, Refrigerant Recovery Procedure.>
4) Release the fuel pressure. <Ref. to FU(H4DOTC)-66, RELEASING OF FUEL PRESSURE, PROCEDURE, Fuel.>
5) Disconnect the ground cable from battery.

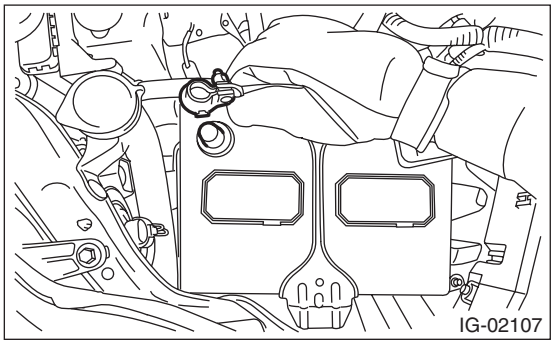

6) Open the fuel filler lid and remove the fuel filler cap.
7) Remove the air intake duct. <Ref. to IN(H4DOTC)-12, REMOVAL, Air Intake Duct.>
8) Remove the intercooler. <Ref. to IN(H4DOTC)-17, REMOVAL, Intercooler.>
9) Remove the air by-pass valve. <Ref. to IN(H4DOTC)-26, REMOVAL, Air By-pass Valve.>
10) Remove the radiator. <Ref. to CO(H4DOTC)-21, REMOVAL, Radiator.>
11) Remove the front exhaust pipe. <Ref. to EX(H4DOTC)-5, REMOVAL, Front Exhaust Pipe.>
12) Lower the vehicle.
13) Disconnect the bulkhead harness connector from the engine harness connector (brown).

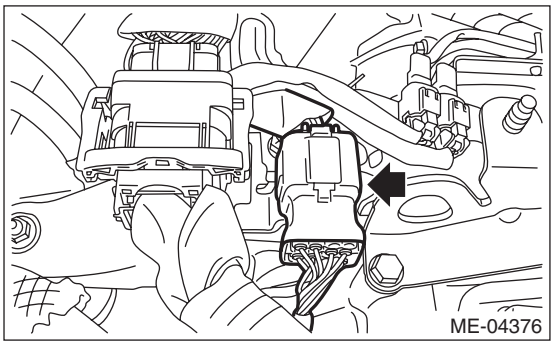

14) Remove the bolt securing the bulkhead harness connector bracket, and disconnect the bulkhead harness connector from the engine harness connector (black).

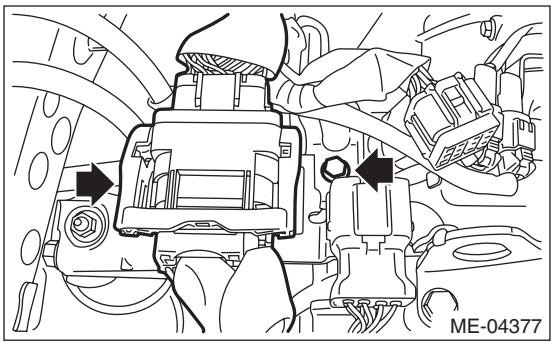

15) Disconnect the connector (A) and connector (B) from A/C compressor, and remove the clip (C) securing the generator cord to the intake manifold protector LH.

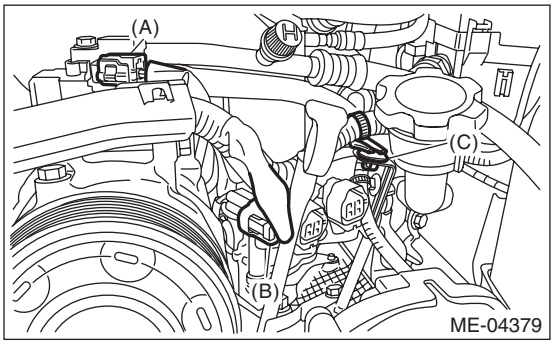

16) Disconnect the following hoses.
(1) A/C pressure hose <Ref. to AC-76, REMOVAL, Hose and Pipe.>
(2) Brake booster vacuum hose

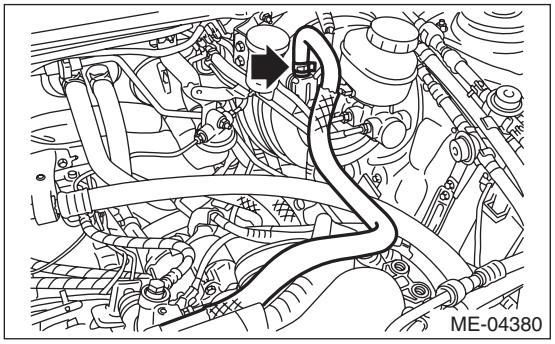

(3) Heater inlet hose and heater outlet hose

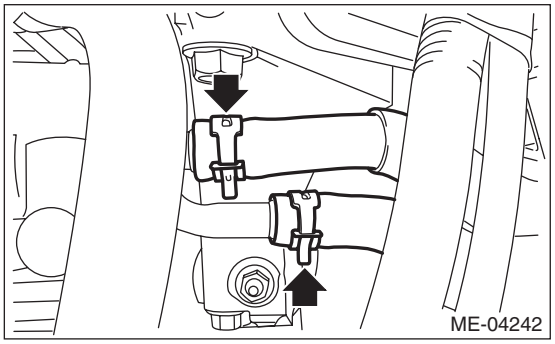

17) Lift up the vehicle.
18) Remove the air intake boot from the intake duct.

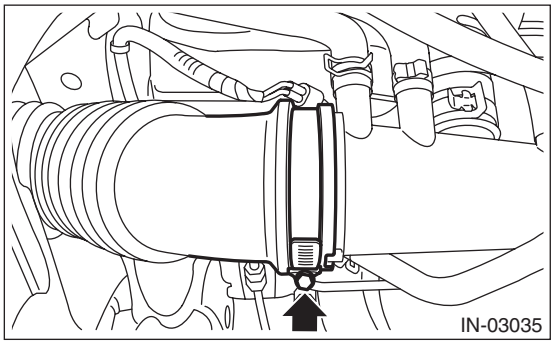

19) Disconnect the ground cable on the engine side, and remove the engine harness cover.

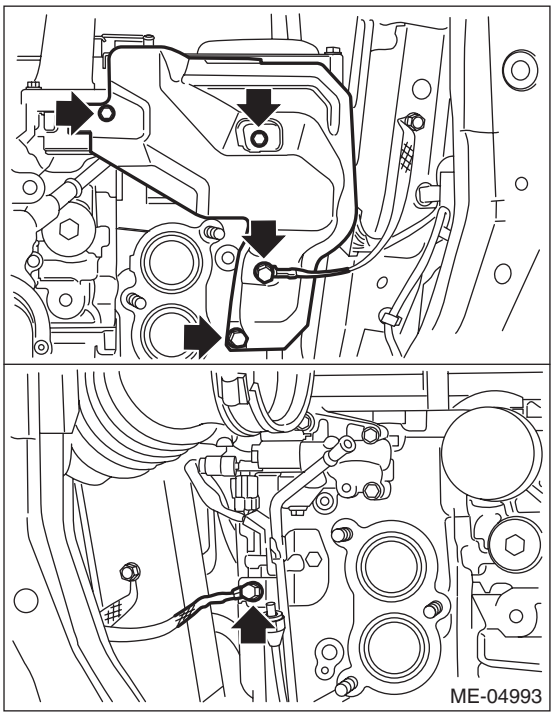

20) Lower the vehicle.
21) Attach ST to the fuel delivery pipe and push ST in the direction of arrow mark to disconnect the fuel delivery hose.

ST 42099AE000 QUICK CONNECTOR RELEASE

CAUTION:
• Be careful not to spill fuel.
• Catch the fuel from hoses using a container or cloth.

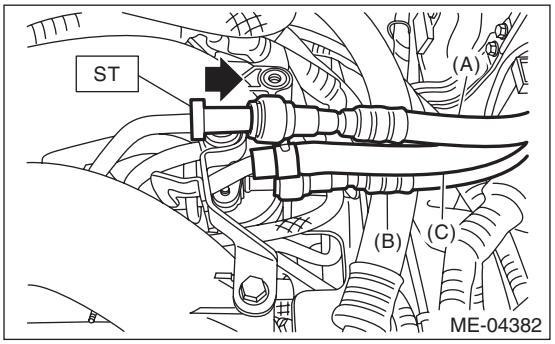

(A) Fuel delivery hose
(B) Fuel return hose
(C) Evaporation hose

22) Disconnect the fuel return hose using the ST.
ST 18371AA000 CONNECTOR REMOVER

CAUTION:
• Be careful not to spill fuel.
• Catch the fuel from hoses using a container or cloth.

(1) Attach ST to the fuel return pipe as shown in the figure.

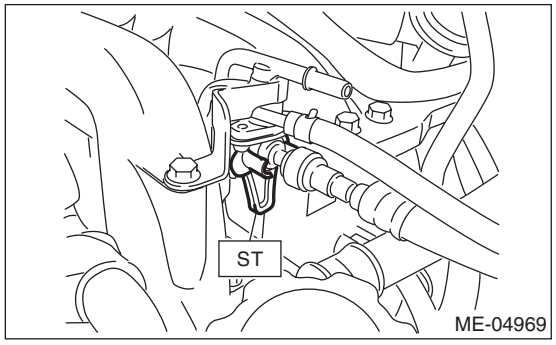

(2) Insert the front side of ST into the quick connector.

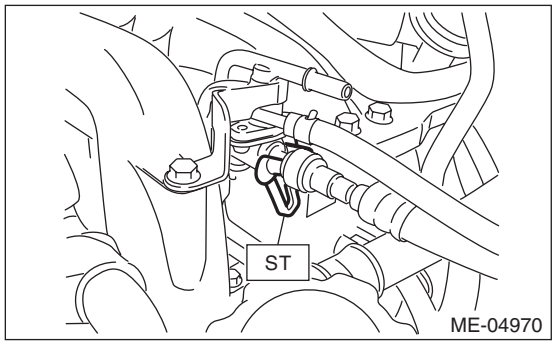

(3) Insert the back side of ST into the quick connector and push ST in the direction of arrow mark to disconnect the fuel return hose.

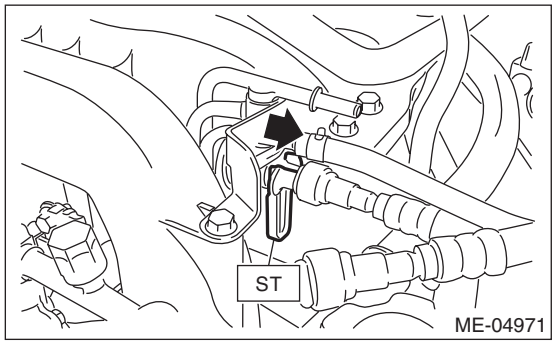

23) Remove the clip and disconnect the evaporation hose from the fuel pipe.

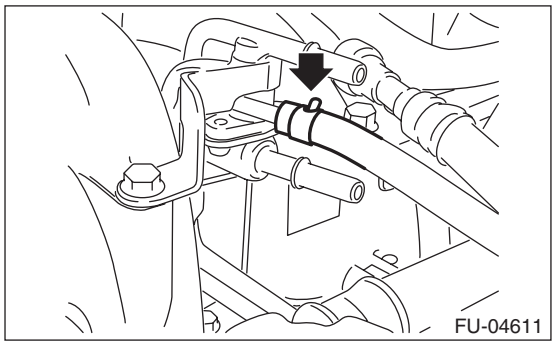

24) Support the engine with a lifting device and wire ropes.

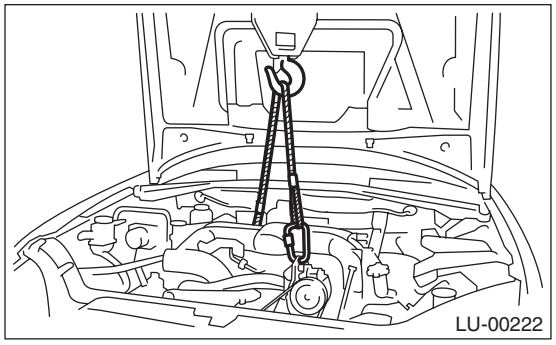

25) Remove the stopper rod.

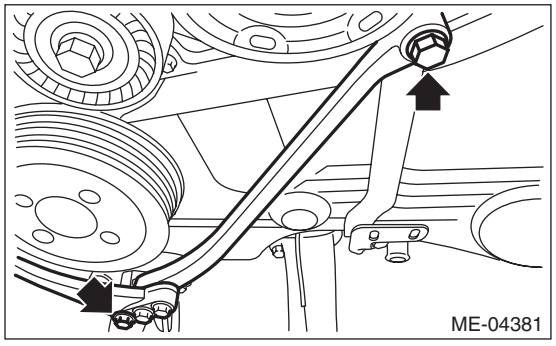

26) Remove the bolt and nut which secure engine mounting to the cradle.

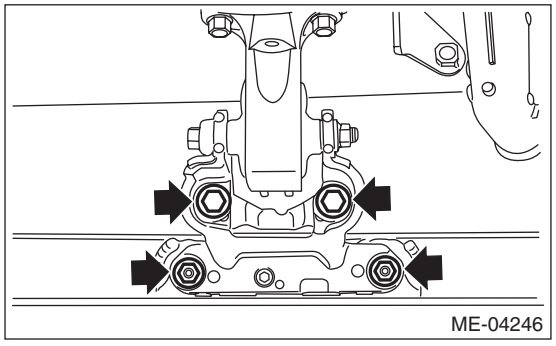

27) Lift up the vehicle.

CAUTION:
When lifting up the vehicle, raise up wire ropes at the same time.

28) Remove the bolts which secure the engine mounting onto the engine, and remove the engine mounting.

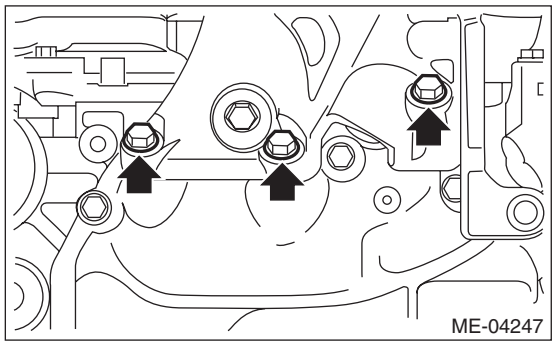

29) Remove the bolts and nuts which hold the lower side of transmission to the engine.

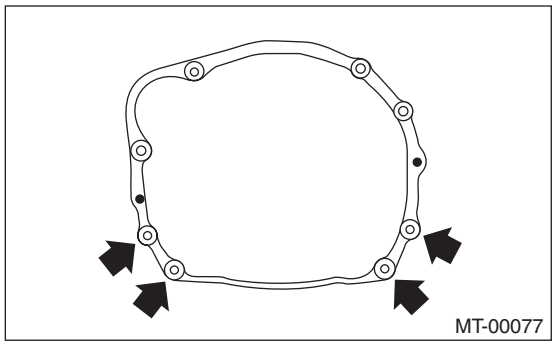

30) Lower the vehicle.

CAUTION:
When lifting down the vehicle, lower wire ropes at the same time.

31) Support the transmission with a garage jack.

NOTE:
Fine adjustment of the transmission height can be performed with this operation.

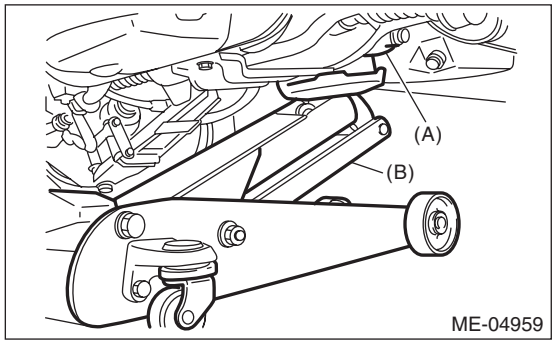

(A) Transmission
(B) Garage jack

32) Separation of engine and transmission

CAUTION:
Before removing the engine away from transmission, check to be sure no work has been overlooked.

(1) Remove the starter. <Ref. to SC(H4SO)-9, REMOVAL, Starter.>
(2) Remove the bolts which hold the upper side of the transmission to the engine.

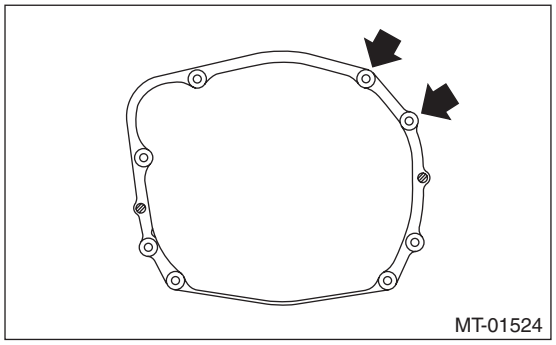

33) Remove the engine from the vehicle.

NOTE:
Be careful not to damage adjacent parts or body panels with crank pulley, oil level gauge, etc.
(1) Slightly raise the engine.
(2) Adjust the height of the transmission with garage jack.
(3) Move the engine horizontally until main shaft is withdrawn from clutch cover.
(4) Slowly move the engine away from engine compartment.

B: INSTALLATION

1) Apply a small amount of grease to splines of main shaft.

Grease:
NICHIMOLY N-130 or equivalent

2) Position the engine in engine compartment and align it with transmission.

NOTE:
Be careful not to damage adjacent parts or body panels with crank pulley, oil level gauge, etc.

3) Tighten the bolts which hold upper side of transmission to engine.

Tightening torque:
50 N·m (5.1 kgf-m, 36.9 ft-lb)

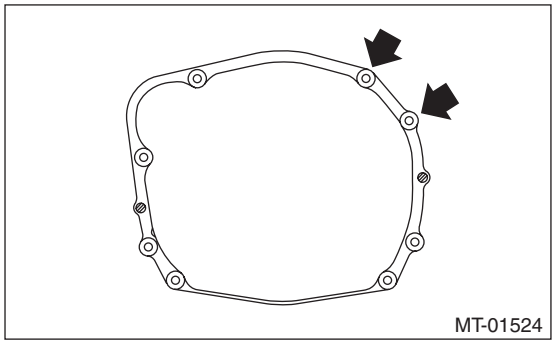

4) Remove the garage jack.
5) Install the starter. <Ref. to SC(H4SO)-10, INSTALLATION, Starter.>

6) Lift up the vehicle.

CAUTION:
When lifting up the vehicle, raise up wire ropes at the same time.

7) Attach the bolts and nuts which hold lower side of the transmission to engine.

Tightening torque:
50 N·m (5.1 kgf-m, 36.9 ft-lb)

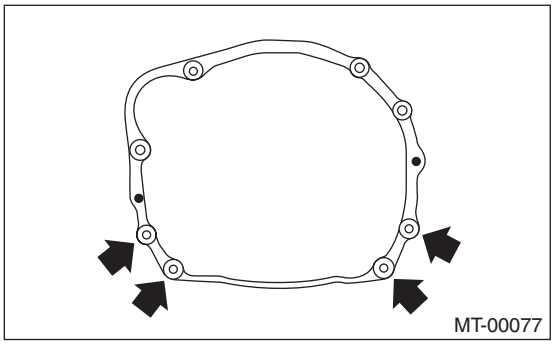

8) Set the engine mounting, and tighten the bolts which hold engine mounting to the engine.

Tightening torque:
58 N·m (5.9 kgf-m, 42.8 ft-lb)

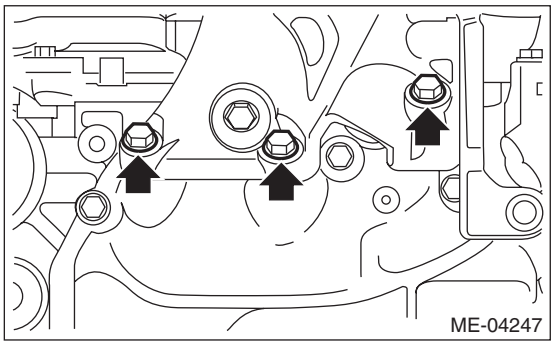

9) Lower the vehicle.

CAUTION:
When lifting down the vehicle, lower wire ropes at the same time.

10) Attach the bolts and nuts which secure engine mounting to the cradle.

Tightening torque:
60 N·m (6.1 kgf-m, 44.3 ft-lb)

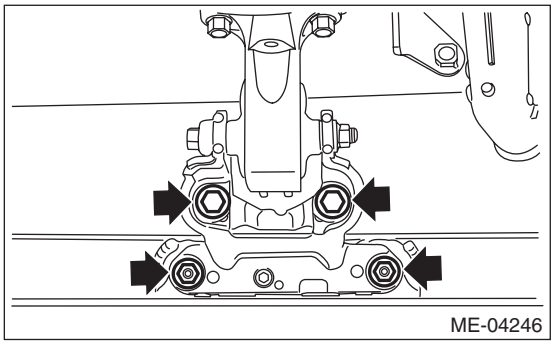

11) Install the stopper rod.

Tightening torque:
36 N·m (3.7 kgf-m, 26.6 ft-lb)

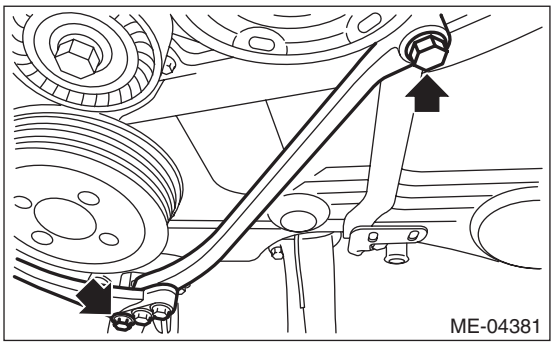

12) Remove the lifting device and wire ropes.

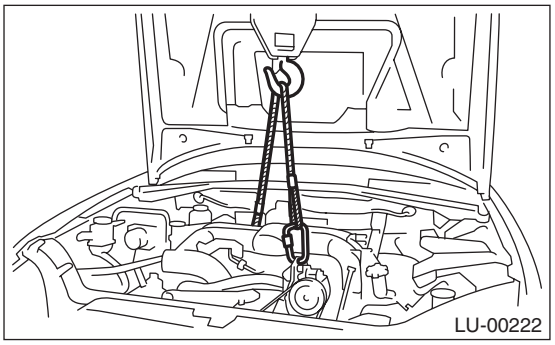

13) Lift up the vehicle.
14) Install the air intake boot to the intake duct.

Tightening torque:
2.5 N·m (0.3 kgf-m, 1.8 ft-lb)

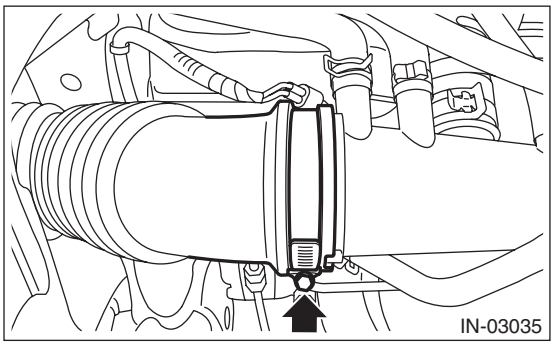

15) Install the engine harness cover, and connect the ground cable.

Tightening torque:
T1: 6.4 N·m (0.7 kgf-m, 4.7 ft-lb)
T2: 7 N·m (0.7 kgf-m, 5.2 ft-lb)

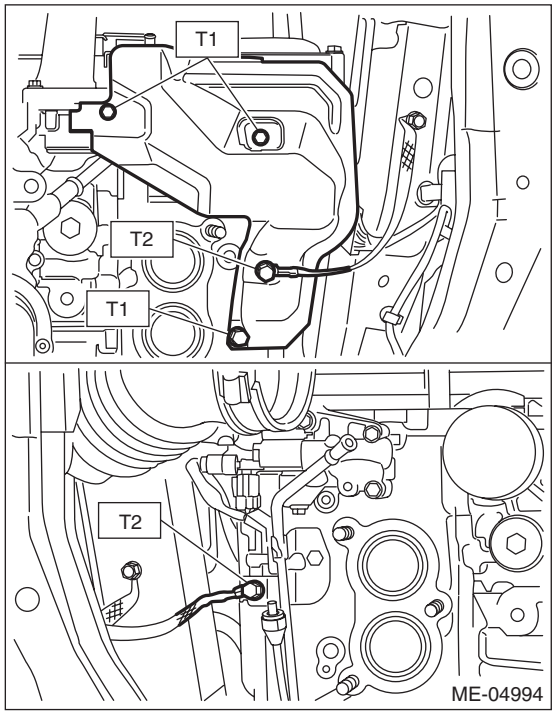

16) Lower the vehicle.
17) Connect the following hoses.
(1) Fuel delivery hose, fuel return hose and evaporation hose
(2) Heater inlet hose and heater outlet hose
(3) Brake booster vacuum hose
(4) A/C pressure hose <Ref. to AC-76, INSTALLATION, Hose and Pipe.>
18) Install the clip (C) securing the generator cord to the intake manifold protector LH, and connect the connector (A) and connector (B) to the A/C compressor.

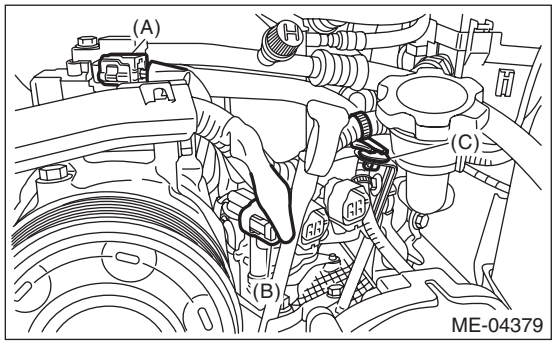

19) Connect the bulkhead harness connector to the engine harness connector (black), and install the bolt securing the bulkhead harness connector bracket.

Tightening torque:
6.4 N·m (0.7 kgf-m, 4.7 ft-lb)

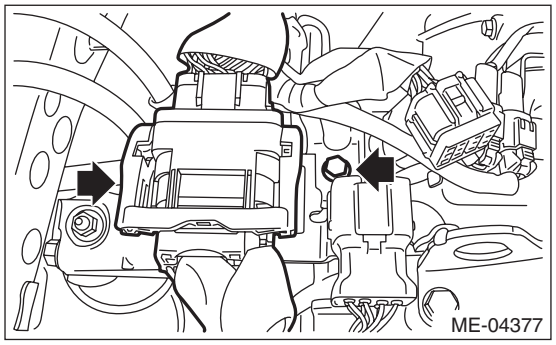

20) Connect the bulkhead harness connector to the engine harness connector (brown).

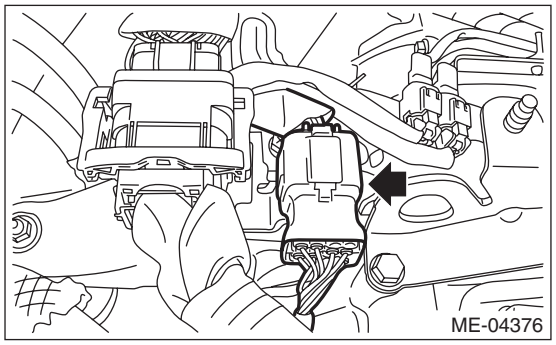

21) Install the front exhaust pipe. <Ref. to EX(H4DOTC)-7, INSTALLATION, Front Exhaust Pipe.>
22) Install the radiator. <Ref. to CO(H4DOTC)-22, INSTALLATION, Radiator.>
23) Install the air by-pass valve. <Ref. to IN(H4DOTC)-26, INSTALLATION, Air By-pass Valve.>
24) Install the intercooler. <Ref. to IN(H4DOTC)-18, INSTALLATION, Intercooler.>
25) Install the air intake duct. <Ref. to IN(H4DOTC)-12, INSTALLATION, Air Intake Duct.>
26) Connect the battery ground terminal.

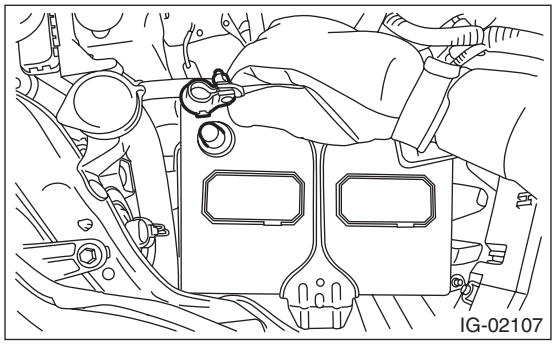

27) Fill engine coolant. <Ref. to CO(H4DOTC)-14, FILLING OF ENGINE COOLANT, REPLACEMENT, Engine Coolant.>
28) Charge the A/C system with refrigerant. <Ref. to AC-25, PROCEDURE, Refrigerant Charging Procedure.>
29) Install the collector cover.
30) Change the front hood damper mounting position from (B) to (A), and close the front hood.

Tightening torque:
20 N·m (2.0 kgf-m, 14.8 ft-lb)

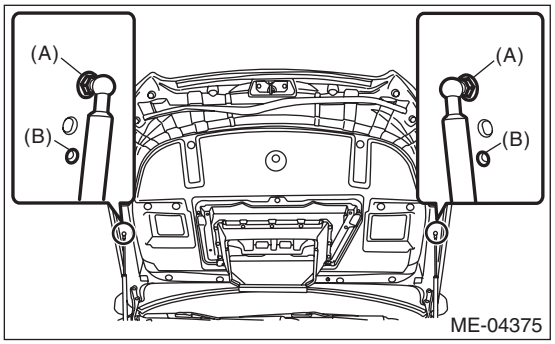

C: INSPECTION

1) Check that the pipes, hoses, connectors and clamps are securely connected.
2) Check that the engine coolant is up to specified level.
3) Start the engine and check for exhaust gas leakage, engine coolant leakage, fuel leakage, noise or vibration.

10.Engine Mounting

A: REMOVAL

1) Change the front hood damper mounting position from (A) to (B), and completely open the front hood.

Tightening torque:
20 N·m (2.0 kgf-m, 14.8 ft-lb)

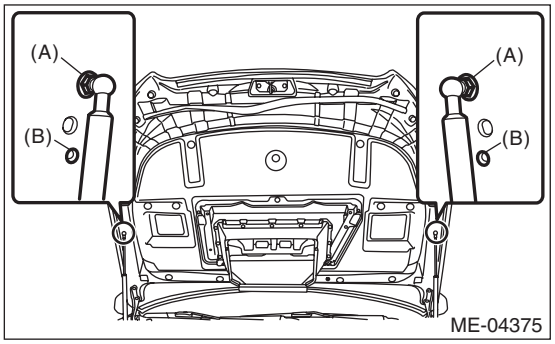

2) Remove the collector cover.
3) Disconnect the ground cable from battery.

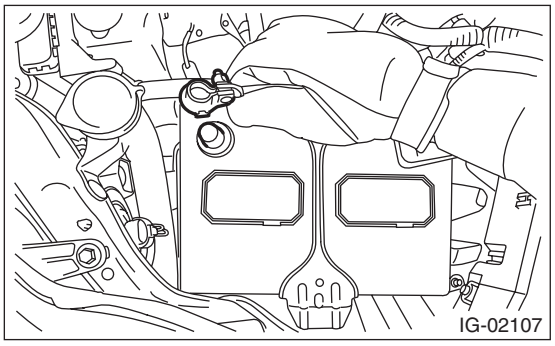

4) Remove the intercooler. <Ref. to IN(H4DOTC)-17, REMOVAL, Intercooler.>
5) Remove the radiator main fan motor assembly and radiator sub fan motor assembly. <Ref. to CO(H4DOTC)-25, REMOVAL, Radiator Main Fan and Fan Motor.> <Ref. to CO(H4DOTC)-27, REMOVAL, Radiator Sub Fan and Fan Motor.>
6) Lift up the vehicle.
7) Remove the under cover. <Ref. to EI-35, REMOVAL, Front Under Cover.>
8) Remove the front exhaust pipe. <Ref. to EX(H4DOTC)-5, REMOVAL, Front Exhaust Pipe.>
9) Lower the vehicle.
10) Support the engine with a lifting device and wire ropes.

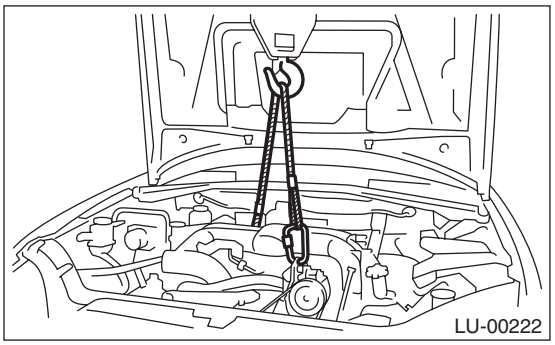

11) Remove the stopper rod.

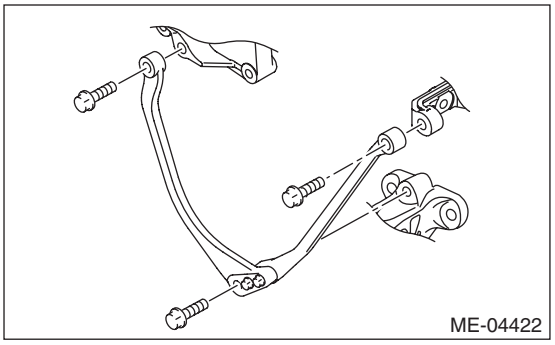

12) Remove the bolt and nut which secure engine mounting to the cradle.

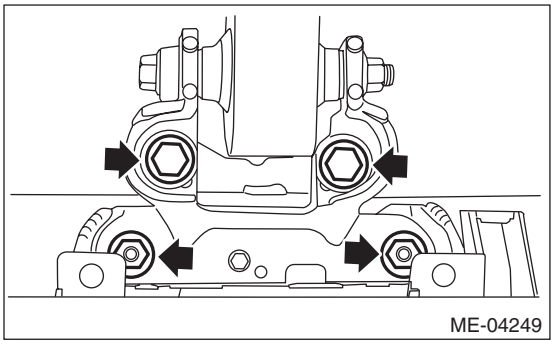

13) Lift up the vehicle.

CAUTION:
When lifting up the vehicle, raise up wire ropes at the same time.

14) Remove the bolts which secure the engine mounting onto the engine, and remove the engine mounting.

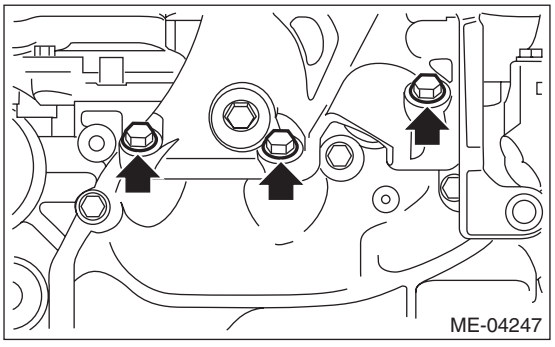

B: INSTALLATION

1) Set the engine mounting, and tighten the bolts which hold engine mounting to the engine.

Tightening torque:
58 N·m (5.9 kgf-m, 42.8 ft-lb)

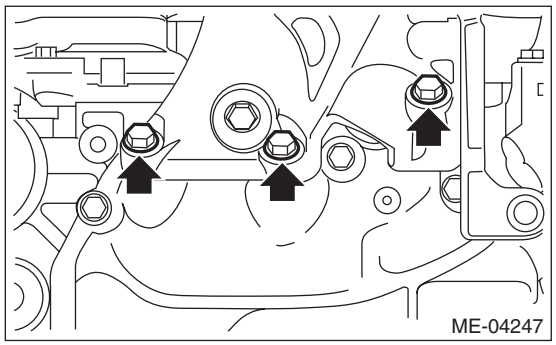

2) Lower the vehicle.

CAUTION:
When lifting down the vehicle, lower wire ropes at the same time.

3) Attach the bolts and nuts which secure engine mounting to the cradle.

Tightening torque:
60 N·m (6.1 kgf-m, 44.3 ft-lb)

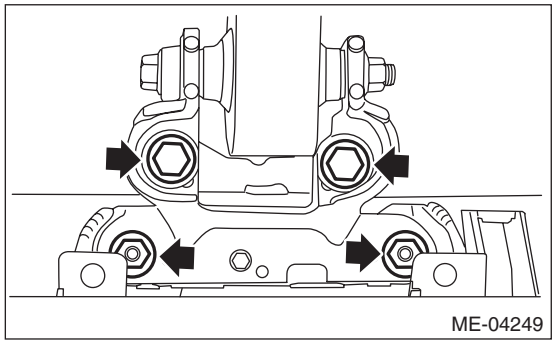

4) Install the stopper rod.

Tightening torque:
36 N·m (3.7 kgf-m, 26.6 ft-lb)

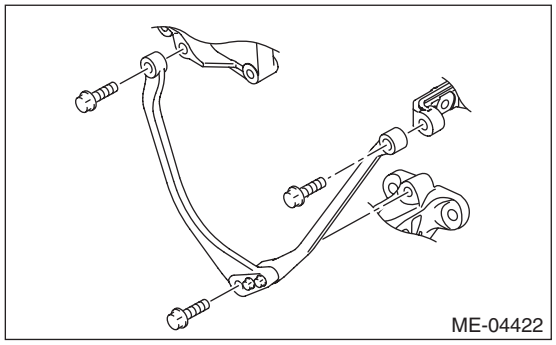

5) Remove the lifting device and wire ropes.

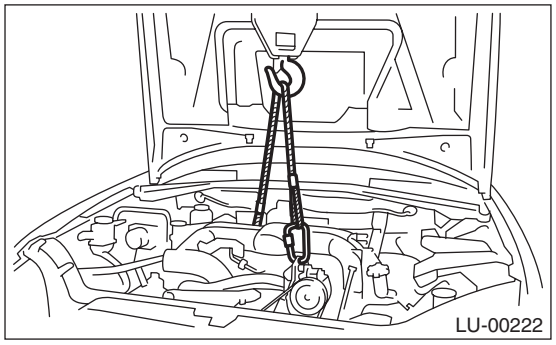

6) Lift up the vehicle.
7) Install the front exhaust pipe. <Ref. to EX(H4DOTC)-7, INSTALLATION, Front Exhaust Pipe.>
8) Install the under cover. <Ref. to EI-35, INSTALLATION, Front Under Cover.>
9) Lower the vehicle.
10) Install the radiator main fan motor assembly and radiator sub fan motor assembly. <Ref. to CO(H4DOTC)-25, INSTALLATION, Radiator Main Fan and Fan Motor.> <Ref. to CO(H4DOTC)-27, INSTALLATION, Radiator Sub Fan and Fan Motor.>
11) Install the intercooler. <Ref. to IN(H4DOTC)-18, INSTALLATION, Intercooler.>
12) Connect the ground cable to battery.

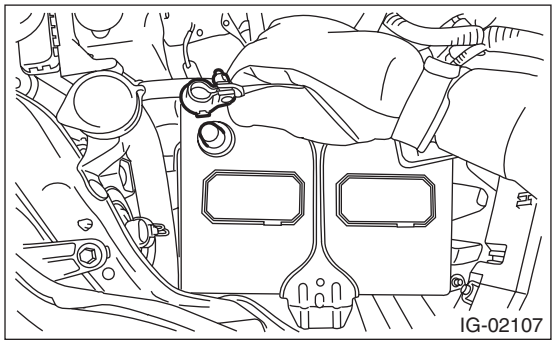

13) Install the collector cover.
14) Change the front hood damper mounting position from (B) to (A), and close the front hood.

Tightening torque:
20 N·m (2.0 kgf-m, 14.8 ft-lb)

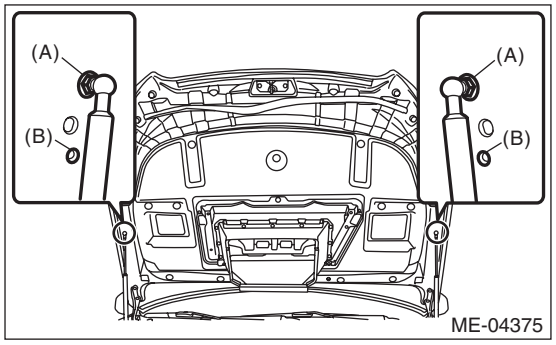

C: DISASSEMBLY

1) Remove the turbocharger upper stay from the engine mounting bracket.

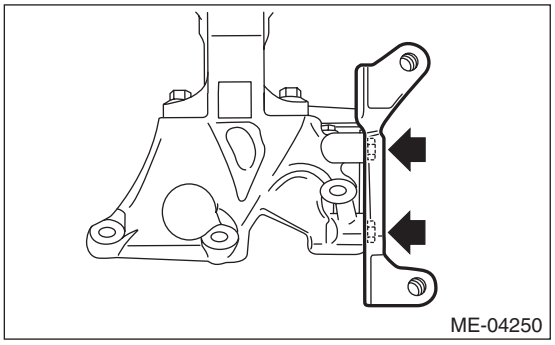

2) Remove the front cushion rubber from the engine mounting bracket.

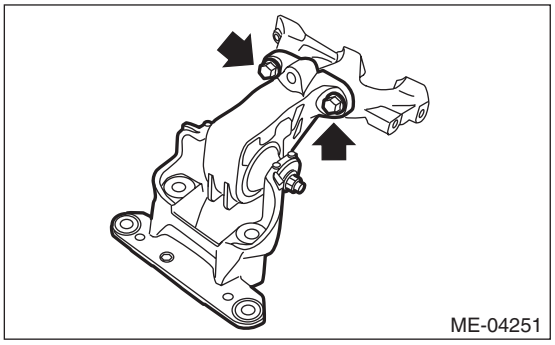

3) Remove the front cushion rubber from the front mounting bracket.

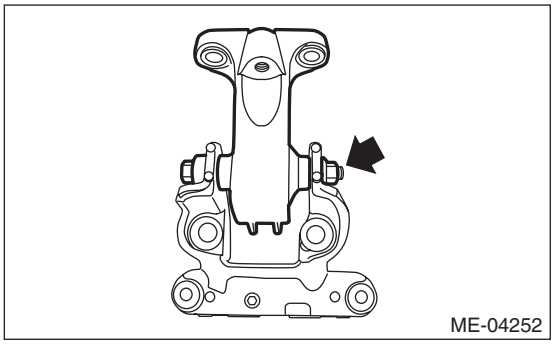

D: ASSEMBLY

1) Install the front cushion rubber to the front mounting bracket.

Tightening torque:
45 N·m (4.6 kgf-m, 33.2 ft-lb)

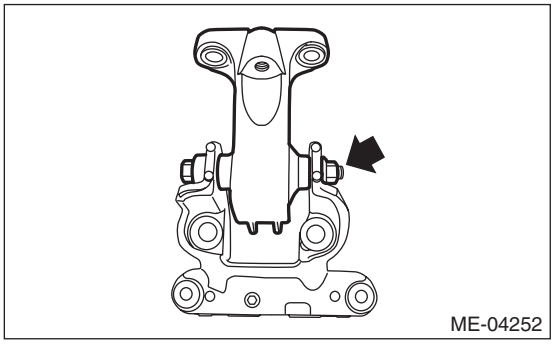

2) Install the front cushion rubber to the engine mounting bracket.

Tightening torque:
25 N·m (2.5 kgf-m, 18.4 ft-lb)

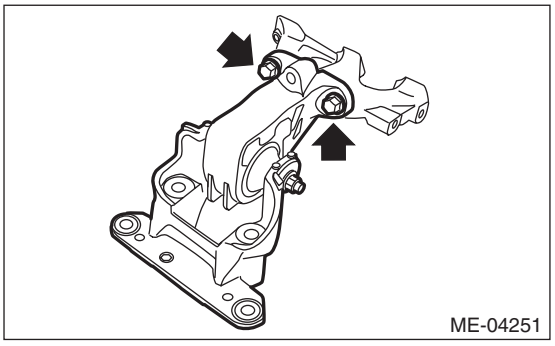

3) Install the turbocharger upper stay to the engine mounting bracket.

Tightening torque:
33 N·m (3.4 kgf-m, 24.3 ft-lb)

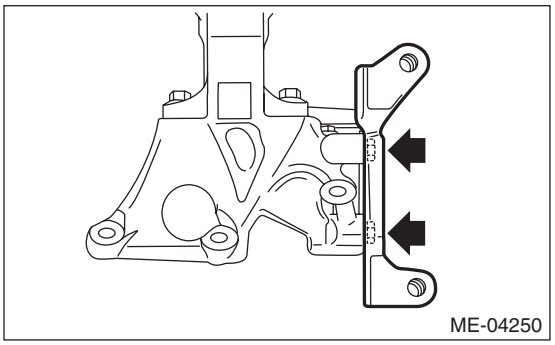

E: INSPECTION

Check that the engine mounting does not have deformation, cracks and any other damage.

11.Preparation for Overhaul

A: PROCEDURE

1) After removing the engine from vehicle body, attach the ST to the engine as shown in the figure.

ST1	498457000	ENGINE STAND ADAPTER RH
ST2	498457100	ENGINE STAND ADAPTER LH
ST3	499817100	ENGINE STAND

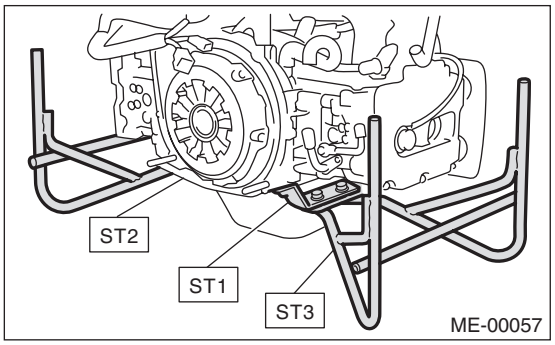

2) In this section the procedures described under each index are all connected and stated in order. Engine overhaul will be completed when you go through all steps in the procedure.
Therefore, in this section, to conduct the particular procedure within the flow of a section, you need to go back and conduct the procedure described previously in order to do that particular procedure.

12.V-belt

A: REMOVAL

NOTE:
When replacing a single part, perform the work with the engine assembly installed to body.

1. V-BELT

1) Remove the collector cover.
2) Remove the air intake duct. <Ref. to IN(H4DOTC)-12, REMOVAL, Air Intake Duct.>
3) Attach the tool to the V-belt tensioner assembly, and rotate the tool clockwise to loosen and remove the V-belt.

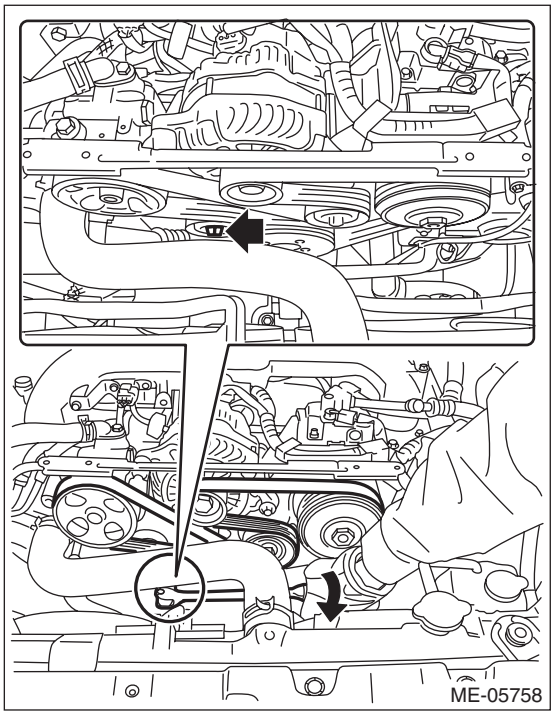
ME-05758

2. V-BELT TENSIONER ASSEMBLY AND IDLER PULLEY

1) Remove the V-belts. <Ref. to ME(H4DOTC)-42, V-BELT, REMOVAL, V-belt.>
2) Remove the bolt securing the V-belt tensioner assembly to the power steering pump bracket, and remove the V-belt tensioner assembly.

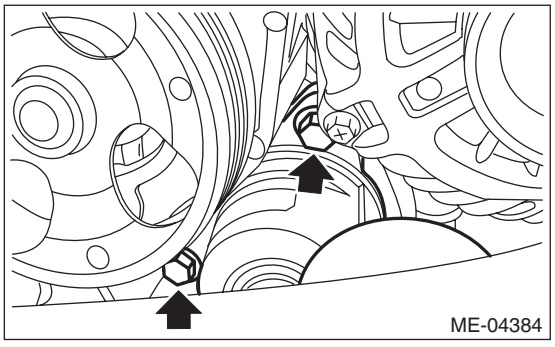
ME-04384

3) Remove the bolt securing the idler pulley to the A/C compressor bracket, and remove the idler pulley.

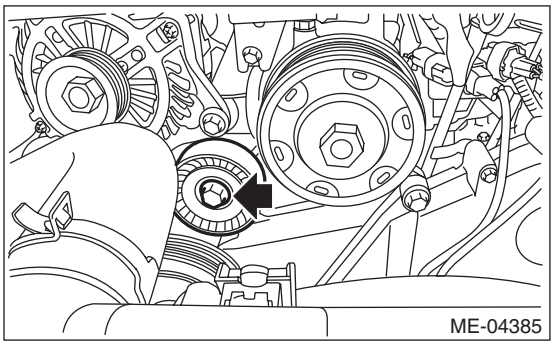
ME-04385

B: INSTALLATION

1. V-BELT

Install in the reverse order of removal.

CAUTION:
• When reusing the V-belt, wipe off dust and water with cloth.
• Do not use the V-belt if there is any oil, grease or coolant on the belt.
• Be careful not to rub the V-belt end surface with bare hands; exposed core may cause injury.
• Wipe off any dust, oil and water on the groove of each pulley with cloth.

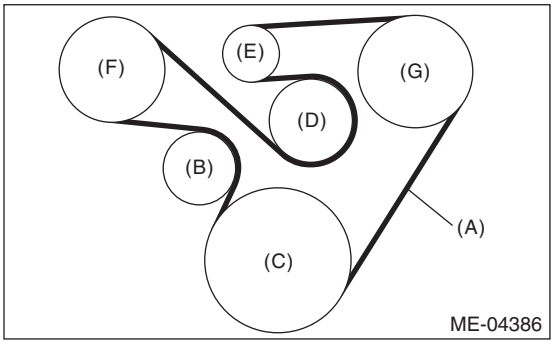

ME-04386

(A) V-belt
(B) V-belt tensioner ASSY
(C) Crank pulley
(D) Idler pulley
(E) Generator pulley
(F) Power steering pump pulley
(G) A/C compressor pulley

2. V-BELT TENSIONER ASSEMBLY AND IDLER PULLEY

Install in the reverse order of removal.

Tightening torque:
33 N·m (3.4 kgf-m, 24.3 ft-lb)

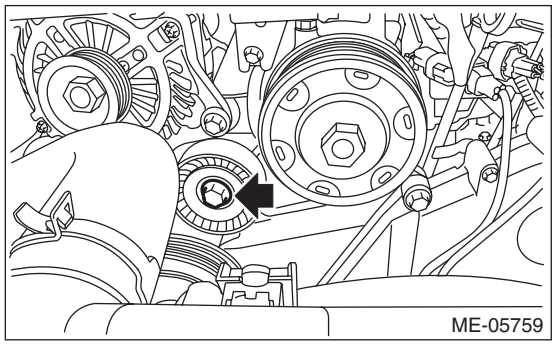

Tightening torque:
20 N·m (2.0 kgf-m, 14.8 ft-lb)

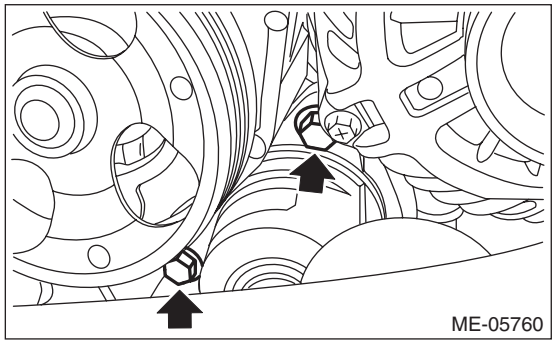

C: INSPECTION

1) Check the V-belt for cracks, tear or wear.
2) Remove the air intake duct. <Ref. to IN(H4DOTC)-12, REMOVAL, Air Intake Duct.>
3) Check that the V-belt tensioner assembly and idler pulley do not have deformation, cracks or other damages.
4) Check the V-belt tension indicator (A) shows within the limit (B).

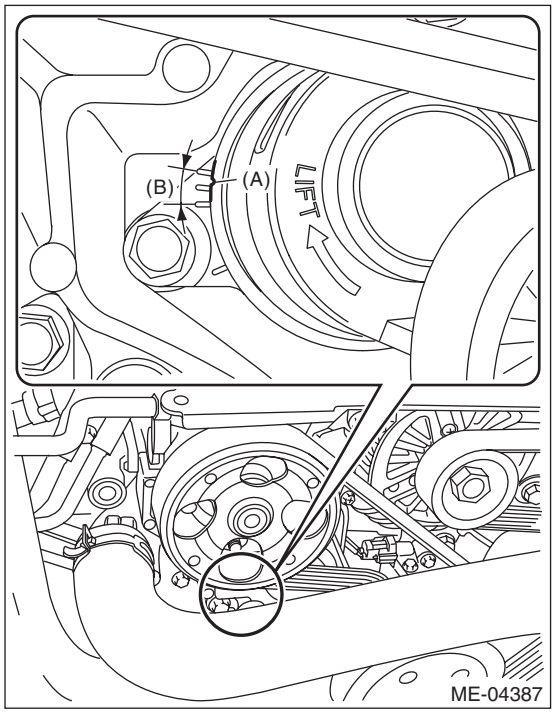

13.Crank Pulley

A: REMOVAL

NOTE:
When replacing a single part, perform the work with the engine assembly installed to body.
1) Remove the V-belts. <Ref. to ME(H4DOTC)-42, REMOVAL, V-belt.>
2) Use the ST to lock the crank pulley, and remove the crank pulley bolt.
ST 499977100 CRANK PULLEY WRENCH

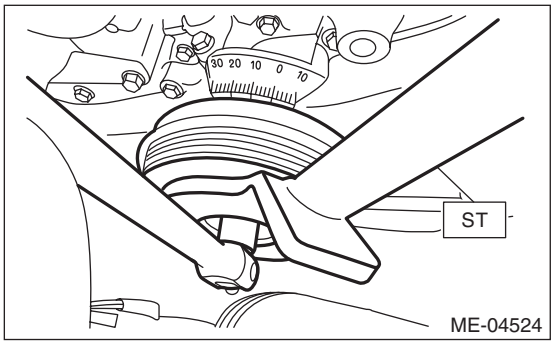

3) Remove the crank pulley.

B: INSTALLATION

1. METHOD WITHOUT ANGLE GAUGE

1) Clean the crankshaft thread using compressed air.
2) Install the crank pulley.
3) Apply engine oil to the crank pulley bolt seat and thread.
4) Tighten the crank pulley bolts.
(1) Use the ST to lock the crank pulley, and temporarily tighten the crank pulley bolt.
ST 499977100 CRANK PULLEY WRENCH

Tightening torque:
47 N·m (4.8 kgf-m, 34.7 ft-lb)

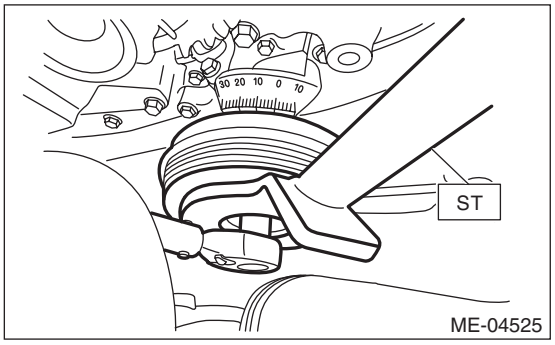

(2) Draw reference lines (A) and (B) using a marker to set the socket to the crank pulley bolt as shown in the figure.

NOTE:
Set the socket onto the crank pulley bolt so that reference lines (A) and (B) is visible.
ST 499977100 CRANK PULLEY WRENCH

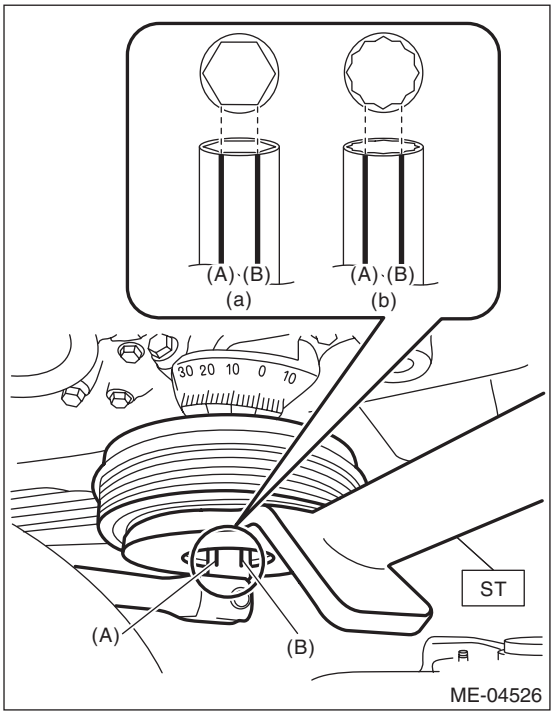

(a) When using 6-point socket
(b) When using 12-point socket

(3) Draw end line (C) on ST using a marker at the same position as reference line (B) drawn on the socket in step (2).
ST 499977100 CRANK PULLEY WRENCH

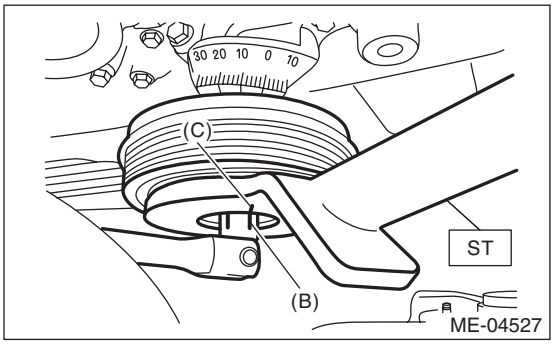

(4) Use the ST to lock the crank pulley, and tighten the crank pulley bolt to the angle where reference line (A) and end line (C) are aligned.

NOTE:
It should be approx. 60° when reference line (A) and end line (C) are aligned.
ST 499977100 CRANK PULLEY WRENCH

Tightening angle:
60°±5°

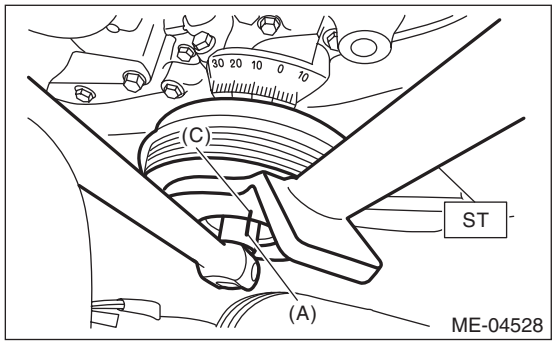

5) Install the V-belts. <Ref. to ME(H4DOTC)-42, INSTALLATION, V-belt.>

2. METHOD WITH ANGLE GAUGE

1) Clean the crankshaft thread using compressed air.
2) Install the crank pulley.
3) Apply engine oil to the crank pulley bolt seat and thread.
4) Tighten the crank pulley bolts.
(1) Remove the radiator main fan motor assembly and radiator sub fan motor assembly. <Ref. to CO(H4DOTC)-25, REMOVAL, Radiator Main Fan and Fan Motor.> <Ref. to CO(H4DOTC)-27, REMOVAL, Radiator Sub Fan and Fan Motor.>
(2) Use the ST1 to lock the crank pulley, and temporarily tighten the crank pulley bolt.
ST1 499977100 CRANK PULLEY WRENCH

Tightening torque:
47 N·m (4.8 kgf-m, 34.7 ft-lb)

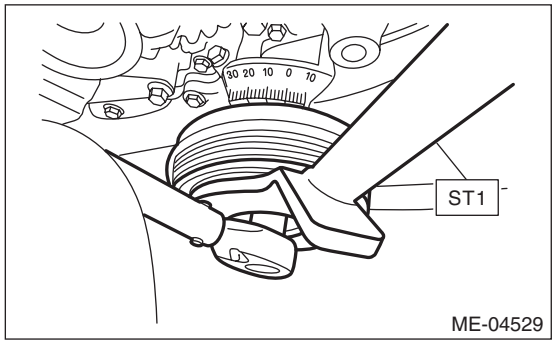

(3) Set the ST2, use the ST1 to lock the crank pulley, and tighten the crank pulley bolt to the specified angle.

NOTE:
Attach the magnet used for securing the ST2 (ANGLE GAUGE) to ST1.
ST1 499977100 CRANK PULLEY WRENCH
ST2 18854AA000 ANGLE GAUGE

Tightening angle:
60°±5°

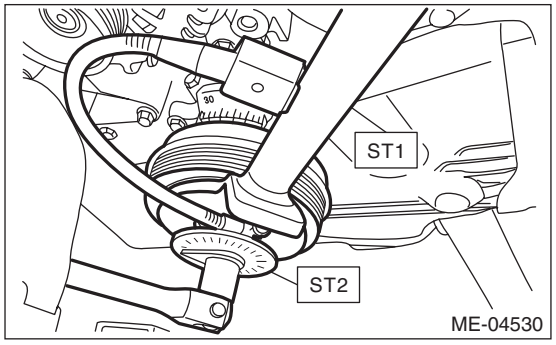

(4) Install the radiator main fan motor assembly and radiator sub fan motor assembly. <Ref. to CO(H4DOTC)-25, INSTALLATION, Radiator Main Fan and Fan Motor.> <Ref. to CO(H4DOTC)-27, INSTALLATION, Radiator Sub Fan and Fan Motor.>

5) Install the V-belts. <Ref. to ME(H4DOTC)-42, INSTALLATION, V-belt.>

C: INSPECTION

Check that the crank pulley has no deformation, cracks or other damages.

14.Timing Belt Cover

A: REMOVAL

1. WORK ON THE VEHICLE

1) Remove the collector cover.
2) Disconnect the ground cable from battery.

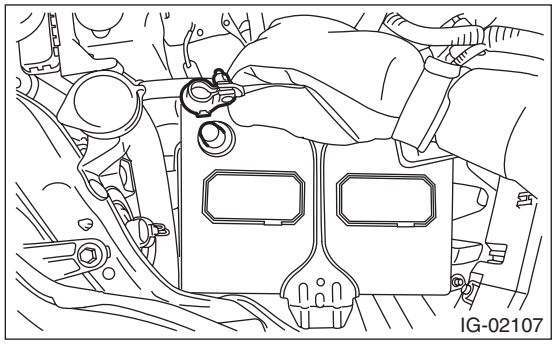

3) When removing the timing belt cover RH
   (1) Remove the air intake duct. <Ref. to IN(H4DOTC)-12, REMOVAL, Air Intake Duct.>
   (2) Loosen the clamp which holds the intake duct to intercooler.

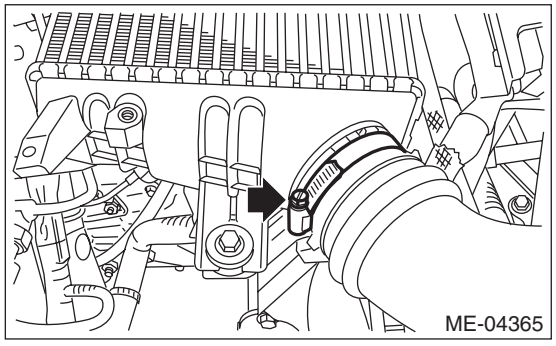

   (3) Remove the V-belts. <Ref. to ME(H4DOTC)-42, REMOVAL, V-belt.>
   (4) Remove the generator. <Ref. to SC(H4SO)-18, REMOVAL, Generator.>
   (5) Remove the suction hose from intake duct.

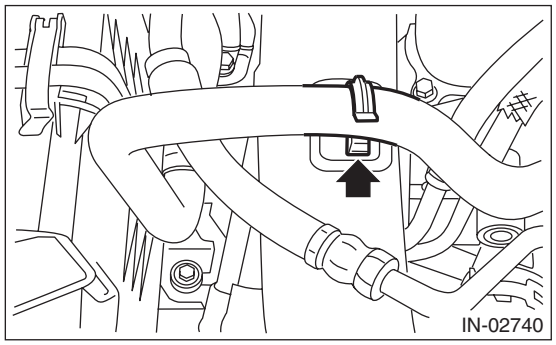

   (6) Disconnect the connector (A) from power steering pump, and remove the power steering pump together with the power steering pump bracket from engine and rod stopper.

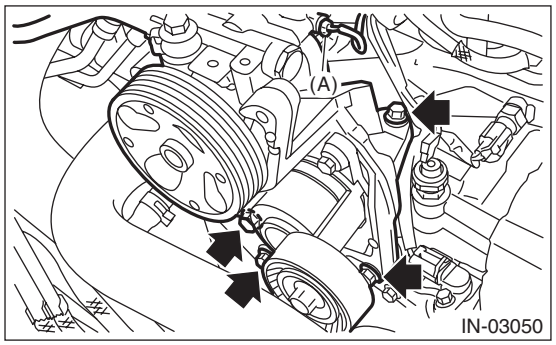

   (7) Mount the power steering pump together with the power steering pump bracket on RH side wheel apron.
   (8) Remove the radiator sub fan motor assembly. <Ref. to CO(H4DOTC)-27, REMOVAL, Radiator Sub Fan and Fan Motor.>
   (9) Remove the engine coolant hose from the clip (A).
   (10) Remove the bolts which secure the intake duct to the turbocharger, and remove the air bypass valve from the intake duct.

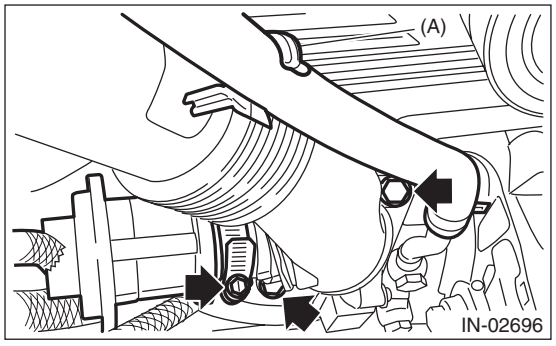

   (11) Remove the intake duct from intake manifold.

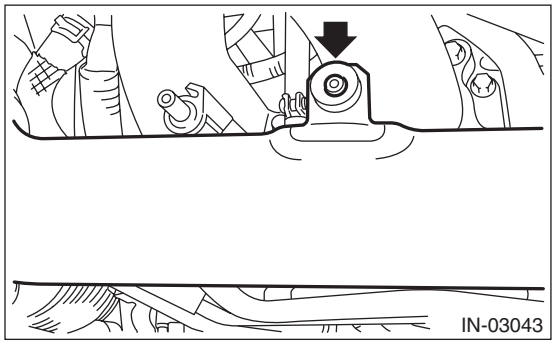

(12) Disconnect the vacuum hose from blow-by pipe, and remove the bolt securing the blow-by pipe from the PCV pipe.

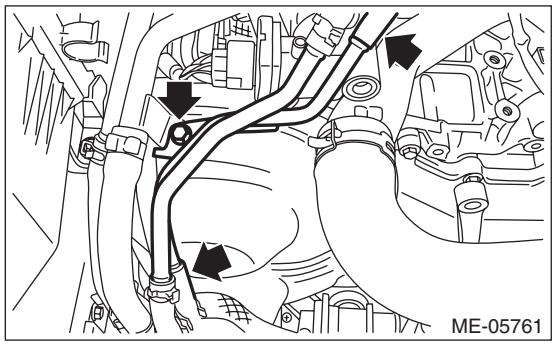

(13) Disconnect the vacuum hose from PCV pipe.

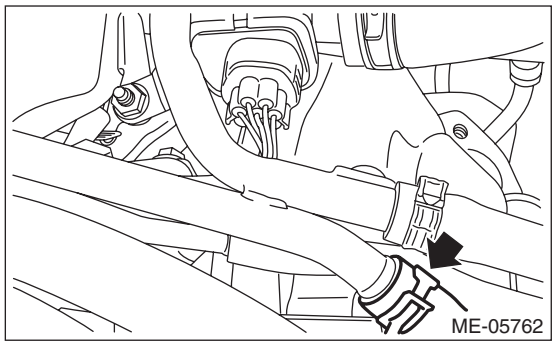

(14) Remove vacuum hose (B), vacuum hose (C), vacuum hose (D) and vacuum hose (E) from the clip (A).

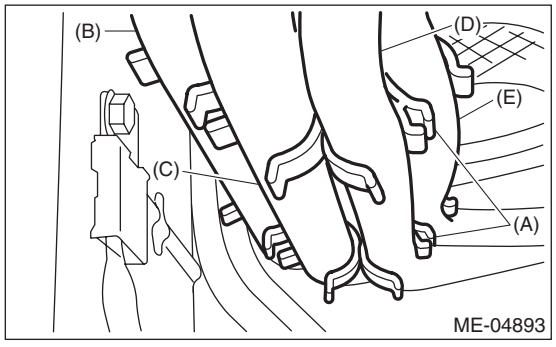

(15) Remove the bolts which secure the upper side of the timing belt cover RH.
(16) Lift up the vehicle.
(17) Remove the under cover. <Ref. to EI-35, REMOVAL, Front Under Cover.>
(18) Remove the air by-pass valve. <Ref. to IN(H4DOTC)-26, REMOVAL, Air By-pass Valve.>
(19) Remove the clip holding the engine harness.

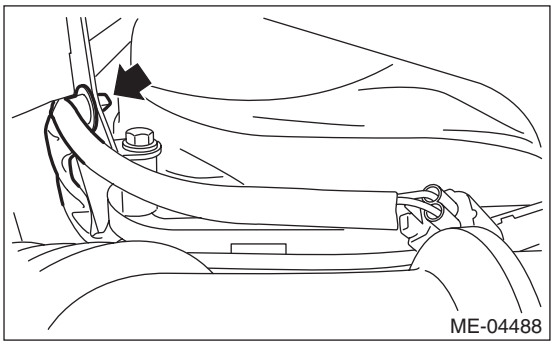

(20) Remove the remaining bolts which secure timing belt cover RH, and remove the timing belt cover RH together with the hose clip stay assembly (A).

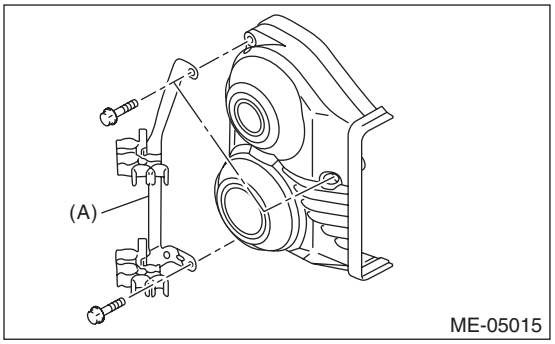

4) When removing the timing belt cover LH
(1) Disconnect the connectors from front oxygen (A/F) sensor and rear oxygen sensor, and remove the clip (A) securing the front oxygen (A/F) sensor harness and rear oxygen sensor harness.

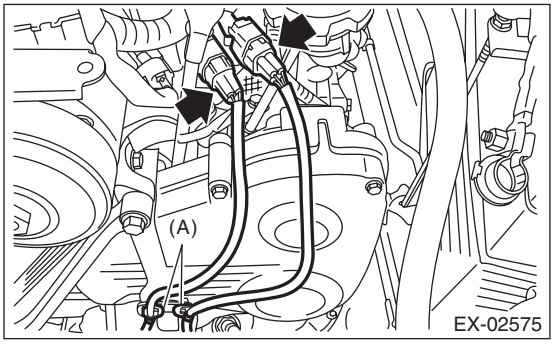

(2) Remove the bolts which secure the upper side of the timing belt cover LH.
(3) Lift up the vehicle.
(4) Remove the under cover. <Ref. to EI-35, REMOVAL, Front Under Cover.>

(5) Loosen the remaining bolts which secure timing belt cover LH, and remove the timing belt cover LH together with the oxygen sensor bracket (A).

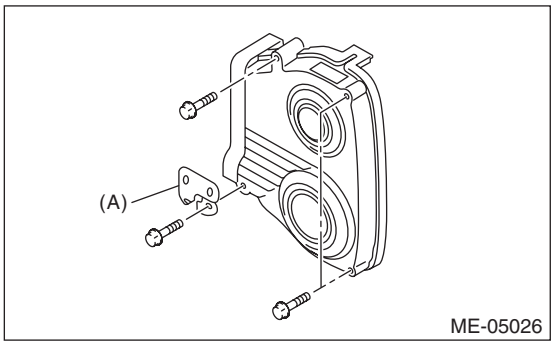

5) When removing the front timing belt cover
(1) Remove the stopper rod.

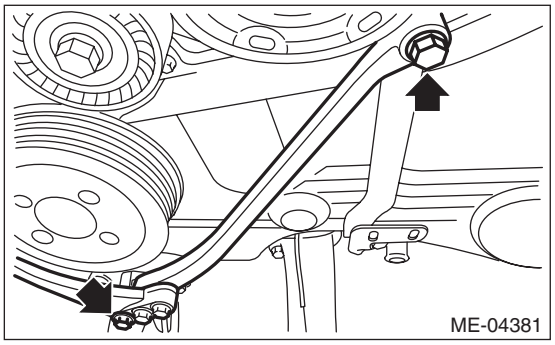

(2) Remove the crank pulley. <Ref. to ME(H4DOTC)-44, REMOVAL, Crank Pulley.>
(3) Remove the timing belt cover RH and timing belt cover LH. Refer to step 3) and step 4) for removal procedures.
(4) Remove the bolts securing the front timing belt cover, and remove the front timing belt cover.

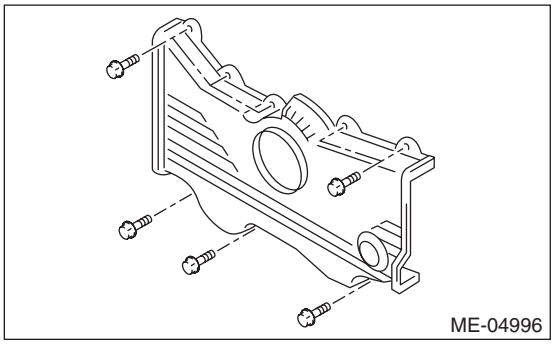

2. WORK ON THE ENGINE UNIT ONLY

1) Remove the crank pulley. <Ref. to ME(H4DOTC)-44, REMOVAL, Crank Pulley.>
2) Remove the blow-by pipe from the PCV pipe.

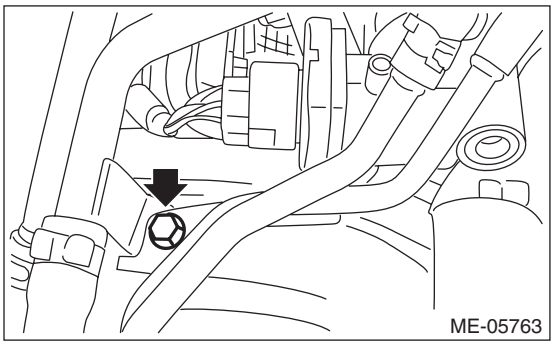

3) Remove vacuum hose (B), vacuum hose (C), vacuum hose (D) and vacuum hose (E) from the clip (A).

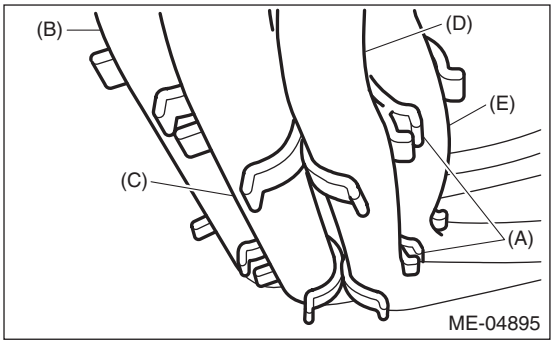

4) Remove the clip which holds the engine harness to the hose clip stay assembly.

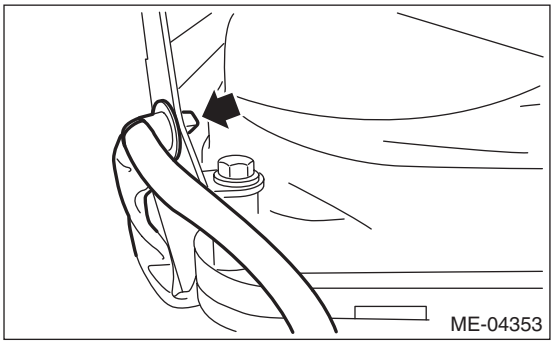

5) Remove timing belt cover RH (B) together with the hose clip stay assembly (A).
6) Remove timing belt cover (LH) (D) together with the oxygen (A/F) sensor bracket (C).

7) Remove front timing belt cover (E).

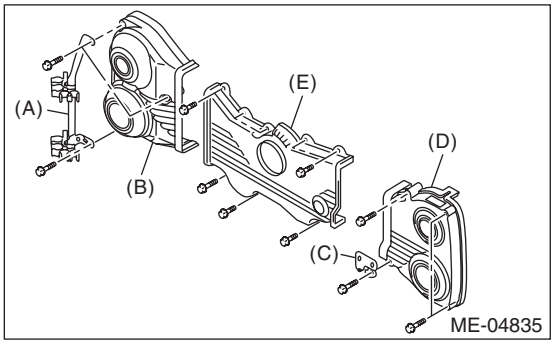

B: INSTALLATION

1. WORK ON THE VEHICLE

Install in the reverse order of removal.

NOTE:
Install the vacuum hose as shown in the figure.

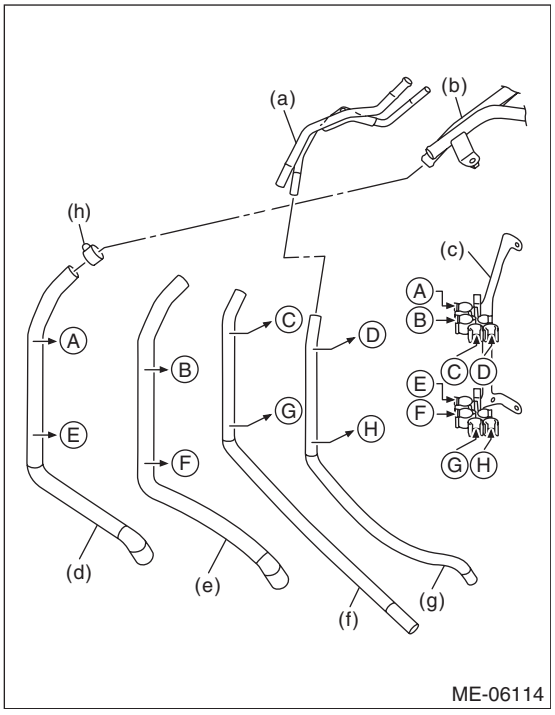

(a) Blow-by pipe
(b) PCV pipe
(c) Hose clip stay ASSY
(d) Vacuum hose (A)
(e) Vacuum hose (B)
(f) Vacuum hose (C)
(g) Vacuum hose (D)
(h) Clip

Tightening torque:
5 N·m (0.5 kgf-m, 3.7 ft-lb)

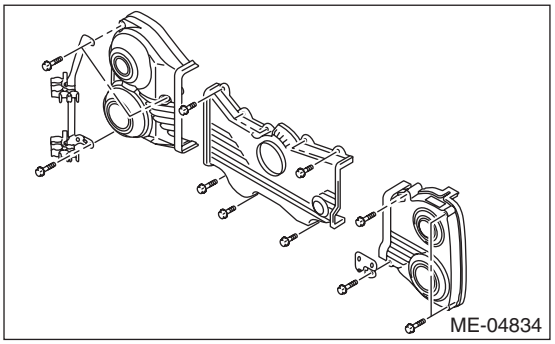

Tightening torque:
6.4 N·m (0.7 kgf-m, 4.7 ft-lb)

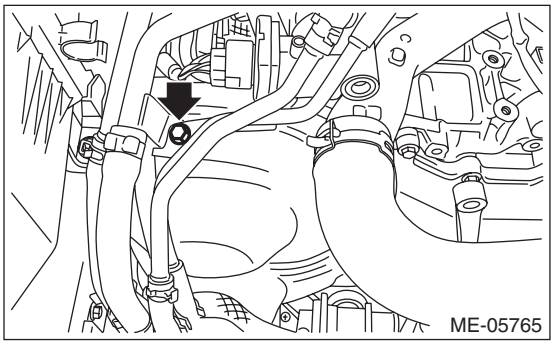

Tightening torque:
T1: 3 N·m (0.3 kgf-m, 2.2 ft-lb)
T2: 16 N·m (1.6 kgf-m, 11.8 ft-lb)

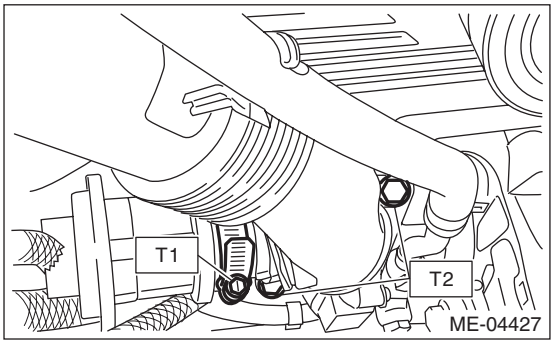

Tightening torque:
Refer to "COMPONENT" of "STARTING/ CHARGING SYSTEMS" for the tightening torque. <Ref. to SC(H4SO)-5, GENERATOR, COMPONENT, General Description.>

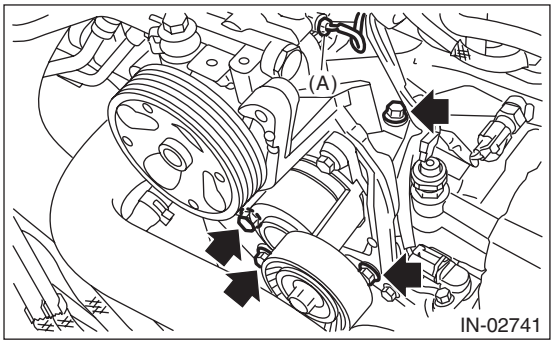

Tightening torque:
3 N·m (0.3 kgf-m, 2.2 ft-lb)

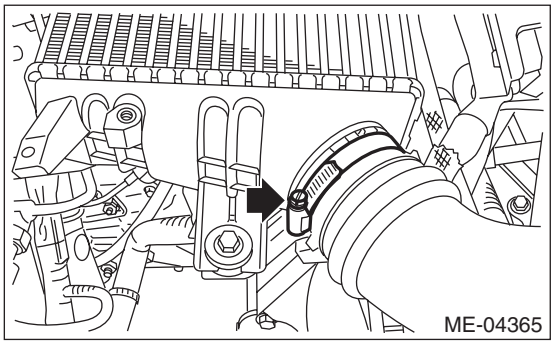

Tightening torque:
36 N·m (3.7 kgf-m, 26.6 ft-lb)

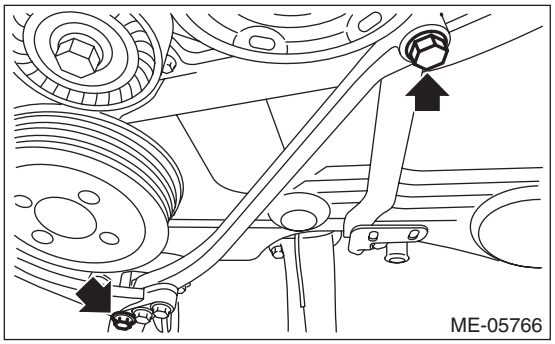

2. WORK ON THE ENGINE UNIT ONLY

Install in the reverse order of removal.

NOTE:
Install the vacuum hose as shown in the figure.

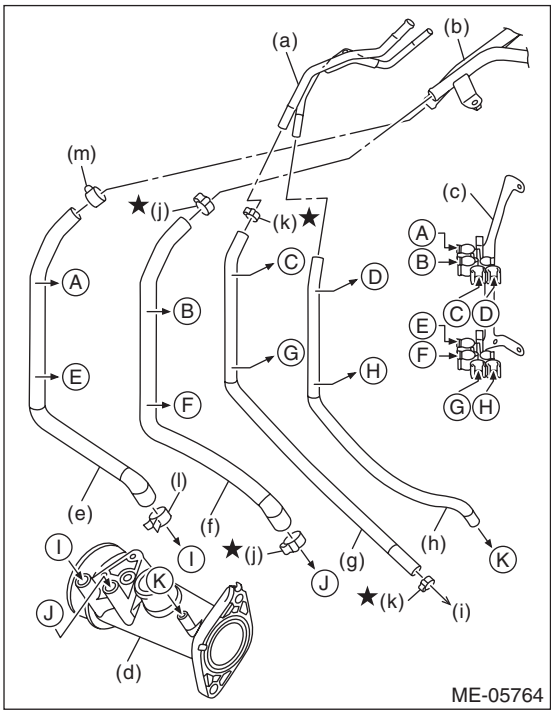

(a) Blow-by pipe
(b) PCV pipe
(c) Hose clip stay ASSY
(d) Intake duct
(e) Vacuum hose (A)
(f) Vacuum hose (B)
(g) Vacuum hose (C)
(h) Vacuum hose (D)
(i) To oil catch tank
(j) Clamp
(k) Clamp
(l) Clip
(m) Clip

Tightening torque:
5 N·m (0.5 kgf-m, 3.7 ft-lb)

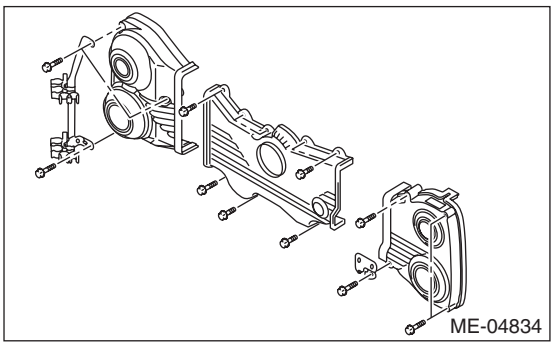

Tightening torque:
6.4 N·m (0.7 kgf-m, 4.7 ft-lb)

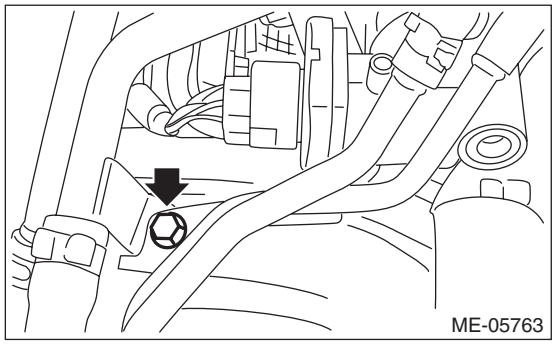

C: INSPECTION

Check that the timing belt cover does not have deformation, cracks and any other damage.

15.Timing Belt

A: REMOVAL

NOTE:
• When replacing a single part, perform the work with the engine assembly installed to body.
• When performing the work with the engine installed to body, the following parts must also be removed/installed.
  • Radiator main fan motor assembly <Ref. to CO(H4DOTC)-25, REMOVAL, Radiator Main Fan and Fan Motor.> <Ref. to CO(H4DOTC)-25, INSTALLATION, Radiator Main Fan and Fan Motor.>
  • Radiator sub fan motor assembly <Ref. to CO(H4DOTC)-27, REMOVAL, Radiator Sub Fan and Fan Motor.> <Ref. to CO(H4DOTC)-27, INSTALLATION, Radiator Sub Fan and Fan Motor.>
• When performing the work with the engine installed to body, protect the radiator with cardboards or blankets.

1. TIMING BELT

1) Remove the crank pulley. <Ref. to ME(H4DOTC)-44, REMOVAL, Crank Pulley.>
2) Remove the timing belt cover. <Ref. to ME(H4DOTC)-46, REMOVAL, Timing Belt Cover.>
3) Remove the timing belt guide.

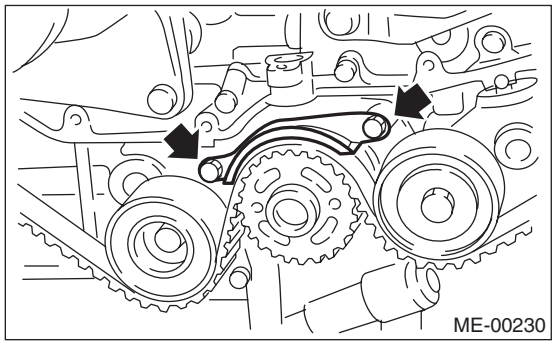
ME-00230

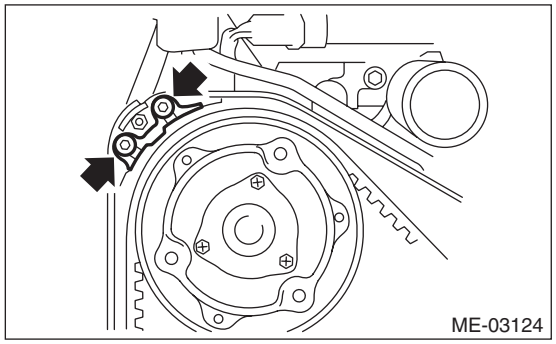
ME-03124

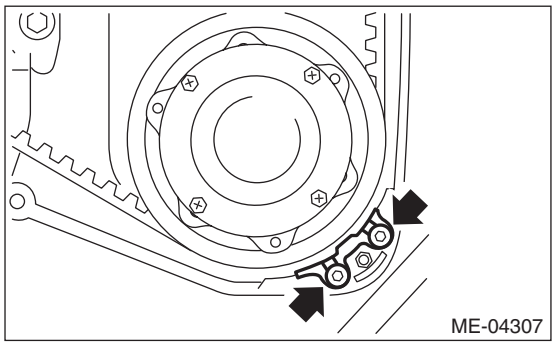
ME-04307

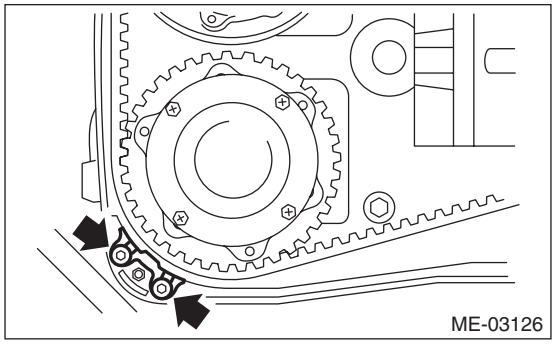
ME-03126

4) If the alignment mark or arrow mark (which indicates the direction of rotation) on timing belt fade away, put new marks before removing the timing belt as shown in procedures below.
  (1) Turn the crankshaft using ST, and align the alignment marks on crank sprocket, intake cam sprocket LH, exhaust cam sprocket LH, intake cam sprocket RH and exhaust cam sprocket RH with marks on oil pump and notches of timing belt cover.

ST 499987500 CRANKSHAFT SOCKET

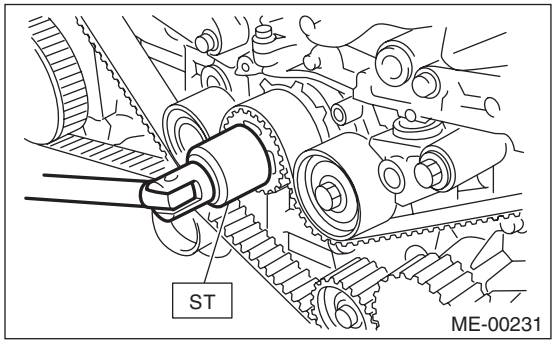

ME-00231

(2) Using white paint, put an alignment mark or an arrow mark on timing belts in relation to the crank sprocket and cam sprockets.

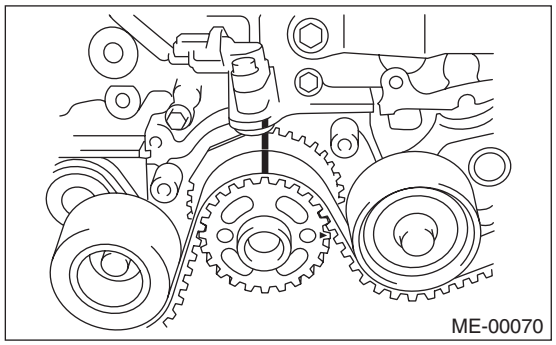
ME-00070

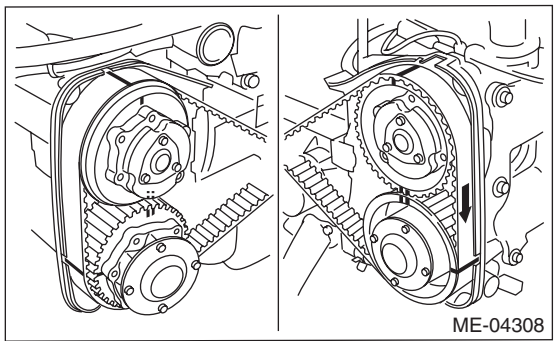
ME-04308

Z_1: 54.5 teeth
Z_2: 51 teeth
Z_3: 28 teeth

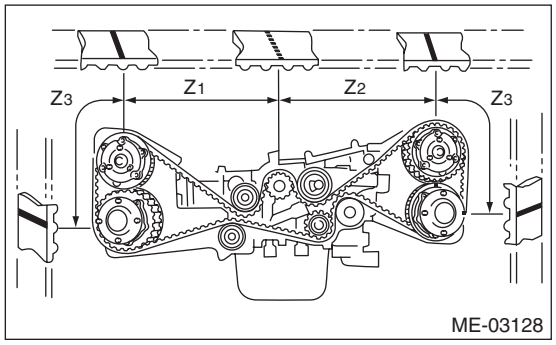

ME-03128

5) Remove the belt idler (A).

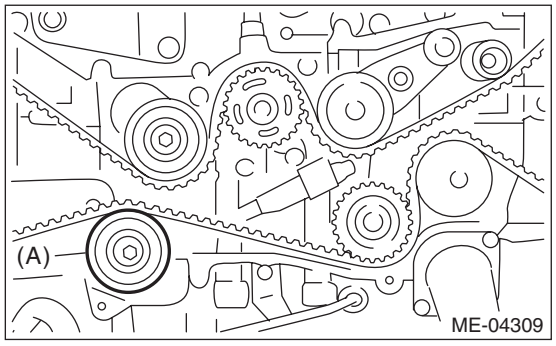

ME-04309

6) Remove the timing belt.

CAUTION:
After the timing belt has been removed, never rotate the intake and exhaust cam sprocket. If the cam sprocket is rotated, the intake and exhaust valve heads strike together and valve stems are bent.

2. AUTOMATIC BELT TENSION ADJUSTER ASSEMBLY AND BELT IDLER

1) Remove the belt idler (A) and (B).

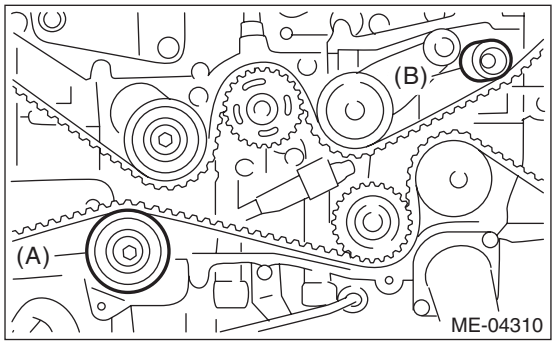

ME-04310

2) Remove the belt idler No. 2.

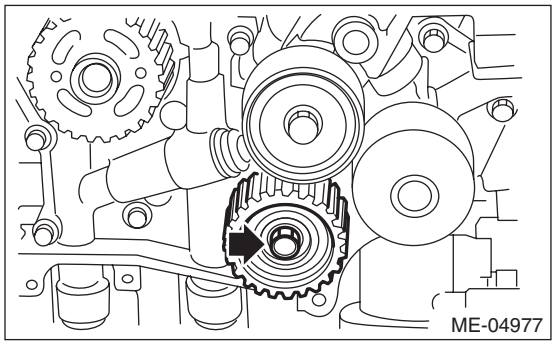
ME-04977

3) Remove the automatic belt tension adjuster assembly.

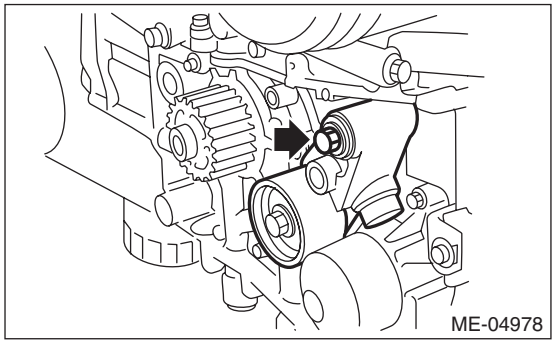
ME-04978

B: INSTALLATION

1. AUTOMATIC BELT TENSION ADJUSTER ASSEMBLY AND BELT IDLER

1) Prepare for installation of the automatic belt tension adjuster assembly.

CAUTION:
• Always use a vertical type pressing tool to move the adjuster rod down.
• Do not use a lateral type vise.
• Push the adjuster rod vertically.
• Press-in the push adjuster rod gradually taking three minutes or more.
• Do not allow press pressure to exceed 9,807 N (1,000 kgf, 2,205 lbf).
• Push in the adjuster rod to the end face of the cylinder. However, do not press the adjuster rod below the end face of the cylinder. Doing so may damage the cylinder.
• Do not release the press pressure until stopper pin is completely inserted.

(1) Attach the automatic belt tension adjuster assembly to vertical pressing tool.

(2) Slowly push in the adjuster rod with a pressure of 165 N (16.8 kgf, 37.1 lbf) or more until the adjuster rod is aligned with the stopper pin hole in the cylinder.

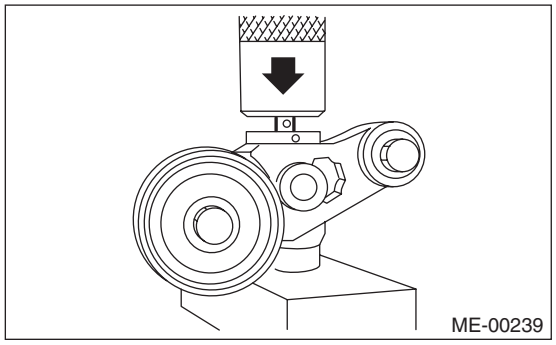
ME-00239

(3) With a 2 mm (0.08 in) dia. stopper pin or a 2 mm (nominal) dia. hex wrench inserted into the stopper pin hole in cylinder, secure the adjuster rod.

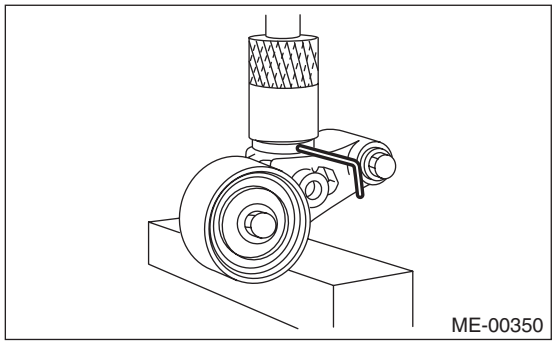
ME-00350

2) Install the automatic belt tension adjuster assembly.

Tightening torque:
39 N·m (4.0 kgf-m, 28.8 ft-lb)

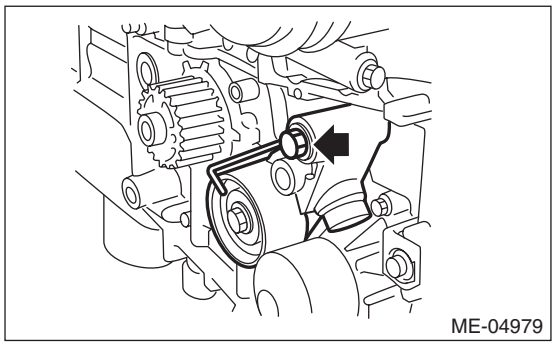
ME-04979

3) Install the belt idler No. 2.

Tightening torque:
39 N·m (4.0 kgf-m, 28.8 ft-lb)

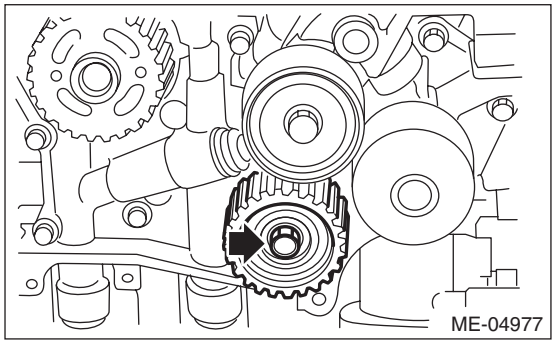
ME-04977

4) Install the belt idlers.

Tightening torque:
39 N·m (4.0 kgf-m, 28.8 ft-lb)

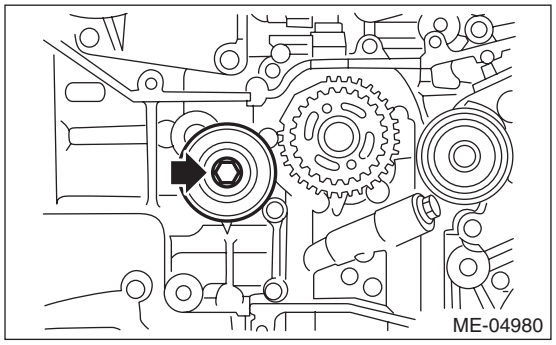
ME-04980

Tightening torque:
25 N·m (2.5 kgf-m, 18.4 ft-lb)

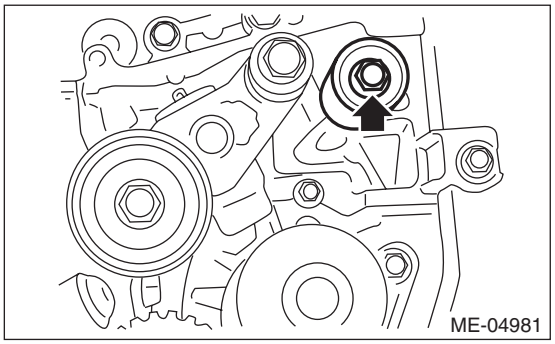

2. TIMING BELT

1) Prepare for installation of the automatic belt tension adjuster assembly. <Ref. to ME(H4DOTC)-54, AUTOMATIC BELT TENSION ADJUSTER ASSEMBLY AND BELT IDLER, INSTALLATION, Timing Belt.>
2) Align the mark (B) on crank sprocket with the mark (A) on oil pump.

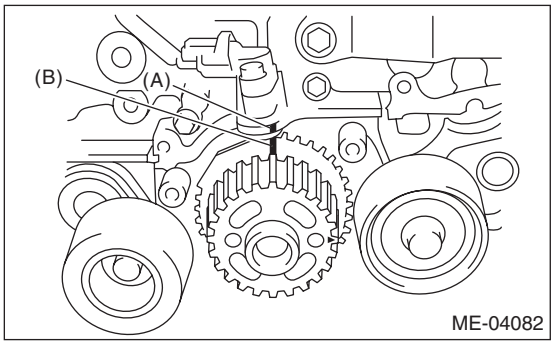

3) Align the single line mark (B) on the exhaust cam sprocket RH with notch (A) on the timing belt cover.

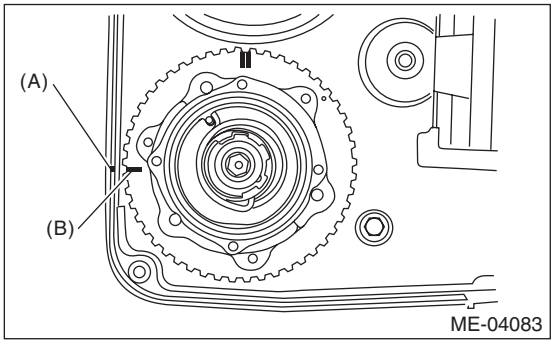

4) Align the single line mark (B) on the intake cam sprocket RH with notch (A) on the timing belt cover. Make sure that the double line marks (C) on intake and exhaust cam sprockets are aligned.

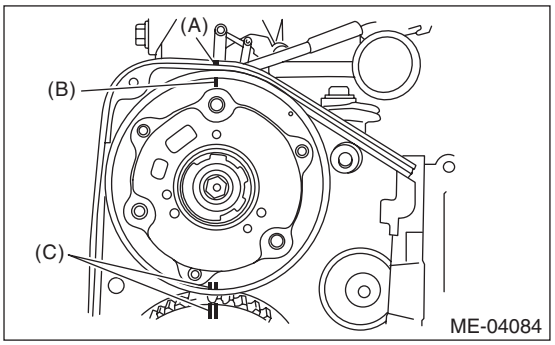

5) Align the single line mark (B) on exhaust cam sprocket LH with notch (A) on the timing belt cover by turning the sprocket counterclockwise (as viewed from front of engine).

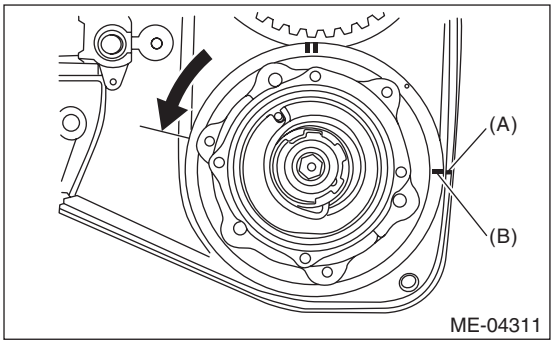

6) Align the single line mark (B) on intake cam sprocket LH with notch (A) on the timing belt cover by turning the sprocket clockwise (as viewed from front of engine). Make sure the double line marks (C) on the intake and exhaust cam sprockets are aligned.

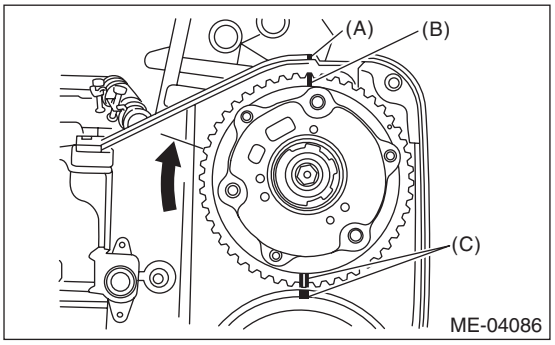

7) Make sure that the cam and crank sprockets are positioned properly.

CAUTION:

• Intake and exhaust camshafts for this DOHC engine can be independently rotated with the timing belts removed. As can be seen from the figure, if the intake and exhaust valves are lifted simultaneously, heads will interfere with each other, resulting in bent valves.

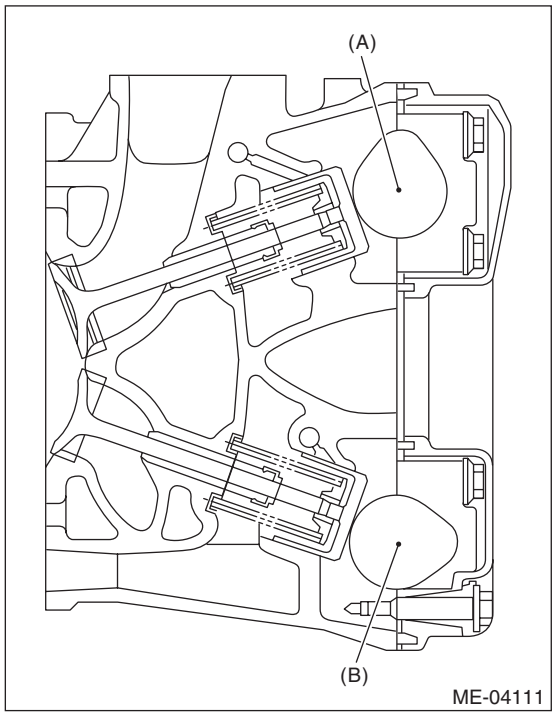

(A) Intake camshaft
(B) Exhaust camshaft

• When the timing belts are not installed, four camshafts are held at the "zero-lift" position, where all cams on camshafts are not pushing down on the intake and exhaust valves. (Under this condition, all valves remain unlifted.)

• When the camshafts are rotated to install the timing belts, #2 intake and #4 exhaust cam of camshaft LH are held, pushing their corresponding valves down. (Under this condition, these valves are held lifted.) Camshaft RH are held so that their cams do not push the valves down.

• Camshafts LH must be rotated from the zero-lift position to the position where the timing belt is to be installed with the smallest possible angle, in order to prevent mutual interference of intake and exhaust valve heads.

• Do not allow the camshafts to rotate in the direction shown in the upper figure. Doing this may cause both the intake and exhaust valves to lift simultaneously, resulting in mutual interference of valve heads.

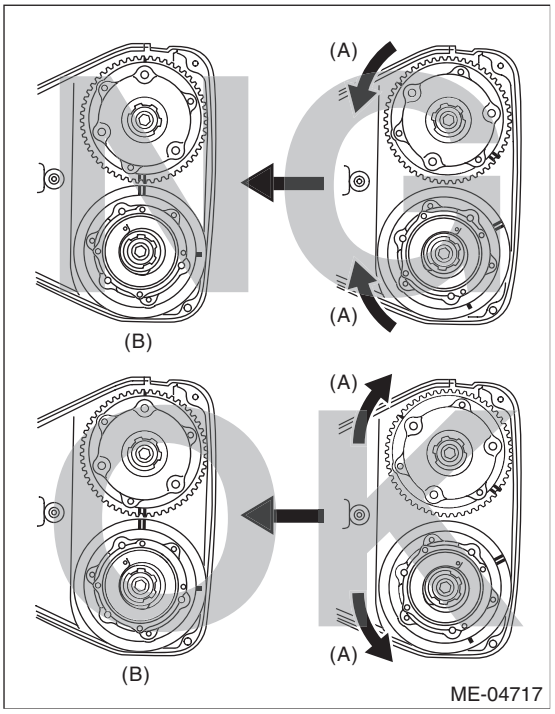

(A) Direction of rotation
(B) Timing belt installation position

8) Align the alignment mark on the timing belt with marks on the sprockets in the alphabetical order shown in the figure. While aligning marks, position the timing belt properly, and install the timing belt.

CAUTION:
- **If the timing belt slips by 1 or more teeth, the valve and piston may hit each other.**
- **Make sure that the direction of belt rotation is correct.**

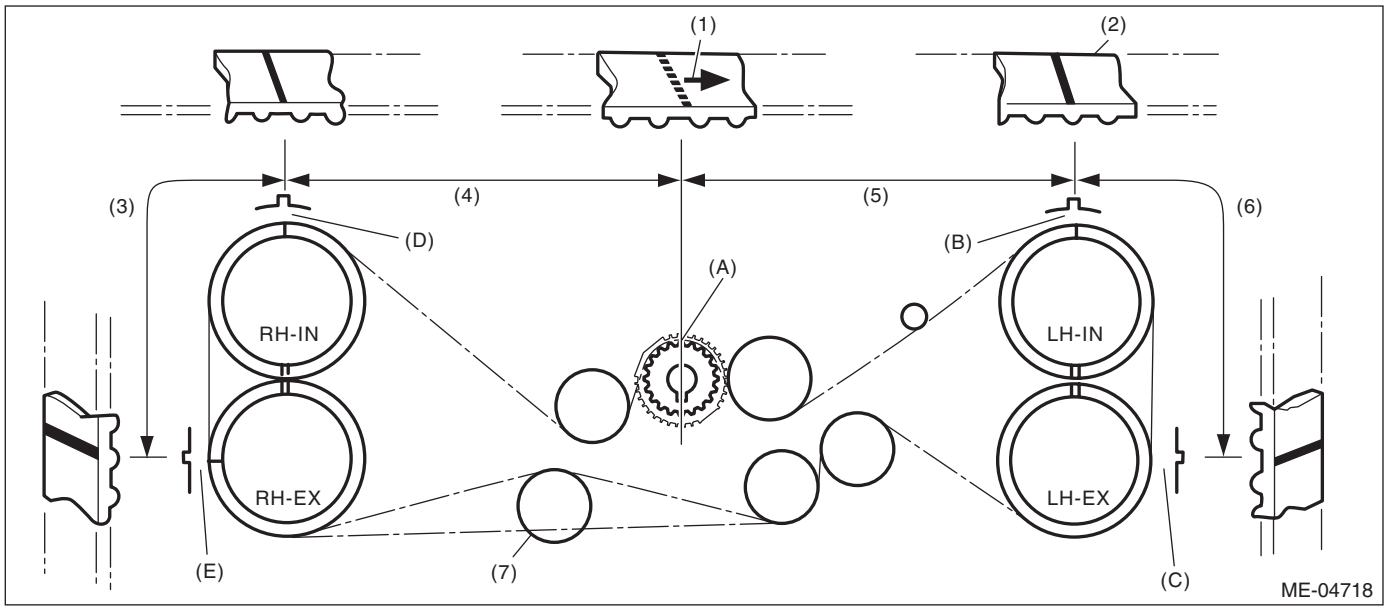

(1) Arrow mark
(2) Timing belt
(3) 28 teeth
(4) 54.5 teeth
(5) 51 teeth
(6) 28 teeth
(7) Install it in the end

9) Install the belt idlers.

Tightening torque:
39 N·m (4.0 kgf-m, 28.8 ft-lb)

NOTE:
Make sure that the marks on the timing belt and sprockets are aligned.

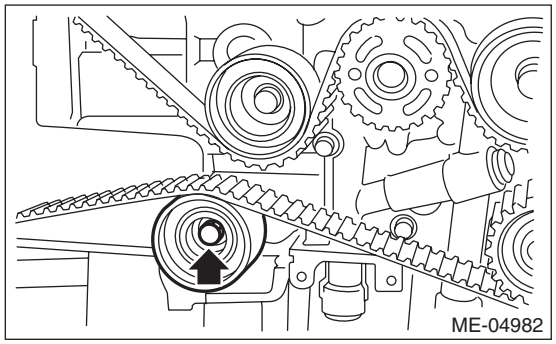

10) After ensuring that the marks on the timing belt and sprockets are aligned, remove the stopper pin from tensioner adjuster.

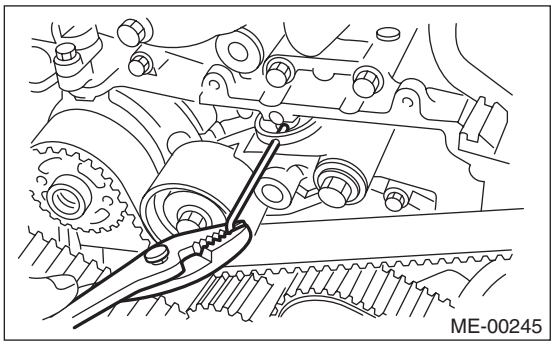
ME-00245

11) Install the timing belt guide.
(1) Temporarily tighten the bolts mounting the timing belt guide.

NOTE:
• Before installing the timing belt guide, clean the timing belt guide mounting bolt holes of the timing belt cover No. 2.
• Apply liquid gasket to the thread of the timing belt guide mounting bolt on the cam sprocket section. (when reusing bolts)

Liquid gasket:
THREE BOND 1324 (Part No. 004403042) or equivalent

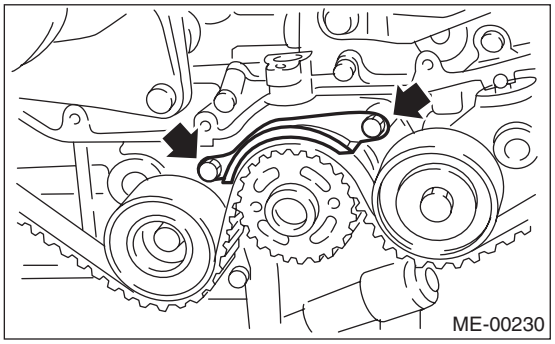
ME-00230

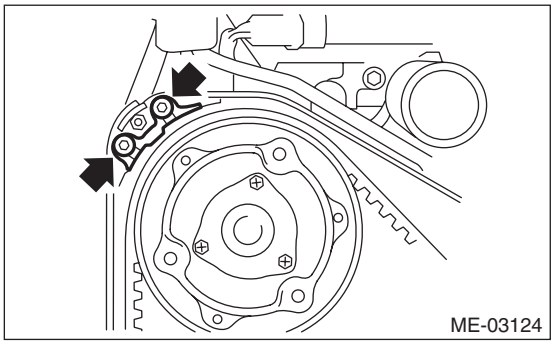
ME-03124

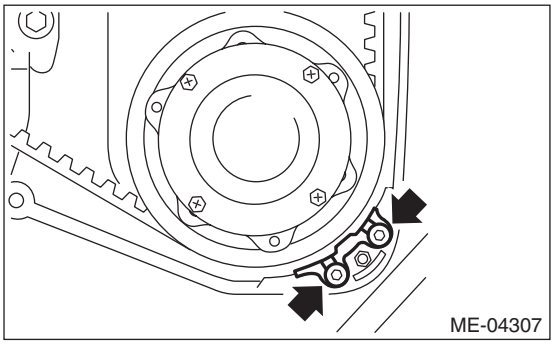
ME-04307

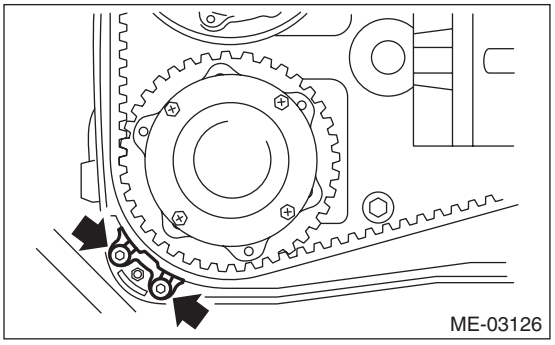
ME-03126

(2) Adjust the clearance between timing belt and timing belt guide using a thickness gauge and tighten.

Clearance:
1.0±0.5 mm (0.039±0.020 in)

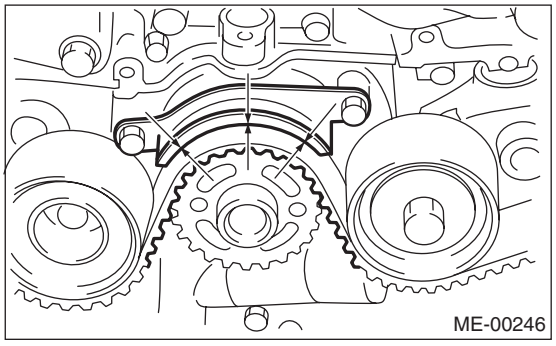
ME-00246

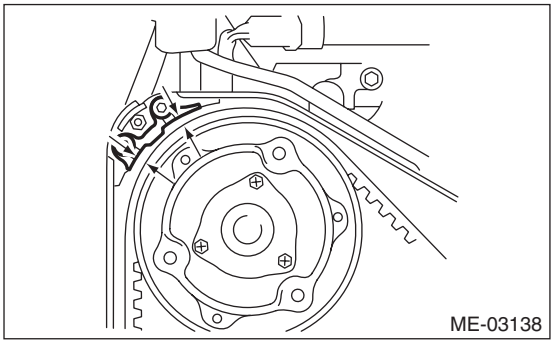
ME-03138

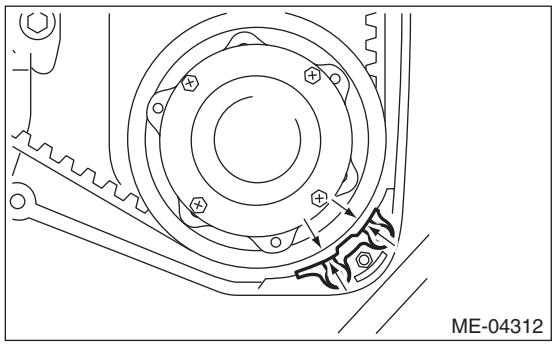

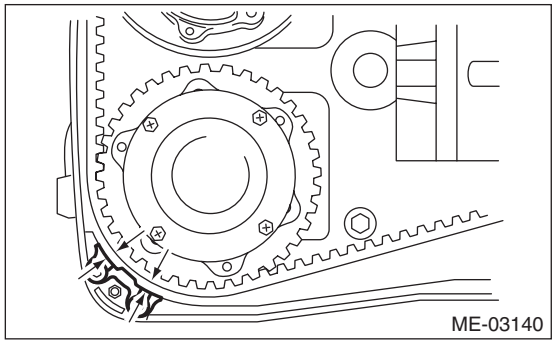

Tightening torque:
9.75 N·m (1.0 kgf-m, 7.2 ft-lb)

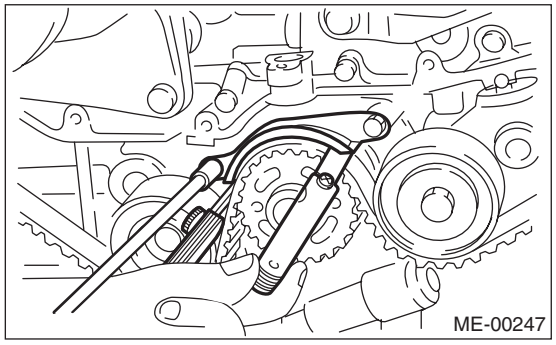

Tightening torque:
6.4 N·m (0.7 kgf-m, 4.7 ft-lb)

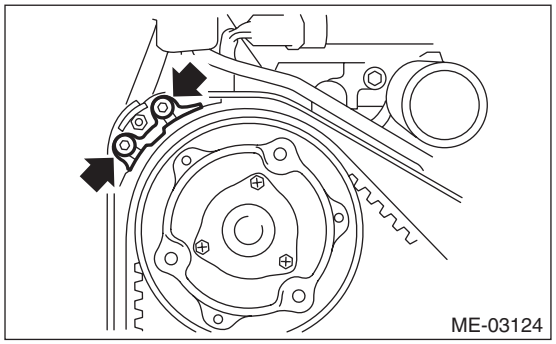

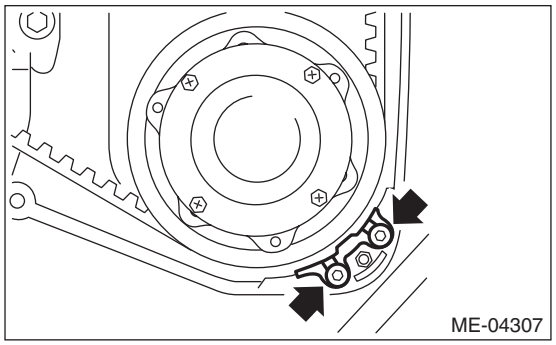

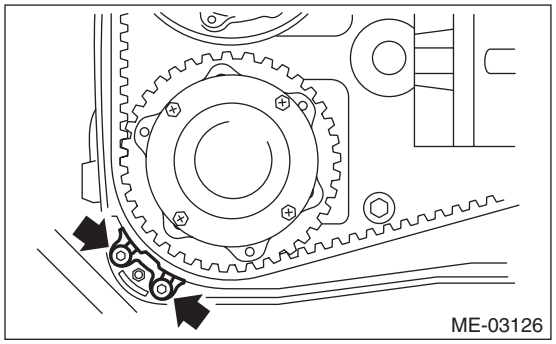

12) Install the timing belt cover. <Ref. to ME(H4DOTC)-49, INSTALLATION, Timing Belt Cover.>
13) Install the crank pulley. <Ref. to ME(H4DOTC)-44, INSTALLATION, Crank Pulley.>

C: INSPECTION

1. TIMING BELT

1) Check the timing belt teeth for breaks, cracks or wear. If any fault is found, replace the timing belt.
2) Check the condition on the back surface of the timing belt. If cracks are found, replace the timing belt.

CAUTION:
• Be careful not to let oil, grease or coolant contact the timing belt. Remove quickly and thoroughly if this happens.
• Do not bend the timing belt sharply.

In radial diameter h:
60 mm (2.36 in) or more

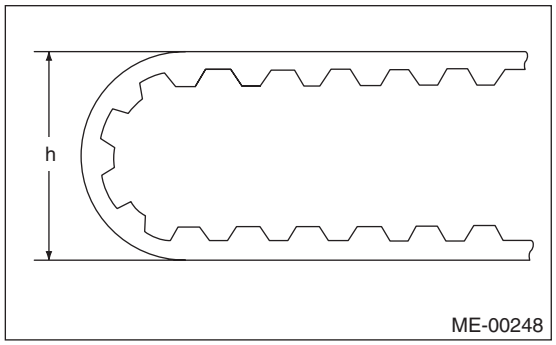

2. AUTOMATIC BELT TENSION ADJUSTER

1) Visually check the oil seals for leaks, and rod ends for abnormal wear and scratches. If necessary, replace the automatic belt tension adjuster assembly.

NOTE:
Slight traces of oil on the oil seal of the rod does not indicate a problem.
2) Check that the adjuster rod does not move when a pressure of 165 N (16.8 kgf, 37.1 lbf) is applied to it. This is to check adjuster rod stiffness.
3) If the adjuster rod is not stiff enough and moves freely when applying 165 N (16.8 kgf, 37.1 lbf), check it using the following procedures:
(1) Slowly press the adjuster rod down to the end surface of cylinder. Repeat this operation two to three times.
(2) With the adjuster rod moved all the way up, apply a pressure of 165 N (16.8 kgf, 37.1 lbf) to it, and check the adjuster rod stiffness.
(3) If the adjuster rod is not stiff and moves down, replace the automatic belt tension adjuster assembly with a new part.

CAUTION:
• Always use a vertical type pressing tool to move the adjuster rod down.
• Do not use a lateral type vise.
• Push the adjuster rod vertically.
• Press-in the push adjuster rod gradually taking three minutes or more.
• Do not allow press pressure to exceed 9,807 N (1,000 kgf, 2,205 lbf).
• Push in the adjuster rod to the end face of the cylinder. However, do not press the adjuster rod below the end face of the cylinder. Doing so may damage the cylinder.
4) Measure the amount of adjuster rod protrusion "L" from the end surface of the cylinder. If it is not within specifications, replace the automatic belt tension adjuster assembly with a new part.

Protrusion amount of adjuster rod L:
5.2 — 6.2 mm (0.205 — 0.244 in)

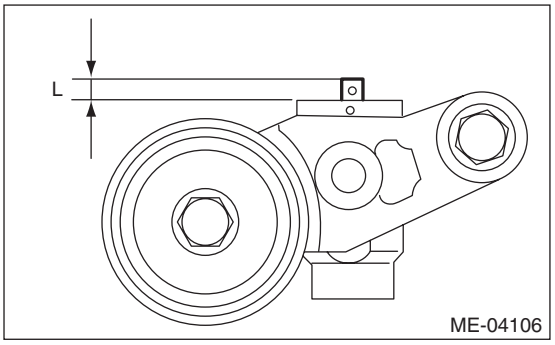

3. BELT TENSION PULLEY

1) Check the mating surfaces of timing belt and contact point of adjuster rod for abnormal wear or scratches. Replace the automatic belt tension adjuster assembly with a new part if faulty.
2) Check the belt tension pulley for smooth rotation. Replace the automatic belt tension adjuster assembly with a new part if abnormal noise or excessive play occurs.
3) Check the belt tension pulley for grease leakage.

4. BELT IDLER

1) Check the belt idler for smooth rotation. Replace if noise or excessive play occurs.
2) Check the outer contacting surfaces of idler pulley for abnormal wear and scratches.
3) Check the belt idler for grease leakage.

16.Cam Sprocket

A: REMOVAL

NOTE:
When replacing a single part, perform the work with the engine assembly installed to body.
1) Remove the crank pulley. <Ref. to ME(H4DOTC)-44, REMOVAL, Crank Pulley.>
2) Remove the timing belt cover. <Ref. to ME(H4DOTC)-46, REMOVAL, Timing Belt Cover.>
3) Remove the timing belt. <Ref. to ME(H4DOTC)-52, REMOVAL, Timing Belt.>
4) Remove the actuator covers of the intake and exhaust cam sprockets.
5) Use the ST to lock the cam sprocket, and remove the cam sprocket bolt.
ST 499977500 CAM SPROCKET WRENCH

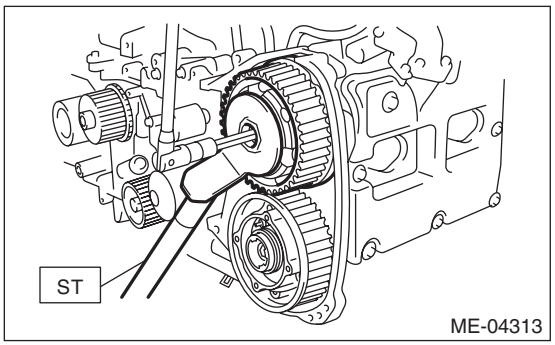

6) Remove the cam sprocket.

B: INSTALLATION

1) Install the cam sprocket.
2) Use the ST to lock the cam sprocket, and install the cam sprocket bolt.

NOTE:
Do not confuse cam sprockets (LH) and (RH) or (INT) and (EXH) during installation.
ST 499977500 CAM SPROCKET WRENCH

Tightening torque:
Tighten to 30 N·m (3.1 kgf-m, 22.1 ft-lb) of torque, and then tighten further by 45°.

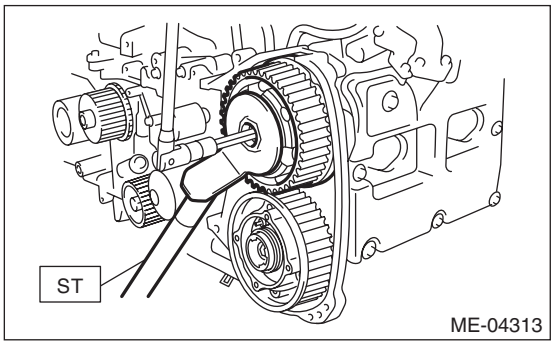

3) Install the actuator covers of intake cam sprocket and exhaust cam sprocket.

NOTE:
Use new O-rings.

Tightening torque:
3.4 N·m (0.3 kgf-m, 2.5 ft-lb)
4) Install the timing belt. <Ref. to ME(H4DOTC)-54, INSTALLATION, Timing Belt.>
5) Install the timing belt cover. <Ref. to ME(H4DOTC)-49, INSTALLATION, Timing Belt Cover.>
6) Install the crank pulley. <Ref. to ME(H4DOTC)-44, INSTALLATION, Crank Pulley.>

C: INSPECTION

1) Check the cam sprocket teeth for abnormal wear and scratches.
2) Make sure there is no free play between cam sprocket and key.

17.Crank Sprocket

A: REMOVAL

NOTE:
When replacing a single part, perform the work with the engine assembly installed to body.
1) Remove the crank pulley. <Ref. to ME(H4DOTC)-44, REMOVAL, Crank Pulley.>
2) Remove the timing belt cover. <Ref. to ME(H4DOTC)-46, REMOVAL, Timing Belt Cover.>
3) Remove the timing belt. <Ref. to ME(H4DOTC)-52, REMOVAL, Timing Belt.>
4) Remove the crank sprocket.

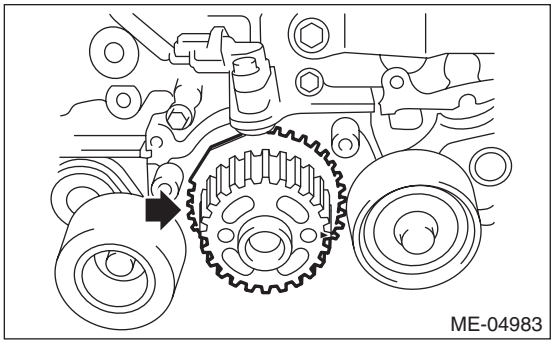

B: INSTALLATION

1) Install the crank sprocket.

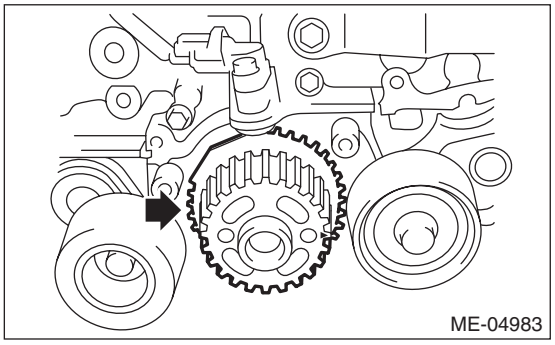

2) Install the timing belt. <Ref. to ME(H4DOTC)-54, INSTALLATION, Timing Belt.>
3) Install the timing belt cover. <Ref. to ME(H4DOTC)-49, INSTALLATION, Timing Belt Cover.>
4) Install the crank pulley. <Ref. to ME(H4DOTC)-44, INSTALLATION, Crank Pulley.>

C: INSPECTION

1) Check the crank sprocket teeth for abnormal wear and scratches.
2) Make sure there is no free play between crank sprocket and key.
3) Check the crank sprocket protrusion used for sensor for damage and contamination of foreign matter.

18.Camshaft

A: REMOVAL

1) Remove the engine from the vehicle. <Ref. to ME(H4DOTC)-31, REMOVAL, Engine Assembly.>
2) Remove the crank pulley. <Ref. to ME(H4DOTC)-44, REMOVAL, Crank Pulley.>
3) Remove the timing belt cover. <Ref. to ME(H4DOTC)-46, REMOVAL, Timing Belt Cover.>
4) Remove the timing belt. <Ref. to ME(H4DOTC)-52, REMOVAL, Timing Belt.>
5) Remove the cam sprocket. <Ref. to ME(H4DOTC)-61, REMOVAL, Cam Sprocket.>
6) Disconnect the connector of the intake oil flow control solenoid valve.

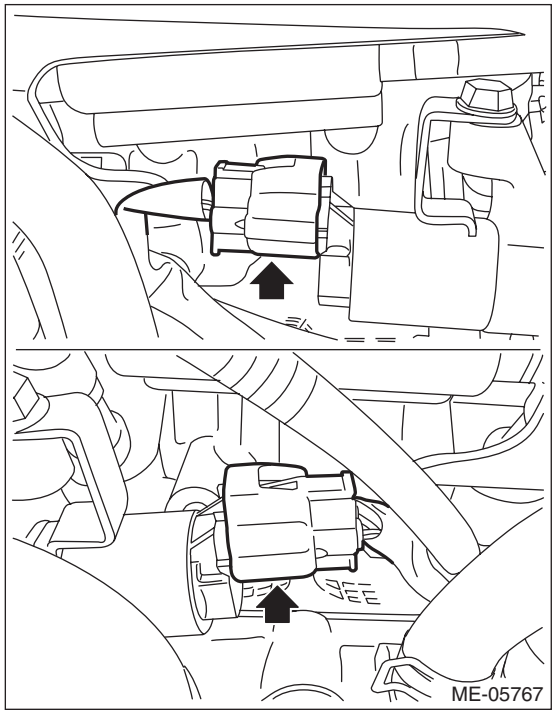
ME-05767

7) Disconnect the connector (A) from the exhaust camshaft position sensor and the connector (B) form the exhaust oil flow control solenoid valve.

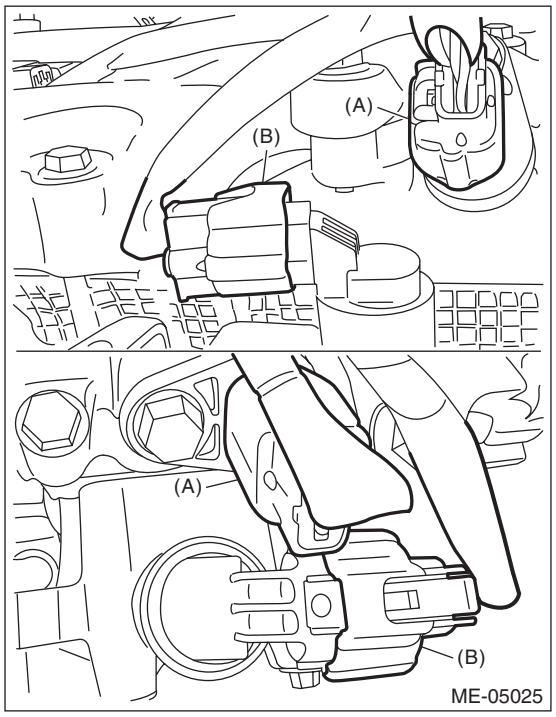

ME-05025

8) Remove the timing belt cover No. 2 RH (A) and timing belt cover No. 2 LH (B).

NOTE:
Do not damage or lose the seal rubber when removing the timing belt covers.

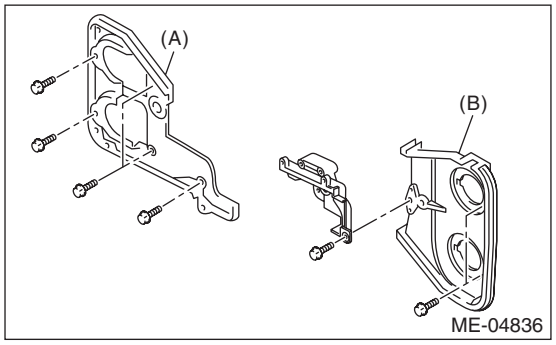

ME-04836

9) Remove the tensioner bracket.

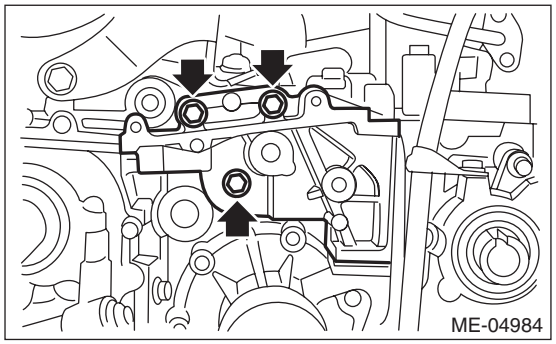
ME-04984

10) Disconnect the oil level switch connector.

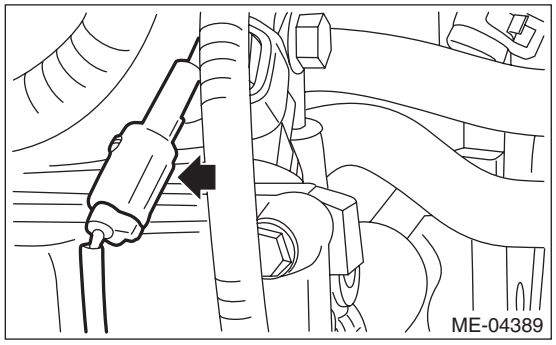

11) Remove the clip (A) and bolt (B) securing the engine harness or oil level switch harness to the rocker cover.

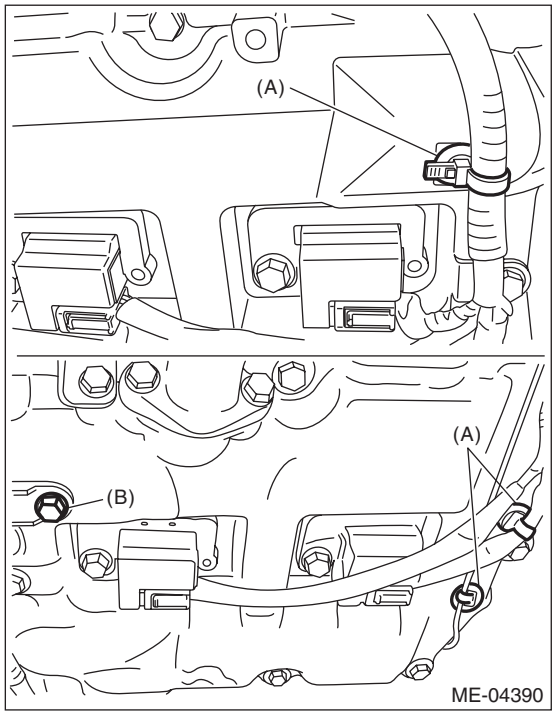

12) Remove the ignition coil. <Ref. to IG(H4DOTC)-6, REMOVAL, Ignition Coil.>

13) Remove the scavenge pump. (RH side only) <Ref. to LU(H4SO)-30, REMOVAL, Scavenge Pump.>

14) Disconnect PCV hose (A) and vacuum hose (B) from the rocker cover.

NOTE:
Pinch the clamp of the PCV hose (A) by fitting the cut out in the ST with the protrusion on the clamp as shown in the figure, and unlock the clamp.
ST 18353AA000 CLAMP PLIERS

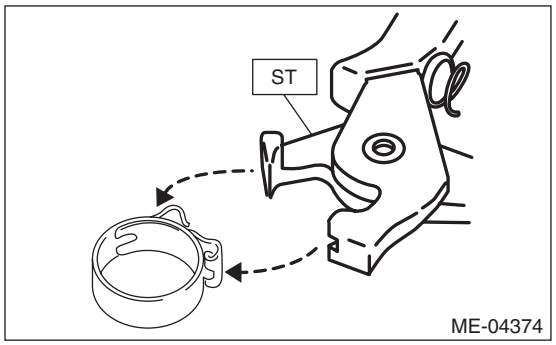

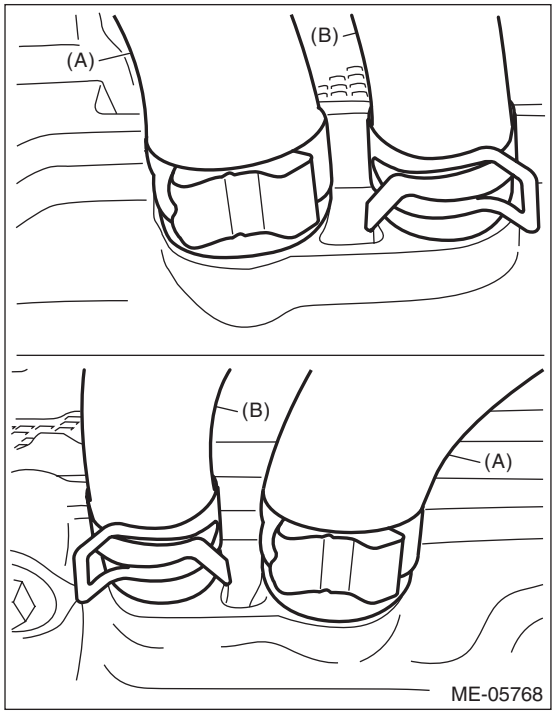

15) Remove the rocker cover.

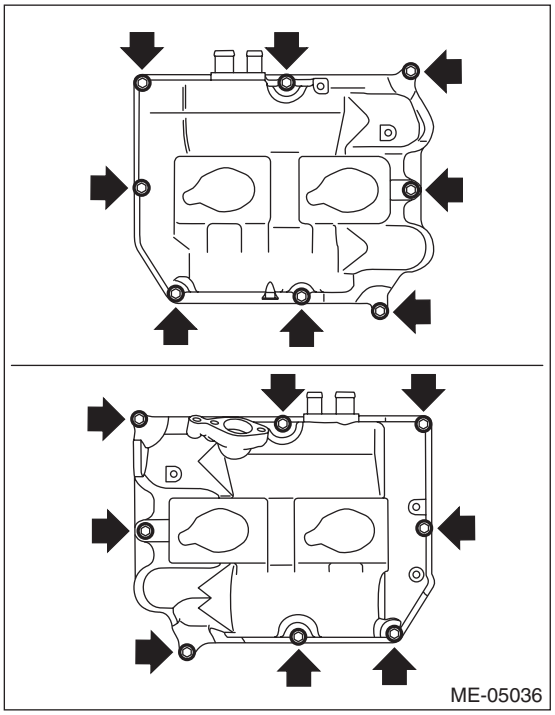

16) Remove the union bolt without filter (without protrusion) which secures the oil pipe to the front camshaft cap.

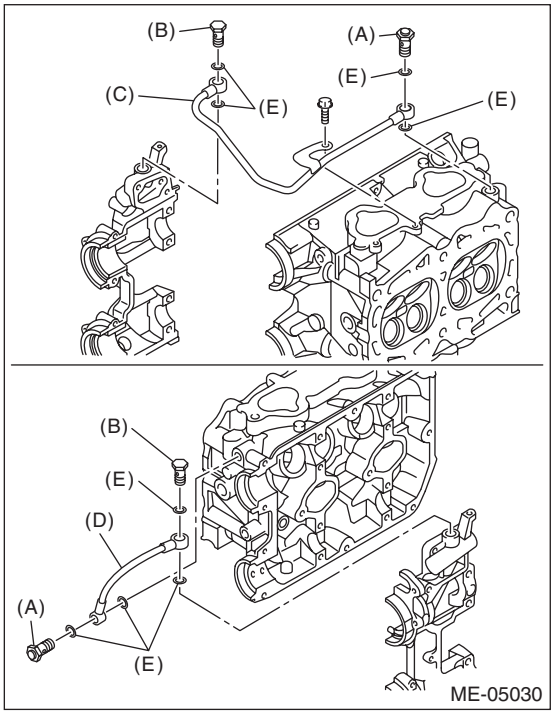

(A) Union bolt with filter (with protrusion)
(B) Union bolt without filter (without protrusion)
(C) Oil pipe RH
(D) Oil pipe LH
(E) Gasket

17) Loosen the bolts located on the upper side of the front camshaft cap, intake camshaft cap and rear camshaft cap (RH side only) equally, a little at a time in alphabetical order, as shown in the figure.

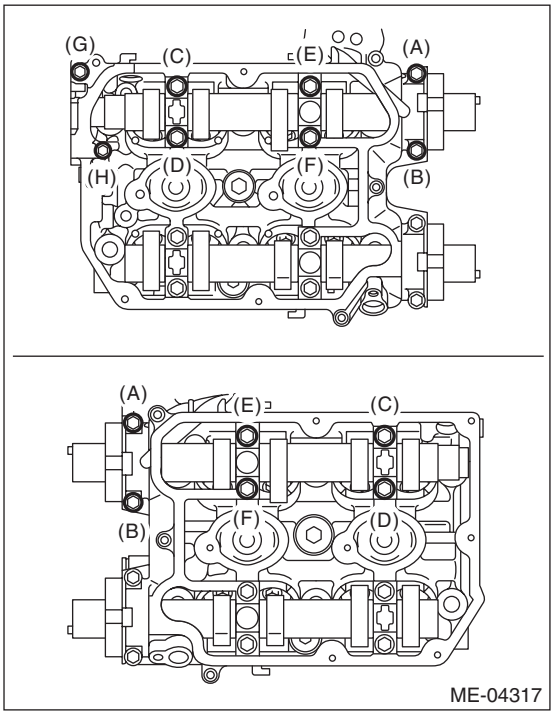

18) Loosen the lower side of the front camshaft cap and the exhaust camshaft cap bolts equally, a little at a time in alphabetical sequence shown in the figure.

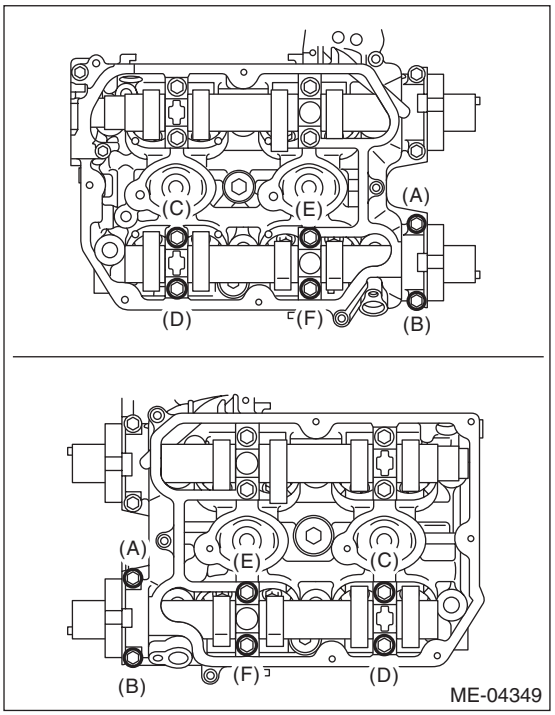

19) Remove the front camshaft cap.
20) Remove the intake camshaft caps, intake camshaft and rear camshaft caps (RH side only).

21) Remove the exhaust camshaft caps and exhaust camshaft.

NOTE:
Arrange camshaft caps in order so that they can be installed in their original positions.
22) Remove the oil seal.

CAUTION:
Do not scratch the journal surface when removing the oil seal.
23) Similarly, remove the camshaft RH and related parts.

B: INSTALLATION

1) Install the camshaft.
Apply engine oil to the cylinder head at camshaft journal installation location before installing the camshaft. Install the camshaft so that each valve is close to or in contact with base circle of the cam lobe.

NOTE:
• Set the camshaft to the position shown in the figure.
• When set at the position shown in the figure, it is not necessary to rotate the camshaft RH when installing the timing belt, but it is necessary to rotate the camshaft LH slightly.

Intake camshaft LH:
Rotate 80° clockwise.

Exhaust camshaft LH:
Rotate 45° counterclockwise.

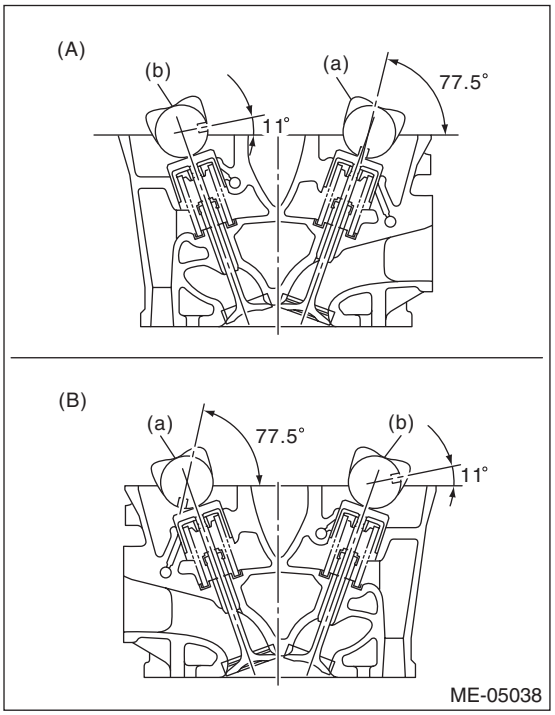

(A) Cylinder head RH
(B) Cylinder head LH
(a) Intake camshaft
(b) Exhaust camshaft

2) Install the camshaft cap.
(1) Apply small amount of liquid gasket to the mating surface of front camshaft cap.

NOTE:
- Install within 5 min. after applying liquid gasket.
- Do not apply liquid gasket excessively. Applying excessively may cause excess gasket to come out and flow toward oil seal, resulting in oil leak.

Liquid gasket:
THREE BOND 1217G (Part No. K0877Y0100) or equivalent

Liquid gasket applying diameter:
Mating surfaces other than ranges A and B
2±0.5 mm (0.0787±0.0197 in)
Mating surfaces of ranges A and B
3±1 mm (0.1181±0.0394 in)

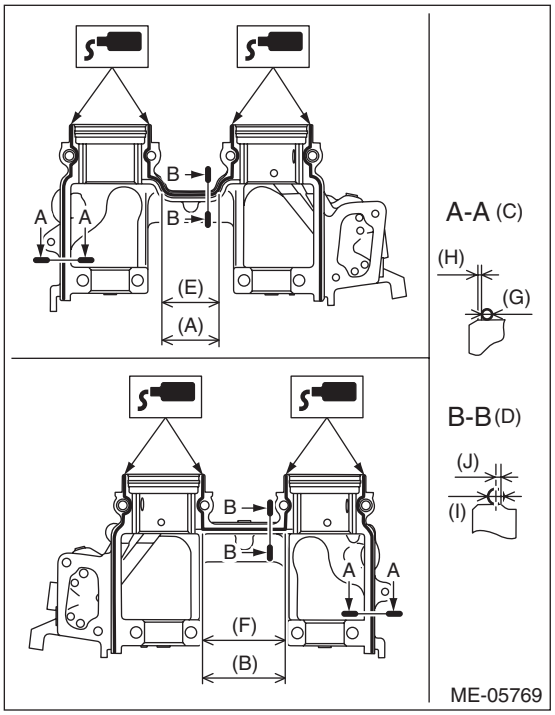

(A) Range A
(B) Range B
(C) Liquid gasket applying position of mating surfaces of ranges other than A and B
(D) Liquid gasket applying position of mating surfaces of ranges A and B
(E) 44.8 mm (1.7638 in)
(F) 65 mm (2.5591 in)
(G) ϕ2±0.5 mm (0.0787±0.0197 in)
(H) 0.5±0.5 mm (0.0197±0.0197 in)
(I) ϕ3±1 mm (0.1181±0.0394 in)
(J) 1 mm (0.0394 in) or less

(2) Apply small amount of liquid gasket to the mating surface of rear camshaft cap (RH side only).

NOTE:
- Install within 5 min. after applying liquid gasket.
- Do not apply liquid gasket excessively. Applying excessively may cause excess gasket to come out and flow toward oil seal, resulting in oil leak.

Liquid gasket:
THREE BOND 1217G (Part No. K0877Y0100) or equivalent

Liquid gasket applying diameter:
2±0.5 mm (0.0787±0.0197 in)

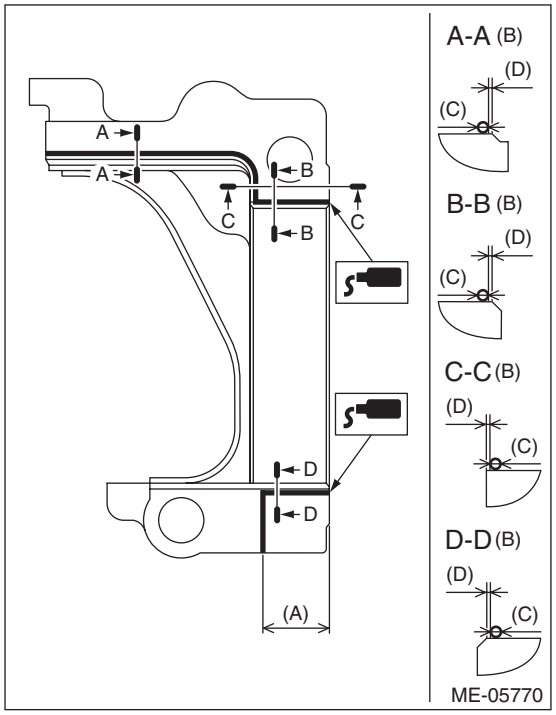

(A) 12.5±1.0 mm (0.4921±0.0394 in)
(B) Liquid gasket applying position
(C) ϕ2±0.5 mm (0.0787±0.0197 in)
(D) 0.5±0.5 mm (0.0197±0.0197 in)

(3) Apply a thin coat of engine oil to the cap journal surface, and install the camshaft cap to the camshaft.

(4) Gradually tighten the camshaft cap in at least two steps, in alphabetical order shown in the figure, and then tighten to the specified torque.

Tightening torque:
T1: 9.75 N·m (1.0 kgf-m, 7.2 ft-lb)
T2: 20 N·m (2.0 kgf-m, 14.8 ft-lb)

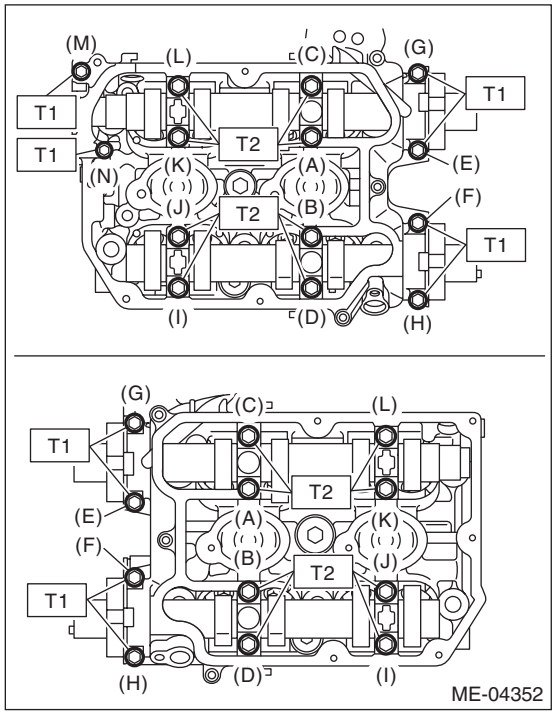

(5) After tightening the camshaft cap, ensure the camshaft rotates only slightly while holding it at base circle.

3) Apply a thin coat of engine oil to the periphery of the camshaft oil seal and oil seal lip, and install the oil seal on the camshaft using ST1 and ST2.

NOTE:
Use a new oil seal.

ST1	499587600	OIL SEAL INSTALLER
ST2	499597200	OIL SEAL GUIDE

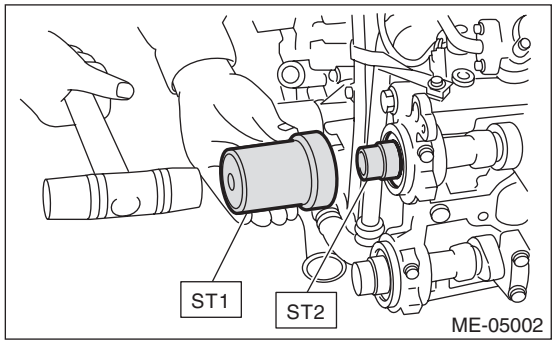

4) Install the oil pipe to the front camshaft cap using the union bolt without filter (without protrusion).

NOTE:
Use a new gasket.

Tightening torque:
29 N·m (3.0 kgf-m, 21.4 ft-lb)

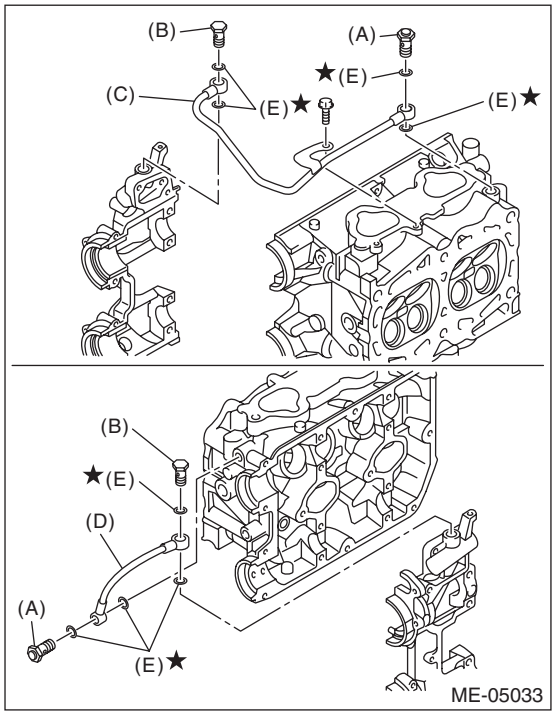

(A) Union bolt with filter (with protrusion)
(B) Union bolt without filter (without protrusion)
(C) Oil pipe RH
(D) Oil pipe LH
(E) Gasket

5) Install the tensioner bracket.

Tightening torque:
24.5 N·m (2.5 kgf-m, 18.1 ft-lb)

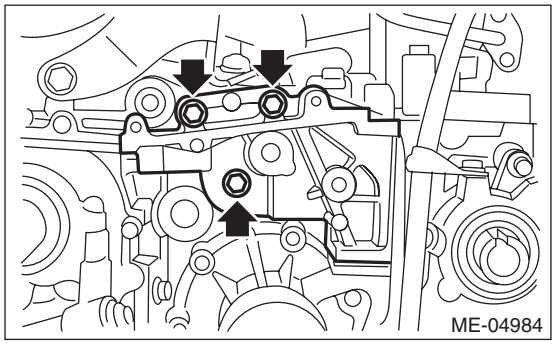

6) Install the timing belt cover No. 2 RH (A) and timing belt cover No. 2 LH (B).

Tightening torque:
5 N·m (0.5 kgf-m, 3.7 ft-lb)

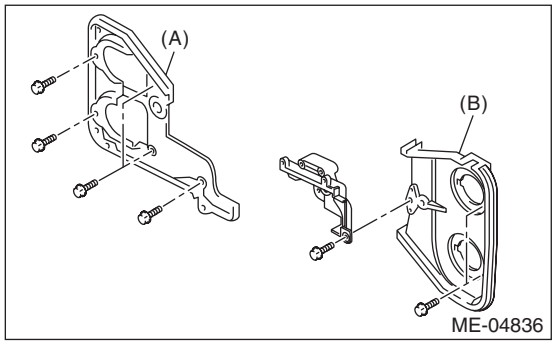

7) Install the cam sprocket. <Ref. to ME(H4DOTC)-61, INSTALLATION, Cam Sprocket.>
8) Install the timing belt. <Ref. to ME(H4DOTC)-54, INSTALLATION, Timing Belt.>
9) Adjust the valve clearance. <Ref. to ME(H4DOTC)-30, ADJUSTMENT, Valve Clearance.>
10) Install the rocker cover.
(1) Install the rocker cover gasket to the rocker cover. (outer section and ignition coil section)

NOTE:
Use a new rocker cover gasket.

(2) Apply liquid gasket to the specified point of the cylinder head.

NOTE:
Install within 5 min. after applying liquid gasket.

Liquid gasket:
THREE BOND 1217G (Part No. K0877Y0100) or equivalent

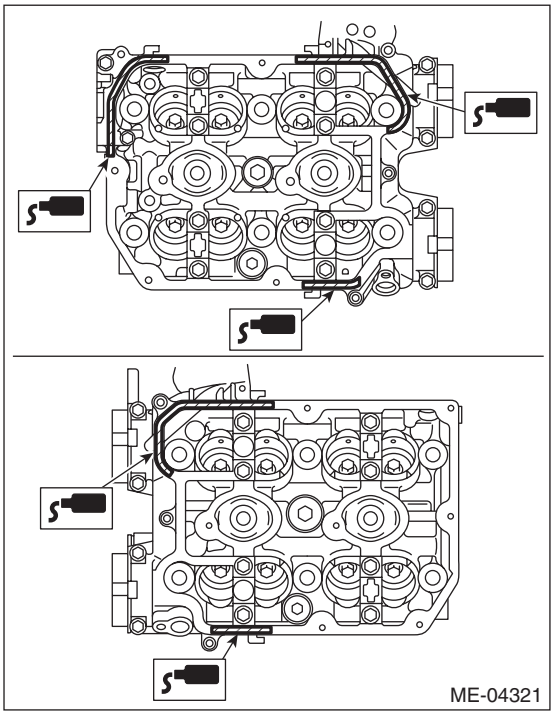

(3) Install the rocker cover onto cylinder heads. Ensure the gasket is properly positioned during installation.

(4) Temporarily tighten the rocker cover bolts in alphabetical order shown in the figure, and then tighten to specified torque in alphabetical order.

Tightening torque:
6.4 N·m (0.7 kgf-m, 4.7 ft-lb)

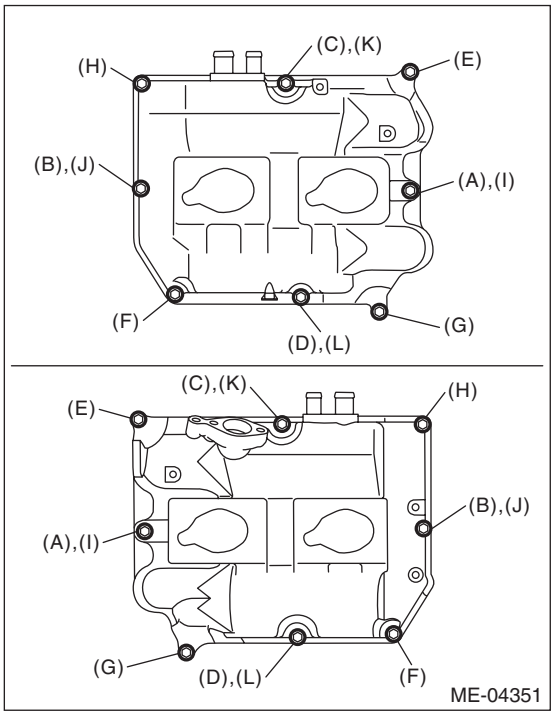

11) Install the scavenge pump. <Ref. to LU(H4SO)-30, INSTALLATION, Scavenge Pump.>
12) Connect the PCV hose (A) and vacuum hose (B) to the rocker cover.

NOTE:
Use a new clamp for the PCV hose (A), fit the cut out in the ST with the protrusion on the clamp as shown in the figure, and lock the clamp.
ST 18353AA000 CLAMP PLIERS

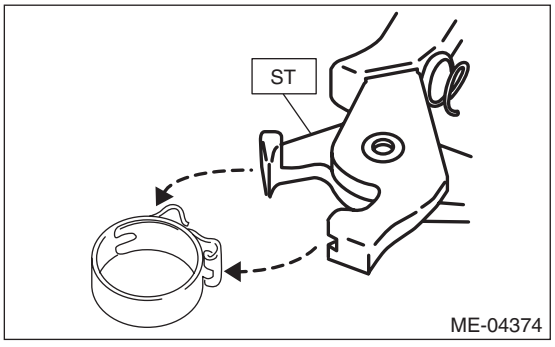

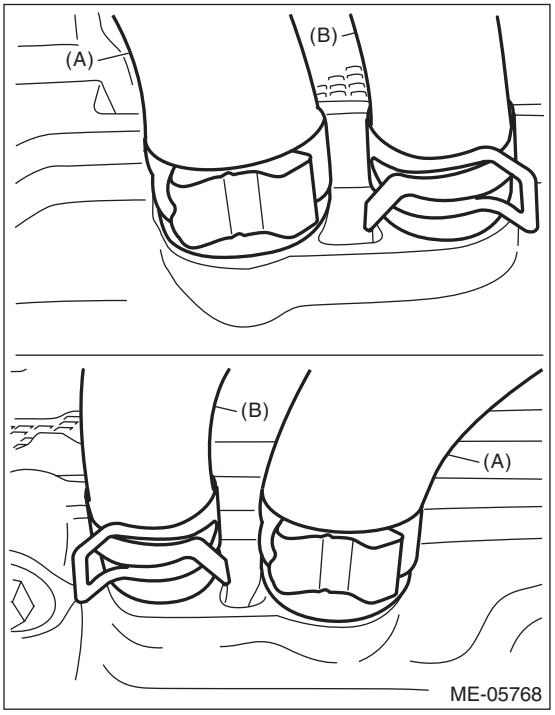

13) Install the ignition coil. <Ref. to IG(H4DOTC)-6, INSTALLATION, Ignition Coil.>
14) Secure the engine harness or oil level switch harness to the rocker cover with the clip (A) and bolt (B).

Tightening torque:
6.4 N·m (0.7 kgf-m, 4.7 ft-lb)

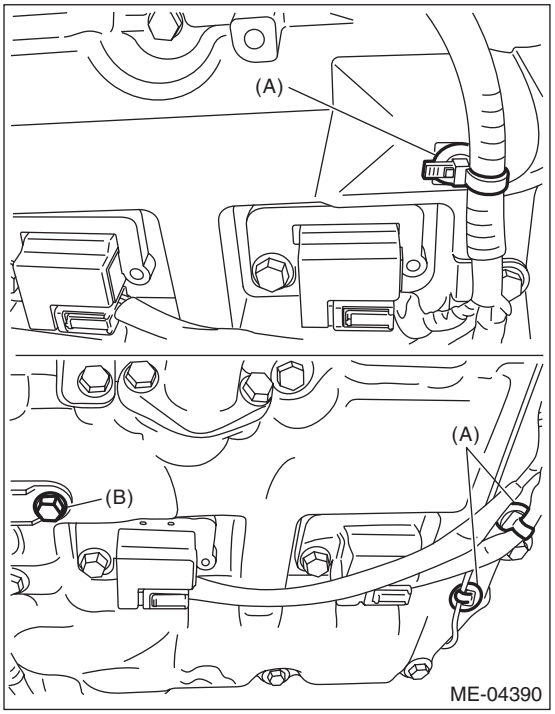

15) Connect the connector to the oil level switch.

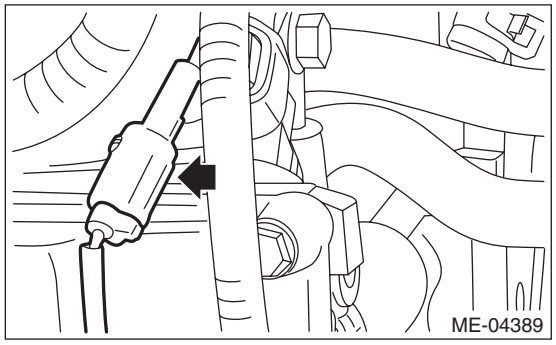

16) Connect the connector to the intake oil flow control solenoid valve.

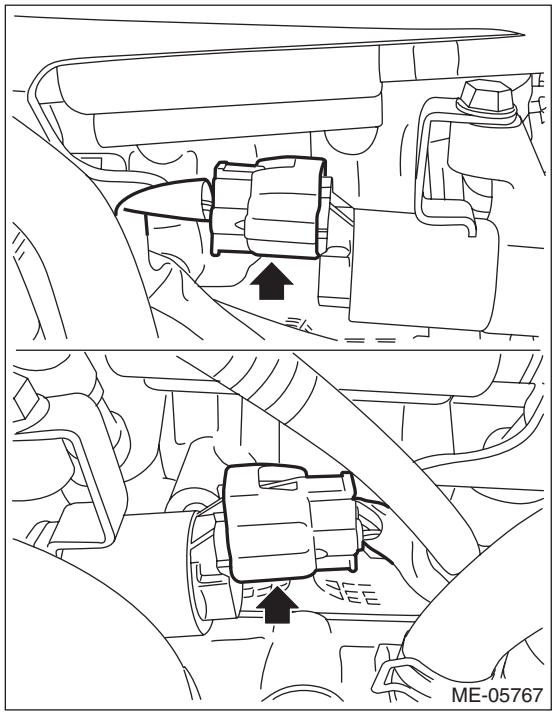

17) Connect the connector (A) from the exhaust camshaft position sensor and the connector (B) to the exhaust oil flow control solenoid valve.

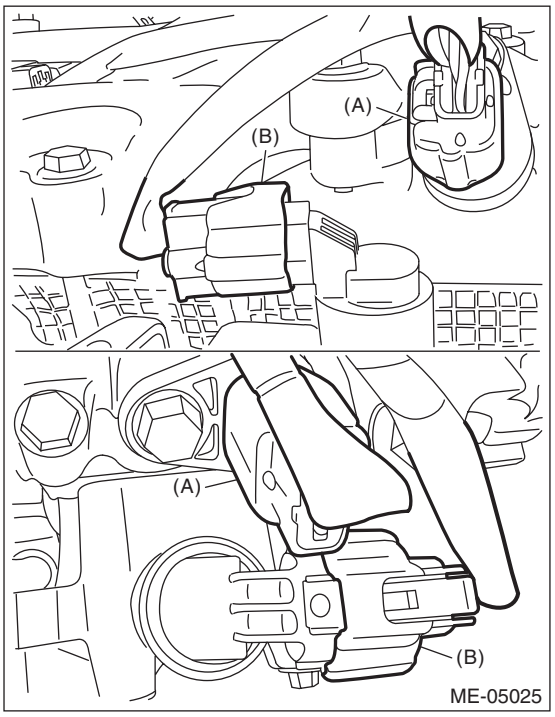

18) Install the timing belt cover. <Ref. to ME(H4DOTC)-49, INSTALLATION, Timing Belt Cover.>

19) Install the crank pulley. <Ref. to ME(H4DOTC)-44, INSTALLATION, Crank Pulley.>

20) Install the engine to the vehicle. <Ref. to ME(H4DOTC)-34, INSTALLATION, Engine Assembly.>

C: INSPECTION

1) Measure the bend, and repair or replace if necessary.

Camshaft bend limit:
0.020 mm (0.00079 in)

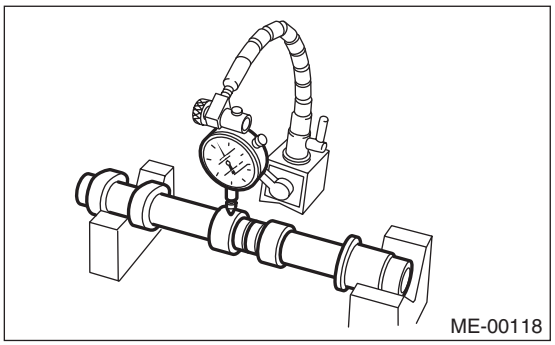

2) Check the journal for damage and wear. Replace if faulty.
3) Check the cutout portion used for camshaft sensor for damage. Replace if faulty.
4) Check the cam face condition, and remove the minor faults by grinding with oil stone. Replace if there is uneven wear or others.
5) Measure the cam lobe height “H” and cam base circle diameter “A”. If it exceeds the standard or offset wear occurs, replace it.

Cam lobe height H:

Standard
Intake
46.55 — 46.65 mm (1.833 — 1.837 in)
Exhaust
45.85 — 45.95 mm (1.805 — 1.809 in)

Cam base circle diameter A:
Standard
37.0 mm (1.457 in)

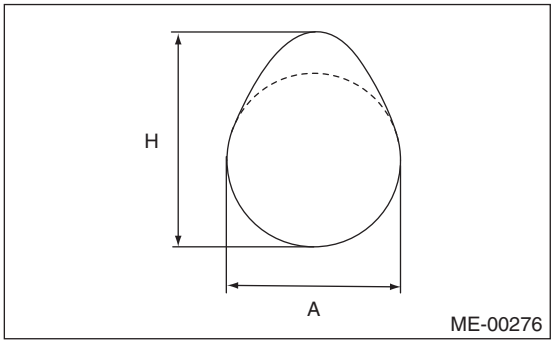

6) Measure the outside diameter of camshaft journal. If the journal diameter is not within specification, check the oil clearance.

	Camshaft journal	
	Front	Center, rear
Standard mm (in)	37.946 — 37.963 (1.4939 — 1.4946)	29.946 — 29.963 (1.1790 — 1.1796)

7) Measure the oil clearance of camshaft journal.
(1) Clean the camshaft cap and cylinder head camshaft journal.
(2) Place the camshaft on cylinder head. (Without installing the valve lifter)
(3) Place a plastigauge across each camshaft journals.
(4) Gradually tighten the camshaft cap in at least two steps, in alphabetical order shown in the figure, and then tighten to the specified torque. Do not turn the camshaft.

Tightening torque:
T1: 9.75 N·m (1.0 kgf-m, 7.2 ft-lb)
T2: 20 N·m (2.0 kgf-m, 7.2 ft-lb)

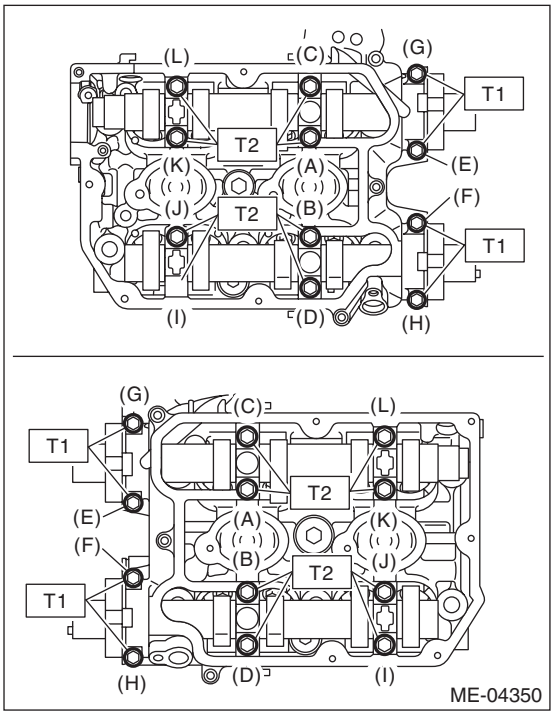

(5) Remove the camshaft cap.

(6) Measure the widest point of the plastigauge on each journal. If oil clearance exceeds the standard, replace the camshaft. If necessary, replace the camshaft caps and cylinder head as a set.

Camshaft oil clearance:
Standard
0.037 — 0.072 mm (0.0015 — 0.0028 in)

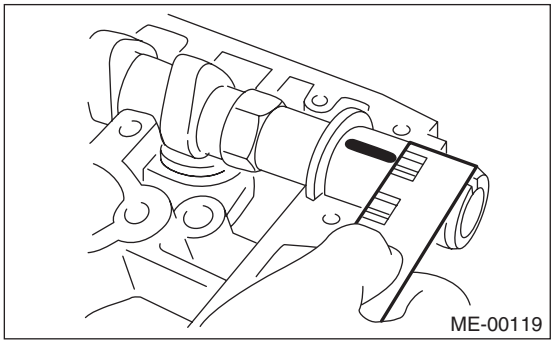

(7) Completely remove the plastigauge.

8) Measure the thrust clearance of camshaft with the dial gauge set at end of camshaft. If the thrust clearance is not within the standard or there is offset wear, replace the camshaft caps and cylinder head as a set. If necessary replace the camshaft.

Camshaft thrust clearance:
Standard
0.068 — 0.116 mm (0.0027 — 0.0047 in)

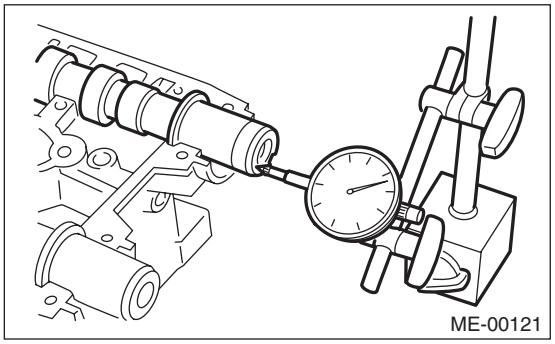

19.Cylinder Head

A: REMOVAL

1) Remove the engine from the vehicle. <Ref. to ME(H4DOTC)-31, REMOVAL, Engine Assembly.>
2) Remove the intake manifold. <Ref. to FU(H4DOTC)-18, REMOVAL, Intake Manifold.>
3) Remove the crank pulley. <Ref. to ME(H4DOTC)-44, REMOVAL, Crank Pulley.>
4) Remove the timing belt cover. <Ref. to ME(H4DOTC)-46, REMOVAL, Timing Belt Cover.>
5) Remove the timing belt. <Ref. to ME(H4DOTC)-52, REMOVAL, Timing Belt.>
6) Remove the cam sprocket. <Ref. to ME(H4DOTC)-61, REMOVAL, Cam Sprocket.>
7) Remove the bolts which secure A/C compressor bracket to cylinder head. (LH side only)
8) Remove the oil pipe. <Ref. to LU(H4SO)-31, REMOVAL, Oil Pipe.>
9) Remove the clip stay.

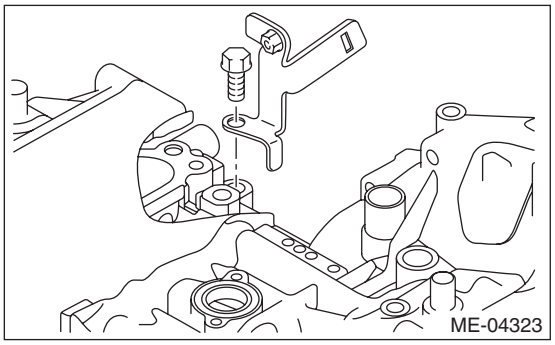
ME-04323

10) Remove the camshaft. <Ref. to ME(H4DOTC)-63, REMOVAL, Camshaft.>
11) Remove the oil level gauge guide. (LH side only)
12) Remove the cylinder head bolts in alphabetical order shown in the figure.

NOTE:
Leave the bolts (A) and (D) engaged by three or four threads to prevent the cylinder head from falling.

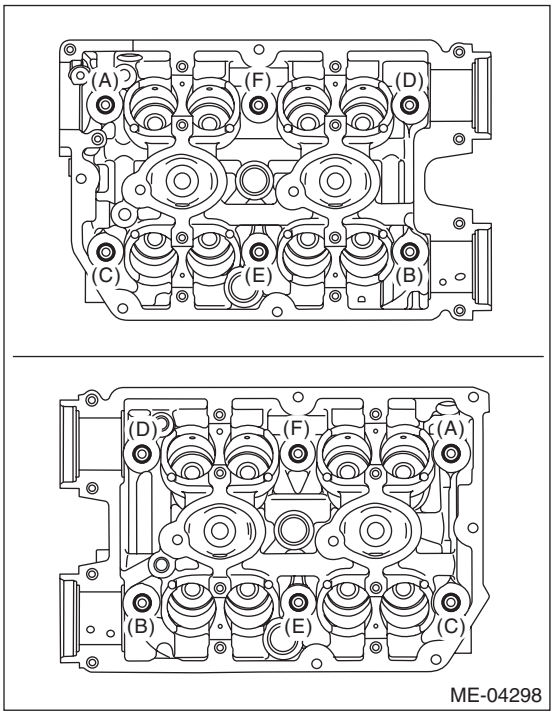

13) While tapping the cylinder head with a plastic hammer, separate it from cylinder block. Remove the bolts (A) and (D) to remove cylinder head.

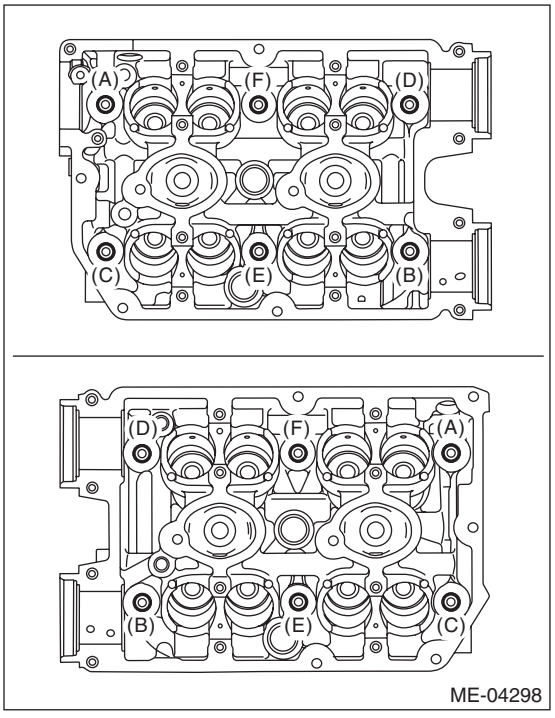

14) Remove the cylinder head gasket.

CAUTION:
Be careful not to scratch the mating surface of cylinder head and cylinder block.

B: INSTALLATION

1) Install the cylinder head to the cylinder block.

CAUTION:
Be careful not to scratch the mating surface of cylinder head and cylinder block.

NOTE:
Use a new cylinder head gasket.

(1) Clean the bolt threads and the bolt holes in the cylinder block

CAUTION:
To avoid erroneous tightening of the bolts, clean out the bolt holes sufficiently by blowing with compressed air to eliminate engine coolant etc.

(2) Apply a sufficient coat of engine oil to the washer and bolt thread.

(3) Tighten all bolts to 40 N·m (4.1 kgf-m, 29.5 ft-lb) in alphabetical order.

(4) Retighten all bolts to 95 N·m (9.7 kgf-m, 70.1 ft-lb) in alphabetical order.

CAUTION:
If the bolt makes stick-slip sound during tightening, repeat the procedure from step (1). In this case, the cylinder head gasket can be reused.

(5) Loosen all the bolts by 180° in the reverse order of installing, and loosen them further by 180°.

(6) Tighten all bolts to 10 N·m (1.0 kgf-m, 7.4 ft-lb) in alphabetical order.

(7) Retighten all bolts to 30 N·m (3.1 kgf-m, 22.1 ft-lb) in alphabetical order.

(8) Retighten all bolts to 70 N·m (7.1 kgf-m, 51.6 ft-lb) in alphabetical order.

(9) Retighten all bolts by 80 — 90° in alphabetical order.

(10) Retighten all bolts by 40 — 45° in alphabetical order.

CAUTION:
The tightening angle of the bolt should not exceed 45°.

(11) Retighten bolts (A) and (B) by 40 — 45°.

CAUTION:
Make sure the total "tightening angle" of steps (10) and (11) does not exceed 90°.

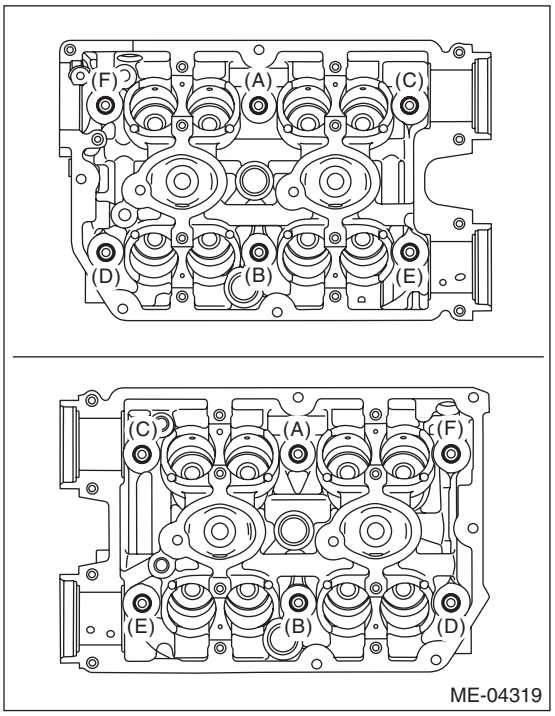

2) Install the oil level gauge guide. (LH side only)

Tightening torque:
6.4 N·m (0.7 kgf-m, 4.7 ft-lb)

3) Install the camshaft. <Ref. to ME(H4DOTC)-66, INSTALLATION, Camshaft.>

4) Install the clip stay.

Tightening torque:
36 N·m (3.7 kgf-m, 26.6 ft-lb)

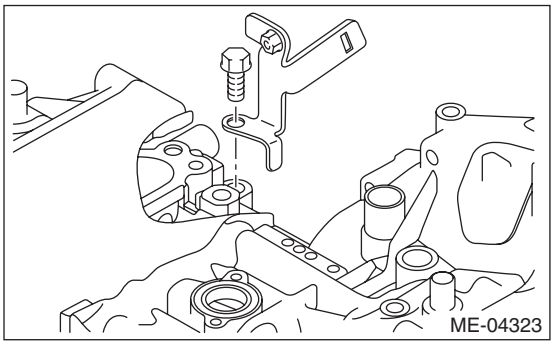

5) Install the oil pipe. <Ref. to LU(H4SO)-33, INSTALLATION, Oil Pipe.>

6) Install the A/C compressor bracket on cylinder head. (LH side only)

Tightening torque:
36 N·m (3.7 kgf-m, 26.6 ft-lb)

7) Install the cam sprocket. <Ref. to ME(H4DOTC)-61, INSTALLATION, Cam Sprocket.>

8) Install the timing belt. <Ref. to ME(H4DOTC)-54, INSTALLATION, Timing Belt.>
9) Adjust the valve clearance. <Ref. to ME(H4DOTC)-30, ADJUSTMENT, Valve Clearance.>
10) Install the rocker cover.
(1) Install the rocker cover gasket to the rocker cover. (outer section and ignition coil section)

NOTE:
Use a new rocker cover gasket.

(2) Apply liquid gasket to the specified point of the cylinder head.

NOTE:
Install within 5 min. after applying liquid gasket.

Liquid gasket:
THREE BOND 1217G (Part No. K0877Y0100) or equivalent

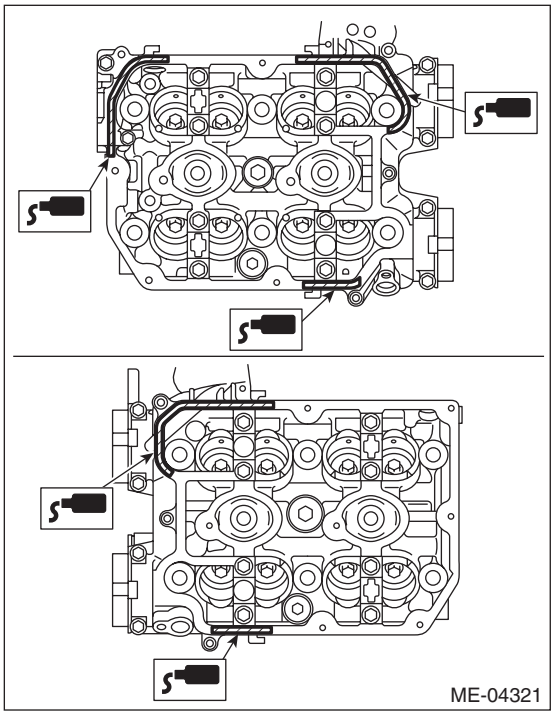

(3) Install the rocker cover onto cylinder heads. Ensure the gasket is properly positioned during installation.

(4) Temporarily tighten the rocker cover bolts in alphabetical order shown in the figure, and then tighten to specified torque in alphabetical order.

Tightening torque:
6.4 N·m (0.7 kgf-m, 4.7 ft-lb)

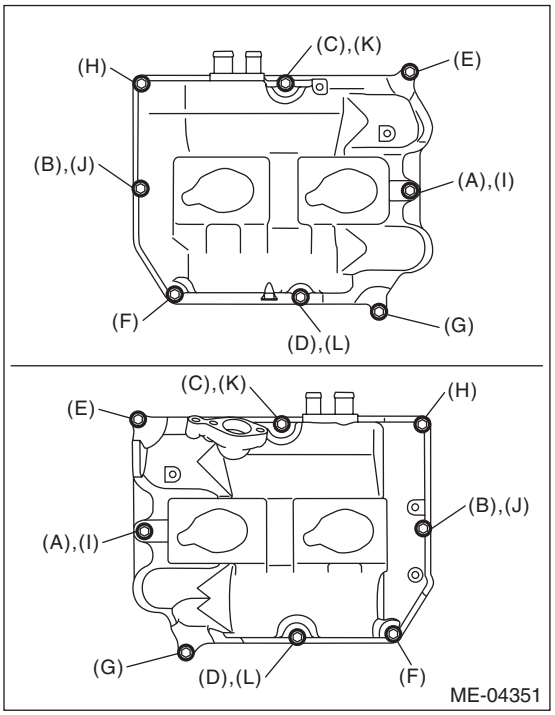

11) Connect the PCV hose to the rocker cover.
12) Install the timing belt cover. <Ref. to ME(H4DOTC)-49, INSTALLATION, Timing Belt Cover.>
13) Install the crank pulley. <Ref. to ME(H4DOTC)-44, INSTALLATION, Crank Pulley.>
14) Install the intake manifold. <Ref. to FU(H4DOTC)-22, INSTALLATION, Intake Manifold.>
15) Install the engine to the vehicle. <Ref. to ME(H4DOTC)-34, INSTALLATION, Engine Assembly.>

C: DISASSEMBLY

1) Remove the valve lifter.
2) Place the cylinder head on ST1.
ST1 498267600 CYLINDER HEAD TABLE
3) Using ST2, compress the valve spring and remove the valve spring retainer key. Remove each valve and valve spring.
ST2 499718000 VALVE SPRING REMOVER

NOTE:
- Mark each valve to prevent confusion.
- Pay careful attention not to damage the lips of intake valve oil seals and exhaust valve oil seals.
- Keep all the removed parts in order for re-installing in their original positions.
- For removal and installation procedures of the valve guide, intake valve oil seal and exhaust valve oil seal, refer to “INSPECTION”. <Ref. to ME(H4DOTC)-79, VALVE GUIDE, INSPECTION, Cylinder Head.> <Ref. to ME(H4DOTC)-81, INTAKE AND EXHAUST VALVE OIL SEAL, INSPECTION, Cylinder Head.>

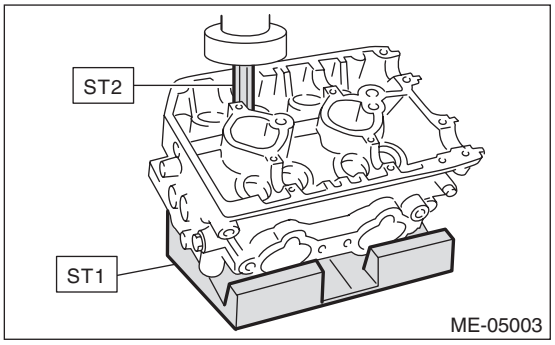

D: ASSEMBLY

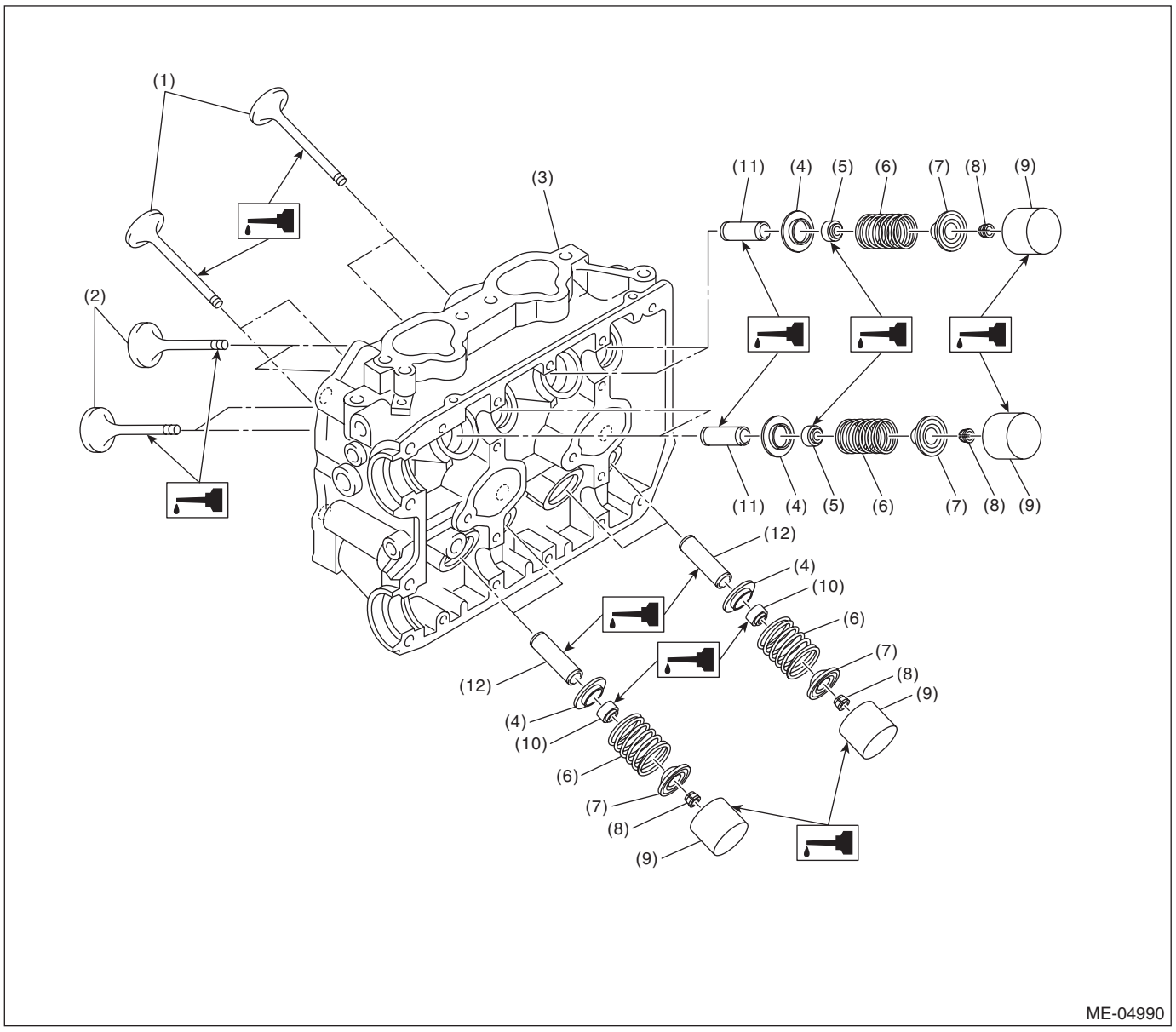

(1)	Exhaust valve	(5)	Intake valve oil seal	(9)	Valve lifter
(2)	Intake valve	(6)	Valve spring	(10)	Exhaust valve oil seal
(3)	Cylinder head	(7)	Valve spring retainer	(11)	Intake valve guide
(4)	Valve spring seat	(8)	Valve spring retainer key	(12)	Exhaust valve guide

1) Install the valve spring and valve.
   (1) Coat the valve stem of each valve with engine oil and insert the valve into valve guide.

NOTE:
When inserting the valve into valve guide, use special care not to damage the oil seal lip.
   (2) Set the cylinder head on ST1.

ST1 498267600 CYLINDER HEAD TABLE

   (3) Install the valve spring and valve spring retainer.

NOTE:
Be sure to install the valve spring with its close-coiled end facing the cylinder head side.

(4) Set the ST2 on valve spring.
ST2 499718000 VALVE SPRING REMOVER

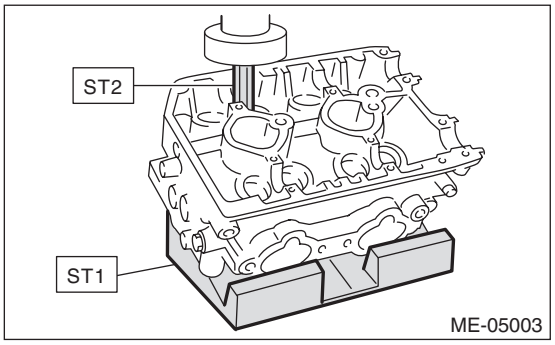

(5) Compress the valve spring and fit the valve spring retainer key.
(6) After installing, tap the valve spring retainers lightly with a plastic hammer for better seating.

2) Apply oil to the surface of valve lifter.
3) Install the valve lifter.

E: INSPECTION

1. CYLINDER HEAD

1) Check for cracks or damage. Use liquid penetrant tester on the important sections to check for fissures. Check that there are no marks of gas leaking or water leaking on gasket installing surface.
2) Measure the warping of the cylinder head surface that mates with cylinder block using a straight edge (A) and thickness gauge (B).
If the warping exceeds the limit, correct the surface by grinding it with a surface grinder.

Warping limit:
0.035 mm (0.0014 in)

Grinding limit:
0.3 mm (0.012 in)

Standard height of cylinder head:
127.5 mm (5.02 in)

NOTE:
Uneven torque for the cylinder head bolts can cause warping. When reinstalling, pay special attention to the torque so as to tighten evenly.

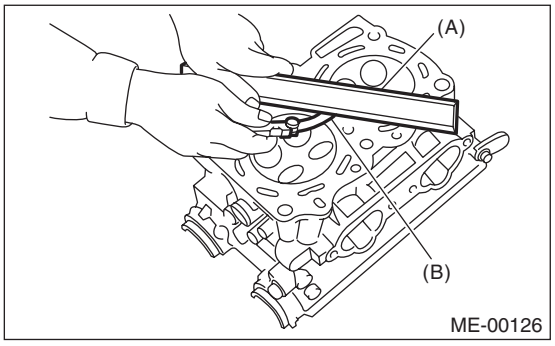

2. VALVE SEAT

Inspect the intake and exhaust valve seats, and correct the contact surfaces with a valve seat cutter if they are defective or when valve guides are replaced.

Contacting width W between valve and valve seat:

Standard
Intake
0.6 — 1.4 mm (0.024 — 0.055 in)
Exhaust
1.2 — 1.8 mm (0.047 — 0.071 in)

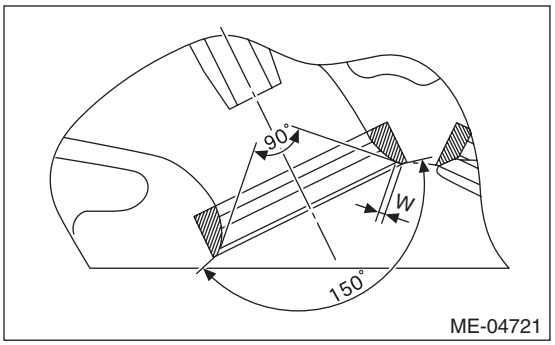

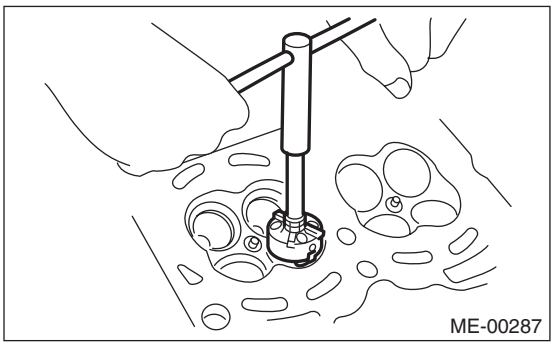

3. VALVE GUIDE

1) Check the clearance between valve guide and valve stem. The clearance can be checked by measuring the outer diameter of valve stem with a micrometer and the inner diameter of valve guide with a caliper gauge respectively.

Clearance between the valve guide and valve stem:

Standard
Intake
0.030 — 0.057 mm (0.0012 — 0.0022 in)
Exhaust
0.040 — 0.067 mm (0.0016 — 0.0026 in)

2) If the clearance between valve guide and valve stem exceeds the standard, replace the valve guide or valve itself, whichever shows the greater amount of wear or damage. See the following procedure for valve guide replacement.

Valve guide inner diameter:
6.000 — 6.012 mm (0.2362 — 0.2367 in)

Valve stem outer diameters:
Intake
5.955 — 5.970 mm (0.2344 — 0.2350 in)
Exhaust
5.945 — 5.960 mm (0.2341 — 0.2346 in)

(1) Place the cylinder head on ST1 with the combustion chamber upward so that valve guides fit the holes in ST1.

(2) Insert the ST2 into valve guide and press it down to remove the valve guide.

ST1 498267600 CYLINDER HEAD TABLE
ST2 499767200 VALVE GUIDE REMOVER

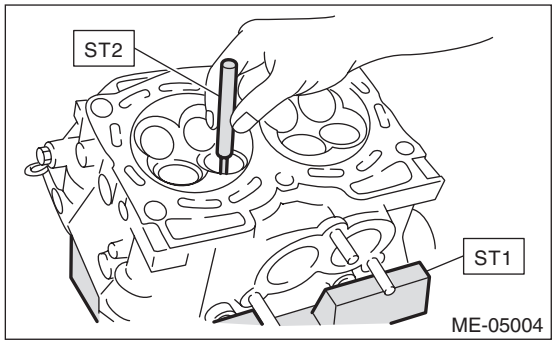

(3) Turn the cylinder head upside down and place the ST as shown in the figure.

ST 18251AA020 VALVE GUIDE ADJUSTER

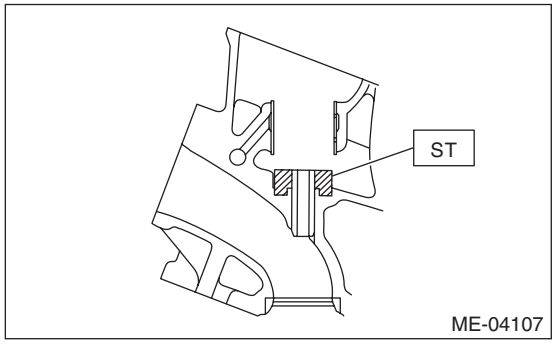

(4) Before installing a new valve guide, make sure that neither scratches nor damages exist on the inner surface of valve guide holes in cylinder head.

(5) Put a new valve guide, coated with sufficient oil, in the cylinder head, and insert the ST1 into valve guide. Press in until the valve guide upper end is flush with the upper surface of ST2.

ST1 499767200 VALVE GUIDE REMOVER
ST2 18251AA020 VALVE GUIDE ADJUSTER

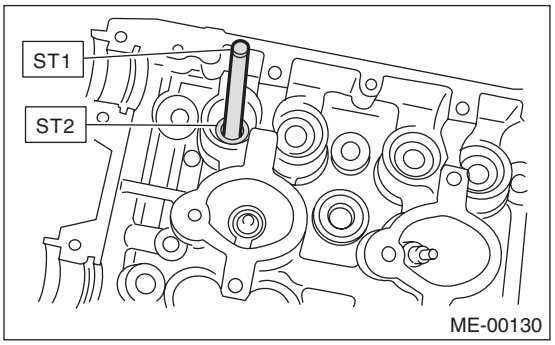

(6) Check the valve guide protrusion amount "L".

Valve guide protrusion amount L:
15.8 — 16.2 mm (0.622 — 0.638 in)

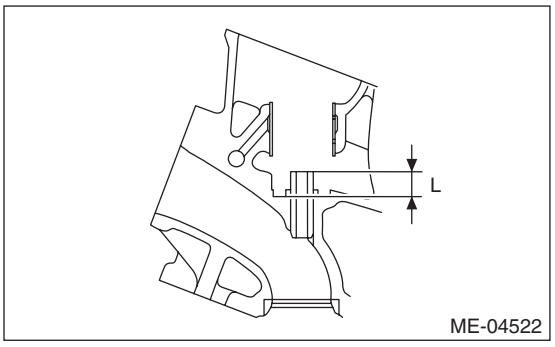

(7) Ream the inside of valve guide using ST. Put the ST in valve guide, and rotate the ST slowly clockwise while pushing it lightly. Bring the ST back while rotating it clockwise.

NOTE:
• Apply engine oil to the ST when reaming.
• If the inner surface of valve guide is damaged, the edge of ST should be slightly ground with oil stone.
• If the inner surface of valve guide becomes lustrous and the ST does not chip, use a new ST or remedy the ST.

ST 499767400 VALVE GUIDE REAMER

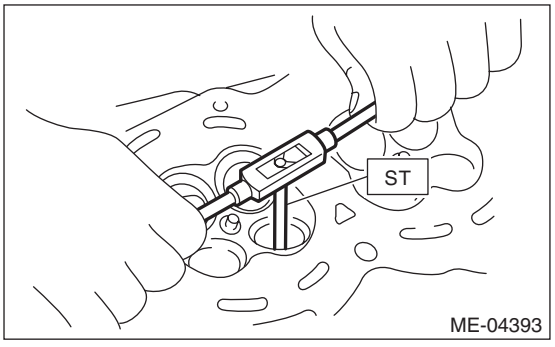

(8) After reaming, clean the valve guide to remove chips.
(9) Recheck the contact condition between valve and valve seat after replacing the valve guide.

4. INTAKE AND EXHAUST VALVE

1) Inspect the flange of valve and valve stem, and replace the valve with a new part if damaged, worn, deformed, or if dimension "H" in the figure is outside of the specified limit.

Head edge thickness H:

Standard
Intake (A)
1.0 — 1.4 mm (0.039 — 0.055 in)
Exhaust (B)
1.3 — 1.7 mm (0.051 — 0.067 in)

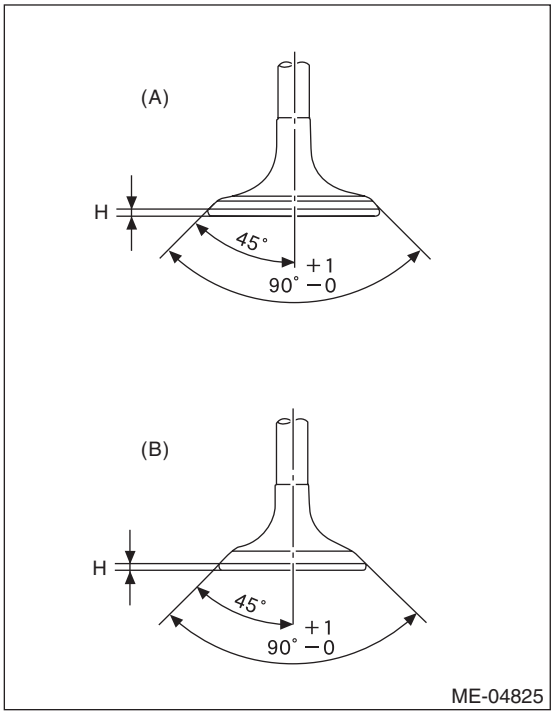

2) Put a small amount of grinding compound on the valve seat surface, and lap the valve and valve seat surface. Replace with a new valve oil seal after lapping.

NOTE:
It is possible to differentiate between the intake valve and the exhaust valve by their overall length.

Valve overall length:
Intake
104.4 mm (4.110 in)
Exhaust
104.65 mm (4.1201 in)

5. VALVE SPRING

1) Check the valve springs for damage, free length, and tension. Replace the valve spring if it is not within the standard value presented in the table.
2) To measure the squareness of the valve spring, stand the valve spring on a surface plate and measure its deflection at the top of valve spring using a right angle gauge.

Free length mm (in)		47.32 (1.863)
Tension/spring height N (kgf, lbf)/mm (in)	Set	205 — 235 (20.90 — 23.96, 46.09 — 52.84)/36.0 (1.417)
	Lift	426 — 490 (43.44 — 49.96, 95.78 — 110.17)/26.5 (1.043)
Squareness		2.5°, 2.1 mm (0.083 in) or less

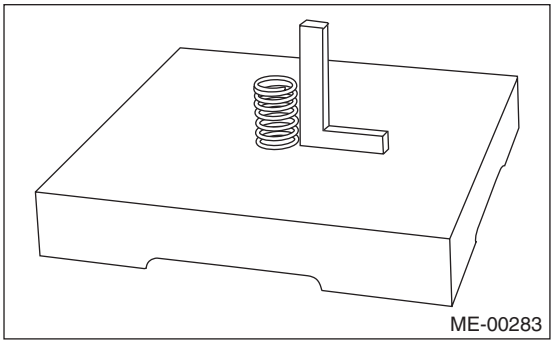

6. INTAKE AND EXHAUST VALVE OIL SEAL

1) For the following, replace the oil seal with a new part. See the procedure 2) and subsequent for replacement procedures.
- When the lip is damaged.
- When the spring is out of the specified position.
- When readjusting the surfaces of valve and valve seat.
- When replacing the valve guide.

2) Place the cylinder head on ST1, and use ST2 to press-fit the oil seal.
ST1 498267600 CYLINDER HEAD TABLE
ST2 498857100 VALVE OIL SEAL GUIDE

NOTE:
• Apply engine oil to oil seal before press-fitting.
• When press-fitting the oil seal, do not use a hammer or strike in.
• The intake valve oil seals and exhaust valve oil seals are distinguished by their colors.

Color of rubber part:
Intake [Gray]
Exhaust [Green]

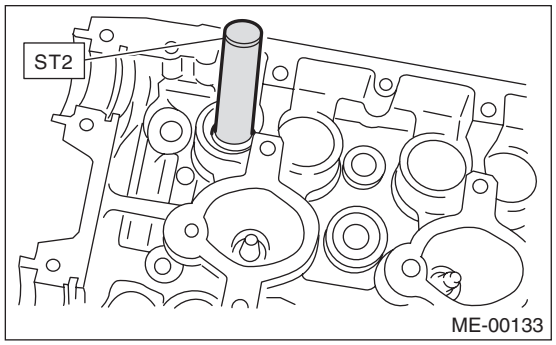

7. VALVE LIFTER

1) Check the valve lifter visually.
2) Measure the outer diameter of valve lifter.

Outer diameter of valve lifter:
Standard
34.959 — 34.975 mm (1.3763 — 1.3770 in)

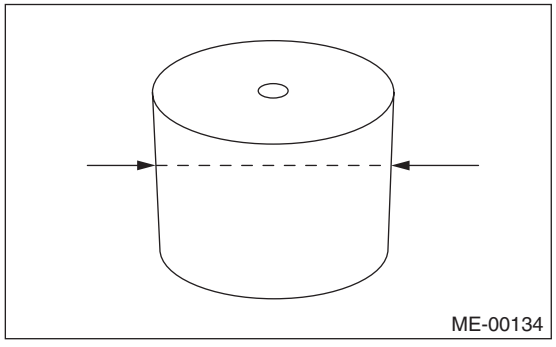

3) Measure the inner diameter of valve lifter mating surface on cylinder head.

Valve lifter mating surface inner diameter:
Standard
34.994 — 35.016 mm (1.3777 — 1.3786 in)

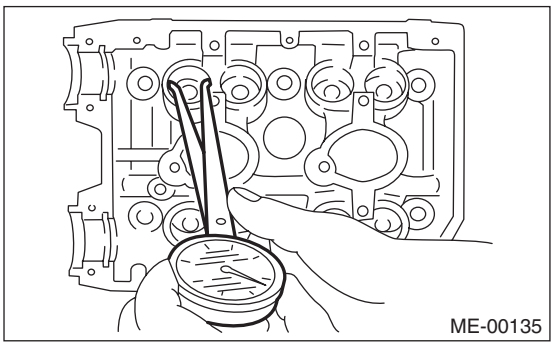

4) Check the clearance between valve lifter and valve lifter mating surface. The clearance can be checked by measuring the outer diameter of valve lifter and the inner diameter of valve lifter. If it exceeds the standard or offset wear occurs, replace the cylinder head.

Valve lifter and valve lifter mating surface clearance:
Standard
0.019 — 0.057 mm (0.0007 — 0.0022 in)

20.Cylinder Block

A: REMOVAL

NOTE:
Before conducting this procedure, drain the engine oil completely.
1) Remove the engine from the vehicle. <Ref. to ME(H4DOTC)-31, REMOVAL, Engine Assembly.>
2) Remove the intake manifold. <Ref. to FU(H4DOTC)-18, REMOVAL, Intake Manifold.>
3) Remove the crank pulley. <Ref. to ME(H4DOTC)-44, REMOVAL, Crank Pulley.>
4) Remove the timing belt cover. <Ref. to ME(H4DOTC)-46, REMOVAL, Timing Belt Cover.>
5) Remove the timing belt. <Ref. to ME(H4DOTC)-52, REMOVAL, Timing Belt.>
6) Remove the cam sprocket. <Ref. to ME(H4DOTC)-61, REMOVAL, Cam Sprocket.>
7) Remove the crank sprocket. <Ref. to ME(H4DOTC)-62, REMOVAL, Crank Sprocket.>
8) Remove the A/C compressor together with the bracket.
9) Remove the camshaft. <Ref. to ME(H4DOTC)-63, REMOVAL, Camshaft.>
10) Remove the cylinder head. <Ref. to ME(H4DOTC)-74, REMOVAL, Cylinder Head.>
11) Remove the clutch disc and cover. <Ref. to CL-11, REMOVAL, Clutch Disc and Cover.>
12) Remove the flywheel. <Ref. to CL-14, REMOVAL, Flywheel.>
13) Remove the oil separator cover.
14) Remove the oil filter. <Ref. to LU(H4SO)-36, REMOVAL, Engine Oil Filter.>
15) Remove the oil cooler. <Ref. to LU(H4SO)-27, REMOVAL, Engine Oil Cooler.>
16) Remove the water pump. <Ref. to CO(H4DOTC)-16, REMOVAL, Water Pump.>
17) Remove the bolts which secure oil pump to cylinder block.

NOTE:
When disassembling and checking the oil pump, loosen the relief valve plug before removing the oil pump.

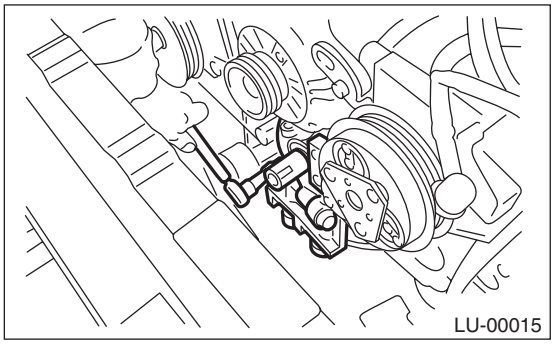
LU-00015

18) Remove the oil pump from cylinder block using a flat tip screwdriver.

CAUTION:
Be careful not to scratch the mating surface of the cylinder block and oil pump.

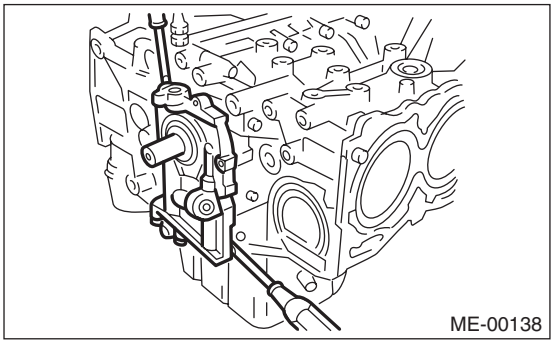
ME-00138

19) Remove the front oil seal from the oil pump.
20) Remove the clip holding the oil level switch harness from cylinder block.

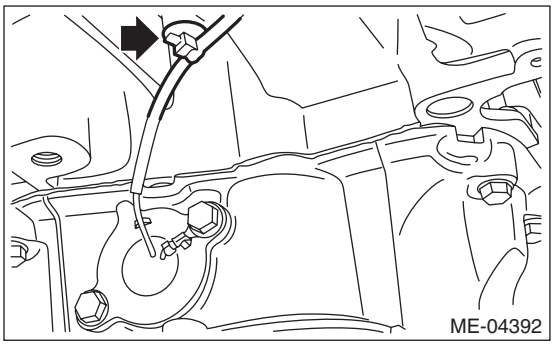
ME-04392

21) Remove the oil pan and cylinder block lower.
(1) Set the part so that the cylinder block LH is on the upper side.
(2) Remove the bolts which secure the oil pan to the cylinder block lower.
(3) Insert an oil pan cutter blade into the gap between cylinder block lower and oil pan, and remove the oil pan.

CAUTION:
Do not use a screwdriver or similar tools in place of oil pan cutter.

(4) Remove the bolts which secure the cylinder block lower to the cylinder block, and remove the cylinder block lower by using flat tip screwdriver.

CAUTION:
Insert the flat tip screwdriver at the position shown in the figure, and avoid scratching the mating surface of the cylinder block and cylinder block lower.

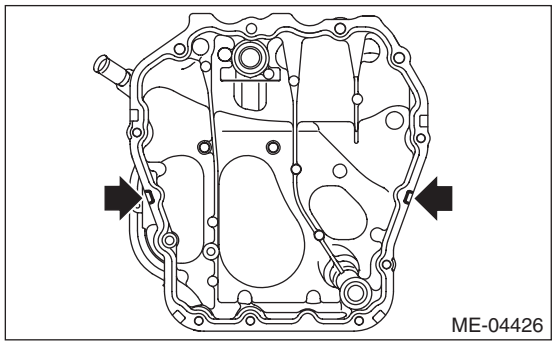

22) Remove the baffle plate.
23) Remove blow-by pipe assembly (A), blow-by pipe (B), PCV hose assembly (C) and water pipe assembly (D).

NOTE:
To unlock the clamp of the blow-by pipe assembly (A), blow-by pipe (B) and PCV hose assembly (C), pinch the clamp by fitting the cut out in the ST with the protrusion on the clamp as shown in the figure.
ST 18353AA000 CLAMP PLIERS

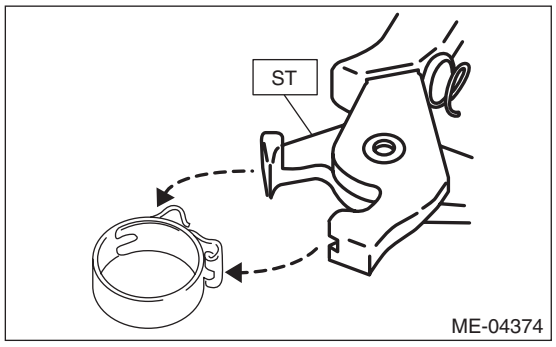

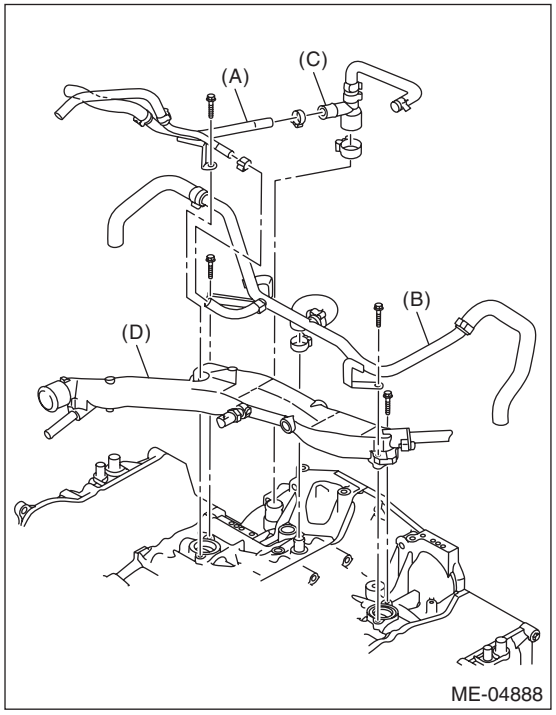

24) Remove the water by-pass pipe.

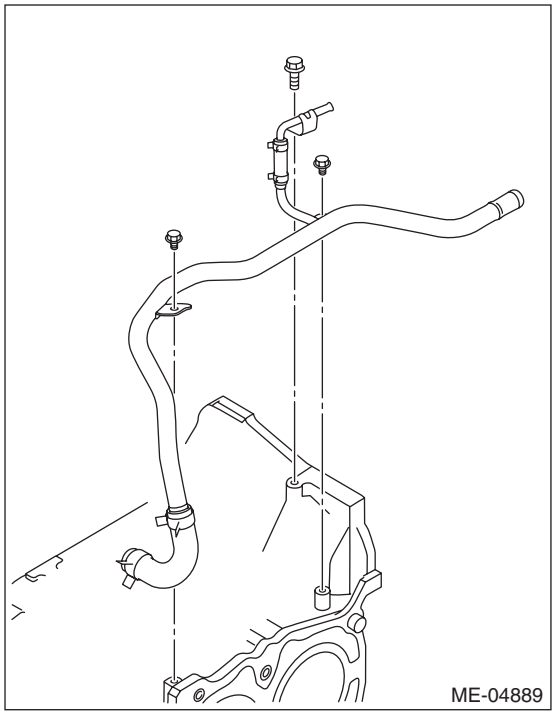

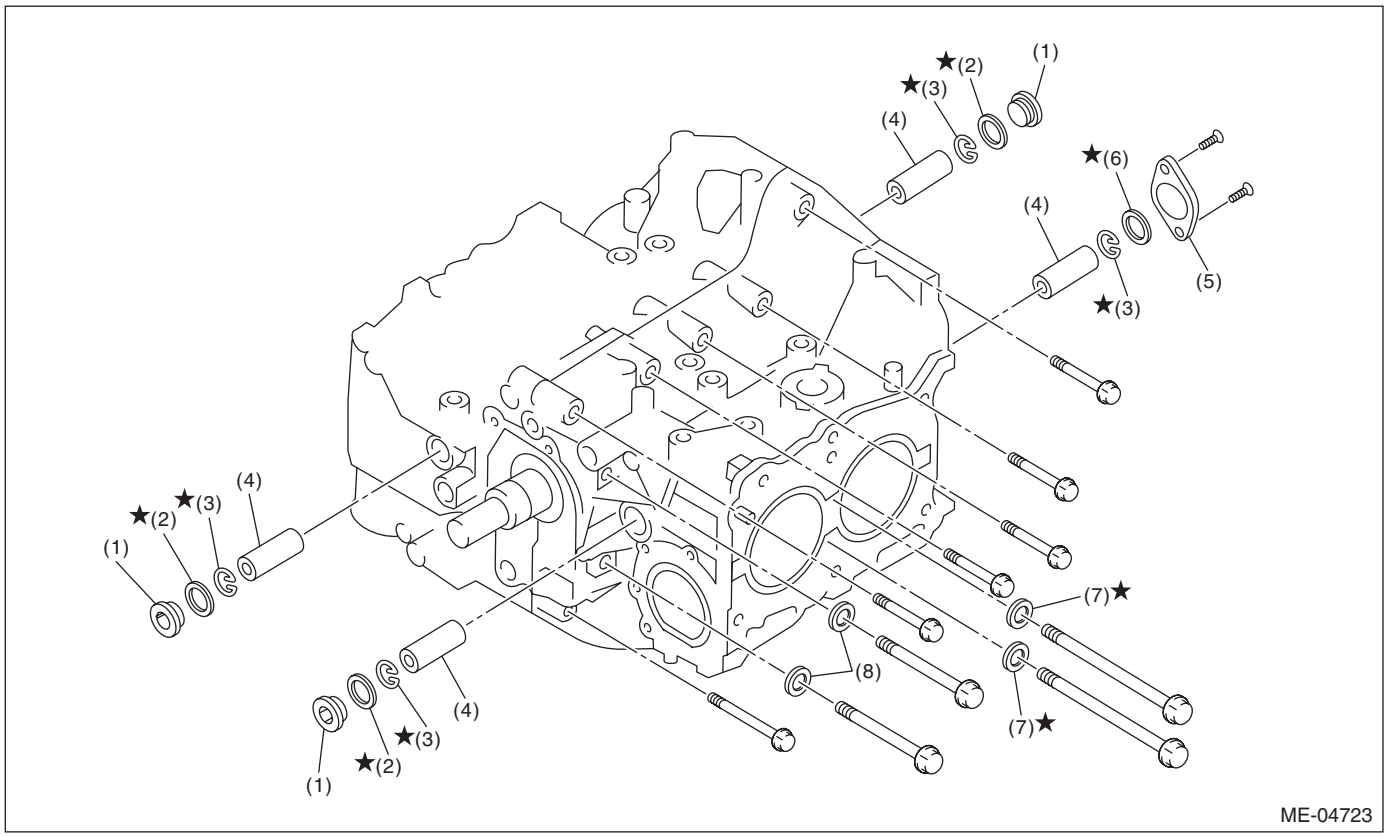

(1) Service hole plug
(2) Gasket
(3) Snap ring
(4) Piston pin
(5) Service hole cover
(6) O-ring
(7) Seal washer
(8) Washer

25) Remove the service hole plugs using a hexagon wrench [14 mm].

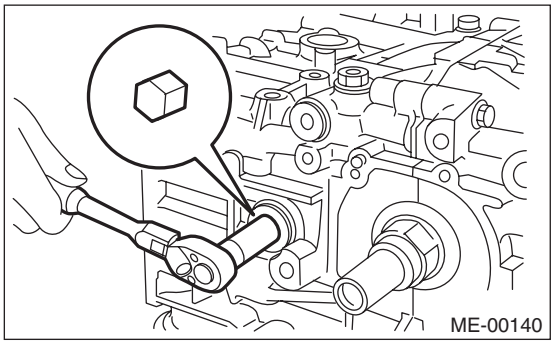

26) Remove the service hole cover.
27) Rotate the crankshaft to bring #1 and #2 pistons to bottom dead center position, then remove the piston snap ring through service hole of #1 and #2 cylinders.

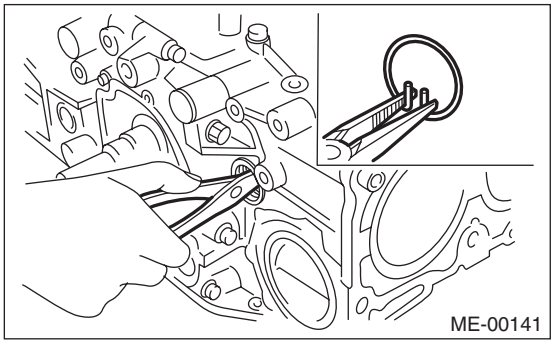

28) Draw out the piston pin from #1 and #2 pistons using ST.
ST 499097700 PISTON PIN REMOVER ASSY

NOTE:
Be careful not to confuse the original combination of piston, piston pin and cylinder.

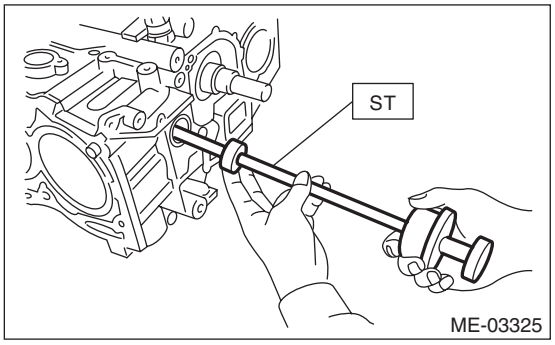

29) Similarly draw out the piston pins from #3 and #4 pistons.
30) Remove the cylinder block connecting bolt on the RH side.
31) Loosen the cylinder block connecting bolt on the LH side by 2 to 3 turns.
32) Set the part so that the cylinder block LH is on the upper side, and remove the cylinder block connecting bolt.
33) Separate the cylinder block LH and RH.

NOTE:
When separating the cylinder block, do not allow the connecting rod to fall or damage the cylinder block.

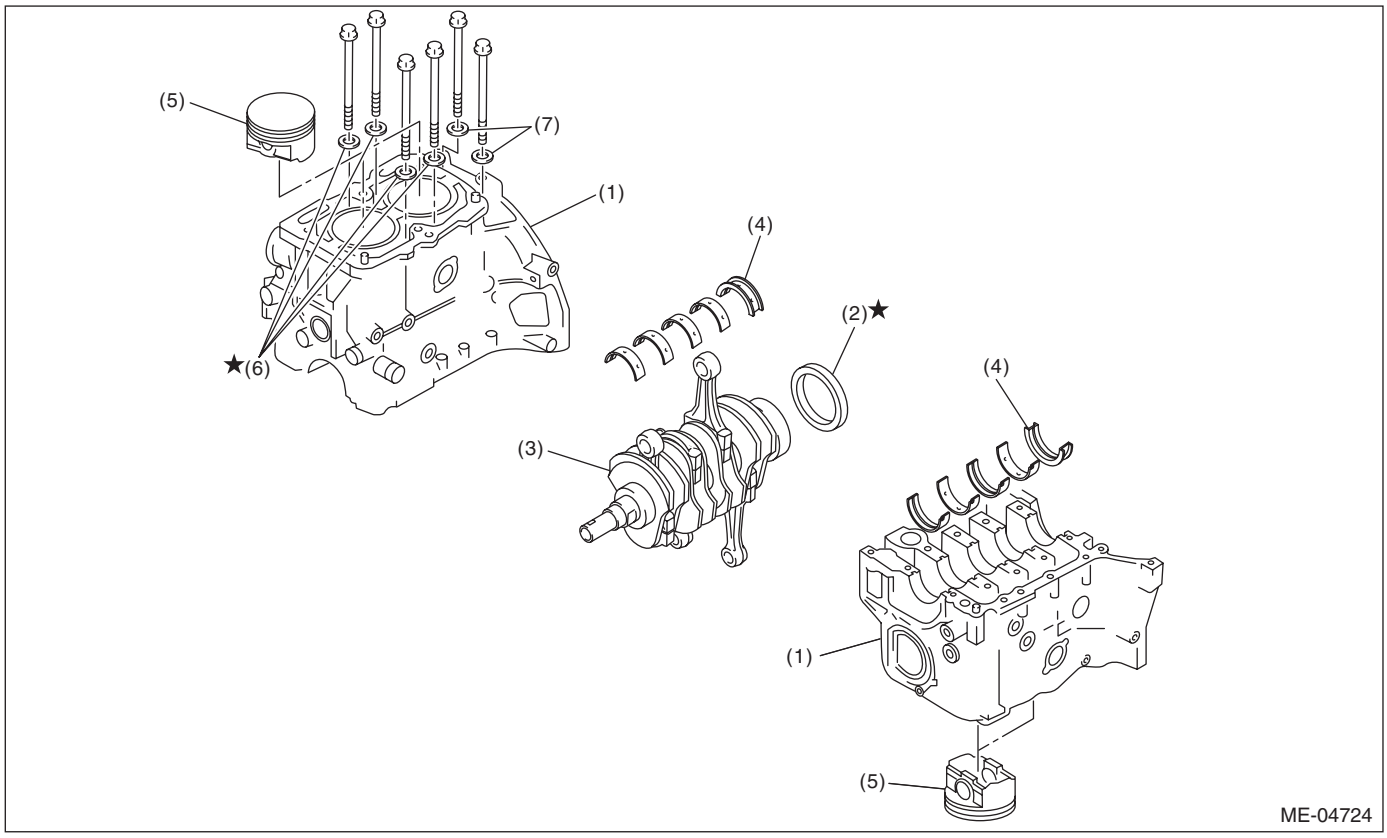

(1) Cylinder block
(2) Rear oil seal
(3) Crankshaft
(4) Crankshaft bearing
(5) Piston
(6) Seal washer
(7) Washer

34) Remove the rear oil seal.
35) Remove the crankshaft together with connecting rod.
36) Remove the crankshaft bearings from cylinder block using a hammer handle.

NOTE:
- Press the crankshaft bearing at the end opposite to locking lip to remove.
- Be careful not to confuse the crankshaft bearing combination.

37) Remove each piston from the cylinder block using a wooden bar or hammer handle.

NOTE:
Be careful not to confuse the original combination of piston and cylinder.

B: INSTALLATION

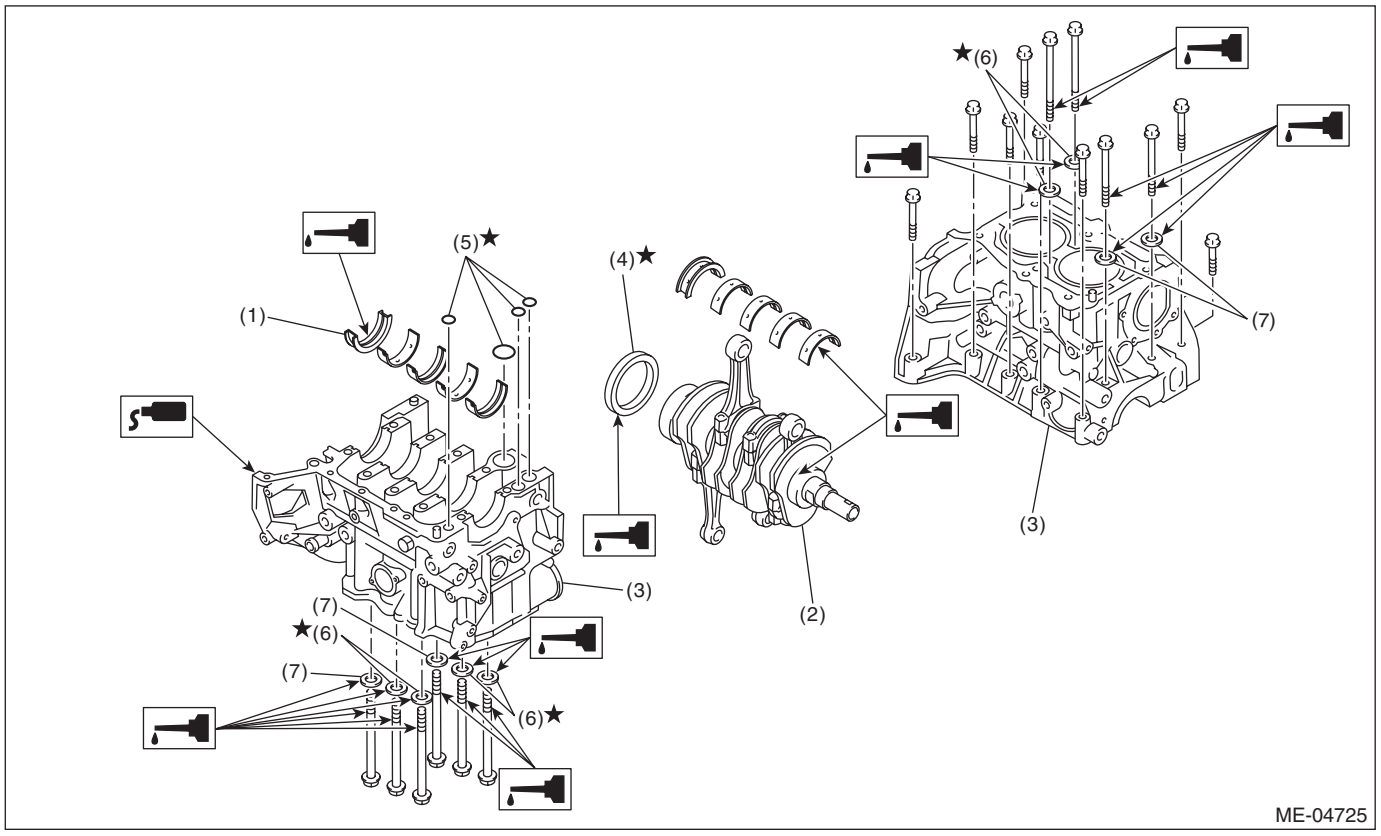

(1) Crankshaft bearing
(2) Crankshaft
(3) Cylinder block
(4) Rear oil seal
(5) O-ring
(6) Seal washer
(7) Washer

1) Remove oil on the mating surface of cylinder block before installation. Apply a coat of engine oil to the bearing and crankshaft journal.
2) Position the crankshaft and O-ring on cylinder block RH.

NOTE:
Use new O-rings.

3) Apply liquid gasket to the mating surfaces of cylinder block RH, and position cylinder block LH.

NOTE:
- Install within 5 min. after applying liquid gasket.
- Do not allow liquid gasket to jut into O-ring grooves, oil passages, bearing grooves, etc.

Liquid gasket:
THREE BOND 1217G (Part No. K0877Y0100) or equivalent

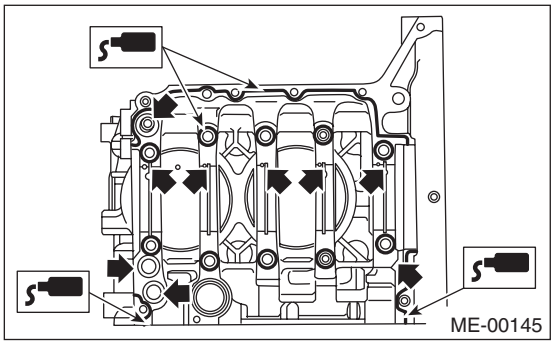

4) Apply a coat of engine oil to the washer and bolt thread.

NOTE:
Use a new seal washer.

5) Tighten the 10 mm cylinder block connecting bolts on the LH side (A — D) in alphabetical order.

Tightening torque:
10 N·m (1.0 kgf-m, 7.4 ft-lb)

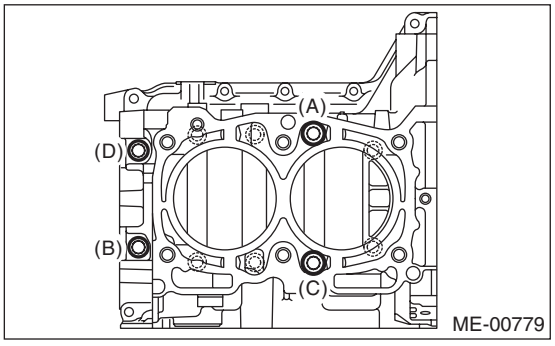

6) Tighten the 10 mm cylinder block connecting bolts on the RH side (E — J) in alphabetical order.

Tightening torque:
10 N·m (1.0 kgf-m, 7.4 ft-lb)

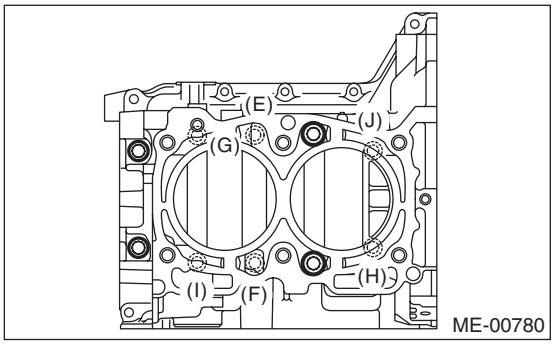

7) Tighten the LH side cylinder block connecting bolts (A — D) further in alphabetical order.

Tightening torque:
18 N·m (1.8 kgf-m, 13.3 ft-lb)

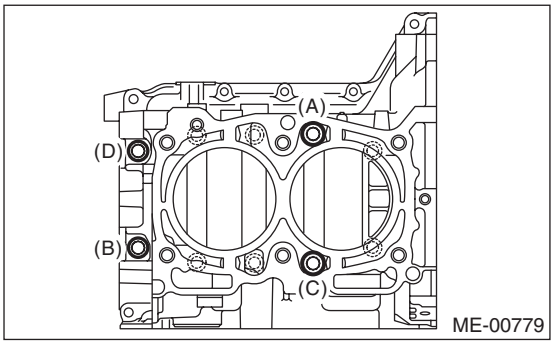

8) Tighten the RH side cylinder block connecting bolts (E — J) further in alphabetical order.

Tightening torque:
18 N·m (1.8 kgf-m, 13.3 ft-lb)

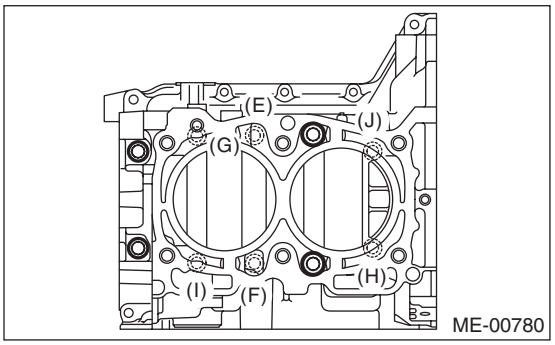

9) Tighten the LH side cylinder block connecting bolts (A — D) further in alphabetical order.
- (A), (C): Angle tightening

Tightening angle:
90°
- (B), (D): Torque tightening

Tightening torque:
40 N·m (4.1 kgf-m, 29.5 ft-lb)

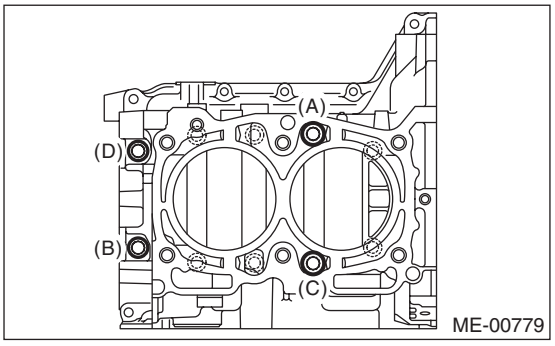

10) Tighten the RH side cylinder block connecting bolts (E — J) further in alphabetical order.

Tightening angle:
90°

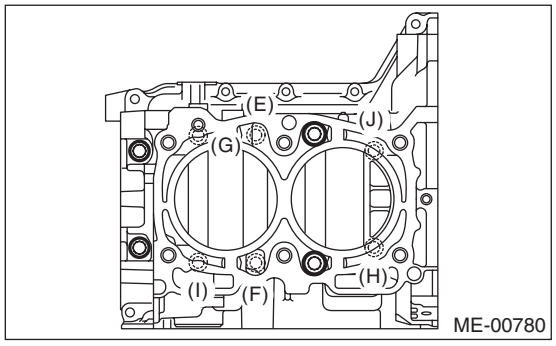

11) Tighten the 8 mm and 6 mm cylinder block connecting bolts on the LH side (A — H) in alphabetical order.

Tightening torque:
(A) — (G): 25 N·m (2.5 kgf-m, 18.4 ft-lb)
(H): 6.4 N·m (0.7 kgf-m, 4.7 ft-lb)

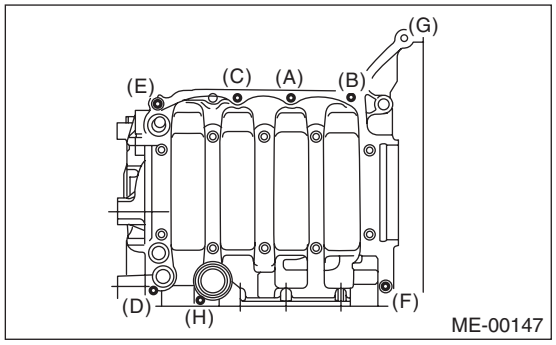

12) Apply a coat of engine oil to the oil seal inner periphery and outer periphery, and install the rear oil seal using ST1 and ST2.

NOTE:
Use a new rear oil seal.

ST1	499597100	CRANKSHAFT OIL SEAL GUIDE
ST2	499587200	CRANKSHAFT OIL SEAL INSTALLER

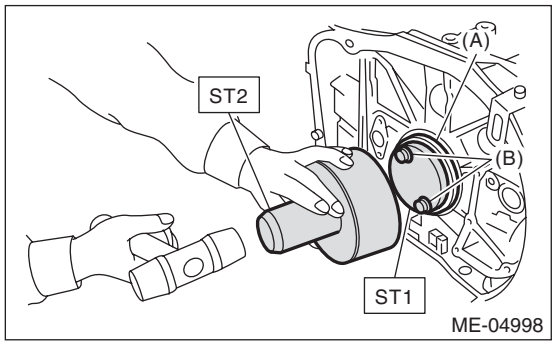

(A) Rear oil seal
(B) Flywheel attachment bolt

13) Position the top ring gap at (A) or (B) in the figure.
14) Position the second ring gap at 180° on the reverse side the top ring gap.

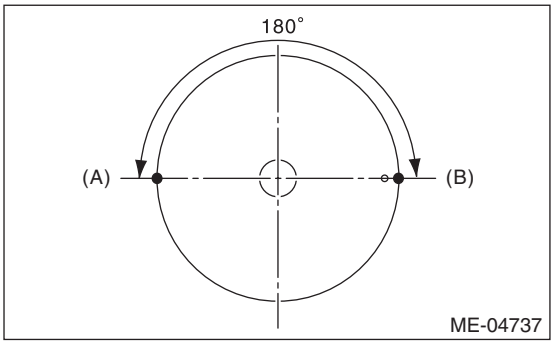

15) Position the upper rail gap at (C) in the figure.

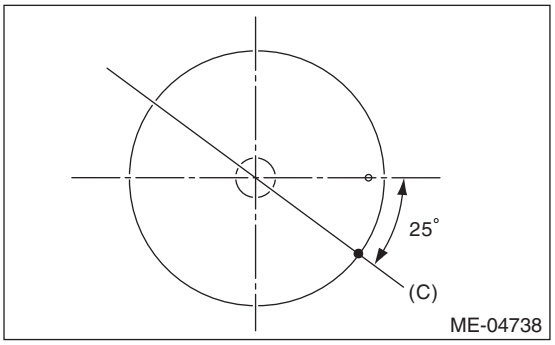

16) Align the upper rail spin stopper (E) to the side hole (D) on the piston.

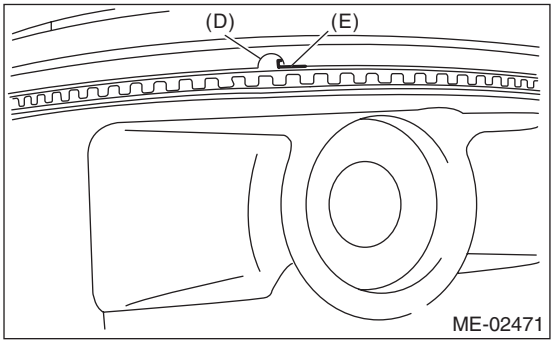

17) Position the expander gap at (F) in the figure on the 180° opposite direction of (C).

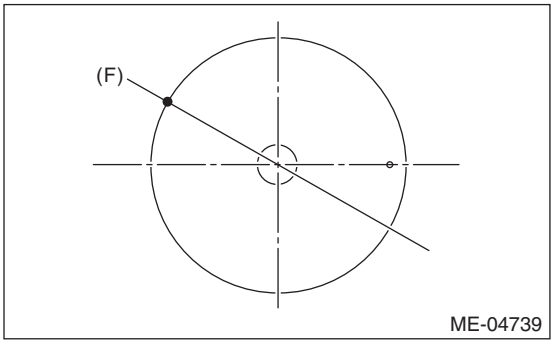

18) Set the lower rail gap at position (G), located 120° clockwise from (C) in the figure.

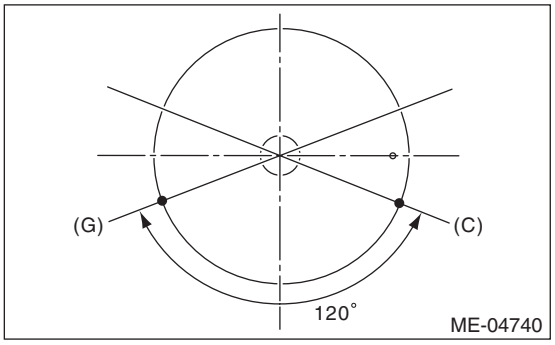

NOTE:
- Make sure ring gaps do not face the same direction.
- Make sure ring gaps are not within the piston skirt area.

19) Install the snap ring.
Before positioning the piston on the cylinder block, attach the snap ring in the service hole of the cylinder block, and the piston hole on the opposite side.

NOTE:
Use new snap rings.

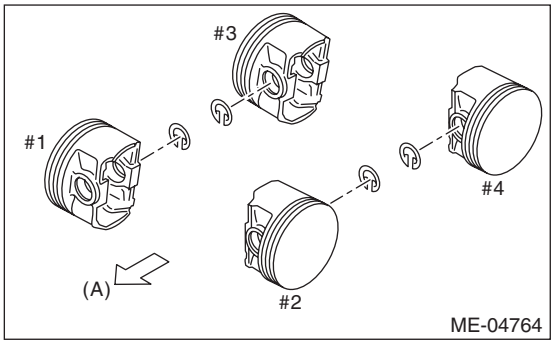

(A) Front side

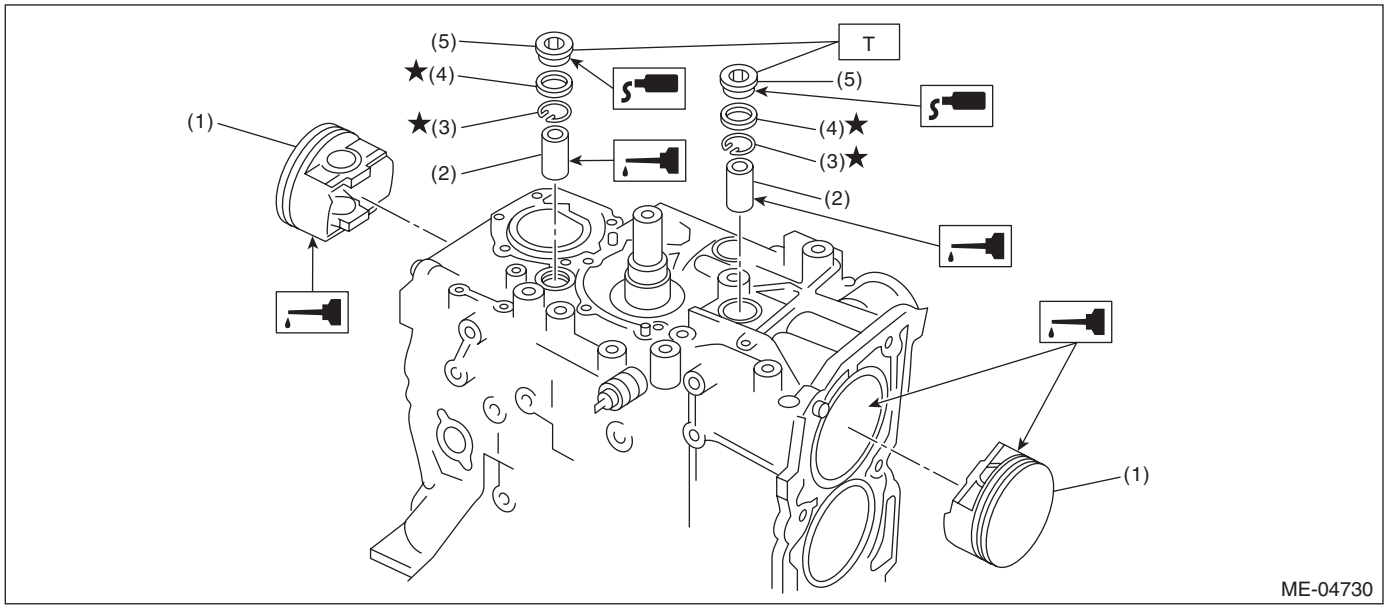

(1) Piston
(2) Piston pin
(3) Snap ring
(4) Gasket
(5) Service hole plug

Tightening torque:N·m (kgf-m, ft-lb)
T: 70 (7.1, 51.6)

20) Install the piston.
(1) Set the parts so that the #1 and #2 cylinders are on the upper side.
(2) Using the ST1, turn the crankshaft so that #1 and #2 connecting rods are set at bottom dead center.

ST1 499987500 CRANKSHAFT SOCKET

(3) Apply a coat of engine oil to the pistons and cylinders and insert pistons in their cylinders using ST2.

ST2 498747300 PISTON GUIDE

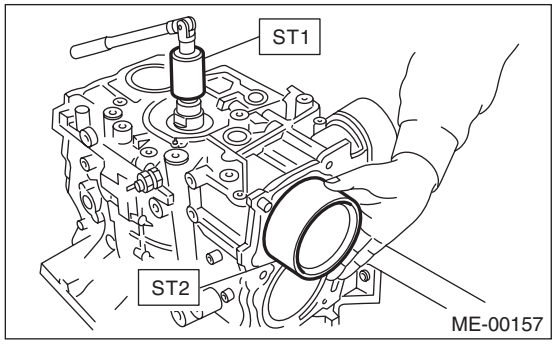

NOTE:
Face the piston front mark towards the front of the engine.

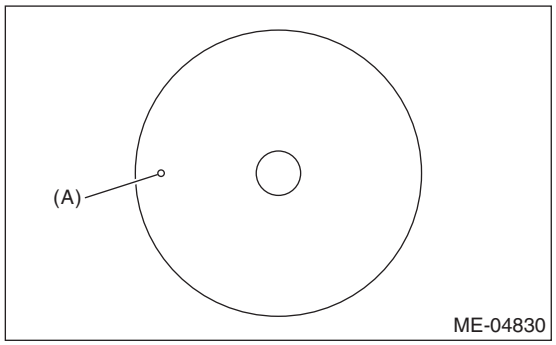

(A) Front mark

21) Install the piston pin.
(1) Apply a coat of engine oil to ST3.
(2) Insert ST3 into the service hole to align the piston pin hole and the connecting rod small end.

ST3 499017100 PISTON PIN GUIDE

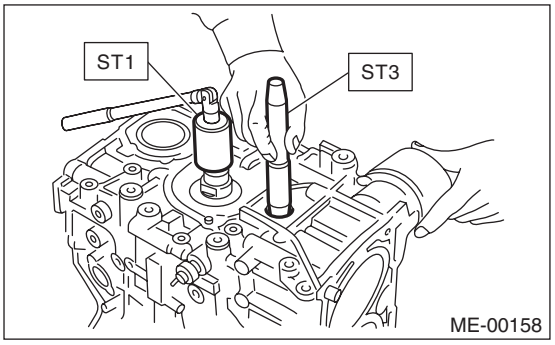

(3) Apply a thin coat of engine oil to piston pin, and insert the piston pin into piston and connecting rod through service hole.
(4) Install the snap ring.

NOTE:
Use new snap rings.

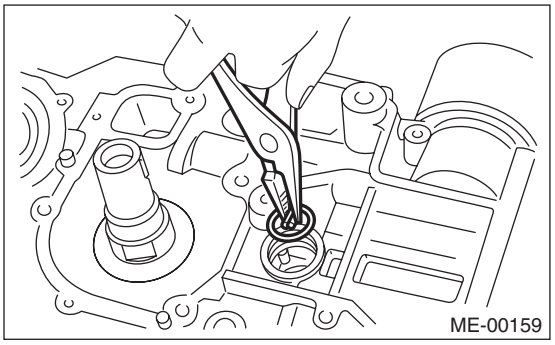

(5) Apply liquid gasket to the threaded portion of the service hole plug.

Liquid gasket:
THREE BOND 1105 (Part No. 004403010) or equivalent

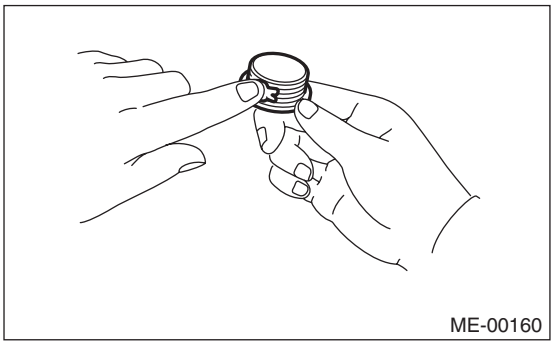

(6) Install the service hole plug and gasket.

NOTE:
Use a new gasket.

Tightening torque:
70 N·m (7.1 kgf-m, 51.6 ft-lb)

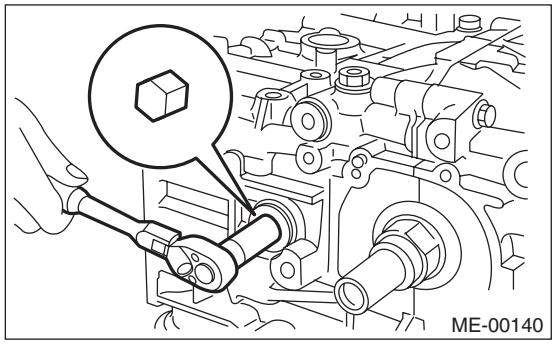

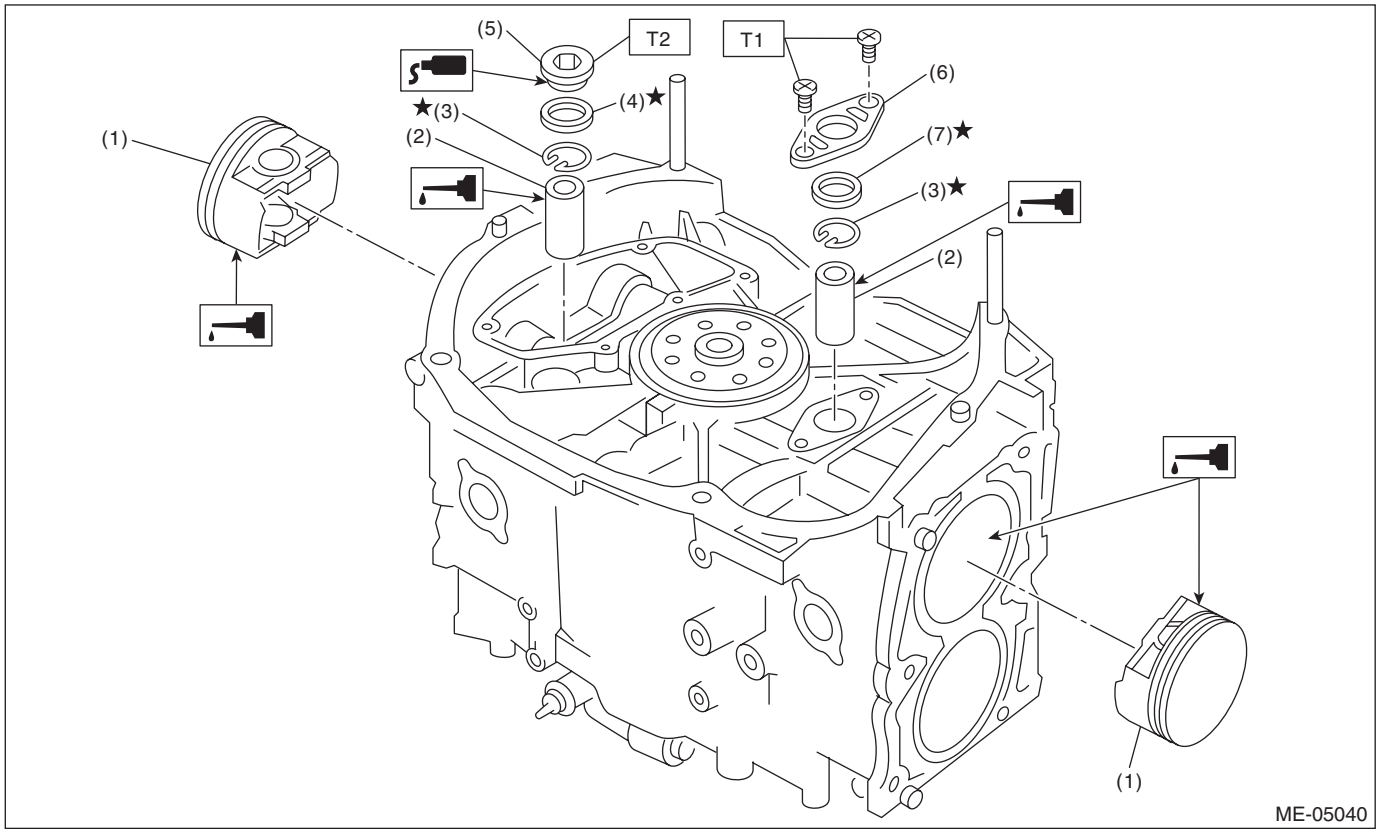

(1) Piston
(2) Piston pin
(3) Snap ring
(4) Gasket
(5) Service hole plug
(6) Service hole cover
(7) O-ring

Tightening torque:N·m (kgf-m, ft-lb)
T1: 6.4 (0.7, 4.7)
T2: 70 (7.1, 51.6)

(7) Set the parts so that the #3 and #4 cylinders are on the upper side. Following the same procedures as used for #1 and #2 cylinders, install the pistons and piston pins.
(8) Install the service hole cover.

NOTE:
Use new O-rings.

Tightening torque:
6.4 N·m (0.7 kgf-m, 4.7 ft-lb)

22) Install the water by-pass pipe.

Tightening torque:
T1: 6.4 N·m (0.7 kgf-m, 4.7 ft-lb)
T2: 16 N·m (1.6 kgf-m, 11.8 ft-lb)

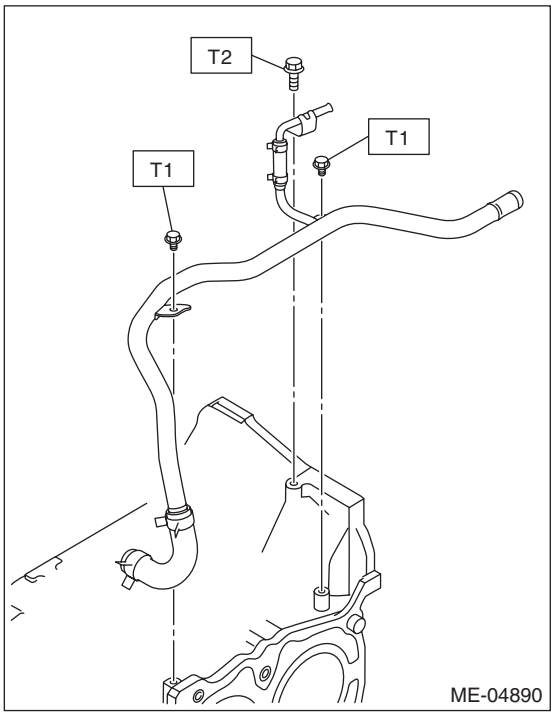

23) Install blow-by pipe assembly (A), blow-by pipe (B), PCV hose assembly (C) and water pipe assembly (D).

NOTE:
For the blow-by pipe assembly (A), blow-by pipe (B) and PCV hose assembly (C), use a new clamp, fit the cut out in the ST with the protrusion on the clamp as shown in the figure, and lock the clamp.
ST 18353AA000 CLAMP PLIERS

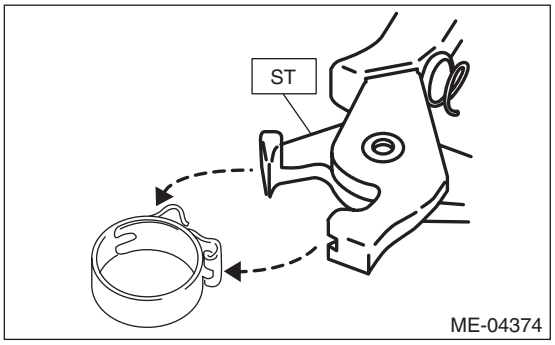

Tightening torque:
6.5 N·m (0.7 kgf-m, 4.8 ft-lb)

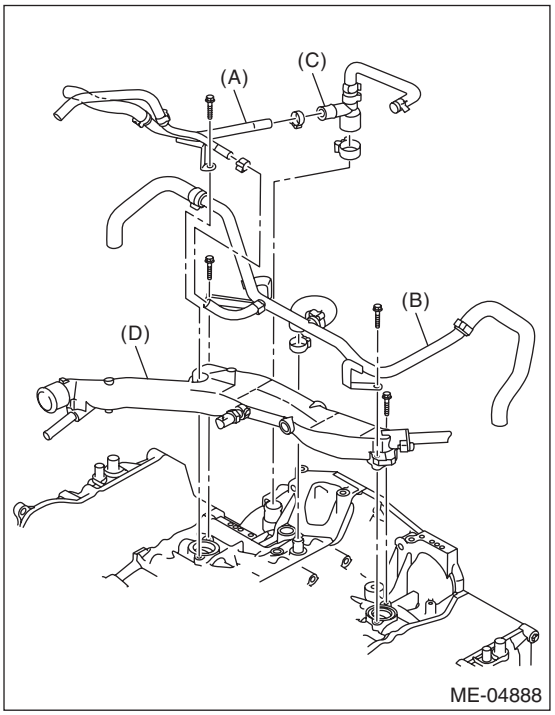

24) Install the baffle plate.

NOTE:
- Use a new seal.
- Make sure that the seals (A) are installed securely on the baffle plate in a direction as shown in the figure below.

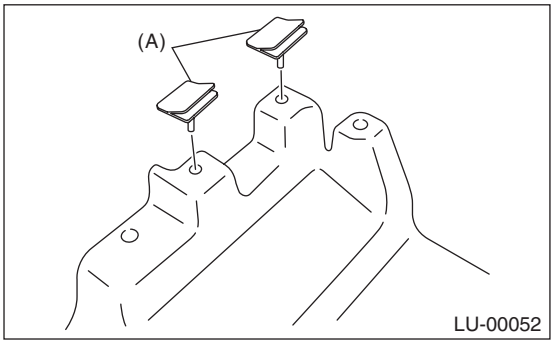

Tightening torque:
6.4 N·m (0.7 kgf-m, 4.7 ft-lb)

25) Apply liquid gasket to the mating surfaces of cylinder block lower, and install the cylinder block lower.

CAUTION:
Be careful not to apply any liquid gasket to the O-ring attachment section.

NOTE:
• Use new O-rings.
• Before installing the cylinder block lower, clean the mating surface of cylinder block lower and cylinder block.
• Install within 5 min. after applying liquid gasket.

Liquid gasket:
THREE BOND 1217G (Part No. K0877Y0100) or equivalent

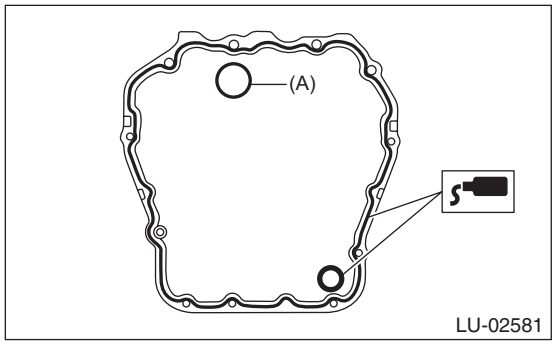

(A) O-ring

Tightening torque:
T1: 6.4 N·m (0.7 kgf-m, 4.7 ft-lb)
T2: 16 N·m (1.6 kgf-m, 11.8 ft-lb)

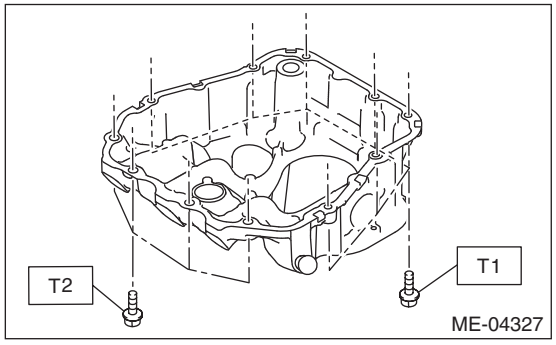

26) Apply liquid gasket to the mating surfaces of oil pan, and install the oil pan.

NOTE:
• Before installing the oil pan, clean the mating surface of oil pan and cylinder block.
• Install within 5 min. after applying liquid gasket.

Liquid gasket:
THREE BOND 1217G (Part No. K0877Y0100) or equivalent

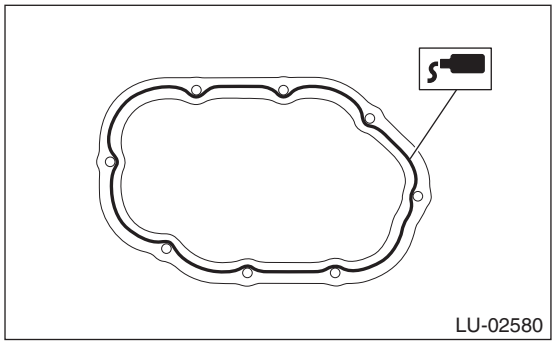

Tightening torque:
5 N·m (0.5 kgf-m, 3.7 ft-lb)

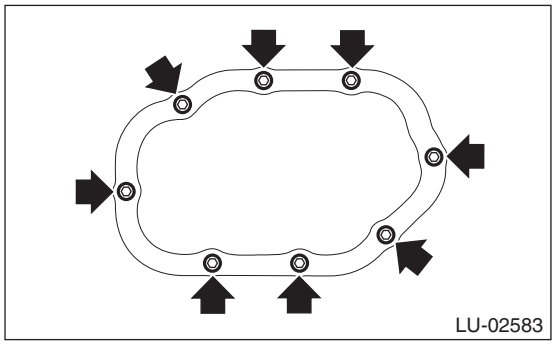

27) Secure the oil level switch harness to the cylinder block with clip.

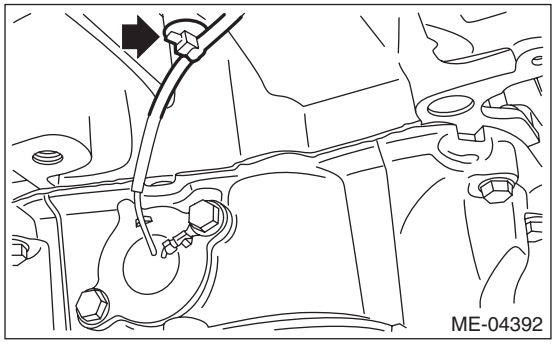

28) Apply liquid gasket to the mating surface of oil separator cover and the threaded portion of bolt (A) shown in the figure (when reusing the bolt), and then install the oil separator cover.

NOTE:
- Install within 5 min. after applying liquid gasket.
- Use new oil separator cover.

Liquid gasket:
Mating surface
THREE BOND 1217G (Part No. K0877Y0100) or equivalent
Bolt thread (A) (when reusing the bolt)
THREE BOND 1324 (Part No. 004403042) or equivalent

Tightening torque:
6.4 N·m (0.65 kgf-m, 4.7 ft-lb)

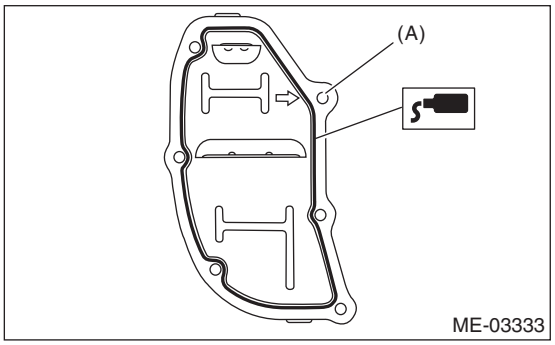

29) Install the flywheel. <Ref. to CL-14, INSTALLATION, Flywheel.>
30) Install the clutch disc and cover. <Ref. to CL-11, INSTALLATION, Clutch Disc and Cover.>
31) Install the oil pump.
(1) Using the ST, install the front oil seal.
ST 499587100 OIL SEAL INSTALLER

NOTE:
Use a new front oil seal.

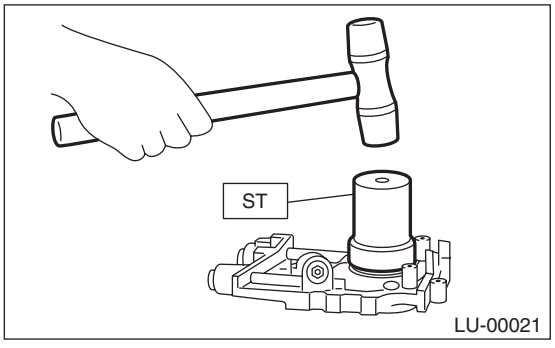

(2) Apply liquid gasket to the mating surfaces of oil pump.

NOTE:
Install within 5 min. after applying liquid gasket.

Liquid gasket:
THREE BOND 1217G (Part No. K0877Y0100) or equivalent

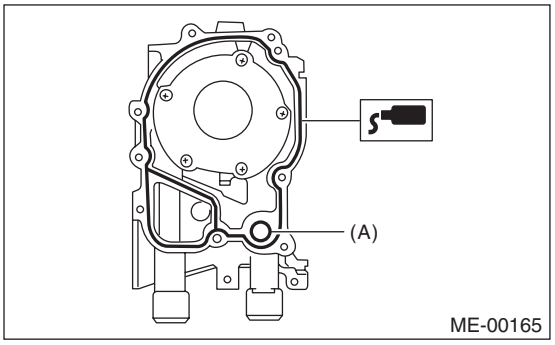

(A) O-ring

(3) Apply a thin coat of engine oil to the inside of front oil seal.

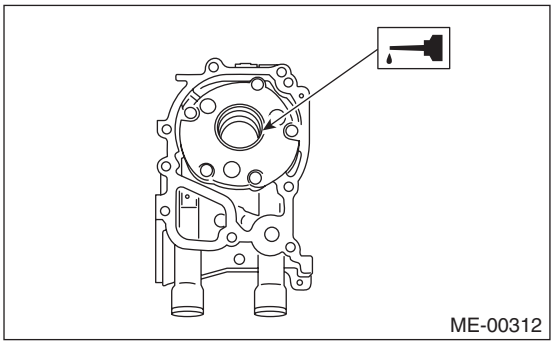

(4) Install the oil pump to cylinder block.

CAUTION:
• Be careful not to damage the front oil seal during installation.
• Make sure the front oil seal lip is not folded.

NOTE:
• Align the flat surface of oil pump's inner rotor with that of crankshaft before installation.
• Use new O-rings.
• Do not forget to assemble O-rings.

(5) Apply liquid gasket to the three bolts thread shown in figure. (when reusing bolts)

Liquid gasket:
THREE BOND 1324 (Part No. 004403042) or equivalent

Tightening torque:
6.4 N·m (0.7 kgf-m, 4.7 ft-lb)

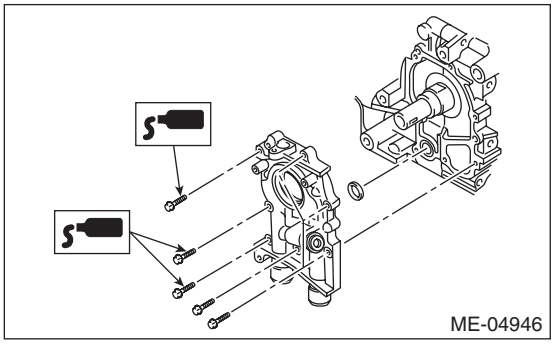

32) Install the water pump and gasket.

NOTE:
• When installing the water pump, tighten bolts in two stages in alphabetical order as shown in the figure.
• Use a new gasket.
• Use new water pump sealing.

Tightening torque:
First:
12 N·m (1.2 kgf-m, 8.9 ft-lb)
Second:
12 N·m (1.2 kgf-m, 8.9 ft-lb)

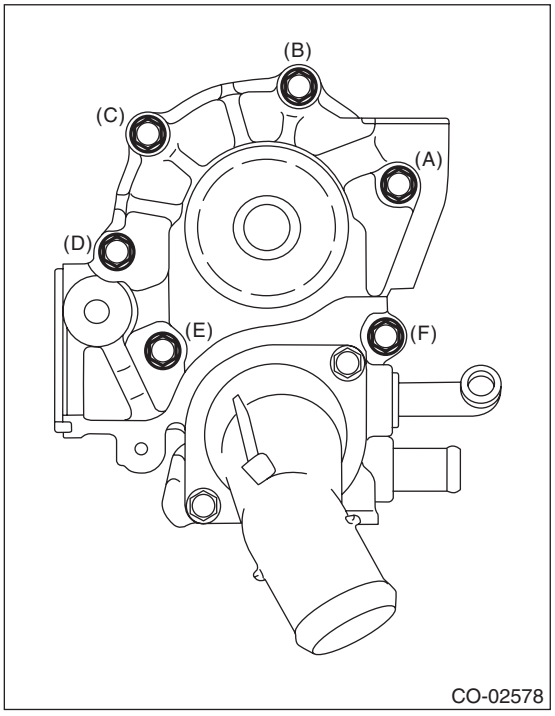

33) Install the hose to water pump.

34) Install the oil cooler. (MT model) <Ref. to LU(H4SO)-28, INSTALLATION, Engine Oil Cooler.>
35) Install the oil filter. <Ref. to LU(H4SO)-36, INSTALLATION, Engine Oil Filter.>
36) Install the cylinder head. <Ref. to ME(H4DOTC)-75, INSTALLATION, Cylinder Head.>
37) Install the camshaft. <Ref. to ME(H4DOTC)-66, INSTALLATION, Camshaft.>
38) Install the A/C compressor together with the bracket.

Tightening torque:
36 N·m (3.7 kgf-m, 26.6 ft-lb)

39) Install the crank sprocket. <Ref. to ME(H4DOTC)-62, INSTALLATION, Crank Sprocket.>
40) Install the cam sprocket. <Ref. to ME(H4DOTC)-61, INSTALLATION, Cam Sprocket.>
41) Install the timing belt. <Ref. to ME(H4DOTC)-54, INSTALLATION, Timing Belt.>
42) Adjust the valve clearance. <Ref. to ME(H4DOTC)-30, ADJUSTMENT, Valve Clearance.>
43) Install the rocker cover.
(1) Install the rocker cover gasket to the rocker cover. (outer section and ignition coil section)

NOTE:
Use a new rocker cover gasket.

(2) Apply liquid gasket to the specified point of the cylinder head.

NOTE:
Install within 5 min. after applying liquid gasket.

Liquid gasket:
THREE BOND 1217G (Part No. K0877Y0100) or equivalent

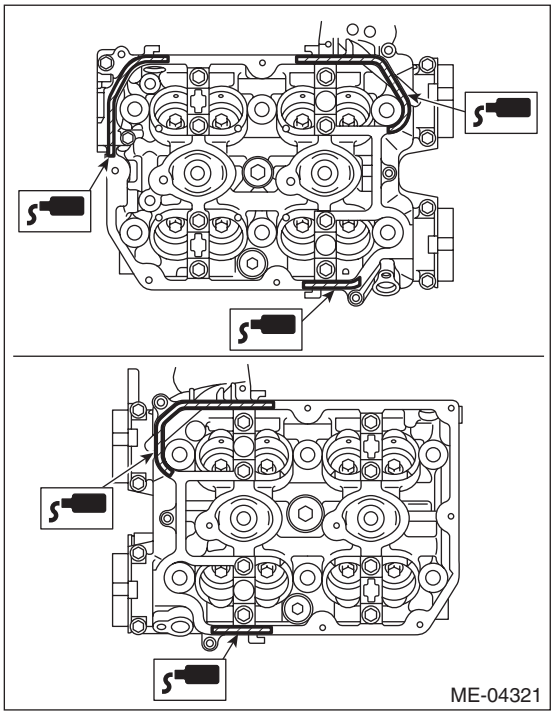

(3) Install the rocker cover onto cylinder heads. Ensure the gasket is properly positioned during installation.

(4) Temporarily tighten the rocker cover bolts in alphabetical order shown in the figure, and then tighten to specified torque in alphabetical order.

Tightening torque:
6.4 N·m (0.7 kgf-m, 4.7 ft-lb)

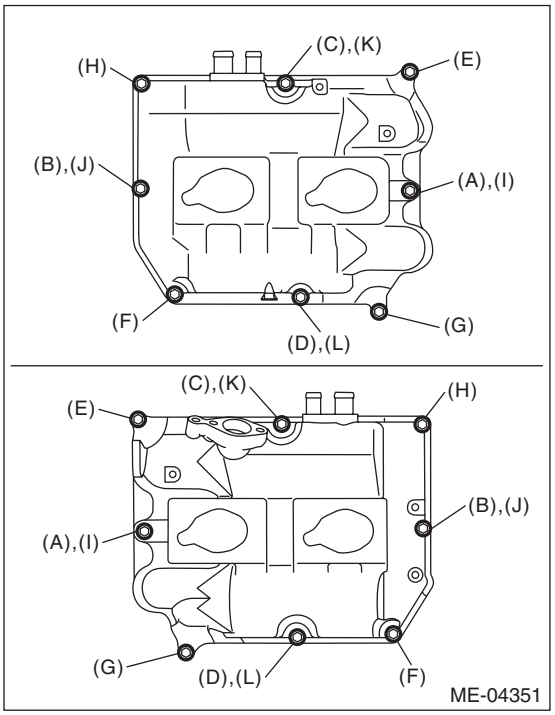

44) Connect the PCV hose to the rocker cover.
45) Install the timing belt cover. <Ref. to ME(H4DOTC)-49, INSTALLATION, Timing Belt Cover.>
46) Install the crank pulley. <Ref. to ME(H4DOTC)-44, INSTALLATION, Crank Pulley.>
47) Install the intake manifold. <Ref. to FU(H4DOTC)-22, INSTALLATION, Intake Manifold.>
48) Install the engine to the vehicle. <Ref. to ME(H4DOTC)-34, INSTALLATION, Engine Assembly.>

C: DISASSEMBLY

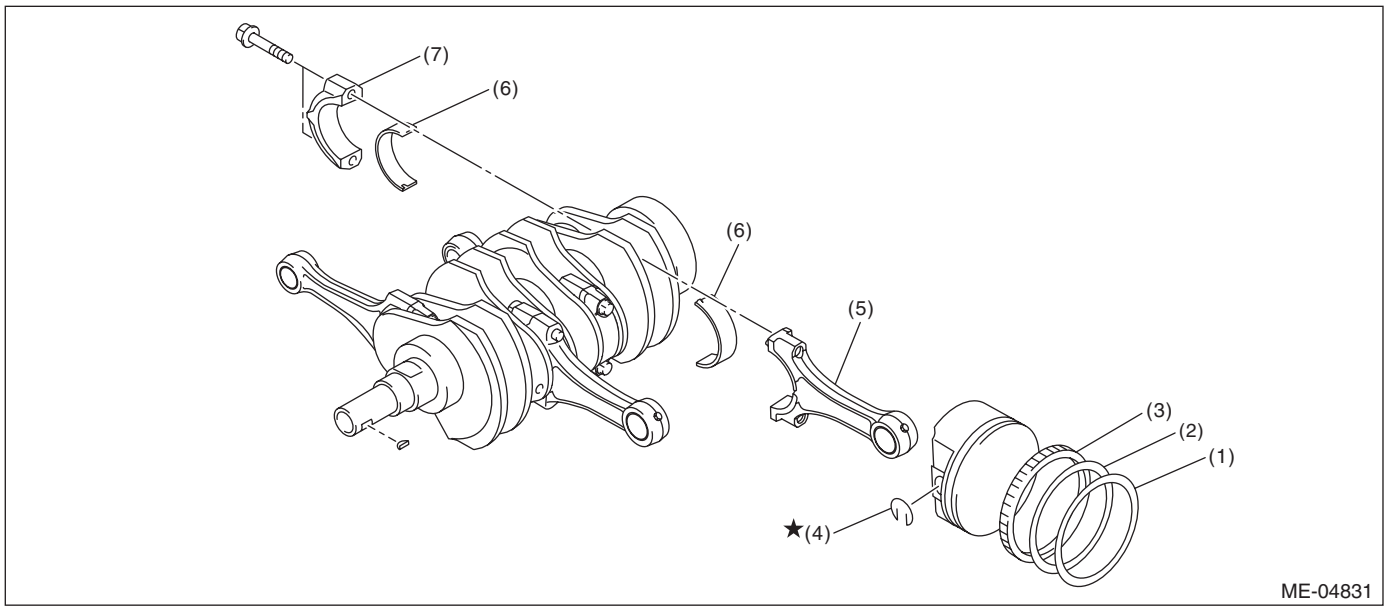

(1) Top ring
(2) Second ring
(3) Oil ring
(4) Snap ring
(5) Connecting rod
(6) Connecting rod bearing
(7) Connecting rod cap

1) Remove the connecting rod cap.
2) Remove the connecting rod bearing.

NOTE:
Keep the removed connecting rods, connecting rod caps and bearings in order so that they are kept in their original combinations/groups, and not mixed together.
3) Remove the piston rings using piston ring expander.
4) Remove the oil ring by hand.

NOTE:
Arrange the removed piston rings in proper order, to prevent confusion.
5) Remove the snap ring.

D: ASSEMBLY

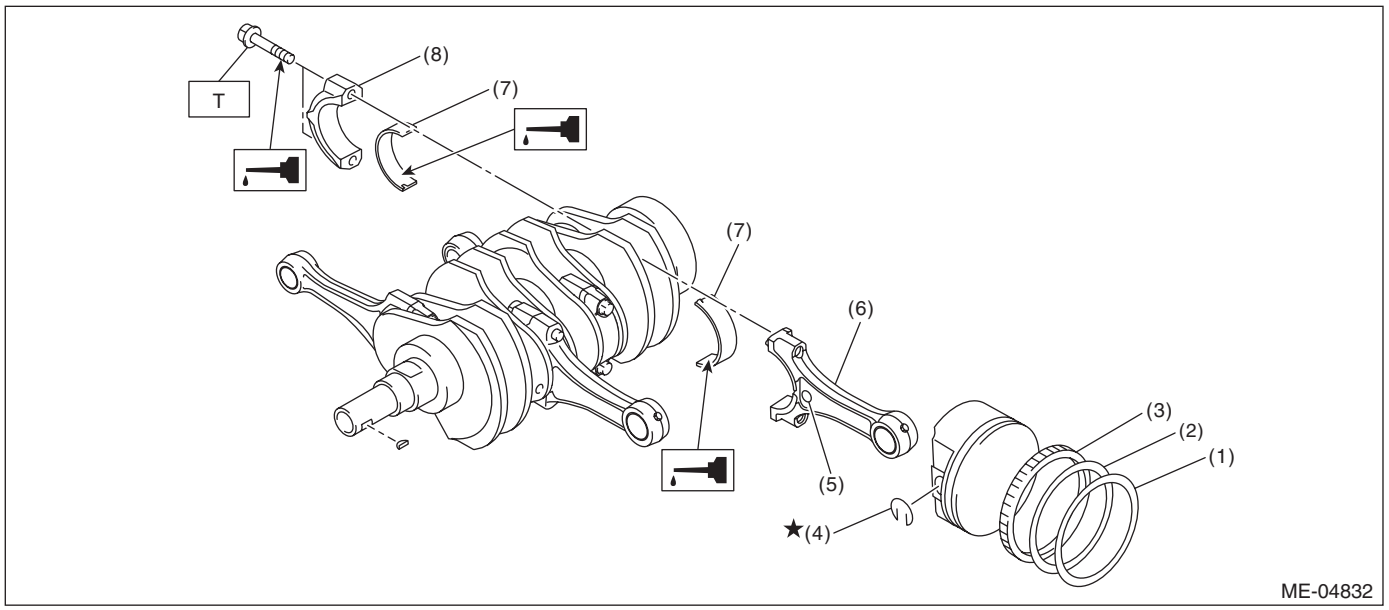

(1)	Top ring	(5)	Side mark
(2)	Second ring	(6)	Connecting rod
(3)	Oil ring	(7)	Connecting rod bearing
(4)	Snap ring	(8)	Connecting rod cap

Tightening torque:N·m (kgf-m, ft-lb)
T: 52 (5.3, 38.4)

1) Apply engine oil to the surface of the connecting rod bearings, and install the connecting rod bearings on connecting rods and connecting rod caps.
2) Position each connecting rod with the side with a side mark facing forward, and install it.
3) Attach the connecting rod cap and tighten it with connecting rod bolt. Make sure the arrow on connecting rod cap faces the front during installation.

NOTE:
• Each connecting rod has its own mating cap. Make sure that they are assembled correctly by checking their matching number.
• When tightening the connecting rod bolts, apply oil on the threads.

Tightening torque:
52 N·m (5.3 kgf-m, 38.4 ft-lb)
4) Install the oil ring upper rail, expander and lower rail by hand.
5) Install the second ring and top ring using piston ring expander.

NOTE:
Assemble so that the piston ring mark “R” faces the top side of the piston.

E: INSPECTION

1. CYLINDER BLOCK

1) Check for cracks or damage. Use liquid penetrant tester on the important sections to check for fissures. Check that there are no marks of gas leaking or water leaking on gasket installing surface.
2) Check the oil passages for clogging.
3) Inspect the cylinder block surface that mates with cylinder head for warping by using a straight edge, and correct by grinding if necessary.

Warping limit:
0.025 mm (0.00098 in)

Grinding limit:
0.1 mm (0.004 in)

Standard height of cylinder block:
201.0 mm (7.91 in)

2. CYLINDER AND PISTON

1) The cylinder bore size is stamped on the front upper face of the cylinder block.

NOTE:
• Measurement should be performed at a temperature of 20°C (68°F).
• Standard sized pistons are classified into two grades, “A” and “B”. These grades should be used as guide lines in selecting a standard piston.

Standard diameter:
A: 99.505 — 99.515 mm (3.9175 — 3.9179 in)
B: 99.495 — 99.505 mm (3.9171 — 3.9175 in)

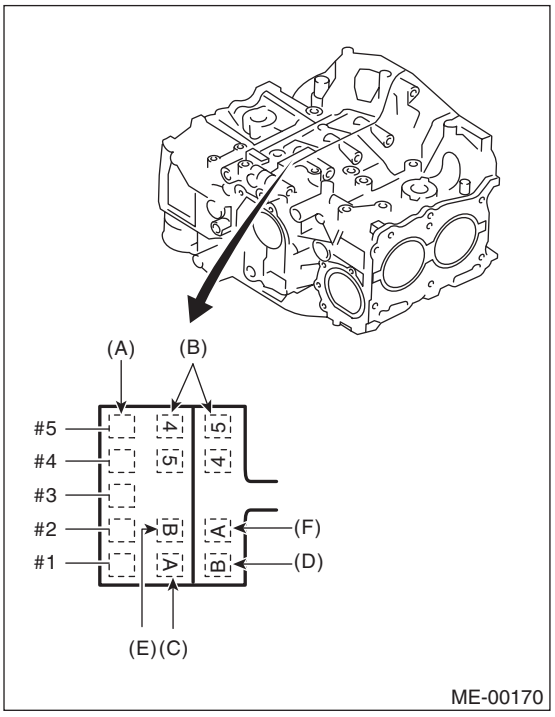

(A) Main journal size mark
(B) Cylinder block (RH) – (LH) combination mark
(C) #1 cylinder bore size mark
(D) #2 cylinder bore size mark
(E) #3 cylinder bore size mark
(F) #4 cylinder bore size mark

2) Measure inner diameter of each cylinder.
Measure the inner diameter of each cylinder in both the thrust and piston pin directions at the heights as shown in the figure, using a cylinder bore gauge.

NOTE:
Measurement should be performed at a temperature of 20°C (68°F).

Cylindricality:
Limit
0.015 mm (0.0006 in)

Out-of-roundness:
Limit
0.010 mm (0.0004 in)

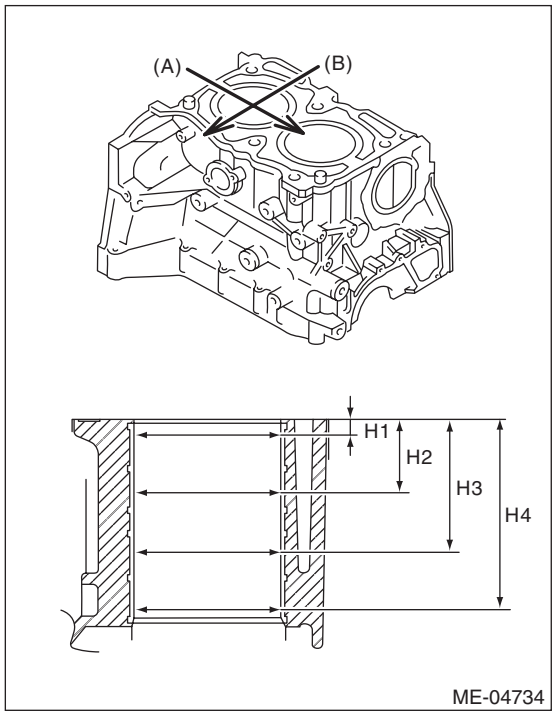

(A) Piston pin direction
(B) Thrust direction
H1: 10 mm (0.39 in)
H2: 45 mm (1.77 in)
H3: 80 mm (3.15 in)
H4: 115 mm (4.53 in)

3) When the piston is to be replaced due to general or cylinder wear, select a suitable sized piston by measuring the piston clearance.

4) Measure outer diameter of each piston.
Measure the outer diameter of each piston at the height as shown in the figure. (Thrust direction)

NOTE:
Measurement should be performed at a temperature of 20°C (68°F).

Piston grade point H:
38.2 mm (1.50 in)

Piston outer diameter:

Standard
A: 99.505 — 99.515 mm (3.9175 — 3.9179 in)
B: 99.495 — 99.505 mm (3.9171 — 3.9175 in)
0.25 mm (0.0098 in) oversize
99.745 — 99.765 mm (3.9270 — 3.9278 in)
0.50 mm (0.0197 in) oversize
99.995 — 100.015 mm (3.9368 — 3.9376 in)

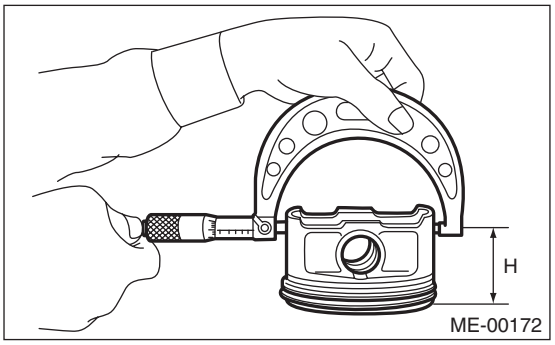

5) Calculate the clearance between cylinder and piston.

NOTE:
Measurement should be performed at a temperature of 20°C (68°F).

Clearance between cylinder and piston at 20°C (68°F):
Standard
–0.010 — 0.010 mm (–0.00039 — 0.00039 in)

6) Boring and honing
(1) If any of the measured value of cylindricality, out-of-roundness or cylinder-to-piston clearance is out of standard or if there is any damage on the cylinder wall, rebore it to replace with an oversize piston.

CAUTION:
When any of the cylinders needs reboring, all other cylinders must be bored at the same time, and replaced with oversize pistons.

(2) If the cylinder inner diameter exceeds the limit after boring and honing, replace the cylinder block.

NOTE:
Immediately after reboring, the cylinder diameter may differ from its real diameter due to temperature rise. Thus, when measuring the cylinder diameter, wait until it has cooled to room temperature.

Cylinder inner diameter boring limit (diameter):
To 100.005 mm (3.9372 in)

3. PISTON AND PISTON PIN

1) Check the piston and piston pin for damage, cracks or wear. Replace if faulty.
2) Check the piston ring groove for wear or damage. Replace if faulty.
3) Make sure that the piston pin can be inserted into the piston pin hole with a thumb at 20°C (68°F). Replace if faulty.

Clearance between piston pin hole and piston pin:
Standard
0.004 — 0.008 mm (0.0002 — 0.0003 in)

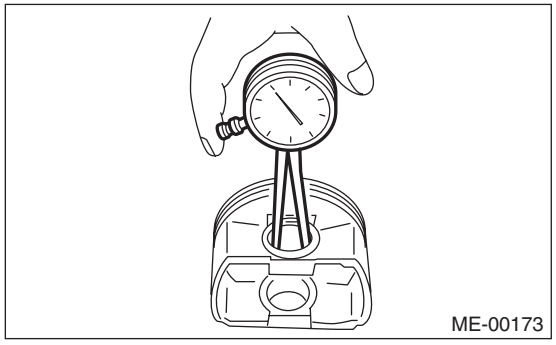
ME-00173

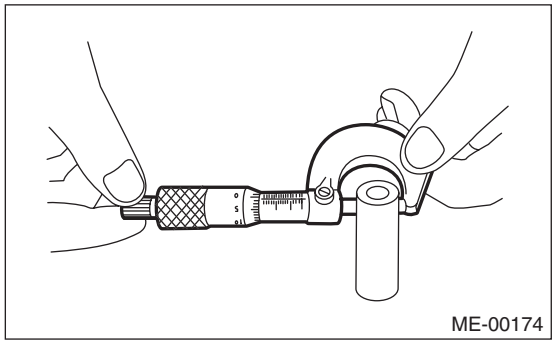
ME-00174

4) Check the snap ring installation groove (A) on the piston for burr. If necessary, remove burr from the groove so that the piston pin can lightly move.

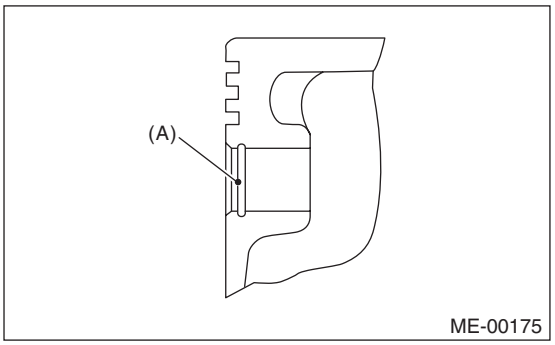

ME-00175

5) Check the snap ring for distortion, cracks and wear.

4. PISTON RING

1) If the piston ring is broken, damaged or worn, or if its tension is insufficient, or when the piston is replaced, replace the piston ring with a new part of the same size as piston.

NOTE:
• The top ring and second ring have the mark to determine the direction for installing. When installing the ring to piston, face marks to the top side.
• Oil ring consists of the upper rail, expander and lower rail. When installing oil ring on piston, be careful of the direction of each rail.

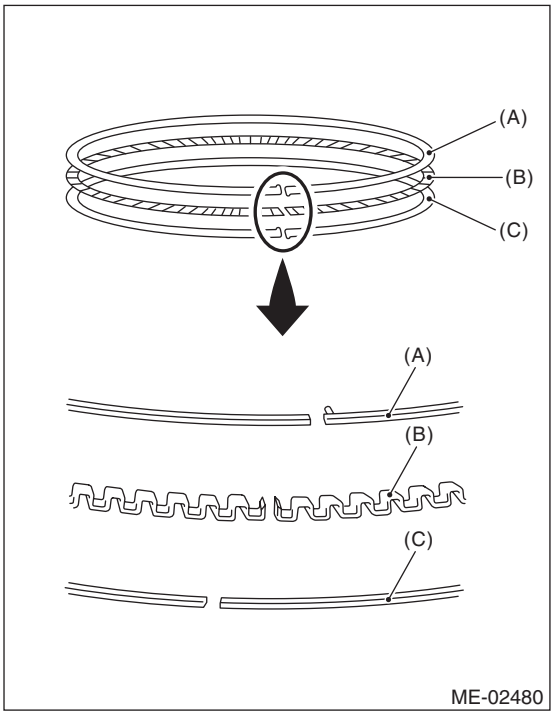

ME-02480

(A) Upper rail
(B) Expander
(C) Lower rail

2) Using the piston, insert the piston ring and oil ring into the cylinder block so that they are perpendicular to the cylinder wall, and measure the piston ring gap using a thickness gauge.

		Standard mm (in)
Piston ring gap	Top ring	0.20 — 0.25 (0.0079 — 0.0098)
	Second ring	0.37 — 0.52 (0.015 — 0.020)
	Oil ring rail	0.20 — 0.50 (0.0079 — 0.0197)

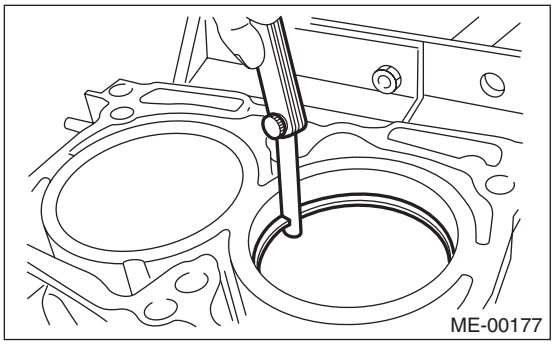

3) Fit the piston ring straight into the piston ring groove, then measure the clearance between piston ring and piston ring groove with a thickness gauge.

NOTE:
Before measuring the clearance, clean the piston ring groove and piston ring.

		Standard mm (in)
Clearance between piston ring and piston ring groove	Top ring	0.040 — 0.080 (0.0016 — 0.0031)
	Second ring	0.030 — 0.070 (0.0012 — 0.0028)

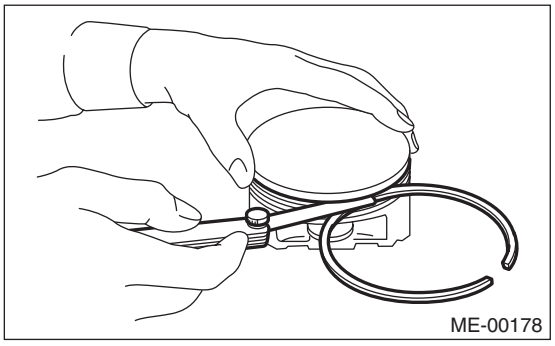

5. CONNECTING ROD

1) Replace the connecting rod, if the large or small end thrust surface is damaged.
2) Check for bend or twist using a connecting rod aligner. Replace the connecting rod if the bend or twist exceeds the limit.

Limit of bend or twist per 100 mm (3.94 in) in length:
0.10 mm (0.0039 in)

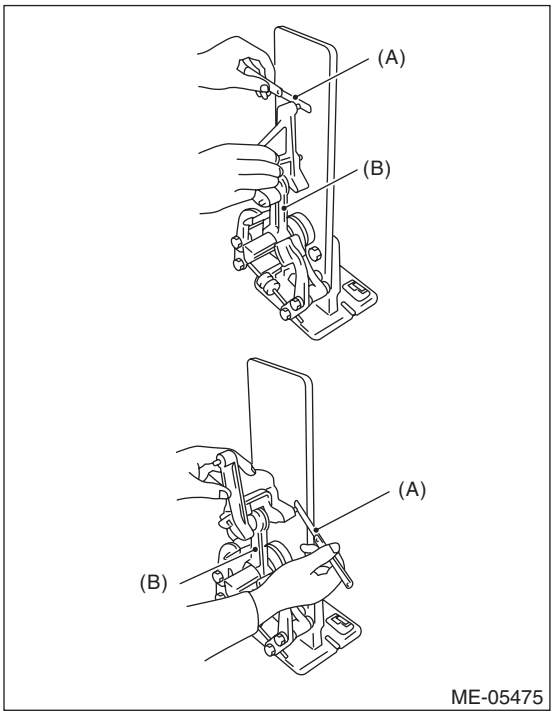

(A) Thickness gauge
(B) Connecting rod

3) Install the connecting rod with bearings attached to the crankshaft, and using a thickness gauge, measure the thrust clearance. If the thrust clearance exceeds the standard or uneven wear is found, replace the connecting rod.

Connecting rod thrust clearance:
Standard
0.070 — 0.330 mm (0.0028 — 0.0130 in)

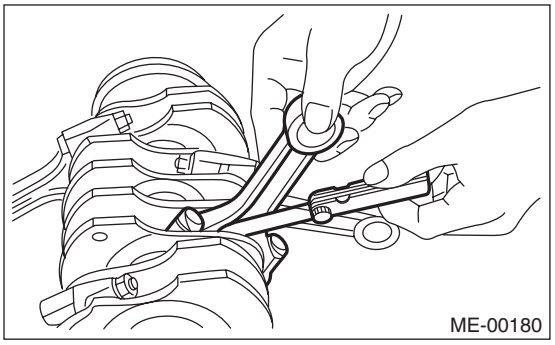

4) Inspect the connecting rod bearing for scar, peeling, seizure, melting, wear, etc.

5) Measure the oil clearance on each connecting rod bearing using plastigauge. If any oil clearance is not within the standard, replace the defective bearing with a new part of standard size or undersize as necessary.

Connecting rod oil clearance:
Standard
0.017 — 0.045 mm (0.0007 — 0.0018 in)

Unit: mm (in)

Bearing	Bearing size (Thickness at center)	Outer diameter of crank pin
Standard	1.490 — 1.506 (0.0587 — 0.0593)	51.976 — 52.000 (2.0463 — 2.0472)
0.03 (0.0012) Undersize	1.504 — 1.512 (0.0592 — 0.0595)	51.954 — 51.970 (2.0454 — 2.0461)
0.05 (0.0020) Undersize	1.514 — 1.522 (0.0596 — 0.0599)	51.934 — 51.950 (2.0447 — 2.0453)
0.25 (0.0098) Undersize	1.614 — 1.622 (0.0635 — 0.0639)	51.734 — 51.750 (2.0368 — 2.0374)

6) Inspect the bushing at connecting rod small end, and replace the connecting rod if it is worn or damaged.
7) Measure the piston pin clearance at connecting rod small end. If the measured value is not within the standard, replace the connecting rod and piston pin as a set.

Clearance between piston pin and bushing:
Standard
0 — 0.022 mm (0 — 0.0009 in)

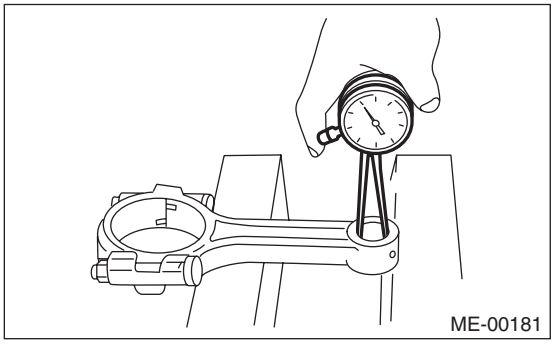
ME-00181

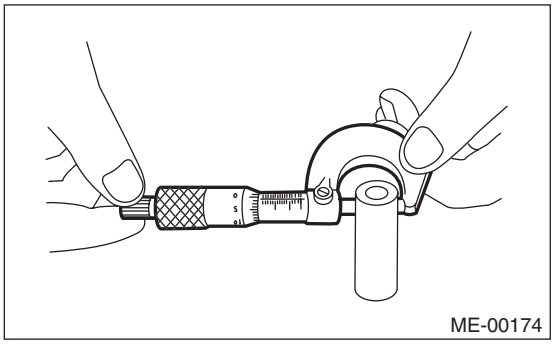
ME-00174

6. CRANKSHAFT AND CRANKSHAFT BEARING

1) Clean the crankshaft completely, and check it for cracks using liquid penetrant tester. If defective, replace the crankshaft.
2) Measure warping of the crankshaft. If it exceeds the limit, correct or replace it.

NOTE:
If a suitable V-block is not available, using just the #1 and #5 crankshaft bearings on cylinder block, position the crankshaft on cylinder block. Then, measure the crankshaft bend using a dial gauge.

Crankshaft bend limit:
0.035 mm (0.0014 in)

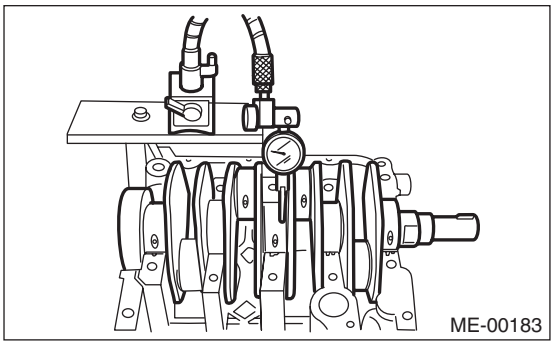
ME-00183

3) Inspect the crank journal and crank pin for wear. If they are not within the standard, replace the bearing with a suitable (undersize) one, and replace or grind to correct the crankshaft as necessary. When grinding the crank journal or crank pin, finish them to the specified dimensions according to the undersize bearing to be used.

Crank pin:
- ***Cylindricality***
  - ***Limit***
  - ***0.004 mm (0.0002 in)***
- ***Out-of-roundness***
  - ***Limit***
  - ***0.003 mm (0.0001 in)***
- ***Grinding limit (dia.)***
  - ***To 51.750 mm (2.0374 in)***

Crank journal:
- ***Cylindricality***
  - ***Limit***
  - ***0.006 mm (0.0002 in)***
- ***Out-of-roundness***
  - ***Limit***
  - ***0.005 mm (0.0002 in)***
- ***Grinding limit (dia.)***
  - ***To 59.758 mm (2.3527 in)***

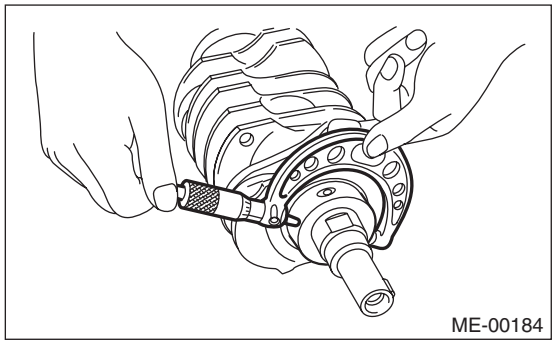

Unit: mm (in)

		Crank journal diameter		Crank pin outer diameter
		#1, #3	#2, #4, #5	
Standard	Journal O.D.	59.984 — 60.008 (2.3616 — 2.3625)	59.984 — 60.008 (2.3616 — 2.3625)	51.976 — 52.000 (2.0463 — 2.0472)
	Bearing size (Thickness at center)	1.998 — 2.015 (0.0787 — 0.0793)	2.000 — 2.017 (0.0787 — 0.0794)	1.490 — 1.506 (0.0587 — 0.0593)
0.03 (0.0012) Undersize	Journal O.D.	59.962 — 59.978 (2.3607 — 2.3613)	59.962 — 59.978 (2.3607 — 2.3613)	51.954 — 51.970 (2.0454 — 2.0461)
	Bearing size (Thickness at center)	2.017 — 2.020 (0.0794 — 0.0795)	2.019 — 2.022 (0.0795 — 0.0796)	1.504 — 1.512 (0.0592 — 0.0595)
0.05 (0.0020) Undersize	Journal O.D.	59.942 — 59.958 (2.3599 — 2.3605)	59.942 — 59.958 (2.3599 — 2.3605)	51.934 — 51.950 (2.0447 — 2.0453)
	Bearing size (Thickness at center)	2.027 — 2.030 (0.0798 — 0.0799)	2.029 — 2.032 (0.0799 — 0.0800)	1.514 — 1.522 (0.0596 — 0.0599)
0.25 (0.0098) Undersize	Journal O.D.	59.742 — 59.758 (2.3520 — 2.3527)	59.742 — 59.758 (2.3520 — 2.3527)	51.734 — 51.750 (2.0368 — 2.0374)
	Bearing size (Thickness at center)	2.127 — 2.130 (0.0837 — 0.0839)	2.129 — 2.132 (0.0838 — 0.0839)	1.614 — 1.622 (0.0635 — 0.0639)

4) Use a thickness gauge to measure the thrust clearance of crankshaft at #5 crank journal bearing. If clearance exceeds the standard, replace the bearing.

Crankshaft thrust clearance:
Standard
0.030 — 0.115 mm (0.0012 — 0.0045 in)

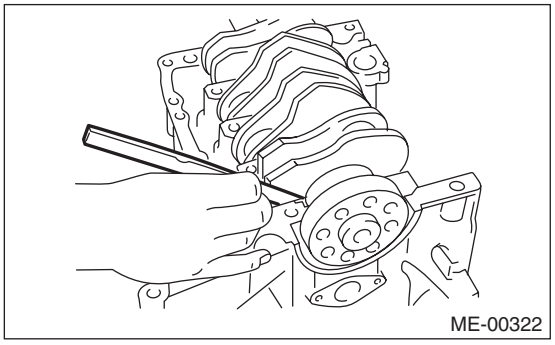

5) Inspect individual crankshaft bearings for signs of flaking, seizure, melting and wear.
6) Measure the oil clearance on each crankshaft bearing using plastigauge. If the measured value is out of standard, replace the defective bearing with an undersize one, and replace or grind to correct the crankshaft as necessary.

Crankshaft oil clearance:
Standard
0.010 — 0.030 mm (0.00039 — 0.0012 in)

21.Intake and Exhaust Valve

A: SPECIFICATION

Refer to “Cylinder Head” for removal and installation procedures of the intake and exhaust valves. <Ref. to ME(H4DOTC)-74, REMOVAL, Cylinder Head.> <Ref. to ME(H4DOTC)-75, INSTALLATION, Cylinder Head.>

22.Piston

A: SPECIFICATION

Refer to “Cylinder Block” for removal and installation procedures of pistons. <Ref. to ME(H4DOTC)-83, REMOVAL, Cylinder Block.> <Ref. to ME(H4DOTC)-87, INSTALLATION, Cylinder Block.>

23.Connecting Rod

A: SPECIFICATION

Refer to “Cylinder Block” for removal and installation procedures of connecting rod. <Ref. to ME(H4DOTC)-83, REMOVAL, Cylinder Block.> <Ref. to ME(H4DOTC)-87, INSTALLATION, Cylinder Block.>

24.Crankshaft

A: SPECIFICATION

Refer to “Cylinder Block” for removal and installation procedures of the crankshaft. <Ref. to ME(H4DOTC)-83, REMOVAL, Cylinder Block.> <Ref. to ME(H4DOTC)-87, INSTALLATION, Cylinder Block.>

25.Engine Trouble in General

A: INSPECTION

NOTE:
The “RANK” shown in the chart shows the possibilities of the cause of trouble in order from “Very often” to “Rarely”.
A — Very often
B — Sometimes
C — Rarely

Symptoms	Problem parts etc.	Possible cause	RANK
1. Engine does not start.			
1) Starter does not turn.	Starter	Defective battery-to-starter harness	B
		Defective starter switch	C
		Defective starter	B
	Battery	Improper connection of terminal	A
		Run-down battery	A
		Defective charging system	B
	Friction	Seizure of crankshaft and connecting rod bearing	C
		Seized camshaft	C
		Seized or stuck piston and cylinder	C
	Immobilizer system <Ref. to IM(diag)-2, Basic Diagnostic Procedure.>		A
2) Initial combustion does not occur.	Starter	Defective starter	C
	Engine control system <Ref. to EN(H4DOTC)(diag)-2, Basic Diagnostic Procedure.>		A
	Fuel line	Defective fuel pump and relay	A
		Clogged fuel line	C
		Lack of fuel or insufficient fuel	B
	Timing belt	Degradation, etc.	B
		Defective timing	B
	Compression	Incorrect valve clearance	C
		Loosened spark plug or defective gasket	C
		Loosened cylinder head bolt or defective cylinder head gasket	C
		Improper valve sealing	C
		Defective valve stem	C
		Worn or broken valve spring	B
		Worn or stuck piston rings, cylinder and piston	C
		Incorrect valve timing	B
		Improper engine oil (low viscosity)	B

Symptoms	Problem parts etc.	Possible cause	RANK
3) Initial combustion occurs.	Engine control system <Ref. to EN(H4DOTC)(diag)-2, Basic Diagnostic Procedure.>		A
	Intake system	Defective intake manifold gasket	B
		Defective throttle body gasket	B
	Fuel line	Defective fuel pump and relay	C
		Clogged fuel line	C
		Lack of fuel or insufficient fuel	B
	Timing belt	Degradation, etc.	B
		Defective timing	B
	Compression	Incorrect valve clearance	C
		Loosened spark plug or defective gasket	C
		Loosened cylinder head bolt or defective cylinder head gasket	C
		Improper valve sealing	C
		Defective valve stem	C
		Worn or broken valve spring	B
		Worn or stuck piston rings, cylinder and piston	C
		Incorrect valve timing	B
		Improper engine oil (low viscosity)	B
4) Engine stalls after initial combustion.	Engine control system <Ref. to EN(H4DOTC)(diag)-2, Basic Diagnostic Procedure.>		A
	Intake system	Loosened or cracked intake duct	B
		Loosened or cracked PCV hose	C
		Loosened or cracked vacuum hose	C
		Defective intake manifold gasket	B
		Defective throttle body gasket	B
		Dirty air cleaner element	C
	Fuel line	Clogged fuel line	C
		Lack of fuel or insufficient fuel	B
	Timing belt	Degradation, etc.	B
		Defective timing	B
	Compression	Incorrect valve clearance	C
		Loosened spark plug or defective gasket	C
		Loosened cylinder head bolt or defective cylinder head gasket	C
		Improper valve sealing	C
		Defective valve stem	C
		Worn or broken valve spring	B
		Worn or stuck piston rings, cylinder and piston	C
		Incorrect valve timing	B
		Improper engine oil (low viscosity)	B

Symptoms	Problem parts etc.	Possible cause	RANK
2. Rough idle and engine stall	Engine control system <Ref. to EN(H4DOTC)(diag)-2, Basic Diagnostic Procedure.>		A
	Intake system	Loosened or cracked intake duct	A
		Loosened or cracked PCV hose	A
		Loosened or cracked vacuum hose	A
		Defective intake manifold gasket	B
		Defective throttle body gasket	B
		Defective PCV valve	C
		Loosened oil filler cap	B
		Dirty air cleaner element	C
	Fuel line	Defective fuel pump and relay	C
		Clogged fuel line	C
		Lack of fuel or insufficient fuel	B
	Timing belt	Defective timing	C
	Compression	Incorrect valve clearance	B
		Loosened spark plug or defective gasket	B
		Loosened cylinder head bolt or defective cylinder head gasket	B
		Improper valve sealing	B
		Defective valve stem	C
		Worn or broken valve spring	B
		Worn or stuck piston rings, cylinder and piston	B
		Incorrect valve timing	A
		Improper engine oil (low viscosity)	B
	Lubrication system	Incorrect oil pressure	B
		Defective rocker cover gasket	C
	Cooling system	Over-heating	C
	Others	Evaporative emission control system malfunction	A
		Stuck or damaged throttle valve	B

Symptoms	Problem parts etc.	Possible cause	RANK
3. Low output, hesitation and poor acceleration	Engine control system <Ref. to EN(H4DOTC)(diag)-2, Basic Diagnostic Procedure.>		A
	Intake system	Loosened or cracked intake duct	A
		Loosened or cracked PCV hose	A
		Loosened or cracked vacuum hose	B
		Defective intake manifold gasket	B
		Defective throttle body gasket	B
		Defective PCV valve	B
		Loosened oil filler cap	B
		Dirty air cleaner element	A
	Fuel line	Defective fuel pump and relay	B
		Clogged fuel line	B
		Lack of fuel or insufficient fuel	C
	Timing belt	Defective timing	B
	Compression	Incorrect valve clearance	B
		Loosened spark plug or defective gasket	B
		Loosened cylinder head bolt or defective cylinder head gasket	B
		Improper valve sealing	B
		Defective valve stem	C
		Worn or broken valve spring	B
		Worn or stuck piston rings, cylinder and piston	C
		Incorrect valve timing	A
		Improper engine oil (low viscosity)	B
	Lubrication system	Incorrect oil pressure	B
	Cooling system	Over-heating	C
		Over-cooling	C
	Others	Evaporative emission control system malfunction	A

Symptoms	Problem parts etc.	Possible cause	RANK
4. Surging	Engine control system <Ref. to EN(H4DOTC)(diag)-2, Basic Diagnostic Procedure.>		A
	Intake system	Loosened or cracked intake duct	A
		Loosened or cracked PCV hose	A
		Loosened or cracked vacuum hose	A
		Defective intake manifold gasket	B
		Defective throttle body gasket	B
		Defective PCV valve	B
		Loosened oil filler cap	B
		Dirty air cleaner element	B
	Fuel line	Defective fuel pump and relay	B
		Clogged fuel line	B
		Lack of fuel or insufficient fuel	C
	Timing belt	Defective timing	B
	Compression	Incorrect valve clearance	B
		Loosened spark plug or defective gasket	C
		Loosened cylinder head bolt or defective cylinder head gasket	C
		Improper valve sealing	C
		Defective valve stem	C
		Worn or broken valve spring	C
		Worn or stuck piston rings, cylinder and piston	C
		Incorrect valve timing	A
		Improper engine oil (low viscosity)	B
	Cooling system	Over-heating	B
	Others	Evaporative emission control system malfunction	C
5. Engine does not return to idle.	Engine control system <Ref. to EN(H4DOTC)(diag)-2, Basic Diagnostic Procedure.>		A
	Intake system	Loosened or cracked vacuum hose	A
	Others	Stuck or damaged throttle valve	A
6. Dieseling (Run-on)	Engine control system <Ref. to EN(H4DOTC)(diag)-2, Basic Diagnostic Procedure.>		A
	Cooling system	Over-heating	B
	Others	Evaporative emission control system malfunction	B
7. After burning in exhaust system	Engine control system <Ref. to EN(H4DOTC)(diag)-2, Basic Diagnostic Procedure.>		A
	Intake system	Loosened or cracked intake duct	C
		Loosened or cracked PCV hose	C
		Loosened or cracked vacuum hose	B
		Defective PCV valve	B
		Loosened oil filler cap	C
	Timing belt	Defective timing	B
	Compression	Incorrect valve clearance	B
		Loosened spark plug or defective gasket	C
		Loosened cylinder head bolt or defective cylinder head gasket	C
		Improper valve sealing	B
		Defective valve stem	C
		Worn or broken valve spring	C
		Worn or stuck piston rings, cylinder and piston	C
		Incorrect valve timing	A
	Lubrication system	Incorrect oil pressure	C
	Cooling system	Over-cooling	C
	Others	Evaporative emission control system malfunction	C

Symptoms	Problem parts etc.	Possible cause	RANK
8. Knocking	Engine control system <Ref. to EN(H4DOTC)(diag)-2, Basic Diagnostic Procedure.>		A
	Intake system	Loosened oil filler cap	B
	Timing belt	Defective timing	B
	Compression	Incorrect valve clearance	C
		Incorrect valve timing	B
	Cooling system	Over-heating	A
9. Excessive engine oil consumption	Intake system	Loosened or cracked PCV hose	A
		Defective PCV valve	B
		Loosened oil filler cap	C
	Compression	Defective valve stem	A
		Worn or stuck piston rings, cylinder and piston	A
	Lubrication system	Loosened oil pump attaching bolts and defective gasket	B
		Defective oil filter gasket	B
		Defective crankshaft oil seal	B
		Defective rocker cover gasket	B
		Loosened oil drain plug or defective gasket	B
		Loosened oil pan fitting bolts or defective oil pan	B
10. Excessive fuel consumption	Engine control system <Ref. to EN(H4DOTC)(diag)-2, Basic Diagnostic Procedure.>		A
	Intake system	Dirty air cleaner element	A
	Timing belt	Defective timing	B
	Compression	Incorrect valve clearance	B
		Loosened spark plug or defective gasket	C
		Loosened cylinder head bolt or defective cylinder head gasket	C
		Improper valve sealing	B
		Defective valve stem	C
		Worn or broken valve spring	C
		Worn or stuck piston rings, cylinder and piston	B
		Incorrect valve timing	B
	Lubrication system	Incorrect oil pressure	C
	Cooling system	Over-cooling	C

26.Engine Noise

A: INSPECTION

Type of sound	Condition	Possible cause
Regular clicking sound	Sound increases as engine speed increases.	• Valve mechanism is defective. • Incorrect valve clearance • Worn camshaft • Broken valve spring
Heavy and dull clank	Oil pressure is low.	• Worn crankshaft main bearing • Worn connecting rod bearing (large end)
	Oil pressure is normal.	• Loosened flywheel mounting bolt • Damaged engine mounting
High-pitched clank	Sound is noticeable when accelerating with an overload condition.	• Ignition timing advanced • Accumulation of carbon inside combustion chamber • Wrong heat range of spark plug • Improper octane value gasoline
Clank when engine speed is between 1,000 and 2,000 rpms.	Sound is reduced when the fuel injector connector of the noisy cylinder is disconnected. *	• Worn crankshaft main bearing • Worn connecting rod bearing (large end)
Knocking sound when engine is operating under idling speed and engine is warm	Sound is reduced when the fuel injector connector of the noisy cylinder is disconnected. *	• Worn cylinder liner and piston ring • Broken or stuck piston ring • Worn piston pin and hole at piston end of connecting rod
	Sound is not reduced if each fuel injector connector is disconnected in turn. *	• Unusually worn valve lifter • Worn cam sprocket • Worn camshaft journal bore in cylinder head
Squeaky sound	—	• Insufficient generator lubrication
Rubbing sound	—	• Poor contact of generator brush and rotor
Gear scream when starting engine	—	• Defective ignition starter switch • Worn gear and starter pinion
Sound like polishing glass with a dry cloth	—	• Loose V-belt • Defective water pump shaft
Hissing sound	—	• Insufficient compression • Air leakage in air intake system, hose, connection or manifold
Timing belt noise	—	• Loose timing belt • Timing belt contacting with adjacent part
Valve noise	—	• Incorrect valve clearance

* When disconnecting the fuel injector connector, the malfunction indicator light illuminates and DTC is stored in ECM memory. Therefore, perform the Clear Memory Mode <Ref. to EN(H4DOTC)(diag)-53, OPERATION, Clear Memory Mode.> and Inspection Mode <Ref. to EN(H4DOTC)(diag)-41, PROCEDURE, Inspection Mode.> after connecting the fuel injector connector.

EXHAUST

EX(H4DOTC)

Page

1. General Description 2
2. Front Exhaust Pipe 5
3. Center Exhaust Pipe 12
4. Rear Exhaust Pipe 15
5. Muffler 17

1. General Description

A: COMPONENT

1. FRONT EXHAUST PIPE

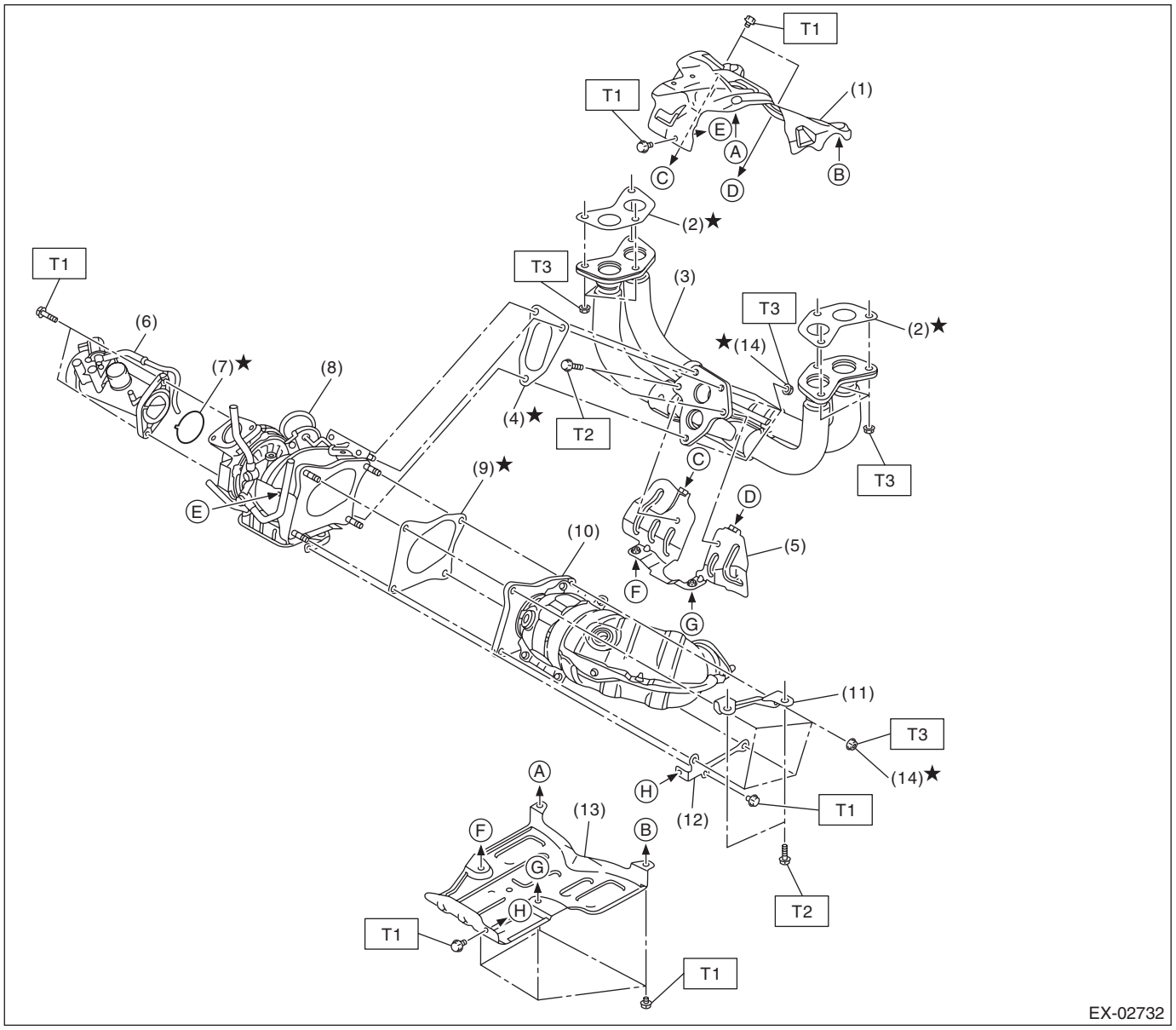

(1)	Exhaust pipe cover	(8)	Turbocharger
(2)	Gasket	(9)	Gasket
(3)	Front exhaust pipe	(10)	Center exhaust pipe (front)
(4)	Gasket	(11)	Turbocharger upper stay
(5)	Exhaust pipe stay	(12)	Turbocharger lower stay
(6)	Intake duct	(13)	Engine cover
(7)	O-ring	(14)	Self-locking nut

Tightening torque:N·m (kgf-m, ft-lb)
T1: 6.4 (0.7, 4.7)
T2: 33 (3.4, 24.3)
T3: 42.5 (4.3, 31.3)

2. CENTER AND REAR EXHAUST PIPE, AND MUFFLER

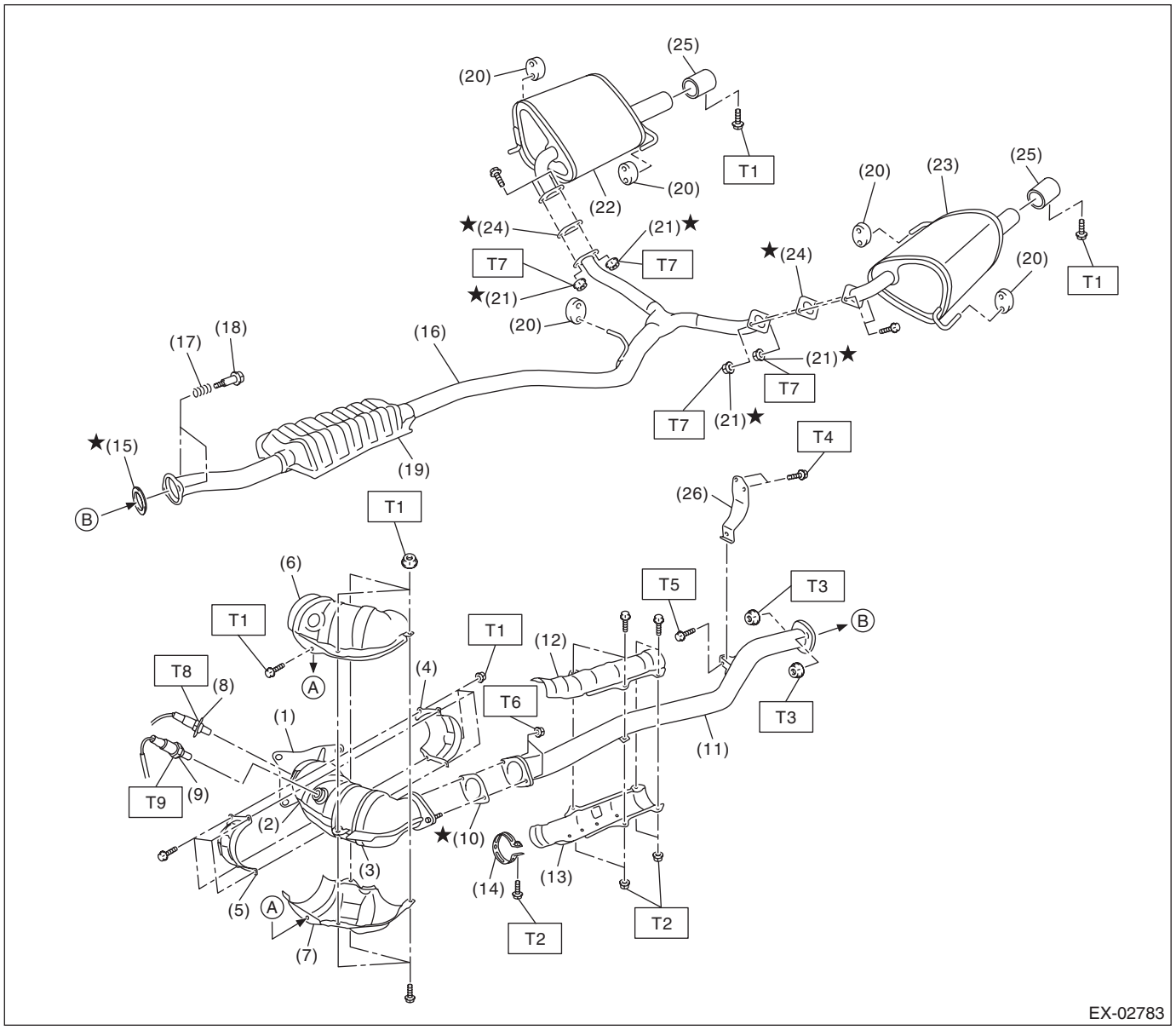

(1)	Center exhaust pipe (front)	(14)	Center exhaust pipe band
(2)	Front catalytic converter	(15)	Gasket
(3)	Rear catalytic converter	(16)	Rear exhaust pipe
(4)	Center exhaust pipe inner cover (front)	(17)	Spring
(5)	Center exhaust pipe outer cover (front)	(18)	Bolt
(6)	Center exhaust pipe upper cover (front)	(19)	Chamber
(7)	Center exhaust pipe lower cover (front)	(20)	Cushion rubber
(8)	Front oxygen (A/F) sensor	(21)	Self-locking nut
(9)	Rear oxygen sensor	(22)	Muffler RH
(10)	Gasket	(23)	Muffler LH
(11)	Center exhaust pipe (rear)	(24)	Gasket
(12)	Center exhaust pipe upper cover (rear)	(25)	Muffler cutter
(13)	Center exhaust pipe lower cover (rear)	(26)	Hanger bracket

Tightening torque:N·m (kgf-m, ft-lb)

- ***T1: 7.5 (0.8, 5.5)***
- ***T2: 13 (1.3, 9.6)***
- ***T3: 18 (1.8, 13.3)***
- ***T4: 23 (2.3, 17.0)***
- ***T5: 35 (3.6, 25.8)***
- ***T6: 42.5 (4.3, 31.3)***
- ***T7: 48 (4.9, 35.4)***
- ***T8: <Ref. to FU(H4DOTC)-54, INSTALLATION, Front Oxygen (A/F) Sensor.>***
- ***T9: <Ref. to FU(H4DOTC)-56, INSTALLATION, Rear Oxygen Sensor.>***

B: CAUTION

- Wear appropriate work clothing, including a cap, protective goggles and protective shoes when performing any work.
- Remove contamination including dirt and corrosion before removal, installation or disassembly.
- Keep the disassembled parts in order and protect them from dust and dirt.
- Before removal, installation or disassembly, be sure to clarify the failure. Avoid unnecessary removal, installation, disassembly and replacement.
- Vehicle components are extremely hot after driving. Be wary of receiving burns from heated parts.
- Be sure to tighten fasteners including bolts and nuts to the specified torque.
- Place shop jacks or rigid racks at the specified points.
- Before disconnecting connectors of sensors or units, be sure to disconnect the ground cable from the battery.
- If any fat adheres to the exhaust pipe, wipe it off. Otherwise a fire may happen.

C: PREPARATION TOOL

1. GENERAL TOOL

TOOL NAME	REMARKS
TORX® socket E10	Used for removing and installing center exhaust pipe (front).

2. Front Exhaust Pipe

A: REMOVAL

CAUTION:
Vehicle components are extremely hot after driving. Be wary of receiving burns from heated parts.

1) Remove the collector cover.
2) Disconnect the ground cable from battery.

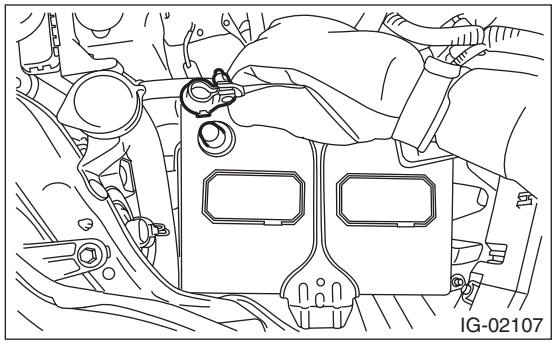

3) Remove the air intake duct. <Ref. to IN(H4DOTC)-12, REMOVAL, Air Intake Duct.>
4) Lift up the vehicle.
5) Remove the under cover. <Ref. to EI-35, REMOVAL, Front Under Cover.>
6) Drain engine coolant. <Ref. to CO(H4DOTC)-14, DRAINING OF ENGINE COOLANT, REPLACEMENT, Engine Coolant.>
7) Lower the vehicle.
8) Disconnect connectors from the front oxygen (A/F) sensor and rear oxygen sensor, and remove the clip (A) fastening the front oxygen (A/F) sensor harness and rear oxygen sensor harness.

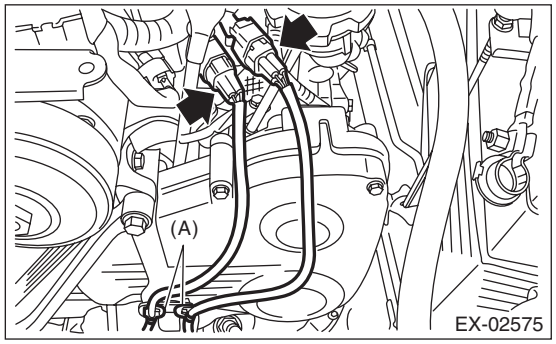

9) Disconnect the engine coolant hose from the water tank pipe and water pump.

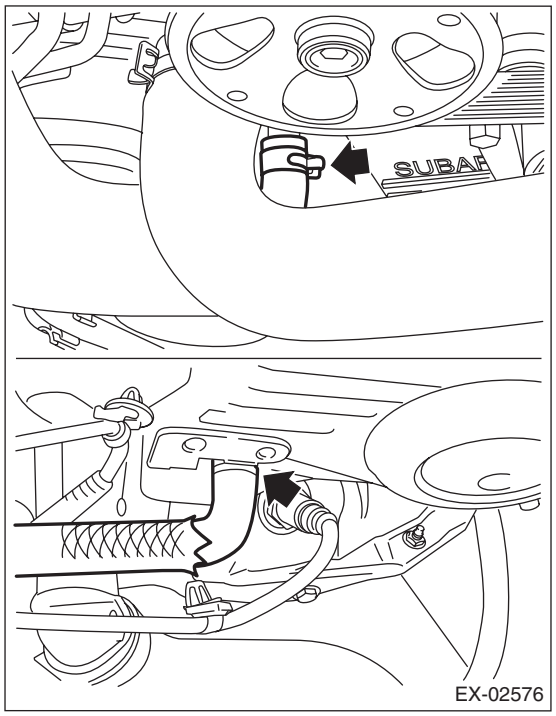

10) Remove the radiator sub fan motor assembly. <Ref. to CO(H4DOTC)-27, REMOVAL, Radiator Sub Fan and Fan Motor.>
11) Remove the engine coolant hose from clip (A), and remove the bolts which secure the intake duct to the turbocharger.

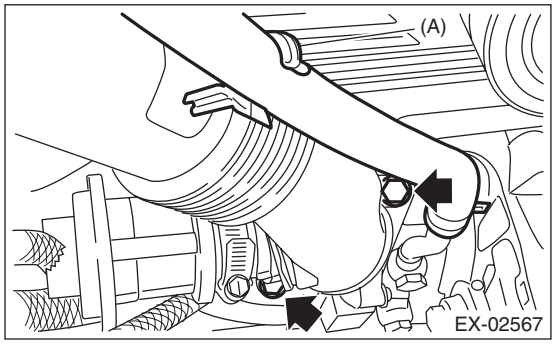

12) Lift up the vehicle.

13) Remove oil inlet pipe B (B) from oil inlet pipe A (A), and remove the bolt which holds oil outlet pipe C (C) and oil inlet pipe A (A).

CAUTION:
In order to prevent damaging the oil inlet pipe, fix the section (a) shown in the figure when loosing the oil inlet pipe flare nut, and avoid the part from rotating together while loosening the nut.

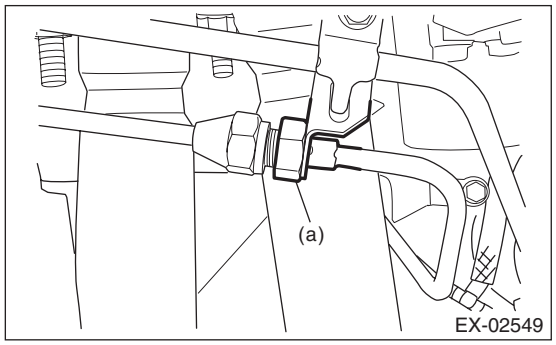

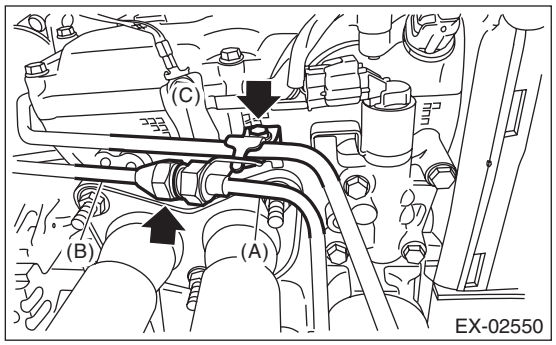

14) Disconnect the air control hose (A), and loosen the bolts which secure the intake duct to the turbocharger.

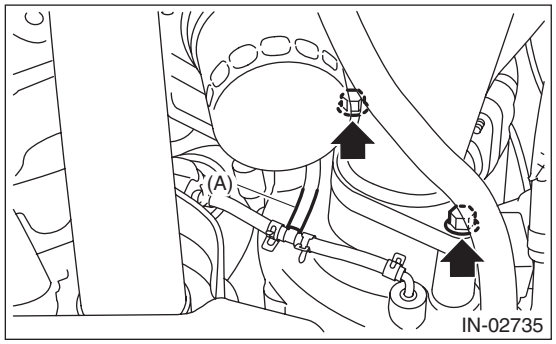

15) Remove the center exhaust pipe (rear) from the center exhaust pipe (front).

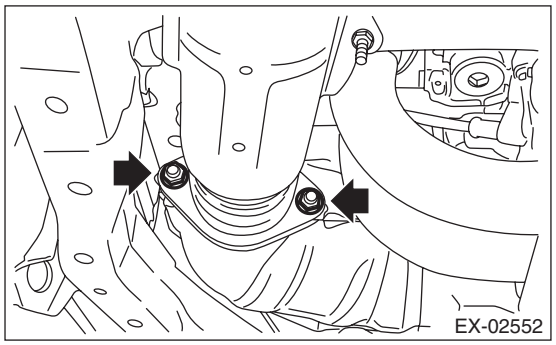

16) Remove the rear exhaust pipe from the center exhaust pipe (rear).

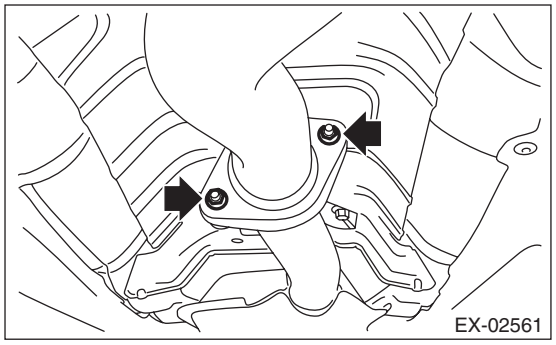

17) Remove the bolt which holds center exhaust pipe (rear) to the hanger bracket, and remove the center exhaust pipe (rear).

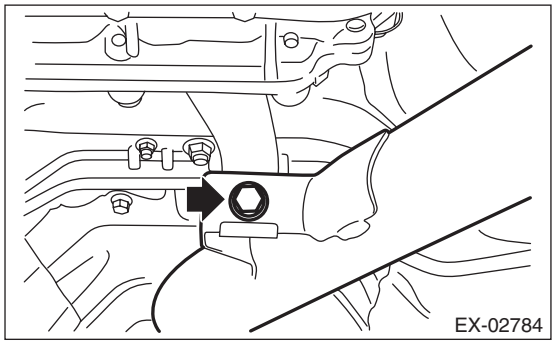

18) Remove the engine cover.

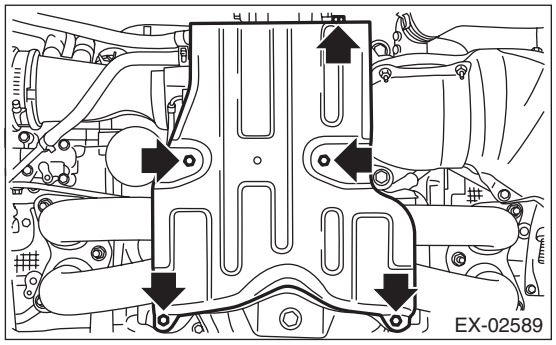

19) Remove bolts and nuts which secure the oil catch tank to the turbocharger and oil catch tank stay, and remove the oil catch tank from the turbocharger.

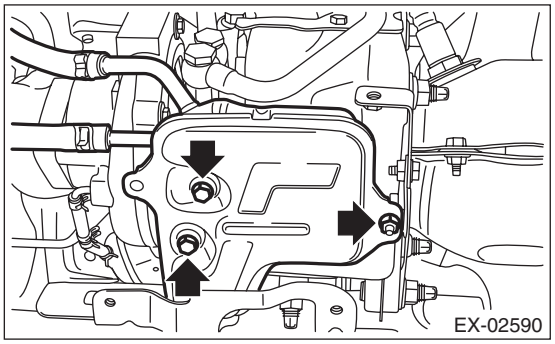

20) Remove the bolts which secure the turbocharger stay.

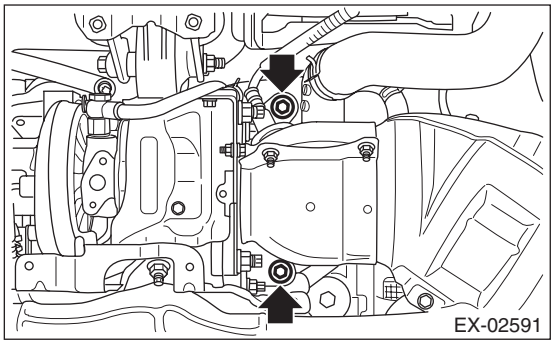

21) While holding the front exhaust pipe with transmission jack, remove the nuts which hold the front exhaust pipe to the cylinder head exhaust port, and remove the front exhaust pipe.

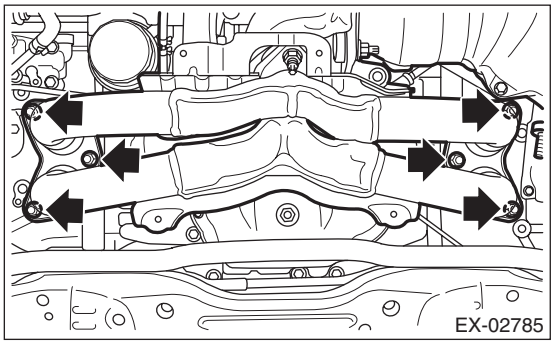

B: INSTALLATION

1) While holding the front exhaust pipe with transmission jack, set the front exhaust pipe, and install the nuts which hold the front exhaust pipe to the cylinder head exhaust port.

NOTE:
Use a new gasket.

Tightening torque:
42.5 N·m (4.3 kgf-m, 31.3 ft-lb)

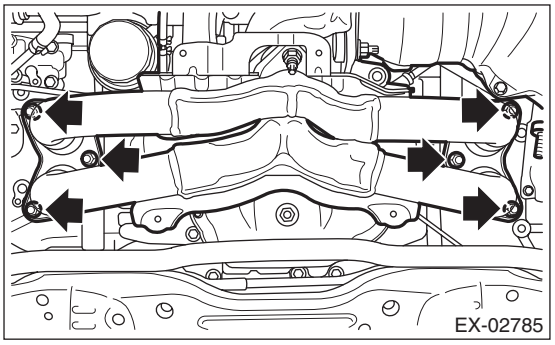

2) Attach the bolt which holds the turbocharger stay.

Tightening torque:
33 N·m (3.4 kgf-m, 24.3 ft-lb)

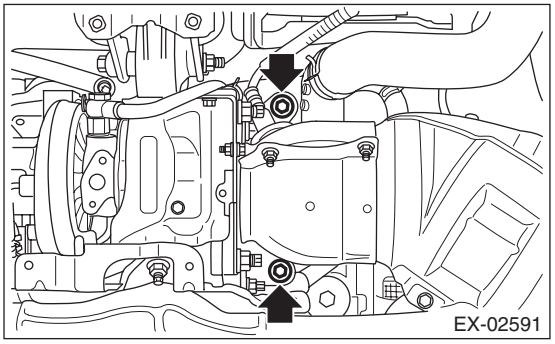

3) Set the oil catch tank to the turbocharger, and attach the bolt and nut which secure the oil catch tank to the turbocharger and oil catch tank stay.

NOTE:
- Use a new gasket.
- When installing the oil catch tank, tighten to the specified torque in the alphabetical order shown in the figure.

Tightening torque:
T1: 6.4 N·m (0.7 kgf-m, 4.7 ft-lb)
T2: 10.5 N·m (1.1 kgf-m, 7.7 ft-lb)

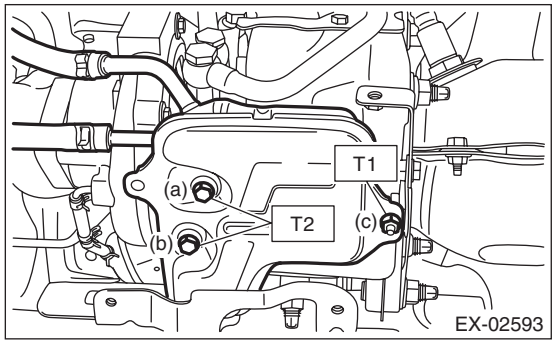

4) Install the engine cover.

Tightening torque:
6.4 N·m (0.7 kgf-m, 4.7 ft-lb)

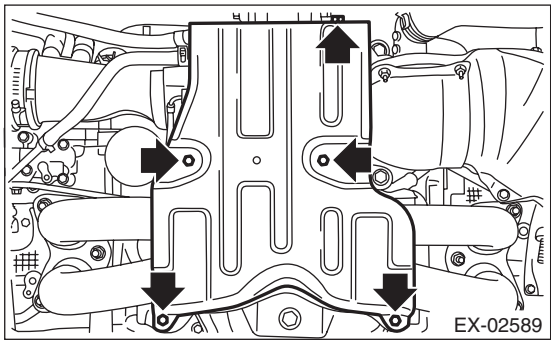

5) Install the center exhaust pipe (rear) and temporarily tighten the bolt which holds center exhaust pipe (rear) to the hanger bracket.

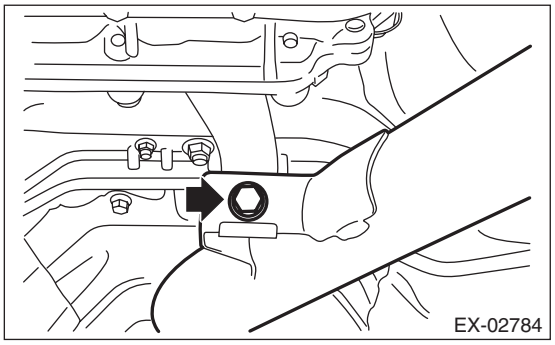

6) Install the rear exhaust pipe to the center exhaust pipe (rear).

NOTE:
Use a new gasket.

Tightening torque:
18 N·m (1.8 kgf-m, 13.3 ft-lb)

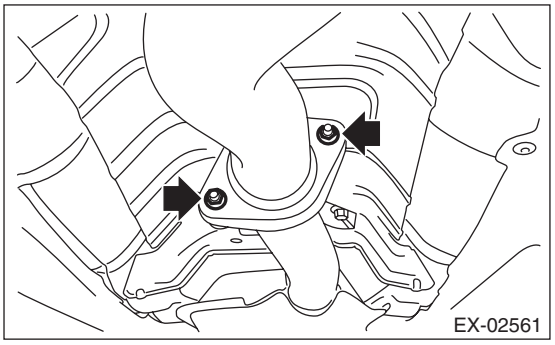

7) Assemble the center exhaust pipe (rear) to the center exhaust pipe (front).

NOTE:
Use a new gasket.

Tightening torque:
42.5 N·m (4.3 kgf-m, 31.3 ft-lb)

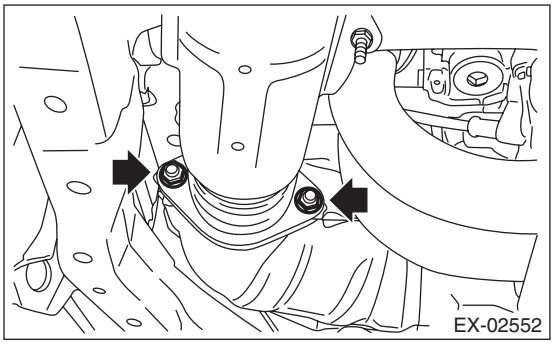

8) Tighten the bolts which hold center exhaust pipe (rear) to the hanger bracket.

Tightening torque:
35 N·m (3.6 kgf-m, 25.8 ft-lb)

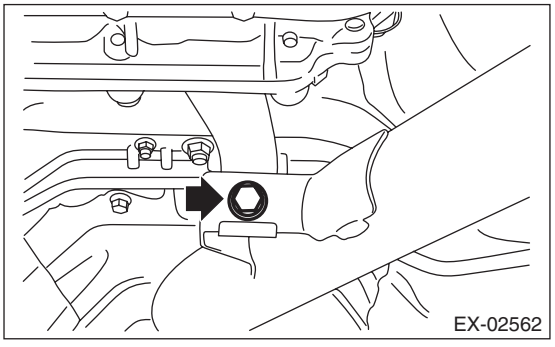

9) Install the bolts which secure the intake duct to the turbocharger, and connect the air control hose (A).

NOTE:
- Use new O-rings.
- Be careful not to pinch the O-ring.

Tightening torque:
6.4 N·m (0.7 kgf-m, 4.7 ft-lb)

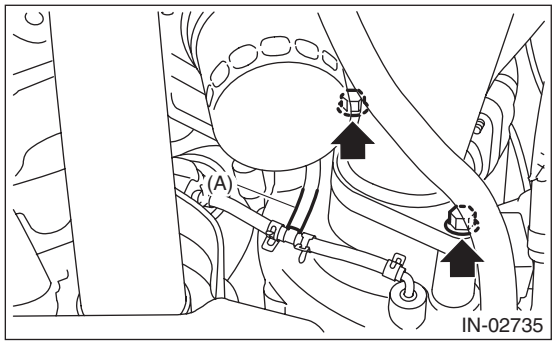

10) Install the bolt which holds oil outlet pipe (C) and oil inlet pipe A (A), and install oil inlet pipe B (B) to oil inlet pipe A (A).

CAUTION:
In order to prevent damaging the oil inlet pipe, fix the section (a) shown in the figure when tightening the oil inlet pipe flare nut, and avoid the part from rotating together while tightening the nut.

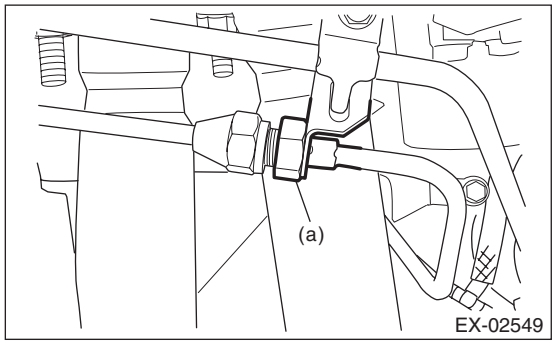

Tightening torque:
T1: 6.4 N·m (0.7 kgf-m, 4.7 ft-lb)
T2: 20 N·m (2.0 kgf-m, 14.8 ft-lb)

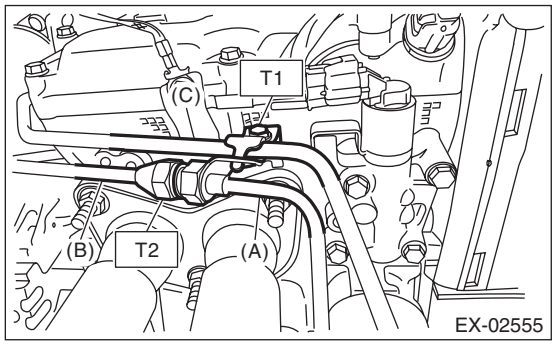

11) Install the under cover. <Ref. to EI-35, INSTALLATION, Front Under Cover.>

12) Lower the vehicle.
13) Install the engine coolant hose to the clip (A), and install the bolts which secure the intake duct to the turbocharger.

Tightening torque:
16 N·m (1.6 kgf-m, 11.8 ft-lb)

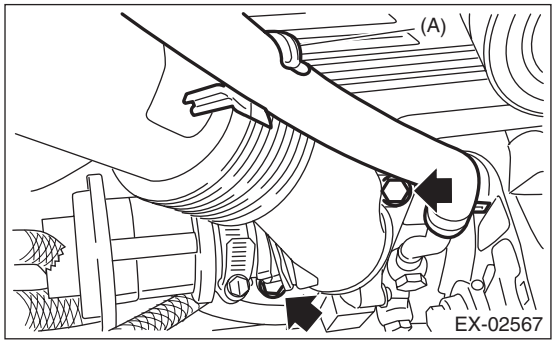

14) Install the radiator sub fan motor assembly. <Ref. to CO(H4DOTC)-27, INSTALLATION, Radiator Sub Fan and Fan Motor.>
15) Connect the engine coolant hoses to the water tank pipe and water pump.

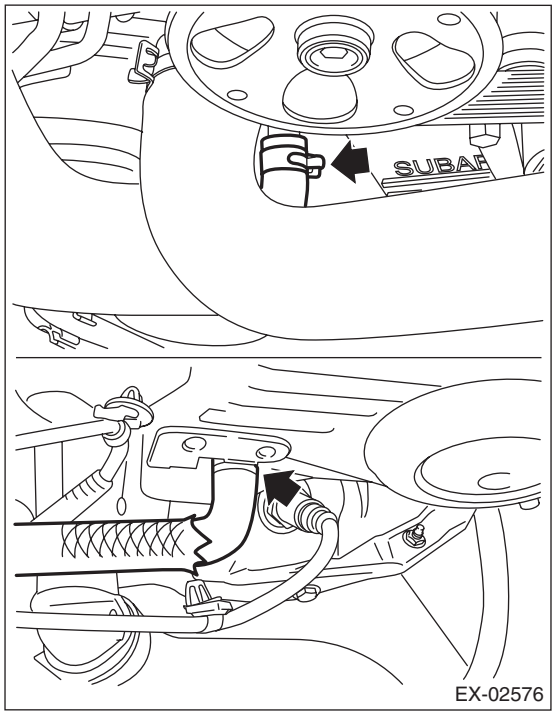

16) Connect connectors to the front oxygen (A/F) sensor and rear oxygen sensor, and secure the front oxygen (A/F) sensor harness and rear oxygen sensor harness with the clip (A).

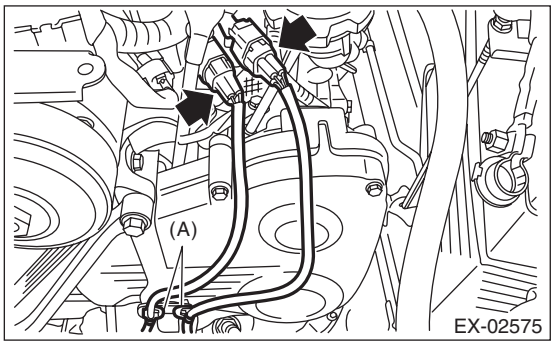

17) Install the air intake duct. <Ref. to IN(H4DOTC)-12, INSTALLATION, Air Intake Duct.>

18) Connect the battery ground terminal.

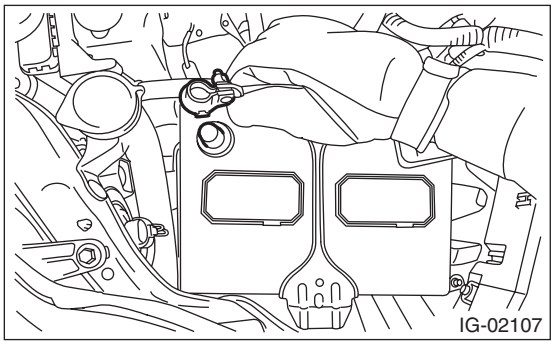

19) Fill engine coolant. <Ref. to CO(H4DOTC)-14, FILLING OF ENGINE COOLANT, REPLACEMENT, Engine Coolant.>

20) Check the engine oil level and replenish the engine oil if necessary. <Ref. to LU(H4SO)-13, INSPECTION, Engine Oil.>

21) Install the collector cover.

C: DISASSEMBLY

1) Remove the exhaust pipe cover.

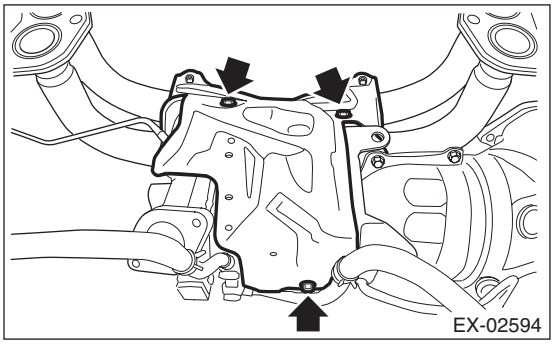

2) Remove nuts which secure the center exhaust pipe (front) to the turbocharger, and remove the center exhaust pipe (front) together with turbocharger upper stay (A) and turbocharger lower stay (B).

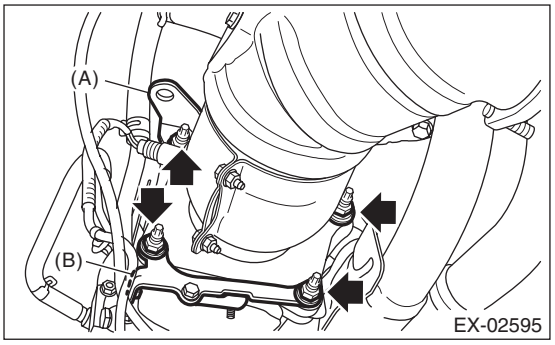

3) Remove the turbocharger from the front exhaust pipe.

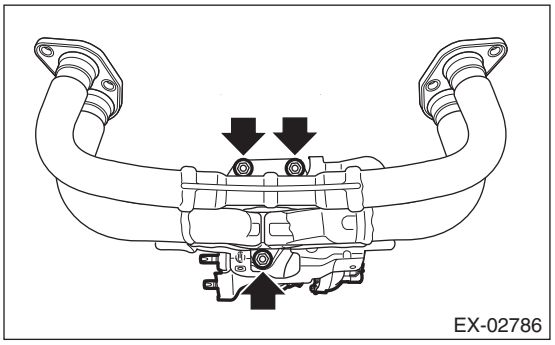

4) Remove the exhaust pipe stay from the front exhaust pipe.

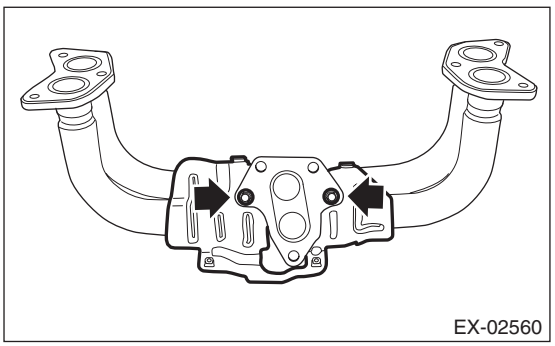

D: ASSEMBLY

1) Install the exhaust pipe stay to the front exhaust pipe.

Tightening torque:
33 N·m (3.4 kgf-m, 24.3 ft-lb)

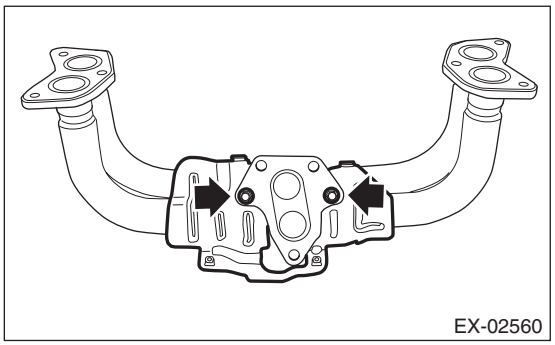

2) Install the turbocharger to the front exhaust pipe.

NOTE:
Use a new gasket and self-locking nut.

Tightening torque:
42.5 N·m (4.3 kgf-m, 31.3 ft-lb)

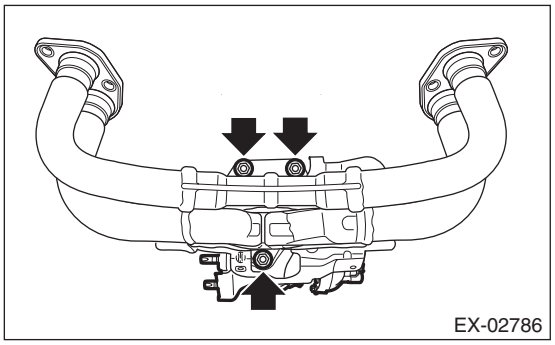

3) Install the center exhaust pipe (front) to the turbocharger together with turbocharger upper stay (A) and turbocharger lower stay (B).

NOTE:
Use a new gasket and self-locking nut.

Tightening torque:
42.5 N·m (4.3 kgf-m, 31.3 ft-lb)

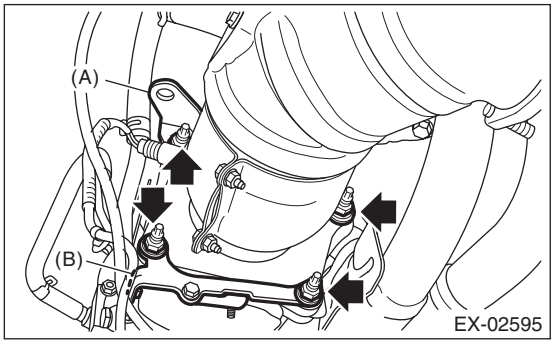

4) Install the exhaust pipe cover.

Tightening torque:
6.4 N·m (0.7 kgf-m, 4.7 ft-lb)

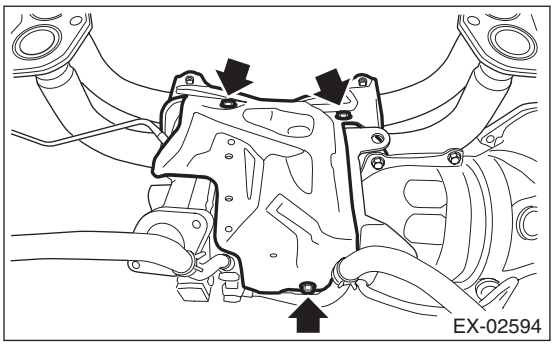

E: INSPECTION

1) Check the connections and welds for exhaust leaks.
2) Make sure there are no holes or rusting.

3. Center Exhaust Pipe

A: REMOVAL

1) Remove the collector cover.
2) Disconnect the ground cable from battery.

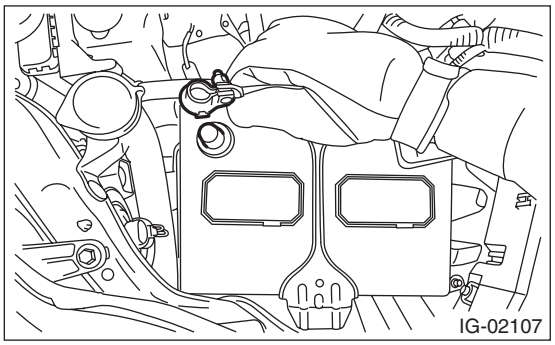

3) Disconnect connectors from the front oxygen (A/F) sensor and rear oxygen sensor, and remove the clip (A) fastening the front oxygen (A/F) sensor harness and rear oxygen sensor harness.

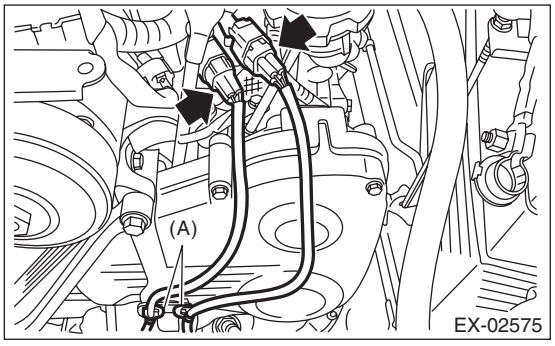

4) Lift up the vehicle.
5) Remove the under cover. <Ref. to EI-35, REMOVAL, Front Under Cover.>
6) Remove the center exhaust pipe (front) from the center exhaust pipe (rear).

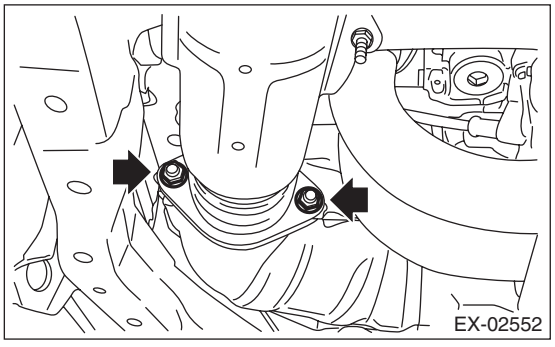

7) Remove the rear exhaust pipe from the center exhaust pipe (rear).

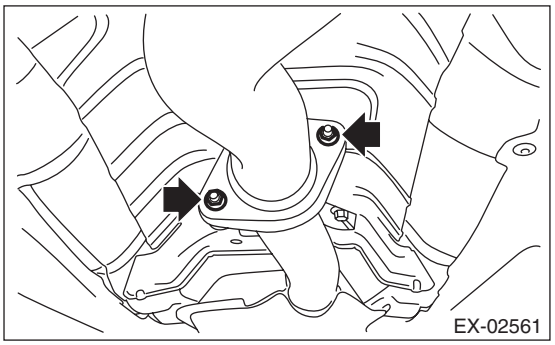

8) Remove the bolt which holds center exhaust pipe (rear) to the hanger bracket, and remove the center exhaust pipe (rear).

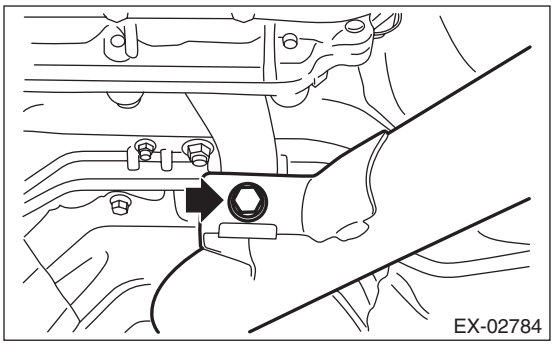

9) Remove the bolts which secure the turbocharger stay.

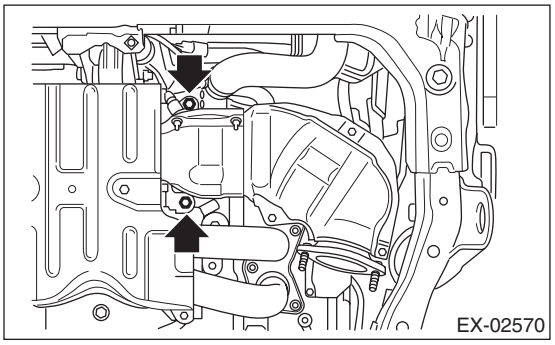

10) Remove the bolts which hold the oil catch tank stay and engine cover to the turbocharger lower stay.

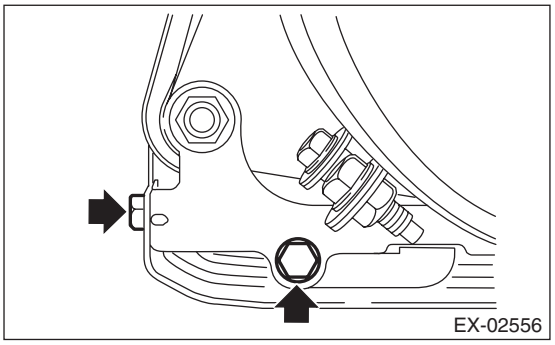

11) Remove nuts which hold center exhaust pipe (front) to the turbocharger, and remove the turbocharger lower stay (A).

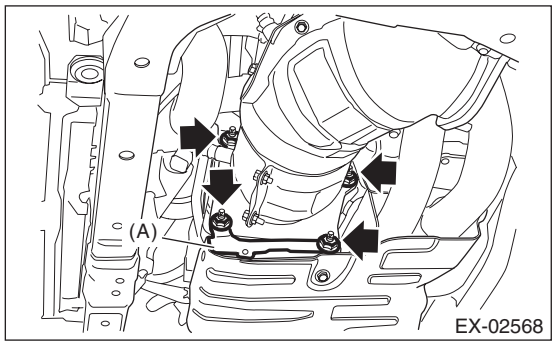

12) Using the TORX® socket E10, remove bolts from the turbocharger, and remove the center exhaust pipe (front) together with turbocharger upper stay (A).

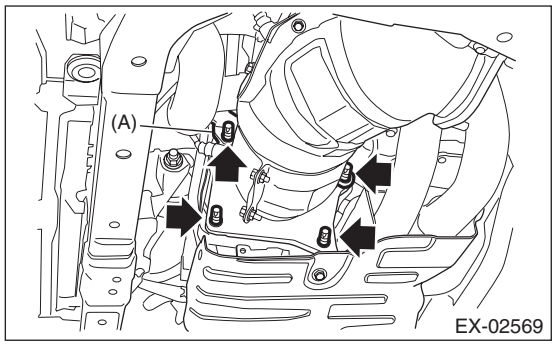

B: INSTALLATION

1) Set the center exhaust pipe (front) together with turbocharger upper stay (A), and install stud bolts to the turbocharger by using the TORX® socket E10.

NOTE:
Use a new gasket.

Tightening torque:
14.7 N·m (1.5 kgf-m, 10.8 ft-lb)

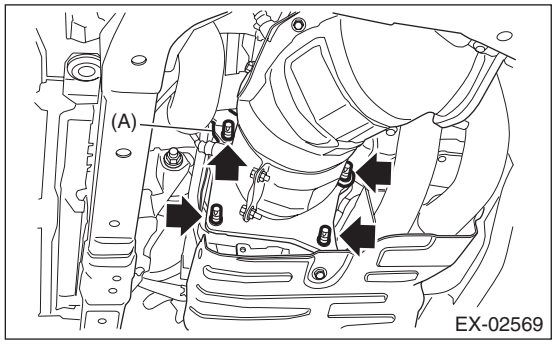

2) Install the center exhaust pipe (front) to the turbocharger together with turbocharger upper stay (A) and turbocharger lower stay (B).

NOTE:
Use a new self-locking nut.

Tightening torque:
42.5 N·m (4.3 kgf-m, 31.3 ft-lb)

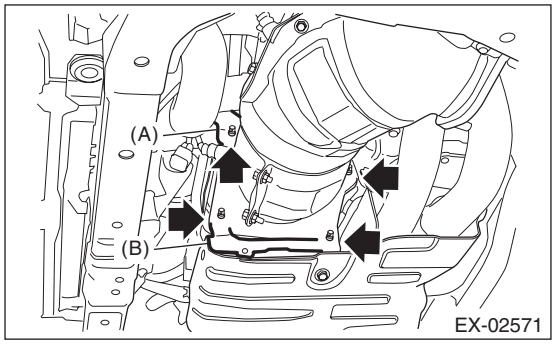

3) Install bolts which hold the oil catch tank stay and engine cover to the turbocharger lower stay.

Tightening torque:
6.4 N·m (0.7 kgf-m, 4.7 ft-lb)

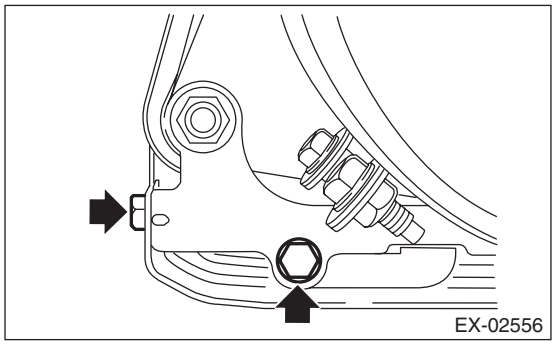

4) Attach the bolt which holds the turbocharger stay.

Tightening torque:
33 N·m (3.4 kgf-m, 24.3 ft-lb)

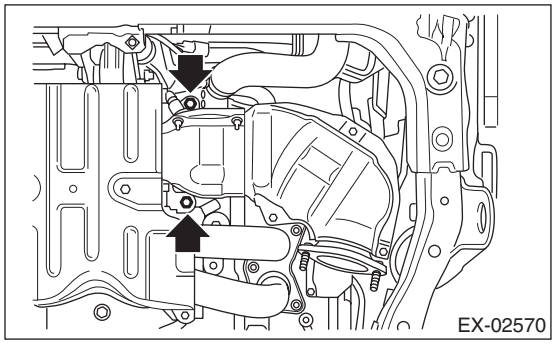

5) Install the center exhaust pipe (rear) and temporarily tighten the bolt which holds center exhaust pipe (rear) to the hanger bracket.

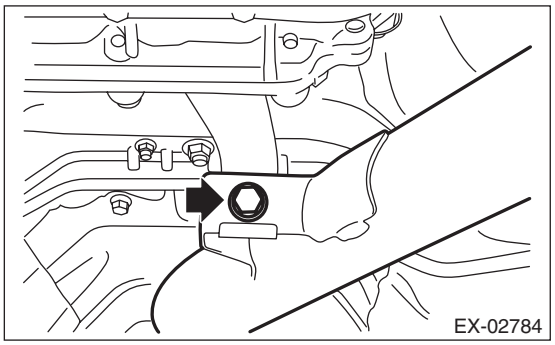

6) Install the rear exhaust pipe to the center exhaust pipe (rear).

NOTE:
Use a new gasket.

Tightening torque:
18 N·m (1.8 kgf-m, 13.3 ft-lb)

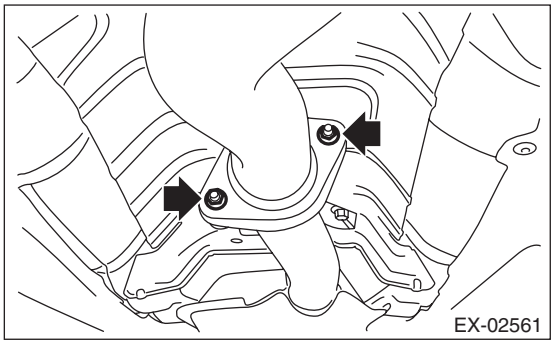

7) Install the center exhaust pipe (front) to the center exhaust pipe (rear).

NOTE:
Use a new gasket.

Tightening torque:
42.5 N·m (4.3 kgf-m, 31.3 ft-lb)

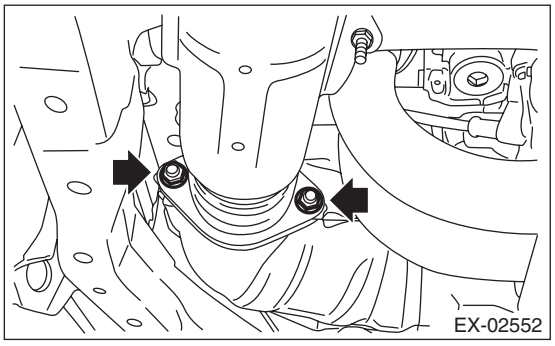

8) Tighten the bolts which hold center exhaust pipe (rear) to the hanger bracket.

Tightening torque:
35 N·m (3.6 kgf-m, 25.8 ft-lb)

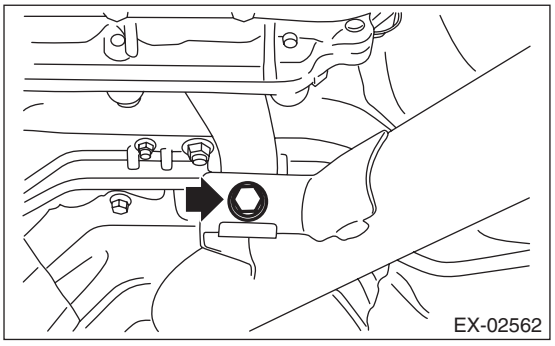

9) Install the under cover. <Ref. to EI-35, INSTALLATION, Front Under Cover.>
10) Lower the vehicle.
11) Connect connectors to the front oxygen (A/F) sensor and rear oxygen sensor, and secure the front oxygen (A/F) sensor harness and rear oxygen sensor harness with the clip (A).

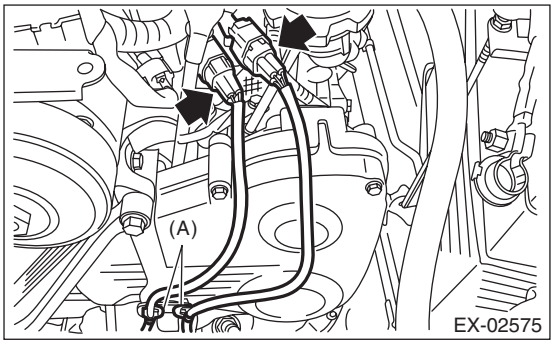

12) Connect the battery ground terminal.

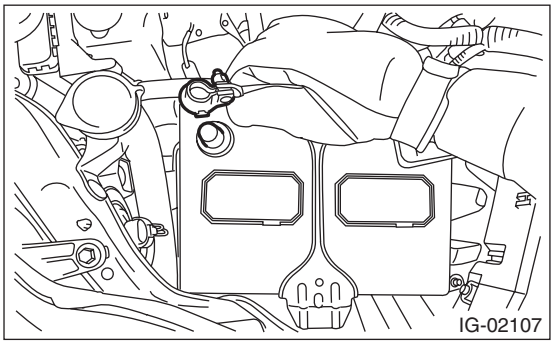

13) Install the collector cover.

C: INSPECTION

1) Check the connections and welds for exhaust leaks.
2) Make sure there are no holes or rusting.

4. Rear Exhaust Pipe

A: REMOVAL

CAUTION:
Vehicle components are extremely hot after driving. Be wary of receiving burns from heated parts.

1) Lift up the vehicle.
2) Remove the center exhaust pipe (rear) from the rear exhaust pipe.

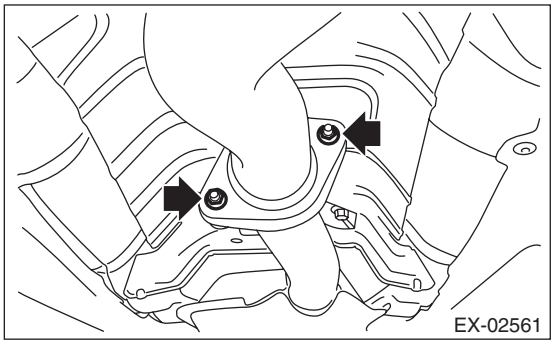

3) Remove the muffler from rear exhaust pipe.

CAUTION:
Be careful not to drop the rear exhaust pipe.

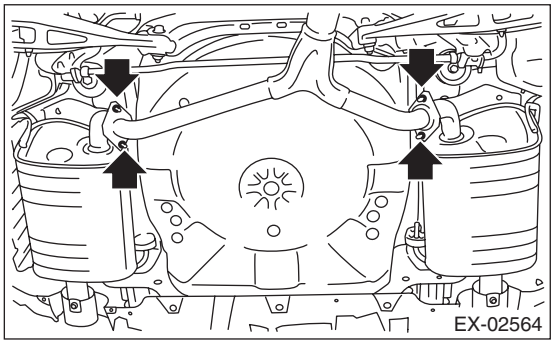

4) Apply a coat of spray type lubricant to the mating area of cushion rubber.
5) Remove the rear exhaust pipe from the cushion rubber.

CAUTION:
Be careful not to let the muffler contact the rear bumper.

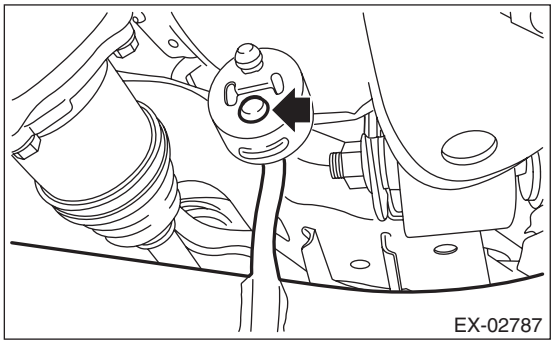

B: INSTALLATION

1) Apply a coat of spray type lubricant to the mating area of cushion rubber.
2) Install the rear exhaust pipe to cushion rubber.

NOTE:
After assembling, degrease the lubricant which was applied to the cushion rubber while removing/installing.

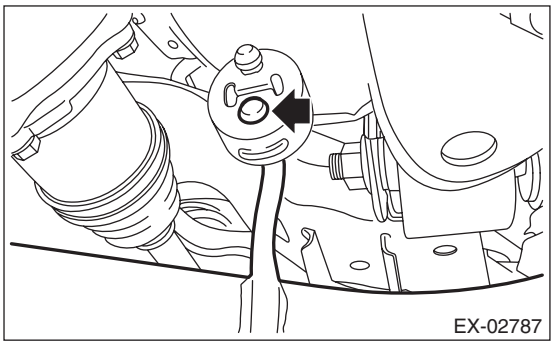

3) Install the rear exhaust pipe to the muffler.

NOTE:
Use a new gasket and self-locking nut.

Tightening torque:
48 N·m (4.9 kgf-m, 35.4 ft-lb)

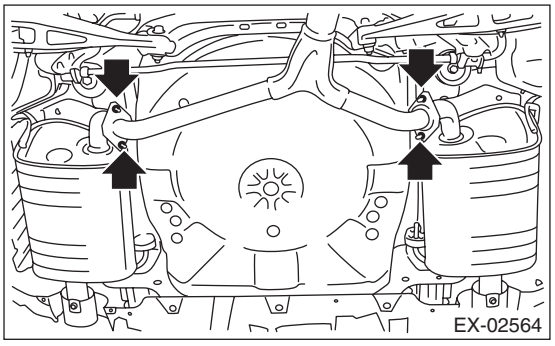

4) Install the center exhaust pipe (rear) to the rear exhaust pipe.

NOTE:
Use a new gasket.

Tightening torque:
18 N·m (1.8 kgf-m, 13.3 ft-lb)

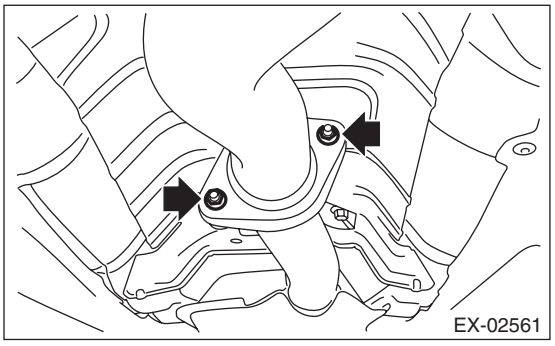

5) Lower the vehicle.

C: INSPECTION

1) Check the connections and welds for exhaust leaks.
2) Make sure there are no holes or rusting.
3) Check the cushion rubber for wear or crack.

5. Muffler

A: REMOVAL

CAUTION:
Vehicle components are extremely hot after driving. Be wary of receiving burns from heated parts.

1) Lift up the vehicle.
2) Remove the rear exhaust pipe from the muffler.

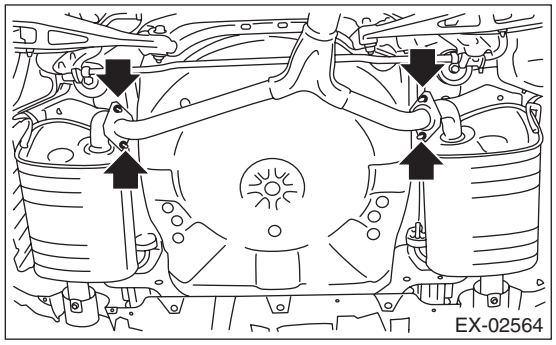

3) Apply a coat of spray type lubricant to the mating area of cushion rubber.
4) Remove the muffler from the cushion rubber.

CAUTION:
Be careful not to drop the muffler during removal.

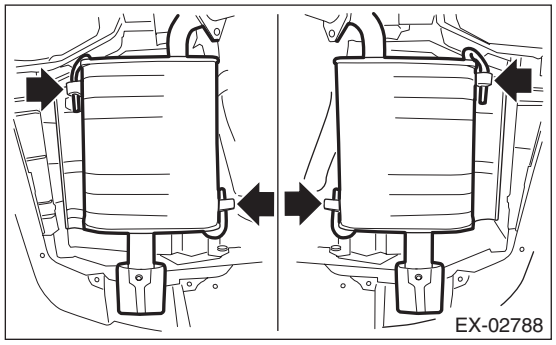

B: INSTALLATION

Install in the reverse order of removal.

NOTE:
- Use a new gasket and self-locking nut.
- After assembling, degrease the lubricant which was applied to the cushion rubber while removing/installing.

Tightening torque:
48 N·m (4.9 kgf-m, 35.4 ft-lb)

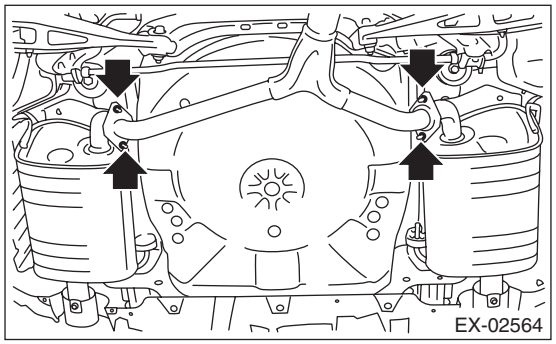

C: INSPECTION

1) Check the connections and welds for exhaust leaks.
2) Make sure there are no holes or rusting.
3) Check the cushion rubber for wear or crack.

COOLING

CO(H4DOTC)

		Page
1.	General Description	2
2.	Radiator Fan System	7
3.	Engine Coolant	14
4.	Water Pump	16
5.	Thermostat	19
6.	Radiator	21
7.	Radiator Cap	24
8.	Radiator Main Fan and Fan Motor	25
9.	Radiator Sub Fan and Fan Motor	27
10.	Reservoir Tank	29
11.	Engine Cooling System Trouble in General	30

1. General Description

A: SPECIFICATION

Cooling system					Electric fan + Forced engine coolant circulation system
Total engine coolant capacity			ℓ (US qt, Imp qt)		Approx. 6.5 (6.9, 5.7)
Water pump	Type				Centrifugal impeller type
	Discharge performance	Discharge rate	ℓ (US gal, Imp gal) /min.		200 (52.8, 44.0)
		Pump speed — Discharge pressure			6,000 rpm — 225.4 kPa (23.0 mAq)
		Engine coolant temperature			80°C (176°F)
	Impeller diameter		mm (in)		76 (2.99)
	Number of impeller vanes				8
	Pump pulley diameter		mm (in)		60 (2.36)
	Clearance between impeller and pump case		mm (in)	Standard	0.5 — 1.5 (0.020 — 0.059)
Thermostat	Type				Wax pellet type
	Starting temperature to open				82 — 86°C (180 — 187°F)
	Fully opens				91°C (196°F)
	Valve lift		mm (in)		9.0 (0.354) or more
	Valve bore		mm (in)		35 (1.38)
Radiator fan	Motor input	Main fan	W		120
		Sub fan	W		120
	Fan diameter / Blade	Main fan			320 mm (12.6 in)/5
		Sub fan			320 mm (12.6 in)/7
Radiator	Type				Down flow
	Core dimensions	Width × Height × Thickness	mm (in)		687.4 × 340 × 16 (27.06 × 13.39 × 0.63)
	Pressure range in which cap valve is open	kPa (kg/cm^2, psi)	Positive pressure side	Standard	93 — 123 (0.95 — 1.25, 14 — 18)
				Limit	83 (0.85, 12)
			Negative pressure side	Standard	–1.0 — –4.9 (–0.01 — –0.05, –0.1 — –0.7)
	Fins				Corrugated fin type
Reservoir tank	Capacity		ℓ (US qt, Imp qt)		0.45 (0.48, 0.40)

	Recommended materials	Item number	Alternative
Coolant	SUBARU SUPER COOLANT (Concentrated type)	—	—
	SUBARU SUPER COOLANT (Diluted type)	K0670Y0001	
Water for dilution	Distilled water	—	Soft water or tap water
Cooling system protective agent	Cooling system conditioner	SOA345001	—

B: COMPONENT

1. WATER PUMP

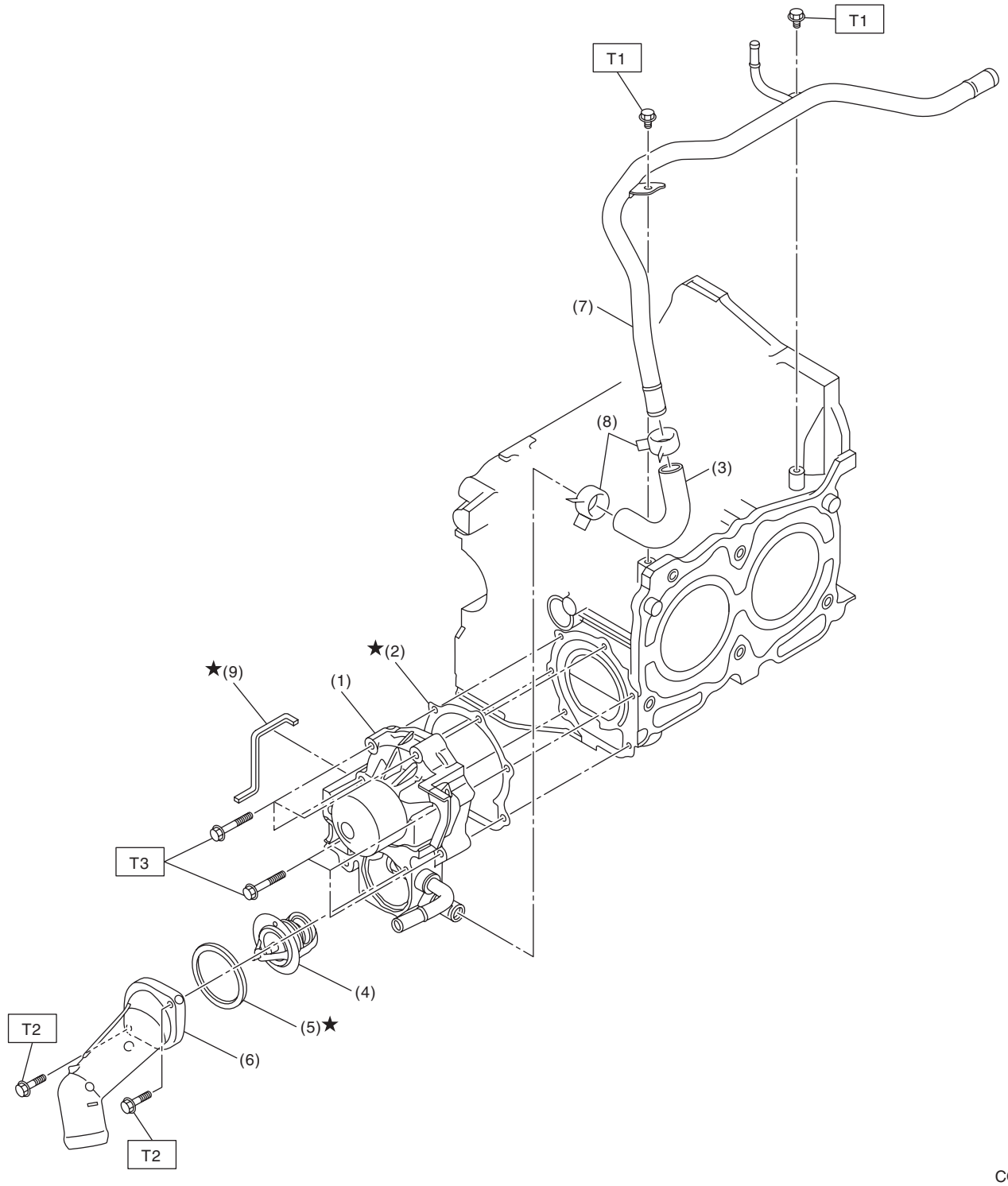

CO-02798

(1) Water pump ASSY
(2) Gasket
(3) Heater by-pass hose
(4) Thermostat
(5) Gasket
(6) Thermostat cover
(7) Water by-pass pipe
(8) Clip
(9) Water pump sealing

Tightening torque:N·m (kgf-m, ft-lb)
T1: 6.4 (0.7, 4.7)
T2: 9 (0.9, 6.6)
T3: First 12 (1.2, 8.9)
Second 12 (1.2, 8.9)

2. RADIATOR AND RADIATOR FAN

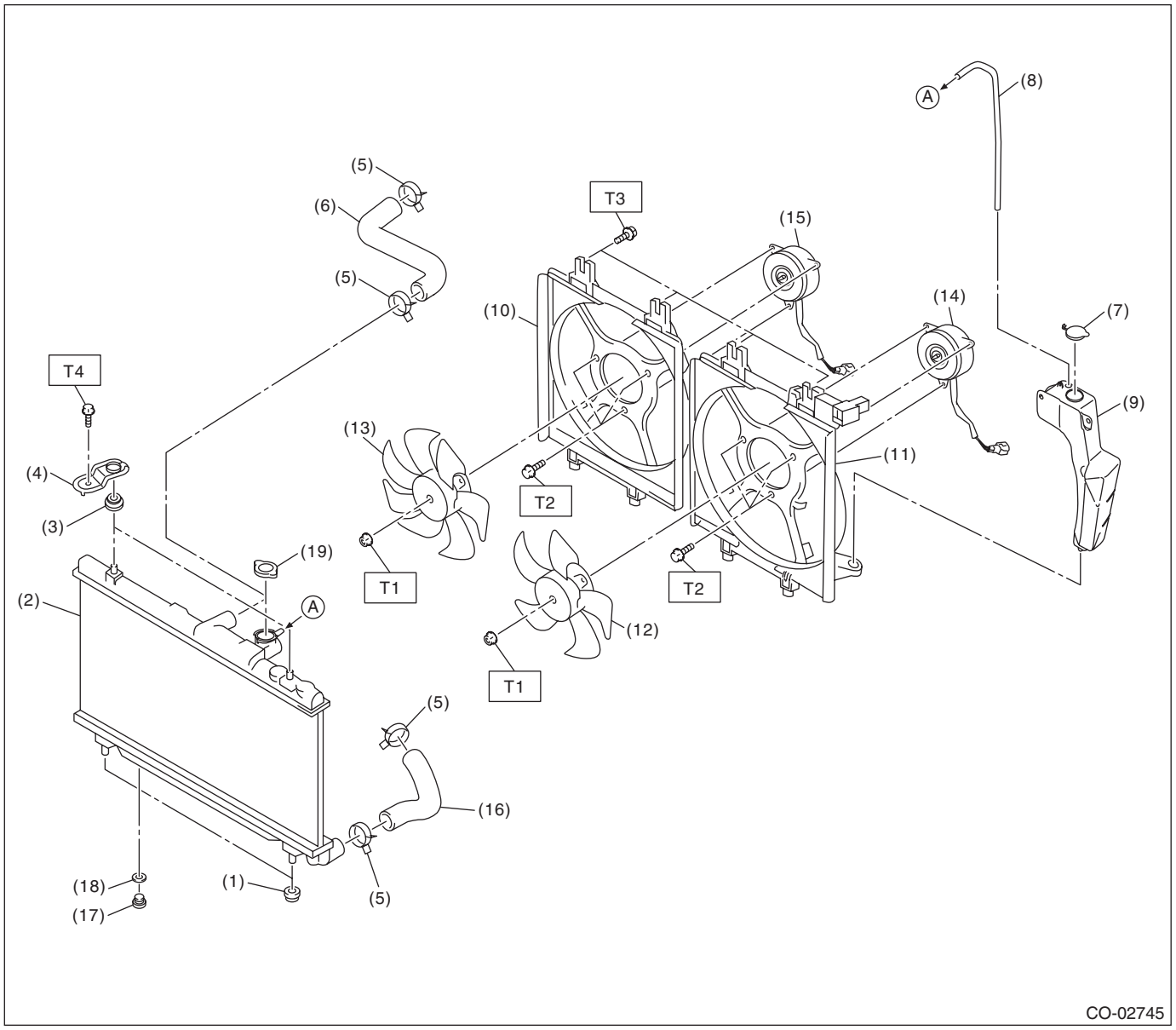

(1) Radiator lower cushion
(2) Radiator
(3) Radiator upper cushion
(4) Radiator upper bracket
(5) Clip
(6) Radiator inlet hose
(7) Engine coolant reservoir tank cap
(8) Over flow hose
(9) Engine coolant reservoir tank
(10) Radiator sub fan shroud
(11) Radiator main fan shroud
(12) Radiator main fan
(13) Radiator sub fan
(14) Main fan motor
(15) Sub fan motor
(16) Radiator outlet hose
(17) Radiator drain plug
(18) O-ring
(19) Radiator cap

Tightening torque:N·m (kgf-m, ft-lb)
T1: 3.4 (0.3, 2.5)
T2: 5 (0.5, 3.7)
T3: 7.5 (0.8, 5.5)
T4: 12 (1.2, 8.9)

C: CAUTION

- Wear appropriate work clothing, including a cap, protective goggles and protective shoes when performing any work.
- Remove contamination including dirt and corrosion before removal, installation or disassembly.
- Keep the disassembled parts in order and protect them from dust and dirt.
- Before removal, installation or disassembly, be sure to clarify the failure. Avoid unnecessary removal, installation, disassembly and replacement.
- Vehicle components are extremely hot after driving. Be wary of receiving burns from heated parts.
- Be sure to tighten fasteners including bolts and nuts to the specified torque.
- Place shop jacks or rigid racks at the specified points.
- Before disconnecting connectors of sensors or units, be sure to disconnect the ground cable from battery.
- Prepare a container and cloth to prevent scattering of engine coolant when performing work where engine coolant can be spilled. If the fuel spills, wipe it off immediately to prevent from penetrating into floor or flowing out for environmental protection.
- Follow all government and local regulations concerning disposal of refuse when disposing engine coolant.

D: PREPARATION TOOL

1. SPECIAL TOOL

ILLUSTRATION	TOOL NUMBER	DESCRIPTION	REMARKS
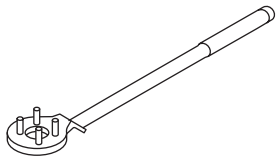 ST-499977100	499977100	CRANK PULLEY WRENCH	Used for removing and installing the crank pulley.
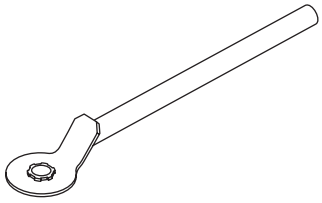 ST-499977500	499977500	CAM SPROCKET WRENCH	Used for removing and installing intake cam sprocket and exhaust cam sprocket.
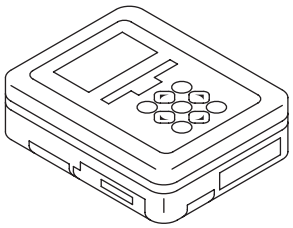 ST1B022XU0	1B022XU0	SUBARU SELECT MONITOR III KIT	Used for troubleshooting the electrical system.

2. GENERAL TOOL

TOOL NAME	REMARKS
Circuit tester	Used for measuring resistance and voltage.
Radiator cap tester	Used for checking radiator and radiator cap.

2. Radiator Fan System

A: WIRING DIAGRAM

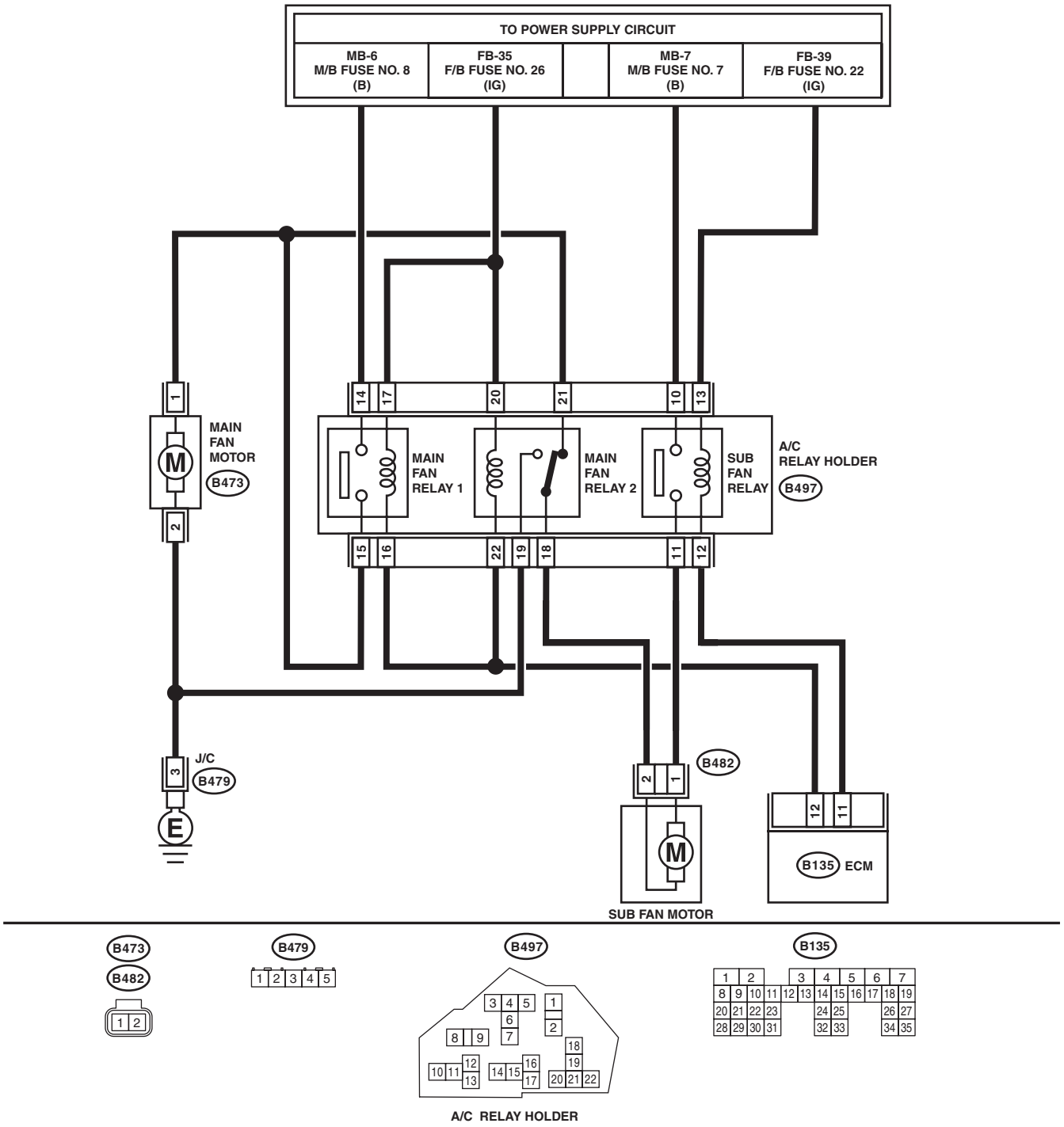

CO-02631

B: INSPECTION

OPERATING CONDITION:

Radiator fan operates depending on the radiator fan operation mode related to engine coolant temperature or the radiator fan operation mode related to A/C compressor load, whichever is higher as an operation mode.

- Radiator fan operation mode related to engine coolant temperature

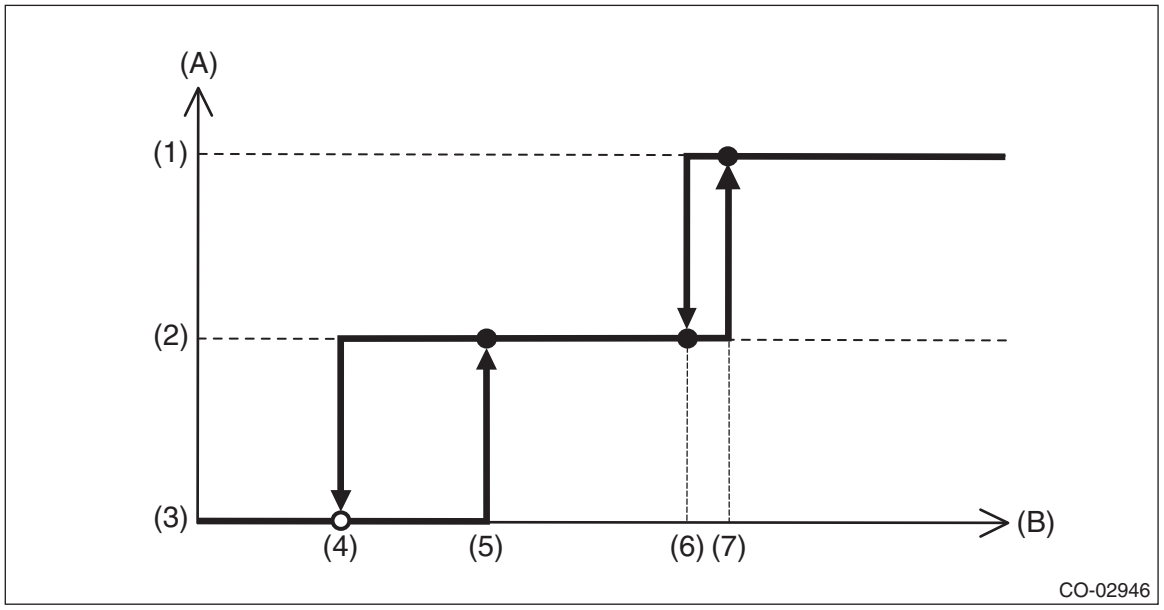

(A)	Radiator fan operation mode	(B)	Engine coolant temperature		
(1)	High-Speed	(4)	96°C (205°F)	(7)	101°C (214°F)
(2)	Low-Speed	(5)	98°C (208°F)		
(3)	OFF	(6)	100°C (212°F)		

- Radiator fan operation mode related to A/C compressor load

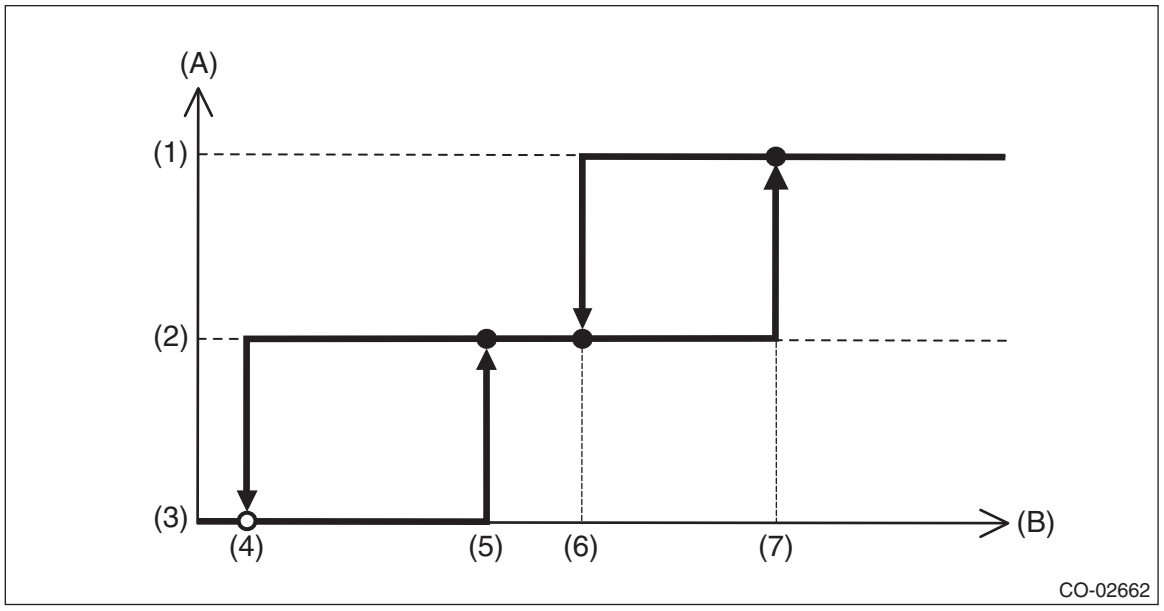

(A)	Radiator fan operation mode	(B)	A/C compressor refrigerant pressure		
(1)	High-Speed	(4)	0.8 MPa (8.16 kgf/cm^2, 116 psi)	(7)	1.5 MPa (15.30 kgf/cm^2, 218 psi)
(2)	Low-Speed	(5)	1.125 MPa (11.47 kgf/cm^2, 163 psi)		
(3)	OFF	(6)	1.25 MPa (12.75 kgf/cm^2, 181 psi)		

DIAGNOSIS:
Radiator main fan and radiator sub fans do not rotate under the above operating conditions.

	Step	Check	Yes	No
1	**CHECK OPERATION OF RADIATOR FAN.** 1) Connect the delivery mode fuse. 2) Turn the ignition switch to ON. 3) Perform the compulsory operation check for the radiator fan relay using Subaru Select Monitor. NOTE: • When performing a forced operation radiator fan relay check using the Subaru Select Monitor, the radiator main fan and radiator sub fan will repeat low speed revolution → high speed revolution → OFF in this order. • Subaru Select Monitor For detailed operation procedures, refer to "PC application help for Subaru Select Monitor".	Do the radiator main fans and radiator sub fans rotate at low speed?	Go to step **2**.	Go to step **3**.
2	**CHECK OPERATION OF RADIATOR FAN.** 1) Connect the delivery mode fuse. 2) Turn the ignition switch to ON. 3) Perform the compulsory operation check for the radiator fan relay using Subaru Select Monitor. NOTE: • When performing a forced operation radiator fan relay check using the Subaru Select Monitor, the radiator main fan and radiator sub fan will repeat low speed revolution → high speed revolution → OFF in this order. • Subaru Select Monitor For detailed operation procedures, refer to "PC application help for Subaru Select Monitor".	Do the radiator main fans and radiator sub fans rotate at high speed?	Radiator main fan system is normal.	Go to step **27**.
3	**CHECK POWER SUPPLY TO SUB FAN RELAY.** 1) Turn the ignition switch to OFF. 2) Remove the sub fan relay from A/C relay holder. 3) Measure the voltage between sub fan relay connector and chassis ground. ***Connector & terminal*** ***(B497) No. 10 (+) — Chassis ground (–):***	Is the voltage 10 V or more?	Go to step **4**.	Go to step **5**.
4	**CHECK POWER SUPPLY TO SUB FAN RELAY.** 1) Turn the ignition switch to ON. 2) Measure the voltage between sub fan relay connector and chassis ground. ***Connector & terminal*** ***(B497) No. 13 (+) — Chassis ground (–):***	Is the voltage 10 V or more?	Go to step **7**.	Go to step **6**.
5	**CHECK FUSE.** 1) Turn the ignition switch to OFF. 2) Remove the fuse No. 7. 3) Check the condition of fuse.	Is the fuse blown out?	Replace the fuse.	Repair the power supply line.
6	**CHECK FUSE.** 1) Turn the ignition switch to OFF. 2) Remove the fuse No. 22. 3) Check the condition of fuse.	Is the fuse blown out?	Replace the fuse.	Repair the power supply line.

	Step	Check	Yes	No
7	**CHECK SUB FAN RELAY.** 1) Turn the ignition switch to OFF. 2) Measure the resistance between sub fan relay terminals. ***Terminals*** ***No. 10 — No. 11:***	Is the resistance 1 MΩ or more?	Go to step **8**.	Replace the sub fan relay.
8	**CHECK SUB FAN RELAY.** 1) Connect the battery to terminals No. 12 and No. 13 of the sub fan relay. 2) Measure the resistance between sub fan relay terminals. ***Terminals*** ***No. 10 — No. 11:***	Is the resistance less than 1 Ω?	Go to step **9**.	Replace the sub fan relay.
9	**CHECK HARNESS BETWEEN SUB FAN RELAY CONNECTOR AND SUB FAN MOTOR CONNECTOR.** 1) Disconnect the connector from the sub fan motor. 2) Measure the resistance of harness between sub fan relay connector and sub fan motor connector. ***Connector & terminal*** ***(B482) No. 1 — (B497) No. 11:***	Is the resistance less than 1 Ω?	Go to step **10**.	Repair the open circuit of harness between sub fan relay connector and sub fan motor connector.
10	**CHECK HARNESS BETWEEN SUB FAN MOTOR CONNECTOR AND MAIN FAN RELAY 2 CONNECTOR.** 1) Remove the main fan relay 2 from A/C relay holder. 2) Measure the resistance of harness between sub fan motor connector and main fan relay 2 connector. ***Connector & terminal*** ***(B482) No. 2 — (B497) No. 18:***	Is the resistance less than 1 Ω?	Go to step **11**.	Repair the open circuit of the harness between sub fan motor connector and main fan relay 2 connector.
11	**CHECK FOR POOR CONTACT.** Check poor contact of sub fan motor connector.	Is there poor contact of the sub fan motor connector?	Repair the poor contact of sub fan motor connector.	Go to step **12**.
12	**CHECK SUB FAN MOTOR.** Connect the battery positive (+) terminal to terminal No. 1 of the sub fan motor, and the ground (–) terminal to terminal No. 2.	Does the radiator sub fan rotate?	Go to step **13**.	Replace the sub fan motor.
13	**CHECK MAIN FAN RELAY 2.** Measure the resistance between main fan relay 2 terminals. ***Terminals*** ***No. 21 — No. 18:***	Is the resistance less than 1 Ω?	Go to step **14**.	Replace the main fan relay 2.
14	**CHECK HARNESS BETWEEN MAIN FAN RELAY 2 CONNECTOR AND MAIN FAN MOTOR CONNECTOR.** 1) Disconnect the connector from the main fan motor. 2) Measure the resistance of the harness between main fan relay 2 connector and main fan motor connector. ***Connector & terminal*** ***(B473) No. 1 — (B497) No. 21:***	Is the resistance less than 1 Ω?	Go to step **15**.	Repair the open circuit of the harness between main fan relay 2 connector and main fan motor connector.

	Step	Check	Yes	No
15	**CHECK GROUND CIRCUIT OF MAIN FAN MOTOR.** Measure the resistance between main fan motor connector and chassis ground. ***Connector & terminal*** ***(B473) No. 2 — Chassis ground:***	Is the resistance less than 5 Ω?	Go to step **16**.	Repair the open circuit of the harness between the main fan motor connector and chassis ground or poor contact of the joint connector.
16	**CHECK FOR POOR CONTACT.** Check poor contact of main fan motor connector.	Is there poor contact of the main fan motor connector?	Repair the poor contact of main fan motor connector.	Go to step **17**.
17	**CHECK MAIN FAN MOTOR.** Connect the battery positive (+) terminal to terminal No. 1 of the main fan motor, and the ground (–) terminal to terminal No. 2.	Does the radiator main fan rotate?	Go to step **18**.	Replace the main fan motor.
18	**CHECK HARNESS BETWEEN SUB FAN RELAY CONNECTOR AND ECM.** 1) Disconnect the connector from ECM. 2) Measure the resistance between the sub fan relay connector and ECM connector. ***Connector & terminal*** ***(B135) No. 11 — (B497) No. 12:***	Is the resistance less than 1 Ω?	Go to step **19**.	Repair the open circuit of harness between sub fan relay connector and ECM.
19	**CHECK FOR POOR CONTACT.** Check for poor contact of ECM connector.	Is there poor contact of ECM connector?	Repair the poor contact of ECM connector.	Check the DTC. Repair the trouble cause. <Ref. to EN(H4DOTC)(diag)-40, Read Diagnostic Trouble Code (DTC).>
20	**CHECK MAIN FAN RELAY 1.** 1) Turn the ignition switch to OFF. 2) Remove the main fan relay 1 from A/C relay holder. 3) Measure the resistance between main fan relay 1 terminals. ***Terminals*** ***No. 14 — No. 15:***	Is the resistance 1 MΩ or more?	Go to step **21**.	Replace the main fan relay 1.
21	**CHECK MAIN FAN RELAY 1.** 1) Connect terminals No. 17 and No. 16 of the main fan relay 1 to the battery. 2) Measure the resistance between main fan relay 1 terminals. ***Terminals*** ***No. 14 — No. 15:***	Is the resistance less than 1 Ω?	Go to step **22**.	Replace the main fan relay 1.
22	**CHECK HARNESS BETWEEN MAIN FAN RELAY 1 CONNECTOR AND MAIN FAN MOTOR CONNECTOR.** 1) Disconnect the connector from the main fan motor. 2) Measure the resistance of the harness between main fan relay 1 connector and main fan motor connector. ***Connector & terminal*** ***(B473) No. 1 — (B497) No. 15:***	Is the resistance less than 1 Ω?	Go to step **23**.	Repair the open circuit of the harness between main fan relay 1 connector and main fan motor connector.

	Step	Check	Yes	No
23	**CHECK HARNESS BETWEEN MAIN FAN RELAY 1 CONNECTOR AND ECM.** 1) Disconnect the connector from ECM. 2) Measure the resistance between the main fan relay 1 connector and ECM connector. ***Connector & terminal*** ***(B135) No. 12 — (B497) No. 16:***	Is the resistance less than 1 Ω?	Go to step **24**.	Repair the open circuit of the harness between main fan relay 1 connector and ECM.
24	**CHECK HARNESS BETWEEN MAIN FAN RELAY 2 CONNECTOR AND ECM.** Measure the resistance between the main fan relay 2 connector and ECM connector. ***Connector & terminal*** ***(B135) No. 12 — (B497) No. 22:***	Is the resistance less than 1 Ω?	Go to step **25**.	Repair the open circuit of the harness between main fan relay 2 connector and ECM.
25	**CHECK FUSE.** 1) Turn the ignition switch to OFF. 2) Remove the fuse No. 8 and No. 26. 3) Check the condition of fuse.	Is the fuse blown out?	Replace the fuse.	Go to step **26**.
26	**CHECK FOR POOR CONTACT.** Check for poor contact of ECM connector.	Is there poor contact of ECM connector?	Repair the poor contact of ECM connector.	Repair the power supply circuit to the main fuse box.
27	**CHECK OPERATION OF RADIATOR FAN.** If the both fans do not rotate at high speed in the condition of step 2, check whether the radiator sub fan is rotating.	Does the radiator sub fan rotate?	Go to step **20**.	Go to step **28**.
28	**CHECK GROUND CIRCUIT OF MAIN FAN RELAY 2.** 1) Remove the main fan relay 2 from A/C relay holder. 2) Measure the resistance between main fan relay 2 connector and chassis ground. ***Connector & terminal*** ***(B497) No. 19 — Chassis ground:***	Is the resistance less than 1 Ω?	Go to step **29**.	Repair the open circuit of the harness between main fan relay 2 connector and chassis ground or poor contact of the joint connector.
29	**CHECK POWER SUPPLY TO MAIN FAN RELAY 2.** 1) Turn the ignition switch to ON. 2) Measure the voltage between main fan relay 2 connector and chassis ground. ***Connector & terminal*** ***(B497) No. 20 (+) — Chassis ground (–):***	Is the voltage 10 V or more?	Go to step **30**.	Repair the power supply line.
30	**CHECK MAIN FAN RELAY 2.** 1) Turn the ignition switch to OFF. 2) Remove the main fan relay 2. 3) Measure the resistance between main fan relay 2 terminals. ***Terminals*** ***No. 18 — No. 19:***	Is the resistance 1 MΩ or more?	Go to step **31**.	Replace the main fan relay 2.
31	**CHECK MAIN FAN RELAY 2.** 1) Connect the battery to terminals No. 20 and No. 22 of the main fan relay 2. 2) Measure the resistance between main fan relay 2 terminals. ***Terminals*** ***No. 18 — No. 19:***	Is the resistance less than 1 Ω?	Go to step **23**.	Replace the main fan relay 2.

3. Engine Coolant

A: REPLACEMENT

1. DRAINING OF ENGINE COOLANT

1) Lift up the vehicle.
2) Remove the under cover. <Ref. to EI-35, REMOVAL, Front Under Cover.>
3) Remove the drain plug to drain engine coolant into container.

NOTE:
Remove the radiator cap so that engine coolant will drain faster.

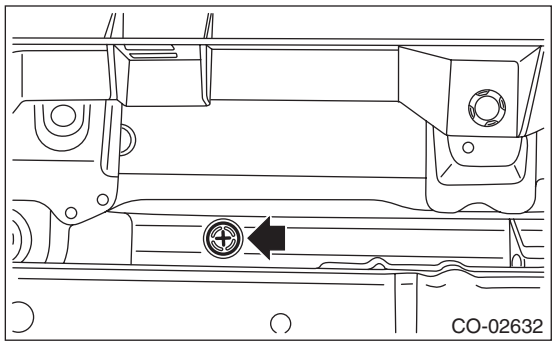

4) Install the drain plug.
5) Install the under cover. <Ref. to EI-35, INSTALLATION, Front Under Cover.>

2. FILLING OF ENGINE COOLANT

1) Pour cooling system conditioner from the filler neck of the radiator.

Cooling system protective agent:
Refer to "SPECIFICATION" for cooling system protective agent. <Ref. to CO(H4DOTC)-2, SPECIFICATION, General Description.>

2) Pour engine coolant into the radiator up to the filler neck position.

Recommended engine coolant:
Refer to "SPECIFICATION" for recommended engine coolant. <Ref. to CO(H4DOTC)-2, SPECIFICATION, General Description.>

Engine coolant level:
Refer to "SPECIFICATION" for engine coolant level. <Ref. to CO(H4DOTC)-2, SPECIFICATION, General Description.>

Engine coolant concentration:
Refer to "ADJUSTMENT" for the recommended engine coolant concentration. <Ref. to CO(H4DOTC)-15, ADJUSTMENT, Engine Coolant.>

NOTE:
The SUBARU Super Coolant contains anti-freeze and anti-rust agents, and is especially made for Subaru engines with an aluminum cylinder block. Be sure to use SUBARU Super Coolant, since other coolant may cause corrosion.
3) Fill engine coolant into the reservoir tank up to "FULL" level.

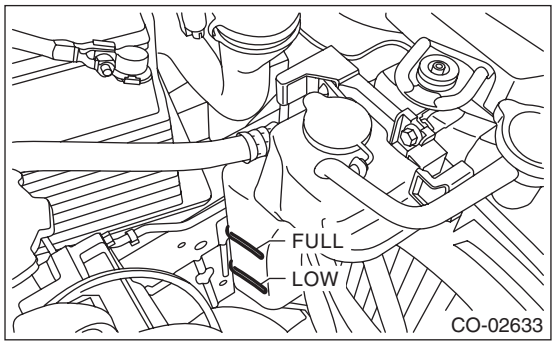

4) Close the radiator cap and start the engine. Race 5 to 6 times at 3,000 rpm or less, then stop the engine. (Complete this operation within 40 seconds.)
5) Wait for one minute after the engine stops, and open the radiator cap. If the engine coolant level drops, add engine coolant into radiator up to the filler neck position.
6) Perform the procedures 4) and 5) again.
7) Attach the radiator cap and reservoir tank cap properly.
8) Start the engine and operate the heater at maximum hot position and the blower speed setting to "LO".
9) Run the engine at 2,000 rpm or less until radiator fan starts and stops.

NOTE:
Be careful with the engine coolant temperature to prevent overheating.
10) Stop the engine and wait until the engine coolant temperature lowers to 30°C (86°F) or less.
11) Open the radiator cap. If the engine coolant level drops, add engine coolant into radiator up to the filler neck position and reservoir tank to the "FULL" level.
12) Attach the radiator cap and reservoir tank cap properly.
13) Set the heater setting to maximum hot position and the blower speed setting to "LO" and start the engine. Perform racing at 3,000 rpm or less. If the flowing sound is heard from the heater core, repeat the procedures from step 9).

B: ADJUSTMENT

1. PROCEDURE TO ADJUST THE SUBARU SUPER COOLANT CONCENTRATION

CAUTION:
SUBARU Super Coolant concentration must be used from 50 to 60% to assure the best performance of the anti-freeze and anti-rust agents.
To adjust the concentration of SUBARU Super Coolant according to temperature, find the proper SUBARU Super Coolant concentration in the table, and add diluting water to the SUBARU Super Coolant (concentrated type) until it reaches the proper dilution.

Relationship of SUBARU Super Coolant concentration and freezing temperature			
SUBARU Super Coolant concentration	50%	55%	60%
Freezing temperature	–36°C (–33°F)	–41°C (–42°F)	–50°C (–58°F)

Recommended engine coolant and water for dilution:
Refer to "SPECIFICATION" for the recommended engine coolant and diluting water. <Ref. to CO(H4DOTC)-2, SPECIFICATION, General Description.>

4. Water Pump

A: REMOVAL

1) Remove the collector cover.
2) Remove the radiator. <Ref. to CO(H4DOTC)-21, REMOVAL, Radiator.>
3) Remove the V-belts. <Ref. to ME(H4DOTC)-42, REMOVAL, V-belt.>
4) Remove the crank pulley. <Ref. to ME(H4DOTC)-44, REMOVAL, Crank Pulley.>
5) Remove the timing belt cover. <Ref. to ME(H4DOTC)-46, REMOVAL, Timing Belt Cover.>
6) Remove the timing belt. <Ref. to ME(H4DOTC)-52, REMOVAL, Timing Belt.>
7) Remove the automatic belt tension adjuster (A).
8) Remove the belt idler (B).
9) Remove the belt idler No. 2 (C).

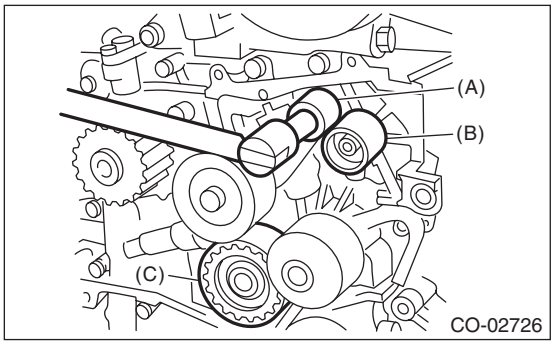

10) Remove the cam sprocket LH. <Ref. to ME(H4DOTC)-61, REMOVAL, Cam Sprocket.>
11) Remove the belt cover No. 2 LH.

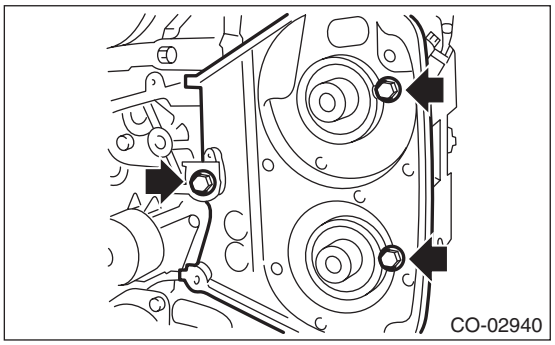

12) Remove the tensioner bracket.

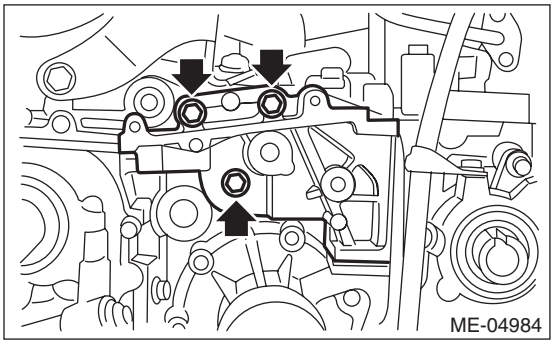

13) Disconnect the hose from water pump.
14) Remove the water pump.

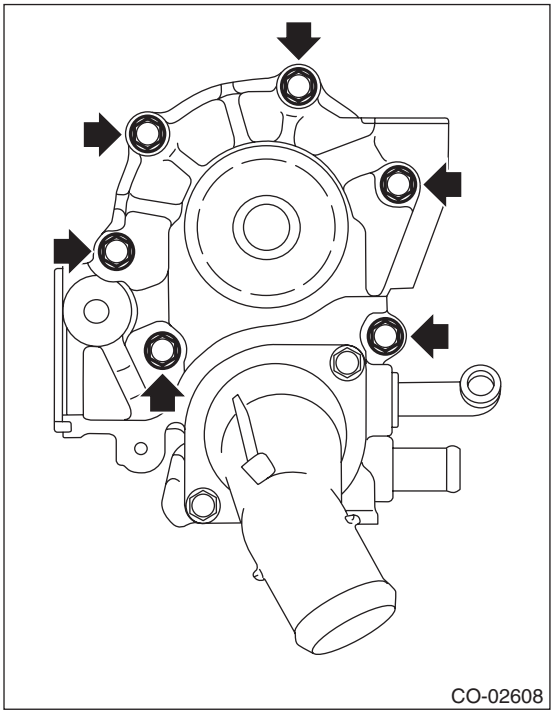

B: INSTALLATION

1) Install the water pump onto cylinder block LH.

NOTE:
- Use a new gasket.
- Use new water pump sealing.
- When installing the water pump, tighten the bolts in two stages in alphabetical sequence as shown in figure.

Tightening torque:
First:
12 N·m (1.2 kgf-m, 8.9 ft-lb)
Second:
12 N·m (1.2 kgf-m, 8.9 ft-lb)

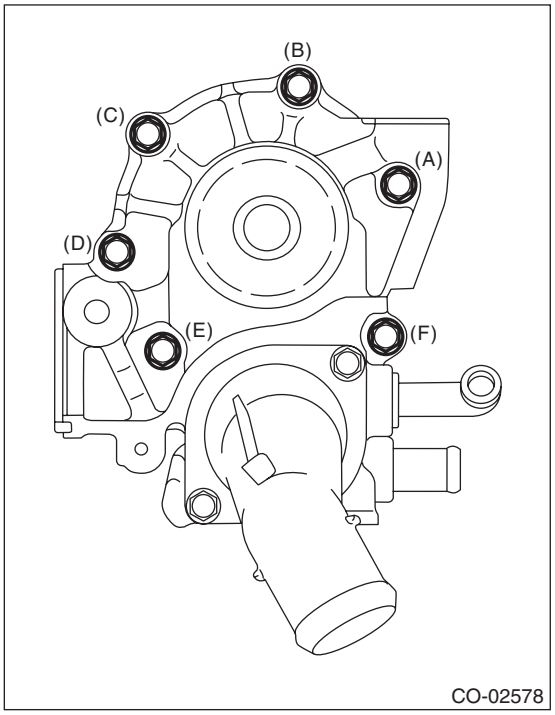

2) Install the hose to water pump.
3) Install the tensioner bracket.

Tightening torque:
24.5 N·m (2.5 kgf-m, 18.1 ft-lb)

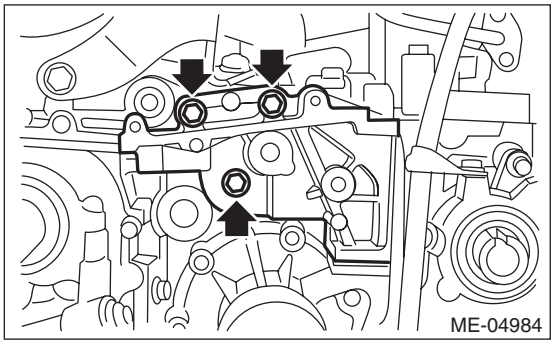

4) Install the belt cover No. 2 LH.

Tightening torque:
5 N·m (0.5 kgf-m, 3.7 ft-lb)

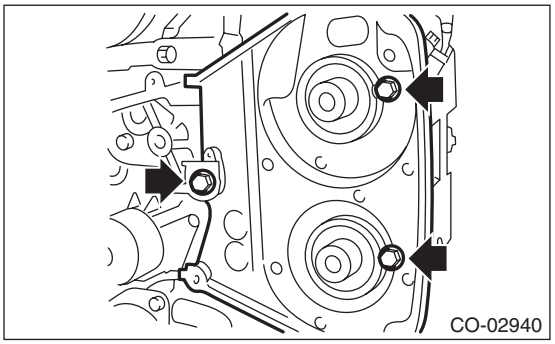

5) Install the cam sprocket LH. <Ref. to ME(H4DOTC)-61, INSTALLATION, Cam Sprocket.>
6) Install the belt idler No. 2 (C).

Tightening torque:
39 N·m (4.0 kgf-m, 28.8 ft-lb)
7) Install the belt idler (B).

Tightening torque:
25 N·m (2.5 kgf-m, 18.4 ft-lb)
8) Install the automatic belt tension adjuster (A) with the tension rod held by a pin. <Ref. to ME(H4DOTC)-54, AUTOMATIC BELT TENSION ADJUSTER ASSEMBLY AND BELT IDLER, INSTALLATION, Timing Belt.>

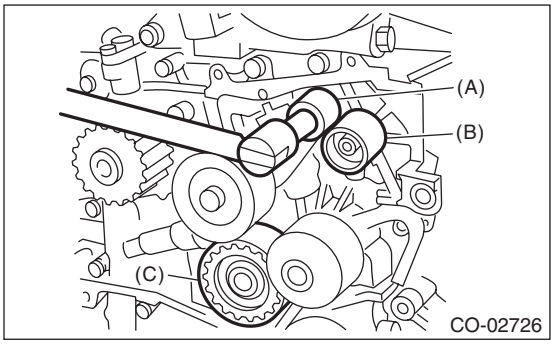

9) Install the timing belt. <Ref. to ME(H4DOTC)-55, TIMING BELT, INSTALLATION, Timing Belt.>
10) Install the timing belt cover. <Ref. to ME(H4DOTC)-49, INSTALLATION, Timing Belt Cover.>
11) Install the crank pulley. <Ref. to ME(H4DOTC)-44, INSTALLATION, Crank Pulley.>
12) Install the V-belts. <Ref. to ME(H4DOTC)-42, INSTALLATION, V-belt.>
13) Install the radiator. <Ref. to CO(H4DOTC)-22, INSTALLATION, Radiator.>
14) Install the collector cover.

C: INSPECTION

1) Check the water pump bearing for smooth rotation.
2) Check the water pump pulley for abnormalities.
3) Make sure the impeller is not abnormally deformed or damaged.
4) Inspect the clearance between impeller and pump case.

Clearance between impeller and pump case:
Standard
0.5 — 1.5 mm (0.020 — 0.059 in)

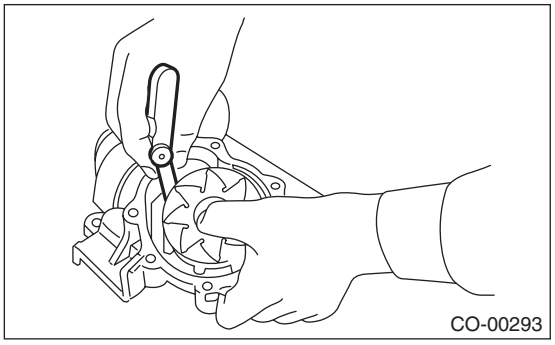

5) After water pump installation, check pulley shaft for engine coolant leaks or noise. If leaks or noise are noted, replace the water pump assembly.

5. Thermostat

A: REMOVAL

1) Lift up the vehicle.
2) Remove the under cover. <Ref. to EI-35, REMOVAL, Front Under Cover.>
3) Drain engine coolant. <Ref. to CO(H4DOTC)-14, DRAINING OF ENGINE COOLANT, REPLACEMENT, Engine Coolant.>
4) Disconnect the radiator outlet hose from thermostat cover.

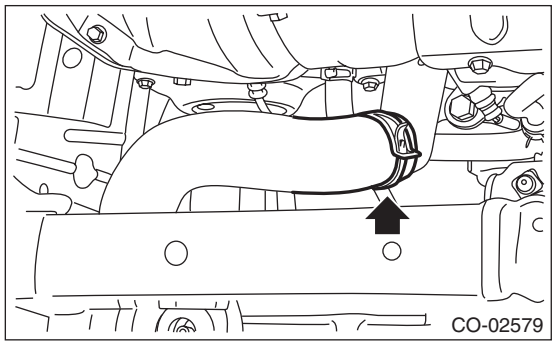

5) Remove the thermostat cover, and then remove the gasket and thermostat.

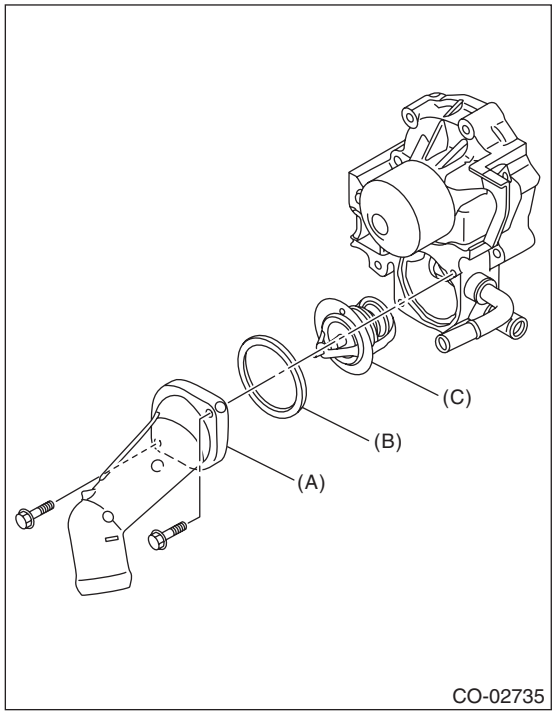

(A) Thermostat cover
(B) Gasket
(C) Thermostat

B: INSTALLATION

1) Install a gasket to thermostat.

NOTE:
Use a new gasket.
2) Install the thermostat and thermostat cover.

NOTE:
Install the parts with the jiggle pin facing upward.

Tightening torque:
9 N·m (0.9 kgf-m, 6.6 ft-lb)

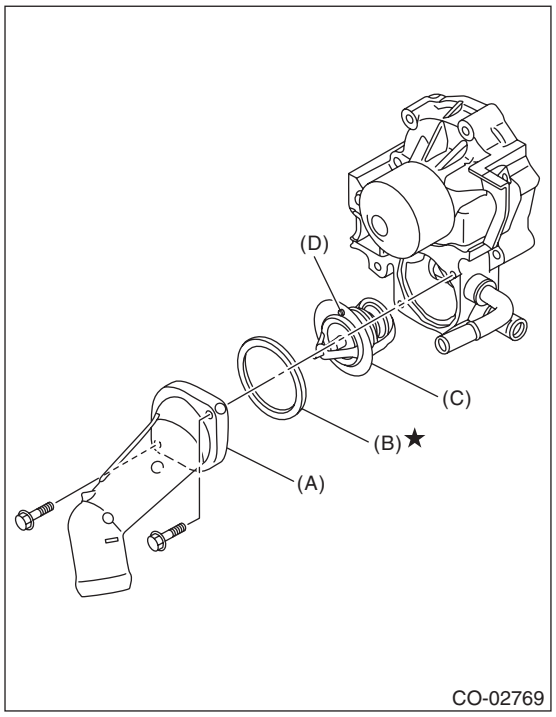

(A) Thermostat cover
(B) Gasket
(C) Thermostat
(D) Jiggle pin

3) Connect the radiator outlet hose to thermostat cover.
4) Install the under cover. <Ref. to EI-35, INSTALLATION, Front Under Cover.>
5) Lower the vehicle.
6) Fill engine coolant. <Ref. to CO(H4DOTC)-14, FILLING OF ENGINE COOLANT, REPLACEMENT, Engine Coolant.>

C: INSPECTION

1) Check that the thermostat does not have deformation, cracks or damage.
2) Check that the thermostat valve closes completely at an ambient temperature.
3) Immerse the thermostat and a thermometer in water. Raise water temperature gradually, and check the temperature and valve lift when the valve begins to open and when the valve is fully opened. Replace the thermostat if faulty.

NOTE:
• During the test, agitate the water for even temperature distribution.
• Leave the thermostat in the boiling water for five minutes or more before measuring the valve lift.
• Hold the thermostat with a wire or the like to avoid contacting the container.

Starting temperature to open:
82 — 86°C (180 — 187°F)

Full open temperature:
91°C (196°F)

Total valve lift:
9.0 mm (0.354 in) or more

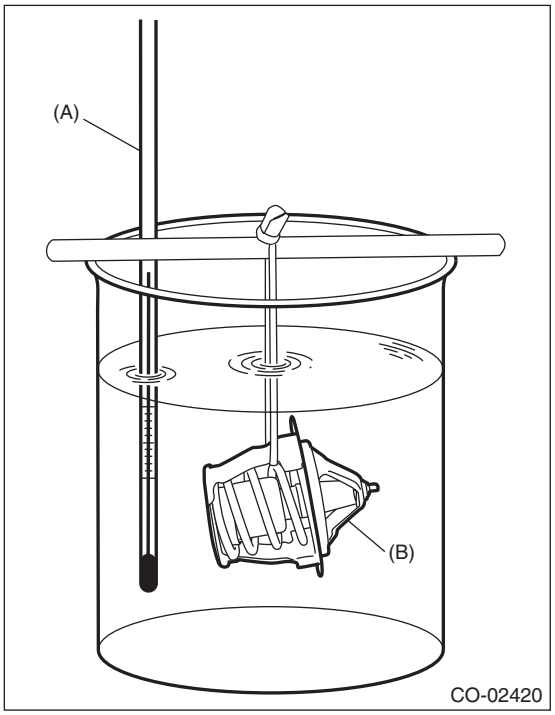

(A) Thermometer
(B) Thermostat

6. Radiator

A: REMOVAL

CAUTION:
The radiator is pressurized when the engine and radiator are hot. Wait until engine and radiator cool down before working on the radiator.

1) Remove the collector cover.
2) Disconnect the ground cable from battery.

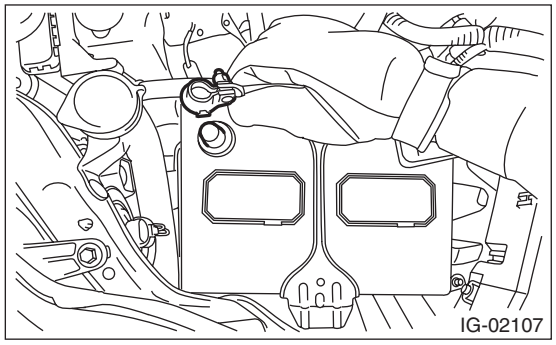

3) Lift up the vehicle.
4) Remove the under cover. <Ref. to EI-35, REMOVAL, Front Under Cover.>
5) Drain engine coolant. <Ref. to CO(H4DOTC)-14, DRAINING OF ENGINE COOLANT, REPLACEMENT, Engine Coolant.>
6) Disconnect the radiator outlet hose from thermostat cover.

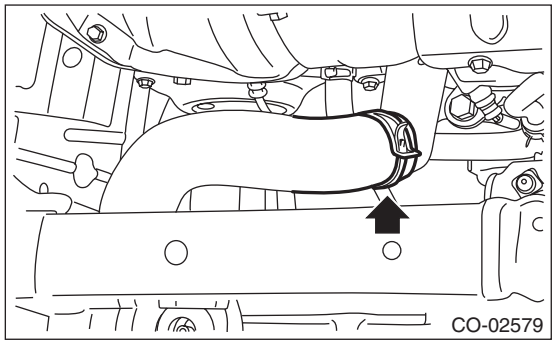

7) Lower the vehicle.
8) Remove the air intake duct. <Ref. to IN(H4DOTC)-12, REMOVAL, Air Intake Duct.>
9) Remove the reservoir tank. <Ref. to CO(H4DOTC)-29, REMOVAL, Reservoir Tank.>
10) Disconnect the connector (A) from the main fan motor and the connector (B) from the sub fan motor.

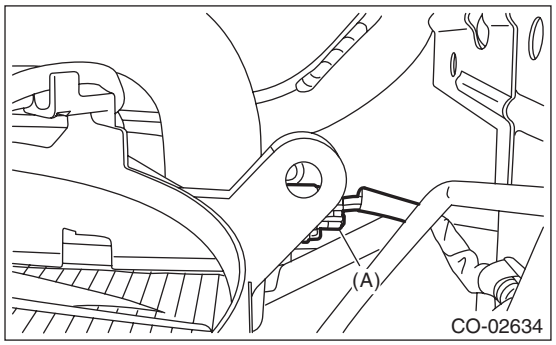

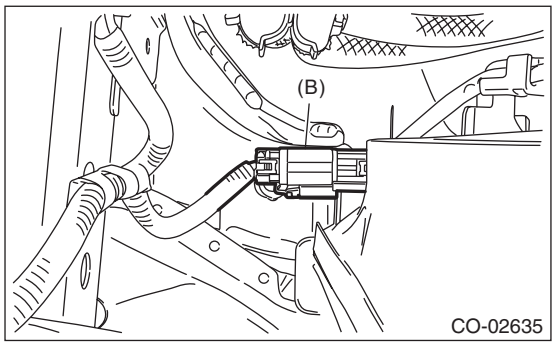

11) Disconnect the radiator inlet hose from the water tank pipe.

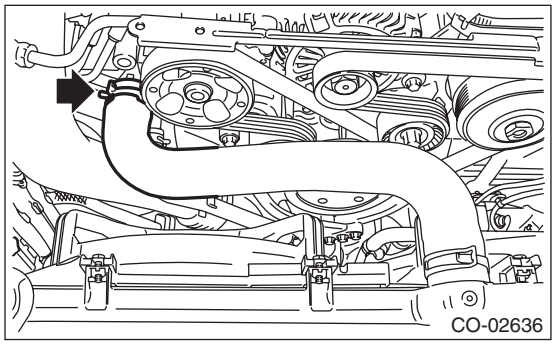

12) Remove the grille bracket.

NOTE:
Remove ten clips when removing the grille bracket.

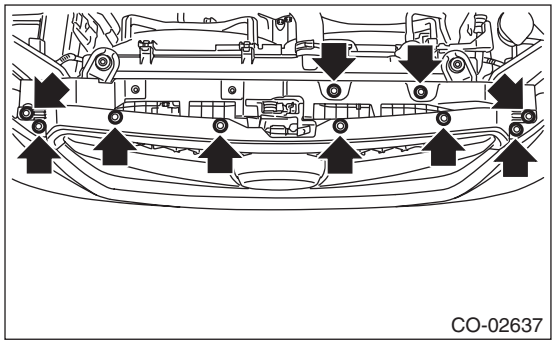

13) Remove the radiator upper brackets.

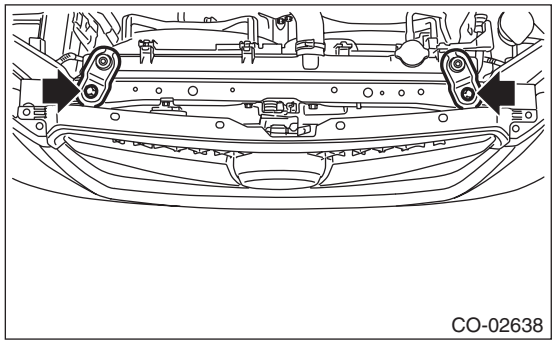

14) Lift the radiator up and remove the radiator from vehicle.
15) Remove the radiator lower cushion from the vehicle body.

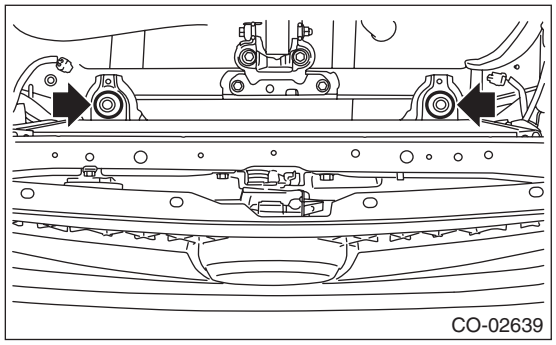

B: INSTALLATION

1) Install the radiator lower cushion to the vehicle body.

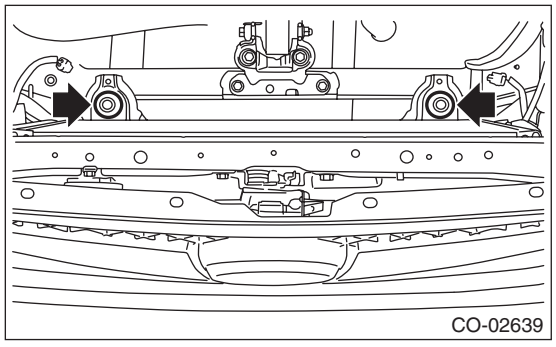

2) Install the radiator to vehicle.

NOTE:
Make pins on the lower side of radiator be fitted into the radiator lower cushions.

3) Install the radiator upper brackets.

Tightening torque:
12 N·m (1.2 kgf-m, 8.9 ft-lb)

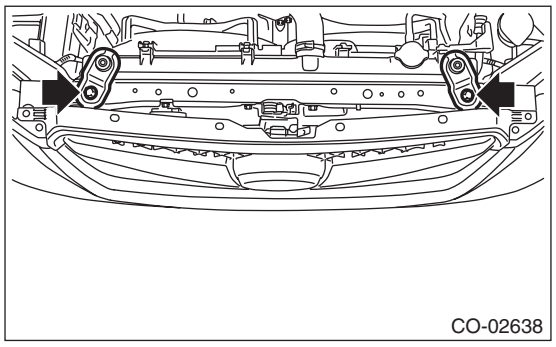

4) Attach the grille bracket.

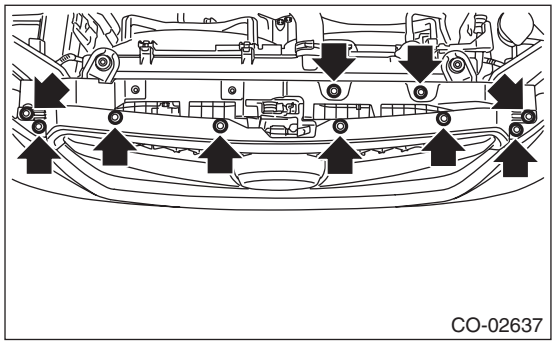

5) Connect the radiator inlet hose.

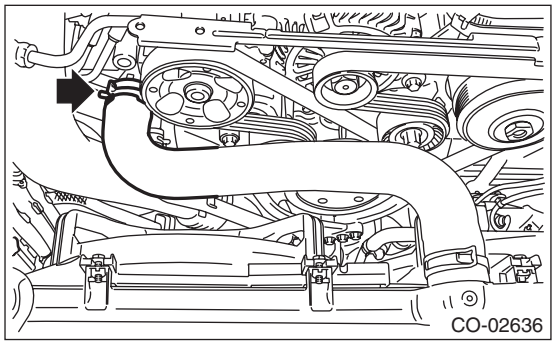

6) Connect the connector (A) to the main fan motor and the connector (B) to the sub fan motor.

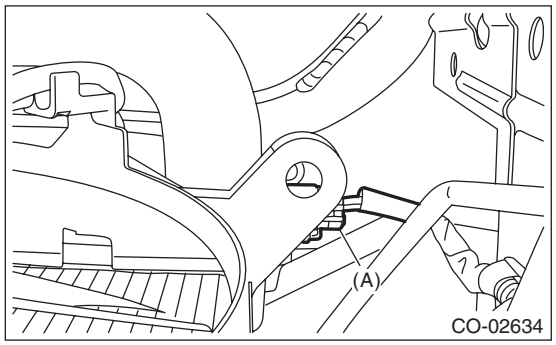

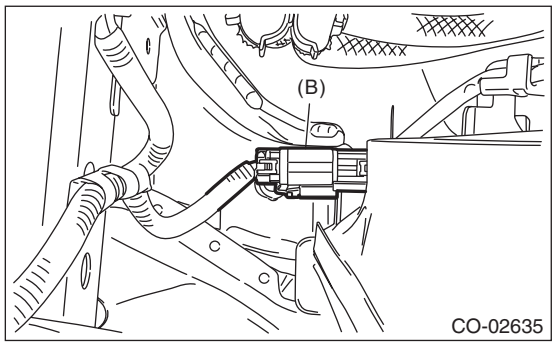

7) Install the reservoir tank. <Ref. to CO(H4DOTC)-29, INSTALLATION, Reservoir Tank.>
8) Install the air intake duct. <Ref. to IN(H4DOTC)-12, INSTALLATION, Air Intake Duct.>
9) Lift up the vehicle.
10) Connect the radiator outlet hose.

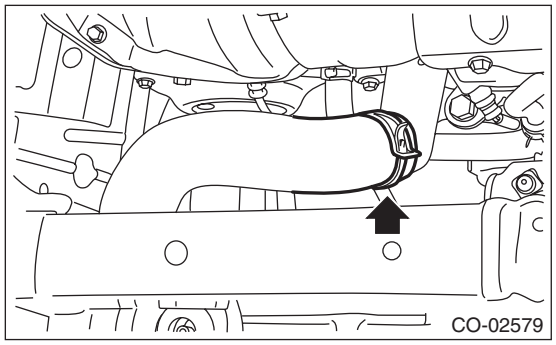

11) Install the under cover. <Ref. to EI-35, INSTALLATION, Front Under Cover.>
12) Lower the vehicle.
13) Connect the battery ground terminal.

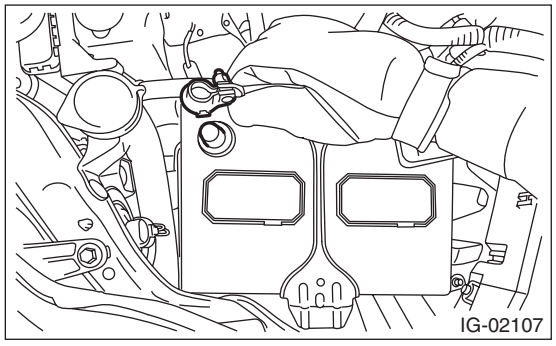

14) Fill engine coolant. <Ref. to CO(H4DOTC)-14, FILLING OF ENGINE COOLANT, REPLACEMENT, Engine Coolant.>
15) Install the collector cover.

C: INSPECTION

1) Check that the radiator does not have deformation, cracks or damage.
2) Check that the hose has no cracks, damage or loose part.
3) Remove the radiator cap, fill the radiator with engine coolant, and then install the radiator cap tester to the filler neck of radiator.

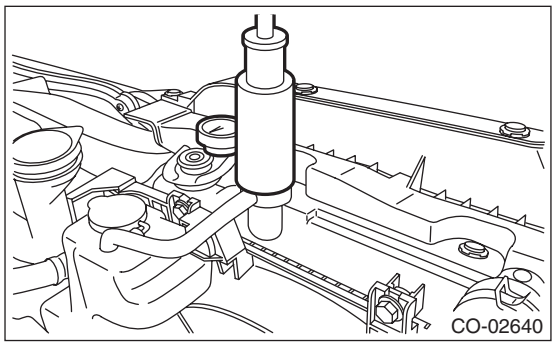

4) Apply a pressure of 157 kPa (1.6 kg/cm^2, 23 psi) to the radiator and check the following points:
- Leakage from the radiator or its vicinity
- Leakage from the hose or its connections

CAUTION:
- **Engine should be turned off.**
- **Wipe engine coolant from check points in advance.**
- **Be careful not to deform the filler neck of the radiator when installing and removing the radiator cap tester.**
- **Be careful of engine coolant from spurting out when removing the radiator cap tester.**

7. Radiator Cap

A: INSPECTION

1) Check that the radiator cap does not have deformation, cracks or damage.
2) Attach the radiator cap tester to radiator cap.

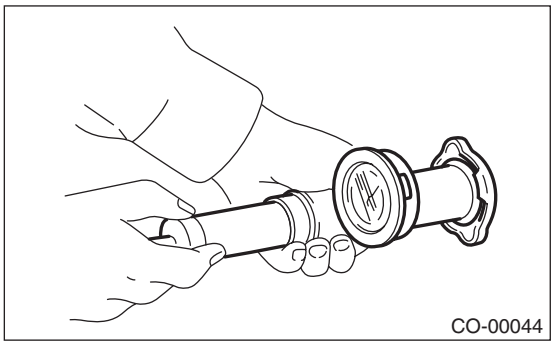

3) Increase pressure until the radiator cap tester gauge needle stops. Radiator cap is functioning properly if it holds the service limit pressure for 5 — 6 seconds. Replace the radiator cap if its valve opens at less than the service limit.

Standard:
93 — 123 kPa (0.95 — 1.25 kgf/cm^2, 14 — 18 psi)

Service limit:
83 kPa (0.85 kgf/cm^2, 12 psi)

CAUTION:
Be sure to remove foreign matter and rust from the cap in advance. Otherwise, results of pressure test will be incorrect.

8. Radiator Main Fan and Fan Motor

A: REMOVAL

1) Remove the collector cover.
2) Disconnect the ground cable from battery.

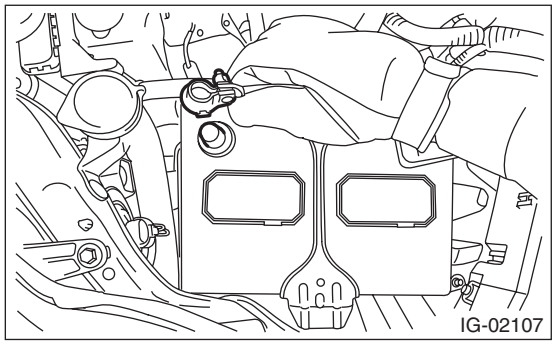

3) Remove the reservoir tank. <Ref. to CO(H4DOTC)-29, REMOVAL, Reservoir Tank.>
4) Disconnect the connector from the main fan motor.

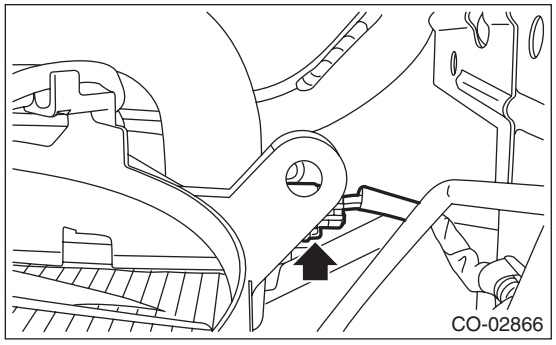

5) Remove the bolts that secure the radiator main fan motor assembly.

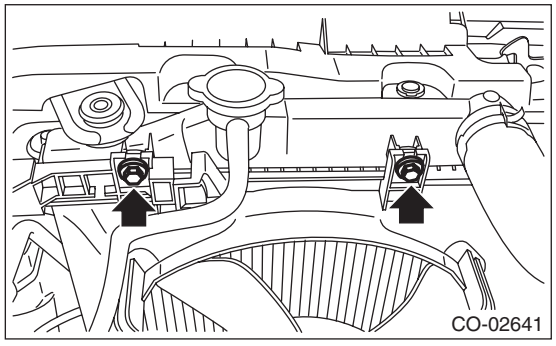

6) Remove the radiator main fan motor assembly from the upper side of the vehicle.

B: INSTALLATION

Install in the reverse order of removal.

CAUTION:
Confirm that the radiator hose is securely connected.

Tightening torque:
7.5 N·m (0.8 kgf-m, 5.5 ft-lb)

C: DISASSEMBLY

1) Remove the main fan motor connector and main fan motor harness from the radiator main fan shroud.
2) Remove the radiator main fan from the main fan motor.

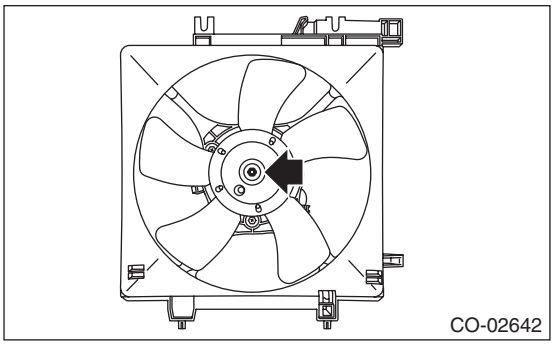

3) Remove the main fan motor from the radiator main fan shroud.

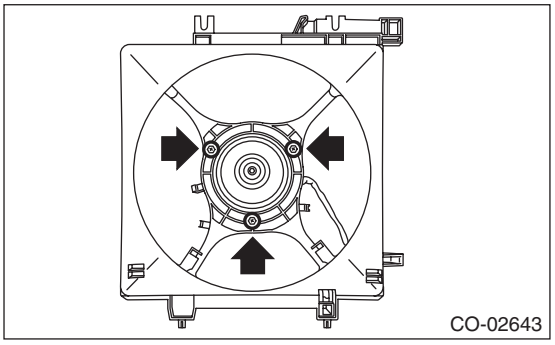

D: ASSEMBLY

Assemble in the reverse order of disassembly.

Tightening torque:
5 N·m (0.5 kgf-m, 3.7 ft-lb)

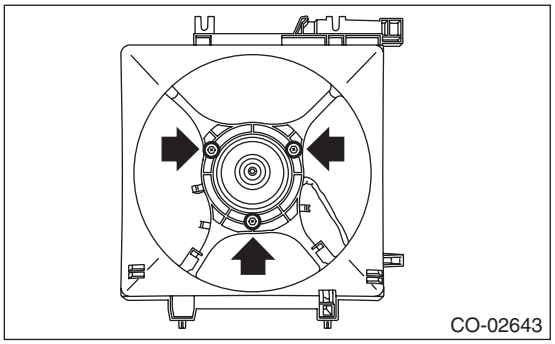

Tightening torque:
3.4 N·m (0.3 kgf-m, 2.5 ft-lb)

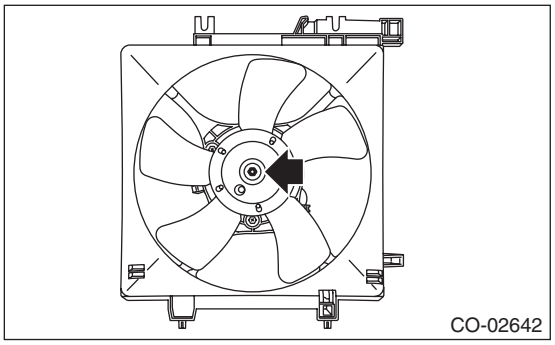

E: INSPECTION

Check that the radiator main fan, radiator main fan shroud and main fan motor do not have deformation, cracks or damage.

9. Radiator Sub Fan and Fan Motor

A: REMOVAL

1) Remove the collector cover.
2) Disconnect the ground cable from battery.

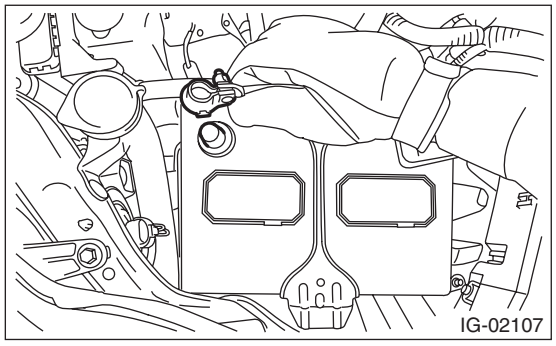

3) Remove the air intake duct. <Ref. to IN(H4DOTC)-12, REMOVAL, Air Intake Duct.>
4) Disconnect the connector from the sub fan motor.

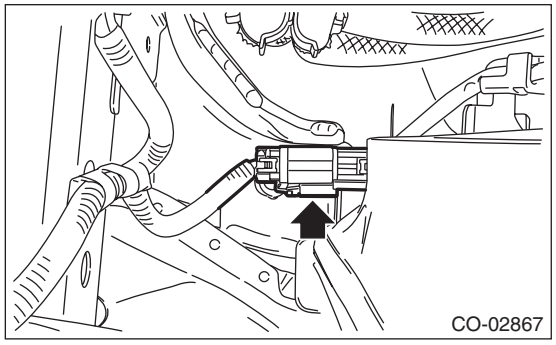

5) Remove the bolts that secure the radiator sub fan motor assembly.

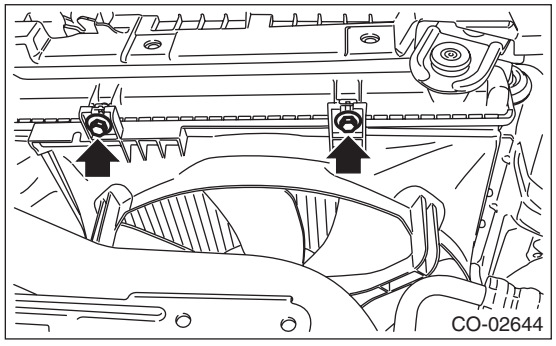

6) Remove the radiator sub fan motor assembly from the upper side of the vehicle.

B: INSTALLATION

Install in the reverse order of removal.

CAUTION:
Confirm that the radiator hose is securely connected.

Tightening torque:
7.5 N·m (0.8 kgf-m, 5.5 ft-lb)

C: DISASSEMBLY

1) Remove the sub fan motor connector and sub fan motor harness from the radiator sub fan shroud.
2) Remove the radiator sub fan from the sub fan motor.

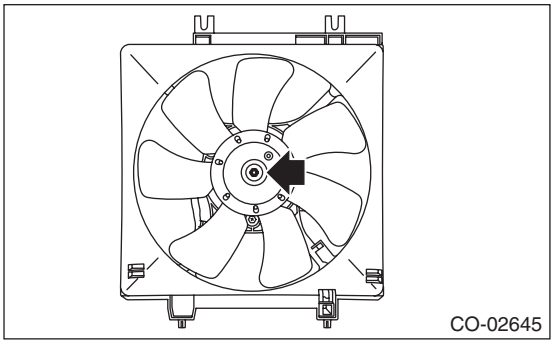

3) Remove the sub fan motor from the radiator sub fan shroud.

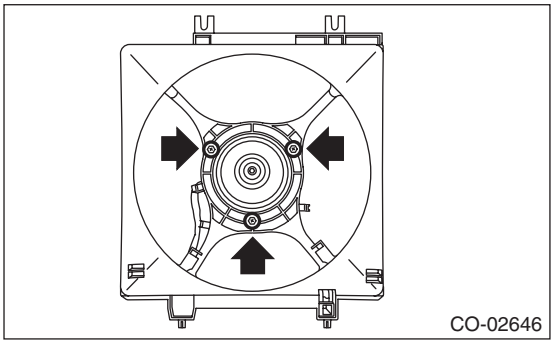

D: ASSEMBLY

Assemble in the reverse order of disassembly.

Tightening torque:
5 N·m (0.5 kgf-m, 3.7 ft-lb)

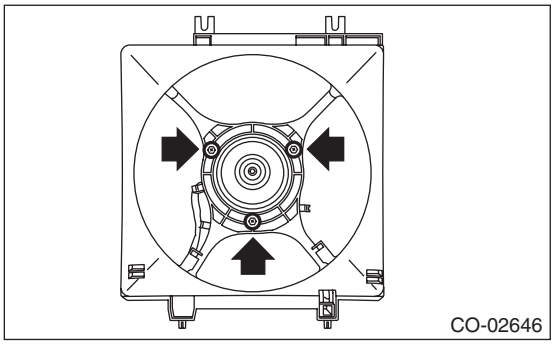

Tightening torque:
3.4 N·m (0.3 kgf-m, 2.5 ft-lb)

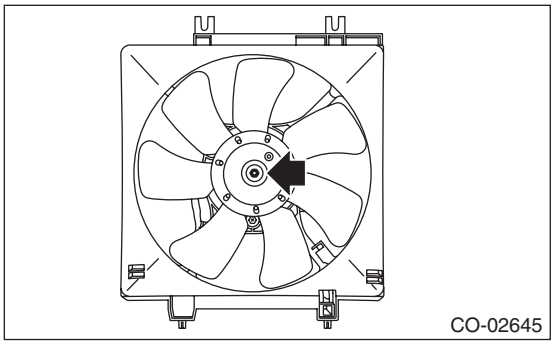

E: INSPECTION

Check that the radiator sub fan, radiator sub fan shroud and sub fan motor do not have deformation, cracks or damage.

10.Reservoir Tank

A: REMOVAL

1) Pull out the over flow hose (A).
2) Pull out the reservoir tank to the arrow direction while pushing the claw (B).

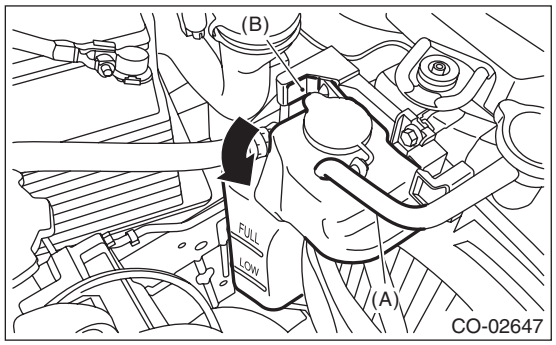

B: INSTALLATION

Install in the reverse order of removal.

C: INSPECTION

1) Check that the reservoir tank does not have deformation, cracks or damage.
2) Check the over flow hose for cracks or damage.
3) Make sure the engine coolant level is between “FULL” and “LOW”.

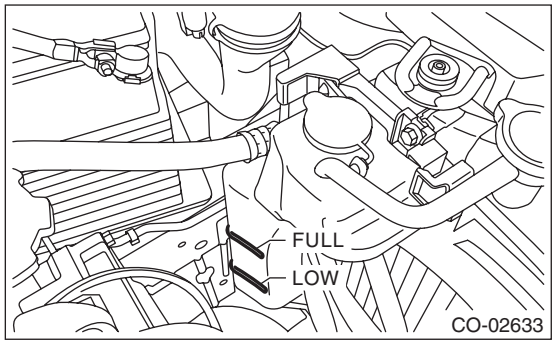

11.Engine Cooling System Trouble in General

A: INSPECTION

Trouble	Possible cause	Corrective action
Over-heating	a. Insufficient engine coolant	Replenish engine coolant, inspect for leakage, and repair it if necessary.
	b. Loose timing belt	Repair or replace timing belt tensioner.
	c. Oil on timing belt	Replace.
	d. Malfunction of thermostat	Replace.
	e. Malfunction of water pump	Replace.
	f. Clogged engine coolant passage	Clean.
	g. Improper ignition timing	Inspect and repair ignition control system. <Ref. to EN(H4DOTC)(diag)-2, PROCEDURE, Basic Diagnostic Procedure.>
	h. Clogged or leaking radiator	Clean, repair or replace.
	i. Defective radiator fan	Replace.
	j. Improper engine oil in engine coolant	Replace the engine coolant. If ineffective, check, repair or replace engine components.
	k. Air/fuel mixture ratio too lean	Inspect and repair the fuel injection system. <Ref. to EN(H4DOTC)(diag)-2, PROCEDURE, Basic Diagnostic Procedure.>
	l. Excessive back pressure in exhaust system	Clean or replace.
	m. Insufficient clearance between piston and cylinder	Adjust or replace.
	n. Slipping clutch	Repair or replace.
	o. Dragging brake	Adjust.
	p. Defective radiator fan	Inspect the radiator fan relay, engine coolant temperature sensor or fan motor and replace them.
Over-cooling	a. Ambient temperature extremely low	Partly cover radiator front area.
	b. Defective thermostat	Replace.
Engine coolant leaks	a. Loosened or damaged connecting units on hoses	Repair or replace.
	b. Leakage from water pump	Replace.
	c. Leakage from water pipe	Repair or replace.
	d. Leakage around cylinder head gasket	Retighten cylinder head bolts or replace cylinder head gasket.
	e. Damaged or cracked cylinder head and cylinder block	Repair or replace.
	f. Damaged or cracked thermostat cover	Repair or replace.
	g. Leakage from radiator	Repair or replace.
Noise	a. Timing belt problem	Replace.
	b. Defective radiator fan	Replace.
	c. Defective water pump bearing	Replace water pump.
	d. Defective water pump mechanical seal	Replace water pump.

LUBRICATION

LU(H4DOTC)

Page
1. General Description 2

1. General Description

A: SPECIFICATION

Specifications for the turbo model are included in the LU (H4SO) section. <Ref. to LU(H4SO)-2, General Description.>

SPEED CONTROL SYSTEMS

SP(H4DOTC)

Page

1. General Description 2

1. General Description

A: SPECIFICATION

Specifications for the turbo model are the same as the non-turbo model. <Ref. to SP(H4SO)-2, General Description.>

IGNITION

IG(H4DOTC)

Page

1. General Description 2
2. Spark Plug 4
3. Ignition Coil 6

1. General Description

A: SPECIFICATION

Item			Specifications
Ignition coil	Type		FK0368
	Ignition system		Independent ignition coil
	Manufacturer		Diamond Electric
Spark plug	Manufacturer and type		NGK: SILFR6B8
	Thread size (diameter, pitch, length) mm		14, 1.25, 26.5
	Spark plug gap mm (in)	Standard	0.7 — 0.8 (0.028 — 0.031)
	Electrode		Iridium

B: COMPONENT

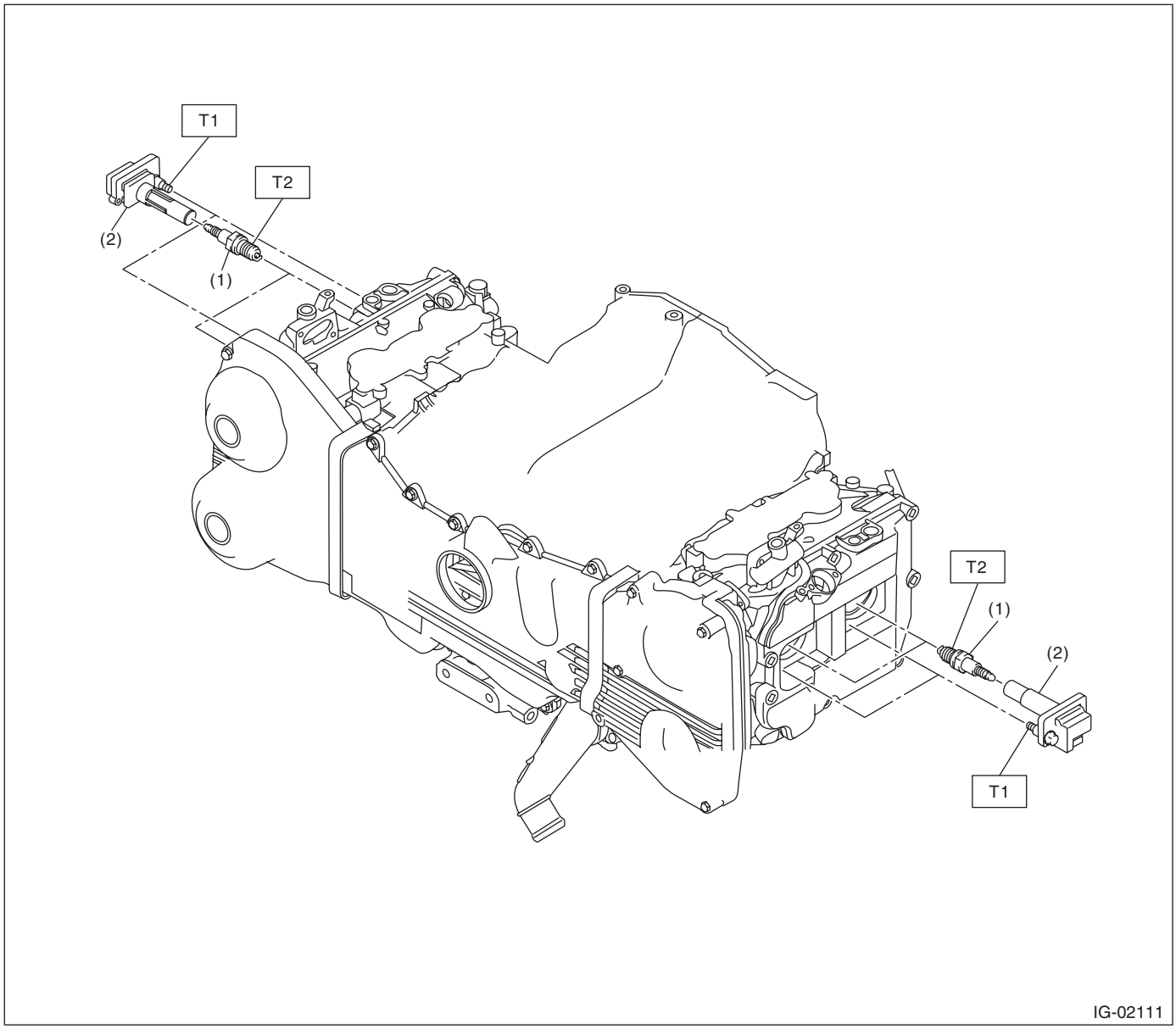

(1) Spark plug
(2) Ignition coil

Tightening torque:N·m (kgf-m, ft-lb)
T1: 16 (1.6, 11.8)
T2: 21 (2.1, 15.5)

C: CAUTION

• Wear appropriate work clothing, including a cap, protective goggles and protective shoes when performing any work.
• Remove contamination including dirt and corrosion before removal, installation or disassembly.
• Keep the disassembled parts in order and protect them from dust and dirt.
• Before removal, installation or disassembly, be sure to clarify the failure. Avoid unnecessary removal, installation, disassembly and replacement.
• Vehicle components are extremely hot after driving. Be wary of receiving burns from heated parts.
• Be sure to tighten fasteners including bolts and nuts to the specified torque.
• Place shop jacks or rigid racks at the specified points.
• Before disconnecting connectors of sensors or units, be sure to disconnect the ground cable from the battery.

2. Spark Plug

A: REMOVAL

Spark plug:
Refer to "SPECIFICATION" for the spark plug. <Ref. to IG(H4DOTC)-2, SPECIFICATION, General Description.>

1. RH SIDE

1) Disconnect the ground cable from battery.

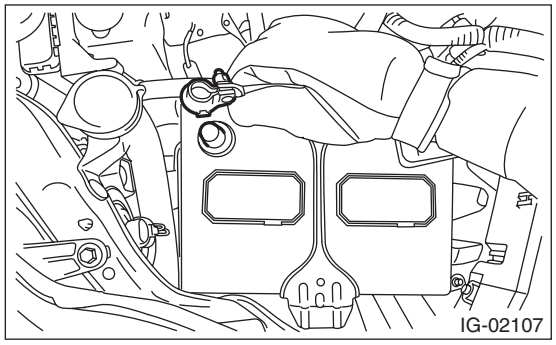
IG-02107

2) Remove the air cleaner case. <Ref. to IN(H4DOTC)-8, REMOVAL, Air Cleaner Case.>
3) Disconnect the connector from ignition coil.
4) Remove the ignition coil.

NOTE:
Turn #3 ignition coil by 180 degrees to remove it.

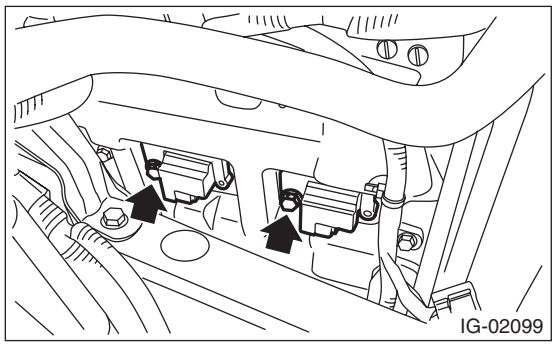
IG-02099

5) Remove the spark plug with a spark plug socket.

2. LH SIDE

1) Remove the battery. <Ref. to SC(H4SO)-28, REMOVAL, Battery.>
2) Disconnect the connector from ignition coil.
3) Remove the ignition coil.

NOTE:
Turn #4 ignition coil by 180 degrees to remove it.

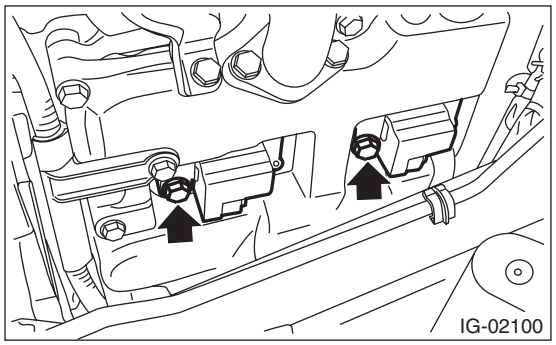
IG-02100

4) Remove the spark plug with a spark plug socket.

B: INSTALLATION

1. RH SIDE

Install in the reverse order of removal.

Tightening torque (Spark plug):
21 N·m (2.1 kgf-m, 15.5 ft-lb)

Tightening torque (Ignition coil):
16 N·m (1.6 kgf-m, 11.8 ft-lb)

2. LH SIDE

Install in the reverse order of removal.

Tightening torque (Spark plug):
21 N·m (2.1 kgf-m, 15.5 ft-lb)

Tightening torque (Ignition coil):
16 N·m (1.6 kgf-m, 11.8 ft-lb)

C: INSPECTION

1) Check the spark plug for abnormalities. If defective, replace the spark plug.

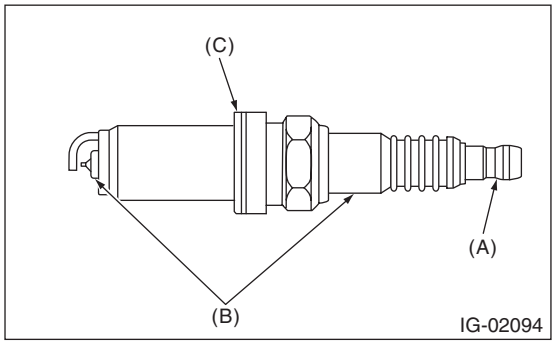

(A) Terminal damage
(B) Crack or damage in insulator
(C) Damaged gasket

2) Check the spark plug electrode and condition of the insulator. If abnormal, check and repair the cause and replace the spark plug.

(1) Normal:
Brown to grayish-tan deposits and slight electrode wear indicate correct spark plug heat range.

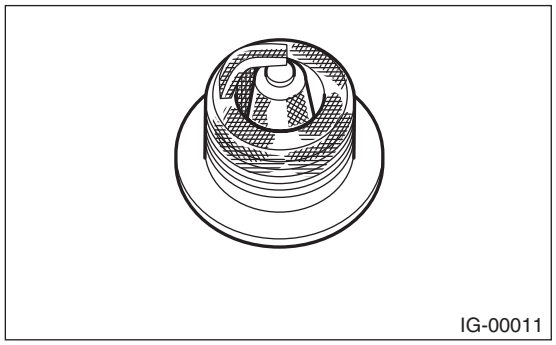
IG-00011

(2) Carbon fouled:
Dry fluffy carbon deposits on insulator and electrode are mostly caused by slow speed driving in the city, weak ignition, too rich fuel mixture, etc.

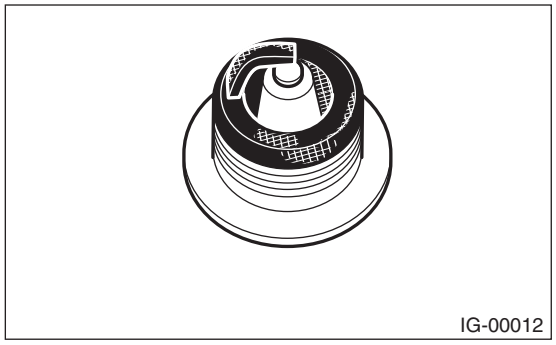
IG-00012

(3) Oil fouled:
Wet black deposits show oil entrance into combustion chamber through worn piston rings or increased clearance between valve guides and valve stems.

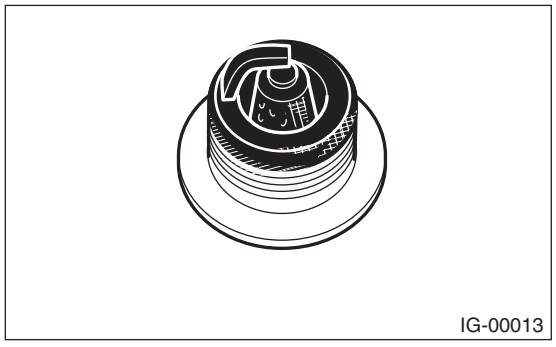
IG-00013

(4) Overheating:
White or light gray insulator with black or brown spots and bluish burnt electrodes indicate engine overheating, wrong selection of fuel, or loose spark plugs.

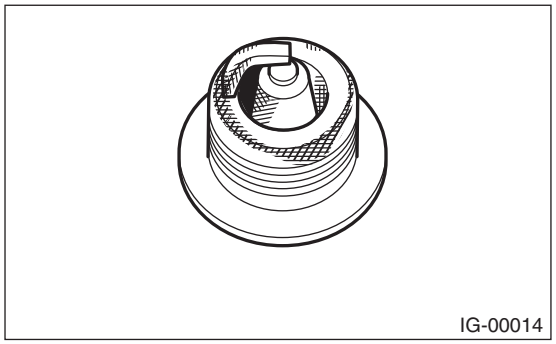
IG-00014

3) Using a nylon brush, etc., clean and remove the carbon or oxide deposits from the spark plug. If deposits are too stubborn, replace the spark plugs. After cleaning the spark plugs, check the spark plug gap “L” using a gap gauge. If it is not within the standard, replace the spark plug.

NOTE:
- Never use a plug cleaner.
- Do not use a metal brush as it may damage the electrode area.

Spark plug gap L:
Standard
0.7 — 0.8 mm (0.028 — 0.031 in)

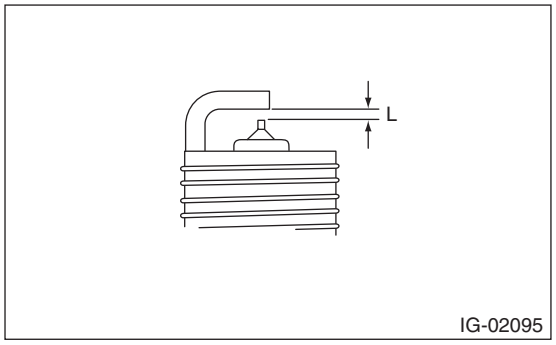

IG-02095

3. Ignition Coil

A: REMOVAL

Direct ignition type is adopted. Refer to “Spark Plug” for removal procedure. <Ref. to IG(H4DOTC)-4, REMOVAL, Spark Plug.>

B: INSTALLATION

Install in the reverse order of removal.

Tightening torque:
16 N·m (1.6 kgf-m, 11.8 ft-lb)

C: INSPECTION

For inspection procedure, refer to “Diagnostics for Engine Starting Failure”. <Ref. to EN(H4DOTC)(diag)-68, IGNITION CONTROL SYSTEM, Diagnostics for Engine Starting Failure.>

STARTING/CHARGING SYSTEMS

SC(H4DOTC)

Page

1. General Description 2

1. General Description

A: SPECIFICATION

Specifications for the turbo model are included in the SC(H4SO) section. <Ref. to SC(H4SO)-2, General Description.>

ENGINE (DIAGNOSTICS)

EN(H4DOTC)(diag)

		Page
1.	Basic Diagnostic Procedure	2
2.	Check List for Interview	4
3.	General Description	6
4.	Electrical Component Location	9
5.	Engine Control Module (ECM) I/O Signal	18
6.	Engine Condition Data	28
7.	Data Link Connector	29
8.	General Scan Tool	30
9.	Subaru Select Monitor	34
10.	Read Diagnostic Trouble Code (DTC)	40
11.	Inspection Mode	41
12.	Drive Cycle	47
13.	Clear Memory Mode	53
14.	System Operation Check Mode	54
15.	Malfunction Indicator Light	55
16.	Diagnostics for Engine Starting Failure	62
17.	Diagnostic Procedure for Subaru Select Monitor Communication	73
18.	List of Diagnostic Trouble Code (DTC)	75
19.	Diagnostic Procedure with Diagnostic Trouble Code (DTC)	84
20.	General Diagnostic Table	339

1. Basic Diagnostic Procedure

A: PROCEDURE

1. ENGINE

	Step	Check	Yes	No
1	**CHECK ENGINE START FAILURE.** 1) Ask the customer when and how the trouble occurred using the interview check list. <Ref. to EN(H4DOTC)(diag)-4, CHECK, Check List for Interview.> 2) Start the engine.	Does the engine start?	Go to step **2**.	Inspection using "Diagnostics for Engine Start Failure". <Ref. to EN(H4DOTC)(diag)-62, Diagnostics for Engine Starting Failure.>
2	**CHECK ILLUMINATION OF MALFUNCTION INDICATOR LIGHT.**	Does the malfunction indicator light illuminate?	Go to step **3**.	Inspection using "General Diagnostic Table". <Ref. to EN(H4DOTC)(diag)-339, General Diagnostic Table.>
3	**CHECK COMMUNICATION STATUS.** 1) Turn the ignition switch to OFF. 2) Connect the Subaru Select Monitor or general scan tool to the data link connector. 3) Turn the ignition switch to ON, and run the Subaru Select Monitor or general scan tool. NOTE: • Subaru Select Monitor For detailed procedures, refer to "Subaru Select Monitor". <Ref. to EN(H4DOTC)(diag)-34, Subaru Select Monitor.> • General scan tool For detailed operation procedures, refer to the general scan tool operation manual.	Does Subaru Select Monitor or general scan tool communicate with vehicle normally?	Go to step **4**.	Inspection using "Diagnostics Procedure for Subaru Select Monitor Communication". <Ref. to EN(H4DOTC)(diag)-73, Diagnostic Procedure for Subaru Select Monitor Communication.>
4	**CHECK DTC.** Read DTC using Subaru Select Monitor or general scan tool. NOTE: • Subaru Select Monitor Refer to "Read Diagnostic Trouble Code" for detailed operation procedure. <Ref. to EN(H4DOTC)(diag)-40, Read Diagnostic Trouble Code (DTC).> • General scan tool For detailed operation procedures, refer to the general scan tool operation manual.	Is DTC displayed on Subaru Select Monitor or general scan tool?	Record the DTC. Repair the trouble cause. <Ref. to EN(H4DOTC)(diag)-75, List of Diagnostic Trouble Code (DTC).> Go to step **5**.	Repair the related parts. NOTE: If DTC is not shown on display although the malfunction indicator light illuminates, perform the diagnosis of malfunction indicator light circuit or combination meter. <Ref. to EN(H4DOTC)(diag)-55, Malfunction Indicator Light.>

	Step	Check	Yes	No
5	**CHECK FREEZE FRAME DATA.** Check the freeze frame data using the Subaru Select Monitor or general scan tool. NOTE: • Subaru Select Monitor For detailed procedures, refer to "Subaru Select Monitor". <Ref. to EN(H4DOTC)(diag)-34, Subaru Select Monitor.> • General scan tool For detailed operation procedures, refer to the general scan tool operation manual.	Is freeze frame data displayed on Subaru Select Monitor or general scan tool?	Record the freeze frame data. Repair the cause of fault, and go to the next step. Go to step **6**.	Go to step **6**.
6	**PERFORM DIAGNOSIS.** 1) Perform the Clear Memory Mode. <Ref. to EN(H4DOTC)(diag)-53, Clear Memory Mode.> 2) Perform the Inspection Mode or Drive Cycle. <Ref. to EN(H4DOTC)(diag)-41, Inspection Mode.> <Ref. to EN(H4DOTC)(diag)-47, Drive Cycle.>	Is DTC displayed on Subaru Select Monitor or general scan tool?	Inspect using "Diagnostic Procedure with Diagnostic Trouble Code (DTC)". <Ref. to EN(H4DOTC)(diag)-84, Diagnostic Procedure with Diagnostic Trouble Code (DTC).>	Finish the diagnosis.

2. Check List for Interview

A: CHECK

1. CHECK LIST NO. 1

Check the following item when problem has occurred.

NOTE:
Use copies of this page for interviewing customers.

Customer's name		Engine No.	
Date of purchase		Fuel type	
Date of repair		Odometer reading	km
V.I.N.			miles
Weather	❑ Fine ❑ Cloudy ❑ Rainy ❑ Snowy ❑ Various/Others:		
Ambient air temperature	°C (°F)		
	❑ Hot ❑ Warm ❑ Cool ❑ Cold		
Place	❑ Highway ❑ Suburbs ❑ Inner city ❑ Uphill ❑ Downhill ❑ Rough road ❑ Others:		
Engine temperature	❑ Cold ❑ Warming-up ❑ After warming-up ❑ Any temperature ❑ Others:		
Engine speed	rpm		
Vehicle speed	km/h (MPH)		
Driving conditions	❑ Not affected ❑ At starting ❑ While idling ❑ At racing ❑ While accelerating ❑ While cruising ❑ While decelerating ❑ While turning (RH/LH)		
Headlight	❑ ON/❑ OFF	Rear defogger	❑ ON/❑ OFF
Blower	❑ ON/❑ OFF	Audio	❑ ON/❑ OFF
A/C compressor	❑ ON/❑ OFF	Rear entertainment system	❑ ON/❑ OFF
Radiator fan	❑ ON/❑ OFF	Car phone	❑ ON/❑ OFF
Front wiper	❑ ON/❑ OFF	Wireless device	❑ ON/❑ OFF
Rear wiper	❑ ON/❑ OFF		

2. CHECK LIST NO. 2

Check the following item about the vehicle's state when the malfunction indicator light turns on.

NOTE:
Use copies of this page for interviewing customers.

a) Other warning lights or indicators illuminate: ❑ Yes / ❑ No
❑ Fuel level warning light ❑ Charge warning light ❑ Engine coolant temperature warning light ❑ Oil pressure warning light ❑ ATF temperature warning light or SPORT indicator light ❑ Driver's control center differential indicator light ❑ ABS warning light ❑ VDC warning light ❑ Cruise indicator light ❑ SI-CRUISE warning light ❑ Immobilizer indicator light ❑ STEERING warning light ❑ Glow indicator light ❑ Sedimenter warning light ❑ Others:
b) Fuel level
• Lack of fuel: ❑ Yes / ❑ No • Indicator position of fuel gauge: • Experienced running out of fuel: ❑ Yes / ❑ No
c) Intentional connecting or disconnecting of harness connectors or spark plug cords: ❑ Yes / ❑ No
• What:
d) Intentional connecting or disconnecting of hoses: ❑ Yes / ❑ No
• What:
e) Installing of other parts except genuine parts: ❑ Yes / ❑ No
• What: • Where:
f) Occurrence of noise: ❑ Yes / ❑ No
• From where: • What kind:
g) Occurrence of smell: ❑ Yes / ❑ No
• From where: • What kind:
h) Intrusion of water into engine compartment or passenger compartment: ❑ Yes / ❑ No
i) Troubles occurred
❑ Engine does not start. ❑ Engine stalls during idling. ❑ Engine stalls while driving. ❑ Engine speed decreases. ❑ Engine speed does not decrease. ❑ Rough idling ❑ Poor acceleration ❑ Back fire ❑ After fire ❑ Does not shift. ❑ Excessive shift shock

3. General Description

A: CAUTION

1) Airbag system wiring harness is routed near the ECM, main relay and fuel pump relay.

CAUTION:
• Do not use electrical test equipment on the airbag system circuit.
• Be careful not to damage the airbag system wiring harness when servicing the ECM, TCM, main relay and fuel pump relay.

2) Never connect the battery in reverse polarity. Doing so will damage the ECM instantly, and other parts will also be damaged.
3) Do not disconnect the battery terminals while the engine is running. A large counter electromotive force will be generated in the generator, and this voltage may damage electronic parts such as ECM etc.
4) Before disconnecting the connectors of each sensor and ECM, be sure to turn the ignition switch to OFF. Perform the Clear Memory Mode after connecting the connectors. <Ref. to EN(H4DOTC)(diag)-53, Clear Memory Mode.>
5) When measuring the voltage or resistance of individual sensor or all electrical control modules, use a tapered pin with a diameter of less than 0.6 mm (0.024 in). Do not insert the pin 4 mm (0.16 in) or more into the part.

CAUTION:
When replacing the ECM, be careful not to use the wrong spec. ECM to avoid any damage on the fuel injection system.

NOTE:
When replacing the ECM of the models with Immobilizer, immobilizer system must be registered. To do so, all ignition keys and ID cards need to be prepared. For detailed operation procedures, refer to “PC application help for Subaru Select Monitor”.
6) Take care not to allow water to get into the connectors when servicing or washing the vehicle in rainy weather. Avoid exposure to water even if the connectors are waterproof.
7) Use ECM mounting stud bolts at the body side grounding point when measuring voltage and resistance inside the passenger compartment.

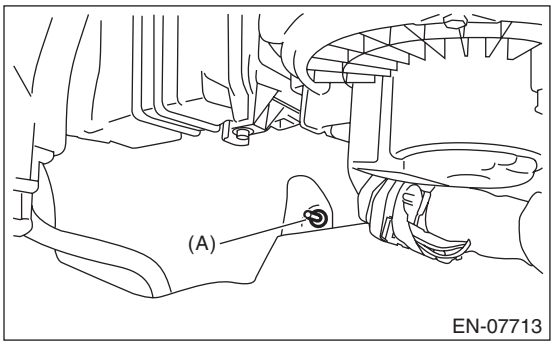

(A) Stud bolt

8) Use the engine ground terminal or engine assembly as the grounding point to chassis when measuring the voltage and resistance in engine compartment.

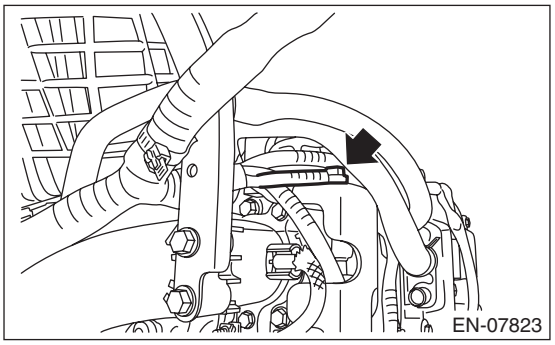

9) Every MFI-related part is a precision part. Do not drop them.
10) Observe the following cautions when installing a radio in vehicle.

CAUTION:
• The antenna must be kept as far apart as possible from control module. (ECM is installed at the back of the glove box.)
• The antenna feeder must be placed as far apart as possible from the ECM and engine control system harness.
• Carefully adjust the antenna for correct matching.
• When mounting a large power type radio, pay special attention to the three items mentioned above.
• Incorrect installation of the radio may affect the operation of ECM.

11) When disconnecting the fuel hose, release the fuel pressure. <Ref. to FU(H4DOTC)-66, RELEASING OF FUEL PRESSURE, PROCEDURE, Fuel.>

12) For the model with ABS, the ABS warning light may illuminate when performing driving test with jacked-up or lifted-up condition, but this is not a system malfunction. The reason for this is the speed difference between the front and rear wheels. When engine control system diagnosis is finished, perform the VDC memory clearance procedure of self-diagnosis function. <Ref. to VDC(diag)-25, Clear Memory Mode.>

B: INSPECTION

Before performing diagnostics, check the following item which might affect engine problems.

1. BATTERY

1) Measure the battery voltage and specific gravity of the electrolyte.

Standard voltage: 12 V

Specific gravity: 1.260 or more

2) Check the condition of the main and other fuses, and harnesses and connectors. Also check for proper grounding.

2. ENGINE GROUND

Make sure that the engine ground terminal is properly connected to the engine.

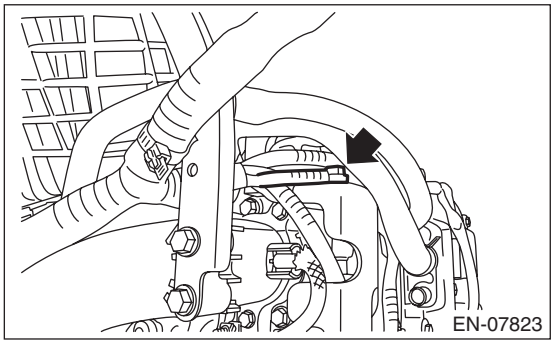

C: NOTE

- The on-board diagnostic (OBD) system detects and indicates a fault in various inputs and outputs of the complex electronic control. Malfunction indicator light in the combination meter indicates occurrence of a fault or trouble.
- Further, against such a failure of sensors as may disable the drive, the fail-safe function is provided to ensure the minimal drivability.
- The OBD system incorporated with the vehicles within this type of engine complies with OBD-II regulations. The OBD system monitors the components and the system malfunction listed in “Engine Section” which affects on emissions.
- When the system decides that a malfunction occurs, malfunction indicator light illuminates. At the same time of the malfunction indicator light illumination or blinking, a DTC and a freeze frame engine conditions are stored into on-board computer.
- The OBD system stores freeze frame engine condition data (engine load, engine coolant temperature, fuel trim, engine speed and vehicle speed, etc.) into on-board computer when it detects a malfunction.
- Freeze frame engine condition data are stored until the DTCs are cleared. However when such malfunctions as fuel trim fault and misfire are detected with the freeze frame engine condition data stored, they are rewritten into those related to the fuel trim fault and misfire.
- When the malfunction does not occur again for three consecutive driving cycles*, malfunction indicator light is turned off, but DTC remains at on-board computer.

*: One driving cycle means the period between the ignition switch ON and the ignition switch OFF after driving.

- When performing diagnosis, connect the Subaru Select Monitor or general scan tool to the vehicle.

D: PREPARATION TOOL

ILLUSTRATION	TOOL NUMBER	DESCRIPTION	REMARKS
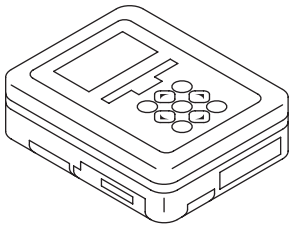 ST1B022XU0	1B022XU0	SUBARU SELECT MONITOR III KIT	Used for troubleshooting the electrical system.
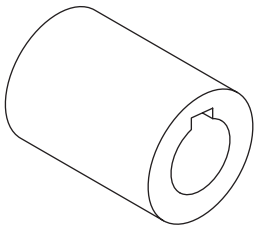 ST-499987500	499987500	CRANKSHAFT SOCKET	Used for rotating crankshaft.

4. Electrical Component Location

A: LOCATION

1. CONTROL MODULE

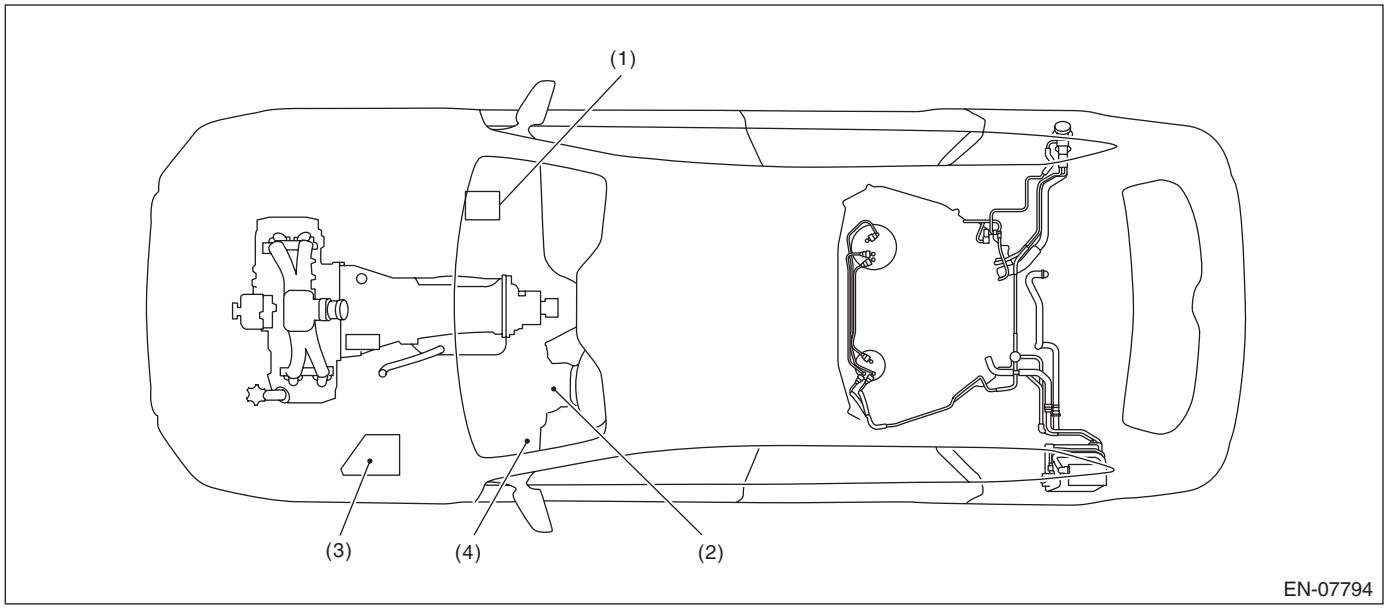

(1) Engine control module (ECM)
(2) Malfunction indicator light
(3) Delivery (test) mode fuse
(4) Data link connector

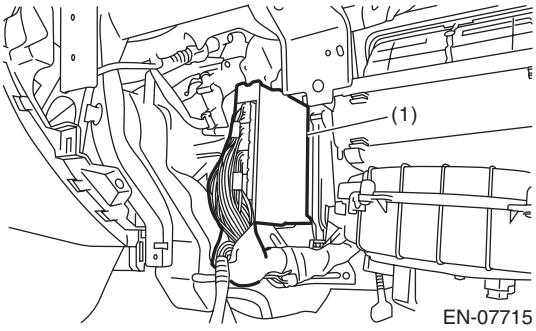

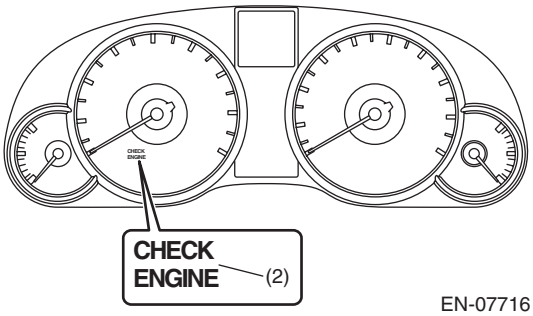

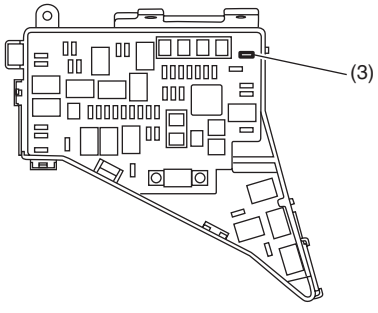

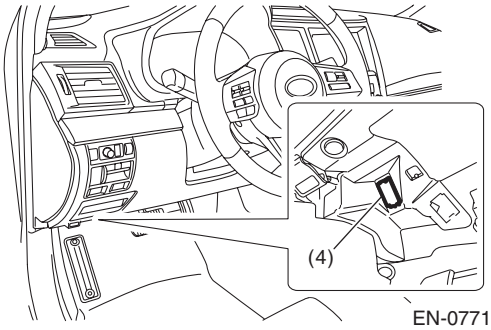

2. SENSOR

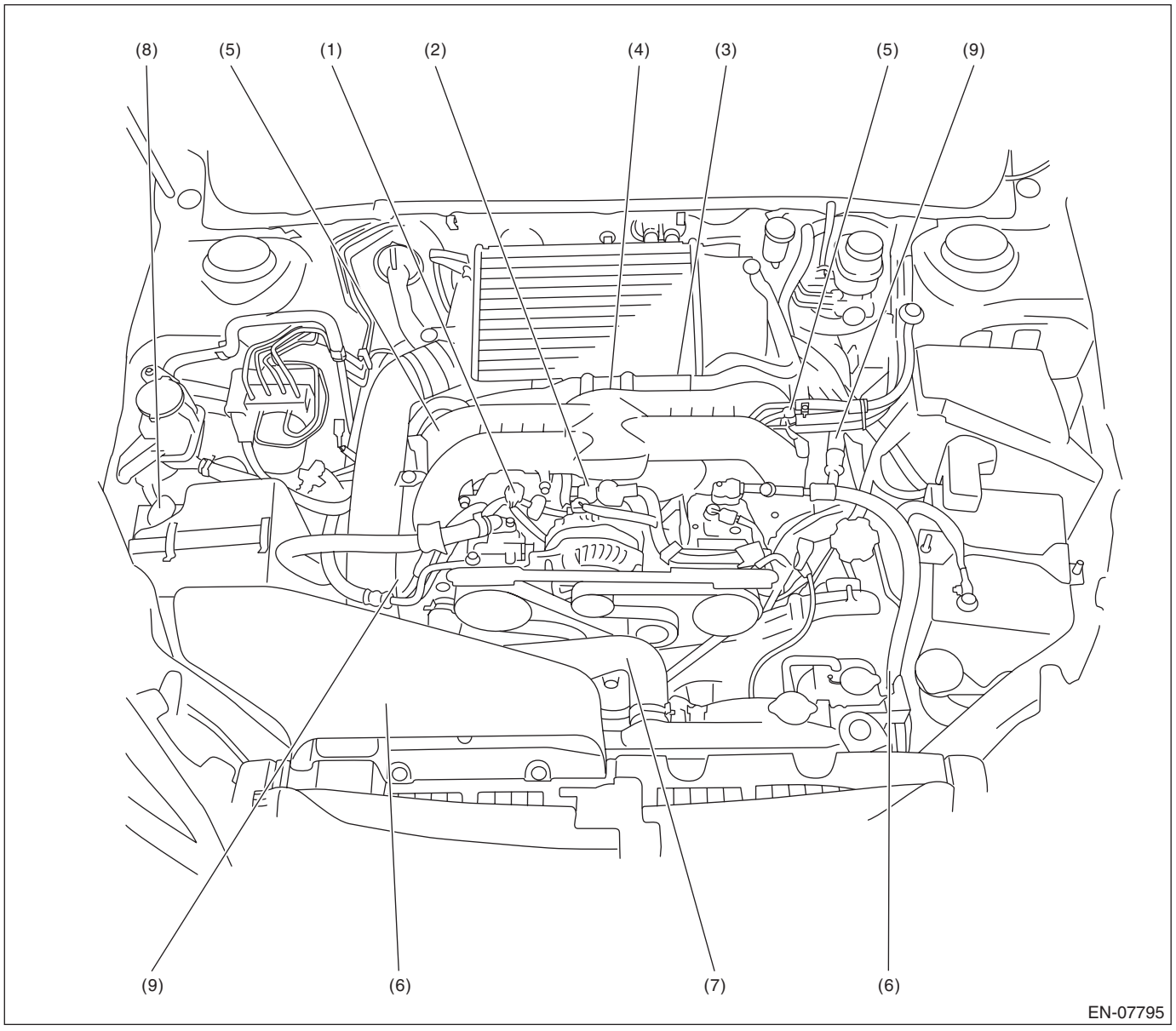

(1) Manifold absolute pressure sensor
(2) Engine coolant temperature sensor
(3) Electronic throttle control
(4) Knock sensor
(5) Intake camshaft position sensor
(6) Exhaust camshaft position sensor
(7) Crankshaft position sensor
(8) Mass air flow and intake air temperature sensor
(9) Tumble generator valve ASSY

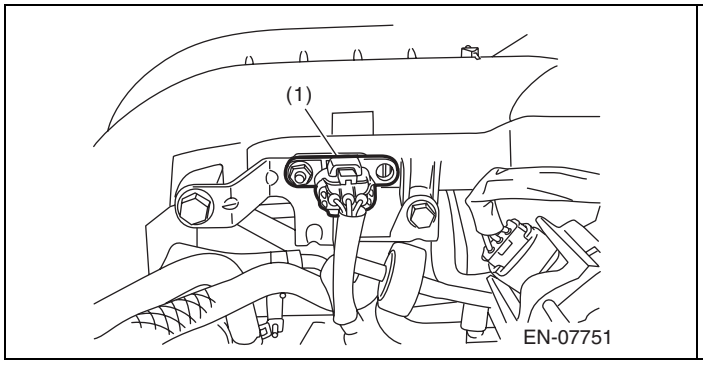

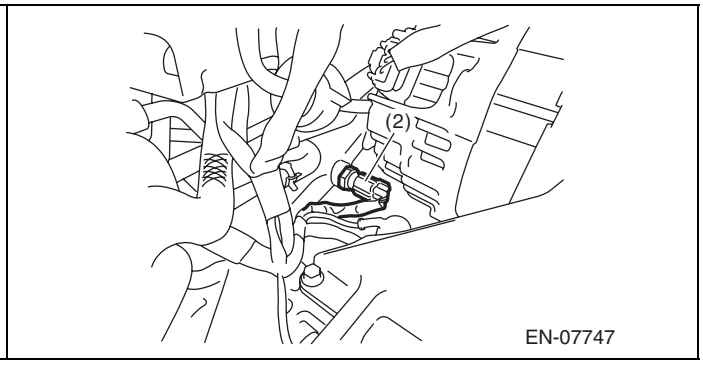

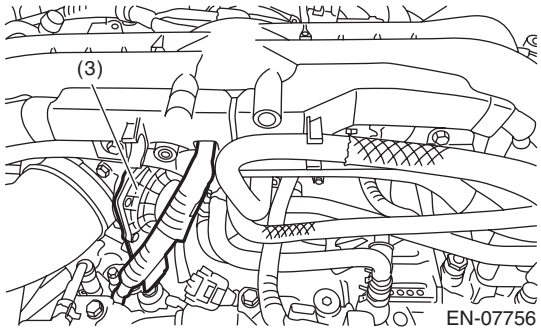
(3)
EN-07756

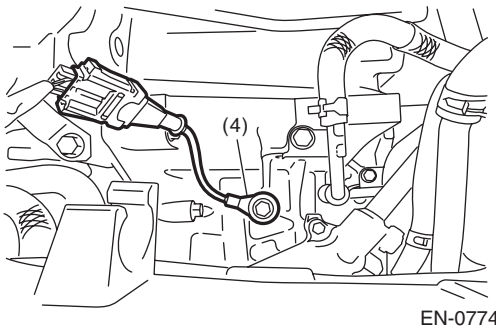
(4)
EN-07748

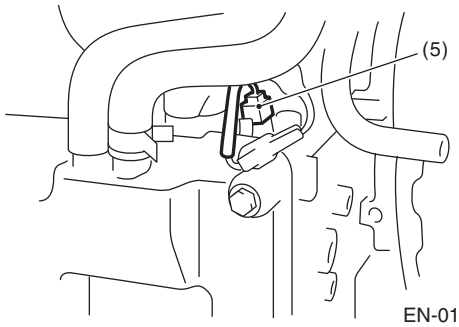
(5)
EN-01798

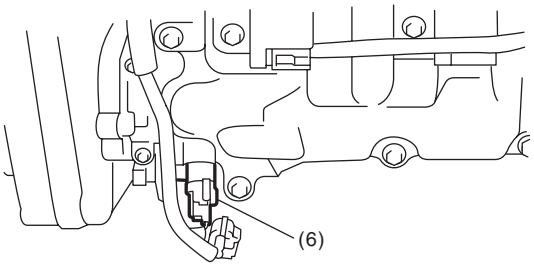
(6)
EN-01929

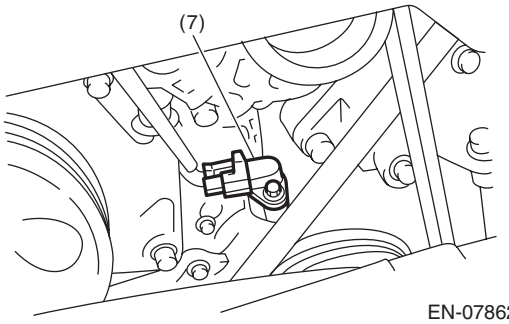
(7)
EN-07862

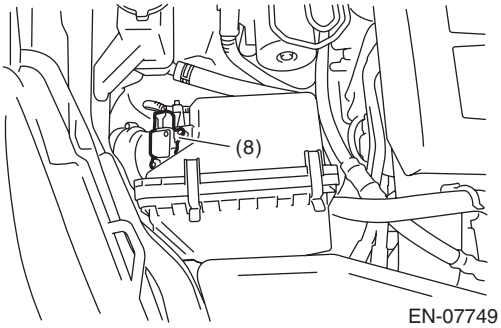
(8)
EN-07749

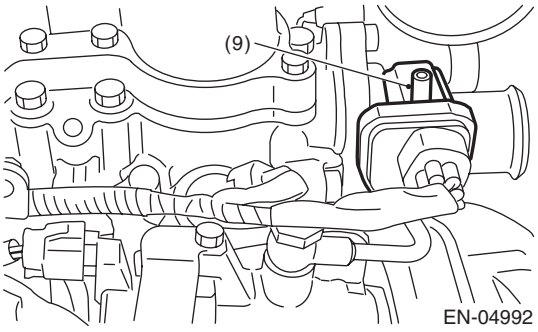
(9)
EN-04992

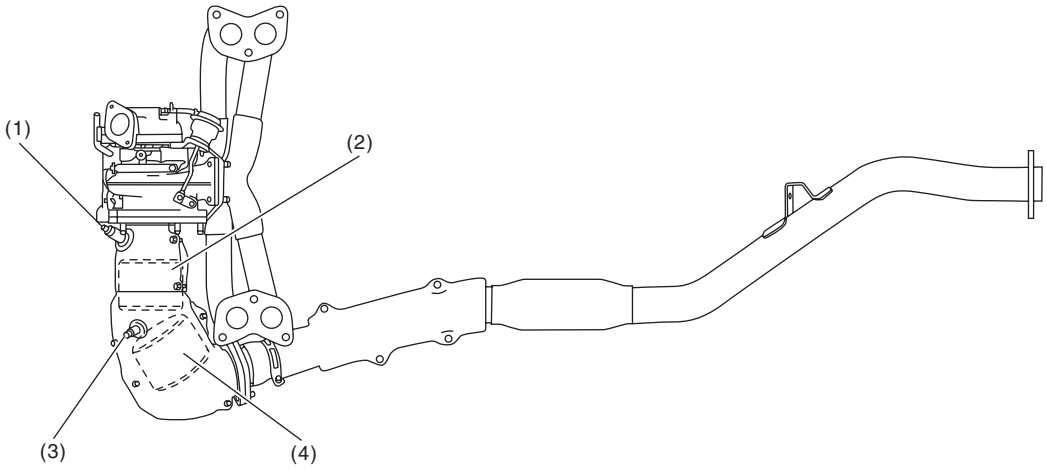

(1) Front oxygen (A/F) sensor
(2) Front catalytic converter
(3) Rear oxygen sensor
(4) Rear catalytic converter

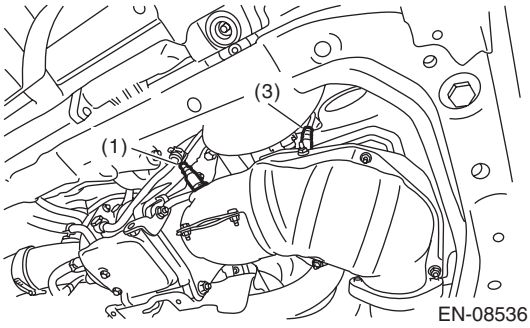

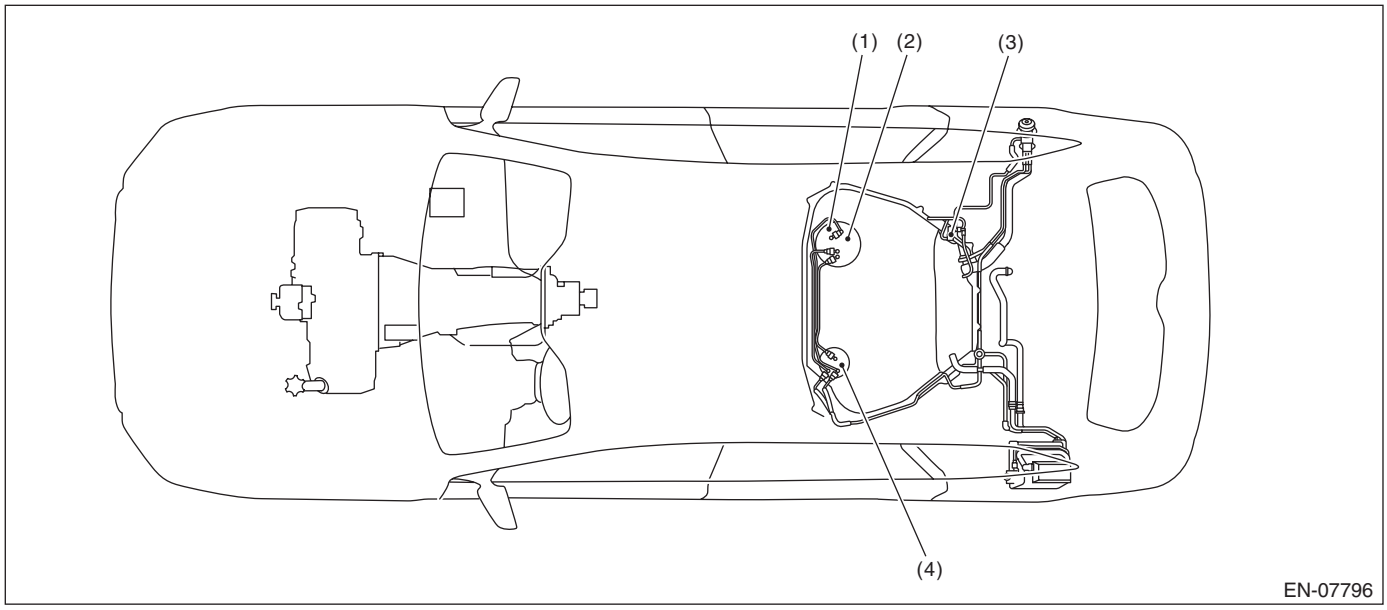

(1) Fuel level sensor
(2) Fuel temperature sensor
(3) Fuel tank pressure sensor
(4) Fuel sub level sensor

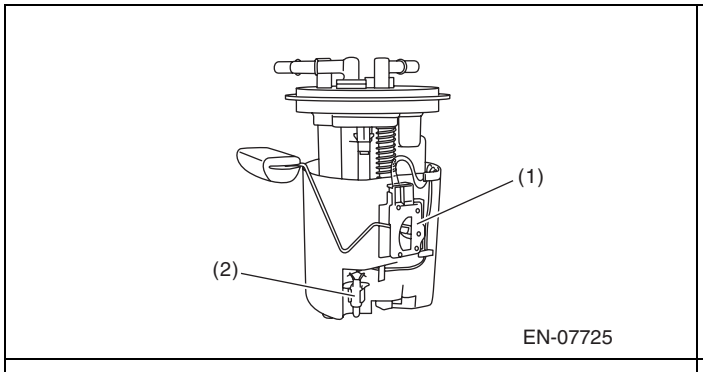

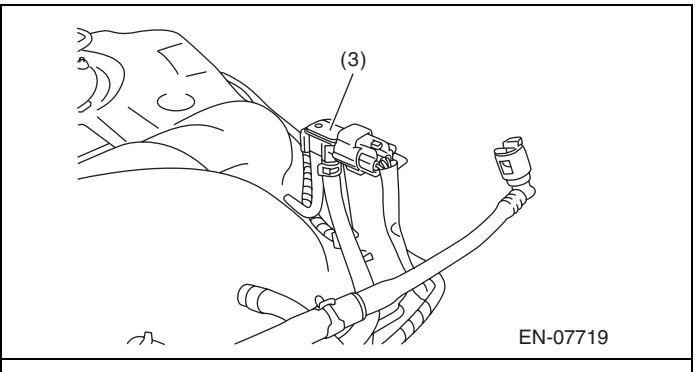

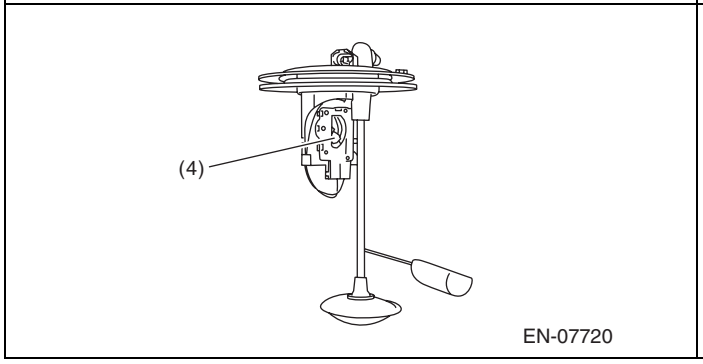

3. SOLENOID VALVE, ACTUATOR, EMISSION CONTROL SYSTEM PARTS AND IGNITION SYSTEM PARTS

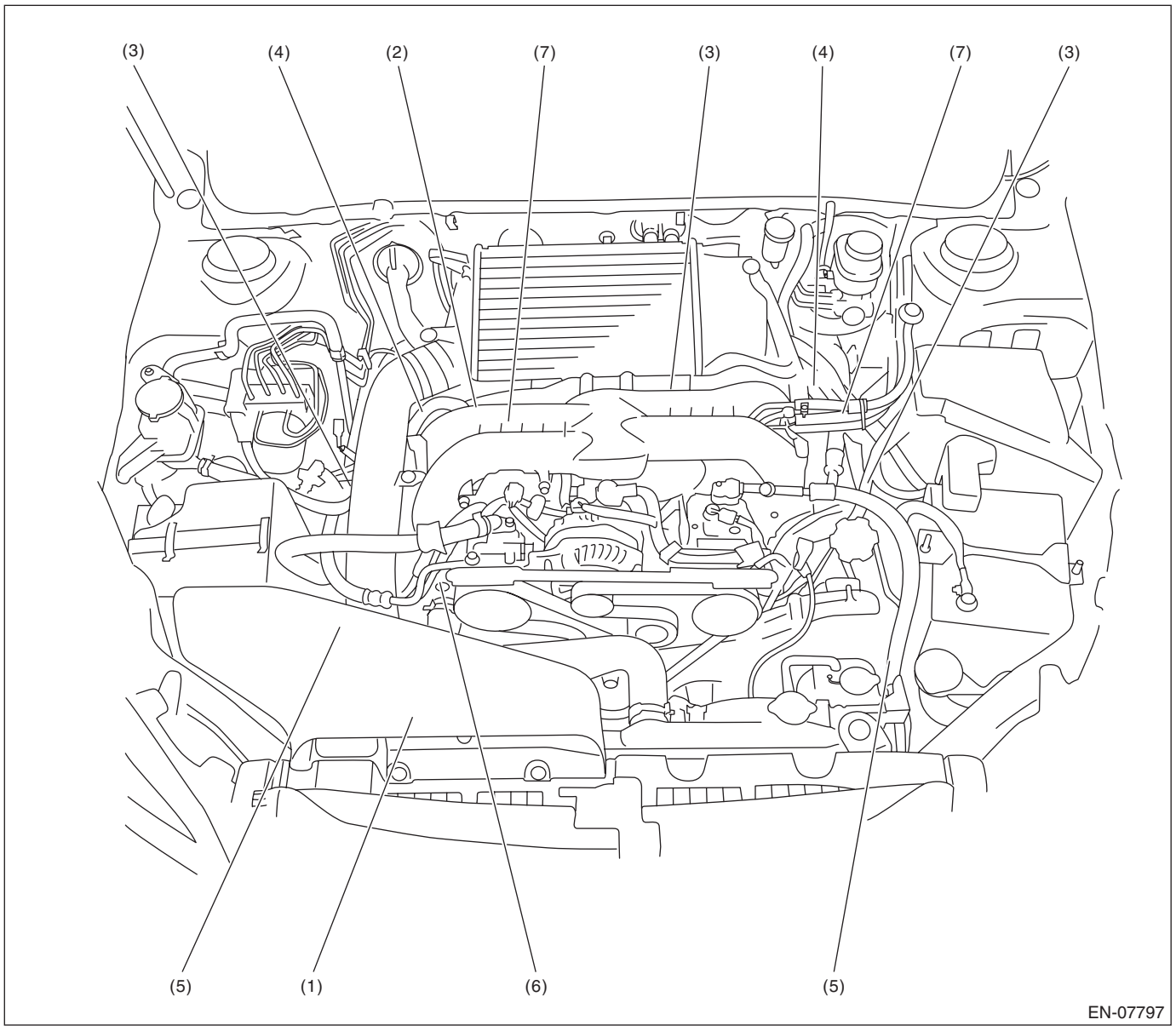

(1) Wastegate control solenoid valve
(2) Purge control solenoid valve 1
(3) Ignition coil
(4) Intake oil flow control solenoid valve
(5) Exhaust oil flow control solenoid valve
(6) Tumble generator valve ASSY
(7) Purge control solenoid valve 2

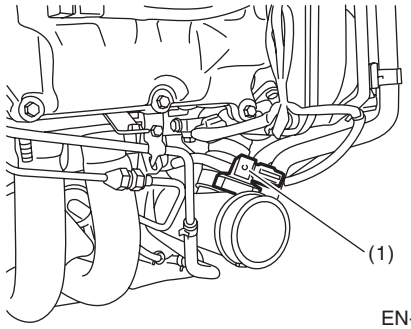

EN-07758

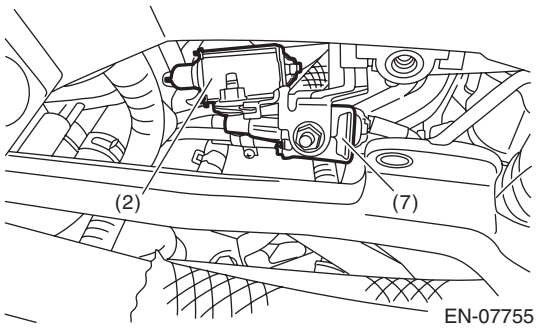

EN-07755

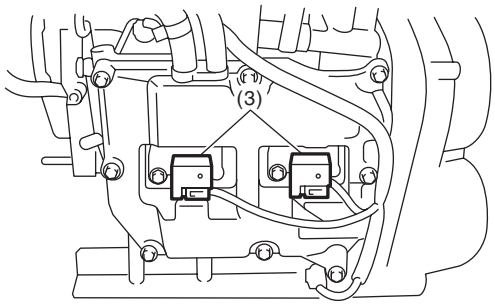

EN-01936

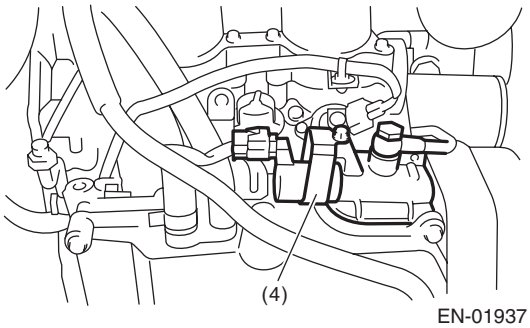

EN-01937

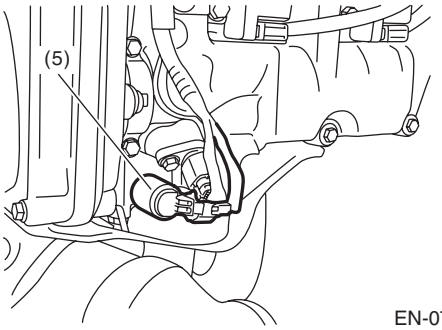

EN-07762

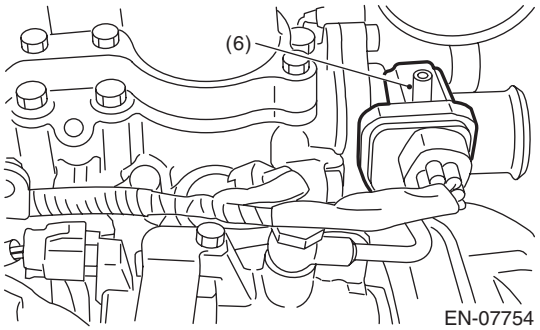

EN-07754

Electrical Component Location

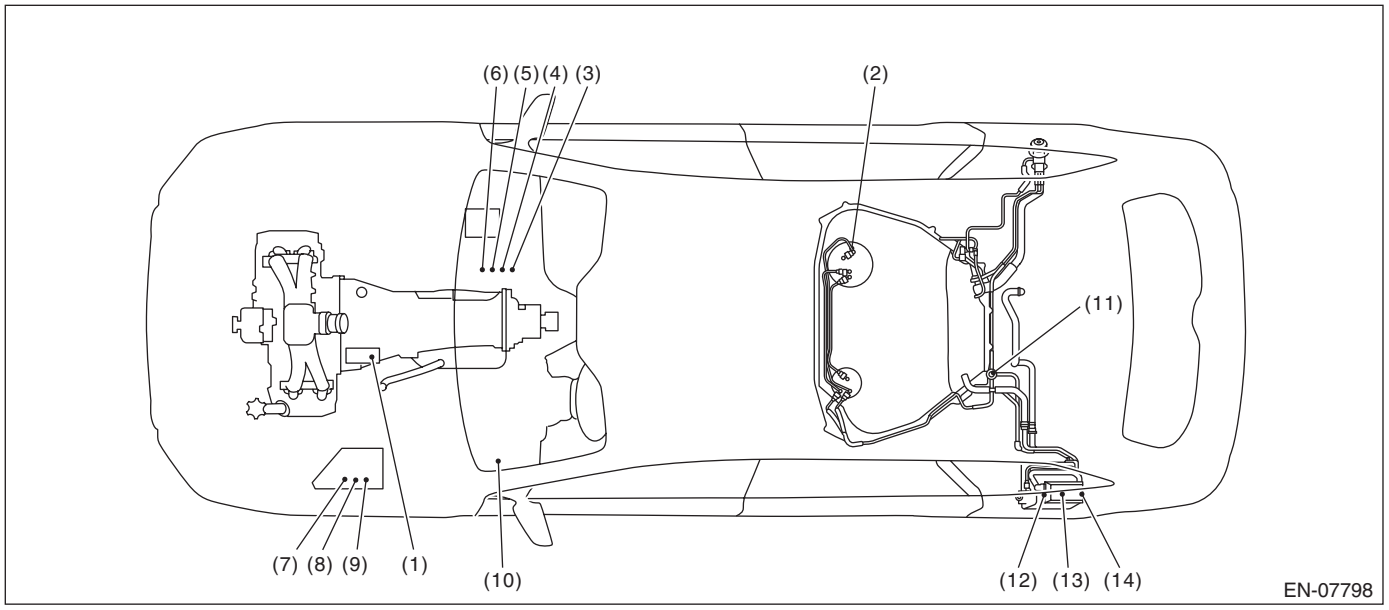

(1) Starter
(2) Fuel pump
(3) Main relay
(4) A/F, oxygen sensor relay
(5) Electronic throttle control relay
(6) Fuel pump relay
(7) Radiator main fan relay 1
(8) Radiator main fan relay 2
(9) Radiator sub fan relay
(10) Starter relay
(11) Pressure control solenoid valve
(12) Canister
(13) Drain valve
(14) Drain filter

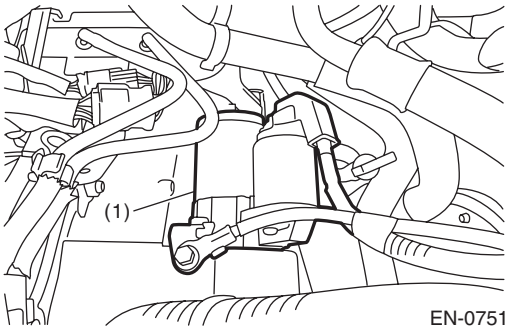

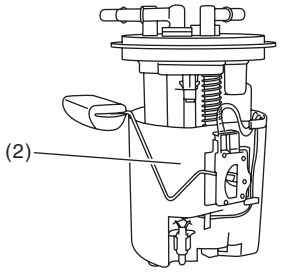

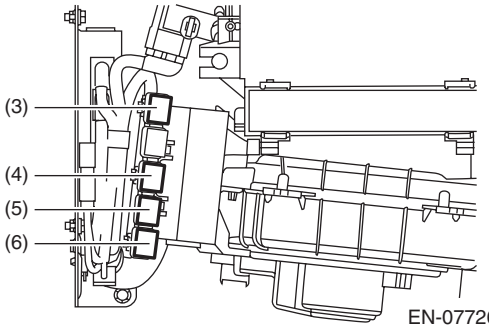

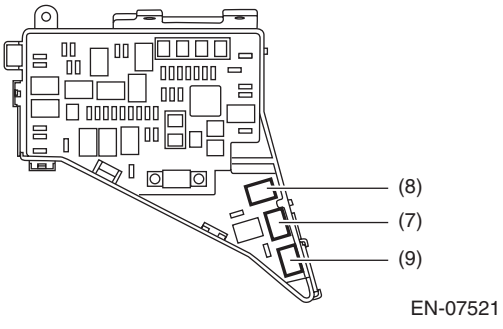

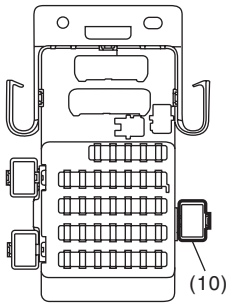

EN-07727

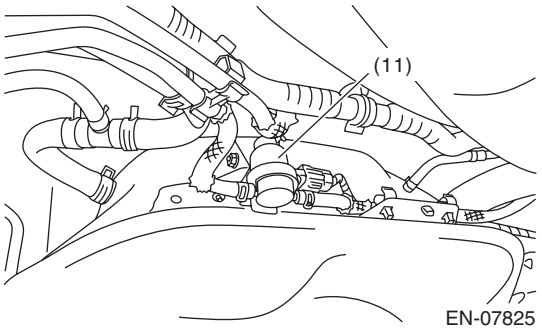

EN-07825

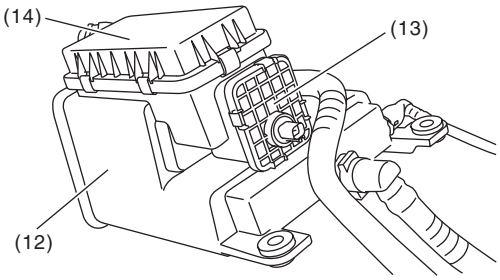

EN-07723

SUBARU.

4. TRANSMISSION

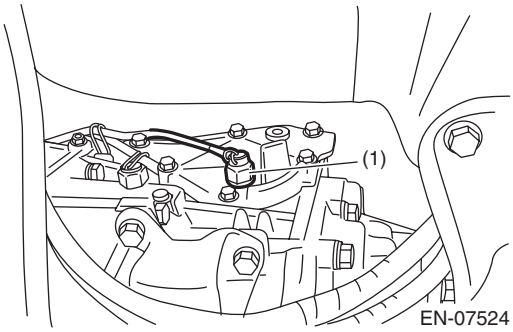

EN-07524

SUBARU.

(1) Neutral position switch

5. Engine Control Module (ECM) I/O Signal

A: ELECTRICAL SPECIFICATION

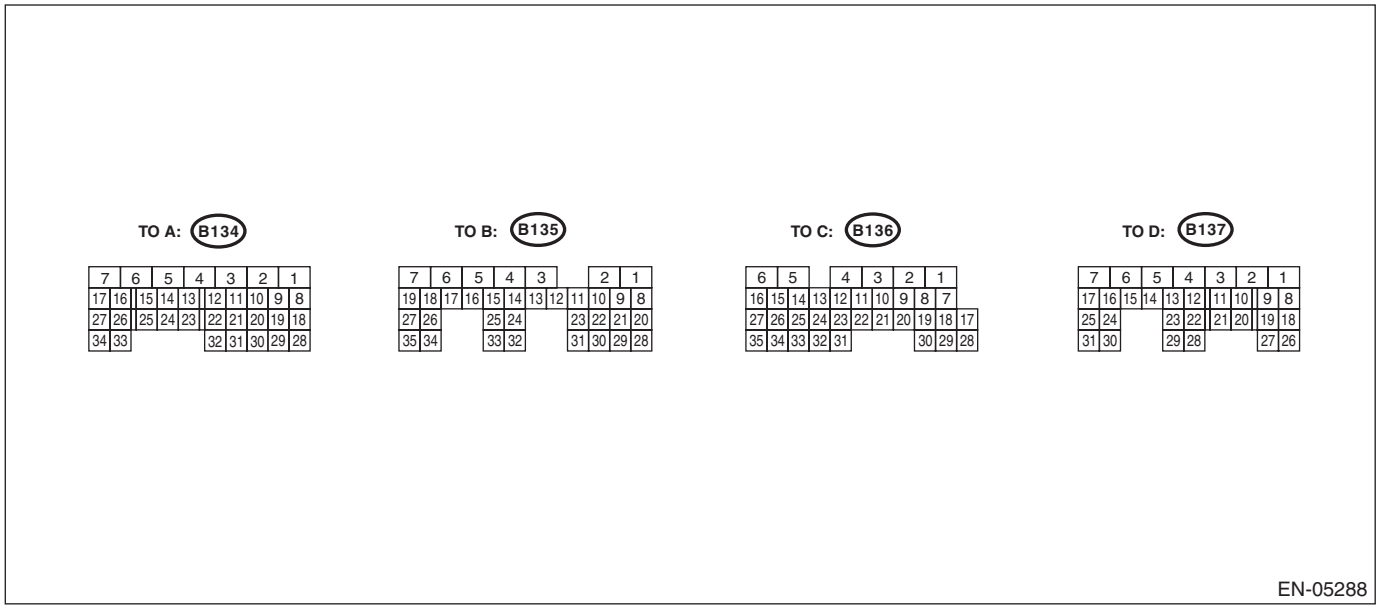

Description		Connector No.	Terminal No.	Signal (V)		Note
				Ignition SW ON (engine OFF)	Engine ON (idling)	
Crankshaft position sensor	Signal (+)	B137	17	0	–7 — +7	Waveform
	Signal (–)	B137	25	0	0	—
	Shield	B137	31	0	0	—
Front oxygen (A/F) sensor	Signal (+)	B136	19	2.8 — 3.2	2.8 — 3.2	—
	Signal (–)	B136	18	2.4 — 2.7	2.4 — 2.7	—
	Shield	B136	9	0	0	—
Rear oxygen sensor	Signal	B136	20	0	0 — 0.9	—
	Shield	B136	9	0	0	—
	Ground (sensor)	B135	30	0	0	—
Front oxygen (A/F) sensor heater	Signal 1	B136	6	—	—	Waveform
	Signal 2	B136	5	—	—	Waveform
Rear oxygen sensor heater signal		B135	6	0 — 13	—	Waveform
Engine coolant temperature sensor	Signal	B137	22	1.0 — 1.4	1.0 — 1.4	After engine is warmed up.
	Ground (sensor)	B134	29	0	0	After engine is warmed up.
Air flow sensor	Signal	B136	22	—	0.3 — 4.5	—
	Shield	B136	10	0	0	—
	Ground	B136	11	0	0	—
Intake air temperature sensor signal		B136	31	0.3 — 4.6	0.3 — 4.6	—
Wastegate control solenoid valve		B134	33	0 or 10 — 13	0 or 12 — 14	Waveform
Starter switch		B136	16	0	0	Cranking: 8 — 14
Ignition switch		B136	30	10 — 13	12 — 14	—

Description		Connector No.	Terminal No.	Signal (V)		Note
				Ignition SW ON (engine OFF)	Engine ON (idling)	
Neutral position switch		B136	35	ON: 0 OFF: 10 — 13	ON: 0 OFF: 12 — 14	—
Delivery (test) mode switch		B136	34	10 — 13	12 — 14	When fuse is installed: 0
Knock sensor	Signal	B137	2	2.8	2.8	—
	Shield	B137	8	0	0	—
Back-up power supply		B136	2	10 — 13	12 — 14	Ignition switch “OFF”: 10 — 13
Control module power supply		B137	7	10 — 13	12 — 14	—
		B136	1	10 — 13	12 — 14	—
Sensor power supply		B134	19	5	5	—
		B135	22	5	5	—
Ignition control	#1	B134	21	0	0 or 5	Waveform
	#2	B134	22	0	0 or 5	Waveform
	#3	B134	31	0	0 or 5	Waveform
	#4	B134	32	0	0 or 5	Waveform
Fuel injector	#1	B134	10	10 — 13	1 — 14	Waveform
	#2	B134	11	10 — 13	1 — 14	Waveform
	#3	B134	12	10 — 13	1 — 14	Waveform
	#4	B134	13	10 — 13	1 — 14	Waveform
Fuel pump control unit	Control	B136	33	0 or 5	0 or 5	Waveform
	Diagnostic signal	B135	10	0 or 10 — 13	12 — 14	—
Main fan relay control		B135	12	ON: 0.5 or less OFF: 10 — 13	ON: 0.5 or less OFF: 12 — 14	—
Sub fan relay control		B135	11	ON: 0.5 or less OFF: 10 — 13	ON: 0.5 or less OFF: 12 — 14	—
Engine speed output		B135	15	—	0 — 13 or more	Waveform
Purge control solenoid valve 1		B137	6	ON: 1 or less OFF: 10 — 13	ON: 1 or less OFF: 12 — 14	Waveform
Purge control solenoid valve 2		B137	15	ON: 1 or less OFF: 10 — 13	ON: 1 or less OFF: 12 — 14	Waveform
Manifold absolute pressure sensor	Signal	B137	20	1.7 — 2.4	1.1 — 1.6	—
	Power supply	B134	19	5	5	
	Ground (sensor)	B134	29	0	0	
SSM communication		B135	14	1 or less ←→ 4 or more	1 or less ←→ 4 or more	—
Electronic Throttle	Main	B134	18	Approx. 0.9 (After engine is warmed up.)	Approx. 0.6 — 0.7 (After engine is warmed up.)	Fully closed: Approx. 0.6 Fully open: Approx. 4.0
	Sub	B134	28	Approx. 1.7 (After engine is warmed up.)	Approx. 1.5 — 1.6 (After engine is warmed up.)	Fully closed: Approx. 1.5 Fully open: Approx. 4.2
	Power supply	B134	19	5	5	—
	Ground (sensor)	B134	29	0	0	—
Electronic throttle control motor (+)		B134	2	Duty waveform	Duty waveform	Drive frequency: 500 Hz

Description		Connector No.	Terminal No.	Signal (V)		Note
				Ignition SW ON (engine OFF)	Engine ON (idling)	
Electronic throttle control motor (–)		B134	1	Duty waveform	Duty waveform	Drive frequency: 500 Hz
Electronic throttle control motor power supply		B135	7	10 — 13	12 — 14	—
Electronic throttle control motor relay		B135	17	ON: 0 OFF: 10 — 13	ON: 0 OFF: 12 — 14	When ignition switch is turned to ON: ON
Intake oil flow control solenoid valve (LH)	Signal (+)	B134	17	ON: 10 — 13 OFF: 0	ON: 12 — 14 OFF: 0	—
	Signal (–)	B134	16	0	0	—
Intake oil flow control solenoid valve (RH)	Signal (+)	B134	34	ON: 10 — 13 OFF: 0	ON: 12 — 14 OFF: 0	—
	Signal (–)	B134	27	0	0	—
Exhaust oil flow control solenoid valve (LH)	Signal (+)	B134	5	ON: 10 — 13 OFF: 0	ON: 12 — 14 OFF: 0	—
	Signal (–)	B134	14	0	0	—
Exhaust oil flow control solenoid valve (RH)	Signal (+)	B134	7	ON: 10 — 13 OFF: 0	ON: 12 — 14 OFF: 0	—
	Signal (–)	B134	15	0	0	—
Intake camshaft position sensor (LH)		B137	16	0 or 5	0 or 5	Waveform
Intake camshaft position sensor (RH)		B137	24	0 or 5	0 or 5	Waveform
Exhaust camshaft position sensor (LH)		B137	29	0 or 5	0 or 5	Waveform
Exhaust camshaft position sensor (RH)		B137	23	0 or 5	0 or 5	Waveform
Camshaft position sensor ground		B137	30	0	0	—
Accelerator pedal position sensor	Main sensor signal	B135	23	Fully closed: 1 Fully opened: 3.3	Fully closed: 1 Fully opened: 3.3	—
	Shield	B136	4	0	0	—
	Main power supply	B135	21	5	5	—
	Ground (main sensor)	B135	29	0	0	—
	Sub signal sensor	B135	31	Fully closed: 1 Fully opened: 3.3	Fully closed: 1 Fully opened: 3.3	—
	Sub power supply	B135	22	5	5	—
	Ground (sub sensor)	B135	30	0	0	—
Starter relay		B135	26	ON: 0 OFF: 10 — 13	ON: 0 OFF: 12 — 14	ON: cranking
Clutch switch		B135	9	When clutch pedal is depressed: 0 When clutch pedal is released: 10 — 13	When clutch pedal is depressed: 0 When clutch pedal is released: 12 — 14	—
Brake switch 1 (brake switch)		B136	15	When brake pedal is depressed: 0 When brake pedal is released: 10 — 13	When brake pedal is depressed: 0 When brake pedal is released: 12 — 14	—

Description		Connector No.	Terminal No.	Signal (V)		Note
				Ignition SW ON (engine OFF)	Engine ON (idling)	
Brake switch 2 (stop light switch)		B136	3	When brake pedal is depressed: 10 — 13 When brake pedal is released: 0	When brake pedal is depressed: 12 — 14 When brake pedal is released: 0	—
Cruise control command switch		B136	12	When operating nothing: 3.5 — 4.5 When operating RES/ACC: 2.5 — 3.5 When operating vehicle distance setting: 1.5 — 2.5 When operating SET/COAST: 0.5 — 1.5 When operating CANCEL: 0 — 0.5	When operating nothing: 3.5 — 4.5 When operating RES/ACC: 2.5 — 3.5 When operating vehicle distance setting: 1.5 — 2.5 When operating SET/COAST: 0.5 — 1.5 When operating CANCEL: 0 — 0.5	—
Cruise control main switch		B136	13	ON: 0 OFF: 5	ON: 0 OFF: 5	—
CAN communication	(Hi)	B136	17	—	—	—
	(Lo)	B136	28	—	—	—
Self-shutoff control		B135	13	0	0	—
Power steering oil pressure switch		B137	28	10 — 13	ON: 0 OFF: 12 — 14	—
Oil level switch		B136	26	0	0	Oil level LOW: 10 — 14
Tumble generator valve position sensor signal (RH)		B137	11	Fully closed: 0.43 — 1.19 Fully opened: 2.83 — 4.69	Fully closed: 0.43 — 1.19 Fully opened: 2.83 — 4.69	—
Tumble generator valve position sensor signal (LH)		B137	10	Fully closed: 0.43 — 1.19 Fully opened: 2.83 — 4.69	Fully closed: 0.43 — 1.19 Fully opened: 2.83 — 4.69	—
Tumble generator valve (RH closed)		B134	26	0 or 10 — 13	0 or 12 — 14	—
Tumble generator valve (LH closed)		B134	24	0 or 10 — 13	0 or 12 — 14	—
Tumble generator valve (RH open)		B134	25	0 or 10 — 13	0 or 12 — 14	—
Tumble generator valve (LH open)		B134	23	0 or 10 — 13	0 or 12 — 14	—
Immobilizer communication		B135	25	—	—	—
Fuel tank pressure sensor		B136	21	2.3 — 2.7	2.3 — 2.7	—
Pressure control solenoid valve		B135	3	ON: 1 or less OFF: 10 — 13	ON: 1 or less OFF: 12 — 14	—
Drain valve		B135	4	ON: 1 or less OFF: 10 — 13	ON: 1 or less OFF: 12 — 14	—
Fuel temperature sensor		B136	23	2.5 — 3.8	2.5 — 3.8	Ambient temperature: 25°C (77°F)

Description		Connector No.	Terminal No.	Signal (V)		Note
				Ignition SW ON (engine OFF)	Engine ON (idling)	
Ground	Sensor	B134	29	0	0	—
		B135	30	0	0	—
	Engine 1	B134	6	0	0	—
	Engine 2	B134	4	0	0	—
	Engine 3	B134	3	0	0	—
	Engine 4	B137	1	0	0	—
	Engine 5	B137	3	0	0	—
	Body	B136	4	0	0	—

Input/output name:
- Crankshaft position sensor
- Intake camshaft position sensor RH
- Intake camshaft position sensor LH
- Exhaust camshaft position sensor RH
- Exhaust camshaft position sensor LH

Measuring condition:
- After warming-up
- At idling

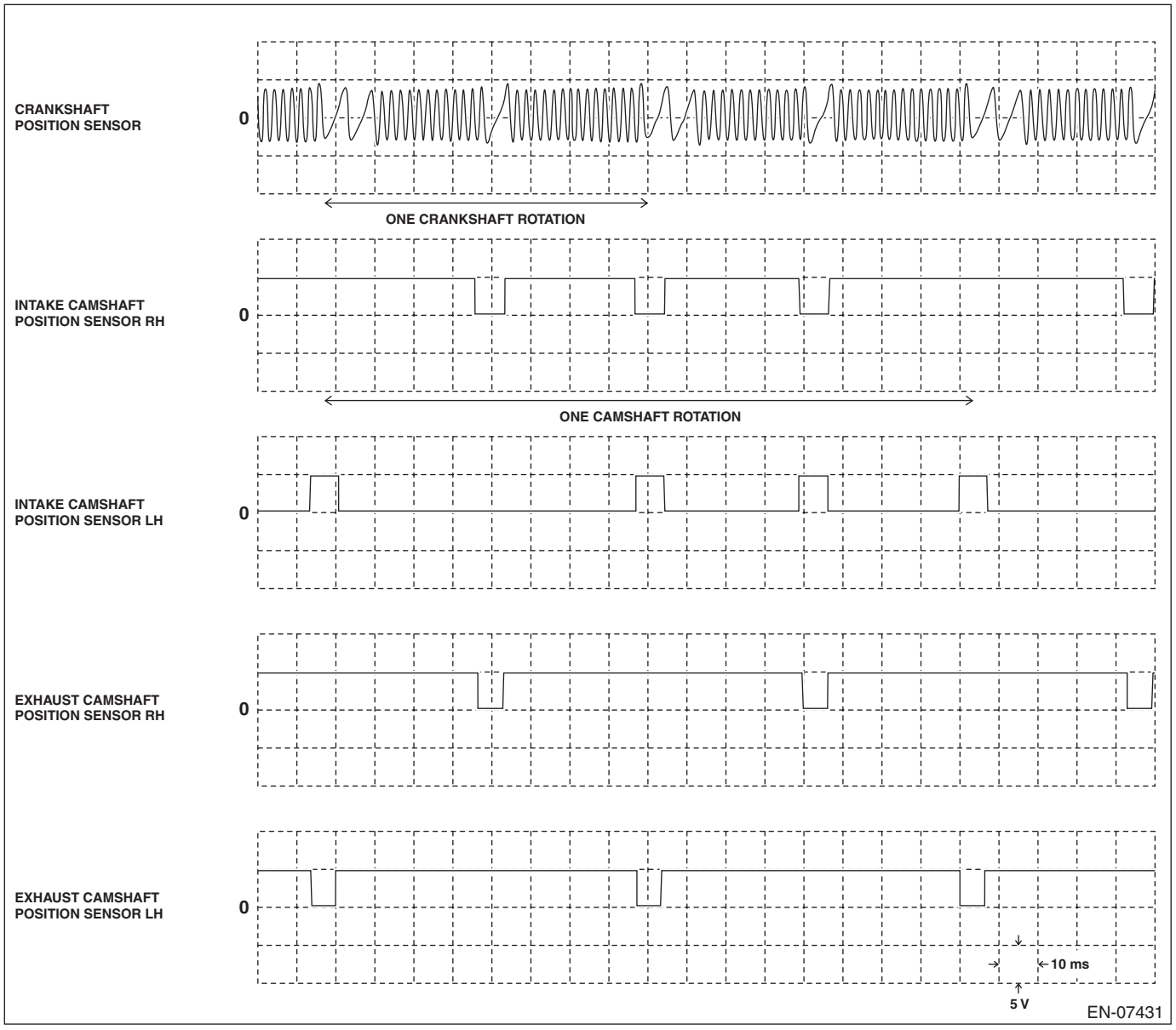

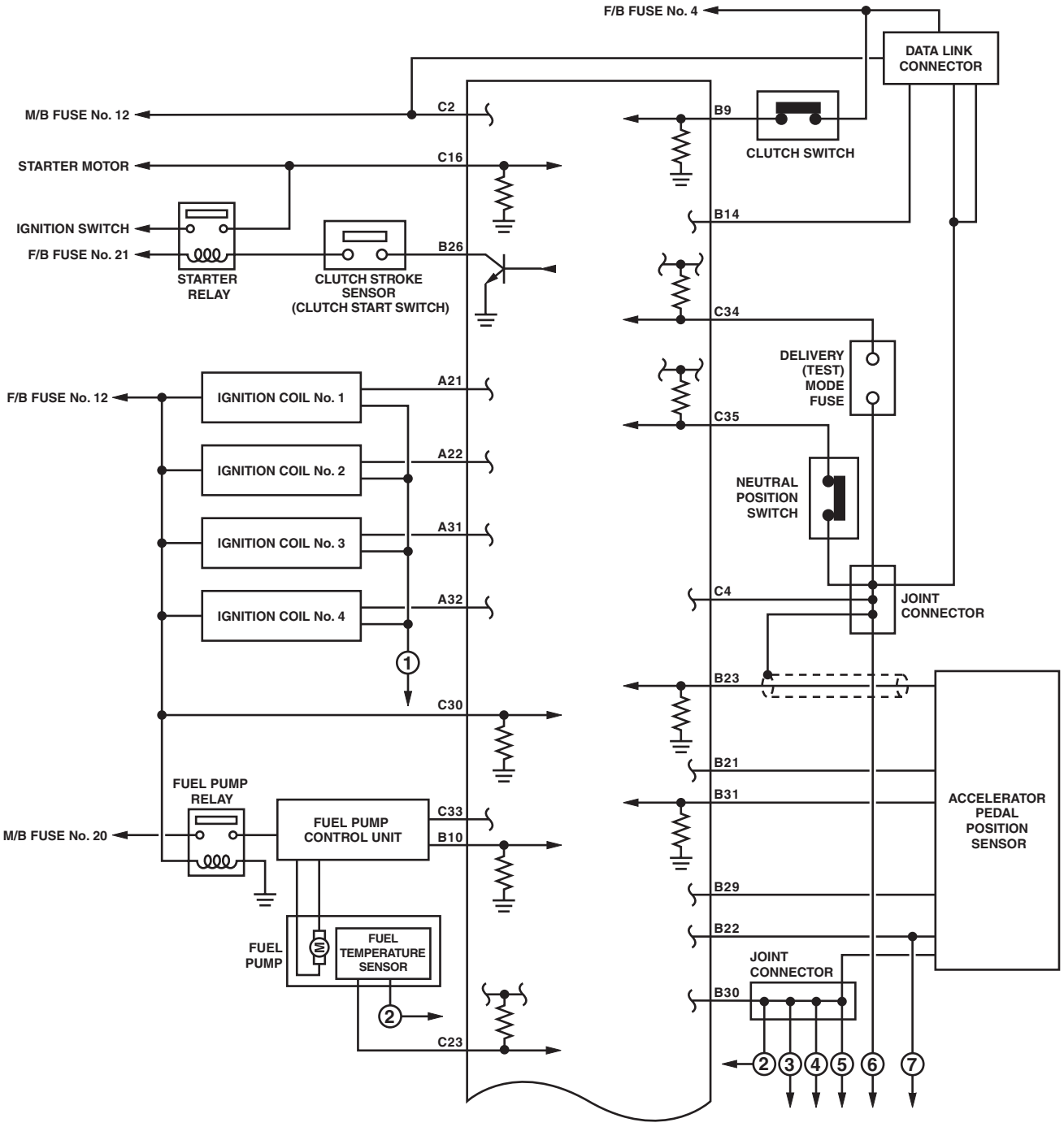
F/B FUSE No. 4
DATA LINK CONNECTOR
M/B FUSE No. 12
C2
B9
CLUTCH SWITCH
STARTER MOTOR
C16
IGNITION SWITCH
F/B FUSE No. 21
B14
STARTER RELAY
CLUTCH STROKE SENSOR (CLUTCH START SWITCH)
B26
C34
DELIVERY (TEST) MODE FUSE
F/B FUSE No. 12
IGNITION COIL No. 1
A21
C35
IGNITION COIL No. 2
A22
NEUTRAL POSITION SWITCH
IGNITION COIL No. 3
A31
C4
JOINT CONNECTOR
IGNITION COIL No. 4
A32
B23
C30
B21
FUEL PUMP RELAY
B31
ACCELERATOR PEDAL POSITION SENSOR
M/B FUSE No. 20
FUEL PUMP CONTROL UNIT
C33
B10
B29
FUEL PUMP
FUEL TEMPERATURE SENSOR
B22
JOINT CONNECTOR
B30
C23
EN-09184

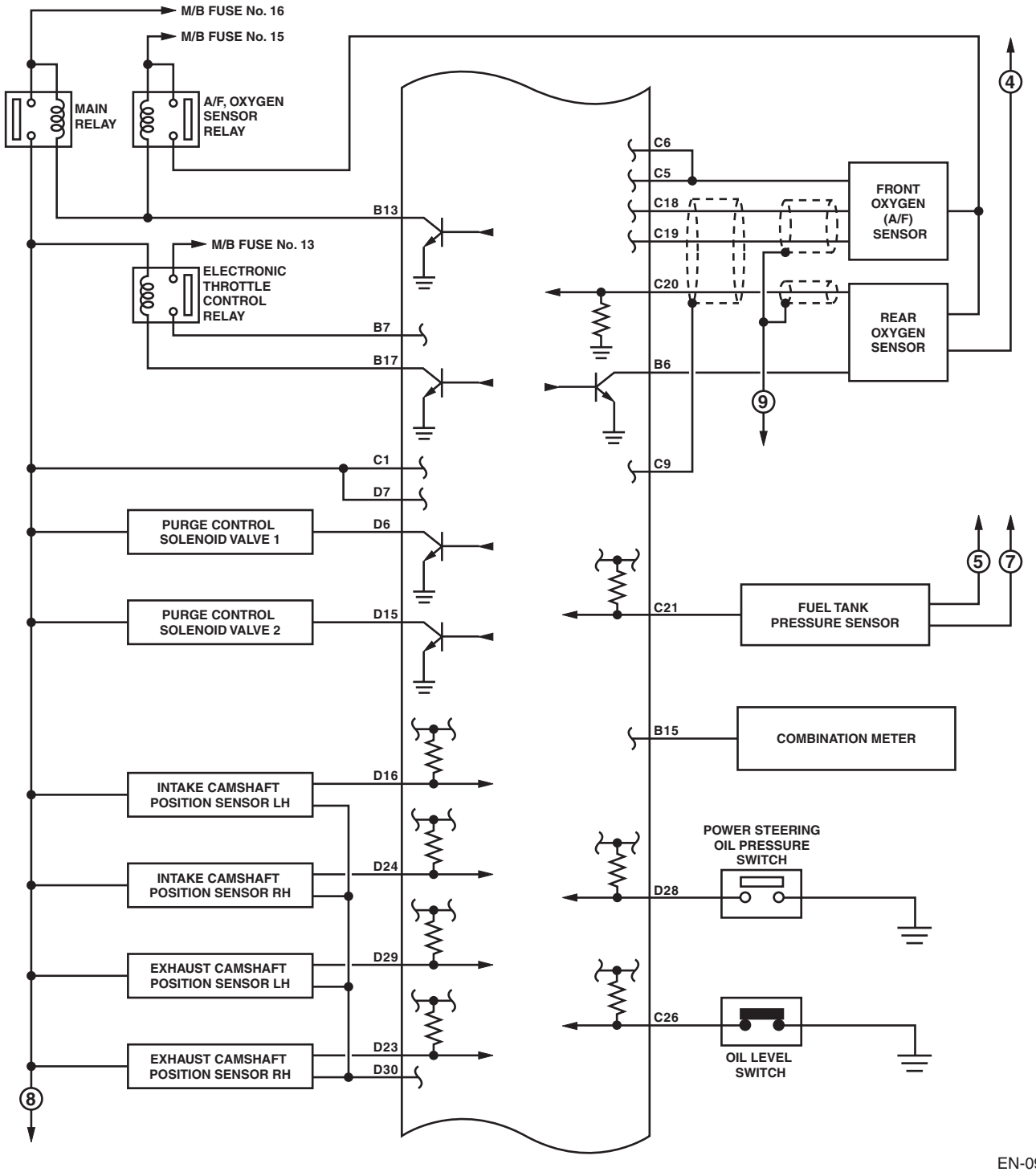
M/B FUSE No. 16
M/B FUSE No. 15
MAIN RELAY
A/F, OXYGEN SENSOR RELAY
M/B FUSE No. 13
ELECTRONIC THROTTLE CONTROL RELAY
B13
B7
B17
C1
D7
D6
D15
D16
D24
D29
D23
D30
C6
C5
C18
C19
C20
B6
C9
C21
B15
D28
C26
FRONT OXYGEN (A/F) SENSOR
REAR OXYGEN SENSOR
FUEL TANK PRESSURE SENSOR
COMBINATION METER
POWER STEERING OIL PRESSURE SWITCH
OIL LEVEL SWITCH
PURGE CONTROL SOLENOID VALVE 1
PURGE CONTROL SOLENOID VALVE 2
INTAKE CAMSHAFT POSITION SENSOR LH
INTAKE CAMSHAFT POSITION SENSOR RH
EXHAUST CAMSHAFT POSITION SENSOR LH
EXHAUST CAMSHAFT POSITION SENSOR RH
4
5
7
8
9

EN-09185

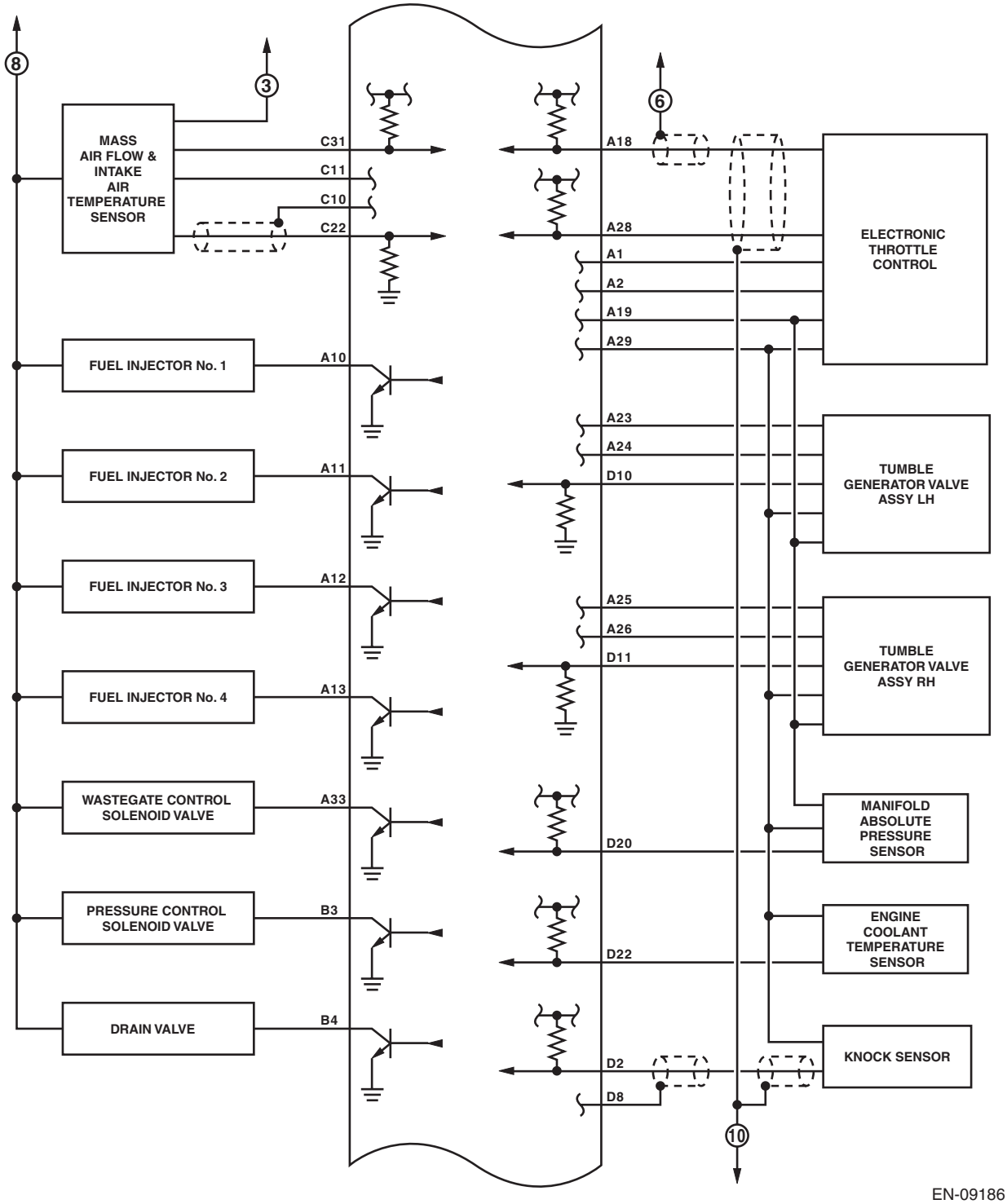
8
3
6
MASS AIR FLOW & INTAKE AIR TEMPERATURE SENSOR
C31
C11
C10
C22
FUEL INJECTOR No. 1
A10
FUEL INJECTOR No. 2
A11
FUEL INJECTOR No. 3
A12
FUEL INJECTOR No. 4
A13
WASTEGATE CONTROL SOLENOID VALVE
A33
PRESSURE CONTROL SOLENOID VALVE
B3
DRAIN VALVE
B4
A18
A28
A1
A2
A19
A29
ELECTRONIC THROTTLE CONTROL
A23
A24
D10
TUMBLE GENERATOR VALVE ASSY LH
A25
A26
D11
TUMBLE GENERATOR VALVE ASSY RH
D20
MANIFOLD ABSOLUTE PRESSURE SENSOR
D22
ENGINE COOLANT TEMPERATURE SENSOR
D2
D8
KNOCK SENSOR
10

EN-09186

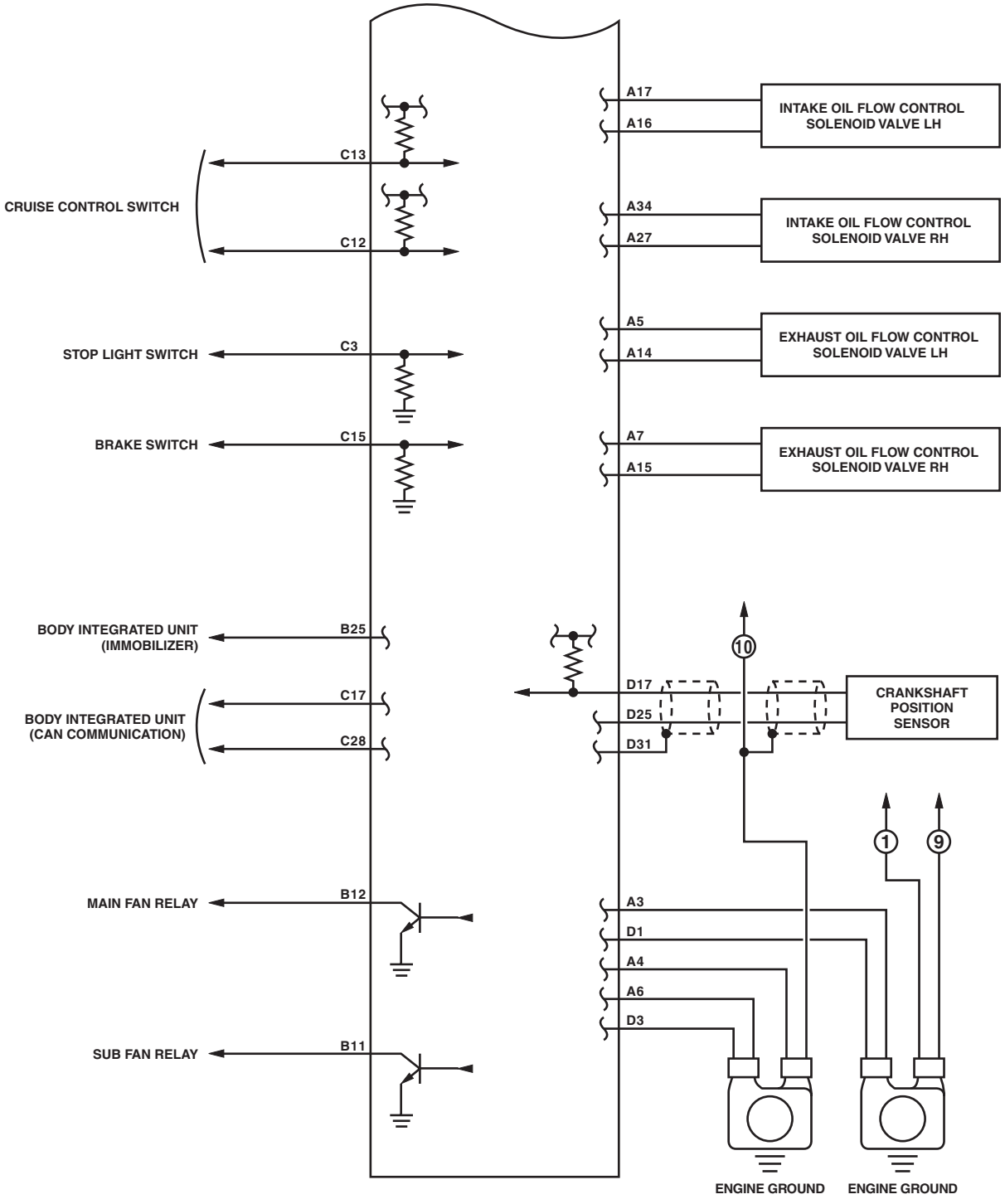
A17
A16
INTAKE OIL FLOW CONTROL SOLENOID VALVE LH
C13
CRUISE CONTROL SWITCH
C12
A34
A27
INTAKE OIL FLOW CONTROL SOLENOID VALVE RH
A5
A14
EXHAUST OIL FLOW CONTROL SOLENOID VALVE LH
STOP LIGHT SWITCH
C3
BRAKE SWITCH
C15
A7
A15
EXHAUST OIL FLOW CONTROL SOLENOID VALVE RH
BODY INTEGRATED UNIT (IMMOBILIZER)
B25
10
D17
D25
D31
CRANKSHAFT POSITION SENSOR
C17
BODY INTEGRATED UNIT (CAN COMMUNICATION)
C28
1
9
MAIN FAN RELAY
B12
A3
D1
A4
A6
D3
SUB FAN RELAY
B11
ENGINE GROUND
ENGINE GROUND

EN-09187

6. Engine Condition Data

A: ELECTRICAL SPECIFICATION

Remarks	Specification
Engine load	17.6 — 35.64 (%): Idling
	13.2 — 26.73 (%): 2,500 rpm racing

Measuring condition:
- After engine is warmed up.
- Place the shift lever in neutral position.
- Turn the A/C to OFF.
- Turn all the accessory switches to OFF.

7. Data Link Connector

A: NOTE

This connector is used for Subaru Select Monitor.

CAUTION:
Do not connect any scan tools other than Subaru Select Monitor or general scan tool because the circuit for Subaru Select Monitor may be damaged.

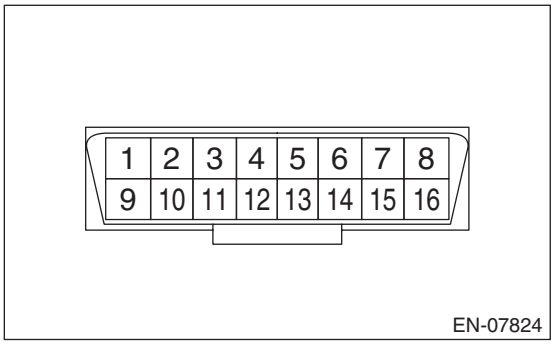

Terminal No.	Contents	Terminal No.	Contents
1	Empty	9	Empty
2	Empty	10	Empty
3	Empty	11	Empty
4	Ground	12	Empty
5	Ground	13	Empty
6	CAN communication (Hi)	14	CAN communication (Lo)
7	Subaru Select Monitor signal	15	Empty
8	Empty	16	Power supply

8. General Scan Tool

A: OPERATION

1. HOW TO USE GENERAL SCAN TOOL

1) Prepare a scan tool (general scan tool) required by SAE J1978.
2) Connect the general scan tool to data link connector located in the lower portion of the instrument panel (on the driver's side).

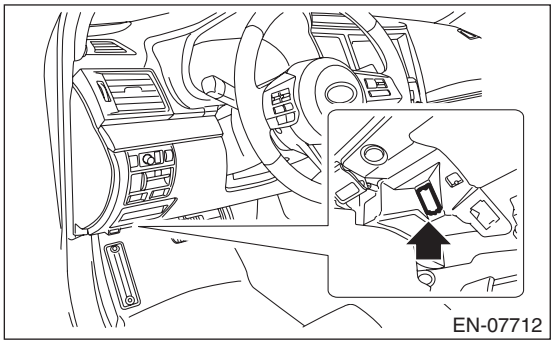

3) Using the general scan tool, call up each data. General scan tool functions consist of:
   (1) MODE $01: Current powertrain diagnostic data
   (2) MODE $02: Powertrain freeze frame data
   (3) MODE $03: Emission-related powertrain DTC
   (4) MODE $04: Clear/Reset emission-related diagnostic information
   (5) MODE $06: Request on-board monitoring test results for intermittently monitored systems
   (6) MODE $07: Request on-board monitoring test results for continuously monitored systems
   (7) MODE $09: Request vehicle information
4) Read out the data according to repair procedures. (For detailed operation procedure, refer to the general scan tool operation manual.)

NOTE:
For details concerning DTC, refer to "List of Diagnostic Trouble Code (DTC)". <Ref. to EN(H4DOTC)(diag)-75, List of Diagnostic Trouble Code (DTC).>

2. MODE $01 (CURRENT POWERTRAIN DIAGNOSTIC DATA)

Refer to data denoting the current operating condition of analog input/output, digital input/output or the powertrain system.
A list of the support data and PID (Parameter Identification) codes are shown in the following table.

PID	Data	Unit of measure
$01	Number of emission-related powertrain DTC, and malfunction indicator light status and diagnosis support information	—
$03	Fuel system control status	—
$04	Calculated engine load value	%
$05	Engine coolant temperature	°C
$06	Short term fuel trim	%
$07	Long term fuel trim	%
$0B	Intake manifold absolute pressure	kPa
$0C	Engine speed	rpm
$0D	Vehicle speed	MPH
$0E	Ignition timing advance	°
$0F	Intake air temperature	°C
$10	Intake air amount	g/s
$11	Throttle valve opening angle	%
$13	Air fuel ratio sensor	—
$15	Oxygen sensor output voltage and short term fuel trim associated with oxygen sensor	V and %

PID	Data	Unit of measure
$1C	Supporting OBD system	—
$1F	Elapsed time after starting the engine	sec
$21	Running distance after MIL turns on	miles
$24	A/F value and A/F sensor output voltage	– and V
$2E	Evaporative purge	%
$2F	Fuel level	%
$30	Number of warm ups after DTC clear	—
$31	Travel distance after DTC clear	miles
$32	Fuel tank pressure	Pa
$33	Barometric pressure	kPa
$34	A/F sensor λ value, current	– and mA
$3C	Catalyst temperature	°C
$41	Diagnostic monitor of each drive cycle	—
$42	ECM power voltage	V
$43	Absolute load	%
$44	A/F target lambda	—
$45	Relative throttle opening angle	%
$46	Ambient temperature	°C
$47	Absolute throttle opening angle 2	%
$49	Absolute accelerator opening angle 1	%
$4A	Absolute accelerator opening angle 2	%
$4C	Target throttle opening angle	%
$4D	Engine operation time during MIL on	min
$4E	Elapsed time after DTC clear	min
$51	Fuel used	—
$5A	Relative accelerator opening angle	%
$65	Neutral status	—

NOTE:
Refer to general scan tool manufacturer's operation manual to access current powertrain diagnostic data (MODE $01).

3. MODE $02 (POWERTRAIN FREEZE FRAME DATA)

Refer to data denoting the operating condition when trouble is sensed by the on-board diagnosis system. A list of the support data and PID (Parameter Identification) codes are shown in the following table.

PID	Data	Unit of measure
$02	DTC that caused the freeze frame data storage required by CARB	—
$03	Fuel system control status	—
$04	Calculated engine load value	%
$05	Engine coolant temperature	°C
$06	Short term fuel trim	%
$07	Long term fuel trim	%
$0B	Intake manifold absolute pressure	kPa
$0C	Engine speed	rpm
$0D	Vehicle speed	MPH
$0E	Ignition timing advance	°
$0F	Intake air temperature	°C
$10	Intake air amount	g/s
$11	Throttle valve opening angle	%
$13	Air fuel ratio sensor	—
$15	Rear oxygen sensor voltage, compensation value	V and %

PID	Data	Unit of measure
$1C	Supporting OBD system	—
$1F	Elapsed time after starting the engine	sec
$2E	Evaporative purge	%
$2F	Fuel level	%
$32	Fuel tank pressure	Pa
$33	Atmospheric pressure	kPa
$42	ECM power voltage	V
$43	Absolute load	%
$44	A/F target lambda	—
$45	Relative throttle opening angle	%
$46	Ambient temperature	°C
$47	Absolute throttle opening angle 2	%
$49	Absolute acceleration opening angle 1	%
$4A	Absolute acceleration opening angle 2	%
$4C	Target throttle opening angle	%
$65	Neutral status	—

NOTE:
Refer to general scan tool manufacturer's operation manual to access freeze frame data (MODE $02).

4. MODE $03 (EMISSION-RELATED POWERTRAIN DTC)

Refer to "List of Diagnostic Trouble Code (DTC)" for information about data denoting emission-related powertrain DTC. <Ref. to EN(H4DOTC)(diag)-75, List of Diagnostic Trouble Code (DTC).>

5. MODE $04 (CLEAR/RESET EMISSION-RELATED DIAGNOSTIC INFORMATION)

Refer to the mode used to clear or reset emission-related diagnostic information (OBD-II trouble diagnostic information).

NOTE:
• Refer to general scan tool manufacturer's instruction manual to clear the emission-related diagnostic information (MODE $04).
• Initial diagnosis of electronic throttle control is performed after memory clearance. Wait for 10 seconds or more after turning the ignition switch to ON, and then start the engine.

6. MODE $06

Refer to diagnostic value of troubleshooting and data of test limit indicated on the support data bit sequence table. A list of the support data is shown in the following table.

OBDMID	TID	SID	Diagnostic item
$01	$84	$1E	A/F sensor range failure (Bank 1 Sensor 1)
	$85	$1E	
	$86	$20	A/F sensor response failure (Bank 1 Sensor 1)
	$91	$20	
	$92	$10	
	$A3	$20	
	$A4	$10	
	$AC	$10	
	$AD	$10	
	$AE	$10	
	$AF	$10	
	$CD	$20	
	$CF	$20	

OBDMID	TID	SID	Diagnostic item
$02	$07	$0B	Oxygen sensor drop failure (Bank 1 Sensor 2)
	$08	$0B	
	$A5	$0B	
	$05	$10	Oxygen sensor response failure (Bank 1 Sensor 2)
	$06	$10	
	$D1	$10	Oxygen sensor delay failure (Bank 1 Sensor 2)
	$D2	$01	
$21	$89	$20	Catalyst deterioration diagnosis (Bank 1)
$35	$8B	$9D	VVT monitor (Bank 1)
	$8C	$9D	
	$8D	$9D	
	$8E	$9D	
$36	$8B	$9D	VVT monitor (Bank 2)
	$8C	$9D	
	$8D	$9D	
	$8E	$9D	
$39	$93	$FE	Evaporative emission control system leak detected (Fuel filler cap off)
$3B	$94	$FE	Evaporative emission control system (0.04 inch leak)
	$95	$FE	
	$A6	$FE	
$3C	$96	$FE	Evaporative emission control system (0.02 inch leak)
	$C1	$FE	
	$C2	$FE	
	$C3	$FE	
	$C4	$FE	
	$C5	$FE	
	$C6	$35	
	$C7	$FE	
	$C8	$FE	
	$C9	$FE	
	$CA	$FE	
$3D	$98	$FE	Evaporative emission control system (Purge flow)
$41	$9B	$14	A/F sensor heater characteristics failure (Bank 1 Sensor 1)
$42	$A2	$24	Oxygen sensor heater characteristics failure (Bank 1 Sensor 2)
$A1	$0B	$24	Misfire monitoring (All cylinders)
	$0C	$24	
$A2	$0B	$24	Misfire monitoring (#1 cylinder)
	$0C	$24	
$A3	$0B	$24	Misfire monitoring (#2 cylinder)
	$0C	$24	
$A4	$0B	$24	Misfire monitoring (#3 cylinder)
	$0C	$24	
$A5	$0B	$24	Misfire monitoring (#4 cylinder)
	$0C	$24	

7. MODE $07

Refer to the data of DTC (pending code) for troubleshooting result about emission in the first time.

8. MODE $09

Refer to the data of vehicle specification (V.I.N., calibration ID, etc.).

9. Subaru Select Monitor

A: OPERATION

1. HOW TO USE THE SUBARU SELECT MONITOR

NOTE:
For detailed operation procedures, refer to “PC application help for Subaru Select Monitor”.

2. READ CURRENT DATA FOR ENGINE (NORMAL MODE)

NOTE:
- For detailed operation procedures, refer to “PC application help for Subaru Select Monitor”.
- A list of the support data is shown in the following table.
- *: For models without cruise control, the brake switch signal does not change.

Contents	Display	Unit of measure	Note (at idling)
Engine load	Engine Load	%	21.0%
Engine coolant temperature signal	Coolant Temp.	°C or °F	80 — 100°C or 176 — 212°F
A/F correction #1	A/F Correction #1	%	–10 — +10%
A/F learning #1	A/F Learning #1	%	–15 — +15%
Intake manifold absolute pressure	Mani. Absolute Pressure	mmHg, kPa, inHg or psig	220 — 275 mmHg, 29.5 — 37 kPa, 8.7 — 10 inHg or 4.2 — 5.3 psig
Engine speed signal	Engine Speed	rpm	630 — 770 rpm (Agree with the tachometer indication)
Meter vehicle speed signal	Vehicle Speed	km/h or MPH	0 km/h or 0 MPH (at parking)
Ignition timing signal	Ignition Timing	deg	10 — 15 deg
Intake air temperature signal	Intake Air Temp.	°C or °F	20 — 50°C or 68 — 122°F
Intake air amount	Mass Air Flow	g/s or lb/m	2.1 — 3.1 g/s or 0.35 — 0.40 lb/m
Throttle opening angle signal	Throttle Opening Angle	%	2.0 — 2.4%
Rear oxygen sensor voltage	Rear O2 Sensor	V	0 — 1.0 V
Battery voltage	Battery Voltage	V	12 — 15 V
Mass air flow voltage	Air Flow Sensor Voltage	V	1.0 — 1.7 V
Injection 1 pulse width	Fuel Injection #1 Pulse	ms	1.2 — 2.2 ms
Atmospheric pressure	Atmosphere Pressure	mmHg, kPa, inHg or psig	—
Intake manifold relative pressure	Mani. Relative Pressure	mmHg, kPa, inHg or psig	Air intake absolute pressure — Atmospheric pressure
Learned ignition timing	Learned Ignition Timing	deg	0 deg
Acceleration opening angle signal	Accel. Opening Angle	%	0.0%
Fuel temperature signal	Fuel Temp.	°C or °F	+28°C or 82°F
Primary supercharged pressure control signal	Primary Control	%	0.0%
Purge control solenoid duty ratio	CPC Valve Duty Ratio	%	0 — 25%
Tumble generator valve RH opening signal	TGV Position Sensor R	V	0.81 V
Tumble generator valve LH opening signal	TGV Position Sensor L	V	0.81 V
Fuel pump duty ratio	Fuel Pump Duty	%	30 — 40%
AVCS advance angle amount RH	VVT Adv. Ang. Amount R	deg	±5 deg
AVCS advance angle amount LH	VVT Adv. Ang. Amount L	deg	±5 deg
Oil flow control solenoid valve duty ratio RH	OCV Duty R	%	0 — 20%

Contents	Display	Unit of measure	Note (at idling)
Oil flow control solenoid valve duty ratio LH	OCV Duty L	%	0 — 20%
Oil flow control solenoid valve current RH	OCV Current R	mA	40 — 100 mA
Oil flow control solenoid valve current LH	OCV Current L	mA	40 — 100 mA
A/F sensor current value 1	A/F Sensor #1 Current	mA	–20 — 20 mA
A/F sensor resistance value 1	A/F Sensor #1 Resistance	Ω	27 — 35 mA
A/F sensor output lambda 1	A/F Sensor #1	—	1.0
A/F correction #3	A/F Correction #3	%	0.00%
A/F learning #3	A/F Learning #3	%	0.00%
Throttle motor duty	Throttle Motor Duty	%	–5%
Throttle motor voltage	Throttle Motor Voltage	V	12 — 15 V
Sub throttle sensor voltage	Sub-Throttle Sensor	V	1.5 V
Main throttle sensor voltage	Main-Throttle Sensor	V	0.6 V
Sub accelerator sensor voltage	Sub-Accelerator Sensor	V	1.1 V
Main acceleration sensor voltage	Main-Accelerator Sensor	V	1.0 V
Memory vehicle speed	Memorized Cruise Speed	km/h or MPH	—
Fuel level sensor resistance	Fuel level resistance	Ω	4 — 96 Ω
Odometer	Odometer	km	—
Exhaust AVCS retard angle amount RH	Exh. VVT Retard Ang. R	deg	±5 deg
Exhaust AVCS retard angle amount LH	Exh. VVT Retard Ang. L	deg	±5 deg
Exhaust oil flow control solenoid valve duty ratio RH	Exh. OCV Duty R	%	0 — 20%
Exhaust oil flow control solenoid valve duty ratio LH	Exh. OCV Duty L	%	0 — 20%
Exhaust oil flow control solenoid valve current value RH	Exh. OCV Current R	mA	40 — 100 mA
Exhaust oil flow control solenoid valve current value LH	Exh. OCV Current L	mA	40 — 100 mA
#1 cylinder roughness monitor	Roughness Monitor #1	—	0
#2 cylinder roughness monitor	Roughness Monitor #2	—	0
#3 cylinder roughness monitor	Roughness Monitor #3	—	0
#4 cylinder roughness monitor	Roughness Monitor #4	—	0
Knock sensor correction	Knocking Correction	deg	0.0 deg
Fuel tank pressure signal	Fuel Tank Pressure	mmHg, kPa, inHg or psig	+8.8 mmHg, +1.2 kPa, +0.4 inHg or 0.2 psig
AT vehicle ID signal	AT Vehicle ID Signal	—	OFF
D-check require Flag	D-check Require Flag	—	OFF
Delivery (test) mode terminal	Delivery Mode Connector (Test Mode Connector)	—	OFF
Neutral position switch signal	Neutral Position Switch	—	ON
Soft idle switch signal	Idle Switch Signal	—	ON
Ignition switch signal	Ignition Switch	—	ON
Power steering switch signal	P/S Switch	—	OFF (when OFF)
Air conditioning switch signal	A/C Switch	—	OFF (when OFF)
Starter switch signal	Starter Switch	—	OFF
Rear oxygen monitor	Rear O2 Rich Signal	—	Rich/Lean
Knocking signal	Knocking Signal	—	OFF
Crankshaft position sensor signal	Crankshaft Position Sig.	—	ON
Camshaft position sensor signal	Camshaft Position Sig.	—	ON
Rear defogger switch signal	Rear Defogger SW	—	OFF (when OFF)
Blower fan switch signal	Blower Fan SW	—	OFF (when OFF)
Light switch signal	Light Switch	—	OFF (when OFF)

Contents	Display	Unit of measure	Note (at idling)
Radiator fan relay 1 signal	Radiator Fan Relay #1	—	OFF (when OFF)
Radiator fan relay 2 signal	Radiator Fan Relay #2	—	OFF (when OFF)
Pressure control solenoid valve signal	PCV Solenoid Valve	—	OFF (when OFF)
Tumble generator valve output signal	TGV Output	—	OFF
Tumble generator valve driving signal	TGV Drive	—	Closing direction
Drain valve signal	Vent. Solenoid Valve	—	OFF (when OFF)
Purge control solenoid valve 2 signal	CPC Solenoid 2	—	OFF (when OFF)
Vehicle dynamics control (VDC) torque down prohibition output	Ban of Torque Down	—	ON
Vehicle dynamics control (VDC) torque down demand	Request Torque Down VDC	—	OFF
ETC motor relay signal	ETC Motor Relay	—	ON
Clutch switch signal	Clutch Switch	—	OFF (when OFF)
Stop light switch signal	Stop Light Switch	—	OFF (when OFF)
SET/COAST switch signal	SET/COAST Switch	—	OFF (when OFF)
RES/ACC switch signal	RESUME/ACCEL Switch	—	OFF (when OFF)
Brake switch signal*	Brake Switch	—	OFF (when OFF)
Main switch signal	Main Switch	—	OFF (when OFF)
Cruise control cancel switch signal	CC Cancel SW	—	OFF (when OFF)
Malfunction indicator light signal	MIL On Flag	—	OFF (when unlit)
Oil level switch signal	Oil level switch	—	HIGH level

3. READ CURRENT DATA FOR ENGINE (OBD MODE)

NOTE:
- For detailed operation procedures, refer to “PC application help for Subaru Select Monitor”.
- A list of the support data is shown in the following table.

Contents	Display	Note (at idling)	Unit of measure
Number of diagnosis code	Number of Diag. Code:	0	—
Condition of malfunction indicator light	MI(MIL)	OFF	—
Monitoring test of misfire	Misfire monitoring (Supp)	YES	—
Monitoring test of misfire	Misfire monitoring (Rdy)	YES	—
Monitoring test of fuel system	Fuel system monitoring (Supp)	YES	—
Monitoring test of fuel system	Fuel system monitoring (Rdy)	YES	—
Monitoring test of comprehensive component	Component monitoring (Supp)	YES	—
Monitoring test of comprehensive component	Component monitoring (Rdy)	YES	—
Test of catalyst	Catalyst Diagnosis (Supp)	YES	—
Test of catalyst	Catalyst Diagnosis (Rdy)	NO	—
Test of heating-type catalyst	Heated catalyst (Supp)	NO	—
Test of heating-type catalyst	Heated catalyst (Rdy)	N/A	—
Test of evaporative emission purge control system	Evaporative purge system (Supp)	YES	—
Test of evaporative emission purge control system	Evaporative purge system (Rdy)	NO	—
Secondary air system test	Secondary air system (Supp)	NO	—

Contents	Display	Note (at idling)	Unit of measure
Secondary air system test	Secondary air system (Rdy)	N/A	—
Test of air conditioning system refrigerant	A/C system refrigerant (Supp)	NO	—
Test of air conditioning system refrigerant	A/C system refrigerant (Rdy)	N/A	—
Test of oxygen sensor	Oxygen sensor (Supp)	YES	—
Test of oxygen sensor	Oxygen sensor (Rdy)	NO	—
Test of oxygen sensor heater	O2 Heater Diagnosis (Supp)	YES	—
Test of oxygen sensor heater	O2 Heater Diagnosis (Rdy)	YES	—
Test of EGR system	EGR system (Supp)	YES	—
Test of EGR system	EGR system (Rdy)	NO	—
Air fuel ratio control system for bank 1	Fuel system for Bank 1	Cl_normal	—
Engine load data	Calculated load value	19.2	%
Engine coolant temperature signal	Coolant Temp.	96	°C
Short term fuel trim by front oxygen (A/F) sensor (Bank 1)	Short term fuel trim B1	17.2	%
Long term fuel trim by front oxygen (A/F) sensor (Bank 1)	Long term fuel trim B1	5.5	%
Intake manifold absolute pressure signal	Mani. Absolute Pressure	32	kPa
Engine speed signal	Engine Speed	846	rpm
Vehicle speed signal	Vehicle Speed	0	km/h
#1 Cylinder ignition timing	Ignition timing adv. #1	13.5	°
Intake air temperature signal	Intake Air Temp.	44	°C
Intake air amount	Mass Air Flow	3.6	g/s
Throttle position signal	Throttle Opening Angle	13	%
Oxygen sensor (Bank 1 Sensor 2)	Oxygen sensor #12	0.1 — 0.7	V
A/F correction (Bank 1 Sensor 2)	Short term fuel trim #12	0.0	%
On-board diagnostic system	OBD System	OBD/OBD2	—
Front oxygen (A/F) sensor (Bank 1 Sensor 1)	Oxygen sensor #11	Supported	—
Oxygen sensor (Bank 1 Sensor 2)	Oxygen sensor #12	Supported	—
Elapsed time after engine start	Time Since Engine Start	—	sec
Travel distance after the malfunction indicator light illuminates	Lighted MI lamp history	—	km
A/F lambda signal (Bank 1 Sensor 1)	A/F Sensor #11	0.951	—
A/F sensor output signal (Bank 1 Sensor 1)	A/F Sensor #11	2.468	V
Evaporative purge	Commanded Evap Purge	0	%
Fuel level signal	Fuel Level	—	%
Number of warm ups after DTC clear	Number of warm-ups	—	—
Travel distance after DTC clear	Meter since DTC cleared	—	km
Fuel tank pressure signal	Fuel Tank Pressure	1171.5	Pa
Atmospheric pressure signal	Atmosphere Pressure	Atmospheric pressure	kPa
A/F lambda signal (Bank 1 Sensor 1)	A/F Sensor #11	0.957	—
A/F sensor output signal (Bank 1 Sensor 1)	A/F Sensor #11	–0.18	mA
Catalyst temperature #1	Catalyst Temperature #11	—	°C
Monitoring test of misfire	Misfire monitoring (Enable)	YES	—
Monitoring test of misfire	Misfire monitoring (Comp)	YES	—
Monitoring test of fuel system	Fuel system monitoring (Enable)	YES	—

Contents	Display	Note (at idling)	Unit of measure
Monitoring test of fuel system	Fuel system monitoring (Comp)	YES	—
Monitoring test of comprehensive component	Component monitoring (Enable)	NO	—
Monitoring test of comprehensive component	Component monitoring (Comp)	NO	—
Test of catalyst	Catalyst Diagnosis (Enable)	YES	—
Test of catalyst	Catalyst Diagnosis (Comp)	NO	—
Test of heating-type catalyst	Heated catalyst (Enable)	N/A	—
Test of heating-type catalyst	Heated catalyst (Comp)	N/A	—
Test of evaporative emission purge control system	Evaporative purge system (Enable)	NO	—
Test of evaporative emission purge control system	Evaporative purge system (Comp)	NO	—
Secondary air system test	Secondary air system (Enable)	N/A	—
Secondary air system test	Secondary air system (Comp)	N/A	—
Test of air conditioning system refrigerant	A/C system refrigerant (Enable)	N/A	—
Test of air conditioning system refrigerant	A/C system refrigerant (Comp)	N/A	—
Test of oxygen sensor	Oxygen sensor (Enable)	YES	—
Test of oxygen sensor	Oxygen sensor (Comp)	NO	—
Test of oxygen sensor heater	O2 Heater Diagnosis (Enable)	YES	—
Test of oxygen sensor heater	O2 Heater Diagnosis (Comp)	YES	—
Test of EGR system	EGR system (Enable)	YES	—
Test of EGR system	EGR system (Comp)	NO	—
ECM power supply voltage	Control module voltage	13.848	V
Absolute load	Absolute Load Value	21	%
A/F target lambda	Target Equivalence Ratio	0.993	—
Relative throttle opening angle	Relative Throttle Pos.	2	%
Ambient temperature	Ambient Temperature	Ambient temperature	°C
Absolute throttle opening angle 2	Absolute Throttle Pos.#2	31	%
Absolute accelerator opening angle 1	Accelerator Pedal Pos.#1	13	%
Absolute accelerator opening angle 2	Accelerator Pedal Pos.#2	13	%
Target throttle opening angle	Target Throt. Act. Cont.	0	%
Engine operating time while malfunction indicator light lit	Time while MIL lighted	—	min
Elapsed time after DTC clear	Time since DTC cleared	—	min
Type of fuel	Type of fuel	GAS	—
Relative acceleration opening angle	Relative Accelera. Pos.	0	%
Neutral condition	MT gear status	NEUT	—

4. READ FREEZE FRAME DATA FOR ENGINE (OBD MODE)

NOTE:
- For detailed operation procedures, refer to “PC application help for Subaru Select Monitor”.
- A list of the support data is shown in the following table.

Contents	Display	Unit of measure
DTC of freeze frame data	Freeze frame data	—
Air fuel ratio control system for bank 1	Fuel system for Bank 1	—
Engine load data	Calculated load value	%
Engine coolant temperature signal	Coolant Temp.	°C or °F
Short term fuel trim by front oxygen (A/F) sensor (Bank 1)	Short term fuel trim B1	%
Long term fuel trim by front oxygen (A/F) sensor (Bank 1)	Long term fuel trim B1	%
Intake manifold absolute pressure signal	Mani. Absolute Pressure	mmHg, kPa, inHg or psi
Engine speed signal	Engine Speed	rpm
Vehicle speed signal	Vehicle Speed	km/h or MPH
Ignition timing adv. #1	Ignition timing adv. #1	°
Intake air temperature	Intake Air Temp.	°C
Amount of intake air	Mass Air Flow	g/s
Throttle valve angle	Throttle Opening Angle	%
Oxygen sensor #12	Oxygen sensor #12	V
A/F correction #12	Short term fuel trim #12	%
OBD system	OBD System	—
Oxygen sensor #11	Oxygen sensor #11	—
Oxygen sensor #12	Oxygen sensor #12	—
Elapsed time after starting engine	Time Since Engine Start	sec
Evaporative purge	Commanded Evap Purge	%
Fuel level	Fuel Level	%
Fuel tank pressure	Fuel Tank Pressure	mmHg, Pa, inHg or psig
Atmospheric pressure	Atmosphere Pressure	mmHg, kPa, inHg or psig
ECM power supply voltage	Control module voltage	V
Absolute load	Absolute Load Value	%
A/F target lambda	Target Equivalence Ratio	—
Relative throttle opening angle	Relative Throttle Pos.	%
Ambient temperature	Ambient Temperature	°C or °F
Absolute throttle opening angle 2	Absolute Throttle Pos.#2	%
Absolute accelerator opening angle 1	Accelerator Pedal Pos.#1	%
Absolute accelerator opening angle 2	Accelerator Pedal Pos.#2	%
Target throttle opening angle	Target Throt. Act. Cont.	%
Neutral condition	MT gear status	—

5. V.I.N. REGISTRATION

1) On «Main Menu» display, select {Each System Check}.
2) On «System Selection Menu» display, select {Engine Control System}.
3) Click the [OK] button after the information of engine type has been displayed.
4) On «Engine Diagnosis» display, select {Entry VIN}.
5) Perform the procedures shown on the display screen.

10. Read Diagnostic Trouble Code (DTC)

A: OPERATION

1. SUBARU SELECT MONITOR

NOTE:
• For detailed operation procedures, refer to “PC application help for Subaru Select Monitor”.
• For details concerning DTC, refer to “List of Diagnostic Trouble Code (DTC)”. <Ref. to EN(H4DOTC)(diag)-75, List of Diagnostic Trouble Code (DTC).>

2. GENERAL SCAN TOOL

Refer to data denoting emission-related powertrain DTC.
For details concerning DTC, refer to “List of Diagnostic Trouble Code (DTC)”. <Ref. to EN(H4DOTC)(diag)-75, List of Diagnostic Trouble Code (DTC).>

NOTE:
Refer to general scan tool manufacturer’s instruction manual to access powertrain DTC (MODE $03).

11.Inspection Mode

A: PROCEDURE

Perform the diagnosis shown in the following DTC table.
When performing the diagnosis not listed in “List of Diagnostic Trouble Code (DTC)”, refer to the item on the drive cycle. <Ref. to EN(H4DOTC)(diag)-47, Drive Cycle.>

DTC	Item	Condition
P0011	Intake Camshaft Position - Timing Over-Advanced or System Performance (Bank 1)	—
P0014	Exhaust AVCS System 1 (Range/Performance)	—
P0016	Crankshaft Position - Camshaft Position Correlation (Bank1)	—
P0017	Crank and Cam Timing B System Failure (Bank 1)	—
P0018	Crankshaft Position - Camshaft Position Correlation (Bank2)	—
P0019	Crank and Cam Timing B System Failure (Bank 2)	—
P0021	Intake Camshaft Position - Timing Over-Advanced or System Performance (Bank 2)	—
P0024	Exhaust AVCS System 2 (Range/Performance)	—
P0031	HO2S Heater Control Circuit Low (Bank 1 Sensor 1)	—
P0032	HO2S Heater Control Circuit High (Bank 1 Sensor 1)	—
P0037	HO2S Heater Control Circuit Low (Bank 1 Sensor 2)	—
P0038	HO2S Heater Control Circuit High (Bank 1 Sensor 2)	—
P0102	Mass or Volume Air Flow Circuit Low Input	—
P0103	Mass or Volume Air Flow Circuit High Input	—
P0107	Manifold Absolute Pressure/Barometric Pressure Circuit Low Input	—
P0108	Manifold Absolute Pressure/Barometric Pressure Circuit High Input	—
P0112	Intake Air Temperature Sensor 1 Circuit Low	—
P0113	Intake Air Temperature Sensor 1 Circuit High	—
P0117	Engine Coolant Temperature Circuit Low	—
P0118	Engine Coolant Temperature Circuit High	—
P0122	Throttle/Pedal Position Sensor/Switch “A” Circuit Low	—
P0123	Throttle/Pedal Position Sensor/Switch “A” Circuit High	—
P0131	O2 Sensor Circuit Low Voltage (Bank 1 Sensor 1)	—
P0132	O2 Sensor Circuit High Voltage (Bank 1 Sensor 1)	—
P0137	O2 Sensor Circuit Low Voltage (Bank 1 Sensor 2)	—
P0138	O2 Sensor Circuit High Voltage (Bank 1 Sensor 2)	—
P0140	O2 Sensor Circuit No Activity Detected (Bank1 Sensor2)	—
P0182	Fuel Temperature Sensor “A” Circuit Low Input	—
P0183	Fuel Temperature Sensor “A” Circuit High Input	—
P0201	Injector #1	—
P0202	Injector #2	—
P0203	Injector #3	—
P0204	Injector #4	—
P0222	Throttle/Pedal Position Sensor/Switch “B” Circuit Low	—
P0223	Throttle/Pedal Position Sensor/Switch “B” Circuit High	—
P0230	Fuel Pump Primary Circuit	—
P0245	Turbo/Super Charger Wastegate Solenoid “A” Low	—
P0327	Knock Sensor 1 Circuit Low (Bank 1 or Single Sensor)	—
P0328	Knock Sensor 1 Circuit High (Bank 1 or Single Sensor)	—
P0335	Crankshaft Position Sensor “A” Circuit	—
P0336	Crankshaft Position Sensor “A” Circuit Range/Performance	—
P0340	Camshaft Position Sensor “A” Circuit (Bank 1 or Single Sensor)	—

DTC	Item	Condition
P0345	Camshaft Position Sensor “A” Circuit (Bank 2)	—
P0351	Ignition Coil A Primary/Secondary Circuit	—
P0352	Ignition Coil B Primary/Secondary Circuit	—
P0353	Ignition Coil C Primary/Secondary Circuit	—
P0354	Ignition Coil D Primary/Secondary Circuit	—
P0365	Camshaft Position Sensor “B” Circuit (Bank 1)	—
P0390	Camshaft Position Sensor “B” Circuit (Bank 2)	—
P0447	Evaporative Emission Control System Vent Control Circuit Open	—
P0448	Evaporative Emission Control System Vent Control Circuit Shorted	—
P0452	Evaporative Emission Control System Pressure Sensor Low Input	—
P0453	Evaporative Emission Control System Pressure Sensor High Input	—
P0458	Evaporative Emission System Purge Control Valve Circuit Low	—
P0462	Fuel Level Sensor “A” Circuit Low	—
P0463	Fuel Level Sensor “A” Circuit High	—
P0500	Vehicle Speed Sensor “A”	—
P0512	Starter Request Circuit	—
P0513	Incorrect Immobilizer Key	—
P0604	Internal Control Module Random Access Memory (RAM) Error	—
P0605	Internal Control Module Read Only Memory (ROM) Error	—
P0607	Throttle Control System Circuit Range/Performance	—
P0638	Throttle Actuator Control Range/Performance (Bank 1)	—
P0851	Park/Neutral Switch Input Circuit Low	—
P0852	Park/Neutral Switch Input Circuit High	—
P1152	O2 Sensor Circuit Range/Performance (Low) (Bank1 Sensor1)	—
P1153	O2 Sensor Circuit Range/Performance (High) (Bank1 Sensor1)	—
P1160	Return Spring Failure	—
P1400	Fuel Tank Pressure Control Solenoid Valve Circuit Low	—
P1420	Fuel Tank Pressure Control Sol. Valve Circuit High	—
P1458	Canister Purge Control Solenoid Valve 2	—
P1459	Canister Purge Control Solenoid Valve 2	—
P1518	Starter Switch Circuit Low Input	—
P1560	Back-Up Voltage Circuit Malfunction	—
P1570	Antenna	—
P1571	Reference Code Incompatibility	—
P1572	IMM Circuit Failure (Except Antenna Circuit)	—
P1574	Key Communication Failure	—
P1576	EGI Control Module EEPROM	—
P1577	IMM Control Module EEPROM	—
P1578	Meter Failure	—
P2006	Intake Manifold Runner Control Stuck Closed (Bank 1)	—
P2007	Intake Manifold Runner Control Stuck Closed (Bank 2)	—
P2008	Intake Manifold Runner Control Circuit / Open (Bank 1)	—
P2009	Intake Manifold Runner Control Circuit Low (Bank 1)	—
P2011	Intake Manifold Runner Control Circuit / Open (Bank 2)	—
P2012	Intake Manifold Runner Control Circuit Low (Bank 2)	—
P2016	Intake Manifold Runner Position Sensor / Switch Circuit Low (Bank 1)	—
P2017	Intake Manifold Runner Position Sensor / Switch Circuit High (Bank 1)	—
P2021	Intake Manifold Runner Position Sensor / Switch Circuit Low (Bank 2)	—
P2022	Intake Manifold Runner Position Sensor / Switch Circuit High (Bank 2)	—
P2088	Intake Camshaft Position Actuator Control Circuit Low (Bank 1)	—

DTC	Item	Condition
P2089	Intake Camshaft Position Actuator Control Circuit High (Bank 1)	—
P2090	Exhaust Camshaft Position Actuator Control Circuit Low (Bank 1)	—
P2091	Exhaust Camshaft Position Actuator Control Circuit High (Bank 1)	—
P2092	Intake Camshaft Position Actuator Control Circuit Low (Bank 2)	—
P2093	Intake Camshaft Position Actuator Control Circuit High (Bank 2)	—
P2094	Exhaust Camshaft Position Actuator Control Circuit Low (Bank 2)	—
P2095	Exhaust Camshaft Position Actuator Control Circuit High (Bank 2)	—
P2101	Throttle Actuator Control Motor Circuit Range/Performance	—
P2102	Throttle Actuator Control Motor Circuit Low	—
P2103	Throttle Actuator Control Motor Circuit High	—
P2109	Throttle/Pedal Position Sensor “A” Minimum Stop Performance	—
P2122	Throttle/Pedal Position Sensor/Switch “D” Circuit Low Input	—
P2123	Throttle/Pedal Position Sensor/Switch “D” Circuit High Input	—
P2127	Throttle/Pedal Position Sensor/Switch “E” Circuit Low Input	—
P2128	Throttle/Pedal Position Sensor/Switch “E” Circuit High Input	—
P2135	Throttle/Pedal Position Sensor/Switch “A”/“B” Voltage Correlation	—
P2138	Throttle/Pedal Position Sensor/Switch “D”/“E” Voltage Correlation	—
P2227	Barometric Pressure Circuit Range/Performance	—
P2228	Barometric Pressure Circuit Low	—
P2229	Barometric Pressure Circuit High	—
U0073	CAN Failure, Bus ‘Off’ Detection	—
U0101	CAN (TCU) Data Not Loaded	—
U0122	CAN (VDC) Data Not Loaded	—
U0140	CAN (BCU) Data Not Loaded	—
U0402	CAN (TCU) Data Abnormal	—
U0416	CAN (VDC) Data Abnormal	—
U0422	CAN (BCU) Data Abnormal	—

1. PREPARATION FOR THE INSPECTION MODE

1) Check that the battery voltage is 12 V or more and fuel remains approx. half [20 — 40 ℓ (5.3 — 10.6 US gal, 4.4 — 8.8 Imp gal)].
2) Lift up the vehicle using a garage jack and place it on rigid racks, or drive the vehicle onto free rollers.

WARNING:
• Before lifting up the vehicle, ensure parking brake is applied.
• Do not use a pantograph jack in place of a rigid rack.
• Secure a rope or wire to the front or rear towing hooks to prevent the lateral runout of front wheels.
• Before rotating the wheels, make sure that there is no one in front of the vehicle. Besides while the wheels are rotating, make sure that no one approaches the vehicle front side.
• Make sure that there is nothing around the wheels. For AWD model, pay attention to all four wheels.
• While servicing, do not depress or release the clutch pedal or accelerator pedal quickly regardless of the engine speed. Quick operation may cause the vehicle to drop off the free roller.
• To prevent the vehicle from slipping due to vibration, do not place anything between rigid rack and the vehicle.

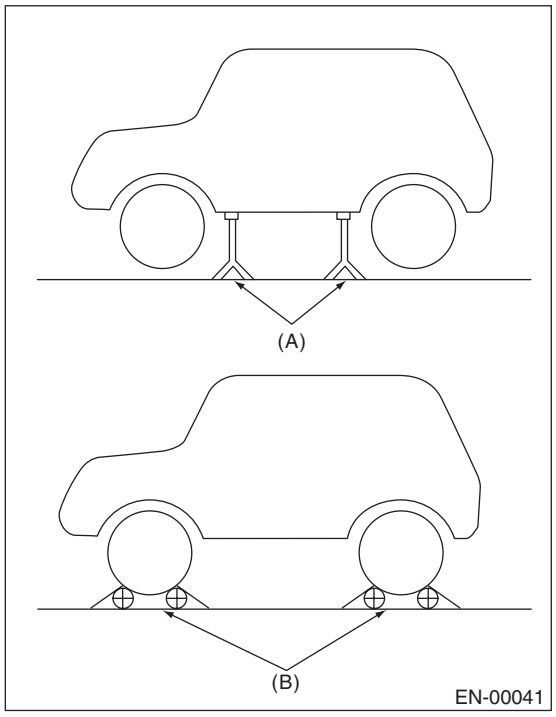

(A) Rigid rack
(B) Free roller

2. SUBARU SELECT MONITOR

1) Check that no DTC remains after clearing memory. <Ref. to EN(H4DOTC)(diag)-53, Clear Memory Mode.>
2) Warm up the engine.
3) Prepare the Subaru Select Monitor kit. <Ref. to EN(H4DOTC)(diag)-8, PREPARATION TOOL, General Description.>

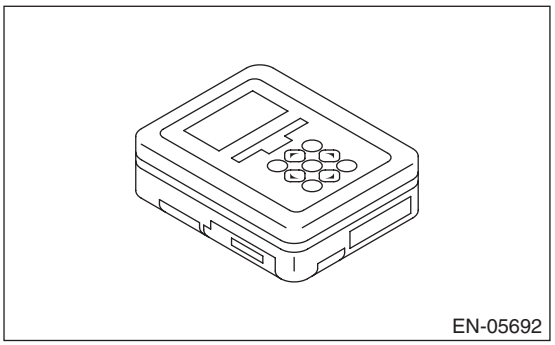

4) Prepare PC with Subaru Select Monitor installed.
5) Connect the USB cable to SDI (Subaru Diagnosis Interface) and USB port on the personal computer (dedicated port for the Subaru Select Monitor).

NOTE:
The dedicated port for the Subaru Select Monitor means the USB port which was used to install the Subaru Select Monitor.
6) Connect the diagnosis cable to SDI.
7) Install the delivery (test) mode fuse (A) of the main fuse box.

CAUTION:
Do not use any fuses that are installed on the vehicle.

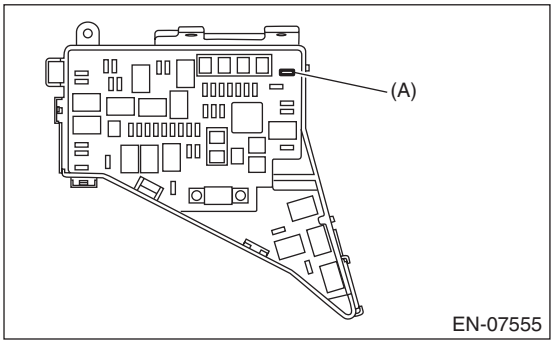

8) Connect SDI to data link connector located in the lower portion of the instrument panel (on the driver's side).

CAUTION:
Do not connect the scan tools except for Subaru Select Monitor and general scan tool.

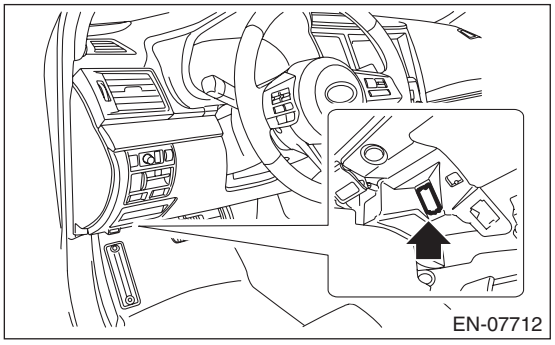

9) Start the PC.
10) Turn the ignition switch to ON (engine OFF) and run the "PC application for Subaru Select Monitor".
11) On «Main Menu» display, select {Each System Check}.
12) On «System Selection Menu» display, select {Engine Control System}.
13) Click the [OK] button after the information of engine type has been displayed.
14) On «Engine Diagnosis» display, select {Dealer Check Mode Procedure}.
15) When the "Perform Inspection (Dealer Check) Mode ?" is shown on the screen, click the [Next] button.
16) Perform subsequent procedures as instructed on the display screen.

- If trouble still remains in the memory, the corresponding DTC appears on the display screen.

NOTE:
- For detailed operation procedures, refer to "PC application help for Subaru Select Monitor".
- For details concerning DTC, refer to "List of Diagnostic Trouble Code (DTC)".
  <Ref. to EN(H4DOTC)(diag)-75, List of Diagnostic Trouble Code (DTC).>
- Release the parking brake.
- The speed difference between front and rear wheels may illuminate the ABS warning light, but this does not indicate a malfunction. When engine control system diagnosis is finished, perform the VDC memory clearance procedure of self-diagnosis function. <Ref. to VDC(diag)-25, Clear Memory Mode.>

3. GENERAL SCAN TOOL

1) Check that no DTC remains after clearing memory. <Ref. to EN(H4DOTC)(diag)-32, MODE $04 (CLEAR/RESET EMISSION-RELATED DIAGNOSTIC INFORMATION), OPERATION, General Scan Tool.>
2) Warm up the engine.
3) Install the delivery (test) mode fuse (A) of the main fuse box.

CAUTION:
Do not use any fuses that are installed on the vehicle.

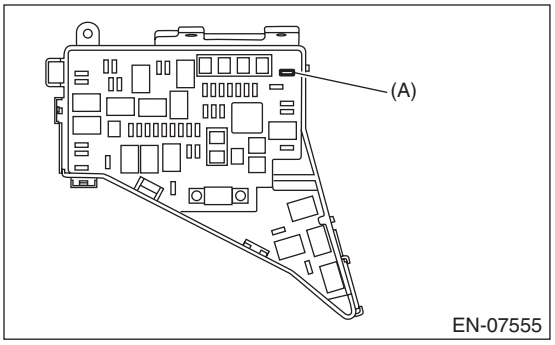

4) Connect the general scan tool to data link connector located in the lower portion of the instrument panel (on the driver's side).

CAUTION:
Do not connect the scan tools except for Subaru Select Monitor and general scan tool.

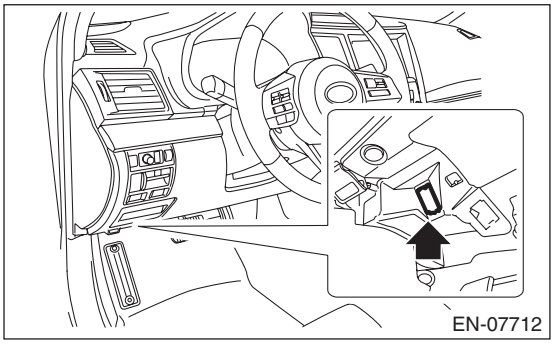

5) Start the engine.

NOTE:
Depress the clutch pedal when starting engine.
6) Turn the neutral position switch to ON by operating shift lever.
7) Keep the engine speed in 2,500 — 3,000 rpm range for 40 seconds.

8) Place the shift lever in 1st gear and drive the vehicle at 5 to 10 km/h (3 to 6 MPH).

NOTE:
- For AWD model, release the parking brake.
- The speed difference between front and rear wheels may illuminate the ABS warning light, but this does not indicate a malfunction. When engine control system diagnosis is finished, perform the VDC memory clearance procedure of self-diagnosis function. <Ref. to VDC(diag)-25, Clear Memory Mode.>

9) Using the general scan tool, check for DTC and record the result(s).

NOTE:
- For detailed operation procedures, refer to the general scan tool operation manual.
- For details concerning DTC, refer to “List of Diagnostic Trouble Code (DTC)”.

<Ref. to EN(H4DOTC)(diag)-75, List of Diagnostic Trouble Code (DTC).>

12.Drive Cycle

A: PROCEDURE

It is necessary to perform the drive cycle listed below if DTC is not found in the Inspection Mode. It is possible to complete diagnosis of the DTC by performing the indicated drive cycle. After the repair for the DTC, perform a necessary drive cycle and make sure the function recovers and the DTC is recorded.

1. PREPARATION FOR DRIVE CYCLE

1) Check that the battery voltage is 12 V or more and fuel remains approx. half [20 — 40 ℓ (5.3 — 10.6 US gal, 4.4 — 8.8 Imp gal)].
2) After performing the diagnostics and Clear Memory Mode, check that no DTC remains. <Ref. to EN(H4DOTC)(diag)-53, Clear Memory Mode.>
3) Check the delivery (test) mode fuse is removed.

NOTE:
• Perform the drive cycle after warming up the engine except when the engine coolant temperature at engine start is specified.
• Perform the drive cycle twice if the DTC in the list is marked with *. After completing the first drive cycle, stop the engine and perform second diagnosis in same condition.

2. DRIVE CYCLE A

DTC	Item	Condition
*P0125	Insufficient Coolant Temperature for Closed Loop Fuel Control	Engine coolant temperature at engine start is less than 20°C (68°F).
*P0126	Insufficient Engine Coolant Temperature for Stable Operation	—
*P0128	Coolant Thermostat (Engine Coolant Temperature Below Thermostat Regulating Temperature)	Engine coolant temperature at engine start is less than 55°C (131°F).
*P0133	O2 Sensor Circuit Slow Response (Bank 1 Sensor 1)	—
*P0141	O2 Sensor Heater Circuit (Bank1 Sensor2)	—
*P0171	System Too Lean (Bank 1)	Complete diagnosis with drive cycle B or C as well.
*P0172	System Too Rich (Bank 1)	Complete diagnosis with drive cycle B or C as well.
*P0301	Cylinder 1 Misfire Detected	Complete diagnosis with drive cycle B or C as well.
*P0302	Cylinder 2 Misfire Detected	Complete diagnosis with drive cycle B or C as well.
*P0303	Cylinder 3 Misfire Detected	Complete diagnosis with drive cycle B or C as well.
*P0304	Cylinder 4 Misfire Detected	Complete diagnosis with drive cycle B or C as well.
*P0420	Catalyst System Efficiency Below Threshold (Bank 1)	—
*P0442	Evaporative Emission Control System Leak Detected (Small Leak)	Engine coolant temperature at engine start is less than 25°C (77°F).
*P0451	Evaporative Emission Control System Pressure Sensor	—
*P0456	Evaporative Emission Control System Leak Detected (Very Small Leak)	Engine coolant temperature at engine start is less than 25°C (77°F).
*P0457	Evaporative Emission Control System Leak Detected (Fuel Cap Loose/Off)	Engine coolant temperature at engine start is less than 25°C (77°F).
*P0459	Evaporative Emission System Purge Control Valve Circuit High	—
P1443	Vent Control Solenoid Valve Function Problem	—

DTC	Item	Condition
*P2096	Post Catalyst Fuel Trim System Too Lean (Bank 1)	Complete diagnosis with drive cycle B or C as well.
*P2097	Post Catalyst Fuel Trim System Too Rich (Bank 1)	Complete diagnosis with drive cycle B or C as well.

Diagnostic procedure:
1) Drive for 20 minutes or more at a constant speed of 80 km/h (50 MPH) or more.
2) Stop the vehicle and idle for one minute.

3. DRIVE CYCLE B

DTC	Item	Condition
*P0171	System Too Lean (Bank 1)	Complete diagnosis with drive cycle A or C as well.
*P0172	System Too Rich (Bank 1)	Complete diagnosis with drive cycle A or C as well.
*P0301	Cylinder 1 Misfire Detected	Complete diagnosis with drive cycle A or C as well.
*P0302	Cylinder 2 Misfire Detected	Complete diagnosis with drive cycle A or C as well.
*P0303	Cylinder 3 Misfire Detected	Complete diagnosis with drive cycle A or C as well.
*P0304	Cylinder 4 Misfire Detected	Complete diagnosis with drive cycle A or C as well.
*P0464	Fuel Level Sensor Circuit Intermittent	—
*P0506	Idle Air Control System RPM Lower Than Expected	—
*P0507	Idle Air Control System RPM Higher Than Expected	—
*P2096	Post Catalyst Fuel Trim System Too Lean (Bank 1)	Complete diagnosis with drive cycle A or C as well.
*P2097	Post Catalyst Fuel Trim System Too Rich (Bank 1)	Complete diagnosis with drive cycle A or C as well.
*P219A	Bank 1 Air-Fuel Ratio Imbalance	Complete diagnosis with drive cycle C as well.

Diagnostic procedure:
1) Drive at 10 km/h (6 MPH) or more.
2) Stop the vehicle and idle for ten minutes.

4. DRIVE CYCLE C

DTC	Item	Condition
*P0030	HO2S Heater Control Circuit (Bank 1 Sensor 1)	—
*P0068	MAP/MAF - Throttle Position Correlation	—
*P0101	Mass or Volume Air Flow Circuit Range/Performance	—
P0134	O2 Sensor Circuit No Activity Detected (Bank 1 Sensor 1)	—
*P013A	O2 Sensor Slow Response - Rich to Lean (Bank 1 Sensor 2)	—
*P013B	O2 Sensor Slow Response - Lean to Rich (Bank 1 Sensor 2)	—
*P013E	O2 Sensor Delayed Response - Rich to Lean (Bank 1 Sensor 2)	—
*P013F	O2 Sensor Delayed Response - Lean to Rich (Bank 1 Sensor 2)	—
*P0171	System Too Lean (Bank 1)	Complete diagnosis with drive cycle A or B as well.
*P0172	System Too Rich (Bank 1)	Complete diagnosis with drive cycle A or B as well.
P0244	Turbo/Super Charger Wastegate Solenoid “A” Range/Performance	—
P0246	Turbo/Super Charger Wastegate Solenoid “A” High	—

DTC	Item	Condition
*P0301	Cylinder 1 Misfire Detected	Complete diagnosis with drive cycle A or B as well.
*P0302	Cylinder 2 Misfire Detected	Complete diagnosis with drive cycle A or B as well.
*P0303	Cylinder 3 Misfire Detected	Complete diagnosis with drive cycle A or B as well.
*P0304	Cylinder 4 Misfire Detected	Complete diagnosis with drive cycle A or B as well.
P2004	Intake Manifold Runner Control Stuck Open (Bank 1)	—
P2005	Intake Manifold Runner Control Stuck Open (Bank 2)	—
*P2096	Post Catalyst Fuel Trim System Too Lean (Bank 1)	Complete diagnosis with drive cycle A or B as well.
*P2097	Post Catalyst Fuel Trim System Too Rich (Bank 1)	Complete diagnosis with drive cycle A or B as well.
*P219A	Bank 1 Air-Fuel Ratio Imbalance	Complete diagnosis with drive cycle B as well.

Diagnostic procedure:

Drive according to the drive pattern described below.

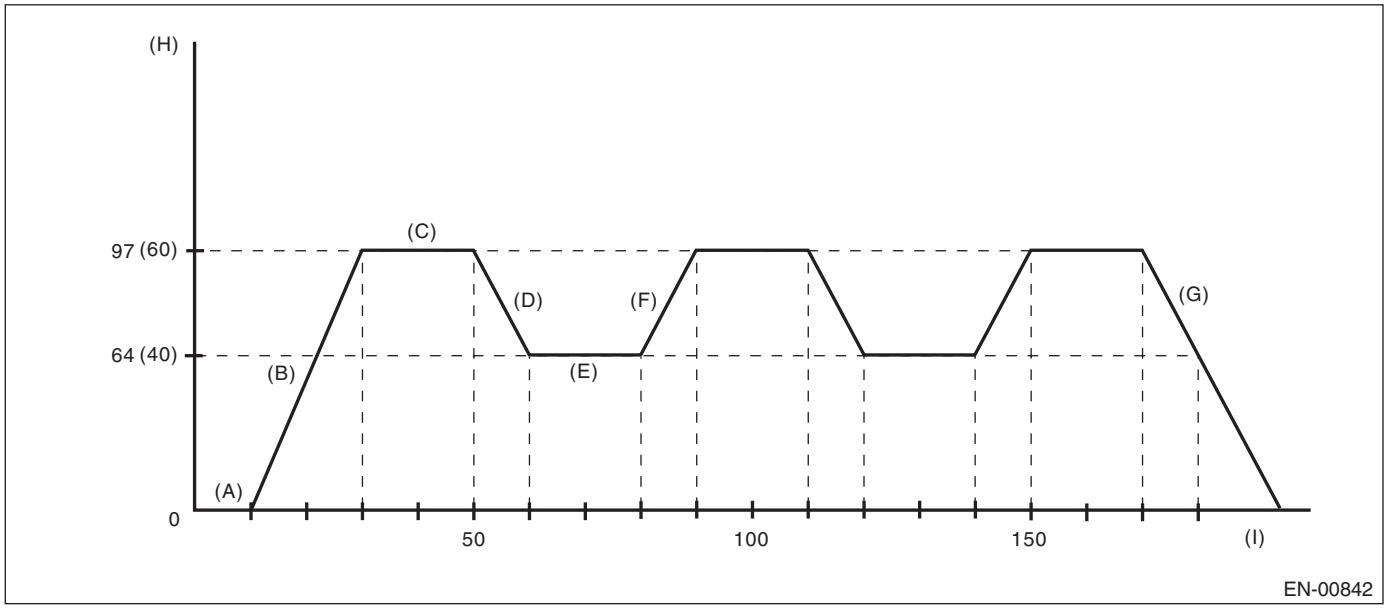

(A) Idle the engine for 10 seconds or more.

(B) Accelerate to 97 km/h (60 MPH) or more within 20 seconds.

(C) Drive for 20 seconds or more at 97 km/h (60 MPH) or more.

(D) Decelerate with fully closed throttle to 64 km/h (40 MPH) or less.

(E) Drive for 20 seconds or more at 64 km/h (40 MPH) or less.

(F) Accelerate to 97 km/h (60 MPH) or more within 10 seconds.

(G) Stop the vehicle with throttle fully closed.

(H) Vehicle speed km/h (MPH)

(I) Sec.

5. DRIVE CYCLE D

DTC	Item	Condition
*P0181	Fuel Temperature Sensor “A” Circuit Range/Performance	—

NOTE:
In drive cycle D, one drive cycle will be established when both the drift diagnosis and stuck diagnosis have completed.

Diagnostic procedure:

DRIFT DIAGNOSIS

1) Make sure of the items below before starting the engine.
- Engine coolant temperature is less than 30°C (86°F).
- Remaining fuel is 10 ℓ (2.6 US gal, 2.2 Imp gal) or more.
- Battery voltage is 10.9 V or more.

2) Idle the engine until engine coolant temperature is at least 10°C (18°F) higher than it was when engine started.
3) After the engine has reached the state of procedure 2), idle the engine for another 5 minutes or more.

STUCK DIAGNOSIS

1) Make sure that the battery voltage is 10.9 V or more.
2) Perform the Clear Memory Mode. <Ref. to EN(H4DOTC)(diag)-53, Clear Memory Mode.>
3) Drive the vehicle for the distance equal to the fuel of 50 ℓ (13.2 US gal, 11 Imp gal).

NOTE:
- It is acceptable to drive the vehicle intermittently.
- Do not disconnect the battery terminals during stuck diagnosis. (Data will be cleared by disconnecting the battery terminals.)

6. DRIVE CYCLE E

DTC	Item	Condition
*P0461	Fuel Level Sensor “A” Circuit Range/Performance	—

Diagnostic procedure:
1) Make sure that the battery voltage is 10.9 V or more.
2) Perform the Clear Memory Mode. <Ref. to EN(H4DOTC)(diag)-53, Clear Memory Mode.>
3) Drive the vehicle for the distance equal to the fuel of 30 ℓ (7.9 US gal, 6.6 Imp gal).

NOTE:
- It is acceptable to drive the vehicle intermittently.
- Do not disconnect the battery terminals while diagnosing. (Data will be cleared by disconnecting the battery terminals.)

7. DRIVE CYCLE F

DTC	Item	Condition
*P0111	Intake Air Temperature Sensor 1 Circuit Range/Performance	—

Diagnostic procedure:
1) Make sure that the engine coolant temperature is less than 30°C (86°F).
2) Drive according to the drive pattern described below.

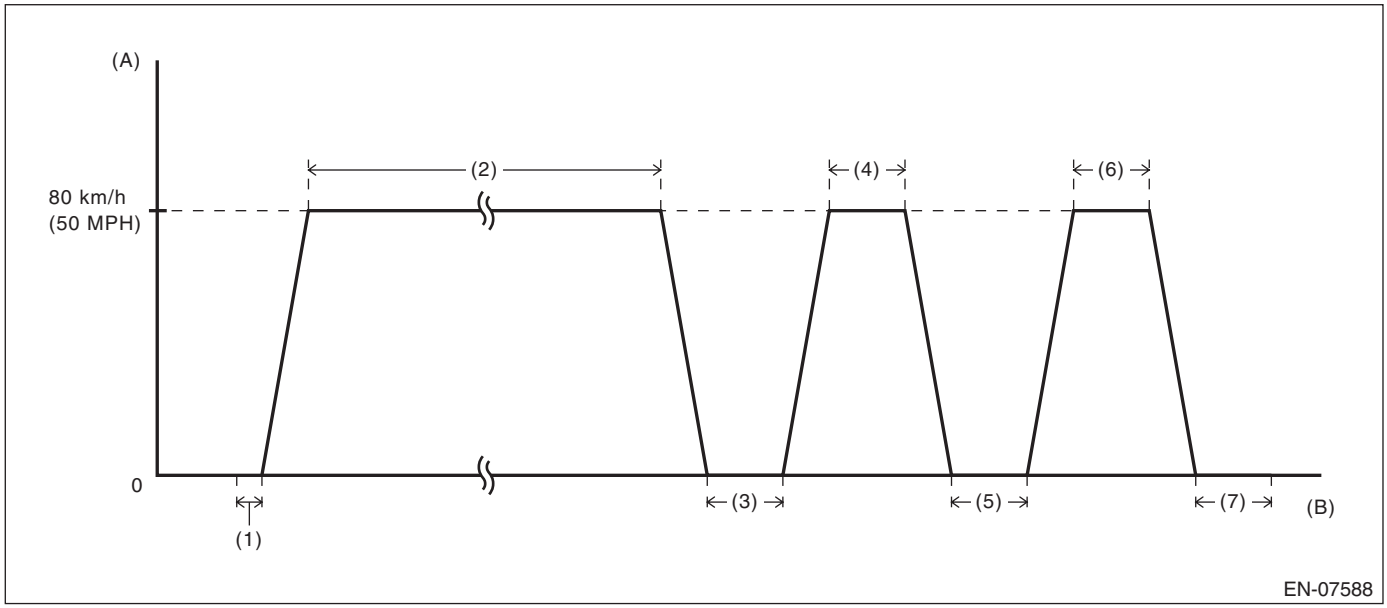

(A) Vehicle speed
(B) Elapsed time
(1) Idle the engine for 10 seconds or more after engine start.
(2) Drive for 8 minutes or more at a constant speed of 80 km/h (50 MPH) or more.
(3) Stop the vehicle and idle for 30 seconds or more.
(4) Drive for 30 seconds or more at a constant speed of 80 km/h (50 MPH) or more.
(5) Stop the vehicle and idle for 30 seconds or more.
(6) Drive for 30 seconds or more at a constant speed of 80 km/h (50 MPH) or more.
(7) Stop the vehicle and idle for 30 seconds.

NOTE:
- There is no given transition time between idling and cruising.
- Driving at constant speed only on a downhill causes smaller engine load and may result in failure to obtain a right diagnostic result.
- When the engine stops while performing drive cycle F, perform it again from the state of procedure 1).

8. DRIVE CYCLE H

DTC	Item	Condition
*P050A	Cold Start Idle Air Control System Performance	—
*P050B	Cold Start Ignition Timing Performance	—

Diagnostic procedure:
1) Perform the Clear Memory Mode. <Ref. to EN(H4DOTC)(diag)-53, Clear Memory Mode.>
2) With the ignition switch ON (engine OFF), read the engine coolant temperature, intake air temperature and fuel temperature. <Ref. to EN(H4DOTC)(diag)-34, READ CURRENT DATA FOR ENGINE (NORMAL MODE), OPERATION, Subaru Select Monitor.>
3) If the values from step 2) satisfy the following two conditions, idle the engine for one minute.

Condition:
|Engine coolant temperature — Intake air temperature| ≤ 5°C (9°F)
|Engine coolant temperature — Fuel temperature| ≤ 2°C (3.6°F)

NOTE:
- If the conditions are not satisfied, turn the ignition switch to OFF and wait until the parameters are satisfied.
- Do not move the shift lever from neutral position during idling.

9. DRIVE CYCLE J

DTC	Item	Condition
P2610	ECM/PCM Internal Engine Off Timer Performance	—

1) Idle the engine for 15 minutes or more.
2) Turn the ignition switch to OFF.
3) After 6 hours passed from the start of step 2), read the temporary code using the Subaru Select Monitor. <Ref. to EN(H4DOTC)(diag)-40, OPERATION, Read Diagnostic Trouble Code (DTC).>

13.Clear Memory Mode

A: OPERATION

1. SUBARU SELECT MONITOR

NOTE:
• Initial diagnosis of electronic throttle control is performed after memory clearance. Wait for 10 seconds or more after turning the ignition switch to ON, and then start the engine.
• For detailed operation procedures, refer to “PC application help for Subaru Select Monitor”.

2. GENERAL SCAN TOOL

For procedures clearing memory using the general scan tool, refer to the general scan tool operation manual.

NOTE:
Initial diagnosis of electronic throttle control is performed after memory clearance. For this reason, start the engine after 10 seconds or more have elapsed since the ignition switch was turned to ON.

14. System Operation Check Mode

A: OPERATION

CAUTION:
After executing the system operation check mode, execute the Clear Memory Mode. <Ref. to EN(H4DOTC)(diag)-53, OPERATION, Clear Memory Mode.>

NOTE:
For detailed operation procedures, refer to “PC application help for Subaru Select Monitor”.

15.Malfunction Indicator Light

A: PROCEDURE

1. Activation of malfunction indicator light. <Ref. to EN(H4DOTC)(diag)-55, ACTIVATION OF MALFUNCTION INDICATOR LIGHT, Malfunction Indicator Light.>
↓
2. Malfunction indicator light does not come on. <Ref. to EN(H4DOTC)(diag)-57, MALFUNCTION INDICATOR LIGHT DOES NOT COME ON, Malfunction Indicator Light.>
↓
3. Malfunction indicator light does not go off. <Ref. to EN(H4DOTC)(diag)-57, MALFUNCTION INDICATOR LIGHT DOES NOT GO OFF, Malfunction Indicator Light.>
↓
4. Malfunction indicator light does not blink. <Ref. to EN(H4DOTC)(diag)-58, MALFUNCTION INDICATOR LIGHT DOES NOT BLINK, Malfunction Indicator Light.>
↓
5. Malfunction indicator light remains blinking. <Ref. to EN(H4DOTC)(diag)-60, MALFUNCTION INDICATOR LIGHT REMAINS BLINKING, Malfunction Indicator Light.>

B: ACTIVATION OF MALFUNCTION INDICATOR LIGHT

1) When the ignition switch is turned to ON (engine OFF), the malfunction indicator light (A) in the combination meter illuminates.

NOTE:
If the malfunction indicator light does not illuminate, perform diagnostics of the malfunction indicator light circuit or the combination meter circuit. <Ref. to EN(H4DOTC)(diag)-57, MALFUNCTION INDICATOR LIGHT DOES NOT COME ON, Malfunction Indicator Light.>

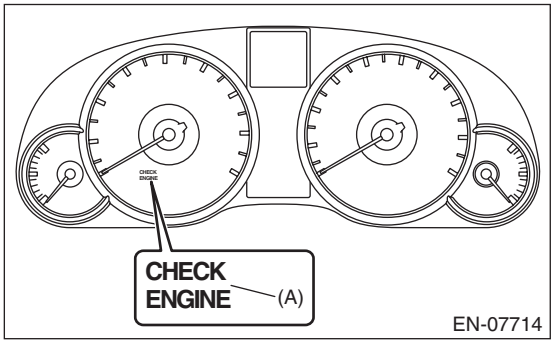

2) After starting the engine, the malfunction indicator light goes out. If it does not go off, any of the engine and emission control system has malfunction.

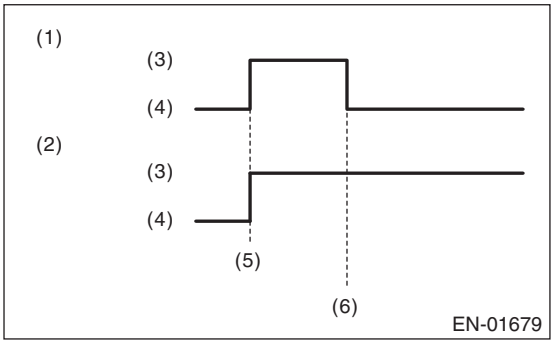

(1) No DTC
(2) Trouble occurs
(3) ON
(4) OFF
(5) Ignition switch ON
(6) Engine start

3) If the diagnostic system detects a misfire which could damage the catalyst, the malfunction indicator light will blink at a cycle of 1 Hz.

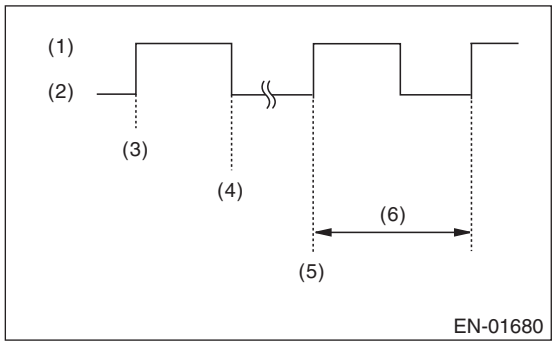

(1) ON
(2) OFF
(3) Ignition switch ON
(4) Engine start
(5) Misfire start
(6) 1 second

4) Install the delivery (test) mode fuse (A) of main fuse box with ignition switch to OFF.

CAUTION:
Do not use any fuses that are installed on the vehicle.

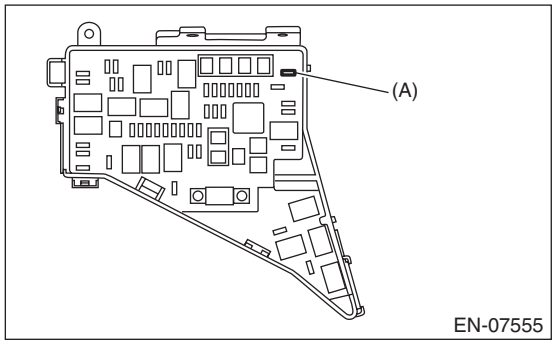

(1) When the ignition switch is turned to ON (engine OFF), the malfunction indicator light illuminates.
(2) After the engine starts, malfunction indicator light blinks in a cycle of 0.5 Hz. (During diagnosis)

(3) Malfunction indicator light blinks at a cycle of 3 Hz after diagnosis if there is no trouble. Malfunction indicator light illuminates if faulty.

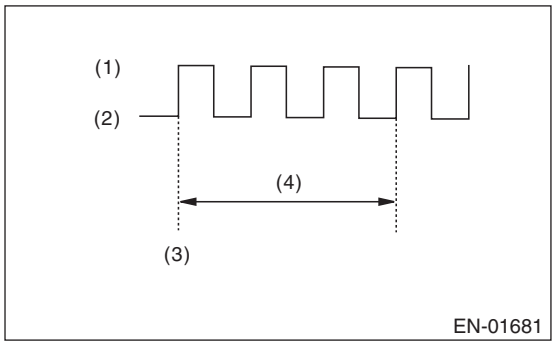

(1) ON
(2) OFF
(3) Ignition switch ON
(4) 1 second

C: MALFUNCTION INDICATOR LIGHT DOES NOT COME ON

TROUBLE SYMPTOM:
When the ignition switch is turned to ON (engine OFF), malfunction indicator light does not illuminate.

	Step	Check	Yes	No
1	**CHECK DTC.**	Is DTC of LAN system displayed? <Ref. to LAN(diag)-10, OPERATION, Read Diagnostic Trouble Code (DTC).>	Check the appropriate DTC using the "List of Diagnostic Trouble Code (DTC)". <Ref. to LAN(diag)-32, List of Diagnostic Trouble Code (DTC).>	Replace the meter case assembly of combination meter. <Ref. to IDI-21, Combination Meter.>

D: MALFUNCTION INDICATOR LIGHT DOES NOT GO OFF

TROUBLE SYMPTOM:
Although malfunction indicator light comes on when the engine runs, DTC is not shown on the Subaru Select Monitor or general scan tool display.

	Step	Check	Yes	No
1	**CHECK DTC.**	Is DTC of engine or LAN system displayed? <Ref. to EN(H4DOTC)(diag)-40, OPERATION, Read Diagnostic Trouble Code (DTC).>	Check the appropriate DTC using the "List of Diagnostic Trouble Code (DTC)". <Ref. to EN(H4DOTC)(diag)-75, List of Diagnostic Trouble Code (DTC).> <Ref. to LAN(diag)-32, List of Diagnostic Trouble Code (DTC).>	Go to step **2**.
2	**CHECK COMBINATION METER.** Perform the self-diagnosis for combination meter system. <Ref. to IDI-6, SELF-DIAGNOSIS DISPLAY MODE, OPERATION, Combination Meter System.>	Does the malfunction indicator light illuminate and go off normally?	Replace the ECM. <Ref. to FU(H4DOTC)-58, Engine Control Module (ECM).>	Replace the meter case assembly of combination meter. <Ref. to IDI-21, Combination Meter.>

E: MALFUNCTION INDICATOR LIGHT DOES NOT BLINK

DIAGNOSIS:

- The malfunction indicator light circuit is open or shorted.
- The delivery (test) mode fuse circuit is open.

TROUBLE SYMPTOM:

Malfunction indicator light does not blink during Inspection Mode.

WIRING DIAGRAM:

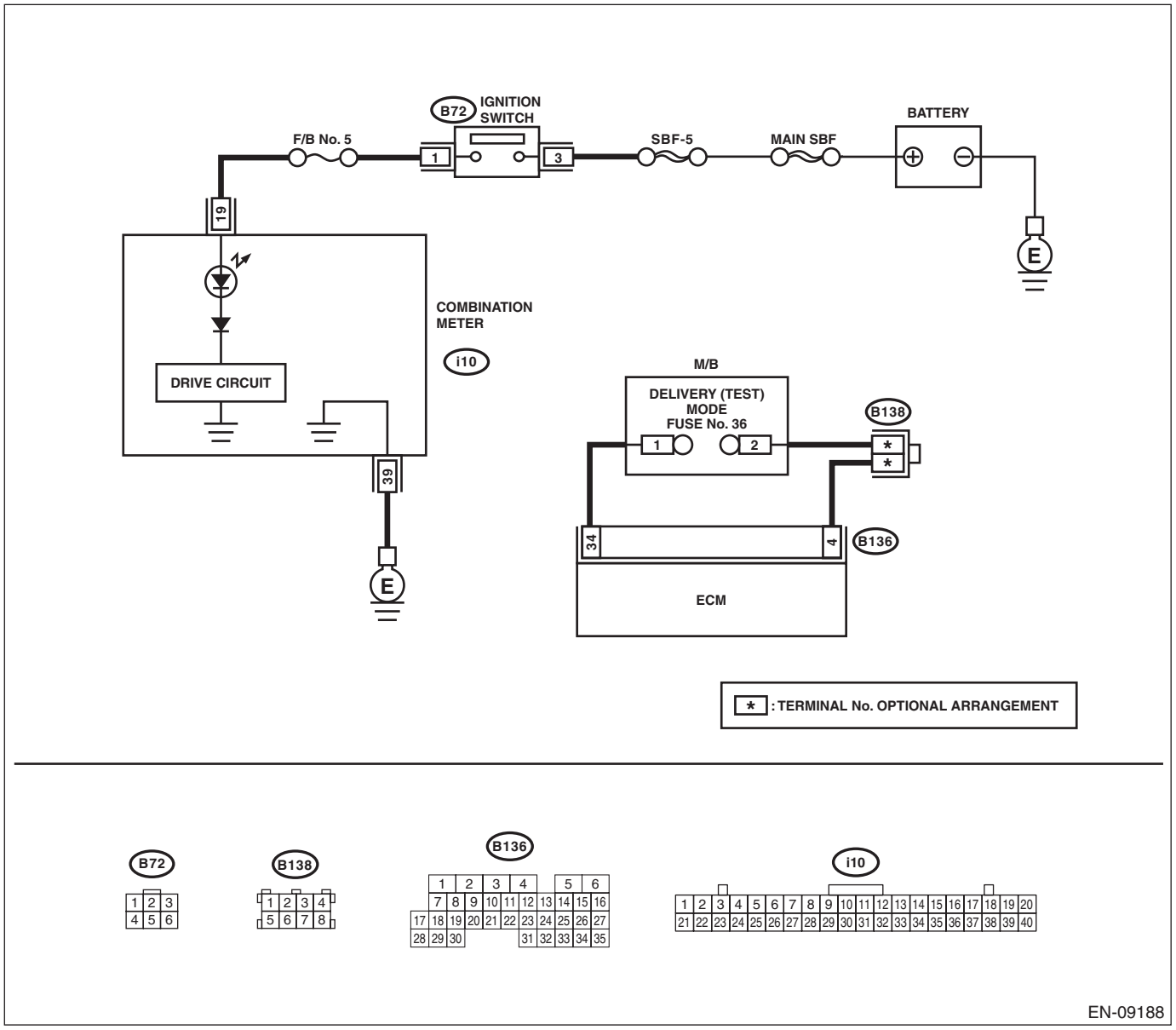

	Step	Check	Yes	No
1	**CHECK STATUS OF MALFUNCTION INDICATOR LIGHT.** 1) Turn the ignition switch to OFF. 2) Check the delivery (test) mode fuse is removed. 3) Turn the ignition switch to ON. (engine OFF)	Does the malfunction indicator light illuminate?	Go to step **2**.	Repair the malfunction indicator light circuit. <Ref. to EN(H4DOTC)(diag)-57, MALFUNCTION INDICATOR LIGHT DOES NOT COME ON, Malfunction Indicator Light.>
2	**CHECK HARNESS BETWEEN ECM AND DELIVERY (TEST) MODE FUSE.** 1) Turn the ignition switch to OFF. 2) Disconnect the connector from ECM. 3) Install the delivery (test) mode fuse. **CAUTION:** **Do not use any fuses that are installed on the vehicle.** 4) Measure the resistance of harness between ECM connectors. ***Connector & terminal*** ***(B136) No. 34 — (B136) No. 4:***	Is the resistance less than 1 Ω?	Go to step **3**.	Repair the harness and connector. NOTE: In this case, repair the following item: • Open circuit of harness between ECM and delivery (test) mode fuse • Poor contact of joint connector
3	**CHECK FOR POOR CONTACT.** Check for poor contact of ECM connector.	Is there poor contact of ECM connector?	Repair the poor contact of ECM connector.	Replace the ECM. <Ref. to FU(H4DOTC)-58, Engine Control Module (ECM).>

F: MALFUNCTION INDICATOR LIGHT REMAINS BLINKING

DIAGNOSIS:
The delivery (test) mode fuse circuit is short-circuited to ground.
TROUBLE SYMPTOM:
Malfunction indicator light blinks when delivery (test) mode fuse is not connected.
WIRING DIAGRAM:

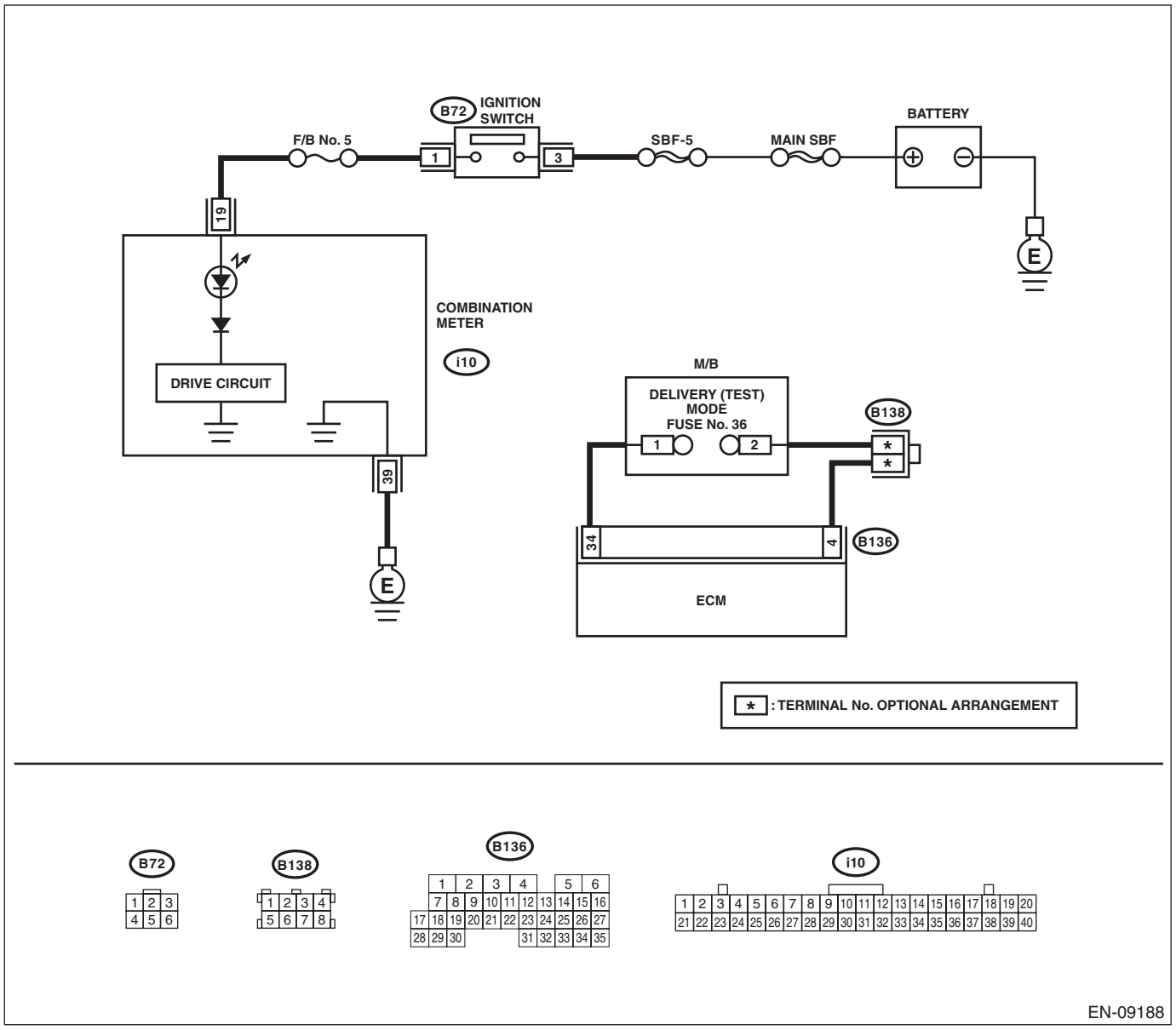

Step		Check	Yes	No
1	**CHECK DELIVERY (TEST) MODE FUSE.** 1) Check the delivery (test) mode fuse is removed. 2) Turn the ignition switch to ON.	Does the malfunction indicator light blink?	Go to step **2**.	System is normal. NOTE: Malfunction indicator light blinks at a cycle of 3 Hz when delivery (test) mode fuse is attached.

	Step	Check	Yes	No
2	**CHECK HARNESS BETWEEN ECM AND DELIVERY (TEST) MODE FUSE.** 1) Turn the ignition switch to OFF. 2) Disconnect the connector from ECM. 3) Measure the resistance between ECM and chassis ground. ***Connector & terminal*** ***(B136) No. 34 — Chassis ground:***	Is the resistance 1 MΩ or more?	Replace the ECM. <Ref. to FU(H4DOTC)-58, Engine Control Module (ECM).>	Repair the short circuit to ground in harness between ECM and delivery (test) mode fuse.

16.Diagnostics for Engine Starting Failure

A: PROCEDURE

1. Check of the fuel amount
↓
2. Inspection of starter motor circuit. <Ref. to EN(H4DOTC)(diag)-63, STARTER MOTOR CIRCUIT, Diagnostics for Engine Starting Failure.>
↓
3. Inspection of ECM power supply and ground line. <Ref. to EN(H4DOTC)(diag)-66, CHECK POWER SUPPLY AND GROUND LINE OF ENGINE CONTROL MODULE (ECM), Diagnostics for Engine Starting Failure.>
↓
4. Inspection of ignition control system. <Ref. to EN(H4DOTC)(diag)-68, IGNITION CONTROL SYSTEM, Diagnostics for Engine Starting Failure.>
↓
5. Inspection of fuel pump circuit. <Ref. to EN(H4DOTC)(diag)-70, FUEL PUMP CIRCUIT, Diagnostics for Engine Starting Failure.>
↓
6. Inspection of fuel injector circuit. <Ref. to EN(H4DOTC)(diag)-71, FUEL INJECTOR CIRCUIT, Diagnostics for Engine Starting Failure.>

B: STARTER MOTOR CIRCUIT

CAUTION:
After servicing or replacing faulty parts, perform Clear Memory Mode <Ref. to EN(H4DOTC)(diag)-53, OPERATION, Clear Memory Mode.>, and Inspection Mode <Ref. to EN(H4DOTC)(diag)-41, PROCEDURE, Inspection Mode.>.
WIRING DIAGRAM:

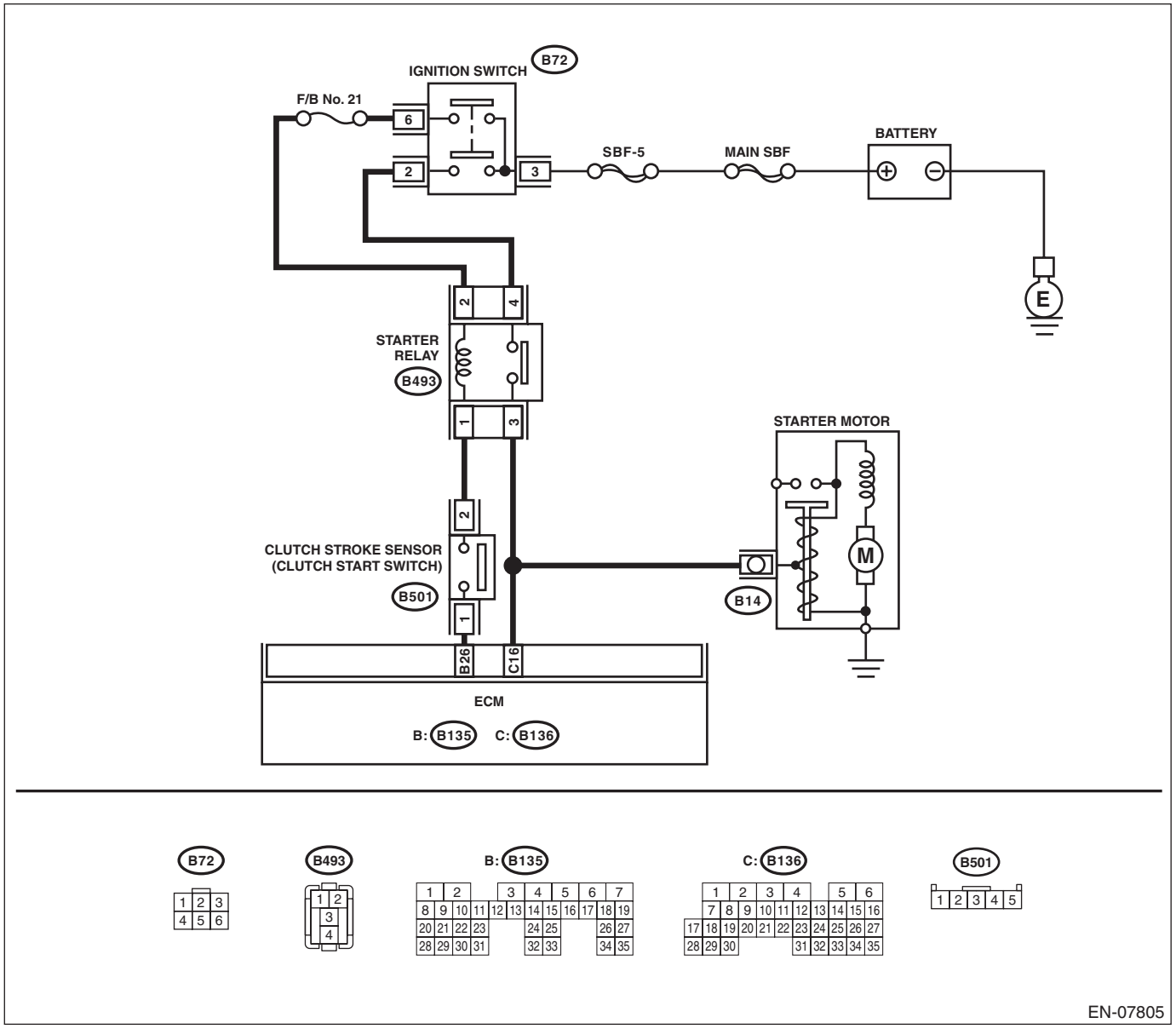

Step		Check	Yes	No
1	**CHECK BATTERY.** Check the battery voltage.	Is the voltage 12 V or more?	Go to step **2**.	Charge or replace the battery.
2	**CHECK OPERATION OF STARTER MOTOR.**	Does the starter motor operate?	Go to step **3**.	Go to step **4**.

	Step	Check	Yes	No
3	**CHECK DTC.**	Is DTC displayed? <Ref. to EN(H4DOTC)(diag)-40, OPERATION, Read Diagnostic Trouble Code (DTC).>	Check the appropriate DTC using the "List of Diagnostic Trouble Code (DTC)". <Ref. to EN(H4DOTC)(diag)-75, List of Diagnostic Trouble Code (DTC).>	The circuit has returned to a normal condition at this time. Reproduce the failure, and then perform the diagnosis again. NOTE: In this case, temporary poor contact of connector, temporary open or short circuit of harness may be the cause.
4	**CHECK INPUT SIGNAL FOR STARTER MOTOR.** 1) Turn the ignition switch to OFF. 2) Disconnect the connector from starter motor. 3) Depress the clutch pedal. 4) Turn the ignition switch to START. 5) Measure the voltage between the starter motor connector and the engine ground. ***Connector & terminal*** ***(B14) No. 1 (+) — Engine ground (–):***	Is the voltage 10 V or more?	Check the starter motor. <Ref. to SC(H4SO)-9, Starter.>	Go to step **5**.
5	**CHECK INPUT SIGNAL FOR STARTER MOTOR.** 1) Depress the clutch pedal. 2) Turn the ignition switch to START. 3) Measure the voltage between starter relay connector and chassis ground. ***Connector & terminal*** ***(B493) No. 3 (+) — Chassis ground (–):***	Is the voltage 10 V or more?	Repair the open circuit of the harness between starter relay connector and starter motor.	Go to step **6**.
6	**CHECK HARNESS BETWEEN BATTERY AND IGNITION SWITCH CONNECTOR.** 1) Turn the ignition switch to OFF. 2) Disconnect the connector from ignition switch. 3) Measure the voltage between ignition switch connector and chassis ground. ***Connector & terminal*** ***(B72) No. 3 (+) — Chassis ground (–):***	Is the voltage 10 V or more?	Go to step **7**.	Repair the power supply circuit.
7	**CHECK IGNITION SWITCH.** Measure the resistance between ignition switch terminals after turning the ignition switch to START position. ***Terminals*** ***No. 2 — No. 3:*** ***No. 6 — No. 3:***	Is the resistance less than 1 Ω?	Go to step **8**.	Replace the ignition switch. <Ref. to SL-58, REPLACEMENT, Ignition Key Lock.>

	Step	Check	Yes	No
8	**CHECK INPUT VOLTAGE OF STARTER RELAY.** 1) Remove the starter relay. 2) Connect the connector to ignition switch. 3) Turn the ignition switch to START. 4) Measure the voltage between starter relay connector and chassis ground. ***Connector & terminal*** ***(B493) No. 4 (+) — Chassis ground (–):*** ***(B493) No. 2 (+) — Chassis ground (–):***	Is the voltage 10 V or more?	Go to step **9**.	Check the following item and repair if necessary. • Blown out of fuse (F/B No. 21) • Open or short circuit to ground in harness between starter relay connector and ignition switch connector
9	**CHECK STARTER RELAY.** 1) Connect the battery to starter relay terminals No. 2 and No. 1. 2) Measure the resistance between starter relay terminals. ***Terminals*** ***No. 4 — No. 3:***	Is the resistance less than 1 Ω?	Go to step **10**.	Replace the starter relay. <Ref. to EN(H4DOTC)(diag)-9, Electrical Component Location.>
10	**CHECK HARNESS BETWEEN ECM AND STARTER RELAY CONNECTOR.** 1) Turn the ignition switch to OFF. 2) Disconnect the connectors from ECM. 3) Measure the resistance of harness between ECM and starter relay connector. ***Connector & terminal*** ***(B136) No. 16 — (B493) No. 3:***	Is the resistance less than 1 Ω?	Go to step **11**.	Repair the open circuit of harness between ECM and starter relay connector.
11	**CHECK ECM INPUT VOLTAGE.** 1) Install the starter relay. 2) Depress the clutch pedal. 3) Turn the ignition switch to START. 4) Measure the voltage between ECM connector and chassis ground. ***Connector & terminal*** ***(B135) No. 26 (+) — Chassis ground (–):***	Is the voltage 10 V or more?	Check the ECM power supply and ground line. <Ref. to EN(H4DOTC)(diag)-66, CHECK POWER SUPPLY AND GROUND LINE OF ENGINE CONTROL MODULE (ECM), Diagnostics for Engine Starting Failure.>	Go to step **12**.
12	**CHECK HARNESS BETWEEN ECM AND CLUTCH START SWITCH CONNECTOR.** 1) Turn the ignition switch to OFF. 2) Disconnect the clutch start switch connector. 3) Measure the resistance of harness between ECM and clutch start switch connector. ***Connector & terminal*** ***(B135) No. 26 — (B501) No. 1:***	Is the resistance less than 1 Ω?	Go to step **13**.	Repair the open circuit of harness between ECM and clutch start switch connector.
13	**CHECK INPUT VOLTAGE OF CLUTCH START SWITCH.** 1) Turn the ignition switch to START. 2) Measure the voltage between the clutch start switch connector and chassis ground. ***Connector & terminal*** ***(B501) No. 2 (+) — Chassis ground (–):***	Is the voltage 10 V or more?	Replace the clutch start switch. <Ref. to CL-31, Clutch Switch.>	Repair open or short circuit to ground in harness between starter relay and clutch start switch connector.

C: CHECK POWER SUPPLY AND GROUND LINE OF ENGINE CONTROL MODULE (ECM)

CAUTION:
After servicing or replacing faulty parts, perform Clear Memory Mode <Ref. to EN(H4DOTC)(diag)-53, OPERATION, Clear Memory Mode.>, and Inspection Mode <Ref. to EN(H4DOTC)(diag)-41, PROCEDURE, Inspection Mode.>.
WIRING DIAGRAM:

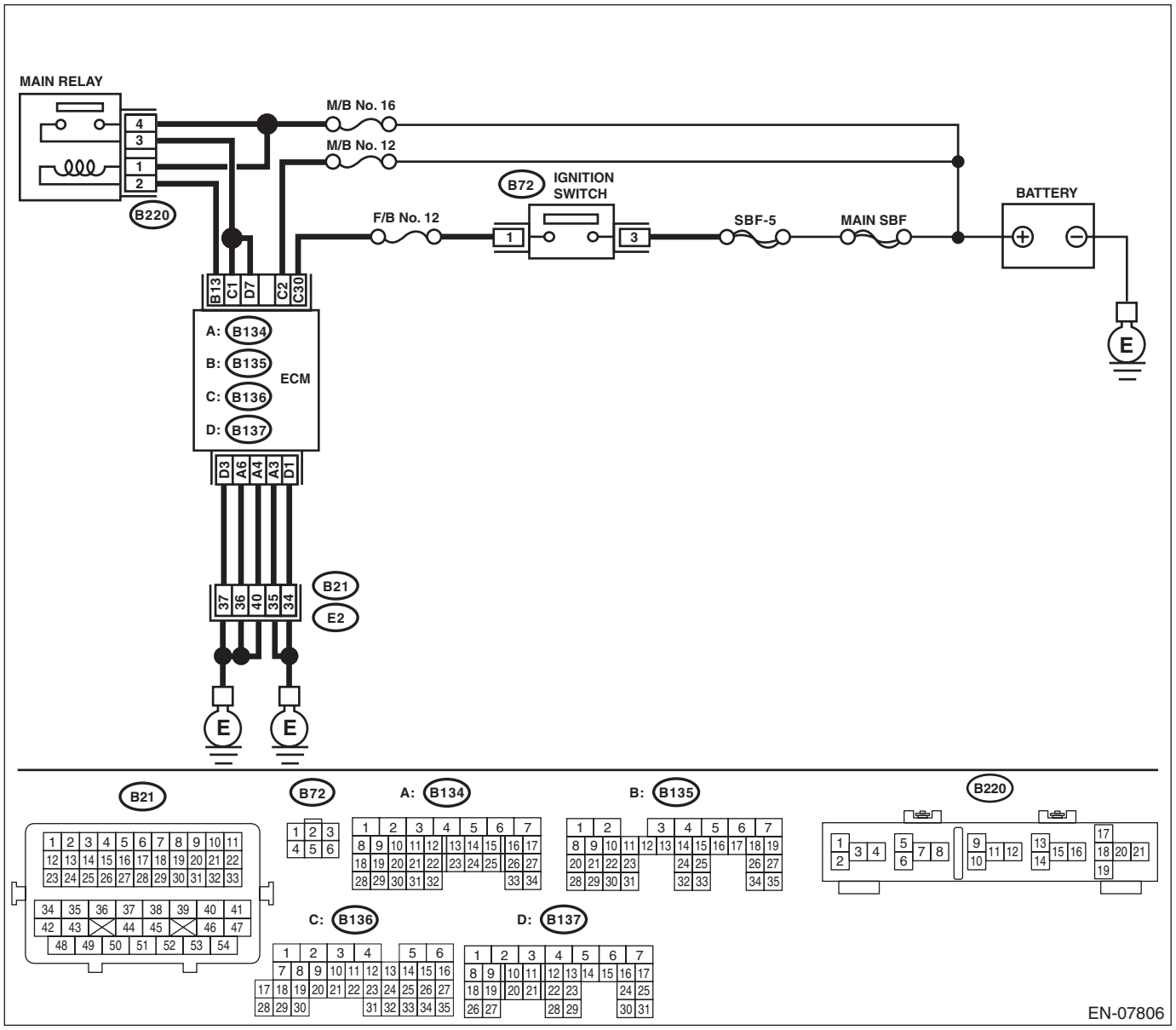

Step		Check	Yes	No
1	**CHECK MAIN RELAY.** 1) Turn the ignition switch to OFF. 2) Remove the main relay. 3) Connect the battery to main relay terminals No. 1 and No. 2. 4) Measure the resistance between main relay terminals. ***Terminals*** ***No. 3 — No. 4:***	Is the resistance less than 1 Ω?	Go to step **2**.	Replace the main relay. <Ref. to EN(H4DOTC)(diag)-9, Electrical Component Location.>

	Step	Check	Yes	No
2	**CHECK GROUND CIRCUIT FOR ECM.** 1) Disconnect the connector from ECM. 2) Measure the resistance of harness between ECM and chassis ground. ***Connector & terminal*** ***(B134) No. 3 — Chassis ground:*** ***(B134) No. 4 — Chassis ground:*** ***(B134) No. 6 — Chassis ground:*** ***(B137) No. 1 — Chassis ground:*** ***(B137) No. 3 — Chassis ground:***	Is the resistance less than 5 Ω?	Go to step **3**.	Repair the harness and connector. NOTE: In this case, repair the following item: • Open circuit in harness between ECM and engine ground terminal • Poor contact of coupling connector
3	**CHECK INPUT VOLTAGE OF ECM.** 1) Turn the ignition switch to ON. 2) Measure the voltage between ECM and chassis ground. ***Connector & terminal*** ***(B136) No. 2 (+) — Chassis ground (–):*** ***(B136) No. 30 (+) — Chassis ground (–):***	Is the voltage 10 V or more?	Go to step **4**.	Repair the open or ground short circuit of harness of power supply circuit.
4	**CHECK INPUT VOLTAGE OF MAIN RELAY.** Measure the voltage between main relay connector and chassis ground. ***Connector & terminal*** ***(B220) No. 1 (+) — Chassis ground (–):*** ***(B220) No. 4 (+) — Chassis ground (–):***	Is the voltage 10 V or more?	Go to step **5**.	Repair the open or ground short circuit of harness of power supply circuit.
5	**CHECK INPUT VOLTAGE OF ECM.** 1) Turn the ignition switch to OFF. 2) Install the main relay. 3) Turn the ignition switch to ON. 4) Measure the voltage between ECM and chassis ground. ***Connector & terminal*** ***(B135) No. 13 (+) — Chassis ground (–):***	Is the voltage 10 V or more?	Go to step **6**.	Repair the open circuit in harness between ECM and main relay connector.
6	**CHECK INPUT VOLTAGE OF ECM.** 1) Turn the ignition switch to OFF. 2) Connect the connector to ECM. 3) Turn the ignition switch to ON. 4) Measure the voltage between ECM and chassis ground. ***Connector & terminal*** ***(B136) No. 1 (+) — Chassis ground (–):*** ***(B137) No. 7 (+) — Chassis ground (–):***	Is the voltage 10 V or more?	Check ignition control system. <Ref. to EN(H4DOTC)(diag)-68, IGNITION CONTROL SYSTEM, Diagnostics for Engine Starting Failure.>	Repair the harness and connector. NOTE: In this case, repair the following item: • Open circuit in harness between ECM and main relay connector • Poor contact of main relay connector • Poor contact of ECM connector

D: IGNITION CONTROL SYSTEM

CAUTION:
After servicing or replacing faulty parts, perform Clear Memory Mode <Ref. to EN(H4DOTC)(diag)-53, OPERATION, Clear Memory Mode.>, and Inspection Mode <Ref. to EN(H4DOTC)(diag)-41, PROCEDURE, Inspection Mode.>.
WIRING DIAGRAM:

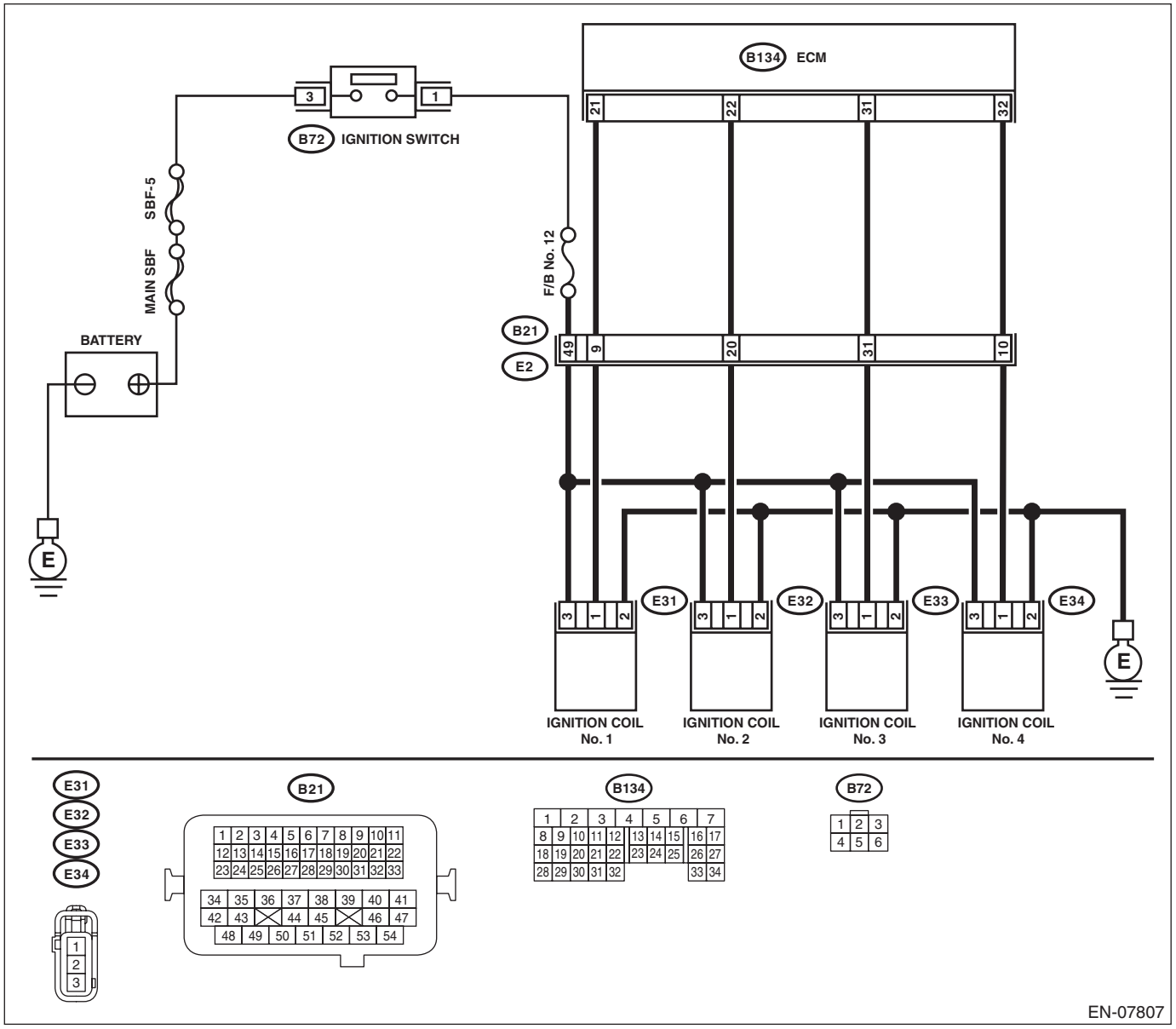

Step		Check	Yes	No
1	**CHECK SPARK PLUG CONDITION.** 1) Remove the spark plug. <Ref. to IG(H4DOTC)-4, REMOVAL, Spark Plug.> 2) Check the spark plug condition. <Ref. to IG(H4DOTC)-4, INSPECTION, Spark Plug.>	Is the spark plug condition normal?	Go to step **2**.	Replace the spark plug. <Ref. to IG(H4DOTC)-4, Spark Plug.>

	Step	Check	Yes	No
2	**CHECK IGNITION SYSTEM FOR SPARKS.** 1) Connect the spark plug to ignition coil. 2) Release the fuel pressure. <Ref. to FU(H4DOTC)-66, RELEASING OF FUEL PRESSURE, PROCEDURE, Fuel.> 3) Contact the spark plug thread portion to engine. 4) While opening the throttle valve fully, crank the engine to check that spark occurs at each cylinder.	Does spark occur at each cylinder?	Check fuel pump system. <Ref. to EN(H4DOTC)(diag)-70, FUEL PUMP CIRCUIT, Diagnostics for Engine Starting Failure.>	Go to step **3**.
3	**CHECK IGNITION COIL POWER SUPPLY CIRCUIT.** 1) Turn the ignition switch to OFF. 2) Disconnect the connector from ignition coil. 3) Turn the ignition switch to ON. 4) Measure the voltage between ignition coil connector and engine ground. ***Connector & terminal*** ***(E31) No. 3 (+) — Engine ground (–):*** ***(E32) No. 3 (+) — Engine ground (–):*** ***(E33) No. 3 (+) — Engine ground (–):*** ***(E34) No. 3 (+) — Engine ground (–):***	Is the voltage 10 V or more?	Go to step **4**.	Repair the harness and connector. NOTE: In this case, repair the following item: • Open circuit or short circuit to ground in power supply circuit • Poor contact of coupling connector • Blown out of fuse (F/B No. 12)
4	**CHECK HARNESS OF IGNITION COIL GROUND CIRCUIT.** 1) Turn the ignition switch to OFF. 2) Measure the resistance of harness between ignition coil connector and engine ground. ***Connector & terminal*** ***(E31) No. 2 — Engine ground:*** ***(E32) No. 2 — Engine ground:*** ***(E33) No. 2 — Engine ground:*** ***(E34) No. 2 — Engine ground:***	Is the resistance less than 5 Ω?	Go to step **5**.	Repair the open circuit in harness between ignition coil connector and engine grounding terminal.
5	**CHECK HARNESS BETWEEN ECM AND IGNITION COIL CONNECTOR.** 1) Disconnect the connectors from ECM. 2) Measure the resistance of harness between ECM and ignition coil connector. ***Connector & terminal*** ***(B134) No. 21 — (E31) No. 1:*** ***(B134) No. 22 — (E32) No. 1:*** ***(B134) No. 31 — (E33) No. 1:*** ***(B134) No. 32 — (E34) No. 1:***	Is the resistance less than 1 Ω?	Go to step **6**.	Repair the harness and connector. NOTE: In this case, repair the following item: • Open circuit of harness between ECM and ignition coil connector • Poor contact of coupling connector
6	**CHECK HARNESS BETWEEN ECM AND IGNITION COIL CONNECTOR.** Measure the resistance of harness between ECM and engine ground. ***Connector & terminal*** ***(B134) No. 21 — Engine ground:*** ***(B134) No. 22 — Engine ground:*** ***(B134) No. 31 — Engine ground:*** ***(B134) No. 32 — Engine ground:***	Is the resistance 1 MΩ or more?	Go to step **7**.	Repair the ground short circuit of harness between ECM and ignition coil connector.
7	**CHECK FOR POOR CONTACT.** Check for poor contact of ECM connector.	Is there poor contact of ECM connector?	Repair the poor contact of ECM connector.	Replace the ignition coil. <Ref. to IG(H4DOTC)-6, Ignition Coil.>

E: FUEL PUMP CIRCUIT

CAUTION:
After servicing or replacing faulty parts, perform Clear Memory Mode <Ref. to EN(H4DOTC)(diag)-53, OPERATION, Clear Memory Mode.>, and Inspection Mode <Ref. to EN(H4DOTC)(diag)-41, PROCEDURE, Inspection Mode.>.

	Step	Check	Yes	No
1	**CHECK OPERATING SOUND OF FUEL PUMP.** Make sure that the fuel pump operates for two seconds when turning the ignition switch to ON. NOTE: Fuel pump operation can be executed using the Subaru Select Monitor. For detailed procedures, refer to "SYSTEM OPERATION CHECK MODE". <Ref. to EN(H4DOTC)(diag)-54, System Operation Check Mode.>	Does the fuel pump emit operating sound?	Check the fuel injector circuit. <Ref. to EN(H4DOTC)(diag)-71, FUEL INJECTOR CIRCUIT, Diagnostics for Engine Starting Failure.>	Display the DTC. <Ref. to EN(H4DOTC)(diag)-40, OPERATION, Read Diagnostic Trouble Code (DTC).>

F: FUEL INJECTOR CIRCUIT

CAUTION:
- **Check or repair only faulty parts.**
- **After servicing or replacing faulty parts, perform Clear Memory Mode <Ref. to EN(H4DOTC)(diag)-53, OPERATION, Clear Memory Mode.>, and Inspection Mode <Ref. to EN(H4DOTC)(diag)-41, PROCEDURE, Inspection Mode.>.**

WIRING DIAGRAM:

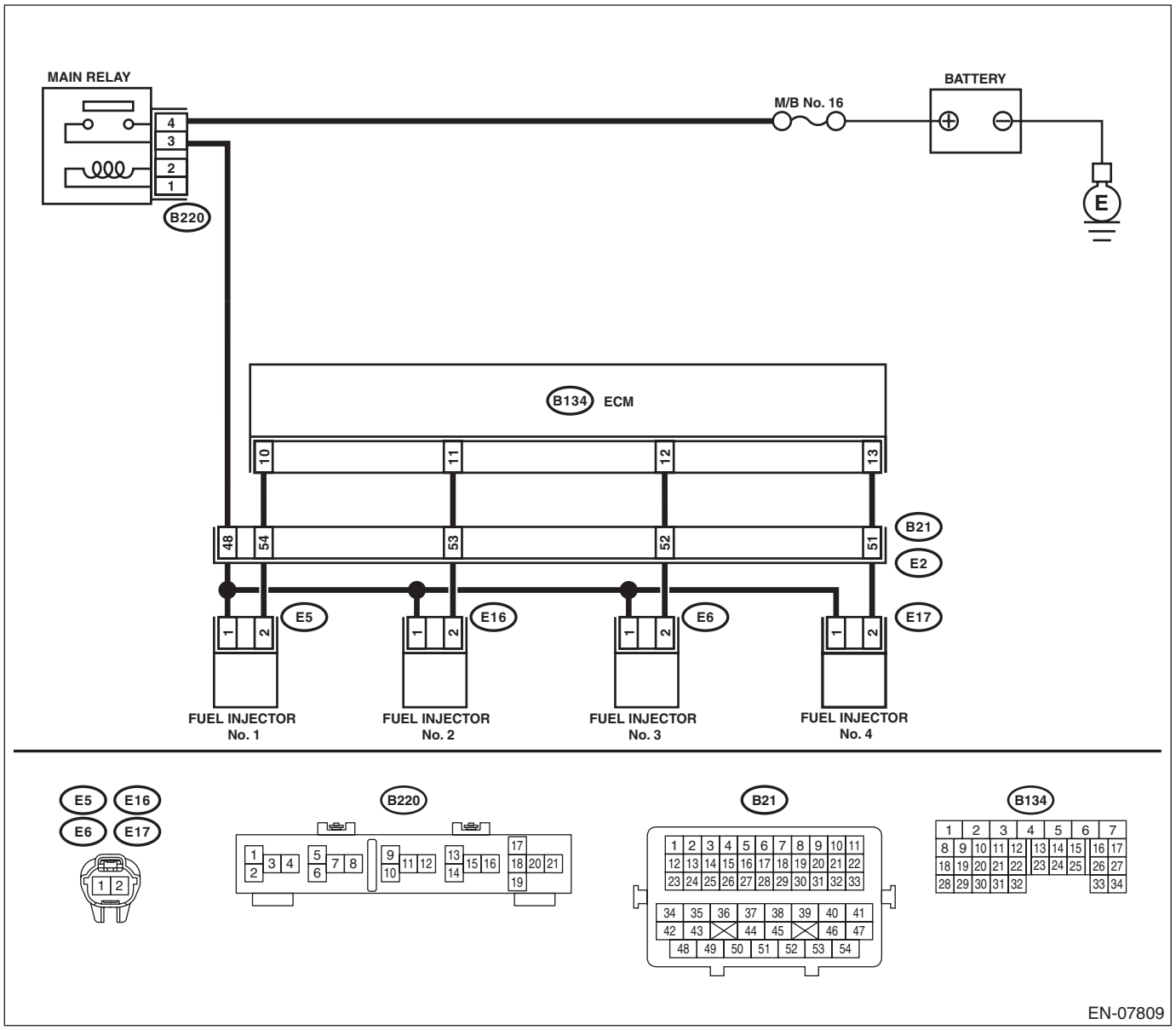

Step		Check	Yes	No
1	**CHECK OPERATION OF EACH FUEL INJECTOR.** While cranking the engine, check each fuel injector emits operating sound. Use a sound scope or attach a screwdriver to the injector for this check.	Does the fuel injector emit operating sound?	Check the fuel pressure. <Ref. to ME(H4DOTC)-26, INSPECTION, Fuel Pressure.>	Go to step **2**.

	Step	Check	Yes	No
2	**CHECK POWER SUPPLY TO EACH FUEL INJECTOR.** 1) Turn the ignition switch to OFF. 2) Disconnect the connector from fuel injector. 3) Turn the ignition switch to ON. 4) Measure the voltage between fuel injector connector and the engine ground. ***Connector & terminal*** ***#1 (E5) No. 1 (+) — Engine ground (–):*** ***#2 (E16) No. 1 (+) — Engine ground (–):*** ***#3 (E6) No. 1 (+) — Engine ground (–):*** ***#4 (E17) No. 1 (+) — Engine ground (–):***	Is the voltage 10 V or more?	Go to step **3**.	Repair the harness and connector. NOTE: In this case, repair the following item: • Open circuit in harness between main relay and fuel injector connector • Poor contact of main relay connector • Poor contact of coupling connector
3	**CHECK HARNESS BETWEEN ECM AND FUEL INJECTOR CONNECTOR.** 1) Turn the ignition switch to OFF. 2) Disconnect the connectors from ECM. 3) Measure the resistance of harness between ECM and fuel injector connector. ***Connector & terminal*** ***#1 (B134) No. 10 — (E5) No. 2:*** ***#2 (B134) No. 11 — (E16) No. 2:*** ***#3 (B134) No. 12 — (E6) No. 2:*** ***#4 (B134) No. 13 — (E17) No. 2:***	Is the resistance less than 1 Ω?	Go to step **4**.	Repair the harness and connector. NOTE: In this case, repair the following item: • Open circuit in harness between ECM and fuel injector connector • Poor contact of coupling connector
4	**CHECK HARNESS BETWEEN ECM AND FUEL INJECTOR CONNECTOR.** Measure the resistance between ECM and chassis ground. ***Connector & terminal*** ***#1 (B134) No. 10 — Chassis ground:*** ***#2 (B134) No. 11 — Chassis ground:*** ***#3 (B134) No. 12 — Chassis ground:*** ***#4 (B134) No. 13 — Chassis ground:***	Is the resistance 1 MΩ or more?	Go to step **5**.	Repair the short circuit to ground in harness between ECM and fuel injector connector.
5	**CHECK EACH FUEL INJECTOR.** Measure the resistance between each fuel injector terminals. ***Terminals*** ***No. 1 — No. 2:***	Is the resistance 5 — 20 Ω?	Go to step **6**.	Replace the faulty fuel injector. <Ref. to FU(H4DOTC)-45, Fuel Injector.>
6	**CHECK FOR POOR CONTACT.** Check for poor contact of ECM connector.	Is there poor contact of ECM connector?	Repair the poor contact of ECM connector.	Inspection using “General Diagnostic Table”. <Ref. to EN(H4DOTC)(diag)-339, INSPECTION, General Diagnostic Table.>

17.Diagnostic Procedure for Subaru Select Monitor Communication

A: COMMUNICATION FOR INITIALIZING IMPOSSIBLE

DIAGNOSIS:
Open or short circuit in data link connector
TROUBLE SYMPTOM:
Subaru Select Monitor communication failure
WIRING DIAGRAM:

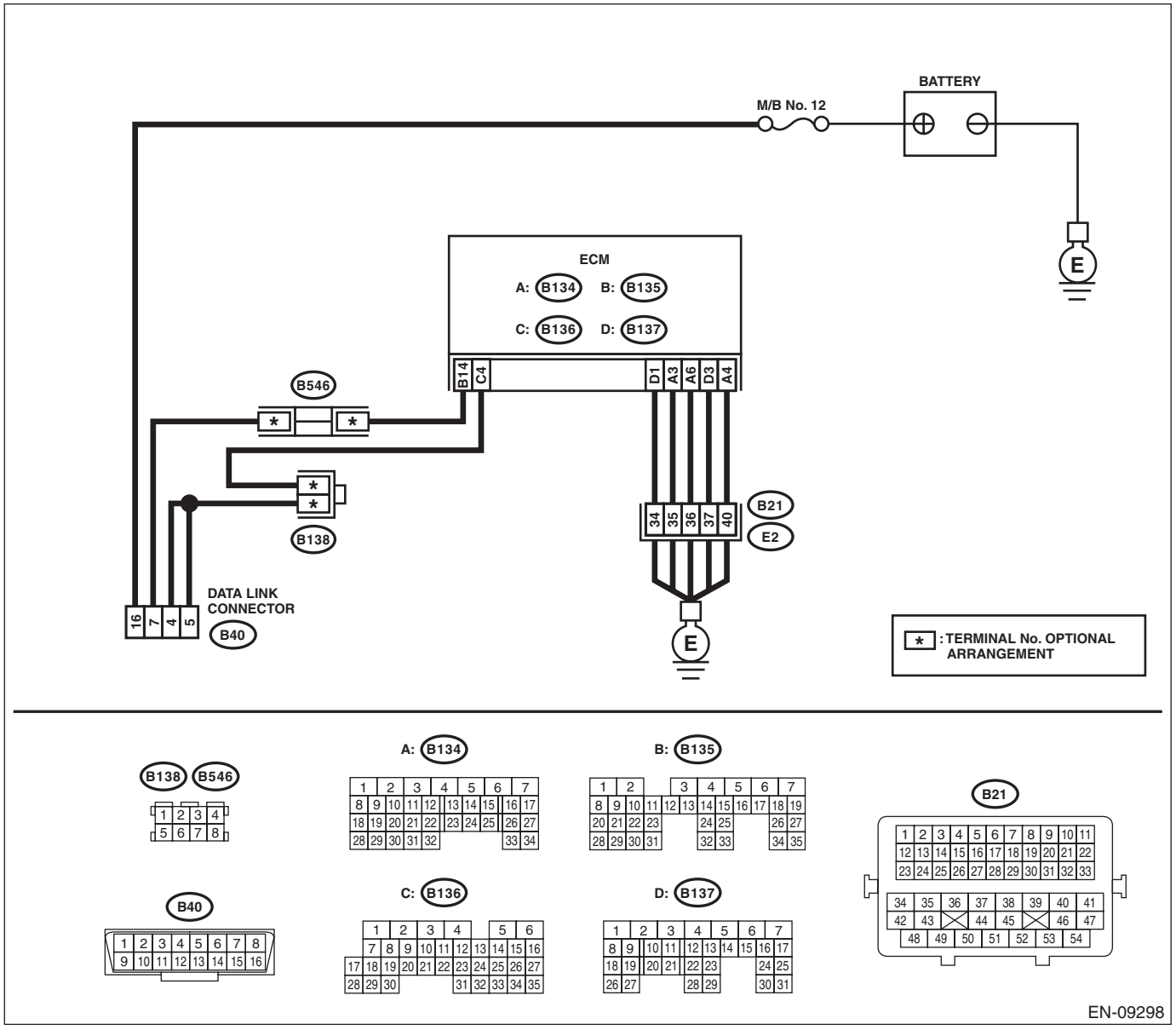

Step		Check	Yes	No
1	**CHECK POWER SUPPLY CIRCUIT.** Connect the SDI (Subaru Diagnosis Interface) or general scan tool to data link connector.	Does SDI or general scan tool turn ON?	Go to step **4**.	Go to step **2**.

	Step	Check	Yes	No
2	**CHECK POWER SUPPLY CIRCUIT.** Measure the voltage between data link connector and chassis ground. ***Connector & terminal*** ***(B40) No. 16 (+) — Chassis ground (–):***	Is the voltage 10 V or more?	Go to step **3**.	Repair the power supply circuit. NOTE: In this case, repair the following item: • Open or ground short circuit of harness between battery and data link connector • Blown out of fuse (M/B No. 12)
3	**CHECK HARNESS BETWEEN DATA LINK CONNECTOR AND CHASSIS GROUND.** 1) Turn the ignition switch to OFF. 2) Measure the resistance of harness between data link connector and chassis ground. ***Connector & terminal*** ***(B40) No. 4 — Chassis ground:*** ***(B40) No. 5 — Chassis ground:***	Is the resistance less than 5 Ω?	Repair the poor contact of data link connector.	Repair the harness and connector. NOTE: In this case, repair the following item: • Open circuit of harness between ECM and data link connector • Open circuit of harness between ECM and engine ground • Poor contact of ECM connector • Poor contact of coupling connector
4	**CHECK HARNESS BETWEEN ECM AND DATA LINK CONNECTOR.** 1) Turn the ignition switch to OFF. 2) Disconnect the connector from ECM, TCM, VDC CM, airbag CM and body integrated unit. **CAUTION:** **When disconnecting the connector from airbag CM, always follow the precautions on AB section. <Ref. to AB-9, CAUTION, General Description.>** 3) Measure the resistance of harness between ECM and data link connector. ***Connector & terminal*** ***(B135) No. 14 — (B40) No. 7:***	Is the resistance less than 1 Ω?	Go to step **5**.	Repair the harness and connector. NOTE: In this case, repair the following item: • Open circuit of harness between ECM and data link connector • Poor contact of coupling connector
5	**CHECK HARNESS BETWEEN ECM AND DATA LINK CONNECTOR.** Measure the resistance between data link connector and chassis ground. ***Connector & terminal*** ***(B40) No. 7 — Chassis ground:***	Is the resistance 1 MΩ or more?	Repair the poor contact of the ECM or data link connector.	Repair the ground short circuit of harness between ECM and data link connector.

18.List of Diagnostic Trouble Code (DTC)

A: LIST

DTC	Item	Note
P0011	Intake Camshaft Position - Timing Over-Advanced or System Performance (Bank 1)	<Ref. to EN(H4DOTC)(diag)-84, DTC P0011 INTAKE CAMSHAFT POSITION - TIMING OVER-ADVANCED OR SYSTEM PERFORMANCE (BANK 1), Diagnostic Procedure with Diagnostic Trouble Code (DTC).>
P0014	Exhaust AVCS System 1 (Range/Performance)	<Ref. to EN(H4DOTC)(diag)-85, DTC P0014 EXHAUST AVCS SYSTEM 1 (RANGE/PERFORMANCE), Diagnostic Procedure with Diagnostic Trouble Code (DTC).>
P0016	Crankshaft Position - Camshaft Position Correlation (Bank1)	<Ref. to EN(H4DOTC)(diag)-86, DTC P0016 CRANKSHAFT POSITION - CAMSHAFT POSITION CORRELATION (BANK1), Diagnostic Procedure with Diagnostic Trouble Code (DTC).>
P0017	Crank and Cam Timing B System Failure (Bank 1)	<Ref. to EN(H4DOTC)(diag)-87, DTC P0017 CRANK AND CAM TIMING B SYSTEM FAILURE (BANK 1), Diagnostic Procedure with Diagnostic Trouble Code (DTC).>
P0018	Crankshaft Position - Camshaft Position Correlation (Bank2)	<Ref. to EN(H4DOTC)(diag)-88, DTC P0018 CRANKSHAFT POSITION - CAMSHAFT POSITION CORRELATION (BANK2), Diagnostic Procedure with Diagnostic Trouble Code (DTC).>
P0019	Crank and Cam Timing B System Failure (Bank 2)	<Ref. to EN(H4DOTC)(diag)-89, DTC P0019 CRANK AND CAM TIMING B SYSTEM FAILURE (BANK 2), Diagnostic Procedure with Diagnostic Trouble Code (DTC).>
P0021	Intake Camshaft Position - Timing Over-Advanced or System Performance (Bank 2)	<Ref. to EN(H4DOTC)(diag)-90, DTC P0021 INTAKE CAMSHAFT POSITION - TIMING OVER-ADVANCED OR SYSTEM PERFORMANCE (BANK 2), Diagnostic Procedure with Diagnostic Trouble Code (DTC).>
P0024	Exhaust AVCS System 2 (Range/Performance)	<Ref. to EN(H4DOTC)(diag)-91, DTC P0024 EXHAUST AVCS SYSTEM 2 (RANGE/PERFORMANCE), Diagnostic Procedure with Diagnostic Trouble Code (DTC).>
P0030	HO2S Heater Control Circuit (Bank 1 Sensor 1)	<Ref. to EN(H4DOTC)(diag)-92, DTC P0030 HO2S HEATER CONTROL CIRCUIT (BANK 1 SENSOR 1), Diagnostic Procedure with Diagnostic Trouble Code (DTC).>
P0031	HO2S Heater Control Circuit Low (Bank 1 Sensor 1)	<Ref. to EN(H4DOTC)(diag)-94, DTC P0031 HO2S HEATER CONTROL CIRCUIT LOW (BANK 1 SENSOR 1), Diagnostic Procedure with Diagnostic Trouble Code (DTC).>
P0032	HO2S Heater Control Circuit High (Bank 1 Sensor 1)	<Ref. to EN(H4DOTC)(diag)-96, DTC P0032 HO2S HEATER CONTROL CIRCUIT HIGH (BANK 1 SENSOR 1), Diagnostic Procedure with Diagnostic Trouble Code (DTC).>
P0037	HO2S Heater Control Circuit Low (Bank 1 Sensor 2)	<Ref. to EN(H4DOTC)(diag)-98, DTC P0037 HO2S HEATER CONTROL CIRCUIT LOW (BANK 1 SENSOR 2), Diagnostic Procedure with Diagnostic Trouble Code (DTC).>
P0038	HO2S Heater Control Circuit High (Bank 1 Sensor 2)	<Ref. to EN(H4DOTC)(diag)-100, DTC P0038 HO2S HEATER CONTROL CIRCUIT HIGH (BANK 1 SENSOR 2), Diagnostic Procedure with Diagnostic Trouble Code (DTC).>
P0068	MAP/MAF - Throttle Position Correlation	<Ref. to EN(H4DOTC)(diag)-102, DTC P0068 MAP/MAF - THROTTLE POSITION CORRELATION, Diagnostic Procedure with Diagnostic Trouble Code (DTC).>
P0101	Mass or Volume Air Flow Circuit Range/Performance	<Ref. to EN(H4DOTC)(diag)-103, DTC P0101 MASS OR VOLUME AIR FLOW CIRCUIT RANGE/PERFORMANCE, Diagnostic Procedure with Diagnostic Trouble Code (DTC).>
P0102	Mass or Volume Air Flow Circuit Low Input	<Ref. to EN(H4DOTC)(diag)-104, DTC P0102 MASS OR VOLUME AIR FLOW CIRCUIT LOW INPUT, Diagnostic Procedure with Diagnostic Trouble Code (DTC).>
P0103	Mass or Volume Air Flow Circuit High Input	<Ref. to EN(H4DOTC)(diag)-106, DTC P0103 MASS OR VOLUME AIR FLOW CIRCUIT HIGH INPUT, Diagnostic Procedure with Diagnostic Trouble Code (DTC).>

DTC	Item	Note
P0107	Manifold Absolute Pressure/Barometric Pressure Circuit Low Input	<Ref. to EN(H4DOTC)(diag)-108, DTC P0107 MANIFOLD ABSOLUTE PRESSURE/BAROMETRIC PRESSURE CIRCUIT LOW INPUT, Diagnostic Procedure with Diagnostic Trouble Code (DTC).>
P0108	Manifold Absolute Pressure/Barometric Pressure Circuit High Input	<Ref. to EN(H4DOTC)(diag)-110, DTC P0108 MANIFOLD ABSOLUTE PRESSURE/BAROMETRIC PRESSURE CIRCUIT HIGH INPUT, Diagnostic Procedure with Diagnostic Trouble Code (DTC).>
P0111	Intake Air Temperature Sensor 1 Circuit Range/Performance	<Ref. to EN(H4DOTC)(diag)-112, DTC P0111 INTAKE AIR TEMPERATURE SENSOR 1 CIRCUIT RANGE/PERFORMANCE, Diagnostic Procedure with Diagnostic Trouble Code (DTC).>
P0112	Intake Air Temperature Sensor 1 Circuit Low	<Ref. to EN(H4DOTC)(diag)-113, DTC P0112 INTAKE AIR TEMPERATURE SENSOR 1 CIRCUIT LOW, Diagnostic Procedure with Diagnostic Trouble Code (DTC).>
P0113	Intake Air Temperature Sensor 1 Circuit High	<Ref. to EN(H4DOTC)(diag)-115, DTC P0113 INTAKE AIR TEMPERATURE SENSOR 1 CIRCUIT HIGH, Diagnostic Procedure with Diagnostic Trouble Code (DTC).>
P0117	Engine Coolant Temperature Circuit Low	<Ref. to EN(H4DOTC)(diag)-117, DTC P0117 ENGINE COOLANT TEMPERATURE CIRCUIT LOW, Diagnostic Procedure with Diagnostic Trouble Code (DTC).>
P0118	Engine Coolant Temperature Circuit High	<Ref. to EN(H4DOTC)(diag)-119, DTC P0118 ENGINE COOLANT TEMPERATURE CIRCUIT HIGH, Diagnostic Procedure with Diagnostic Trouble Code (DTC).>
P0122	Throttle/Pedal Position Sensor/Switch “A” Circuit Low	<Ref. to EN(H4DOTC)(diag)-121, DTC P0122 THROTTLE/PEDAL POSITION SENSOR/SWITCH “A” CIRCUIT LOW, Diagnostic Procedure with Diagnostic Trouble Code (DTC).>
P0123	Throttle/Pedal Position Sensor/Switch “A” Circuit High	<Ref. to EN(H4DOTC)(diag)-123, DTC P0123 THROTTLE/PEDAL POSITION SENSOR/SWITCH “A” CIRCUIT HIGH, Diagnostic Procedure with Diagnostic Trouble Code (DTC).>
P0125	Insufficient Coolant Temperature for Closed Loop Fuel Control	<Ref. to EN(H4DOTC)(diag)-125, DTC P0125 INSUFFICIENT COOLANT TEMPERATURE FOR CLOSED LOOP FUEL CONTROL, Diagnostic Procedure with Diagnostic Trouble Code (DTC).>
P0126	Insufficient Engine Coolant Temperature for Stable Operation	<Ref. to EN(H4DOTC)(diag)-126, DTC P0126 INSUFFICIENT ENGINE COOLANT TEMPERATURE FOR STABLE OPERATION, Diagnostic Procedure with Diagnostic Trouble Code (DTC).>
P0128	Coolant Thermostat (Engine Coolant Temperature Below Thermostat Regulating Temperature)	<Ref. to EN(H4DOTC)(diag)-127, DTC P0128 COOLANT THERMOSTAT (ENGINE COOLANT TEMPERATURE BELOW THERMOSTAT REGULATING TEMPERATURE), Diagnostic Procedure with Diagnostic Trouble Code (DTC).>
P0131	O2 Sensor Circuit Low Voltage (Bank 1 Sensor 1)	<Ref. to EN(H4DOTC)(diag)-128, DTC P0131 O2 SENSOR CIRCUIT LOW VOLTAGE (BANK 1 SENSOR 1), Diagnostic Procedure with Diagnostic Trouble Code (DTC).>
P0132	O2 Sensor Circuit High Voltage (Bank 1 Sensor 1)	<Ref. to EN(H4DOTC)(diag)-130, DTC P0132 O2 SENSOR CIRCUIT HIGH VOLTAGE (BANK 1 SENSOR 1), Diagnostic Procedure with Diagnostic Trouble Code (DTC).>
P0133	O2 Sensor Circuit Slow Response (Bank 1 Sensor 1)	<Ref. to EN(H4DOTC)(diag)-132, DTC P0133 O2 SENSOR CIRCUIT SLOW RESPONSE (BANK 1 SENSOR 1), Diagnostic Procedure with Diagnostic Trouble Code (DTC).>
P0134	O2 Sensor Circuit No Activity Detected (Bank 1 Sensor 1)	<Ref. to EN(H4DOTC)(diag)-133, DTC P0134 O2 SENSOR CIRCUIT NO ACTIVITY DETECTED (BANK 1 SENSOR 1), Diagnostic Procedure with Diagnostic Trouble Code (DTC).>
P0137	O2 Sensor Circuit Low Voltage (Bank 1 Sensor 2)	<Ref. to EN(H4DOTC)(diag)-135, DTC P0137 O2 SENSOR CIRCUIT LOW VOLTAGE (BANK 1 SENSOR 2), Diagnostic Procedure with Diagnostic Trouble Code (DTC).>
P0138	O2 Sensor Circuit High Voltage (Bank 1 Sensor 2)	<Ref. to EN(H4DOTC)(diag)-137, DTC P0138 O2 SENSOR CIRCUIT HIGH VOLTAGE (BANK 1 SENSOR 2), Diagnostic Procedure with Diagnostic Trouble Code (DTC).>

DTC	Item	Note
P013A	O2 Sensor Slow Response - Rich to Lean (Bank 1 Sensor 2)	<Ref. to EN(H4DOTC)(diag)-139, DTC P013A O2 SENSOR SLOW RESPONSE - RICH TO LEAN (BANK 1 SENSOR 2), Diagnostic Procedure with Diagnostic Trouble Code (DTC).>
P013B	O2 Sensor Slow Response - Lean to Rich (Bank 1 Sensor 2)	<Ref. to EN(H4DOTC)(diag)-140, DTC P013B O2 SENSOR SLOW RESPONSE - LEAN TO RICH (BANK 1 SENSOR 2), Diagnostic Procedure with Diagnostic Trouble Code (DTC).>
P013E	O2 Sensor Delayed Response - Rich to Lean (Bank 1 Sensor 2)	<Ref. to EN(H4DOTC)(diag)-140, DTC P013E O2 SENSOR DELAYED RESPONSE - RICH TO LEAN (BANK 1 SENSOR 2), Diagnostic Procedure with Diagnostic Trouble Code (DTC).>
P013F	O2 Sensor Delayed Response - Lean to Rich (Bank 1 Sensor 2)	<Ref. to EN(H4DOTC)(diag)-140, DTC P013F O2 SENSOR DELAYED RESPONSE - LEAN TO RICH (BANK 1 SENSOR 2), Diagnostic Procedure with Diagnostic Trouble Code (DTC).>
P0140	O2 Sensor Circuit No Activity Detected (Bank1 Sensor2)	<Ref. to EN(H4DOTC)(diag)-141, DTC P0140 O2 SENSOR CIRCUIT NO ACTIVITY DETECTED (BANK1 SENSOR2), Diagnostic Procedure with Diagnostic Trouble Code (DTC).>
P0141	O2 Sensor Heater Circuit (Bank1 Sensor2)	<Ref. to EN(H4DOTC)(diag)-143, DTC P0141 O2 SENSOR HEATER CIRCUIT (BANK1 SENSOR2), Diagnostic Procedure with Diagnostic Trouble Code (DTC).>
P0171	System Too Lean (Bank 1)	<Ref. to EN(H4DOTC)(diag)-143, DTC P0171 SYSTEM TOO LEAN (BANK 1), Diagnostic Procedure with Diagnostic Trouble Code (DTC).>
P0172	System Too Rich (Bank 1)	<Ref. to EN(H4DOTC)(diag)-144, DTC P0172 SYSTEM TOO RICH (BANK 1), Diagnostic Procedure with Diagnostic Trouble Code (DTC).>
P0181	Fuel Temperature Sensor “A” Circuit Range/Performance	<Ref. to EN(H4DOTC)(diag)-146, DTC P0181 FUEL TEMPERATURE SENSOR “A” CIRCUIT RANGE/PERFORMANCE, Diagnostic Procedure with Diagnostic Trouble Code (DTC).>
P0182	Fuel Temperature Sensor “A” Circuit Low Input	<Ref. to EN(H4DOTC)(diag)-147, DTC P0182 FUEL TEMPERATURE SENSOR “A” CIRCUIT LOW INPUT, Diagnostic Procedure with Diagnostic Trouble Code (DTC).>
P0183	Fuel Temperature Sensor “A” Circuit High Input	<Ref. to EN(H4DOTC)(diag)-149, DTC P0183 FUEL TEMPERATURE SENSOR “A” CIRCUIT HIGH INPUT, Diagnostic Procedure with Diagnostic Trouble Code (DTC).>
P0201	Injector #1	<Ref. to EN(H4DOTC)(diag)-151, DTC P0201 INJECTOR #1, Diagnostic Procedure with Diagnostic Trouble Code (DTC).>
P0202	Injector #2	<Ref. to EN(H4DOTC)(diag)-153, DTC P0202 INJECTOR #2, Diagnostic Procedure with Diagnostic Trouble Code (DTC).>
P0203	Injector #3	<Ref. to EN(H4DOTC)(diag)-153, DTC P0203 INJECTOR #3, Diagnostic Procedure with Diagnostic Trouble Code (DTC).>
P0204	Injector #4	<Ref. to EN(H4DOTC)(diag)-153, DTC P0204 INJECTOR #4, Diagnostic Procedure with Diagnostic Trouble Code (DTC).>
P0222	Throttle/Pedal Position Sensor/ Switch “B” Circuit Low	<Ref. to EN(H4DOTC)(diag)-154, DTC P0222 THROTTLE/PEDAL POSITION SENSOR/SWITCH “B” CIRCUIT LOW, Diagnostic Procedure with Diagnostic Trouble Code (DTC).>
P0223	Throttle/Pedal Position Sensor/ Switch “B” Circuit High	<Ref. to EN(H4DOTC)(diag)-156, DTC P0223 THROTTLE/PEDAL POSITION SENSOR/SWITCH “B” CIRCUIT HIGH, Diagnostic Procedure with Diagnostic Trouble Code (DTC).>
P0230	Fuel Pump Primary Circuit	<Ref. to EN(H4DOTC)(diag)-158, DTC P0230 FUEL PUMP PRIMARY CIRCUIT, Diagnostic Procedure with Diagnostic Trouble Code (DTC).>
P0244	Turbo/Super Charger Wastegate Solenoid “A” Range/Performance	<Ref. to EN(H4DOTC)(diag)-161, DTC P0244 TURBO/SUPER CHARGER WASTEGATE SOLENOID “A” RANGE/PERFORMANCE, Diagnostic Procedure with Diagnostic Trouble Code (DTC).>
P0245	Turbo/Super Charger Wastegate Solenoid “A” Low	<Ref. to EN(H4DOTC)(diag)-162, DTC P0245 TURBO/SUPER CHARGER WASTEGATE SOLENOID “A” LOW, Diagnostic Procedure with Diagnostic Trouble Code (DTC).>
P0246	Turbo/Super Charger Wastegate Solenoid “A” High	<Ref. to EN(H4DOTC)(diag)-165, DTC P0246 TURBO/SUPER CHARGER WASTEGATE SOLENOID “A” HIGH, Diagnostic Procedure with Diagnostic Trouble Code (DTC).>

DTC	Item	Note
P0301	Cylinder 1 Misfire Detected	<Ref. to EN(H4DOTC)(diag)-166, DTC P0301 CYLINDER 1 MISFIRE DETECTED, Diagnostic Procedure with Diagnostic Trouble Code (DTC).>
P0302	Cylinder 2 Misfire Detected	<Ref. to EN(H4DOTC)(diag)-166, DTC P0302 CYLINDER 2 MISFIRE DETECTED, Diagnostic Procedure with Diagnostic Trouble Code (DTC).>
P0303	Cylinder 3 Misfire Detected	<Ref. to EN(H4DOTC)(diag)-166, DTC P0303 CYLINDER 3 MISFIRE DETECTED, Diagnostic Procedure with Diagnostic Trouble Code (DTC).>
P0304	Cylinder 4 Misfire Detected	<Ref. to EN(H4DOTC)(diag)-167, DTC P0304 CYLINDER 4 MISFIRE DETECTED, Diagnostic Procedure with Diagnostic Trouble Code (DTC).>
P0327	Knock Sensor 1 Circuit Low (Bank 1 or Single Sensor)	<Ref. to EN(H4DOTC)(diag)-172, DTC P0327 KNOCK SENSOR 1 CIRCUIT LOW (BANK 1 OR SINGLE SENSOR), Diagnostic Procedure with Diagnostic Trouble Code (DTC).>
P0328	Knock Sensor 1 Circuit High (Bank 1 or Single Sensor)	<Ref. to EN(H4DOTC)(diag)-174, DTC P0328 KNOCK SENSOR 1 CIRCUIT HIGH (BANK 1 OR SINGLE SENSOR), Diagnostic Procedure with Diagnostic Trouble Code (DTC).>
P0335	Crankshaft Position Sensor “A” Circuit	<Ref. to EN(H4DOTC)(diag)-176, DTC P0335 CRANKSHAFT POSITION SENSOR “A” CIRCUIT, Diagnostic Procedure with Diagnostic Trouble Code (DTC).>
P0336	Crankshaft Position Sensor “A” Circuit Range/Performance	<Ref. to EN(H4DOTC)(diag)-178, DTC P0336 CRANKSHAFT POSITION SENSOR “A” CIRCUIT RANGE/PERFORMANCE, Diagnostic Procedure with Diagnostic Trouble Code (DTC).>
P0340	Camshaft Position Sensor “A” Circuit (Bank 1 or Single Sensor)	<Ref. to EN(H4DOTC)(diag)-179, DTC P0340 CAMSHAFT POSITION SENSOR “A” CIRCUIT (BANK 1 OR SINGLE SENSOR), Diagnostic Procedure with Diagnostic Trouble Code (DTC).>
P0345	Camshaft Position Sensor “A” Circuit (Bank 2)	<Ref. to EN(H4DOTC)(diag)-181, DTC P0345 CAMSHAFT POSITION SENSOR “A” CIRCUIT (BANK 2), Diagnostic Procedure with Diagnostic Trouble Code (DTC).>
P0351	Ignition Coil A Primary/Secondary Circuit	<Ref. to EN(H4DOTC)(diag)-183, DTC P0351 IGNITION COIL A PRIMARY/SECONDARY CIRCUIT, Diagnostic Procedure with Diagnostic Trouble Code (DTC).>
P0352	Ignition Coil B Primary/Secondary Circuit	<Ref. to EN(H4DOTC)(diag)-185, DTC P0352 IGNITION COIL B PRIMARY/SECONDARY CIRCUIT, Diagnostic Procedure with Diagnostic Trouble Code (DTC).>
P0353	Ignition Coil C Primary/Secondary Circuit	<Ref. to EN(H4DOTC)(diag)-185, DTC P0353 IGNITION COIL C PRIMARY/SECONDARY CIRCUIT, Diagnostic Procedure with Diagnostic Trouble Code (DTC).>
P0354	Ignition Coil D Primary/Secondary Circuit	<Ref. to EN(H4DOTC)(diag)-185, DTC P0354 IGNITION COIL D PRIMARY/SECONDARY CIRCUIT, Diagnostic Procedure with Diagnostic Trouble Code (DTC).>
P0365	Camshaft Position Sensor “B” Circuit (Bank 1)	<Ref. to EN(H4DOTC)(diag)-186, DTC P0365 CAMSHAFT POSITION SENSOR “B” CIRCUIT (BANK 1), Diagnostic Procedure with Diagnostic Trouble Code (DTC).>
P0390	Camshaft Position Sensor “B” Circuit (Bank 2)	<Ref. to EN(H4DOTC)(diag)-188, DTC P0390 CAMSHAFT POSITION SENSOR “B” CIRCUIT (BANK 2), Diagnostic Procedure with Diagnostic Trouble Code (DTC).>
P0420	Catalyst System Efficiency Below Threshold (Bank 1)	<Ref. to EN(H4DOTC)(diag)-190, DTC P0420 CATALYST SYSTEM EFFICIENCY BELOW THRESHOLD (BANK 1), Diagnostic Procedure with Diagnostic Trouble Code (DTC).>
P0442	Evaporative Emission Control System Leak Detected (Small Leak)	<Ref. to EN(H4DOTC)(diag)-194, DTC P0442 EVAPORATIVE EMISSION CONTROL SYSTEM LEAK DETECTED (SMALL LEAK), Diagnostic Procedure with Diagnostic Trouble Code (DTC).>
P0447	Evaporative Emission Control System Vent Control Circuit Open	<Ref. to EN(H4DOTC)(diag)-196, DTC P0447 EVAPORATIVE EMISSION CONTROL SYSTEM VENT CONTROL CIRCUIT OPEN, Diagnostic Procedure with Diagnostic Trouble Code (DTC).>
P0448	Evaporative Emission Control System Vent Control Circuit Shorted	<Ref. to EN(H4DOTC)(diag)-198, DTC P0448 EVAPORATIVE EMISSION CONTROL SYSTEM VENT CONTROL CIRCUIT SHORTED, Diagnostic Procedure with Diagnostic Trouble Code (DTC).>

DTC	Item	Note
P0451	Evaporative Emission Control System Pressure Sensor	<Ref. to EN(H4DOTC)(diag)-200, DTC P0451 EVAPORATIVE EMISSION CONTROL SYSTEM PRESSURE SENSOR, Diagnostic Procedure with Diagnostic Trouble Code (DTC).>
P0452	Evaporative Emission Control System Pressure Sensor Low Input	<Ref. to EN(H4DOTC)(diag)-201, DTC P0452 EVAPORATIVE EMISSION CONTROL SYSTEM PRESSURE SENSOR LOW INPUT, Diagnostic Procedure with Diagnostic Trouble Code (DTC).>
P0453	Evaporative Emission Control System Pressure Sensor High Input	<Ref. to EN(H4DOTC)(diag)-203, DTC P0453 EVAPORATIVE EMISSION CONTROL SYSTEM PRESSURE SENSOR HIGH INPUT, Diagnostic Procedure with Diagnostic Trouble Code (DTC).>
P0456	Evaporative Emission Control System Leak Detected (Very Small Leak)	<Ref. to EN(H4DOTC)(diag)-205, DTC P0456 EVAPORATIVE EMISSION CONTROL SYSTEM LEAK DETECTED (VERY SMALL LEAK), Diagnostic Procedure with Diagnostic Trouble Code (DTC).>
P0457	Evaporative Emission Control System Leak Detected (Fuel Cap Loose/Off)	<Ref. to EN(H4DOTC)(diag)-207, DTC P0457 EVAPORATIVE EMISSION CONTROL SYSTEM LEAK DETECTED (FUEL CAP LOOSE/OFF), Diagnostic Procedure with Diagnostic Trouble Code (DTC).>
P0458	Evaporative Emission System Purge Control Valve Circuit Low	<Ref. to EN(H4DOTC)(diag)-209, DTC P0458 EVAPORATIVE EMISSION SYSTEM PURGE CONTROL VALVE CIRCUIT LOW, Diagnostic Procedure with Diagnostic Trouble Code (DTC).>
P0459	Evaporative Emission System Purge Control Valve Circuit High	<Ref. to EN(H4DOTC)(diag)-211, DTC P0459 EVAPORATIVE EMISSION SYSTEM PURGE CONTROL VALVE CIRCUIT HIGH, Diagnostic Procedure with Diagnostic Trouble Code (DTC).>
P0461	Fuel Level Sensor “A” Circuit Range/Performance	<Ref. to EN(H4DOTC)(diag)-213, DTC P0461 FUEL LEVEL SENSOR “A” CIRCUIT RANGE/PERFORMANCE, Diagnostic Procedure with Diagnostic Trouble Code (DTC).>
P0462	Fuel Level Sensor “A” Circuit Low	<Ref. to EN(H4DOTC)(diag)-213, DTC P0462 FUEL LEVEL SENSOR “A” CIRCUIT LOW, Diagnostic Procedure with Diagnostic Trouble Code (DTC).>
P0463	Fuel Level Sensor “A” Circuit High	<Ref. to EN(H4DOTC)(diag)-214, DTC P0463 FUEL LEVEL SENSOR “A” CIRCUIT HIGH, Diagnostic Procedure with Diagnostic Trouble Code (DTC).>
P0464	Fuel Level Sensor Circuit Intermittent	<Ref. to EN(H4DOTC)(diag)-215, DTC P0464 FUEL LEVEL SENSOR CIRCUIT INTERMITTENT, Diagnostic Procedure with Diagnostic Trouble Code (DTC).>
P0500	Vehicle Speed Sensor “A”	<Ref. to EN(H4DOTC)(diag)-215, DTC P0500 VEHICLE SPEED SENSOR “A”, Diagnostic Procedure with Diagnostic Trouble Code (DTC).>
P0506	Idle Air Control System RPM Lower Than Expected	<Ref. to EN(H4DOTC)(diag)-216, DTC P0506 IDLE AIR CONTROL SYSTEM RPM LOWER THAN EXPECTED, Diagnostic Procedure with Diagnostic Trouble Code (DTC).>
P0507	Idle Air Control System RPM Higher Than Expected	<Ref. to EN(H4DOTC)(diag)-217, DTC P0507 IDLE AIR CONTROL SYSTEM RPM HIGHER THAN EXPECTED, Diagnostic Procedure with Diagnostic Trouble Code (DTC).>
P050A	Cold Start Idle Air Control System Performance	<Ref. to EN(H4DOTC)(diag)-218, DTC P050A COLD START IDLE AIR CONTROL SYSTEM PERFORMANCE, Diagnostic Procedure with Diagnostic Trouble Code (DTC).>
P050B	Cold Start Ignition Timing Performance	<Ref. to EN(H4DOTC)(diag)-226, DTC P050B COLD START IGNITION TIMING PERFORMANCE, Diagnostic Procedure with Diagnostic Trouble Code (DTC).>
P0512	Starter Request Circuit	<Ref. to EN(H4DOTC)(diag)-227, DTC P0512 STARTER REQUEST CIRCUIT, Diagnostic Procedure with Diagnostic Trouble Code (DTC).>
P0513	Incorrect Immobilizer Key	<Ref. to IM(diag)-16, DTC P0513 INCORRECT IMMOBILIZER KEY, Diagnostic Procedure with Diagnostic Trouble Code (DTC).>
P0604	Internal Control Module Random Access Memory (RAM) Error	<Ref. to EN(H4DOTC)(diag)-229, DTC P0604 INTERNAL CONTROL MODULE RANDOM ACCESS MEMORY (RAM) ERROR, Diagnostic Procedure with Diagnostic Trouble Code (DTC).>
P0605	Internal Control Module Read Only Memory (ROM) Error	<Ref. to EN(H4DOTC)(diag)-229, DTC P0605 INTERNAL CONTROL MODULE READ ONLY MEMORY (ROM) ERROR, Diagnostic Procedure with Diagnostic Trouble Code (DTC).>

DTC	Item	Note
P0607	Throttle Control System Circuit Range/Performance	<Ref. to EN(H4DOTC)(diag)-230, DTC P0607 THROTTLE CONTROL SYSTEM CIRCUIT RANGE/PERFORMANCE, Diagnostic Procedure with Diagnostic Trouble Code (DTC).>
P0638	Throttle Actuator Control Range/ Performance (Bank 1)	<Ref. to EN(H4DOTC)(diag)-231, DTC P0638 THROTTLE ACTUATOR CONTROL RANGE/PERFORMANCE (BANK 1), Diagnostic Procedure with Diagnostic Trouble Code (DTC).>
P0851	Neutral Switch Input Circuit Low (MT Model)	<Ref. to EN(H4DOTC)(diag)-232, DTC P0851 NEUTRAL SWITCH INPUT CIRCUIT LOW (MT MODEL), Diagnostic Procedure with Diagnostic Trouble Code (DTC).>
P0852	Neutral Switch Input Circuit High (MT Model)	<Ref. to EN(H4DOTC)(diag)-234, DTC P0852 NEUTRAL SWITCH INPUT CIRCUIT HIGH (MT MODEL), Diagnostic Procedure with Diagnostic Trouble Code (DTC).>
P1152	O2 Sensor Circuit Range/Performance (Low) (Bank1 Sensor1)	<Ref. to EN(H4DOTC)(diag)-236, DTC P1152 O2 SENSOR CIRCUIT RANGE/PERFORMANCE (LOW) (BANK1 SENSOR1), Diagnostic Procedure with Diagnostic Trouble Code (DTC).>
P1153	O2 Sensor Circuit Range/Performance (High) (Bank1 Sensor1)	<Ref. to EN(H4DOTC)(diag)-238, DTC P1153 O2 SENSOR CIRCUIT RANGE/PERFORMANCE (HIGH) (BANK1 SENSOR1), Diagnostic Procedure with Diagnostic Trouble Code (DTC).>
P1160	Return Spring Failure	<Ref. to EN(H4DOTC)(diag)-239, DTC P1160 RETURN SPRING FAILURE, Diagnostic Procedure with Diagnostic Trouble Code (DTC).>
P1400	Fuel Tank Pressure Control Solenoid Valve Circuit Low	<Ref. to EN(H4DOTC)(diag)-240, DTC P1400 FUEL TANK PRESSURE CONTROL SOLENOID VALVE CIRCUIT LOW, Diagnostic Procedure with Diagnostic Trouble Code (DTC).>
P1420	Fuel Tank Pressure Control Sol. Valve Circuit High	<Ref. to EN(H4DOTC)(diag)-242, DTC P1420 FUEL TANK PRESSURE CONTROL SOL. VALVE CIRCUIT HIGH, Diagnostic Procedure with Diagnostic Trouble Code (DTC).>
P1443	Vent Control Solenoid Valve Function Problem	<Ref. to EN(H4DOTC)(diag)-244, DTC P1443 VENT CONTROL SOLENOID VALVE FUNCTION PROBLEM, Diagnostic Procedure with Diagnostic Trouble Code (DTC).>
P1458	Canister Purge Control Solenoid Valve 2	<Ref. to EN(H4DOTC)(diag)-245, DTC P1458 CANISTER PURGE CONTROL SOLENOID VALVE 2, Diagnostic Procedure with Diagnostic Trouble Code (DTC).>
P1459	Canister Purge Control Solenoid Valve 2	<Ref. to EN(H4DOTC)(diag)-247, DTC P1459 CANISTER PURGE CONTROL SOLENOID VALVE 2, Diagnostic Procedure with Diagnostic Trouble Code (DTC).>
P1518	Starter Switch Circuit Low Input	<Ref. to EN(H4DOTC)(diag)-249, DTC P1518 STARTER SWITCH CIRCUIT LOW INPUT, Diagnostic Procedure with Diagnostic Trouble Code (DTC).>
P1560	Back-Up Voltage Circuit Malfunction	<Ref. to EN(H4DOTC)(diag)-251, DTC P1560 BACK-UP VOLTAGE CIRCUIT MALFUNCTION, Diagnostic Procedure with Diagnostic Trouble Code (DTC).>
P1570	Antenna	<Ref. to IM(diag)-17, DTC P1570 ANTENNA, Diagnostic Procedure with Diagnostic Trouble Code (DTC).>
P1571	Reference Code Incompatibility	<Ref. to IM(diag)-19, DTC P1571 REFERENCE CODE INCOMPATIBILITY, Diagnostic Procedure with Diagnostic Trouble Code (DTC).>
P1572	IMM Circuit Failure (Except Antenna Circuit)	<Ref. to IM(diag)-20, DTC P1572 IMM CIRCUIT FAILURE (EXCEPT ANTENNA CIRCUIT), Diagnostic Procedure with Diagnostic Trouble Code (DTC).>
P1574	Key Communication Failure	<Ref. to IM(diag)-22, DTC P1574 KEY COMMUNICATION FAILURE, Diagnostic Procedure with Diagnostic Trouble Code (DTC).>
P1576	EGI Control Module EEPROM	<Ref. to IM(diag)-22, DTC P1576 EGI CONTROL MODULE EEPROM, Diagnostic Procedure with Diagnostic Trouble Code (DTC).>
P1577	IMM Control Module EEPROM	<Ref. to IM(diag)-23, DTC P1577 IMM CONTROL MODULE EEPROM, Diagnostic Procedure with Diagnostic Trouble Code (DTC).>
P1578	Meter Failure	<Ref. to IM(diag)-24, DTC P1578 METER FAILURE, Diagnostic Procedure with Diagnostic Trouble Code (DTC).>

DTC	Item	Note
P2004	Intake Manifold Runner Control Stuck Open (Bank 1)	<Ref. to EN(H4DOTC)(diag)-253, DTC P2004 INTAKE MANIFOLD RUNNER CONTROL STUCK OPEN (BANK 1), Diagnostic Procedure with Diagnostic Trouble Code (DTC).>
P2005	Intake Manifold Runner Control Stuck Open (Bank 2)	<Ref. to EN(H4DOTC)(diag)-254, DTC P2005 INTAKE MANIFOLD RUNNER CONTROL STUCK OPEN (BANK 2), Diagnostic Procedure with Diagnostic Trouble Code (DTC).>
P2006	Intake Manifold Runner Control Stuck Closed (Bank 1)	<Ref. to EN(H4DOTC)(diag)-255, DTC P2006 INTAKE MANIFOLD RUNNER CONTROL STUCK CLOSED (BANK 1), Diagnostic Procedure with Diagnostic Trouble Code (DTC).>
P2007	Intake Manifold Runner Control Stuck Closed (Bank 2)	<Ref. to EN(H4DOTC)(diag)-256, DTC P2007 INTAKE MANIFOLD RUNNER CONTROL STUCK CLOSED (BANK 2), Diagnostic Procedure with Diagnostic Trouble Code (DTC).>
P2008	Intake Manifold Runner Control Circuit / Open (Bank 1)	<Ref. to EN(H4DOTC)(diag)-257, DTC P2008 INTAKE MANIFOLD RUNNER CONTROL CIRCUIT / OPEN (BANK 1), Diagnostic Procedure with Diagnostic Trouble Code (DTC).>
P2009	Intake Manifold Runner Control Circuit Low (Bank 1)	<Ref. to EN(H4DOTC)(diag)-259, DTC P2009 INTAKE MANIFOLD RUNNER CONTROL CIRCUIT LOW (BANK 1), Diagnostic Procedure with Diagnostic Trouble Code (DTC).>
P2011	Intake Manifold Runner Control Circuit / Open (Bank 2)	<Ref. to EN(H4DOTC)(diag)-261, DTC P2011 INTAKE MANIFOLD RUNNER CONTROL CIRCUIT / OPEN (BANK 2), Diagnostic Procedure with Diagnostic Trouble Code (DTC).>
P2012	Intake Manifold Runner Control Circuit Low (Bank 2)	<Ref. to EN(H4DOTC)(diag)-263, DTC P2012 INTAKE MANIFOLD RUNNER CONTROL CIRCUIT LOW (BANK 2), Diagnostic Procedure with Diagnostic Trouble Code (DTC).>
P2016	Intake Manifold Runner Position Sensor / Switch Circuit Low (Bank 1)	<Ref. to EN(H4DOTC)(diag)-265, DTC P2016 INTAKE MANIFOLD RUNNER POSITION SENSOR / SWITCH CIRCUIT LOW (BANK 1), Diagnostic Procedure with Diagnostic Trouble Code (DTC).>
P2017	Intake Manifold Runner Position Sensor / Switch Circuit High (Bank 1)	<Ref. to EN(H4DOTC)(diag)-267, DTC P2017 INTAKE MANIFOLD RUNNER POSITION SENSOR / SWITCH CIRCUIT HIGH (BANK 1), Diagnostic Procedure with Diagnostic Trouble Code (DTC).>
P2021	Intake Manifold Runner Position Sensor / Switch Circuit Low (Bank 2)	<Ref. to EN(H4DOTC)(diag)-269, DTC P2021 INTAKE MANIFOLD RUNNER POSITION SENSOR / SWITCH CIRCUIT LOW (BANK 2), Diagnostic Procedure with Diagnostic Trouble Code (DTC).>
P2022	Intake Manifold Runner Position Sensor / Switch Circuit High (Bank 2)	<Ref. to EN(H4DOTC)(diag)-271, DTC P2022 INTAKE MANIFOLD RUNNER POSITION SENSOR / SWITCH CIRCUIT HIGH (BANK 2), Diagnostic Procedure with Diagnostic Trouble Code (DTC).>
P2088	Intake Camshaft Position Actuator Control Circuit Low (Bank 1)	<Ref. to EN(H4DOTC)(diag)-273, DTC P2088 INTAKE CAMSHAFT POSITION ACTUATOR CONTROL CIRCUIT LOW (BANK 1), Diagnostic Procedure with Diagnostic Trouble Code (DTC).>
P2089	Intake Camshaft Position Actuator Control Circuit High (Bank 1)	<Ref. to EN(H4DOTC)(diag)-275, DTC P2089 INTAKE CAMSHAFT POSITION ACTUATOR CONTROL CIRCUIT HIGH (BANK 1), Diagnostic Procedure with Diagnostic Trouble Code (DTC).>
P2090	Exhaust Camshaft Position Actuator Control Circuit Low (Bank 1)	<Ref. to EN(H4DOTC)(diag)-277, DTC P2090 EXHAUST CAMSHAFT POSITION ACTUATOR CONTROL CIRCUIT LOW (BANK 1), Diagnostic Procedure with Diagnostic Trouble Code (DTC).>
P2091	Exhaust Camshaft Position Actuator Control Circuit High (Bank 1)	<Ref. to EN(H4DOTC)(diag)-279, DTC P2091 EXHAUST CAMSHAFT POSITION ACTUATOR CONTROL CIRCUIT HIGH (BANK 1), Diagnostic Procedure with Diagnostic Trouble Code (DTC).>
P2092	Intake Camshaft Position Actuator Control Circuit Low (Bank 2)	<Ref. to EN(H4DOTC)(diag)-281, DTC P2092 INTAKE CAMSHAFT POSITION ACTUATOR CONTROL CIRCUIT LOW (BANK 2), Diagnostic Procedure with Diagnostic Trouble Code (DTC).>
P2093	Intake Camshaft Position Actuator Control Circuit High (Bank 2)	<Ref. to EN(H4DOTC)(diag)-283, DTC P2093 INTAKE CAMSHAFT POSITION ACTUATOR CONTROL CIRCUIT HIGH (BANK 2), Diagnostic Procedure with Diagnostic Trouble Code (DTC).>
P2094	Exhaust Camshaft Position Actuator Control Circuit Low (Bank 2)	<Ref. to EN(H4DOTC)(diag)-285, DTC P2094 EXHAUST CAMSHAFT POSITION ACTUATOR CONTROL CIRCUIT LOW (BANK 2), Diagnostic Procedure with Diagnostic Trouble Code (DTC).>

DTC	Item	Note
P2095	Exhaust Camshaft Position Actuator Control Circuit High (Bank 2)	<Ref. to EN(H4DOTC)(diag)-287, DTC P2095 EXHAUST CAMSHAFT POSITION ACTUATOR CONTROL CIRCUIT HIGH (BANK 2), Diagnostic Procedure with Diagnostic Trouble Code (DTC).>
P2096	Post Catalyst Fuel Trim System Too Lean (Bank 1)	<Ref. to EN(H4DOTC)(diag)-289, DTC P2096 POST CATALYST FUEL TRIM SYSTEM TOO LEAN (BANK 1), Diagnostic Procedure with Diagnostic Trouble Code (DTC).>
P2097	Post Catalyst Fuel Trim System Too Rich (Bank 1)	<Ref. to EN(H4DOTC)(diag)-296, DTC P2097 POST CATALYST FUEL TRIM SYSTEM TOO RICH (BANK 1), Diagnostic Procedure with Diagnostic Trouble Code (DTC).>
P2101	Throttle Actuator Control Motor Circuit Range/Performance	<Ref. to EN(H4DOTC)(diag)-303, DTC P2101 THROTTLE ACTUATOR CONTROL MOTOR CIRCUIT RANGE/PERFORMANCE, Diagnostic Procedure with Diagnostic Trouble Code (DTC).>
P2102	Throttle Actuator Control Motor Circuit Low	<Ref. to EN(H4DOTC)(diag)-308, DTC P2102 THROTTLE ACTUATOR CONTROL MOTOR CIRCUIT LOW, Diagnostic Procedure with Diagnostic Trouble Code (DTC).>
P2103	Throttle Actuator Control Motor Circuit High	<Ref. to EN(H4DOTC)(diag)-310, DTC P2103 THROTTLE ACTUATOR CONTROL MOTOR CIRCUIT HIGH, Diagnostic Procedure with Diagnostic Trouble Code (DTC).>
P2109	Throttle/Pedal Position Sensor “A” Minimum Stop Performance	<Ref. to EN(H4DOTC)(diag)-311, DTC P2109 THROTTLE/PEDAL POSITION SENSOR “A” MINIMUM STOP PERFORMANCE, Diagnostic Procedure with Diagnostic Trouble Code (DTC).>
P2122	Throttle/Pedal Position Sensor/ Switch “D” Circuit Low Input	<Ref. to EN(H4DOTC)(diag)-312, DTC P2122 THROTTLE/PEDAL POSITION SENSOR/SWITCH “D” CIRCUIT LOW INPUT, Diagnostic Procedure with Diagnostic Trouble Code (DTC).>
P2123	Throttle/Pedal Position Sensor/ Switch “D” Circuit High Input	<Ref. to EN(H4DOTC)(diag)-314, DTC P2123 THROTTLE/PEDAL POSITION SENSOR/SWITCH “D” CIRCUIT HIGH INPUT, Diagnostic Procedure with Diagnostic Trouble Code (DTC).>
P2127	Throttle/Pedal Position Sensor/ Switch “E” Circuit Low Input	<Ref. to EN(H4DOTC)(diag)-316, DTC P2127 THROTTLE/PEDAL POSITION SENSOR/SWITCH “E” CIRCUIT LOW INPUT, Diagnostic Procedure with Diagnostic Trouble Code (DTC).>
P2128	Throttle/Pedal Position Sensor/ Switch “E” Circuit High Input	<Ref. to EN(H4DOTC)(diag)-318, DTC P2128 THROTTLE/PEDAL POSITION SENSOR/SWITCH “E” CIRCUIT HIGH INPUT, Diagnostic Procedure with Diagnostic Trouble Code (DTC).>
P2135	Throttle/Pedal Position Sensor/ Switch “A”/“B” Voltage Correlation	<Ref. to EN(H4DOTC)(diag)-320, DTC P2135 THROTTLE/PEDAL POSITION SENSOR/SWITCH “A”/“B” VOLTAGE CORRELATION, Diagnostic Procedure with Diagnostic Trouble Code (DTC).>
P2138	Throttle/Pedal Position Sensor/ Switch “D”/“E” Voltage Correlation	<Ref. to EN(H4DOTC)(diag)-323, DTC P2138 THROTTLE/PEDAL POSITION SENSOR/SWITCH “D”/“E” VOLTAGE CORRELATION, Diagnostic Procedure with Diagnostic Trouble Code (DTC).>
P219A	Bank 1 Air-Fuel Ratio Imbalance	<Ref. to EN(H4DOTC)(diag)-325, DTC P219A BANK 1 AIR-FUEL RATIO IMBALANCE, Diagnostic Procedure with Diagnostic Trouble Code (DTC).>
P2227	Barometric Pressure Circuit Range/Performance	<Ref. to EN(H4DOTC)(diag)-336, DTC P2227 BAROMETRIC PRESSURE CIRCUIT RANGE/PERFORMANCE, Diagnostic Procedure with Diagnostic Trouble Code (DTC).>
P2228	Barometric Pressure Circuit Low	<Ref. to EN(H4DOTC)(diag)-336, DTC P2228 BAROMETRIC PRESSURE CIRCUIT LOW, Diagnostic Procedure with Diagnostic Trouble Code (DTC).>
P2229	Barometric Pressure Circuit High	<Ref. to EN(H4DOTC)(diag)-337, DTC P2229 BAROMETRIC PRESSURE CIRCUIT HIGH, Diagnostic Procedure with Diagnostic Trouble Code (DTC).>
P2610	ECM/PCM Internal Engine Off Timer Performance	<Ref. to EN(H4DOTC)(diag)-337, DTC P2610 ECM/PCM INTERNAL ENGINE OFF TIMER PERFORMANCE, Diagnostic Procedure with Diagnostic Trouble Code (DTC).>
U0073	CAN Failure, Bus ‘Off’ Detection	<Ref. to EN(H4DOTC)(diag)-338, DTC U0073 CAN FAILURE, BUS ‘OFF’ DETECTION, Diagnostic Procedure with Diagnostic Trouble Code (DTC).>
U0101	CAN (TCU) Data Not Loaded	<Ref. to EN(H4DOTC)(diag)-338, DTC U0101 CAN (TCU) DATA NOT LOADED, Diagnostic Procedure with Diagnostic Trouble Code (DTC).>

DTC	Item	Note
U0122	CAN (VDC) Data Not Loaded	<Ref. to EN(H4DOTC)(diag)-338, DTC U0122 CAN (VDC) DATA NOT LOADED, Diagnostic Procedure with Diagnostic Trouble Code (DTC).>
U0140	CAN (BCU) Data Not Loaded	<Ref. to EN(H4DOTC)(diag)-338, DTC U0140 CAN (BCU) DATA NOT LOADED, Diagnostic Procedure with Diagnostic Trouble Code (DTC).>
U0402	CAN (TCU) Data Abnormal	<Ref. to EN(H4DOTC)(diag)-338, DTC U0402 CAN (TCU) DATA ABNORMAL, Diagnostic Procedure with Diagnostic Trouble Code (DTC).>
U0416	CAN (VDC) Data Abnormal	<Ref. to EN(H4DOTC)(diag)-338, DTC U0416 CAN (VDC) DATA ABNORMAL, Diagnostic Procedure with Diagnostic Trouble Code (DTC).>
U0422	CAN (BCU) Data Abnormal	<Ref. to EN(H4DOTC)(diag)-338, DTC U0422 CAN (BCU) DATA ABNORMAL, Diagnostic Procedure with Diagnostic Trouble Code (DTC).>

19.Diagnostic Procedure with Diagnostic Trouble Code (DTC)

A: DTC P0011 INTAKE CAMSHAFT POSITION - TIMING OVER-ADVANCED OR SYSTEM PERFORMANCE (BANK 1)

DTC DETECTING CONDITION:

- Detected when two consecutive driving cycles with fault occur.
- GENERAL DESCRIPTION <Ref. to GD(H4DOTC)-10, DTC P0011 INTAKE CAMSHAFT POSITION - TIMING OVER-ADVANCED OR SYSTEM PERFORMANCE (BANK 1), Diagnostic Trouble Code (DTC) Detecting Criteria.>

TROUBLE SYMPTOM:

- Engine stalls.
- Improper idling

CAUTION:

After servicing or replacing faulty parts, perform Clear Memory Mode <Ref. to EN(H4DOTC)(diag)-53, OPERATION, Clear Memory Mode.>, and Inspection Mode <Ref. to EN(H4DOTC)(diag)-41, PROCEDURE, Inspection Mode.>.

	Step	Check	Yes	No
1	**CHECK CURRENT DATA.** 1) Start the engine and let it idle. 2) Read the value of «VVT Adv. Ang. Amount R» using the Subaru Select Monitor. NOTE: For detailed operation procedures, refer to “READ CURRENT DATA FOR ENGINE”. <Ref. to EN(H4DOTC)(diag)-34, Subaru Select Monitor.>	Is the value of «VVT Adv. Ang. Amount R» approx. 0 deg?	Go to step **2**.	Check the following item and repair or replace if necessary. • Oil pipe (clog) • Oil flow control solenoid valve (clog or dirt of oil routing, setting of spring) • Intake camshaft (dirt, damage of camshaft)
2	**CHECK CURRENT DATA.** 1) Drive with acceleration and deceleration at 80 km/h (50 MPH) or less. NOTE: Drive to an extent that the duty output of oil flow control solenoid valve increases. 2) Read the values of «OCV Duty R» and «VVT Adv. Ang. Amount R» using the Subaru Select Monitor. NOTE: For detailed operation procedures, refer to “READ CURRENT DATA FOR ENGINE”. <Ref. to EN(H4DOTC)(diag)-34, Subaru Select Monitor.>	When the value of «OCV Duty R» increases more than 10%, is the value of «VVT Adv. Ang. Amount R» approx. 0 deg?	Check the following item and repair or replace if necessary. • Oil pipe (clog) • Oil flow control solenoid valve (clog or dirt of oil routing, setting of spring) • Intake camshaft (dirt, damage of camshaft)	Perform the following procedures, and clean the oil routing. Replace the engine oil and idle the engine for 5 minutes, and then replace the oil filter and engine oil. <Ref. to LU(H4SO)-13, REPLACEMENT, Engine Oil.> <Ref. to LU(H4SO)-36, Engine Oil Filter.>

B: DTC P0014 EXHAUST AVCS SYSTEM 1 (RANGE/PERFORMANCE)

DTC DETECTING CONDITION:

- Detected when two consecutive driving cycles with fault occur.
- GENERAL DESCRIPTION <Ref. to GD(H4DOTC)-12, DTC P0014 EXHAUST AVCS SYSTEM 1 (RANGE/PERFORMANCE), Diagnostic Trouble Code (DTC) Detecting Criteria.>

TROUBLE SYMPTOM:

- Engine stalls.
- Improper idling

CAUTION:
After servicing or replacing faulty parts, perform Clear Memory Mode <Ref. to EN(H4DOTC)(diag)-53, OPERATION, Clear Memory Mode.>, and Inspection Mode <Ref. to EN(H4DOTC)(diag)-41, PROCEDURE, Inspection Mode.>.

	Step	Check	Yes	No
1	**CHECK CURRENT DATA.** 1) Start the engine and let it idle. 2) Read the value of «Exh. VVT Retard Ang. R» using the Subaru Select Monitor. NOTE: For detailed operation procedures, refer to “READ CURRENT DATA FOR ENGINE”. <Ref. to EN(H4DOTC)(diag)-34, Subaru Select Monitor.>	Is the value of «Exh. VVT Retard Ang. R» approx. 0 deg?	Go to step **2**.	Check the following item and repair or replace if necessary. • Oil pipe (clog) • Oil flow control solenoid valve (clog or dirt of oil routing, setting of spring) • Exhaust camshaft (dirt, damage of camshaft)
2	**CHECK CURRENT DATA.** 1) Drive with acceleration and deceleration at 80 km/h (50 MPH) or less. NOTE: Drive to an extent that the duty output of oil flow control solenoid valve increases. 2) Read the values of «Exh. OCV Duty R» and «Exh. VVT Retard Ang. R» using the Subaru Select Monitor. NOTE: For detailed operation procedures, refer to “READ CURRENT DATA FOR ENGINE”. <Ref. to EN(H4DOTC)(diag)-34, Subaru Select Monitor.>	When the value of «Exh. OCV Duty R» increases more than 10%, is the value of «Exh. VVT Retard Ang. R» approx. 0 deg?	Check the following item and repair or replace if necessary. • Oil pipe (clog) • Oil flow control solenoid valve (clog or dirt of oil routing, setting of spring) • Exhaust camshaft (dirt, damage of camshaft)	Perform the following procedures, and clean the oil routing. Replace the engine oil and idle the engine for 5 minutes, and then replace the oil filter and engine oil. <Ref. to LU(H4SO)-13, REPLACEMENT, Engine Oil.> <Ref. to LU(H4SO)-36, Engine Oil Filter.>

C: DTC P0016 CRANKSHAFT POSITION - CAMSHAFT POSITION CORRELATION (BANK1)

DTC DETECTING CONDITION:

- Detected when two consecutive driving cycles with fault occur.
- GENERAL DESCRIPTION <Ref. to GD(H4DOTC)-14, DTC P0016 CRANKSHAFT POSITION - CAMSHAFT POSITION CORRELATION (BANK1), Diagnostic Trouble Code (DTC) Detecting Criteria.>

TROUBLE SYMPTOM:

- Engine stalls.
- Improper idling

CAUTION:

After servicing or replacing faulty parts, perform Clear Memory Mode <Ref. to EN(H4DOTC)(diag)-53, OPERATION, Clear Memory Mode.>, and Inspection Mode <Ref. to EN(H4DOTC)(diag)-41, PROCEDURE, Inspection Mode.>.

	Step	Check	Yes	No
1	**CHECK CURRENT DATA.** 1) Start the engine and let it idle. 2) Read the values of «VVT Adv. Ang. Amount R» and «OCV Duty R» using the Subaru Select Monitor. NOTE: For detailed operation procedures, refer to “READ CURRENT DATA FOR ENGINE”. <Ref. to EN(H4DOTC)(diag)-34, Subaru Select Monitor.>	Is the value of «VVT Adv. Ang. Amount R» approx. 0 deg, and the value of «OCV Duty R» approx. 10%?	Perform the following procedures, and clean the oil routing. Replace the engine oil and idle the engine for 5 minutes, and then replace the oil filter and engine oil. <Ref. to LU(H4SO)-13, REPLACEMENT, Engine Oil.> <Ref. to LU(H4SO)-36, Engine Oil Filter.>	Check the following item and repair or replace if necessary. • Oil pipe (clog) • Oil flow control solenoid valve (clog or dirt of oil routing, setting of spring) • Intake camshaft (dirt, damage of camshaft) • Timing belt (matching of timing mark)

D: DTC P0017 CRANK AND CAM TIMING B SYSTEM FAILURE (BANK 1)

DTC DETECTING CONDITION:

- Detected when two consecutive driving cycles with fault occur.
- GENERAL DESCRIPTION <Ref. to GD(H4DOTC)-16, DTC P0017 CRANK AND CAM TIMING B SYSTEM FAILURE (BANK 1), Diagnostic Trouble Code (DTC) Detecting Criteria.>

TROUBLE SYMPTOM:

- Engine stalls.
- Improper idling

CAUTION:
After servicing or replacing faulty parts, perform Clear Memory Mode <Ref. to EN(H4DOTC)(diag)-53, OPERATION, Clear Memory Mode.>, and Inspection Mode <Ref. to EN(H4DOTC)(diag)-41, PROCEDURE, Inspection Mode.>.

	Step	Check	Yes	No
1	**CHECK CURRENT DATA.** 1) Start the engine and let it idle. 2) Read the values of «Exh. VVT Retard Ang. R» and «Exh. OCV Duty R» using the Subaru Select Monitor. NOTE: For detailed operation procedures, refer to “READ CURRENT DATA FOR ENGINE”. <Ref. to EN(H4DOTC)(diag)-34, Subaru Select Monitor.>	Is the value of «Exh. VVT Retard Ang. R» approx. 0 deg, and the value of «Exh. OCV Duty R» approx. 10%?	Perform the following procedures, and clean the oil routing. Replace the engine oil and idle the engine for 5 minutes, and then replace the oil filter and engine oil. <Ref. to LU(H4SO)-13, REPLACEMENT, Engine Oil.> <Ref. to LU(H4SO)-36, Engine Oil Filter.>	Check the following item and repair or replace if necessary. • Oil pipe (clog) • Oil flow control solenoid valve (clog or dirt of oil routing, setting of spring) • Exhaust camshaft (dirt, damage of camshaft) • Timing belt (matching of timing mark)

E: DTC P0018 CRANKSHAFT POSITION - CAMSHAFT POSITION CORRELATION (BANK2)

DTC DETECTING CONDITION:

- Detected when two consecutive driving cycles with fault occur.
- GENERAL DESCRIPTION <Ref. to GD(H4DOTC)-18, DTC P0018 CRANKSHAFT POSITION - CAMSHAFT POSITION CORRELATION (BANK2), Diagnostic Trouble Code (DTC) Detecting Criteria.>

TROUBLE SYMPTOM:

- Engine stalls.
- Improper idling

CAUTION:

After servicing or replacing faulty parts, perform Clear Memory Mode <Ref. to EN(H4DOTC)(diag)-53, OPERATION, Clear Memory Mode.>, and Inspection Mode <Ref. to EN(H4DOTC)(diag)-41, PROCEDURE, Inspection Mode.>.

	Step	Check	Yes	No
1	**CHECK CURRENT DATA.** 1) Start the engine and let it idle. 2) Read the values of «VVT Adv. Ang. Amount L» and «OCV Duty L» using the Subaru Select Monitor. NOTE: For detailed operation procedures, refer to “READ CURRENT DATA FOR ENGINE”. <Ref. to EN(H4DOTC)(diag)-34, Subaru Select Monitor.>	Is the value of «VVT Adv. Ang. Amount L» approx. 0 deg, and the value of «OCV Duty L» approx. 10%?	Perform the following procedures, and clean the oil routing. Replace the engine oil and idle the engine for 5 minutes, and then replace the oil filter and engine oil. <Ref. to LU(H4SO)-13, REPLACEMENT, Engine Oil.> <Ref. to LU(H4SO)-36, Engine Oil Filter.>	Check the following item and repair or replace if necessary. • Oil pipe (clog) • Oil flow control solenoid valve (clog or dirt of oil routing, setting of spring) • Intake camshaft (dirt, damage of camshaft) • Timing belt (matching of timing mark)

F: DTC P0019 CRANK AND CAM TIMING B SYSTEM FAILURE (BANK 2)

DTC DETECTING CONDITION:

- Detected when two consecutive driving cycles with fault occur.
- GENERAL DESCRIPTION <Ref. to GD(H4DOTC)-18, DTC P0019 CRANK AND CAM TIMING B SYSTEM FAILURE (BANK 2), Diagnostic Trouble Code (DTC) Detecting Criteria.>

TROUBLE SYMPTOM:

- Engine stalls.
- Improper idling

CAUTION:
After servicing or replacing faulty parts, perform Clear Memory Mode <Ref. to EN(H4DOTC)(diag)-53, OPERATION, Clear Memory Mode.>, and Inspection Mode <Ref. to EN(H4DOTC)(diag)-41, PROCEDURE, Inspection Mode.>.

	Step	Check	Yes	No
1	**CHECK CURRENT DATA.** 1) Start the engine and let it idle. 2) Read the values of «Exh. VVT Retard Ang. L» and «Exh. OCV Duty L» using the Subaru Select Monitor. NOTE: For detailed operation procedures, refer to “READ CURRENT DATA FOR ENGINE”. <Ref. to EN(H4DOTC)(diag)-34, Subaru Select Monitor.>	Is the value of «Exh. VVT Retard Ang. L» approx. 0 deg, and the value of «Exh. OCV Duty L» approx. 10%?	Perform the following procedures, and clean the oil routing. Replace the engine oil and idle the engine for 5 minutes, and then replace the oil filter and engine oil. <Ref. to LU(H4SO)-13, REPLACEMENT, Engine Oil.> <Ref. to LU(H4SO)-36, Engine Oil Filter.>	Check the following item and repair or replace if necessary. • Oil pipe (clog) • Oil flow control solenoid valve (clog or dirt of oil routing, setting of spring) • Exhaust camshaft (dirt, damage of camshaft) • Timing belt (matching of timing mark)

G: DTC P0021 INTAKE CAMSHAFT POSITION - TIMING OVER-ADVANCED OR SYSTEM PERFORMANCE (BANK 2)

DTC DETECTING CONDITION:

- Detected when two consecutive driving cycles with fault occur.
- GENERAL DESCRIPTION <Ref. to GD(H4DOTC)-18, DTC P0021 INTAKE CAMSHAFT POSITION - TIMING OVER-ADVANCED OR SYSTEM PERFORMANCE (BANK 2), Diagnostic Trouble Code (DTC) Detecting Criteria.>

TROUBLE SYMPTOM:

- Engine stalls.
- Improper idling

CAUTION:

After servicing or replacing faulty parts, perform Clear Memory Mode <Ref. to EN(H4DOTC)(diag)-53, OPERATION, Clear Memory Mode.>, and Inspection Mode <Ref. to EN(H4DOTC)(diag)-41, PROCEDURE, Inspection Mode.>.

	Step	Check	Yes	No
1	**CHECK CURRENT DATA.** 1) Start the engine and let it idle. 2) Read the value of «VVT Adv. Ang. Amount L» using the Subaru Select Monitor. NOTE: For detailed operation procedures, refer to "READ CURRENT DATA FOR ENGINE". <Ref. to EN(H4DOTC)(diag)-34, Subaru Select Monitor.>	Is the value of «VVT Adv. Ang. Amount L» approx. 0 deg?	Go to step **2**.	Check the following item and repair or replace if necessary. • Oil pipe (clog) • Oil flow control solenoid valve (clog or dirt of oil routing, setting of spring) • Intake camshaft (dirt, damage of camshaft)
2	**CHECK CURRENT DATA.** 1) Drive with acceleration and deceleration at 80 km/h (50 MPH) or less. NOTE: Drive to an extent that the duty output of oil flow control solenoid valve increases. 2) Read the values of «OCV Duty L» and «VVT Adv. Ang. Amount L» using the Subaru Select Monitor. NOTE: For detailed operation procedures, refer to "READ CURRENT DATA FOR ENGINE". <Ref. to EN(H4DOTC)(diag)-34, Subaru Select Monitor.>	When the value of «OCV Duty L» increases more than 10%, is the value of «VVT Adv. Ang. Amount L» approx. 0 deg?	Check the following item and repair or replace if necessary. • Oil pipe (clog) • Oil flow control solenoid valve (clog or dirt of oil routing, setting of spring) • Intake camshaft (dirt, damage of camshaft)	Perform the following procedures, and clean the oil routing. Replace the engine oil and idle the engine for 5 minutes, and then replace the oil filter and engine oil. <Ref. to LU(H4SO)-13, REPLACEMENT, Engine Oil.> <Ref. to LU(H4SO)-36, Engine Oil Filter.>

H: DTC P0024 EXHAUST AVCS SYSTEM 2 (RANGE/PERFORMANCE)

DTC DETECTING CONDITION:

- Detected when two consecutive driving cycles with fault occur.
- GENERAL DESCRIPTION <Ref. to GD(H4DOTC)-18, DTC P0024 EXHAUST AVCS SYSTEM 2 (RANGE/PERFORMANCE), Diagnostic Trouble Code (DTC) Detecting Criteria.>

TROUBLE SYMPTOM:

- Engine stalls.
- Improper idling

CAUTION:
After servicing or replacing faulty parts, perform Clear Memory Mode <Ref. to EN(H4DOTC)(diag)-53, OPERATION, Clear Memory Mode.>, and Inspection Mode <Ref. to EN(H4DOTC)(diag)-41, PROCEDURE, Inspection Mode.>.

	Step	Check	Yes	No
1	**CHECK CURRENT DATA.** 1) Start the engine and let it idle. 2) Read the value of «Exh. VVT Retard Ang. L» using the Subaru Select Monitor. NOTE: For detailed operation procedures, refer to “READ CURRENT DATA FOR ENGINE”. <Ref. to EN(H4DOTC)(diag)-34, Subaru Select Monitor.>	Is the value of «Exh. VVT Retard Ang. L» approx. 0 deg?	Go to step **2**.	Check the following item and repair or replace if necessary. • Oil pipe (clog) • Oil flow control solenoid valve (clog or dirt of oil routing, setting of spring) • Exhaust camshaft (dirt, damage of camshaft)
2	**CHECK CURRENT DATA.** 1) Drive with acceleration and deceleration at 80 km/h (50 MPH) or less. NOTE: Drive to an extent that the duty output of oil flow control solenoid valve increases. 2) Read the values of «Exh. OCV Duty L» and «Exh. VVT Retard Ang. L» using the Subaru Select Monitor. NOTE: For detailed operation procedures, refer to “READ CURRENT DATA FOR ENGINE”. <Ref. to EN(H4DOTC)(diag)-34, Subaru Select Monitor.>	When the value of «Exh. OCV Duty L» increases more than 10%, is the value of «Exh. VVT Retard Ang. L» approx. 0 deg?	Check the following item and repair or replace if necessary. • Oil pipe (clog) • Oil flow control solenoid valve (clog or dirt of oil routing, setting of spring) • Exhaust camshaft (dirt, damage of camshaft)	Perform the following procedures, and clean the oil routing. Replace the engine oil and idle the engine for 5 minutes, and then replace the oil filter and engine oil. <Ref. to LU(H4SO)-13, REPLACEMENT, Engine Oil.> <Ref. to LU(H4SO)-36, Engine Oil Filter.>

I: DTC P0030 HO2S HEATER CONTROL CIRCUIT (BANK 1 SENSOR 1)

DTC DETECTING CONDITION:

- Detected when two consecutive driving cycles with fault occur.
- GENERAL DESCRIPTION <Ref. to GD(H4DOTC)-19, DTC P0030 HO2S HEATER CONTROL CIRCUIT (BANK 1 SENSOR 1), Diagnostic Trouble Code (DTC) Detecting Criteria.>

CAUTION:
After servicing or replacing faulty parts, perform Clear Memory Mode <Ref. to EN(H4DOTC)(diag)-53, OPERATION, Clear Memory Mode.>, and Inspection Mode <Ref. to EN(H4DOTC)(diag)-41, PROCEDURE, Inspection Mode.>.
WIRING DIAGRAM:

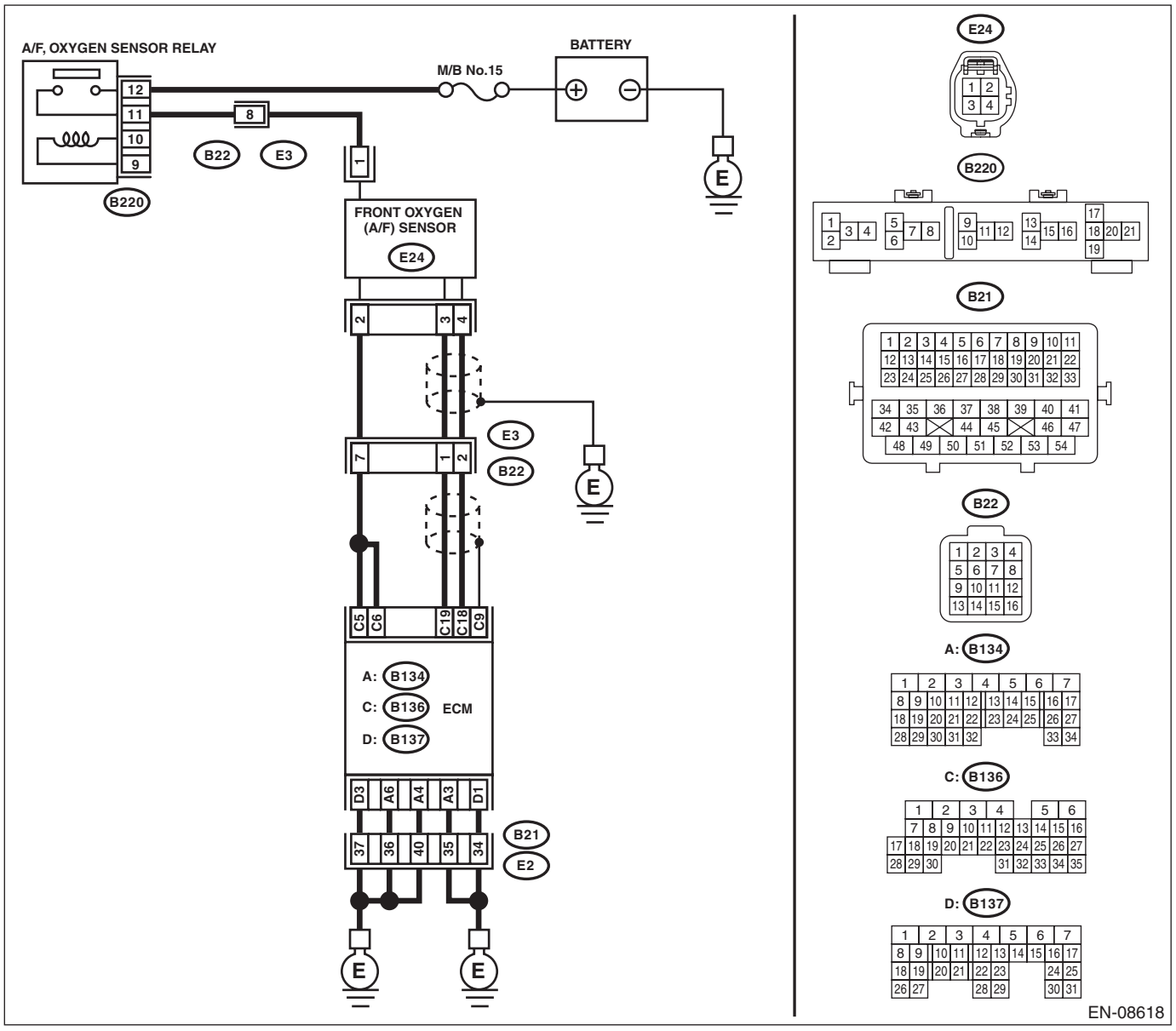

	Step	Check	Yes	No
1	**CHECK HARNESS BETWEEN ECM AND FRONT OXYGEN (A/F) SENSOR CONNECTOR.** 1) Start and warm up the engine. 2) Turn the ignition switch to OFF. 3) Disconnect the connectors from ECM and front oxygen (A/F) sensor. 4) Measure the resistance of harness between ECM and front oxygen (A/F) sensor connector. ***Connector & terminal*** ***(B136) No. 5 — (E24) No. 2:*** ***(B136) No. 6 — (E24) No. 2:*** ***(B136) No. 19 — (E24) No. 3:*** ***(B136) No. 18 — (E24) No. 4:***	Is the resistance less than 1 Ω?	Go to step **2**.	Repair the harness and connector. NOTE: In this case, repair the following item: • Open circuit in harness between ECM and front oxygen (A/F) sensor connector • Poor contact of coupling connector
2	**CHECK FRONT OXYGEN (A/F) SENSOR.** Measure the resistance between front oxygen (A/F) sensor connector terminals. ***Terminals*** ***No. 1 — No. 2:***	Is the resistance less than 2 — 3 Ω?	Go to step **3**.	Replace the front oxygen (A/F) sensor. <Ref. to FU(H4DOTC)-54, Front Oxygen (A/F) Sensor.>
3	**CHECK FOR POOR CONTACT.** Check for poor contact of ECM and front oxygen (A/F) sensor connector.	Is there poor contact of ECM or front oxygen (A/F) sensor connector?	Repair the poor contact of ECM or front oxygen (A/F) sensor connector.	Replace the front oxygen (A/F) sensor. <Ref. to FU(H4DOTC)-54, Front Oxygen (A/F) Sensor.>

J: DTC P0031 HO2S HEATER CONTROL CIRCUIT LOW (BANK 1 SENSOR 1)

DTC DETECTING CONDITION:

- Immediately at fault recognition
- GENERAL DESCRIPTION <Ref. to GD(H4DOTC)-21, DTC P0031 HO2S HEATER CONTROL CIRCUIT LOW (BANK 1 SENSOR 1), Diagnostic Trouble Code (DTC) Detecting Criteria.>

CAUTION:
After servicing or replacing faulty parts, perform Clear Memory Mode <Ref. to EN(H4DOTC)(diag)-53, OPERATION, Clear Memory Mode.>, and Inspection Mode <Ref. to EN(H4DOTC)(diag)-41, PROCEDURE, Inspection Mode.>.
WIRING DIAGRAM:

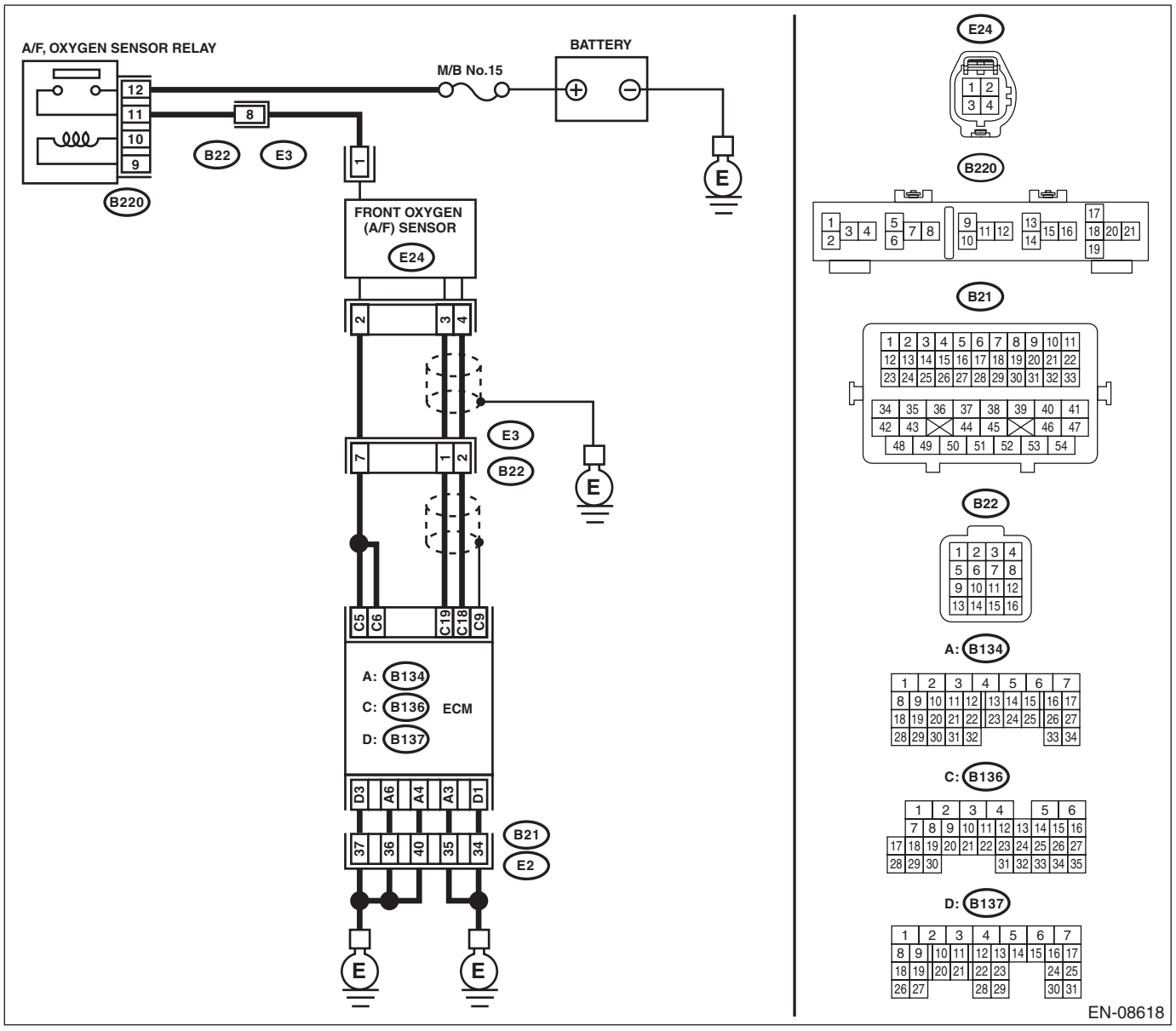

	Step	Check	Yes	No
1	**CHECK POWER SUPPLY TO FRONT OXYGEN (A/F) SENSOR.** 1) Turn the ignition switch to OFF. 2) Disconnect the connectors from front oxygen (A/F) sensor. 3) Turn the ignition switch to ON. 4) Measure the voltage between front oxygen (A/F) sensor connector and engine ground. ***Connector & terminal*** ***(E24) No. 1 (+) — Engine ground (–):***	Is the voltage 10 V or more?	Go to step **2**.	Repair the power supply line. NOTE: In this case, repair the following item: • Open circuit in harness between A/F, oxygen sensor relay and front oxygen (A/F) sensor connector • Poor contact of A/F, oxygen sensor relay connector • Poor contact of coupling connector • Malfunction of A/F, oxygen sensor relay
2	**CHECK HARNESS BETWEEN ECM AND FRONT OXYGEN (A/F) SENSOR CONNECTOR.** 1) Turn the ignition switch to OFF. 2) Disconnect the connector from ECM. 3) Measure the resistance between ECM and front oxygen (A/F) sensor connector. ***Connector & terminal*** ***(B136) No. 5 — (E24) No. 2:*** ***(B136) No. 6 — (E24) No. 2:***	Is the resistance less than 1 Ω?	Go to step **3**.	Repair the harness and connector. NOTE: In this case, repair the following item: • Open circuit in harness between ECM and front oxygen (A/F) sensor connector • Poor contact of coupling connector
3	**CHECK GROUND CIRCUIT FOR ECM.** Measure the resistance of harness between ECM and chassis ground. ***Connector & terminal*** ***(B134) No. 3 — Chassis ground:*** ***(B134) No. 4 — Chassis ground:*** ***(B134) No. 6 — Chassis ground:*** ***(B137) No. 1 — Chassis ground:*** ***(B137) No. 3 — Chassis ground:***	Is the resistance less than 5 Ω?	Go to step **4**.	Repair the harness and connector. NOTE: In this case, repair the following item: • Open circuit of harness between ECM and engine ground • Poor contact of coupling connector
4	**CHECK FRONT OXYGEN (A/F) SENSOR.** Measure the resistance between front oxygen (A/F) sensor terminals. ***Terminals*** ***No. 1 — No. 2:***	Is the resistance 2 — 3 Ω?	Repair the poor contact of ECM connector.	Replace the front oxygen (A/F) sensor. <Ref. to FU(H4DOTC)-54, Front Oxygen (A/F) Sensor.>

K: DTC P0032 HO2S HEATER CONTROL CIRCUIT HIGH (BANK 1 SENSOR 1)

DTC DETECTING CONDITION:

- Immediately at fault recognition
- GENERAL DESCRIPTION <Ref. to GD(H4DOTC)-23, DTC P0032 HO2S HEATER CONTROL CIRCUIT HIGH (BANK 1 SENSOR 1), Diagnostic Trouble Code (DTC) Detecting Criteria.>

CAUTION:
After servicing or replacing faulty parts, perform Clear Memory Mode <Ref. to EN(H4DOTC)(diag)-53, OPERATION, Clear Memory Mode.>, and Inspection Mode <Ref. to EN(H4DOTC)(diag)-41, PROCEDURE, Inspection Mode.>.
WIRING DIAGRAM:

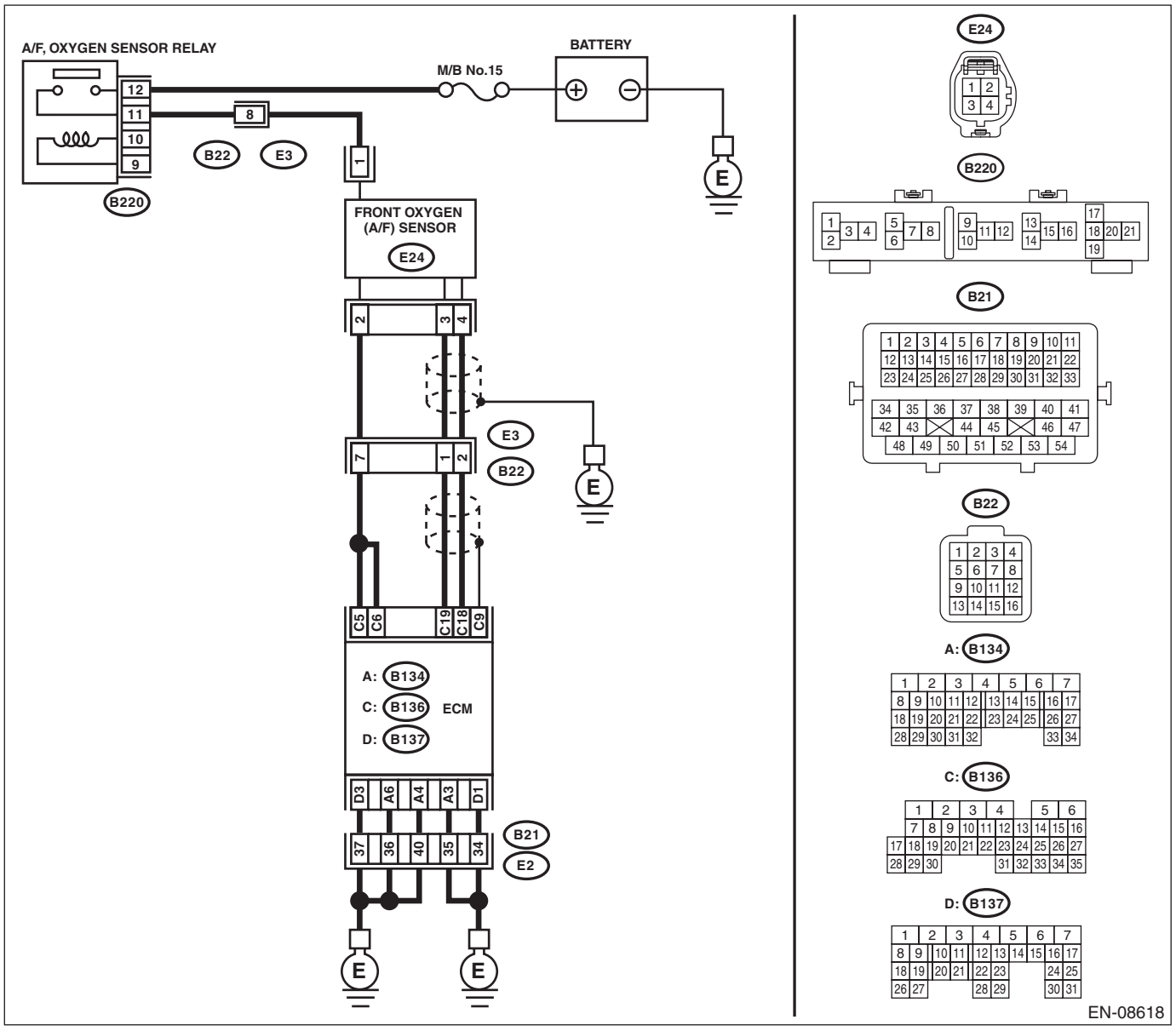

	Step	Check	Yes	No
1	**CHECK HARNESS BETWEEN ECM AND FRONT OXYGEN (A/F) SENSOR CONNECTOR.** 1) Turn the ignition switch to OFF. 2) Measure the voltage between ECM and chassis ground. ***Connector & terminal*** ***(B136) No. 5 (+) — Chassis ground (–):*** ***(B136) No. 6 (+) — Chassis ground (–):***	Is the voltage 10 V or more?	Repair the short circuit to power in the harness between ECM and front oxygen (A/F) sensor connector.	Go to step **2**.
2	**CHECK GROUND CIRCUIT FOR ECM.** 1) Disconnect the connectors from ECM. 2) Measure the resistance between ECM and chassis ground. ***Connector & terminal*** ***(B134) No. 3 — Chassis ground:*** ***(B134) No. 4 — Chassis ground:*** ***(B134) No. 6 — Chassis ground:*** ***(B137) No. 1 — Chassis ground:*** ***(B137) No. 3 — Chassis ground:***	Is the resistance less than 5 Ω?	Repair the poor contact of ECM connector.	Repair the harness and connector. NOTE: In this case, repair the following item: • Open circuit of harness between ECM and engine ground • Poor contact of coupling connector

L: DTC P0037 HO2S HEATER CONTROL CIRCUIT LOW (BANK 1 SENSOR 2)

DTC DETECTING CONDITION:

- Detected when two consecutive driving cycles with fault occur.
- GENERAL DESCRIPTION <Ref. to GD(H4DOTC)-25, DTC P0037 HO2S HEATER CONTROL CIRCUIT LOW (BANK 1 SENSOR 2), Diagnostic Trouble Code (DTC) Detecting Criteria.>

CAUTION:
After servicing or replacing faulty parts, perform Clear Memory Mode <Ref. to EN(H4DOTC)(diag)-53, OPERATION, Clear Memory Mode.>, and Inspection Mode <Ref. to EN(H4DOTC)(diag)-41, PROCEDURE, Inspection Mode.>.
WIRING DIAGRAM:

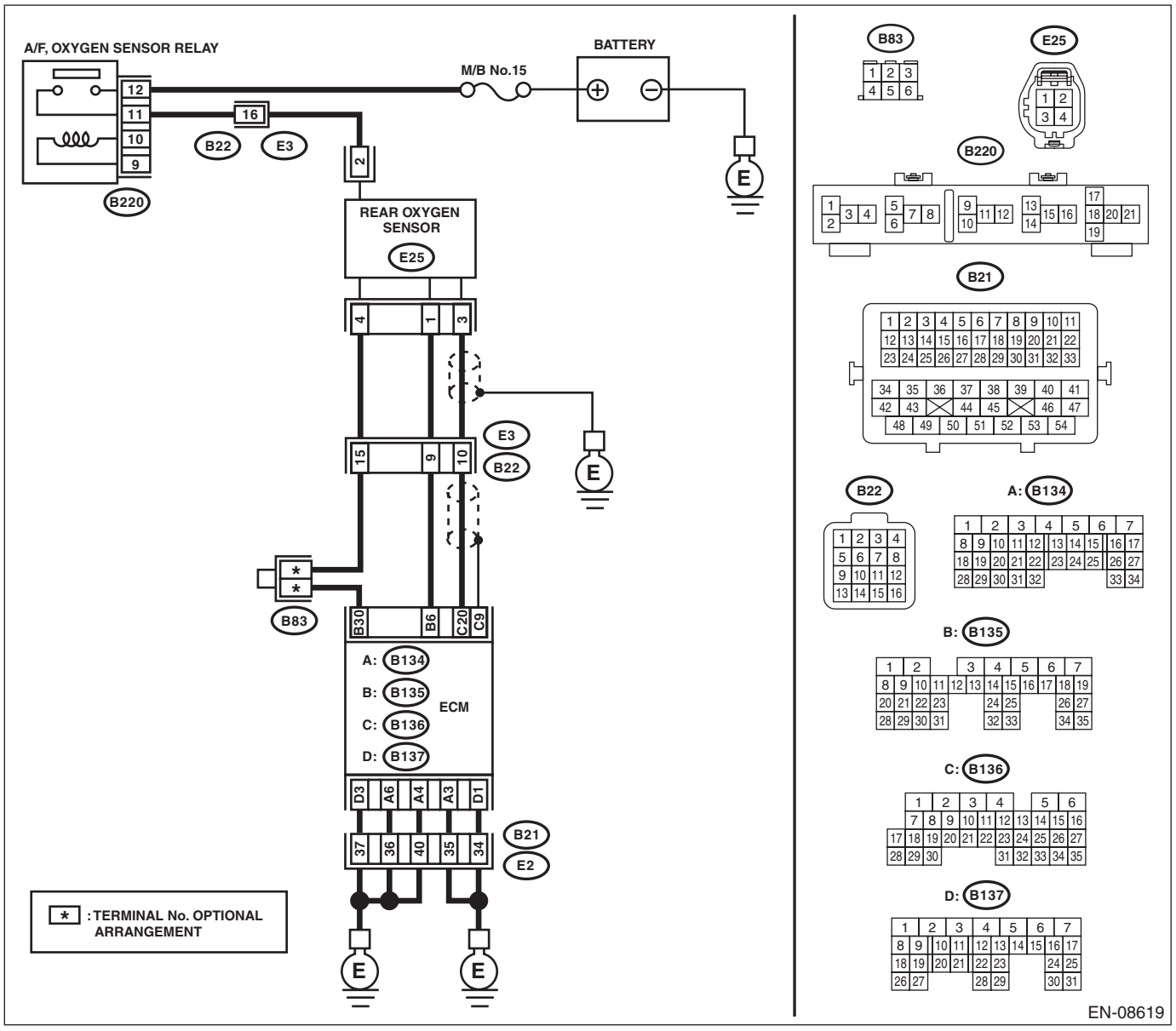

	Step	Check	Yes	No
1	**CHECK POWER SUPPLY TO REAR OXYGEN SENSOR.** 1) Turn the ignition switch to OFF. 2) Disconnect the connector from rear oxygen sensor. 3) Turn the ignition switch to ON. 4) Measure the voltage between rear oxygen sensor connector and engine ground. ***Connector & terminal*** ***(E25) No. 2 (+) — Engine ground (–):***	Is the voltage 10 V or more?	Go to step **2**.	Repair the power supply line. NOTE: In this case, repair the following item: • Open circuit in harness between A/F, oxygen sensor relay and rear oxygen sensor connector • Poor contact of A/F, oxygen sensor relay connector • Poor contact of coupling connector • Malfunction of A/F, oxygen sensor relay
2	**CHECK HARNESS BETWEEN ECM AND REAR OXYGEN SENSOR CONNECTOR.** 1) Turn the ignition switch to OFF. 2) Disconnect the connector from ECM. 3) Measure the resistance between the ECM and rear oxygen sensor connector. ***Connector & terminal*** ***(B135) No. 6 — (E25) No. 1:***	Is the resistance less than 1 Ω?	Go to step **3**.	Repair the harness and connector. NOTE: In this case, repair the following item: • Open circuit in harness between ECM and rear oxygen sensor connector • Poor contact of coupling connector
3	**CHECK GROUND CIRCUIT FOR ECM.** Measure the resistance of harness between ECM and chassis ground. ***Connector & terminal*** ***(B134) No. 3 — Chassis ground:*** ***(B134) No. 4 — Chassis ground:*** ***(B134) No. 6 — Chassis ground:*** ***(B137) No. 1 — Chassis ground:*** ***(B137) No. 3 — Chassis ground:***	Is the resistance less than 5 Ω?	Go to step **4**.	Repair the harness and connector. NOTE: In this case, repair the following item: • Open circuit of harness between ECM and engine ground • Poor contact of coupling connector
4	**CHECK REAR OXYGEN SENSOR.** Measure the resistance between rear oxygen sensor terminals. ***Terminals*** ***No. 1 — No. 2:***	Is the resistance 5 — 7 Ω?	Repair the poor contact of ECM connector.	Replace the rear oxygen sensor. <Ref. to FU(H4DOTC)-56, Rear Oxygen Sensor.>

M: DTC P0038 HO2S HEATER CONTROL CIRCUIT HIGH (BANK 1 SENSOR 2)

DTC DETECTING CONDITION:

- Detected when two consecutive driving cycles with fault occur.
- GENERAL DESCRIPTION <Ref. to GD(H4DOTC)-27, DTC P0038 HO2S HEATER CONTROL CIRCUIT HIGH (BANK 1 SENSOR 2), Diagnostic Trouble Code (DTC) Detecting Criteria.>

CAUTION:
After servicing or replacing faulty parts, perform Clear Memory Mode <Ref. to EN(H4DOTC)(diag)-53, OPERATION, Clear Memory Mode.>, and Inspection Mode <Ref. to EN(H4DOTC)(diag)-41, PROCEDURE, Inspection Mode.>.
WIRING DIAGRAM:

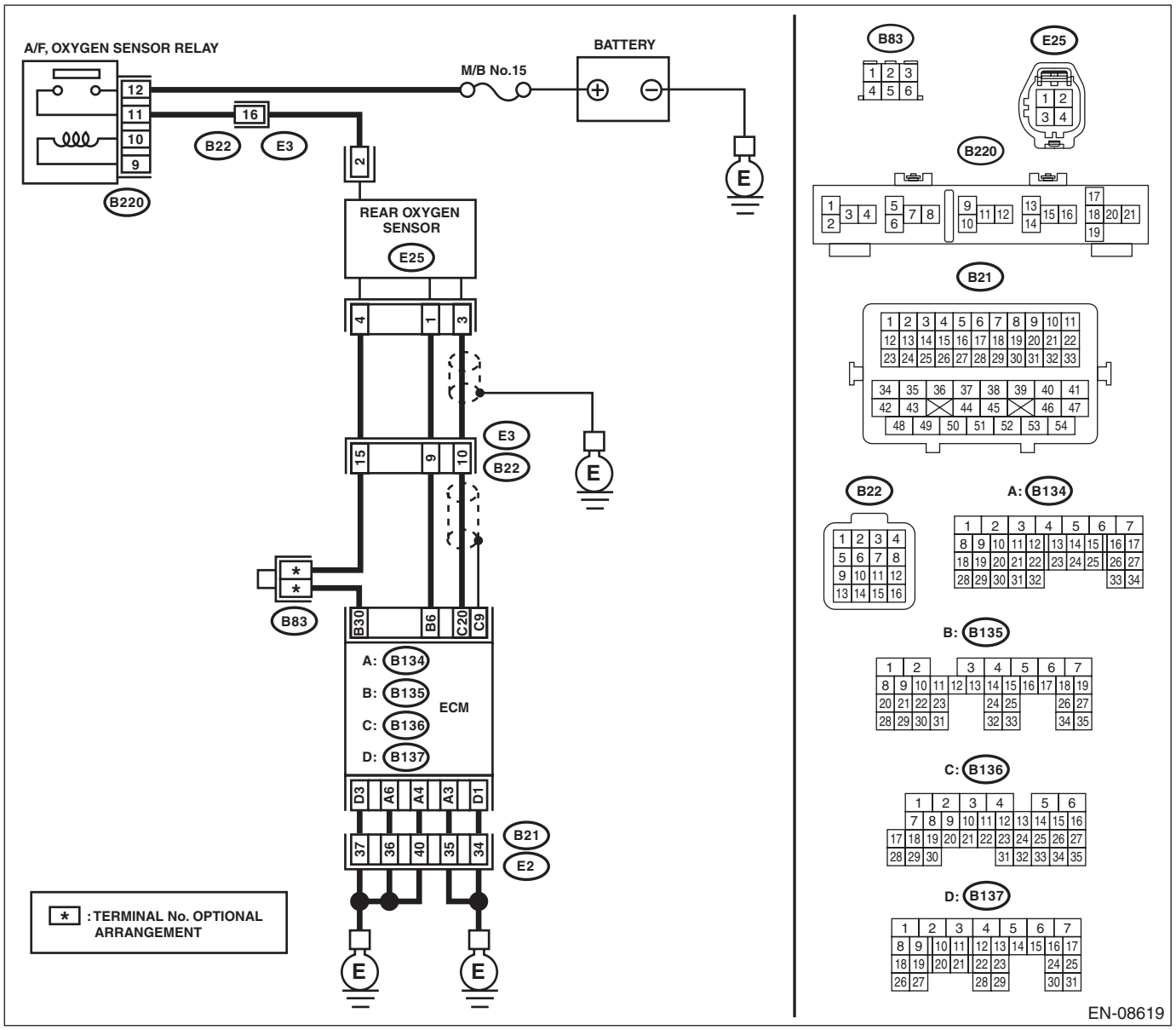

Step		Check	Yes	No
1	**CHECK HARNESS BETWEEN ECM AND REAR OXYGEN SENSOR CONNECTOR.** 1) Turn the ignition switch to OFF. 2) Measure the voltage between ECM and chassis ground. ***Connector & terminal*** ***(B135) No. 6 (+) — Chassis ground (–):***	Is the voltage 10 V or more?	Repair the short circuit to power in the harness between ECM and rear oxygen sensor connector.	Go to step **2**.

	Step	Check	Yes	No
2	**CHECK GROUND CIRCUIT FOR ECM.** 1) Disconnect the connector from ECM. 2) Measure the resistance between ECM and chassis ground. ***Connector & terminal*** ***(B134) No. 3 — Chassis ground:*** ***(B134) No. 4 — Chassis ground:*** ***(B134) No. 6 — Chassis ground:*** ***(B137) No. 1 — Chassis ground:*** ***(B137) No. 3 — Chassis ground:***	Is the resistance less than 5 Ω?	Repair the poor contact of ECM connector.	Repair the harness and connector. NOTE: In this case, repair the following item: • Open circuit of harness between ECM and engine ground • Poor contact of coupling connector

N: DTC P0068 MAP/MAF - THROTTLE POSITION CORRELATION

DTC DETECTING CONDITION:

- Detected when two consecutive driving cycles with fault occur.
- GENERAL DESCRIPTION <Ref. to GD(H4DOTC)-29, DTC P0068 MAP/MAF - THROTTLE POSITION CORRELATION, Diagnostic Trouble Code (DTC) Detecting Criteria.>

CAUTION:
After servicing or replacing faulty parts, perform Clear Memory Mode <Ref. to EN(H4DOTC)(diag)-53, OPERATION, Clear Memory Mode.>, and Inspection Mode <Ref. to EN(H4DOTC)(diag)-41, PROCEDURE, Inspection Mode.>.

	Step	Check	Yes	No
1	**CHECK AIR INTAKE SYSTEM.**	Are there holes, loose bolts or disconnection of hose on air intake system?	Repair the air intake system.	Go to step **2**.
2	**CHECK MANIFOLD ABSOLUTE PRESSURE SENSOR.** 1) Start the engine and warm up engine until coolant temperature is higher than 75°C (167°F). 2) Place the shift lever in neutral position. 3) Turn the A/C switch to OFF. 4) Turn all the accessory switches to OFF. 5) Read the value of «Mani. Absolute Pressure» using the Subaru Select Monitor or a general scan tool. NOTE: • Subaru Select Monitor For detailed operation procedures, refer to “READ CURRENT DATA FOR ENGINE”. <Ref. to EN(H4DOTC)(diag)-34, Subaru Select Monitor.> • General scan tool For detailed operation procedures, refer to the “General Scan Tool Instruction Manual”.	Is the value in «Mani. Absolute Pressure» 73.3 — 106.6 kPa (550 — 800 mmHg, 21.65 — 31.50 inHg) when the ignition is turned ON, and 20.0 — 46.7 kPa (150 — 350 mmHg, 5.91 — 13.78 inHg) during idling?	Go to step **3**.	Replace the manifold absolute pressure sensor. <Ref. to FU(H4DOTC)-43, Manifold Absolute Pressure Sensor.>
3	**CHECK THROTTLE OPENING ANGLE.** Using the Subaru Select Monitor or a general scan tool, read the value in «Throttle Opening Angle». NOTE: • Subaru Select Monitor For detailed operation procedures, refer to “READ CURRENT DATA FOR ENGINE”. <Ref. to EN(H4DOTC)(diag)-34, Subaru Select Monitor.> • General scan tool For detailed operation procedures, refer to the “General Scan Tool Instruction Manual”.	Is the value in «Throttle Opening Angle» with the throttle fully closed less than 5%?	Go to step **4**.	Replace the electronic throttle control. <Ref. to FU(H4DOTC)-15, Throttle Body.>
4	**CHECK THROTTLE OPENING ANGLE.**	Is the value in «Throttle Opening Angle» with the throttle fully open 85% or more?	Replace the manifold absolute pressure sensor. <Ref. to FU(H4DOTC)-43, Manifold Absolute Pressure Sensor.>	Replace the electronic throttle control. <Ref. to FU(H4DOTC)-15, Throttle Body.>

O: DTC P0101 MASS OR VOLUME AIR FLOW CIRCUIT RANGE/PERFORMANCE

DTC DETECTING CONDITION:

- Detected when two consecutive driving cycles with fault occur.
- GENERAL DESCRIPTION <Ref. to GD(H4DOTC)-31, DTC P0101 MASS OR VOLUME AIR FLOW CIRCUIT RANGE/PERFORMANCE, Diagnostic Trouble Code (DTC) Detecting Criteria.>

TROUBLE SYMPTOM:

- Improper idling
- Engine stalls.
- Poor driving performance

CAUTION:

After servicing or replacing faulty parts, perform Clear Memory Mode <Ref. to EN(H4DOTC)(diag)-53, OPERATION, Clear Memory Mode.>, and Inspection Mode <Ref. to EN(H4DOTC)(diag)-41, PROCEDURE, Inspection Mode.>.

	Step	Check	Yes	No
1	**CHECK FOR ANY OTHER DTC ON DISPLAY.**	Is any other DTC displayed?	Check the appropriate DTC using the “List of Diagnostic Trouble Code (DTC)”. <Ref. to EN(H4DOTC)(diag)-75, List of Diagnostic Trouble Code (DTC).>	Replace the mass air flow and intake air temperature sensor. <Ref. to FU(H4DOTC)-42, Mass Air Flow and Intake Air Temperature Sensor.>

P: DTC P0102 MASS OR VOLUME AIR FLOW CIRCUIT LOW INPUT

DTC DETECTING CONDITION:

- Immediately at fault recognition
- GENERAL DESCRIPTION <Ref. to GD(H4DOTC)-33, DTC P0102 MASS OR VOLUME AIR FLOW CIRCUIT LOW INPUT, Diagnostic Trouble Code (DTC) Detecting Criteria.>

TROUBLE SYMPTOM:

- Improper idling
- Engine stalls.
- Poor driving performance

CAUTION:
After servicing or replacing faulty parts, perform Clear Memory Mode <Ref. to EN(H4DOTC)(diag)-53, OPERATION, Clear Memory Mode.>, and Inspection Mode <Ref. to EN(H4DOTC)(diag)-41, PROCEDURE, Inspection Mode.>.

WIRING DIAGRAM:

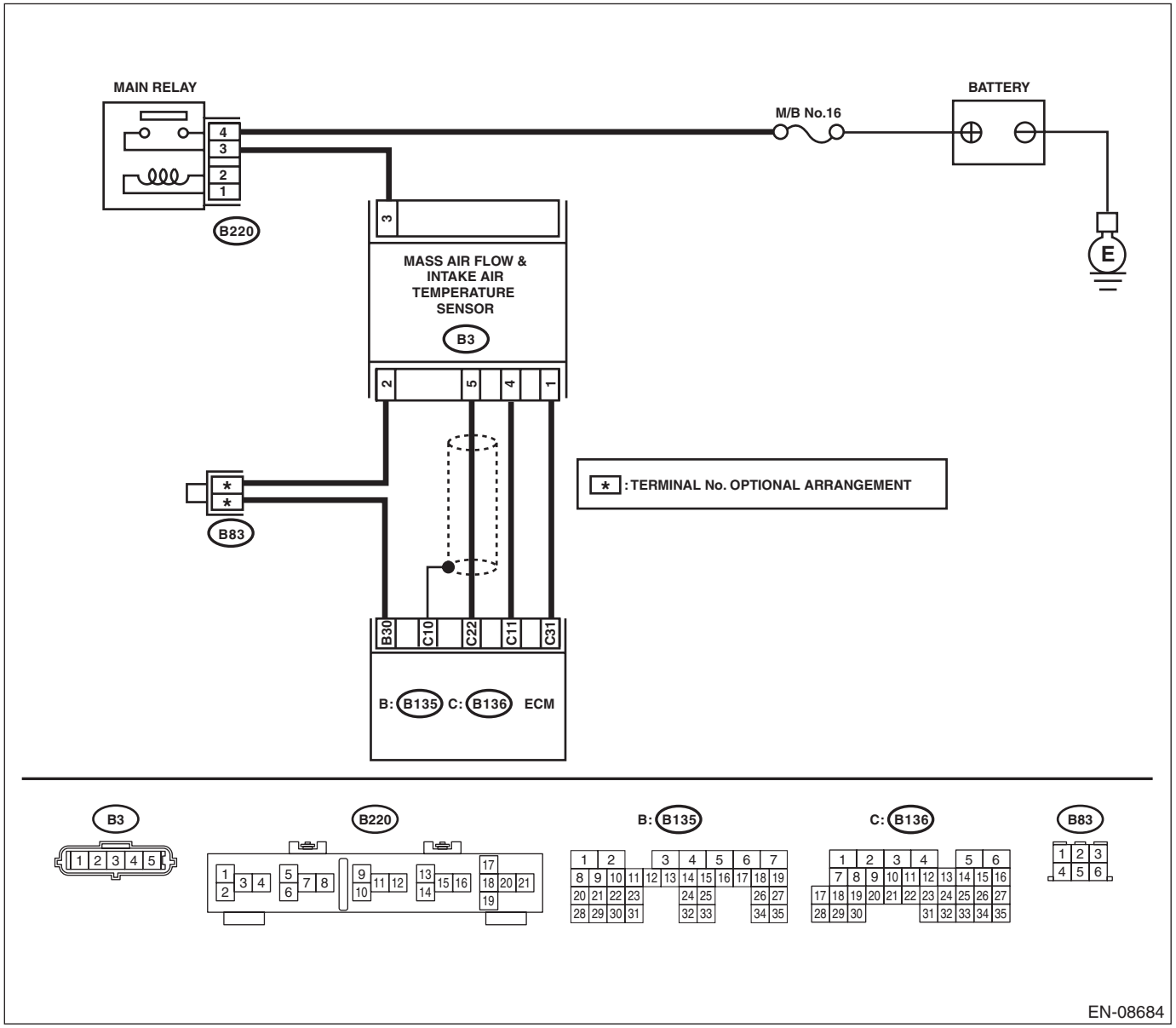

	Step	Check	Yes	No
1	**CHECK CURRENT DATA.** 1) Start the engine. 2) Read the value of «Air Flow Sensor Voltage» using Subaru Select Monitor. NOTE: For detailed operation procedures, refer to "READ CURRENT DATA FOR ENGINE". <Ref. to EN(H4DOTC)(diag)-34, Subaru Select Monitor.>	Is the value of «Air Flow Sensor Voltage» less than 0.2 V?	Go to step **2**.	Even if DTC is detected, the circuit has returned to a normal condition at this time. Reproduce the failure, and then perform the diagnosis again. NOTE: In this case, temporary poor contact of connector, temporary open or short circuit of harness may be the cause.
2	**CHECK POWER SUPPLY OF MASS AIR FLOW AND INTAKE AIR TEMPERATURE SENSOR.** 1) Turn the ignition switch to OFF. 2) Disconnect the connectors from the mass air flow and intake air temperature sensor. 3) Turn the ignition switch to ON. 4) Measure the voltage between mass air flow and intake air temperature sensor connector and engine ground. ***Connector & terminal*** ***(B3) No. 3 (+) — Engine ground (–):***	Is the voltage 10 V or more?	Go to step **3**.	Repair the harness and connector. NOTE: In this case, repair the following item: • Open circuit in harness between main relay and mass air flow and intake air temperature sensor connector • Poor contact of main relay connector
3	**CHECK HARNESS BETWEEN ECM AND MASS AIR FLOW AND INTAKE AIR TEMPERATURE SENSOR CONNECTOR.** 1) Turn the ignition switch to OFF. 2) Disconnect the connector from ECM. 3) Measure the resistance of harness between ECM and the mass air flow and intake air temperature sensor connector. ***Connector & terminal*** ***(B136) No. 22 — (B3) No. 5:***	Is the resistance less than 1 Ω?	Go to step **4**.	Repair the open circuit in harness between ECM and the mass air flow and intake air temperature sensor connector.
4	**CHECK HARNESS BETWEEN ECM AND MASS AIR FLOW AND INTAKE AIR TEMPERATURE SENSOR CONNECTOR.** Measure the resistance between ECM and chassis ground. ***Connector & terminal*** ***(B136) No. 22 — Chassis ground:***	Is the resistance 1 MΩ or more?	Go to step **5**.	Repair the short circuit to ground in harness between ECM and mass air flow and intake air temperature sensor connector.
5	**CHECK FOR POOR CONTACT.** Check for poor contact of ECM and mass air flow and intake air temperature sensor connector.	Is there poor contact of ECM or mass air flow and intake air temperature sensor connector?	Repair the poor contact of ECM or mass air flow and intake air temperature sensor connector.	Replace the mass air flow and intake air temperature sensor. <Ref. to FU(H4DOTC)-42, Mass Air Flow and Intake Air Temperature Sensor.>

Q: DTC P0103 MASS OR VOLUME AIR FLOW CIRCUIT HIGH INPUT

DTC DETECTING CONDITION:

- Immediately at fault recognition
- GENERAL DESCRIPTION <Ref. to GD(H4DOTC)-35, DTC P0103 MASS OR VOLUME AIR FLOW CIRCUIT HIGH INPUT, Diagnostic Trouble Code (DTC) Detecting Criteria.>

TROUBLE SYMPTOM:

- Improper idling
- Engine stalls.
- Poor driving performance

CAUTION:
After servicing or replacing faulty parts, perform Clear Memory Mode <Ref. to EN(H4DOTC)(diag)-53, OPERATION, Clear Memory Mode.>, and Inspection Mode <Ref. to EN(H4DOTC)(diag)-41, PROCEDURE, Inspection Mode.>.

WIRING DIAGRAM:

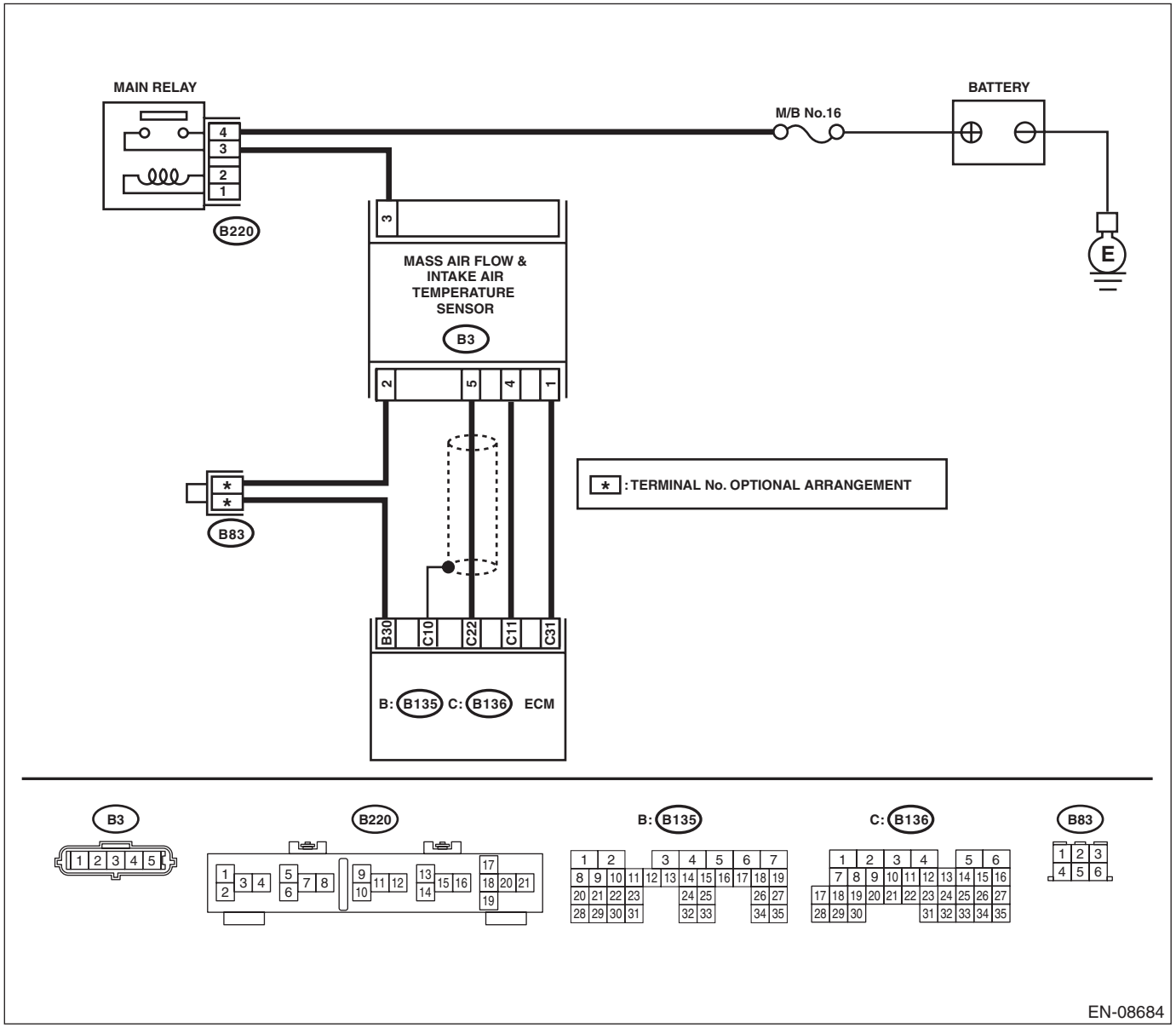

	Step	Check	Yes	No
1	**CHECK CURRENT DATA.** 1) Start the engine. 2) Read the value of «Air Flow Sensor Voltage» using Subaru Select Monitor. NOTE: For detailed operation procedures, refer to "READ CURRENT DATA FOR ENGINE". <Ref. to EN(H4DOTC)(diag)-34, Subaru Select Monitor.>	Is the value of «Air Flow Sensor Voltage» 5 V or more?	Go to step **2**.	Even if DTC is detected, the circuit has returned to a normal condition at this time. Reproduce the failure, and then perform the diagnosis again. NOTE: In this case, temporary poor contact of connector, temporary open or short circuit of harness may be the cause.
2	**CHECK HARNESS BETWEEN ECM AND MASS AIR FLOW AND INTAKE AIR TEMPERATURE SENSOR CONNECTOR.** 1) Turn the ignition switch to OFF. 2) Disconnect the connectors from the mass air flow and intake air temperature sensor. 3) Start the engine. 4) Read the value of «Air Flow Sensor Voltage» using Subaru Select Monitor. NOTE: For detailed operation procedures, refer to "READ CURRENT DATA FOR ENGINE". <Ref. to EN(H4DOTC)(diag)-34, Subaru Select Monitor.>	Is the value of «Air Flow Sensor Voltage» 5 V or more?	Repair the short circuit of harness to power supply between ECM and mass air flow and intake air temperature sensor connector.	Go to step **3**.
3	**CHECK HARNESS BETWEEN ECM AND MASS AIR FLOW AND INTAKE AIR TEMPERATURE SENSOR CONNECTOR.** 1) Turn the ignition switch to OFF. 2) Measure the resistance of harness between mass air flow and intake air temperature sensor connector and engine ground. ***Connector & terminal*** ***(B3) No. 4 — Engine ground:***	Is the resistance less than 5 Ω?	Go to step **4**.	Repair the harness and connector. NOTE: In this case, repair the following item: • Open circuit in harness between ECM and mass air flow and intake air temperature sensor connector • Poor contact of ECM connector
4	**CHECK FOR POOR CONTACT.** Check for poor contact of mass air flow and intake air temperature sensor connector.	Is there poor contact of mass air flow and intake air temperature sensor connector?	Repair the poor contact of mass air flow and intake air temperature sensor connector.	Replace the mass air flow and intake air temperature sensor. <Ref. to FU(H4DOTC)-42, Mass Air Flow and Intake Air Temperature Sensor.>

R: DTC P0107 MANIFOLD ABSOLUTE PRESSURE/BAROMETRIC PRESSURE CIRCUIT LOW INPUT

DTC DETECTING CONDITION:

- Immediately at fault recognition
- GENERAL DESCRIPTION <Ref. to GD(H4DOTC)-37, DTC P0107 MANIFOLD ABSOLUTE PRESSURE/ BAROMETRIC PRESSURE CIRCUIT LOW INPUT, Diagnostic Trouble Code (DTC) Detecting Criteria.>

CAUTION:
After servicing or replacing faulty parts, perform Clear Memory Mode <Ref. to EN(H4DOTC)(diag)-53, OPERATION, Clear Memory Mode.>, and Inspection Mode <Ref. to EN(H4DOTC)(diag)-41, PROCEDURE, Inspection Mode.>.
WIRING DIAGRAM:

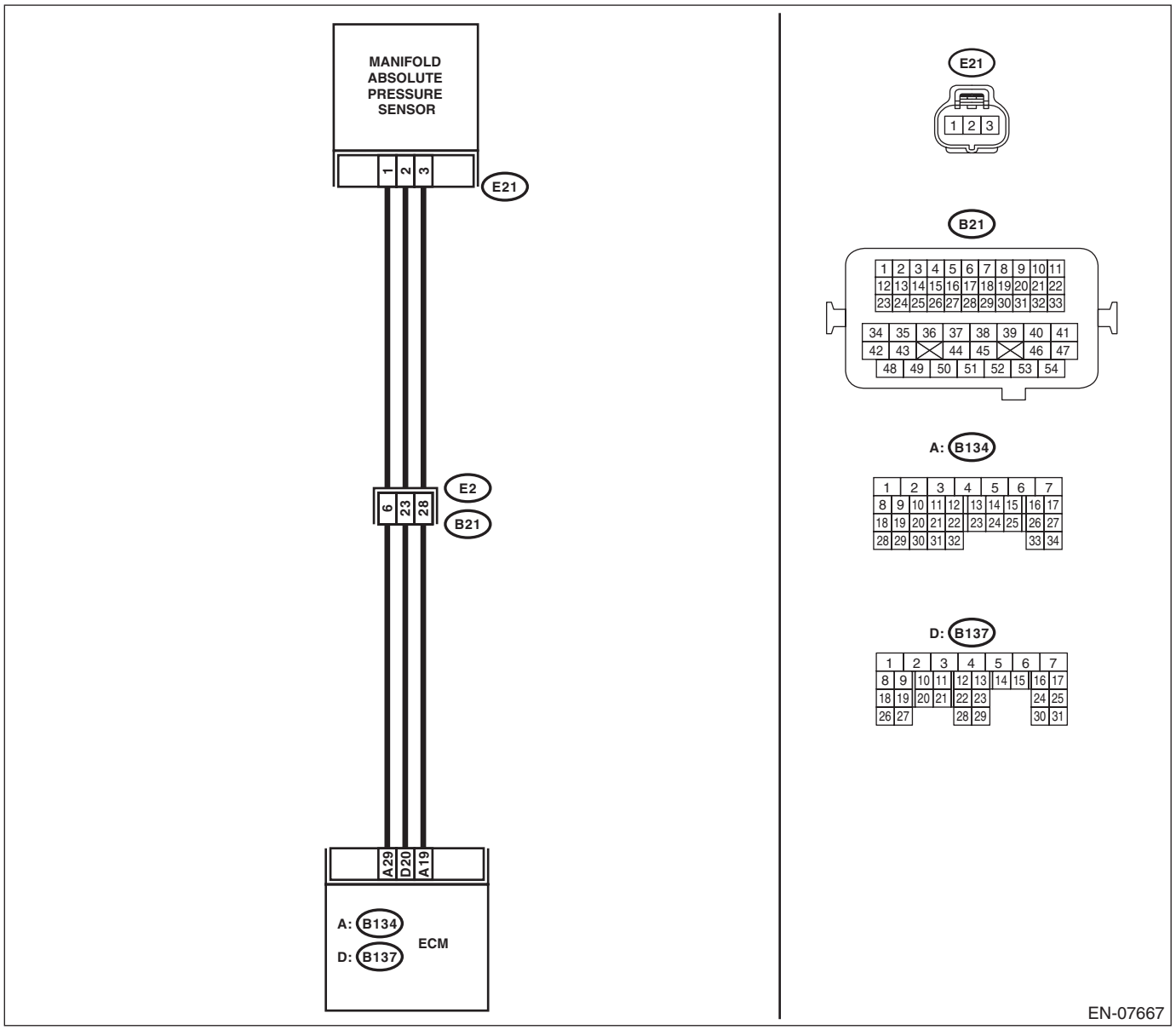

	Step	Check	Yes	No
1	**CHECK CURRENT DATA.** 1) Start the engine. 2) Read the value of «Mani. Absolute Pressure» using the Subaru Select Monitor or a general scan tool. NOTE: • Subaru Select Monitor For detailed operation procedures, refer to "READ CURRENT DATA FOR ENGINE". <Ref. to EN(H4DOTC)(diag)-34, Subaru Select Monitor.> • General scan tool For detailed operation procedures, refer to the general scan tool operation manual.	Is the value of «Mani. Absolute Pressure» less than 13.3 kPa (100 mmHg, 3.94 inHg)?	Go to step **2**.	Even if DTC is detected, the circuit has returned to a normal condition at this time. Reproduce the failure, and then perform the diagnosis again. NOTE: In this case, temporary poor contact of connector, temporary open or short circuit of harness may be the cause.
2	**CHECK POWER SUPPLY OF MANIFOLD ABSOLUTE PRESSURE SENSOR.** 1) Turn the ignition switch to OFF. 2) Disconnect the connector from manifold absolute pressure sensor. 3) Turn the ignition switch to ON. 4) Measure the voltage between manifold absolute pressure sensor connector and engine ground. ***Connector & terminal*** ***(E21) No. 3 (+) — Engine ground (–):***	Is the voltage 4.5 V or more?	Go to step **3**.	Repair the harness and connector. NOTE: In this case, repair the following item: • Open circuit of harness between ECM and manifold absolute pressure sensor connector. • Poor contact of ECM connector • Poor contact of coupling connector
3	**CHECK HARNESS BETWEEN ECM AND MANIFOLD ABSOLUTE PRESSURE SENSOR CONNECTOR.** 1) Turn the ignition switch to OFF. 2) Disconnect the connector from ECM. 3) Measure the resistance of harness between ECM and manifold absolute pressure sensor connector. ***Connector & terminal*** ***(B137) No. 20 — (E21) No. 2:***	Is the resistance less than 1 Ω?	Go to step **4**.	Repair the harness and connector. NOTE: In this case, repair the following item: • Open circuit of harness between ECM and manifold absolute pressure sensor connector. • Poor contact of coupling connector
4	**CHECK HARNESS BETWEEN ECM AND MANIFOLD ABSOLUTE PRESSURE SENSOR CONNECTOR.** Measure the resistance between ECM and chassis ground. ***Connector & terminal*** ***(B137) No. 20 — Chassis ground:***	Is the resistance 1 MΩ or more?	Go to step **5**.	Repair ground short circuit of harness between ECM and manifold absolute pressure sensor connector.
5	**CHECK FOR POOR CONTACT.** Check for poor contact of ECM and manifold absolute pressure sensor connector.	Is there poor contact of ECM or manifold absolute pressure sensor connector?	Repair the poor contact of ECM or manifold absolute pressure sensor connector.	Replace the manifold absolute pressure sensor. <Ref. to FU(H4DOTC)-43, Manifold Absolute Pressure Sensor.>

S: DTC P0108 MANIFOLD ABSOLUTE PRESSURE/BAROMETRIC PRESSURE CIRCUIT HIGH INPUT

DTC DETECTING CONDITION:

- Immediately at fault recognition
- GENERAL DESCRIPTION <Ref. to GD(H4DOTC)-39, DTC P0108 MANIFOLD ABSOLUTE PRESSURE/ BAROMETRIC PRESSURE CIRCUIT HIGH INPUT, Diagnostic Trouble Code (DTC) Detecting Criteria.>

CAUTION:
After servicing or replacing faulty parts, perform Clear Memory Mode <Ref. to EN(H4DOTC)(diag)-53, OPERATION, Clear Memory Mode.>, and Inspection Mode <Ref. to EN(H4DOTC)(diag)-41, PROCEDURE, Inspection Mode.>.
WIRING DIAGRAM:

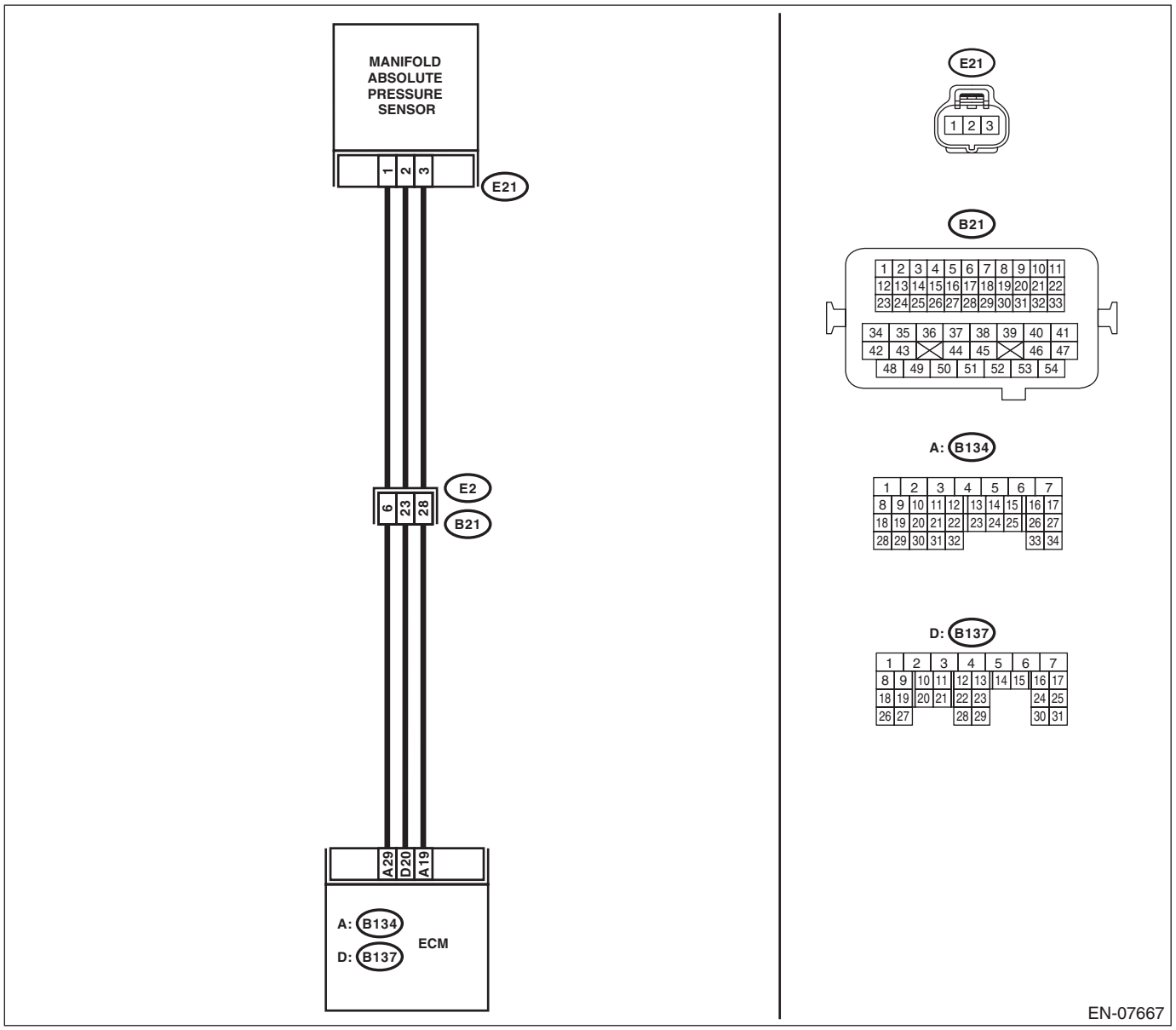

	Step	Check	Yes	No
1	**CHECK CURRENT DATA.** 1) Start the engine. 2) Read the value of «Mani. Absolute Pressure» using the Subaru Select Monitor or a general scan tool. NOTE: • Subaru Select Monitor For detailed operation procedures, refer to "READ CURRENT DATA FOR ENGINE". <Ref. to EN(H4DOTC)(diag)-34, Subaru Select Monitor.> • General scan tool For detailed operation procedures, refer to the general scan tool operation manual.	Is the value of «Mani. Absolute Pressure» 119.5 kPa (896.5 mmHg, 35.29 inHg) or more?	Go to step **2**.	Even if DTC is detected, the circuit has returned to a normal condition at this time. Reproduce the failure, and then perform the diagnosis again. NOTE: In this case, temporary poor contact of connector, temporary open or short circuit of harness may be the cause.
2	**CHECK HARNESS BETWEEN ECM AND MANIFOLD ABSOLUTE PRESSURE SENSOR CONNECTOR.** 1) Turn the ignition switch to OFF. 2) Disconnect the connector from manifold absolute pressure sensor. 3) Start the engine. 4) Read the value of «Mani. Absolute Pressure» using the Subaru Select Monitor or a general scan tool. NOTE: • Subaru Select Monitor For detailed operation procedures, refer to "READ CURRENT DATA FOR ENGINE". <Ref. to EN(H4DOTC)(diag)-34, Subaru Select Monitor.> • General scan tool For detailed operation procedures, refer to the general scan tool operation manual.	Is the value of «Mani. Absolute Pressure» 119.5 kPa (896.5 mmHg, 35.29 inHg) or more?	Repair the short circuit to power in harness between ECM and manifold absolute pressure sensor connector.	Go to step **3**.
3	**CHECK HARNESS BETWEEN ECM AND MANIFOLD ABSOLUTE PRESSURE SENSOR CONNECTOR.** 1) Turn the ignition switch to OFF. 2) Measure the resistance of harness between manifold absolute pressure sensor connector and engine ground. ***Connector & terminal*** ***(E21) No. 1 — Engine ground:***	Is the resistance less than 5 Ω?	Go to step **4**.	Repair the harness and connector. NOTE: In this case, repair the following item: • Open circuit of harness between ECM and manifold absolute pressure sensor connector. • Poor contact of ECM connector • Poor contact of coupling connector
4	**CHECK FOR POOR CONTACT.** Check for poor contact of manifold absolute pressure sensor connector.	Is there poor contact of manifold absolute pressure sensor connector?	Repair the poor contact of manifold absolute pressure sensor connector.	Replace the manifold absolute pressure sensor. <Ref. to FU(H4DOTC)-43, Manifold Absolute Pressure Sensor.>

T: DTC P0111 INTAKE AIR TEMPERATURE SENSOR 1 CIRCUIT RANGE/PERFORMANCE

DTC DETECTING CONDITION:

- Detected when two consecutive driving cycles with fault occur.
- GENERAL DESCRIPTION <Ref. to GD(H4DOTC)-41, DTC P0111 INTAKE AIR TEMPERATURE SENSOR 1 CIRCUIT RANGE/PERFORMANCE, Diagnostic Trouble Code (DTC) Detecting Criteria.>

TROUBLE SYMPTOM:

- Improper idling
- Poor driving performance

CAUTION:

After servicing or replacing faulty parts, perform Clear Memory Mode <Ref. to EN(H4DOTC)(diag)-53, OPERATION, Clear Memory Mode.>, and Inspection Mode <Ref. to EN(H4DOTC)(diag)-41, PROCEDURE, Inspection Mode.>.

	Step	Check	Yes	No
1	**CHECK ENGINE COOLANT TEMPERATURE.** 1) Start the engine and warm up completely. 2) Read the value of «Coolant Temp.» using the Subaru Select Monitor or a general scan tool. NOTE: • Subaru Select Monitor For detailed operation procedures, refer to “READ CURRENT DATA FOR ENGINE”. <Ref. to EN(H4DOTC)(diag)-34, Subaru Select Monitor.> • General scan tool For detailed operation procedures, refer to the general scan tool operation manual.	Is the value of «Coolant Temp.» 75°C (167°F) or more?	Replace the mass air flow and intake air temperature sensor. <Ref. to FU(H4DOTC)-42, Mass Air Flow and Intake Air Temperature Sensor.>	Go to DTC P0125. <Ref. to EN(H4DOTC)(diag)-125, DTC P0125 INSUFFICIENT COOLANT TEMPERATURE FOR CLOSED LOOP FUEL CONTROL, Diagnostic Procedure with Diagnostic Trouble Code (DTC).>

U: DTC P0112 INTAKE AIR TEMPERATURE SENSOR 1 CIRCUIT LOW

DTC DETECTING CONDITION:

- Immediately at fault recognition
- GENERAL DESCRIPTION <Ref. to GD(H4DOTC)-43, DTC P0112 INTAKE AIR TEMPERATURE SENSOR 1 CIRCUIT LOW, Diagnostic Trouble Code (DTC) Detecting Criteria.>

TROUBLE SYMPTOM:

- Improper idling
- Poor driving performance

CAUTION:

After servicing or replacing faulty parts, perform Clear Memory Mode <Ref. to EN(H4DOTC)(diag)-53, OPERATION, Clear Memory Mode.>, and Inspection Mode <Ref. to EN(H4DOTC)(diag)-41, PROCEDURE, Inspection Mode.>.

WIRING DIAGRAM:

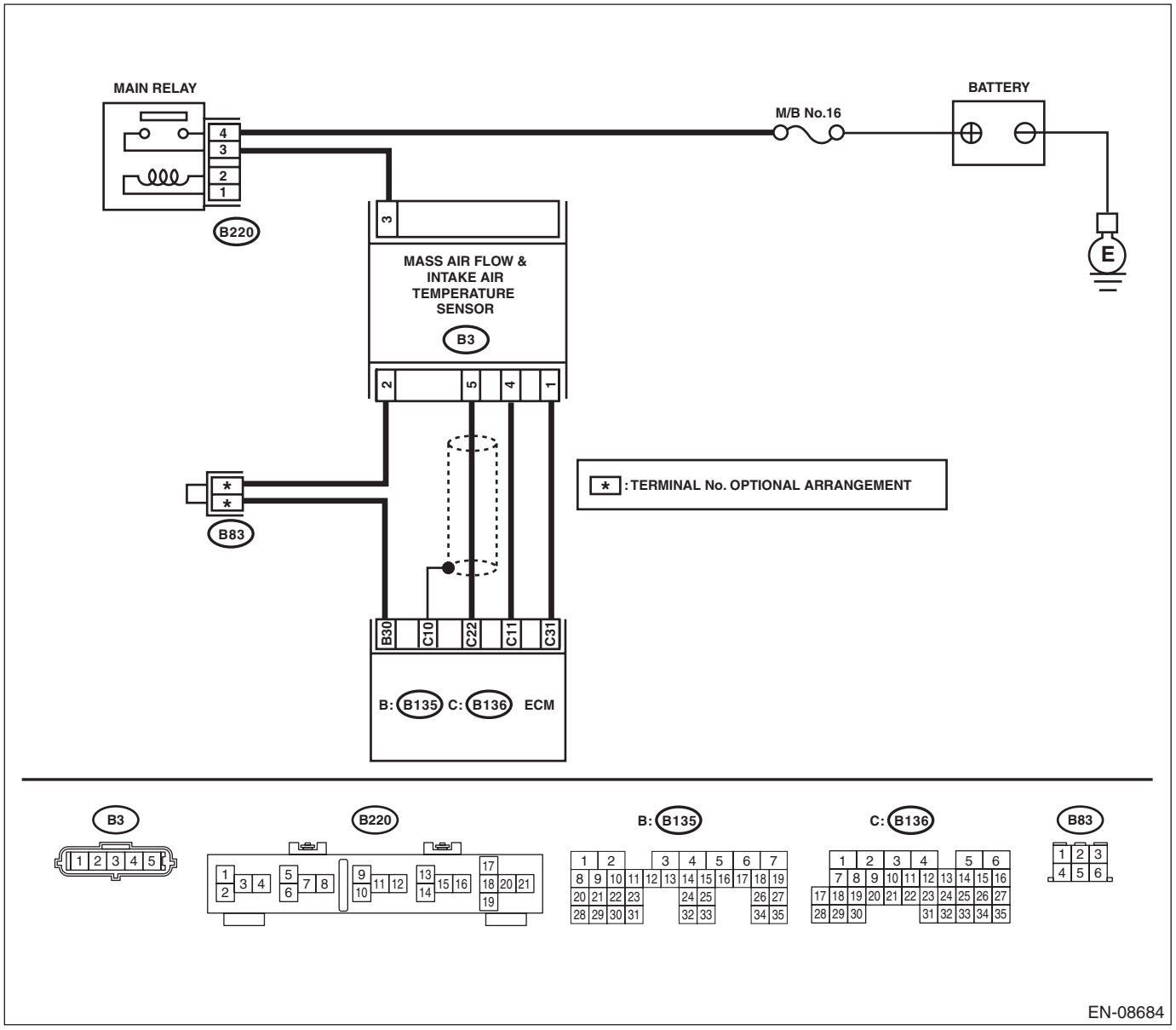

	Step	Check	Yes	No
1	**CHECK CURRENT DATA.** 1) Start the engine. 2) Read the value of «Intake Air Temp.» using the Subaru Select Monitor or a general scan tool. NOTE: • Subaru Select Monitor For detailed operation procedures, refer to "READ CURRENT DATA FOR ENGINE". <Ref. to EN(H4DOTC)(diag)-34, Subaru Select Monitor.> • General scan tool For detailed operation procedures, refer to the general scan tool operation manual.	Is the value of «Intake Air Temp.» 120°C (248°F) or more?	Go to step **2**.	Even if DTC is detected, the circuit has returned to a normal condition at this time. Reproduce the failure, and then perform the diagnosis again. NOTE: In this case, temporary poor contact of connector, temporary open or short circuit of harness may be the cause.
2	**CHECK HARNESS BETWEEN ECM AND MASS AIR FLOW AND INTAKE AIR TEMPERATURE SENSOR CONNECTOR.** 1) Turn the ignition switch to OFF. 2) Disconnect the connector from ECM and the mass air flow and intake air temperature sensor. 3) Measure the resistance between ECM and chassis ground. ***Connector & terminal*** ***(B136) No. 31 — Chassis ground:***	Is the resistance 1 MΩ or more?	Replace the mass air flow and intake air temperature sensor. <Ref. to FU(H4DOTC)-42, Mass Air Flow and Intake Air Temperature Sensor.>	Repair the short circuit to ground in harness between ECM and mass air flow and intake air temperature sensor connector.

V: DTC P0113 INTAKE AIR TEMPERATURE SENSOR 1 CIRCUIT HIGH

DTC DETECTING CONDITION:

- Immediately at fault recognition
- GENERAL DESCRIPTION <Ref. to GD(H4DOTC)-45, DTC P0113 INTAKE AIR TEMPERATURE SENSOR 1 CIRCUIT HIGH, Diagnostic Trouble Code (DTC) Detecting Criteria.>

TROUBLE SYMPTOM:

- Improper idling
- Poor driving performance

CAUTION:

After servicing or replacing faulty parts, perform Clear Memory Mode <Ref. to EN(H4DOTC)(diag)-53, OPERATION, Clear Memory Mode.>, and Inspection Mode <Ref. to EN(H4DOTC)(diag)-41, PROCEDURE, Inspection Mode.>.

WIRING DIAGRAM:

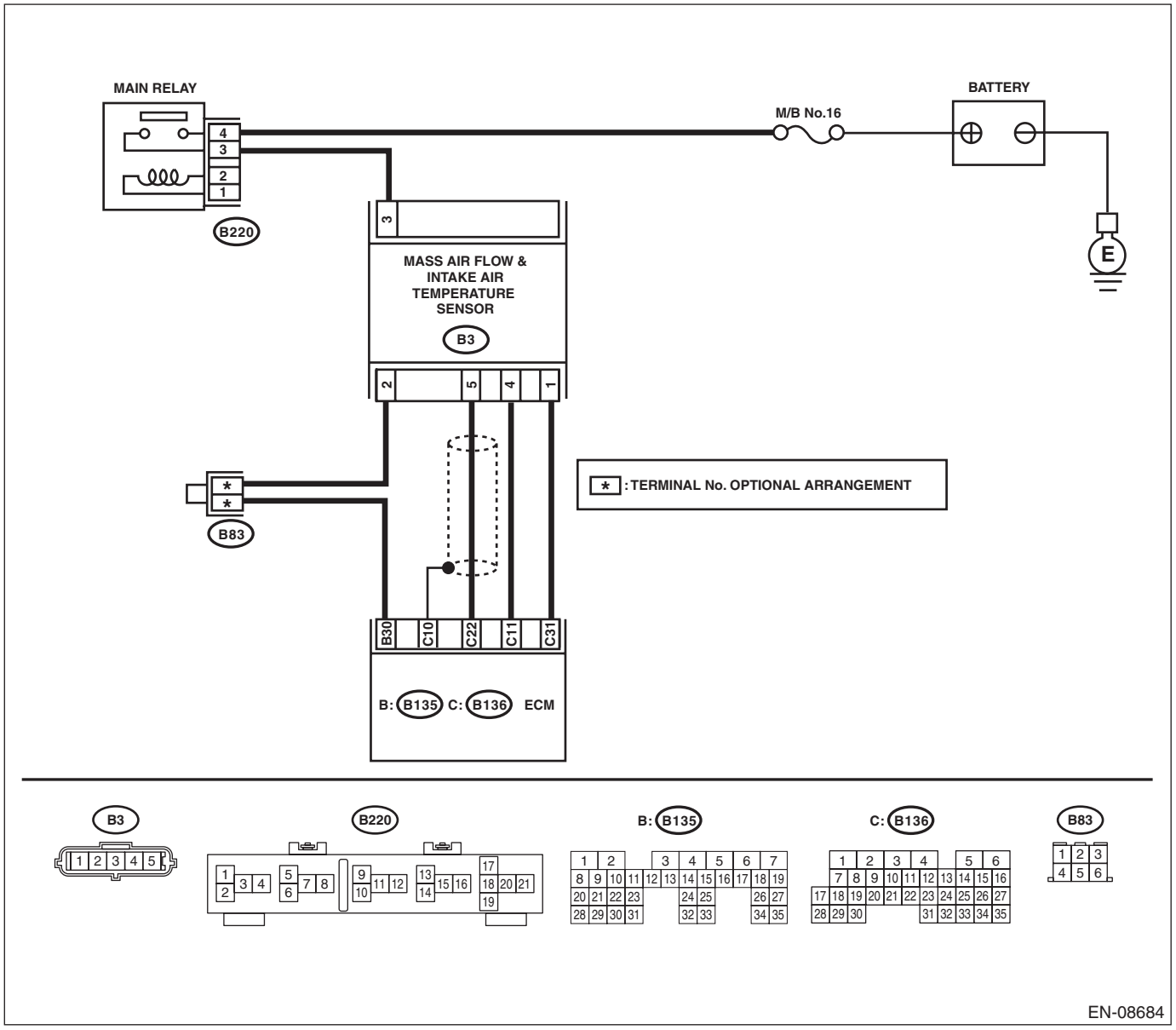

	Step	Check	Yes	No
1	**CHECK CURRENT DATA.** 1) Start the engine. 2) Read the value of «Intake Air Temp.» using the Subaru Select Monitor or a general scan tool. NOTE: • Subaru Select Monitor For detailed operation procedures, refer to "READ CURRENT DATA FOR ENGINE". <Ref. to EN(H4DOTC)(diag)-34, Subaru Select Monitor.> • General scan tool For detailed operation procedures, refer to the general scan tool operation manual.	Is the value of «Intake Air Temp.» less than –40°C (–40°F)?	Go to step **2**.	Even if DTC is detected, the circuit has returned to a normal condition at this time. Reproduce the failure, and then perform the diagnosis again. NOTE: In this case, temporary poor contact of connector, temporary open or short circuit of harness may be the cause.
2	**CHECK FOR POOR CONTACT.** Check for poor contact of ECM and mass air flow and intake air temperature sensor connector.	Is there poor contact of ECM or mass air flow and intake air temperature sensor connector?	Repair the poor contact of ECM or mass air flow and intake air temperature sensor connector.	Go to step **3**.
3	**CHECK HARNESS BETWEEN ECM AND MASS AIR FLOW AND INTAKE AIR TEMPERATURE SENSOR CONNECTOR.** 1) Turn the ignition switch to OFF. 2) Disconnect the connector from ECM and the mass air flow and intake air temperature sensor. 3) Measure the resistance of harness between ECM and the mass air flow and intake air temperature sensor connector. ***Connector & terminal*** ***(B136) No. 31 — (B3) No. 1:*** ***(B135) No. 30 — (B3) No. 2:***	Is the resistance less than 1 Ω?	Go to step **4**.	Repair the harness and connector. NOTE: In this case, repair the following item: • Open circuit in harness between ECM and mass air flow and intake air temperature sensor connector • Poor contact of coupling connector
4	**CHECK HARNESS BETWEEN ECM AND MASS AIR FLOW AND INTAKE AIR TEMPERATURE SENSOR CONNECTOR.** 1) Connect all connectors. 2) Turn the ignition switch to ON. 3) Measure the voltage between ECM and chassis ground. ***Connector & terminal*** ***(B136) No. 31 (+) — Chassis ground (–):***	Is the voltage 5 V or more?	Repair the short circuit of harness to power supply between ECM and mass air flow and intake air temperature sensor connector.	Replace the mass air flow and intake air temperature sensor. <Ref. to FU(H4DOTC)-42, Mass Air Flow and Intake Air Temperature Sensor.>

W: DTC P0117 ENGINE COOLANT TEMPERATURE CIRCUIT LOW

DTC DETECTING CONDITION:

- Immediately at fault recognition
- GENERAL DESCRIPTION <Ref. to GD(H4DOTC)-47, DTC P0117 ENGINE COOLANT TEMPERATURE CIRCUIT LOW, Diagnostic Trouble Code (DTC) Detecting Criteria.>

TROUBLE SYMPTOM:

- Hard to start
- Improper idling
- Poor driving performance

CAUTION:
After servicing or replacing faulty parts, perform Clear Memory Mode <Ref. to EN(H4DOTC)(diag)-53, OPERATION, Clear Memory Mode.>, and Inspection Mode <Ref. to EN(H4DOTC)(diag)-41, PROCEDURE, Inspection Mode.>.

WIRING DIAGRAM:

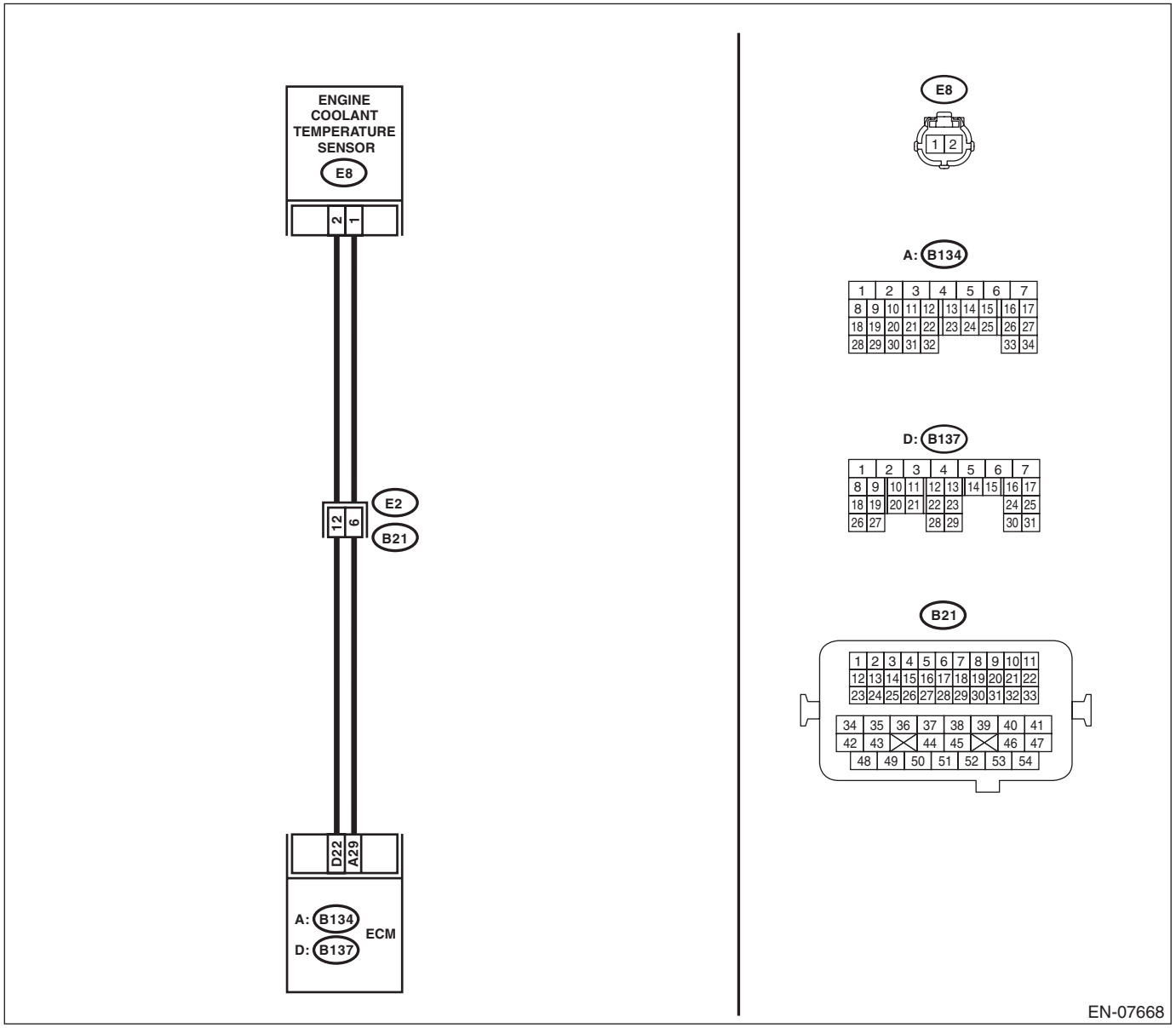

	Step	Check	Yes	No
1	**CHECK CURRENT DATA.** 1) Start the engine. 2) Read the value of «Coolant Temp.» using the Subaru Select Monitor or a general scan tool. NOTE: • Subaru Select Monitor For detailed operation procedures, refer to “READ CURRENT DATA FOR ENGINE”. <Ref. to EN(H4DOTC)(diag)-34, Subaru Select Monitor.> • General scan tool For detailed operation procedures, refer to the general scan tool operation manual.	Is the value of «Coolant Temp.» 150°C (302°F) or more?	Go to step **2**.	Even if DTC is detected, the circuit has returned to a normal condition at this time. Reproduce the failure, and then perform the diagnosis again. NOTE: In this case, temporary poor contact of connector, temporary open or short circuit of harness may be the cause.
2	**CHECK HARNESS BETWEEN ECM AND ENGINE COOLANT TEMPERATURE SENSOR CONNECTOR.** 1) Turn the ignition switch to OFF. 2) Disconnect the connectors from ECM and engine coolant temperature sensor. 3) Measure the resistance between ECM and chassis ground. ***Connector & terminal*** ***(B137) No. 22 — Chassis ground:***	Is the resistance 1 MΩ or more?	Replace the engine coolant temperature sensor. <Ref. to FU(H4DOTC)-34, Engine Coolant Temperature Sensor.>	Repair short circuit in harness to ground between ECM and engine coolant temperature sensor connector.

X: DTC P0118 ENGINE COOLANT TEMPERATURE CIRCUIT HIGH

DTC DETECTING CONDITION:

- Immediately at fault recognition
- GENERAL DESCRIPTION <Ref. to GD(H4DOTC)-49, DTC P0118 ENGINE COOLANT TEMPERATURE CIRCUIT HIGH, Diagnostic Trouble Code (DTC) Detecting Criteria.>

TROUBLE SYMPTOM:

- Hard to start
- Improper idling
- Poor driving performance

CAUTION:
After servicing or replacing faulty parts, perform Clear Memory Mode <Ref. to EN(H4DOTC)(diag)-53, OPERATION, Clear Memory Mode.>, and Inspection Mode <Ref. to EN(H4DOTC)(diag)-41, PROCEDURE, Inspection Mode.>.

WIRING DIAGRAM:

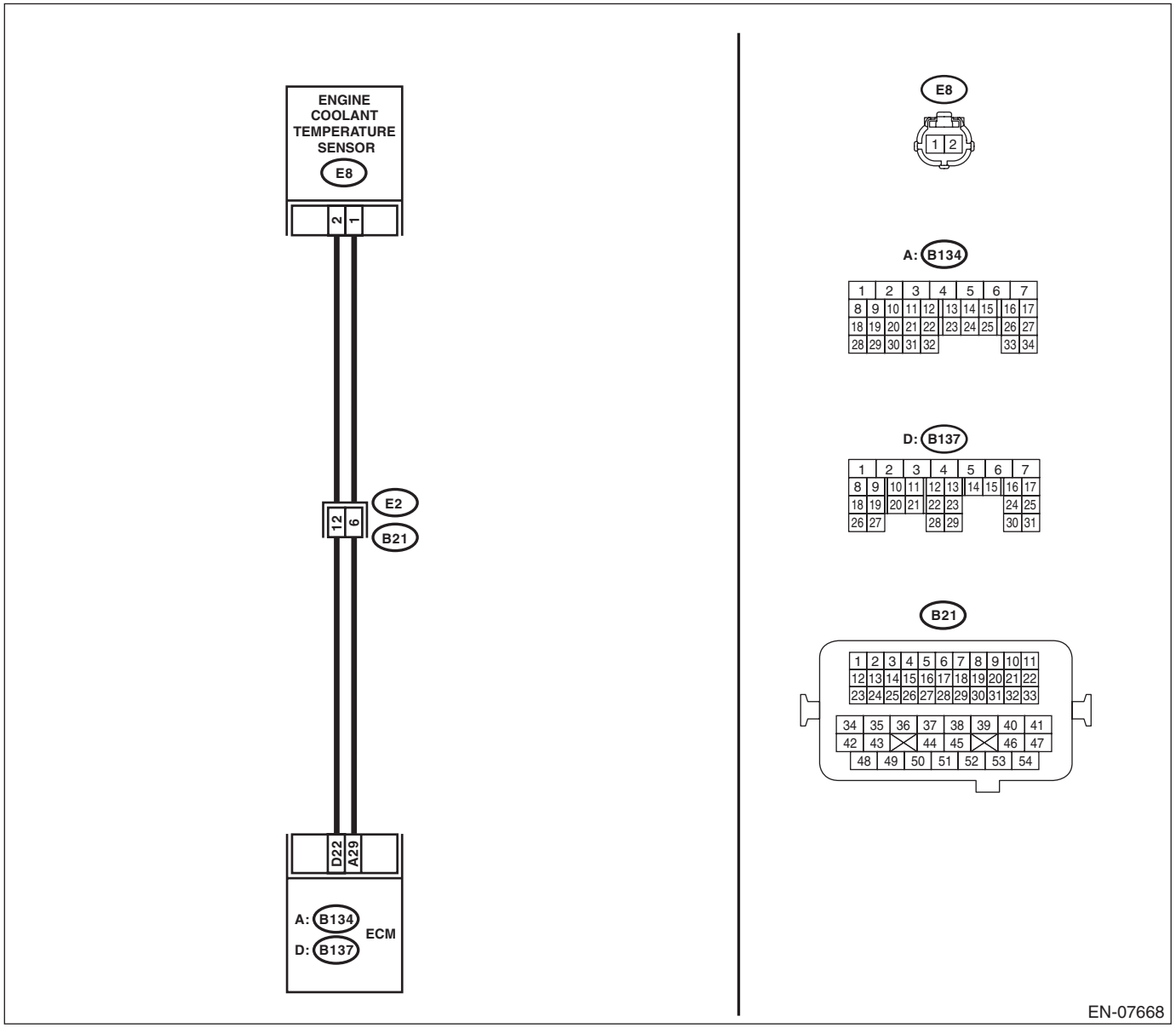

	Step	Check	Yes	No
1	**CHECK CURRENT DATA.** 1) Start the engine. 2) Read the value of «Coolant Temp.» using the Subaru Select Monitor or a general scan tool. NOTE: • Subaru Select Monitor For detailed operation procedures, refer to "READ CURRENT DATA FOR ENGINE". <Ref. to EN(H4DOTC)(diag)-34, Subaru Select Monitor.> • General scan tool For detailed operation procedures, refer to the general scan tool operation manual.	Is the value of «Coolant Temp.» less than –40°C (–40°F)?	Go to step **2**.	Even if DTC is detected, the circuit has returned to a normal condition at this time. Reproduce the failure, and then perform the diagnosis again. NOTE: In this case, temporary poor contact of connector, temporary open or short circuit of harness may be the cause.
2	**CHECK FOR POOR CONTACT.** Check for poor contact of ECM and engine coolant temperature sensor connector.	Is there poor contact of ECM or engine coolant temperature sensor connector?	Repair the poor contact of ECM or engine coolant temperature sensor connector.	Go to step **3**.
3	**CHECK HARNESS BETWEEN ECM AND ENGINE COOLANT TEMPERATURE SENSOR CONNECTOR.** 1) Turn the ignition switch to OFF. 2) Disconnect the connectors from ECM and engine coolant temperature sensor. 3) Measure the resistance of harness between ECM and engine coolant temperature sensor connector. ***Connector & terminal*** ***(B137) No. 22 — (E8) No. 2:*** ***(B134) No. 29 — (E8) No. 1:***	Is the resistance less than 1 Ω?	Go to step **4**.	Repair the harness and connector. NOTE: In this case, repair the following item: • Open circuit in harness between ECM and engine coolant temperature sensor connector • Poor contact of coupling connector
4	**CHECK HARNESS BETWEEN ECM AND ENGINE COOLANT TEMPERATURE SENSOR CONNECTOR.** 1) Connect all connectors. 2) Turn the ignition switch to ON. 3) Measure the voltage between ECM and chassis ground. ***Connector & terminal*** ***(B137) No. 22 (+) — Chassis ground (–):***	Is the voltage 5 V or more?	Repair the short circuit to power in harness between ECM and engine coolant temperature sensor connector.	Replace the engine coolant temperature sensor. <Ref. to FU(H4DOTC)-34, Engine Coolant Temperature Sensor.>

Y: DTC P0122 THROTTLE/PEDAL POSITION SENSOR/SWITCH “A” CIRCUIT LOW

DTC DETECTING CONDITION:

- Immediately at fault recognition
- GENERAL DESCRIPTION <Ref. to GD(H4DOTC)-51, DTC P0122 THROTTLE/PEDAL POSITION SENSOR/SWITCH “A” CIRCUIT LOW, Diagnostic Trouble Code (DTC) Detecting Criteria.>

TROUBLE SYMPTOM:

- Improper idling
- Engine stalls.
- Poor driving performance

CAUTION:

After servicing or replacing faulty parts, perform Clear Memory Mode <Ref. to EN(H4DOTC)(diag)-53, OPERATION, Clear Memory Mode.>, and Inspection Mode <Ref. to EN(H4DOTC)(diag)-41, PROCEDURE, Inspection Mode.>.

WIRING DIAGRAM:

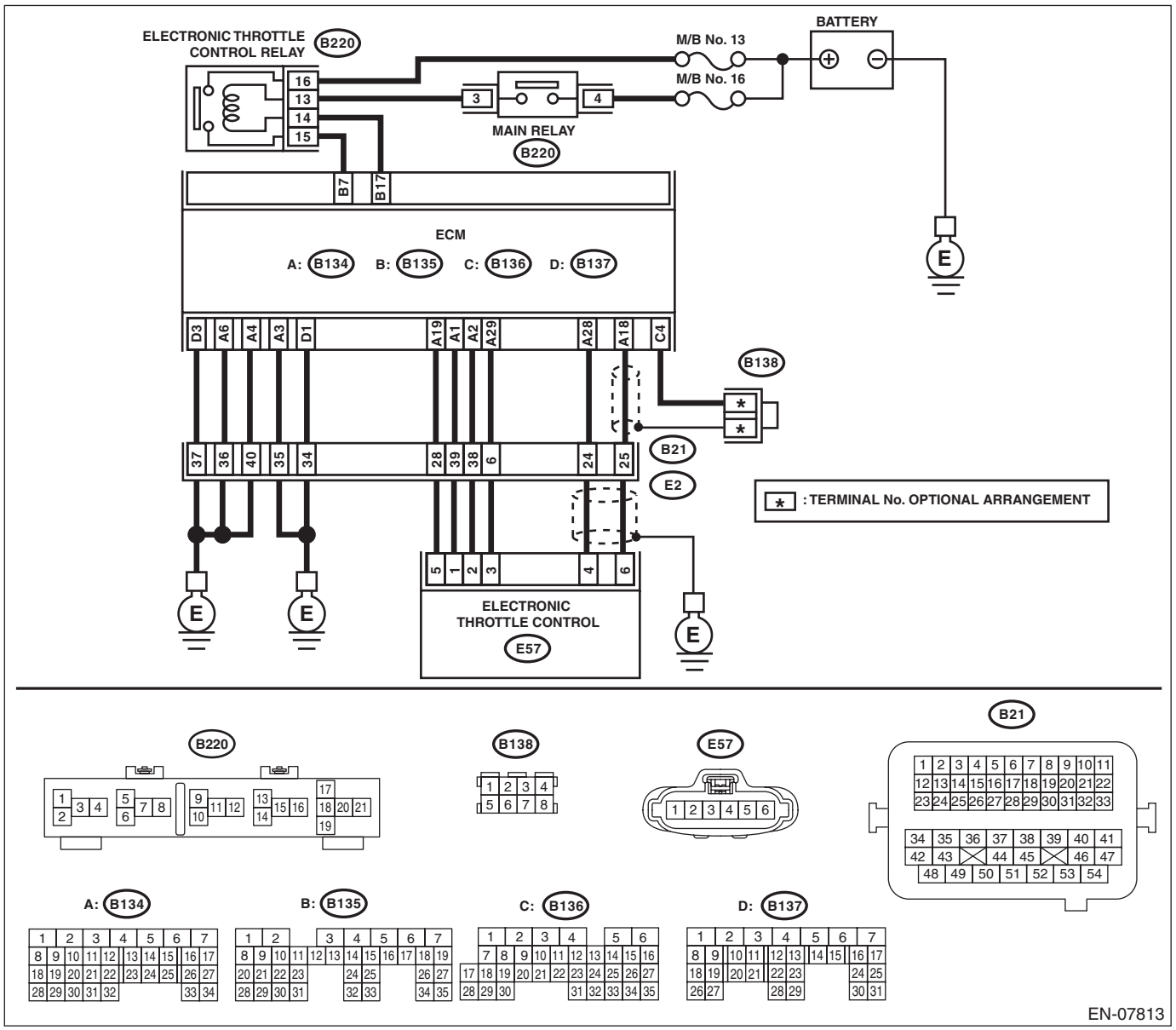

	Step	Check	Yes	No
1	**CHECK HARNESS BETWEEN ECM AND ELECTRONIC THROTTLE CONTROL CONNECTOR.** 1) Turn the ignition switch to OFF. 2) Disconnect the connectors from ECM and electronic throttle control. 3) Measure the resistance between ECM and chassis ground. ***Connector & terminal*** ***(B134) No. 19 — Chassis ground:*** ***(B134) No. 18 — Chassis ground:*** ***(B134) No. 18 — (B136) No. 4:***	Is the resistance 1 MΩ or more?	Go to step **2**.	Repair the short circuit to ground in harness between ECM and electronic throttle control connector.
2	**CHECK SHORT CIRCUIT INSIDE THE ECM.** 1) Connect the connector to ECM. 2) Measure the resistance between electronic throttle control connector and engine ground. ***Connector & terminal*** ***(E57) No. 6 — Engine ground:***	Is the resistance 1 MΩ or more?	Replace the electronic throttle control. <Ref. to FU(H4DOTC)-15, Throttle Body.>	Repair the short circuit to ground in harness between ECM and electronic throttle control connector. Replace the ECM if defective. <Ref. to FU(H4DOTC)-58, Engine Control Module (ECM).>

Z: DTC P0123 THROTTLE/PEDAL POSITION SENSOR/SWITCH “A” CIRCUIT HIGH

DTC DETECTING CONDITION:

- Immediately at fault recognition
- GENERAL DESCRIPTION <Ref. to GD(H4DOTC)-53, DTC P0123 THROTTLE/PEDAL POSITION SENSOR/SWITCH “A” CIRCUIT HIGH, Diagnostic Trouble Code (DTC) Detecting Criteria.>

TROUBLE SYMPTOM:

- Improper idling
- Engine stalls.
- Poor driving performance

CAUTION:

After servicing or replacing faulty parts, perform Clear Memory Mode <Ref. to EN(H4DOTC)(diag)-53, OPERATION, Clear Memory Mode.>, and Inspection Mode <Ref. to EN(H4DOTC)(diag)-41, PROCEDURE, Inspection Mode.>.

WIRING DIAGRAM:

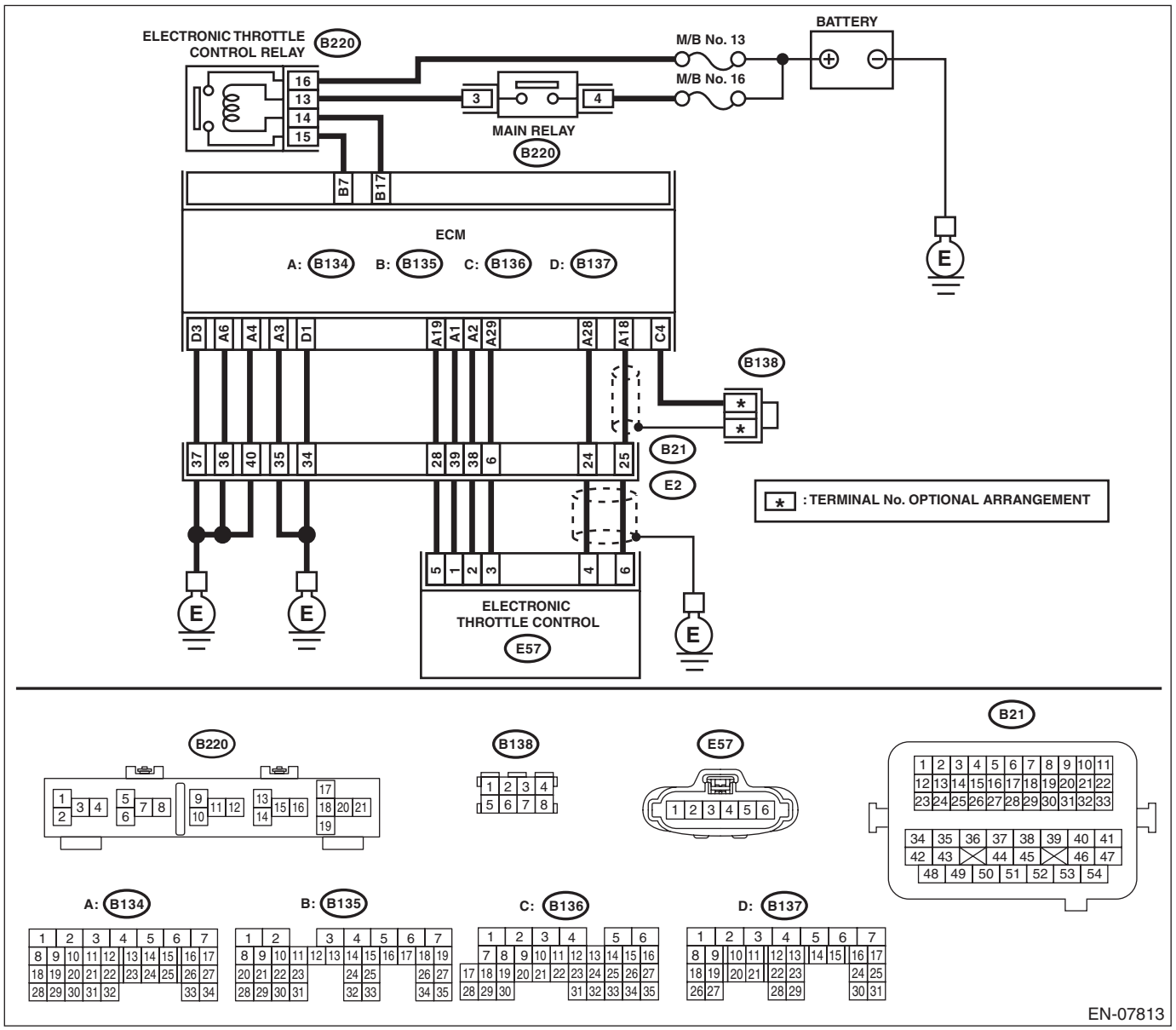

	Step	Check	Yes	No
1	**CHECK HARNESS BETWEEN ECM AND ELECTRONIC THROTTLE CONTROL CONNECTOR.** 1) Turn the ignition switch to OFF. 2) Disconnect the connectors from the ECM and electronic throttle control. 3) Measure the resistance of harness between ECM and electronic throttle control connector. ***Connector & terminal*** ***(B134) No. 18 — (E57) No. 6:*** ***(B134) No. 29 — (E57) No. 3:***	Is the resistance less than 1 Ω?	Go to step **2**.	Repair the harness and connector. NOTE: In this case, repair the following item: • Open circuit in harness between ECM and electronic throttle control connector • Poor contact of coupling connector
2	**CHECK HARNESS BETWEEN ECM AND ELECTRONIC THROTTLE CONTROL CONNECTOR.** 1) Connect the connector to ECM. 2) Measure the resistance between electronic throttle control connector and engine ground. ***Connector & terminal*** ***(E57) No. 3 — Engine ground:***	Is the resistance less than 5 Ω?	Go to step **3**.	Repair the harness and connector. NOTE: In this case, repair the following item: • Open circuit of harness between ECM and engine ground • Poor contact of ECM connector • Poor contact of coupling connector
3	**CHECK HARNESS BETWEEN ECM AND ELECTRONIC THROTTLE CONTROL CONNECTOR.** 1) Turn the ignition switch to ON. 2) Measure the voltage between electronic throttle control connector and engine ground. ***Connector & terminal*** ***(E57) No. 6 (+) — Engine ground (–):***	Is the voltage 5 V or more?	Repair the short circuit of harness to power supply between ECM and electronic throttle control connector.	Go to step **4**.
4	**CHECK HARNESS BETWEEN ECM AND ELECTRONIC THROTTLE CONTROL CONNECTOR.** 1) Turn the ignition switch to OFF. 2) Disconnect the connector from ECM. 3) Measure the resistance between ECM connectors. ***Connector & terminal*** ***(B134) No. 19 — (B134) No. 18:***	Is the resistance 1 MΩ or more?	Repair the poor contact of electronic throttle control connector. Replace the electronic throttle control if defective. <Ref. to FU(H4DOTC)-15, Throttle Body.>	Repair the short circuit of harness to power supply between ECM and electronic throttle control connector.

AA:DTC P0125 INSUFFICIENT COOLANT TEMPERATURE FOR CLOSED LOOP FUEL CONTROL

DTC DETECTING CONDITION:

- Detected when two consecutive driving cycles with fault occur.
- GENERAL DESCRIPTION <Ref. to GD(H4DOTC)-55, DTC P0125 INSUFFICIENT COOLANT TEMPERATURE FOR CLOSED LOOP FUEL CONTROL, Diagnostic Trouble Code (DTC) Detecting Criteria.>

TROUBLE SYMPTOM:

Engine does not return to idle.

CAUTION:

After servicing or replacing faulty parts, perform Clear Memory Mode <Ref. to EN(H4DOTC)(diag)-53, OPERATION, Clear Memory Mode.>, and Inspection Mode <Ref. to EN(H4DOTC)(diag)-41, PROCEDURE, Inspection Mode.>.

	Step	Check	Yes	No
1	**CHECK TIRE SIZE.**	Is the tire size as specified and the same size as three other wheels?	Go to step **2**.	Replace the tire.
2	**CHECK ENGINE COOLANT.** Check the following items: • Amount of engine coolant • Engine coolant freeze • Contamination of engine coolant	Is the engine coolant normal?	Go to step **3**.	Fill or replace the engine coolant. <Ref. to CO(H4DOTC)-14, REPLACEMENT, Engine Coolant.>
3	**CHECK THERMOSTAT.**	Does the thermostat remain opened?	Replace the thermostat. <Ref. to CO(H4DOTC)-19, Thermostat.>	Replace the engine coolant temperature sensor. <Ref. to FU(H4DOTC)-34, Engine Coolant Temperature Sensor.>

AB:DTC P0126 INSUFFICIENT ENGINE COOLANT TEMPERATURE FOR STABLE OPERATION

DTC DETECTING CONDITION:

- Detected when two consecutive driving cycles with fault occur.
- GENERAL DESCRIPTION <Ref. to GD(H4DOTC)-57, DTC P0126 INSUFFICIENT ENGINE COOLANT TEMPERATURE FOR STABLE OPERATION, Diagnostic Trouble Code (DTC) Detecting Criteria.>

TROUBLE SYMPTOM:

- Hard to start
- Improper idling
- Poor driving performance

CAUTION:

After servicing or replacing faulty parts, perform Clear Memory Mode <Ref. to EN(H4DOTC)(diag)-53, OPERATION, Clear Memory Mode.>, and Inspection Mode <Ref. to EN(H4DOTC)(diag)-41, PROCEDURE, Inspection Mode.>.

	Step	Check	Yes	No
1	**CHECK ENGINE COOLANT TEMPERATURE SENSOR.** 1) Disconnect the connectors from the engine coolant temperature sensor. 2) Measure the resistance between engine coolant temperature sensor terminals when the engine coolant is cold and after warmed up. ***Terminals*** ***No. 1 — No. 2:***	Is the resistance of engine coolant temperature sensor different between when engine coolant is cold and after warmed up?	Repair the poor contact of ECM connector.	Replace the engine coolant temperature sensor. <Ref. to FU(H4DOTC)-34, Engine Coolant Temperature Sensor.>

AC:DTC P0128 COOLANT THERMOSTAT (ENGINE COOLANT TEMPERATURE BELOW THERMOSTAT REGULATING TEMPERATURE)

DTC DETECTING CONDITION:

- Detected when two consecutive driving cycles with fault occur.
- GENERAL DESCRIPTION <Ref. to GD(H4DOTC)-59, DTC P0128 COOLANT THERMOSTAT (ENGINE COOLANT TEMPERATURE BELOW THERMOSTAT REGULATING TEMPERATURE), Diagnostic Trouble Code (DTC) Detecting Criteria.>

TROUBLE SYMPTOM:

Thermostat remains open.

CAUTION:

After servicing or replacing faulty parts, perform Clear Memory Mode <Ref. to EN(H4DOTC)(diag)-53, OPERATION, Clear Memory Mode.>, and Inspection Mode <Ref. to EN(H4DOTC)(diag)-41, PROCEDURE, Inspection Mode.>.

	Step	Check	Yes	No
1	**CHECK ENGINE COOLANT.**	Is the engine coolant amount normal?	Go to step **2**.	Refill the engine coolant. <Ref. to CO(H4DOTC)-14, Engine Coolant.>
2	**CHECK RADIATOR FAN.** 1) Start the engine. 2) Check the radiator fan operation.	Does the radiator fan continuously rotate for 3 minutes or more during idling?	Repair radiator fan circuit. <Ref. to CO(H4DOTC)-25, Radiator Main Fan and Fan Motor.> and <Ref. to CO(H4DOTC)-27, Radiator Sub Fan and Fan Motor.>	Replace the thermostat. <Ref. to CO(H4DOTC)-19, Thermostat.>

AD:DTC P0131 O2 SENSOR CIRCUIT LOW VOLTAGE (BANK 1 SENSOR 1)

DTC DETECTING CONDITION:

- Immediately at fault recognition
- GENERAL DESCRIPTION <Ref. to GD(H4DOTC)-63, DTC P0131 O2 SENSOR CIRCUIT LOW VOLTAGE (BANK 1 SENSOR 1), Diagnostic Trouble Code (DTC) Detecting Criteria.>

CAUTION:
After servicing or replacing faulty parts, perform Clear Memory Mode <Ref. to EN(H4DOTC)(diag)-53, OPERATION, Clear Memory Mode.>, and Inspection Mode <Ref. to EN(H4DOTC)(diag)-41, PROCEDURE, Inspection Mode.>.
WIRING DIAGRAM:

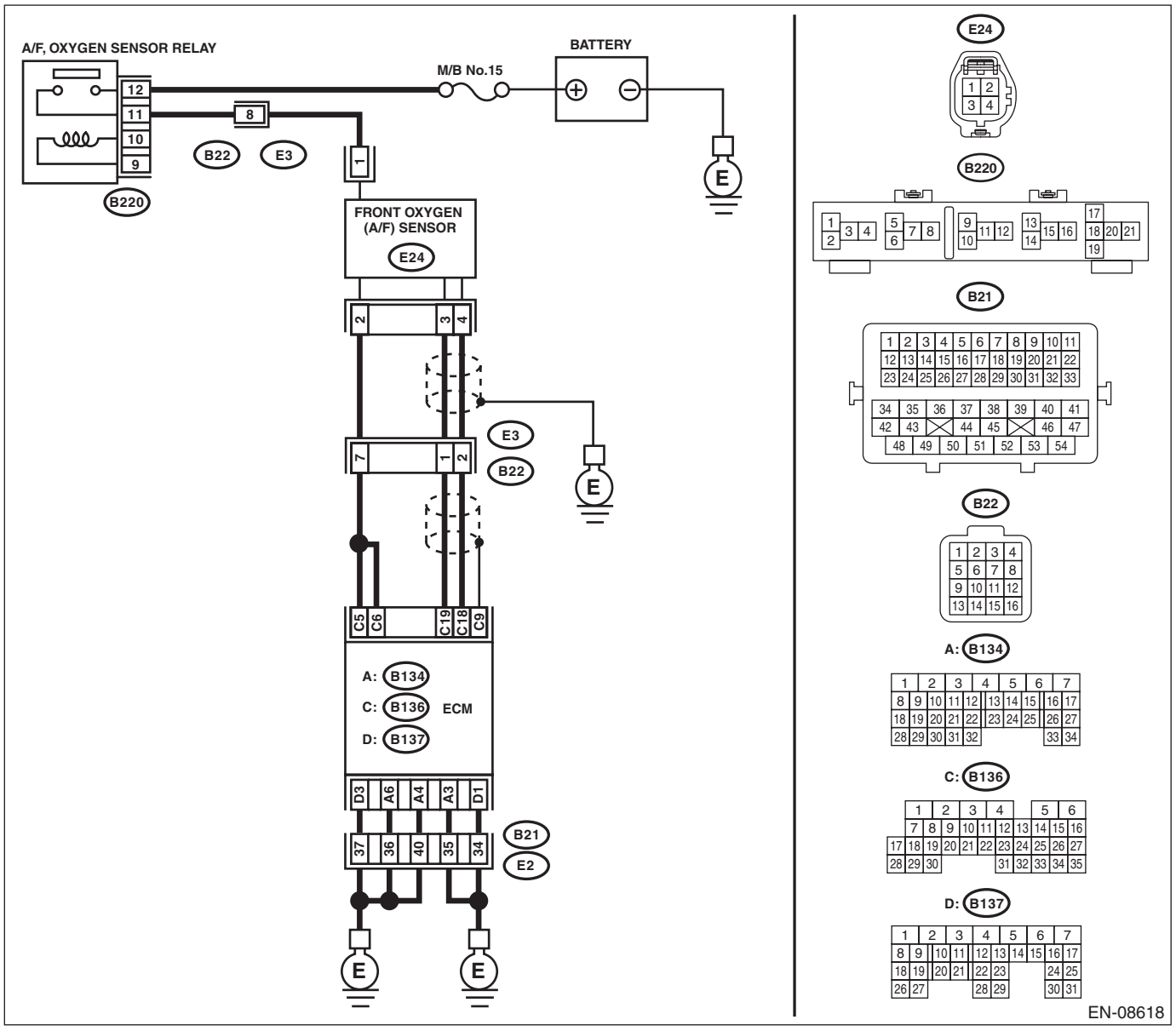

Step		Check	Yes	No
1	**CHECK FRONT OXYGEN (A/F) SENSOR CONNECTOR AND COUPLING CONNECTOR.**	Has water entered the connector?	Completely remove any water inside.	Go to step **2**.

	Step	Check	Yes	No
2	**CHECK HARNESS BETWEEN ECM AND FRONT OXYGEN (A/F) SENSOR CONNECTOR.** 1) Turn the ignition switch to OFF. 2) Disconnect the connectors from ECM and front oxygen (A/F) sensor connector. 3) Measure the resistance between ECM and chassis ground. ***Connector & terminal*** ***(B136) No. 19 — Chassis ground:*** ***(B136) No. 18 — Chassis ground:***	Is the resistance 1 MΩ or more?	Go to step **3**.	Repair the ground short circuit of harness between ECM and front oxygen (A/F) sensor connector.
3	**CHECK FOR POOR CONTACT.** Check for poor contact of the front oxygen (A/F) sensor connector.	Is there poor contact of front oxygen (A/F) sensor connector?	Repair the poor contact of front oxygen (A/F) sensor connector.	Replace the front oxygen (A/F) sensor. <Ref. to FU(H4DOTC)-54, Front Oxygen (A/F) Sensor.>

AE:DTC P0132 O2 SENSOR CIRCUIT HIGH VOLTAGE (BANK 1 SENSOR 1)

DTC DETECTING CONDITION:

- Immediately at fault recognition
- GENERAL DESCRIPTION <Ref. to GD(H4DOTC)-65, DTC P0132 O2 SENSOR CIRCUIT HIGH VOLTAGE (BANK 1 SENSOR 1), Diagnostic Trouble Code (DTC) Detecting Criteria.>

CAUTION:
After servicing or replacing faulty parts, perform Clear Memory Mode <Ref. to EN(H4DOTC)(diag)-53, OPERATION, Clear Memory Mode.>, and Inspection Mode <Ref. to EN(H4DOTC)(diag)-41, PROCEDURE, Inspection Mode.>.
WIRING DIAGRAM:

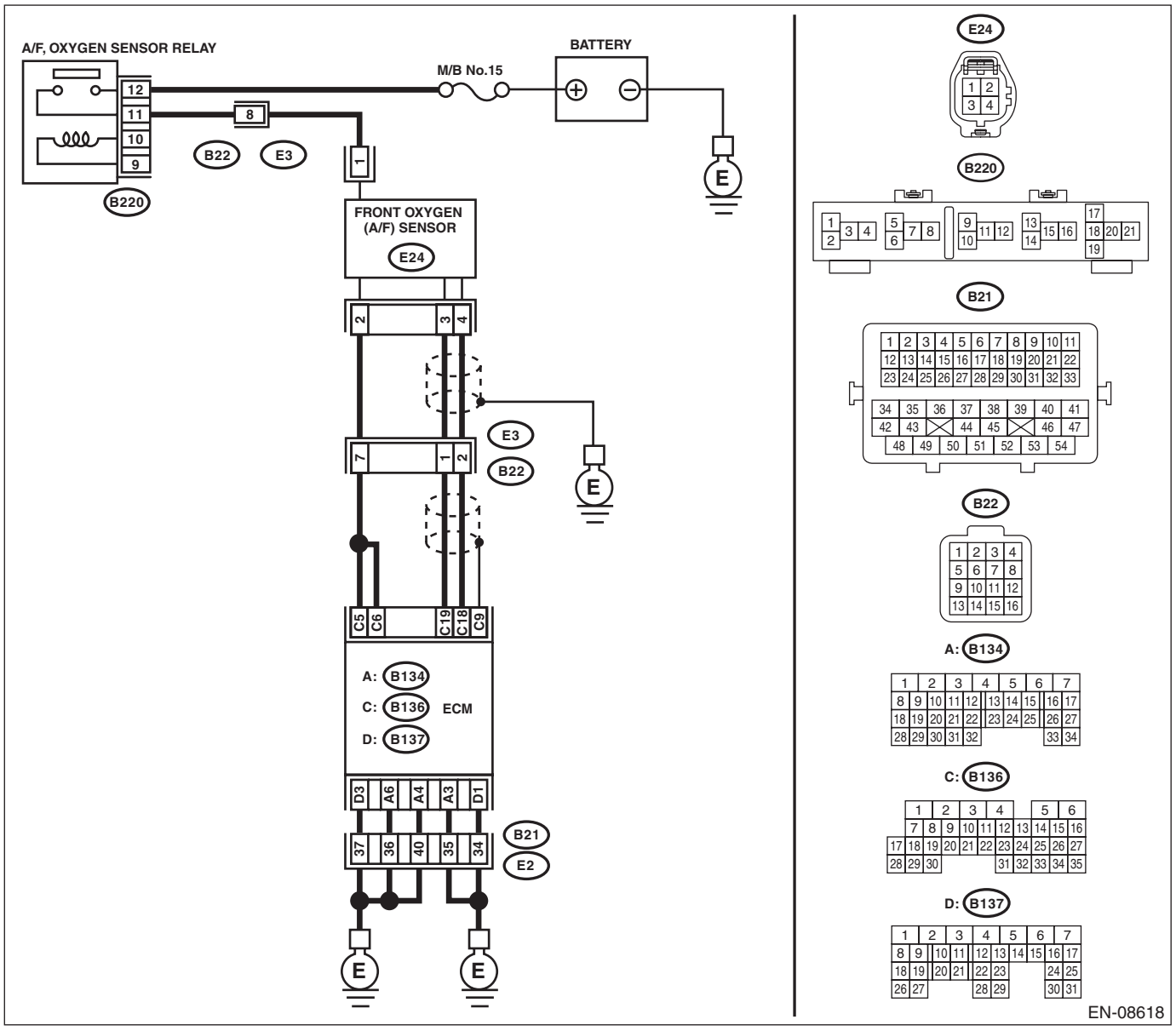

Step		Check	Yes	No
1	**CHECK FRONT OXYGEN (A/F) SENSOR CONNECTOR AND COUPLING CONNECTOR.**	Has water entered the connector?	Completely remove any water inside.	Go to step **2**.

	Step	Check	Yes	No
2	**CHECK HARNESS BETWEEN ECM AND FRONT OXYGEN (A/F) SENSOR CONNECTOR.** 1) Turn the ignition switch to OFF. 2) Disconnect the connectors from front oxygen (A/F) sensor. 3) Turn the ignition switch to ON. 4) Measure the voltage between ECM and chassis ground. ***Connector & terminal*** ***(B136) No. 19 (+) — Chassis ground (–):*** ***(B136) No. 18 (+) — Chassis ground (–):***	Is the voltage 8 V or more?	Repair the short circuit to power in the harness between ECM and front oxygen (A/F) sensor connector.	Replace the front oxygen (A/F) sensor. <Ref. to FU(H4DOTC)-54, Front Oxygen (A/F) Sensor.>

AF:DTC P0133 O2 SENSOR CIRCUIT SLOW RESPONSE (BANK 1 SENSOR 1)

DTC DETECTING CONDITION:

- Detected when two consecutive driving cycles with fault occur.
- GENERAL DESCRIPTION <Ref. to GD(H4DOTC)-67, DTC P0133 O2 SENSOR CIRCUIT SLOW RESPONSE (BANK 1 SENSOR 1), Diagnostic Trouble Code (DTC) Detecting Criteria.>

CAUTION:
After servicing or replacing faulty parts, perform Clear Memory Mode <Ref. to EN(H4DOTC)(diag)-53, OPERATION, Clear Memory Mode.>, and Inspection Mode <Ref. to EN(H4DOTC)(diag)-41, PROCEDURE, Inspection Mode.>.

	Step	Check	Yes	No
1	**CHECK EXHAUST SYSTEM.** NOTE: Check the following items. • Loose installation of front portion of exhaust pipe onto cylinder heads • Loose connection between front exhaust pipe and front catalytic converter • Damage of exhaust pipe resulting in a hole	Is there any fault in exhaust system?	Repair the exhaust system.	Replace the front oxygen (A/F) sensor. <Ref. to FU(H4DOTC)-54, Front Oxygen (A/F) Sensor.>

AG:DTC P0134 O2 SENSOR CIRCUIT NO ACTIVITY DETECTED (BANK 1 SENSOR 1)

DTC DETECTING CONDITION:

- Immediately at fault recognition
- GENERAL DESCRIPTION <Ref. to GD(H4DOTC)-70, DTC P0134 O2 SENSOR CIRCUIT NO ACTIVITY DETECTED (BANK 1 SENSOR 1), Diagnostic Trouble Code (DTC) Detecting Criteria.>

CAUTION:

After servicing or replacing faulty parts, perform Clear Memory Mode <Ref. to EN(H4DOTC)(diag)-53, OPERATION, Clear Memory Mode.>, and Inspection Mode <Ref. to EN(H4DOTC)(diag)-41, PROCEDURE, Inspection Mode.>.

WIRING DIAGRAM:

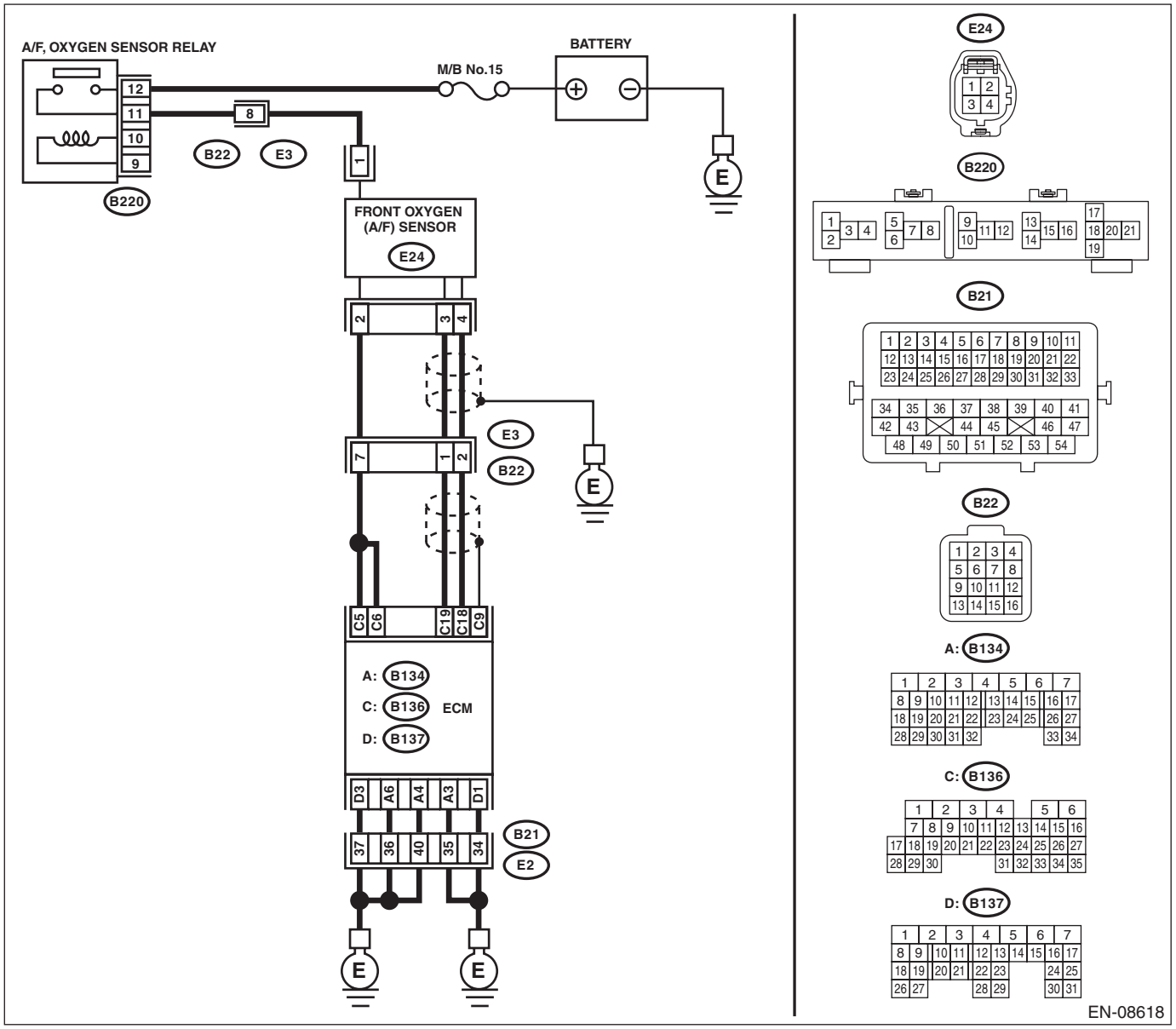

	Step	Check	Yes	No
1	**CHECK HARNESS BETWEEN ECM AND FRONT OXYGEN (A/F) SENSOR CONNECTOR.** 1) Turn the ignition switch to OFF. 2) Disconnect the connectors from ECM and front oxygen (A/F) sensor connector. 3) Measure the resistance of harness between ECM and front oxygen (A/F) sensor connector. ***Connector & terminal*** ***(B136) No. 19 — (E24) No. 3:*** ***(B136) No. 18 — (E24) No. 4:***	Is the resistance less than 1 Ω?	Go to step **2**.	Repair the harness and connector. NOTE: In this case, repair the following item: • Open circuit in harness between ECM and front oxygen (A/F) sensor connector • Poor contact of coupling connector
2	**CHECK FOR POOR CONTACT.** Check for poor contact of ECM and front oxygen (A/F) sensor connector.	Is there poor contact of ECM or front oxygen (A/F) sensor connector?	Repair the poor contact of ECM or front oxygen (A/F) sensor connector.	Replace the front oxygen (A/F) sensor. <Ref. to FU(H4DOTC)-54, Front Oxygen (A/F) Sensor.>

AH:DTC P0137 O2 SENSOR CIRCUIT LOW VOLTAGE (BANK 1 SENSOR 2)

DTC DETECTING CONDITION:

- Detected when two consecutive driving cycles with fault occur.
- GENERAL DESCRIPTION <Ref. to GD(H4DOTC)-72, DTC P0137 O2 SENSOR CIRCUIT LOW VOLTAGE (BANK 1 SENSOR 2), Diagnostic Trouble Code (DTC) Detecting Criteria.>

CAUTION:
After servicing or replacing faulty parts, perform Clear Memory Mode <Ref. to EN(H4DOTC)(diag)-53, OPERATION, Clear Memory Mode.>, and Inspection Mode <Ref. to EN(H4DOTC)(diag)-41, PROCEDURE, Inspection Mode.>.
WIRING DIAGRAM:

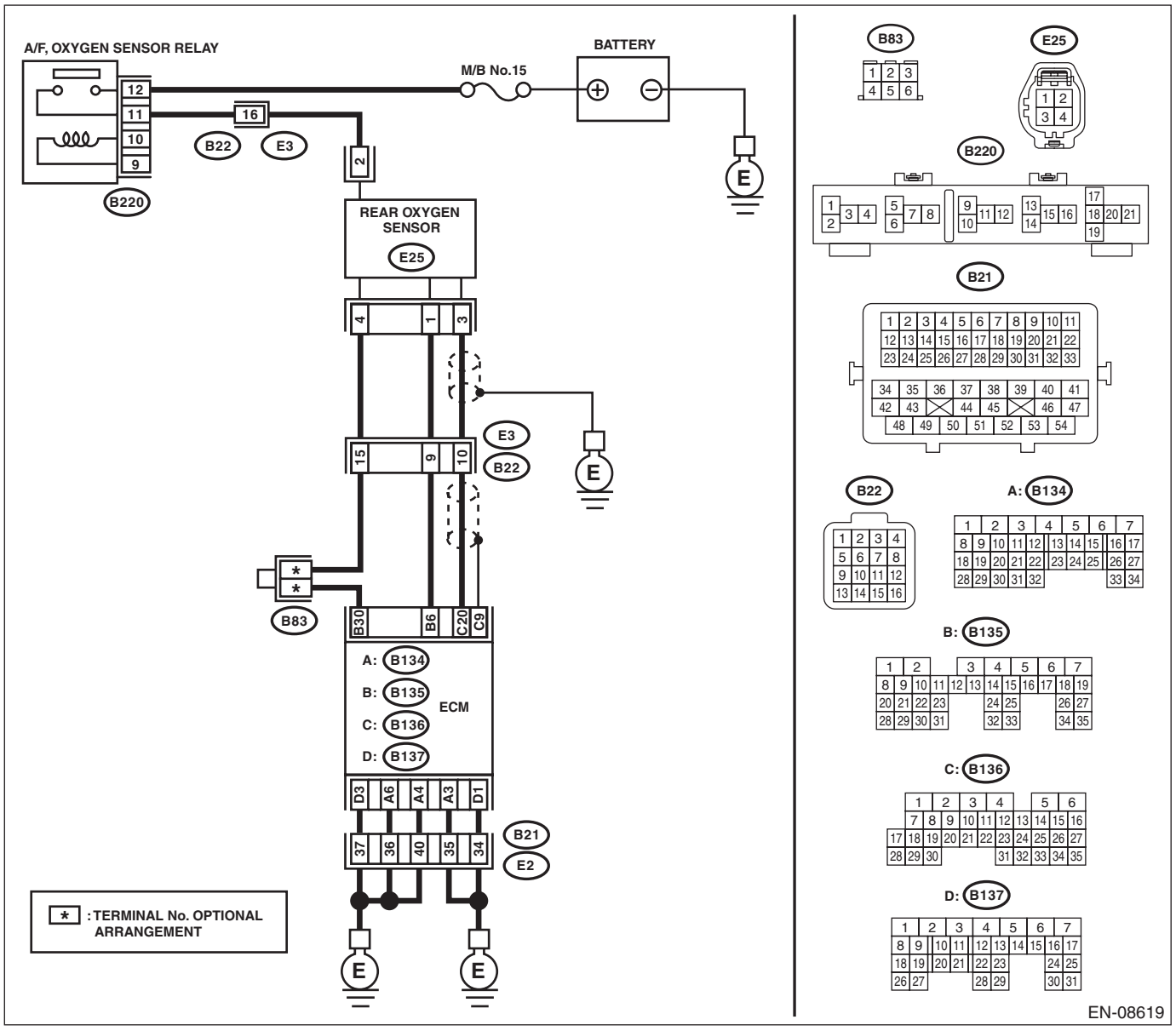

	Step	Check	Yes	No
1	**CHECK REAR OXYGEN SENSOR DATA.** 1) Warm up the engine until engine coolant temperature is higher than 75°C (167°F), and keep the engine speed at 3,000 rpm. (2 minutes maximum) 2) Read the value of «Rear O2 Sensor» using the Subaru Select Monitor or a general scan tool. NOTE: • Subaru Select Monitor For detailed operation procedures, refer to "READ CURRENT DATA FOR ENGINE". <Ref. to EN(H4DOTC)(diag)-34, Subaru Select Monitor.> • General scan tool For detailed operation procedures, refer to the general scan tool operation manual.	Is the value of «Rear O2 Sensor» 0.490 V or more?	Go to step **5**.	Go to step **2**.
2	**CHECK REAR OXYGEN SENSOR CONNECTOR AND COUPLING CONNECTOR.**	Has water entered the connector?	Completely remove any water inside.	Go to step **3**.
3	**CHECK HARNESS BETWEEN ECM AND REAR OXYGEN SENSOR CONNECTOR.** 1) Turn the ignition switch to OFF. 2) Disconnect the connector from ECM and rear oxygen sensor. 3) Measure the resistance of harness between ECM and rear oxygen sensor connector. ***Connector & terminal*** ***(B136) No. 20 — (E25) No. 3:*** ***(B135) No. 30 — (E25) No. 4:***	Is the resistance less than 1 Ω?	Go to step **4**.	Repair the harness and connector. NOTE: In this case, repair the following item: • Open circuit in harness between ECM and rear oxygen sensor connector • Poor contact of coupling connector
4	**CHECK HARNESS BETWEEN ECM AND REAR OXYGEN SENSOR CONNECTOR.** 1) Connect the connector to ECM. 2) Turn the ignition switch to ON. 3) Measure the voltage between rear oxygen sensor connector and chassis ground. ***Connector & terminal*** ***(E25) No. 3 (+) — Chassis ground (–):***	Is the voltage 0.2 — 0.5 V?	Replace the rear oxygen sensor. <Ref. to FU(H4DOTC)-56, Rear Oxygen Sensor.>	Repair the harness and connector. NOTE: In this case, repair the following item: • Open circuit in harness between ECM and rear oxygen sensor connector • Poor contact of ECM connector • Poor contact of coupling connector
5	**CHECK EXHAUST SYSTEM.** Check exhaust system parts. NOTE: Check the following items. • Looseness and improper fitting of exhaust system parts • Damage (crack, hole etc.) of parts • Damage (crack, hole etc.) between front oxygen (A/F) sensor and rear oxygen sensor	Is there any fault in exhaust system?	Repair or replace faulty parts.	Replace the rear oxygen sensor. <Ref. to FU(H4DOTC)-56, Rear Oxygen Sensor.>

AI: DTC P0138 O2 SENSOR CIRCUIT HIGH VOLTAGE (BANK 1 SENSOR 2)

DTC DETECTING CONDITION:

- Detected when two consecutive driving cycles with fault occur.
- GENERAL DESCRIPTION <Ref. to GD(H4DOTC)-74, DTC P0138 O2 SENSOR CIRCUIT HIGH VOLTAGE (BANK 1 SENSOR 2), Diagnostic Trouble Code (DTC) Detecting Criteria.>

CAUTION:
After servicing or replacing faulty parts, perform Clear Memory Mode <Ref. to EN(H4DOTC)(diag)-53, OPERATION, Clear Memory Mode.>, and Inspection Mode <Ref. to EN(H4DOTC)(diag)-41, PROCEDURE, Inspection Mode.>.
WIRING DIAGRAM:

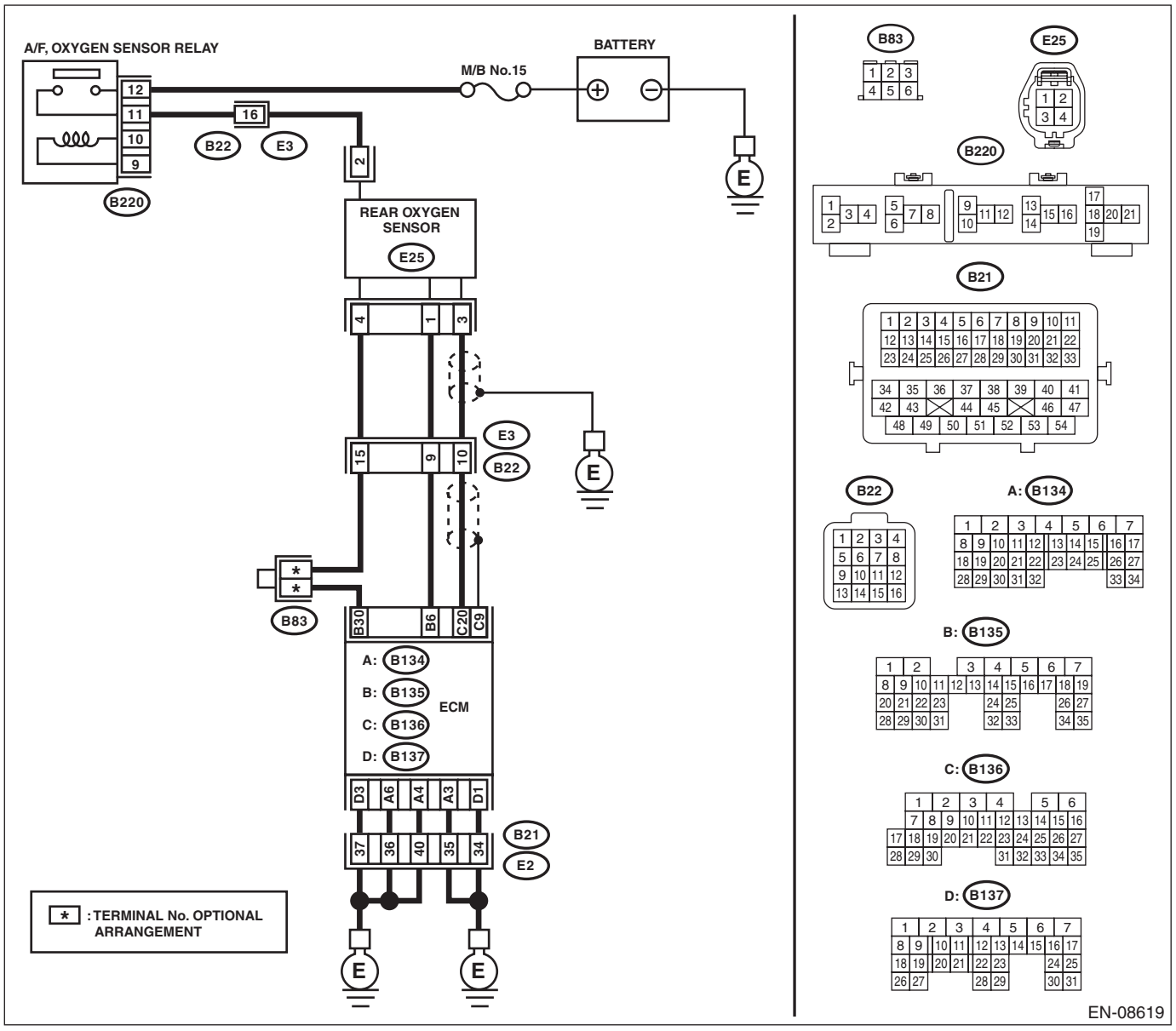

	Step	Check	Yes	No
1	**CHECK REAR OXYGEN SENSOR DATA.** 1) Warm up the engine until engine coolant temperature is higher than 75°C (167°F), and rapidly reduce the engine speed from 3,000 rpm. 2) Read the value of «Rear O2 Sensor» using the Subaru Select Monitor or a general scan tool. NOTE: • Subaru Select Monitor For detailed operation procedures, refer to "READ CURRENT DATA FOR ENGINE". <Ref. to EN(H4DOTC)(diag)-34, Subaru Select Monitor.> • General scan tool For detailed operation procedures, refer to the general scan tool operation manual.	Is the value of «Rear O2 Sensor» 0.250 V or less?	Go to step **5**.	Go to step **2**.
2	**CHECK REAR OXYGEN SENSOR CONNECTOR AND COUPLING CONNECTOR.**	Has water entered the connector?	Completely remove any water inside.	Go to step **3**.
3	**CHECK HARNESS BETWEEN ECM AND REAR OXYGEN SENSOR CONNECTOR.** 1) Turn the ignition switch to OFF. 2) Disconnect the connector from ECM and rear oxygen sensor. 3) Measure the resistance of harness between ECM and rear oxygen sensor connector. ***Connector & terminal*** ***(B136) No. 20 — (E25) No. 3:*** ***(B135) No. 30 — (E25) No. 4:***	Is the resistance less than 1 Ω?	Go to step **4**.	Repair the harness and connector. NOTE: In this case, repair the following item: • Open circuit in harness between ECM and rear oxygen sensor connector • Poor contact of coupling connector
4	**CHECK HARNESS BETWEEN ECM AND REAR OXYGEN SENSOR CONNECTOR.** 1) Connect the connector to ECM. 2) Turn the ignition switch to ON. 3) Measure the voltage between rear oxygen sensor connector and chassis ground. ***Connector & terminal*** ***(E25) No. 3 (+) — Chassis ground (–):***	Is the voltage 0.2 — 0.5 V?	Replace the rear oxygen sensor. <Ref. to FU(H4DOTC)-56, Rear Oxygen Sensor.>	Repair the harness and connector. NOTE: In this case, repair the following item: • Open circuit in harness between ECM and rear oxygen sensor connector • Poor contact of ECM connector • Poor contact of coupling connector
5	**CHECK EXHAUST SYSTEM.** Check exhaust system parts. NOTE: Check the following items. • Looseness and improper fitting of exhaust system parts • Damage (crack, hole etc.) of parts • Damage (crack, hole etc.) between front oxygen (A/F) sensor and rear oxygen sensor	Is there any fault in exhaust system?	Repair or replace faulty parts.	Replace the rear oxygen sensor. <Ref. to FU(H4DOTC)-56, Rear Oxygen Sensor.>

AJ:DTC P013A O2 SENSOR SLOW RESPONSE - RICH TO LEAN (BANK 1 SENSOR 2)

DTC DETECTING CONDITION:

- Detected when two consecutive driving cycles with fault occur.
- GENERAL DESCRIPTION <Ref. to GD(H4DOTC)-75, DTC P013A O2 SENSOR SLOW RESPONSE - RICH TO LEAN (BANK 1 SENSOR 2), Diagnostic Trouble Code (DTC) Detecting Criteria.>

CAUTION:

After servicing or replacing faulty parts, perform Clear Memory Mode <Ref. to EN(H4DOTC)(diag)-53, OPERATION, Clear Memory Mode.>, and Inspection Mode <Ref. to EN(H4DOTC)(diag)-41, PROCEDURE, Inspection Mode.>.

WIRING DIAGRAM:

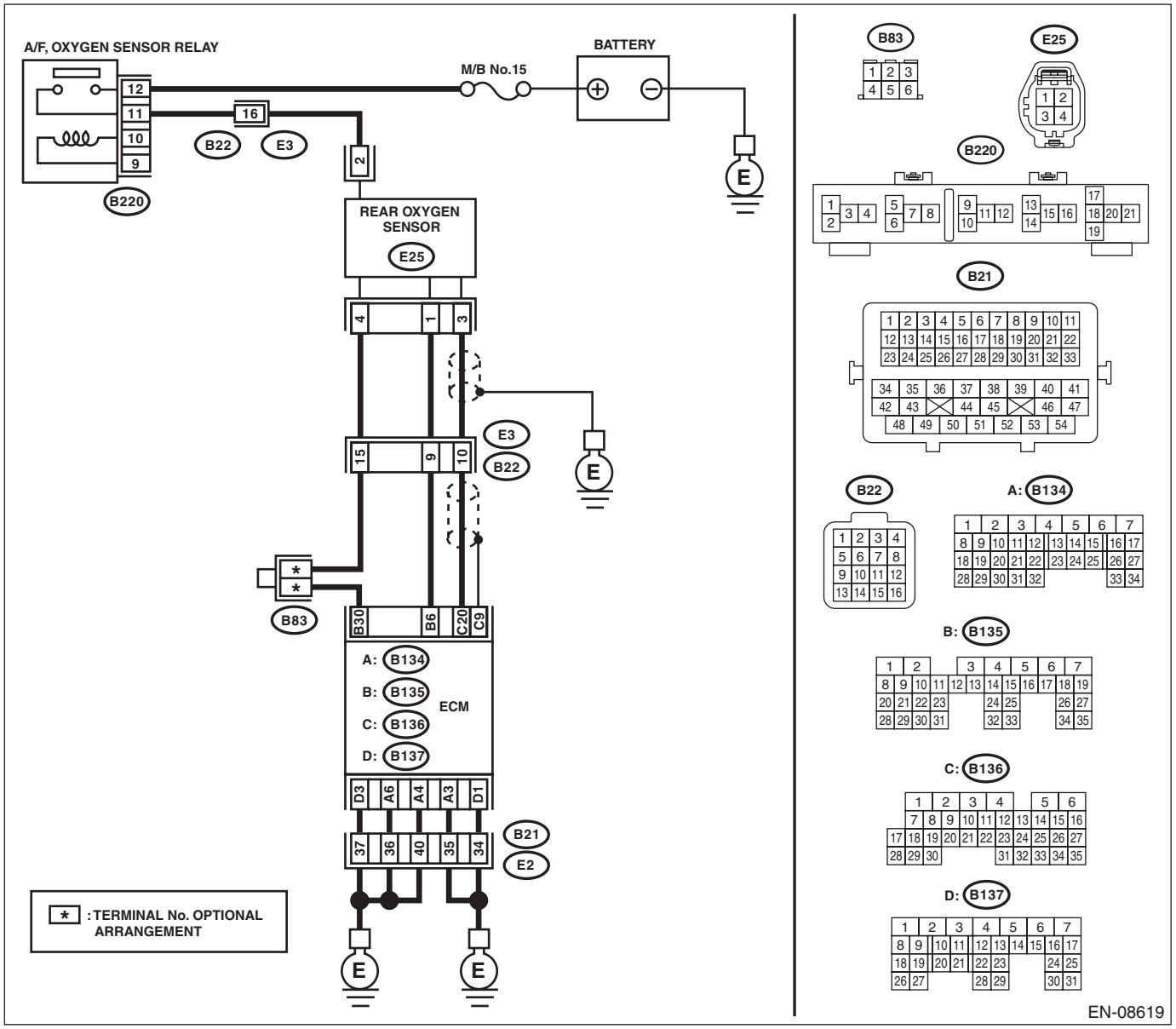

	Step	Check	Yes	No
1	**CHECK HARNESS BETWEEN ECM AND REAR OXYGEN SENSOR CONNECTOR.** 1) Turn the ignition switch to OFF. 2) Disconnect the connector from ECM and rear oxygen sensor. 3) Measure the resistance of harness between ECM and rear oxygen sensor connector. ***Connector & terminal*** ***(B136) No. 20 — (E25) No. 3:***	Is the resistance less than 1 Ω?	Go to step **2**.	Repair the harness and connector. NOTE: In this case, repair the following item: • Open circuit in harness between ECM and rear oxygen sensor connector • Poor contact of coupling connector
2	**CHECK HARNESS BETWEEN ECM AND REAR OXYGEN SENSOR CONNECTOR.** Measure the resistance between rear oxygen sensor connector and chassis ground. ***Connector & terminal*** ***(E25) No. 3 — Chassis ground:***	Is the resistance 1 MΩ or more?	Go to step **3**.	Repair the ground short circuit of harness between ECM and rear oxygen sensor connector.
3	**CHECK REAR OXYGEN SENSOR.** Measure the resistance between rear oxygen sensor terminals. ***Terminals*** ***No. 3 — No. 4***	Is the resistance less than 1 Ω?	Replace the rear oxygen sensor. <Ref. to FU(H4DOTC)-56, Rear Oxygen Sensor.>	Even if DTC is detected, the circuit has returned to a normal condition at this time. Reproduce the failure, and then perform the diagnosis again. NOTE: In this case, temporary poor contact of connector, temporary open or short circuit of harness may be the cause.

AK:DTC P013B O2 SENSOR SLOW RESPONSE - LEAN TO RICH (BANK 1 SENSOR 2)

NOTE:
For the diagnostic procedure, refer to DTC P013A. <Ref. to EN(H4DOTC)(diag)-139, DTC P013A O2 SENSOR SLOW RESPONSE - RICH TO LEAN (BANK 1 SENSOR 2), Diagnostic Procedure with Diagnostic Trouble Code (DTC).>

AL:DTC P013E O2 SENSOR DELAYED RESPONSE - RICH TO LEAN (BANK 1 SENSOR 2)

NOTE:
For the diagnostic procedure, refer to DTC P013A. <Ref. to EN(H4DOTC)(diag)-139, DTC P013A O2 SENSOR SLOW RESPONSE - RICH TO LEAN (BANK 1 SENSOR 2), Diagnostic Procedure with Diagnostic Trouble Code (DTC).>

AM:DTC P013F O2 SENSOR DELAYED RESPONSE - LEAN TO RICH (BANK 1 SENSOR 2)

NOTE:
For the diagnostic procedure, refer to DTC P013A. <Ref. to EN(H4DOTC)(diag)-139, DTC P013A O2 SENSOR SLOW RESPONSE - RICH TO LEAN (BANK 1 SENSOR 2), Diagnostic Procedure with Diagnostic Trouble Code (DTC).>

AN:DTC P0140 O2 SENSOR CIRCUIT NO ACTIVITY DETECTED (BANK1 SENSOR2)

DTC DETECTING CONDITION:

- Detected when two consecutive driving cycles with fault occur.
- GENERAL DESCRIPTION <Ref. to GD(H4DOTC)-83, DTC P0140 O2 SENSOR CIRCUIT NO ACTIVITY DETECTED (BANK1 SENSOR2), Diagnostic Trouble Code (DTC) Detecting Criteria.>

CAUTION:

After servicing or replacing faulty parts, perform Clear Memory Mode <Ref. to EN(H4DOTC)(diag)-53, OPERATION, Clear Memory Mode.>, and Inspection Mode <Ref. to EN(H4DOTC)(diag)-41, PROCEDURE, Inspection Mode.>.

WIRING DIAGRAM:

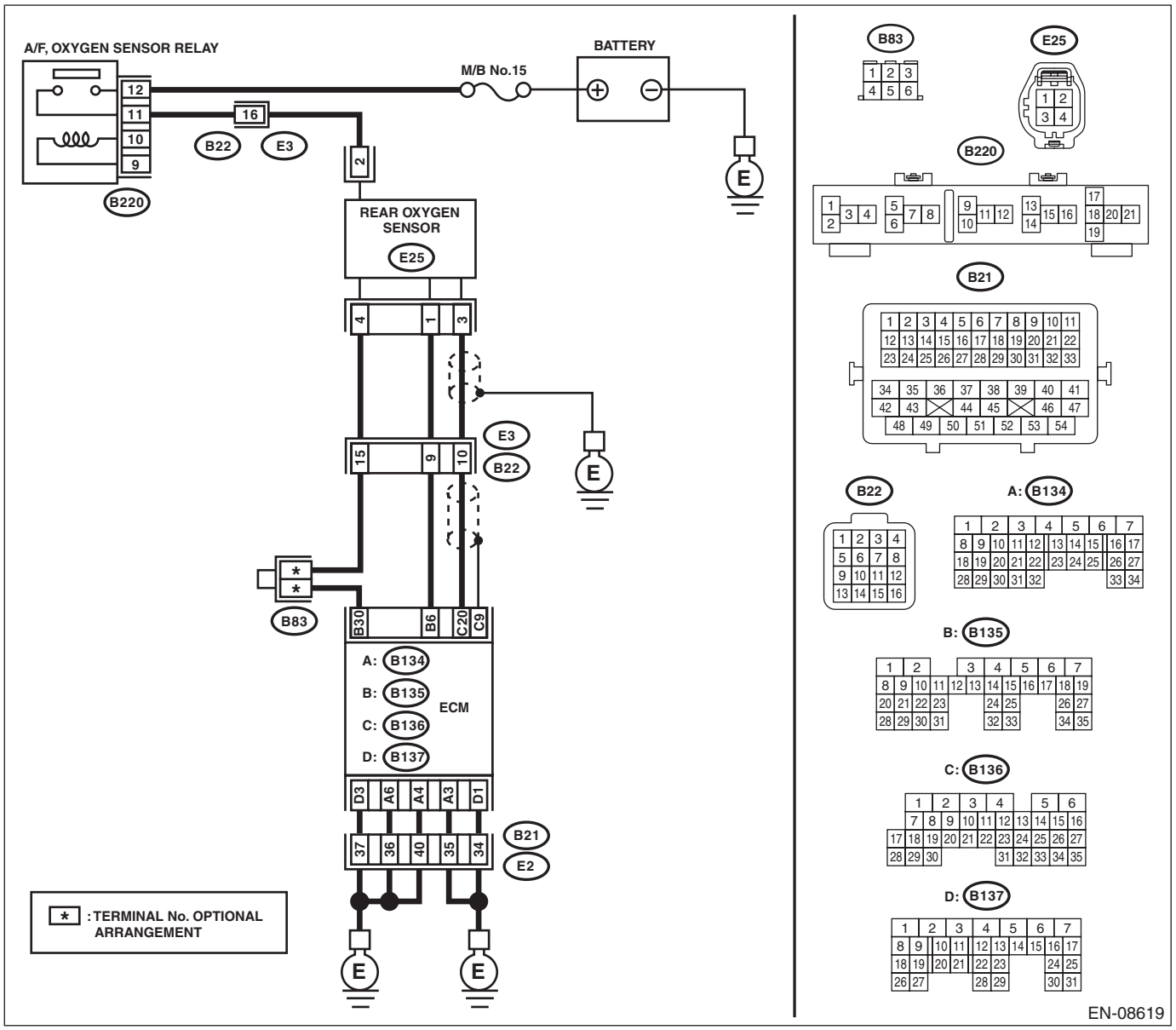

	Step	Check	Yes	No
1	**CHECK REAR OXYGEN SENSOR DATA.** 1) Warm up the engine until engine coolant temperature is higher than 75°C (167°F), and keep the engine speed at 3,000 rpm. (2 minutes maximum) 2) Read the value of «Rear O2 Sensor» using the Subaru Select Monitor or a general scan tool. NOTE: • Subaru Select Monitor For detailed operation procedures, refer to "READ CURRENT DATA FOR ENGINE". <Ref. to EN(H4DOTC)(diag)-34, Subaru Select Monitor.> • General scan tool For detailed operation procedures, refer to the general scan tool operation manual.	Is the value of «Rear O2 Sensor» 0.490 V or more?	Go to step **6**.	Go to step **2**.
2	**CHECK REAR OXYGEN SENSOR DATA.** 1) Warm up the engine until engine coolant temperature is higher than 75°C (167°F), and rapidly reduce the engine speed from 3,000 rpm. 2) Read the value of «Rear O2 Sensor» using the Subaru Select Monitor or a general scan tool. NOTE: • Subaru Select Monitor For detailed operation procedures, refer to "READ CURRENT DATA FOR ENGINE". <Ref. to EN(H4DOTC)(diag)-34, Subaru Select Monitor.> • General scan tool For detailed operation procedures, refer to the general scan tool operation manual.	Is the value of «Rear O2 Sensor» 0.250 V or less?	Go to step **6**.	Go to step **3**.
3	**CHECK REAR OXYGEN SENSOR CONNECTOR AND COUPLING CONNECTOR.**	Has water entered the connector?	Completely remove any water inside.	Go to step **4**.
4	**CHECK HARNESS BETWEEN ECM AND REAR OXYGEN SENSOR CONNECTOR.** 1) Turn the ignition switch to OFF. 2) Disconnect the connector from ECM and rear oxygen sensor. 3) Measure the resistance of harness between ECM and rear oxygen sensor connector. ***Connector & terminal*** ***(B136) No. 20 — (E25) No. 3:*** ***(B135) No. 30 — (E25) No. 4:***	Is the resistance less than 1 Ω?	Go to step **5**.	Repair the harness and connector. NOTE: In this case, repair the following item: • Open circuit in harness between ECM and rear oxygen sensor connector • Poor contact of coupling connector

	Step	Check	Yes	No
5	**CHECK HARNESS BETWEEN ECM AND REAR OXYGEN SENSOR CONNECTOR.** 1) Connect the connector to ECM. 2) Turn the ignition switch to ON. 3) Measure the voltage between rear oxygen sensor connector and chassis ground. ***Connector & terminal*** ***(E25) No. 3 (+) — Chassis ground (–):***	Is the voltage 0.2 — 0.5 V?	Replace the rear oxygen sensor. <Ref. to FU(H4DOTC)-56, Rear Oxygen Sensor.>	Repair the harness and connector. NOTE: In this case, repair the following item: • Open circuit in harness between ECM and rear oxygen sensor connector • Poor contact of ECM connector • Poor contact of coupling connector
6	**CHECK EXHAUST SYSTEM.** Check exhaust system parts. NOTE: Check the following items. • Looseness and improper fitting of exhaust system parts • Damage (crack, hole etc.) of parts • Damage (crack, hole etc.) between front oxygen (A/F) sensor and rear oxygen sensor	Is there any fault in exhaust system?	Repair or replace faulty parts.	Replace the rear oxygen sensor. <Ref. to FU(H4DOTC)-56, Rear Oxygen Sensor.>

AO:DTC P0141 O2 SENSOR HEATER CIRCUIT (BANK1 SENSOR2)

Refer to DTC P0037 for diagnostic procedure. <Ref. to EN(H4DOTC)(diag)-98, DTC P0037 HO2S HEATER CONTROL CIRCUIT LOW (BANK 1 SENSOR 2), Diagnostic Procedure with Diagnostic Trouble Code (DTC).>

AP:DTC P0171 SYSTEM TOO LEAN (BANK 1)

Refer to DTC P0172 for diagnostic procedure. <Ref. to EN(H4DOTC)(diag)-144, DTC P0172 SYSTEM TOO RICH (BANK 1), Diagnostic Procedure with Diagnostic Trouble Code (DTC).>

AQ:DTC P0172 SYSTEM TOO RICH (BANK 1)

DTC DETECTING CONDITION:

- Detected when two consecutive driving cycles with fault occur.
- GENERAL DESCRIPTION <Ref. to GD(H4DOTC)-88, DTC P0172 SYSTEM TOO RICH (BANK 1), Diagnostic Trouble Code (DTC) Detecting Criteria.>

TROUBLE SYMPTOM:

- Improper idling
- Engine stalls.
- Poor driving performance

CAUTION:
After servicing or replacing faulty parts, perform Clear Memory Mode <Ref. to EN(H4DOTC)(diag)-53, OPERATION, Clear Memory Mode.>, and Inspection Mode <Ref. to EN(H4DOTC)(diag)-41, PROCEDURE, Inspection Mode.>.

	Step	Check	Yes	No
1	**CHECK EXHAUST SYSTEM.**	Are there holes or loose bolts on exhaust system?	Repair the exhaust system.	Go to step **2**.
2	**CHECK AIR INTAKE SYSTEM.**	Are there holes, loose bolts or disconnection of hose on air intake system?	Repair the air intake system.	Go to step **3**.
3	**CHECK FUEL PRESSURE.** **WARNING:** **Place "NO OPEN FLAMES" signs near the working area.** **CAUTION:** **Be careful not to spill fuel.** Measure the fuel pressure while disconnecting pressure regulator vacuum hose from intake manifold. <Ref. to ME(H4DOTC)-26, INSPECTION, Fuel Pressure.> **CAUTION:** **Release fuel pressure before removing the fuel pressure gauge.** NOTE: If fuel pressure does not increase, squeeze the fuel return hose 2 to 3 times, then measure fuel pressure again.	Is the measured value 328 — 358 kPa (3.3 — 3.7 kg/cm^2, 48 — 52 psi)?	Go to step **4**.	Repair the following item. Fuel pressure is too high: • Clogged fuel return line or bent hose Fuel pressure is too low: • Improper fuel pump discharge • Clogged fuel supply line
4	**CHECK FUEL PRESSURE.** After connecting the pressure regulator vacuum hose, measure fuel pressure. <Ref. to ME(H4DOTC)-26, INSPECTION, Fuel Pressure.> **CAUTION:** **Release fuel pressure before removing the fuel pressure gauge.** NOTE: • If fuel pressure does not increase, squeeze fuel return hose 2 to 3 times, then measure fuel pressure again. • If the measured value at this step is out of specification, check or replace pressure regulator and pressure regulator vacuum hose.	Is the measured value 274 — 304 kPa (2.8 — 3.1 kg/cm^2, 40 — 44 psi)?	Go to step **5**.	Repair the following item. Fuel pressure is too high: • Faulty pressure regulator • Clogged fuel return line or bent hose Fuel pressure is too low: • Faulty pressure regulator • Improper fuel pump discharge • Clogged fuel supply line

	Step	Check	Yes	No
5	**CHECK ENGINE COOLANT TEMPERATURE SENSOR.** 1) Start the engine and warm up completely. 2) Read the value of «Coolant Temp.» using the Subaru Select Monitor or a general scan tool. NOTE: • Subaru Select Monitor For detailed operation procedures, refer to "READ CURRENT DATA FOR ENGINE". <Ref. to EN(H4DOTC)(diag)-34, Subaru Select Monitor.> • General scan tool For detailed operation procedures, refer to the general scan tool operation manual.	Is the value of «Coolant Temp.» 75°C (167°F) or more?	Go to step **6**.	Replace the engine coolant temperature sensor. <Ref. to FU(H4DOTC)-34, Engine Coolant Temperature Sensor.>
6	**CHECK MASS AIR FLOW AND INTAKE AIR TEMPERATURE SENSOR.** 1) Start the engine and warm up engine until coolant temperature is higher than 75°C (167°F). 2) Place the shift lever in neutral position. 3) Turn the A/C switch to OFF. 4) Turn all the accessory switches to OFF. 5) Read the value of «Mass Air Flow» using the Subaru Select Monitor or a general scan tool. NOTE: • Subaru Select Monitor For detailed operation procedures, refer to "READ CURRENT DATA FOR ENGINE". <Ref. to EN(H4DOTC)(diag)-34, Subaru Select Monitor.> • General scan tool For detailed operation procedures, refer to the general scan tool operation manual.	Is the value of «Mass Air Flow» 2.0 — 5.0 g/s (0.26 — 0.66 lb/m)?	Go to step **7**.	Replace the mass air flow and intake air temperature sensor. <Ref. to FU(H4DOTC)-42, Mass Air Flow and Intake Air Temperature Sensor.>
7	**CHECK MASS AIR FLOW AND INTAKE AIR TEMPERATURE SENSOR.** 1) Start the engine and warm up engine until coolant temperature is higher than 75°C (167°F). 2) Place the shift lever in neutral position. 3) Turn the A/C switch to OFF. 4) Turn all the accessory switches to OFF. 5) Open the front hood. 6) Measure the ambient temperature. 7) Read the value of «Intake Air Temp.» using the Subaru Select Monitor or a general scan tool. NOTE: • Subaru Select Monitor For detailed operation procedures, refer to "READ CURRENT DATA FOR ENGINE". <Ref. to EN(H4DOTC)(diag)-34, Subaru Select Monitor.> • General scan tool For detailed operation procedures, refer to the general scan tool operation manual.	Subtract ambient temperature from «Intake Air Temp.». Is the obtained value –10 — 50°C (–18 — 90°F)?	Repair the poor contact of ECM connector.	Check the mass air flow and intake air temperature sensor. <Ref. to FU(H4DOTC)-42, Mass Air Flow and Intake Air Temperature Sensor.>

AR:DTC P0181 FUEL TEMPERATURE SENSOR “A” CIRCUIT RANGE/PERFORMANCE

DTC DETECTING CONDITION:

- Detected when two consecutive driving cycles with fault occur.
- GENERAL DESCRIPTION <Ref. to GD(H4DOTC)-90, DTC P0181 FUEL TEMPERATURE SENSOR “A” CIRCUIT RANGE/PERFORMANCE, Diagnostic Trouble Code (DTC) Detecting Criteria.>

CAUTION:
After servicing or replacing faulty parts, perform Clear Memory Mode <Ref. to EN(H4DOTC)(diag)-53, OPERATION, Clear Memory Mode.>, and Inspection Mode <Ref. to EN(H4DOTC)(diag)-41, PROCEDURE, Inspection Mode.>.

Step		Check	Yes	No
1	**CHECK FOR ANY OTHER DTC ON DISPLAY.**	Is any other DTC displayed?	Check the appropriate DTC using the “List of Diagnostic Trouble Code (DTC)”. <Ref. to EN(H4DOTC)(diag)-75, List of Diagnostic Trouble Code (DTC).>	Replace the fuel temperature sensor. <Ref. to EC(H4DOTC)-15, Fuel Temperature Sensor.>

AS:DTC P0182 FUEL TEMPERATURE SENSOR “A” CIRCUIT LOW INPUT

DTC DETECTING CONDITION:

- Immediately at fault recognition
- GENERAL DESCRIPTION <Ref. to GD(H4DOTC)-93, DTC P0182 FUEL TEMPERATURE SENSOR “A” CIRCUIT LOW INPUT, Diagnostic Trouble Code (DTC) Detecting Criteria.>

CAUTION:
After servicing or replacing faulty parts, perform Clear Memory Mode <Ref. to EN(H4DOTC)(diag)-53, OPERATION, Clear Memory Mode.>, and Inspection Mode <Ref. to EN(H4DOTC)(diag)-41, PROCEDURE, Inspection Mode.>.
WIRING DIAGRAM:

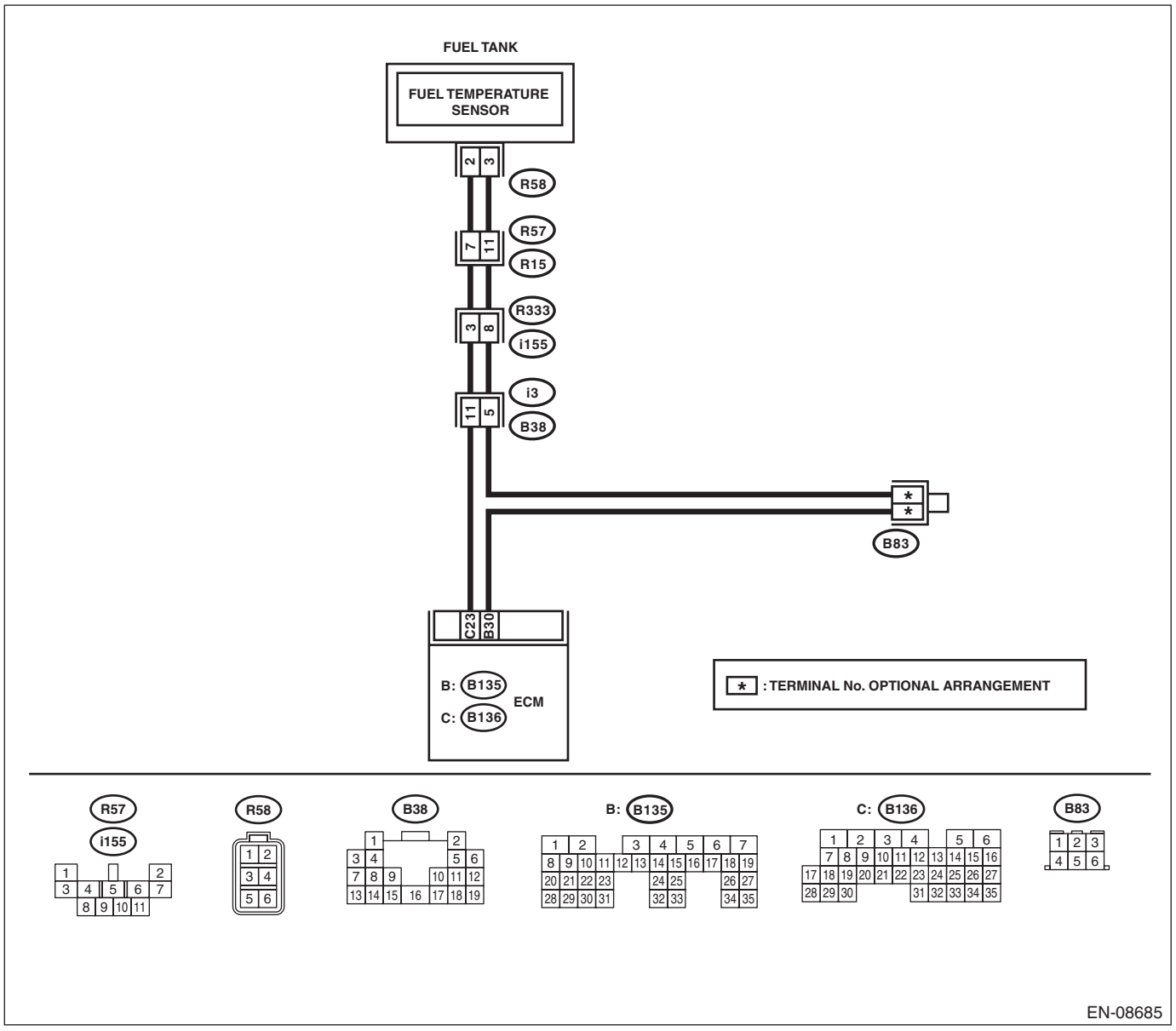

	Step	Check	Yes	No
1	**CHECK CURRENT DATA.** 1) Start the engine. 2) Using the Subaru Select Monitor, read the value in «Fuel Temp.». NOTE: For detailed operation procedures, refer to "READ CURRENT DATA FOR ENGINE". <Ref. to EN(H4DOTC)(diag)-34, Subaru Select Monitor.>	Is the value in «Fuel Temp.» 120°C (248°F) or more?	Go to step **2**.	Even if DTC is detected, the circuit has returned to a normal condition at this time. Reproduce the failure, and then perform the diagnosis again. NOTE: In this case, temporary poor contact of connector, temporary open or short circuit of harness may be the cause.
2	**CHECK HARNESS BETWEEN ECM AND FUEL TEMPERATURE SENSOR CONNECTOR.** 1) Turn the ignition switch to OFF. 2) Disconnect the connectors from ECM and fuel temperature sensor. 3) Measure the resistance between ECM and chassis ground. ***Connector & terminal*** ***(B136) No. 23 — Chassis ground:***	Is the resistance 1 MΩ or more?	Replace the fuel temperature sensor. <Ref. to EC(H4DOTC)-15, Fuel Temperature Sensor.>	Repair the ground short circuit of harness between ECM and fuel pump connector.

AT:DTC P0183 FUEL TEMPERATURE SENSOR “A” CIRCUIT HIGH INPUT

DTC DETECTING CONDITION:

- Immediately at fault recognition
- GENERAL DESCRIPTION <Ref. to GD(H4DOTC)-95, DTC P0183 FUEL TEMPERATURE SENSOR “A” CIRCUIT HIGH INPUT, Diagnostic Trouble Code (DTC) Detecting Criteria.>

CAUTION:

After servicing or replacing faulty parts, perform Clear Memory Mode <Ref. to EN(H4DOTC)(diag)-53, OPERATION, Clear Memory Mode.>, and Inspection Mode <Ref. to EN(H4DOTC)(diag)-41, PROCEDURE, Inspection Mode.>.

WIRING DIAGRAM:

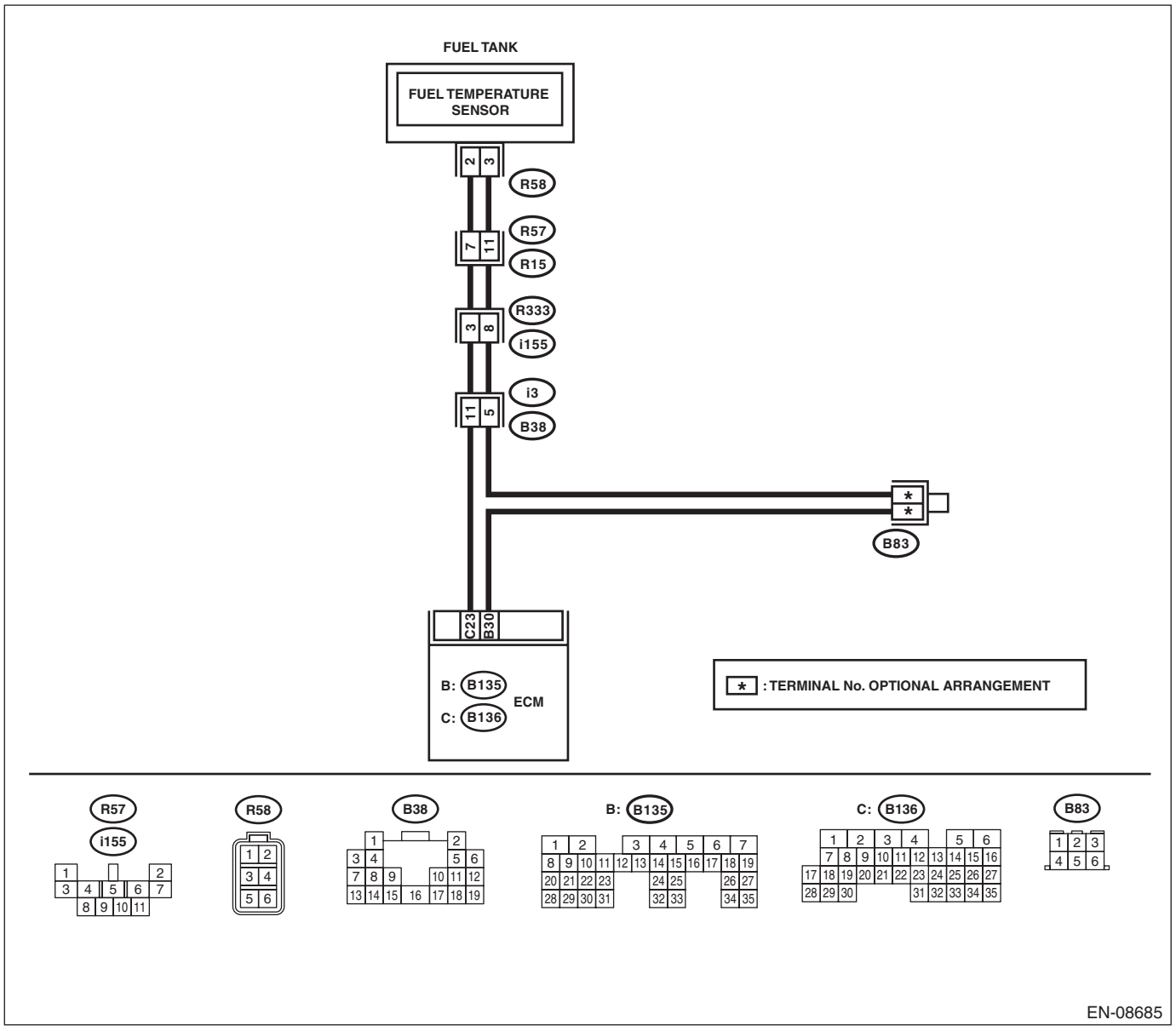

	Step	Check	Yes	No
1	**CHECK CURRENT DATA.** 1) Start the engine. 2) Using the Subaru Select Monitor, read the value in «Fuel Temp.». NOTE: For detailed operation procedures, refer to "READ CURRENT DATA FOR ENGINE". <Ref. to EN(H4DOTC)(diag)-34, Subaru Select Monitor.>	Is the value in «Fuel Temp.» less than –40°C (–40°F)?	Go to step **2**.	Even if DTC is detected, the circuit has returned to a normal condition at this time. Reproduce the failure, and then perform the diagnosis again. NOTE: In this case, temporary poor contact of connector, temporary open or short circuit of harness may be the cause.
2	**CHECK FOR POOR CONTACT.** Check any poor contact of the ECM and fuel temperature sensor connectors.	Is there poor contact of the ECM or fuel temperature sensor connectors?	Repair any poor contact of the ECM or fuel temperature sensor connectors.	Go to step **3**.
3	**CHECK HARNESS BETWEEN ECM AND FUEL TEMPERATURE SENSOR CONNECTOR.** 1) Turn the ignition switch to OFF. 2) Disconnect the connectors from ECM and fuel temperature sensor. 3) Measure the resistance of the harness between the ECM and fuel temperature sensor connector. ***Connector & terminal*** ***(B136) No. 23 — (R58) No. 2:*** ***(B135) No. 30 — (R58) No. 3:***	Is the resistance less than 1 Ω?	Go to step **4**.	Repair the harness and connector. NOTE: In this case, repair the following item: • Open circuit in harness between ECM and fuel temperature sensor connector • Poor contact of coupling connector
4	**CHECK HARNESS BETWEEN ECM AND FUEL TEMPERATURE SENSOR CONNECTOR.** 1) Connect all connectors. 2) Turn the ignition switch to ON. 3) Measure the voltage between ECM and chassis ground. ***Connector & terminal*** ***(B136) No. 23 (+) — Chassis ground (–):***	Is the voltage 5 V or more?	Repair the short circuit to power in the harness between the ECM and fuel temperature sensor connector.	Replace the fuel temperature sensor. <Ref. to EC(H4DOTC)-15, Fuel Temperature Sensor.>

AU:DTC P0201 INJECTOR #1

DTC DETECTING CONDITION:

- Immediately at fault recognition
- GENERAL DESCRIPTION <Ref. to GD(H4DOTC)-97, DTC P0201 INJECTOR #1, Diagnostic Trouble Code (DTC) Detecting Criteria.>

TROUBLE SYMPTOM:

- Improper idling
- Poor driving performance

CAUTION:

After servicing or replacing faulty parts, perform Clear Memory Mode <Ref. to EN(H4DOTC)(diag)-53, OPERATION, Clear Memory Mode.>, and Inspection Mode <Ref. to EN(H4DOTC)(diag)-41, PROCEDURE, Inspection Mode.>.

WIRING DIAGRAM:

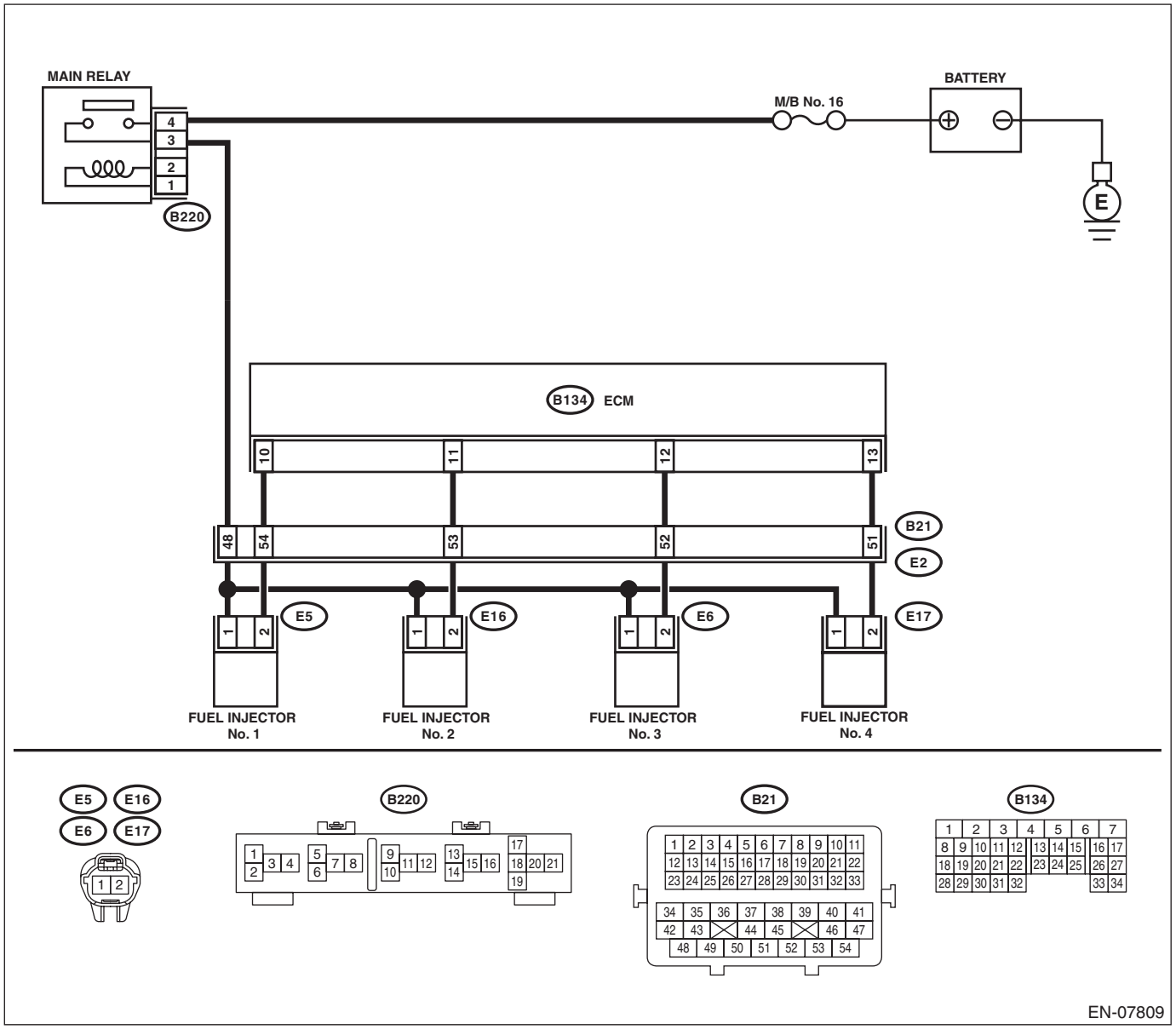

	Step	Check	Yes	No
1	**CHECK POWER SUPPLY TO FUEL INJECTOR.** 1) Turn the ignition switch to OFF. 2) Disconnect the connector from fuel injector. 3) Turn the ignition switch to ON. 4) Measure the voltage between fuel injector connector and the engine ground. ***Connector & terminal*** ***DTC P0201; (E5) No. 1 (+) — Engine ground (–):*** ***DTC P0202; (E16) No. 1 (+) — Engine ground (–):*** ***DTC P0203; (E6) No. 1 (+) — Engine ground (–):*** ***DTC P0204; (E17) No. 1 (+) — Engine ground (–):***	Is the voltage 10 V or more?	Go to step **2**.	Repair the harness and connector. NOTE: In this case, repair the following item: • Open circuit in harness between main relay and fuel injector connector • Poor contact of main relay connector • Poor contact of coupling connector
2	**CHECK HARNESS BETWEEN ECM AND FUEL INJECTOR CONNECTOR.** 1) Turn the ignition switch to OFF. 2) Disconnect the connector from ECM. 3) Measure the resistance between fuel injector connector and engine ground. ***Connector & terminal*** ***DTC P0201; (E5) No. 2 — Engine ground:*** ***DTC P0202; (E16) No. 2 — Engine ground:*** ***DTC P0203; (E6) No. 2 — Engine ground:*** ***DTC P0204; (E17) No. 2 — Engine ground:***	Is the resistance 1 MΩ or more?	Go to step **3**.	Repair the short circuit to ground in harness between ECM connector and fuel injector connector.
3	**CHECK HARNESS BETWEEN ECM AND FUEL INJECTOR CONNECTOR.** Measure the resistance of harness between ECM connector and fuel injector connector. ***Connector & terminal*** ***DTC P0201; (B134) No. 10 — (E5) No. 2:*** ***DTC P0202; (B134) No. 11 — (E16) No. 2:*** ***DTC P0203; (B134) No. 12 — (E6) No. 2:*** ***DTC P0204; (B134) No. 13 — (E17) No. 2:***	Is the resistance less than 1 Ω?	Go to step **4**.	Repair the harness and connector. NOTE: In this case, repair the following item: • Open circuit in harness between ECM connector and fuel injector connector • Poor contact of coupling connector
4	**CHECK FUEL INJECTOR.** Measure the resistance between fuel injector terminals on the corresponding cylinder. ***Terminals*** ***No. 1 — No. 2:***	Is the resistance 5 — 20 Ω?	Go to step **5**.	Replace the fuel injector. <Ref. to FU(H4DOTC)-45, Fuel Injector.>
5	**CHECK FOR POOR CONTACT.** Check for poor contact of ECM connector.	Is there poor contact of ECM connector?	Repair the poor contact of ECM connector.	Go to step **6**.

	Step	Check	Yes	No
6	**CHECK FUEL INJECTOR OPERATION.** 1) Connect all connectors. 2) Start the engine. 3) Check if the corresponding fuel injector emits operating sound. NOTE: Use a sound scope to check the operating sound.	Does the fuel injector emit operating sound?	Even if DTC is detected, the circuit has returned to a normal condition at this time. Reproduce the failure, and then perform the diagnosis again. NOTE: In this case, temporary poor contact of connector, temporary open or short circuit of harness may be the cause.	Repair the poor contact of fuel injector connector.

AV:DTC P0202 INJECTOR #2

NOTE:
For the diagnostic procedure, refer to DTC P0201. <Ref. to EN(H4DOTC)(diag)-151, DTC P0201 INJECTOR #1, Diagnostic Procedure with Diagnostic Trouble Code (DTC).>

AW:DTC P0203 INJECTOR #3

NOTE:
For the diagnostic procedure, refer to DTC P0201. <Ref. to EN(H4DOTC)(diag)-151, DTC P0201 INJECTOR #1, Diagnostic Procedure with Diagnostic Trouble Code (DTC).>

AX:DTC P0204 INJECTOR #4

NOTE:
For the diagnostic procedure, refer to DTC P0201. <Ref. to EN(H4DOTC)(diag)-151, DTC P0201 INJECTOR #1, Diagnostic Procedure with Diagnostic Trouble Code (DTC).>

AY:DTC P0222 THROTTLE/PEDAL POSITION SENSOR/SWITCH “B” CIRCUIT LOW

DTC DETECTING CONDITION:

- Immediately at fault recognition
- GENERAL DESCRIPTION <Ref. to GD(H4DOTC)-99, DTC P0222 THROTTLE/PEDAL POSITION SENSOR/SWITCH “B” CIRCUIT LOW, Diagnostic Trouble Code (DTC) Detecting Criteria.>

TROUBLE SYMPTOM:

- Improper idling
- Poor driving performance
- Engine stalls.

CAUTION:

After servicing or replacing faulty parts, perform Clear Memory Mode <Ref. to EN(H4DOTC)(diag)-53, OPERATION, Clear Memory Mode.>, and Inspection Mode <Ref. to EN(H4DOTC)(diag)-41, PROCEDURE, Inspection Mode.>.

WIRING DIAGRAM:

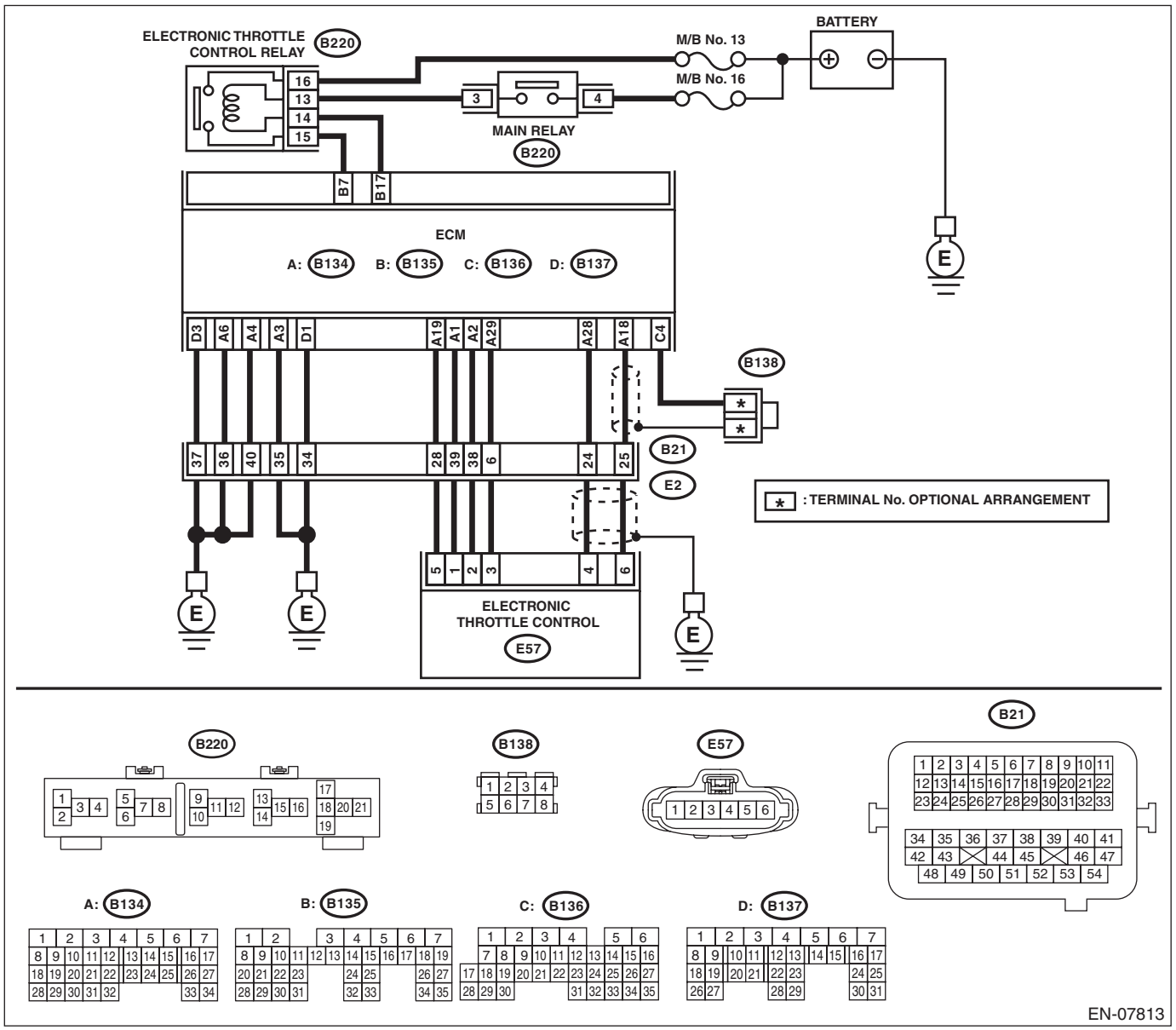

	Step	Check	Yes	No
1	**CHECK HARNESS BETWEEN ECM AND ELECTRONIC THROTTLE CONTROL CONNECTOR.** 1) Turn the ignition switch to OFF. 2) Disconnect the connectors from the ECM and electronic throttle control. 3) Measure the resistance between ECM and chassis ground. ***Connector & terminal*** ***(B134) No. 19 — Chassis ground:*** ***(B134) No. 28 — Chassis ground:***	Is the resistance 1 MΩ or more?	Go to step **2**.	Repair the ground short circuit of harness between ECM and electronic throttle control connector.
2	**CHECK SHORT CIRCUIT INSIDE THE ECM.** 1) Connect the connector to ECM. 2) Measure the resistance between electronic throttle control connector and engine ground. ***Connector & terminal*** ***(E57) No. 4 — Engine ground:***	Is the resistance 1 MΩ or more?	Replace the electronic throttle control. <Ref. to FU(H4DOTC)-15, Throttle Body.>	Repair the ground short circuit of harness between ECM and electronic throttle control connector. Replace the ECM if defective. <Ref. to FU(H4DOTC)-58, Engine Control Module (ECM).>

AZ:DTC P0223 THROTTLE/PEDAL POSITION SENSOR/SWITCH “B” CIRCUIT HIGH

DTC DETECTING CONDITION:

- Immediately at fault recognition
- GENERAL DESCRIPTION <Ref. to GD(H4DOTC)-101, DTC P0223 THROTTLE/PEDAL POSITION SENSOR/SWITCH “B” CIRCUIT HIGH, Diagnostic Trouble Code (DTC) Detecting Criteria.>

TROUBLE SYMPTOM:

- Improper idling
- Poor driving performance
- Engine stalls.

CAUTION:

After servicing or replacing faulty parts, perform Clear Memory Mode <Ref. to EN(H4DOTC)(diag)-53, OPERATION, Clear Memory Mode.>, and Inspection Mode <Ref. to EN(H4DOTC)(diag)-41, PROCEDURE, Inspection Mode.>.

WIRING DIAGRAM:

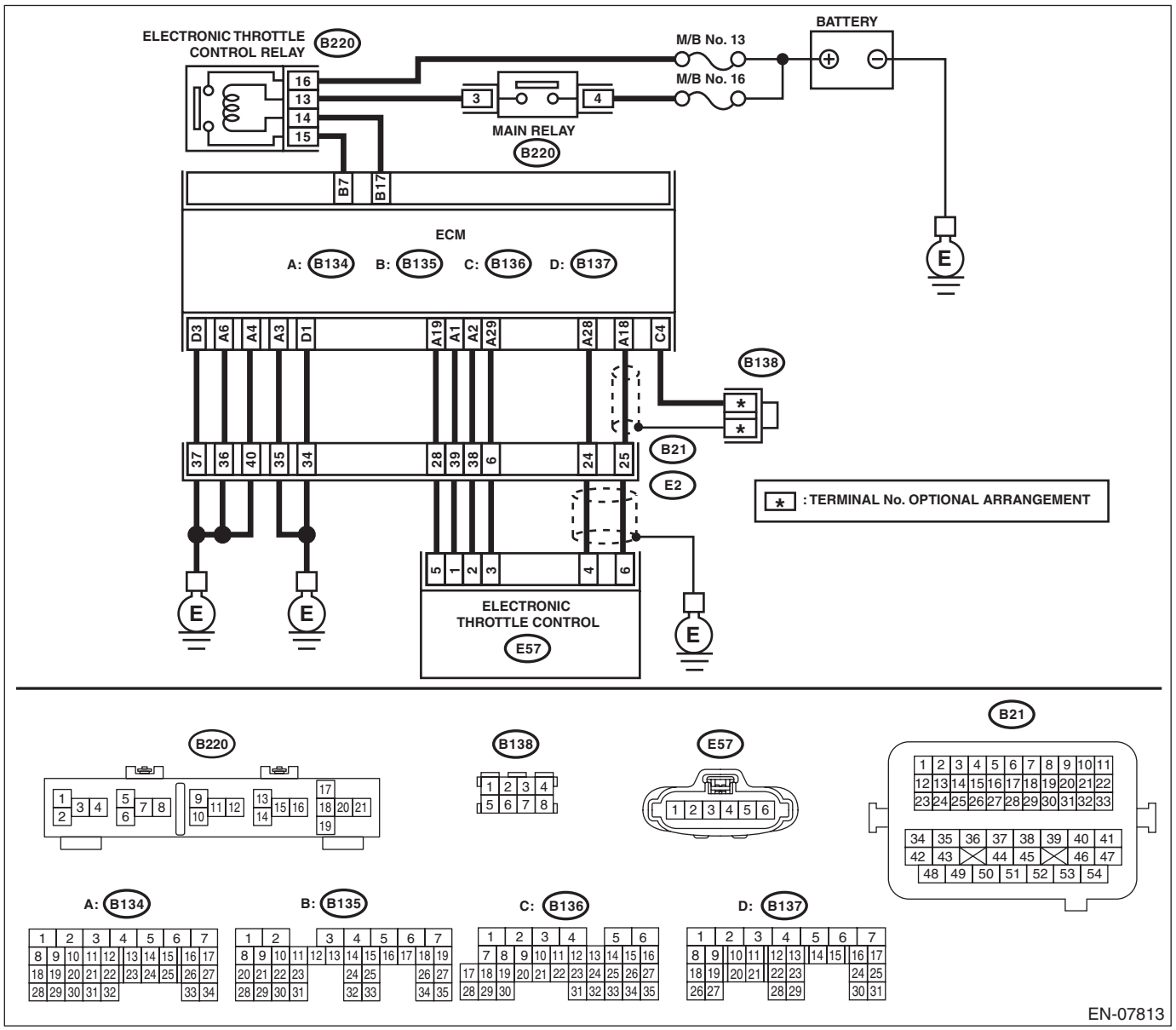

	Step	Check	Yes	No
1	**CHECK HARNESS BETWEEN ECM AND ELECTRONIC THROTTLE CONTROL CONNECTOR.** 1) Turn the ignition switch to OFF. 2) Disconnect the connectors from the ECM and electronic throttle control. 3) Measure the resistance of harness between ECM and electronic throttle control connector. ***Connector & terminal*** ***(B134) No. 28 — (E57) No. 4:*** ***(B134) No. 29 — (E57) No. 3:***	Is the resistance less than 1 Ω?	Go to step **2**.	Repair the harness and connector. NOTE: In this case, repair the following item: • Open circuit in harness between ECM and electronic throttle control connector • Poor contact of coupling connector
2	**CHECK HARNESS BETWEEN ECM AND ELECTRONIC THROTTLE CONTROL CONNECTOR.** 1) Connect the connector to ECM. 2) Measure the resistance between electronic throttle control connector and engine ground. ***Connector & terminal*** ***(E57) No. 3 — Engine ground:***	Is the resistance less than 5 Ω?	Go to step **3**.	Repair the harness and connector. NOTE: In this case, repair the following item: • Open circuit of harness between ECM and engine ground • Poor contact of ECM connector • Poor contact of coupling connector
3	**CHECK HARNESS BETWEEN ECM AND ELECTRONIC THROTTLE CONTROL CONNECTOR.** 1) Turn the ignition switch to ON. 2) Measure the voltage between electronic throttle control connector and engine ground. ***Connector & terminal*** ***(E57) No. 4 (+) — Engine ground (–):***	Is the voltage 5 V or more?	Repair the short circuit of harness to power supply between ECM and electronic throttle control connector.	Go to step **4**.
4	**CHECK HARNESS BETWEEN ECM AND ELECTRONIC THROTTLE CONTROL CONNECTOR.** 1) Turn the ignition switch to OFF. 2) Disconnect the connector from ECM. 3) Measure the resistance between ECM connectors. ***Connector & terminal*** ***(B134) No. 19 — (B134) No. 28:***	Is the resistance 1 MΩ or more?	Repair the poor contact of electronic throttle control connector. Replace the electronic throttle control if defective. <Ref. to FU(H4DOTC)-15, Throttle Body.>	Repair the short circuit of harness to power supply between ECM and electronic throttle control connector.

BA:DTC P0230 FUEL PUMP PRIMARY CIRCUIT

DTC DETECTING CONDITION:

- Detected when two consecutive driving cycles with fault occur.
- GENERAL DESCRIPTION <Ref. to GD(H4DOTC)-103, DTC P0230 FUEL PUMP PRIMARY CIRCUIT, Diagnostic Trouble Code (DTC) Detecting Criteria.>

CAUTION:
After servicing or replacing faulty parts, perform Clear Memory Mode <Ref. to EN(H4DOTC)(diag)-53, OPERATION, Clear Memory Mode.>, and Inspection Mode <Ref. to EN(H4DOTC)(diag)-41, PROCEDURE, Inspection Mode.>.
WIRING DIAGRAM:

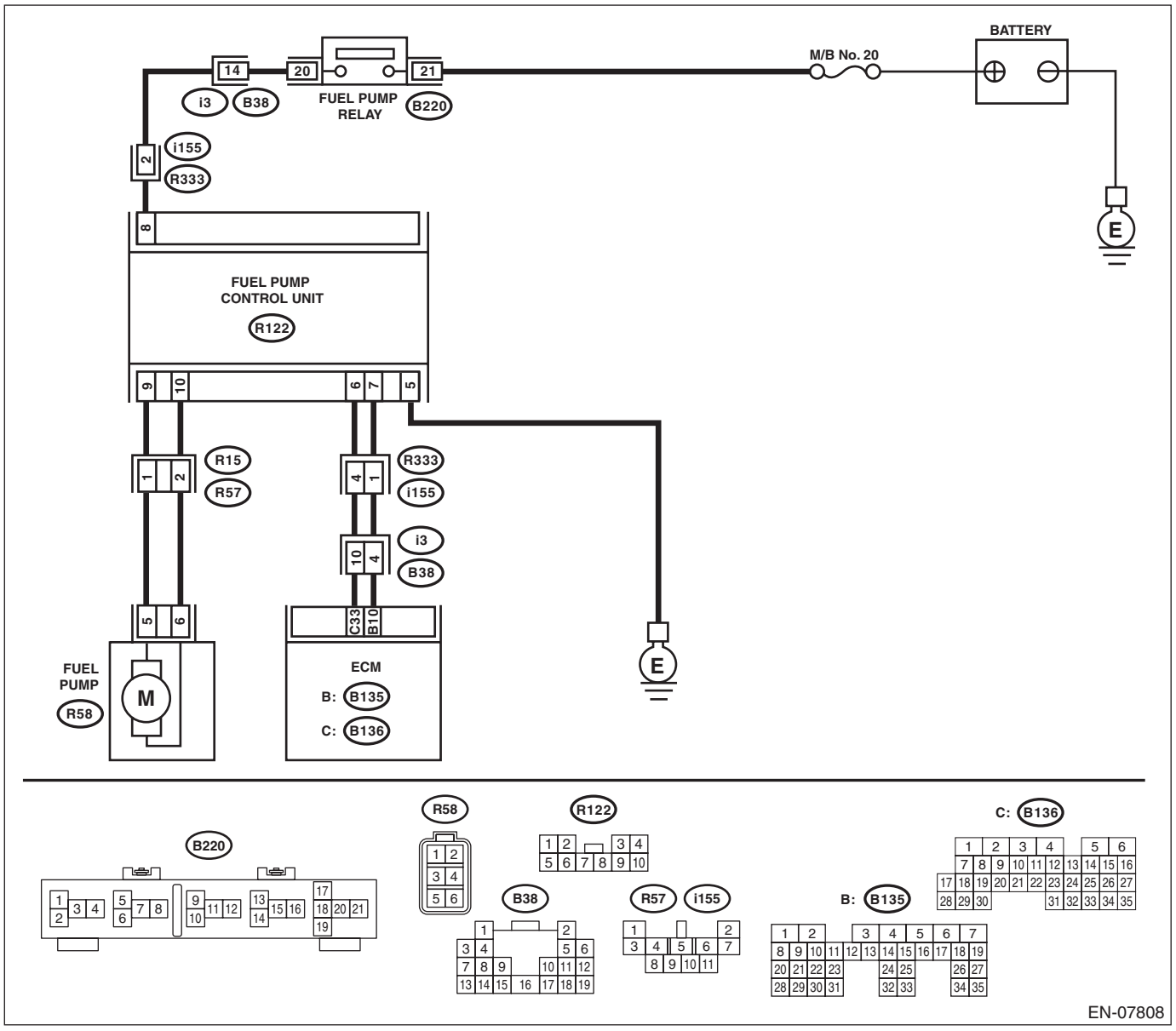

	Step	Check	Yes	No
1	**CHECK POWER SUPPLY CIRCUIT TO FUEL PUMP CONTROL UNIT.** 1) Turn the ignition switch to OFF. 2) Disconnect the connector from fuel pump control unit. 3) Turn the ignition switch to ON. 4) Measure the voltage between fuel pump control unit connector and chassis ground. ***Connector & terminal*** ***(R122) No. 8 (+) — Chassis ground (–):***	Is the voltage 10 V or more?	Go to step **2**.	Repair the power supply circuit. NOTE: In this case, repair the following item: • Open or ground short circuit of harness between fuel pump relay and fuel pump control unit connector • Poor contact of fuel pump relay connector • Poor contact of coupling connector
2	**CHECK GROUND CIRCUIT OF FUEL PUMP CONTROL UNIT.** 1) Turn the ignition switch to OFF. 2) Measure the resistance of harness between fuel pump control unit connector and chassis ground. ***Connector & terminal*** ***(R122) No. 5 — Chassis ground:***	Is the resistance less than 5 Ω?	Go to step **3**.	Repair the open circuit in harness between fuel pump control unit and chassis ground.
3	**CHECK HARNESS BETWEEN FUEL PUMP CONTROL UNIT AND FUEL PUMP CONNECTOR.** 1) Disconnect the connector from fuel pump. 2) Measure the resistance of harness between fuel pump control unit and fuel pump connector. ***Connector & terminal*** ***(R122) No. 9 — (R58) No. 5:*** ***(R122) No. 10 — (R58) No. 6:***	Is the resistance less than 1 Ω?	Go to step **4**.	Repair the harness and connector. NOTE: In this case, repair the following item: • Open circuit in harness between fuel pump control unit and fuel pump connector • Poor contact of coupling connector
4	**CHECK HARNESS BETWEEN FUEL PUMP CONTROL UNIT AND FUEL PUMP CONNECTOR.** Measure the resistance between fuel pump control unit connector and chassis ground. ***Connector & terminal*** ***(R122) No. 9 — Chassis ground:*** ***(R122) No. 10 — Chassis ground:***	Is the resistance 1 MΩ or more?	Go to step **5**.	Repair the short circuit to ground in harness between fuel pump control unit and fuel pump connector.
5	**CHECK HARNESS BETWEEN ECM AND FUEL PUMP CONTROL UNIT CONNECTOR.** 1) Disconnect the connector from ECM. 2) Measure the resistance of harness between ECM and fuel pump control unit connector. ***Connector & terminal*** ***(B136) No. 33 — (R122) No. 6:*** ***(B135) No. 10 — (R122) No. 7:***	Is the resistance less than 1 Ω?	Go to step **6**.	Repair the harness and connector. NOTE: In this case, repair the following item: • Open circuit in harness between ECM and fuel pump control unit connector • Poor contact of coupling connector

	Step	Check	Yes	No
6	**CHECK HARNESS BETWEEN ECM AND FUEL PUMP CONTROL UNIT CONNECTOR.** Measure the resistance between fuel pump control unit connector and chassis ground. ***Connector & terminal*** ***(R122) No. 6 — Chassis ground:*** ***(R122) No. 7 — Chassis ground:***	Is the resistance 1 MΩ or more?	Go to step **7**.	Repair the short circuit to ground in harness between ECM and fuel pump control unit connector.
7	**CHECK FOR POOR CONTACT.** Check for poor contact of ECM and fuel pump control unit connector.	Is there poor contact of ECM or fuel pump control unit connector?	Repair the poor contact of ECM or fuel pump control unit connector.	Go to step **8**.
8	**CHECK EXPERIENCE OF RUNNING OUT OF FUEL.**	Has the vehicle experienced running out of fuel?	Finish the diagnosis. NOTE: DTC may be recorded as a result of fuel pump idling while running out of fuel.	Replace the fuel pump control unit. <Ref. to FU(H4DOTC)-65, Fuel Pump Control Unit.>

BB:DTC P0244 TURBO/SUPER CHARGER WASTEGATE SOLENOID “A” RANGE/PERFORMANCE

DTC DETECTING CONDITION:

- Immediately at fault recognition
- GENERAL DESCRIPTION <Ref. to GD(H4DOTC)-105, DTC P0244 TURBO/SUPER CHARGER WASTEGATE SOLENOID “A” RANGE/PERFORMANCE, Diagnostic Trouble Code (DTC) Detecting Criteria.>

TROUBLE SYMPTOM:

Poor driving performance

CAUTION:

After servicing or replacing faulty parts, perform Clear Memory Mode <Ref. to EN(H4DOTC)(diag)-53, OPERATION, Clear Memory Mode.>, and Inspection Mode <Ref. to EN(H4DOTC)(diag)-41, PROCEDURE, Inspection Mode.>.

	Step	Check	Yes	No
1	**CHECK FOR ANY OTHER DTC ON DISPLAY.**	Is any other DTC displayed?	Check the appropriate DTC using the “List of Diagnostic Trouble Code (DTC)”. <Ref. to EN(H4DOTC)(diag)-75, List of Diagnostic Trouble Code (DTC).>	Go to step **2**.
2	**CHECK WASTEGATE ACTUATOR PIPING AND WASTEGATE CONTROL SOLENOID VALVE PIPING.**	Are there any damage or disconnection of hose in wastegate actuator piping or wastegate control solenoid valve piping?	Connect the wastegate actuator pipe or wastegate control solenoid valve pipe properly. If defective, replace the hose.	Replace the wastegate control solenoid valve. <Ref. to FU(H4DOTC)-52, Wastegate Control Solenoid Valve.>

BC:DTC P0245 TURBO/SUPER CHARGER WASTEGATE SOLENOID “A” LOW

DTC DETECTING CONDITION:

- Immediately at fault recognition
- GENERAL DESCRIPTION <Ref. to GD(H4DOTC)-107, DTC P0245 TURBO/SUPER CHARGER WASTEGATE SOLENOID “A” LOW, Diagnostic Trouble Code (DTC) Detecting Criteria.>

TROUBLE SYMPTOM:

Poor driving performance

CAUTION:

After servicing or replacing faulty parts, perform Clear Memory Mode <Ref. to EN(H4DOTC)(diag)-53, OPERATION, Clear Memory Mode.>, and Inspection Mode <Ref. to EN(H4DOTC)(diag)-41, PROCEDURE, Inspection Mode.>.

WIRING DIAGRAM:

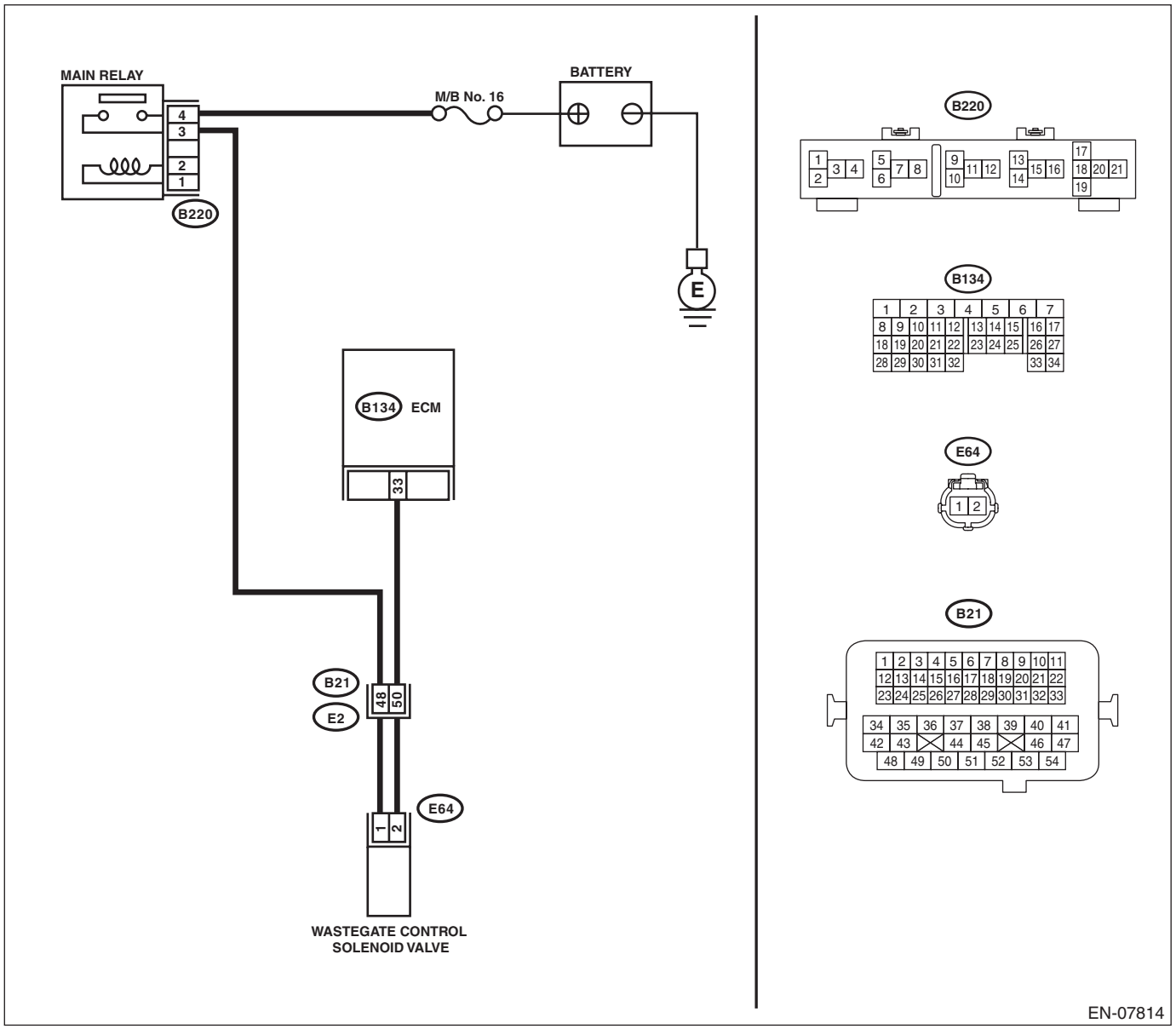

	Step	Check	Yes	No
1	**CHECK OUTPUT SIGNAL OF ECM.** 1) Turn the ignition switch to ON. 2) Measure the voltage between ECM and chassis ground. ***Connector & terminal*** ***(B134) No. 33 (+) — Chassis ground (–):***	Is the voltage 10 V or more?	Go to step **2**.	Go to step **3**.
2	**CHECK FOR POOR CONTACT.** Check for poor contact of ECM connector.	Is there poor contact of ECM connector?	Repair the poor contact of ECM connector.	Even if DTC is detected, the circuit has returned to a normal condition at this time. Reproduce the failure, and then perform the diagnosis again. NOTE: In this case, temporary open or short circuit of harness or temporary poor contact of connector may be the cause.
3	**CHECK POWER SUPPLY TO WASTEGATE CONTROL SOLENOID VALVE.** Measure the voltage between wastegate control solenoid valve connector and engine ground. ***Connector & terminal*** ***(E64) No. 1 (+) — Engine ground (–):***	Is the voltage 10 V or more?	Go to step **4**.	Repair the power supply circuit.
4	**CHECK HARNESS BETWEEN ECM AND WASTEGATE CONTROL SOLENOID VALVE CONNECTOR.** 1) Turn the ignition switch to OFF. 2) Disconnect the connector from ECM and wastegate control solenoid valve. 3) Measure the resistance between wastegate control solenoid valve connector and engine ground. ***Connector & terminal*** ***(E64) No. 2 — Engine ground:***	Is the resistance 1 MΩ or more?	Go to step **5**.	Repair ground short circuit of harness between ECM and wastegate control solenoid valve connector.
5	**CHECK HARNESS BETWEEN ECM AND WASTEGATE CONTROL SOLENOID VALVE CONNECTOR.** Measure the resistance of harness between ECM and wastegate control solenoid valve connector. ***Connector & terminal*** ***(B134) No. 33 — (E64) No. 2:***	Is the resistance less than 1 Ω?	Go to step **6**.	Repair the harness and connector. NOTE: In this case, repair the following item: • Open circuit of harness between ECM and wastegate control solenoid valve connector • Poor contact of coupling connector

	Step	Check	Yes	No
6	**CHECK WASTEGATE CONTROL SOLENOID VALVE.** 1) Remove the wastegate control solenoid valve. 2) Measure the resistance between wastegate control solenoid valve terminals. ***Terminals*** ***No. 1 — No. 2:***	Is the resistance 10 — 100 Ω?	Repair poor contact of wastegate control solenoid valve connector.	Replace the wastegate control solenoid valve. <Ref. to FU(H4DOTC)-52, Wastegate Control Solenoid Valve.>

BD:DTC P0246 TURBO/SUPER CHARGER WASTEGATE SOLENOID “A” HIGH

DTC DETECTING CONDITION:

- Immediately at fault recognition
- GENERAL DESCRIPTION <Ref. to GD(H4DOTC)-108, DTC P0246 TURBO/SUPER CHARGER WASTEGATE SOLENOID “A” HIGH, Diagnostic Trouble Code (DTC) Detecting Criteria.>

TROUBLE SYMPTOM:

Poor driving performance

CAUTION:

After servicing or replacing faulty parts, perform Clear Memory Mode <Ref. to EN(H4DOTC)(diag)-53, OPERATION, Clear Memory Mode.>, and Inspection Mode <Ref. to EN(H4DOTC)(diag)-41, PROCEDURE, Inspection Mode.>.

WIRING DIAGRAM:

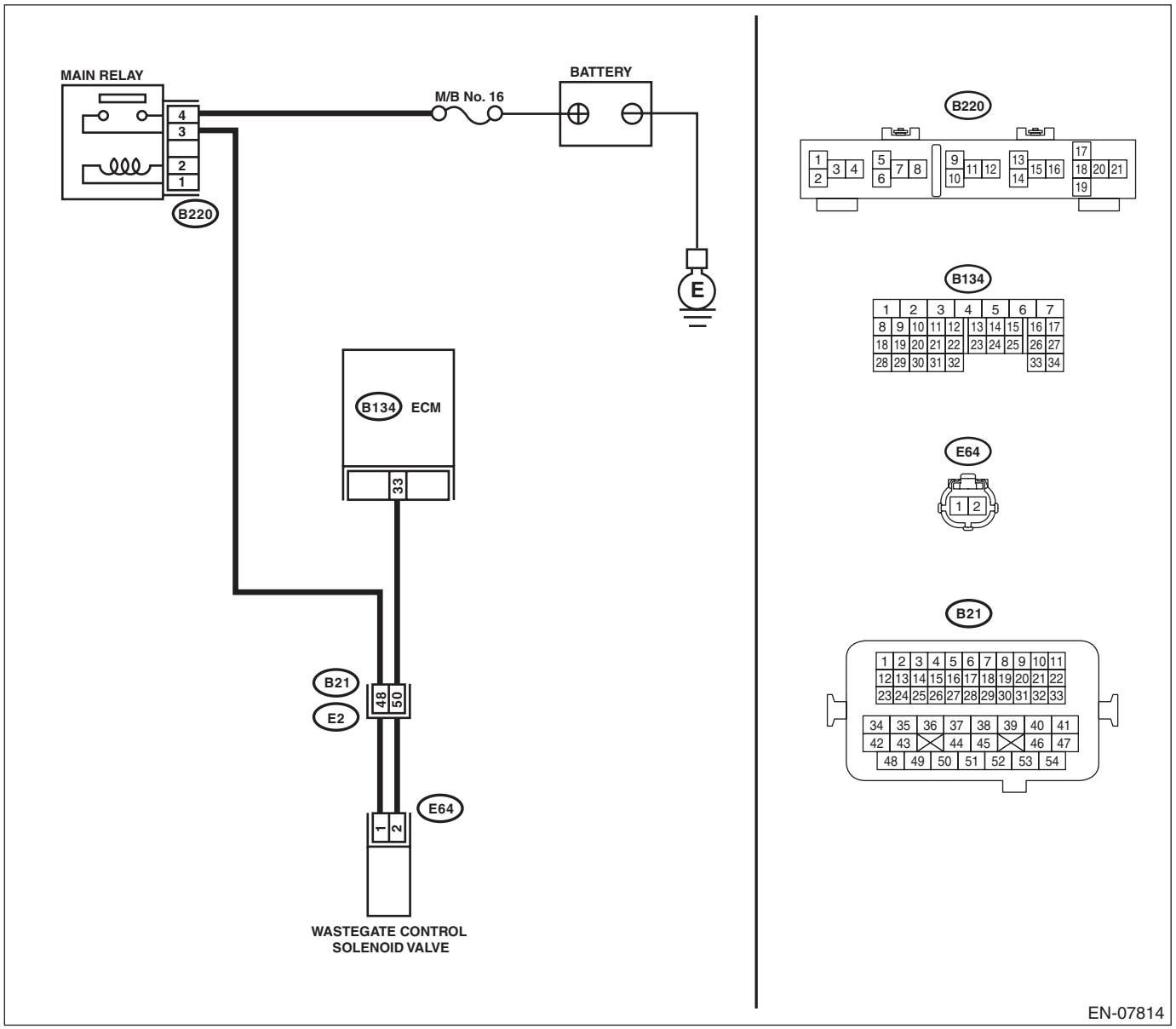

	Step	Check	Yes	No
1	**CHECK HARNESS BETWEEN ECM AND WASTEGATE CONTROL SOLENOID VALVE CONNECTOR.** 1) Turn the ignition switch to OFF. 2) Disconnect the connector from ECM and wastegate control solenoid valve. 3) Turn the ignition switch to ON. 4) Measure the voltage between ECM and chassis ground. ***Connector & terminal*** ***(B134) No. 33 (+) — Chassis ground (–):***	Is the voltage 10 V or more?	Repair short circuit of the harness to power supply between ECM and wastegate control solenoid valve connector.	Go to step **2**.
2	**CHECK WASTEGATE CONTROL SOLENOID VALVE.** 1) Turn the ignition switch to OFF. 2) Measure the resistance between wastegate control solenoid valve terminals. ***Terminals*** ***No. 1 — No. 2:***	Is the resistance less than 1 Ω?	Replace the wastegate control solenoid valve. <Ref. to FU(H4DOTC)-52, Wastegate Control Solenoid Valve.>	Repair the poor contact of ECM connector.

BE:DTC P0301 CYLINDER 1 MISFIRE DETECTED

NOTE:
For the diagnostic procedure, refer to DTC P0304. <Ref. to EN(H4DOTC)(diag)-167, DTC P0304 CYLINDER 4 MISFIRE DETECTED, Diagnostic Procedure with Diagnostic Trouble Code (DTC).>

BF:DTC P0302 CYLINDER 2 MISFIRE DETECTED

NOTE:
For the diagnostic procedure, refer to DTC P0304. <Ref. to EN(H4DOTC)(diag)-167, DTC P0304 CYLINDER 4 MISFIRE DETECTED, Diagnostic Procedure with Diagnostic Trouble Code (DTC).>

BG:DTC P0303 CYLINDER 3 MISFIRE DETECTED

NOTE:
For the diagnostic procedure, refer to DTC P0304. <Ref. to EN(H4DOTC)(diag)-167, DTC P0304 CYLINDER 4 MISFIRE DETECTED, Diagnostic Procedure with Diagnostic Trouble Code (DTC).>

BH:DTC P0304 CYLINDER 4 MISFIRE DETECTED

DTC DETECTING CONDITION:

- Detected when two consecutive driving cycles with fault occur.
- Immediately at fault recognition (A misfire which could damage catalyst occurs.)
- GENERAL DESCRIPTION <Ref. to GD(H4DOTC)-115, DTC P0304 CYLINDER 4 MISFIRE DETECTED, Diagnostic Trouble Code (DTC) Detecting Criteria.>

TROUBLE SYMPTOM:

- Engine stalls.
- Improper idling
- Rough driving

CAUTION:

After servicing or replacing faulty parts, perform Clear Memory Mode <Ref. to EN(H4DOTC)(diag)-53, OPERATION, Clear Memory Mode.>, and Inspection Mode <Ref. to EN(H4DOTC)(diag)-41, PROCEDURE, Inspection Mode.>.

WIRING DIAGRAM:

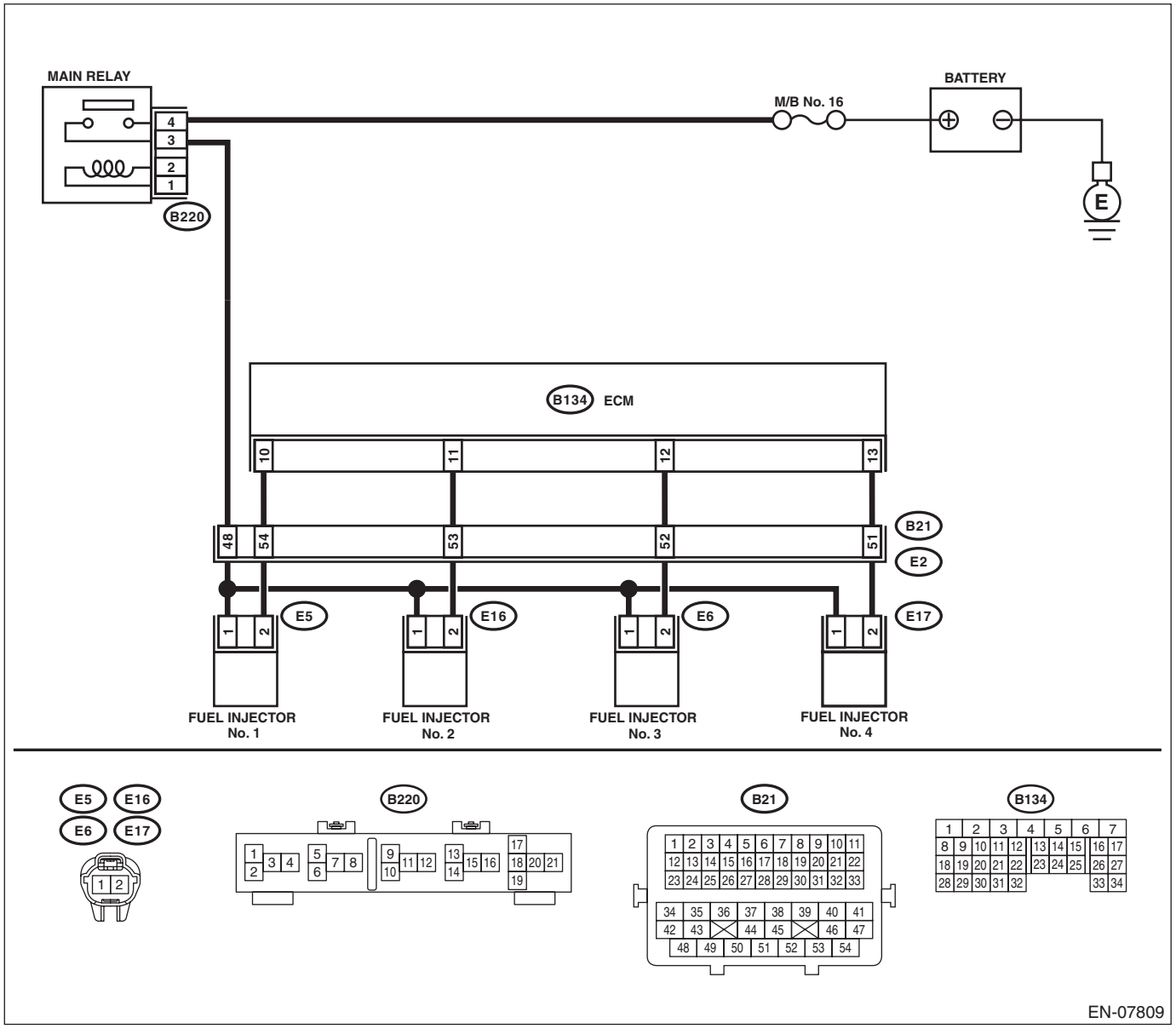

	Step	Check	Yes	No
1	**CHECK OUTPUT SIGNAL OF ECM.** 1) Turn the ignition switch to ON. 2) Measure the voltage between ECM and chassis ground on faulty cylinders. ***Connector & terminal*** ***#1 (B134) No. 10 (+) — Chassis ground (–):*** ***#2 (B134) No. 11 (+) — Chassis ground (–):*** ***#3 (B134) No. 12 (+) — Chassis ground (–):*** ***#4 (B134) No. 13 (+) — Chassis ground (–):***	Is the voltage 10 V or more?	Go to step **6**.	Go to step **2**.
2	**CHECK HARNESS BETWEEN ECM AND FUEL INJECTOR CONNECTOR.** 1) Turn the ignition switch to OFF. 2) Disconnect the connector from fuel injector on faulty cylinders. 3) Measure the resistance between fuel injector connector and engine ground on faulty cylinders. ***Connector & terminal*** ***#1 (E5) No. 2 — Engine ground:*** ***#2 (E16) No. 2 — Engine ground:*** ***#3 (E6) No. 2 — Engine ground:*** ***#4 (E17) No. 2 — Engine ground:***	Is the resistance 1 MΩ or more?	Go to step **3**.	Repair the short circuit to ground in harness between ECM and fuel injector connector.
3	**CHECK HARNESS BETWEEN ECM AND FUEL INJECTOR CONNECTOR.** Measure the resistance of harness between ECM and fuel injector connector on faulty cylinders. ***Connector & terminal*** ***#1 (B134) No. 10 — (E5) No. 2:*** ***#2 (B134) No. 11 — (E16) No. 2:*** ***#3 (B134) No. 12 — (E6) No. 2:*** ***#4 (B134) No. 13 — (E17) No. 2:***	Is the resistance less than 1 Ω?	Go to step **4**.	Repair the harness and connector. NOTE: In this case, repair the following item: • Open circuit in harness between ECM and fuel injector connector • Poor contact of coupling connector
4	**CHECK FUEL INJECTOR.** Measure the resistance between fuel injector terminals on faulty cylinder. ***Terminals*** ***No. 1 — No. 2:***	Is the resistance 5 — 20 Ω?	Go to step **5**.	Replace the faulty fuel injector. <Ref. to FU(H4DOTC)-45, Fuel Injector.>
5	**CHECK POWER SUPPLY LINE.** 1) Turn the ignition switch to ON. 2) Measure the voltage between fuel injector connector of faulty cylinders and engine ground. ***Connector & terminal*** ***#1 (E5) No. 1 (+) — Engine ground (–):*** ***#2 (E16) No. 1 (+) — Engine ground (–):*** ***#3 (E6) No. 1 (+) — Engine ground (–):*** ***#4 (E17) No. 1 (+) — Engine ground (–):***	Is the voltage 10 V or more?	Repair the poor contact of all connectors in fuel injector circuit.	Repair the harness and connector. NOTE: In this case, repair the following item: • Open circuit in harness between the main relay and fuel injector connector on faulty cylinders • Poor contact of coupling connector • Poor contact of main relay connector

Step		Check	Yes	No
6	**CHECK HARNESS BETWEEN ECM AND FUEL INJECTOR CONNECTOR.** 1) Turn the ignition switch to OFF. 2) Disconnect the connector from fuel injector on faulty cylinders. 3) Turn the ignition switch to ON. 4) Measure the voltage between ECM and chassis ground on faulty cylinders. ***Connector & terminal*** ***#1 (B134) No. 10 (+) — Chassis ground (–):*** ***#2 (B134) No. 11 (+) — Chassis ground (–):*** ***#3 (B134) No. 12 (+) — Chassis ground (–):*** ***#4 (B134) No. 13 (+) — Chassis ground (–):***	Is the voltage 10 V or more?	Repair the short circuit to power in harness between ECM and fuel injector connector.	Go to step **7**.
7	**CHECK FUEL INJECTOR.** 1) Turn the ignition switch to OFF. 2) Measure the resistance between fuel injector terminals on faulty cylinder. ***Terminals*** ***No. 1 — No. 2:***	Is the resistance 5 — 20 Ω?	Go to step **8**.	Replace the faulty fuel injector. <Ref. to FU(H4DOTC)-45, Fuel Injector.>
8	**CHECK INSTALLATION OF CAMSHAFT POSITION SENSOR/CRANKSHAFT POSITION SENSOR.**	Is the camshaft position sensor or crankshaft position sensor loosely installed?	Tighten the camshaft position sensor or crankshaft position sensor. <Ref. to FU(H4DOTC)-37, Camshaft Position Sensor.> <Ref. to FU(H4DOTC)-35, Crankshaft Position Sensor.>	Go to step **9**.
9	**CHECK CRANK SPROCKET.** Remove the timing belt cover. <Ref. to ME(H4DOTC)-46, REMOVAL, Timing Belt Cover.>	Is the crank sprocket rusted or does it have broken teeth?	Replace the crank sprocket. <Ref. to ME(H4DOTC)-62, Crank Sprocket.>	Go to step **10**.
10	**CHECK INSTALLATION CONDITION OF TIMING BELT.** Turn the crankshaft using ST, and align the alignment mark on crank sprocket with alignment mark on cylinder block. ST 499987500 CRANKSHAFT SOCKET	Is the timing belt dislocated from its proper position?	Repair the installation condition of timing belt. <Ref. to ME(H4DOTC)-52, Timing Belt.>	Go to step **11**.
11	**CHECK FUEL LEVEL.**	Is the fuel meter indication higher than the “Lower” level?	Go to step **12**.	Refill the fuel so that the fuel meter indication is higher than the “Lower” level, and proceed to the next step. Go to step **12**.
12	**CHECK STATUS OF MALFUNCTION INDICATOR LIGHT.** 1) Clear the memory using the Subaru Select Monitor or general scan tool. <Ref. to EN(H4DOTC)(diag)-53, Clear Memory Mode.> 2) Start the engine, and drive the vehicle 10 minutes or more.	Does the malfunction indicator light illuminate or blink?	Go to step **14**.	Go to step **13**.

	Step	Check	Yes	No
13	**CHECK CAUSE OF MISFIRE.**	Was the cause of misfire identified when the engine is running?	Finish diagnostics operation, if the engine has no abnormality.	Repair the poor contact of connector. NOTE: In this case, repair the following item: • Poor contact of ignition coil connector • Poor contact of fuel injector connector on faulty cylinders • Poor contact of ECM connector • Poor contact of coupling connector
14	**CHECK AIR INTAKE SYSTEM.**	Is there any fault in air intake system?	Repair the air intake system. NOTE: Check the following items. • Are there air leaks or air suction caused by loose or dislocated nuts and bolts? • Are there cracks or any disconnection of hoses?	Go to step **15**.
15	**CHECK MISFIRE SYMPTOM.** 1) Turn the ignition switch to ON. 2) Check for DTC. <Ref. to EN(H4DOTC)(diag)-40, Read Diagnostic Trouble Code (DTC).>	Does the Subaru Select Monitor or general scan tool indicate only one DTC?	Go to step **18**.	Go to step **16**.
16	**CHECK DTC.**	Is DTC P0301 and P0303 displayed on the Subaru Select Monitor or general scan tool?	Go to step **19**.	Go to step **17**.
17	**CHECK DTC.**	Is DTC P0302 and P0304 displayed on the Subaru Select Monitor or general scan tool?	Go to step **20**.	Go to step **21**.
18	**ONLY ONE CYLINDER.**	Is there any fault in the cylinder?	Repair or replace faulty parts. NOTE: Check the following items. • Spark plug • Ignition coil • Fuel injector • Compression ratio	Go to DTC P0171. <Ref. to EN(H4DOTC)(diag)-143, DTC P0171 SYSTEM TOO LEAN (BANK 1), Diagnostic Procedure with Diagnostic Trouble Code (DTC).>

Step		Check	Yes	No
19	GROUP OF #1 AND #3 CYLINDERS.	Are there any faults in #1 and #3 cylinders?	Repair or replace faulty parts. NOTE: Check the following items. • Spark plug • Ignition coil • Fuel injector • Compression ratio • Skipping timing belt teeth	Go to DTC P0171. <Ref. to EN(H4DOTC)(diag)-143, DTC P0171 SYSTEM TOO LEAN (BANK 1), Diagnostic Procedure with Diagnostic Trouble Code (DTC).>
20	GROUP OF #2 AND #4 CYLINDERS.	Are there any faults in #2 and #4 cylinders?	Repair or replace faulty parts. NOTE: Check the following items. • Spark plug • Ignition coil • Fuel injector • Compression ratio • Skipping timing belt teeth	Go to DTC P0171. <Ref. to EN(H4DOTC)(diag)-143, DTC P0171 SYSTEM TOO LEAN (BANK 1), Diagnostic Procedure with Diagnostic Trouble Code (DTC).>
21	CYLINDER AT RANDOM.	Is the engine idle rough?	Go to DTC P0171. <Ref. to EN(H4DOTC)(diag)-143, DTC P0171 SYSTEM TOO LEAN (BANK 1), Diagnostic Procedure with Diagnostic Trouble Code (DTC).>	Repair or replace faulty parts. NOTE: Check the following items. • Spark plug • Ignition coil • Fuel injector • Compression ratio

BI: DTC P0327 KNOCK SENSOR 1 CIRCUIT LOW (BANK 1 OR SINGLE SENSOR)

DTC DETECTING CONDITION:

- Immediately at fault recognition
- GENERAL DESCRIPTION <Ref. to GD(H4DOTC)-116, DTC P0327 KNOCK SENSOR 1 CIRCUIT LOW (BANK 1 OR SINGLE SENSOR), Diagnostic Trouble Code (DTC) Detecting Criteria.>

TROUBLE SYMPTOM:

- Poor driving performance
- Knocking occurs.

CAUTION:
After servicing or replacing faulty parts, perform Clear Memory Mode <Ref. to EN(H4DOTC)(diag)-53, OPERATION, Clear Memory Mode.>, and Inspection Mode <Ref. to EN(H4DOTC)(diag)-41, PROCEDURE, Inspection Mode.>.
WIRING DIAGRAM:

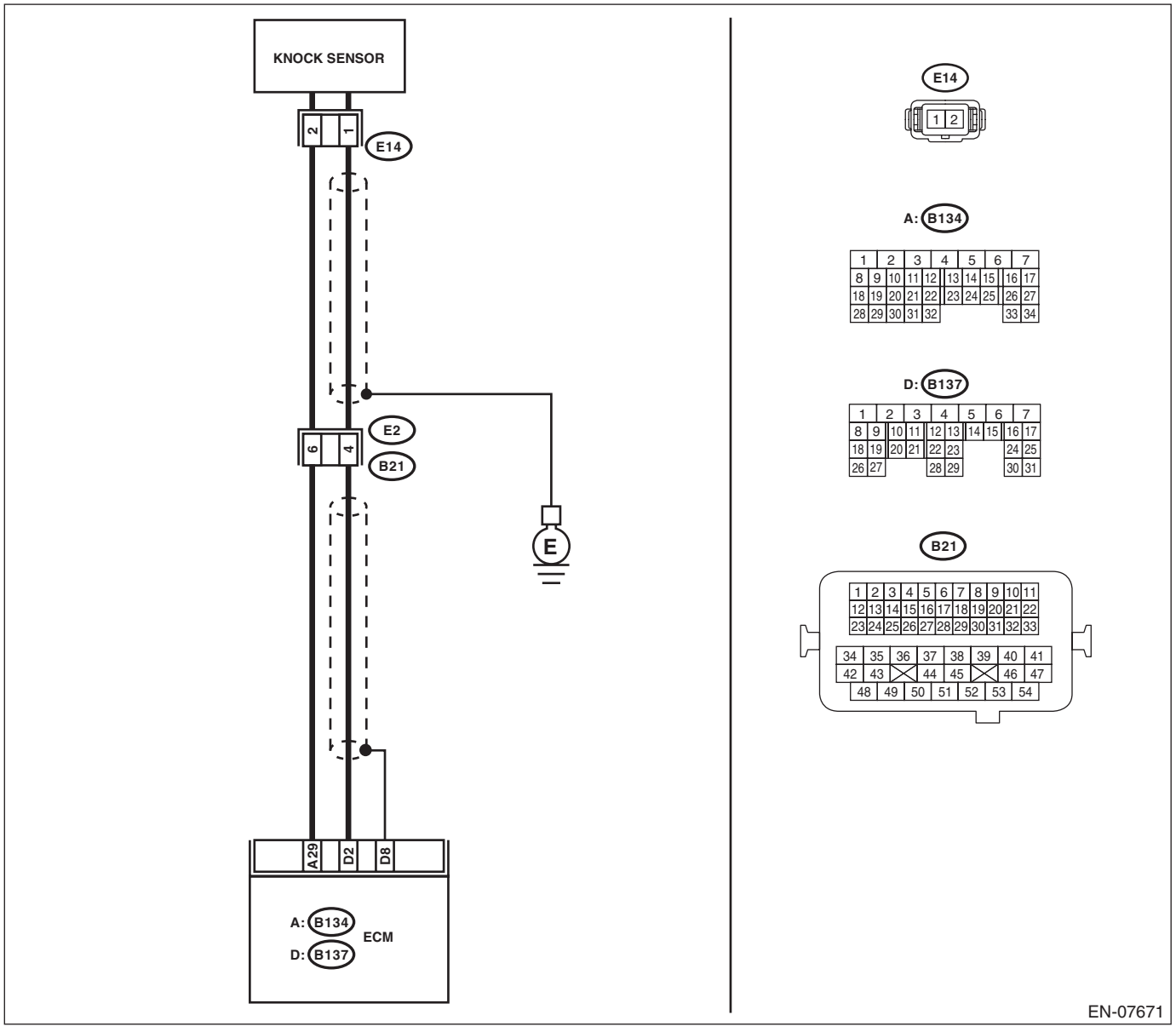

	Step	Check	Yes	No
1	**CHECK HARNESS BETWEEN ECM AND KNOCK SENSOR CONNECTOR.** 1) Turn the ignition switch to OFF. 2) Disconnect the connector from ECM. 3) Measure the resistance between ECM connectors. ***Connector & terminal*** ***(B137) No. 2 — (B134) No. 29:***	Is the resistance 600 kΩ or more?	Go to step **2**.	Repair the poor contact of ECM connector.
2	**CHECK KNOCK SENSOR.** 1) Disconnect the connector from knock sensor. 2) Measure the resistance between knock sensor terminals. ***Terminals*** ***No. 1 — No. 2:***	Is the resistance 600 kΩ or more?	Replace the knock sensor. <Ref. to FU(H4DOTC)-39, Knock Sensor.>	Repair the harness and connector. NOTE: In this case, repair the following item: • Open circuit in harness between ECM and knock sensor connector • Poor contact of knock sensor connector • Poor contact of coupling connector

BJ:DTC P0328 KNOCK SENSOR 1 CIRCUIT HIGH (BANK 1 OR SINGLE SENSOR)

DTC DETECTING CONDITION:

- Immediately at fault recognition
- GENERAL DESCRIPTION <Ref. to GD(H4DOTC)-118, DTC P0328 KNOCK SENSOR 1 CIRCUIT HIGH (BANK 1 OR SINGLE SENSOR), Diagnostic Trouble Code (DTC) Detecting Criteria.>

TROUBLE SYMPTOM:

- Poor driving performance
- Knocking occurs.

CAUTION:

After servicing or replacing faulty parts, perform Clear Memory Mode <Ref. to EN(H4DOTC)(diag)-53, OPERATION, Clear Memory Mode.>, and Inspection Mode <Ref. to EN(H4DOTC)(diag)-41, PROCEDURE, Inspection Mode.>.

WIRING DIAGRAM:

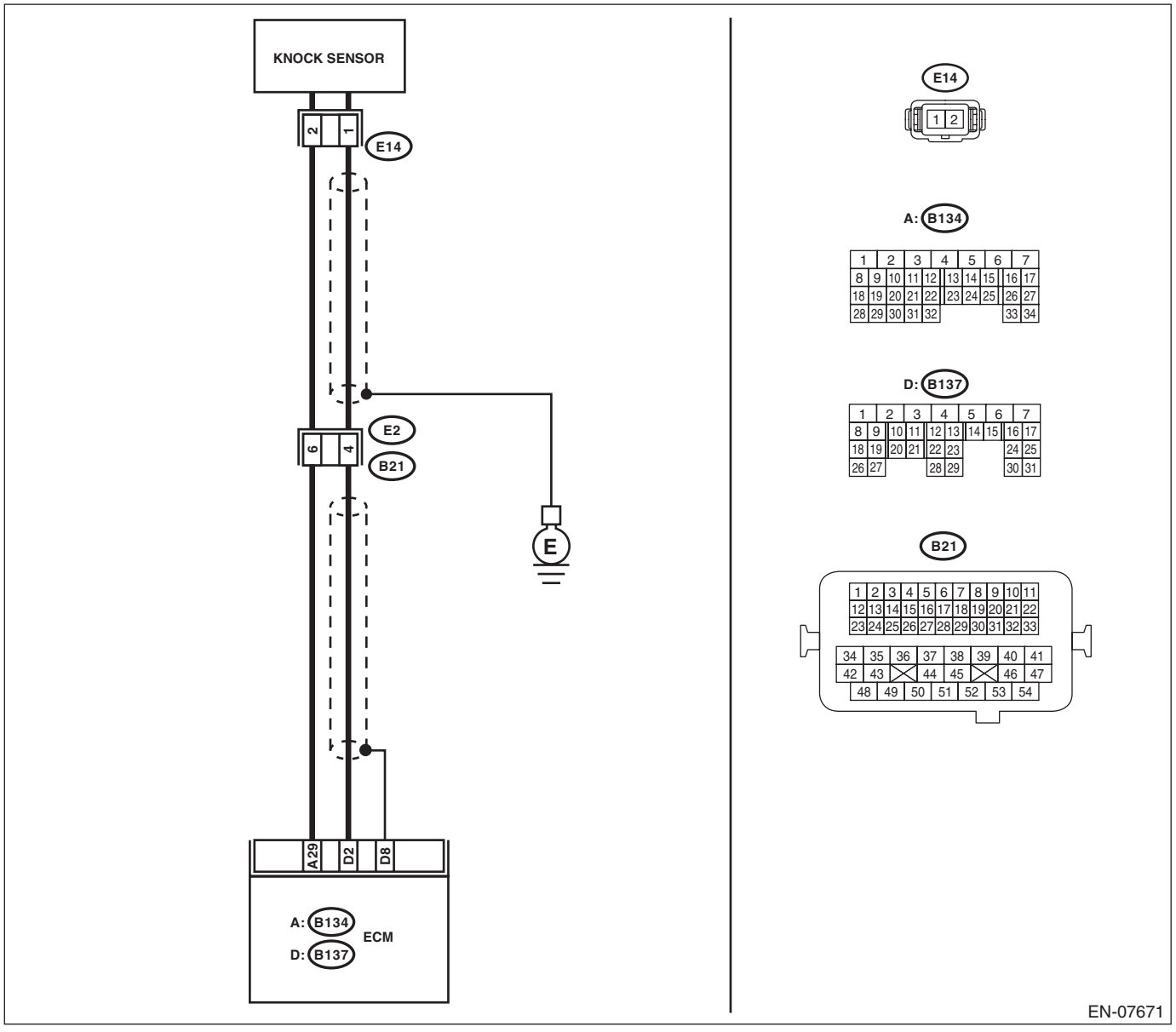

	Step	Check	Yes	No
1	**CHECK HARNESS BETWEEN ECM AND KNOCK SENSOR CONNECTOR.** 1) Turn the ignition switch to OFF. 2) Disconnect the connector from ECM. 3) Measure the resistance between ECM connectors. ***Connector & terminal*** ***(B137) No. 2 — (B134) No. 29:***	Is the resistance less than 500 kΩ?	Go to step **2**.	Go to step **3**.
2	**CHECK KNOCK SENSOR.** 1) Disconnect the connector from knock sensor. 2) Measure the resistance between knock sensor connectors. ***Terminals*** ***No. 1 — No. 2:***	Is the resistance less than 500 kΩ?	Replace the knock sensor. <Ref. to FU(H4DOTC)-39, Knock Sensor.>	Repair the ground short circuit of harness between ECM and knock sensor connector. NOTE: The harness between both connectors are shielded. Remove the shield and repair the short circuit of the harness.
3	**CHECK INPUT SIGNAL OF ECM.** 1) Connect the connector to ECM. 2) Turn the ignition switch to ON. 3) Measure the voltage between ECM and chassis ground. ***Connector & terminal*** ***(B137) No. 2 (+) — Chassis ground (–):***	Is the voltage 2 V or more?	Even if DTC is detected, the circuit has returned to a normal condition at this time. Reproduce the failure, and then perform the diagnosis again. NOTE: In this case, temporary poor contact of connector, temporary open or short circuit of harness may be the cause.	Repair the poor contact of ECM connector.

BK:DTC P0335 CRANKSHAFT POSITION SENSOR “A” CIRCUIT

DTC DETECTING CONDITION:

- Immediately at fault recognition
- GENERAL DESCRIPTION <Ref. to GD(H4DOTC)-120, DTC P0335 CRANKSHAFT POSITION SENSOR “A” CIRCUIT, Diagnostic Trouble Code (DTC) Detecting Criteria.>

TROUBLE SYMPTOM:

- Engine stalls.
- Failure of engine to start

CAUTION:
After servicing or replacing faulty parts, perform Clear Memory Mode <Ref. to EN(H4DOTC)(diag)-53, OPERATION, Clear Memory Mode.>, and Inspection Mode <Ref. to EN(H4DOTC)(diag)-41, PROCEDURE, Inspection Mode.>.
WIRING DIAGRAM:

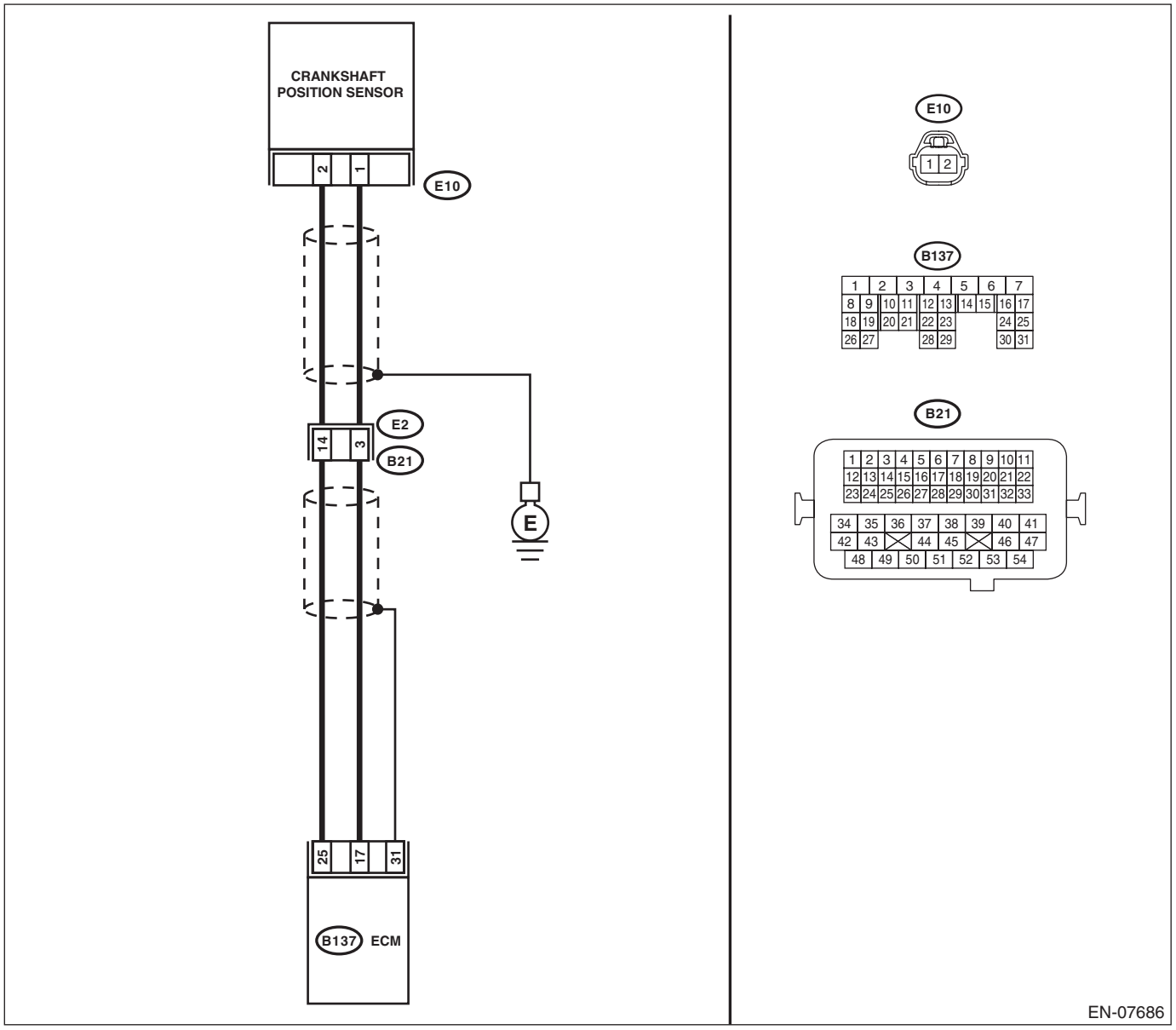

	Step	Check	Yes	No
1	**CHECK CONDITION OF CRANKSHAFT POSITION SENSOR.**	Is the crankshaft position sensor installation bolt tightened securely?	Go to step **2**.	Tighten the crankshaft position sensor installation bolt securely. <Ref. to FU(H4DOTC)-35, Crankshaft Position Sensor.>
2	**CHECK CRANKSHAFT POSITION SENSOR.** 1) Turn the ignition switch to OFF. 2) Remove the crankshaft position sensor. <Ref. to FU(H4DOTC)-35, REMOVAL, Crankshaft Position Sensor.> 3) Measure the resistance between terminals of crankshaft position sensor. ***Terminals*** ***No. 1 — No. 2:***	Is the resistance between 1 and 4 kΩ?	Go to step **3**.	Replace the crankshaft position sensor. <Ref. to FU(H4DOTC)-35, Crankshaft Position Sensor.>
3	**CHECK HARNESS BETWEEN ECM AND CRANKSHAFT POSITION SENSOR CONNECTOR.** 1) Disconnect the connectors from ECM. 2) Measure the resistance of harness between ECM and crankshaft position sensor connector. ***Connector & terminal*** ***(B137) No. 17 — (E10) No. 1:*** ***(B137) No. 25 — (E10) No. 2:***	Is the resistance less than 1 Ω?	Repair the poor contact of ECM and crankshaft position sensor connector.	Repair the harness and connector. NOTE: In this case, repair the following item: • Open circuit in harness between ECM and crankshaft position sensor connector • Poor contact of coupling connector

BL:DTC P0336 CRANKSHAFT POSITION SENSOR “A” CIRCUIT RANGE/PERFORMANCE

DTC DETECTING CONDITION:

- Detected when two consecutive driving cycles with fault occur.
- GENERAL DESCRIPTION <Ref. to GD(H4DOTC)-122, DTC P0336 CRANKSHAFT POSITION SENSOR “A” CIRCUIT RANGE/PERFORMANCE, Diagnostic Trouble Code (DTC) Detecting Criteria.>

TROUBLE SYMPTOM:

- Engine stalls.
- Failure of engine to start

CAUTION:
After servicing or replacing faulty parts, perform Clear Memory Mode <Ref. to EN(H4DOTC)(diag)-53, OPERATION, Clear Memory Mode.>, and Inspection Mode <Ref. to EN(H4DOTC)(diag)-41, PROCEDURE, Inspection Mode.>.

	Step	Check	Yes	No
1	**CHECK CONDITION OF CRANKSHAFT POSITION SENSOR.** Turn the ignition switch to OFF.	Is the crankshaft position sensor installation bolt tightened securely?	Go to step **2**.	Tighten the crankshaft position sensor installation bolt securely. <Ref. to FU(H4DOTC)-35, Crankshaft Position Sensor.>
2	**CHECK CRANK SPROCKET.** Remove the timing belt cover. <Ref. to ME(H4DOTC)-46, REMOVAL, Timing Belt Cover.>	Are crank sprocket teeth cracked or damaged?	Replace the crank sprocket. <Ref. to ME(H4DOTC)-62, Crank Sprocket.>	Go to step **3**.
3	**CHECK INSTALLATION CONDITION OF TIMING BELT.** Turn the crankshaft using ST, and align the alignment mark on crank sprocket with alignment mark on cylinder block. ST 499987500 CRANKSHAFT SOCKET	Is the timing belt dislocated from its proper position?	Repair the installation condition of timing belt. <Ref. to ME(H4DOTC)-52, Timing Belt.>	Replace the crankshaft position sensor. <Ref. to FU(H4DOTC)-35, Crankshaft Position Sensor.>

BM:DTC P0340 CAMSHAFT POSITION SENSOR “A” CIRCUIT (BANK 1 OR SINGLE SENSOR)

DTC DETECTING CONDITION:

- Immediately at fault recognition
- GENERAL DESCRIPTION <Ref. to GD(H4DOTC)-124, DTC P0340 CAMSHAFT POSITION SENSOR “A” CIRCUIT (BANK 1 OR SINGLE SENSOR), Diagnostic Trouble Code (DTC) Detecting Criteria.>

TROUBLE SYMPTOM:

- Engine stalls.
- Failure of engine to start

CAUTION:

After servicing or replacing faulty parts, perform Clear Memory Mode <Ref. to EN(H4DOTC)(diag)-53, OPERATION, Clear Memory Mode.>, and Inspection Mode <Ref. to EN(H4DOTC)(diag)-41, PROCEDURE, Inspection Mode.>.

WIRING DIAGRAM:

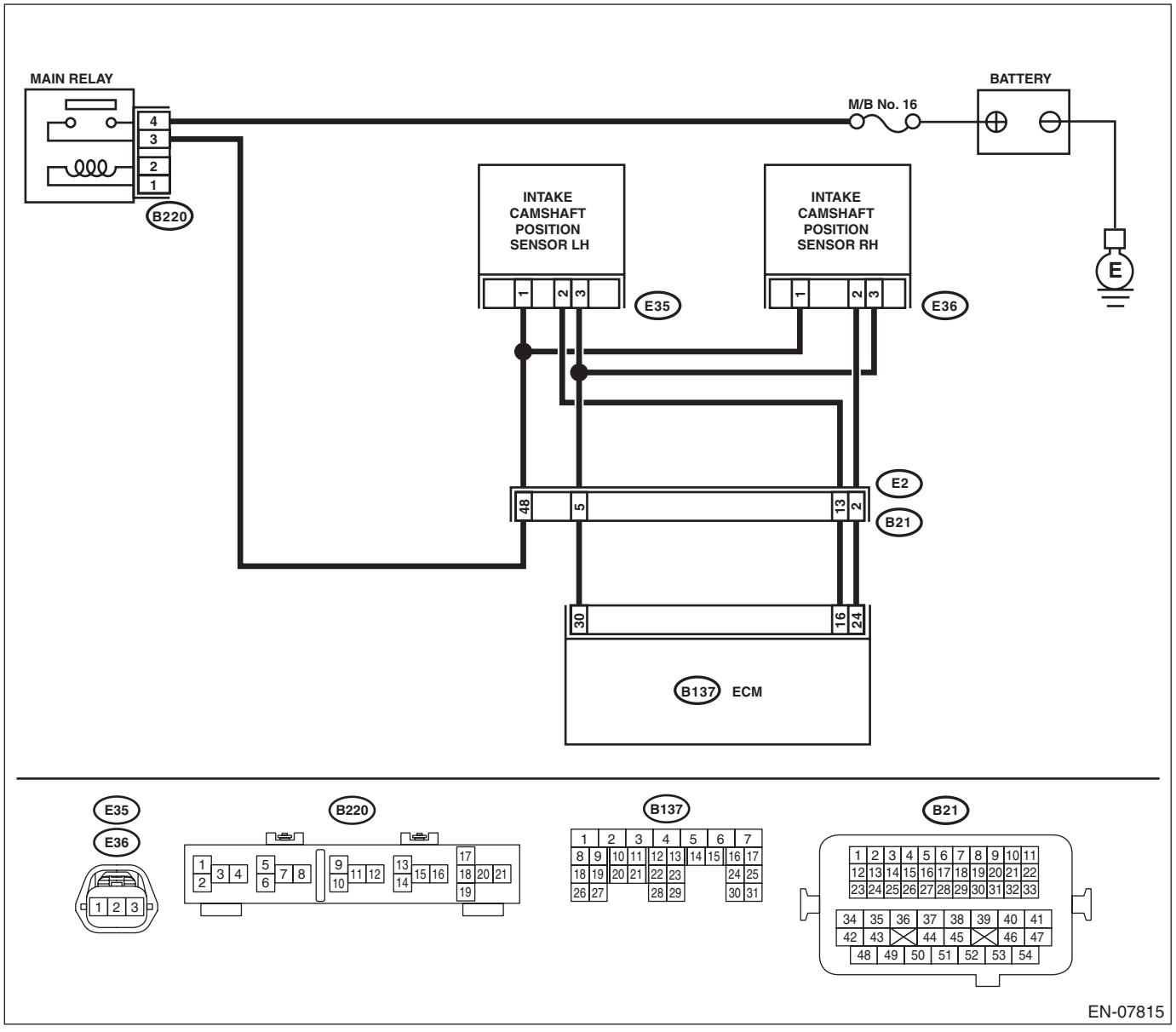

	Step	Check	Yes	No
1	**CHECK POWER SUPPLY OF CAMSHAFT POSITION SENSOR.** 1) Turn the ignition switch to OFF. 2) Disconnect the connector from camshaft position sensor. 3) Turn the ignition switch to ON. 4) Measure the voltage between camshaft position sensor connector and engine ground. ***Connector & terminal*** ***(E36) No. 1 (+) — Engine ground (–):***	Is the voltage 10 V or more?	Go to step **2**.	Repair the harness and connector. NOTE: In this case, repair the following item: • Open circuit or short circuit to ground in harness between main relay connector and camshaft position sensor connector • Poor contact of coupling connector
2	**CHECK HARNESS BETWEEN ECM AND CAMSHAFT POSITION SENSOR CONNECTOR.** 1) Turn the ignition switch to OFF. 2) Disconnect the connectors from ECM. 3) Measure the resistance between ECM and camshaft position sensor connector. ***Connector & terminal*** ***(B137) No. 24 — (E36) No. 2:*** ***(B137) No. 30 — (E36) No. 3:***	Is the resistance less than 1 Ω?	Go to step **3**.	Repair the harness and connector. NOTE: In this case, repair the following item: • Open circuit in harness between ECM and camshaft position sensor connector • Poor contact of coupling connector
3	**CHECK HARNESS BETWEEN ECM AND CAMSHAFT POSITION SENSOR CONNECTOR.** Measure the resistance between camshaft position sensor connector and engine ground. ***Connector & terminal*** ***(E36) No. 2 — Engine ground:***	Is the resistance 1 MΩ or more?	Go to step **4**.	Repair short circuit to ground in harness between ECM and camshaft position sensor connector.
4	**CHECK HARNESS BETWEEN ECM AND CAMSHAFT POSITION SENSOR CONNECTOR.** Measure the voltage between camshaft position sensor connector and engine ground. ***Connector & terminal*** ***(E36) No. 2 (+) — Engine ground (–):***	Is the voltage 5 V or more?	Repair the short circuit to power in the harness between ECM and camshaft position sensor connector.	Go to step **5**.
5	**CHECK CONDITION OF CAMSHAFT POSITION SENSOR.**	Is the camshaft position sensor installation bolt tightened securely?	Go to step **6**.	Tighten the camshaft position sensor installation bolt securely. <Ref. to FU(H4DOTC)-37, Camshaft Position Sensor.>
6	**CHECK CAMSHAFT POSITION SENSOR.** Check the waveform of the camshaft position sensor. <Ref. to EN(H4DOTC)(diag)-18, Engine Control Module (ECM) I/O Signal.>	Is there any abnormality in waveform?	Replace the camshaft position sensor. <Ref. to FU(H4DOTC)-37, Camshaft Position Sensor.>	Repair the following item. • Poor contact of ECM connector • Poor contact of camshaft position sensor connector • Poor contact of coupling connector

BN:DTC P0345 CAMSHAFT POSITION SENSOR “A” CIRCUIT (BANK 2)

DTC DETECTING CONDITION:

- Immediately at fault recognition
- GENERAL DESCRIPTION <Ref. to GD(H4DOTC)-125, DTC P0345 CAMSHAFT POSITION SENSOR “A” CIRCUIT (BANK 2), Diagnostic Trouble Code (DTC) Detecting Criteria.>

TROUBLE SYMPTOM:

- Engine stalls.
- Failure of engine to start

CAUTION:

After servicing or replacing faulty parts, perform Clear Memory Mode <Ref. to EN(H4DOTC)(diag)-53, OPERATION, Clear Memory Mode.>, and Inspection Mode <Ref. to EN(H4DOTC)(diag)-41, PROCEDURE, Inspection Mode.>.

WIRING DIAGRAM:

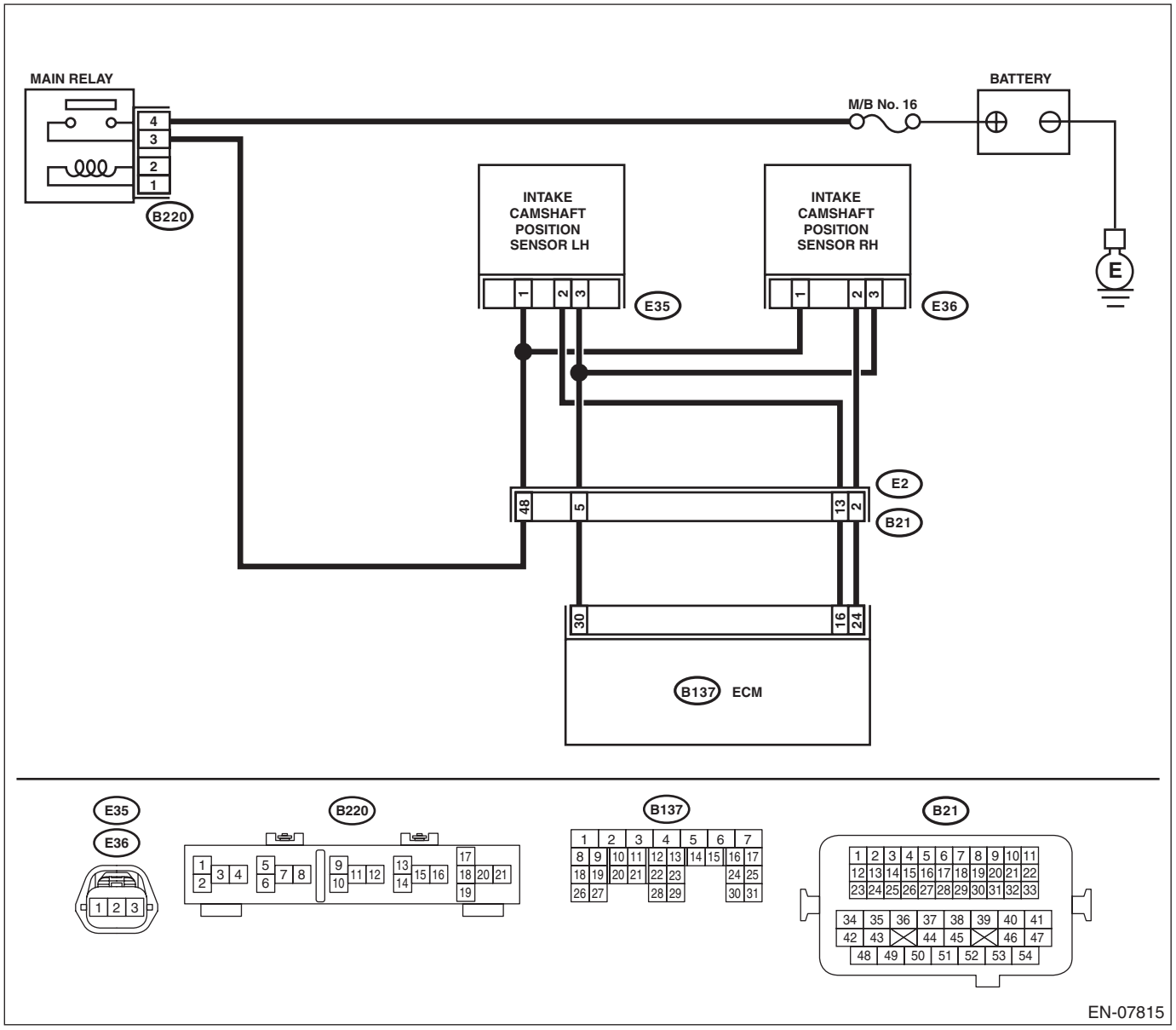

	Step	Check	Yes	No
1	**CHECK POWER SUPPLY OF CAMSHAFT POSITION SENSOR.** 1) Turn the ignition switch to OFF. 2) Disconnect the connector from camshaft position sensor. 3) Turn the ignition switch to ON. 4) Measure the voltage between camshaft position sensor connector and engine ground. ***Connector & terminal*** ***(E35) No. 1 (+) — Engine ground (–):***	Is the voltage 10 V or more?	Go to step **2**.	Repair the harness and connector. NOTE: In this case, repair the following item: • Open circuit or short circuit to ground in harness between main relay connector and camshaft position sensor connector • Poor contact of coupling connector
2	**CHECK HARNESS BETWEEN ECM AND CAMSHAFT POSITION SENSOR CONNECTOR.** 1) Turn the ignition switch to OFF. 2) Disconnect the connectors from ECM. 3) Measure the resistance between ECM and camshaft position sensor connector. ***Connector & terminal*** ***(B137) No. 16 — (E35) No. 2:*** ***(B137) No. 30 — (E35) No. 3:***	Is the resistance less than 1 Ω?	Go to step **3**.	Repair the harness and connector. NOTE: In this case, repair the following item: • Open circuit in harness between ECM and camshaft position sensor connector • Poor contact of coupling connector
3	**CHECK HARNESS BETWEEN ECM AND CAMSHAFT POSITION SENSOR CONNECTOR.** Measure the resistance between camshaft position sensor connector and engine ground. ***Connector & terminal*** ***(E35) No. 2 — Engine ground:***	Is the resistance 1 MΩ or more?	Go to step **4**.	Repair short circuit to ground in harness between ECM and camshaft position sensor connector.
4	**CHECK HARNESS BETWEEN ECM AND CAMSHAFT POSITION SENSOR CONNECTOR.** Measure the voltage between camshaft position sensor connector and engine ground. ***Connector & terminal*** ***(E35) No. 2 (+) — Engine ground (–):***	Is the voltage 5 V or more?	Repair the short circuit to power in the harness between ECM and camshaft position sensor connector.	Go to step **5**.
5	**CHECK CONDITION OF CAMSHAFT POSITION SENSOR.**	Is the camshaft position sensor installation bolt tightened securely?	Go to step **6**.	Tighten the camshaft position sensor installation bolt securely. <Ref. to FU(H4DOTC)-37, Camshaft Position Sensor.>
6	**CHECK CAMSHAFT POSITION SENSOR.** Check the waveform of the camshaft position sensor. <Ref. to EN(H4DOTC)(diag)-18, Engine Control Module (ECM) I/O Signal.>	Is there any abnormality in waveform?	Replace the camshaft position sensor. <Ref. to FU(H4DOTC)-37, Camshaft Position Sensor.>	Repair the following item. • Poor contact of ECM connector • Poor contact of camshaft position sensor connector • Poor contact of coupling connector

BO:DTC P0351 IGNITION COIL A PRIMARY/SECONDARY CIRCUIT

DTC DETECTING CONDITION:

- Immediately at fault recognition
- GENERAL DESCRIPTION <Ref. to GD(H4DOTC)-126, DTC P0351 IGNITION COIL A PRIMARY/SECONDARY CIRCUIT, Diagnostic Trouble Code (DTC) Detecting Criteria.>

TROUBLE SYMPTOM:

- Improper idling
- Poor driving performance

CAUTION:

After servicing or replacing faulty parts, perform Clear Memory Mode <Ref. to EN(H4DOTC)(diag)-53, OPERATION, Clear Memory Mode.>, and Inspection Mode <Ref. to EN(H4DOTC)(diag)-41, PROCEDURE, Inspection Mode.>.

WIRING DIAGRAM:

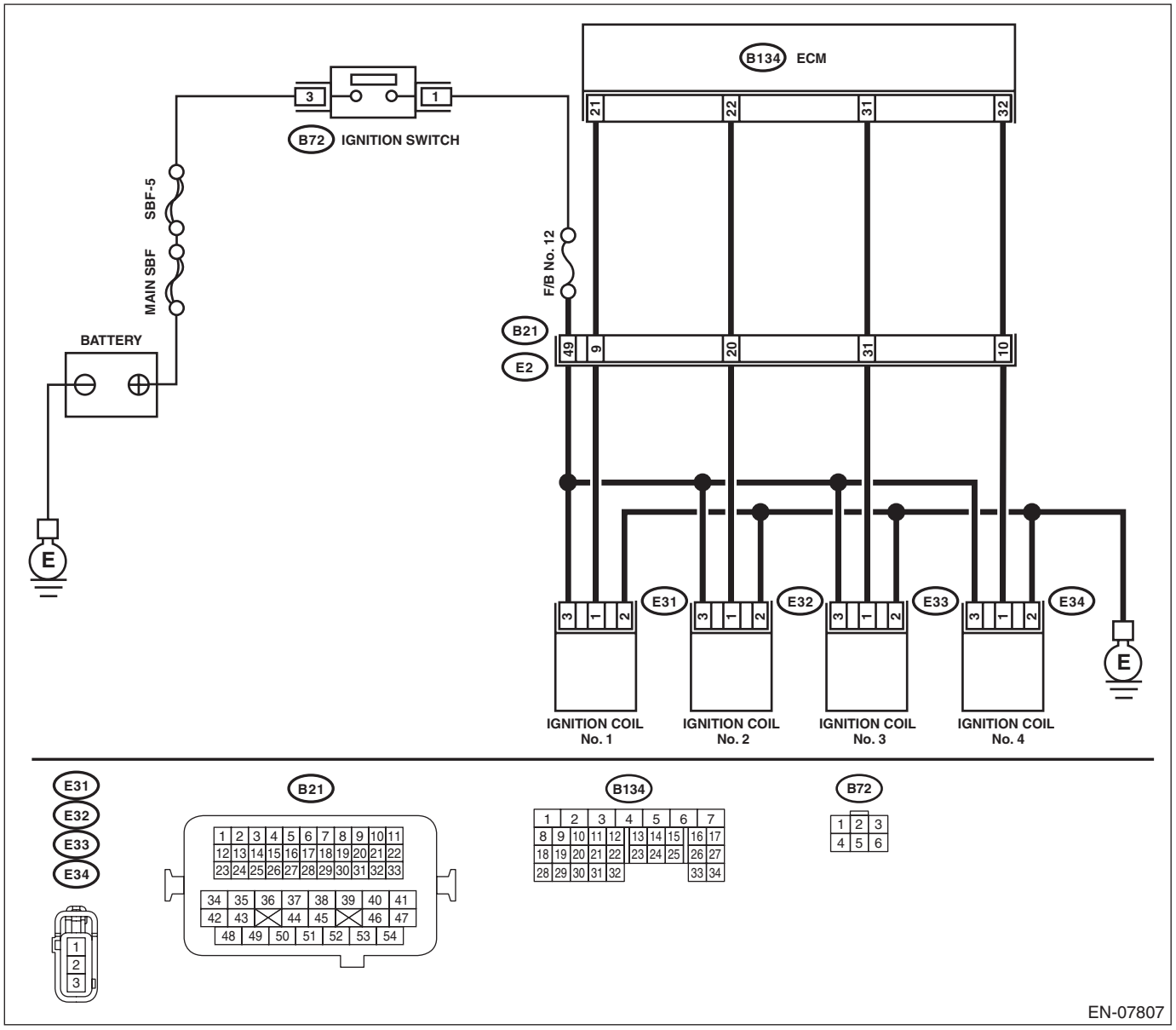

	Step	Check	Yes	No
1	**CHECK IGNITION COIL POWER SUPPLY CIRCUIT.** 1) Turn the ignition switch to OFF. 2) Disconnect the connector from ignition coil. 3) Turn the ignition switch to ON. 4) Measure the voltage between ignition coil connector and engine ground. ***Connector & terminal*** ***DTC P0351; (E31) No. 3 (+) — Engine ground (–):*** ***DTC P0352; (E32) No. 3 (+) — Engine ground (–):*** ***DTC P0353; (E33) No. 3 (+) — Engine ground (–):*** ***DTC P0354; (E34) No. 3 (+) — Engine ground (–):***	Is the voltage 10 V or more?	Go to step **2**.	Repair the harness and connector. NOTE: In this case, repair the following item: • Open circuit or short circuit to ground in harness of power supply circuit • Blown out of fuse (F/B No. 12) • Poor contact of coupling connector
2	**CHECK HARNESS OF IGNITION COIL GROUND CIRCUIT.** 1) Turn the ignition switch to OFF. 2) Measure the resistance of harness between ignition coil connector and engine ground. ***Connector & terminal*** ***DTC P0351; (E31) No. 2 — Engine ground:*** ***DTC P0352; (E32) No. 2 — Engine ground:*** ***DTC P0353; (E33) No. 2 — Engine ground:*** ***DTC P0354; (E34) No. 2 — Engine ground:***	Is the resistance less than 5 Ω?	Go to step **3**.	Repair the open circuit in harness between ignition coil connector and engine grounding terminal.
3	**CHECK HARNESS BETWEEN ECM AND IGNITION COIL CONNECTOR.** 1) Disconnect the connector from ECM. 2) Measure the resistance between ignition coil connector and engine ground. ***Connector & terminal*** ***DTC P0351; (E31) No. 1 — Engine ground:*** ***DTC P0352; (E32) No. 1 — Engine ground:*** ***DTC P0353; (E33) No. 1 — Engine ground:*** ***DTC P0354; (E34) No. 1 — Engine ground:***	Is the resistance 1 MΩ or more?	Go to step **4**.	Repair the ground short circuit of harness between ECM connector and ignition coil connector.
4	**CHECK HARNESS BETWEEN ECM AND IGNITION COIL CONNECTOR.** Measure the resistance of harness between ECM connector and ignition coil connector. ***Connector & terminal*** ***DTC P0351; (B134) No. 21 — (E31) No. 1:*** ***DTC P0352; (B134) No. 22 — (E32) No. 1:*** ***DTC P0353; (B134) No. 31 — (E33) No. 1:*** ***DTC P0354; (B134) No. 32 — (E34) No. 1:***	Is the resistance less than 1 Ω?	Go to step **5**.	Repair the harness and connector. NOTE: In this case, repair the following item: • Open circuit of harness between ECM connector and the ignition coil connector • Poor contact of coupling connector
5	**CHECK FOR POOR CONTACT.** Check for poor contact of ECM connector.	Is there poor contact of ECM connector?	Repair the poor contact of ECM connector.	Go to step **6**.
6	**CHECK SPARK PLUG CONDITION.** 1) Remove the spark plug of the corresponding cylinder. <Ref. to IG(H4DOTC)-4, REMOVAL, Spark Plug.> 2) Check the spark plug condition. <Ref. to IG(H4DOTC)-4, INSPECTION, Spark Plug.>	Is the spark plug condition normal?	Replace the ignition coil. <Ref. to IG(H4DOTC)-6, Ignition Coil.>	Replace the spark plug. <Ref. to IG(H4DOTC)-4, Spark Plug.>

BP:DTC P0352 IGNITION COIL B PRIMARY/SECONDARY CIRCUIT

NOTE:
For the diagnostic procedure, refer to DTC P0351. <Ref. to EN(H4DOTC)(diag)-183, DTC P0351 IGNITION COIL A PRIMARY/SECONDARY CIRCUIT, Diagnostic Procedure with Diagnostic Trouble Code (DTC).>

BQ:DTC P0353 IGNITION COIL C PRIMARY/SECONDARY CIRCUIT

NOTE:
For the diagnostic procedure, refer to DTC P0351. <Ref. to EN(H4DOTC)(diag)-183, DTC P0351 IGNITION COIL A PRIMARY/SECONDARY CIRCUIT, Diagnostic Procedure with Diagnostic Trouble Code (DTC).>

BR:DTC P0354 IGNITION COIL D PRIMARY/SECONDARY CIRCUIT

NOTE:
For the diagnostic procedure, refer to DTC P0351. <Ref. to EN(H4DOTC)(diag)-183, DTC P0351 IGNITION COIL A PRIMARY/SECONDARY CIRCUIT, Diagnostic Procedure with Diagnostic Trouble Code (DTC).>

BS:DTC P0365 CAMSHAFT POSITION SENSOR “B” CIRCUIT (BANK 1)

DTC DETECTING CONDITION:

- Immediately at fault recognition
- GENERAL DESCRIPTION <Ref. to GD(H4DOTC)-127, DTC P0365 CAMSHAFT POSITION SENSOR “B” CIRCUIT (BANK 1), Diagnostic Trouble Code (DTC) Detecting Criteria.>

TROUBLE SYMPTOM:

- Engine stalls.
- Failure of engine to start

CAUTION:
After servicing or replacing faulty parts, perform Clear Memory Mode <Ref. to EN(H4DOTC)(diag)-53, OPERATION, Clear Memory Mode.>, and Inspection Mode <Ref. to EN(H4DOTC)(diag)-41, PROCEDURE, Inspection Mode.>.

WIRING DIAGRAM:

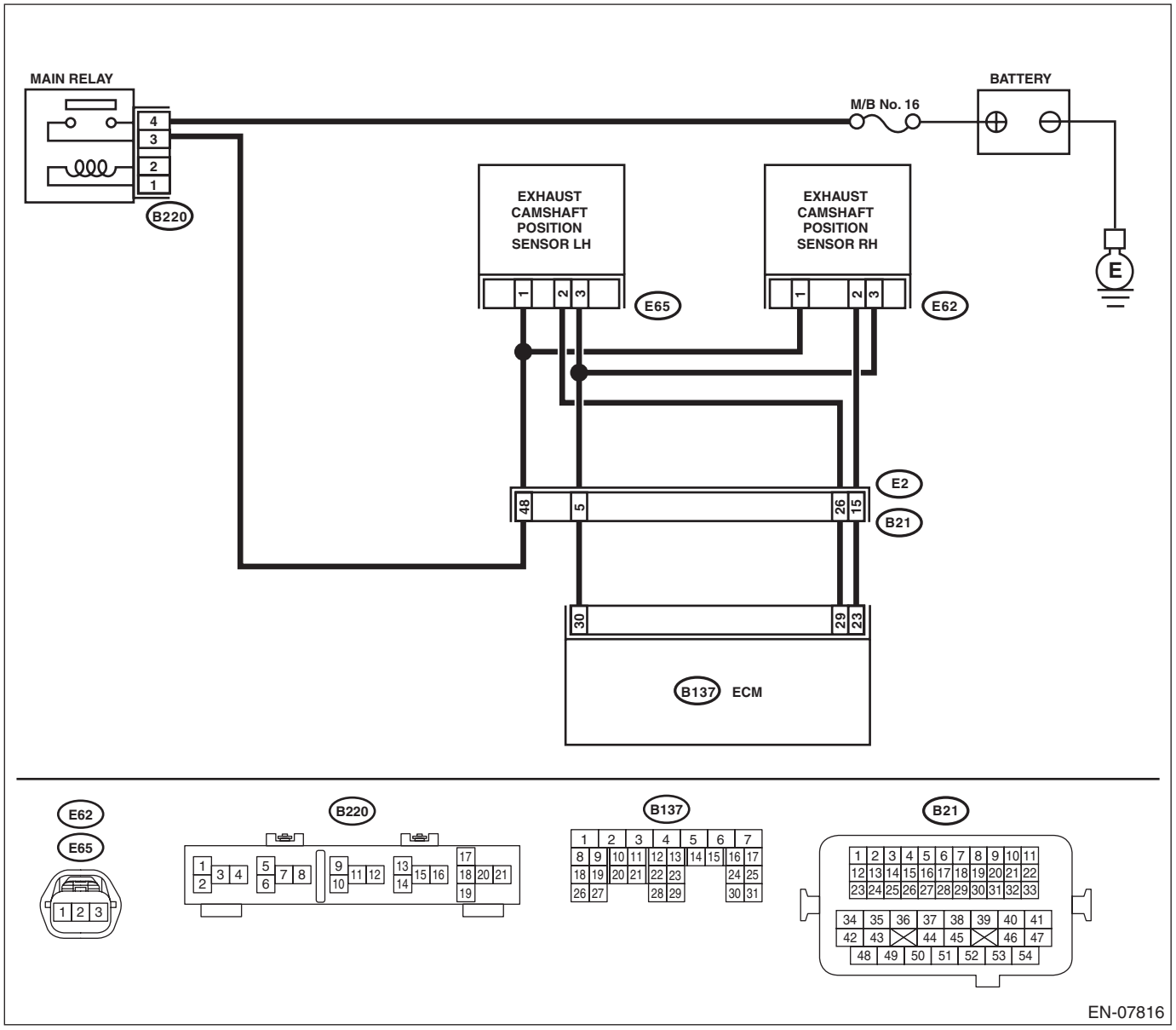

	Step	Check	Yes	No
1	**CHECK POWER SUPPLY OF CAMSHAFT POSITION SENSOR.** 1) Turn the ignition switch to OFF. 2) Disconnect the connector from camshaft position sensor. 3) Turn the ignition switch to ON. 4) Measure the voltage between camshaft position sensor connector and engine ground. ***Connector & terminal*** ***(E62) No. 1 (+) — Engine ground (–):***	Is the voltage 10 V or more?	Go to step **2**.	Repair the harness and connector. NOTE: In this case, repair the following item: • Open circuit or short circuit to ground in harness between main relay connector and camshaft position sensor connector • Poor contact of coupling connector
2	**CHECK HARNESS BETWEEN ECM AND CAMSHAFT POSITION SENSOR CONNECTOR.** 1) Turn the ignition switch to OFF. 2) Disconnect the connectors from ECM. 3) Measure the resistance between ECM and camshaft position sensor connector. ***Connector & terminal*** ***(B137) No. 23 — (E62) No. 2:*** ***(B137) No. 30 — (E62) No. 3:***	Is the resistance less than 1 Ω?	Go to step **3**.	Repair the harness and connector. NOTE: In this case, repair the following item: • Open circuit in harness between ECM and camshaft position sensor connector • Poor contact of coupling connector
3	**CHECK HARNESS BETWEEN ECM AND CAMSHAFT POSITION SENSOR CONNECTOR.** Measure the resistance between camshaft position sensor connector and engine ground. ***Connector & terminal*** ***(E62) No. 2 — Engine ground:***	Is the resistance 1 MΩ or more?	Go to step **4**.	Repair short circuit to ground in harness between ECM and camshaft position sensor connector.
4	**CHECK HARNESS BETWEEN ECM AND CAMSHAFT POSITION SENSOR CONNECTOR.** Measure the voltage between camshaft position sensor connector and engine ground. ***Connector & terminal*** ***(E62) No. 2 (+) — Engine ground (–):***	Is the voltage 5 V or more?	Repair the short circuit to power in the harness between ECM and camshaft position sensor connector.	Go to step **5**.
5	**CHECK CONDITION OF CAMSHAFT POSITION SENSOR.**	Is the camshaft position sensor installation bolt tightened securely?	Go to step **6**.	Tighten the camshaft position sensor installation bolt securely. <Ref. to FU(H4DOTC)-37, Camshaft Position Sensor.>
6	**CHECK CAMSHAFT POSITION SENSOR.** Check the waveform of the camshaft position sensor. <Ref. to EN(H4DOTC)(diag)-18, Engine Control Module (ECM) I/O Signal.>	Is there any abnormality in waveform?	Replace the camshaft position sensor. <Ref. to FU(H4DOTC)-37, Camshaft Position Sensor.>	Repair the following item. • Poor contact of ECM connector • Poor contact of camshaft position sensor connector • Poor contact of coupling connector

BT:DTC P0390 CAMSHAFT POSITION SENSOR “B” CIRCUIT (BANK 2)

DTC DETECTING CONDITION:

- Immediately at fault recognition
- GENERAL DESCRIPTION <Ref. to GD(H4DOTC)-127, DTC P0390 CAMSHAFT POSITION SENSOR “B” CIRCUIT (BANK 2), Diagnostic Trouble Code (DTC) Detecting Criteria.>

TROUBLE SYMPTOM:

- Engine stalls.
- Failure of engine to start

CAUTION:

After servicing or replacing faulty parts, perform Clear Memory Mode <Ref. to EN(H4DOTC)(diag)-53, OPERATION, Clear Memory Mode.>, and Inspection Mode <Ref. to EN(H4DOTC)(diag)-41, PROCEDURE, Inspection Mode.>.

WIRING DIAGRAM:

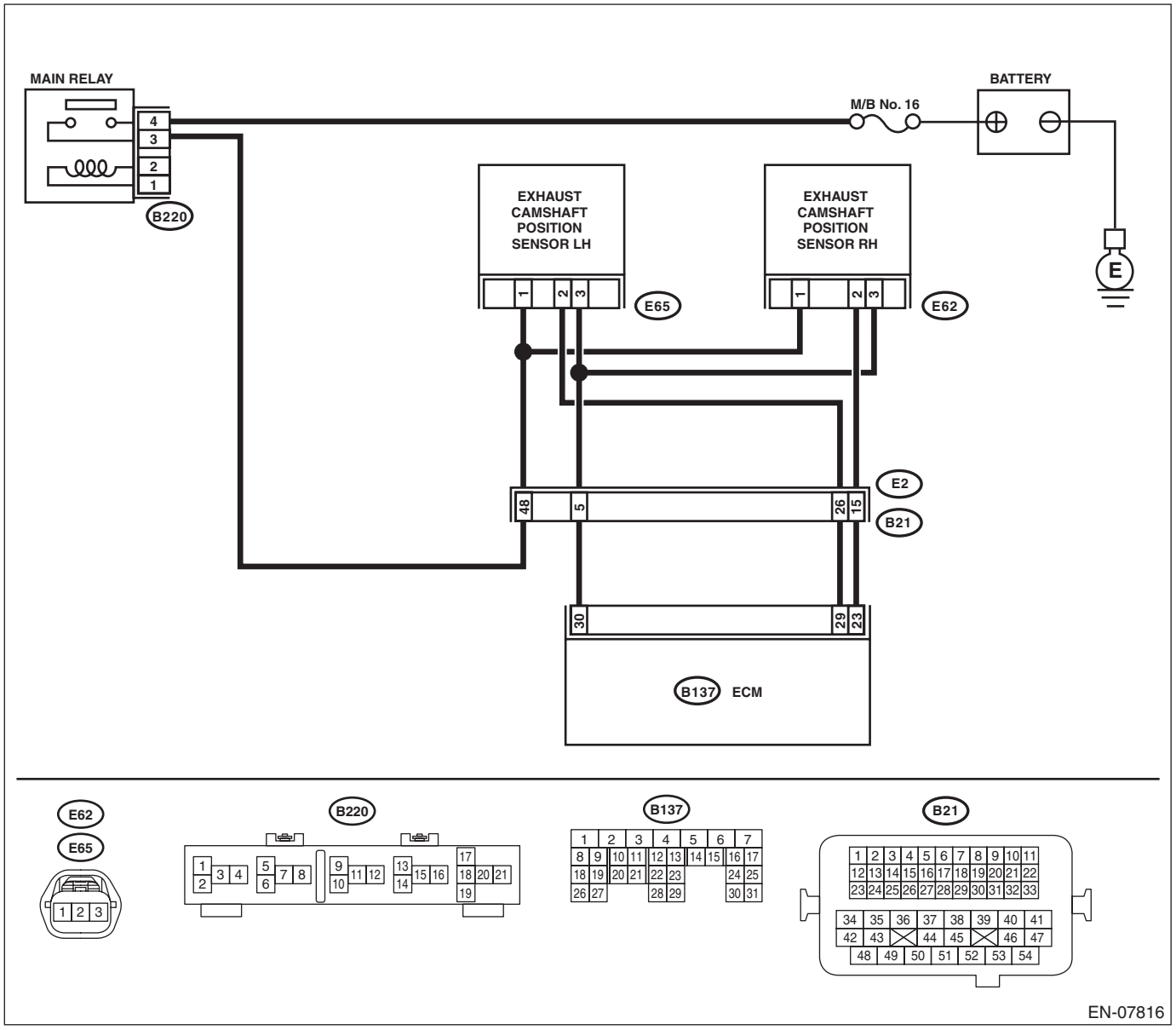

	Step	Check	Yes	No
1	**CHECK POWER SUPPLY OF CAMSHAFT POSITION SENSOR.** 1) Turn the ignition switch to OFF. 2) Disconnect the connector from camshaft position sensor. 3) Turn the ignition switch to ON. 4) Measure the voltage between camshaft position sensor connector and engine ground. ***Connector & terminal*** ***(E65) No. 1 (+) — Engine ground (–):***	Is the voltage 10 V or more?	Go to step **2**.	Repair the harness and connector. NOTE: In this case, repair the following item: • Open circuit or short circuit to ground in harness between main relay connector and camshaft position sensor connector • Poor contact of coupling connector
2	**CHECK HARNESS BETWEEN ECM AND CAMSHAFT POSITION SENSOR CONNECTOR.** 1) Turn the ignition switch to OFF. 2) Disconnect the connectors from ECM. 3) Measure the resistance between ECM and camshaft position sensor connector. ***Connector & terminal*** ***(B137) No. 29 — (E65) No. 2:*** ***(B137) No. 30 — (E65) No. 3:***	Is the resistance less than 1 Ω?	Go to step **3**.	Repair the harness and connector. NOTE: In this case, repair the following item: • Open circuit in harness between ECM and camshaft position sensor connector • Poor contact of coupling connector
3	**CHECK HARNESS BETWEEN ECM AND CAMSHAFT POSITION SENSOR CONNECTOR.** Measure the resistance between camshaft position sensor connector and engine ground. ***Connector & terminal*** ***(E65) No. 2 — Engine ground:***	Is the resistance 1 MΩ or more?	Go to step **4**.	Repair short circuit to ground in harness between ECM and camshaft position sensor connector.
4	**CHECK HARNESS BETWEEN ECM AND CAMSHAFT POSITION SENSOR CONNECTOR.** Measure the voltage between camshaft position sensor connector and engine ground. ***Connector & terminal*** ***(E65) No. 2 (+) — Engine ground (–):***	Is the voltage 5 V or more?	Repair the short circuit to power in the harness between ECM and camshaft position sensor connector.	Go to step **5**.
5	**CHECK CONDITION OF CAMSHAFT POSITION SENSOR.**	Is the camshaft position sensor installation bolt tightened securely?	Go to step **6**.	Tighten the camshaft position sensor installation bolt securely. <Ref. to FU(H4DOTC)-37, Camshaft Position Sensor.>
6	**CHECK CAMSHAFT POSITION SENSOR.** Check the waveform of the camshaft position sensor. <Ref. to EN(H4DOTC)(diag)-18, Engine Control Module (ECM) I/O Signal.>	Is there any abnormality in waveform?	Replace the camshaft position sensor. <Ref. to FU(H4DOTC)-37, Camshaft Position Sensor.>	Repair the following item. • Poor contact of ECM connector • Poor contact of camshaft position sensor connector • Poor contact of coupling connector

BU:DTC P0420 CATALYST SYSTEM EFFICIENCY BELOW THRESHOLD (BANK 1)

DTC DETECTING CONDITION:

- Detected when two consecutive driving cycles with fault occur.
- GENERAL DESCRIPTION <Ref. to GD(H4DOTC)-128, DTC P0420 CATALYST SYSTEM EFFICIENCY BELOW THRESHOLD (BANK 1), Diagnostic Trouble Code (DTC) Detecting Criteria.>

TROUBLE SYMPTOM:

- Engine stalls.
- Idle mixture is out of specifications.

CAUTION:
After servicing or replacing faulty parts, perform Clear Memory Mode <Ref. to EN(H4DOTC)(diag)-53, OPERATION, Clear Memory Mode.>, and Inspection Mode <Ref. to EN(H4DOTC)(diag)-41, PROCEDURE, Inspection Mode.>.

WIRING DIAGRAM:

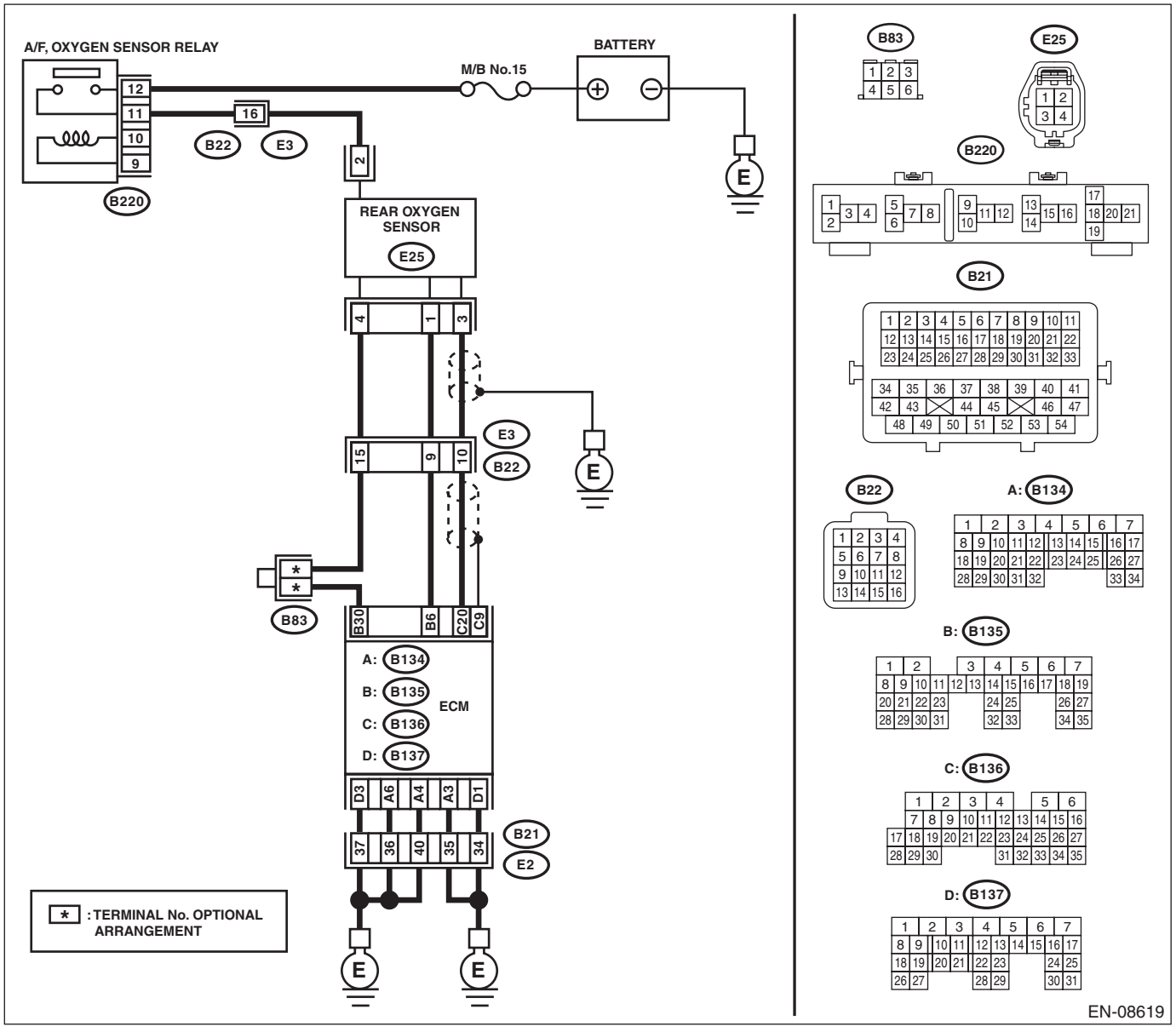

	Step	Check	Yes	No
1	**CHECK EXHAUST SYSTEM.** Check for gas leaks or air suction caused by loose or dislocated nuts and bolts, and open hole at exhaust pipes. NOTE: Check the following positions. • Between cylinder head and front exhaust pipe • Between front exhaust pipe and front catalytic converter • Between front catalytic converter and rear catalytic converter • Loose or improperly attached front oxygen (A/F) sensor or rear oxygen sensor	Is there any fault in exhaust system?	Repair or replace the exhaust system. <Ref. to EX(H4DOTC)-2, General Description.>	Go to step **2**.
2	**CHECK WAVEFORM DATA ON THE SUBARU SELECT MONITOR (WHILE DRIVING).** 1) Drive at a constant speed between 80 — 112 km/h (50 — 70 MPH). 2) After 5 minutes have elapsed in the condition of step 1), use the Subaru Select Monitor while still driving to read the waveform data. • At normal condition 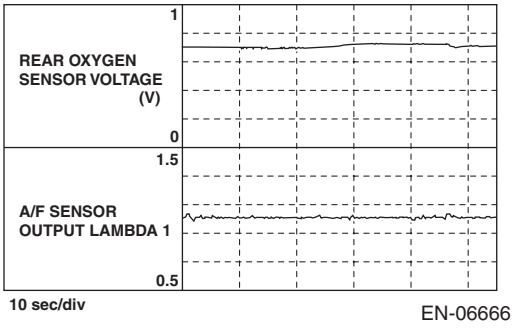 EN-06666 • At abnormal condition (numerous inversion) 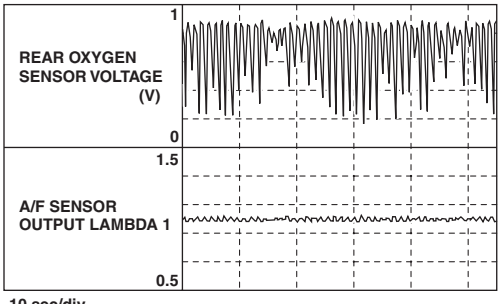 EN-06667	Is a normal waveform displayed?	Even if DTC is detected, the circuit has returned to a normal condition at this time. Reproduce the failure, and then perform the diagnosis again. NOTE: In this case, temporary poor contact of connector, temporary open or short circuit of harness may be the cause.	Go to step **3**.

	Step	Check	Yes	No
3	**CHECK WAVEFORM DATA ON THE SUBARU SELECT MONITOR (WHILE IDLING).** 1) Run the engine at idle. 2) In the condition of step 1), use the Subaru Select Monitor to read the waveform data. • At normal condition 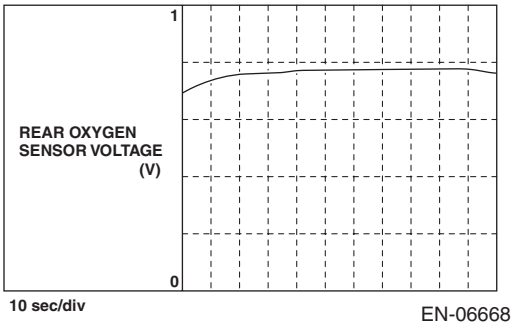 EN-06668 • At abnormal condition 1 (numerous inversion) 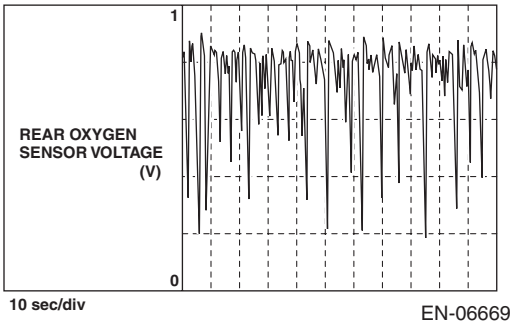 EN-06669 • At abnormal condition 2 (noise input) 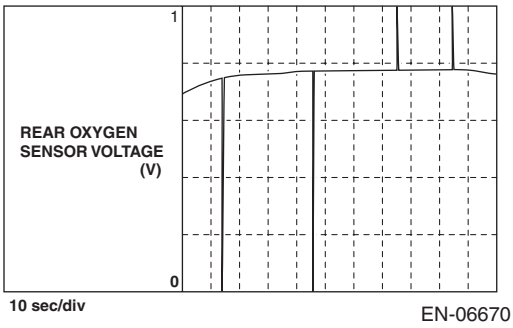 EN-06670	Is a normal waveform displayed?	Go to step **4**.	• The waveform is displayed at abnormal condition 1: Go to step **4**. • The waveform is displayed at abnormal condition 2: Go to step **5**.
4	**CHECK CATALYTIC CONVERTER.**	Is the catalytic converter damaged?	Replace the catalytic converter. <Ref. to EC(H4DOTC)-3, Front Catalytic Converter.>	Go to step **5**.
5	**CHECK REAR OXYGEN SENSOR CONNECTOR AND COUPLING CONNECTOR.**	Has water entered the connector?	Completely remove any water inside.	Go to step **6**.

	Step	Check	Yes	No
6	**CHECK HARNESS BETWEEN ECM AND REAR OXYGEN SENSOR CONNECTOR.** 1) Turn the ignition switch to OFF. 2) Disconnect the connector from ECM and rear oxygen sensor. 3) Measure the resistance of harness between ECM and rear oxygen sensor connector. ***Connector & terminal*** ***(B136) No. 20 — (E25) No. 3:*** ***(B135) No. 30 — (E25) No. 4:***	Is the resistance less than 1 Ω?	Go to step **7**.	Repair the harness and connector. NOTE: Repair the following locations. • Open circuit in harness between ECM and rear oxygen sensor connector • Poor contact of coupling connector
7	**CHECK HARNESS BETWEEN ECM AND REAR OXYGEN SENSOR CONNECTOR.** 1) Connect the connector to ECM. 2) Turn the ignition switch to ON. 3) Measure the voltage between rear oxygen sensor connector and chassis ground. ***Connector & terminal*** ***(E25) No. 3 (+) — Chassis ground (–):***	Is the voltage 0.2 — 0.5 V?	Go to step **8**.	Repair the harness and connector. NOTE: Repair the following locations. • Open circuit in harness between ECM and rear oxygen sensor connector • Poor contact of coupling connector • Poor contact of ECM connector
8	**CHECK REAR OXYGEN SENSOR SHIELD.** 1) Turn the ignition switch to OFF. 2) Expose the rear oxygen sensor connector body side harness sensor shield. 3) Measure the resistance between sensor shield and chassis ground.	Is the resistance less than 1 Ω?	Replace the rear oxygen sensor. <Ref. to FU(H4DOTC)-56, Rear Oxygen Sensor.>	Repair the open circuit of rear oxygen sensor harness.

BV:DTC P0442 EVAPORATIVE EMISSION CONTROL SYSTEM LEAK DETECTED (SMALL LEAK)

DTC DETECTING CONDITION:

- Detected when two consecutive driving cycles with fault occur.
- GENERAL DESCRIPTION <Ref. to GD(H4DOTC)-130, DTC P0442 EVAPORATIVE EMISSION CONTROL SYSTEM LEAK DETECTED (SMALL LEAK), Diagnostic Trouble Code (DTC) Detecting Criteria.>

TROUBLE SYMPTOM:

- Fuel odor
- There is a hole of more than 1.0 mm (0.04 in) dia. in evaporation system or fuel tank.

CAUTION:
After servicing or replacing faulty parts, perform Clear Memory Mode <Ref. to EN(H4DOTC)(diag)-53, OPERATION, Clear Memory Mode.>, and Inspection Mode <Ref. to EN(H4DOTC)(diag)-41, PROCEDURE, Inspection Mode.>.

	Step	Check	Yes	No
1	**CHECK FUEL FILLER CAP.** 1) Turn the ignition switch to OFF. 2) Check the fuel filler cap. NOTE: The DTC is stored in memory if fuel filler cap is or was loose or if the cap chain has caught while tightening.	Is the fuel filler cap tightened securely?	Go to step **2**.	Tighten fuel filler cap securely.
2	**CHECK FUEL FILLER CAP.**	Is the fuel filler cap genuine?	Go to step **3**.	Replace with a genuine fuel filler cap.
3	**CHECK FUEL FILLER PIPE GASKET.**	Is there any damage to the seal between fuel filler cap and fuel filler pipe?	Repair or replace the fuel filler cap and fuel filler pipe. <Ref. to FU(H4DOTC)-75, Fuel Filler Pipe.>	Go to step **4**.
4	**CHECK DRAIN VALVE OPERATION.** 1) Install the delivery (test) mode fuse. **CAUTION:** **Do not use any fuses that are installed on the vehicle.** 2) Turn the ignition switch to ON. 3) Perform operation check for the drain valve using the Subaru Select Monitor. NOTE: The drain valve can be operated using Subaru Select Monitor. For detailed procedures, refer to “SYSTEM OPERATION CHECK MODE”. <Ref. to EN(H4DOTC)(diag)-54, System Operation Check Mode.>	Does the drain valve operate?	Go to step **5**.	Replace the drain valve. <Ref. to EC(H4DOTC)-22, Drain Valve.>
5	**CHECK OPERATION OF PURGE CONTROL SOLENOID VALVE.** Perform operation check for the purge control solenoid valve using the Subaru Select Monitor. NOTE: Purge control solenoid valve operation can be executed using Subaru Select Monitor. For detailed procedures, refer to “SYSTEM OPERATION CHECK MODE”. <Ref. to EN(H4DOTC)(diag)-54, System Operation Check Mode.>	Does the purge control solenoid valve operate?	Go to step **6**.	Replace the purge control solenoid valve. <Ref. to EC(H4DOTC)-9, Purge Control Solenoid Valve.>

	Step	Check	Yes	No
6	**CHECK OPERATION OF PRESSURE CONTROL SOLENOID VALVE.** Perform operation check for the pressure control solenoid valve using the Subaru Select Monitor. NOTE: The pressure control solenoid valve operation can be executed using the Subaru Select Monitor. For detailed procedures, refer to "SYSTEM OPERATION CHECK MODE". <Ref. to EN(H4DOTC)(diag)-54, System Operation Check Mode.>	Does the pressure control solenoid valve operate?	Go to step **7**.	Replace the pressure control solenoid valve. <Ref. to EC(H4DOTC)-19, Pressure Control Solenoid Valve Assembly.>
7	**CHECK EVAPORATIVE EMISSION CONTROL SYSTEM LINE.** 1) Turn the ignition switch to OFF. 2) Remove the delivery (test) mode fuse.	Is there any hole of more than 1.0 mm (0.04 in) dia. on evaporation line?	Repair or replace the evaporation line. <Ref. to FU(H4DOTC)-88, Fuel Delivery, Return and Evaporation Lines.>	Go to step **8**.
8	**CHECK CANISTER.**	Is the canister damaged or is there a hole of more than 1.0 mm (0.04 in) dia. in it?	Repair or replace the canister. <Ref. to EC(H4DOTC)-5, Canister.>	Go to step **9**.
9	**CHECK FUEL TANK.** Remove the fuel tank. <Ref. to FU(H4DOTC)-68, Fuel Tank.>	Is the fuel tank damaged or is there any hole of more than 1.0 mm (0.04 in) dia. in it?	Repair or replace the fuel tank. <Ref. to FU(H4DOTC)-68, Fuel Tank.>	Go to step **10**.
10	**CHECK ANY OTHER MECHANICAL TROUBLE IN EVAPORATIVE EMISSION CONTROL SYSTEM.**	Is there any hole of more than 1.0 mm (0.04 in) dia., crack, clogging, or disconnection, bend, misconnection of hoses or pipes in evaporative emission control system?	Repair or replace the hoses or pipes.	Repair the poor contact of ECM connector.

BW:DTC P0447 EVAPORATIVE EMISSION CONTROL SYSTEM VENT CONTROL CIRCUIT OPEN

DTC DETECTING CONDITION:

- Immediately at fault recognition
- GENERAL DESCRIPTION <Ref. to GD(H4DOTC)-144, DTC P0447 EVAPORATIVE EMISSION CONTROL SYSTEM VENT CONTROL CIRCUIT OPEN, Diagnostic Trouble Code (DTC) Detecting Criteria.>

CAUTION:

After servicing or replacing faulty parts, perform Clear Memory Mode <Ref. to EN(H4DOTC)(diag)-53, OPERATION, Clear Memory Mode.>, and Inspection Mode <Ref. to EN(H4DOTC)(diag)-41, PROCEDURE, Inspection Mode.>.

WIRING DIAGRAM:

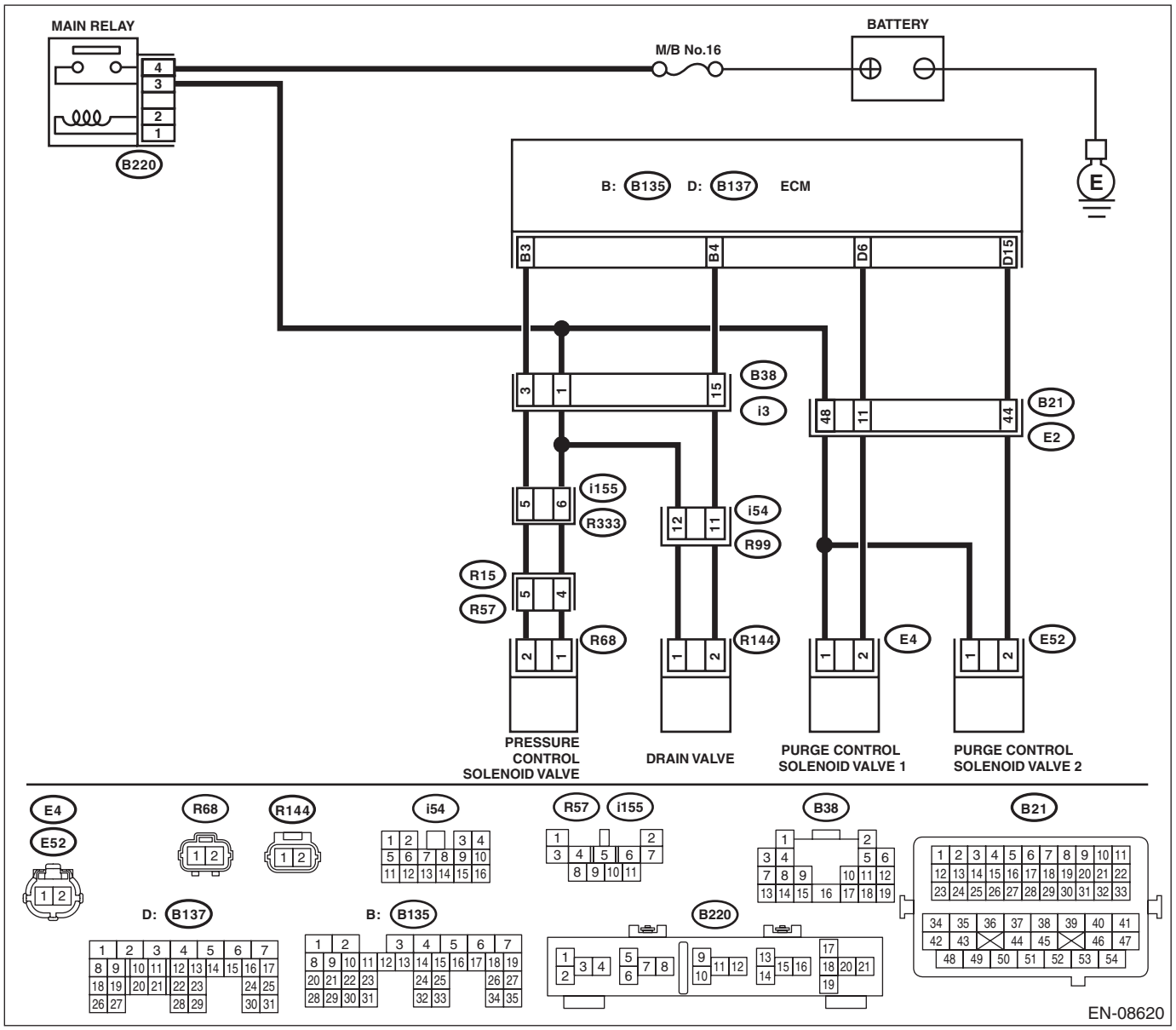

	Step	Check	Yes	No
1	**CHECK OUTPUT SIGNAL OF ECM.** 1) Turn the ignition switch to ON. 2) Measure the voltage between ECM and chassis ground. ***Connector & terminal*** ***(B135) No. 4 (+) — Chassis ground (–):***	Is the voltage 10 V or more?	Go to step **2**.	Go to step **3**.
2	**CHECK FOR POOR CONTACT.** Check for poor contact of ECM connector.	Is there poor contact of ECM connector?	Repair the poor contact of ECM connector.	Even if DTC is detected, the circuit has returned to a normal condition at this time. Reproduce the failure, and then perform the diagnosis again. NOTE: In this case, temporary open or short circuit of harness or temporary poor contact of connector may be the cause.
3	**CHECK POWER SUPPLY TO DRAIN VALVE.** Measure the voltage between drain valve connector and chassis ground. ***Connector & terminal*** ***(R144) No. 1 (+) — Chassis ground (–):***	Is the voltage 10 V or more?	Go to step **4**.	Repair the power supply circuit.
4	**CHECK HARNESS BETWEEN ECM AND DRAIN VALVE CONNECTOR.** 1) Turn the ignition switch to OFF. 2) Disconnect the connectors from the ECM and drain valve. 3) Measure the resistance between the drain valve connector and chassis ground. ***Connector & terminal*** ***(R144) No. 2 — Chassis ground:***	Is the resistance 1 MΩ or more?	Go to step **5**.	Repair the ground short circuit of harness between ECM and drain valve connector.
5	**CHECK HARNESS BETWEEN ECM AND DRAIN VALVE CONNECTOR.** Measure the resistance of harness between ECM and drain valve connector. ***Connector & terminal*** ***(B135) No. 4 — (R144) No. 2:***	Is the resistance less than 1 Ω?	Go to step **6**.	Repair the harness and connector. NOTE: In this case, repair the following item: • Open circuit of harness between ECM and drain valve connector • Poor contact of coupling connector
6	**CHECK DRAIN VALVE.** Measure the resistance between drain valve terminals. ***Terminals*** ***No. 1 — No. 2:***	Is the resistance 10 — 100 Ω?	Repair the poor contact of drain valve connector.	Replace the drain valve. <Ref. to EC(H4DOTC)-22, Drain Valve.>

BX:DTC P0448 EVAPORATIVE EMISSION CONTROL SYSTEM VENT CONTROL CIRCUIT SHORTED

DTC DETECTING CONDITION:

- Immediately at fault recognition
- GENERAL DESCRIPTION <Ref. to GD(H4DOTC)-146, DTC P0448 EVAPORATIVE EMISSION CONTROL SYSTEM VENT CONTROL CIRCUIT SHORTED, Diagnostic Trouble Code (DTC) Detecting Criteria.>

CAUTION:

After servicing or replacing faulty parts, perform Clear Memory Mode <Ref. to EN(H4DOTC)(diag)-53, OPERATION, Clear Memory Mode.>, and Inspection Mode <Ref. to EN(H4DOTC)(diag)-41, PROCEDURE, Inspection Mode.>.

WIRING DIAGRAM:

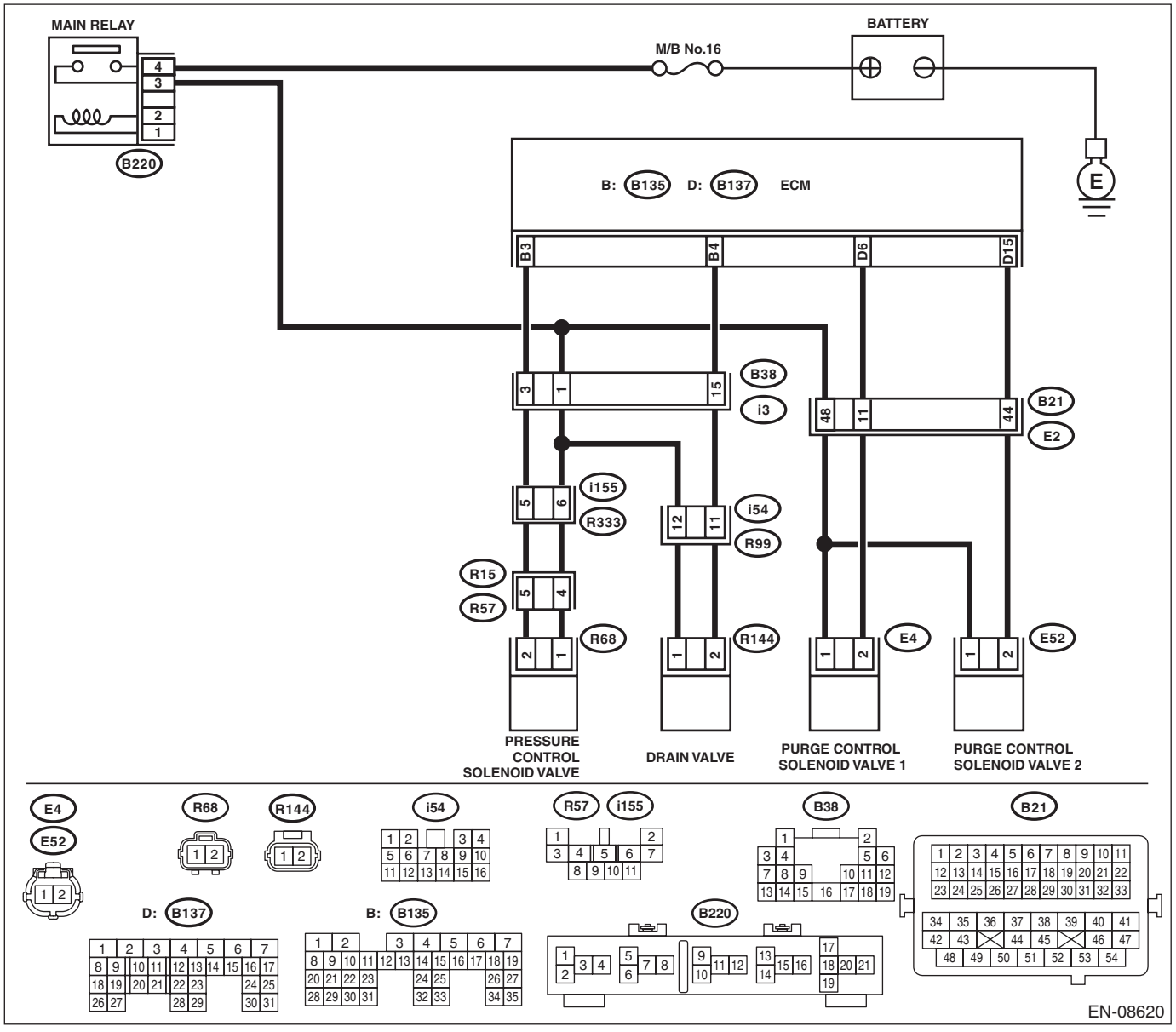

	Step	Check	Yes	No
1	**CHECK HARNESS BETWEEN ECM AND DRAIN VALVE CONNECTOR.** 1) Turn the ignition switch to OFF. 2) Disconnect the connectors from the ECM and drain valve. 3) Turn the ignition switch to ON. 4) Measure the voltage between ECM and chassis ground. ***Connector & terminal*** ***(B135) No. 4 (+) — Chassis ground (–):***	Is the voltage 10 V or more?	Repair the short circuit to power in the harness between ECM and drain valve connector.	Go to step **2**.
2	**CHECK DRAIN VALVE.** 1) Turn the ignition switch to OFF. 2) Measure the resistance between drain valve terminals. ***Terminals*** ***No. 1 — No. 2:***	Is the resistance less than 1 Ω?	Replace the drain valve. <Ref. to EC(H4DOTC)-22, Drain Valve.>	Repair the poor contact of ECM connector.

BY:DTC P0451 EVAPORATIVE EMISSION CONTROL SYSTEM PRESSURE SENSOR

DTC DETECTING CONDITION:

- Detected when two consecutive driving cycles with fault occur.
- GENERAL DESCRIPTION <Ref. to GD(H4DOTC)-148, DTC P0451 EVAPORATIVE EMISSION CONTROL SYSTEM PRESSURE SENSOR, Diagnostic Trouble Code (DTC) Detecting Criteria.>

CAUTION:
After servicing or replacing faulty parts, perform Clear Memory Mode <Ref. to EN(H4DOTC)(diag)-53, OPERATION, Clear Memory Mode.>, and Inspection Mode <Ref. to EN(H4DOTC)(diag)-41, PROCEDURE, Inspection Mode.>.

	Step	Check	Yes	No
1	**CHECK FUEL FILLER CAP.** 1) Turn the ignition switch to OFF. 2) Open the fuel flap.	Is the fuel filler cap tightened securely?	Go to step **2**.	Tighten fuel filler cap securely.
2	**CHECK PRESSURE/VACUUM LINE.** NOTE: Check the following items. • Disconnection, leakage and clogging of the vacuum hoses and pipes between fuel tank pressure sensor and fuel tank • Disconnection, leakage and clogging of air ventilation hoses and pipes between fuel filler pipe and fuel tank	Is there any fault in pressure/vacuum line?	Repair or replace the hoses and pipes.	Replace the fuel tank pressure sensor. <Ref. to EC(H4DOTC)-17, Fuel Tank Pressure Sensor.>

BZ:DTC P0452 EVAPORATIVE EMISSION CONTROL SYSTEM PRESSURE SENSOR LOW INPUT

DTC DETECTING CONDITION:

- Immediately at fault recognition
- GENERAL DESCRIPTION <Ref. to GD(H4DOTC)-152, DTC P0452 EVAPORATIVE EMISSION CONTROL SYSTEM PRESSURE SENSOR LOW INPUT, Diagnostic Trouble Code (DTC) Detecting Criteria.>

CAUTION:
After servicing or replacing faulty parts, perform Clear Memory Mode <Ref. to EN(H4DOTC)(diag)-53, OPERATION, Clear Memory Mode.>, and Inspection Mode <Ref. to EN(H4DOTC)(diag)-41, PROCEDURE, Inspection Mode.>.

WIRING DIAGRAM:

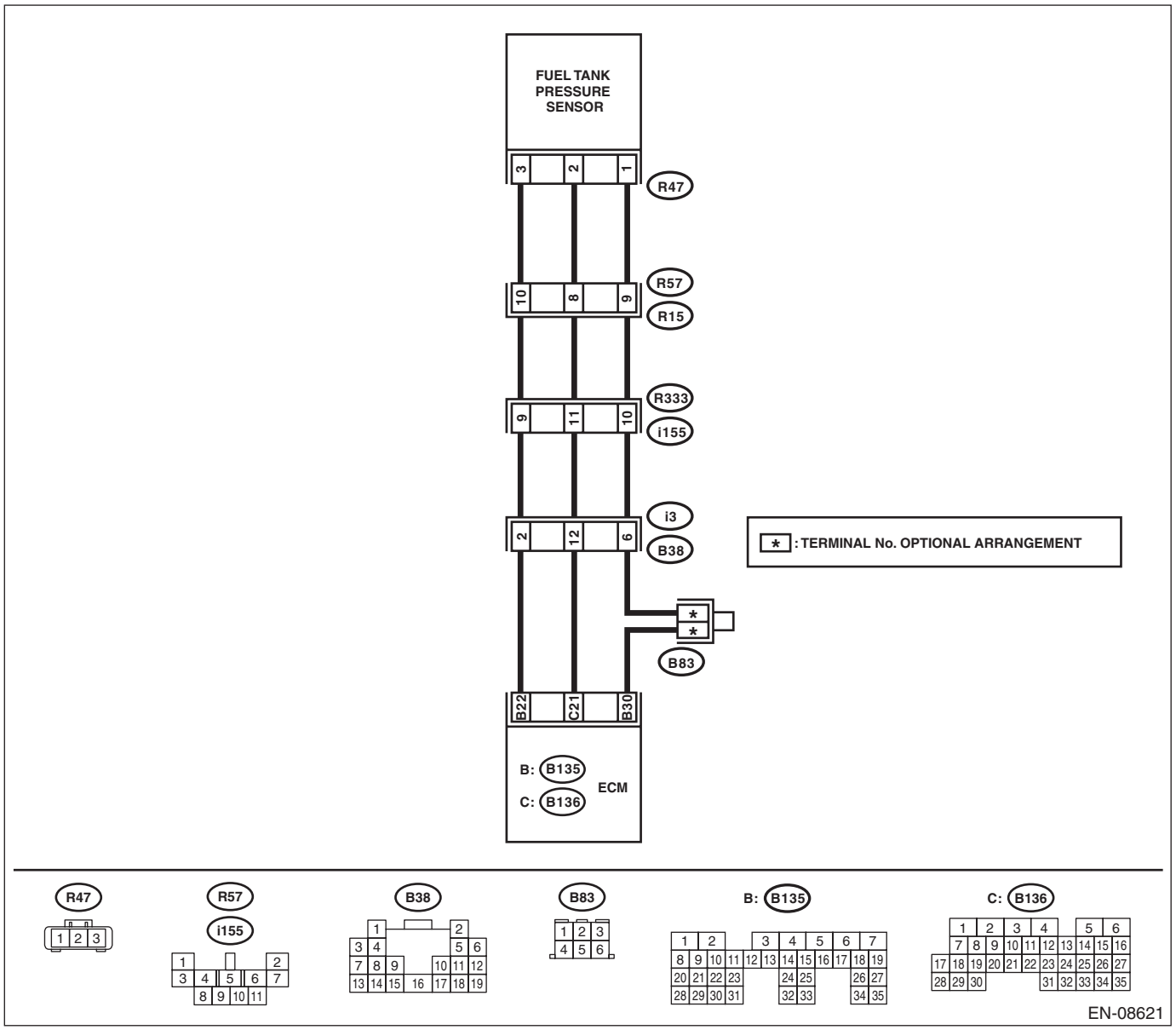

	Step	Check	Yes	No
1	**CHECK CURRENT DATA.** 1) Turn the ignition switch to ON. 2) Using the Subaru Select Monitor or a general scan tool, read the value in «Fuel Tank Pressure». NOTE: • Subaru Select Monitor For detailed operation procedures, refer to "READ CURRENT DATA FOR ENGINE". <Ref. to EN(H4DOTC)(diag)-34, Subaru Select Monitor.> • General scan tool For detailed operation procedures, refer to the general scan tool operation manual.	Is the value in «Fuel Tank Pressure» less than –7.45 kPa (–55.89 mmHg, –2.2003 inHg)?	Go to step **2**.	Even if DTC is detected, the circuit has returned to a normal condition at this time. Reproduce the failure, and then perform the diagnosis again. NOTE: In this case, temporary poor contact of connector, temporary open or short circuit of harness may be the cause.
2	**CHECK FUEL TANK PRESSURE SENSOR POWER SUPPLY.** 1) Turn the ignition switch to OFF. 2) Disconnect the connector from the fuel tank pressure sensor. 3) Turn the ignition switch to ON. 4) Measure the voltage between the fuel tank pressure sensor connector and chassis ground. ***Connector & terminal*** ***(R47) No. 3 (+) — Chassis ground (–):***	Is the voltage 4.5 V or more?	Go to step **3**.	Repair the harness and connector. NOTE: In this case, repair the following item: • Open circuit of harness between ECM and fuel tank pressure sensor connector • Poor contact of ECM connector • Poor contact of coupling connector
3	**CHECK HARNESS BETWEEN ECM AND FUEL TANK PRESSURE SENSOR CONNECTOR.** 1) Turn the ignition switch to OFF. 2) Disconnect the connector from ECM. 3) Measure the resistance of harness between the ECM and fuel tank pressure sensor connector. ***Connector & terminal*** ***(B136) No. 21 — (R47) No. 2:***	Is the resistance less than 1 Ω?	Go to step **4**.	Repair the harness and connector. NOTE: In this case, repair the following item: • Open circuit of harness between ECM and fuel tank pressure sensor connector • Poor contact of coupling connector
4	**CHECK HARNESS BETWEEN ECM AND FUEL TANK PRESSURE SENSOR CONNECTOR.** Measure the resistance between ECM and chassis ground. ***Connector & terminal*** ***(B136) No. 21 — Chassis ground:***	Is the resistance 1 MΩ or more?	Go to step **5**.	Repair the ground short circuit of harness between ECM and fuel tank pressure sensor connector.
5	**CHECK FOR POOR CONTACT.** Check for poor contact between the ECM and fuel tank pressure sensor connector.	Is there poor contact of the ECM or fuel tank pressure sensor connector?	Repair the poor contact of the ECM or fuel tank pressure sensor connector.	Replace the fuel tank pressure sensor. <Ref. to EC(H4DOTC)-17, Fuel Tank Pressure Sensor.>

CA:DTC P0453 EVAPORATIVE EMISSION CONTROL SYSTEM PRESSURE SENSOR HIGH INPUT

DTC DETECTING CONDITION:

- Immediately at fault recognition
- GENERAL DESCRIPTION <Ref. to GD(H4DOTC)-154, DTC P0453 EVAPORATIVE EMISSION CONTROL SYSTEM PRESSURE SENSOR HIGH INPUT, Diagnostic Trouble Code (DTC) Detecting Criteria.>

CAUTION:

After servicing or replacing faulty parts, perform Clear Memory Mode <Ref. to EN(H4DOTC)(diag)-53, OPERATION, Clear Memory Mode.>, and Inspection Mode <Ref. to EN(H4DOTC)(diag)-41, PROCEDURE, Inspection Mode.>.

WIRING DIAGRAM:

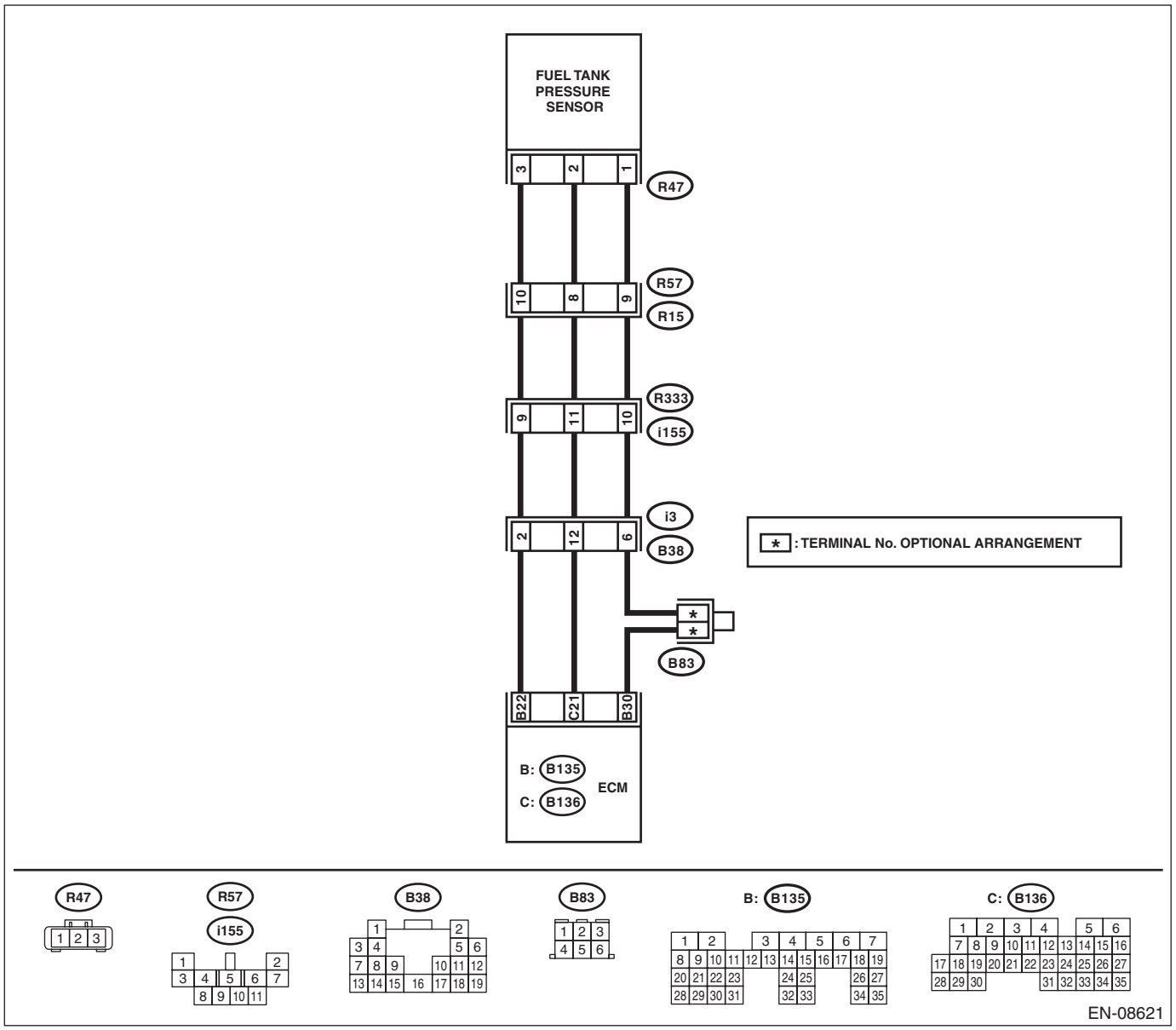

	Step	Check	Yes	No
1	**CHECK CURRENT DATA.** 1) Turn the ignition switch to ON. 2) Using the Subaru Select Monitor or a general scan tool, read the value in «Fuel Tank Pressure». NOTE: • Subaru Select Monitor For detailed operation procedures, refer to "READ CURRENT DATA FOR ENGINE". <Ref. to EN(H4DOTC)(diag)-34, Subaru Select Monitor.> • General scan tool For detailed operation procedures, refer to the general scan tool operation manual.	Is the value in «Fuel Tank Pressure» 7.98 kPa (59.86 mmHg, 2.357 inHg) or more?	Go to step **2**.	Even if DTC is detected, the circuit has returned to a normal condition at this time. Reproduce the failure, and then perform the diagnosis again. NOTE: In this case, temporary poor contact of connector, temporary open or short circuit of harness may be the cause.
2	**CHECK HARNESS BETWEEN ECM AND FUEL TANK PRESSURE SENSOR CONNECTOR.** 1) Turn the ignition switch to OFF. 2) Disconnect the connector from the fuel tank pressure sensor. 3) Turn the ignition switch to ON. 4) Using the Subaru Select Monitor or a general scan tool, read the value in «Fuel Tank Pressure». NOTE: • Subaru Select Monitor For detailed operation procedures, refer to "READ CURRENT DATA FOR ENGINE". <Ref. to EN(H4DOTC)(diag)-34, Subaru Select Monitor.> • General scan tool For detailed operation procedures, refer to the general scan tool operation manual.	Is the value in «Fuel Tank Pressure» 7.98 kPa (59.86 mmHg, 2.357 inHg) or more?	Repair the short circuit to power in the harness between ECM and fuel tank pressure sensor connector.	Go to step **3**.
3	**CHECK HARNESS BETWEEN ECM AND FUEL TANK PRESSURE SENSOR CONNECTOR.** 1) Turn the ignition switch to OFF. 2) Measure the resistance of harness between fuel tank pressure sensor connector and engine ground. ***Connector & terminal*** ***(R47) No. 1 — Engine ground:***	Is the resistance less than 5 Ω?	Go to step **4**.	Repair the harness and connector. NOTE: In this case, repair the following item: • Open circuit of harness between ECM and fuel tank pressure sensor connector • Poor contact of ECM connector • Poor contact of coupling connector
4	**CHECK FOR POOR CONTACT.** Check for poor contact of the fuel tank pressure sensor connector.	Is there poor contact of fuel tank pressure sensor connector?	Repair the poor contact of fuel tank pressure sensor connector.	Replace the fuel tank pressure sensor. <Ref. to EC(H4DOTC)-17, Fuel Tank Pressure Sensor.>

CB:DTC P0456 EVAPORATIVE EMISSION CONTROL SYSTEM LEAK DETECTED (VERY SMALL LEAK)

DTC DETECTING CONDITION:

- Detected when two consecutive driving cycles with fault occur.
- GENERAL DESCRIPTION <Ref. to GD(H4DOTC)-155, DTC P0456 EVAPORATIVE EMISSION CONTROL SYSTEM LEAK DETECTED (VERY SMALL LEAK), Diagnostic Trouble Code (DTC) Detecting Criteria.>

TROUBLE SYMPTOM:

- Fuel odor
- There is a hole of more than 0.5 mm (0.020 in) dia. in evaporation system or fuel tank.

CAUTION:
After servicing or replacing faulty parts, perform Clear Memory Mode <Ref. to EN(H4DOTC)(diag)-53, OPERATION, Clear Memory Mode.>, and Inspection Mode <Ref. to EN(H4DOTC)(diag)-41, PROCEDURE, Inspection Mode.>.

	Step	Check	Yes	No
1	**CHECK FUEL FILLER CAP.** 1) Turn the ignition switch to OFF. 2) Check the fuel filler cap. NOTE: The DTC is stored in memory if fuel filler cap is or was loose or if the cap chain has caught while tightening.	Is the fuel filler cap tightened securely?	Go to step **2**.	Tighten fuel filler cap securely.
2	**CHECK FUEL FILLER CAP.**	Is the fuel filler cap genuine?	Go to step **3**.	Replace with a genuine fuel filler cap.
3	**CHECK FUEL FILLER PIPE GASKET.**	Is there any damage to the seal between fuel filler cap and fuel filler pipe?	Repair or replace the fuel filler cap and fuel filler pipe. <Ref. to FU(H4DOTC)-75, Fuel Filler Pipe.>	Go to step **4**.
4	**CHECK DRAIN VALVE OPERATION.** 1) Install the delivery (test) mode fuse. **CAUTION:** **Do not use any fuses that are installed on the vehicle.** 2) Turn the ignition switch to ON. 3) Perform operation check for the drain valve using the Subaru Select Monitor. NOTE: Drain valve can be operated using the Subaru Select Monitor. For detailed procedures, refer to "SYSTEM OPERATION CHECK MODE". <Ref. to EN(H4DOTC)(diag)-54, System Operation Check Mode.>	Does the drain valve operate?	Go to step **5**.	Replace the drain valve. <Ref. to EC(H4DOTC)-22, Drain Valve.>
5	**CHECK OPERATION OF PURGE CONTROL SOLENOID VALVE.** Perform operation check for the purge control solenoid valve using the Subaru Select Monitor. NOTE: Purge control solenoid valve operation can be executed using Subaru Select Monitor. For detailed procedures, refer to "SYSTEM OPERATION CHECK MODE". <Ref. to EN(H4DOTC)(diag)-54, System Operation Check Mode.>	Does the purge control solenoid valve operate?	Go to step **6**.	Replace the purge control solenoid valve. <Ref. to EC(H4DOTC)-9, Purge Control Solenoid Valve.>

Step		Check	Yes	No
6	**CHECK OPERATION OF PRESSURE CONTROL SOLENOID VALVE.** Perform operation check for the pressure control solenoid valve using the Subaru Select Monitor. NOTE: The pressure control solenoid valve operation can be executed using the Subaru Select Monitor. For detailed procedures, refer to "SYSTEM OPERATION CHECK MODE". <Ref. to EN(H4DOTC)(diag)-54, System Operation Check Mode.>	Does the pressure control solenoid valve operate?	Go to step **7**.	Replace the pressure control solenoid valve. <Ref. to EC(H4DOTC)-19, Pressure Control Solenoid Valve Assembly.>
7	**CHECK EVAPORATIVE EMISSION CONTROL SYSTEM LINE.** 1) Turn the ignition switch to OFF. 2) Remove the delivery (test) mode fuse.	Is there any hole of more than 0.5 mm (0.020 in) dia. on evaporation line?	Repair or replace the evaporation line. <Ref. to FU(H4DOTC)-88, Fuel Delivery, Return and Evaporation Lines.>	Go to step **8**.
8	**CHECK CANISTER.**	Is the canister damaged or is there a hole of more than 0.5 mm (0.020 in) dia. in it?	Repair or replace the canister. <Ref. to EC(H4DOTC)-5, Canister.>	Go to step **9**.
9	**CHECK FUEL TANK.** Remove the fuel tank. <Ref. to FU(H4DOTC)-68, Fuel Tank.>	Is the fuel tank damaged or is there any hole of more than 0.5 mm (0.020 in) dia. in it?	Repair or replace the fuel tank. <Ref. to FU(H4DOTC)-68, Fuel Tank.>	Go to step **10**.
10	**CHECK ANY OTHER MECHANICAL TROUBLE IN EVAPORATIVE EMISSION CONTROL SYSTEM.**	Is there any hole of more than 0.5 mm (0.020 in) dia., crack, clogging, or disconnection, bend, misconnection of hoses or pipes in evaporative emission control system?	Repair or replace the hoses or pipes.	Repair the poor contact of ECM connector.

CC:DTC P0457 EVAPORATIVE EMISSION CONTROL SYSTEM LEAK DETECTED (FUEL CAP LOOSE/OFF)

DTC DETECTING CONDITION:

- Detected when two consecutive driving cycles with fault occur.
- GENERAL DESCRIPTION <Ref. to GD(H4DOTC)-155, DTC P0457 EVAPORATIVE EMISSION CONTROL SYSTEM LEAK DETECTED (FUEL CAP LOOSE/OFF), Diagnostic Trouble Code (DTC) Detecting Criteria.>

TROUBLE SYMPTOM:

- Fuel odor
- Fuel filler cap loose or lost

CAUTION:
After servicing or replacing faulty parts, perform Clear Memory Mode <Ref. to EN(H4DOTC)(diag)-53, OPERATION, Clear Memory Mode.>, and Inspection Mode <Ref. to EN(H4DOTC)(diag)-41, PROCEDURE, Inspection Mode.>.

	Step	Check	Yes	No
1	**CHECK FUEL FILLER CAP.** 1) Turn the ignition switch to OFF. 2) Check the fuel filler cap. NOTE: The DTC is stored in memory if fuel filler cap is or was loose or if the cap chain has caught while tightening.	Is the fuel filler cap tightened securely?	Go to step **2**.	Tighten fuel filler cap securely.
2	**CHECK FUEL FILLER CAP.**	Is the fuel filler cap genuine?	Go to step **3**.	Replace with a genuine fuel filler cap.
3	**CHECK FUEL FILLER PIPE GASKET.**	Is there any damage to the seal between fuel filler cap and fuel filler pipe?	Repair or replace the fuel filler cap and fuel filler pipe. <Ref. to FU(H4DOTC)-75, Fuel Filler Pipe.>	Go to step **4**.
4	**CHECK DRAIN VALVE OPERATION.** 1) Install the delivery (test) mode fuse. **CAUTION:** **Do not use any fuses that are installed on the vehicle.** 2) Turn the ignition switch to ON. 3) Perform operation check for the drain valve using the Subaru Select Monitor. NOTE: Drain valve can be operated using the Subaru Select Monitor. For detailed procedures, refer to "SYSTEM OPERATION CHECK MODE". <Ref. to EN(H4DOTC)(diag)-54, System Operation Check Mode.>	Does the drain valve operate?	Go to step **5**.	Replace the drain valve. <Ref. to EC(H4DOTC)-22, Drain Valve.>
5	**CHECK OPERATION OF PURGE CONTROL SOLENOID VALVE.** Perform operation check for the purge control solenoid valve using the Subaru Select Monitor. NOTE: Purge control solenoid valve operation can be executed using Subaru Select Monitor. For detailed procedures, refer to "SYSTEM OPERATION CHECK MODE". <Ref. to EN(H4DOTC)(diag)-54, System Operation Check Mode.>	Does the purge control solenoid valve operate?	Go to step **6**.	Replace the purge control solenoid valve. <Ref. to EC(H4DOTC)-9, Purge Control Solenoid Valve.>

	Step	Check	Yes	No
6	**CHECK OPERATION OF PRESSURE CONTROL SOLENOID VALVE.** Perform operation check for the pressure control solenoid valve using the Subaru Select Monitor. NOTE: The pressure control solenoid valve operation can be executed using the Subaru Select Monitor. For detailed procedures, refer to "SYSTEM OPERATION CHECK MODE". <Ref. to EN(H4DOTC)(diag)-54, System Operation Check Mode.>	Does the pressure control solenoid valve operate?	Go to step **7**.	Replace the pressure control solenoid valve. <Ref. to EC(H4DOTC)-19, Pressure Control Solenoid Valve Assembly.>
7	**CHECK EVAPORATIVE EMISSION CONTROL SYSTEM LINE.** 1) Turn the ignition switch to OFF. 2) Remove the delivery (test) mode fuse.	Is there any disconnection, damage or clogging on the evaporation line?	Repair or replace the evaporation line. <Ref. to FU(H4DOTC)-88, Fuel Delivery, Return and Evaporation Lines.>	Go to step **8**.
8	**CHECK CANISTER.**	Is the canister damaged?	Repair or replace the canister. <Ref. to EC(H4DOTC)-5, Canister.>	Go to step **9**.
9	**CHECK FUEL TANK.** Remove the fuel tank. <Ref. to FU(H4DOTC)-68, Fuel Tank.>	Is the fuel tank damaged?	Repair or replace the fuel tank. <Ref. to FU(H4DOTC)-68, Fuel Tank.>	Go to step **10**.
10	**CHECK ANY OTHER MECHANICAL TROUBLE IN EVAPORATIVE EMISSION CONTROL SYSTEM.**	Are there holes, cracks, clogging, or disconnection, misconnection of hoses or pipes in evaporative emission control system?	Repair or replace the hoses or pipes.	Repair the poor contact of ECM connector.

CD:DTC P0458 EVAPORATIVE EMISSION SYSTEM PURGE CONTROL VALVE CIRCUIT LOW

DTC DETECTING CONDITION:

- Detected when two consecutive driving cycles with fault occur.
- GENERAL DESCRIPTION <Ref. to GD(H4DOTC)-156, DTC P0458 EVAPORATIVE EMISSION SYSTEM PURGE CONTROL VALVE CIRCUIT LOW, Diagnostic Trouble Code (DTC) Detecting Criteria.>

TROUBLE SYMPTOM:

Improper idling

CAUTION:

After servicing or replacing faulty parts, perform Clear Memory Mode <Ref. to EN(H4DOTC)(diag)-53, OPERATION, Clear Memory Mode.>, and Inspection Mode <Ref. to EN(H4DOTC)(diag)-41, PROCEDURE, Inspection Mode.>.

WIRING DIAGRAM:

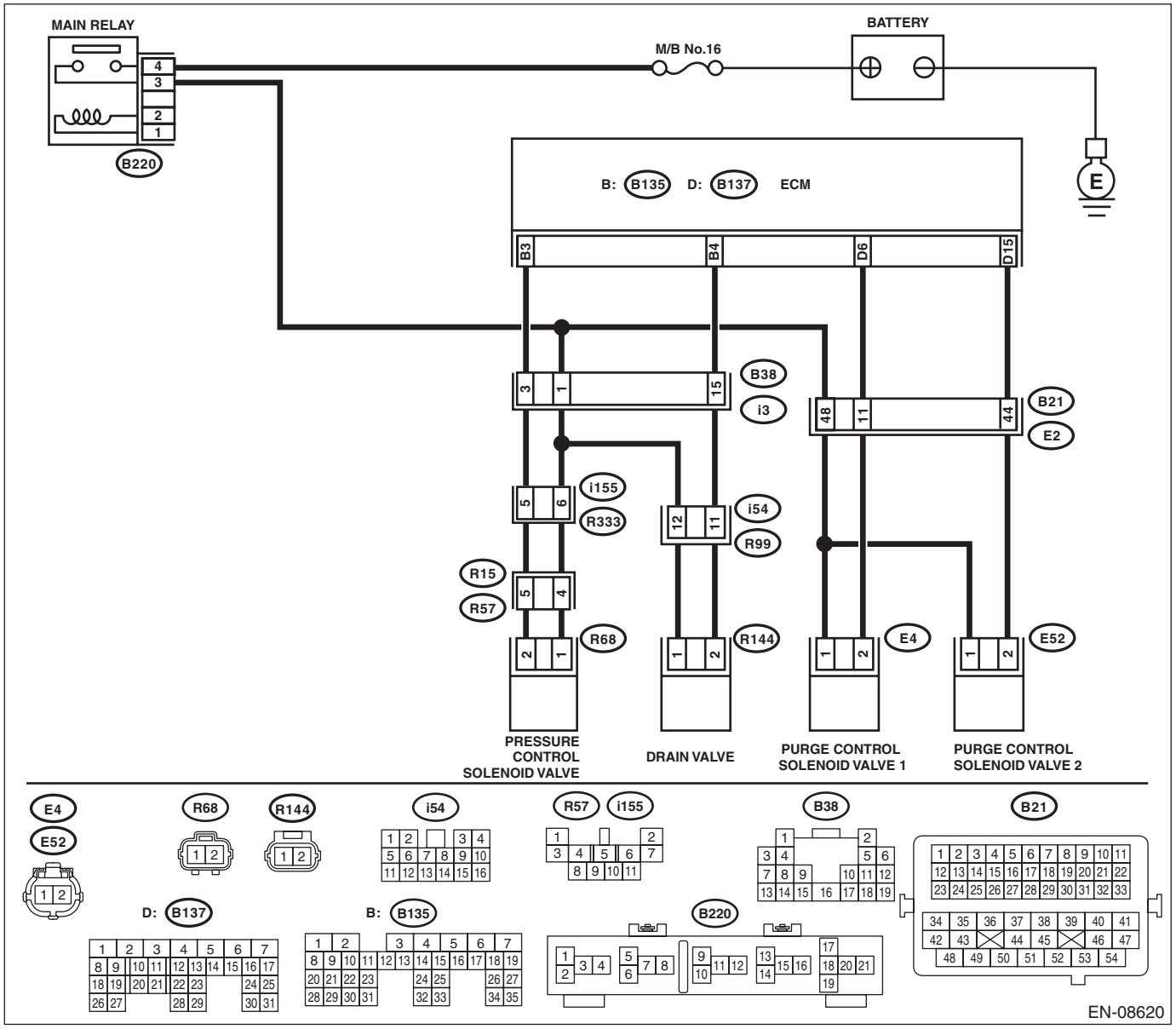

	Step	Check	Yes	No
1	**CHECK OUTPUT SIGNAL OF ECM.** 1) Turn the ignition switch to ON. 2) Measure the voltage between ECM and chassis ground. ***Connector & terminal*** ***(B137) No. 6 (+) — Chassis ground (–):***	Is the voltage 10 V or more?	Go to step **2**.	Go to step **3**.
2	**CHECK FOR POOR CONTACT.** Check for poor contact of ECM connector.	Is there poor contact of ECM connector?	Repair the poor contact of ECM connector.	Even if DTC is detected, the circuit has returned to a normal condition at this time. Reproduce the failure, and then perform the diagnosis again. NOTE: In this case, temporary open or short circuit of harness or temporary poor contact of connector may be the cause.
3	**CHECK POWER SUPPLY TO PURGE CONTROL SOLENOID VALVE CONNECTOR.** Measure the voltage between purge control solenoid valve connector and engine ground. ***Connector & terminal*** ***(E4) No. 1 (+) — Engine ground (–):***	Is the voltage 10 V or more?	Go to step **4**.	Repair the power supply circuit.
4	**CHECK HARNESS BETWEEN ECM AND PURGE CONTROL SOLENOID VALVE CONNECTOR.** 1) Turn the ignition switch to OFF. 2) Disconnect the connectors from ECM and purge control solenoid valve. 3) Measure the resistance between the purge control solenoid valve connector and engine ground. ***Connector & terminal*** ***(E4) No. 2 — Engine ground:***	Is the resistance 1 MΩ or more?	Go to step **5**.	Repair the ground short circuit of harness between ECM and purge control solenoid valve connector.
5	**CHECK HARNESS BETWEEN ECM AND PURGE CONTROL SOLENOID VALVE CONNECTOR.** Measure the resistance of harness between ECM and purge control solenoid valve connector. ***Connector & terminal*** ***(B137) No. 6 — (E4) No. 2:***	Is the resistance less than 1 Ω?	Go to step **6**.	Repair the harness and connector. NOTE: In this case, repair the following item: • Open circuit in harness between ECM and purge control solenoid valve connector • Poor contact of coupling connector
6	**CHECK PURGE CONTROL SOLENOID VALVE.** 1) Remove the purge control solenoid valve. 2) Measure the resistance between purge control solenoid valve terminals. ***Terminals*** ***No. 1 — No. 2:***	Is the resistance 10 — 100 Ω?	Repair the poor contact of purge control solenoid valve connector.	Replace the purge control solenoid valve. <Ref. to EC(H4DOTC)-9, Purge Control Solenoid Valve.>

CE:DTC P0459 EVAPORATIVE EMISSION SYSTEM PURGE CONTROL VALVE CIRCUIT HIGH

DTC DETECTING CONDITION:

- Detected when two consecutive driving cycles with fault occur.
- GENERAL DESCRIPTION <Ref. to GD(H4DOTC)-158, DTC P0459 EVAPORATIVE EMISSION SYSTEM PURGE CONTROL VALVE CIRCUIT HIGH, Diagnostic Trouble Code (DTC) Detecting Criteria.>

TROUBLE SYMPTOM:

Improper idling

CAUTION:

After servicing or replacing faulty parts, perform Clear Memory Mode <Ref. to EN(H4DOTC)(diag)-53, OPERATION, Clear Memory Mode.>, and Inspection Mode <Ref. to EN(H4DOTC)(diag)-41, PROCEDURE, Inspection Mode.>.

WIRING DIAGRAM:

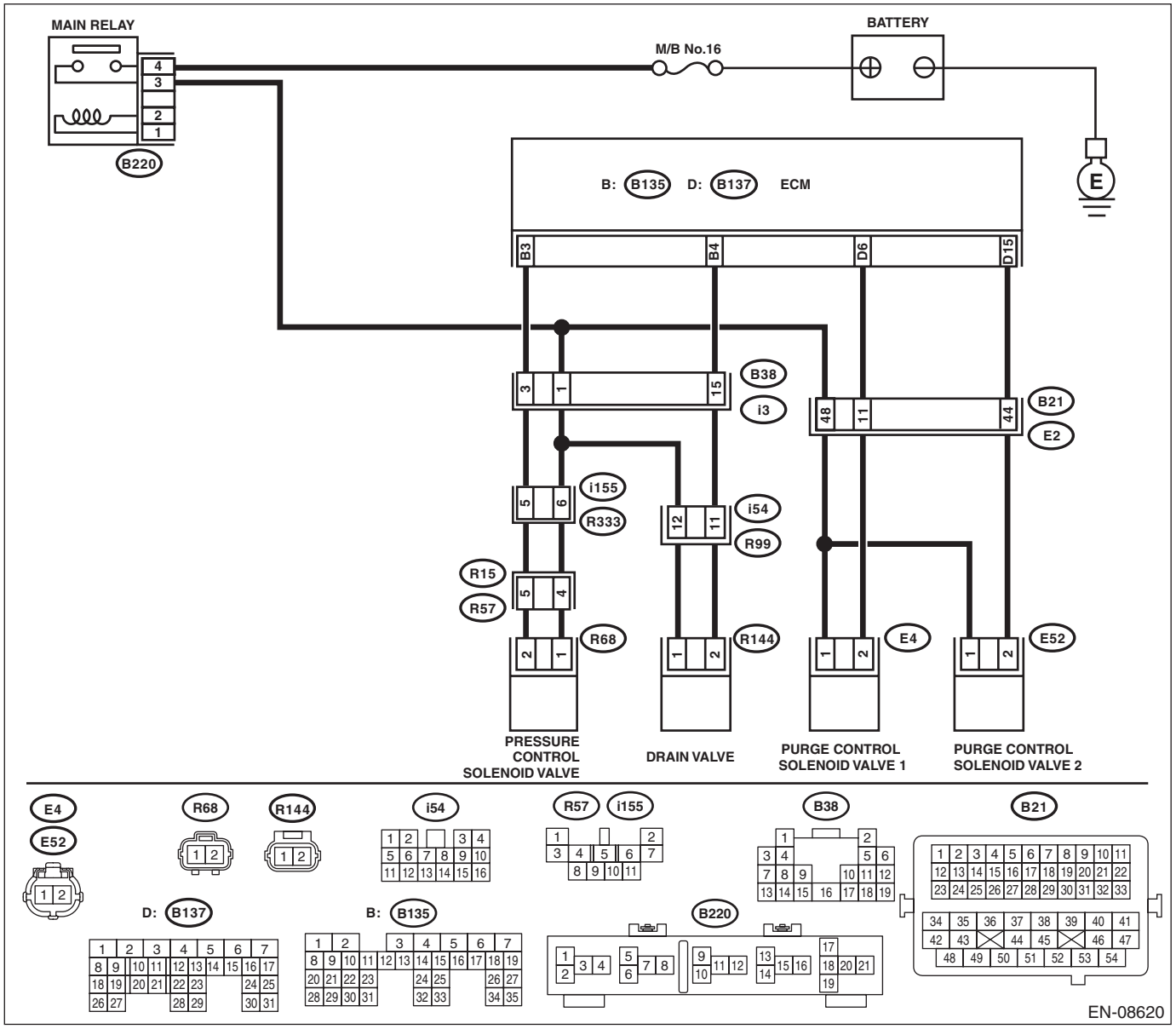

	Step	Check	Yes	No
1	**CHECK HARNESS BETWEEN ECM AND PURGE CONTROL SOLENOID VALVE CONNECTOR.** 1) Turn the ignition switch to OFF. 2) Disconnect the connectors from ECM and purge control solenoid valve. 3) Turn the ignition switch to ON. 4) Measure the voltage between ECM and chassis ground. ***Connector & terminal*** ***(B137) No. 6 (+) — Chassis ground (–):***	Is the voltage 10 V or more?	Repair the short circuit to power in the harness between ECM and purge control solenoid valve connector.	Go to step **2**.
2	**CHECK PURGE CONTROL SOLENOID VALVE.** 1) Turn the ignition switch to OFF. 2) Measure the resistance between purge control solenoid valve terminals. ***Terminals*** ***No. 1 — No. 2:***	Is the resistance less than 1 Ω?	Replace the purge control solenoid valve. <Ref. to EC(H4DOTC)-9, Purge Control Solenoid Valve.>	Repair the poor contact of ECM connector.

CF:DTC P0461 FUEL LEVEL SENSOR “A” CIRCUIT RANGE/PERFORMANCE

DTC DETECTING CONDITION:

- Detected when two consecutive driving cycles with fault occur.
- GENERAL DESCRIPTION <Ref. to GD(H4DOTC)-160, DTC P0461 FUEL LEVEL SENSOR “A” CIRCUIT RANGE/PERFORMANCE, Diagnostic Trouble Code (DTC) Detecting Criteria.>

CAUTION:
After servicing or replacing faulty parts, perform Clear Memory Mode <Ref. to EN(H4DOTC)(diag)-53, OPERATION, Clear Memory Mode.>, and Inspection Mode <Ref. to EN(H4DOTC)(diag)-41, PROCEDURE, Inspection Mode.>.

Step		Check	Yes	No
1	**CHECK FOR ANY OTHER DTC ON DISPLAY.**	Is any other DTC displayed?	Check the appropriate DTC using the “List of Diagnostic Trouble Code (DTC)”. <Ref. to EN(H4DOTC)(diag)-75, List of Diagnostic Trouble Code (DTC).>	Replace the fuel level sensor and fuel sub level sensor. <Ref. to FU(H4DOTC)-81, Fuel Level Sensor.> <Ref. to FU(H4DOTC)-83, Fuel Sub Level Sensor.>

CG:DTC P0462 FUEL LEVEL SENSOR “A” CIRCUIT LOW

NOTE:
For the diagnostic procedure, refer to DTC P0463. <Ref. to EN(H4DOTC)(diag)-214, DTC P0463 FUEL LEVEL SENSOR “A” CIRCUIT HIGH, Diagnostic Procedure with Diagnostic Trouble Code (DTC).>

CH:DTC P0463 FUEL LEVEL SENSOR “A” CIRCUIT HIGH

DTC DETECTING CONDITION:

- Detected when two consecutive driving cycles with fault occur.
- GENERAL DESCRIPTION <Ref. to GD(H4DOTC)-164, DTC P0463 FUEL LEVEL SENSOR “A” CIRCUIT HIGH, Diagnostic Trouble Code (DTC) Detecting Criteria.>

CAUTION:
After servicing or replacing faulty parts, perform Clear Memory Mode <Ref. to EN(H4DOTC)(diag)-53, OPERATION, Clear Memory Mode.>, and Inspection Mode <Ref. to EN(H4DOTC)(diag)-41, PROCEDURE, Inspection Mode.>.

Step	Check	Yes	No
1 **CHECK FOR ANY OTHER DTC ON DISPLAY.**	Is DTC P0462 or P0463 displayed on the Subaru Select Monitor?	Check the combination meter. <Ref. to IDI-13, CHECK FUEL LEVEL SENSOR, INSPECTION, Combination Meter System.>	Even if DTC is detected, the circuit has returned to a normal condition at this time. Reproduce the failure, and then perform the diagnosis again. NOTE: In this case, temporary poor contact of connector, temporary open or short circuit of harness may be the cause.

CI: DTC P0464 FUEL LEVEL SENSOR CIRCUIT INTERMITTENT

DTC DETECTING CONDITION:

- Detected when two consecutive driving cycles with fault occur.
- GENERAL DESCRIPTION <Ref. to GD(H4DOTC)-166, DTC P0464 FUEL LEVEL SENSOR CIRCUIT INTERMITTENT, Diagnostic Trouble Code (DTC) Detecting Criteria.>

CAUTION:
After servicing or replacing faulty parts, perform Clear Memory Mode <Ref. to EN(H4DOTC)(diag)-53, OPERATION, Clear Memory Mode.>, and Inspection Mode <Ref. to EN(H4DOTC)(diag)-41, PROCEDURE, Inspection Mode.>.

Step		Check	Yes	No
1	**CHECK FOR ANY OTHER DTC ON DISPLAY.**	Is DTC P0464 displayed on the display?	Check the combination meter. <Ref. to IDI-13, CHECK FUEL LEVEL SENSOR, INSPECTION, Combination Meter System.>	Even if DTC is detected, the circuit has returned to a normal condition at this time. Reproduce the failure, and then perform the diagnosis again. NOTE: In this case, temporary poor contact of connector, temporary open or short circuit of harness may be the cause.

CJ:DTC P0500 VEHICLE SPEED SENSOR “A”

DTC DETECTING CONDITION:

- Immediately at fault recognition
- GENERAL DESCRIPTION <Ref. to GD(H4DOTC)-169, DTC P0500 VEHICLE SPEED SENSOR “A”, Diagnostic Trouble Code (DTC) Detecting Criteria.>

CAUTION:
After servicing or replacing faulty parts, perform Clear Memory Mode <Ref. to EN(H4DOTC)(diag)-53, OPERATION, Clear Memory Mode.>, and Inspection Mode <Ref. to EN(H4DOTC)(diag)-41, PROCEDURE, Inspection Mode.>.

Step		Check	Yes	No
1	**CHECK DTC OF VDC.** Check DTC of VDC.	Is DTC of VDC displayed?	Perform the diagnosis according to DTC. <Ref. to VDC(diag)-35, List of Diagnostic Trouble Code (DTC).>	Repair the poor contact of ECM connector.

CK:DTC P0506 IDLE AIR CONTROL SYSTEM RPM LOWER THAN EXPECTED

DTC DETECTING CONDITION:

- Detected when two consecutive driving cycles with fault occur.
- GENERAL DESCRIPTION <Ref. to GD(H4DOTC)-170, DTC P0506 IDLE AIR CONTROL SYSTEM RPM LOWER THAN EXPECTED, Diagnostic Trouble Code (DTC) Detecting Criteria.>

TROUBLE SYMPTOM:

- Hard to start the engine.
- Engine does not start.
- Improper idling
- Engine stalls.

CAUTION:

After servicing or replacing faulty parts, perform Clear Memory Mode <Ref. to EN(H4DOTC)(diag)-53, OPERATION, Clear Memory Mode.>, and Inspection Mode <Ref. to EN(H4DOTC)(diag)-41, PROCEDURE, Inspection Mode.>.

	Step	Check	Yes	No
1	**CHECK FOR ANY OTHER DTC ON DISPLAY.**	Is any other DTC displayed?	Check the appropriate DTC using the "List of Diagnostic Trouble Code (DTC)". <Ref. to EN(H4DOTC)(diag)-75, List of Diagnostic Trouble Code (DTC).>	Go to step **2**.
2	**CHECK AIR CLEANER ELEMENT.** 1) Turn the ignition switch to OFF. 2) Check the air cleaner element.	Is there excessive clogging on air cleaner element?	Replace the air cleaner element. <Ref. to IN(H4DOTC)-7, Air Cleaner Element.>	Go to step **3**.
3	**CHECK ELECTRONIC THROTTLE CONTROL.** 1) Remove the electronic throttle control. <Ref. to FU(H4DOTC)-15, REMOVAL, Throttle Body.> 2) Check the electronic throttle control.	Are foreign matter found inside electronic throttle control?	Remove foreign matter from electronic throttle control.	Perform the diagnosis of DTC P2101. <Ref. to EN(H4DOTC)(diag)-303, DTC P2101 THROTTLE ACTUATOR CONTROL MOTOR CIRCUIT RANGE/PERFORMANCE, Diagnostic Procedure with Diagnostic Trouble Code (DTC).>

CL:DTC P0507 IDLE AIR CONTROL SYSTEM RPM HIGHER THAN EXPECTED

DTC DETECTING CONDITION:

- Detected when two consecutive driving cycles with fault occur.
- GENERAL DESCRIPTION <Ref. to GD(H4DOTC)-171, DTC P0507 IDLE AIR CONTROL SYSTEM RPM HIGHER THAN EXPECTED, Diagnostic Trouble Code (DTC) Detecting Criteria.>

TROUBLE SYMPTOM:

Engine keeps running at higher speed than specified idle speed.

CAUTION:

After servicing or replacing faulty parts, perform Clear Memory Mode <Ref. to EN(H4DOTC)(diag)-53, OPERATION, Clear Memory Mode.>, and Inspection Mode <Ref. to EN(H4DOTC)(diag)-41, PROCEDURE, Inspection Mode.>.

	Step	Check	Yes	No
1	**CHECK FOR ANY OTHER DTC ON DISPLAY.**	Is any other DTC displayed?	Check the appropriate DTC using the "List of Diagnostic Trouble Code (DTC)". <Ref. to EN(H4DOTC)(diag)-75, List of Diagnostic Trouble Code (DTC).>	Go to step **2**.
2	**CHECK AIR INTAKE SYSTEM.** 1) Start and idle the engine. 2) Check the following items. • Loose installation of intake manifold and throttle body • Cracks of intake manifold gasket and throttle body gasket • Disconnection of vacuum hoses	Is there any fault in air intake system?	Repair air suction and leaks.	Go to step **3**.
3	**CHECK ELECTRONIC THROTTLE CONTROL.** 1) Turn the ignition switch to OFF. 2) Remove the electronic throttle control. <Ref. to FU(H4DOTC)-15, REMOVAL, Throttle Body.> 3) Check the electronic throttle control.	Are foreign matter found inside electronic throttle control?	Remove foreign matter from electronic throttle control.	Perform the diagnosis of DTC P2101. <Ref. to EN(H4DOTC)(diag)-303, DTC P2101 THROTTLE ACTUATOR CONTROL MOTOR CIRCUIT RANGE/PERFORMANCE, Diagnostic Procedure with Diagnostic Trouble Code (DTC).>

CM:DTC P050A COLD START IDLE AIR CONTROL SYSTEM PERFORMANCE

DTC DETECTING CONDITION:

- Detected when two consecutive driving cycles with fault occur.
- GENERAL DESCRIPTION <Ref. to GD(H4DOTC)-172, DTC P050A COLD START IDLE AIR CONTROL SYSTEM PERFORMANCE, Diagnostic Trouble Code (DTC) Detecting Criteria.>

TROUBLE SYMPTOM:

- Engine keeps running at higher speed than specified idle speed.
- Engine keeps running at a lower speed than the specified idle speed.
- Engine stalls.

CAUTION:

After servicing or replacing faulty parts, perform Clear Memory Mode <Ref. to EN(H4DOTC)(diag)-53, OPERATION, Clear Memory Mode.>, and Inspection Mode <Ref. to EN(H4DOTC)(diag)-41, PROCEDURE, Inspection Mode.>.

WIRING DIAGRAM:

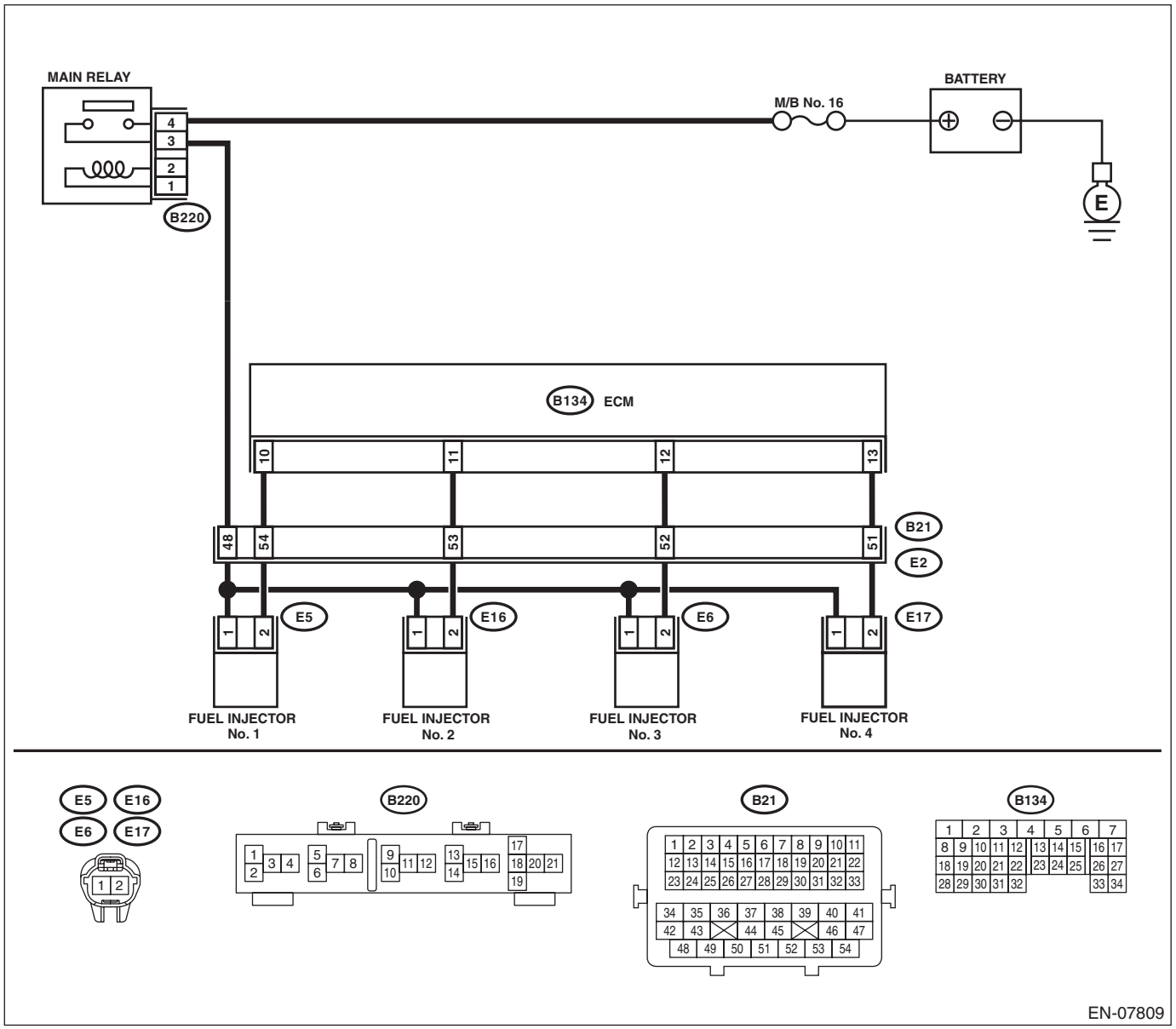

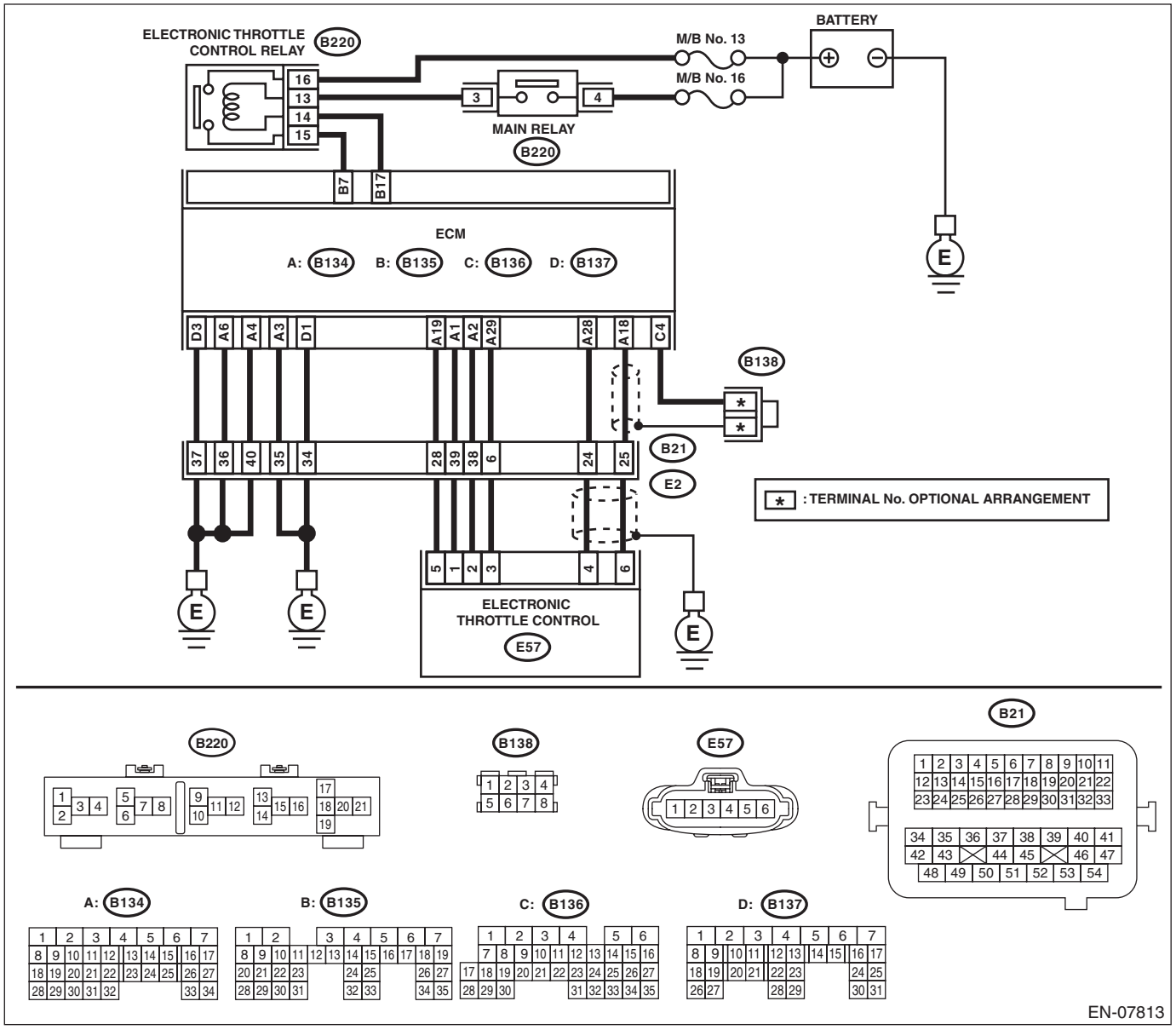

Step		Check	Yes	No
1	**CHECK FOR ANY OTHER DTC ON DISPLAY.**	Is any other DTC displayed?	Check the appropriate DTC using the “List of Diagnostic Trouble Code (DTC)”. <Ref. to EN(H4DOTC)(diag)-75, List of Diagnostic Trouble Code (DTC).>	Go to step **2**.
2	**CHECK ENGINE OIL.**	Is there a proper amount of engine oil?	Go to step **3**.	Replace engine oil. <Ref. to LU(H4SO)-13, REPLACEMENT, Engine Oil.>
3	**CHECK EXHAUST SYSTEM.**	Are there holes or loose bolts on exhaust system?	Repair the exhaust system.	Go to step **4**.

	Step	Check	Yes	No
4	**CHECK AIR INTAKE SYSTEM.**	Are there holes, loose bolts or disconnection of hose on air intake system?	Repair the air intake system.	Go to step **5**.
5	**CHECK FUEL PRESSURE.** **WARNING:** **Place "NO OPEN FLAMES" signs near the working area.** **CAUTION:** **Be careful not to spill fuel.** Measure the fuel pressure while disconnecting pressure regulator vacuum hose from intake manifold. <Ref. to ME(H4DOTC)-26, INSPECTION, Fuel Pressure.> **CAUTION:** **Release fuel pressure before removing the fuel pressure gauge.** NOTE: If fuel pressure does not increase, squeeze the fuel return hose 2 to 3 times, then measure fuel pressure again.	Is the measured value 328 — 358 kPa (3.3 — 3.7 kg/cm^2, 48 — 52 psi)?	Go to step **6**.	Repair the following item. Fuel pressure is too high: • Clogged fuel return line or bent hose Fuel pressure is too low: • Improper fuel pump discharge • Clogged fuel supply line
6	**CHECK FUEL PRESSURE.** After connecting the pressure regulator vacuum hose, measure fuel pressure. <Ref. to ME(H4DOTC)-26, INSPECTION, Fuel Pressure.> **CAUTION:** **Release fuel pressure before removing the fuel pressure gauge.** NOTE: • If fuel pressure does not increase, squeeze fuel return hose 2 to 3 times, then measure fuel pressure again. • If the measured value at this step is out of specification, check or replace pressure regulator and pressure regulator vacuum hose.	Is the measured value 274 — 304 kPa (2.8 — 3.1 kg/cm^2, 40 — 44 psi)?	Go to step **7**.	Repair the following item. Fuel pressure is too high: • Faulty pressure regulator • Clogged fuel return line or bent hose Fuel pressure is too low: • Faulty pressure regulator • Improper fuel pump discharge • Clogged fuel supply line
7	**CHECK ENGINE COOLANT TEMPERATURE SENSOR.** 1) Start the engine and warm up completely. 2) Read the value of «Coolant Temp.» using the Subaru Select Monitor or a general scan tool. NOTE: • Subaru Select Monitor For detailed operation procedures, refer to "READ CURRENT DATA FOR ENGINE". <Ref. to EN(H4DOTC)(diag)-34, Subaru Select Monitor.> • General scan tool For detailed operation procedures, refer to the general scan tool operation manual.	Is the value of «Coolant Temp.» 75°C (167°F) or more?	Go to step **8**.	Replace the engine coolant temperature sensor. <Ref. to FU(H4DOTC)-34, Engine Coolant Temperature Sensor.>

	Step	Check	Yes	No
8	**CHECK MASS AIR FLOW AND INTAKE AIR TEMPERATURE SENSOR.** 1) Start the engine and warm up engine until coolant temperature is higher than 70°C (158°F). 2) Place the shift lever in neutral position. 3) Turn the A/C switch to OFF. 4) Turn all the accessory switches to OFF. 5) Read the value of «Mass Air Flow» using the Subaru Select Monitor or a general scan tool. NOTE: • Subaru Select Monitor For detailed operation procedures, refer to "READ CURRENT DATA FOR ENGINE". <Ref. to EN(H4DOTC)(diag)-34, Subaru Select Monitor.> • General scan tool For detailed operation procedures, refer to the general scan tool operation manual.	Is the value of «Mass Air Flow» 2.0 — 5.0 g/s (0.26 — 0.66 lb/m)?	Go to step **9**.	Replace the mass air flow and intake air temperature sensor. <Ref. to FU(H4DOTC)-42, Mass Air Flow and Intake Air Temperature Sensor.>
9	**CHECK MASS AIR FLOW AND INTAKE AIR TEMPERATURE SENSOR.** 1) Start the engine and warm up engine until coolant temperature is higher than 70°C (158°F). 2) Place the shift lever in neutral position. 3) Turn the A/C switch to OFF. 4) Turn all the accessory switches to OFF. 5) Open the front hood. 6) Measure the ambient temperature. 7) Read the value of «Intake Air Temp.» using the Subaru Select Monitor or a general scan tool. NOTE: • Subaru Select Monitor For detailed operation procedures, refer to "READ CURRENT DATA FOR ENGINE". <Ref. to EN(H4DOTC)(diag)-34, Subaru Select Monitor.> • General scan tool For detailed operation procedures, refer to the general scan tool operation manual.	Subtract ambient temperature from «Intake Air Temp.». Is the obtained value –10 — 50°C (–18 — 90°F)?	Go to step **10**.	Check the mass air flow and intake air temperature sensor. <Ref. to FU(H4DOTC)-42, Mass Air Flow and Intake Air Temperature Sensor.>
10	**CHECK OUTPUT SIGNAL OF ECM.** 1) Turn the ignition switch to ON. 2) Measure the voltage between ECM and chassis ground on faulty cylinders. ***Connector & terminal*** ***#1 (B134) No. 10 (+) — Chassis ground (–):*** ***#2 (B134) No. 11 (+) — Chassis ground (–):*** ***#3 (B134) No. 12 (+) — Chassis ground (–):*** ***#4 (B134) No. 13 (+) — Chassis ground (–):***	Is the voltage 10 V or more?	Go to step **15**.	Go to step **11**.

	Step	Check	Yes	No
11	**CHECK HARNESS BETWEEN ECM AND FUEL INJECTOR CONNECTOR.** 1) Turn the ignition switch to OFF. 2) Disconnect the connector from fuel injector on faulty cylinders. 3) Measure the resistance between fuel injector connector and engine ground on faulty cylinders. ***Connector & terminal*** ***#1 (E5) No. 2 — Engine ground:*** ***#2 (E16) No. 2 — Engine ground:*** ***#3 (E6) No. 2 — Engine ground:*** ***#4 (E17) No. 2 — Engine ground:***	Is the resistance 1 MΩ or more?	Go to step **12**.	Repair the short circuit to ground in harness between ECM and fuel injector connector.
12	**CHECK HARNESS BETWEEN ECM AND FUEL INJECTOR CONNECTOR.** Measure the resistance of harness between ECM and fuel injector connector on faulty cylinders. ***Connector & terminal*** ***#1 (B134) No. 10 — (E5) No. 2:*** ***#2 (B134) No. 11 — (E16) No. 2:*** ***#3 (B134) No. 12 — (E6) No. 2:*** ***#4 (B134) No. 13 — (E17) No. 2:***	Is the resistance less than 1 Ω?	Go to step **13**.	Repair the harness and connector. NOTE: In this case, repair the following item: • Open circuit in harness between ECM and fuel injector connector • Poor contact of coupling connector
13	**CHECK FUEL INJECTOR.** Measure the resistance between fuel injector terminals on faulty cylinder. ***Terminals*** ***No. 1 — No. 2:***	Is the resistance 5 — 20 Ω?	Go to step **14**.	Replace the faulty fuel injector. <Ref. to FU(H4DOTC)-45, Fuel Injector.>
14	**CHECK POWER SUPPLY LINE.** 1) Turn the ignition switch to ON. 2) Measure the voltage between fuel injector and engine ground on faulty cylinders. ***Connector & terminal*** ***#1 (E5) No. 1 (+) — Engine ground (–):*** ***#2 (E16) No. 1 (+) — Engine ground (–):*** ***#3 (E6) No. 1 (+) — Engine ground (–):*** ***#4 (E17) No. 1 (+) — Engine ground (–):***	Is the voltage 10 V or more?	Repair the poor contact of all connectors in fuel injector circuit.	Repair the harness and connector. NOTE: In this case, repair the following item: • Open circuit in harness between the main relay and fuel injector connector on faulty cylinders • Poor contact of coupling connector • Poor contact of main relay connector
15	**CHECK HARNESS BETWEEN ECM AND FUEL INJECTOR CONNECTOR.** 1) Turn the ignition switch to OFF. 2) Disconnect the connector from fuel injector on faulty cylinders. 3) Turn the ignition switch to ON. 4) Measure the voltage between ECM and chassis ground on faulty cylinders. ***Connector & terminal*** ***#1 (B134) No. 10 (+) — Chassis ground (–):*** ***#2 (B134) No. 11 (+) — Chassis ground (–):*** ***#3 (B134) No. 12 (+) — Chassis ground (–):*** ***#4 (B134) No. 13 (+) — Chassis ground (–):***	Is the voltage 10 V or more?	Repair the short circuit to power in harness between ECM and fuel injector connector.	Go to step **16**.

	Step	Check	Yes	No
16	**CHECK FUEL INJECTOR.** 1) Turn the ignition switch to OFF. 2) Measure the resistance between fuel injector terminals on faulty cylinder. ***Terminals*** ***No. 1 — No. 2:***	Is the resistance 5 — 20 Ω?	Go to step **17**.	Replace the faulty fuel injector. <Ref. to FU(H4DOTC)-45, Fuel Injector.>
17	**CHECK INSTALLATION OF CAMSHAFT POSITION SENSOR/CRANKSHAFT POSITION SENSOR.**	Is the camshaft position sensor or crankshaft position sensor loosely installed?	Tighten the camshaft position sensor or crankshaft position sensor.	Go to step **18**.
18	**CHECK CRANK SPROCKET.** Remove the timing belt cover. <Ref. to ME(H4DOTC)-46, REMOVAL, Timing Belt Cover.>	Is the crank sprocket rusted or does it have broken teeth?	Replace the crank sprocket. <Ref. to ME(H4DOTC)-62, Crank Sprocket.>	Go to step **19**.
19	**CHECK INSTALLATION CONDITION OF TIMING BELT.** Turn the crankshaft using ST, and align the alignment mark on crank sprocket with alignment mark on cylinder block. ST 499987500 CRANKSHAFT SOCKET	Is the timing belt dislocated from its proper position?	Repair the installation condition of timing belt. <Ref. to ME(H4DOTC)-52, Timing Belt.>	Go to step **20**.
20	**CHECK ELECTRONIC THROTTLE CONTROL RELAY.** 1) Turn the ignition switch to OFF. 2) Remove the electronic throttle control relay. 3) Connect the battery to terminals No. 13 and No. 14 of electronic throttle control relay. 4) Measure the resistance between electronic throttle control relay terminals. ***Terminals*** ***No. 16 — No. 15:***	Is the resistance less than 1 Ω?	Go to step **21**.	Replace the electronic throttle control relay. <Ref. to FU(H4DOTC)-63, Electronic Throttle Control Relay.>
21	**CHECK POWER SUPPLY OF ELECTRONIC THROTTLE CONTROL RELAY.** Measure the voltage between electronic throttle control relay connector and chassis ground. ***Connector & terminal*** ***(B220) No. 16 (+) — Chassis ground (–):***	Is the voltage 10 V or more?	Go to step **22**.	Repair the open or ground short circuit of power supply circuit.
22	**CHECK HARNESS BETWEEN ECM AND ELECTRONIC THROTTLE CONTROL RELAY CONNECTOR.** 1) Disconnect the connector from ECM. 2) Turn the ignition switch to ON. 3) Measure the voltage between electronic throttle control relay connector and chassis ground. ***Connector & terminal*** ***(B220) No. 14 (+) — Chassis ground (–):***	Is the voltage 10 V or more?	Repair the short circuit to power in the harness between ECM and electronic throttle control relay connector.	Go to step **23**.
23	**CHECK HARNESS BETWEEN ECM AND ELECTRONIC THROTTLE CONTROL RELAY CONNECTOR.** 1) Turn the ignition switch to OFF. 2) Measure the resistance between electronic throttle control relay connector and chassis ground. ***Connector & terminal*** ***(B220) No. 14 — Chassis ground:*** ***(B220) No. 15 — Chassis ground:***	Is the resistance 1 MΩ or more?	Go to step **24**.	Repair the short circuit in harness to ground between ECM and electronic throttle control relay connector.

	Step	Check	Yes	No
24	**CHECK HARNESS BETWEEN ECM AND ELECTRONIC THROTTLE CONTROL RELAY CONNECTOR.** Measure the resistance between ECM and electronic throttle control relay connector. ***Connector & terminal*** ***(B135) No. 17 — (B220) No. 14:*** ***(B135) No. 7 — (B220) No. 15:***	Is the resistance less than 1 Ω?	Go to step **25**.	Repair the open circuit in harness between ECM and electronic throttle control relay connector.
25	**CHECK HARNESS BETWEEN ECM AND ELECTRONIC THROTTLE CONTROL CONNECTOR.** 1) Turn the ignition switch to OFF. 2) Disconnect the connectors from ECM and electronic throttle control. 3) Measure the resistance between ECM and chassis ground. ***Connector & terminal*** ***(B134) No. 19 — Chassis ground:*** ***(B134) No. 18 — Chassis ground:*** ***(B134) No. 18 — (B136) No. 4:*** ***(B134) No. 28 — Chassis ground:***	Is the resistance 1 MΩ or more?	Go to step **26**.	Repair the short circuit to ground in harness between ECM and electronic throttle control connector.
26	**CHECK SHORT CIRCUIT INSIDE THE ECM.** 1) Connect the connector to ECM. 2) Measure the resistance between electronic throttle control connector and engine ground. ***Connector & terminal*** ***(E57) No. 6 — Engine ground:*** ***(E57) No. 4 — Engine ground:***	Is the resistance 1 MΩ or more?	Go to step **27**.	Repair the short circuit to ground in harness between ECM and electronic throttle control connector. Replace the ECM if defective. <Ref. to FU(H4DOTC)-58, Engine Control Module (ECM).>
27	**CHECK HARNESS BETWEEN ECM AND ELECTRONIC THROTTLE CONTROL CONNECTOR.** 1) Disconnect the connector from ECM. 2) Measure the resistance of harness between ECM and electronic throttle control connector. ***Connector & terminal*** ***(B134) No. 18 — (E57) No. 6:*** ***(B134) No. 28 — (E57) No. 4:*** ***(B134) No. 29 — (E57) No. 3:***	Is the resistance less than 1 Ω?	Go to step **28**.	Repair the harness and connector. NOTE: In this case, repair the following item: • Open circuit in harness between ECM and electronic throttle control connector • Poor contact of coupling connector
28	**CHECK HARNESS BETWEEN ECM AND ELECTRONIC THROTTLE CONTROL CONNECTOR.** 1) Connect the connector to ECM. 2) Measure the resistance between electronic throttle control connector and engine ground. ***Connector & terminal*** ***(E57) No. 3 — Engine ground:***	Is the resistance less than 5 Ω?	Go to step **29**.	Repair the harness and connector. NOTE: In this case, repair the following item: • Open circuit of harness between ECM and engine ground • Poor contact of ECM connector • Poor contact of coupling connector

	Step	Check	Yes	No
29	**CHECK HARNESS BETWEEN ECM AND ELECTRONIC THROTTLE CONTROL CONNECTOR.** 1) Turn the ignition switch to ON. 2) Measure the voltage between electronic throttle control connector and engine ground. ***Connector & terminal*** ***(E57) No. 6 (+) — Engine ground (–):*** ***(E57) No. 4 (+) — Engine ground (–):***	Is the voltage 5 V or more?	Repair the short circuit to power in harness between ECM and electronic throttle control connector.	Go to step **30**.
30	**CHECK HARNESS BETWEEN ECM AND ELECTRONIC THROTTLE CONTROL CONNECTOR.** 1) Turn the ignition switch to OFF. 2) Disconnect the connector from ECM. 3) Measure the resistance between ECM connectors. ***Connector & terminal*** ***(B134) No. 19 — (B134) No. 18:*** ***(B134) No. 19 — (B134) No. 28:***	Is the resistance 1 MΩ or more?	Go to step **31**.	Repair the short circuit to power in harness between ECM and electronic throttle control connector.
31	**CHECK SENSOR OUTPUT.** 1) Connect all connectors. 2) Turn the ignition switch to ON. 3) Read the value of «Main-Throttle Sensor» using Subaru Select Monitor. NOTE: For detailed operation procedures, refer to "READ CURRENT DATA FOR ENGINE". <Ref. to EN(H4DOTC)(diag)-34, Subaru Select Monitor.>	Is the value of «Main-Throttle Sensor» 0.81 — 0.87 V?	Go to step **32**.	Repair the poor contact of electronic throttle control connector. Replace the electronic throttle control if defective. <Ref. to FU(H4DOTC)-15, Throttle Body.>
32	**CHECK SENSOR OUTPUT.** Read the value of «Sub-Throttle Sensor» using Subaru Select Monitor. NOTE: For detailed operation procedures, refer to "READ CURRENT DATA FOR ENGINE". <Ref. to EN(H4DOTC)(diag)-34, Subaru Select Monitor.>	Is the value of «Sub-Throttle Sensor» 1.64 — 1.70 V?	Go to step **33**.	Repair the poor contact of electronic throttle control connector. Replace the electronic throttle control if defective. <Ref. to FU(H4DOTC)-15, Throttle Body.>
33	**CHECK HARNESS BETWEEN ECM AND ELECTRONIC THROTTLE CONTROL MOTOR.** 1) Turn the ignition switch to OFF. 2) Disconnect the connectors from ECM and electronic throttle control. 3) Measure the resistance between ECM and electronic throttle control connector. ***Connector & terminal*** ***(B134) No. 2 — (E57) No. 2:*** ***(B134) No. 1 — (E57) No. 1:***	Is the resistance less than 1 Ω?	Go to step **34**.	Repair the harness and connector. NOTE: In this case, repair the following item: • Open circuit in harness between ECM and electronic throttle control connector • Poor contact of coupling connector

	Step	Check	Yes	No
34	**CHECK HARNESS BETWEEN ECM AND ELECTRONIC THROTTLE CONTROL MOTOR.** 1) Connect the connector to ECM. 2) Turn the ignition switch to ON. 3) Measure the voltage between electronic throttle control connector and engine ground. ***Connector & terminal*** ***(E57) No. 2 (+) — Engine ground (–):*** ***(E57) No. 1 (+) — Engine ground (–):***	Is the voltage 5 V or more?	Repair the short circuit to power in harness between ECM and electronic throttle control connector.	Go to step **35**.
35	**CHECK HARNESS BETWEEN ECM AND ELECTRONIC THROTTLE CONTROL MOTOR.** 1) Turn the ignition switch to OFF. 2) Disconnect the connector from ECM. 3) Measure the resistance between electronic throttle control connector and engine ground. ***Connector & terminal*** ***(E57) No. 2 — Engine ground:*** ***(E57) No. 1 — Engine ground:***	Is the resistance 1 MΩ or more?	Go to step **36**.	Repair the short circuit to ground in harness between ECM and electronic throttle control connector.
36	**CHECK ELECTRONIC THROTTLE CONTROL MOTOR HARNESS.** Measure the resistance between electronic throttle control connectors. ***Connector & terminal*** ***(E57) No. 2 — (E57) No. 1:***	Is the resistance 1 MΩ or more?	Go to step **37**.	Repair the short circuit of harness between ECM and electronic throttle control connector.
37	**CHECK ELECTRONIC THROTTLE CONTROL GROUND CIRCUIT.** Measure the resistance between ECM and chassis ground. ***Connector & terminal*** ***(B134) No. 3 — Chassis ground:*** ***(B134) No. 4 — Chassis ground:*** ***(B134) No. 6 — Chassis ground:*** ***(B137) No. 1 — Chassis ground:*** ***(B137) No. 3 — Chassis ground:***	Is the resistance less than 5 Ω?	Go to step **38**.	Repair the harness and connector. NOTE: In this case, repair the following item: • Open circuit of harness between ECM and engine ground • Poor contact of coupling connector
38	**CHECK ELECTRONIC THROTTLE CONTROL.** Measure the resistance between electronic throttle control terminals. ***Terminals*** ***No. 1 — No. 2:***	Is the resistance 50 Ω or less?	Go to step **39**.	Replace the electronic throttle control. <Ref. to FU(H4DOTC)-15, Throttle Body.>
39	**CHECK ELECTRONIC THROTTLE CONTROL.** Move the throttle valve to the fully open and fully closed positions with fingers. Check that the valve returns to the specified position when releasing fingers.	Does the valve return to the specified position? Standard value: 3 mm (0.12 in) from fully closed position	Repair the poor contact of ECM connector.	Replace the electronic throttle control. <Ref. to FU(H4DOTC)-15, Throttle Body.>

CN:DTC P050B COLD START IGNITION TIMING PERFORMANCE

NOTE:
For the diagnostic procedure, refer to DTC P050A. <Ref. to EN(H4DOTC)(diag)-218, DTC P050A COLD START IDLE AIR CONTROL SYSTEM PERFORMANCE, Diagnostic Procedure with Diagnostic Trouble Code (DTC).>

CO:DTC P0512 STARTER REQUEST CIRCUIT

DTC DETECTING CONDITION:

- Immediately at fault recognition
- GENERAL DESCRIPTION <Ref. to GD(H4DOTC)-177, DTC P0512 STARTER REQUEST CIRCUIT, Diagnostic Trouble Code (DTC) Detecting Criteria.>

TROUBLE SYMPTOM:

Failure of engine to start

CAUTION:

After servicing or replacing faulty parts, perform Clear Memory Mode <Ref. to EN(H4DOTC)(diag)-53, OPERATION, Clear Memory Mode.>, and Inspection Mode <Ref. to EN(H4DOTC)(diag)-41, PROCEDURE, Inspection Mode.>.

WIRING DIAGRAM:

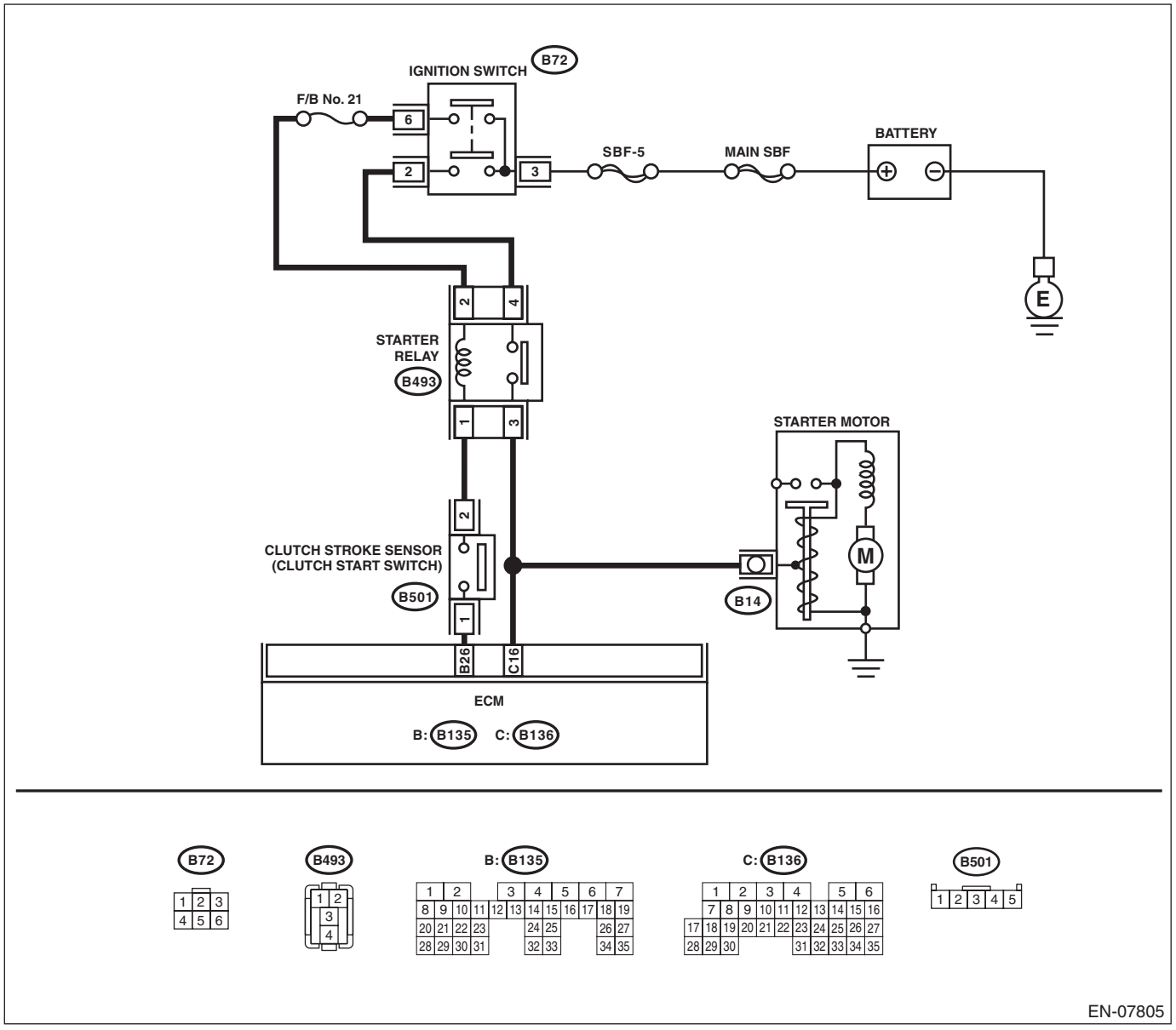

EN-07805

	Step	Check	Yes	No
1	**CHECK FOR ANY OTHER DTC ON DISPLAY.**	Is any other DTC displayed?	Check the appropriate DTC using the “List of Diagnostic Trouble Code (DTC)”. <Ref. to EN(H4DOTC)(diag)-75, List of Diagnostic Trouble Code (DTC).>	Go to step **2**.
2	**CHECK HARNESS BETWEEN ECM AND STARTER RELAY CONNECTOR.** 1) Turn the ignition switch to OFF. 2) Disconnect the connector from ECM. 3) Turn the ignition switch to ON. 4) Measure the voltage between ECM and chassis ground. ***Connector & terminal*** ***(B136) No. 16 (+) — Chassis ground (–):***	Is the voltage 10 V or more?	Repair the short circuit to power supply in harness between ECM and starter relay connector.	Repair the poor contact of ECM connector.

CP:DTC P0604 INTERNAL CONTROL MODULE RANDOM ACCESS MEMORY (RAM) ERROR

DTC DETECTING CONDITION:

- Immediately at fault recognition
- GENERAL DESCRIPTION <Ref. to GD(H4DOTC)-179, DTC P0604 INTERNAL CONTROL MODULE RANDOM ACCESS MEMORY (RAM) ERROR, Diagnostic Trouble Code (DTC) Detecting Criteria.>

TROUBLE SYMPTOM:

- Engine does not start.
- Engine stalls.

CAUTION:

After servicing or replacing faulty parts, perform Clear Memory Mode <Ref. to EN(H4DOTC)(diag)-53, OPERATION, Clear Memory Mode.>, and Inspection Mode <Ref. to EN(H4DOTC)(diag)-41, PROCEDURE, Inspection Mode.>.

Step	Check	Yes	No
1 **CHECK FOR ANY OTHER DTC ON DISPLAY.**	Is any other DTC displayed?	Check the appropriate DTC using the “List of Diagnostic Trouble Code (DTC)”. <Ref. to EN(H4DOTC)(diag)-75, List of Diagnostic Trouble Code (DTC).>	Even if DTC is detected, the circuit has returned to a normal condition at this time. Reproduce the failure, and then perform the diagnosis again. NOTE: In this case, temporary poor contact of connector, temporary open or short circuit of harness may be the cause.

CQ:DTC P0605 INTERNAL CONTROL MODULE READ ONLY MEMORY (ROM) ERROR

NOTE:
For the diagnostic procedure, refer to DTC P0607. <Ref. to EN(H4DOTC)(diag)-230, DTC P0607 THROTTLE CONTROL SYSTEM CIRCUIT RANGE/PERFORMANCE, Diagnostic Procedure with Diagnostic Trouble Code (DTC).>

CR:DTC P0607 THROTTLE CONTROL SYSTEM CIRCUIT RANGE/PERFORMANCE

DTC DETECTING CONDITION:

- Immediately at fault recognition
- GENERAL DESCRIPTION <Ref. to GD(H4DOTC)-181, DTC P0607 THROTTLE CONTROL SYSTEM CIRCUIT RANGE/PERFORMANCE, Diagnostic Trouble Code (DTC) Detecting Criteria.>

TROUBLE SYMPTOM:

- Improper idling
- Poor driving performance

CAUTION:

After servicing or replacing faulty parts, perform Clear Memory Mode <Ref. to EN(H4DOTC)(diag)-53, OPERATION, Clear Memory Mode.>, and Inspection Mode <Ref. to EN(H4DOTC)(diag)-41, PROCEDURE, Inspection Mode.>.

WIRING DIAGRAM:

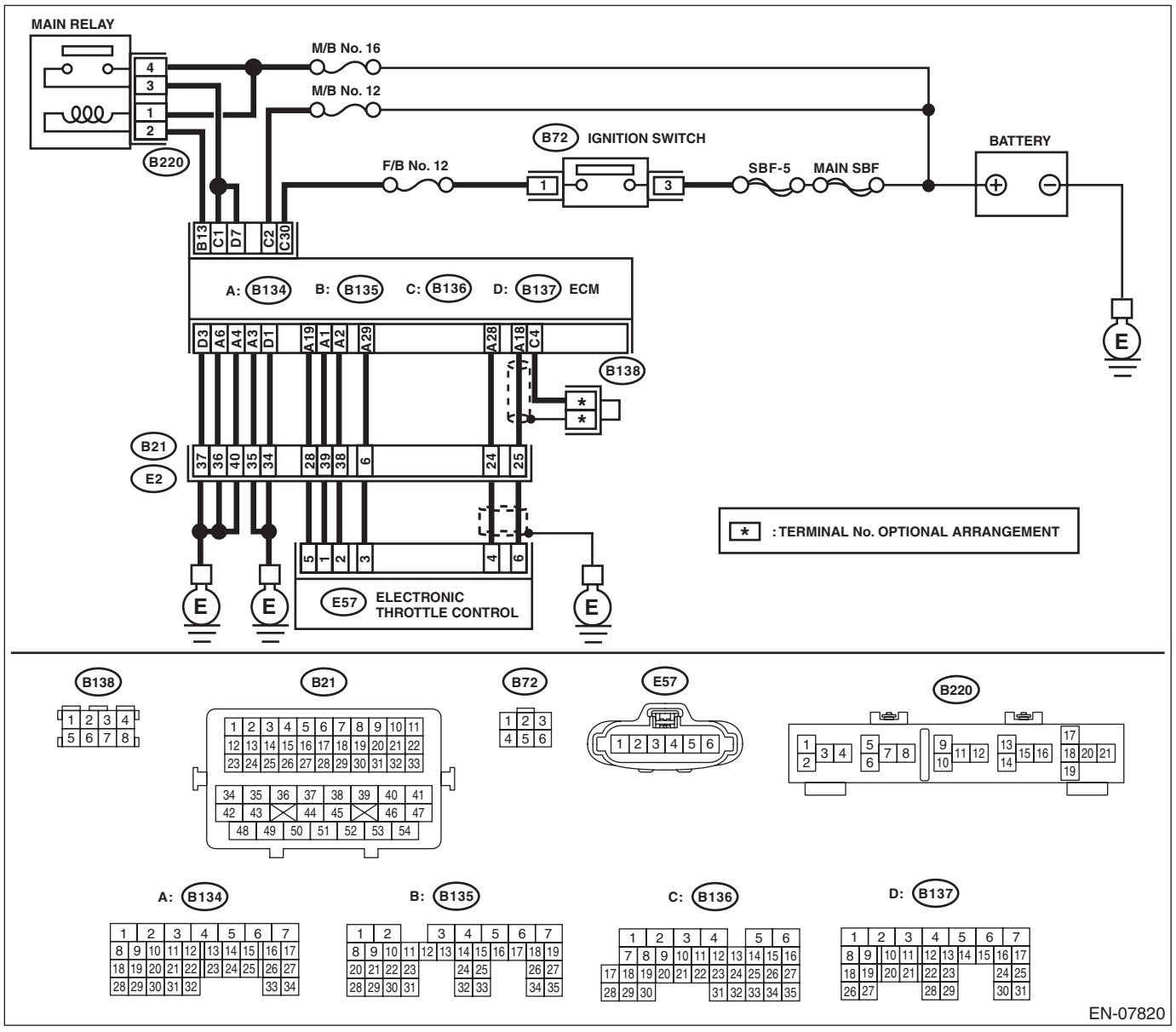

	Step	Check	Yes	No
1	**CHECK INPUT VOLTAGE OF ECM.** 1) Turn the ignition switch to ON. 2) Measure the voltage between ECM and chassis ground. ***Connector & terminal*** ***(B136) No. 1 (+) — Chassis ground (–):*** ***(B137) No. 7 (+) — Chassis ground (–):***	Is the voltage 10 — 13 V?	Go to step **2**.	Repair the open or ground short circuit of power supply circuit.
2	**CHECK INPUT VOLTAGE OF ECM.** 1) Start the engine. 2) Measure the voltage between ECM and chassis ground. ***Connector & terminal*** ***(B136) No. 1 (+) — Chassis ground (–):*** ***(B137) No. 7 (+) — Chassis ground (–):***	Is the voltage 13 — 15 V?	Go to step **3**.	Repair the open or ground short circuit of power supply circuit.
3	**CHECK HARNESS BETWEEN ECM AND ELECTRONIC THROTTLE CONTROL CONNECTOR.** 1) Turn the ignition switch to OFF. 2) Disconnect the connectors from the ECM and electronic throttle control. 3) Measure the resistance of harness between ECM and electronic throttle control connector. ***Connector & terminal*** ***(B134) No. 19 — (E57) No. 5:*** ***(B134) No. 29 — (E57) No. 3:***	Is the resistance less than 1 Ω?	Go to step **4**.	Repair the harness and connector. NOTE: In this case, repair the following item: • Open circuit in harness between ECM and electronic throttle control connector • Poor contact of coupling connector
4	**CHECK ECM GROUND HARNESS.** 1) Connect all connectors. 2) Turn the ignition switch to ON. 3) Measure the voltage between ECM and chassis ground. ***Connector & terminal*** ***(B134) No. 3 (+) — Chassis ground (–):*** ***(B134) No. 4 (+) — Chassis ground (–):*** ***(B134) No. 6 (+) — Chassis ground (–):*** ***(B137) No. 1 (+) — Chassis ground (–):*** ***(B137) No. 3 (+) — Chassis ground (–):***	Is the voltage less than 1 V?	Repair the poor contact of ECM connector.	Repair the harness and connector. NOTE: In this case, repair the following item: • Open circuit in ground circuit • Retightening of engine ground terminals • Poor contact of coupling connector

CS:DTC P0638 THROTTLE ACTUATOR CONTROL RANGE/PERFORMANCE (BANK 1)

NOTE:
For the diagnostic procedure, refer to DTC P2101. <Ref. to EN(H4DOTC)(diag)-303, DTC P2101 THROTTLE ACTUATOR CONTROL MOTOR CIRCUIT RANGE/PERFORMANCE, Diagnostic Procedure with Diagnostic Trouble Code (DTC).>

CT:DTC P0851 NEUTRAL SWITCH INPUT CIRCUIT LOW (MT MODEL)

DTC DETECTING CONDITION:

- Detected when two consecutive driving cycles with fault occur.
- GENERAL DESCRIPTION <Ref. to GD(H4DOTC)-185, DTC P0851 NEUTRAL SWITCH INPUT CIRCUIT LOW (MT MODEL), Diagnostic Trouble Code (DTC) Detecting Criteria.>

TROUBLE SYMPTOM:

Improper idling

CAUTION:

After servicing or replacing faulty parts, perform Clear Memory Mode <Ref. to EN(H4DOTC)(diag)-53, OPERATION, Clear Memory Mode.>, and Inspection Mode <Ref. to EN(H4DOTC)(diag)-41, PROCEDURE, Inspection Mode.>.

WIRING DIAGRAM:

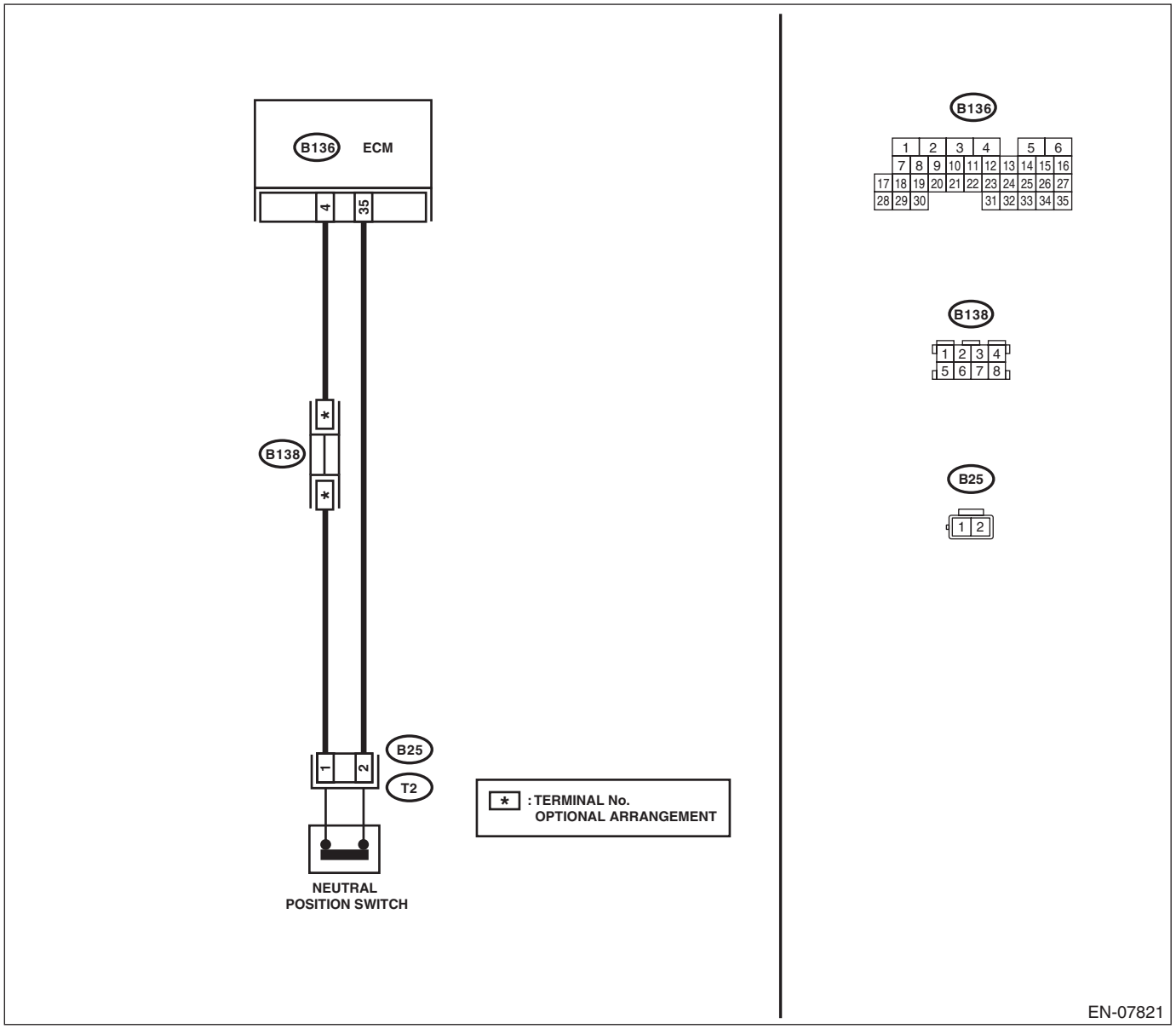

	Step	Check	Yes	No
1	**CHECK INPUT SIGNAL OF ECM.** 1) Turn the ignition switch to ON. 2) Place the shift lever in a position other than neutral. 3) Measure the voltage between ECM and chassis ground. ***Connector & terminal*** ***(B136) No. 35 (+) — Chassis ground (–):***	Is the voltage 10 V or more?	Repair the poor contact of ECM connector.	Go to step **2**.
2	**CHECK HARNESS BETWEEN ECM AND NEUTRAL POSITION SWITCH CONNECTOR.** 1) Turn the ignition switch to OFF. 2) Disconnect the connectors from ECM and neutral position switch. 3) Measure the resistance between ECM and chassis ground. ***Connector & terminal*** ***(B136) No. 35 — Chassis ground:***	Is the resistance 1 MΩ or more?	Replace the neutral position switch. <Ref. to 6MT-37, Switches and Harness.>	Repair the short circuit to ground harness between ECM and neutral position switch connector.

CU:DTC P0852 NEUTRAL SWITCH INPUT CIRCUIT HIGH (MT MODEL)

DTC DETECTING CONDITION:

- Detected when two consecutive driving cycles with fault occur.
- GENERAL DESCRIPTION <Ref. to GD(H4DOTC)-186, DTC P0852 NEUTRAL SWITCH INPUT CIRCUIT HIGH (MT MODEL), Diagnostic Trouble Code (DTC) Detecting Criteria.>

TROUBLE SYMPTOM:

Improper idling

CAUTION:

After servicing or replacing faulty parts, perform Clear Memory Mode <Ref. to EN(H4DOTC)(diag)-53, OPERATION, Clear Memory Mode.>, and Inspection Mode <Ref. to EN(H4DOTC)(diag)-41, PROCEDURE, Inspection Mode.>.

WIRING DIAGRAM:

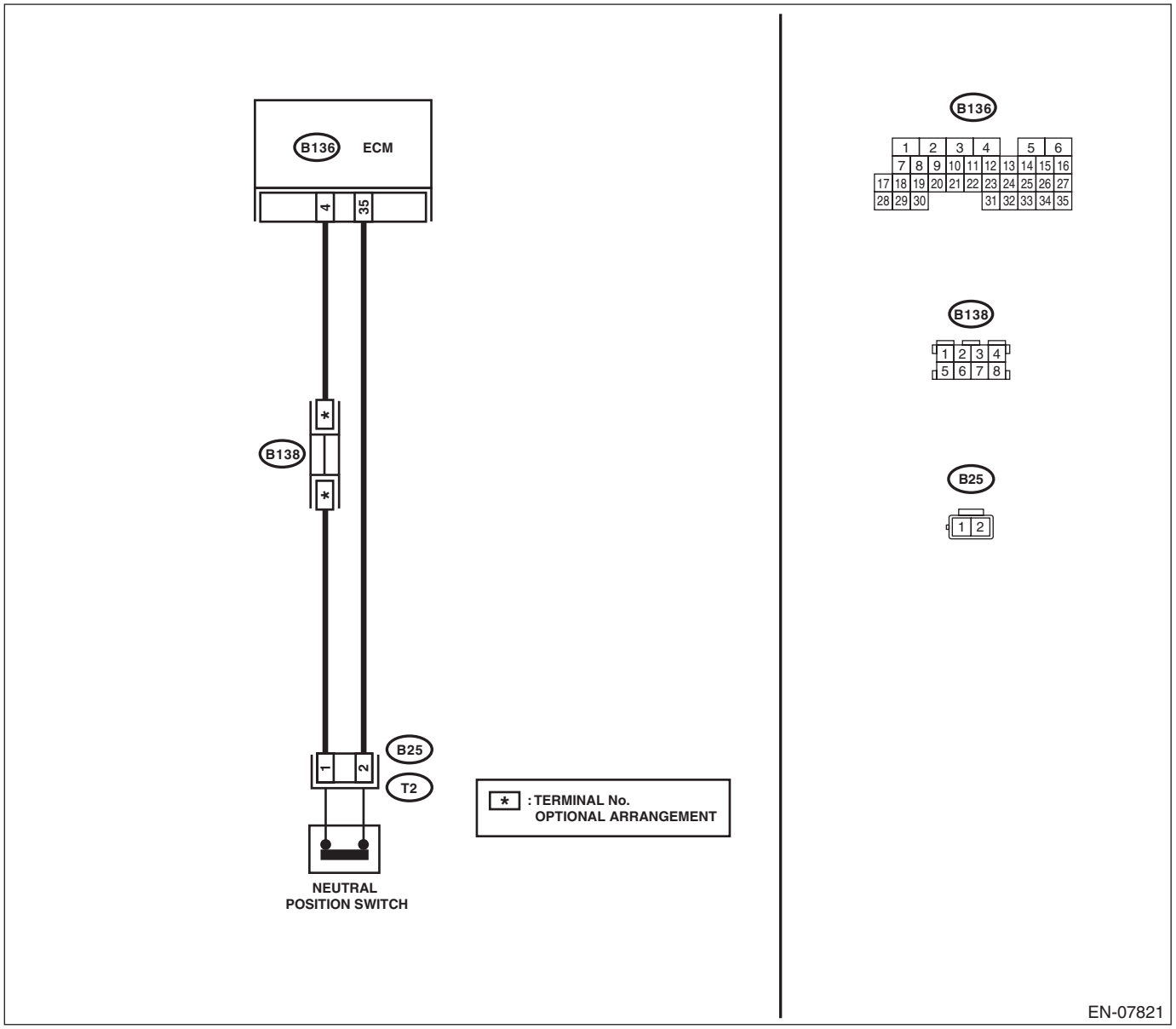

	Step	Check	Yes	No
1	**CHECK INPUT SIGNAL OF ECM.** 1) Turn the ignition switch to ON. 2) Place the shift lever in neutral. 3) Measure the voltage between ECM and chassis ground. ***Connector & terminal*** ***(B136) No. 35 (+) — Chassis ground (–):***	Is the voltage less than 1 V?	Repair the poor contact of ECM connector.	Go to step **2**.
2	**CHECK HARNESS BETWEEN ECM AND NEUTRAL POSITION SWITCH CONNECTOR.** 1) Turn the ignition switch to OFF. 2) Disconnect the connectors from ECM and neutral position switch. 3) Measure the resistance of harness between ECM and neutral position switch connector. ***Connector & terminal*** ***(B136) No. 35 — (B25) No. 2:*** ***(B136) No. 4 — (B25) No. 1:***	Is the resistance less than 1 Ω?	Go to step **3**.	Repair the harness and connector. NOTE: In this case, repair the following item: • Open circuit in harness between ECM and neutral position switch connector • Poor contact of coupling connector
3	**CHECK NEUTRAL POSITION SWITCH.** 1) Place the shift lever in neutral. 2) Measure the resistance between neutral position switch terminals. ***Terminals*** ***No. 1 — No. 2:***	Is the resistance less than 1 Ω?	Repair the poor contact of neutral position switch connector.	Replace the neutral position switch. <Ref. to 6MT-37, Switches and Harness.>

CV:DTC P1152 O2 SENSOR CIRCUIT RANGE/PERFORMANCE (LOW) (BANK1 SENSOR1)

DTC DETECTING CONDITION:

- Detected when two consecutive driving cycles with fault occur.
- GENERAL DESCRIPTION <Ref. to GD(H4DOTC)-187, DTC P1152 O2 SENSOR CIRCUIT RANGE/PERFORMANCE (LOW) (BANK1 SENSOR1), Diagnostic Trouble Code (DTC) Detecting Criteria.>

CAUTION:

After servicing or replacing faulty parts, perform Clear Memory Mode <Ref. to EN(H4DOTC)(diag)-53, OPERATION, Clear Memory Mode.>, and Inspection Mode <Ref. to EN(H4DOTC)(diag)-41, PROCEDURE, Inspection Mode.>.

WIRING DIAGRAM:

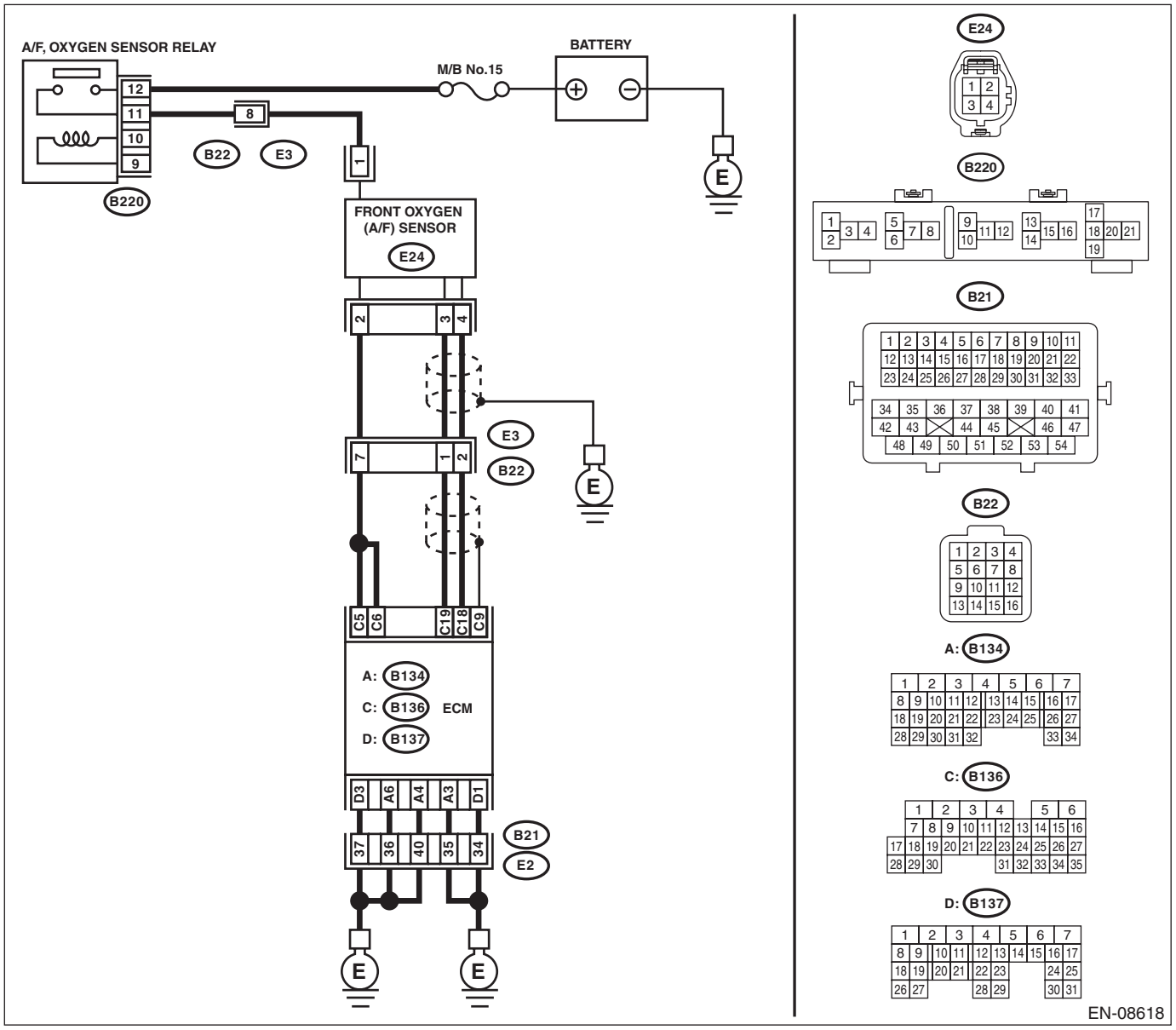

Step		Check	Yes	No
1	**CHECK FRONT OXYGEN (A/F) SENSOR CONNECTOR AND COUPLING CONNECTOR.**	Has water entered the connector?	Completely remove any water inside.	Go to step **2**.

	Step	Check	Yes	No
2	**CHECK HARNESS BETWEEN ECM AND FRONT OXYGEN (A/F) SENSOR CONNECTOR.** 1) Turn the ignition switch to OFF. 2) Disconnect the connectors from ECM and front oxygen (A/F) sensor. 3) Measure the resistance of harness between ECM and front oxygen (A/F) sensor connector. ***Connector & terminal*** ***(B136) No. 19 — (E24) No. 3:*** ***(B136) No. 18 — (E24) No. 4:***	Is the resistance less than 1 Ω?	Go to step **3**.	Repair the harness and connector. NOTE: In this case, repair the following item: • Open circuit in harness between ECM and front oxygen (A/F) sensor connector • Poor contact of coupling connector
3	**CHECK FOR POOR CONTACT.** Check for poor contact of the front oxygen (A/F) sensor connector.	Is there poor contact of front oxygen (A/F) sensor connector?	Repair the poor contact of front oxygen (A/F) sensor connector.	Replace the front oxygen (A/F) sensor. <Ref. to FU(H4DOTC)-54, Front Oxygen (A/F) Sensor.>

CW:DTC P1153 O2 SENSOR CIRCUIT RANGE/PERFORMANCE (HIGH) (BANK1 SENSOR1)

DTC DETECTING CONDITION:

- Detected when two consecutive driving cycles with fault occur.
- GENERAL DESCRIPTION <Ref. to GD(H4DOTC)-189, DTC P1153 O2 SENSOR CIRCUIT RANGE/PERFORMANCE (HIGH) (BANK1 SENSOR1), Diagnostic Trouble Code (DTC) Detecting Criteria.>

CAUTION:

After servicing or replacing faulty parts, perform Clear Memory Mode <Ref. to EN(H4DOTC)(diag)-53, OPERATION, Clear Memory Mode.>, and Inspection Mode <Ref. to EN(H4DOTC)(diag)-41, PROCEDURE, Inspection Mode.>.

WIRING DIAGRAM:

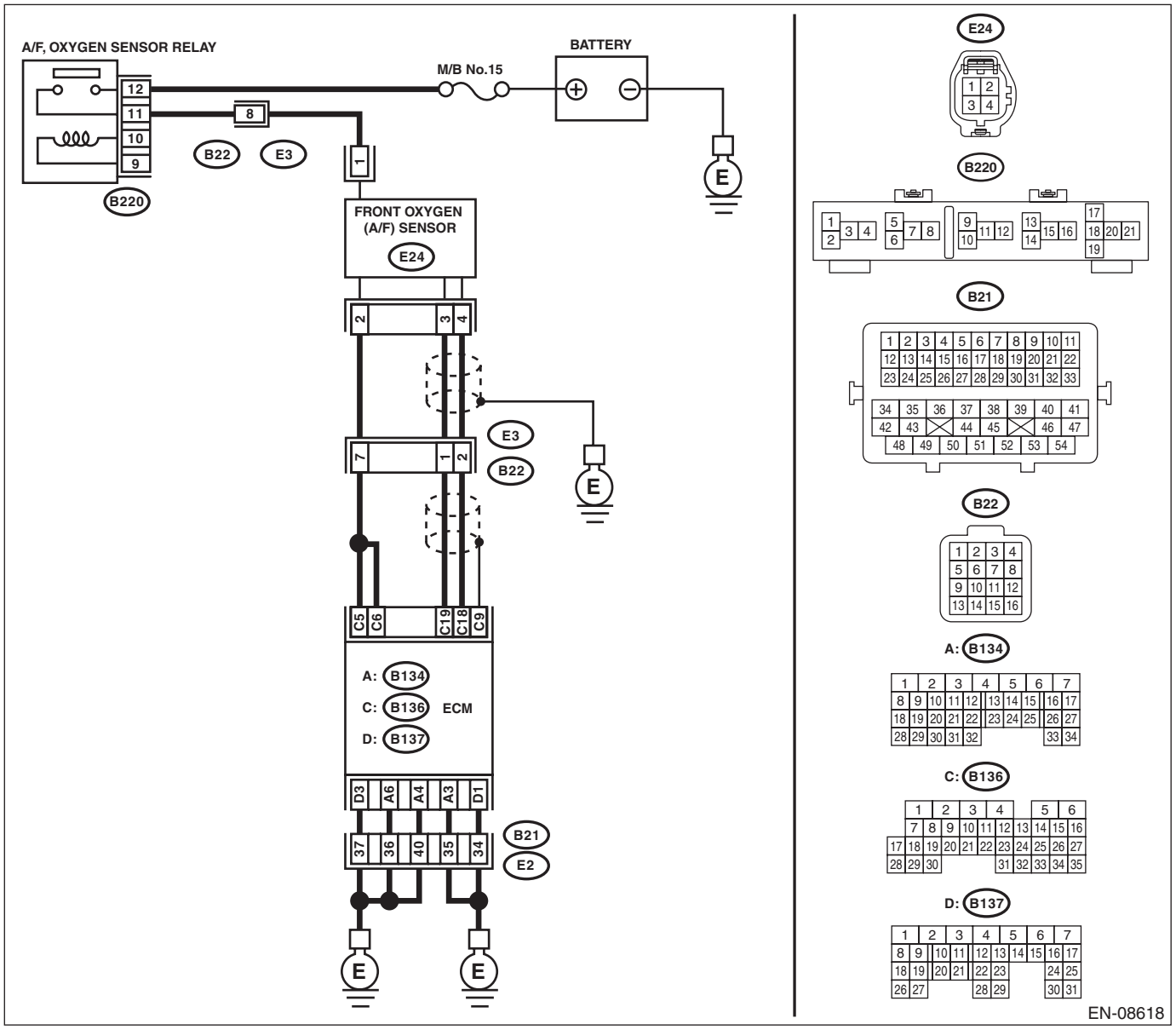

EN-08618

Step		Check	Yes	No
1	**CHECK FRONT OXYGEN (A/F) SENSOR CONNECTOR AND COUPLING CONNECTOR.**	Has water entered the connector?	Completely remove any water inside.	Go to step **2**.

	Step	Check	Yes	No
2	**CHECK HARNESS BETWEEN ECM AND FRONT OXYGEN (A/F) SENSOR CONNECTOR.** 1) Turn the ignition switch to OFF. 2) Disconnect the connector from ECM. 3) Measure the resistance between ECM and chassis ground. ***Connector & terminal*** ***(B136) No. 19 — Chassis ground:*** ***(B136) No. 18 — Chassis ground:***	Is the resistance 1 MΩ or more?	Go to step **3**.	Repair the ground short circuit of harness between ECM and front oxygen (A/F) sensor connector.
3	**CHECK OUTPUT SIGNAL FOR ECM.** 1) Connect the connector to ECM. 2) Turn the ignition switch to ON. 3) Measure the voltage between ECM and chassis ground. ***Connector & terminal*** ***(B136) No. 19 (+) — Chassis ground (–):***	Is the voltage 4.5 V or more?	Go to step **5**.	Go to step **4**.
4	**CHECK OUTPUT SIGNAL FOR ECM.** Measure the voltage between ECM and chassis ground. ***Connector & terminal*** ***(B136) No. 18 (+) — Chassis ground (–):***	Is the voltage 4.95 V or more?	Go to step **5**.	Replace the front oxygen (A/F) sensor. <Ref. to FU(H4DOTC)-54, Front Oxygen (A/F) Sensor.>
5	**CHECK OUTPUT SIGNAL FOR ECM.** Measure the voltage between ECM and chassis ground. ***Connector & terminal*** ***(B136) No. 19 (+) — Chassis ground (–):*** ***(B136) No. 18 (+) — Chassis ground (–):***	Is the voltage 8 V or more?	Repair the short circuit to power in the harness between ECM and front oxygen (A/F) sensor connector. After repair, replace the ECM. <Ref. to FU(H4DOTC)-58, Engine Control Module (ECM).>	Repair the poor contact of ECM connector.

CX:DTC P1160 RETURN SPRING FAILURE

NOTE:
For the diagnostic procedure, refer to DTC P2101. <Ref. to EN(H4DOTC)(diag)-303, DTC P2101 THROTTLE ACTUATOR CONTROL MOTOR CIRCUIT RANGE/PERFORMANCE, Diagnostic Procedure with Diagnostic Trouble Code (DTC).>

CY:DTC P1400 FUEL TANK PRESSURE CONTROL SOLENOID VALVE CIRCUIT LOW

DTC DETECTING CONDITION:

- Detected when two consecutive driving cycles with fault occur.
- GENERAL DESCRIPTION <Ref. to GD(H4DOTC)-193, DTC P1400 FUEL TANK PRESSURE CONTROL SOLENOID VALVE CIRCUIT LOW, Diagnostic Trouble Code (DTC) Detecting Criteria.>

CAUTION:

After servicing or replacing faulty parts, perform Clear Memory Mode <Ref. to EN(H4DOTC)(diag)-53, OPERATION, Clear Memory Mode.>, and Inspection Mode <Ref. to EN(H4DOTC)(diag)-41, PROCEDURE, Inspection Mode.>.

WIRING DIAGRAM:

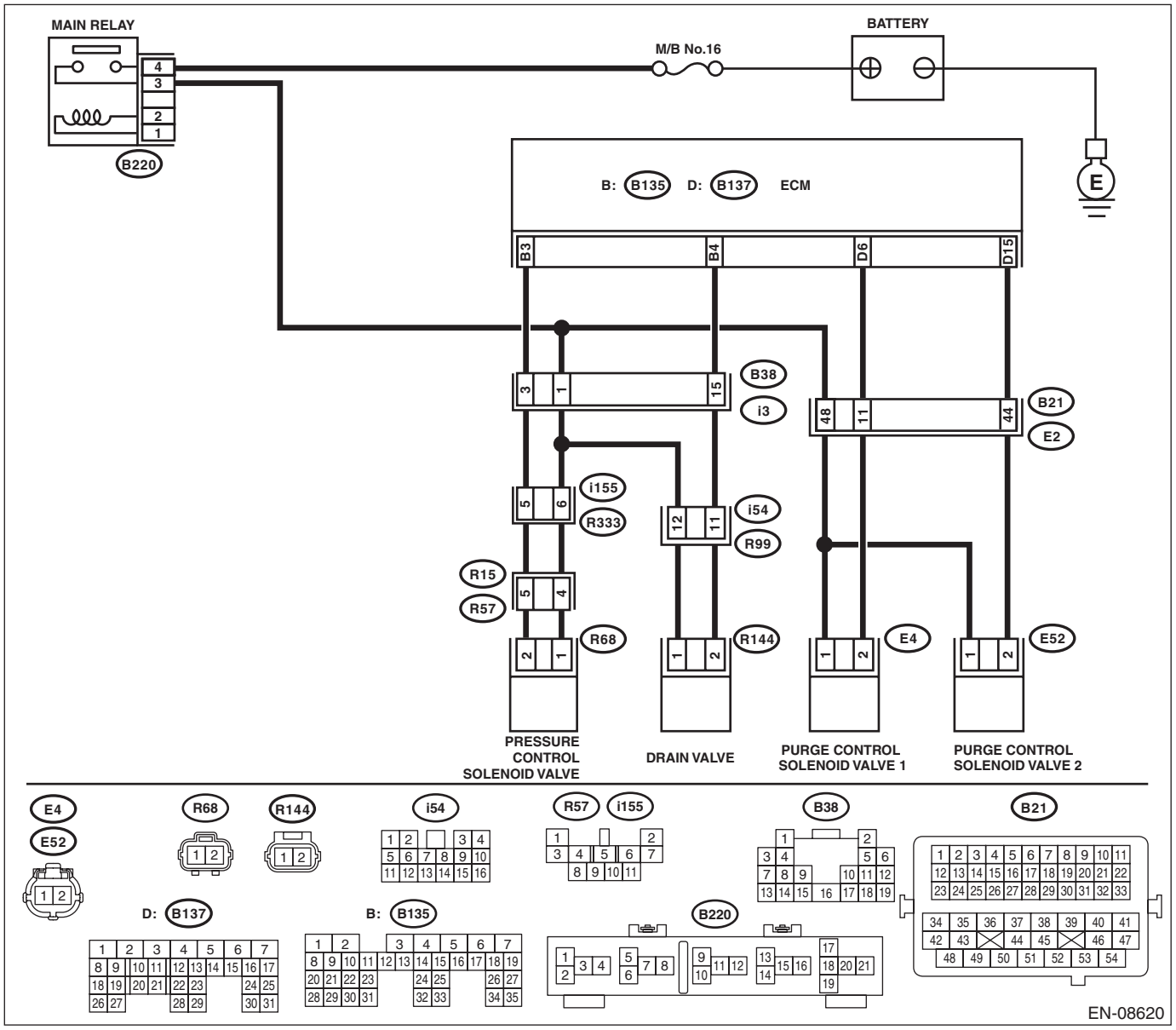

	Step	Check	Yes	No
1	**CHECK OUTPUT SIGNAL OF ECM.** 1) Turn the ignition switch to ON. 2) Measure the voltage between ECM and chassis ground. ***Connector & terminal*** ***(B135) No. 3 (+) — Chassis ground (–):***	Is the voltage 10 V or more?	Go to step **2**.	Go to step **3**.
2	**CHECK FOR POOR CONTACT.** Check for poor contact of ECM connector.	Is there poor contact of ECM connector?	Repair the poor contact of ECM connector.	Even if DTC is detected, the circuit has returned to a normal condition at this time. Reproduce the failure, and then perform the diagnosis again. NOTE: In this case, temporary open or short circuit of harness or temporary poor contact of connector may be the cause.
3	**CHECK POWER SUPPLY TO THE PRESSURE CONTROL SOLENOID VALVE.** Measure the voltage between pressure control solenoid valve and chassis ground. ***Connector & terminal*** ***(R68) No. 1 (+) — Chassis ground (–):***	Is the voltage 10 V or more?	Go to step **4**.	Repair the power supply circuit.
4	**CHECK HARNESS BETWEEN ECM AND PRESSURE CONTROL SOLENOID VALVE CONNECTOR.** 1) Turn the ignition switch to OFF. 2) Disconnect the connector from the ECM and pressure control solenoid valve. 3) Measure the resistance between pressure control solenoid valve and chassis ground. ***Connector & terminal*** ***(R68) No. 2 — Chassis ground:***	Is the resistance 1 MΩ or more?	Go to step **5**.	Repair the ground short circuit of harness between ECM and pressure control solenoid valve connector.
5	**CHECK HARNESS BETWEEN ECM AND PRESSURE CONTROL SOLENOID VALVE CONNECTOR.** Measure the resistance of harness between ECM and pressure control solenoid valve connector. ***Connector & terminal*** ***(B135) No. 3 — (R68) No. 2:***	Is the resistance less than 1 Ω?	Go to step **6**.	Repair the harness and connector. NOTE: In this case, repair the following item: • Open circuit in harness between ECM and pressure control solenoid valve connector • Poor contact of coupling connector
6	**CHECK PRESSURE CONTROL SOLENOID VALVE.** Measure the resistance between pressure control solenoid valve terminals. ***Terminals*** ***No. 1 — No. 2:***	Is the resistance 10 — 100 Ω?	Repair the poor contact of pressure control solenoid valve connector.	Replace the pressure control solenoid valve. <Ref. to EC(H4DOTC)-19, Pressure Control Solenoid Valve Assembly.>

CZ:DTC P1420 FUEL TANK PRESSURE CONTROL SOL. VALVE CIRCUIT HIGH

DTC DETECTING CONDITION:

- Detected when two consecutive driving cycles with fault occur.
- GENERAL DESCRIPTION <Ref. to GD(H4DOTC)-195, DTC P1420 FUEL TANK PRESSURE CONTROL SOL. VALVE CIRCUIT HIGH, Diagnostic Trouble Code (DTC) Detecting Criteria.>

CAUTION:

After servicing or replacing faulty parts, perform Clear Memory Mode <Ref. to EN(H4DOTC)(diag)-53, OPERATION, Clear Memory Mode.>, and Inspection Mode <Ref. to EN(H4DOTC)(diag)-41, PROCEDURE, Inspection Mode.>.

WIRING DIAGRAM:

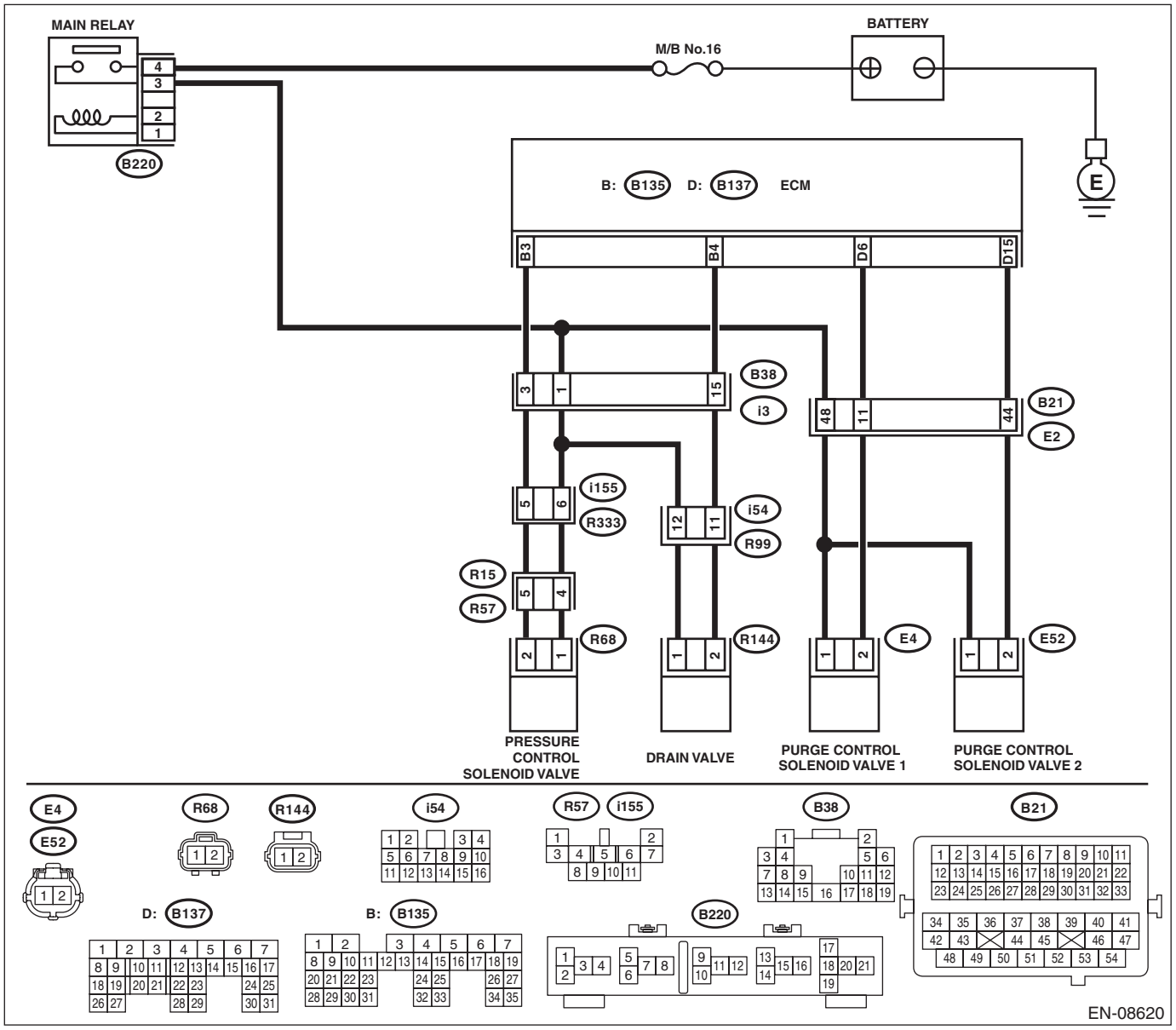

	Step	Check	Yes	No
1	**CHECK HARNESS BETWEEN ECM AND PRESSURE CONTROL SOLENOID VALVE CONNECTOR.** 1) Turn the ignition switch to OFF. 2) Disconnect the connector from the ECM and pressure control solenoid valve. 3) Turn the ignition switch to ON. 4) Measure the voltage between ECM and chassis ground. ***Connector & terminal*** ***(B135) No. 3 (+) — Chassis ground (–):***	Is the voltage 10 V or more?	Repair the short circuit to power in the harness between ECM and pressure control solenoid valve connector.	Go to step **2**.
2	**CHECK PRESSURE CONTROL SOLENOID VALVE.** 1) Turn the ignition switch to OFF. 2) Measure the resistance between pressure control solenoid valve terminals. ***Terminals*** ***No. 1 — No. 2:***	Is the resistance less than 1 Ω?	Replace the pressure control solenoid valve. <Ref. to EC(H4DOTC)-19, Pressure Control Solenoid Valve Assembly.>	Repair the poor contact of ECM connector.

DA:DTC P1443 VENT CONTROL SOLENOID VALVE FUNCTION PROBLEM

DTC DETECTING CONDITION:

- Immediately at fault recognition
- GENERAL DESCRIPTION <Ref. to GD(H4DOTC)-197, DTC P1443 VENT CONTROL SOLENOID VALVE FUNCTION PROBLEM, Diagnostic Trouble Code (DTC) Detecting Criteria.>

TROUBLE SYMPTOM:

Improper fuel supply

CAUTION:

After servicing or replacing faulty parts, perform Clear Memory Mode <Ref. to EN(H4DOTC)(diag)-53, OPERATION, Clear Memory Mode.>, and Inspection Mode <Ref. to EN(H4DOTC)(diag)-41, PROCEDURE, Inspection Mode.>.

	Step	Check	Yes	No
1	**CHECK FOR ANY OTHER DTC ON DISPLAY.**	Is any other DTC displayed?	Check the appropriate DTC using the "List of Diagnostic Trouble Code (DTC)". <Ref. to EN(H4DOTC)(diag)-75, List of Diagnostic Trouble Code (DTC).>	Go to step **2**.
2	**CHECK DRAIN HOSE.** Check the drain hose for clogging.	Is there clogging in the drain hose?	Replace the drain hose.	Go to step **3**.
3	**CHECK DRAIN VALVE OPERATION.** 1) Turn the ignition switch to OFF. 2) Install the delivery (test) mode fuse. **CAUTION:** **Do not use any fuses that are installed on the vehicle.** 3) Turn the ignition switch to ON. 4) Perform operation check for the drain valve using the Subaru Select Monitor. NOTE: Drain valve can be operated using the Subaru Select Monitor. For detailed procedures, refer to "SYSTEM OPERATION CHECK MODE". <Ref. to EN(H4DOTC)(diag)-54, System Operation Check Mode.>	Does the drain valve operate?	Repair the poor contact of ECM connector.	Replace the drain valve. <Ref. to EC(H4DOTC)-22, Drain Valve.>

DB:DTC P1458 CANISTER PURGE CONTROL SOLENOID VALVE 2

DTC DETECTING CONDITION:

- Detected when two consecutive driving cycles with fault occur.
- GENERAL DESCRIPTION <Ref. to GD(H4DOTC)-199, DTC P1458 CANISTER PURGE CONTROL SOLENOID VALVE 2, Diagnostic Trouble Code (DTC) Detecting Criteria.>

TROUBLE SYMPTOM:

Improper idling

CAUTION:

After servicing or replacing faulty parts, perform Clear Memory Mode <Ref. to EN(H4DOTC)(diag)-53, OPERATION, Clear Memory Mode.>, and Inspection Mode <Ref. to EN(H4DOTC)(diag)-41, PROCEDURE, Inspection Mode.>.

WIRING DIAGRAM:

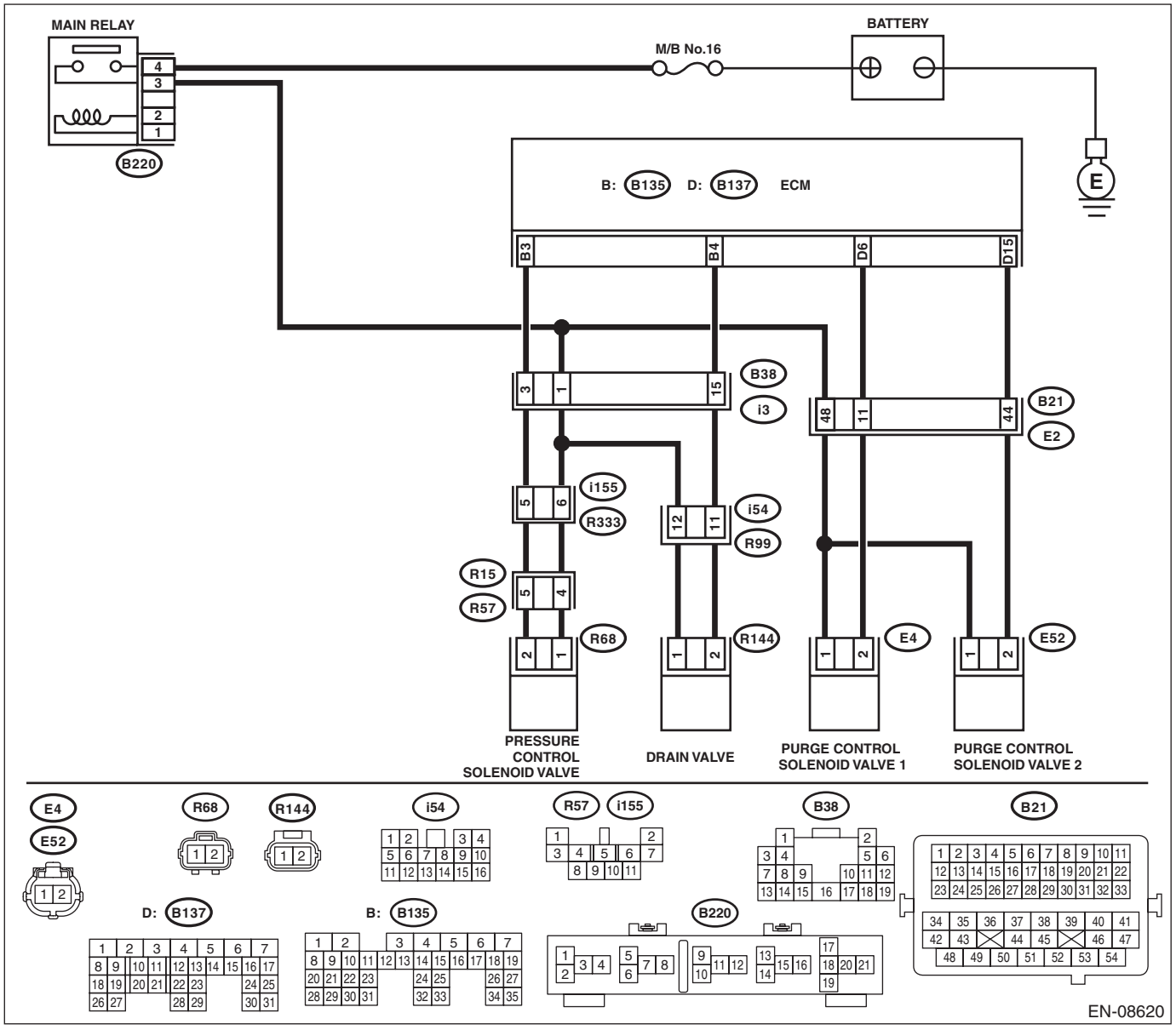

	Step	Check	Yes	No
1	**CHECK OUTPUT SIGNAL OF ECM.** 1) Turn the ignition switch to ON. 2) Measure the voltage between ECM and chassis ground. ***Connector & terminal*** ***(B137) No. 15 (+) — Chassis ground (–):***	Is the voltage 10 V or more?	Go to step **2**.	Go to step **3**.
2	**CHECK FOR POOR CONTACT.** Check for poor contact of ECM connector.	Is there poor contact of ECM connector?	Repair the poor contact of ECM connector.	Even if DTC is detected, the circuit has returned to a normal condition at this time. Reproduce the failure, and then perform the diagnosis again. NOTE: In this case, temporary open or short circuit of harness or temporary poor contact of connector may be the cause.
3	**CHECK POWER SUPPLY TO PURGE CONTROL SOLENOID VALVE 2.** Measure the voltage between purge control solenoid valve 2 connector and engine ground. ***Connector & terminal*** ***(E52) No. 1 (+) — Engine ground (–):***	Is the voltage 10 V or more?	Go to step **4**.	Repair the power supply circuit.
4	**CHECK HARNESS BETWEEN ECM AND PURGE CONTROL SOLENOID VALVE 2 CONNECTOR.** 1) Turn the ignition switch to OFF. 2) Disconnect the connectors from ECM and purge control solenoid valve 2. 3) Measure the resistance between the purge control solenoid valve 2 connector and engine ground. ***Connector & terminal*** ***(E52) No. 2 — Engine ground:***	Is the resistance 1 MΩ or more?	Go to step **5**.	Repair the ground short circuit of harness between ECM and purge control solenoid valve 2 connector.
5	**CHECK HARNESS BETWEEN ECM AND PURGE CONTROL SOLENOID VALVE 2 CONNECTOR.** Measure the resistance of harness between ECM and purge control solenoid valve 2 connector. ***Connector & terminal*** ***(B137) No. 15 — (E52) No. 2:***	Is the resistance less than 1 Ω?	Go to step **6**.	Repair the harness and connector. NOTE: In this case, repair the following item: • Open circuit of harness between ECM and purge control solenoid valve 2 connector • Poor contact of coupling connector
6	**CHECK PURGE CONTROL SOLENOID VALVE 2.** 1) Remove the purge control solenoid valve 2. 2) Measure the resistance between purge control solenoid valve 2 terminals. ***Terminals*** ***No. 1 — No. 2:***	Is the resistance 10 — 100 Ω?	Repair the poor contact of the purge control solenoid valve 2 connector.	Replace the purge control solenoid valve 2. <Ref. to EC(H4DOTC)-9, Purge Control Solenoid Valve.>

DC:DTC P1459 CANISTER PURGE CONTROL SOLENOID VALVE 2

DTC DETECTING CONDITION:

- Detected when two consecutive driving cycles with fault occur.
- GENERAL DESCRIPTION <Ref. to GD(H4DOTC)-200, DTC P1459 CANISTER PURGE CONTROL SOLENOID VALVE 2, Diagnostic Trouble Code (DTC) Detecting Criteria.>

TROUBLE SYMPTOM:

Improper idling

CAUTION:

After servicing or replacing faulty parts, perform Clear Memory Mode <Ref. to EN(H4DOTC)(diag)-53, OPERATION, Clear Memory Mode.>, and Inspection Mode <Ref. to EN(H4DOTC)(diag)-41, PROCEDURE, Inspection Mode.>.

WIRING DIAGRAM:

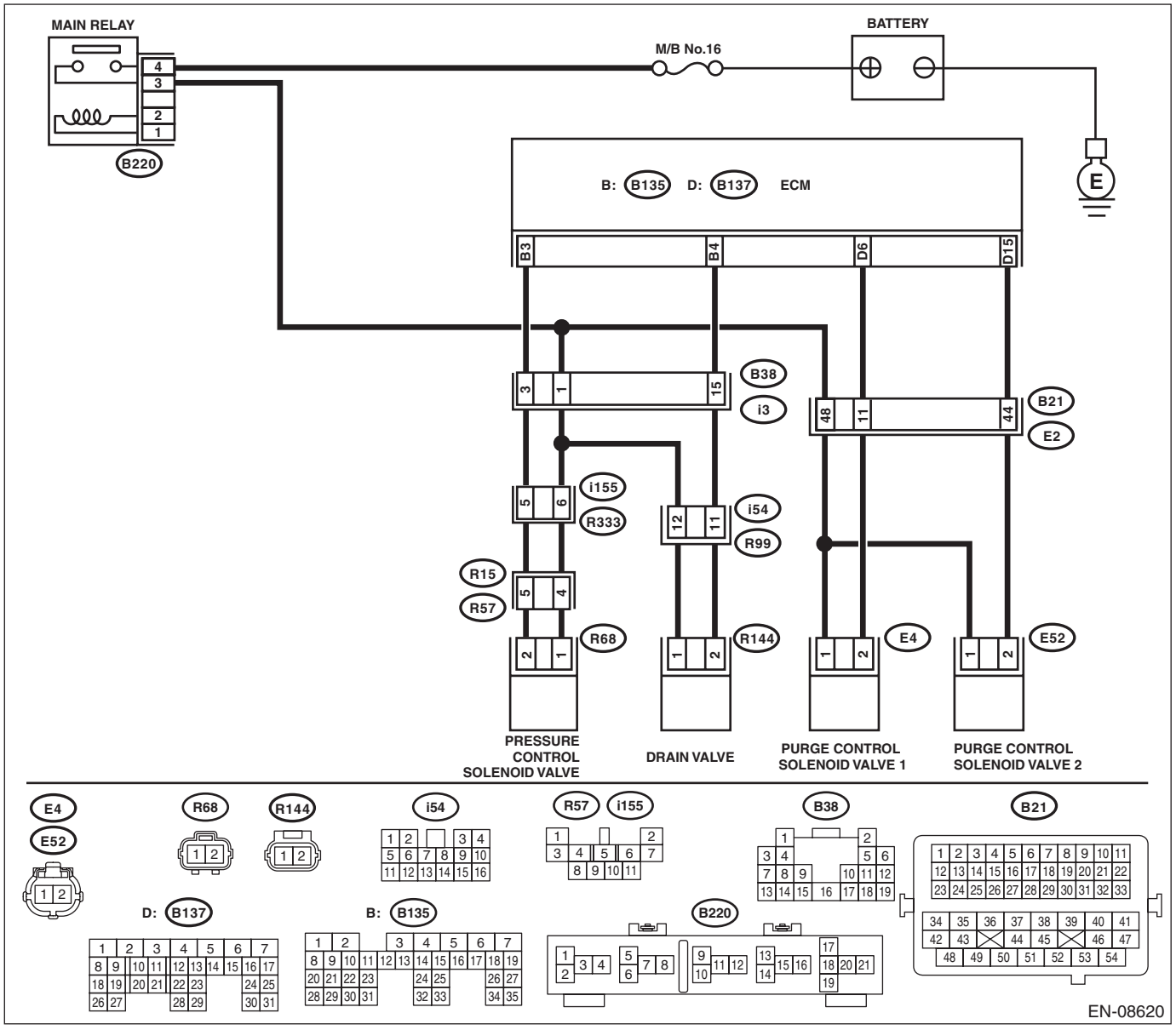

	Step	Check	Yes	No
1	**CHECK HARNESS BETWEEN ECM AND PURGE CONTROL SOLENOID VALVE 2 CONNECTOR.** 1) Turn the ignition switch to OFF. 2) Disconnect the connectors from ECM and purge control solenoid valve 2. 3) Turn the ignition switch to ON. 4) Measure the voltage between ECM and chassis ground. ***Connector & terminal*** ***(B137) No. 15 (+) — Chassis ground (–):***	Is the voltage 10 V or more?	Repair the short to power in the harness between ECM and purge control solenoid valve 2 connector.	Go to step **2**.
2	**CHECK PURGE CONTROL SOLENOID VALVE 2.** 1) Turn the ignition switch to OFF. 2) Measure the resistance between purge control solenoid valve 2 terminals. ***Terminals*** ***No. 1 — No. 2:***	Is the resistance less than 1 Ω?	Replace the purge control solenoid valve 2. <Ref. to EC(H4DOTC)-9, Purge Control Solenoid Valve.>	Repair the poor contact of ECM connector.

DD:DTC P1518 STARTER SWITCH CIRCUIT LOW INPUT

DTC DETECTING CONDITION:

- Immediately at fault recognition
- GENERAL DESCRIPTION <Ref. to GD(H4DOTC)-201, DTC P1518 STARTER SWITCH CIRCUIT LOW INPUT, Diagnostic Trouble Code (DTC) Detecting Criteria.>

TROUBLE SYMPTOM:

Failure of engine to start

CAUTION:

After servicing or replacing faulty parts, perform Clear Memory Mode <Ref. to EN(H4DOTC)(diag)-53, OPERATION, Clear Memory Mode.>, and Inspection Mode <Ref. to EN(H4DOTC)(diag)-41, PROCEDURE, Inspection Mode.>.

WIRING DIAGRAM:

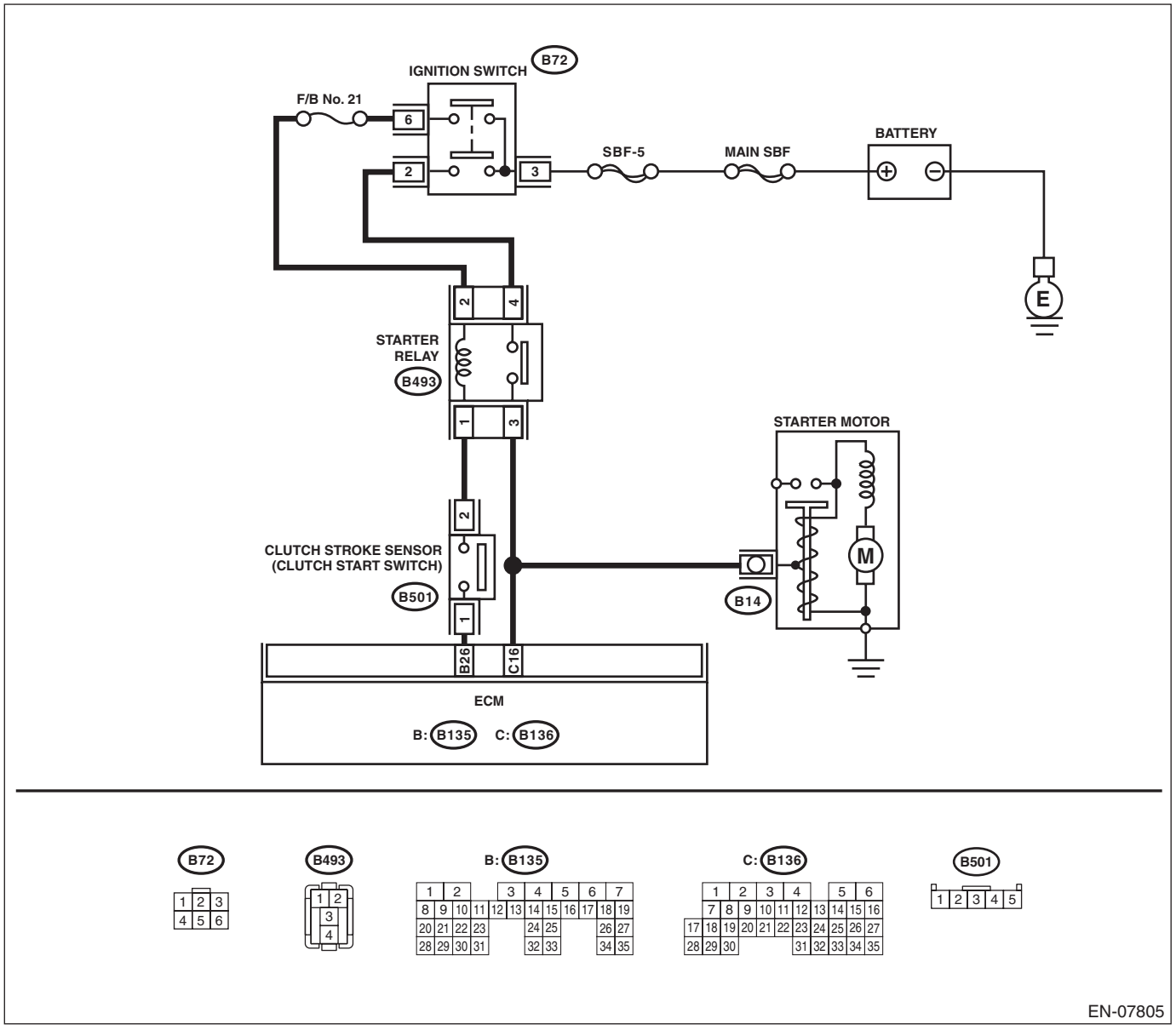

EN-07805

	Step	Check	Yes	No
1	**CHECK FOR ANY OTHER DTC ON DISPLAY.**	Is any other DTC displayed?	Check DTC using "List of Diagnostic Trouble Code (DTC)". <Ref. to EN(H4DOTC)(diag)-75, List of Diagnostic Trouble Code (DTC).>	Go to step **2**.
2	**CHECK HARNESS BETWEEN ECM AND STARTER RELAY CONNECTOR.** 1) Turn the ignition to OFF. 2) Disconnect the connectors from ECM and starter motor. 3) Remove the starter relay. 4) Measure the resistance of harness between ECM and starter relay connector. ***Connector & terminal*** ***(B136) No. 16 — (B493) No. 3:***	Is the resistance less than 1 Ω?	Go to step **3**.	Repair the open circuit of harness between ECM and starter relay connector.
3	**CHECK HARNESS BETWEEN ECM AND STARTER RELAY CONNECTOR.** Measure the resistance between ECM and chassis ground. ***Connector & terminal*** ***(B136) No. 16 — Chassis ground:***	Is the resistance 1 MΩ or more?	Repair the poor contact of ECM connector.	Repair the short circuit to ground in harness between ECM and starter relay connector.

DE:DTC P1560 BACK-UP VOLTAGE CIRCUIT MALFUNCTION

DTC DETECTING CONDITION:

- Immediately at fault recognition
- GENERAL DESCRIPTION <Ref. to GD(H4DOTC)-202, DTC P1560 BACK-UP VOLTAGE CIRCUIT MALFUNCTION, Diagnostic Trouble Code (DTC) Detecting Criteria.>

CAUTION:
After servicing or replacing faulty parts, perform Clear Memory Mode <Ref. to EN(H4DOTC)(diag)-53, OPERATION, Clear Memory Mode.>, and Inspection Mode <Ref. to EN(H4DOTC)(diag)-41, PROCEDURE, Inspection Mode.>.
WIRING DIAGRAM:

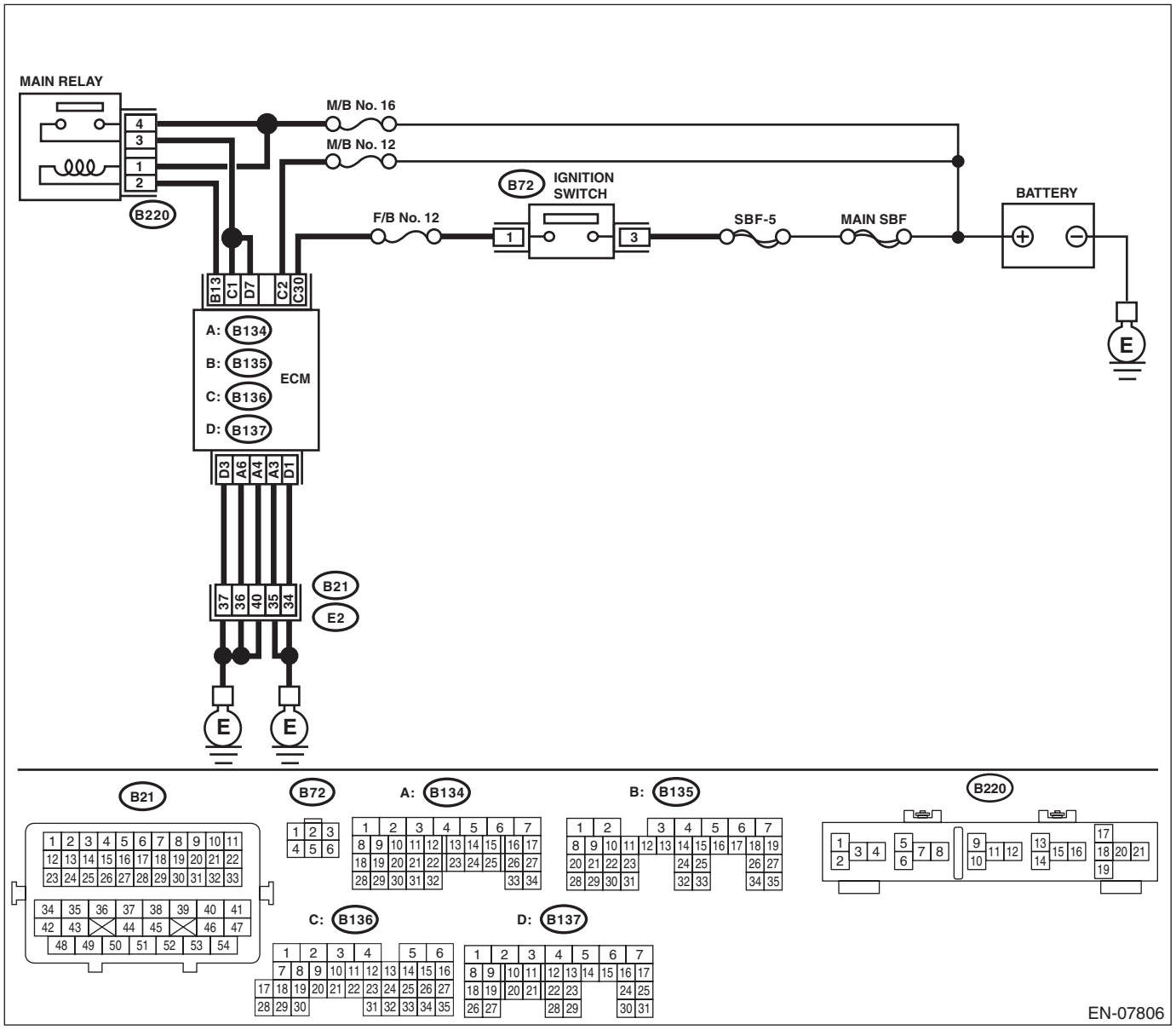

Step		Check	Yes	No
1	**CHECK INPUT SIGNAL OF ECM.** 1) Turn the ignition switch to OFF. 2) Measure the voltage between ECM and chassis ground. ***Connector & terminal*** ***(B136) No. 2 (+) — Chassis ground (–):***	Is the voltage 10 V or more?	Repair the poor contact of ECM connector.	Go to step **2**.

	Step	Check	Yes	No
2	**CHECK HARNESS BETWEEN ECM AND MAIN FUSE BOX CONNECTOR.** 1) Disconnect the connector from ECM. 2) Measure the resistance between ECM and chassis ground. ***Connector & terminal*** ***(B136) No. 2 — Chassis ground:***	Is the resistance 1 MΩ or more?	Go to step **3**.	Repair the ground short circuit of harness between ECM and battery terminal.
3	**CHECK M/B FUSE NO. 12.**	Is the fuse blown out?	Replace the fuse.	Repair the harness and connector. NOTE: In this case, repair the following item: • Open circuit in harness between ECM and battery • Poor contact of ECM connector • Poor contact of battery terminal

DF:DTC P2004 INTAKE MANIFOLD RUNNER CONTROL STUCK OPEN (BANK 1)

DTC DETECTING CONDITION:

- Immediately at fault recognition
- GENERAL DESCRIPTION <Ref. to GD(H4DOTC)-204, DTC P2004 INTAKE MANIFOLD RUNNER CONTROL STUCK OPEN (BANK 1), Diagnostic Trouble Code (DTC) Detecting Criteria.>

CAUTION:
After servicing or replacing faulty parts, perform Clear Memory Mode <Ref. to EN(H4DOTC)(diag)-53, OPERATION, Clear Memory Mode.>, and Inspection Mode <Ref. to EN(H4DOTC)(diag)-41, PROCEDURE, Inspection Mode.>.

	Step	Check	Yes	No
1	**CHECK FOR ANY OTHER DTC ON DISPLAY.**	Is any other DTC displayed?	Check the appropriate DTC using the "List of Diagnostic Trouble Code (DTC)". <Ref. to EN(H4DOTC)(diag)-75, List of Diagnostic Trouble Code (DTC).>	Go to step **2**.
2	**CHECK TUMBLE GENERATOR VALVE RH.** 1) Remove the tumble generator valve assembly RH. 2) Check the tumble generator valve body.	Is there any dirt or clogging with foreign objects in the tumble generator valve?	Clean the tumble generator valve.	Replace the tumble generator valve assembly RH. <Ref. to FU(H4DOTC)-48, Tumble Generator Valve Assembly.>

DG:DTC P2005 INTAKE MANIFOLD RUNNER CONTROL STUCK OPEN (BANK 2)

DTC DETECTING CONDITION:

- Immediately at fault recognition
- GENERAL DESCRIPTION <Ref. to GD(H4DOTC)-205, DTC P2005 INTAKE MANIFOLD RUNNER CONTROL STUCK OPEN (BANK 2), Diagnostic Trouble Code (DTC) Detecting Criteria.>

CAUTION:
After servicing or replacing faulty parts, perform Clear Memory Mode <Ref. to EN(H4DOTC)(diag)-53, OPERATION, Clear Memory Mode.>, and Inspection Mode <Ref. to EN(H4DOTC)(diag)-41, PROCEDURE, Inspection Mode.>.

	Step	Check	Yes	No
1	**CHECK FOR ANY OTHER DTC ON DISPLAY.**	Is any other DTC displayed?	Check the appropriate DTC using the “List of Diagnostic Trouble Code (DTC)”. <Ref. to EN(H4DOTC)(diag)-75, List of Diagnostic Trouble Code (DTC).>	Go to step **2**.
2	**CHECK TUMBLE GENERATOR VALVE LH.** 1) Remove the tumble generator valve assembly LH. 2) Check the tumble generator valve body.	Is there any dirt or clogging with foreign objects in the tumble generator valve?	Clean the tumble generator valve.	Replace the tumble generator valve assembly LH. <Ref. to FU(H4DOTC)-48, Tumble Generator Valve Assembly.>

DH:DTC P2006 INTAKE MANIFOLD RUNNER CONTROL STUCK CLOSED (BANK 1)

DTC DETECTING CONDITION:

- Immediately at fault recognition
- GENERAL DESCRIPTION <Ref. to GD(H4DOTC)-206, DTC P2006 INTAKE MANIFOLD RUNNER CONTROL STUCK CLOSED (BANK 1), Diagnostic Trouble Code (DTC) Detecting Criteria.>

CAUTION:
After servicing or replacing faulty parts, perform Clear Memory Mode <Ref. to EN(H4DOTC)(diag)-53, OPERATION, Clear Memory Mode.>, and Inspection Mode <Ref. to EN(H4DOTC)(diag)-41, PROCEDURE, Inspection Mode.>.

	Step	Check	Yes	No
1	**CHECK FOR ANY OTHER DTC ON DISPLAY.**	Is any other DTC displayed?	Check the appropriate DTC using the "List of Diagnostic Trouble Code (DTC)". <Ref. to EN(H4DOTC)(diag)-75, List of Diagnostic Trouble Code (DTC).>	Go to step **2**.
2	**CHECK TUMBLE GENERATOR VALVE RH.** 1) Remove the tumble generator valve assembly RH. 2) Check the tumble generator valve body.	Is there any dirt or clogging with foreign objects in the tumble generator valve?	Clean the tumble generator valve.	Replace the tumble generator valve assembly RH. <Ref. to FU(H4DOTC)-48, Tumble Generator Valve Assembly.>

DI: DTC P2007 INTAKE MANIFOLD RUNNER CONTROL STUCK CLOSED (BANK 2)

DTC DETECTING CONDITION:

- Immediately at fault recognition
- GENERAL DESCRIPTION <Ref. to GD(H4DOTC)-207, DTC P2007 INTAKE MANIFOLD RUNNER CONTROL STUCK CLOSED (BANK 2), Diagnostic Trouble Code (DTC) Detecting Criteria.>

CAUTION:
After servicing or replacing faulty parts, perform Clear Memory Mode <Ref. to EN(H4DOTC)(diag)-53, OPERATION, Clear Memory Mode.>, and Inspection Mode <Ref. to EN(H4DOTC)(diag)-41, PROCEDURE, Inspection Mode.>.

	Step	Check	Yes	No
1	**CHECK FOR ANY OTHER DTC ON DISPLAY.**	Is any other DTC displayed?	Check the appropriate DTC using the "List of Diagnostic Trouble Code (DTC)". <Ref. to EN(H4DOTC)(diag)-75, List of Diagnostic Trouble Code (DTC).>	Go to step **2**.
2	**CHECK TUMBLE GENERATOR VALVE LH.** 1) Remove the tumble generator valve assembly LH. 2) Check the tumble generator valve body.	Is there any dirt or clogging with foreign objects in the tumble generator valve?	Clean the tumble generator valve.	Replace the tumble generator valve assembly LH. <Ref. to FU(H4DOTC)-48, Tumble Generator Valve Assembly.>

DJ:DTC P2008 INTAKE MANIFOLD RUNNER CONTROL CIRCUIT / OPEN (BANK 1)

DTC DETECTING CONDITION:

- Immediately at fault recognition
- GENERAL DESCRIPTION <Ref. to GD(H4DOTC)-208, DTC P2008 INTAKE MANIFOLD RUNNER CONTROL CIRCUIT / OPEN (BANK 1), Diagnostic Trouble Code (DTC) Detecting Criteria.>

CAUTION:
After servicing or replacing faulty parts, perform Clear Memory Mode <Ref. to EN(H4DOTC)(diag)-53, OPERATION, Clear Memory Mode.>, and Inspection Mode <Ref. to EN(H4DOTC)(diag)-41, PROCEDURE, Inspection Mode.>.
WIRING DIAGRAM:

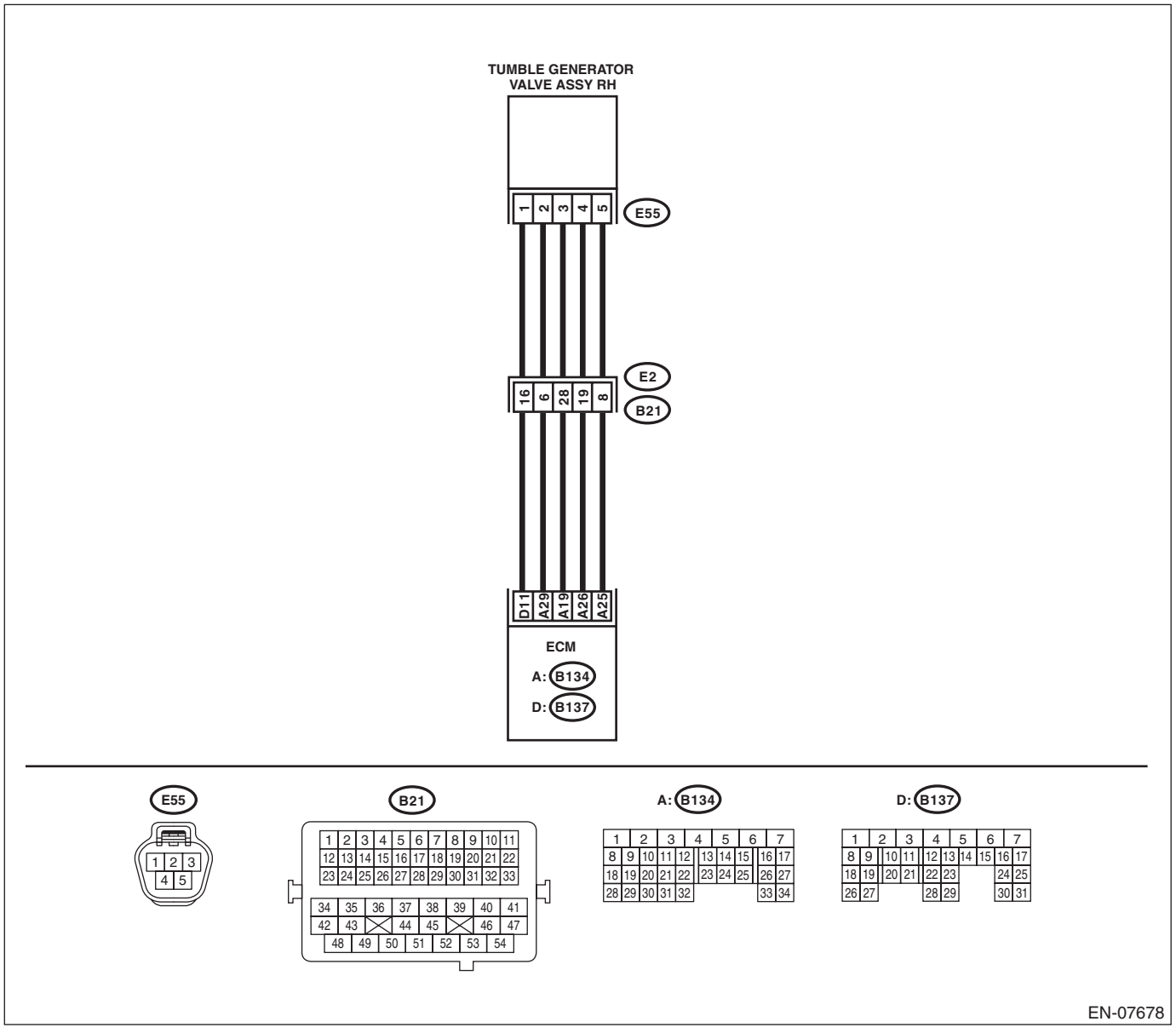

	Step	Check	Yes	No
1	**CHECK HARNESS BETWEEN ECM AND TUMBLE GENERATOR VALVE ASSEMBLY RH CONNECTOR.** 1) Turn the ignition switch to OFF. 2) Disconnect the connectors from the ECM and tumble generator valve assembly RH. 3) Measure the resistance of harness between ECM and tumble generator valve assembly RH. ***Connector & terminal*** ***(B134) No. 25 — (E55) No. 5:*** ***(B134) No. 26 — (E55) No. 4:***	Is the resistance less than 1 Ω?	Go to step **2**.	Repair the harness and connector. NOTE: In this case, repair the following item: • Open circuit in harness between ECM and tumble generator valve assembly RH connector • Poor contact of coupling connector
2	**CHECK HARNESS BETWEEN ECM AND TUMBLE GENERATOR VALVE ASSEMBLY RH CONNECTOR.** Measure the resistance between ECM and chassis ground. ***Connector & terminal*** ***(B134) No. 25 — Chassis ground:*** ***(B134) No. 26 — Chassis ground:***	Is the resistance 1 MΩ or more?	Go to step **3**.	Repair the short circuit to ground in harness between ECM and tumble generator valve assembly RH connector.
3	**CHECK FOR POOR CONTACT.** Check for poor contact of tumble generator valve assembly RH connector.	Is there poor contact of the tumble generator valve assembly RH connector?	Repair the poor contact of tumble generator valve assembly RH connector.	Replace the tumble generator valve assembly RH. <Ref. to FU(H4DOTC)-48, Tumble Generator Valve Assembly.>

DK:DTC P2009 INTAKE MANIFOLD RUNNER CONTROL CIRCUIT LOW (BANK 1)

DTC DETECTING CONDITION:

- Immediately at fault recognition
- GENERAL DESCRIPTION <Ref. to GD(H4DOTC)-210, DTC P2009 INTAKE MANIFOLD RUNNER CONTROL CIRCUIT LOW (BANK 1), Diagnostic Trouble Code (DTC) Detecting Criteria.>

CAUTION:
After servicing or replacing faulty parts, perform Clear Memory Mode <Ref. to EN(H4DOTC)(diag)-53, OPERATION, Clear Memory Mode.>, and Inspection Mode <Ref. to EN(H4DOTC)(diag)-41, PROCEDURE, Inspection Mode.>.
WIRING DIAGRAM:

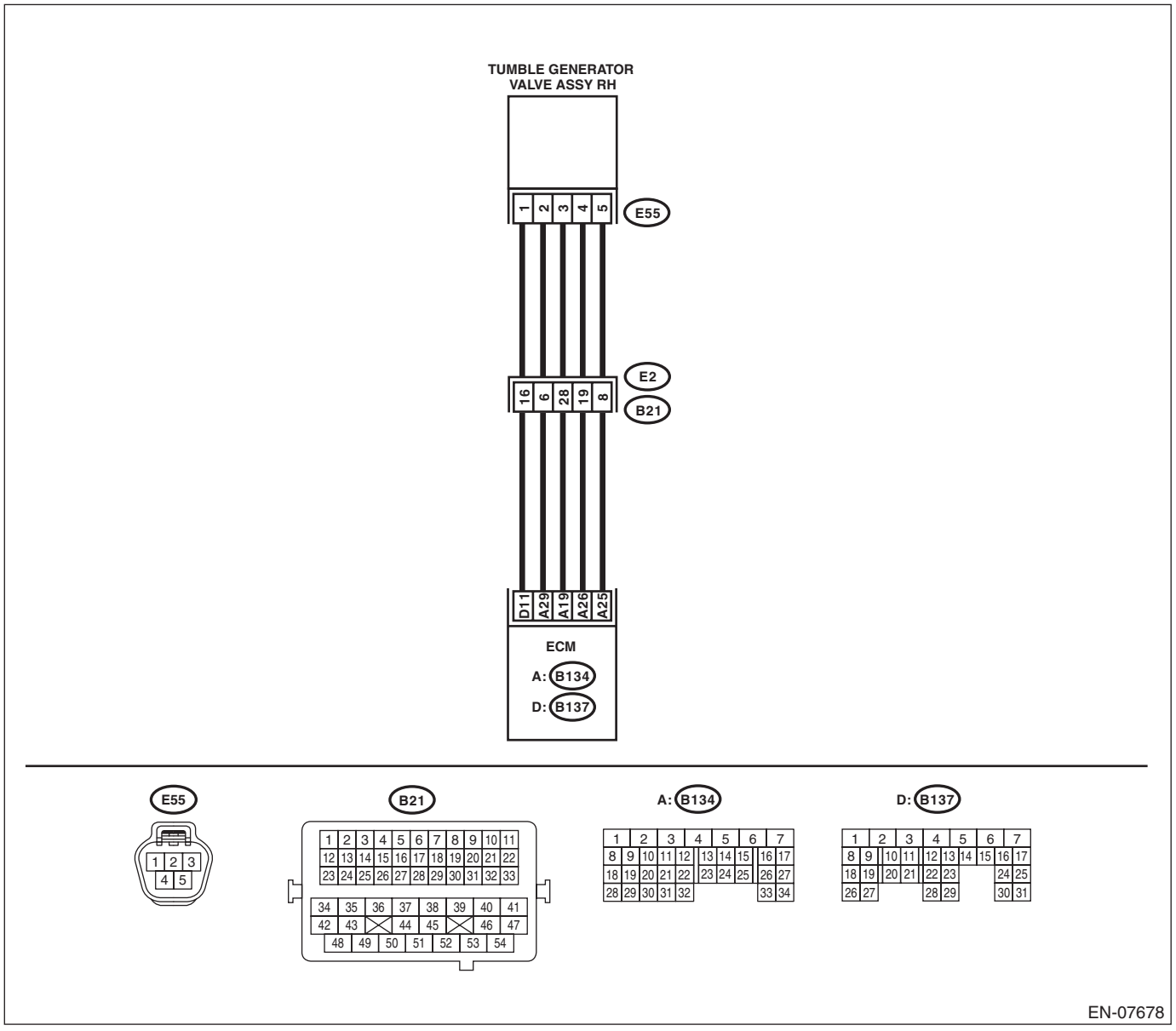

	Step	Check	Yes	No
1	**CHECK HARNESS BETWEEN ECM AND TUMBLE GENERATOR VALVE ASSEMBLY RH CONNECTOR.** 1) Turn the ignition switch to OFF. 2) Disconnect the connectors from ECM. 3) Measure the voltage between ECM and chassis ground. ***Connector & terminal*** ***(B134) No. 25 (+) — Chassis ground (–):*** ***(B134) No. 26 (+) — Chassis ground (–):***	Is the voltage 5 V or more?	Repair the short circuit to power in harness between ECM and tumble generator valve assembly RH connector.	Replace the tumble generator valve assembly RH. <Ref. to FU(H4DOTC)-48, Tumble Generator Valve Assembly.>

DL:DTC P2011 INTAKE MANIFOLD RUNNER CONTROL CIRCUIT / OPEN (BANK 2)

DTC DETECTING CONDITION:

- Immediately at fault recognition
- GENERAL DESCRIPTION <Ref. to GD(H4DOTC)-211, DTC P2011 INTAKE MANIFOLD RUNNER CONTROL CIRCUIT / OPEN (BANK 2), Diagnostic Trouble Code (DTC) Detecting Criteria.>

CAUTION:

After servicing or replacing faulty parts, perform Clear Memory Mode <Ref. to EN(H4DOTC)(diag)-53, OPERATION, Clear Memory Mode.>, and Inspection Mode <Ref. to EN(H4DOTC)(diag)-41, PROCEDURE, Inspection Mode.>.

WIRING DIAGRAM:

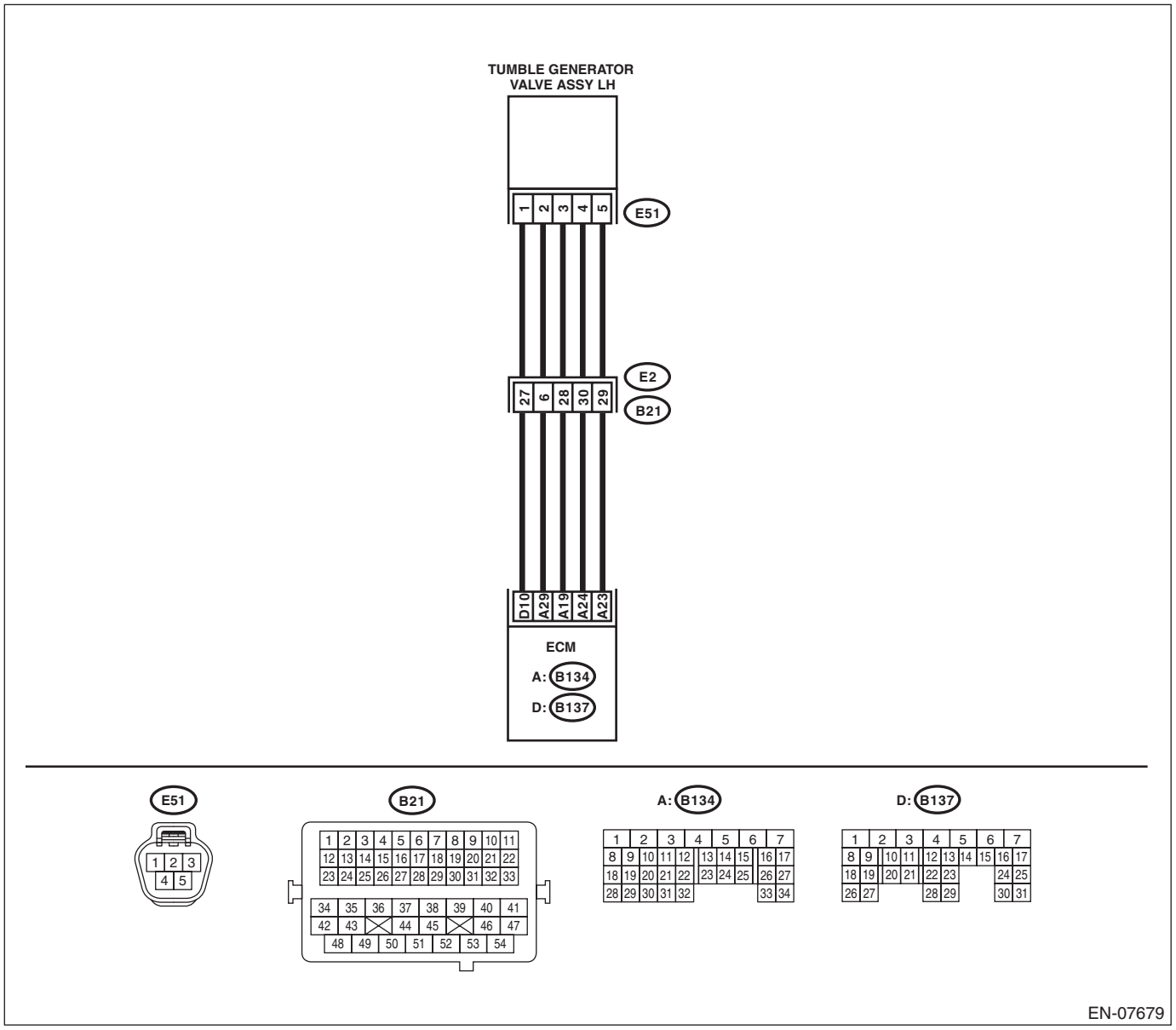

	Step	Check	Yes	No
1	**CHECK HARNESS BETWEEN ECM AND TUMBLE GENERATOR VALVE ASSEMBLY LH CONNECTOR.** 1) Turn the ignition switch to OFF. 2) Disconnect the connectors from ECM and tumble generator valve assembly LH. 3) Measure the resistance of harness between ECM and tumble generator valve assembly LH. ***Connector & terminal*** ***(B134) No. 23 — (E51) No. 5:*** ***(B134) No. 24 — (E51) No. 4:***	Is the resistance less than 1 Ω?	Go to step **2**.	Repair the harness and connector. NOTE: In this case, repair the following item: • Open circuit in harness between ECM and tumble generator valve assembly LH connector • Poor contact of coupling connector
2	**CHECK HARNESS BETWEEN ECM AND TUMBLE GENERATOR VALVE ASSEMBLY LH CONNECTOR.** Measure the resistance between ECM and chassis ground. ***Connector & terminal*** ***(B134) No. 23 — Chassis ground:*** ***(B134) No. 24 — Chassis ground:***	Is the resistance 1 MΩ or more?	Go to step **3**.	Repair the short circuit to ground in harness between ECM and tumble generator valve assembly LH connector.
3	**CHECK FOR POOR CONTACT.** Check for poor contact of tumble generator valve assembly LH connector.	Is there poor contact of the tumble generator valve assembly LH connector?	Repair the poor contact of tumble generator valve assembly LH connector.	Replace the tumble generator valve assembly LH. <Ref. to FU(H4DOTC)-48, Tumble Generator Valve Assembly.>

DM:DTC P2012 INTAKE MANIFOLD RUNNER CONTROL CIRCUIT LOW (BANK 2)

DTC DETECTING CONDITION:

- Immediately at fault recognition
- GENERAL DESCRIPTION <Ref. to GD(H4DOTC)-212, DTC P2012 INTAKE MANIFOLD RUNNER CONTROL CIRCUIT LOW (BANK 2), Diagnostic Trouble Code (DTC) Detecting Criteria.>

CAUTION:
After servicing or replacing faulty parts, perform Clear Memory Mode <Ref. to EN(H4DOTC)(diag)-53, OPERATION, Clear Memory Mode.>, and Inspection Mode <Ref. to EN(H4DOTC)(diag)-41, PROCEDURE, Inspection Mode.>.
WIRING DIAGRAM:

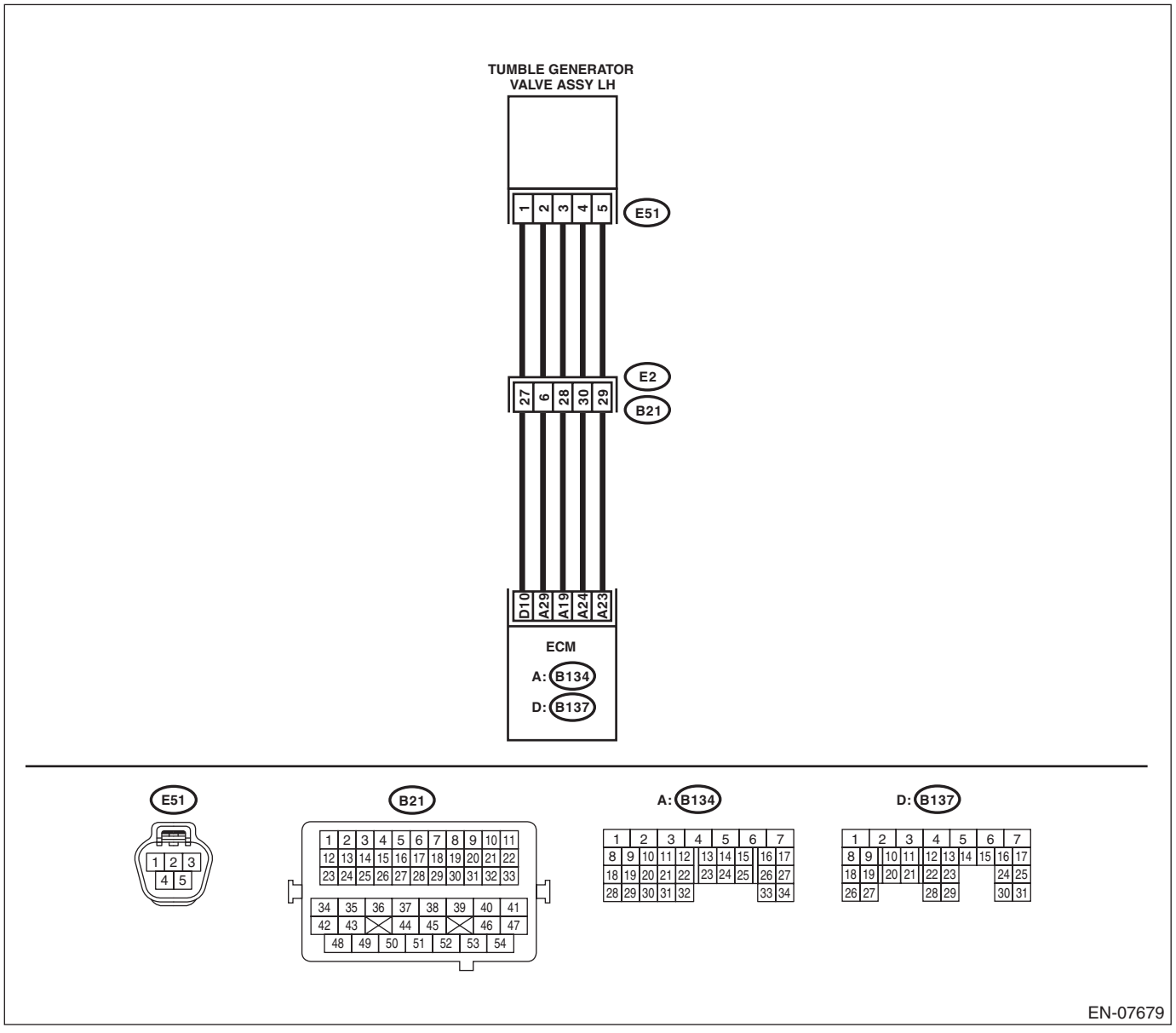

	Step	Check	Yes	No
1	**CHECK HARNESS BETWEEN ECM AND TUMBLE GENERATOR VALVE ASSEMBLY LH CONNECTOR.** 1) Turn the ignition switch to OFF. 2) Disconnect the connectors from ECM. 3) Measure the voltage between ECM and chassis ground. ***Connector & terminal*** ***(B134) No. 23 (+) — Chassis ground (–):*** ***(B134) No. 24 (+) — Chassis ground (–):***	Is the voltage 5 V or more?	Repair the short circuit to power in harness between ECM and tumble generator valve assembly LH connector.	Replace the tumble generator valve assembly LH. <Ref. to FU(H4DOTC)-48, Tumble Generator Valve Assembly.>

DN:DTC P2016 INTAKE MANIFOLD RUNNER POSITION SENSOR / SWITCH CIRCUIT LOW (BANK 1)

DTC DETECTING CONDITION:

- Immediately at fault recognition
- GENERAL DESCRIPTION <Ref. to GD(H4DOTC)-213, DTC P2016 INTAKE MANIFOLD RUNNER POSITION SENSOR / SWITCH CIRCUIT LOW (BANK 1), Diagnostic Trouble Code (DTC) Detecting Criteria.>

TROUBLE SYMPTOM:

- Improper idling
- Engine stalls.
- Poor driving performance

CAUTION:

After servicing or replacing faulty parts, perform Clear Memory Mode <Ref. to EN(H4DOTC)(diag)-53, OPERATION, Clear Memory Mode.>, and Inspection Mode <Ref. to EN(H4DOTC)(diag)-41, PROCEDURE, Inspection Mode.>.

WIRING DIAGRAM:

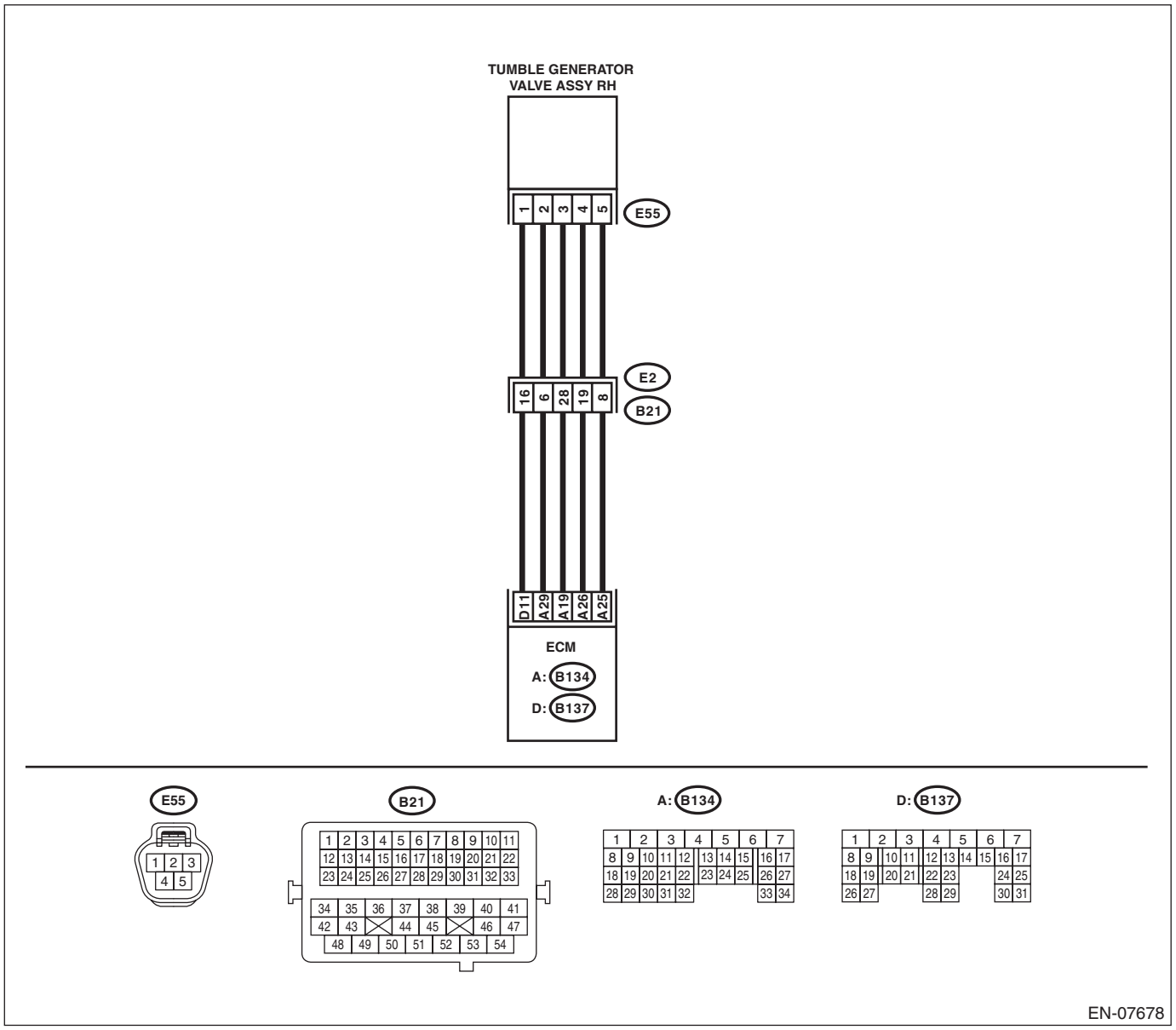

EN-07678

	Step	Check	Yes	No
1	**CHECK CURRENT DATA.** 1) Start the engine. 2) Read the value of «TGV Position Sensor R» using the Subaru Select Monitor. NOTE: For detailed operation procedures, refer to "READ CURRENT DATA FOR ENGINE". <Ref. to EN(H4DOTC)(diag)-34, Subaru Select Monitor.>	Is the value of «TGV Position Sensor R» less than 0.2 V?	Go to step **2**.	Even if DTC is detected, the circuit has returned to a normal condition at this time. Reproduce the failure, and then perform the diagnosis again. NOTE: In this case, temporary poor contact of connector, temporary open or short circuit of harness may be the cause.
2	**CHECK POWER SUPPLY OF TUMBLE GENERATOR VALVE ASSEMBLY RH.** 1) Turn the ignition switch to OFF. 2) Disconnect the connector from tumble generator valve assembly RH. 3) Turn the ignition switch to ON. 4) Measure the voltage between tumble generator valve assembly RH connector and engine ground. ***Connector & terminal*** ***(E55) No. 3 (+) — Engine ground (–):***	Is the voltage 4.5 V or more?	Go to step **3**.	Repair the harness and connector. NOTE: In this case, repair the following item: • Open circuit in harness between ECM and tumble generator valve assembly RH connector • Poor contact of ECM connector • Poor contact of coupling connector
3	**CHECK HARNESS BETWEEN ECM AND TUMBLE GENERATOR VALVE ASSEMBLY RH CONNECTOR.** 1) Turn the ignition switch to OFF. 2) Disconnect the connector from ECM. 3) Measure the resistance of harness between ECM and tumble generator valve assembly RH. ***Connector & terminal*** ***(B137) No. 11 — (E55) No. 1:***	Is the resistance less than 1 Ω?	Go to step **4**.	Repair the harness and connector. NOTE: In this case, repair the following item: • Open circuit in harness between ECM and tumble generator valve assembly RH connector • Poor contact of coupling connector
4	**CHECK HARNESS BETWEEN ECM AND TUMBLE GENERATOR VALVE ASSEMBLY RH CONNECTOR.** Measure the resistance between ECM and chassis ground. ***Connector & terminal*** ***(B137) No. 11 — Chassis ground:***	Is the resistance 1 MΩ or more?	Go to step **5**.	Repair the short circuit to ground in harness between ECM and tumble generator valve assembly RH connector.
5	**CHECK FOR POOR CONTACT.** Check for poor contact of ECM and tumble generator valve assembly RH connector.	Is there poor contact of ECM or the tumble generator valve assembly RH connector?	Repair the poor contact of ECM or tumble generator valve assembly RH connector.	Replace the tumble generator valve assembly RH. <Ref. to FU(H4DOTC)-48, Tumble Generator Valve Assembly.>

DO:DTC P2017 INTAKE MANIFOLD RUNNER POSITION SENSOR / SWITCH CIRCUIT HIGH (BANK 1)

DTC DETECTING CONDITION:

- Immediately at fault recognition
- GENERAL DESCRIPTION <Ref. to GD(H4DOTC)-215, DTC P2017 INTAKE MANIFOLD RUNNER POSITION SENSOR / SWITCH CIRCUIT HIGH (BANK 1), Diagnostic Trouble Code (DTC) Detecting Criteria.>

TROUBLE SYMPTOM:

- Improper idling
- Engine stalls.
- Poor driving performance

CAUTION:

After servicing or replacing faulty parts, perform Clear Memory Mode <Ref. to EN(H4DOTC)(diag)-53, OPERATION, Clear Memory Mode.>, and Inspection Mode <Ref. to EN(H4DOTC)(diag)-41, PROCEDURE, Inspection Mode.>.

WIRING DIAGRAM:

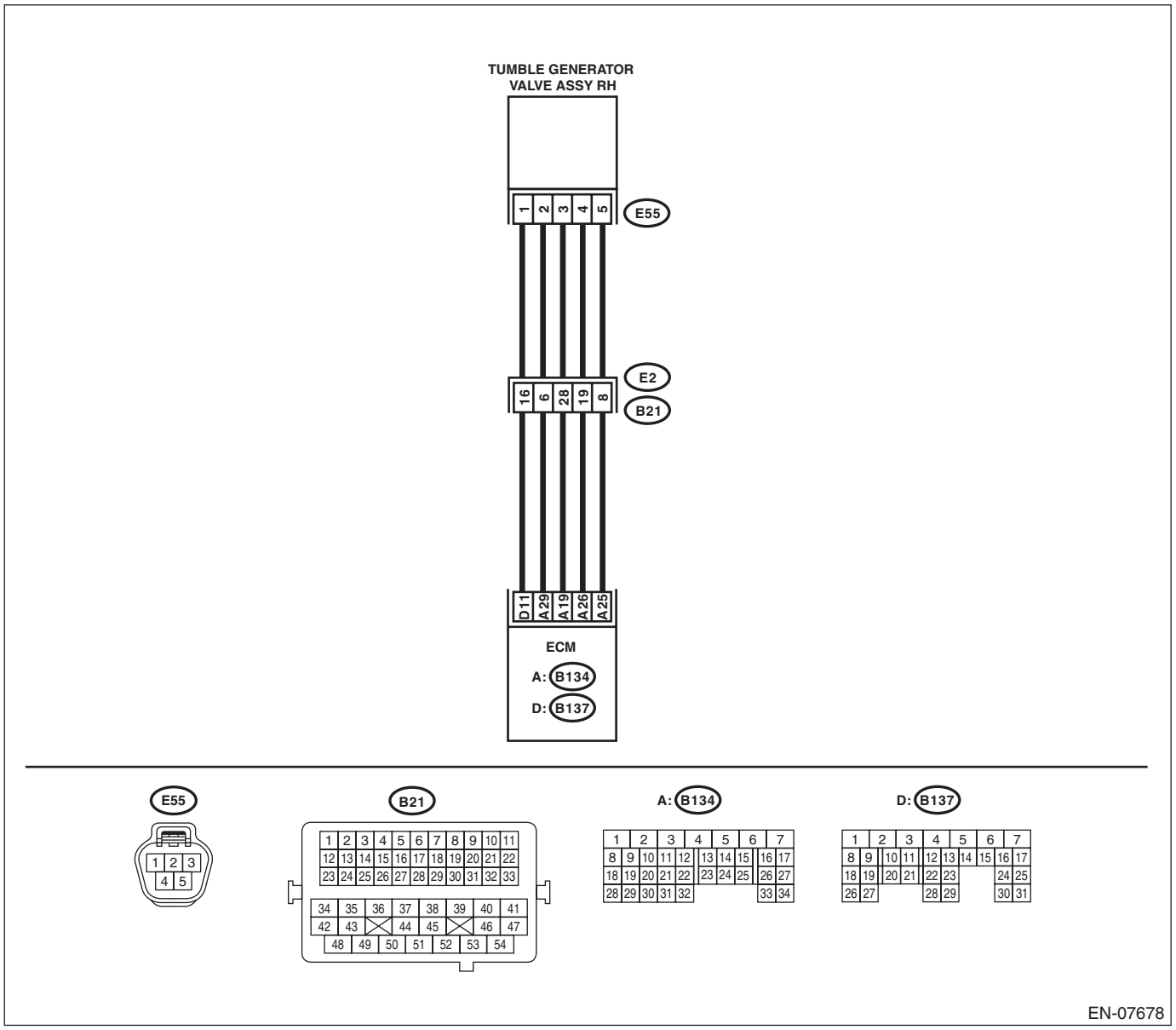

	Step	Check	Yes	No
1	**CHECK CURRENT DATA.** 1) Start the engine. 2) Read the value of «TGV Position Sensor R» using the Subaru Select Monitor. NOTE: For detailed operation procedures, refer to "READ CURRENT DATA FOR ENGINE". <Ref. to EN(H4DOTC)(diag)-34, Subaru Select Monitor.>	Is the value of «TGV Position Sensor R» 5 V or more?	Go to step **2**.	Even if DTC is detected, the circuit has returned to a normal condition at this time. Reproduce the failure, and then perform the diagnosis again. NOTE: In this case, temporary poor contact of connector, temporary open or short circuit of harness may be the cause.
2	**CHECK HARNESS BETWEEN ECM AND TUMBLE GENERATOR VALVE ASSEMBLY RH CONNECTOR.** 1) Turn the ignition switch to OFF. 2) Disconnect the connector from tumble generator valve assembly RH. 3) Start the engine. 4) Read the value of «TGV Position Sensor R» using the Subaru Select Monitor. NOTE: For detailed operation procedures, refer to "READ CURRENT DATA FOR ENGINE". <Ref. to EN(H4DOTC)(diag)-34, Subaru Select Monitor.>	Is the value of «TGV Position Sensor R» 5 V or more?	Repair the short circuit to power in harness between ECM and tumble generator valve assembly RH connector.	Go to step **3**.
3	**CHECK HARNESS BETWEEN ECM AND TUMBLE GENERATOR VALVE ASSEMBLY RH CONNECTOR.** 1) Turn the ignition switch to OFF. 2) Measure the resistance of harness between tumble generator valve assembly RH connector and engine ground. ***Connector & terminal*** ***(E55) No. 2 — Engine ground:***	Is the resistance less than 5 Ω?	Go to step **4**.	Repair the harness and connector. NOTE: In this case, repair the following item: • Open circuit in harness between ECM and tumble generator valve assembly RH connector • Poor contact of ECM connector • Poor contact of coupling connector
4	**CHECK FOR POOR CONTACT.** Check for poor contact of tumble generator valve assembly RH connector.	Is there poor contact of the tumble generator valve assembly RH connector?	Repair the poor contact of tumble generator valve assembly RH connector.	Replace the tumble generator valve assembly RH. <Ref. to FU(H4DOTC)-48, Tumble Generator Valve Assembly.>

DP:DTC P2021 INTAKE MANIFOLD RUNNER POSITION SENSOR / SWITCH CIRCUIT LOW (BANK 2)

DTC DETECTING CONDITION:

- Immediately at fault recognition
- GENERAL DESCRIPTION <Ref. to GD(H4DOTC)-217, DTC P2021 INTAKE MANIFOLD RUNNER POSITION SENSOR / SWITCH CIRCUIT LOW (BANK 2), Diagnostic Trouble Code (DTC) Detecting Criteria.>

TROUBLE SYMPTOM:

- Improper idling
- Engine stalls.
- Poor driving performance

CAUTION:

After servicing or replacing faulty parts, perform Clear Memory Mode <Ref. to EN(H4DOTC)(diag)-53, OPERATION, Clear Memory Mode.>, and Inspection Mode <Ref. to EN(H4DOTC)(diag)-41, PROCEDURE, Inspection Mode.>.

WIRING DIAGRAM:

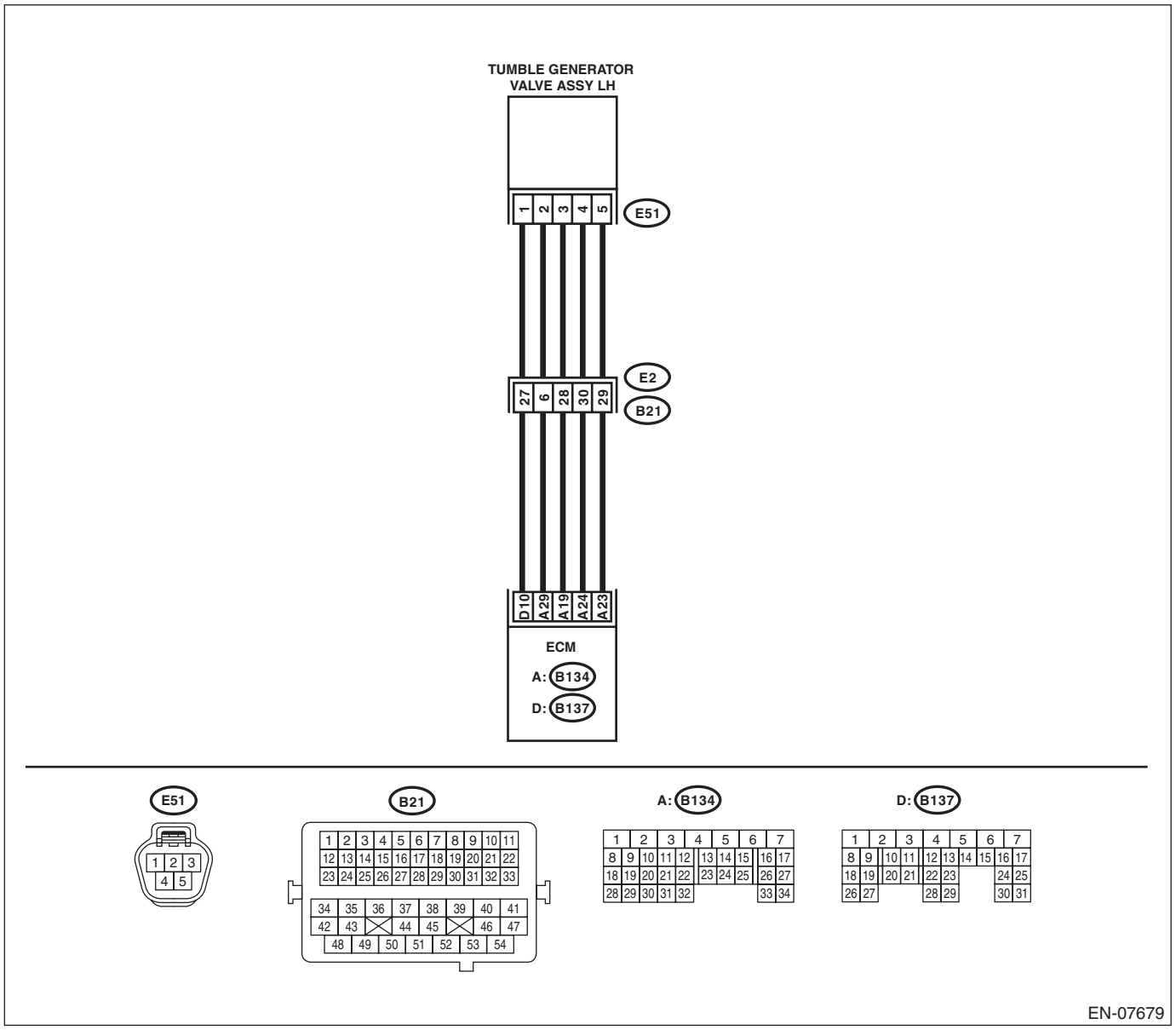

	Step	Check	Yes	No
1	**CHECK CURRENT DATA.** 1) Start the engine. 2) Read the value of «TGV Position Sensor L» using the Subaru Select Monitor. NOTE: For detailed operation procedures, refer to "READ CURRENT DATA FOR ENGINE". <Ref. to EN(H4DOTC)(diag)-34, Subaru Select Monitor.>	Is the value of «TGV Position Sensor L» less than 0.2 V?	Go to step **2**.	Even if DTC is detected, the circuit has returned to a normal condition at this time. Reproduce the failure, and then perform the diagnosis again. NOTE: In this case, temporary poor contact of connector, temporary open or short circuit of harness may be the cause.
2	**CHECK POWER SUPPLY OF TUMBLE GENERATOR VALVE ASSEMBLY LH.** 1) Turn the ignition switch to OFF. 2) Disconnect the connector from tumble generator valve assembly LH. 3) Turn the ignition switch to ON. 4) Measure the voltage between tumble generator valve assembly LH connector and engine ground. ***Connector & terminal*** ***(E51) No. 3 (+) — Engine ground (–):***	Is the voltage 4.5 V or more?	Go to step **3**.	Repair the harness and connector. NOTE: In this case, repair the following item: • Open circuit in harness between ECM and tumble generator valve assembly LH connector • Poor contact of ECM connector • Poor contact of coupling connector
3	**CHECK HARNESS BETWEEN ECM AND TUMBLE GENERATOR VALVE ASSEMBLY LH CONNECTOR.** 1) Turn the ignition switch to OFF. 2) Disconnect the connector from ECM. 3) Measure the resistance of harness between ECM and tumble generator valve assembly LH. ***Connector & terminal*** ***(B137) No. 10 — (E51) No. 1:***	Is the resistance less than 1 Ω?	Go to step **4**.	Repair the harness and connector. NOTE: In this case, repair the following item: • Open circuit in harness between ECM and tumble generator valve assembly LH connector • Poor contact of coupling connector
4	**CHECK HARNESS BETWEEN ECM AND TUMBLE GENERATOR VALVE ASSEMBLY LH CONNECTOR.** Measure the resistance between ECM and chassis ground. ***Connector & terminal*** ***(B137) No. 10 — Chassis ground:***	Is the resistance 1 MΩ or more?	Go to step **5**.	Repair the short circuit to ground in harness between ECM and tumble generator valve assembly LH connector.
5	**CHECK FOR POOR CONTACT.** Check for poor contact of ECM and tumble generator valve assembly LH connector.	Is there poor contact of ECM or the tumble generator valve assembly LH connector?	Repair the poor contact of ECM or tumble generator valve assembly LH connector.	Replace the tumble generator valve assembly LH. <Ref. to FU(H4DOTC)-48, Tumble Generator Valve Assembly.>

DQ:DTC P2022 INTAKE MANIFOLD RUNNER POSITION SENSOR / SWITCH CIRCUIT HIGH (BANK 2)

DTC DETECTING CONDITION:

- Immediately at fault recognition
- GENERAL DESCRIPTION <Ref. to GD(H4DOTC)-219, DTC P2022 INTAKE MANIFOLD RUNNER POSITION SENSOR / SWITCH CIRCUIT HIGH (BANK 2), Diagnostic Trouble Code (DTC) Detecting Criteria.>

TROUBLE SYMPTOM:

- Improper idling
- Engine stalls.
- Poor driving performance

CAUTION:

After servicing or replacing faulty parts, perform Clear Memory Mode <Ref. to EN(H4DOTC)(diag)-53, OPERATION, Clear Memory Mode.>, and Inspection Mode <Ref. to EN(H4DOTC)(diag)-41, PROCEDURE, Inspection Mode.>.

WIRING DIAGRAM:

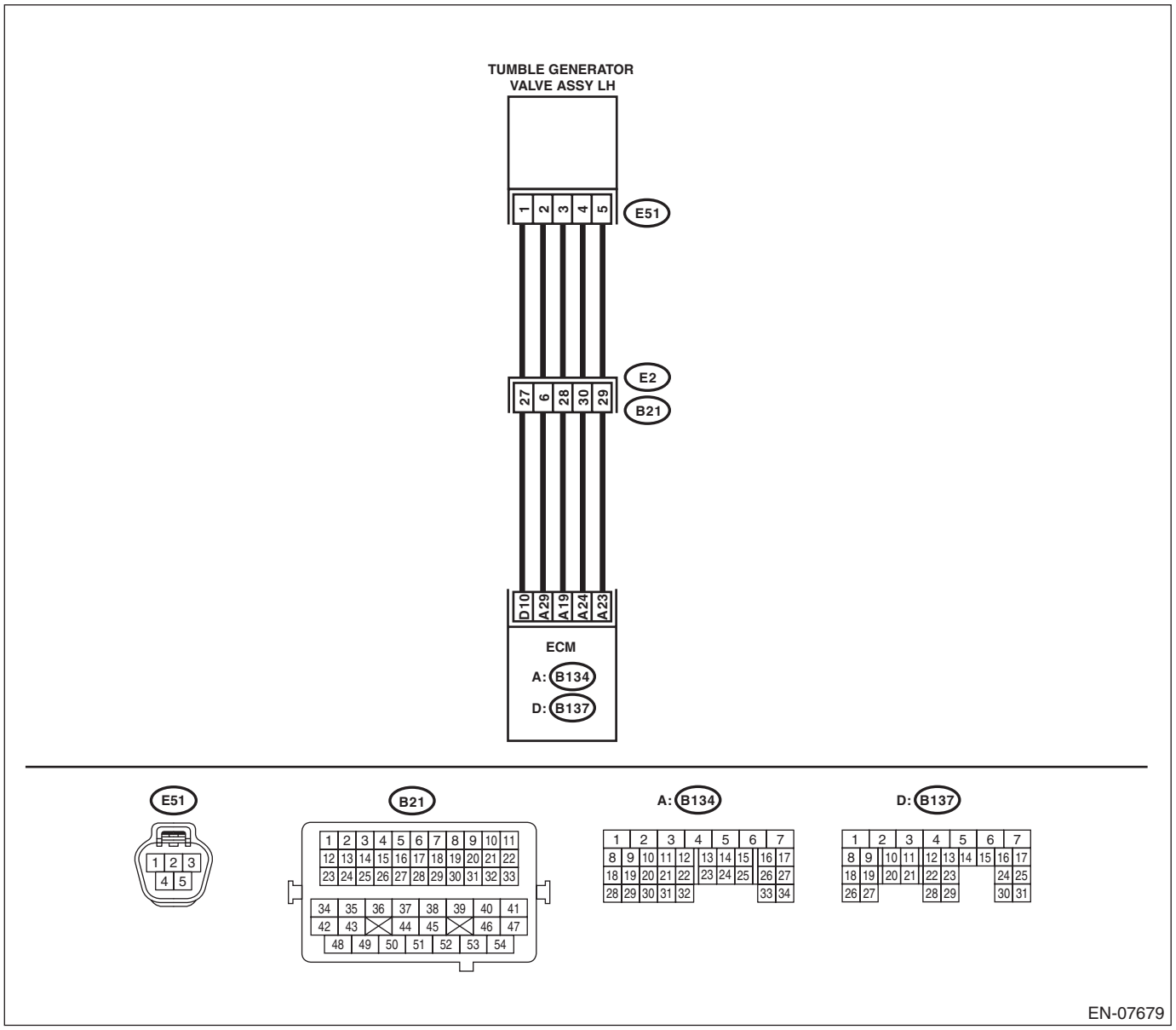

	Step	Check	Yes	No
1	**CHECK CURRENT DATA.** 1) Start the engine. 2) Read the value of «TGV Position Sensor L» using the Subaru Select Monitor. NOTE: For detailed operation procedures, refer to "READ CURRENT DATA FOR ENGINE". <Ref. to EN(H4DOTC)(diag)-34, Subaru Select Monitor.>	Is the value of «TGV Position Sensor L» 5 V or more?	Go to step **2**.	Even if DTC is detected, the circuit has returned to a normal condition at this time. Reproduce the failure, and then perform the diagnosis again. NOTE: In this case, temporary poor contact of connector, temporary open or short circuit of harness may be the cause.
2	**CHECK HARNESS BETWEEN ECM AND TUMBLE GENERATOR VALVE ASSEMBLY LH CONNECTOR.** 1) Turn the ignition switch to OFF. 2) Disconnect the connector from tumble generator valve assembly LH. 3) Start the engine. 4) Read the value of «TGV Position Sensor L» using the Subaru Select Monitor. NOTE: For detailed operation procedures, refer to "READ CURRENT DATA FOR ENGINE". <Ref. to EN(H4DOTC)(diag)-34, Subaru Select Monitor.>	Is the value of «TGV Position Sensor L» 5 V or more?	Repair the short circuit to power in harness between ECM and tumble generator valve assembly LH connector.	Go to step **3**.
3	**CHECK HARNESS BETWEEN ECM AND TUMBLE GENERATOR VALVE ASSEMBLY LH CONNECTOR.** 1) Turn the ignition switch to OFF. 2) Measure the resistance of harness between tumble generator valve assembly LH connector and engine ground. ***Connector & terminal*** ***(E51) No. 2 — Engine ground:***	Is the resistance less than 5 Ω?	Go to step **4**.	Repair the harness and connector. NOTE: In this case, repair the following item: • Open circuit in harness between ECM and tumble generator valve assembly LH connector • Poor contact of ECM connector • Poor contact of coupling connector
4	**CHECK FOR POOR CONTACT.** Check for poor contact of tumble generator valve assembly LH connector.	Is there poor contact of the tumble generator valve assembly LH connector?	Repair the poor contact of tumble generator valve assembly LH connector.	Replace the tumble generator valve assembly LH. <Ref. to FU(H4DOTC)-48, Tumble Generator Valve Assembly.>

DR:DTC P2088 INTAKE CAMSHAFT POSITION ACTUATOR CONTROL CIRCUIT LOW (BANK 1)

DTC DETECTING CONDITION:

- Immediately at fault recognition
- GENERAL DESCRIPTION <Ref. to GD(H4DOTC)-221, DTC P2088 INTAKE CAMSHAFT POSITION ACTUATOR CONTROL CIRCUIT LOW (BANK 1), Diagnostic Trouble Code (DTC) Detecting Criteria.>

TROUBLE SYMPTOM:

Improper idling

CAUTION:

After servicing or replacing faulty parts, perform Clear Memory Mode <Ref. to EN(H4DOTC)(diag)-53, OPERATION, Clear Memory Mode.>, and Inspection Mode <Ref. to EN(H4DOTC)(diag)-41, PROCEDURE, Inspection Mode.>.

WIRING DIAGRAM:

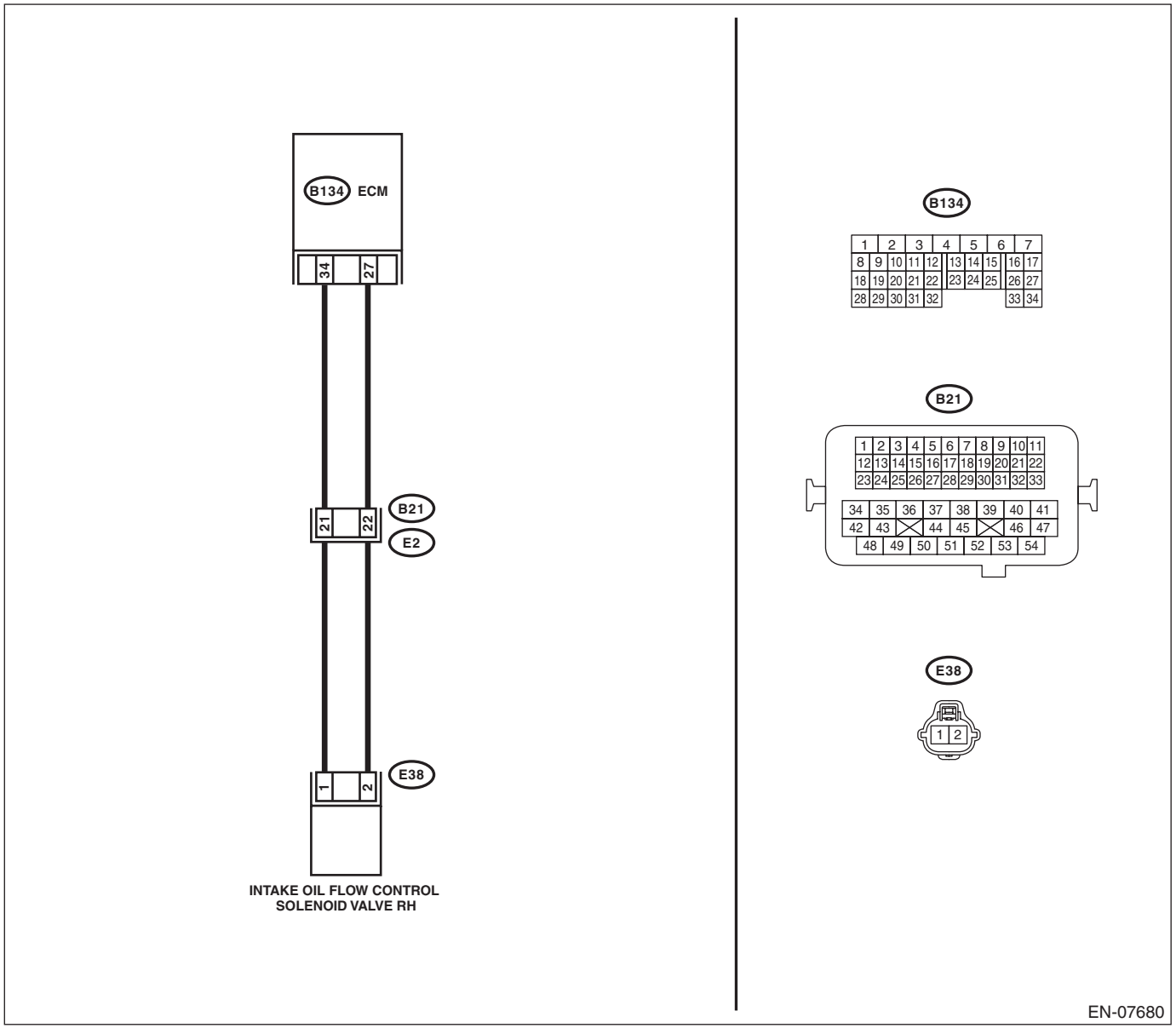

	Step	Check	Yes	No
1	**CHECK HARNESS BETWEEN ECM AND OIL FLOW CONTROL SOLENOID VALVE RH CONNECTOR.** 1) Turn the ignition switch to OFF. 2) Disconnect the connectors from ECM and oil flow control solenoid valve RH. 3) Measure the resistance of harness between ECM and oil flow control solenoid valve RH connector. ***Connector & terminal*** ***(B134) No. 34 — (E38) No. 1:*** ***(B134) No. 27 — (E38) No. 2:***	Is the resistance less than 1 Ω?	Go to step **2**.	Repair the harness and connector. NOTE: In this case, repair the following item: • Open circuit in harness between ECM and oil flow control solenoid valve RH connector • Poor contact of coupling connector
2	**CHECK HARNESS BETWEEN ECM AND OIL FLOW CONTROL SOLENOID VALVE RH CONNECTOR.** Measure the resistance between ECM and chassis ground. ***Connector & terminal*** ***(B134) No. 34 — Chassis ground:*** ***(B134) No. 27 — Chassis ground:***	Is the resistance 1 MΩ or more?	Go to step **3**.	Repair the short circuit to ground in harness between ECM and oil flow control solenoid valve RH connector.
3	**CHECK OIL FLOW CONTROL SOLENOID VALVE.** Measure the resistance between oil flow control solenoid valve terminals. ***Terminals*** ***No. 1 — No. 2:***	Is the resistance 6 — 12 Ω?	Repair the poor contact of ECM and oil flow control solenoid valve RH connector RH.	Replace the oil flow control solenoid valve RH. <Ref. to ME(H4DOTC)-63, Camshaft.>

DS:DTC P2089 INTAKE CAMSHAFT POSITION ACTUATOR CONTROL CIRCUIT HIGH (BANK 1)

DTC DETECTING CONDITION:

- Immediately at fault recognition
- GENERAL DESCRIPTION <Ref. to GD(H4DOTC)-222, DTC P2089 INTAKE CAMSHAFT POSITION ACTUATOR CONTROL CIRCUIT HIGH (BANK 1), Diagnostic Trouble Code (DTC) Detecting Criteria.>

TROUBLE SYMPTOM:

Improper idling

CAUTION:

After servicing or replacing faulty parts, perform Clear Memory Mode <Ref. to EN(H4DOTC)(diag)-53, OPERATION, Clear Memory Mode.>, and Inspection Mode <Ref. to EN(H4DOTC)(diag)-41, PROCEDURE, Inspection Mode.>.

WIRING DIAGRAM:

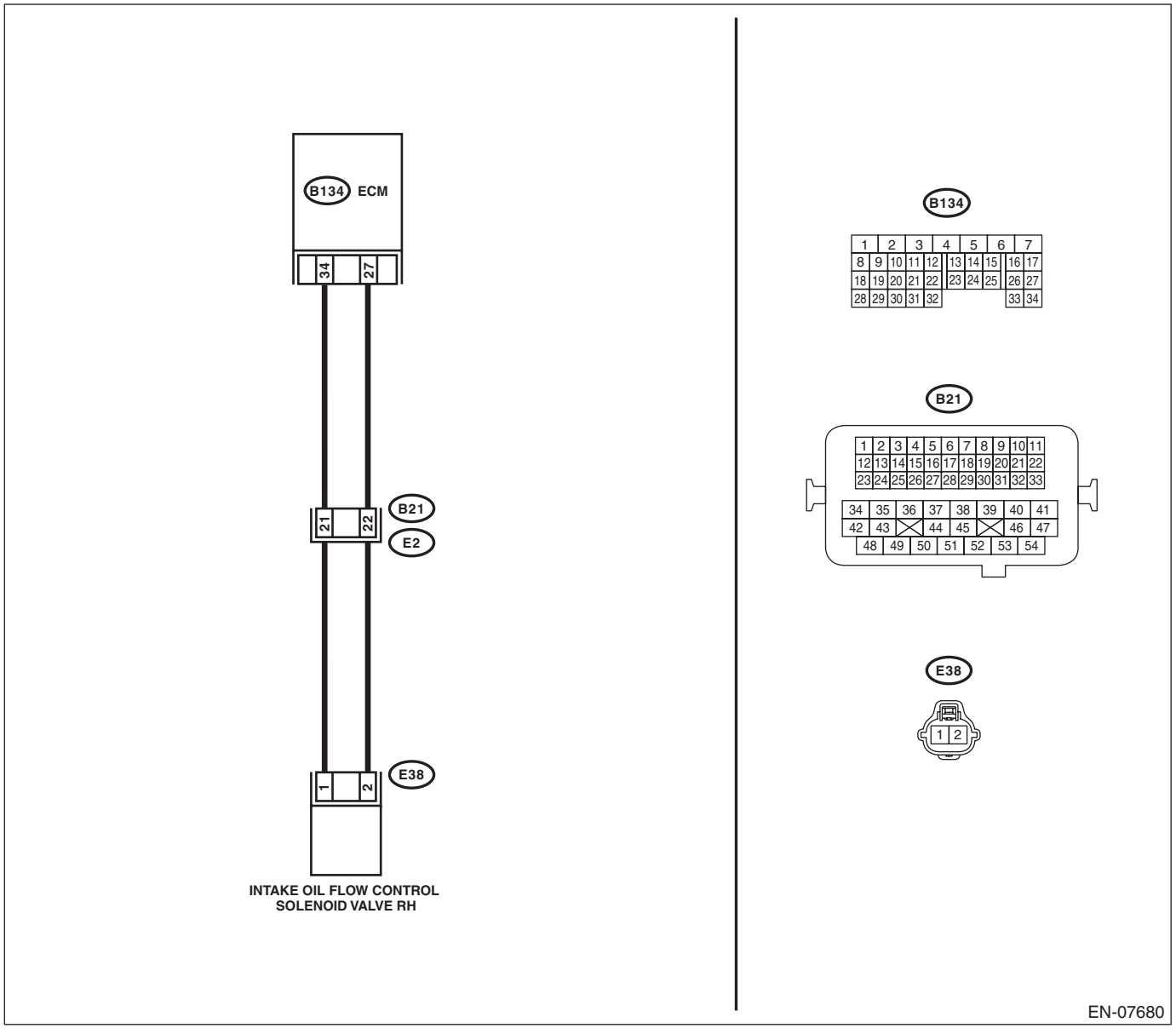

	Step	Check	Yes	No
1	**CHECK HARNESS BETWEEN ECM AND OIL FLOW CONTROL SOLENOID VALVE RH CONNECTOR.** 1) Turn the ignition switch to OFF. 2) Disconnect the connectors from ECM and oil flow control solenoid valve RH. 3) Measure the voltage between ECM and chassis ground. ***Connector & terminal*** ***(B134) No. 34 (+) — Chassis ground (–):*** ***(B134) No. 27 (+) — Chassis ground (–):***	Is the voltage less than 1 V?	Go to step **2**.	Repair the short circuit to power supply in harness between ECM and oil flow control solenoid valve RH connector.
2	**CHECK HARNESS BETWEEN ECM AND OIL FLOW CONTROL SOLENOID VALVE RH CONNECTOR.** Measure the resistance of harness between ECM and oil flow control solenoid valve RH connector. ***Connector & terminal*** ***(B134) No. 34 — (E38) No. 1:*** ***(B134) No. 27 — (E38) No. 2:***	Is the resistance less than 1 Ω?	Go to step **3**.	Repair the harness and connector. NOTE: In this case, repair the following item: • Open circuit in harness between ECM and oil flow control solenoid valve RH connector • Poor contact of coupling connector
3	**CHECK OIL FLOW CONTROL SOLENOID VALVE.** Measure the resistance between oil flow control solenoid valve terminals. ***Terminals*** ***No. 1 — No. 2:***	Is the resistance 6 — 12 Ω?	Repair the poor contact of ECM and oil flow control solenoid valve RH connector RH.	Replace the oil flow control solenoid valve RH. <Ref. to ME(H4DOTC)-63, Camshaft.>

DT:DTC P2090 EXHAUST CAMSHAFT POSITION ACTUATOR CONTROL CIRCUIT LOW (BANK 1)

DTC DETECTING CONDITION:

- Immediately at fault recognition
- GENERAL DESCRIPTION <Ref. to GD(H4DOTC)-223, DTC P2090 EXHAUST CAMSHAFT POSITION ACTUATOR CONTROL CIRCUIT LOW (BANK 1), Diagnostic Trouble Code (DTC) Detecting Criteria.>

TROUBLE SYMPTOM:

Improper idling

CAUTION:

After servicing or replacing faulty parts, perform Clear Memory Mode <Ref. to EN(H4DOTC)(diag)-53, OPERATION, Clear Memory Mode.>, and Inspection Mode <Ref. to EN(H4DOTC)(diag)-41, PROCEDURE, Inspection Mode.>.

WIRING DIAGRAM:

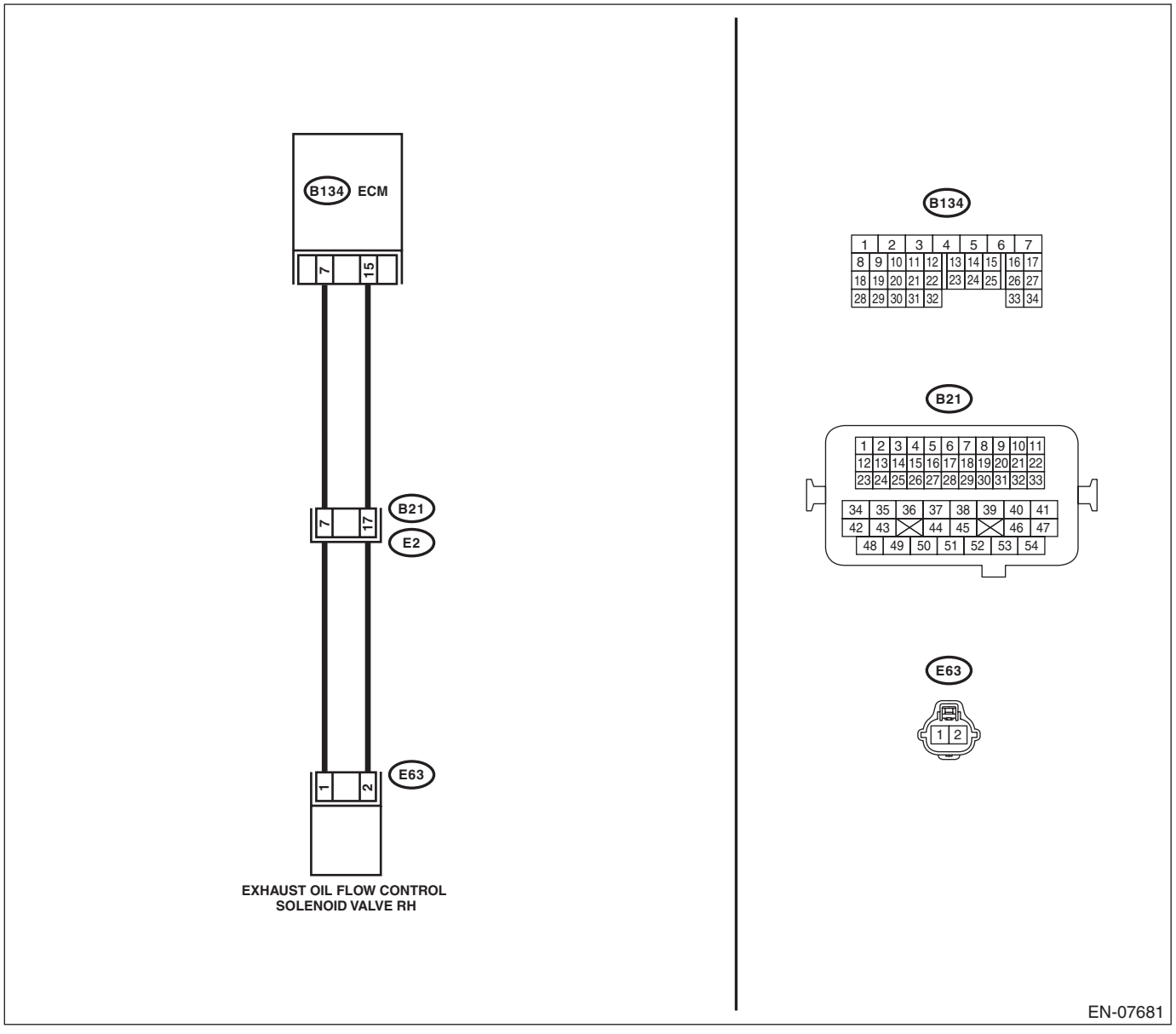

	Step	Check	Yes	No
1	**CHECK HARNESS BETWEEN ECM AND OIL FLOW CONTROL SOLENOID VALVE RH CONNECTOR.** 1) Turn the ignition switch to OFF. 2) Disconnect the connectors from ECM and oil flow control solenoid valve RH. 3) Measure the resistance of harness between ECM and oil flow control solenoid valve RH connector. ***Connector & terminal*** ***(B134) No. 7 — (E63) No. 1:*** ***(B134) No. 15 — (E63) No. 2:***	Is the resistance less than 1 Ω?	Go to step **2**.	Repair the harness and connector. NOTE: In this case, repair the following item: • Open circuit in harness between ECM and oil flow control solenoid valve RH connector • Poor contact of coupling connector
2	**CHECK HARNESS BETWEEN ECM AND OIL FLOW CONTROL SOLENOID VALVE RH CONNECTOR.** Measure the resistance between ECM and chassis ground. ***Connector & terminal*** ***(B134) No. 7 — Chassis ground:*** ***(B134) No. 15 — Chassis ground:***	Is the resistance 1 MΩ or more?	Go to step **3**.	Repair the short circuit to ground in harness between ECM and oil flow control solenoid valve RH connector.
3	**CHECK OIL FLOW CONTROL SOLENOID VALVE.** Measure the resistance between oil flow control solenoid valve terminals. ***Terminals*** ***No. 1 — No. 2:***	Is the resistance 6 — 12 Ω?	Repair the poor contact of ECM and oil flow control solenoid valve RH connector RH.	Replace the oil flow control solenoid valve RH. <Ref. to FU(H4DOTC)-50, Oil Flow Control Solenoid Valve.>

DU:DTC P2091 EXHAUST CAMSHAFT POSITION ACTUATOR CONTROL CIRCUIT HIGH (BANK 1)

DTC DETECTING CONDITION:

- Immediately at fault recognition
- GENERAL DESCRIPTION <Ref. to GD(H4DOTC)-224, DTC P2091 EXHAUST CAMSHAFT POSITION ACTUATOR CONTROL CIRCUIT HIGH (BANK 1), Diagnostic Trouble Code (DTC) Detecting Criteria.>

TROUBLE SYMPTOM:

Improper idling

CAUTION:

After servicing or replacing faulty parts, perform Clear Memory Mode <Ref. to EN(H4DOTC)(diag)-53, OPERATION, Clear Memory Mode.>, and Inspection Mode <Ref. to EN(H4DOTC)(diag)-41, PROCEDURE, Inspection Mode.>.

WIRING DIAGRAM:

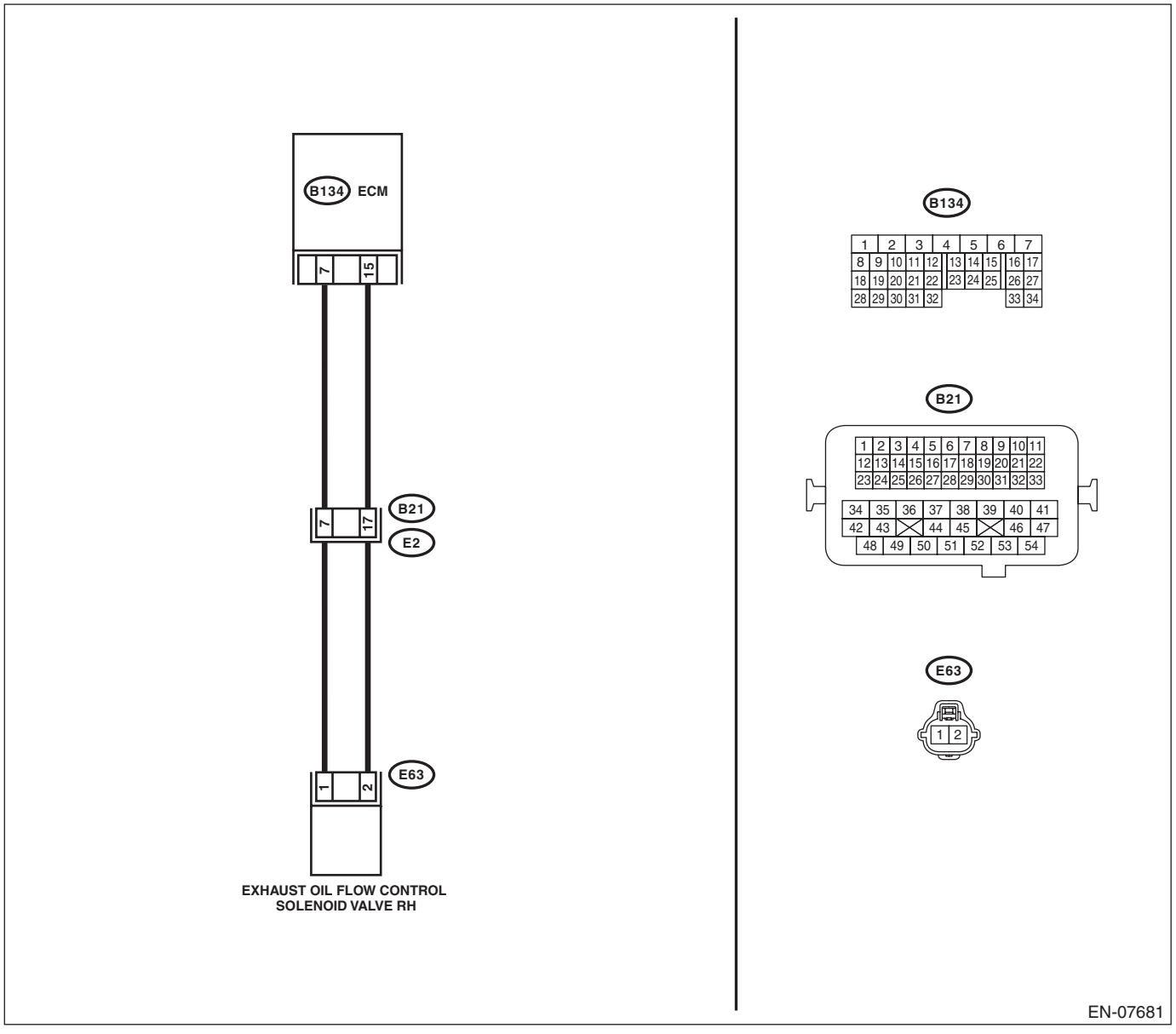

	Step	Check	Yes	No
1	**CHECK HARNESS BETWEEN ECM AND OIL FLOW CONTROL SOLENOID VALVE RH CONNECTOR.** 1) Turn the ignition switch to OFF. 2) Disconnect the connectors from ECM and oil flow control solenoid valve RH. 3) Measure the voltage between ECM and chassis ground. ***Connector & terminal*** ***(B134) No. 7 (+) — Chassis ground (–):*** ***(B134) No. 15 (+) — Chassis ground (–):***	Is the voltage less than 1 V?	Go to step **2**.	Repair the short circuit to power supply in harness between ECM and oil flow control solenoid valve RH connector.
2	**CHECK HARNESS BETWEEN ECM AND OIL FLOW CONTROL SOLENOID VALVE RH CONNECTOR.** Measure the resistance of harness between ECM and oil flow control solenoid valve RH connector. ***Connector & terminal*** ***(B134) No. 7 — (E63) No. 1:*** ***(B134) No. 15 — (E63) No. 2:***	Is the resistance less than 1 Ω?	Go to step **3**.	Repair the harness and connector. NOTE: In this case, repair the following item: • Open circuit in harness between ECM and oil flow control solenoid valve RH connector • Poor contact of coupling connector
3	**CHECK OIL FLOW CONTROL SOLENOID VALVE.** Measure the resistance between oil flow control solenoid valve terminals. ***Terminals*** ***No. 1 — No. 2:***	Is the resistance 6 — 12 Ω?	Repair the poor contact of ECM and oil flow control solenoid valve RH connector RH.	Replace the oil flow control solenoid valve RH. <Ref. to FU(H4DOTC)-50, Oil Flow Control Solenoid Valve.>

DV:DTC P2092 INTAKE CAMSHAFT POSITION ACTUATOR CONTROL CIRCUIT LOW (BANK 2)

DTC DETECTING CONDITION:

- Immediately at fault recognition
- GENERAL DESCRIPTION <Ref. to GD(H4DOTC)-225, DTC P2092 INTAKE CAMSHAFT POSITION ACTUATOR CONTROL CIRCUIT LOW (BANK 2), Diagnostic Trouble Code (DTC) Detecting Criteria.>

TROUBLE SYMPTOM:

Improper idling

CAUTION:

After servicing or replacing faulty parts, perform Clear Memory Mode <Ref. to EN(H4DOTC)(diag)-53, OPERATION, Clear Memory Mode.>, and Inspection Mode <Ref. to EN(H4DOTC)(diag)-41, PROCEDURE, Inspection Mode.>.

WIRING DIAGRAM:

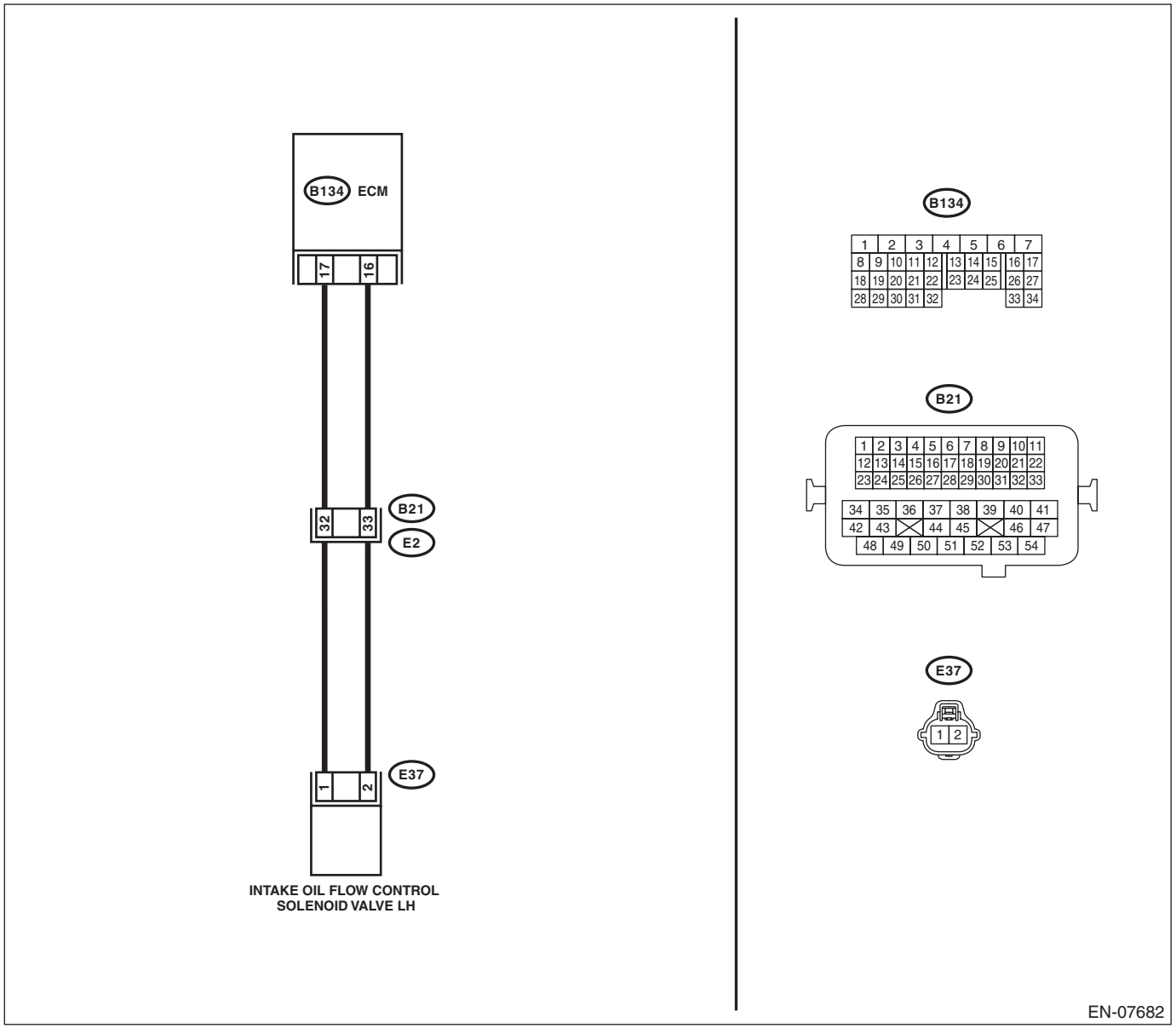

	Step	Check	Yes	No
1	**CHECK HARNESS BETWEEN ECM AND OIL FLOW CONTROL SOLENOID VALVE LH CONNECTOR.** 1) Turn the ignition switch to OFF. 2) Disconnect the connectors from ECM and oil flow control solenoid valve LH. 3) Measure the resistance of harness between ECM and oil flow control solenoid valve LH connector. ***Connector & terminal*** ***(B134) No. 17 — (E37) No. 1:*** ***(B134) No. 16 — (E37) No. 2:***	Is the resistance less than 1 Ω?	Go to step **2**.	Repair the harness and connector. NOTE: In this case, repair the following item: • Open circuit in harness between ECM and oil flow control solenoid valve RH connector • Poor contact of coupling connector
2	**CHECK HARNESS BETWEEN ECM AND OIL FLOW CONTROL SOLENOID VALVE LH CONNECTOR.** Measure the resistance between ECM and chassis ground. ***Connector & terminal*** ***(B134) No. 17 — Chassis ground:*** ***(B134) No. 16 — Chassis ground:***	Is the resistance 1 MΩ or more?	Go to step **3**.	Repair the short circuit to ground in harness between ECM and oil flow control solenoid valve LH connector.
3	**CHECK OIL FLOW CONTROL SOLENOID VALVE.** Measure the resistance between oil flow control solenoid valve terminals. ***Terminals*** ***No. 1 — No. 2:***	Is the resistance 6 — 12 Ω?	Repair the poor contact of ECM and oil flow control solenoid valve LH connector.	Replace the oil flow control solenoid valve LH. <Ref. to ME(H4DOTC)-63, Camshaft.>

DW:DTC P2093 INTAKE CAMSHAFT POSITION ACTUATOR CONTROL CIRCUIT HIGH (BANK 2)

DTC DETECTING CONDITION:

- Immediately at fault recognition
- GENERAL DESCRIPTION <Ref. to GD(H4DOTC)-225, DTC P2093 INTAKE CAMSHAFT POSITION ACTUATOR CONTROL CIRCUIT HIGH (BANK 2), Diagnostic Trouble Code (DTC) Detecting Criteria.>

TROUBLE SYMPTOM:

Improper idling

CAUTION:

After servicing or replacing faulty parts, perform Clear Memory Mode <Ref. to EN(H4DOTC)(diag)-53, OPERATION, Clear Memory Mode.>, and Inspection Mode <Ref. to EN(H4DOTC)(diag)-41, PROCEDURE, Inspection Mode.>.

WIRING DIAGRAM:

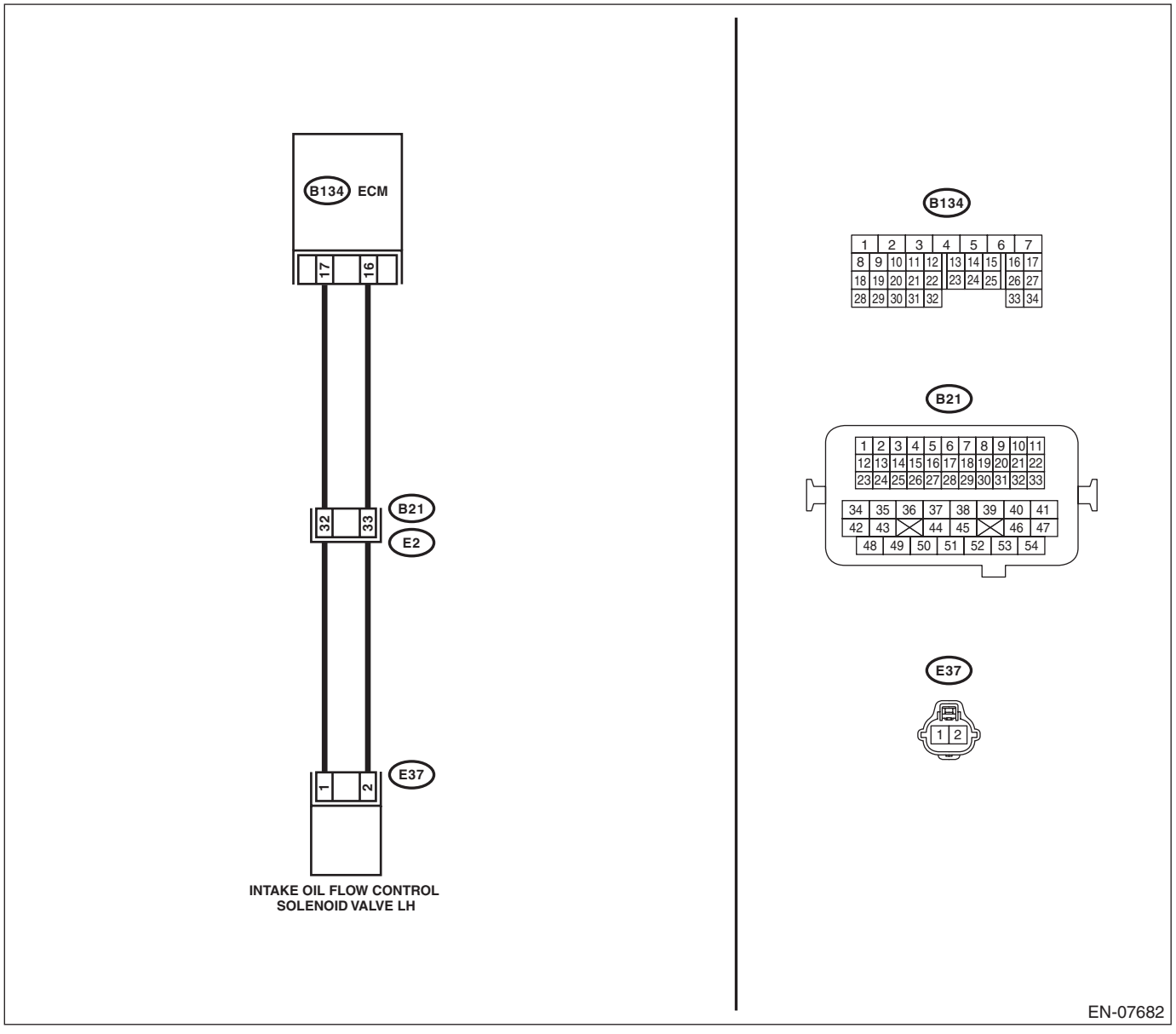

	Step	Check	Yes	No
1	**CHECK HARNESS BETWEEN ECM AND OIL FLOW CONTROL SOLENOID VALVE LH CONNECTOR.** 1) Turn the ignition switch to OFF. 2) Disconnect the connectors from ECM and oil flow control solenoid valve LH. 3) Measure the voltage between ECM and chassis ground. ***Connector & terminal*** ***(B134) No. 17 (+) — Chassis ground (–):*** ***(B134) No. 16 (+) — Chassis ground (–):***	Is the voltage less than 1 V?	Go to step **2**.	Repair the short circuit to power supply in harness between ECM and oil flow control solenoid valve LH connector.
2	**CHECK HARNESS BETWEEN ECM AND OIL FLOW CONTROL SOLENOID VALVE LH CONNECTOR.** Measure the resistance of harness between ECM and oil flow control solenoid valve LH connector. ***Connector & terminal*** ***(B134) No. 17 — (E37) No. 1:*** ***(B134) No. 16 — (E37) No. 2:***	Is the resistance less than 1 Ω?	Go to step **3**.	Repair the harness and connector. NOTE: In this case, repair the following item: • Open circuit in harness between ECM and oil flow control solenoid valve RH connector • Poor contact of coupling connector
3	**CHECK OIL FLOW CONTROL SOLENOID VALVE.** Measure the resistance between oil flow control solenoid valve terminals. ***Terminals*** ***No. 1 — No. 2:***	Is the resistance 6 — 12 Ω?	Repair the poor contact of ECM and oil flow control solenoid valve LH connector.	Replace the oil flow control solenoid valve LH. <Ref. to ME(H4DOTC)-63, Camshaft.>

DX:DTC P2094 EXHAUST CAMSHAFT POSITION ACTUATOR CONTROL CIRCUIT LOW (BANK 2)

DTC DETECTING CONDITION:

- Immediately at fault recognition
- GENERAL DESCRIPTION <Ref. to GD(H4DOTC)-225, DTC P2094 EXHAUST CAMSHAFT POSITION ACTUATOR CONTROL CIRCUIT LOW (BANK 2), Diagnostic Trouble Code (DTC) Detecting Criteria.>

TROUBLE SYMPTOM:

Improper idling

CAUTION:

After servicing or replacing faulty parts, perform Clear Memory Mode <Ref. to EN(H4DOTC)(diag)-53, OPERATION, Clear Memory Mode.>, and Inspection Mode <Ref. to EN(H4DOTC)(diag)-41, PROCEDURE, Inspection Mode.>.

WIRING DIAGRAM:

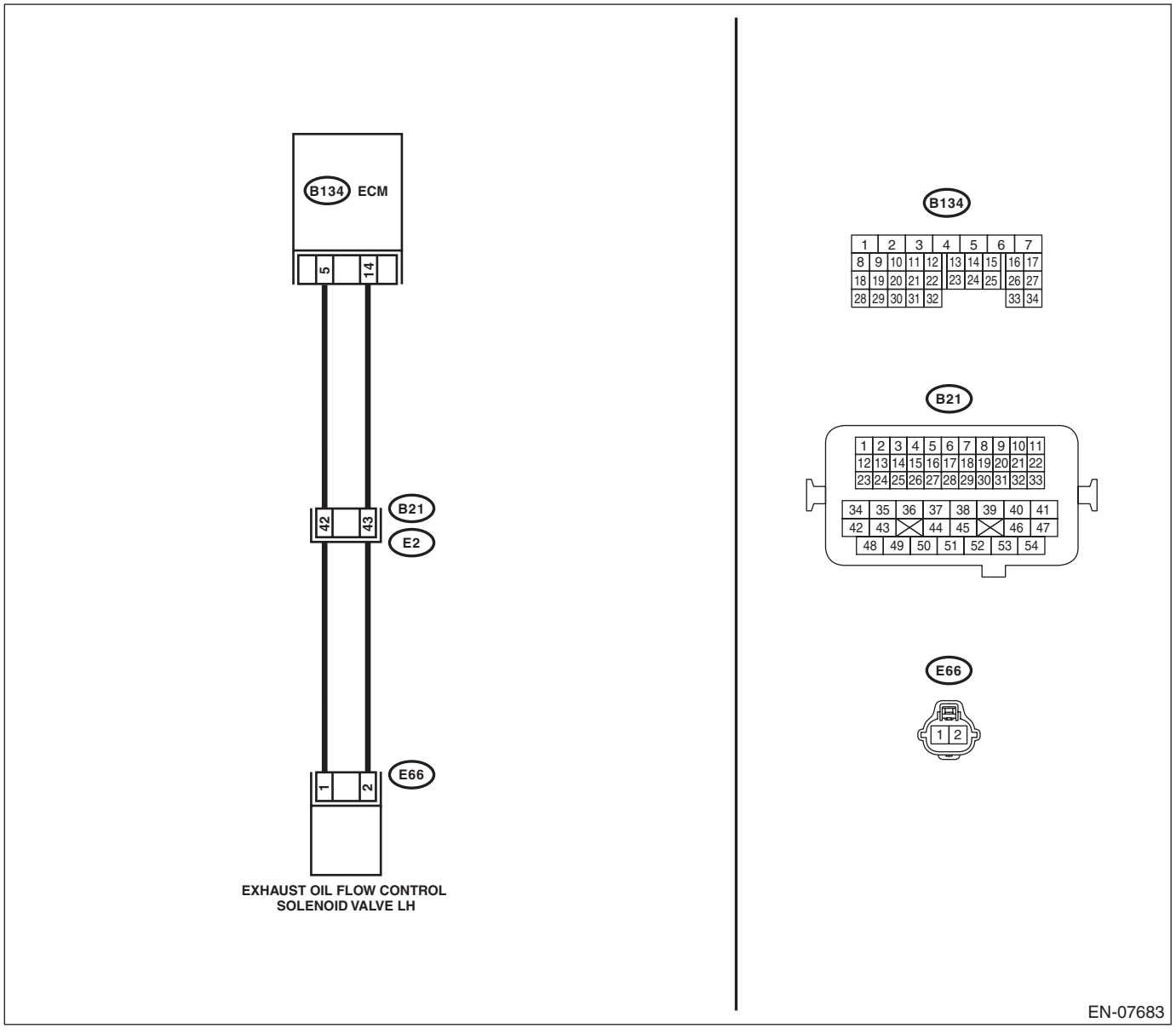

	Step	Check	Yes	No
1	**CHECK HARNESS BETWEEN ECM AND OIL FLOW CONTROL SOLENOID VALVE LH CONNECTOR.** 1) Turn the ignition switch to OFF. 2) Disconnect the connectors from ECM and oil flow control solenoid valve LH. 3) Measure the resistance of harness between ECM and oil flow control solenoid valve LH connector. ***Connector & terminal*** ***(B134) No. 5 — (E66) No. 1:*** ***(B134) No. 14 — (E66) No. 2:***	Is the resistance less than 1 Ω?	Go to step **2**.	Repair the harness and connector. NOTE: In this case, repair the following item: • Open circuit in harness between ECM and oil flow control solenoid valve RH connector • Poor contact of coupling connector
2	**CHECK HARNESS BETWEEN ECM AND OIL FLOW CONTROL SOLENOID VALVE LH CONNECTOR.** Measure the resistance between ECM and chassis ground. ***Connector & terminal*** ***(B134) No. 5 — Chassis ground:*** ***(B134) No. 14 — Chassis ground:***	Is the resistance 1 MΩ or more?	Go to step **3**.	Repair the short circuit to ground in harness between ECM and oil flow control solenoid valve LH connector.
3	**CHECK OIL FLOW CONTROL SOLENOID VALVE.** Measure the resistance between oil flow control solenoid valve terminals. ***Terminals*** ***No. 1 — No. 2:***	Is the resistance 6 — 12 Ω?	Repair the poor contact of ECM and oil flow control solenoid valve LH connector.	Replace the oil flow control solenoid valve LH. <Ref. to FU(H4DOTC)-50, Oil Flow Control Solenoid Valve.>

DY:DTC P2095 EXHAUST CAMSHAFT POSITION ACTUATOR CONTROL CIRCUIT HIGH (BANK 2)

DTC DETECTING CONDITION:

- Immediately at fault recognition
- GENERAL DESCRIPTION <Ref. to GD(H4DOTC)-225, DTC P2095 EXHAUST CAMSHAFT POSITION ACTUATOR CONTROL CIRCUIT HIGH (BANK 2), Diagnostic Trouble Code (DTC) Detecting Criteria.>

TROUBLE SYMPTOM:

Improper idling

CAUTION:

After servicing or replacing faulty parts, perform Clear Memory Mode <Ref. to EN(H4DOTC)(diag)-53, OPERATION, Clear Memory Mode.>, and Inspection Mode <Ref. to EN(H4DOTC)(diag)-41, PROCEDURE, Inspection Mode.>.

WIRING DIAGRAM:

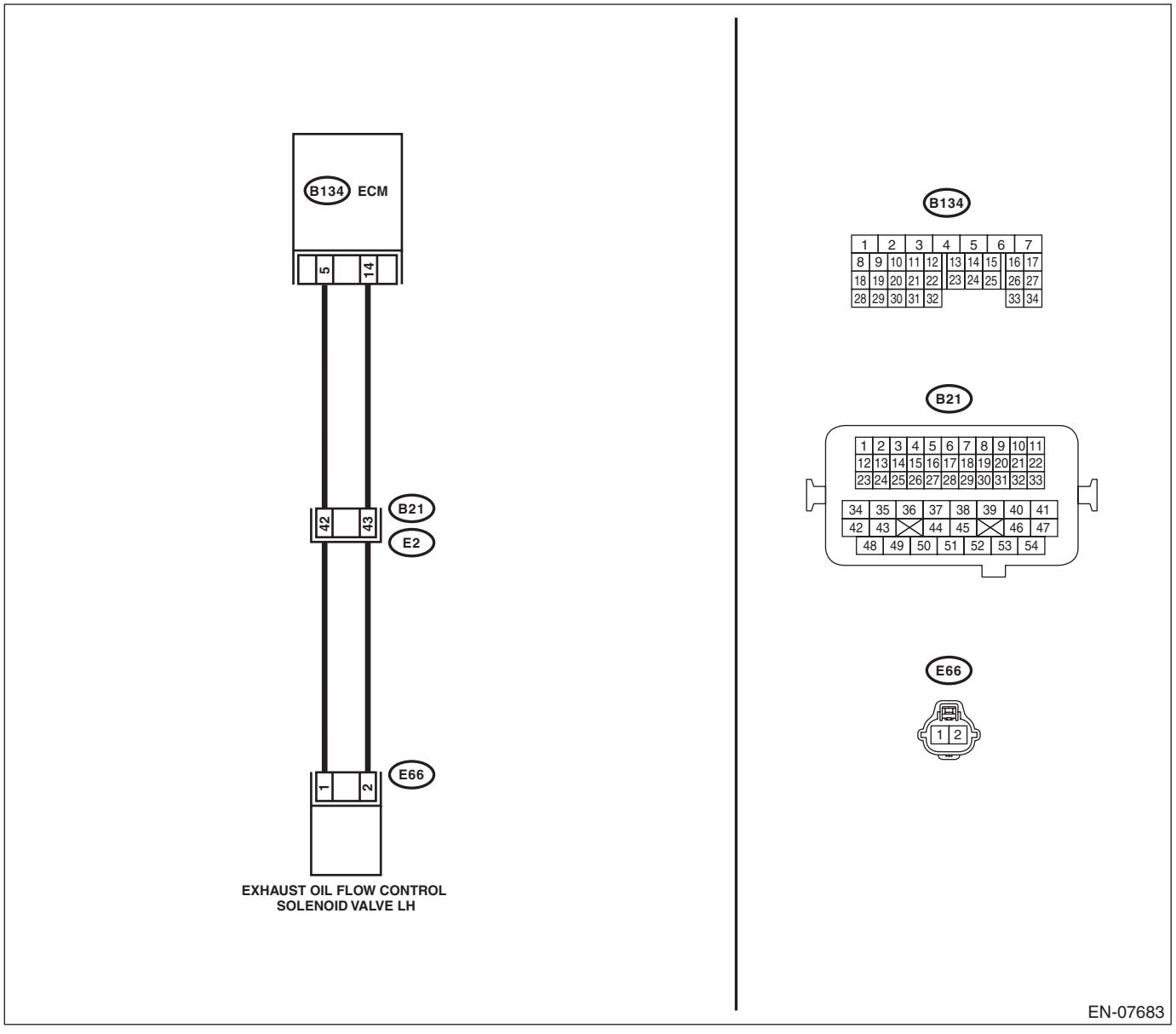

	Step	Check	Yes	No
1	**CHECK HARNESS BETWEEN ECM AND OIL FLOW CONTROL SOLENOID VALVE LH CONNECTOR.** 1) Turn the ignition switch to OFF. 2) Disconnect the connectors from ECM and oil flow control solenoid valve LH. 3) Measure the voltage between ECM and chassis ground. ***Connector & terminal*** ***(B134) No. 5 (+) — Chassis ground (–):*** ***(B134) No. 14 (+) — Chassis ground (–):***	Is the voltage less than 1 V?	Go to step **2**.	Repair the short circuit to power supply in harness between ECM and oil flow control solenoid valve LH connector.
2	**CHECK HARNESS BETWEEN ECM AND OIL FLOW CONTROL SOLENOID VALVE LH CONNECTOR.** Measure the resistance of harness between ECM and oil flow control solenoid valve LH connector. ***Connector & terminal*** ***(B134) No. 5 — (E66) No. 1:*** ***(B134) No. 14 — (E66) No. 2:***	Is the resistance less than 1 Ω?	Go to step **3**.	Repair the harness and connector. NOTE: In this case, repair the following item: • Open circuit in harness between ECM and oil flow control solenoid valve RH connector • Poor contact of coupling connector
3	**CHECK OIL FLOW CONTROL SOLENOID VALVE.** Measure the resistance between oil flow control solenoid valve terminals. ***Terminals*** ***No. 1 — No. 2:***	Is the resistance 6 — 12 Ω?	Repair the poor contact of ECM and oil flow control solenoid valve LH connector.	Replace the oil flow control solenoid valve LH. <Ref. to FU(H4DOTC)-50, Oil Flow Control Solenoid Valve.>

DZ:DTC P2096 POST CATALYST FUEL TRIM SYSTEM TOO LEAN (BANK 1)

DTC DETECTING CONDITION:

- Detected when two consecutive driving cycles with fault occur.
- GENERAL DESCRIPTION <Ref. to GD(H4DOTC)-226, DTC P2096 POST CATALYST FUEL TRIM SYSTEM TOO LEAN (BANK 1), Diagnostic Trouble Code (DTC) Detecting Criteria.>

CAUTION:
After servicing or replacing faulty parts, perform Clear Memory Mode <Ref. to EN(H4DOTC)(diag)-53, OPERATION, Clear Memory Mode.>, and Inspection Mode <Ref. to EN(H4DOTC)(diag)-41, PROCEDURE, Inspection Mode.>.
WIRING DIAGRAM:

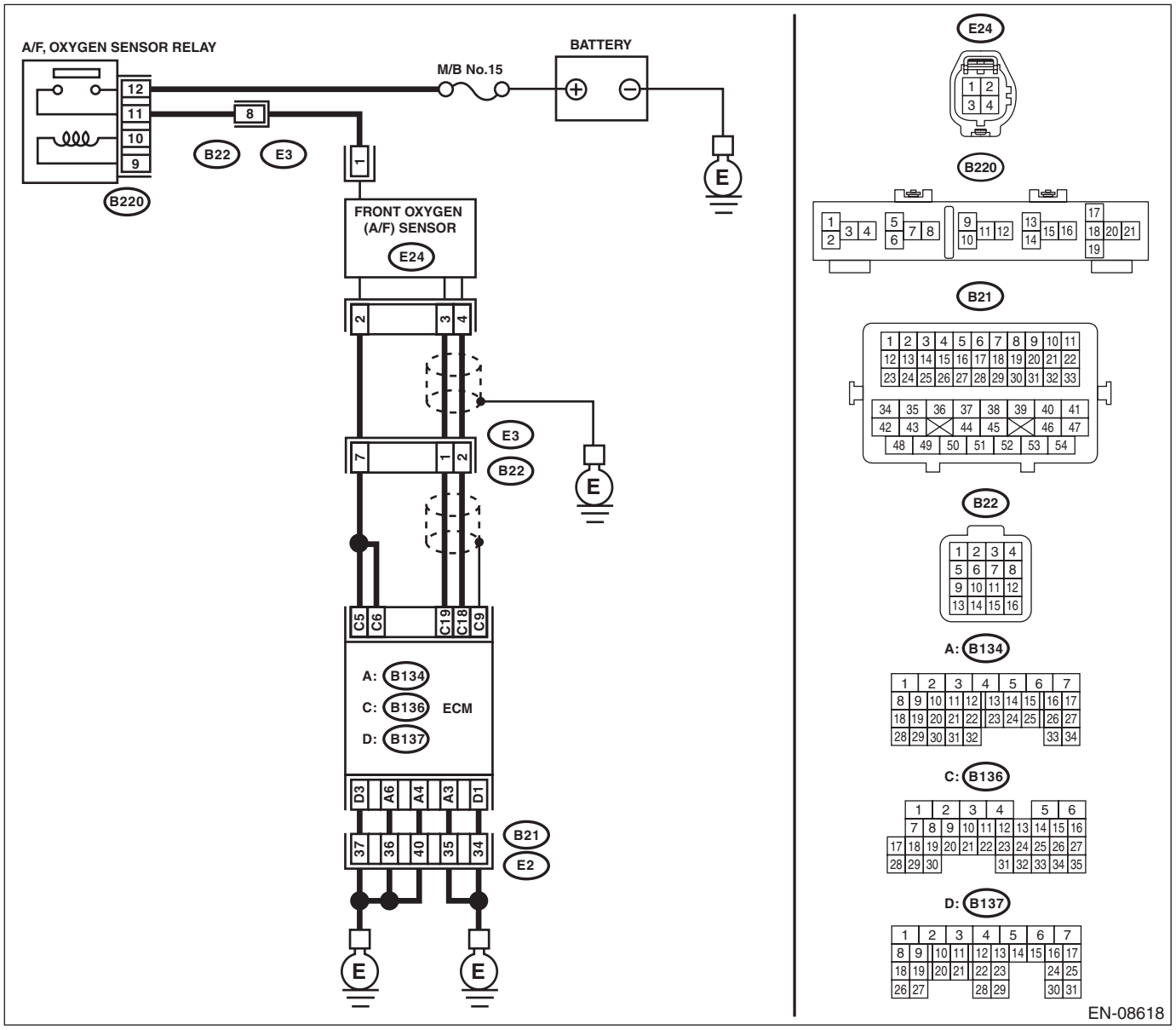

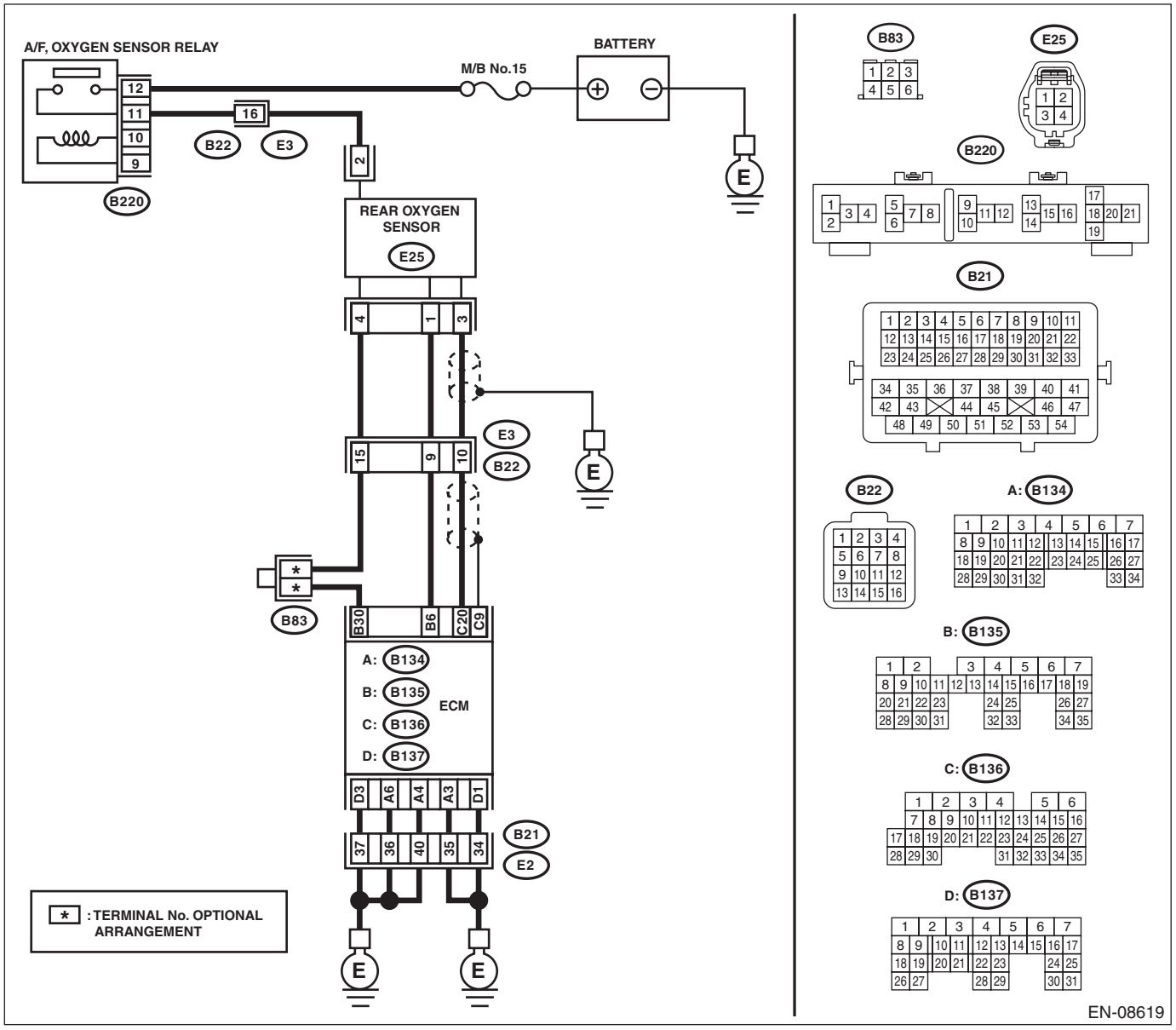

Step		Check	Yes	No
1	**CHECK FOR ANY OTHER DTC ON DISPLAY.**	Is any other DTC displayed?	Check DTC using "List of Diagnostic Trouble Code (DTC)". <Ref. to EN(H4DOTC)(diag)-75, List of Diagnostic Trouble Code (DTC).>	Go to step **2**.
2	**CHECK FRONT OXYGEN (A/F) SENSOR CONNECTOR AND COUPLING CONNECTOR.**	Has water entered the connector?	Completely remove any water inside.	Go to step **3**.

	Step	Check	Yes	No
3	**CHECK HARNESS BETWEEN ECM AND FRONT OXYGEN (A/F) SENSOR CONNECTOR.** 1) Turn the ignition switch to OFF. 2) Disconnect the connectors from ECM and front oxygen (A/F) sensor. 3) Measure the resistance of harness between ECM and front oxygen (A/F) sensor connector. ***Connector & terminal*** ***(B136) No. 19 — (E24) No. 3:*** ***(B136) No. 18 — (E24) No. 4:***	Is the resistance less than 1 Ω?	Go to step **4**.	Repair the harness and connector. NOTE: In this case, repair the following item: • Open circuit in harness between ECM and front oxygen (A/F) sensor connector • Poor contact of coupling connector
4	**CHECK HARNESS BETWEEN ECM AND FRONT OXYGEN (A/F) SENSOR CONNECTOR.** Measure the resistance between ECM and chassis ground. ***Connector & terminal*** ***(B136) No. 19 — Chassis ground:*** ***(B136) No. 18 — Chassis ground:***	Is the resistance 1 MΩ or more?	Go to step **5**.	Repair the ground short circuit of harness between ECM and front oxygen (A/F) sensor connector.
5	**CHECK OUTPUT SIGNAL FOR ECM.** 1) Connect the connector to ECM. 2) Turn the ignition switch to ON. 3) Measure the voltage between front oxygen (A/F) sensor connector and chassis ground. ***Connector & terminal*** ***(E24) No. 3 (+) — Chassis ground (–):***	Is the voltage 4.5 V or more?	Go to step **7**.	Go to step **6**.
6	**CHECK OUTPUT SIGNAL FOR ECM.** Measure the voltage between front oxygen (A/F) sensor connector and chassis ground. ***Connector & terminal*** ***(E24) No. 4 (+) — Chassis ground (–):***	Is the voltage 4.95 V or more?	Go to step **7**.	Go to step **8**.
7	**CHECK OUTPUT SIGNAL FOR ECM.** Measure the voltage between front oxygen (A/F) sensor connector and chassis ground. ***Connector & terminal*** ***(E24) No. 3 (+) — Chassis ground (–):*** ***(E24) No. 4 (+) — Chassis ground (–):***	Is the voltage 8 V or more?	Repair the short circuit to power in the harness between ECM and front oxygen (A/F) sensor connector. After repair, replace the ECM. <Ref. to FU(H4DOTC)-58, Engine Control Module (ECM).>	Repair the poor contact of ECM connector.
8	**CHECK EXHAUST SYSTEM.**	Are there holes or loose bolts on exhaust system?	Repair the exhaust system.	Go to step **9**.
9	**CHECK AIR INTAKE SYSTEM.**	Are there holes, loose bolts or disconnection of hose on air intake system?	Repair the air intake system.	Go to step **10**.

	Step	Check	Yes	No
10	**CHECK FUEL PRESSURE.** **WARNING:** **Place "NO OPEN FLAMES" signs near the working area.** **CAUTION:** **Be careful not to spill fuel.** 1) Connect the front oxygen (A/F) sensor connector. 2) Measure the fuel pressure while disconnecting pressure regulator vacuum hose from intake manifold. <Ref. to ME(H4DOTC)-26, INSPECTION, Fuel Pressure.> **CAUTION:** **Release fuel pressure before removing the fuel pressure gauge.** NOTE: If fuel pressure does not increase, squeeze the fuel return hose 2 to 3 times, then measure fuel pressure again.	Is the measured value 328 — 358 kPa (3.3 — 3.7 kgf/cm^2, 48 — 52 psi)?	Go to step **11**.	Repair the following item. Fuel pressure is too high: • Clogged fuel return line or bent hose Fuel pressure is too low: • Improper fuel pump discharge • Clogged fuel supply line
11	**CHECK FUEL PRESSURE.** After connecting the pressure regulator vacuum hose, measure fuel pressure. <Ref. to ME(H4DOTC)-26, INSPECTION, Fuel Pressure.> **CAUTION:** **Release fuel pressure before removing the fuel pressure gauge.** NOTE: • If fuel pressure does not increase, squeeze fuel return hose 2 to 3 times, then measure fuel pressure again. • If the measured value at this step is out of specification, check or replace pressure regulator and pressure regulator vacuum hose.	Is the measured value 274 — 304 kPa (2.8 — 3.1 kgf/cm^2, 40 — 44 psi)?	Go to step **12**.	Repair the following item. Fuel pressure is too high: • Faulty pressure regulator • Clogged fuel return line or bent hose Fuel pressure is too low: • Faulty pressure regulator • Improper fuel pump discharge • Clogged fuel supply line
12	**CHECK ENGINE COOLANT TEMPERATURE SENSOR.** 1) Start the engine and warm up completely. 2) Read the value of «Coolant Temp.» using the Subaru Select Monitor or a general scan tool. NOTE: • Subaru Select Monitor For detailed operation procedures, refer to "READ CURRENT DATA FOR ENGINE". <Ref. to EN(H4DOTC)(diag)-34, Subaru Select Monitor.> • General scan tool For detailed operation procedures, refer to the general scan tool operation manual.	Is the value of «Coolant Temp.» 75°C (167°F) or more?	Go to step **13**.	Replace the engine coolant temperature sensor. <Ref. to FU(H4DOTC)-34, Engine Coolant Temperature Sensor.>

	Step	Check	Yes	No
13	**CHECK MASS AIR FLOW AND INTAKE AIR TEMPERATURE SENSOR.** 1) Start the engine and warm up engine until coolant temperature is higher than 75°C (167°F). 2) Place the shift lever in neutral position. 3) Turn the A/C switch to OFF. 4) Turn all the accessory switches to OFF. 5) Read the value of «Mass Air Flow» using the Subaru Select Monitor or a general scan tool. NOTE: • Subaru Select Monitor For detailed operation procedures, refer to "READ CURRENT DATA FOR ENGINE". <Ref. to EN(H4DOTC)(diag)-34, Subaru Select Monitor.> • General scan tool For detailed operation procedures, refer to the general scan tool operation manual.	Is the value in «Mass Air Flow» 2.0 — 5.0 g/s (0.26 — 0.66 lb/s)?	Go to step **14**.	Replace the mass air flow and intake air temperature sensor. <Ref. to FU(H4DOTC)-42, Mass Air Flow and Intake Air Temperature Sensor.>
14	**CHECK MASS AIR FLOW AND INTAKE AIR TEMPERATURE SENSOR.** 1) Start the engine and warm up engine until coolant temperature is higher than 75°C (167°F). 2) Place the shift lever in neutral position. 3) Turn the A/C switch to OFF. 4) Turn all the accessory switches to OFF. 5) Open the front hood. 6) Measure the ambient temperature. 7) Read the value of «Intake Air Temp.» using the Subaru Select Monitor or a general scan tool. NOTE: • Subaru Select Monitor For detailed operation procedures, refer to "READ CURRENT DATA FOR ENGINE". <Ref. to EN(H4DOTC)(diag)-34, Subaru Select Monitor.> • General scan tool For detailed operation procedures, refer to the general scan tool operation manual.	Subtract ambient temperature from «Intake Air Temp.». Is the obtained value –10 — 50°C (–18 — 90°F)?	Go to step **15**.	Check the mass air flow and intake air temperature sensor. <Ref. to FU(H4DOTC)-42, Mass Air Flow and Intake Air Temperature Sensor.>
15	**CHECK REAR OXYGEN SENSOR DATA.** 1) Warm up the engine until engine coolant temperature is higher than 75°C (167°F), and keep the engine speed at 3,000 rpm. (2 minutes maximum) 2) Read the value of «Rear O2 Sensor» using the Subaru Select Monitor or a general scan tool. NOTE: • Depress the clutch pedal. • Subaru Select Monitor For detailed operation procedures, refer to "READ CURRENT DATA FOR ENGINE". <Ref. to EN(H4DOTC)(diag)-34, Subaru Select Monitor.> • General scan tool For detailed operation procedures, refer to the general scan tool operation manual.	Is the value of «Rear O2 Sensor» 0.490 V or more?	Go to step **16**.	Go to step **17**.

	Step	Check	Yes	No
16	**CHECK REAR OXYGEN SENSOR DATA.** 1) Warm up the engine until engine coolant temperature is higher than 75°C (167°F), and rapidly reduce the engine speed from 3,000 rpm. 2) Read the value of «Rear O2 Sensor» using the Subaru Select Monitor or a general scan tool. NOTE: • Depress the clutch pedal. • Subaru Select Monitor For detailed operation procedures, refer to "READ CURRENT DATA FOR ENGINE". <Ref. to EN(H4DOTC)(diag)-34, Subaru Select Monitor.> • General scan tool For detailed operation procedures, refer to the general scan tool operation manual.	Is the value of «Rear O2 Sensor» 0.250 V or less?	Go to step **18**.	Go to step **17**.
17	**CHECK REAR OXYGEN SENSOR CONNECTOR AND COUPLING CONNECTOR.**	Has water entered the connector?	Completely remove any water inside.	Go to step **19**.
18	**CHECK FRONT OXYGEN (A/F) SENSOR USING REAR OXYGEN SENSOR SIGNAL.** 1) Warm up the engine until engine coolant temperature is higher than 75°C (167°F), then keep the engine idling for 5 minutes or more. 2) Read the value of «Rear O2 Sensor» using the Subaru Select Monitor or a general scan tool. NOTE: • Subaru Select Monitor For detailed operation procedures, refer to "READ CURRENT DATA FOR ENGINE". <Ref. to EN(H4DOTC)(diag)-34, Subaru Select Monitor.> • General scan tool For detailed operation procedures, refer to the general scan tool operation manual.	Is the value in «Rear O2 Sensor» kept at 0.250 V or less for 5 minutes or more?	Replace the front oxygen (A/F) sensor. <Ref. to FU(H4DOTC)-54, Front Oxygen (A/F) Sensor.>	Go to step **19**.
19	**CHECK HARNESS BETWEEN ECM AND REAR OXYGEN SENSOR CONNECTOR.** 1) Turn the ignition switch to OFF. 2) Disconnect the connector from ECM and rear oxygen sensor. 3) Measure the resistance of harness between ECM and rear oxygen sensor connector. ***Connector & terminal*** ***(B136) No. 20 — (E25) No. 3:*** ***(B135) No. 30 — (E25) No. 4:***	Is the resistance less than 1 Ω?	Go to step **20**.	Repair the harness and connector. NOTE: In this case, repair the following item: • Open circuit in harness between ECM and rear oxygen sensor connector • Poor contact of coupling connector

	Step	Check	Yes	No
20	**CHECK HARNESS BETWEEN ECM AND REAR OXYGEN SENSOR CONNECTOR.** 1) Connect the connector to ECM. 2) Turn the ignition switch to ON. 3) Measure the voltage between rear oxygen sensor connector and chassis ground. ***Connector & terminal*** ***(E25) No. 3 (+) — Chassis ground (–):***	Is the voltage 0.2 — 0.5 V?	Replace the rear oxygen sensor. <Ref. to FU(H4DOTC)-56, Rear Oxygen Sensor.>	Repair the harness and connector. NOTE: In this case, repair the following item: • Open circuit in harness between ECM and rear oxygen sensor connector • Poor contact of ECM connector • Poor contact of coupling connector

EA:DTC P2097 POST CATALYST FUEL TRIM SYSTEM TOO RICH (BANK 1)

DTC DETECTING CONDITION:

- Detected when two consecutive driving cycles with fault occur.
- GENERAL DESCRIPTION <Ref. to GD(H4DOTC)-228, DTC P2097 POST CATALYST FUEL TRIM SYSTEM TOO RICH (BANK 1), Diagnostic Trouble Code (DTC) Detecting Criteria.>

CAUTION:
After servicing or replacing faulty parts, perform Clear Memory Mode <Ref. to EN(H4DOTC)(diag)-53, OPERATION, Clear Memory Mode.>, and Inspection Mode <Ref. to EN(H4DOTC)(diag)-41, PROCEDURE, Inspection Mode.>.
WIRING DIAGRAM:

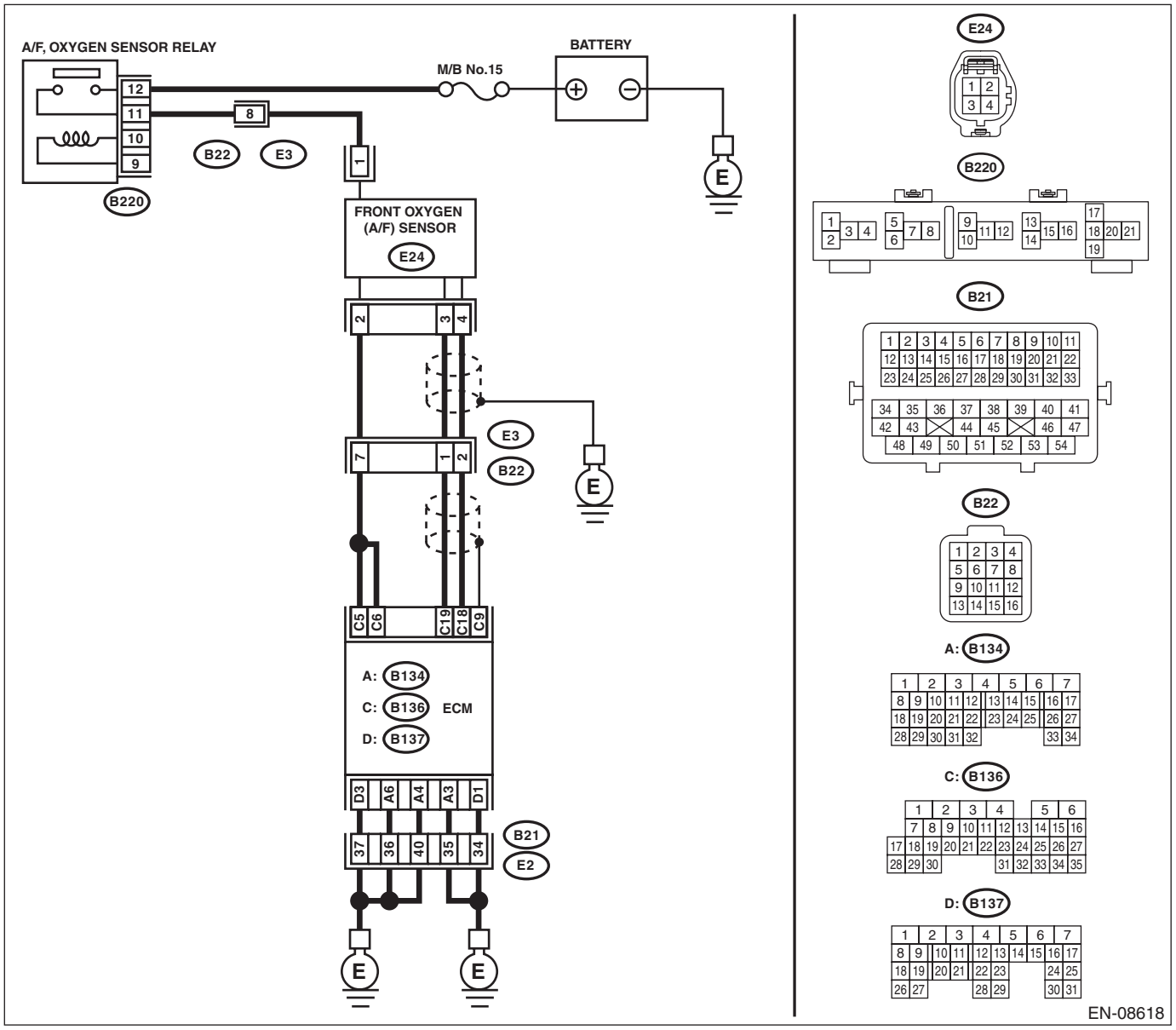

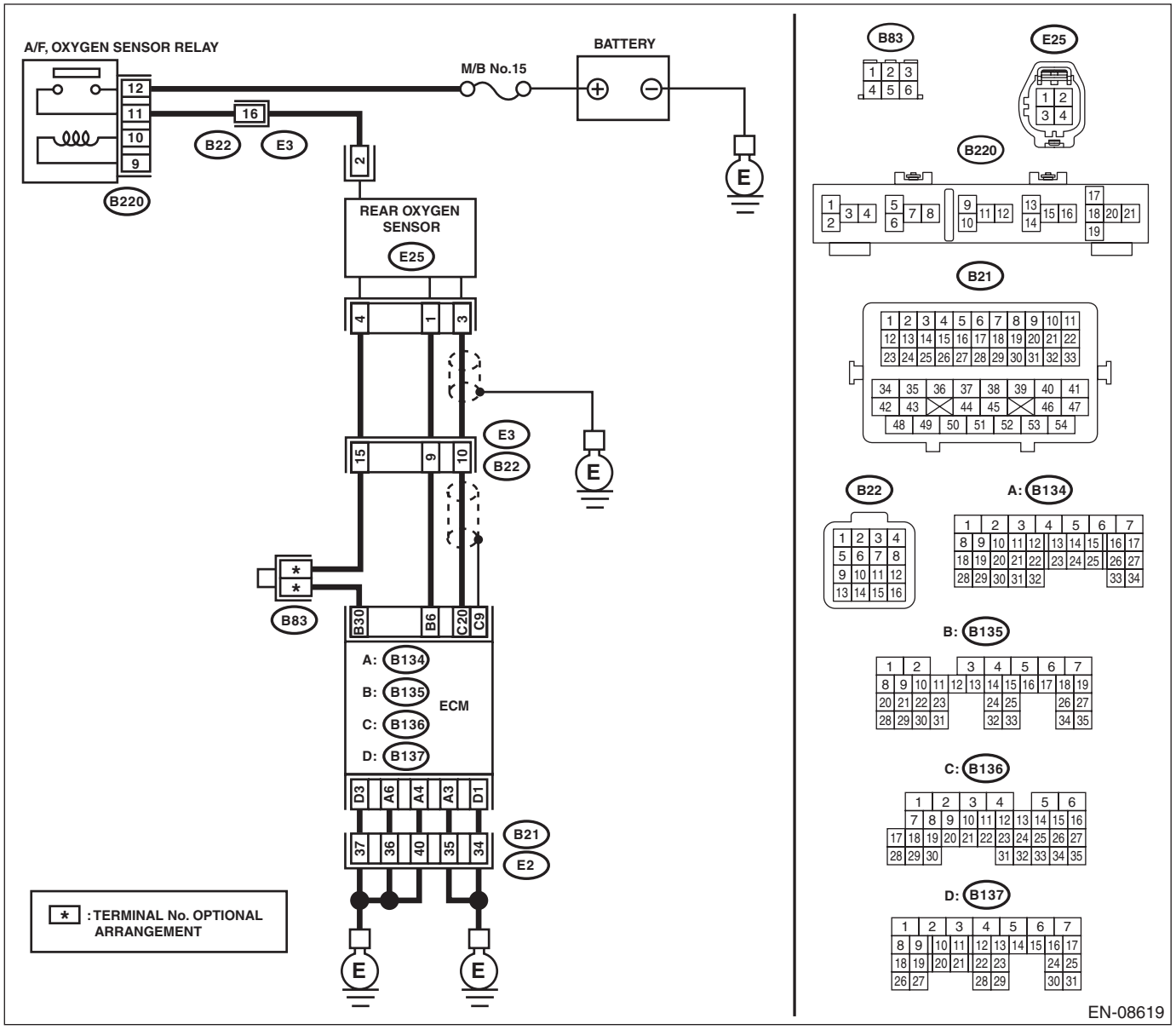

Step		Check	Yes	No
1	**CHECK FOR ANY OTHER DTC ON DISPLAY.**	Is any other DTC displayed?	Check DTC using "List of Diagnostic Trouble Code (DTC)". <Ref. to EN(H4DOTC)(diag)-75, List of Diagnostic Trouble Code (DTC).>	Go to step **2**.
2	**CHECK FRONT OXYGEN (A/F) SENSOR CONNECTOR AND COUPLING CONNECTOR.**	Has water entered the connector?	Completely remove any water inside.	Go to step **3**.

	Step	Check	Yes	No
3	**CHECK HARNESS BETWEEN ECM AND FRONT OXYGEN (A/F) SENSOR CONNECTOR.** 1) Turn the ignition switch to OFF. 2) Disconnect the connectors from ECM and front oxygen (A/F) sensor. 3) Measure the resistance of harness between ECM and front oxygen (A/F) sensor connector. ***Connector & terminal*** ***(B136) No. 19 — (E24) No. 3:*** ***(B136) No. 18 — (E24) No. 4:***	Is the resistance less than 1 Ω?	Go to step **4**.	Repair the harness and connector. NOTE: In this case, repair the following item: • Open circuit in harness between ECM and front oxygen (A/F) sensor connector • Poor contact of coupling connector
4	**CHECK HARNESS BETWEEN ECM AND FRONT OXYGEN (A/F) SENSOR CONNECTOR.** Measure the resistance between ECM and chassis ground. ***Connector & terminal*** ***(B136) No. 19 — Chassis ground:*** ***(B136) No. 18 — Chassis ground:***	Is the resistance 1 MΩ or more?	Go to step **5**.	Repair the ground short circuit of harness between ECM and front oxygen (A/F) sensor connector.
5	**CHECK OUTPUT SIGNAL FOR ECM.** 1) Connect the connector to ECM. 2) Turn the ignition switch to ON. 3) Measure the voltage between front oxygen (A/F) sensor connector and chassis ground. ***Connector & terminal*** ***(E24) No. 3 (+) — Chassis ground (–):***	Is the voltage 4.5 V or more?	Go to step **7**.	Go to step **6**.
6	**CHECK OUTPUT SIGNAL FOR ECM.** Measure the voltage between front oxygen (A/F) sensor connector and chassis ground. ***Connector & terminal*** ***(E24) No. 4 (+) — Chassis ground (–):***	Is the voltage 4.95 V or more?	Go to step **7**.	Go to step **8**.
7	**CHECK OUTPUT SIGNAL FOR ECM.** Measure the voltage between front oxygen (A/F) sensor connector and chassis ground. ***Connector & terminal*** ***(E24) No. 3 (+) — Chassis ground (–):*** ***(E24) No. 4 (+) — Chassis ground (–):***	Is the voltage 8 V or more?	Repair the short circuit to power in the harness between ECM and front oxygen (A/F) sensor connector. After repair, replace the ECM. <Ref. to FU(H4DOTC)-58, Engine Control Module (ECM).>	Repair the poor contact of ECM connector.
8	**CHECK EXHAUST SYSTEM.**	Are there holes or loose bolts on exhaust system?	Repair the exhaust system.	Go to step **9**.
9	**CHECK AIR INTAKE SYSTEM.**	Are there holes, loose bolts or disconnection of hose on air intake system?	Repair the air intake system.	Go to step **10**.

	Step	Check	Yes	No
10	**CHECK FUEL PRESSURE.** **WARNING:** **Place "NO OPEN FLAMES" signs near the working area.** **CAUTION:** **Be careful not to spill fuel.** 1) Connect the front oxygen (A/F) sensor connector. 2) Measure the fuel pressure while disconnecting pressure regulator vacuum hose from intake manifold. <Ref. to ME(H4DOTC)-26, INSPECTION, Fuel Pressure.> **CAUTION:** **Release fuel pressure before removing the fuel pressure gauge.** NOTE: If fuel pressure does not increase, squeeze the fuel return hose 2 to 3 times, then measure fuel pressure again.	Is the measured value 328 — 358 kPa (3.3 — 3.7 kgf/cm^2, 48 — 52 psi)?	Go to step **11**.	Repair the following item. Fuel pressure is too high: • Clogged fuel return line or bent hose Fuel pressure is too low: • Improper fuel pump discharge • Clogged fuel supply line
11	**CHECK FUEL PRESSURE.** After connecting the pressure regulator vacuum hose, measure fuel pressure. <Ref. to ME(H4DOTC)-26, INSPECTION, Fuel Pressure.> **CAUTION:** **Release fuel pressure before removing the fuel pressure gauge.** NOTE: • If fuel pressure does not increase, squeeze fuel return hose 2 to 3 times, then measure fuel pressure again. • If the measured value at this step is out of specification, check or replace pressure regulator and pressure regulator vacuum hose.	Is the measured value 274 — 304 kPa (2.8 — 3.1 kgf/cm^2, 40 — 44 psi)?	Go to step **12**.	Repair the following item. Fuel pressure is too high: • Faulty pressure regulator • Clogged fuel return line or bent hose Fuel pressure is too low: • Faulty pressure regulator • Improper fuel pump discharge • Clogged fuel supply line
12	**CHECK ENGINE COOLANT TEMPERATURE SENSOR.** 1) Start the engine and warm up completely. 2) Read the value of «Coolant Temp.» using the Subaru Select Monitor or a general scan tool. NOTE: • Subaru Select Monitor For detailed operation procedures, refer to "READ CURRENT DATA FOR ENGINE". <Ref. to EN(H4DOTC)(diag)-34, Subaru Select Monitor.> • General scan tool For detailed operation procedures, refer to the general scan tool operation manual.	Is the value of «Coolant Temp.» 75°C (167°F) or more?	Go to step **13**.	Replace the engine coolant temperature sensor. <Ref. to FU(H4DOTC)-34, Engine Coolant Temperature Sensor.>

	Step	Check	Yes	No
13	**CHECK MASS AIR FLOW AND INTAKE AIR TEMPERATURE SENSOR.** 1) Start the engine and warm up engine until coolant temperature is higher than 75°C (167°F). 2) Place the shift lever in neutral position. 3) Turn the A/C switch to OFF. 4) Turn all the accessory switches to OFF. 5) Read the value of «Mass Air Flow» using the Subaru Select Monitor or a general scan tool. NOTE: • Subaru Select Monitor For detailed operation procedures, refer to "READ CURRENT DATA FOR ENGINE". <Ref. to EN(H4DOTC)(diag)-34, Subaru Select Monitor.> • General scan tool For detailed operation procedures, refer to the general scan tool operation manual.	Is the value in «Mass Air Flow» 2.0 — 5.0 g/s (0.26 — 0.66 lb/s)?	Go to step **14**.	Replace the mass air flow and intake air temperature sensor. <Ref. to FU(H4DOTC)-42, Mass Air Flow and Intake Air Temperature Sensor.>
14	**CHECK MASS AIR FLOW AND INTAKE AIR TEMPERATURE SENSOR.** 1) Start the engine and warm up engine until coolant temperature is higher than 75°C (167°F). 2) Place the shift lever in neutral position. 3) Turn the A/C switch to OFF. 4) Turn all the accessory switches to OFF. 5) Open the front hood. 6) Measure the ambient temperature. 7) Read the value of «Intake Air Temp.» using the Subaru Select Monitor or a general scan tool. NOTE: • Subaru Select Monitor For detailed operation procedures, refer to "READ CURRENT DATA FOR ENGINE". <Ref. to EN(H4DOTC)(diag)-34, Subaru Select Monitor.> • General scan tool For detailed operation procedures, refer to the general scan tool operation manual.	Subtract ambient temperature from «Intake Air Temp.». Is the obtained value –10 — 50°C (–18 — 90°F)?	Go to step **15**.	Check the mass air flow and intake air temperature sensor. <Ref. to FU(H4DOTC)-42, Mass Air Flow and Intake Air Temperature Sensor.>
15	**CHECK REAR OXYGEN SENSOR DATA.** 1) Warm up the engine until engine coolant temperature is higher than 75°C (167°F), and keep the engine speed at 3,000 rpm. (2 minutes maximum) 2) Read the value of «Rear O2 Sensor» using the Subaru Select Monitor or a general scan tool. NOTE: • Depress the clutch pedal. • Subaru Select Monitor For detailed operation procedures, refer to "READ CURRENT DATA FOR ENGINE". <Ref. to EN(H4DOTC)(diag)-34, Subaru Select Monitor.> • General scan tool For detailed operation procedures, refer to the general scan tool operation manual.	Is the value of «Rear O2 Sensor» 0.490 V or more?	Go to step **16**.	Go to step **17**.

	Step	Check	Yes	No
16	**CHECK REAR OXYGEN SENSOR DATA.** 1) Warm up the engine until engine coolant temperature is higher than 75°C (167°F), and rapidly reduce the engine speed from 3,000 rpm. 2) Read the value of «Rear O2 Sensor» using the Subaru Select Monitor or a general scan tool. NOTE: • Depress the clutch pedal. • Subaru Select Monitor For detailed operation procedures, refer to "READ CURRENT DATA FOR ENGINE". <Ref. to EN(H4DOTC)(diag)-34, Subaru Select Monitor.> • General scan tool For detailed operation procedures, refer to the general scan tool operation manual.	Is the value of «Rear O2 Sensor» 0.250 V or less?	Go to step **18**.	Go to step **17**.
17	**CHECK REAR OXYGEN SENSOR CONNECTOR AND COUPLING CONNECTOR.**	Has water entered the connector?	Completely remove any water inside.	Go to step **19**.
18	**CHECK FRONT OXYGEN (A/F) SENSOR USING REAR OXYGEN SENSOR SIGNAL.** 1) Warm up the engine until engine coolant temperature is higher than 75°C (167°F), then keep the engine idling for 5 minutes or more. 2) Read the value of «Rear O2 Sensor» using the Subaru Select Monitor or a general scan tool. NOTE: • Subaru Select Monitor For detailed operation procedures, refer to "READ CURRENT DATA FOR ENGINE". <Ref. to EN(H4DOTC)(diag)-34, Subaru Select Monitor.> • General scan tool For detailed operation procedures, refer to the general scan tool operation manual.	Is the value in «Rear O2 Sensor» kept at 0.8 V or more for 5 minutes or more?	Replace the front oxygen (A/F) sensor. <Ref. to FU(H4DOTC)-54, Front Oxygen (A/F) Sensor.>	Go to step **19**.
19	**CHECK HARNESS BETWEEN ECM AND REAR OXYGEN SENSOR CONNECTOR.** 1) Turn the ignition switch to OFF. 2) Disconnect the connector from ECM and rear oxygen sensor. 3) Measure the resistance of harness between ECM and rear oxygen sensor connector. ***Connector & terminal*** ***(B136) No. 20 — (E25) No. 3:*** ***(B135) No. 30 — (E25) No. 4:***	Is the resistance less than 1 Ω?	Go to step **20**.	Repair the harness and connector. NOTE: In this case, repair the following item: • Open circuit in harness between ECM and rear oxygen sensor connector • Poor contact of coupling connector

	Step	Check	Yes	No
20	**CHECK HARNESS BETWEEN ECM AND REAR OXYGEN SENSOR CONNECTOR.** 1) Connect the connector to ECM. 2) Turn the ignition switch to ON. 3) Measure the voltage between rear oxygen sensor connector and chassis ground. ***Connector & terminal*** ***(E25) No. 3 (+) — Chassis ground (–):***	Is the voltage 0.2 — 0.5 V?	Replace the rear oxygen sensor. <Ref. to FU(H4DOTC)-56, Rear Oxygen Sensor.>	Repair the harness and connector. NOTE: In this case, repair the following item: • Open circuit in harness between ECM and rear oxygen sensor connector • Poor contact of ECM connector • Poor contact of coupling connector

EB:DTC P2101 THROTTLE ACTUATOR CONTROL MOTOR CIRCUIT RANGE/ PERFORMANCE

DTC DETECTING CONDITION:

- Immediately at fault recognition
- GENERAL DESCRIPTION <Ref. to GD(H4DOTC)-230, DTC P2101 THROTTLE ACTUATOR CONTROL MOTOR CIRCUIT RANGE/PERFORMANCE, Diagnostic Trouble Code (DTC) Detecting Criteria.>

TROUBLE SYMPTOM:

- Improper idling
- Poor driving performance
- Engine stalls.

CAUTION:

After servicing or replacing faulty parts, perform Clear Memory Mode <Ref. to EN(H4DOTC)(diag)-53, OPERATION, Clear Memory Mode.>, and Inspection Mode <Ref. to EN(H4DOTC)(diag)-41, PROCEDURE, Inspection Mode.>.

WIRING DIAGRAM:

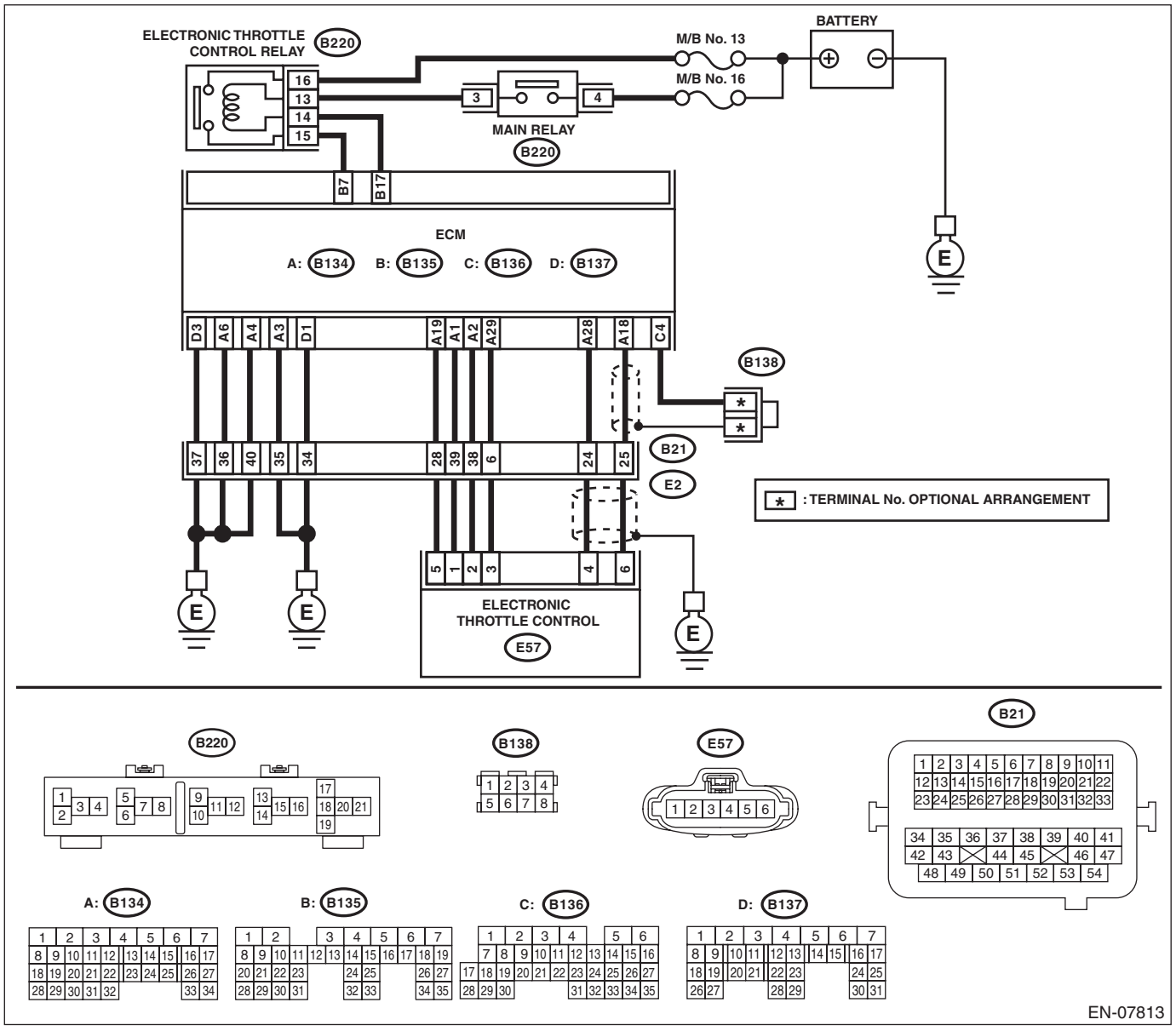

	Step	Check	Yes	No
1	**CHECK ELECTRONIC THROTTLE CONTROL RELAY.** 1) Turn the ignition switch to OFF. 2) Remove the electronic throttle control relay. 3) Connect the battery to terminals No. 13 and No. 14 of electronic throttle control relay. 4) Measure the resistance between electronic throttle control relay terminals. ***Terminals*** ***No. 16 — No. 15:***	Is the resistance less than 1 Ω?	Go to step **2**.	Replace the electronic throttle control relay. <Ref. to FU(H4DOTC)-63, Electronic Throttle Control Relay.>
2	**CHECK POWER SUPPLY OF ELECTRONIC THROTTLE CONTROL RELAY.** Measure the voltage between electronic throttle control relay connector and chassis ground. ***Connector & terminal*** ***(B220) No. 16 (+) — Chassis ground (–):***	Is the voltage 10 V or more?	Go to step **3**.	Repair the open or ground short circuit of power supply circuit.
3	**CHECK HARNESS BETWEEN ECM AND ELECTRONIC THROTTLE CONTROL RELAY CONNECTOR.** 1) Disconnect the connector from ECM. 2) Turn the ignition switch to ON. 3) Measure the voltage between electronic throttle control relay connector and chassis ground. ***Connector & terminal*** ***(B220) No. 14 (+) — Chassis ground (–):***	Is the voltage 10 V or more?	Repair the short circuit to power in the harness between ECM and electronic throttle control relay connector.	Go to step **4**.
4	**CHECK HARNESS BETWEEN ECM AND ELECTRONIC THROTTLE CONTROL RELAY CONNECTOR.** 1) Turn the ignition switch to OFF. 2) Measure the resistance between electronic throttle control relay connector and chassis ground. ***Connector & terminal*** ***(B220) No. 14 — Chassis ground:*** ***(B220) No. 15 — Chassis ground:***	Is the resistance 1 MΩ or more?	Go to step **5**.	Repair the short circuit in harness to ground between ECM and electronic throttle control relay connector.
5	**CHECK HARNESS BETWEEN ECM AND ELECTRONIC THROTTLE CONTROL RELAY CONNECTOR.** Measure the resistance between ECM and electronic throttle control relay connector. ***Connector & terminal*** ***(B135) No. 17 — (B220) No. 14:*** ***(B135) No. 7 — (B220) No. 15:***	Is the resistance less than 1 Ω?	Go to step **6**.	Repair the open circuit in harness between ECM and electronic throttle control relay connector.
6	**CHECK HARNESS BETWEEN ECM AND ELECTRONIC THROTTLE CONTROL CONNECTOR.** 1) Turn the ignition switch to OFF. 2) Disconnect the connectors from electronic throttle control. 3) Measure the resistance between ECM and chassis ground. ***Connector & terminal*** ***(B134) No. 19 — Chassis ground:*** ***(B134) No. 18 — Chassis ground:*** ***(B134) No. 18 — (B136) No. 4:*** ***(B134) No. 28 — Chassis ground:***	Is the resistance 1 MΩ or more?	Go to step **7**.	Repair the short circuit to ground in harness between ECM and electronic throttle control connector.

	Step	Check	Yes	No
7	**CHECK SHORT CIRCUIT INSIDE THE ECM.** 1) Connect the connector to ECM. 2) Measure the resistance between electronic throttle control connector and engine ground. ***Connector & terminal*** ***(E57) No. 6 — Engine ground:*** ***(E57) No. 4 — Engine ground:***	Is the resistance 1 MΩ or more?	Go to step **8**.	Repair the short circuit to ground in harness between ECM and electronic throttle control connector. Replace the ECM if defective. <Ref. to FU(H4DOTC)-58, Engine Control Module (ECM).>
8	**CHECK HARNESS BETWEEN ECM AND ELECTRONIC THROTTLE CONTROL CONNECTOR.** 1) Disconnect the connector from ECM. 2) Measure the resistance of harness between ECM and electronic throttle control connector. ***Connector & terminal*** ***(B134) No. 18 — (E57) No. 6:*** ***(B134) No. 28 — (E57) No. 4:*** ***(B134) No. 29 — (E57) No. 3:***	Is the resistance less than 1 Ω?	Go to step **9**.	Repair the harness and connector. NOTE: In this case, repair the following item: • Open circuit in harness between ECM and electronic throttle control connector • Poor contact of coupling connector
9	**CHECK HARNESS BETWEEN ECM AND ELECTRONIC THROTTLE CONTROL CONNECTOR.** 1) Connect the connector to ECM. 2) Measure the resistance between electronic throttle control connector and engine ground. ***Connector & terminal*** ***(E57) No. 3 — Engine ground:***	Is the resistance less than 5 Ω?	Go to step **10**.	Repair the harness and connector. NOTE: In this case, repair the following item: • Open circuit of harness between ECM and engine ground • Poor contact of ECM connector • Poor contact of coupling connector
10	**CHECK HARNESS BETWEEN ECM AND ELECTRONIC THROTTLE CONTROL CONNECTOR.** 1) Turn the ignition switch to ON. 2) Measure the voltage between electronic throttle control connector and engine ground. ***Connector & terminal*** ***(E57) No. 6 (+) — Engine ground (–):*** ***(E57) No. 4 (+) — Engine ground (–):***	Is the voltage 5 V or more?	Repair the short circuit to power in harness between ECM and electronic throttle control connector.	Go to step **11**.
11	**CHECK HARNESS BETWEEN ECM AND ELECTRONIC THROTTLE CONTROL CONNECTOR.** 1) Turn the ignition switch to OFF. 2) Disconnect the connector from ECM. 3) Measure the resistance between ECM connectors. ***Connector & terminal*** ***(B134) No. 19 — (B134) No. 18:*** ***(B134) No. 19 — (B134) No. 28:***	Is the resistance 1 MΩ or more?	Go to step **12**.	Repair the short circuit to power in harness between ECM and electronic throttle control connector.

	Step	Check	Yes	No
12	**CHECK SENSOR OUTPUT.** 1) Connect all connectors. 2) Turn the ignition switch to ON. 3) Read the value of «Main-Throttle Sensor» using Subaru Select Monitor. NOTE: For detailed operation procedures, refer to "READ CURRENT DATA FOR ENGINE". <Ref. to EN(H4DOTC)(diag)-34, Subaru Select Monitor.>	Is the value of «Main-Throttle Sensor» 0.81 — 0.87 V?	Go to step **13**.	Repair the poor contact of electronic throttle control connector. Replace the electronic throttle control if defective. <Ref. to FU(H4DOTC)-15, Throttle Body.>
13	**CHECK SENSOR OUTPUT.** Read the value of «Sub-Throttle Sensor» using Subaru Select Monitor. NOTE: For detailed operation procedures, refer to "READ CURRENT DATA FOR ENGINE". <Ref. to EN(H4DOTC)(diag)-34, Subaru Select Monitor.>	Is the value of «Sub-Throttle Sensor» 1.64 — 1.70 V?	Go to step **14**.	Repair the poor contact of electronic throttle control connector. Replace the electronic throttle control if defective. <Ref. to FU(H4DOTC)-15, Throttle Body.>
14	**CHECK HARNESS BETWEEN ECM AND ELECTRONIC THROTTLE CONTROL MOTOR.** 1) Turn the ignition switch to OFF. 2) Disconnect the connectors from ECM and electronic throttle control. 3) Measure the resistance between ECM and electronic throttle control connector. ***Connector & terminal*** ***(B134) No. 2 — (E57) No. 2:*** ***(B134) No. 1 — (E57) No. 1:***	Is the resistance less than 1 Ω?	Go to step **15**.	Repair the harness and connector. NOTE: In this case, repair the following item: • Open circuit in harness between ECM and electronic throttle control • Poor contact of coupling connector
15	**CHECK HARNESS BETWEEN ECM AND ELECTRONIC THROTTLE CONTROL MOTOR.** 1) Connect the connector to ECM. 2) Turn the ignition switch to ON. 3) Measure the voltage between electronic throttle control connector and engine ground. ***Connector & terminal*** ***(E57) No. 2 (+) — Engine ground (–):*** ***(E57) No. 1 (+) — Engine ground (–):***	Is the voltage 5 V or more?	Repair the short circuit to power in harness between ECM and electronic throttle control connector.	Go to step **16**.
16	**CHECK HARNESS BETWEEN ECM AND ELECTRONIC THROTTLE CONTROL MOTOR.** 1) Turn the ignition switch to OFF. 2) Disconnect the connector from ECM. 3) Measure the resistance between electronic throttle control connector and engine ground. ***Connector & terminal*** ***(E57) No. 2 — Engine ground:*** ***(E57) No. 1 — Engine ground:***	Is the resistance 1 MΩ or more?	Go to step **17**.	Repair the short circuit to ground in harness between ECM and electronic throttle control connector.
17	**CHECK ELECTRONIC THROTTLE CONTROL MOTOR HARNESS.** Measure the resistance between electronic throttle control connectors. ***Connector & terminal*** ***(E57) No. 2 — (E57) No. 1:***	Is the resistance 1 MΩ or more?	Go to step **18**.	Repair the short circuit of harness between ECM and electronic throttle control connector.

	Step	Check	Yes	No
18	**CHECK ELECTRONIC THROTTLE CONTROL GROUND CIRCUIT.** Measure the resistance between ECM and chassis ground. ***Connector & terminal*** ***(B134) No. 3 — Chassis ground:*** ***(B134) No. 4 — Chassis ground:*** ***(B134) No. 6 — Chassis ground:*** ***(B137) No. 1 — Chassis ground:*** ***(B137) No. 3 — Chassis ground:***	Is the resistance less than 5 Ω?	Go to step **19**.	Repair the harness and connector. NOTE: In this case, repair the following item: • Open circuit of harness between ECM and engine ground • Poor contact of coupling connector
19	**CHECK ELECTRONIC THROTTLE CONTROL.** Measure the resistance between electronic throttle control terminals. ***Terminals*** ***No. 2 — No. 1:***	Is the resistance 50 Ω or less?	Go to step **20**.	Replace the electronic throttle control. <Ref. to FU(H4DOTC)-15, Throttle Body.>
20	**CHECK ELECTRONIC THROTTLE CONTROL.** Move the throttle valve to the fully open and fully closed positions with fingers. Check that the valve returns to the specified position when releasing fingers.	Does the valve return to the specified position? Standard value: 3 mm (0.12 in) from fully closed position	Repair the poor contact of ECM connector.	Replace the electronic throttle control. <Ref. to FU(H4DOTC)-15, Throttle Body.>

EC:DTC P2102 THROTTLE ACTUATOR CONTROL MOTOR CIRCUIT LOW

DTC DETECTING CONDITION:

- Immediately at fault recognition
- GENERAL DESCRIPTION <Ref. to GD(H4DOTC)-232, DTC P2102 THROTTLE ACTUATOR CONTROL MOTOR CIRCUIT LOW, Diagnostic Trouble Code (DTC) Detecting Criteria.>

TROUBLE SYMPTOM:

- Improper idling
- Poor driving performance
- Engine stalls.

CAUTION:
After servicing or replacing faulty parts, perform Clear Memory Mode <Ref. to EN(H4DOTC)(diag)-53, OPERATION, Clear Memory Mode.>, and Inspection Mode <Ref. to EN(H4DOTC)(diag)-41, PROCEDURE, Inspection Mode.>.

WIRING DIAGRAM:

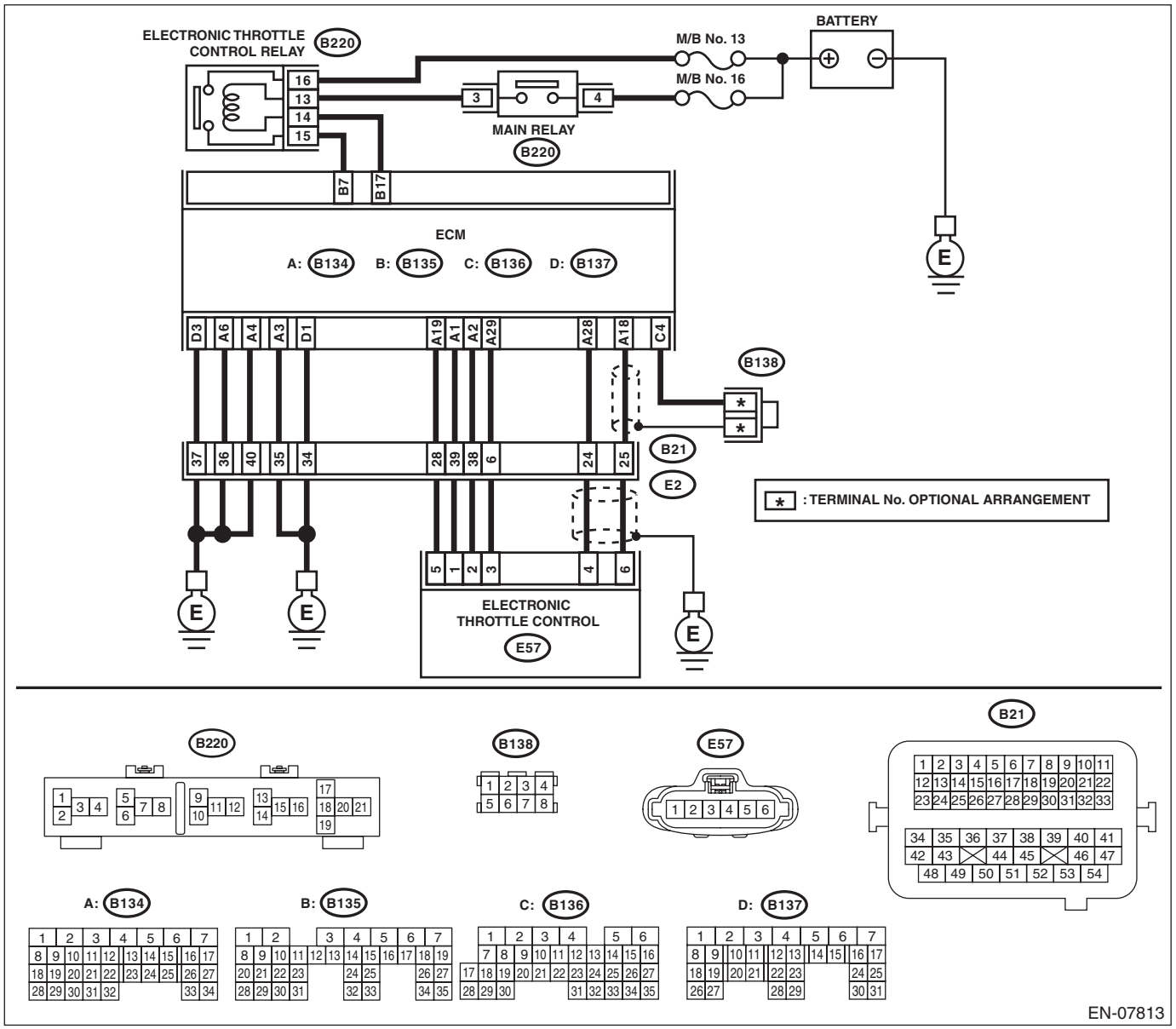

	Step	Check	Yes	No
1	**CHECK ELECTRONIC THROTTLE CONTROL RELAY.** 1) Turn the ignition switch to OFF. 2) Remove the electronic throttle control relay. 3) Connect the battery to terminals No. 13 and No. 14 of electronic throttle control relay. 4) Measure the resistance between electronic throttle control relay terminals. ***Terminals*** ***No. 16 — No. 15:***	Is the resistance less than 1 Ω?	Go to step **2**.	Replace the electronic throttle control relay. <Ref. to FU(H4DOTC)-63, Electronic Throttle Control Relay.>
2	**CHECK POWER SUPPLY OF ELECTRONIC THROTTLE CONTROL RELAY.** Measure the voltage between electronic throttle control relay connector and chassis ground. ***Connector & terminal*** ***(B220) No. 16 (+) — Chassis ground (–):***	Is the voltage 10 V or more?	Go to step **3**.	Repair the open or ground short circuit of power supply circuit.
3	**CHECK HARNESS BETWEEN ECM AND ELECTRONIC THROTTLE CONTROL RELAY CONNECTOR.** 1) Disconnect the connector from ECM. 2) Turn the ignition switch to ON. 3) Measure the voltage between electronic throttle control relay connector and chassis ground. ***Connector & terminal*** ***(B220) No. 14 (+) — Chassis ground (–):***	Is the voltage 10 V or more?	Repair the short circuit to power in the harness between ECM and electronic throttle control relay connector.	Go to step **4**.
4	**CHECK HARNESS BETWEEN ECM AND ELECTRONIC THROTTLE CONTROL RELAY CONNECTOR.** 1) Turn the ignition switch to OFF. 2) Measure the resistance between electronic throttle control relay connector and chassis ground. ***Connector & terminal*** ***(B220) No. 14 — Chassis ground:*** ***(B220) No. 15 — Chassis ground:***	Is the resistance 1 MΩ or more?	Go to step **5**.	Repair the short circuit in harness to ground between ECM and electronic throttle control relay connector.
5	**CHECK HARNESS BETWEEN ECM AND ELECTRONIC THROTTLE CONTROL RELAY CONNECTOR.** Measure the resistance between ECM and electronic throttle control relay connector. ***Connector & terminal*** ***(B135) No. 17 — (B220) No. 14:*** ***(B135) No. 7 — (B220) No. 15:***	Is the resistance less than 1 Ω?	Repair the poor contact of ECM connector.	Repair the open circuit in harness between ECM and electronic throttle control relay connector.

ED:DTC P2103 THROTTLE ACTUATOR CONTROL MOTOR CIRCUIT HIGH

DTC DETECTING CONDITION:

- Immediately at fault recognition
- GENERAL DESCRIPTION <Ref. to GD(H4DOTC)-234, DTC P2103 THROTTLE ACTUATOR CONTROL MOTOR CIRCUIT HIGH, Diagnostic Trouble Code (DTC) Detecting Criteria.>

CAUTION:

After servicing or replacing faulty parts, perform Clear Memory Mode <Ref. to EN(H4DOTC)(diag)-53, OPERATION, Clear Memory Mode.>, and Inspection Mode <Ref. to EN(H4DOTC)(diag)-41, PROCEDURE, Inspection Mode.>.

WIRING DIAGRAM:

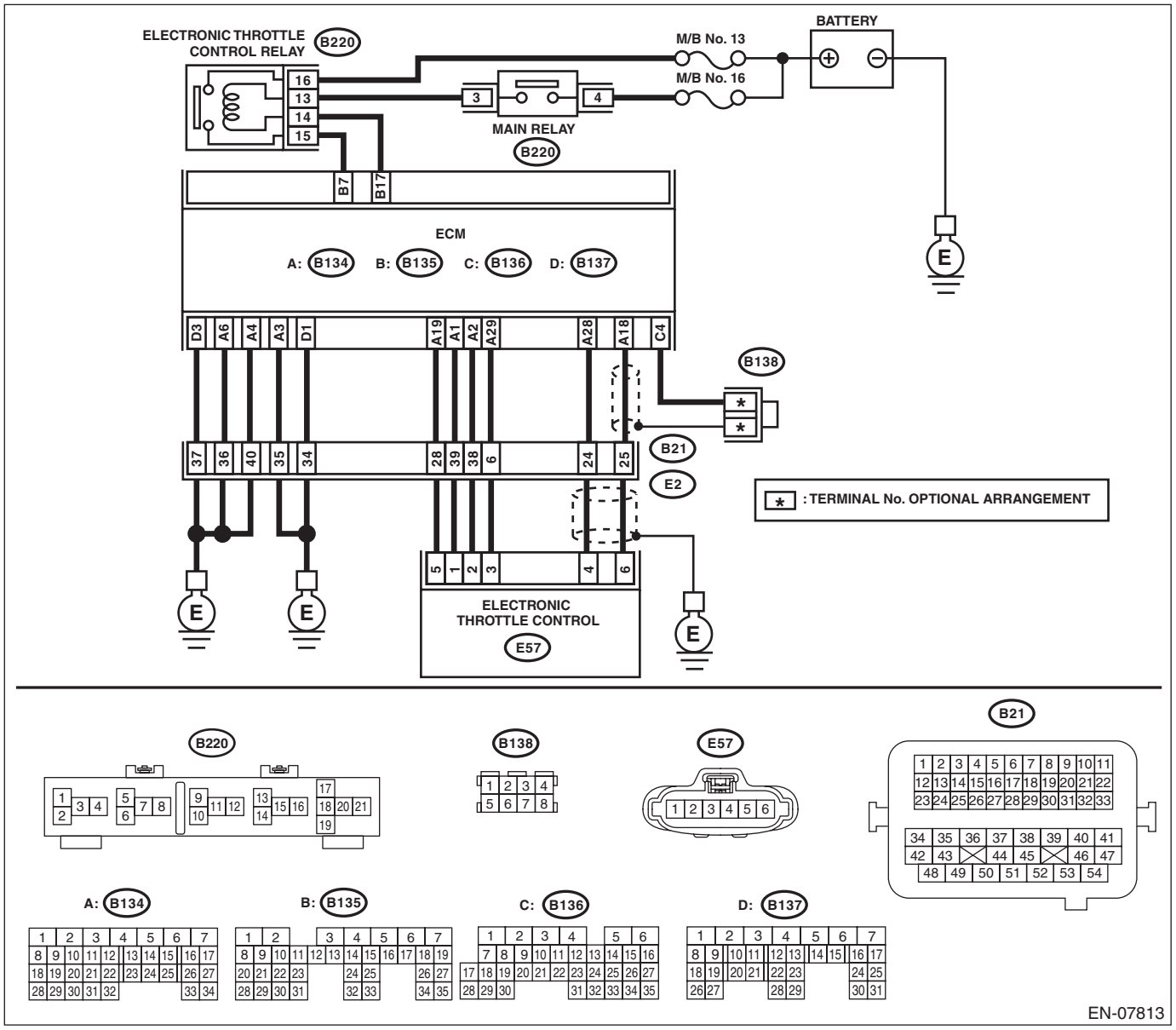

	Step	Check	Yes	No
1	**CHECK ELECTRONIC THROTTLE CONTROL RELAY.** 1) Turn the ignition switch to OFF. 2) Remove the electronic throttle control relay. 3) Measure the resistance between electronic throttle control relay terminals. ***Terminals*** ***No. 16 — No. 15:***	Is the resistance 1 MΩ or more?	Go to step **2**.	Replace the electronic throttle control relay. <Ref. to FU(H4DOTC)-63, Electronic Throttle Control Relay.>
2	**CHECK SHORT CIRCUIT OF ELECTRONIC THROTTLE CONTROL RELAY POWER SUPPLY.** 1) Turn the ignition switch to ON. 2) Measure the voltage between electronic throttle control relay connector and chassis ground. ***Connector & terminal*** ***(B220) No. 15 (+) — Chassis ground (–):***	Is the voltage 10 V or more?	Repair the short circuit to power in the harness between ECM and electronic throttle control relay connector.	Go to step **3**.
3	**CHECK HARNESS BETWEEN ECM AND ELECTRONIC THROTTLE CONTROL RELAY CONNECTOR.** 1) Turn the ignition switch to OFF. 2) Disconnect the connector from ECM. 3) Measure the resistance between ECM and chassis ground. ***Connector & terminal*** ***(B135) No. 17 — Chassis ground:***	Is the resistance 1 MΩ or more?	Repair the poor contact of ECM connector.	Repair the short circuit in harness to ground between ECM and electronic throttle control relay connector.

EE:DTC P2109 THROTTLE/PEDAL POSITION SENSOR “A” MINIMUM STOP PERFORMANCE

NOTE:
For the diagnostic procedure, refer to DTC P2101. <Ref. to EN(H4DOTC)(diag)-303, DTC P2101 THROTTLE ACTUATOR CONTROL MOTOR CIRCUIT RANGE/PERFORMANCE, Diagnostic Procedure with Diagnostic Trouble Code (DTC).>

EF:DTC P2122 THROTTLE/PEDAL POSITION SENSOR/SWITCH “D” CIRCUIT LOW INPUT

DTC DETECTING CONDITION:

- Immediately at fault recognition
- GENERAL DESCRIPTION <Ref. to GD(H4DOTC)-238, DTC P2122 THROTTLE/PEDAL POSITION SENSOR/SWITCH “D” CIRCUIT LOW INPUT, Diagnostic Trouble Code (DTC) Detecting Criteria.>

TROUBLE SYMPTOM:

- Improper idling
- Poor driving performance

CAUTION:

After servicing or replacing faulty parts, perform Clear Memory Mode <Ref. to EN(H4DOTC)(diag)-53, OPERATION, Clear Memory Mode.>, and Inspection Mode <Ref. to EN(H4DOTC)(diag)-41, PROCEDURE, Inspection Mode.>.

WIRING DIAGRAM:

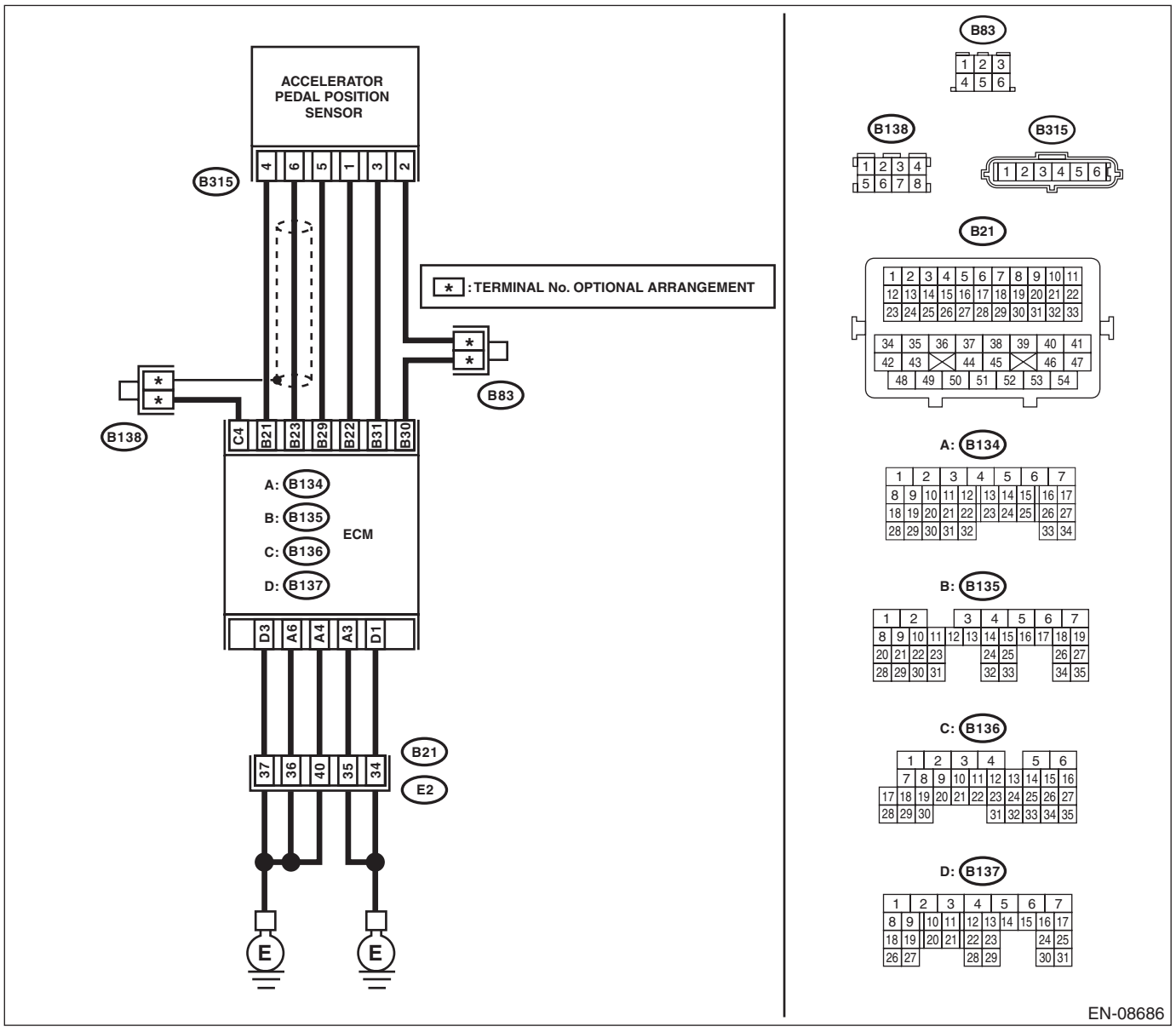

	Step	Check	Yes	No
1	**CHECK HARNESS BETWEEN ECM AND ACCELERATOR PEDAL POSITION SENSOR CONNECTOR.** 1) Turn the ignition switch to OFF. 2) Disconnect the connectors from ECM and accelerator pedal position sensor. 3) Measure the resistance between ECM and chassis ground. ***Connector & terminal*** ***(B135) No. 21 — Chassis ground:*** ***(B135) No. 23 — Chassis ground:*** ***(B135) No. 23 — (B136) No. 4:***	Is the resistance 1 MΩ or more?	Go to step **2**.	Repair the short circuit to ground in harness between ECM and accelerator pedal position sensor connector.
2	**CHECK SHORT CIRCUIT INSIDE THE ECM.** 1) Connect the connector to ECM. 2) Measure the resistance between accelerator pedal position sensor connector and chassis ground. ***Connector & terminal*** ***(B315) No. 6 — Chassis ground:***	Is the resistance 1 MΩ or more?	Replace the accelerator pedal. <Ref. to SP(H4SO)-4, Accelerator Pedal.>	Repair the short circuit to ground in harness between ECM and accelerator pedal position sensor connector. Replace the ECM if defective. <Ref. to FU(H4DOTC)-58, Engine Control Module (ECM).>

EG:DTC P2123 THROTTLE/PEDAL POSITION SENSOR/SWITCH "D" CIRCUIT HIGH INPUT

DTC DETECTING CONDITION:

- Immediately at fault recognition
- GENERAL DESCRIPTION <Ref. to GD(H4DOTC)-240, DTC P2123 THROTTLE/PEDAL POSITION SENSOR/SWITCH "D" CIRCUIT HIGH INPUT, Diagnostic Trouble Code (DTC) Detecting Criteria.>

TROUBLE SYMPTOM:

- Improper idling
- Poor driving performance

CAUTION:

After servicing or replacing faulty parts, perform Clear Memory Mode <Ref. to EN(H4DOTC)(diag)-53, OPERATION, Clear Memory Mode.>, and Inspection Mode <Ref. to EN(H4DOTC)(diag)-41, PROCEDURE, Inspection Mode.>.

WIRING DIAGRAM:

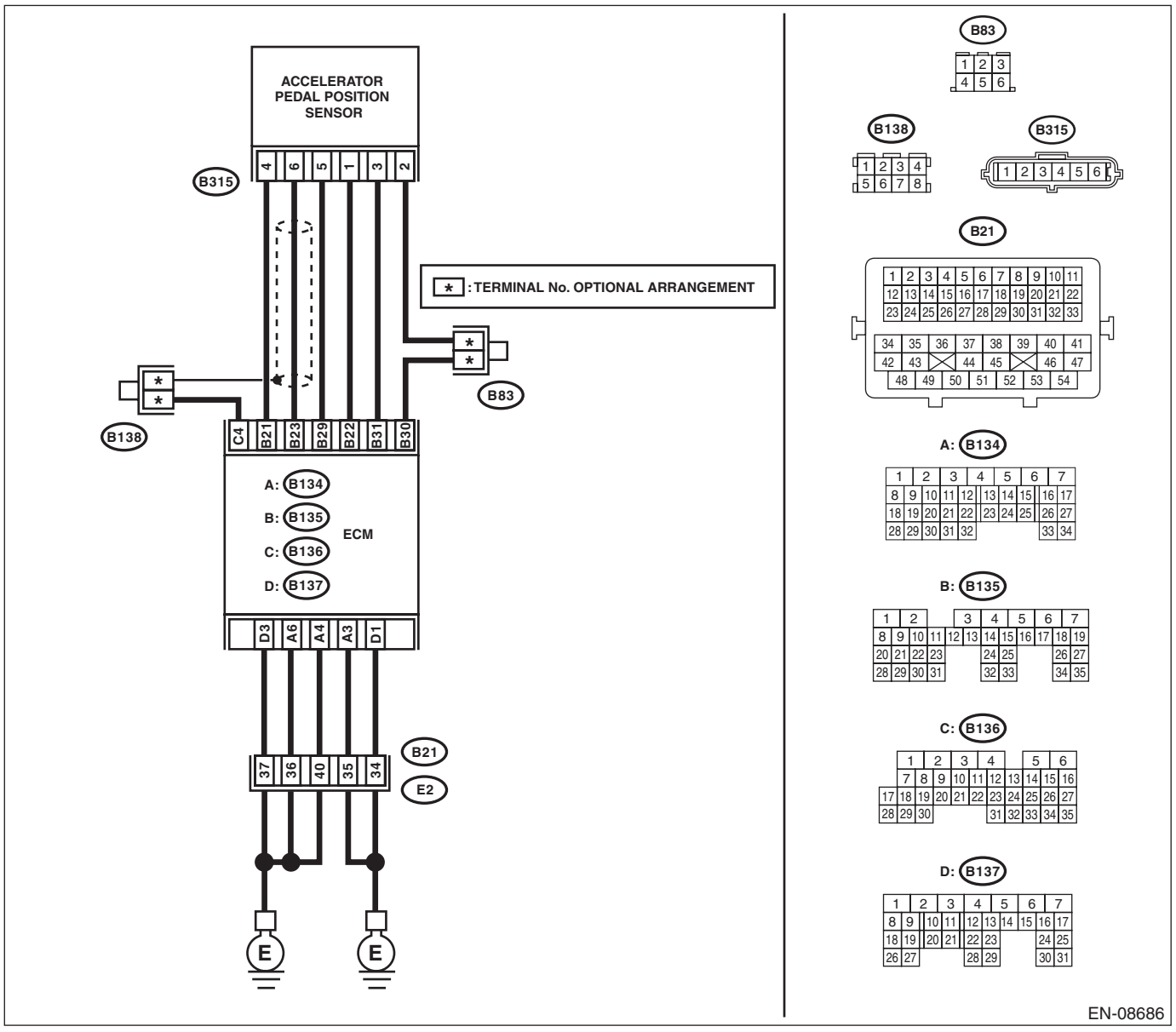

	Step	Check	Yes	No
1	**CHECK HARNESS BETWEEN ECM AND ACCELERATOR PEDAL POSITION SENSOR CONNECTOR.** 1) Turn the ignition switch to OFF. 2) Disconnect the connectors from ECM and accelerator pedal position sensor. 3) Measure the resistance of harness between ECM and accelerator pedal position sensor connector. ***Connector & terminal*** ***(B135) No. 23 — (B315) No. 6:*** ***(B135) No. 29 — (B315) No. 5:***	Is the resistance less than 1 Ω?	Go to step **2**.	Repair the open circuit in harness between ECM and accelerator pedal position sensor connector.
2	**CHECK HARNESS BETWEEN ECM AND ACCELERATOR PEDAL POSITION SENSOR CONNECTOR.** 1) Connect the connector to ECM. 2) Measure the resistance between accelerator pedal position sensor connector and chassis ground. ***Connector & terminal*** ***(B315) No. 5 — Chassis ground:***	Is the resistance less than 5 Ω?	Go to step **3**.	Repair the harness and connector. NOTE: In this case, repair the following item: • Open circuit of harness between ECM and engine ground • Poor contact of ECM connector • Poor contact of coupling connector
3	**CHECK HARNESS BETWEEN ECM AND ACCELERATOR PEDAL POSITION SENSOR CONNECTOR.** 1) Turn the ignition switch to ON. 2) Measure the voltage between accelerator pedal position sensor connector and chassis ground. ***Connector & terminal*** ***(B315) No. 6 (+) — Chassis ground (–):***	Is the voltage 5 V or more?	Repair the short circuit to power supply in the harness between the ECM and accelerator pedal position sensor connector.	Go to step **4**.
4	**CHECK HARNESS BETWEEN ECM AND ACCELERATOR PEDAL POSITION SENSOR CONNECTOR.** 1) Turn the ignition switch to OFF. 2) Disconnect the connectors from ECM. 3) Measure the resistance between ECM connectors. ***Connector & terminal*** ***(B135) No. 21 — (B135) No. 23:***	Is the resistance 1 MΩ or more?	Repair the poor contact of accelerator pedal position sensor connector. Replace the accelerator pedal if defective. <Ref. to SP(H4SO)-4, Accelerator Pedal.>	Repair the short circuit to power supply in the harness between the ECM and accelerator pedal position sensor connector.

EH:DTC P2127 THROTTLE/PEDAL POSITION SENSOR/SWITCH “E” CIRCUIT LOW INPUT

DTC DETECTING CONDITION:

- Immediately at fault recognition
- GENERAL DESCRIPTION <Ref. to GD(H4DOTC)-242, DTC P2127 THROTTLE/PEDAL POSITION SENSOR/SWITCH “E” CIRCUIT LOW INPUT, Diagnostic Trouble Code (DTC) Detecting Criteria.>

TROUBLE SYMPTOM:

- Improper idling
- Poor driving performance

CAUTION:

After servicing or replacing faulty parts, perform Clear Memory Mode <Ref. to EN(H4DOTC)(diag)-53, OPERATION, Clear Memory Mode.>, and Inspection Mode <Ref. to EN(H4DOTC)(diag)-41, PROCEDURE, Inspection Mode.>.

WIRING DIAGRAM:

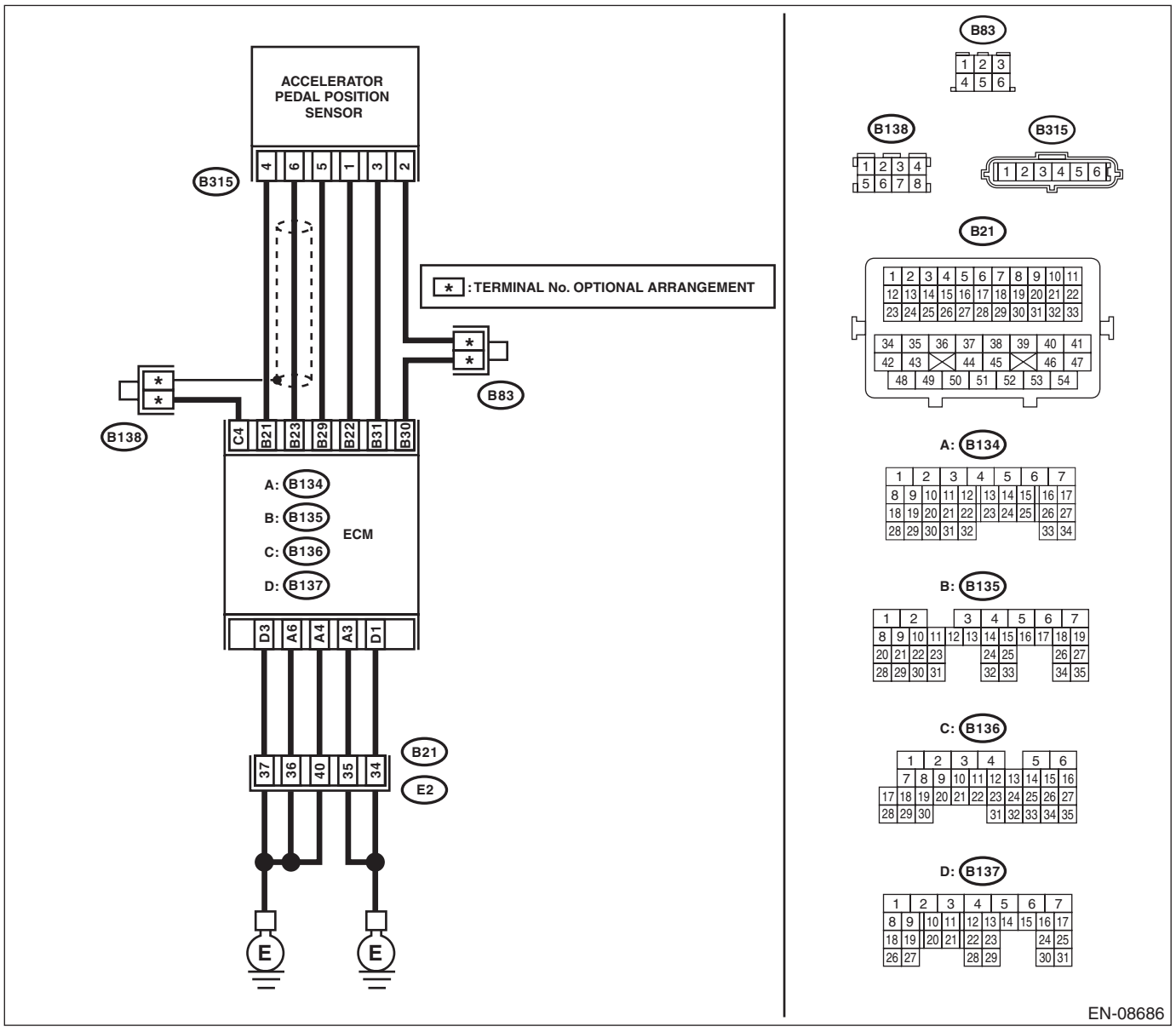

EN-08686

	Step	Check	Yes	No
1	**CHECK HARNESS BETWEEN ECM AND ACCELERATOR PEDAL POSITION SENSOR CONNECTOR.** 1) Turn the ignition switch to OFF. 2) Disconnect the connectors from ECM and accelerator pedal position sensor. 3) Measure the resistance between ECM and chassis ground. ***Connector & terminal*** ***(B135) No. 22 — Chassis ground:*** ***(B135) No. 31 — Chassis ground:***	Is the resistance 1 MΩ or more?	Go to step **2**.	Repair the short circuit to ground in harness between ECM and accelerator pedal position sensor connector.
2	**CHECK SHORT CIRCUIT INSIDE THE ECM.** 1) Connect the connector to ECM. 2) Measure the resistance between accelerator pedal position sensor connector and chassis ground. ***Connector & terminal*** ***(B315) No. 3 — Chassis ground:***	Is the resistance 1 MΩ or more?	Replace the accelerator pedal. <Ref. to SP(H4SO)-4, Accelerator Pedal.>	Repair the short circuit to ground in harness between ECM and accelerator pedal position sensor connector. Replace the ECM if defective. <Ref. to FU(H4DOTC)-58, Engine Control Module (ECM).>

EI: DTC P2128 THROTTLE/PEDAL POSITION SENSOR/SWITCH "E" CIRCUIT HIGH INPUT

DTC DETECTING CONDITION:

- Immediately at fault recognition
- GENERAL DESCRIPTION <Ref. to GD(H4DOTC)-244, DTC P2128 THROTTLE/PEDAL POSITION SENSOR/SWITCH "E" CIRCUIT HIGH INPUT, Diagnostic Trouble Code (DTC) Detecting Criteria.>

TROUBLE SYMPTOM:

- Improper idling
- Poor driving performance

CAUTION:

After servicing or replacing faulty parts, perform Clear Memory Mode <Ref. to EN(H4DOTC)(diag)-53, OPERATION, Clear Memory Mode.>, and Inspection Mode <Ref. to EN(H4DOTC)(diag)-41, PROCEDURE, Inspection Mode.>.

WIRING DIAGRAM:

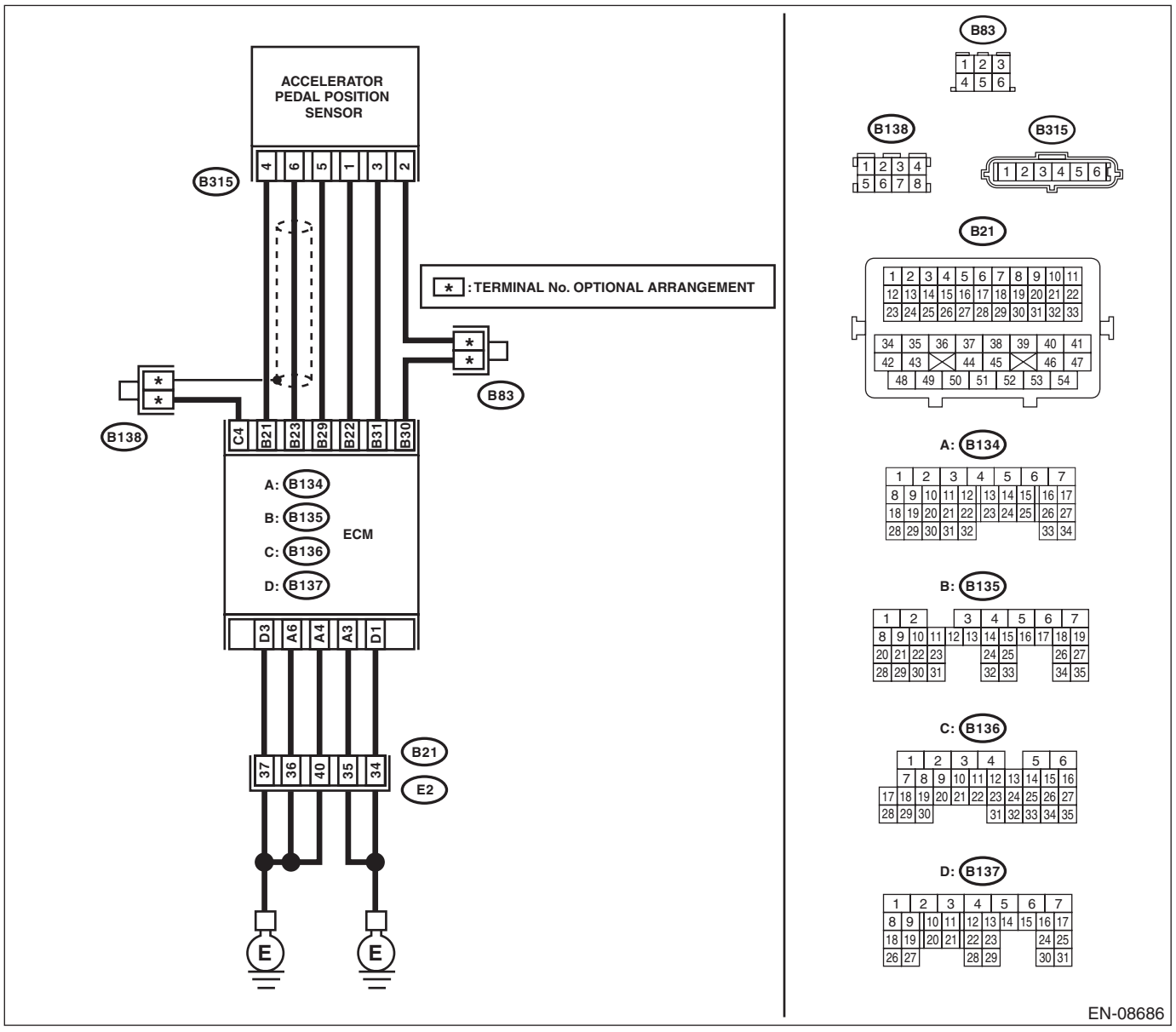

	Step	Check	Yes	No
1	**CHECK HARNESS BETWEEN ECM AND ACCELERATOR PEDAL POSITION SENSOR CONNECTOR.** 1) Turn the ignition switch to OFF. 2) Disconnect the connectors from ECM and accelerator pedal position sensor. 3) Measure the resistance of harness between ECM and accelerator pedal position sensor connector. ***Connector & terminal*** ***(B135) No. 31 — (B315) No. 3:*** ***(B135) No. 30 — (B315) No. 2:***	Is the resistance less than 1 Ω?	Go to step **2**.	Repair the harness and connector. NOTE: In this case, repair the following item: • Open circuit in harness between ECM and accelerator pedal position sensor connector • Poor contact of coupling connector
2	**CHECK HARNESS BETWEEN ECM AND ACCELERATOR PEDAL POSITION SENSOR CONNECTOR.** 1) Connect the connector to ECM. 2) Measure the resistance between accelerator pedal position sensor connector and chassis ground. ***Connector & terminal*** ***(B315) No. 2 — Chassis ground:***	Is the resistance less than 1 Ω?	Go to step **3**.	Repair the harness and connector. NOTE: In this case, repair the following item: • Open circuit of harness between ECM and engine ground • Poor contact of ECM connector • Poor contact of coupling connector
3	**CHECK HARNESS BETWEEN ECM AND ACCELERATOR PEDAL POSITION SENSOR CONNECTOR.** 1) Turn the ignition switch to ON. 2) Measure the voltage between accelerator pedal position sensor connector and chassis ground. ***Connector & terminal*** ***(B315) No. 3 (+) — Chassis ground (–):***	Is the voltage 5 V or more?	Repair the short circuit to power supply in the harness between the ECM and accelerator pedal position sensor connector.	Go to step **4**.
4	**CHECK HARNESS BETWEEN ECM AND ACCELERATOR PEDAL POSITION SENSOR CONNECTOR.** 1) Turn the ignition switch to OFF. 2) Disconnect the connectors from ECM. 3) Measure the resistance between ECM connectors. ***Connector & terminal*** ***(B135) No. 22 — (B135) No. 31:***	Is the resistance 1 MΩ or more?	Repair the poor contact of accelerator pedal position sensor connector. Replace the accelerator pedal if defective. <Ref. to SP(H4SO)-4, Accelerator Pedal.>	Repair the short circuit to power supply in the harness between the ECM and accelerator pedal position sensor connector.

EJ: DTC P2135 THROTTLE/PEDAL POSITION SENSOR/SWITCH "A"/"B" VOLTAGE CORRELATION

DTC DETECTING CONDITION:

- Immediately at fault recognition
- GENERAL DESCRIPTION <Ref. to GD(H4DOTC)-246, DTC P2135 THROTTLE/PEDAL POSITION SENSOR/SWITCH "A"/"B" VOLTAGE CORRELATION, Diagnostic Trouble Code (DTC) Detecting Criteria.>

TROUBLE SYMPTOM:

- Improper idling
- Poor driving performance

CAUTION:

After servicing or replacing faulty parts, perform Clear Memory Mode <Ref. to EN(H4DOTC)(diag)-53, OPERATION, Clear Memory Mode.>, and Inspection Mode <Ref. to EN(H4DOTC)(diag)-41, PROCEDURE, Inspection Mode.>.

WIRING DIAGRAM:

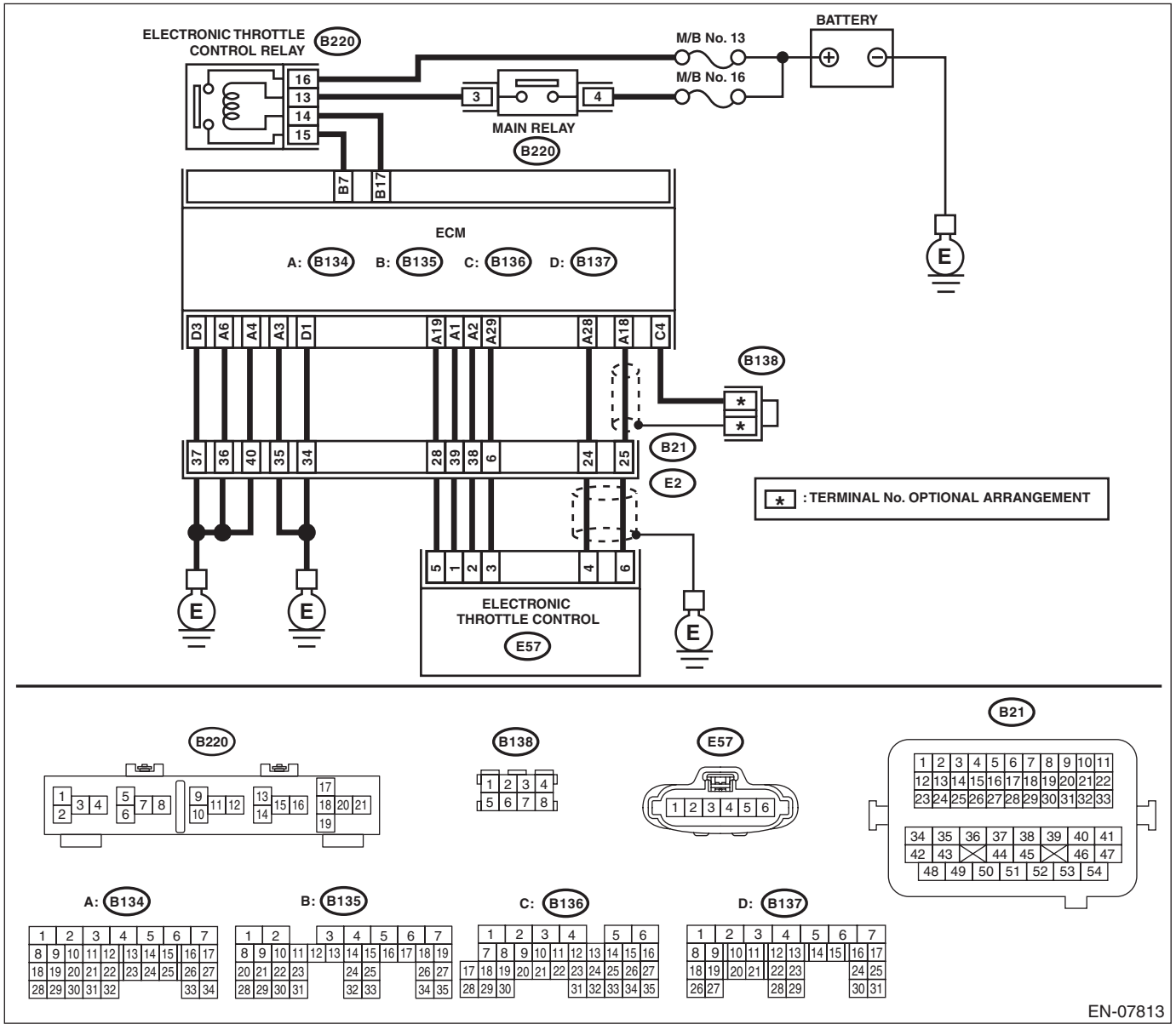

	Step	Check	Yes	No
1	**CHECK HARNESS BETWEEN ECM AND ELECTRONIC THROTTLE CONTROL CONNECTOR.** 1) Turn the ignition switch to OFF. 2) Disconnect the connectors from the ECM and electronic throttle control. 3) Measure the resistance between ECM and chassis ground. ***Connector & terminal*** ***(B134) No. 19 — Chassis ground:*** ***(B134) No. 18 — Chassis ground:*** ***(B134) No. 18 — (B136) No. 4:*** ***(B134) No. 28 — Chassis ground:***	Is the resistance 1 MΩ or more?	Go to step **2**.	Repair the ground short circuit of harness between ECM and electronic throttle control connector.
2	**CHECK SHORT CIRCUIT INSIDE THE ECM.** 1) Connect the connector to ECM. 2) Measure the resistance between electronic throttle control connector and engine ground. ***Connector & terminal*** ***(E57) No. 6 — Engine ground:*** ***(E57) No. 4 — Engine ground:***	Is the resistance 1 MΩ or more?	Go to step **3**.	Repair the ground short circuit of harness between ECM and electronic throttle control connector. Replace the ECM if defective. <Ref. to FU(H4DOTC)-58, Engine Control Module (ECM).>
3	**CHECK HARNESS BETWEEN ECM AND ELECTRONIC THROTTLE CONTROL CONNECTOR.** 1) Disconnect the connector from ECM. 2) Measure the resistance of harness between ECM and electronic throttle control connector. ***Connector & terminal*** ***(B134) No. 18 — (E57) No. 6:*** ***(B134) No. 28 — (E57) No. 4:*** ***(B134) No. 29 — (E57) No. 3:***	Is the resistance less than 1 Ω?	Go to step **4**.	Repair the harness and connector. NOTE: In this case, repair the following item: • Open circuit in harness between ECM and electronic throttle control connector • Poor contact of coupling connector
4	**CHECK HARNESS BETWEEN ECM AND ELECTRONIC THROTTLE CONTROL CONNECTOR.** 1) Connect the connector to ECM. 2) Measure the resistance between electronic throttle control connector and engine ground. ***Connector & terminal*** ***(E57) No. 3 — Engine ground:***	Is the resistance less than 5 Ω?	Go to step **5**.	Repair the harness and connector. NOTE: In this case, repair the following item: • Open circuit of harness between ECM and engine ground • Poor contact of ECM connector • Poor contact of coupling connector
5	**CHECK HARNESS BETWEEN ECM AND ELECTRONIC THROTTLE CONTROL CONNECTOR.** 1) Turn the ignition switch to ON. 2) Measure the voltage between electronic throttle control connector and engine ground. ***Connector & terminal*** ***(E57) No. 6 (+) — Engine ground (–):*** ***(E57) No. 4 (+) — Engine ground (–):***	Is the voltage 5 V or more?	Repair the short circuit of harness to power supply between ECM and electronic throttle control connector.	Go to step **6**.

	Step	Check	Yes	No
6	**CHECK HARNESS BETWEEN ECM AND ELECTRONIC THROTTLE CONTROL CONNECTOR.** 1) Turn the ignition switch to OFF. 2) Disconnect the connector from ECM. 3) Measure the resistance between ECM connectors. ***Connector & terminal*** ***(B134) No. 19 — (B134) No. 18:*** ***(B134) No. 19 — (B134) No. 28:***	Is the resistance 1 MΩ or more?	Repair the poor contact of electronic throttle control connector. Replace the electronic throttle control if defective. <Ref. to FU(H4DOTC)-15, Throttle Body.>	Repair the short circuit of harness to power supply between ECM and electronic throttle control connector.

EK:DTC P2138 THROTTLE/PEDAL POSITION SENSOR/SWITCH “D”/“E” VOLTAGE CORRELATION

DTC DETECTING CONDITION:

- Immediately at fault recognition
- GENERAL DESCRIPTION <Ref. to GD(H4DOTC)-248, DTC P2138 THROTTLE/PEDAL POSITION SENSOR/SWITCH “D”/“E” VOLTAGE CORRELATION, Diagnostic Trouble Code (DTC) Detecting Criteria.>

TROUBLE SYMPTOM:

- Improper idling
- Poor driving performance

CAUTION:

After servicing or replacing faulty parts, perform Clear Memory Mode <Ref. to EN(H4DOTC)(diag)-53, OPERATION, Clear Memory Mode.>, and Inspection Mode <Ref. to EN(H4DOTC)(diag)-41, PROCEDURE, Inspection Mode.>.

WIRING DIAGRAM:

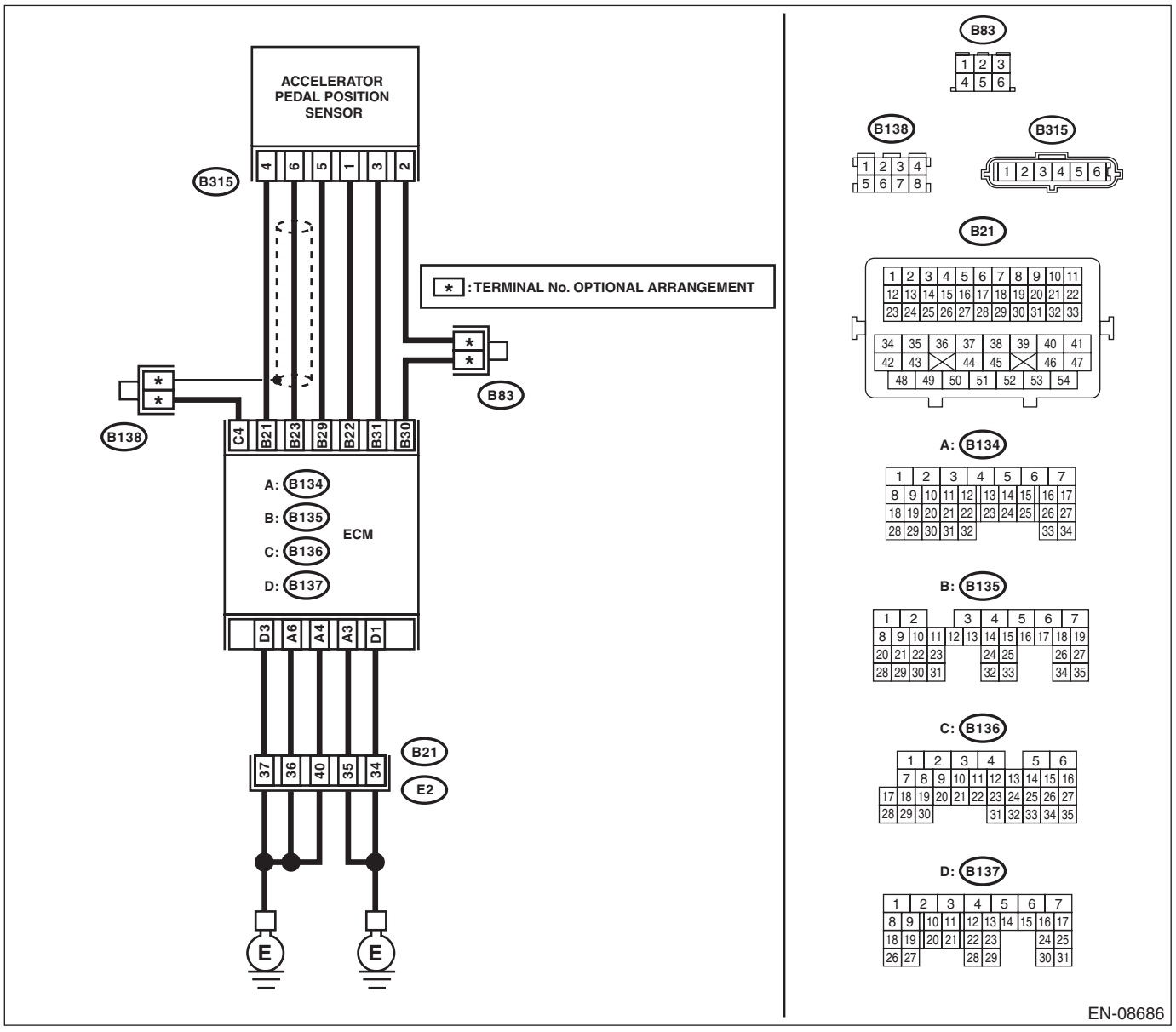

	Step	Check	Yes	No
1	**CHECK ACCELERATOR PEDAL POSITION SENSOR OUTPUT.** 1) Turn the ignition switch to ON. 2) Measure the voltage between ECM and chassis ground. ***Connector & terminal*** ***Main accelerator pedal position sensor signal*** ***(B135) No. 23 (+) — Chassis ground (–):*** ***Sub accelerator pedal position sensor signal*** ***(B135) No. 31 (+) — Chassis ground (–):***	Is the difference in measured values for the main accelerator pedal position sensor signal and the sub accelerator pedal position sensor signal 0 V?	Go to step **3**.	Go to step **2**.
2	**CHECK ACCELERATOR PEDAL POSITION SENSOR OUTPUT.** 1) Measure the voltage between accelerator pedal position sensor connector and chassis ground. ***Connector & terminal*** ***(B315) No. 6 (+) — Chassis ground (–):*** ***(B315) No. 3 (+) — Chassis ground (–):***	Is the difference in measured values for the main accelerator pedal position sensor signal and the sub accelerator pedal position sensor signal 0 V?	Replace the accelerator pedal. <Ref. to SP(H4SO)-4, Accelerator Pedal.>	Repair the harness and connector. NOTE: In this case, repair the following item: • Open circuit in harness between ECM and accelerator pedal position sensor connector • Short circuit to ground in harness between ECM and accelerator pedal position sensor connector
3	**CHECK HARNESS BETWEEN ECM AND ACCELERATOR PEDAL POSITION SENSOR CONNECTOR.** Measure the resistance of harness between the accelerator pedal position sensor connector and chassis ground. ***Connector & terminal*** ***(B315) No. 5 — Chassis ground:*** ***(B315) No. 2 — Chassis ground:***	Is the resistance less than 5 Ω?	Repair the poor contact of ECM connector.	Repair the harness and connector. NOTE: In this case, repair the following item: • Open circuit in harness between ECM and accelerator pedal position sensor connector • Open circuit of harness between ECM and engine ground • Poor contact of ECM connector • Poor contact of coupling connector

EL:DTC P219A BANK 1 AIR-FUEL RATIO IMBALANCE

DTC DETECTING CONDITION:

- Detected when two consecutive driving cycles with fault occur.
- GENERAL DESCRIPTION <Ref. to GD(H4DOTC)-250, DTC P219A BANK 1 AIR-FUEL RATIO IMBALANCE, Diagnostic Trouble Code (DTC) Detecting Criteria.>

TROUBLE SYMPTOM:

- Engine stalls.
- Improper idling

CAUTION:

After servicing or replacing faulty parts, perform Clear Memory Mode <Ref. to EN(H4DOTC)(diag)-53, OPERATION, Clear Memory Mode.>, and Inspection Mode <Ref. to EN(H4DOTC)(diag)-41, PROCEDURE, Inspection Mode.>.

WIRING DIAGRAM:

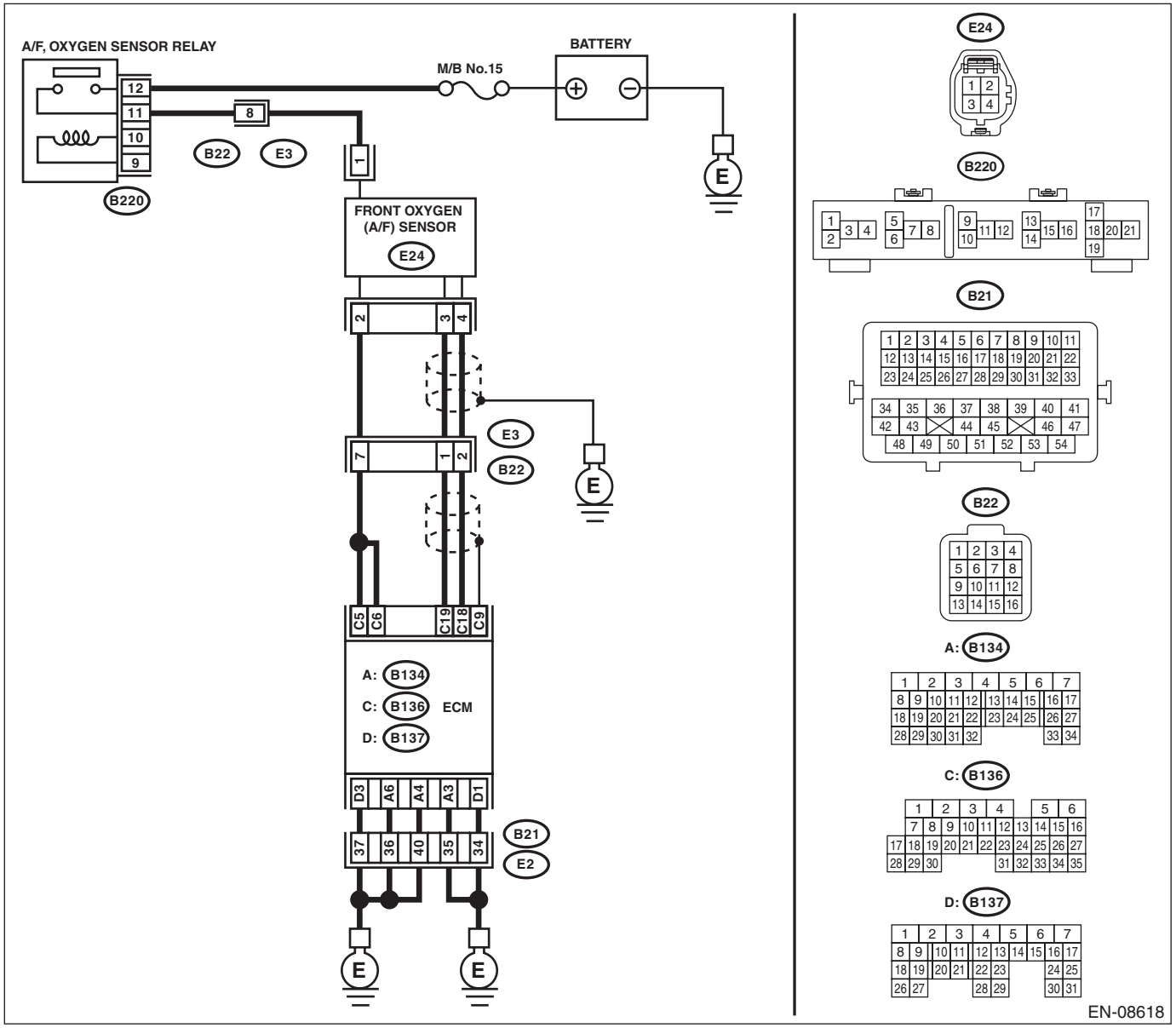

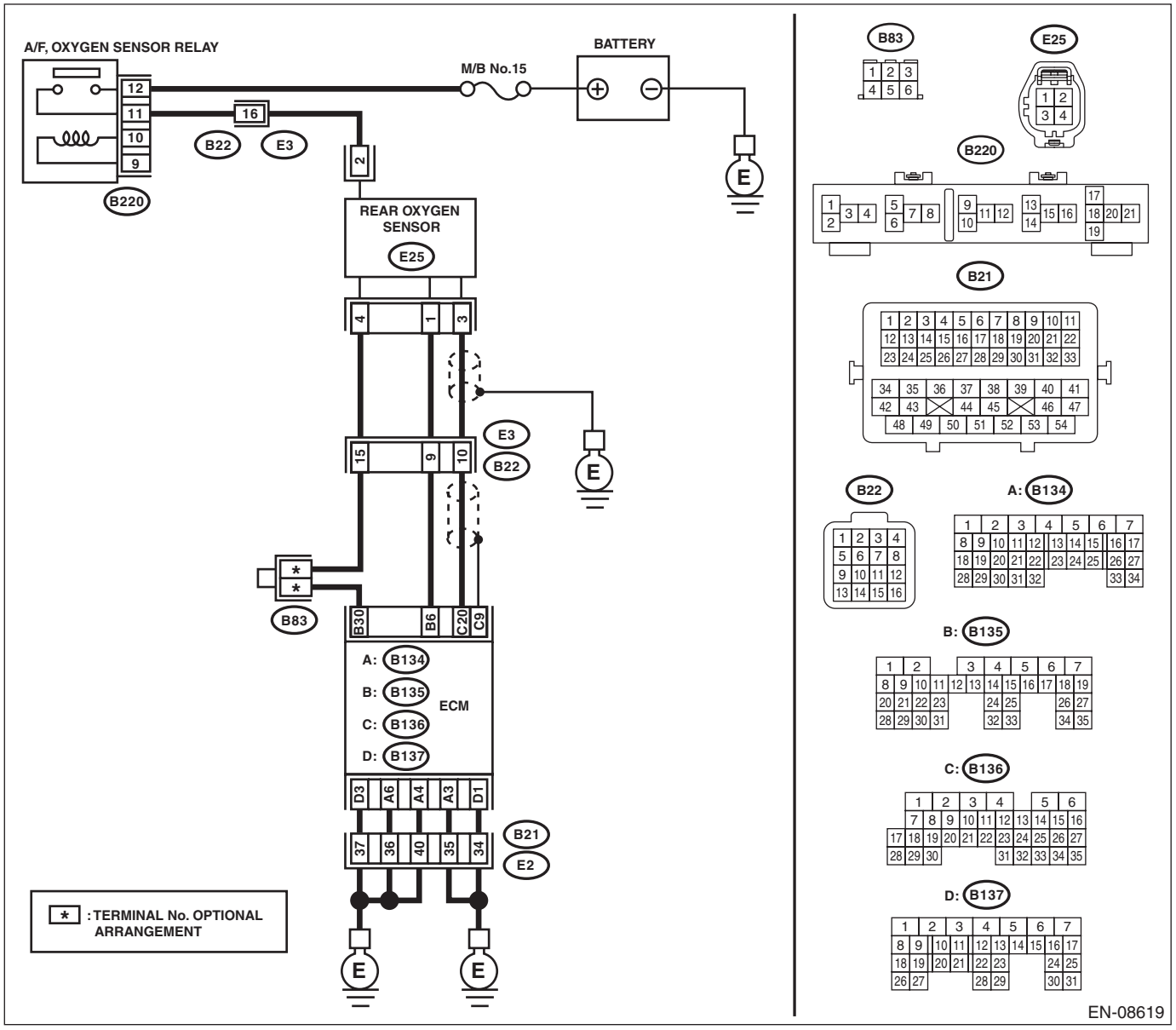
A/F, OXYGEN SENSOR RELAY
BATTERY
M/B No.15
B220
B22
E3
REAR OXYGEN SENSOR
E25
B83
B30
B6
C20
C9
A: B134
B: B135
C: B136
D: B137
ECM
D3
A6
A4
A3
D1
B21
E2
E
* : TERMINAL No. OPTIONAL ARRANGEMENT
B83
E25
B220
B21
B22
A: B134
B: B135
C: B136
D: B137
EN-08619

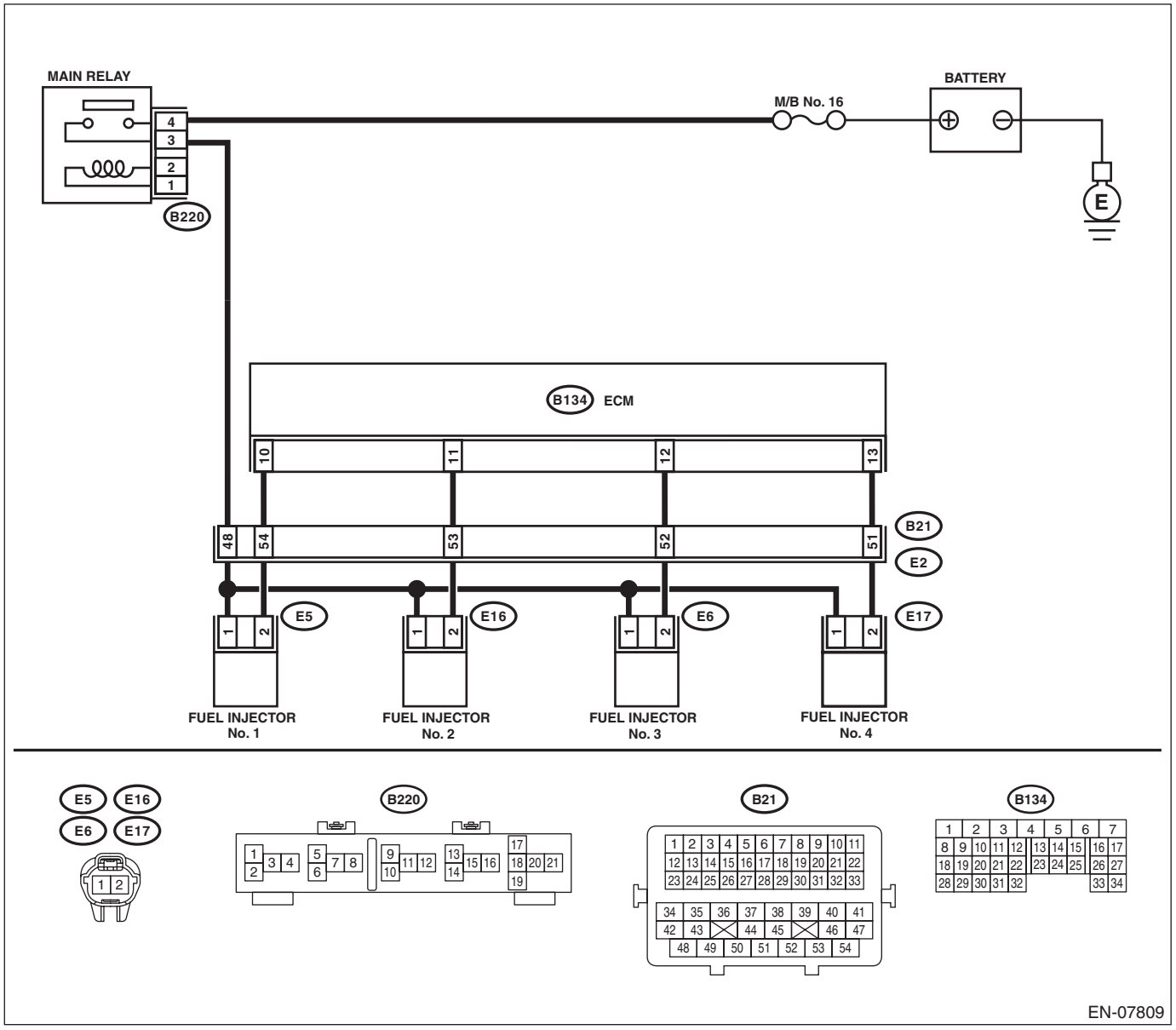

Step		Check	Yes	No
1	**CHECK FRONT OXYGEN (A/F) SENSOR CONNECTOR AND COUPLING CONNECTOR.**	Has water entered the connector?	Completely remove any water inside.	Go to step **2**.
2	**CHECK HARNESS BETWEEN ECM AND FRONT OXYGEN (A/F) SENSOR CONNECTOR.** 1) Turn the ignition switch to OFF. 2) Disconnect the connectors from ECM and front oxygen (A/F) sensor. 3) Measure the resistance of harness between ECM and front oxygen (A/F) sensor connector. ***Connector & terminal*** ***(B136) No. 19 — (E24) No. 3:*** ***(B136) No. 18 — (E24) No. 4:***	Is the resistance less than 1 Ω?	Go to step **3**.	Repair the harness and connector. NOTE: In this case, repair the following item: • Open circuit in harness between ECM and front oxygen (A/F) sensor connector • Poor contact of coupling connector

	Step	Check	Yes	No
3	**CHECK HARNESS BETWEEN ECM AND FRONT OXYGEN (A/F) SENSOR CONNECTOR.** Measure the resistance between ECM and chassis ground. ***Connector & terminal*** ***(B136) No. 19 — Chassis ground:*** ***(B136) No. 18 — Chassis ground:***	Is the resistance 1 MΩ or more?	Go to step **4**.	Repair the ground short circuit of harness between ECM and front oxygen (A/F) sensor connector.
4	**CHECK OUTPUT SIGNAL FOR ECM.** 1) Connect the connector to ECM. 2) Turn the ignition switch to ON. 3) Measure the voltage between front oxygen (A/F) sensor connector and chassis ground. ***Connector & terminal*** ***(E24) No. 3 (+) — Chassis ground (–):***	Is the voltage 4.5 V or more?	Go to step **6**.	Go to step **5**.
5	**CHECK OUTPUT SIGNAL FOR ECM.** Measure the voltage between front oxygen (A/F) sensor connector and chassis ground. ***Connector & terminal*** ***(E24) No. 4 (+) — Chassis ground (–):***	Is the voltage 4.95 V or more?	Go to step **6**.	Go to step **7**.
6	**CHECK OUTPUT SIGNAL FOR ECM.** Measure the voltage between front oxygen (A/F) sensor connector and chassis ground. ***Connector & terminal*** ***(E24) No. 3 (+) — Chassis ground (–):*** ***(E24) No. 4 (+) — Chassis ground (–):***	Is the voltage 8 V or more?	Repair the short circuit to power in the harness between ECM and front oxygen (A/F) sensor connector. After repair, replace the ECM. <Ref. to FU(H4DOTC)-58, Engine Control Module (ECM).>	Repair the poor contact of ECM connector.
7	**CHECK EXHAUST SYSTEM.**	Are there holes or loose bolts on exhaust system?	Repair the exhaust system.	Go to step **8**.
8	**CHECK AIR INTAKE SYSTEM.**	Are there holes, loose bolts or disconnection of hose on air intake system?	Repair the air intake system.	Go to step **9**.
9	**CHECK FUEL PRESSURE.** **WARNING:** **Place "NO OPEN FLAMES" signs near the working area.** **CAUTION:** **Be careful not to spill fuel.** 1) Connect the front oxygen (A/F) sensor connector. 2) Measure the fuel pressure while disconnecting pressure regulator vacuum hose from intake manifold. <Ref. to ME(H4DOTC)-26, INSPECTION, Fuel Pressure.> **CAUTION:** **Release fuel pressure before removing the fuel pressure gauge.** NOTE: If fuel pressure does not increase, squeeze the fuel return hose 2 to 3 times, then measure fuel pressure again.	Is the measured value 328 — 358 kPa (3.3 — 3.7 kg/cm^2, 48 — 52 psi)?	Go to step **10**.	Repair the following item. Fuel pressure is too high: • Clogged fuel line or bent hose Fuel pressure is too low: • Improper fuel pump discharge • Clogged fuel supply line

	Step	Check	Yes	No
10	**CHECK FUEL PRESSURE.** After connecting the pressure regulator vacuum hose, measure fuel pressure. <Ref. to ME(H4DOTC)-26, INSPECTION, Fuel Pressure.> **CAUTION:** **Release fuel pressure before removing the fuel pressure gauge.** NOTE: • If fuel pressure does not increase, squeeze fuel return hose 2 to 3 times, then measure fuel pressure again. • If the measured value at this step is out of specification, check or replace pressure regulator vacuum hose.	Is the measured value 274 — 304 kPa (2.8 — 3.1 kg/cm^2, 40 — 44 psi)?	Go to step **11**.	Repair the following item. Fuel pressure is too high: • Faulty pressure regulator • Clogged fuel return line or bent hose Fuel pressure is too low: • Faulty pressure regulator • Improper fuel pump discharge • Clogged fuel supply line
11	**CHECK ENGINE COOLANT TEMPERATURE SENSOR.** 1) Start the engine and warm up completely. 2) Read the value of «Coolant Temp.» using the Subaru Select Monitor or a general scan tool. NOTE: • Subaru Select Monitor For detailed operation procedures, refer to “READ CURRENT DATA FOR ENGINE”. <Ref. to EN(H4DOTC)(diag)-34, Subaru Select Monitor.> • General scan tool For detailed operation procedures, refer to the general scan tool operation manual.	Is the value of «Coolant Temp.» 75°C (167°F) or more?	Go to step **12**.	Replace the engine coolant temperature sensor. <Ref. to FU(H4DOTC)-34, Engine Coolant Temperature Sensor.>
12	**CHECK MASS AIR FLOW AND INTAKE AIR TEMPERATURE SENSOR.** 1) Start the engine and warm up engine until coolant temperature is higher than 75°C (167°F). 2) Place the shift lever in neutral position. 3) Turn the A/C switch to OFF. 4) Turn all the accessory switches to OFF. 5) Read the value of «Mass Air Flow» using the Subaru Select Monitor or a general scan tool. NOTE: • Subaru Select Monitor For detailed operation procedures, refer to “READ CURRENT DATA FOR ENGINE”. <Ref. to EN(H4DOTC)(diag)-34, Subaru Select Monitor.> • General scan tool For detailed operation procedures, refer to the general scan tool operation manual.	Is the value of «Mass Air Flow» 2.0 — 5.0 g/s (0.26 — 0.66 lb/m)?	Go to step **13**.	Replace the mass air flow and intake air temperature sensor. <Ref. to FU(H4DOTC)-42, Mass Air Flow and Intake Air Temperature Sensor.>

	Step	Check	Yes	No
13	**CHECK MASS AIR FLOW AND INTAKE AIR TEMPERATURE SENSOR.** 1) Start the engine and warm up engine until coolant temperature is higher than 75°C (167°F). 2) Place the shift lever in neutral position. 3) Turn the A/C switch to OFF. 4) Turn all the accessory switches to OFF. 5) Open the front hood. 6) Measure the ambient temperature. 7) Read the value of «Intake Air Temp.» using the Subaru Select Monitor or a general scan tool. NOTE: • Subaru Select Monitor For detailed operation procedures, refer to "READ CURRENT DATA FOR ENGINE". <Ref. to EN(H4DOTC)(diag)-34, Subaru Select Monitor.> • General scan tool For detailed operation procedures, refer to the general scan tool operation manual.	Subtract ambient temperature from «Intake Air Temp.». Is the obtained value –10 — 50°C (–18 — 90°F)?	Go to step **14**.	Check the mass air flow and intake air temperature sensor. <Ref. to FU(H4DOTC)-42, Mass Air Flow and Intake Air Temperature Sensor.>
14	**CHECK REAR OXYGEN SENSOR DATA.** 1) Warm up the engine until engine coolant temperature is higher than 75°C (167°F), and keep the engine speed at 3,000 rpm. (2 minutes maximum) 2) Read the value of «Rear O2 Sensor» using the Subaru Select Monitor or a general scan tool. NOTE: • Depress the clutch pedal. • Subaru Select Monitor For detailed operation procedures, refer to "READ CURRENT DATA FOR ENGINE". <Ref. to EN(H4DOTC)(diag)-34, Subaru Select Monitor.> • General scan tool For detailed operation procedures, refer to the general scan tool operation manual.	Is the value of «Rear O2 Sensor» 0.490 V or more?	Go to step **15**.	Go to step **16**.
15	**CHECK REAR OXYGEN SENSOR DATA.** 1) Warm up the engine until engine coolant temperature is higher than 75°C (167°F), and rapidly reduce the engine speed from 3,000 rpm. 2) Read the value of «Rear O2 Sensor» using the Subaru Select Monitor or a general scan tool. NOTE: • Depress the clutch pedal. • Subaru Select Monitor For detailed operation procedures, refer to "READ CURRENT DATA FOR ENGINE". <Ref. to EN(H4DOTC)(diag)-34, Subaru Select Monitor.> • General scan tool For detailed operation procedures, refer to the general scan tool operation manual.	Is the value of «Rear O2 Sensor» 0.250 V or less?	Go to step **17**.	Go to step **16**.

	Step	Check	Yes	No
16	**CHECK REAR OXYGEN SENSOR CONNECTOR AND COUPLING CONNECTOR.**	Has water entered the connector?	Completely remove any water inside.	Go to step **18**.
17	**CHECK FRONT OXYGEN (A/F) SENSOR USING REAR OXYGEN SENSOR SIGNAL.** 1) Warm up the engine until engine coolant temperature is higher than 75°C (167°F), then keep the engine idling for 5 minutes or more. 2) Read the value of «Rear O2 Sensor» using the Subaru Select Monitor or a general scan tool. NOTE: • Subaru Select Monitor For detailed operation procedures, refer to "READ CURRENT DATA FOR ENGINE". <Ref. to EN(H4DOTC)(diag)-34, Subaru Select Monitor.> • General scan tool For detailed operation procedures, refer to the general scan tool operation manual.	Is the value in «Rear O2 Sensor» kept at 0.250 V or less for 5 minutes or more?	Replace the front oxygen (A/F) sensor. <Ref. to FU(H4DOTC)-54, Front Oxygen (A/F) Sensor.>	Go to step **18**.
18	**CHECK HARNESS BETWEEN ECM AND REAR OXYGEN SENSOR CONNECTOR.** 1) Turn the ignition switch to OFF. 2) Disconnect the connector from ECM and rear oxygen sensor. 3) Measure the resistance of harness between ECM and rear oxygen sensor connector. ***Connector & terminal*** ***(B136) No. 20 — (E25) No. 3:*** ***(B135) No. 30 — (E25) No. 4:***	Is the resistance less than 1 Ω?	Go to step **19**.	Repair the harness and connector. NOTE: In this case, repair the following item: • Open circuit in harness between ECM and rear oxygen sensor connector • Poor contact of coupling connector
19	**CHECK HARNESS BETWEEN ECM AND REAR OXYGEN SENSOR CONNECTOR.** 1) Connect the connector to ECM. 2) Turn the ignition switch to ON. 3) Measure the voltage between rear oxygen sensor connector and chassis ground. ***Connector & terminal*** ***(E25) No. 3 (+) — Chassis ground (–):***	Is the voltage 0.2 — 0.5 V?	Replace the rear oxygen sensor. <Ref. to FU(H4DOTC)-56, Rear Oxygen Sensor.>	Go to step **20**.
20	**CHECK OUTPUT SIGNAL OF ECM.** 1) Turn the ignition switch to ON. 2) Measure the voltage between ECM and chassis ground on faulty cylinders. ***Connector & terminal*** ***#1 (B134) No. 10 (+) — Chassis ground (–):*** ***#2 (B134) No. 11 (+) — Chassis ground (–):*** ***#3 (B134) No. 12 (+) — Chassis ground (–):*** ***#4 (B134) No. 13 (+) — Chassis ground (–):***	Is the voltage 10 V or more?	Go to step **25**.	Go to step **21**.

	Step	Check	Yes	No
21	**CHECK HARNESS BETWEEN ECM AND FUEL INJECTOR CONNECTOR.** 1) Turn the ignition switch to OFF. 2) Disconnect the connector from fuel injector on faulty cylinders. 3) Measure the resistance between fuel injector connector and engine ground on faulty cylinders. ***Connector & terminal*** ***#1 (E5) No. 2 — Engine ground:*** ***#2 (E16) No. 2 — Engine ground:*** ***#3 (E6) No. 2 — Engine ground:*** ***#4 (E17) No. 2 — Engine ground:***	Is the resistance 1 MΩ or more?	Go to step **22**.	Repair the short circuit to ground in harness between ECM and fuel injector connector.
22	**CHECK HARNESS BETWEEN ECM AND FUEL INJECTOR CONNECTOR.** Measure the resistance of harness between ECM and fuel injector connector on faulty cylinders. ***Connector & terminal*** ***#1 (B134) No. 10 — (E5) No. 2:*** ***#2 (B134) No. 11 — (E16) No. 2:*** ***#3 (B134) No. 12 — (E6) No. 2:*** ***#4 (B134) No. 13 — (E17) No. 2:***	Is the resistance less than 1 Ω?	Go to step **23**.	Repair the harness and connector. NOTE: In this case, repair the following item: • Open circuit in harness between ECM and fuel injector connector • Poor contact of coupling connector
23	**CHECK FUEL INJECTOR.** Measure the resistance between fuel injector terminals on faulty cylinder. ***Terminals*** ***No. 1 — No. 2:***	Is the resistance 5 — 20 Ω?	Go to step **24**.	Replace the faulty fuel injector. <Ref. to FU(H4DOTC)-45, Fuel Injector.>
24	**CHECK POWER SUPPLY LINE.** 1) Turn the ignition switch to ON. 2) Measure the voltage between fuel injector connector of faulty cylinders and engine ground. ***Connector & terminal*** ***#1 (E5) No. 1 (+) — Engine ground (–):*** ***#2 (E16) No. 1 (+) — Engine ground (–):*** ***#3 (E6) No. 1 (+) — Engine ground (–):*** ***#4 (E17) No. 1 (+) — Engine ground (–):***	Is the voltage 10 V or more?	Repair the poor contact of all connectors in fuel injector circuit.	Repair the harness and connector. NOTE: In this case, repair the following item: • Open circuit in harness between the main relay and fuel injector connector on faulty cylinders • Poor contact of coupling connector • Poor contact of main relay connector
25	**CHECK HARNESS BETWEEN ECM AND FUEL INJECTOR CONNECTOR.** 1) Turn the ignition switch to OFF. 2) Disconnect the connector from fuel injector on faulty cylinders. 3) Turn the ignition switch to ON. 4) Measure the voltage between ECM and chassis ground on faulty cylinders. ***Connector & terminal*** ***#1 (B134) No. 10 (+) — Chassis ground (–):*** ***#2 (B134) No. 11 (+) — Chassis ground (–):*** ***#3 (B134) No. 12 (+) — Chassis ground (–):*** ***#4 (B134) No. 13 (+) — Chassis ground (–):***	Is the voltage 10 V or more?	Repair the short circuit to power in harness between ECM and fuel injector connector.	Go to step **26**.

	Step	Check	Yes	No
26	**CHECK FUEL INJECTOR.** 1) Turn the ignition switch to OFF. 2) Measure the resistance between fuel injector terminals on faulty cylinder. ***Terminals*** ***No. 1 — No. 2:***	Is the resistance 5 — 20 Ω?	Go to step **27**.	Replace the faulty fuel injector. <Ref. to FU(H4DOTC)-45, Fuel Injector.>
27	**CHECK INSTALLATION CONDITION OF CAMSHAFT POSITION SENSOR/CRANKSHAFT POSITION SENSOR.**	Is the camshaft position sensor or crankshaft position sensor loosely installed?	Tighten the camshaft position sensor or crankshaft position sensor. <Ref. to FU(H4DOTC)-37, Camshaft Position Sensor.> <Ref. to FU(H4DOTC)-35, Crankshaft Position Sensor.>	Go to step **28**.
28	**CHECK CRANK SPROCKET.** Remove the timing belt cover. <Ref. to ME(H4DOTC)-46, REMOVAL, Timing Belt Cover.>	Is the crank sprocket rusted or does it have broken teeth?	Replace the crank sprocket. <Ref. to ME(H4DOTC)-62, Crank Sprocket.>	Go to step **29**.
29	**CHECK INSTALLATION CONDITION OF TIMING BELT.** Turn the crankshaft using ST, and align the alignment mark on crank sprocket with alignment mark on cylinder block. ST 499987500 CRANKSHAFT SOCKET	Is the timing belt dislocated from its proper position?	Repair the installation condition of timing belt. <Ref. to ME(H4DOTC)-52, Timing Belt.>	Go to step **30**.
30	**CHECK FUEL LEVEL.**	Is the fuel meter indication higher than the “Lower” level?	Go to step **31**.	Refill the fuel so that the fuel meter indication is higher than the “Lower” level, and proceed to the next step. Go to step **31**.
31	**CHECK STATUS OF MALFUNCTION INDICATOR LIGHT.** 1) Clear the memory using the Subaru Select Monitor or general scan tool. <Ref. to EN(H4DOTC)(diag)-53, Clear Memory Mode.> 2) Start the engine, and drive the vehicle 10 minutes or more.	Does the malfunction indicator light illuminate or blink?	Go to step **33**.	Go to step **32**.
32	**CHECK CAUSE OF MISFIRE.**	Was the cause of misfire identified when the engine is running?	Finish diagnostics operation, if the engine has no abnormality.	Repair the poor contact of connector. NOTE: In this case, repair the following item: • Poor contact of ignition coil connector • Poor contact of fuel injector connector on faulty cylinders • Poor contact of ECM connector • Poor contact of coupling connector

	Step	Check	Yes	No
33	**CHECK AIR INTAKE SYSTEM.**	Is there any fault in air intake system?	Repair the air intake system. NOTE: Check the following items. • Are there air leaks or air suction caused by loose or dislocated nuts and bolts? • Are there cracks or any disconnection of hoses?	Go to step **34**.
34	**CHECK MISFIRE SYMPTOM.** 1) Turn the ignition switch to ON. 2) Check for DTC. <Ref. to EN(H4DOTC)(diag)-40, Read Diagnostic Trouble Code (DTC).>	Does the Subaru Select Monitor or general scan tool indicate only one DTC?	Go to step **37**.	Go to step **35**.
35	**CHECK DTC.**	Is DTC P0301 and P0303 displayed on the Subaru Select Monitor or general scan tool?	Go to step **38**.	Go to step **36**.
36	**CHECK DTC.**	Is DTC P0302 and P0304 displayed on the Subaru Select Monitor or general scan tool?	Go to step **39**.	Go to step **40**.
37	**ONLY ONE CYLINDER.**	Is there any fault in the cylinder?	Repair or replace faulty parts. NOTE: Check the following items. • Spark plug • Ignition coil • Fuel injector • Compression ratio	Go to DTC P0171. <Ref. to EN(H4DOTC)(diag)-143, DTC P0171 SYSTEM TOO LEAN (BANK 1), Diagnostic Procedure with Diagnostic Trouble Code (DTC).>
38	**GROUP OF #1 AND #3 CYLINDERS.**	Are there any faults in #1 and #3 cylinders?	Repair or replace faulty parts. NOTE: Check the following items. • Spark plug • Ignition coil • Fuel injector • Compression ratio • Skipping timing belt teeth	Go to DTC P0171. <Ref. to EN(H4DOTC)(diag)-143, DTC P0171 SYSTEM TOO LEAN (BANK 1), Diagnostic Procedure with Diagnostic Trouble Code (DTC).>
39	**GROUP OF #2 AND #4 CYLINDERS.**	Are there any faults in #2 and #4 cylinders?	Repair or replace faulty parts. NOTE: Check the following items. • Spark plug • Ignition coil • Fuel injector • Compression ratio • Skipping timing belt teeth	Go to DTC P0171. <Ref. to EN(H4DOTC)(diag)-143, DTC P0171 SYSTEM TOO LEAN (BANK 1), Diagnostic Procedure with Diagnostic Trouble Code (DTC).>

Step		Check	Yes	No
40	CYLINDER AT RANDOM.	Is the engine idle rough?	Go to DTC P0171. <Ref. to EN(H4DOTC)(diag)-143, DTC P0171 SYSTEM TOO LEAN (BANK 1), Diagnostic Procedure with Diagnostic Trouble Code (DTC).>	Repair or replace faulty parts. NOTE: Check the following items. • Spark plug • Ignition coil • Fuel injector • Compression ratio

EM:DTC P2227 BAROMETRIC PRESSURE CIRCUIT RANGE/PERFORMANCE

DTC DETECTING CONDITION:

- Detected when two consecutive driving cycles with fault occur.
- GENERAL DESCRIPTION <Ref. to GD(H4DOTC)-253, DTC P2227 BAROMETRIC PRESSURE CIRCUIT RANGE/PERFORMANCE, Diagnostic Trouble Code (DTC) Detecting Criteria.>

CAUTION:
After servicing or replacing faulty parts, perform Clear Memory Mode <Ref. to EN(H4DOTC)(diag)-53, OPERATION, Clear Memory Mode.>, and Inspection Mode <Ref. to EN(H4DOTC)(diag)-41, PROCEDURE, Inspection Mode.>.

Step		Check	Yes	No
1	**CHECK FOR ANY OTHER DTC ON DISPLAY.**	Is any other DTC displayed?	Check DTC using "List of Diagnostic Trouble Code (DTC)". <Ref. to EN(H4DOTC)(diag)-75, List of Diagnostic Trouble Code (DTC).>	Replace the ECM. <Ref. to FU(H4DOTC)-58, Engine Control Module (ECM).> NOTE: The barometric pressure sensor is built into the ECM.

EN:DTC P2228 BAROMETRIC PRESSURE CIRCUIT LOW

DTC DETECTING CONDITION:

- Immediately at fault recognition
- GENERAL DESCRIPTION <Ref. to GD(H4DOTC)-254, DTC P2228 BAROMETRIC PRESSURE CIRCUIT LOW, Diagnostic Trouble Code (DTC) Detecting Criteria.>

CAUTION:
After servicing or replacing faulty parts, perform Clear Memory Mode <Ref. to EN(H4DOTC)(diag)-53, OPERATION, Clear Memory Mode.>, and Inspection Mode <Ref. to EN(H4DOTC)(diag)-41, PROCEDURE, Inspection Mode.>.

Step		Check	Yes	No
1	**CHECK FOR ANY OTHER DTC ON DISPLAY.**	Is any other DTC displayed?	Check DTC using "List of Diagnostic Trouble Code (DTC)". <Ref. to EN(H4DOTC)(diag)-75, List of Diagnostic Trouble Code (DTC).>	Replace the ECM. <Ref. to FU(H4DOTC)-58, Engine Control Module (ECM).> NOTE: The barometric pressure sensor is built into the ECM.

EO:DTC P2229 BAROMETRIC PRESSURE CIRCUIT HIGH

DTC DETECTING CONDITION:

- Immediately at fault recognition
- GENERAL DESCRIPTION <Ref. to GD(H4DOTC)-255, DTC P2229 BAROMETRIC PRESSURE CIRCUIT HIGH, Diagnostic Trouble Code (DTC) Detecting Criteria.>

CAUTION:
After servicing or replacing faulty parts, perform Clear Memory Mode <Ref. to EN(H4DOTC)(diag)-53, OPERATION, Clear Memory Mode.>, and Inspection Mode <Ref. to EN(H4DOTC)(diag)-41, PROCEDURE, Inspection Mode.>.

Step		Check	Yes	No
1	**CHECK FOR ANY OTHER DTC ON DISPLAY.**	Is any other DTC displayed?	Check DTC using "List of Diagnostic Trouble Code (DTC)". <Ref. to EN(H4DOTC)(diag)-75, List of Diagnostic Trouble Code (DTC).>	Replace the ECM. <Ref. to FU(H4DOTC)-58, Engine Control Module (ECM).> NOTE: The barometric pressure sensor is built into the ECM.

EP:DTC P2610 ECM/PCM INTERNAL ENGINE OFF TIMER PERFORMANCE

DTC DETECTING CONDITION:

- Detected when two consecutive driving cycles with fault occur.
- GENERAL DESCRIPTION <Ref. to GD(H4DOTC)-256, DTC P2610 ECM/PCM INTERNAL ENGINE OFF TIMER PERFORMANCE, Diagnostic Trouble Code (DTC) Detecting Criteria.>

CAUTION:
After servicing or replacing faulty parts, perform Clear Memory Mode <Ref. to EN(H4DOTC)(diag)-53, OPERATION, Clear Memory Mode.>, and Inspection Mode <Ref. to EN(H4DOTC)(diag)-41, PROCEDURE, Inspection Mode.>.

Step		Check	Yes	No
1	**CHECK FOR ANY OTHER DTC ON DISPLAY.**	Is any other DTC displayed?	Check DTC using "List of Diagnostic Trouble Code (DTC)". <Ref. to EN(H4DOTC)(diag)-75, List of Diagnostic Trouble Code (DTC).>	Replace the ECM. <Ref. to FU(H4DOTC)-58, Engine Control Module (ECM).> NOTE: The soak timer IC is built into the ECM.

EQ:DTC U0073 CAN FAILURE, BUS 'OFF' DETECTION

NOTE:
For the diagnostic procedure, refer to LAN section. <Ref. to LAN(diag)-2, Basic Diagnostic Procedure.>

ER:DTC U0101 CAN (TCU) DATA NOT LOADED

NOTE:
For the diagnostic procedure, refer to LAN section. <Ref. to LAN(diag)-2, Basic Diagnostic Procedure.>

ES:DTC U0122 CAN (VDC) DATA NOT LOADED

NOTE:
For the diagnostic procedure, refer to LAN section. <Ref. to LAN(diag)-2, Basic Diagnostic Procedure.>

ET:DTC U0140 CAN (BCU) DATA NOT LOADED

NOTE:
For the diagnostic procedure, refer to LAN section. <Ref. to LAN(diag)-2, Basic Diagnostic Procedure.>

EU:DTC U0402 CAN (TCU) DATA ABNORMAL

NOTE:
For the diagnostic procedure, refer to LAN section. <Ref. to LAN(diag)-2, Basic Diagnostic Procedure.>

EV:DTC U0416 CAN (VDC) DATA ABNORMAL

NOTE:
For the diagnostic procedure, refer to LAN section. <Ref. to LAN(diag)-2, Basic Diagnostic Procedure.>

EW:DTC U0422 CAN (BCU) DATA ABNORMAL

NOTE:
For the diagnostic procedure, refer to LAN section. <Ref. to LAN(diag)-2, Basic Diagnostic Procedure.>

20.General Diagnostic Table

A: INSPECTION

1. ENGINE

NOTE:
Malfunction of parts other than those listed is also possible. <Ref. to ME(H4DOTC)-111, Engine Trouble in General.>

Symptoms	Problem parts
1. Engine stalls during idling.	1) Electronic throttle control 2) Manifold absolute pressure sensor 3) Mass air flow and intake air temperature sensor 4) Ignition parts (*1) 5) Engine coolant temperature sensor (*2) 6) Crankshaft position sensor (*3) 7) Camshaft position sensor (*3) 8) Fuel injection parts (*4)
2. Rough idling	1) Electronic throttle control 2) Manifold absolute pressure sensor 3) Mass air flow and intake air temperature sensor 4) Engine coolant temperature sensor (*2) 5) Ignition parts (*1) 6) Air intake system (*5) 7) Fuel injection parts (*4) 8) Crankshaft position sensor (*3) 9) Camshaft position sensor (*3) 10) Oxygen sensor 11) Fuel pump and fuel pump relay
3. Engine does not return to idle.	1) Electronic throttle control 2) Engine coolant temperature sensor 3) Manifold absolute pressure sensor 4) Mass air flow and intake air temperature sensor 5) Accelerator pedal position sensor
4. Poor acceleration	1) Manifold absolute pressure sensor 2) Mass air flow and intake air temperature sensor 3) Electronic throttle control 4) Fuel injection parts (*4) 5) Fuel pump and fuel pump relay 6) Engine coolant temperature sensor (*2) 7) Crankshaft position sensor (*3) 8) Camshaft position sensor (*3) 9) Engine torque control signal circuit 10) Ignition parts (*1) 11) Accelerator pedal position sensor
5. Engine stalls, hesitates, or sputters at acceleration.	1) Manifold absolute pressure sensor 2) Mass air flow and intake air temperature sensor 3) Engine coolant temperature sensor (*2) 4) Crankshaft position sensor (*3) 5) Camshaft position sensor (*3) 6) Purge control solenoid valve 7) Fuel injection parts (*4) 8) Fuel pump and fuel pump relay 9) Electronic throttle control

Symptoms	Problem parts
6. Surging	1) Manifold absolute pressure sensor 2) Mass air flow and intake air temperature sensor 3) Engine coolant temperature sensor (*2) 4) Crankshaft position sensor (*3) 5) Camshaft position sensor (*3) 6) Fuel injection parts (*4) 7) Electronic control position sensor 8) Fuel pump and fuel pump relay
7. Spark knock	1) Manifold absolute pressure sensor 2) Mass air flow and intake air temperature sensor 3) Engine coolant temperature sensor 4) Knock sensor 5) Fuel injection parts (*4) 6) Fuel pump and fuel pump relay
8. After-burning in exhaust system	1) Manifold absolute pressure sensor 2) Mass air flow and intake air temperature sensor 3) Engine coolant temperature sensor (*2) 4) Fuel injection parts (*4) 5) Fuel pump and fuel pump relay

*1: Check ignition coil and spark plug.
*2: Indicate the symptom occurring only in cold temperatures.
*3: Ensure the secure installation.
*4: Check fuel injector, fuel pressure regulator and fuel filter.
*5: Inspect air leak in air intake system.

GENERAL DESCRIPTION

GD(H4DOTC)

Page

1. List of Diagnostic Trouble Code (DTC) 2
2. Diagnostic Trouble Code (DTC) Detecting Criteria 10

1. List of Diagnostic Trouble Code (DTC)

A: LIST

DTC	Item	Index
P0011	Intake Camshaft Position - Timing Over-Advanced or System Performance (Bank 1)	<Ref. to GD(H4DOTC)-10, DTC P0011 INTAKE CAMSHAFT POSITION - TIMING OVER-ADVANCED OR SYSTEM PERFORMANCE (BANK 1), Diagnostic Trouble Code (DTC) Detecting Criteria.>
P0014	Exhaust AVCS System 1 (Range/ Performance)	<Ref. to GD(H4DOTC)-12, DTC P0014 EXHAUST AVCS SYSTEM 1 (RANGE/PERFORMANCE), Diagnostic Trouble Code (DTC) Detecting Criteria.>
P0016	Crankshaft Position - Camshaft Position Correlation (Bank1)	<Ref. to GD(H4DOTC)-14, DTC P0016 CRANKSHAFT POSITION - CAMSHAFT POSITION CORRELATION (BANK1), Diagnostic Trouble Code (DTC) Detecting Criteria.>
P0017	Crank and Cam Timing B System Failure (Bank 1)	<Ref. to GD(H4DOTC)-16, DTC P0017 CRANK AND CAM TIMING B SYSTEM FAILURE (BANK 1), Diagnostic Trouble Code (DTC) Detecting Criteria.>
P0018	Crankshaft Position - Camshaft Position Correlation (Bank2)	<Ref. to GD(H4DOTC)-18, DTC P0018 CRANKSHAFT POSITION - CAMSHAFT POSITION CORRELATION (BANK2), Diagnostic Trouble Code (DTC) Detecting Criteria.>
P0019	Crank and Cam Timing B System Failure (Bank 2)	<Ref. to GD(H4DOTC)-18, DTC P0019 CRANK AND CAM TIMING B SYSTEM FAILURE (BANK 2), Diagnostic Trouble Code (DTC) Detecting Criteria.>
P0021	Intake Camshaft Position - Timing Over-Advanced or System Performance (Bank 2)	<Ref. to GD(H4DOTC)-18, DTC P0021 INTAKE CAMSHAFT POSITION - TIMING OVER-ADVANCED OR SYSTEM PERFORMANCE (BANK 2), Diagnostic Trouble Code (DTC) Detecting Criteria.>
P0024	Exhaust AVCS System 2 (Range/ Performance)	<Ref. to GD(H4DOTC)-18, DTC P0024 EXHAUST AVCS SYSTEM 2 (RANGE/PERFORMANCE), Diagnostic Trouble Code (DTC) Detecting Criteria.>
P0030	HO2S Heater Control Circuit (Bank 1 Sensor 1)	<Ref. to GD(H4DOTC)-19, DTC P0030 HO2S HEATER CONTROL CIRCUIT (BANK 1 SENSOR 1), Diagnostic Trouble Code (DTC) Detecting Criteria.>
P0031	HO2S Heater Control Circuit Low (Bank 1 Sensor 1)	<Ref. to GD(H4DOTC)-21, DTC P0031 HO2S HEATER CONTROL CIRCUIT LOW (BANK 1 SENSOR 1), Diagnostic Trouble Code (DTC) Detecting Criteria.>
P0032	HO2S Heater Control Circuit High (Bank 1 Sensor 1)	<Ref. to GD(H4DOTC)-23, DTC P0032 HO2S HEATER CONTROL CIRCUIT HIGH (BANK 1 SENSOR 1), Diagnostic Trouble Code (DTC) Detecting Criteria.>
P0037	HO2S Heater Control Circuit Low (Bank 1 Sensor 2)	<Ref. to GD(H4DOTC)-25, DTC P0037 HO2S HEATER CONTROL CIRCUIT LOW (BANK 1 SENSOR 2), Diagnostic Trouble Code (DTC) Detecting Criteria.>
P0038	HO2S Heater Control Circuit High (Bank 1 Sensor 2)	<Ref. to GD(H4DOTC)-27, DTC P0038 HO2S HEATER CONTROL CIRCUIT HIGH (BANK 1 SENSOR 2), Diagnostic Trouble Code (DTC) Detecting Criteria.>
P0068	MAP/MAF - Throttle Position Correlation	<Ref. to GD(H4DOTC)-29, DTC P0068 MAP/MAF - THROTTLE POSITION CORRELATION, Diagnostic Trouble Code (DTC) Detecting Criteria.>
P0101	Mass or Volume Air Flow Circuit Range/Performance	<Ref. to GD(H4DOTC)-31, DTC P0101 MASS OR VOLUME AIR FLOW CIRCUIT RANGE/PERFORMANCE, Diagnostic Trouble Code (DTC) Detecting Criteria.>
P0102	Mass or Volume Air Flow Circuit Low Input	<Ref. to GD(H4DOTC)-33, DTC P0102 MASS OR VOLUME AIR FLOW CIRCUIT LOW INPUT, Diagnostic Trouble Code (DTC) Detecting Criteria.>
P0103	Mass or Volume Air Flow Circuit High Input	<Ref. to GD(H4DOTC)-35, DTC P0103 MASS OR VOLUME AIR FLOW CIRCUIT HIGH INPUT, Diagnostic Trouble Code (DTC) Detecting Criteria.>
P0107	Manifold Absolute Pressure/Barometric Pressure Circuit Low Input	<Ref. to GD(H4DOTC)-37, DTC P0107 MANIFOLD ABSOLUTE PRESSURE/BAROMETRIC PRESSURE CIRCUIT LOW INPUT, Diagnostic Trouble Code (DTC) Detecting Criteria.>
P0108	Manifold Absolute Pressure/Barometric Pressure Circuit High Input	<Ref. to GD(H4DOTC)-39, DTC P0108 MANIFOLD ABSOLUTE PRESSURE/BAROMETRIC PRESSURE CIRCUIT HIGH INPUT, Diagnostic Trouble Code (DTC) Detecting Criteria.>

DTC	Item	Index
P0111	Intake Air Temperature Sensor 1 Circuit Range/Performance	<Ref. to GD(H4DOTC)-41, DTC P0111 INTAKE AIR TEMPERATURE SENSOR 1 CIRCUIT RANGE/PERFORMANCE, Diagnostic Trouble Code (DTC) Detecting Criteria.>
P0112	Intake Air Temperature Sensor 1 Circuit Low	<Ref. to GD(H4DOTC)-43, DTC P0112 INTAKE AIR TEMPERATURE SENSOR 1 CIRCUIT LOW, Diagnostic Trouble Code (DTC) Detecting Criteria.>
P0113	Intake Air Temperature Sensor 1 Circuit High	<Ref. to GD(H4DOTC)-45, DTC P0113 INTAKE AIR TEMPERATURE SENSOR 1 CIRCUIT HIGH, Diagnostic Trouble Code (DTC) Detecting Criteria.>
P0117	Engine Coolant Temperature Circuit Low	<Ref. to GD(H4DOTC)-47, DTC P0117 ENGINE COOLANT TEMPERATURE CIRCUIT LOW, Diagnostic Trouble Code (DTC) Detecting Criteria.>
P0118	Engine Coolant Temperature Circuit High	<Ref. to GD(H4DOTC)-49, DTC P0118 ENGINE COOLANT TEMPERATURE CIRCUIT HIGH, Diagnostic Trouble Code (DTC) Detecting Criteria.>
P0122	Throttle/Pedal Position Sensor/ Switch “A” Circuit Low	<Ref. to GD(H4DOTC)-51, DTC P0122 THROTTLE/PEDAL POSITION SENSOR/SWITCH “A” CIRCUIT LOW, Diagnostic Trouble Code (DTC) Detecting Criteria.>
P0123	Throttle/Pedal Position Sensor/ Switch “A” Circuit High	<Ref. to GD(H4DOTC)-53, DTC P0123 THROTTLE/PEDAL POSITION SENSOR/SWITCH “A” CIRCUIT HIGH, Diagnostic Trouble Code (DTC) Detecting Criteria.>
P0125	Insufficient Coolant Temperature for Closed Loop Fuel Control	<Ref. to GD(H4DOTC)-55, DTC P0125 INSUFFICIENT COOLANT TEMPERATURE FOR CLOSED LOOP FUEL CONTROL, Diagnostic Trouble Code (DTC) Detecting Criteria.>
P0126	Insufficient Engine Coolant Temperature for Stable Operation	<Ref. to GD(H4DOTC)-57, DTC P0126 INSUFFICIENT ENGINE COOLANT TEMPERATURE FOR STABLE OPERATION, Diagnostic Trouble Code (DTC) Detecting Criteria.>
P0128	Coolant Thermostat (Engine Coolant Temperature Below Thermostat Regulating Temperature)	<Ref. to GD(H4DOTC)-59, DTC P0128 COOLANT THERMOSTAT (ENGINE COOLANT TEMPERATURE BELOW THERMOSTAT REGULATING TEMPERATURE), Diagnostic Trouble Code (DTC) Detecting Criteria.>
P0131	O2 Sensor Circuit Low Voltage (Bank 1 Sensor 1)	<Ref. to GD(H4DOTC)-63, DTC P0131 O2 SENSOR CIRCUIT LOW VOLTAGE (BANK 1 SENSOR 1), Diagnostic Trouble Code (DTC) Detecting Criteria.>
P0132	O2 Sensor Circuit High Voltage (Bank 1 Sensor 1)	<Ref. to GD(H4DOTC)-65, DTC P0132 O2 SENSOR CIRCUIT HIGH VOLTAGE (BANK 1 SENSOR 1), Diagnostic Trouble Code (DTC) Detecting Criteria.>
P0133	O2 Sensor Circuit Slow Response (Bank 1 Sensor 1)	<Ref. to GD(H4DOTC)-67, DTC P0133 O2 SENSOR CIRCUIT SLOW RESPONSE (BANK 1 SENSOR 1), Diagnostic Trouble Code (DTC) Detecting Criteria.>
P0134	O2 Sensor Circuit No Activity Detected (Bank 1 Sensor 1)	<Ref. to GD(H4DOTC)-70, DTC P0134 O2 SENSOR CIRCUIT NO ACTIVITY DETECTED (BANK 1 SENSOR 1), Diagnostic Trouble Code (DTC) Detecting Criteria.>
P0137	O2 Sensor Circuit Low Voltage (Bank 1 Sensor 2)	<Ref. to GD(H4DOTC)-72, DTC P0137 O2 SENSOR CIRCUIT LOW VOLTAGE (BANK 1 SENSOR 2), Diagnostic Trouble Code (DTC) Detecting Criteria.>
P0138	O2 Sensor Circuit High Voltage (Bank 1 Sensor 2)	<Ref. to GD(H4DOTC)-74, DTC P0138 O2 SENSOR CIRCUIT HIGH VOLTAGE (BANK 1 SENSOR 2), Diagnostic Trouble Code (DTC) Detecting Criteria.>
P013A	O2 Sensor Slow Response - Rich to Lean (Bank 1 Sensor 2)	<Ref. to GD(H4DOTC)-75, DTC P013A O2 SENSOR SLOW RESPONSE - RICH TO LEAN (BANK 1 SENSOR 2), Diagnostic Trouble Code (DTC) Detecting Criteria.>
P013B	O2 Sensor Slow Response - Lean to Rich (Bank 1 Sensor 2)	<Ref. to GD(H4DOTC)-77, DTC P013B O2 SENSOR SLOW RESPONSE - LEAN TO RICH (BANK 1 SENSOR 2), Diagnostic Trouble Code (DTC) Detecting Criteria.>
P013E	O2 Sensor Delayed Response - Rich to Lean (Bank 1 Sensor 2)	<Ref. to GD(H4DOTC)-79, DTC P013E O2 SENSOR DELAYED RESPONSE - RICH TO LEAN (BANK 1 SENSOR 2), Diagnostic Trouble Code (DTC) Detecting Criteria.>
P013F	O2 Sensor Delayed Response - Lean to Rich (Bank 1 Sensor 2)	<Ref. to GD(H4DOTC)-81, DTC P013F O2 SENSOR DELAYED RESPONSE - LEAN TO RICH (BANK 1 SENSOR 2), Diagnostic Trouble Code (DTC) Detecting Criteria.>

DTC	Item	Index
P0140	O2 Sensor Circuit No Activity Detected (Bank1 Sensor2)	<Ref. to GD(H4DOTC)-83, DTC P0140 O2 SENSOR CIRCUIT NO ACTIVITY DETECTED (BANK1 SENSOR2), Diagnostic Trouble Code (DTC) Detecting Criteria.>
P0141	O2 Sensor Heater Circuit (Bank1 Sensor2)	<Ref. to GD(H4DOTC)-85, DTC P0141 O2 SENSOR HEATER CIRCUIT (BANK1 SENSOR2), Diagnostic Trouble Code (DTC) Detecting Criteria.>
P0171	System Too Lean (Bank 1)	<Ref. to GD(H4DOTC)-87, DTC P0171 SYSTEM TOO LEAN (BANK 1), Diagnostic Trouble Code (DTC) Detecting Criteria.>
P0172	System Too Rich (Bank 1)	<Ref. to GD(H4DOTC)-88, DTC P0172 SYSTEM TOO RICH (BANK 1), Diagnostic Trouble Code (DTC) Detecting Criteria.>
P0181	Fuel Temperature Sensor “A” Circuit Range/Performance	<Ref. to GD(H4DOTC)-90, DTC P0181 FUEL TEMPERATURE SENSOR “A” CIRCUIT RANGE/PERFORMANCE, Diagnostic Trouble Code (DTC) Detecting Criteria.>
P0182	Fuel Temperature Sensor “A” Circuit Low Input	<Ref. to GD(H4DOTC)-93, DTC P0182 FUEL TEMPERATURE SENSOR “A” CIRCUIT LOW INPUT, Diagnostic Trouble Code (DTC) Detecting Criteria.>
P0183	Fuel Temperature Sensor “A” Circuit High Input	<Ref. to GD(H4DOTC)-95, DTC P0183 FUEL TEMPERATURE SENSOR “A” CIRCUIT HIGH INPUT, Diagnostic Trouble Code (DTC) Detecting Criteria.>
P0201	Injector #1	<Ref. to GD(H4DOTC)-97, DTC P0201 INJECTOR #1, Diagnostic Trouble Code (DTC) Detecting Criteria.>
P0202	Injector #2	<Ref. to GD(H4DOTC)-98, DTC P0202 INJECTOR #2, Diagnostic Trouble Code (DTC) Detecting Criteria.>
P0203	Injector #3	<Ref. to GD(H4DOTC)-98, DTC P0203 INJECTOR #3, Diagnostic Trouble Code (DTC) Detecting Criteria.>
P0204	Injector #4	<Ref. to GD(H4DOTC)-98, DTC P0204 INJECTOR #4, Diagnostic Trouble Code (DTC) Detecting Criteria.>
P0222	Throttle/Pedal Position Sensor/ Switch “B” Circuit Low	<Ref. to GD(H4DOTC)-99, DTC P0222 THROTTLE/PEDAL POSITION SENSOR/SWITCH “B” CIRCUIT LOW, Diagnostic Trouble Code (DTC) Detecting Criteria.>
P0223	Throttle/Pedal Position Sensor/ Switch “B” Circuit High	<Ref. to GD(H4DOTC)-101, DTC P0223 THROTTLE/PEDAL POSITION SENSOR/SWITCH “B” CIRCUIT HIGH, Diagnostic Trouble Code (DTC) Detecting Criteria.>
P0230	Fuel Pump Primary Circuit	<Ref. to GD(H4DOTC)-103, DTC P0230 FUEL PUMP PRIMARY CIRCUIT, Diagnostic Trouble Code (DTC) Detecting Criteria.>
P0244	Turbo/Super Charger Wastegate Solenoid “A” Range/Performance	<Ref. to GD(H4DOTC)-105, DTC P0244 TURBO/SUPER CHARGER WASTEGATE SOLENOID “A” RANGE/PERFORMANCE, Diagnostic Trouble Code (DTC) Detecting Criteria.>
P0245	Turbo/Super Charger Wastegate Solenoid “A” Low	<Ref. to GD(H4DOTC)-107, DTC P0245 TURBO/SUPER CHARGER WASTEGATE SOLENOID “A” LOW, Diagnostic Trouble Code (DTC) Detecting Criteria.>
P0246	Turbo/Super Charger Wastegate Solenoid “A” High	<Ref. to GD(H4DOTC)-108, DTC P0246 TURBO/SUPER CHARGER WASTEGATE SOLENOID “A” HIGH, Diagnostic Trouble Code (DTC) Detecting Criteria.>
P0301	Cylinder 1 Misfire Detected	<Ref. to GD(H4DOTC)-109, DTC P0301 CYLINDER 1 MISFIRE DETECTED, Diagnostic Trouble Code (DTC) Detecting Criteria.>
P0302	Cylinder 2 Misfire Detected	<Ref. to GD(H4DOTC)-115, DTC P0302 CYLINDER 2 MISFIRE DETECTED, Diagnostic Trouble Code (DTC) Detecting Criteria.>
P0303	Cylinder 3 Misfire Detected	<Ref. to GD(H4DOTC)-115, DTC P0303 CYLINDER 3 MISFIRE DETECTED, Diagnostic Trouble Code (DTC) Detecting Criteria.>
P0304	Cylinder 4 Misfire Detected	<Ref. to GD(H4DOTC)-115, DTC P0304 CYLINDER 4 MISFIRE DETECTED, Diagnostic Trouble Code (DTC) Detecting Criteria.>
P0327	Knock Sensor 1 Circuit Low (Bank 1 or Single Sensor)	<Ref. to GD(H4DOTC)-116, DTC P0327 KNOCK SENSOR 1 CIRCUIT LOW (BANK 1 OR SINGLE SENSOR), Diagnostic Trouble Code (DTC) Detecting Criteria.>
P0328	Knock Sensor 1 Circuit High (Bank 1 or Single Sensor)	<Ref. to GD(H4DOTC)-118, DTC P0328 KNOCK SENSOR 1 CIRCUIT HIGH (BANK 1 OR SINGLE SENSOR), Diagnostic Trouble Code (DTC) Detecting Criteria.>

DTC	Item	Index
P0335	Crankshaft Position Sensor “A” Circuit	<Ref. to GD(H4DOTC)-120, DTC P0335 CRANKSHAFT POSITION SENSOR “A” CIRCUIT, Diagnostic Trouble Code (DTC) Detecting Criteria.>
P0336	Crankshaft Position Sensor “A” Circuit Range/Performance	<Ref. to GD(H4DOTC)-122, DTC P0336 CRANKSHAFT POSITION SENSOR “A” CIRCUIT RANGE/PERFORMANCE, Diagnostic Trouble Code (DTC) Detecting Criteria.>
P0340	Camshaft Position Sensor “A” Circuit (Bank 1 or Single Sensor)	<Ref. to GD(H4DOTC)-124, DTC P0340 CAMSHAFT POSITION SENSOR “A” CIRCUIT (BANK 1 OR SINGLE SENSOR), Diagnostic Trouble Code (DTC) Detecting Criteria.>
P0345	Camshaft Position Sensor “A” Circuit (Bank 2)	<Ref. to GD(H4DOTC)-125, DTC P0345 CAMSHAFT POSITION SENSOR “A” CIRCUIT (BANK 2), Diagnostic Trouble Code (DTC) Detecting Criteria.>
P0351	Ignition Coil A Primary/Secondary Circuit	<Ref. to GD(H4DOTC)-126, DTC P0351 IGNITION COIL A PRIMARY/SECONDARY CIRCUIT, Diagnostic Trouble Code (DTC) Detecting Criteria.>
P0352	Ignition Coil B Primary/Secondary Circuit	<Ref. to GD(H4DOTC)-126, DTC P0352 IGNITION COIL B PRIMARY/SECONDARY CIRCUIT, Diagnostic Trouble Code (DTC) Detecting Criteria.>
P0353	Ignition Coil C Primary/Secondary Circuit	<Ref. to GD(H4DOTC)-126, DTC P0353 IGNITION COIL C PRIMARY/SECONDARY CIRCUIT, Diagnostic Trouble Code (DTC) Detecting Criteria.>
P0354	Ignition Coil D Primary/Secondary Circuit	<Ref. to GD(H4DOTC)-126, DTC P0354 IGNITION COIL D PRIMARY/SECONDARY CIRCUIT, Diagnostic Trouble Code (DTC) Detecting Criteria.>
P0365	Camshaft Position Sensor “B” Circuit (Bank 1)	<Ref. to GD(H4DOTC)-127, DTC P0365 CAMSHAFT POSITION SENSOR “B” CIRCUIT (BANK 1), Diagnostic Trouble Code (DTC) Detecting Criteria.>
P0390	Camshaft Position Sensor “B” Circuit (Bank 2)	<Ref. to GD(H4DOTC)-127, DTC P0390 CAMSHAFT POSITION SENSOR “B” CIRCUIT (BANK 2), Diagnostic Trouble Code (DTC) Detecting Criteria.>
P0420	Catalyst System Efficiency Below Threshold (Bank 1)	<Ref. to GD(H4DOTC)-128, DTC P0420 CATALYST SYSTEM EFFICIENCY BELOW THRESHOLD (BANK 1), Diagnostic Trouble Code (DTC) Detecting Criteria.>
P0442	Evaporative Emission Control System Leak Detected (Small Leak)	<Ref. to GD(H4DOTC)-130, DTC P0442 EVAPORATIVE EMISSION CONTROL SYSTEM LEAK DETECTED (SMALL LEAK), Diagnostic Trouble Code (DTC) Detecting Criteria.>
P0447	Evaporative Emission Control System Vent Control Circuit Open	<Ref. to GD(H4DOTC)-144, DTC P0447 EVAPORATIVE EMISSION CONTROL SYSTEM VENT CONTROL CIRCUIT OPEN, Diagnostic Trouble Code (DTC) Detecting Criteria.>
P0448	Evaporative Emission Control System Vent Control Circuit Shorted	<Ref. to GD(H4DOTC)-146, DTC P0448 EVAPORATIVE EMISSION CONTROL SYSTEM VENT CONTROL CIRCUIT SHORTED, Diagnostic Trouble Code (DTC) Detecting Criteria.>
P0451	Evaporative Emission Control System Pressure Sensor	<Ref. to GD(H4DOTC)-148, DTC P0451 EVAPORATIVE EMISSION CONTROL SYSTEM PRESSURE SENSOR, Diagnostic Trouble Code (DTC) Detecting Criteria.>
P0452	Evaporative Emission Control System Pressure Sensor Low Input	<Ref. to GD(H4DOTC)-152, DTC P0452 EVAPORATIVE EMISSION CONTROL SYSTEM PRESSURE SENSOR LOW INPUT, Diagnostic Trouble Code (DTC) Detecting Criteria.>
P0453	Evaporative Emission Control System Pressure Sensor High Input	<Ref. to GD(H4DOTC)-154, DTC P0453 EVAPORATIVE EMISSION CONTROL SYSTEM PRESSURE SENSOR HIGH INPUT, Diagnostic Trouble Code (DTC) Detecting Criteria.>
P0456	Evaporative Emission Control System Leak Detected (Very Small Leak)	<Ref. to GD(H4DOTC)-155, DTC P0456 EVAPORATIVE EMISSION CONTROL SYSTEM LEAK DETECTED (VERY SMALL LEAK), Diagnostic Trouble Code (DTC) Detecting Criteria.>
P0457	Evaporative Emission Control System Leak Detected (Fuel Cap Loose/Off)	<Ref. to GD(H4DOTC)-155, DTC P0457 EVAPORATIVE EMISSION CONTROL SYSTEM LEAK DETECTED (FUEL CAP LOOSE/OFF), Diagnostic Trouble Code (DTC) Detecting Criteria.>
P0458	Evaporative Emission System Purge Control Valve Circuit Low	<Ref. to GD(H4DOTC)-156, DTC P0458 EVAPORATIVE EMISSION SYSTEM PURGE CONTROL VALVE CIRCUIT LOW, Diagnostic Trouble Code (DTC) Detecting Criteria.>
P0459	Evaporative Emission System Purge Control Valve Circuit High	<Ref. to GD(H4DOTC)-158, DTC P0459 EVAPORATIVE EMISSION SYSTEM PURGE CONTROL VALVE CIRCUIT HIGH, Diagnostic Trouble Code (DTC) Detecting Criteria.>

DTC	Item	Index
P0461	Fuel Level Sensor “A” Circuit Range/Performance	<Ref. to GD(H4DOTC)-160, DTC P0461 FUEL LEVEL SENSOR “A” CIRCUIT RANGE/PERFORMANCE, Diagnostic Trouble Code (DTC) Detecting Criteria.>
P0462	Fuel Level Sensor “A” Circuit Low	<Ref. to GD(H4DOTC)-162, DTC P0462 FUEL LEVEL SENSOR “A” CIRCUIT LOW, Diagnostic Trouble Code (DTC) Detecting Criteria.>
P0463	Fuel Level Sensor “A” Circuit High	<Ref. to GD(H4DOTC)-164, DTC P0463 FUEL LEVEL SENSOR “A” CIRCUIT HIGH, Diagnostic Trouble Code (DTC) Detecting Criteria.>
P0464	Fuel Level Sensor Circuit Intermittent	<Ref. to GD(H4DOTC)-166, DTC P0464 FUEL LEVEL SENSOR CIRCUIT INTERMITTENT, Diagnostic Trouble Code (DTC) Detecting Criteria.>
P0500	Vehicle Speed Sensor “A”	<Ref. to GD(H4DOTC)-169, DTC P0500 VEHICLE SPEED SENSOR “A”, Diagnostic Trouble Code (DTC) Detecting Criteria.>
P0506	Idle Air Control System RPM Lower Than Expected	<Ref. to GD(H4DOTC)-170, DTC P0506 IDLE AIR CONTROL SYSTEM RPM LOWER THAN EXPECTED, Diagnostic Trouble Code (DTC) Detecting Criteria.>
P0507	Idle Air Control System RPM Higher Than Expected	<Ref. to GD(H4DOTC)-171, DTC P0507 IDLE AIR CONTROL SYSTEM RPM HIGHER THAN EXPECTED, Diagnostic Trouble Code (DTC) Detecting Criteria.>
P050A	Cold Start Idle Air Control System Performance	<Ref. to GD(H4DOTC)-172, DTC P050A COLD START IDLE AIR CONTROL SYSTEM PERFORMANCE, Diagnostic Trouble Code (DTC) Detecting Criteria.>
P050B	Cold Start Ignition Timing Performance	<Ref. to GD(H4DOTC)-176, DTC P050B COLD START IGNITION TIMING PERFORMANCE, Diagnostic Trouble Code (DTC) Detecting Criteria.>
P0512	Starter Request Circuit	<Ref. to GD(H4DOTC)-177, DTC P0512 STARTER REQUEST CIRCUIT, Diagnostic Trouble Code (DTC) Detecting Criteria.>
P0513	Incorrect Immobilizer Key	<Ref. to GD(H4DOTC)-178, DTC P0513 INCORRECT IMMOBILIZER KEY, Diagnostic Trouble Code (DTC) Detecting Criteria.>
P0604	Internal Control Module Random Access Memory (RAM) Error	<Ref. to GD(H4DOTC)-179, DTC P0604 INTERNAL CONTROL MODULE RANDOM ACCESS MEMORY (RAM) ERROR, Diagnostic Trouble Code (DTC) Detecting Criteria.>
P0605	Internal Control Module Read Only Memory (ROM) Error	<Ref. to GD(H4DOTC)-180, DTC P0605 INTERNAL CONTROL MODULE READ ONLY MEMORY (ROM) ERROR, Diagnostic Trouble Code (DTC) Detecting Criteria.>
P0607	Throttle Control System Circuit Range/Performance	<Ref. to GD(H4DOTC)-181, DTC P0607 THROTTLE CONTROL SYSTEM CIRCUIT RANGE/PERFORMANCE, Diagnostic Trouble Code (DTC) Detecting Criteria.>
P0638	Throttle Actuator Control Range/Performance (Bank 1)	<Ref. to GD(H4DOTC)-183, DTC P0638 THROTTLE ACTUATOR CONTROL RANGE/PERFORMANCE (BANK 1), Diagnostic Trouble Code (DTC) Detecting Criteria.>
P0851	Neutral Switch Input Circuit Low (MT Model)	<Ref. to GD(H4DOTC)-185, DTC P0851 NEUTRAL SWITCH INPUT CIRCUIT LOW (MT MODEL), Diagnostic Trouble Code (DTC) Detecting Criteria.>
P0852	Neutral Switch Input Circuit High (MT Model)	<Ref. to GD(H4DOTC)-186, DTC P0852 NEUTRAL SWITCH INPUT CIRCUIT HIGH (MT MODEL), Diagnostic Trouble Code (DTC) Detecting Criteria.>
P1152	O2 Sensor Circuit Range/Performance (Low) (Bank1 Sensor1)	<Ref. to GD(H4DOTC)-187, DTC P1152 O2 SENSOR CIRCUIT RANGE/PERFORMANCE (LOW) (BANK1 SENSOR1), Diagnostic Trouble Code (DTC) Detecting Criteria.>
P1153	O2 Sensor Circuit Range/Performance (High) (Bank1 Sensor1)	<Ref. to GD(H4DOTC)-189, DTC P1153 O2 SENSOR CIRCUIT RANGE/PERFORMANCE (HIGH) (BANK1 SENSOR1), Diagnostic Trouble Code (DTC) Detecting Criteria.>
P1160	Return Spring Failure	<Ref. to GD(H4DOTC)-191, DTC P1160 RETURN SPRING FAILURE, Diagnostic Trouble Code (DTC) Detecting Criteria.>
P1400	Fuel Tank Pressure Control Solenoid Valve Circuit Low	<Ref. to GD(H4DOTC)-193, DTC P1400 FUEL TANK PRESSURE CONTROL SOLENOID VALVE CIRCUIT LOW, Diagnostic Trouble Code (DTC) Detecting Criteria.>

DTC	Item	Index
P1420	Fuel Tank Pressure Control Sol. Valve Circuit High	<Ref. to GD(H4DOTC)-195, DTC P1420 FUEL TANK PRESSURE CONTROL SOL. VALVE CIRCUIT HIGH, Diagnostic Trouble Code (DTC) Detecting Criteria.>
P1443	Vent Control Solenoid Valve Function Problem	<Ref. to GD(H4DOTC)-197, DTC P1443 VENT CONTROL SOLENOID VALVE FUNCTION PROBLEM, Diagnostic Trouble Code (DTC) Detecting Criteria.>
P1458	Canister Purge Control Solenoid Valve 2	<Ref. to GD(H4DOTC)-199, DTC P1458 CANISTER PURGE CONTROL SOLENOID VALVE 2, Diagnostic Trouble Code (DTC) Detecting Criteria.>
P1459	Canister Purge Control Solenoid Valve 2	<Ref. to GD(H4DOTC)-200, DTC P1459 CANISTER PURGE CONTROL SOLENOID VALVE 2, Diagnostic Trouble Code (DTC) Detecting Criteria.>
P1518	Starter Switch Circuit Low Input	<Ref. to GD(H4DOTC)-201, DTC P1518 STARTER SWITCH CIRCUIT LOW INPUT, Diagnostic Trouble Code (DTC) Detecting Criteria.>
P1560	Back-Up Voltage Circuit Malfunction	<Ref. to GD(H4DOTC)-202, DTC P1560 BACK-UP VOLTAGE CIRCUIT MALFUNCTION, Diagnostic Trouble Code (DTC) Detecting Criteria.>
P1570	Antenna	<Ref. to GD(H4DOTC)-203, DTC P1570 ANTENNA, Diagnostic Trouble Code (DTC) Detecting Criteria.>
P1571	Reference Code Incompatibility	<Ref. to GD(H4DOTC)-203, DTC P1571 REFERENCE CODE INCOMPATIBILITY, Diagnostic Trouble Code (DTC) Detecting Criteria.>
P1572	IMM Circuit Failure (Except Antenna Circuit)	<Ref. to GD(H4DOTC)-203, DTC P1572 IMM CIRCUIT FAILURE (EXCEPT ANTENNA CIRCUIT), Diagnostic Trouble Code (DTC) Detecting Criteria.>
P1574	Key Communication Failure	<Ref. to GD(H4DOTC)-203, DTC P1574 KEY COMMUNICATION FAILURE, Diagnostic Trouble Code (DTC) Detecting Criteria.>
P1576	EGI Control Module EEPROM	<Ref. to GD(H4DOTC)-203, DTC P1576 EGI CONTROL MODULE EEPROM, Diagnostic Trouble Code (DTC) Detecting Criteria.>
P1577	IMM Control Module EEPROM	<Ref. to GD(H4DOTC)-203, DTC P1577 IMM CONTROL MODULE EEPROM, Diagnostic Trouble Code (DTC) Detecting Criteria.>
P1578	Meter Failure	<Ref. to GD(H4DOTC)-203, DTC P1578 METER FAILURE, Diagnostic Trouble Code (DTC) Detecting Criteria.>
P2004	Intake Manifold Runner Control Stuck Open (Bank 1)	<Ref. to GD(H4DOTC)-204, DTC P2004 INTAKE MANIFOLD RUNNER CONTROL STUCK OPEN (BANK 1), Diagnostic Trouble Code (DTC) Detecting Criteria.>
P2005	Intake Manifold Runner Control Stuck Open (Bank 2)	<Ref. to GD(H4DOTC)-205, DTC P2005 INTAKE MANIFOLD RUNNER CONTROL STUCK OPEN (BANK 2), Diagnostic Trouble Code (DTC) Detecting Criteria.>
P2006	Intake Manifold Runner Control Stuck Closed (Bank 1)	<Ref. to GD(H4DOTC)-206, DTC P2006 INTAKE MANIFOLD RUNNER CONTROL STUCK CLOSED (BANK 1), Diagnostic Trouble Code (DTC) Detecting Criteria.>
P2007	Intake Manifold Runner Control Stuck Closed (Bank 2)	<Ref. to GD(H4DOTC)-207, DTC P2007 INTAKE MANIFOLD RUNNER CONTROL STUCK CLOSED (BANK 2), Diagnostic Trouble Code (DTC) Detecting Criteria.>
P2008	Intake Manifold Runner Control Circuit / Open (Bank 1)	<Ref. to GD(H4DOTC)-208, DTC P2008 INTAKE MANIFOLD RUNNER CONTROL CIRCUIT / OPEN (BANK 1), Diagnostic Trouble Code (DTC) Detecting Criteria.>
P2009	Intake Manifold Runner Control Circuit Low (Bank 1)	<Ref. to GD(H4DOTC)-210, DTC P2009 INTAKE MANIFOLD RUNNER CONTROL CIRCUIT LOW (BANK 1), Diagnostic Trouble Code (DTC) Detecting Criteria.>
P2011	Intake Manifold Runner Control Circuit / Open (Bank 2)	<Ref. to GD(H4DOTC)-211, DTC P2011 INTAKE MANIFOLD RUNNER CONTROL CIRCUIT / OPEN (BANK 2), Diagnostic Trouble Code (DTC) Detecting Criteria.>
P2012	Intake Manifold Runner Control Circuit Low (Bank 2)	<Ref. to GD(H4DOTC)-212, DTC P2012 INTAKE MANIFOLD RUNNER CONTROL CIRCUIT LOW (BANK 2), Diagnostic Trouble Code (DTC) Detecting Criteria.>
P2016	Intake Manifold Runner Position Sensor / Switch Circuit Low (Bank 1)	<Ref. to GD(H4DOTC)-213, DTC P2016 INTAKE MANIFOLD RUNNER POSITION SENSOR / SWITCH CIRCUIT LOW (BANK 1), Diagnostic Trouble Code (DTC) Detecting Criteria.>

DTC	Item	Index
P2017	Intake Manifold Runner Position Sensor / Switch Circuit High (Bank 1)	<Ref. to GD(H4DOTC)-215, DTC P2017 INTAKE MANIFOLD RUNNER POSITION SENSOR / SWITCH CIRCUIT HIGH (BANK 1), Diagnostic Trouble Code (DTC) Detecting Criteria.>
P2021	Intake Manifold Runner Position Sensor / Switch Circuit Low (Bank 2)	<Ref. to GD(H4DOTC)-217, DTC P2021 INTAKE MANIFOLD RUNNER POSITION SENSOR / SWITCH CIRCUIT LOW (BANK 2), Diagnostic Trouble Code (DTC) Detecting Criteria.>
P2022	Intake Manifold Runner Position Sensor / Switch Circuit High (Bank 2)	<Ref. to GD(H4DOTC)-219, DTC P2022 INTAKE MANIFOLD RUNNER POSITION SENSOR / SWITCH CIRCUIT HIGH (BANK 2), Diagnostic Trouble Code (DTC) Detecting Criteria.>
P2088	Intake Camshaft Position Actuator Control Circuit Low (Bank 1)	<Ref. to GD(H4DOTC)-221, DTC P2088 INTAKE CAMSHAFT POSITION ACTUATOR CONTROL CIRCUIT LOW (BANK 1), Diagnostic Trouble Code (DTC) Detecting Criteria.>
P2089	Intake Camshaft Position Actuator Control Circuit High (Bank 1)	<Ref. to GD(H4DOTC)-222, DTC P2089 INTAKE CAMSHAFT POSITION ACTUATOR CONTROL CIRCUIT HIGH (BANK 1), Diagnostic Trouble Code (DTC) Detecting Criteria.>
P2090	Exhaust Camshaft Position Actuator Control Circuit Low (Bank 1)	<Ref. to GD(H4DOTC)-223, DTC P2090 EXHAUST CAMSHAFT POSITION ACTUATOR CONTROL CIRCUIT LOW (BANK 1), Diagnostic Trouble Code (DTC) Detecting Criteria.>
P2091	Exhaust Camshaft Position Actuator Control Circuit High (Bank 1)	<Ref. to GD(H4DOTC)-224, DTC P2091 EXHAUST CAMSHAFT POSITION ACTUATOR CONTROL CIRCUIT HIGH (BANK 1), Diagnostic Trouble Code (DTC) Detecting Criteria.>
P2092	Intake Camshaft Position Actuator Control Circuit Low (Bank 2)	<Ref. to GD(H4DOTC)-225, DTC P2092 INTAKE CAMSHAFT POSITION ACTUATOR CONTROL CIRCUIT LOW (BANK 2), Diagnostic Trouble Code (DTC) Detecting Criteria.>
P2093	Intake Camshaft Position Actuator Control Circuit High (Bank 2)	<Ref. to GD(H4DOTC)-225, DTC P2093 INTAKE CAMSHAFT POSITION ACTUATOR CONTROL CIRCUIT HIGH (BANK 2), Diagnostic Trouble Code (DTC) Detecting Criteria.>
P2094	Exhaust Camshaft Position Actuator Control Circuit Low (Bank 2)	<Ref. to GD(H4DOTC)-225, DTC P2094 EXHAUST CAMSHAFT POSITION ACTUATOR CONTROL CIRCUIT LOW (BANK 2), Diagnostic Trouble Code (DTC) Detecting Criteria.>
P2095	Exhaust Camshaft Position Actuator Control Circuit High (Bank 2)	<Ref. to GD(H4DOTC)-225, DTC P2095 EXHAUST CAMSHAFT POSITION ACTUATOR CONTROL CIRCUIT HIGH (BANK 2), Diagnostic Trouble Code (DTC) Detecting Criteria.>
P2096	Post Catalyst Fuel Trim System Too Lean (Bank 1)	<Ref. to GD(H4DOTC)-226, DTC P2096 POST CATALYST FUEL TRIM SYSTEM TOO LEAN (BANK 1), Diagnostic Trouble Code (DTC) Detecting Criteria.>
P2097	Post Catalyst Fuel Trim System Too Rich (Bank 1)	<Ref. to GD(H4DOTC)-228, DTC P2097 POST CATALYST FUEL TRIM SYSTEM TOO RICH (BANK 1), Diagnostic Trouble Code (DTC) Detecting Criteria.>
P2101	Throttle Actuator Control Motor Circuit Range/Performance	<Ref. to GD(H4DOTC)-230, DTC P2101 THROTTLE ACTUATOR CONTROL MOTOR CIRCUIT RANGE/PERFORMANCE, Diagnostic Trouble Code (DTC) Detecting Criteria.>
P2102	Throttle Actuator Control Motor Circuit Low	<Ref. to GD(H4DOTC)-232, DTC P2102 THROTTLE ACTUATOR CONTROL MOTOR CIRCUIT LOW, Diagnostic Trouble Code (DTC) Detecting Criteria.>
P2103	Throttle Actuator Control Motor Circuit High	<Ref. to GD(H4DOTC)-234, DTC P2103 THROTTLE ACTUATOR CONTROL MOTOR CIRCUIT HIGH, Diagnostic Trouble Code (DTC) Detecting Criteria.>
P2109	Throttle/Pedal Position Sensor “A” Minimum Stop Performance	<Ref. to GD(H4DOTC)-236, DTC P2109 THROTTLE/PEDAL POSITION SENSOR “A” MINIMUM STOP PERFORMANCE, Diagnostic Trouble Code (DTC) Detecting Criteria.>
P2122	Throttle/Pedal Position Sensor/ Switch “D” Circuit Low Input	<Ref. to GD(H4DOTC)-238, DTC P2122 THROTTLE/PEDAL POSITION SENSOR/SWITCH “D” CIRCUIT LOW INPUT, Diagnostic Trouble Code (DTC) Detecting Criteria.>
P2123	Throttle/Pedal Position Sensor/ Switch “D” Circuit High Input	<Ref. to GD(H4DOTC)-240, DTC P2123 THROTTLE/PEDAL POSITION SENSOR/SWITCH “D” CIRCUIT HIGH INPUT, Diagnostic Trouble Code (DTC) Detecting Criteria.>

DTC	Item	Index
P2127	Throttle/Pedal Position Sensor/ Switch “E” Circuit Low Input	<Ref. to GD(H4DOTC)-242, DTC P2127 THROTTLE/PEDAL POSITION SENSOR/SWITCH “E” CIRCUIT LOW INPUT, Diagnostic Trouble Code (DTC) Detecting Criteria.>
P2128	Throttle/Pedal Position Sensor/ Switch “E” Circuit High Input	<Ref. to GD(H4DOTC)-244, DTC P2128 THROTTLE/PEDAL POSITION SENSOR/SWITCH “E” CIRCUIT HIGH INPUT, Diagnostic Trouble Code (DTC) Detecting Criteria.>
P2135	Throttle/Pedal Position Sensor/ Switch “A”/“B” Voltage Correlation	<Ref. to GD(H4DOTC)-246, DTC P2135 THROTTLE/PEDAL POSITION SENSOR/SWITCH “A”/“B” VOLTAGE CORRELATION, Diagnostic Trouble Code (DTC) Detecting Criteria.>
P2138	Throttle/Pedal Position Sensor/ Switch “D”/“E” Voltage Correlation	<Ref. to GD(H4DOTC)-248, DTC P2138 THROTTLE/PEDAL POSITION SENSOR/SWITCH “D”/“E” VOLTAGE CORRELATION, Diagnostic Trouble Code (DTC) Detecting Criteria.>
P219A	Bank 1 Air-Fuel Ratio Imbalance	<Ref. to GD(H4DOTC)-250, DTC P219A BANK 1 AIR-FUEL RATIO IMBALANCE, Diagnostic Trouble Code (DTC) Detecting Criteria.>
P2227	Barometric Pressure Circuit Range/Performance	<Ref. to GD(H4DOTC)-253, DTC P2227 BAROMETRIC PRESSURE CIRCUIT RANGE/PERFORMANCE, Diagnostic Trouble Code (DTC) Detecting Criteria.>
P2228	Barometric Pressure Circuit Low	<Ref. to GD(H4DOTC)-254, DTC P2228 BAROMETRIC PRESSURE CIRCUIT LOW, Diagnostic Trouble Code (DTC) Detecting Criteria.>
P2229	Barometric Pressure Circuit High	<Ref. to GD(H4DOTC)-255, DTC P2229 BAROMETRIC PRESSURE CIRCUIT HIGH, Diagnostic Trouble Code (DTC) Detecting Criteria.>
P2610	ECM/PCM Internal Engine Off Timer Performance	<Ref. to GD(H4DOTC)-256, DTC P2610 ECM/PCM INTERNAL ENGINE OFF TIMER PERFORMANCE, Diagnostic Trouble Code (DTC) Detecting Criteria.>
U0073	CAN Failure, Bus ‘Off’ Detection	<Ref. to GD(H4DOTC)-265, DTC U0073 CAN FAILURE, BUS ‘OFF’ DETECTION, Diagnostic Trouble Code (DTC) Detecting Criteria.>
U0101	CAN (TCU) Data Not Loaded	<Ref. to GD(H4DOTC)-266, DTC U0101 CAN (TCU) DATA NOT LOADED, Diagnostic Trouble Code (DTC) Detecting Criteria.>
U0122	CAN (VDC) Data Not Loaded	<Ref. to GD(H4DOTC)-267, DTC U0122 CAN (VDC) DATA NOT LOADED, Diagnostic Trouble Code (DTC) Detecting Criteria.>
U0140	CAN (BCU) Data Not Loaded	<Ref. to GD(H4DOTC)-267, DTC U0140 CAN (BCU) DATA NOT LOADED, Diagnostic Trouble Code (DTC) Detecting Criteria.>
U0402	CAN (TCU) Data Abnormal	<Ref. to GD(H4DOTC)-268, DTC U0402 CAN (TCU) DATA ABNORMAL, Diagnostic Trouble Code (DTC) Detecting Criteria.>
U0416	CAN (VDC) Data Abnormal	<Ref. to GD(H4DOTC)-269, DTC U0416 CAN (VDC) DATA ABNORMAL, Diagnostic Trouble Code (DTC) Detecting Criteria.>
U0422	CAN (BCU) Data Abnormal	<Ref. to GD(H4DOTC)-269, DTC U0422 CAN (BCU) DATA ABNORMAL, Diagnostic Trouble Code (DTC) Detecting Criteria.>

2. Diagnostic Trouble Code (DTC) Detecting Criteria

A: DTC P0011 INTAKE CAMSHAFT POSITION - TIMING OVER-ADVANCED OR SYSTEM PERFORMANCE (BANK 1)

1. OUTLINE OF DIAGNOSIS

Detect the AVCS system malfunction.
Judge NG when the amount of AVCS actual timing advance does not approach to the amount of AVCS target timing advance.

2. COMPONENT DESCRIPTION

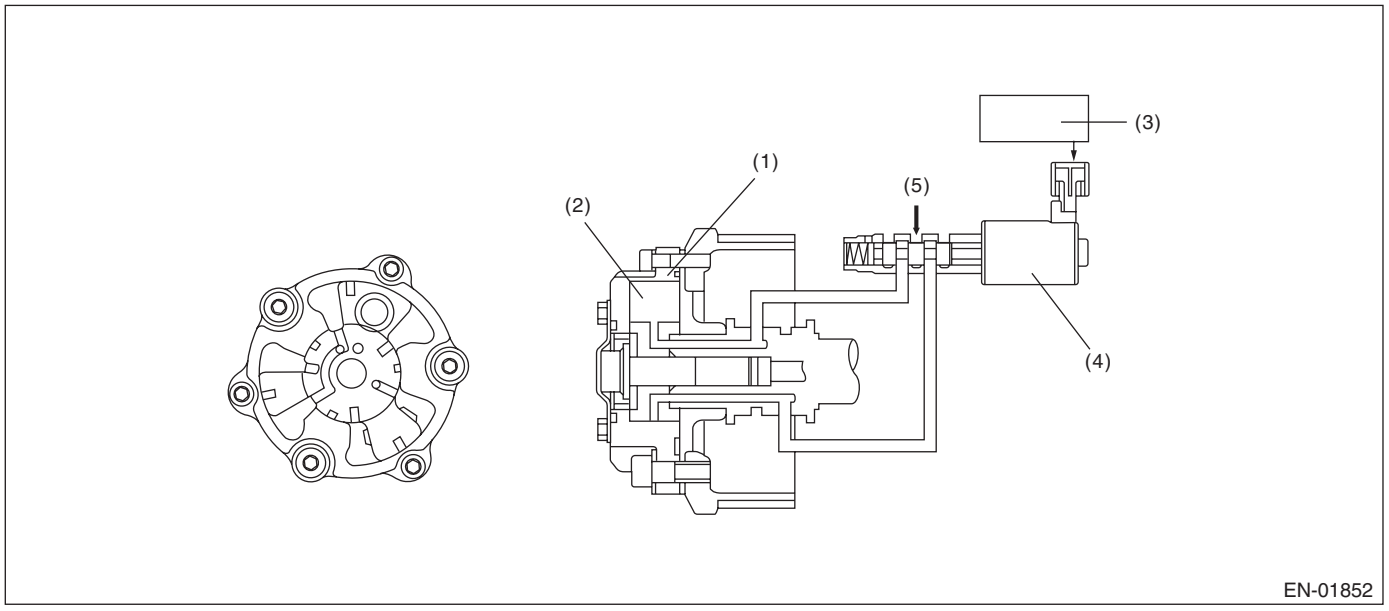

(1) AVCS timing controller
(2) Vane
(3) Engine control module (ECM)
(4) Oil flow control solenoid valve
(5) Oil pressure

3. ENABLE CONDITION

Secondary Parameters	Enable Conditions
Time of establishing all secondary parameter conditions	≥ 3000 ms
Battery voltage	≥ 10.9 V
Engine speed	≥ 1500 rpm
Engine coolant temperature	≥ 20 °C (68 °F)
AVCS control	Operation
Target timing advance change amount (per 64 ms)	< 1.07 °CA

4. GENERAL DRIVING CYCLE

Perform the diagnosis continuously after warming up when the engine speed increases and AVCS operates.

5. DIAGNOSTIC METHOD

1) When the conditions during which the differences of AVCS target timing advance amount and AVCS actual timing advance amount is large continues for certain amount of time.
2) When the differences of target timing advance amount and actual timing advance amount is calculated during AVCS control, and the difference per predetermined time is the specified value or larger.

- **Abnormality Judgment**

Judge as NG when the following conditions are established within the predetermined time.

Judgment Value

Malfunction Criteria	Threshold Value
Σ(Target position – Actual position)	> 4500 °CA (Bank 1) > 4500 °CA (Bank 2)
or	
Σ(Target position – Actual position)	< –7000 °CA (Bank 1) < –7000 °CA (Bank 2)

Time Needed for Diagnosis: 30000 ms
Malfunction Indicator Light Illumination: Illuminates when malfunction occurs in 2 continuous driving cycles.

- **Normality Judgment**

Judge as OK and clear the NG if the following conditions are established within the predetermined time.

Judgment Value

Malfunction Criteria	Threshold Value
Σ(Target position – Actual position)	≤ 4500 °CA (Bank 1) ≤ 4500 °CA (Bank 2) and ≥ –7000 °CA (Bank 1) ≥ –7000 °CA (Bank 2)

Time Needed for Diagnosis: 30000 ms

B: DTC P0014 EXHAUST AVCS SYSTEM 1 (RANGE/PERFORMANCE)

1. OUTLINE OF DIAGNOSIS

Detect the exhaust AVCS system malfunction.
Judge NG when the amount of exhaust AVCS actual timing advance does not approach the amount of exhaust AVCS target timing advance.

2. COMPONENT DESCRIPTION

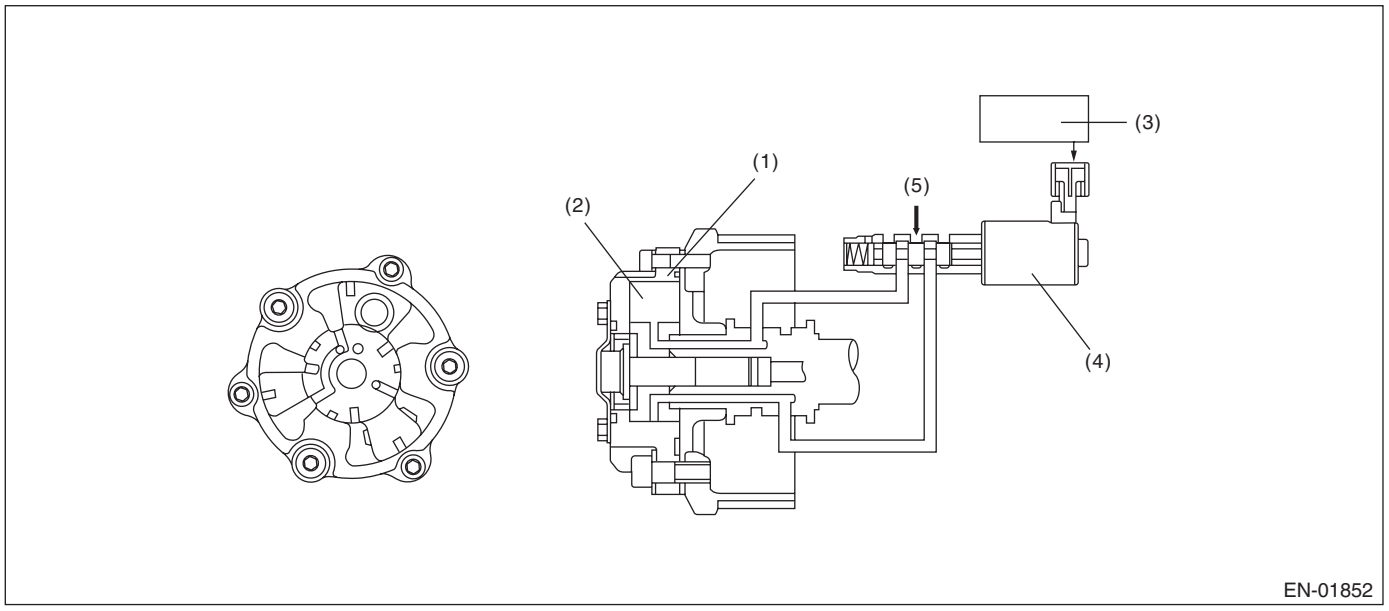

(1) Exhaust AVCS timing controller
(2) Vane
(3) Engine control module (ECM)
(4) Oil flow control solenoid valve
(5) Oil pressure

3. ENABLE CONDITIONS

Secondary Parameters	Enable Conditions
Time of establishing all secondary parameter conditions	≥ 3000 ms
Battery voltage	≥ 10.9 V
Engine speed	≥ 1500 rpm
Engine coolant temperature	≥ 20 °C (68 °F)
Exhaust AVCS control	Operation
Target timing advance change amount (per 64 ms)	< 1.07 °CA

4. GENERAL DRIVING CYCLE

Perform the diagnosis continuously after warming up when the engine speed increases and exhaust AVCS operates.

5. DIAGNOSTIC METHOD

1) When the conditions during which the differences of exhaust AVCS target timing advance amount and exhaust AVCS actual timing advance amount is large continues for certain amount of time.
2) When the differences of target timing advance amount and actual timing advance amount is calculated during exhaust AVCS control, and the difference per predetermined time is the specified value or larger.

- **Abnormality Judgment**

Judge as NG when the following conditions are established within the predetermined time.

Judgment Value

Malfunction Criteria	Threshold Value
Σ(Target position – Actual position)	> 6000 °CA (Bank 1) > 6000 °CA (Bank 2)
or	
Σ(Target position – Actual position)	< –6000 °CA (Bank 1) < –6000 °CA (Bank 2)

Time Needed for Diagnosis:
30000 ms
Malfunction Indicator Light Illumination: Illuminates when malfunction occurs in 2 continuous driving cycles.

- **Normality Judgment**

Judge as OK and clear the NG if the following conditions are established within the predetermined time.

Judgment Value

Malfunction Criteria	Threshold Value
Σ(Target position – Actual position)	≤ 6000 °CA (Bank 1) ≤ 6000 °CA (Bank 2) and ≥ –6000 °CA (Bank 1) ≥ –6000 °CA (Bank 2)

Time Needed for Diagnosis: 30000 ms

C: DTC P0016 CRANKSHAFT POSITION - CAMSHAFT POSITION CORRELATION (BANK1)

1. OUTLINE OF DIAGNOSIS

Detect the AVCS system malfunction.
Judge as NG when standard timing advance amount is far from learning angle.

2. COMPONENT DESCRIPTION

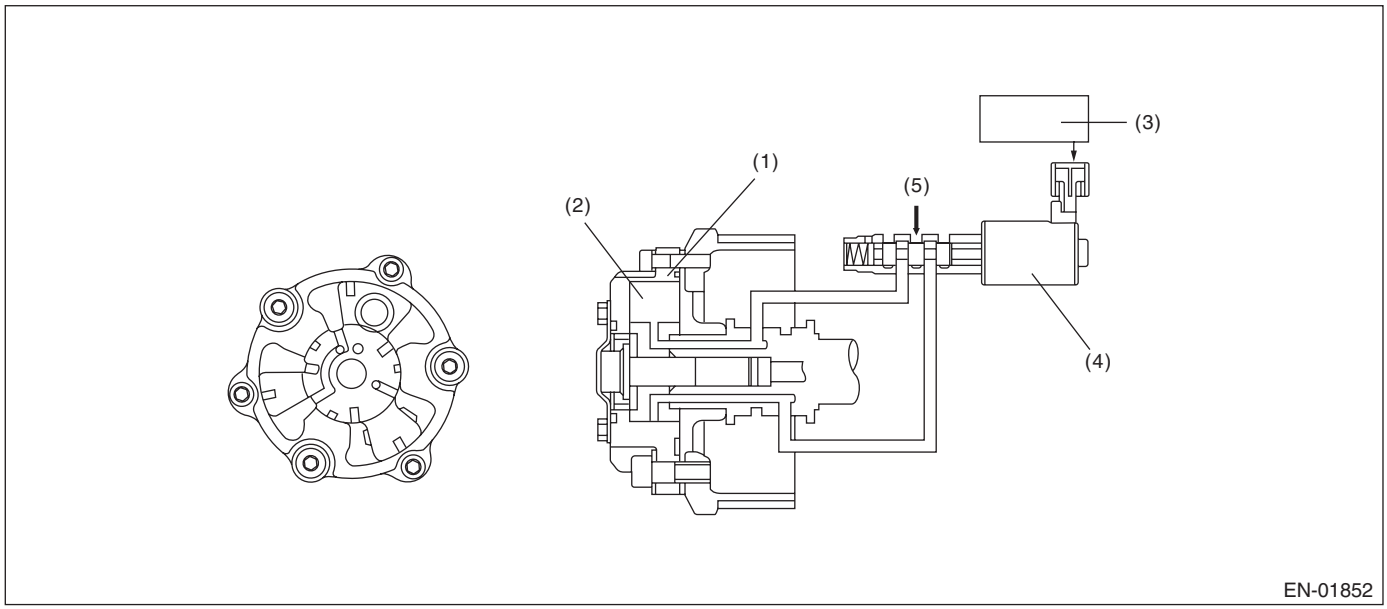

(1) AVCS timing controller
(2) Vane
(3) Engine control module (ECM)
(4) Oil flow control solenoid valve
(5) Hydraulic pressure

3. ENABLE CONDITION

Secondary Parameters	Enable Conditions
Battery voltage	≥ 10.9 V
Engine speed	≥ 600 rpm and < 975 rpm
Engine coolant temperature	≥ 72 °C (161.6 °F)
AVCS control	Not in operation
Target timing advance	0°CA

4. GENERAL DRIVING CYCLE

Perform the diagnosis continuously after starting engine and while AVCS is not operating.

5. DIAGNOSTIC METHOD

Judge as NG when the absolute value of the difference between cam signal input position and learning value is out of specification.

- **Abnormality Judgment**

If the duration of time while the following conditions are met is longer than the time indicated, judge as NG.

Judgment Value

Malfunction Criteria	Threshold Value
|Crankshaft position when camshaft position sensor signal is input – Learning value|	> 9 °CA

Time Needed for Diagnosis: 20000 ms
Malfunction Indicator Light Illumination: Illuminates when malfunction occurs in 2 continuous driving cycles.

NOTE:
Initial standard learning value is the value of crank angle initially input at the production plant. And then it will be updated every time normal judgment has been completed. Learning value will not be updated if NG judgment occurs because timing belt or chain derails suddenly in process or because wrong assembly occurs during servicing.

- **Normality Judgment**

Judge as OK and clear the NG if the continuous time while the following conditions are established is more than the predetermined time.

Judgment Value

Malfunction Criteria	Threshold Value
|Crankshaft position when camshaft position sensor signal is input – Learning value|	≤ 9 °CA

Time Needed for Diagnosis: Less than 1 second

D: DTC P0017 CRANK AND CAM TIMING B SYSTEM FAILURE (BANK 1)

1. OUTLINE OF DIAGNOSIS

Detect the exhaust AVCS system malfunction.
Judge as NG when standard timing advance amount is far from learning angle.

2. COMPONENT DESCRIPTION

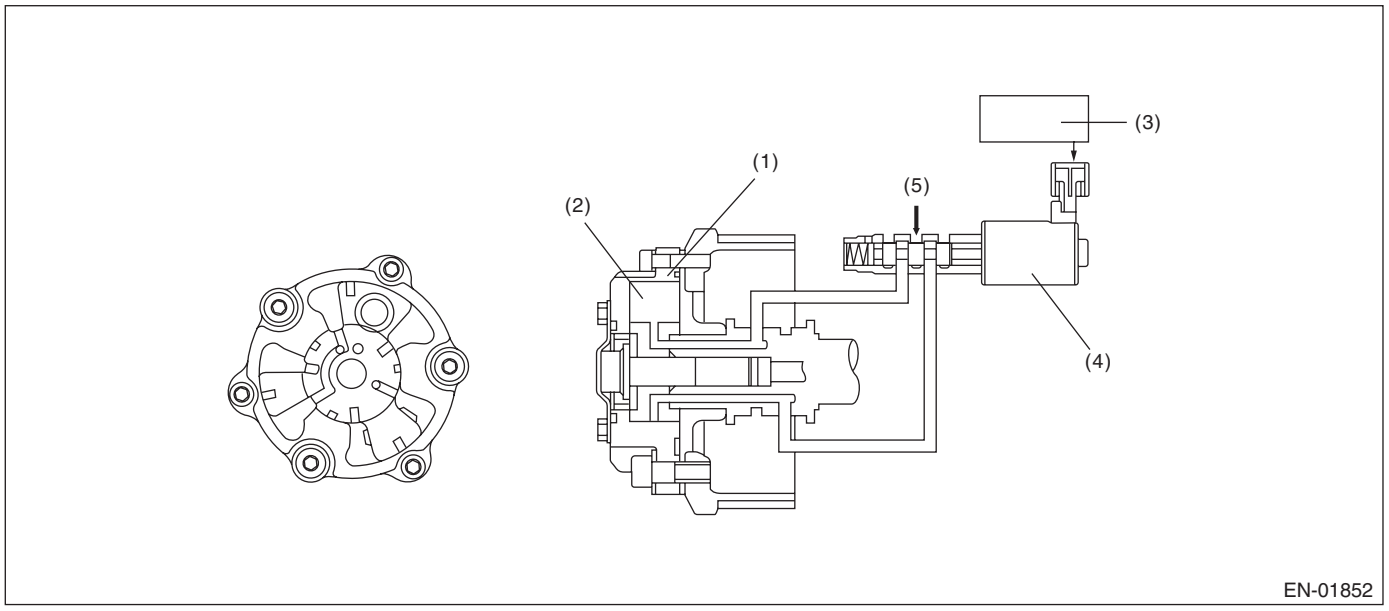

(1) Exhaust AVCS timing controller
(2) Vane
(3) Engine control module (ECM)
(4) Oil flow control solenoid valve
(5) Oil pressure

3. ENABLE CONDITIONS

Secondary Parameters	Enable Conditions
Battery voltage	≥ 10.9 V
Engine speed	≥ 600 rpm and < 975 rpm
Engine coolant temperature	≥ 72 °C (161.6 °F)
Exhaust AVCS control	Not in operation
Target timing advance	0°CA

4. GENERAL DRIVING CYCLE

Perform the diagnosis continuously while the exhaust AVCS is not operating after warming up.

5. DIAGNOSTIC METHOD

Judge as NG when the absolute value of the difference between cam signal input position and learning value is out of specification.

- **Abnormality Judgment**

If the duration of time while the following conditions are met is longer than the time indicated, judge as NG.

Judgment Value

Malfunction Criteria	Threshold Value
|Crankshaft position when camshaft position sensor signal is input – Learning value|	> 9 °CA

Time Needed for Diagnosis: 20000 ms
Malfunction Indicator Light Illumination: Illuminates when malfunction occurs in 2 continuous driving cycles.

NOTE:
Initial standard learning value is the value of crank angle initially input at the production plant. And then it will be updated every time normal judgment has been completed. Learning value will not be updated if NG judgment occurs because timing belt or chain derails suddenly in process or because wrong assembly occurs during servicing.

- **Normality Judgment**

Judge as OK and clear the NG if the continuous time while the following conditions are established is more than the predetermined time.

Judgment Value

Malfunction Criteria	Threshold Value
|Crankshaft position when camshaft position sensor signal is input – Learning value|	≤ 9 °CA

Time Needed for Diagnosis: Less than 1 second

E: DTC P0018 CRANKSHAFT POSITION - CAMSHAFT POSITION CORRELATION (BANK2)

1. OUTLINE OF DIAGNOSIS

NOTE:
For the detection standard, refer to DTC P0016. <Ref. to GD(H4DOTC)-14, DTC P0016 CRANKSHAFT POSITION - CAMSHAFT POSITION CORRELATION (BANK1), Diagnostic Trouble Code (DTC) Detecting Criteria.>

F: DTC P0019 CRANK AND CAM TIMING B SYSTEM FAILURE (BANK 2)

1. OUTLINE OF DIAGNOSIS

NOTE:
For the detection standard, refer to DTC P0017. <Ref. to GD(H4DOTC)-16, DTC P0017 CRANK AND CAM TIMING B SYSTEM FAILURE (BANK 1), Diagnostic Trouble Code (DTC) Detecting Criteria.>

G: DTC P0021 INTAKE CAMSHAFT POSITION - TIMING OVER-ADVANCED OR SYSTEM PERFORMANCE (BANK 2)

1. OUTLINE OF DIAGNOSIS

NOTE:
For the detection standard, refer to DTC P0011. <Ref. to GD(H4DOTC)-10, DTC P0011 INTAKE CAMSHAFT POSITION - TIMING OVER-ADVANCED OR SYSTEM PERFORMANCE (BANK 1), Diagnostic Trouble Code (DTC) Detecting Criteria.>

H: DTC P0024 EXHAUST AVCS SYSTEM 2 (RANGE/PERFORMANCE)

1. OUTLINE OF DIAGNOSIS

NOTE:
For the detection standard, refer to DTC P0014. <Ref. to GD(H4DOTC)-12, DTC P0014 EXHAUST AVCS SYSTEM 1 (RANGE/PERFORMANCE), Diagnostic Trouble Code (DTC) Detecting Criteria.>

I: DTC P0030 HO2S HEATER CONTROL CIRCUIT (BANK 1 SENSOR 1)

1. OUTLINE OF DIAGNOSIS

Detect functional errors of the front oxygen (A/F) sensor heater.
Judge as NG when it is determined that the front oxygen (A/F) sensor impedance is large when looking at engine status such as deceleration fuel cut.

2. COMPONENT DESCRIPTION

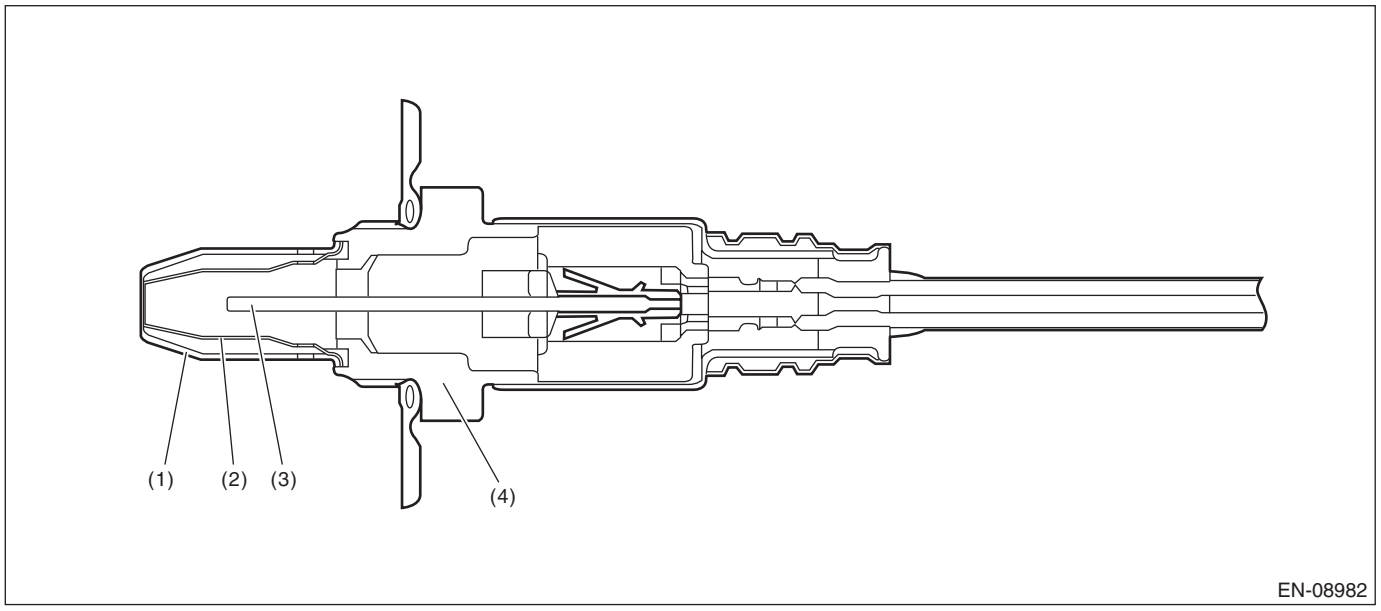

(1) Element cover (outer)
(2) Element cover (inner)
(3) Sensor element
(4) Sensor housing

3. ENABLE CONDITION

Secondary Parameters	Enable Conditions
Condition established time	≥ 42000 ms
Battery voltage	≥ 10.9 V
Heater current	Permitted
A/F sensor heater final control	Main energization status
After fuel cut	≥ 20000 ms

4. GENERAL DRIVING CYCLE

Perform the diagnosis continuously after 42000 ms seconds or more have passed since the engine started.

5. DIAGNOSTIC METHOD

• Abnormality Judgment

If the duration of time while the following conditions are met is longer than the time indicated, judge as NG.

Judgment Value

Malfunction Criteria	Threshold Value
Front oxygen (A/F) sensor impedance	> 50 Ω

Time Needed for Diagnosis: 10000 ms
Malfunction Indicator Light Illumination: Illuminates when malfunction occurs in 2 continuous driving cycles.

• Normality Judgment

Judge as OK and clear the NG if the continuous time while the following conditions are established is more than the predetermined time.

Judgment Value

Malfunction Criteria	Threshold Value
Front oxygen (A/F) sensor impedance	≤ 50 Ω

Time Needed for Diagnosis: 10000 ms

J: DTC P0031 HO2S HEATER CONTROL CIRCUIT LOW (BANK 1 SENSOR 1)

1. OUTLINE OF DIAGNOSIS

Detect front oxygen (A/F) sensor heater open or short circuit.
The front oxygen (A/F) sensor heater performs duty control, and the output terminal voltage at ON is 0 V, and the output terminal voltage at OFF is the battery voltage.
Judge as NG when the terminal voltage remains Low.

2. COMPONENT DESCRIPTION

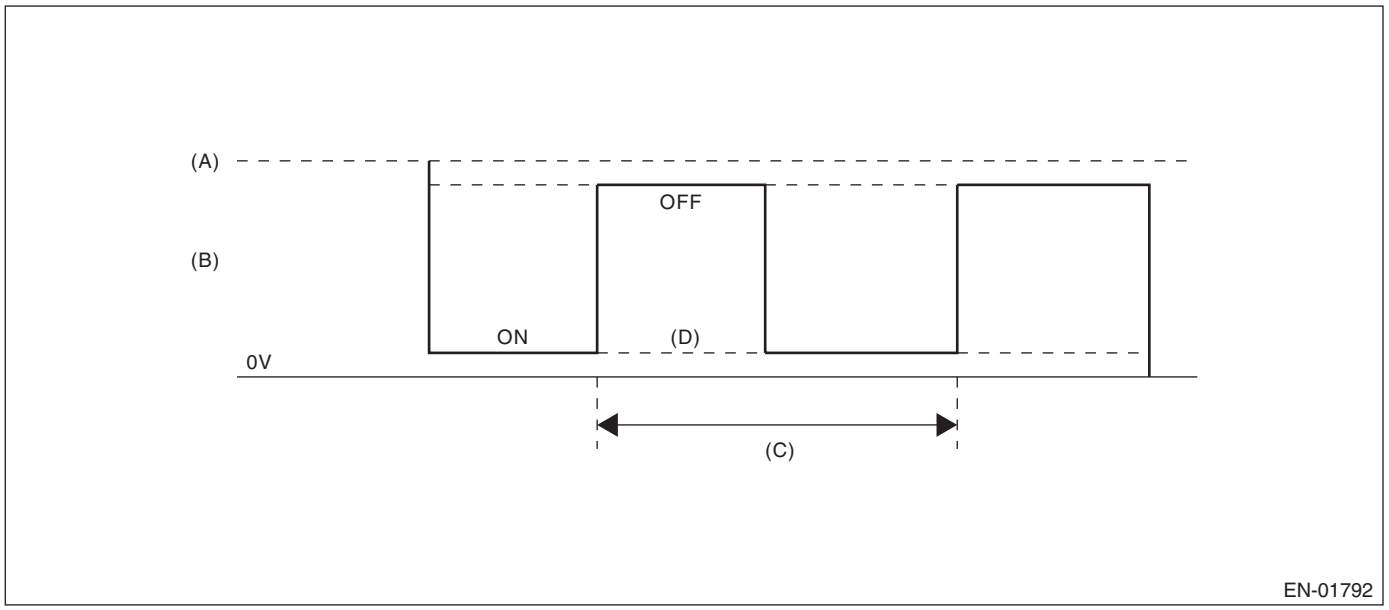

(A) Battery voltage
(B) Front oxygen (A/F) sensor heater output voltage
(C) 128 ms
(D) Low error

3. ENABLE CONDITION

Secondary Parameters	Enable Conditions
Battery voltage	≥ 10.9 V

4. GENERAL DRIVING CYCLE

Always perform the diagnosis continuously.

5. DIAGNOSTIC METHOD

- **Abnormality Judgment**

If the duration of time while the following conditions are met is longer than the time indicated, judge as NG.

Judgment Value

Malfunction Criteria	Threshold Value
Output voltage level Front oxygen (A/F) sensor heater control duty	Low < 87.5 %

Time Needed for Diagnosis: 4 ms × 250 time(s)
Malfunction Indicator Light Illumination: Illuminates as soon as a malfunction occurs.

- **Normality Judgment**

Judge as OK and clear the NG if the continuous time while the following conditions are established is more than the predetermined time.

Judgment Value

Malfunction Criteria	Threshold Value
Output voltage level	High

Time Needed for Diagnosis: Less than 1 second

K: DTC P0032 HO2S HEATER CONTROL CIRCUIT HIGH (BANK 1 SENSOR 1)

1. OUTLINE OF DIAGNOSIS

Detect front oxygen (A/F) sensor heater open or short circuit.
The front oxygen (A/F) sensor heater performs duty control, and the output terminal voltage at ON is 0 V, and the output terminal voltage at OFF is the battery voltage.
Judge as NG when the terminal voltage remains High.

2. COMPONENT DESCRIPTION

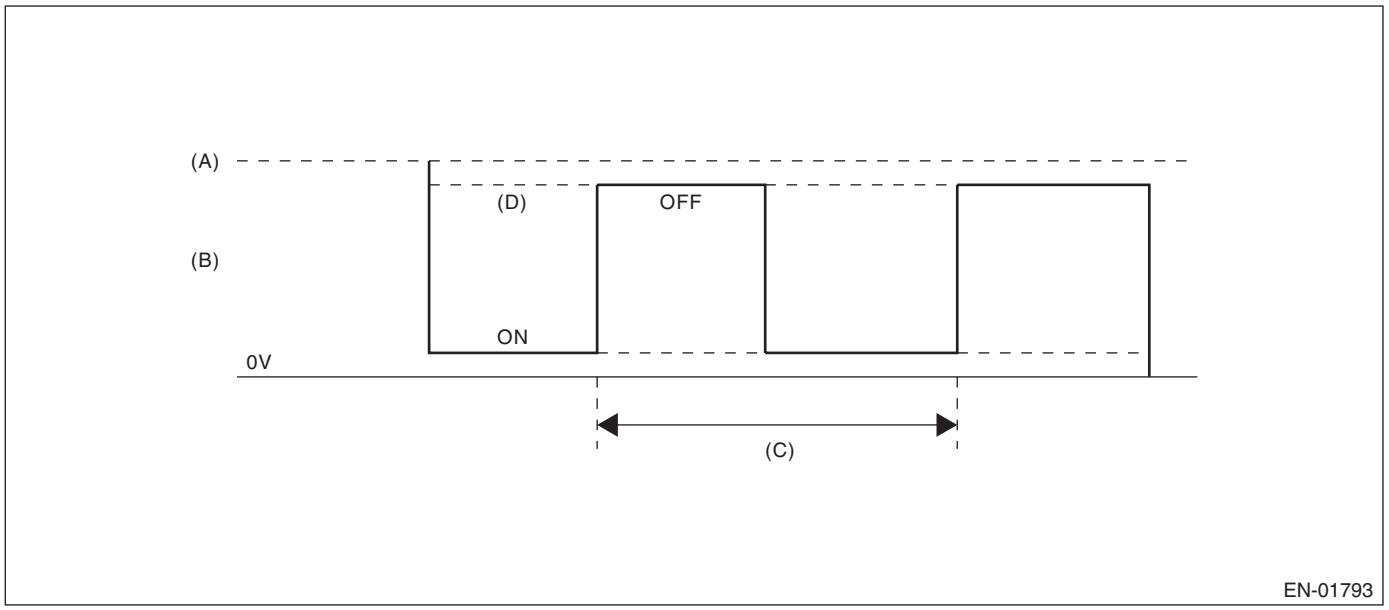

(A) Battery voltage
(B) Front oxygen (A/F) sensor heater output voltage
(C) 128 ms
(D) High error

3. ENABLE CONDITION

Secondary Parameters	Enable Conditions
Battery voltage	≥ 10.9 V

4. GENERAL DRIVING CYCLE

Always perform the diagnosis continuously.

5. DIAGNOSTIC METHOD

- **Abnormality Judgment**

If the duration of time while the following conditions are met is longer than the time indicated, judge as NG.

Judgment Value

Malfunction Criteria	Threshold Value
Output voltage level Front oxygen (A/F) sensor heater control duty	High ≥ 12.5 %

Time Needed for Diagnosis: 4 ms × 500 time(s)
Malfunction Indicator Light Illumination: Illuminates as soon as a malfunction occurs.

- **Normality Judgment**

Judge as OK and clear the NG if the continuous time while the following conditions are established is more than the predetermined time.

Judgment Value

Malfunction Criteria	Threshold Value
Output voltage level	Low

Time Needed for Diagnosis: Less than 1 second

L: DTC P0037 HO2S HEATER CONTROL CIRCUIT LOW (BANK 1 SENSOR 2)

1. OUTLINE OF DIAGNOSIS

Detect the rear oxygen sensor heater open or short circuit.
The rear oxygen sensor heater performs duty control, and the output terminal voltage at ON is 0 V, and the output terminal voltage at OFF is the battery voltage.
Judge as NG when the terminal voltage remains Low.

2. COMPONENT DESCRIPTION

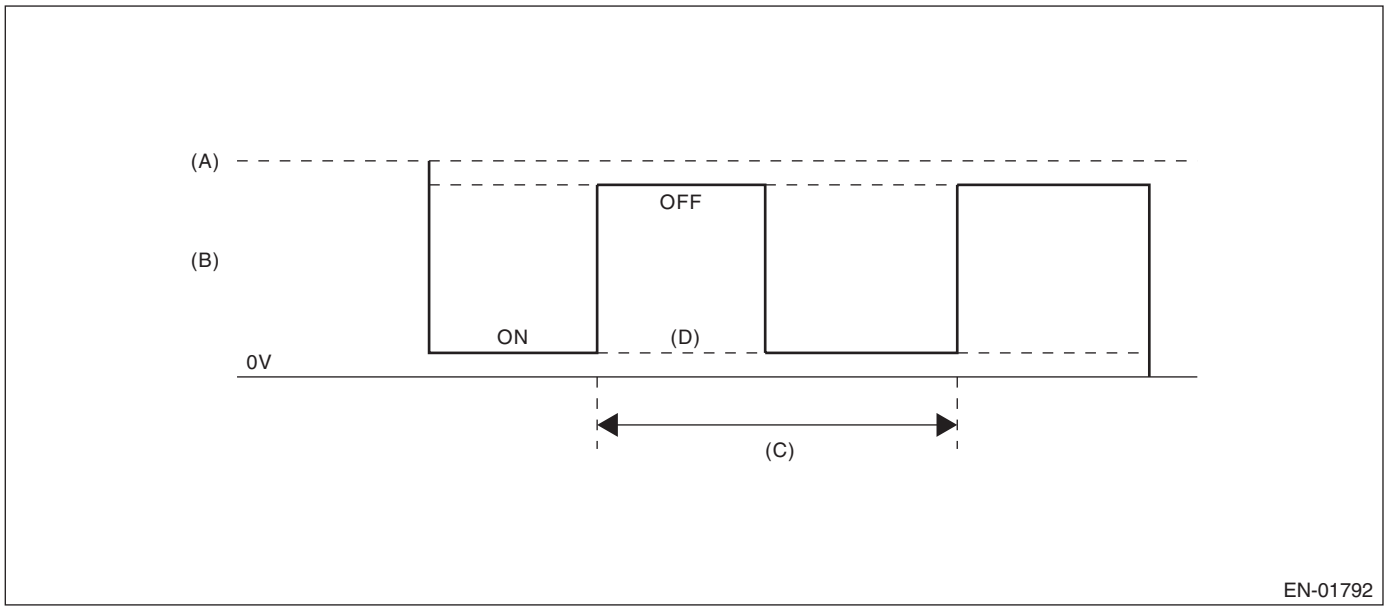

(A) Battery voltage
(B) Output voltage of the rear oxygen sensor heater
(C) 256 ms (cycle)
(D) Low error

3. ENABLE CONDITION

Secondary Parameters	Enable Conditions
Battery voltage	≥ 10.9 V
Elapsed time after starting the engine	≥ 1 second
Engine speed	< 8000 rpm

4. GENERAL DRIVING CYCLE

After starting the engine, perform the diagnosis continuously when engine is low speed.

5. DIAGNOSTIC METHOD

- **Abnormality Judgment**

If the duration of time while the following conditions are met is longer than the time indicated, judge as NG.

Judgment Value

Malfunction Criteria	Threshold Value
Output voltage level	Low
Rear oxygen sensor heater control duty	< 75 %

Time Needed for Diagnosis: 8 ms × 1250 time(s)
Malfunction Indicator Light Illumination: Illuminates when malfunction occurs in 2 continuous driving cycles.

- **Normality Judgment**

Judge as OK and clear the NG if the continuous time while the following conditions are established is more than the predetermined time.

Judgment Value

Malfunction Criteria	Threshold Value
Output voltage level	High

Time Needed for Diagnosis: Less than 1 second

M: DTC P0038 HO2S HEATER CONTROL CIRCUIT HIGH (BANK 1 SENSOR 2)

1. OUTLINE OF DIAGNOSIS

Detect the rear oxygen sensor heater open or short circuit.
The rear oxygen sensor heater performs duty control, and the output terminal voltage at ON is 0 V, and the output terminal voltage at OFF is the battery voltage.
Judge as NG when the terminal voltage remains High.

2. COMPONENT DESCRIPTION

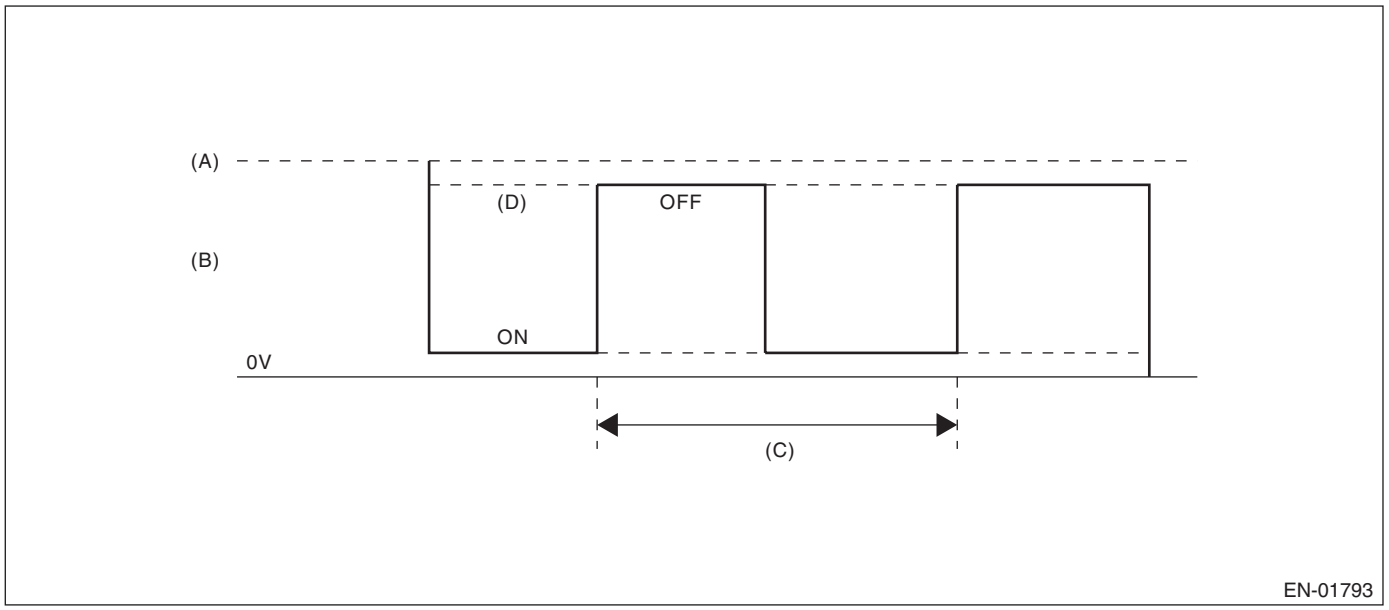

(A) Battery voltage
(B) Output voltage of the rear oxygen sensor heater
(C) 256 ms (cycle)
(D) High error

3. ENABLE CONDITION

Secondary Parameters	Enable Conditions
Battery voltage	≥ 10.9 V
Elapsed time after starting the engine	≥ 1 second
Engine speed	< 8000 rpm

4. GENERAL DRIVING CYCLE

After starting the engine, perform the diagnosis continuously when engine is low speed.

5. DIAGNOSTIC METHOD

- **Abnormality Judgment**

If the duration of time while the following conditions are met is longer than the time indicated, judge as NG.

Judgment Value

Malfunction Criteria	Threshold Value
Output voltage level	High
Rear oxygen sensor heater control duty	≥ 25 %

Time Needed for Diagnosis: 8 ms × 1250 time(s)
Malfunction Indicator Light Illumination: Illuminates when malfunction occurs in 2 continuous driving cycles.

- **Normality Judgment**

Judge as OK and clear the NG if the continuous time while the following conditions are established is more than the predetermined time.

Judgment Value

Malfunction Criteria	Threshold Value
Output voltage level	Low

Time Needed for Diagnosis: Less than 1 second

N: DTC P0068 MAP/MAF - THROTTLE POSITION CORRELATION

1. OUTLINE OF DIAGNOSIS

Detect problems in the intake manifold pressure sensor output properties.
Judge as NG when the intake air pressure AD value is Low whereas it seemed to be High from the viewpoint of engine condition, or when it is High whereas it seemed to be Low from the engine condition.

2. COMPONENT DESCRIPTION

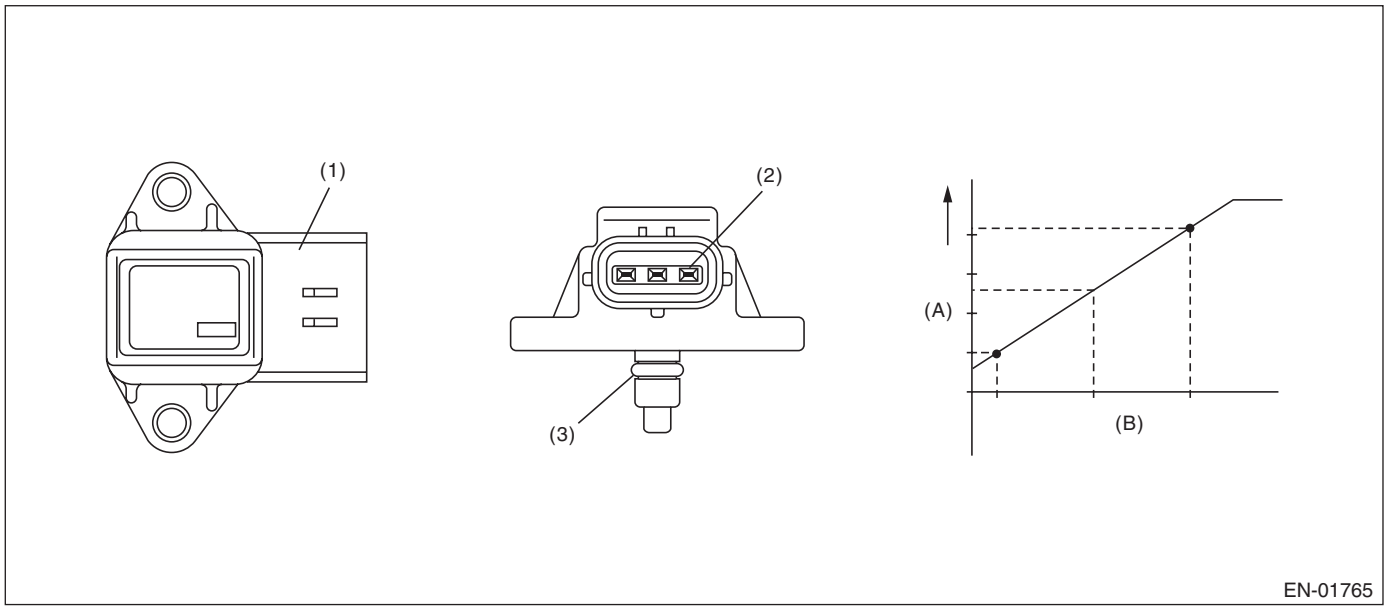

(A) Output voltage
(B) Absolute pressure
(1) Connector
(2) Terminals
(3) O-ring

3. ENABLE CONDITION

Secondary Parameters	Enable Conditions
Engine coolant temperature	≥ 72 °C (161.6 °F)

4. GENERAL DRIVING CYCLE

Perform the diagnosis continuously after idling.

5. DIAGNOSTIC METHOD

• Abnormality Judgment

Judge as NG when Low side or High side becomes NG.
If the duration of time while the following conditions are met is longer than the time indicated, judge as NG.

Judgment Value

Malfunction Criteria	Threshold Value
Low	
Engine speed	< 3000 rpm
Throttle position	≥ 16 °
Output voltage	< 1 V
Engine load	> 0.96 g/rev (0.03 oz/rev)
High	
Engine speed	600 rpm — 900 rpm
Throttle position	< 5.13 °
Output voltage	≥ 2.36 V
Engine load	< 0.48 g/rev (0.02 oz/rev)

Time Needed for Diagnosis:
Low side: 3000 ms
High side: 3000 ms
Malfunction Indicator Light Illumination: Illuminates when malfunction occurs in 2 continuous driving cycles.

• Normality Judgment

Judge as OK and clear the NG when both Low side and High side become OK.
If the duration of time while the following conditions are met is longer than the time indicated, judge as OK.

Judgment Value

Malfunction Criteria	Threshold Value
Low	
Engine speed	< 3000 rpm
Throttle position	≥ 16 °
Output voltage	≥ 1 V
Engine load	> 0.96 g/rev (0.03 oz/rev)
High	
Engine speed	600 rpm — 900 rpm
Throttle position	< 5.13 °
Output voltage	< 2.36 V
Engine load	< 0.48 g/rev (0.02 oz/rev)

Time Needed for Diagnosis:
Low side: Less than 1 second
High side: Less than 1 second

O: DTC P0101 MASS OR VOLUME AIR FLOW CIRCUIT RANGE/PERFORMANCE

1. OUTLINE OF DIAGNOSIS

Detect the malfunction of air flow sensor output properties.
Judge as a low side NG when the air flow voltage indicates a small value regardless of running in a state where the air flow voltage increases. Judge as a high side NG when the air flow voltage indicates a large value regardless of running in a state where the air flow voltage decreases. Judge air flow sensor property NG when the Low side or High side becomes NG.

2. COMPONENT DESCRIPTION

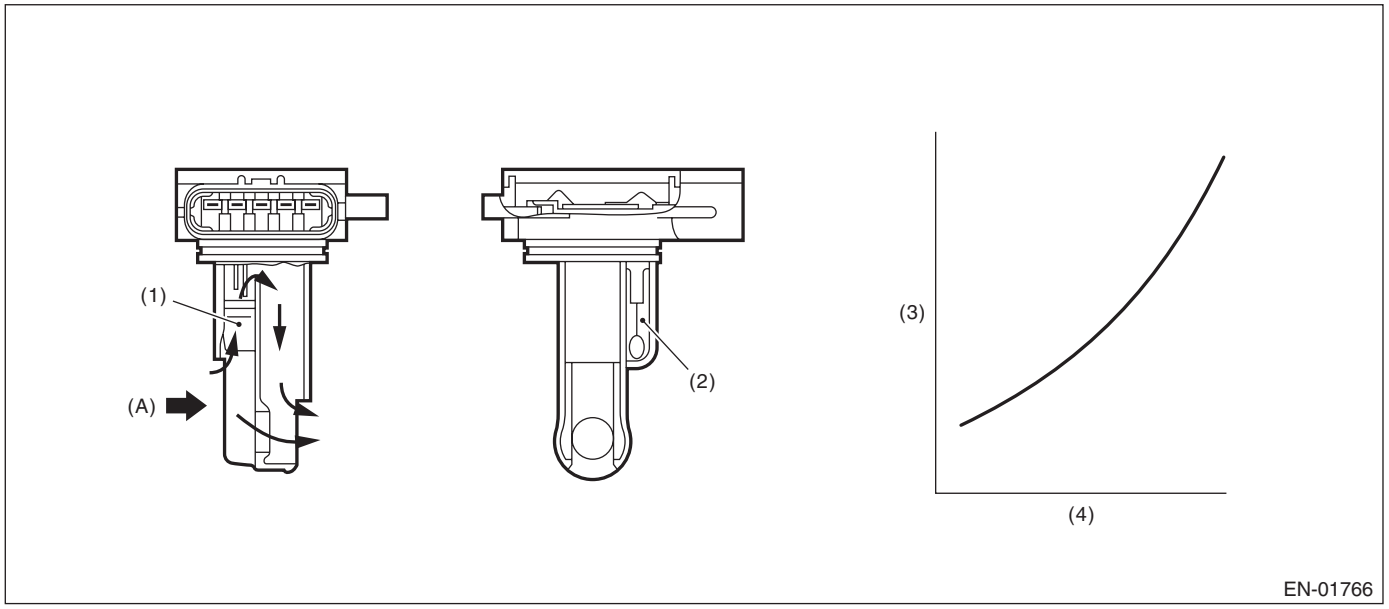

(A) Air

(1) Air flow sensor
(2) Intake air temperature sensor
(3) Voltage (V)
(4) Amount of intake air (kg (lb)/s)

3. ENABLE CONDITION

Secondary Parameters	Enable Conditions
Engine coolant temperature	≥ 72 °C (161.6 °F)

4. GENERAL DRIVING CYCLE

Perform the diagnosis continuously after idling.

5. DIAGNOSTIC METHOD

• Abnormality Judgment

Judge as NG when Low side or High side becomes NG.
If the duration of time while the following conditions are met is longer than the time indicated, judge as NG.

Judgment Value

Malfunction Criteria	Threshold Value
Low	
Output voltage	< 1.5 V
Engine speed	≥ 2300 rpm
Throttle opening angle	≥ 16 °
Intake manifold pressure	≥ 66.7 kPa (500 mmHg, 19.7 inHg)
High (1)	
Output voltage	≥ 1.95 V
Engine speed	600 rpm — 900 rpm
Throttle opening angle	< 5.13 °
Intake manifold pressure	≥ 50 kPa (375 mmHg, 14.8 inHg)
High (2)	
Output voltage	≥ 1.65 V
Engine speed	600 rpm — 900 rpm
Throttle opening angle	< 5.13 °
Intake manifold pressure	≥ 50 kPa (375 mmHg, 14.8 inHg)
Fuel system diagnosis	Rich side malfunction

Time Needed for Diagnosis:
Low: 3000 ms
High: 3000 ms
Malfunction Indicator Light Illumination: Illuminates when malfunction occurs in 2 continuous driving cycles.

• Normality Judgment

Judge as OK and clear the NG when both Low side and High side become OK.
Judge as OK and clear the NG if the continuous time while the following conditions are established is more than the predetermined time.

Judgment Value

Malfunction Criteria	Threshold Value
Low	
Output voltage	≥ 1.5 V
Engine speed	≥ 2300 rpm
Throttle opening angle	≥ 16 °
Intake manifold pressure	≥ 66.7 kPa (500 mmHg, 19.7 inHg)
High	
Output voltage	< 1.95 V
Engine speed	600 rpm — 900 rpm
Throttle opening angle	< 5.13 °
Intake manifold pressure	< 50 kPa (375 mmHg, 14.8 inHg)
Fuel system diagnosis	Rich side normal

Time Needed for Diagnosis:
Low: Less than 1 second
High: Less than 1 second

P: DTC P0102 MASS OR VOLUME AIR FLOW CIRCUIT LOW INPUT

1. OUTLINE OF DIAGNOSIS

Detect open or short circuits of the air flow sensor.
Judge as NG if out of specification.

2. COMPONENT DESCRIPTION

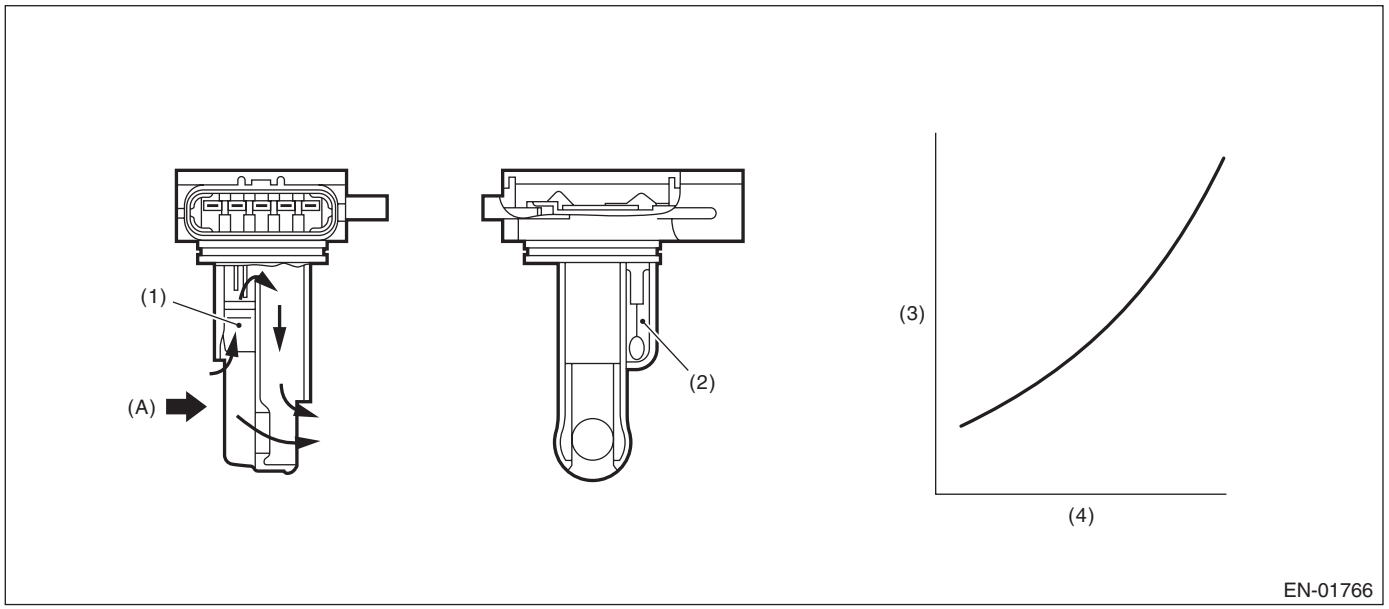

(A) Air

(1) Air flow sensor
(2) Intake air temperature sensor
(3) Voltage (V)
(4) Amount of intake air (kg (lb)/s)

3. ENABLE CONDITION

Secondary Parameters	Enable Conditions
None	

4. GENERAL DRIVING CYCLE

Always perform the diagnosis continuously.

5. DIAGNOSTIC METHOD

- **Abnormality Judgment**

If the duration of time while the following conditions are met is longer than the time indicated, judge as NG.

Judgment Value

Malfunction Criteria	Threshold Value
Output voltage	≤ 0.22 V

Time Needed for Diagnosis: 500 ms
Malfunction Indicator Light Illumination: Illuminates as soon as a malfunction occurs.

- **Normality Judgment**

Judge as OK and clear the NG if the continuous time while the following conditions are established is more than the predetermined time.

Judgment Value

Malfunction Criteria	Threshold Value
Output voltage	> 0.22 V

Time Needed for Diagnosis: Less than 1 second

Q: DTC P0103 MASS OR VOLUME AIR FLOW CIRCUIT HIGH INPUT

1. OUTLINE OF DIAGNOSIS

Detect open or short circuits of the air flow sensor.
Judge as NG if out of specification.

2. COMPONENT DESCRIPTION

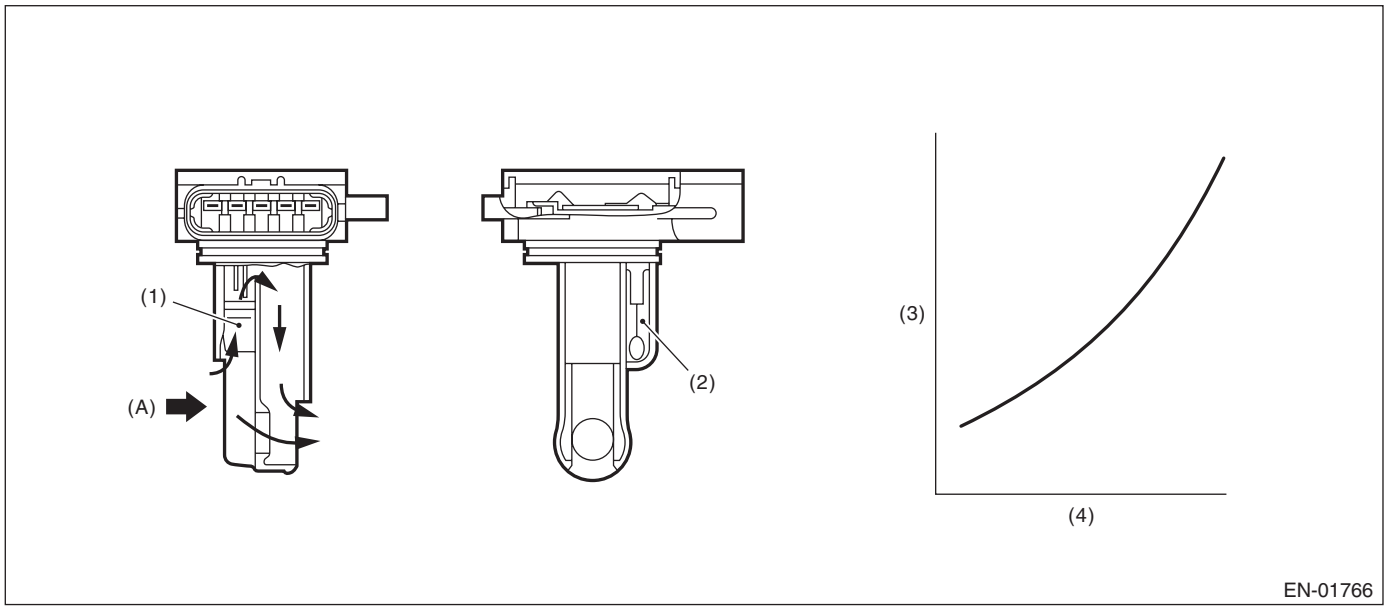

(A) Air

(1) Air flow sensor
(2) Intake air temperature sensor
(3) Voltage (V)
(4) Amount of intake air (kg (lb)/s)

3. ENABLE CONDITION

Secondary Parameters	Enable Conditions
None	

4. GENERAL DRIVING CYCLE

Always perform the diagnosis continuously.

5. DIAGNOSTIC METHOD

- **Abnormality Judgment**

If the duration of time while the following conditions are met is longer than the time indicated, judge as NG.

Judgment Value

Malfunction Criteria	Threshold Value
Output voltage	≥ 4.952 V

Time Needed for Diagnosis: 500 ms
Malfunction Indicator Light Illumination: Illuminates as soon as a malfunction occurs.

- **Normality Judgment**

Judge as OK and clear the NG if the continuous time while the following conditions are established is more than the predetermined time.

Judgment Value

Malfunction Criteria	Threshold Value
Output voltage	< 4.952 V

Time Needed for Diagnosis: Less than 1 second

R: DTC P0107 MANIFOLD ABSOLUTE PRESSURE/BAROMETRIC PRESSURE CIRCUIT LOW INPUT

1. OUTLINE OF DIAGNOSIS

Detect the open or short circuit of intake manifold pressure sensor.
Judge as NG if out of specification.

2. COMPONENT DESCRIPTION

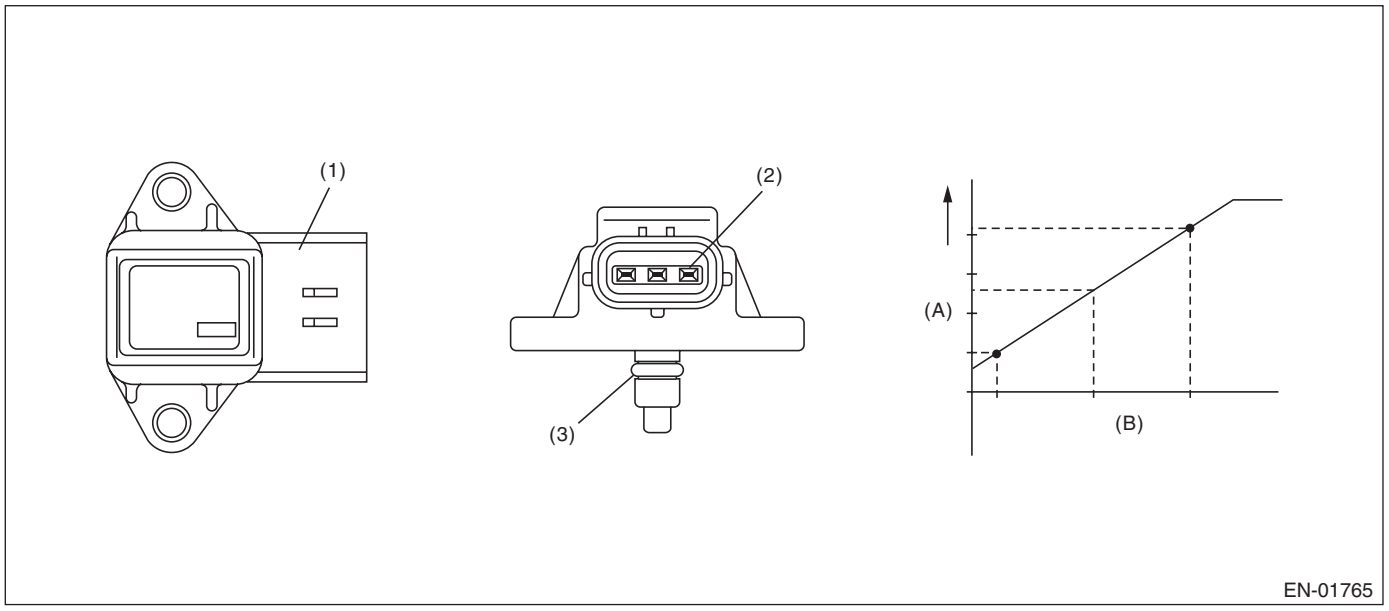

(A) Output voltage
(B) Absolute pressure
(1) Connector
(2) Terminals
(3) O-ring

3. ENABLE CONDITION

Secondary Parameters	Enable Conditions
None	

4. GENERAL DRIVING CYCLE

Always perform the diagnosis continuously.

5. DIAGNOSTIC METHOD

- **Abnormality Judgment**

If the duration of time while the following conditions are met is longer than the time indicated, judge as NG.

Judgment Value

Malfunction Criteria	Threshold Value
Output voltage	≤ 0.822 V

Time Needed for Diagnosis: 500 ms
Malfunction Indicator Light Illumination: Illuminates as soon as a malfunction occurs.

- **Normality Judgment**

Judge as OK and clear the NG if the continuous time while the following conditions are established is more than the predetermined time.

Judgment Value

Malfunction Criteria	Threshold Value
Output voltage	> 0.822 V

Time Needed for Diagnosis: Less than 1 second

S: DTC P0108 MANIFOLD ABSOLUTE PRESSURE/BAROMETRIC PRESSURE CIRCUIT HIGH INPUT

1. OUTLINE OF DIAGNOSIS

Detect the open or short circuit of intake manifold pressure sensor.
Judge as NG if out of specification.

2. COMPONENT DESCRIPTION

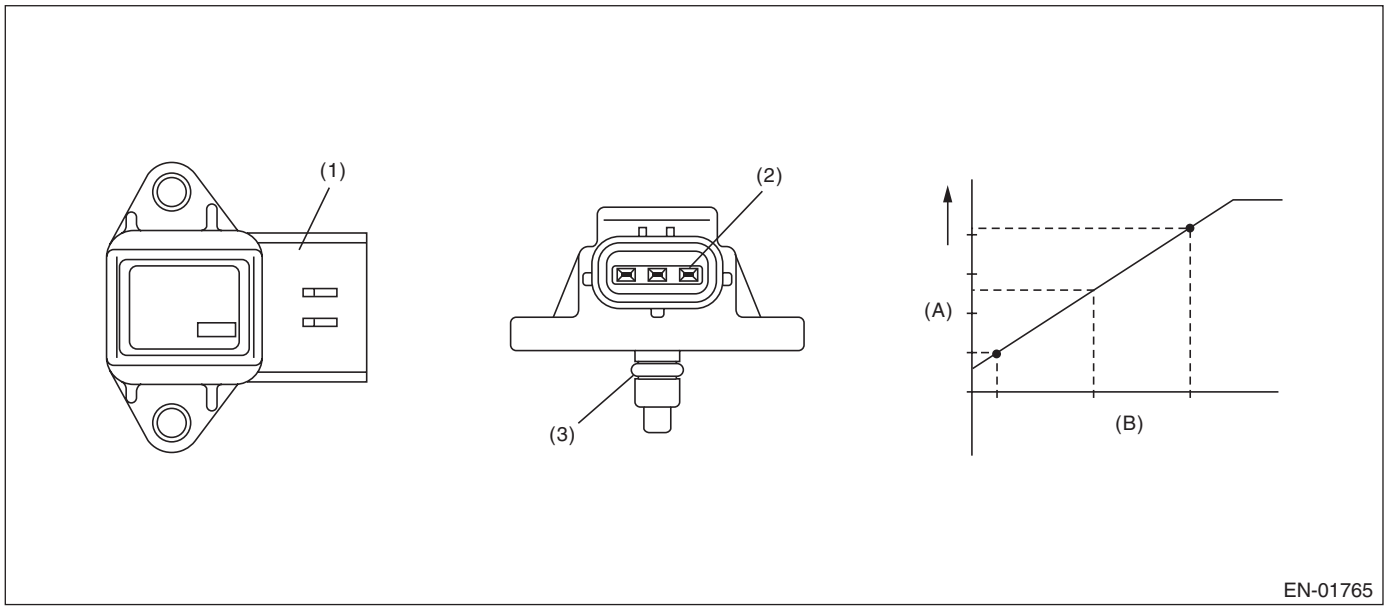

(A) Output voltage
(B) Absolute pressure
(1) Connector
(2) Terminals
(3) O-ring

3. ENABLE CONDITION

Secondary Parameters	Enable Conditions
None	

4. GENERAL DRIVING CYCLE

Always perform the diagnosis continuously.

5. DIAGNOSTIC METHOD

- **Abnormality Judgment**

If the duration of time while the following conditions are met is longer than the time indicated, judge as NG.

Judgment Value

Malfunction Criteria	Threshold Value
Output voltage	≥ 4.474 V

Time Needed for Diagnosis: 500 ms
Malfunction Indicator Light Illumination: Illuminates as soon as a malfunction occurs.

- **Normality Judgment**

Judge as OK and clear the NG if the continuous time while the following conditions are established is more than the predetermined time.

Judgment Value

Malfunction Criteria	Threshold Value
Output voltage	< 4.474 V

Time Needed for Diagnosis: Less than 1 second

T: DTC P0111 INTAKE AIR TEMPERATURE SENSOR 1 CIRCUIT RANGE/PERFORMANCE

1. OUTLINE OF DIAGNOSIS

Detect the malfunction of intake air temperature sensor output property.
Judge as NG when the intake air temperature is not varied whereas it seemed to be varied from the viewpoint of engine condition.

2. COMPONENT DESCRIPTION

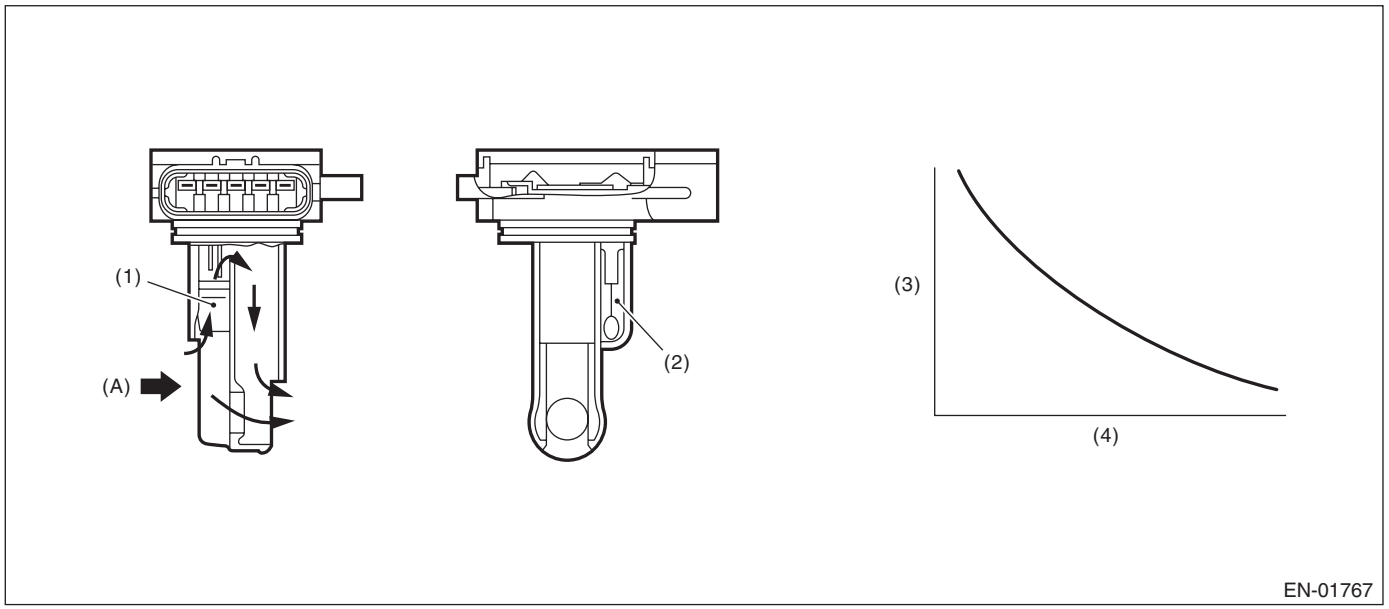

(A) Air

(1) Air flow sensor
(2) Intake air temperature sensor
(3) Resistance value (Ω)
(4) Intake air temperature °C (°F)

3. ENABLE CONDITION

Secondary Parameters	Enable Conditions
Engine coolant temperature at engine starting	< 35 °C (95 °F)
Battery voltage	≥ 10.9 V
Continuous time when the vehicle speed is less than 140 km/h (87 MPH)	≥ 610 s
Engine coolant temperature	≥ 72 °C (161.6 °F)
Intake air amount sum value	≥ Value of Map 1
Number of experiences under conditions below	≥ 3 time(s)
• Continuous time when vehicle speed is less than 4 km/h (2.5 MPH)	≥ Value from Map 2
• Continuous time when vehicle speed is 40 km/h (24.9 MPH) or more	≥ 15 s
and	
Establishing time of 1, 2	≥ 15 s
1. Intake air amount	≥ 15 g/s (0.53 oz/s)
2. Vehicle speed	≥ 4 km/h (2.5 MPH)

Map 1

Engine coolant temperature °C (°F)	–20 (–4)	–10 (14)	0 (32)	10 (50)	20 (68)
Intake air amount sum value (g (oz))	76000 (2680.52)	8880 (313.2)	8153 (287.56)	7427 (261.95)	6009 (211.94)

Map 2

Engine coolant temperature °C (°F)	–20 (–4)	–10 (14)	5 (41)	20 (68)
Continuous time (s) when vehicle speed is less than 4 km/h (2.5 MPH)	250	40	32	24

4. GENERAL DRIVING CYCLE

Perform the diagnosis when the vehicle speed condition is met after warming up from a cold condition.

5. DIAGNOSTIC METHOD

- **Abnormality Judgment**

Judge as NG when the following conditions are established.

Judgment Value

Malfunction Criteria	Threshold Value
Output voltage difference between Max. and Min.	< 0.02 V(Equivalent to approximately 0.5°C (0.9°F) near 25°C)

Time Needed for Diagnosis: Less than 1 second
Malfunction Indicator Light Illumination: Illuminates when malfunction occurs in 2 continuous driving cycles.

- **Normality Judgment**

Judge as OK and clear the NG if the following conditions are established.

Judgment Value

Malfunction Criteria	Threshold Value
Output voltage difference between Max. and Min.	≥ 0.02 V

Time Needed for Diagnosis: Less than 1 second

U: DTC P0112 INTAKE AIR TEMPERATURE SENSOR 1 CIRCUIT LOW

1. OUTLINE OF DIAGNOSIS

Detect open or short circuit of the intake air temperature sensor.
Judge as NG if out of specification.

2. COMPONENT DESCRIPTION

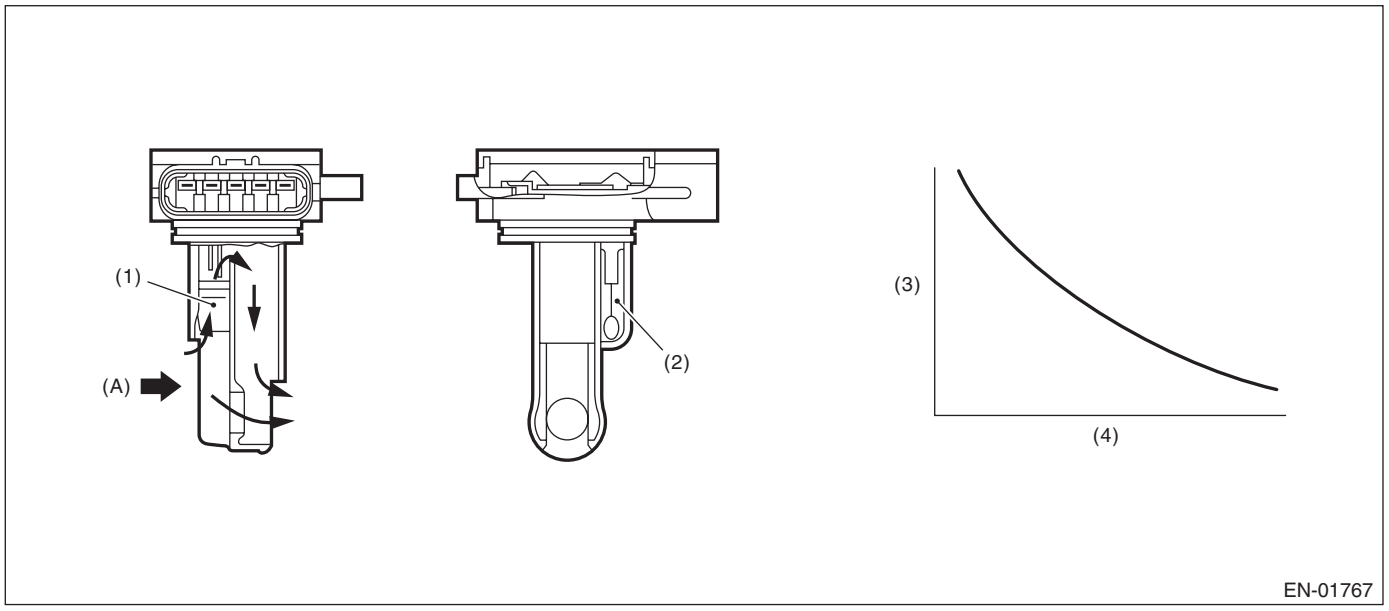

(A) Air

(1) Air flow sensor
(2) Intake air temperature sensor
(3) Resistance value (Ω)
(4) Intake air temperature °C (°F)

3. ENABLE CONDITION

Secondary Parameters	Enable Conditions
None	

4. GENERAL DRIVING CYCLE

Always perform the diagnosis continuously.

5. DIAGNOSTIC METHOD

- **Abnormality Judgment**

If the duration of time while the following conditions are met is longer than the time indicated, judge as NG.

Judgment Value

Malfunction Criteria	Threshold Value
Output voltage	< 0.395 V

Time Needed for Diagnosis: 500 ms
Malfunction Indicator Light Illumination: Illuminates as soon as a malfunction occurs.

- **Normality Judgment**

Judge as OK and clear the NG if the continuous time while the following conditions are established is more than the predetermined time.

Judgment Value

Malfunction Criteria	Threshold Value
Output voltage	≥ 0.395 V

Time Needed for Diagnosis: Less than 1 second

V: DTC P0113 INTAKE AIR TEMPERATURE SENSOR 1 CIRCUIT HIGH

1. OUTLINE OF DIAGNOSIS

Detect open or short circuit of the intake air temperature sensor.
Judge as NG if out of specification.

2. COMPONENT DESCRIPTION

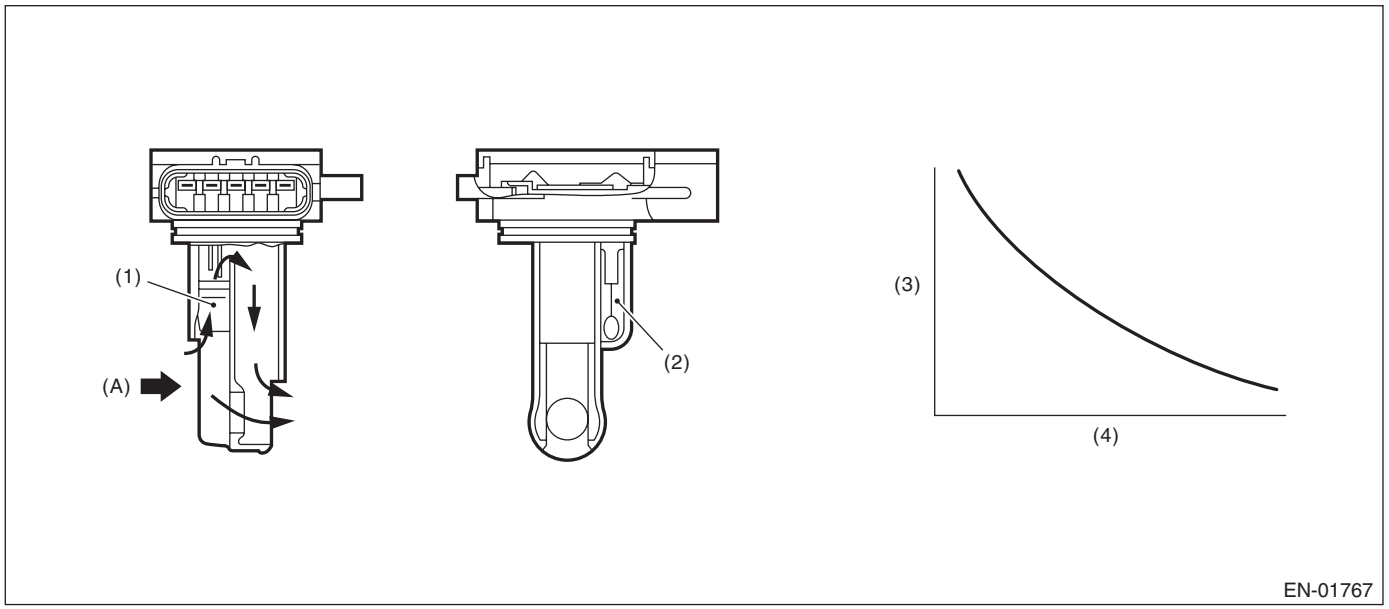

(A) Air

(1) Air flow sensor
(2) Intake air temperature sensor
(3) Resistance value (Ω)
(4) Intake air temperature °C (°F)

3. ENABLE CONDITION

Secondary Parameters	Enable Conditions
None	

4. GENERAL DRIVING CYCLE

Always perform the diagnosis continuously.

5. DIAGNOSTIC METHOD

- **Abnormality Judgment**

If the duration of time while the following conditions are met is longer than the time indicated, judge as NG.

Judgment Value

Malfunction Criteria	Threshold Value
Output voltage	≥ 4.712 V

Time Needed for Diagnosis: 500 ms
Malfunction Indicator Light Illumination: Illuminates as soon as a malfunction occurs.

- **Normality Judgment**

Judge as OK and clear the NG if the continuous time while the following conditions are established is more than the predetermined time.

Judgment Value

Malfunction Criteria	Threshold Value
Output voltage	< 4.712 V

Time Needed for Diagnosis: Less than 1 second

W: DTC P0117 ENGINE COOLANT TEMPERATURE CIRCUIT LOW

1. OUTLINE OF DIAGNOSIS

Detect the open or short circuit of the engine coolant temperature sensor.
Judge as NG if out of specification.

2. COMPONENT DESCRIPTION

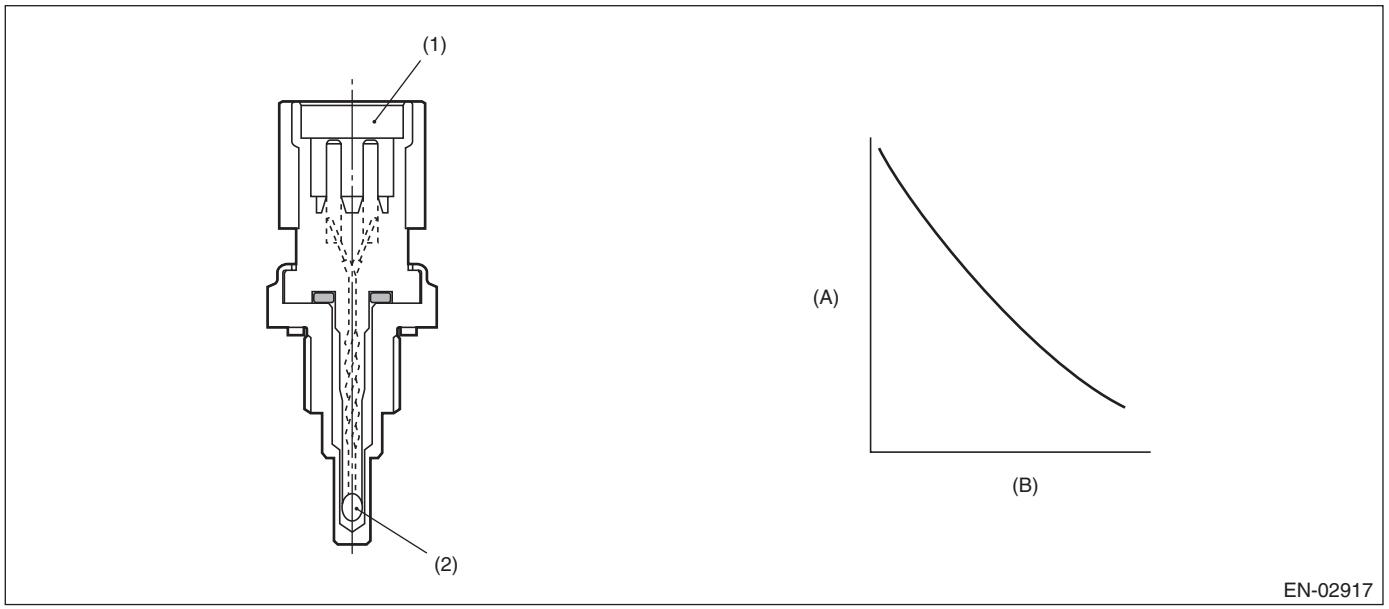

(A) Resistance value (kΩ)
(B) Temperature °C (°F)
(1) Connector
(2) Thermistor element

3. ENABLE CONDITION

Secondary Parameters	Enable Conditions
None	

4. GENERAL DRIVING CYCLE

Always perform the diagnosis continuously.

5. DIAGNOSTIC METHOD

- **Abnormality Judgment**

If the duration of time while the following conditions are met is longer than the time indicated, judge as NG.

Judgment Value

Malfunction Criteria	Threshold Value
Output voltage	< 0.464 V

Time Needed for Diagnosis: 500 ms
Malfunction Indicator Light Illumination: Illuminates as soon as a malfunction occurs.

- **Normality Judgment**

Judge as OK and clear the NG if the continuous time while the following conditions are established is more than the predetermined time.

Judgment Value

Malfunction Criteria	Threshold Value
Output voltage	≥ 0.464 V

Time Needed for Diagnosis: Less than 1 second

X: DTC P0118 ENGINE COOLANT TEMPERATURE CIRCUIT HIGH

1. OUTLINE OF DIAGNOSIS

Detect the open or short circuit of the engine coolant temperature sensor.
Judge as NG if out of specification.

2. COMPONENT DESCRIPTION

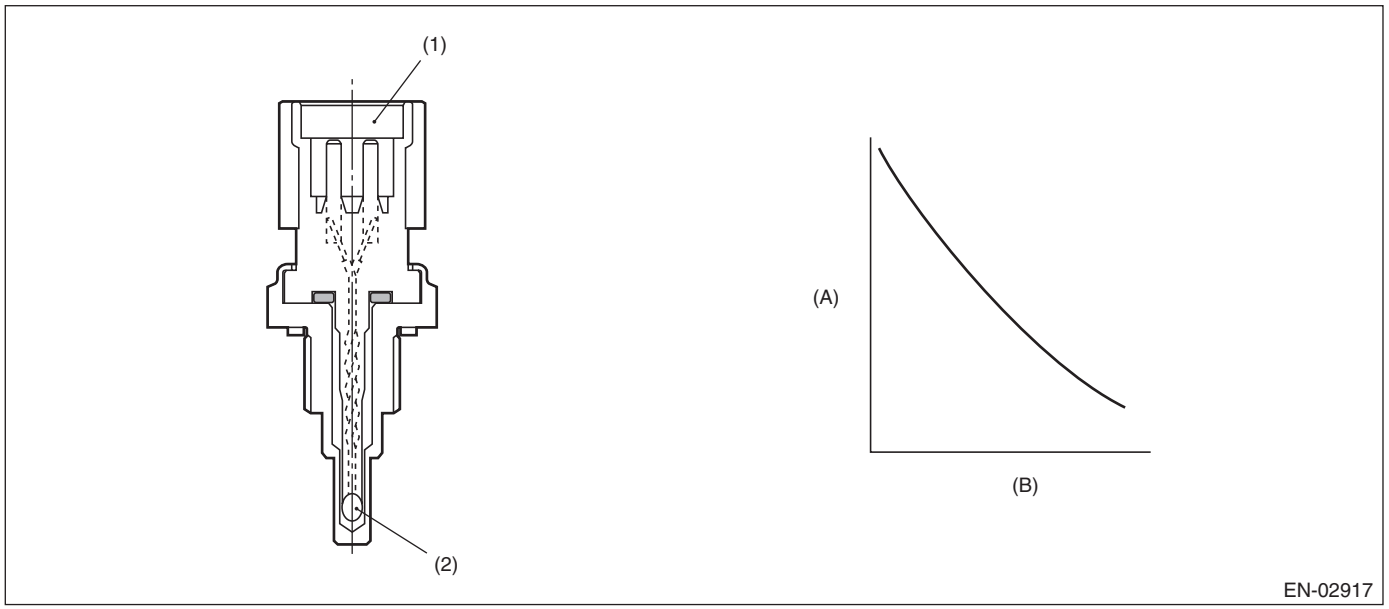

(A) Resistance value (kΩ)
(B) Temperature °C (°F)
(1) Connector
(2) Thermistor element

3. ENABLE CONDITION

Secondary Parameters	Enable Conditions
None	

4. GENERAL DRIVING CYCLE

Always perform the diagnosis continuously.

5. DIAGNOSTIC METHOD

- **Abnormality Judgment**

If the duration of time while the following conditions are met is longer than the time indicated, judge as NG.

Judgment Value

Malfunction Criteria	Threshold Value
Output voltage	≥ 4.702 V

Time Needed for Diagnosis: 500 ms
Malfunction Indicator Light Illumination: Illuminates as soon as a malfunction occurs.

- **Normality Judgment**

Judge as OK and clear the NG if the continuous time while the following conditions are established is more than the predetermined time.

Judgment Value

Malfunction Criteria	Threshold Value
Output voltage	< 4.702 V

Time Needed for Diagnosis: Less than 1 second

Y: DTC P0122 THROTTLE/PEDAL POSITION SENSOR/SWITCH “A” CIRCUIT LOW

1. OUTLINE OF DIAGNOSIS

Detect the open or short circuit of throttle position sensor 1.
Judge as NG if out of specification.

2. COMPONENT DESCRIPTION

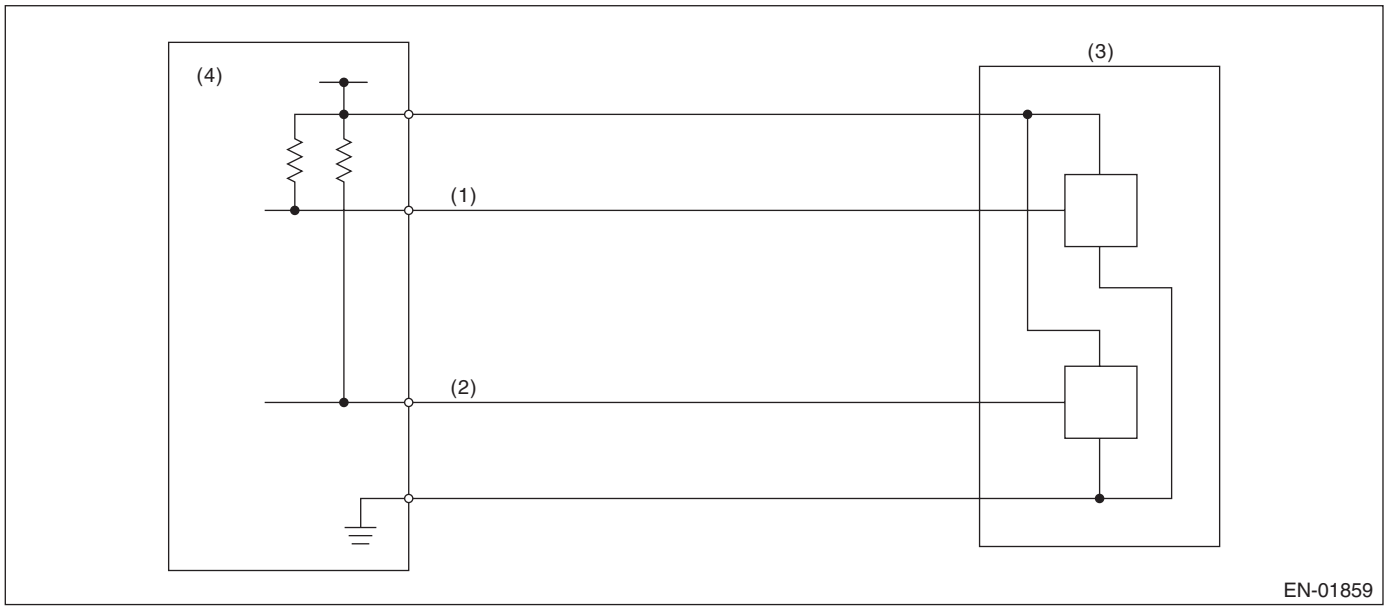

(1) Throttle position sensor 1 signal
(2) Throttle position sensor 2 signal
(3) Throttle position sensor
(4) Engine control module (ECM)

3. ENABLE CONDITION

Secondary Parameters	Enable Conditions
Ignition switch	ON
Battery voltage	≥ 6 V

4. GENERAL DRIVING CYCLE

Always perform the diagnosis continuously.

5. DIAGNOSTIC METHOD

- **Abnormality Judgment**

If the duration of time while the following conditions are met is longer than the time indicated, judge as NG.

Judgment Value

Malfunction Criteria	Threshold Value
Sensor 1 input voltage	≤ 0.23 V

Time Needed for Diagnosis: 24 ms
Malfunction Indicator Light Illumination: Illuminates as soon as a malfunction occurs.

- **Normality Judgment**

Judge as OK and clear the NG if the continuous time while the following conditions are established is more than the predetermined time.

Judgment Value

Malfunction Criteria	Threshold Value
Sensor 1 input voltage	> 0.23 V

Time Needed for Diagnosis: 24 ms

Z: DTC P0123 THROTTLE/PEDAL POSITION SENSOR/SWITCH “A” CIRCUIT HIGH

1. OUTLINE OF DIAGNOSIS

Detect the open or short circuit of throttle position sensor 1.
Judge as NG if out of specification.

2. COMPONENT DESCRIPTION

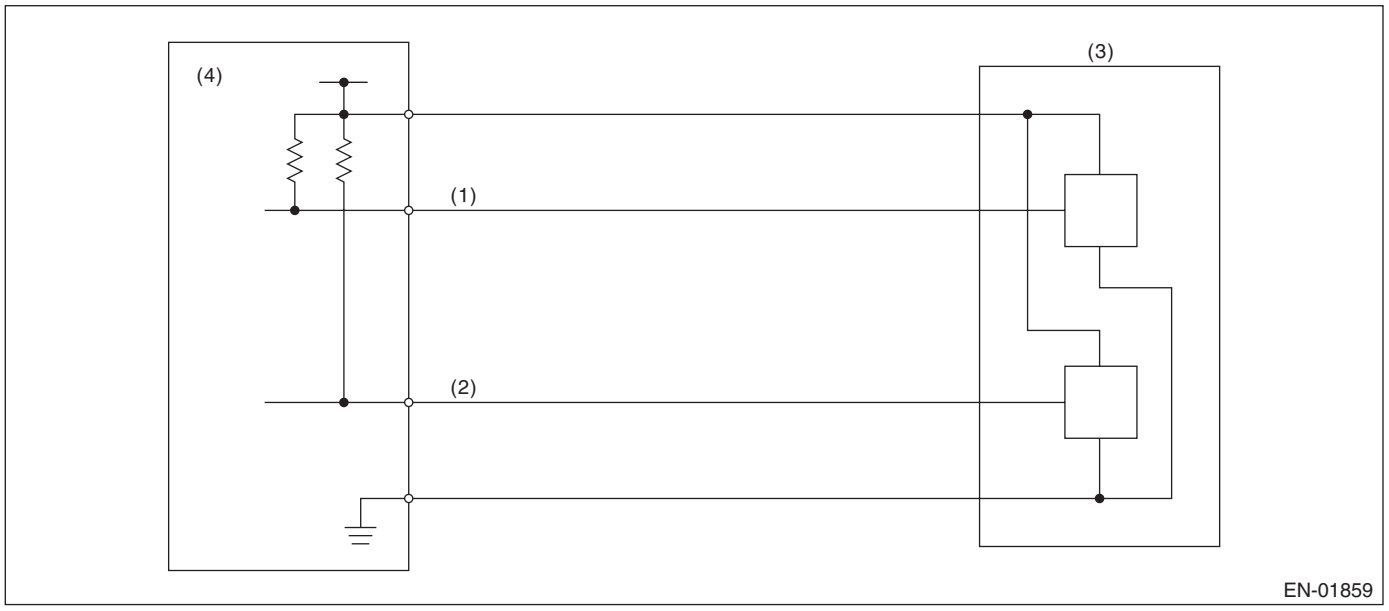

(1) Throttle position sensor 1 signal
(2) Throttle position sensor 2 signal
(3) Throttle position sensor
(4) Engine control module (ECM)

3. ENABLE CONDITION

Secondary Parameters	Enable Conditions
Ignition switch	ON
Battery voltage	≥ 6 V

4. GENERAL DRIVING CYCLE

Always perform the diagnosis continuously.

5. DIAGNOSTIC METHOD

- **Abnormality Judgment**

If the duration of time while the following conditions are met is longer than the time indicated, judge as NG.

Judgment Value

Malfunction Criteria	Threshold Value
Sensor 1 input voltage	≥ 4.858 V

Time Needed for Diagnosis: 24 ms
Malfunction Indicator Light Illumination: Illuminates as soon as a malfunction occurs.

- **Normality Judgment**

Judge as OK and clear the NG if the continuous time while the following conditions are established is more than the predetermined time.

Judgment Value

Malfunction Criteria	Threshold Value
Sensor 1 input voltage	< 4.858 V

Time Needed for Diagnosis: 24 ms

AA:DTC P0125 INSUFFICIENT COOLANT TEMPERATURE FOR CLOSED LOOP FUEL CONTROL

1. OUTLINE OF DIAGNOSIS

Detect the malfunction of engine coolant temperature output property.
Judge as NG when the engine coolant temperature does not rise in driving conditions where it should.

2. COMPONENT DESCRIPTION

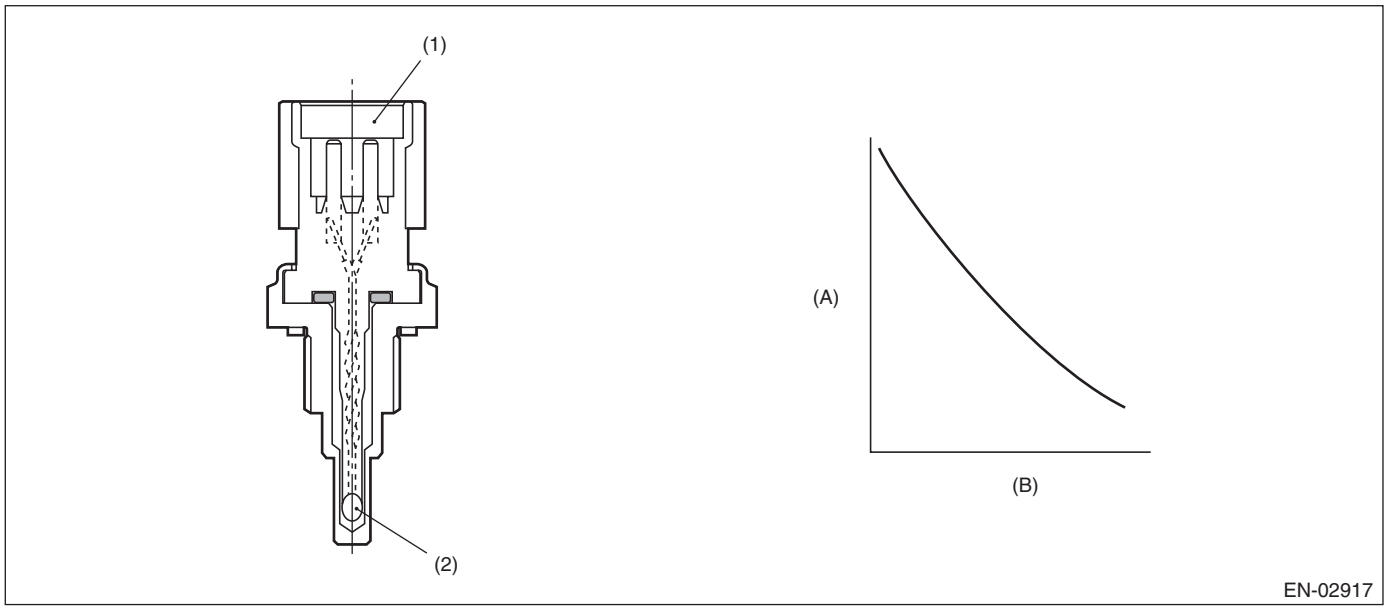

(A) Resistance value (kΩ)
(B) Temperature °C (°F)
(1) Connector
(2) Thermistor element

3. ENABLE CONDITION

Secondary Parameters	Enable Conditions
Engine speed	≥ Value from Map
Battery voltage	≥ 10.9 V

Map

Engine coolant temperature °C (°F)	–40 (–40)	–30 (–22)	–20 (–4)	–10 (14)	0 (32)	10 (50)	20 (68)	30 (86)
Engine speed rpm	500	500	500	500	500	500	500	500

Engine coolant temperature °C (°F)	40 (104)	50 (122)	60 (140)	70 (158)	80 (176)	90 (194)	100 (212)	110 (230)
Engine speed rpm	500	500	500	500	500	500	500	500

4. GENERAL DRIVING CYCLE

Perform the diagnosis only once after engine start.

5. DIAGNOSTIC METHOD

• Abnormality Judgment

Judge as NG if the criteria below are met.

Judgment Value

Malfunction Criteria	Threshold Value
Engine coolant temperature	< 20 °C (68 °F)
Timer for diagnosis after engine start	≥ Judgment value of timer after engine start

Timer for diagnosis after engine start
a. Timer stop at fuel cut
b. During the driving conditions except a) above, timer counts up as follows.
64 ms + TWCNT ms (when at 64 ms)
TWCNT is defined as follows,
TWCNT = 0 at idle switch ON,
TWCNT show on the following table at idle switch OFF.

		Vehicle speed km/h (MPH)							
		0 (0)	8 (5)	16 (9.9)	24 (14.9)	32 (19.9)	40 (24.9)	48 (29.8)	56 (34.8)
Temperature °C (°F)	–20 (–4)	0 ms	37.136 ms	74.272 ms	111.41 ms	126.66 ms	141.91 ms	163.59 ms	185.26 ms
	–10 (14)	0 ms	27.391 ms	54.782 ms	82.173 ms	99.65 ms	117.13 ms	135.96 ms	154.8 ms
	0 (32)	0 ms	17.646 ms	35.292 ms	52.938 ms	72.64 ms	92.341 ms	108.34 ms	124.33 ms
	10 (50)	0 ms	7.9012 ms	15.802 ms	23.704 ms	45.63 ms	67.556 ms	80.711 ms	93.867 ms
	20 (68)	0 ms	7.9012 ms	15.802 ms	23.704 ms	45.63 ms	67.556 ms	80.711 ms	93.867 ms

Judgment value of timer after engine starting
t = 451056 ms – 25870 ms × Ti
Ti : The lowest coolant temperature after engine start
Time Needed for Diagnosis: Less than 1 second
Malfunction Indicator Light Illumination: Illuminates when malfunction occurs in 2 continuous driving cycles.

• Normality Judgment

Judge as OK and clear the NG when the malfunction criteria below are met.

Judgment Value

Malfunction Criteria	Threshold Value
Engine coolant temperature	≥ 20 °C (68 °F)

Time Needed for Diagnosis: Less than 1 second

AB:DTC P0126 INSUFFICIENT ENGINE COOLANT TEMPERATURE FOR STABLE OPERATION

1. OUTLINE OF DIAGNOSIS

Detect the malfunction of the engine coolant temperature sensor characteristics.
When the ignition is ON after the specified period of soaking time has elapsed, compare the engine coolant temperature with intake air temperature. Judge as NG if the difference between two temperatures is larger than the predetermined value and the engine coolant temperature becomes the specified value or more.

2. COMPONENT DESCRIPTION

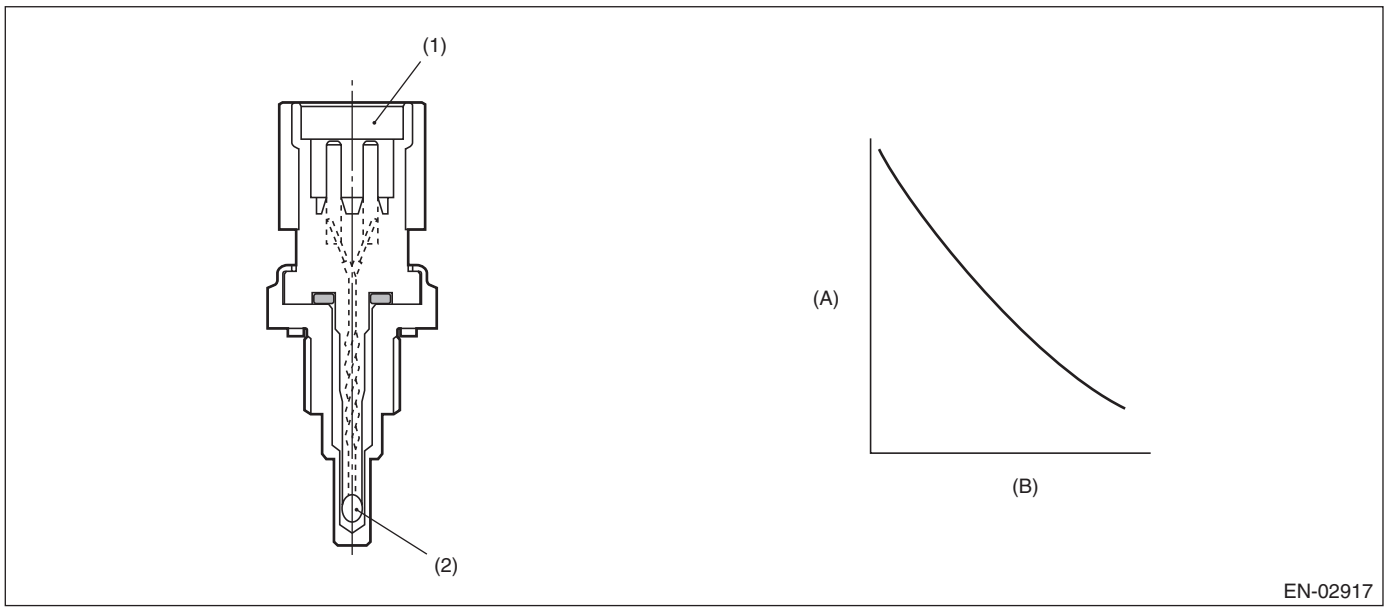

(A) Resistance value (kΩ)
(B) Temperature °C (°F)
(1) Connector
(2) Thermistor element

3. ENABLE CONDITION

Secondary Parameters	Enable Conditions
Battery voltage	≥ 10.9 V
Soaking time	≥ 21600 s
Engine coolant temperature at the last engine stop	≥ Value from Map

Map

Estimate ambient temperature °C (°F)	–7 (19.4)	8 (46.4)	10 (50)	25 (77)
Engine coolant temperature at the last engine stop °C (°F)	79.1 (174.4)	79.1 (174.4)	79.1 (174.4)	79.1 (174.4)

4. GENERAL DRIVING CYCLE

Perform the diagnosis only once after starting the engine.

5. DIAGNOSTIC METHOD

- **Abnormality Judgment**

If the duration of time while the following conditions are met is longer than the time indicated, judge as NG.

Judgment Value

Malfunction Criteria	Threshold Value
All of the following conditions are established.	
Engine coolant temperature – intake air temperature	> 15°C (27°F)
Engine coolant temperature	> 40 °C (104 °F)

Time Needed for Diagnosis: 512 ms
Malfunction Indicator Light Illumination: Illuminates when malfunction occurs in 2 continuous driving cycles.

- **Normality Judgment**

Judge as OK and clear the NG if the continuous time while the following conditions are established is more than the predetermined time.

Judgment Value

Malfunction Criteria	Threshold Value
When any one of the followings is established.	
Engine coolant temperature – intake air temperature	≤ 15°C (27°F)
Engine coolant temperature	≤ 40 °C (104 °F)

Time Needed for Diagnosis: Less than 1 second

AC:DTC P0128 COOLANT THERMOSTAT (ENGINE COOLANT TEMPERATURE BELOW THERMOSTAT REGULATING TEMPERATURE)

1. OUTLINE OF DIAGNOSIS

Detect malfunctions of the thermostat function.
Judge as NG when any one of the following conditions is established.

- When the actual engine coolant temperature does not reach the maximum temperature necessary to perform other OBDII diagnosis and Σ (Estimated engine coolant temperature – actual engine coolant temperature) exceeded the predetermined value. (Judgment 1)
- When the actual engine coolant temperature does not reach the range within –11°C (–19.8°F) from the regulated temperature and Σ (Estimated engine coolant temperature – actual engine coolant temperature) exceeded the predetermined value. (Judgment 2)
- When the difference between the estimated coolant temperature and the actual engine coolant temperature exceeds the predetermined value, and Σ (Estimated engine coolant temperature – actual engine coolant temperature) exceeded the predetermined value. (Judgment 3)

2. COMPONENT DESCRIPTION

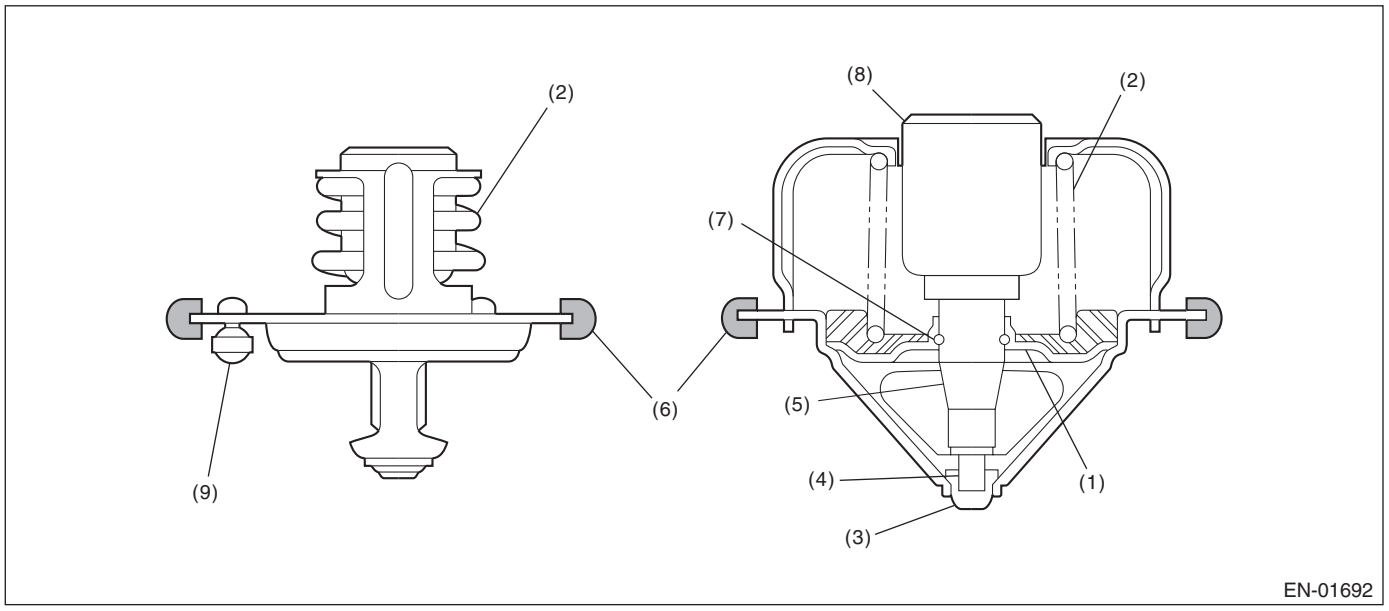

(1) Valve
(2) Spring
(3) Stopper
(4) Piston
(5) Guide
(6) Rubber seal
(7) Stop ring
(8) Wax element
(9) Jiggle valve

3. ENABLE CONDITION

Secondary Parameters	Enable Conditions
<Judgment 1>	
Battery voltage	≥ 10.9 V
Estimate ambient temperature	≥ –7 °C (19.4 °F)
Vehicle speed	≥ 30 km/h (18.6 MPH)
Estimated coolant temperature	≥ Value of Map 1
<Judgment 2>	
Battery voltage	≥ 10.9 V
Estimate ambient temperature	≥ –7 °C (19.4 °F)
Vehicle speed	≥ 30 km/h (18.6 MPH)
Estimated coolant temperature	≥ Value from Map 2
<Judgment 3>	
Battery voltage	≥ 10.9 V
Estimate ambient temperature	≥ –7 °C (19.4 °F)
Vehicle speed	≥ 30 km/h (18.6 MPH)
Estimated coolant temperature	≥ Value from Map 3

Map 1

Engine coolant temperature at engine starting °C (°F)	–7 (19.4)	8 (46.4)	10 (50)	25 (77)
Estimated coolant temperature °C (°F)	72 (161.6)	72 (161.6)	72 (161.6)	72 (161.6)

Map 2

Engine coolant temperature at engine starting °C (°F)	–7 (19.4)	8 (46.4)	10 (50)	25 (77)
Estimated coolant temperature °C (°F)	79.1 (174.4)	79.1 (174.4)	79.1 (174.4)	79.1 (174.4)

Map 3

Engine coolant temperature at engine starting °C (°F)	–7 (19.4)	10 (50)	25 (77)	27 (80.6)
Estimated coolant temperature °C (°F)	58.5 (137.3)	68.6 (155.5)	77.6 (171.7)	79.1 (174.4)

4. GENERAL DRIVING CYCLE

Perform the diagnosis only once after starting the engine.

5. DIAGNOSTIC METHOD

• Abnormality Judgment

If the duration of time while the following conditions are met is longer than the time indicated, judge as NG.

Judgment Value

Malfunction Criteria	Threshold Value
When any one of the followings is established.	
<Judgment 1>	
Actual engine coolant temperature and Σ (Estimated engine coolant temperature – actual engine coolant temperature)	< Value of Map 4 > Value of Map 5
<Judgment 2>	
Actual engine coolant temperature and Σ (Estimated engine coolant temperature – actual engine coolant temperature)	< Regulated temperature – Value of Map 6 > Value of Map 7
<Judgment 3>	
Estimated engine coolant temperature – actual engine coolant temperature and Σ (Estimated engine coolant temperature – actual engine coolant temperature)	> Value of Map 8 > Value of Map 9

Map 4

Estimate ambient temperature °C (°F)	–7 (19.4)	8 (46.4)	10 (50)	25 (77)
Threshold Value °C (°F)	72 (161.6)	72 (161.6)	72 (161.6)	72 (161.6)

Map 5

Engine coolant temperature at engine starting °C (°F)	–7 (19.4)	0 (32)	8 (46.4)	10 (50)	25 (77)	35 (95)
Threshold Value °C (°F)	1731.6 (3116.9)	1731.6 (3116.9)	1731.6 (3116.9)	1731.6 (3116.9)	1731.6 (3116.9)	1000 (1800)

Map 6

Estimate ambient temperature °C (°F)	–7 (19.4)	8 (46.4)	10 (50)	25 (77)
Threshold Value °C (°F)	11.1 (20)	11.1 (20)	11.1 (20)	11.1 (20)

Map 7

Engine coolant temperature at engine starting °C (°F)	–7 (19.4)	0 (32)	8 (46.4)	10 (50)	25 (77)	30 (86)	35 (95)
Threshold Value °C (°F)	1731.6 (3116.9)	1731.6 (3116.9)	1731.6 (3116.9)	1731.6 (3116.9)	1731.6 (3116.9)	1731.6 (3116.9)	1000 (1800)

Map 8

Estimate ambient temperature °C (°F)	–7 (19.4)	8 (46.4)	10 (50)	25 (77)
Threshold Value °C (°F)	11.1 (20)	11.1 (20)	11.1 (20)	11.1 (20)

Map 9

Engine coolant temperature at engine starting °C (°F)	–7 (19.4)	8 (46.4)	10 (50)	25 (77)
Threshold Value °C (°F)	1731.6 (3116.9)	1731.6 (3116.9)	1731.6 (3116.9)	1731.6 (3116.9)

Time Needed for Diagnosis: 300 — 700 seconds
Malfunction Indicator Light Illumination: Illuminates when malfunction occurs in 2 continuous driving cycles.

- **Normality Judgment**

Judge as OK and clear the NG if the continuous time while the following conditions are established is more than the predetermined time.

Judgment Value

Malfunction Criteria	Threshold Value
All of the following conditions are established.	
<Judgment 1>	
Actual engine coolant temperature and Σ (Estimated engine coolant temperature – actual engine coolant temperature)	≥ Value of Map 4 ≤ Value of Map 5
<Judgment 2>	
Actual engine coolant temperature and Σ (Estimated engine coolant temperature – actual engine coolant temperature)	≥ Regulated temperature – Value of Map 6 ≤ Value of Map 7
<Judgment 3>	
Estimated engine coolant temperature – actual engine coolant temperature and Σ (Estimated engine coolant temperature – actual engine coolant temperature) and Actual engine coolant temperature	≤ Value of Map 8 ≤ Value of Map 9 ≥ Regulated temperature – Value of Map 10

Map 10

Estimate ambient temperature °C (°F)	–7 (19.4)	8 (46.4)	10 (50)	25 (77)
Threshold Value °C (°F)	11.1 (20)	11.1 (20)	11.1 (20)	11.1 (20)

Time Needed for Diagnosis: 300 — 700 seconds

AD:DTC P0131 O2 SENSOR CIRCUIT LOW VOLTAGE (BANK 1 SENSOR 1)

1. OUTLINE OF DIAGNOSIS

Detect the open or short circuit of sensor.
Judge as NG, when the element voltage is out of the specified range.

2. COMPONENT DESCRIPTION

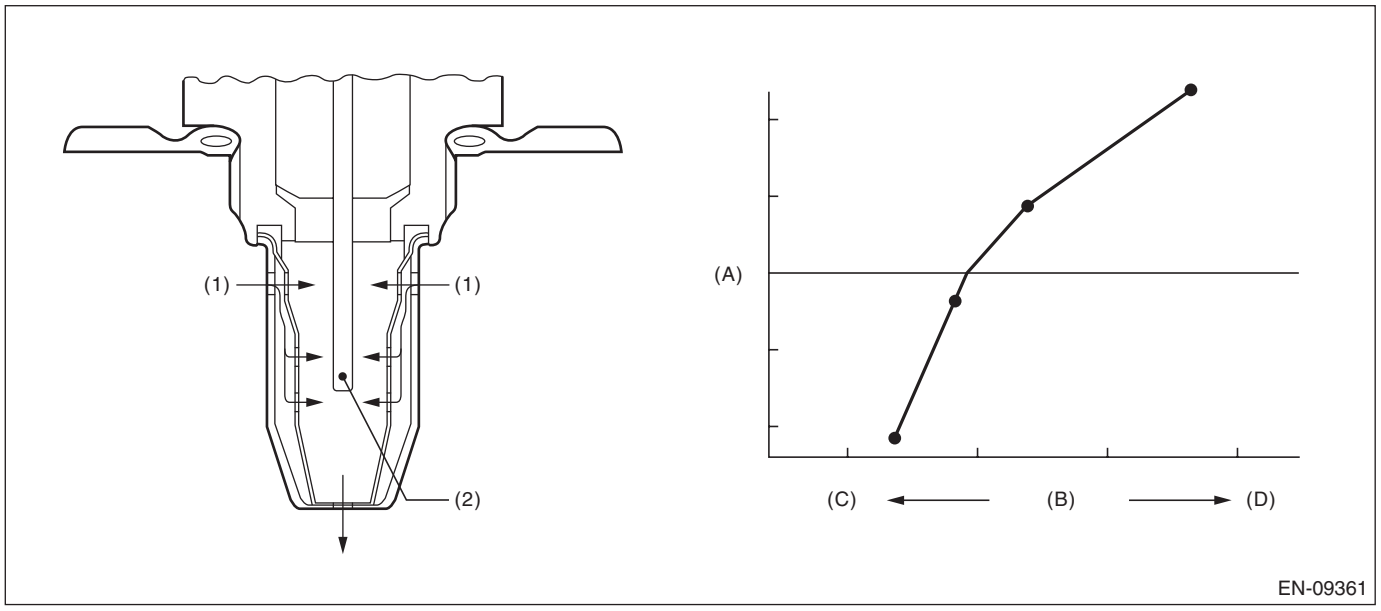

(A) Electromotive force
(B) Air fuel ratio
(C) Lean
(D) Rich

(1) Exhaust gas
(2) ZrO_2

3. ENABLE CONDITION

Secondary Parameters	Enable Conditions
Battery voltage	≥ 10.9 V

4. GENERAL DRIVING CYCLE

Always perform the diagnosis continuously.

5. DIAGNOSTIC METHOD

- **Abnormality Judgment**

If the duration of time while the following conditions are met is longer than the time indicated, judge as NG.

Judgment Value

Malfunction Criteria	Threshold Value
Input voltage (+)	< 1.128 V
or	
Input voltage (–)	< 0.23 V
or	
|Input voltage (+) – Input voltage (–)|	< 0.644 V

Time Needed for Diagnosis:
Input voltage (+): 1000 ms
Input voltage (–): 1000 ms
|Input voltage (+) – Input voltage (–)|: 1000 ms
Malfunction Indicator Light Illumination: Illuminates as soon as a malfunction occurs.

- **Normality Judgment**

Judge as OK and clear the NG if the continuous time while the following conditions are established is more than the predetermined time.

Judgment Value

Malfunction Criteria	Threshold Value
Input voltage (+)	≥ 1.128 V
Input voltage (–)	≥ 0.23 V
|Input voltage (+) – Input voltage (–)|	≥ 0.644 V

Time Needed for Diagnosis: Less than 1 second

AE:DTC P0132 O2 SENSOR CIRCUIT HIGH VOLTAGE (BANK 1 SENSOR 1)

1. OUTLINE OF DIAGNOSIS

Detect the open or short circuit of sensor.
Judge as NG, when the element voltage is out of the specified range.

2. COMPONENT DESCRIPTION

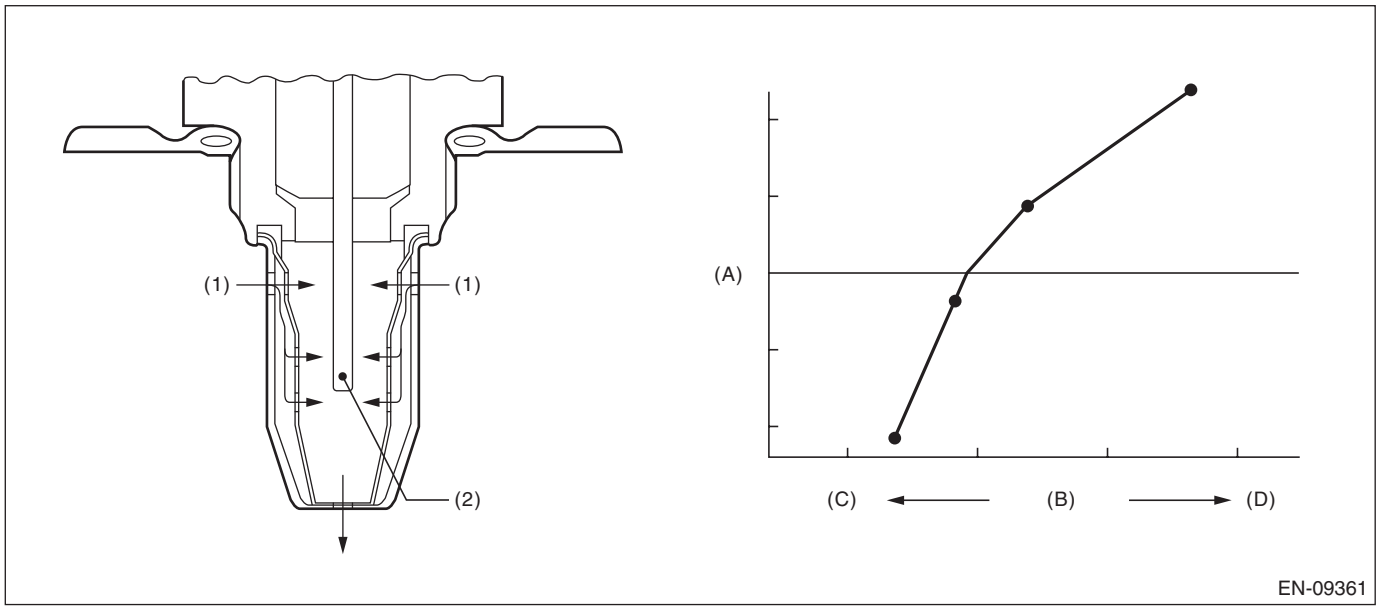

(A) Electromotive force
(B) Air fuel ratio
(C) Lean
(D) Rich

(1) Exhaust gas
(2) ZrO_2

3. ENABLE CONDITION

Secondary Parameters	Enable Conditions
Battery voltage	≥ 10.9 V

4. GENERAL DRIVING CYCLE

Always perform the diagnosis continuously.

5. DIAGNOSTIC METHOD

- **Abnormality Judgment**

If the duration of time while the following conditions are met is longer than the time indicated, judge as NG.

Judgment Value

Malfunction Criteria	Threshold Value
Input voltage (+)	> 3.589 V
or	
Input voltage (–)	> 3.541 V

Time Needed for Diagnosis:
Input voltage (+): 1000 ms
Input voltage (–): 1000 ms
Malfunction Indicator Light Illumination: Illuminates as soon as a malfunction occurs.

- **Normality Judgment**

Judge as OK and clear the NG if the continuous time while the following conditions are established is more than the predetermined time.

Judgment Value

Malfunction Criteria	Threshold Value
Input voltage (+)	≤ 3.589 V
Input voltage (–)	≤ 3.541 V

Time Needed for Diagnosis: Less than 1 second

AF:DTC P0133 O2 SENSOR CIRCUIT SLOW RESPONSE (BANK 1 SENSOR 1)

1. OUTLINE OF DIAGNOSIS

Detect the slow response of front oxygen (A/F) sensor.
Front oxygen (A/F) sensor cover has some ventilation holes for exhaust gas. Clogged ventilation holes are diagnosed.
When the holes are clogged, the A/F output variation becomes slow comparing with the actual A/F variation because oxygen which reaches the zirconia layer is insufficient. Therefore, if the sensor cover holes are clogged, the rich to lean judgment in the ECM is delayed when the actual change from rich to lean occurs.
Judge as NG when the actual movement in comparison to the ECM control amount is slow.

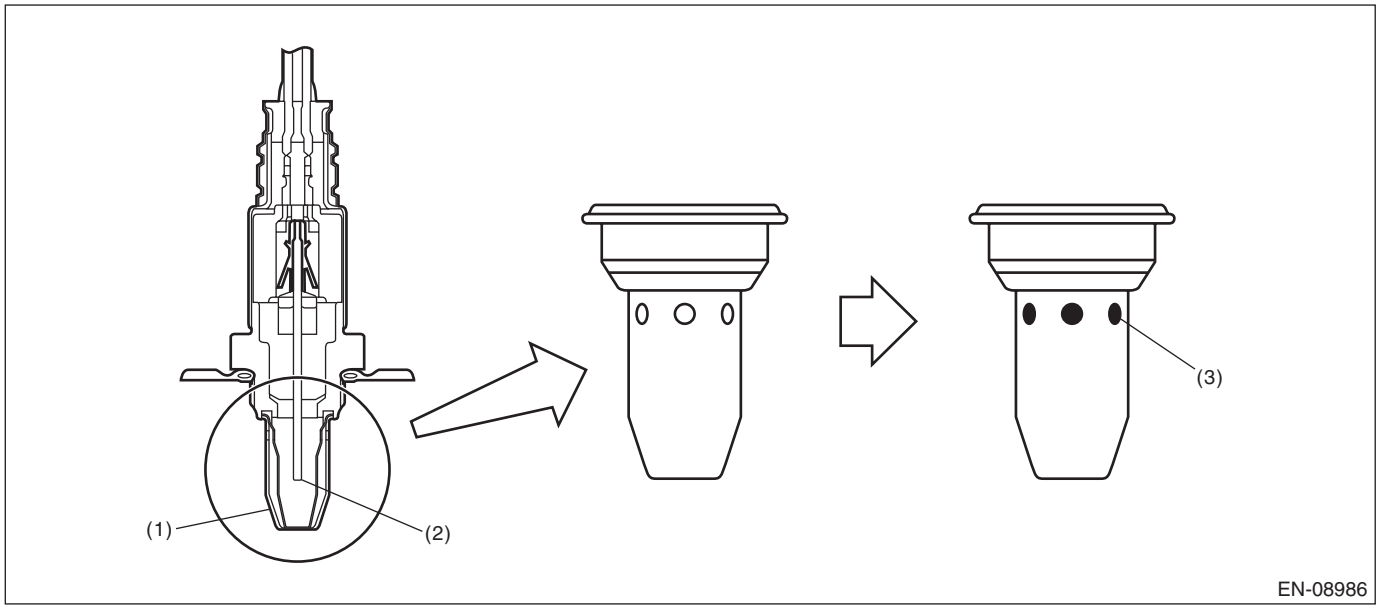

(1) Cover (2) Zirconia (3) Clogging

2. COMPONENT DESCRIPTION

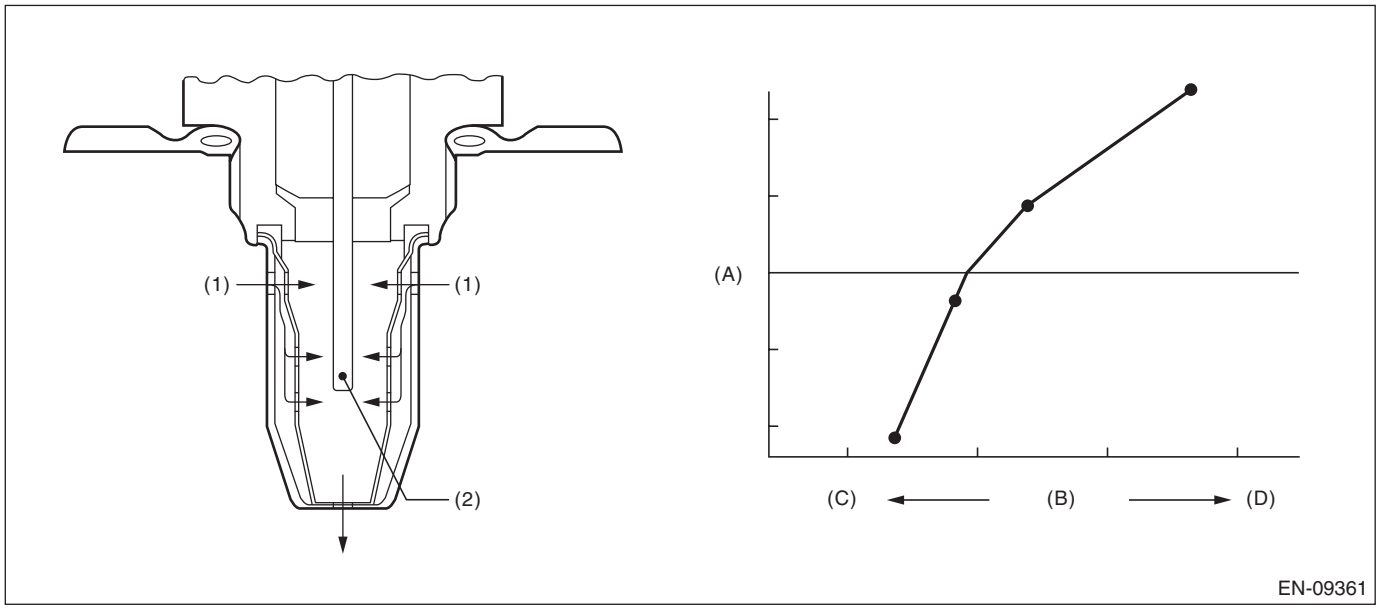

(A) Electromotive force (B) Air fuel ratio (C) Lean
(D) Rich

(1) Exhaust gas (2) ZrO_2

3. ENABLE CONDITION

Secondary Parameters	Enable Conditions
Time needed for all secondary parameters to be in enable conditions	≥ 1024 ms
Battery voltage	≥ 10.9 V
Atmospheric pressure	> 75 kPa (563 mmHg, 22.2 inHg)
Closed loop control with main feedback	Operation
Front oxygen (A/F) sensor impedance	0 Ω — 50 Ω
Elapsed time after starting the engine	≥ 120000 ms
Engine coolant temperature	≥ 72 °C (161.6 °F)
Engine speed	1000 rpm — 10000 rpm
Vehicle speed	10 km/h — 200 km/h (6.2 MPH — 124.3 MPH)
Amount of intake air	10 g/s — 31 g/s (0.35 oz/s — 1.09 oz/s)
Engine load	< 0.02 g/rev (0 oz/rev)
Learning value of EVAP conc. during purge	< 0.2
Total time of operating canister purge	≥ 19.9 s

4. GENERAL DRIVING CYCLE

Perform diagnosis only once at a constant speed of 10 km/h — 200 km/h (6.2 MPH — 124.3 MPH) 120000 ms or more after starting the engine.

5. DIAGNOSTIC METHOD

Calculate faf difference every 32 ms × 4 , and the λ value difference. Calculate the diagnostic value after calculating 820 time(s).

- **Abnormality Judgment**

If the duration of time while the following conditions are met is longer than the time indicated, judge as NG.

Judgment Value

Malfunction Criteria	Threshold Value
parafca = td2faf/td2lmd where, td2faf (N) = td2faf (n–1) + |d2faf (n)| td2lmd (N) = td2lmd (n–1) + |d2lmd (n)| add up to 32 ms × 4 × 820 time(s). d2faf (n) = (faf (n) – faf (n–1)) – (faf (n–1) – faf (n–2)) d2lmd (n) = (lmd (n) – lmd (n–1)) – (lmd (n–1) – lmd (n–2)) faf = main feedback compensation coefficient every 128 milliseconds lmd = output lambda every 128 milliseconds	> 0.379

Time Needed for Diagnosis: 32 ms × 4 × 820 time(s)
Malfunction Indicator Light Illumination: Illuminates when malfunction occurs in 2 continuous driving cycles.

- **Normality Judgment**

Judge as OK and clear the NG if the continuous time while the following conditions are established is more than the predetermined time.

Judgment Value

Malfunction Criteria	Threshold Value
parafca = td2faf/td2lmd where, td2faf (N) = td2faf (n–1) + |d2faf (n)| td2lmd (N) = td2lmd (n–1) + |d2lmd (n)| add up to 32 ms × 4 × 820 time(s). d2faf (n) = (faf (n) – faf (n–1)) – (faf (n–1) – faf (n–2)) d2lmd (n) = (lmd (n) – lmd (n–1)) – (lmd (n–1) – lmd (n–2)) faf = main feedback compensation coefficient every 128 milliseconds lmd = output lambda every 128 milliseconds	≤ 0.379

Time Needed for Diagnosis: 32 ms × 4 × 820 time(s)

AG:DTC P0134 O2 SENSOR CIRCUIT NO ACTIVITY DETECTED (BANK 1 SENSOR 1)

1. OUTLINE OF DIAGNOSIS

Detect open circuits of the sensor.
Judge as NG when the impedance of the element is large.

2. COMPONENT DESCRIPTION

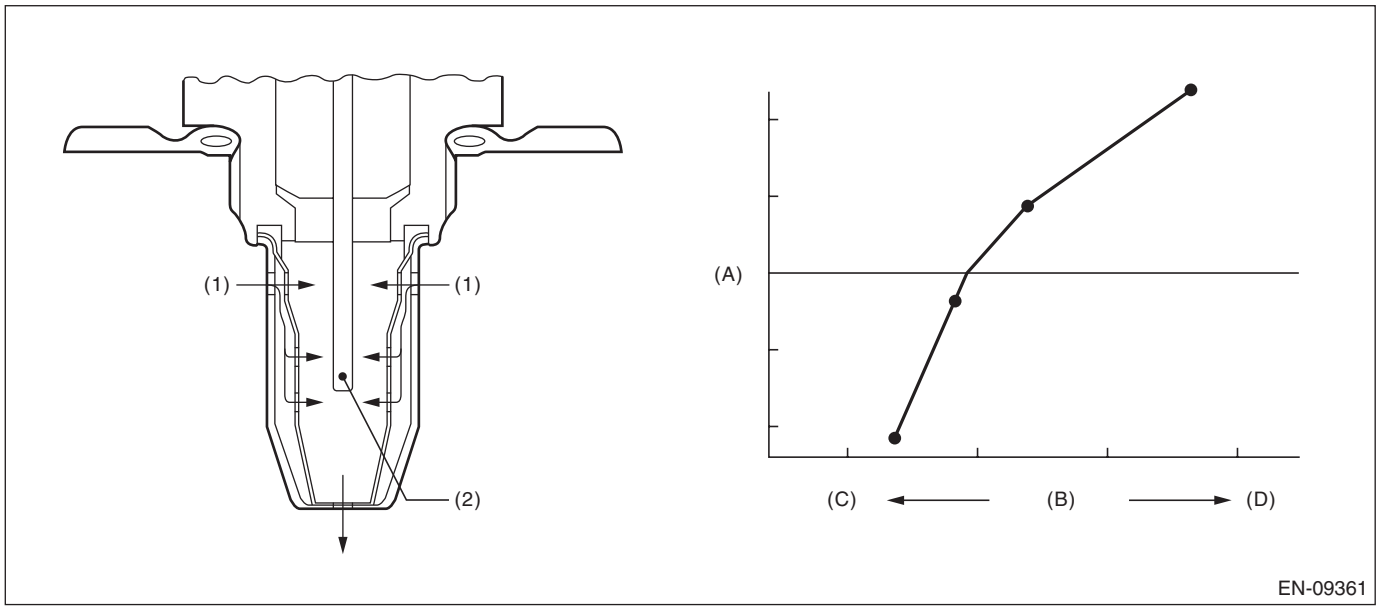

(A) Electromotive force (B) Air fuel ratio (C) Lean
(D) Rich

(1) Exhaust gas (2) ZrO_2

3. ENABLE CONDITION

Secondary Parameters	Enable Conditions
None	

4. GENERAL DRIVING CYCLE

Always perform the diagnosis continuously.

5. DIAGNOSTIC METHOD

- **Abnormality Judgment**

If the duration of time while the following conditions are met is longer than the time indicated, judge as NG.

Judgment Value

Malfunction Criteria	Threshold Value
Battery voltage	≥ 10.9 V
Time of heater control duty at 70 % or more	≥ 36000 ms
Front oxygen (A/F) sensor impedance.	> 500 Ω

Time Needed for Diagnosis: 5000 ms
Malfunction Indicator Light Illumination: Illuminates as soon as a malfunction occurs.

- **Normality Judgment**

Judge as OK and clear the NG if the continuous time while the following conditions are established is more than the predetermined time.

Judgment Value

Malfunction Criteria	Threshold Value
Battery voltage	≥ 10.9 V
Front oxygen (A/F) sensor impedance.	≤ 500 Ω

Time Needed for Diagnosis: Less than 1 second

AH:DTC P0137 O2 SENSOR CIRCUIT LOW VOLTAGE (BANK 1 SENSOR 2)

1. OUTLINE OF DIAGNOSIS

Detect continuity NG of the oxygen sensor. If the oxygen sensor voltage reading is not within the probable range considering the operating conditions, judge as NG.

2. COMPONENT DESCRIPTION

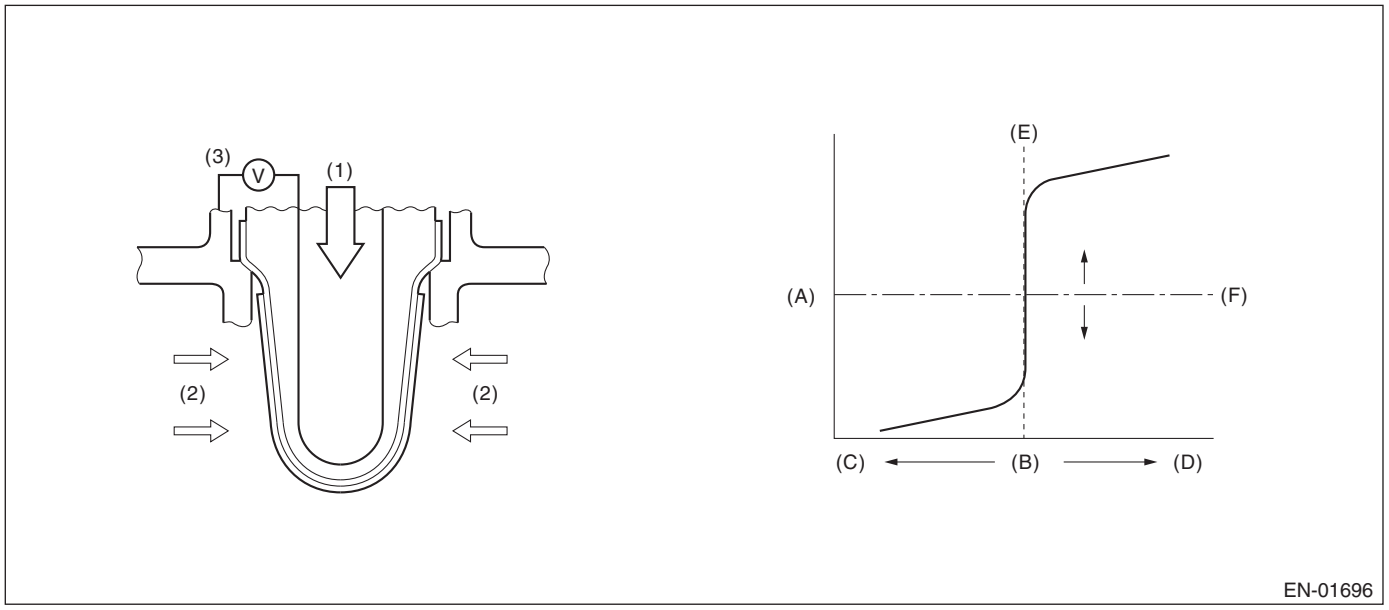

(A)	Electromotive force	(B)	Air fuel ratio	(C)	Rich
(D)	Lean	(E)	Theoretical air fuel ratio	(F)	Comparative voltage
(1)	Atmosphere	(2)	Exhaust gas	(3)	Electromotive force

3. ENABLE CONDITION

Used for abnormality judgment

Secondary Parameters	Enable Conditions
High	
Secondary air system	Not in operation
Closed loop control at the oxygen sensor	In operation
Misfire detection every 200 rotations	< 65535 time(s)
Front oxygen (A/F) sensor compensation coefficient	Not in limit value
Battery voltage	≥ 10.9 V
Engine coolant temperature	≥ 72 °C (161.6 °F)
Low (1)	
Secondary air system	Not in operation
Closed loop control at the oxygen sensor	In operation
Misfire detection every 200 rotations	< 65535 time(s)
Front oxygen (A/F) sensor compensation coefficient	Not in limit value
Battery voltage	≥ 10.9 V
Engine coolant temperature	≥ 72 °C (161.6 °F)
Amount of intake air	≥ 10 g/s (0.35 oz/s)
Low (2)	
Secondary air system	Not in operation
Closed loop control at the oxygen sensor	In operation
Misfire detection every 200 rotations	< 65535 time(s)
Front oxygen (A/F) sensor compensation coefficient	Not in limit value
Battery voltage	≥ 10.9 V
Engine coolant temperature	≥ 72 °C (161.6 °F)
Amount of intake air	< 10 g/s (0.35 oz/s)
Current continuation time of the rear oxygen sensor heater	≥ 25000 ms
Low (3)	
Secondary air system	Not in operation
Closed loop control at the oxygen sensor	In operation
Misfire detection every 200 rotations	< 65535 time(s)
Front oxygen (A/F) sensor compensation coefficient	Not in limit value
Battery voltage	≥ 10.9 V
Engine coolant temperature	≥ 72 °C (161.6 °F)
Amount of intake air	< 10 g/s (0.35 oz/s)
Current continuation time of the rear oxygen sensor heater	≥ 25000 ms
Fuel cut	Experienced

Used for normality judgment

Secondary Parameters	Enable Conditions
Secondary air system	Not in operation
Closed loop control at the oxygen sensor	In operation
Misfire detection every 200 rotations	< 65535 time(s)
Front oxygen (A/F) sensor compensation coefficient	Not in limit value
Battery voltage	≥ 10.9 V
Engine coolant temperature	≥ 72 °C (161.6 °F)

4. GENERAL DRIVING CYCLE

After starting the engine, continuously perform the diagnosis with the same engine condition.

5. DIAGNOSTIC METHOD

• Abnormality Judgment

If the duration of time while the following conditions are met is longer than the time indicated, judge as NG.

Judgment Value

Malfunction Criteria	Threshold Value	DTC
High Sensor output voltage	> 1.2 V	P0138
Low Sensor output voltage	< 0.03 V	P0137

Time Needed for Diagnosis:

High: 2500 ms
Low (1): 20000 ms
Low (2): 150000 ms
Low (3): Value from Map

Map

Fuel cut time (ms)	0	2000	10000
Time Needed for Diagnosis (ms)	150000	150000	150000

Malfunction Indicator Light Illumination: Illuminates when malfunction occurs in 2 continuous driving cycles.

• Normality Judgment

Judge as OK and clear the NG if the continuous time while the following conditions are established is more than the predetermined time.

Judgment Value

Malfunction Criteria	Threshold Value	DTC
High Sensor output voltage	≤ 1.2 V	P0138
Low Sensor output voltage	≥ 0.03 V	P0137

Time Needed for Diagnosis:

High: Less than 1 second
Low (1): Less than 1 second
Low (2): Less than 1 second
Low (3): Less than 1 second

AI: DTC P0138 O2 SENSOR CIRCUIT HIGH VOLTAGE (BANK 1 SENSOR 2)

1. OUTLINE OF DIAGNOSIS

NOTE:
For the detection standard, refer to DTC P0137. <Ref. to GD(H4DOTC)-72, DTC P0137 O2 SENSOR CIRCUIT LOW VOLTAGE (BANK 1 SENSOR 2), Diagnostic Trouble Code (DTC) Detecting Criteria.>

AJ:DTC P013A O2 SENSOR SLOW RESPONSE - RICH TO LEAN (BANK 1 SENSOR 2)

1. OUTLINE OF DIAGNOSIS

Detect the slow response of rich → lean for rear oxygen sensor output.
When the deceleration fuel cut has occurred, detect the trouble by calculating the time when the rear oxygen sensor output passes through the predetermined range of voltages.
Judge as NG when the response time is larger than the threshold value.

2. COMPONENT DESCRIPTION

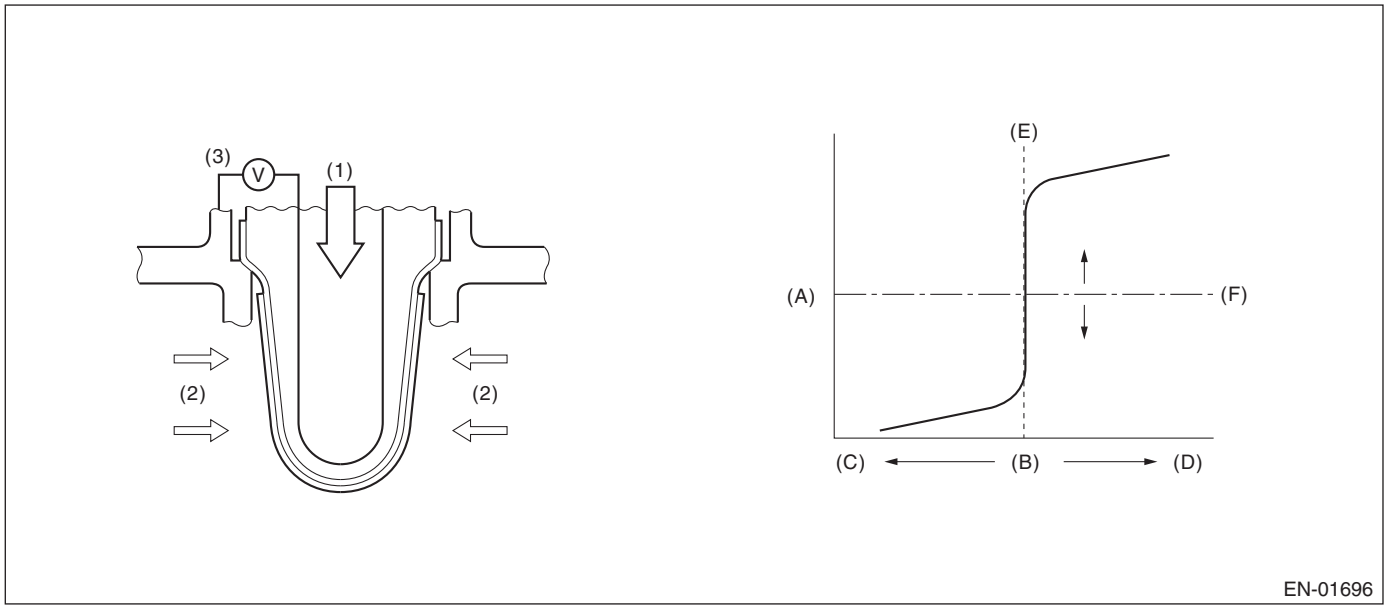

(A)	Electromotive force	(B)	Air fuel ratio	(C)	Rich
(D)	Lean	(E)	Theoretical air fuel ratio	(F)	Comparative voltage
(1)	Atmosphere	(2)	Exhaust gas	(3)	Electromotive force

3. ENABLE CONDITIONS

Secondary Parameters	Enable Conditions
Battery voltage	> 10.9 V
Rear oxygen sensor closed loop control	Operation
Current calculation time of the rear oxygen sensor heater after starting	≥ 180000 ms
Engine speed when fuel cut starts	≥ 1700 rpm
Rear oxygen sensor voltage when fuel cut starts	≥ 0.55 V
Fuel cut time	≥ 5000 ms
Engine coolant temperature when fuel cut starts	≥ 72 °C (161.6 °F)
Estimated temperature of rear oxygen sensor element when fuel cut starts	≥ 450 °C (842 °F)

4. GENERAL DRIVING CYCLE

Perform diagnosis once during deceleration fuel cut from a constant and high speed driving, when rear oxygen sensor is warmed up sufficiently.

5. DIAGNOSTIC METHOD

Detect the trouble by calculating the response time of the rear oxygen sensor during fuel cut.

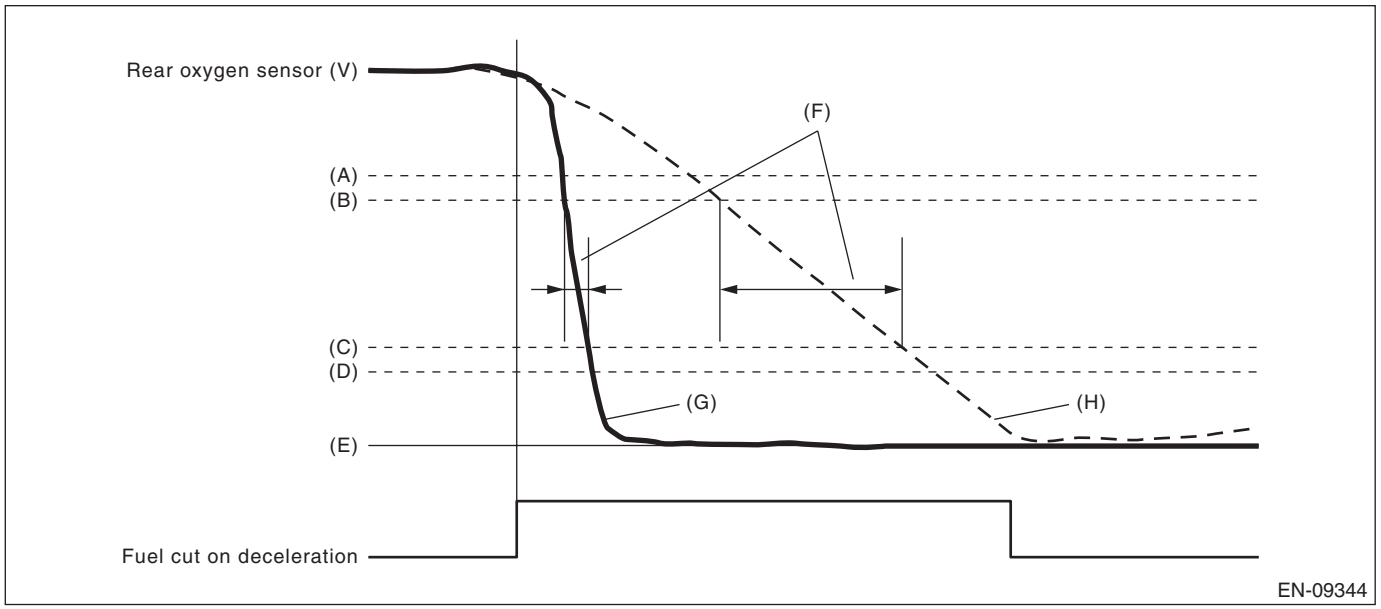

(A) 0.55 V
(B) 0.50 V
(C) 0.20 V
(D) 0.15 V
(E) 0 V
(F) Diagnostic parameter
(G) Normal
(H) Malfunction

- **Abnormality Judgment**

Judge as NG when the following conditions are established.

Judgment Value

Malfunction Criteria	Threshold Value
Time when rear oxygen sensor voltage changed from 0.5 V to 0.2 V.	> 837 ms

Time Needed for Diagnosis: 10 seconds
Malfunction Indicator Light Illumination: Illuminates when malfunction occurs in 2 continuous driving cycles.

- **Normality Judgment**

Judge as OK and clear the NG if the following conditions are established.

Judgment Value

Malfunction Criteria	Threshold Value
Time when rear oxygen sensor voltage changed from 0.5 V to 0.2 V.	≤ 837 ms

Time Needed for Diagnosis: 10 seconds

AK:DTC P013B O2 SENSOR SLOW RESPONSE - LEAN TO RICH (BANK 1 SENSOR 2)

1. OUTLINE OF DIAGNOSIS

Detect the slow response of lean → rich for rear oxygen sensor output.
After the deceleration fuel cut has occurred, detect the trouble by calculating the time when the rear oxygen sensor output passes through the predetermined range of voltages.
Judge as NG when the response time is larger than the threshold value.

2. COMPONENT DESCRIPTION

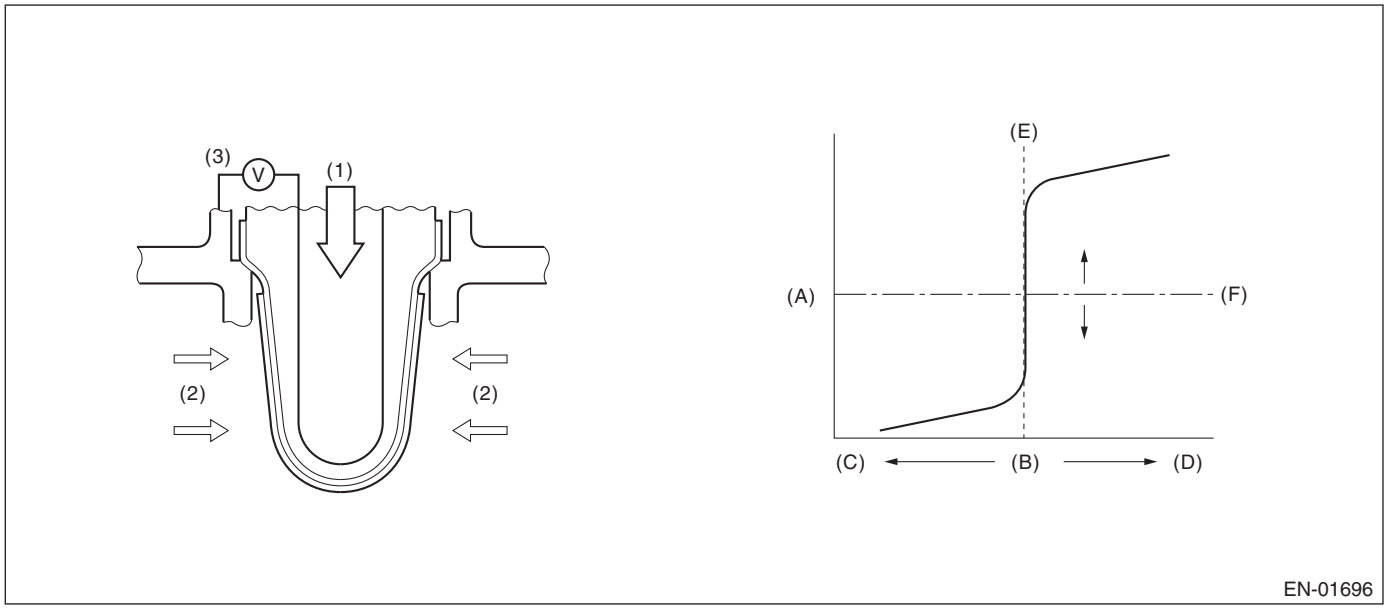

(A) Electromotive force
(B) Air fuel ratio
(C) Rich
(D) Lean
(E) Theoretical air fuel ratio
(F) Comparative voltage

(1) Atmosphere
(2) Exhaust gas
(3) Electromotive force

3. ENABLE CONDITIONS

Secondary Parameters	Enable Conditions
Battery voltage	> 10.9 V
Rear oxygen sensor closed loop control	Operation
Fuel cut time	≥ 5000 ms

4. GENERAL DRIVING CYCLE

Perform diagnosis only once after recovering from a deceleration fuel cut continued for more than predetermined time.

5. DIAGNOSTIC METHOD

Detect the trouble by calculating the response time of the rear oxygen sensor after fuel cut.

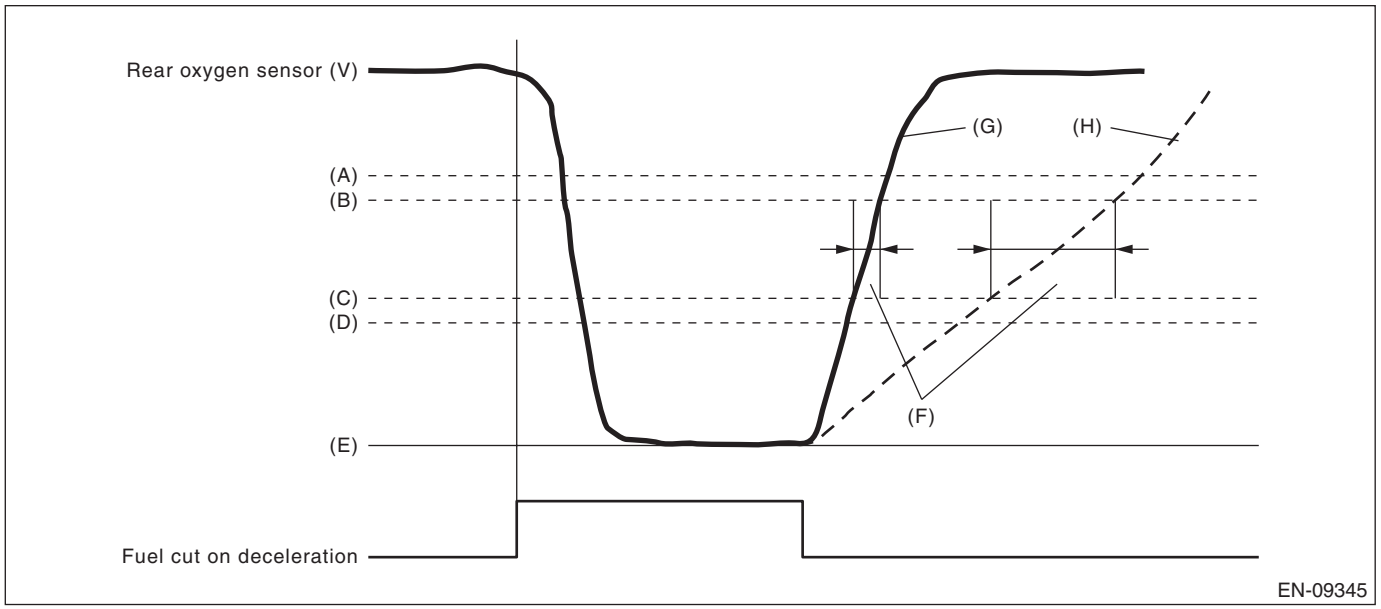

(A) 0.55 V
(B) 0.50 V
(C) 0.30 V
(D) 0.25 V
(E) 0 V
(F) Diagnostic parameter
(G) Normal
(H) Malfunction

- **Abnormality Judgment**

Judge as NG when the following conditions are established.

Judgment Value

Malfunction Criteria	Threshold Value
Time when rear oxygen sensor voltage changed from 0.3 V to 0.5 V.	> 4000 ms

Time Needed for Diagnosis: 10 seconds
Malfunction Indicator Light Illumination: Illuminates when malfunction occurs in 2 continuous driving cycles.

- **Normality Judgment**

Judge as OK and clear the NG if the following conditions are established.

Judgment Value

Malfunction Criteria	Threshold Value
Time when rear oxygen sensor voltage changed from 0.3 V to 0.5 V.	≤ 4000 ms

Time Needed for Diagnosis: 10 seconds

AL:DTC P013E O2 SENSOR DELAYED RESPONSE - RICH TO LEAN (BANK 1 SENSOR 2)

1. OUTLINE OF DIAGNOSIS

Detect the delayed response of rear oxygen sensor output for rich → lean.
After the deceleration fuel cut has started, detect the trouble by calculating the time when the rear oxygen sensor output decreases to the predetermined voltages.
Judge as NG when the response time is larger than the threshold value.

2. COMPONENT DESCRIPTION

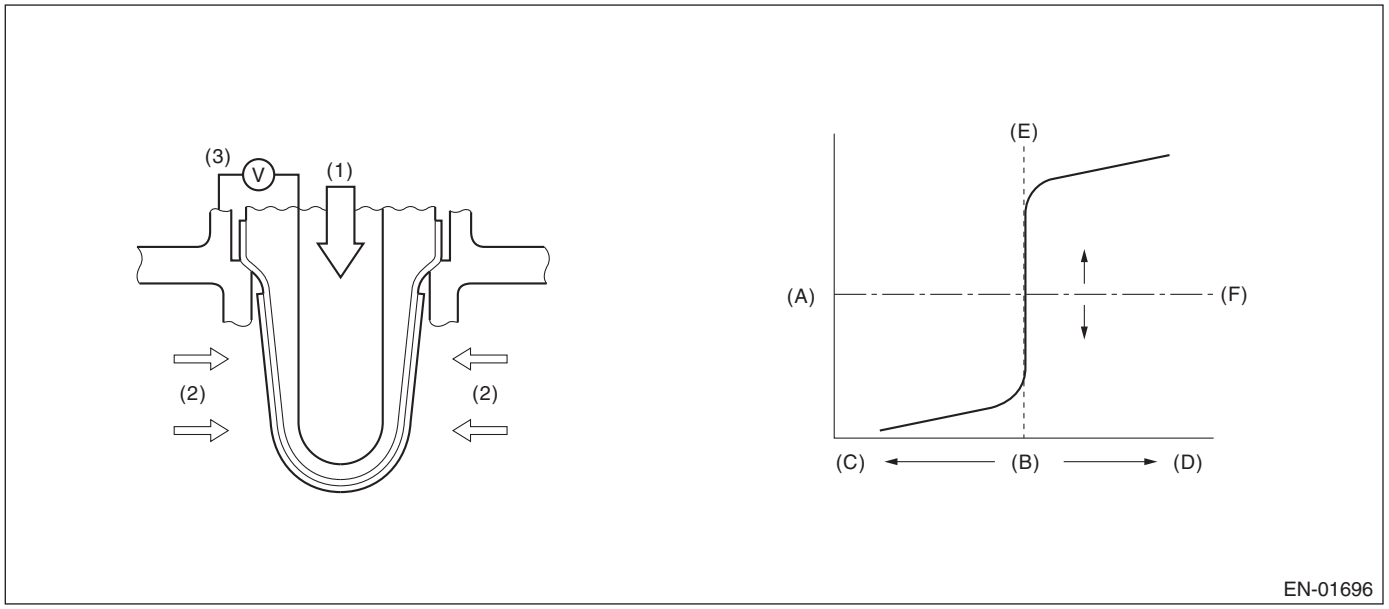

(A) Electromotive force
(B) Air fuel ratio
(C) Rich
(D) Lean
(E) Theoretical air fuel ratio
(F) Comparative voltage

(1) Atmosphere
(2) Exhaust gas
(3) Electromotive force

3. ENABLE CONDITIONS

Secondary Parameters	Enable Conditions
Battery voltage	> 10.9 V
Rear oxygen sensor closed loop control	Operation
Engine speed when fuel cut starts	≥ 1700 rpm
Rear oxygen sensor voltage when fuel cut starts	≥ 0.55 V
Fuel cut time	≥ 5000 ms
Engine coolant temperature when fuel cut starts	≥ 72 °C (161.6 °F)
Estimated temperature of rear oxygen sensor element when fuel cut starts	≥ 450 °C (842 °F)

4. GENERAL DRIVING CYCLE

Perform diagnosis once during deceleration fuel cut from a constant and high speed driving, when rear oxygen sensor is warmed up sufficiently.

5. DIAGNOSTIC METHOD

Detect the trouble by calculating the time from the beginning of the fuel cut to the beginning of the rear oxygen sensor voltage starting to drop.

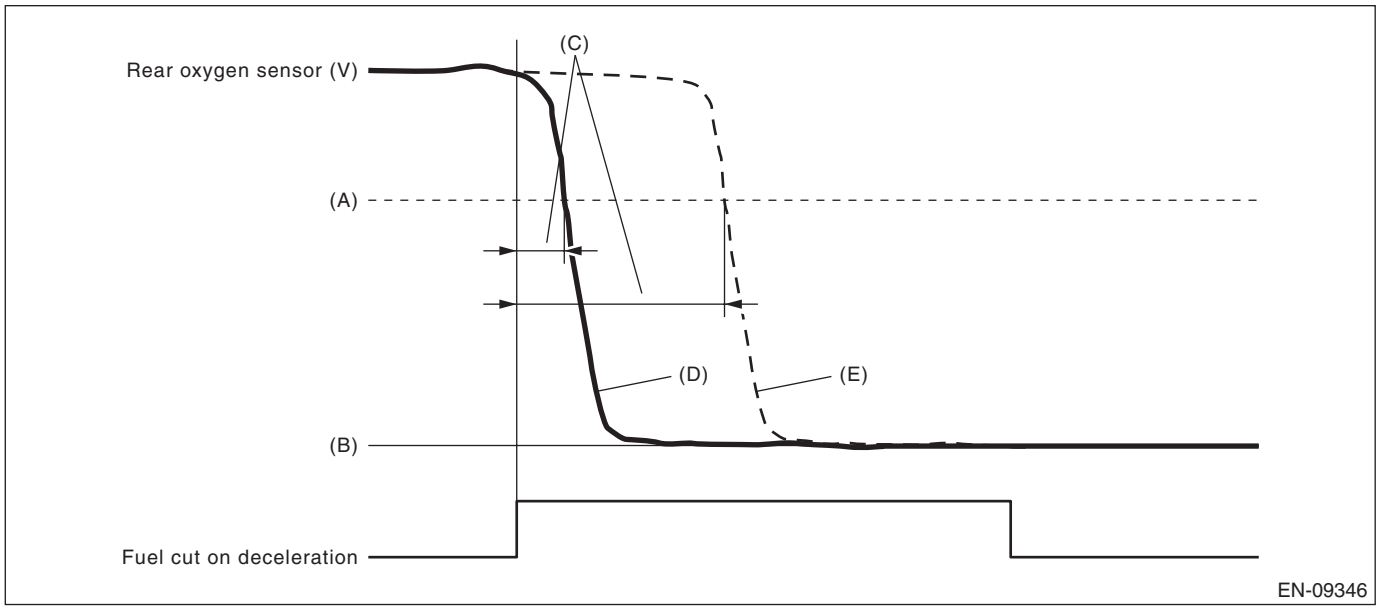

(A) 0.5 V
(B) 0 V
(C) Diagnostic parameter
(D) Normal
(E) Malfunction

• Abnormality Judgment

Judge as NG when the following conditions are established.

Judgment Value

Malfunction Criteria	Threshold Value
Time when rear oxygen sensor voltage changed to 0.5 V after the fuel cut started.	> 4000 ms

Time Needed for Diagnosis: 10 seconds
Malfunction Indicator Light Illumination: Illuminates when malfunction occurs in 2 continuous driving cycles.

• Normality Judgment

Judge as OK and clear the NG if the following conditions are established.

Judgment Value

Malfunction Criteria	Threshold Value
Time when rear oxygen sensor voltage changed to 0.5 V after the fuel cut started.	≤ 4000 ms

Time Needed for Diagnosis: 10 seconds

AM:DTC P013F O2 SENSOR DELAYED RESPONSE - LEAN TO RICH (BANK 1 SENSOR 2)

1. OUTLINE OF DIAGNOSIS

Detect the delayed response of rear oxygen sensor output for lean → rich.
After the deceleration fuel cut has completed, detect the trouble by calculating the time when the rear oxygen sensor output increases to the predetermined voltages.
Judge as NG when the response time is larger than the threshold value.

2. COMPONENT DESCRIPTION

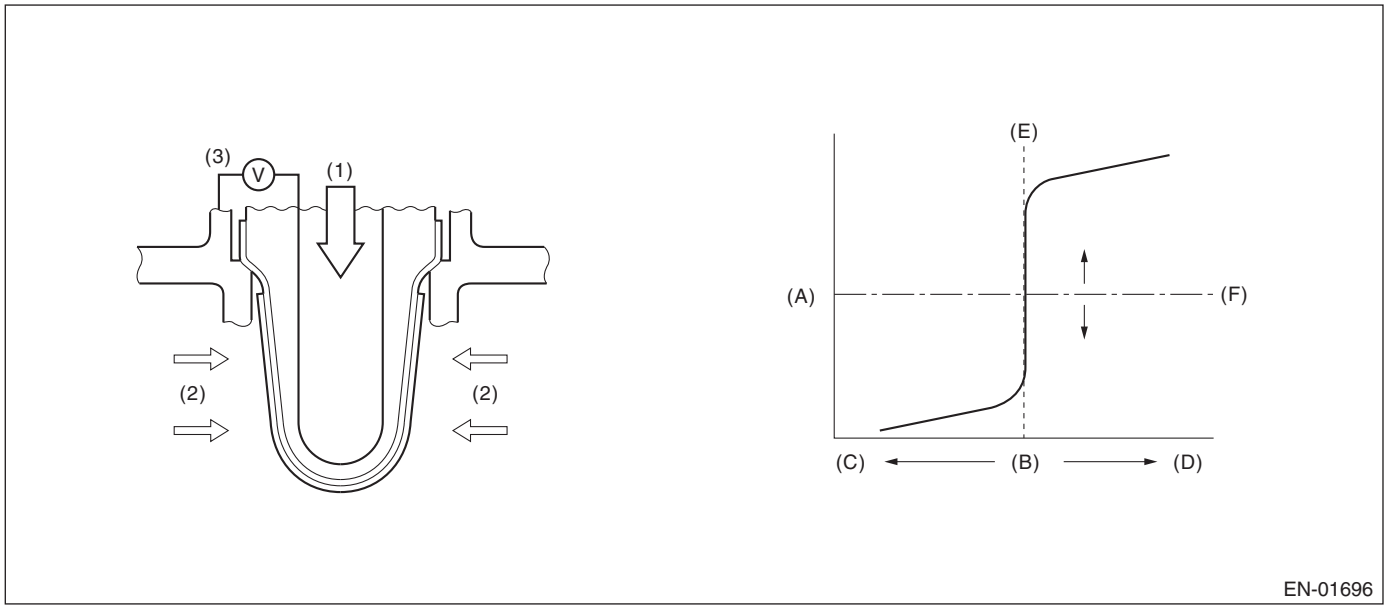

(A)	Electromotive force	(B)	Air fuel ratio	(C)	Rich
(D)	Lean	(E)	Theoretical air fuel ratio	(F)	Comparative voltage
(1)	Atmosphere	(2)	Exhaust gas	(3)	Electromotive force

3. ENABLE CONDITIONS

Secondary Parameters	Enable Conditions
Battery voltage	> 10.9 V
Rear oxygen sensor closed loop control	Operation
Engine speed	≥ 500 rpm
Rear oxygen sensor voltage when fuel cut has completed	< 0.15 V
Fuel cut time	≥ 5000 ms
Engine coolant temperature when fuel cut has completed	≥ 72 °C (161.6 °F)
Estimated element temperature of rear oxygen sensor when fuel cut has completed	≥ 450 °C (842 °F)

4. GENERAL DRIVING CYCLE

Perform diagnosis only once when recovering from the deceleration fuel cut continued for more than predetermined time with the rear oxygen sensor warmed up sufficiently.

5. DIAGNOSTIC METHOD

Detect the trouble by calculating the time from the completion of the fuel cut to the beginning of the rear oxygen sensor voltage starting to rise.

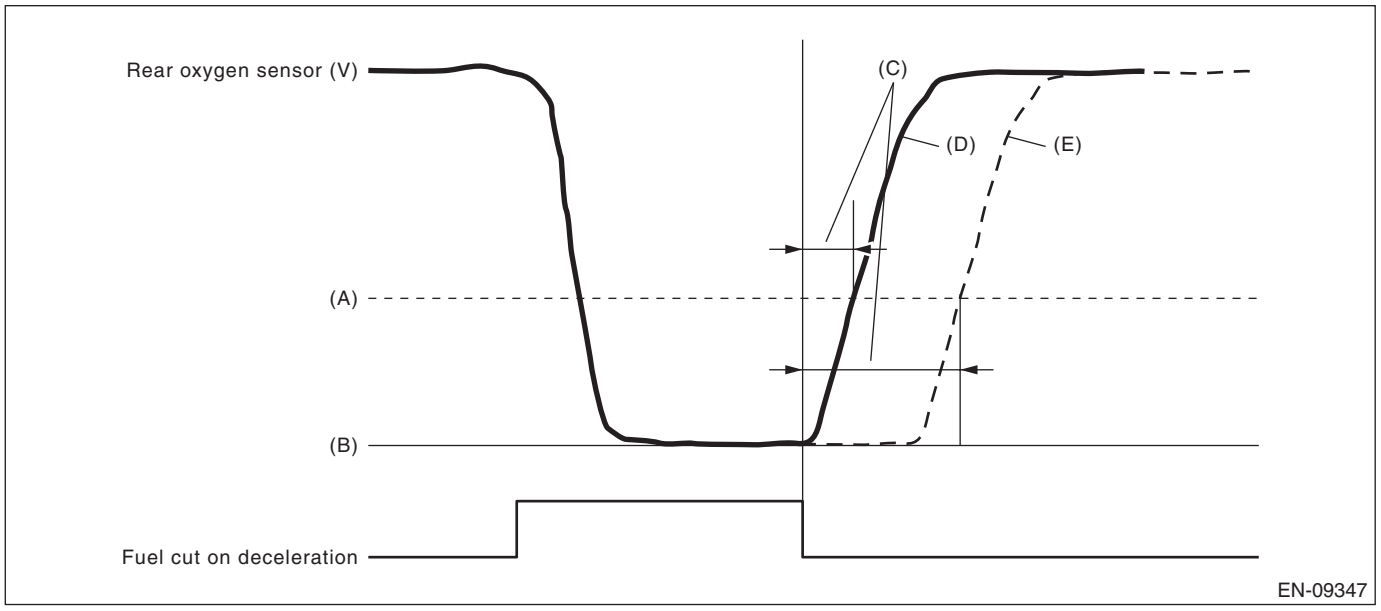

(A) 0.3 V
(B) 0 V
(C) Diagnostic parameter
(D) Normal
(E) Malfunction

• Abnormality Judgment

Judge as NG when the following conditions are established.

Judgment Value

Malfunction Criteria	Threshold Value
The number of times that the rear oxygen sensor voltage changed to 0.3 V after the fuel cut has completed (time counter)	> 3750 time(s)

Time Needed for Diagnosis: 10 seconds
Malfunction Indicator Light Illumination: Illuminates when malfunction occurs in 2 continuous driving cycles.

• Normality Judgment

Judge as OK and clear the NG if the following conditions are established.

Judgment Value

Malfunction Criteria	Threshold Value
The number of times that the rear oxygen sensor voltage changed to 0.3 V after the fuel cut has completed (time counter)	≤ 3750 time(s)

Time Needed for Diagnosis: 10 seconds

AN:DTC P0140 O2 SENSOR CIRCUIT NO ACTIVITY DETECTED (BANK1 SENSOR2)

1. OUTLINE OF DIAGNOSIS

Detect the rear oxygen sensor open or short circuit. Judge as NG when the rear oxygen sensor voltage can be determined to be abnormal considering conditions such as intake air amount, engine coolant temperature, main feedback control and deceleration fuel cut.

2. COMPONENT DESCRIPTION

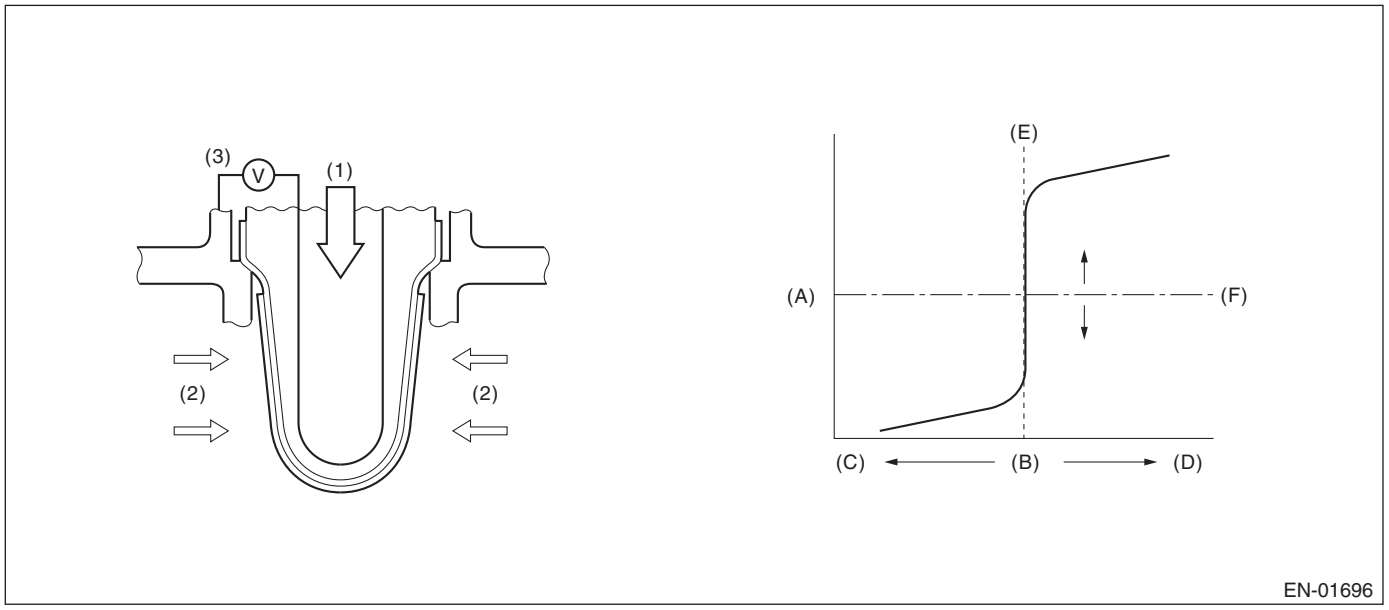

(A) Electromotive force
(B) Air fuel ratio
(C) Rich
(D) Lean
(E) Theoretical air fuel ratio
(F) Comparative voltage

(1) Atmosphere
(2) Exhaust gas
(3) Electromotive force

3. ENABLE CONDITION (USED ONLY FOR MALFUNCTION JUDGMENT)

Secondary Parameters	Enable Conditions
Closed loop control at the rear oxygen sensor	In operation
Target output voltage of rear oxygen sensor	≥ 0.55 V + 0.05 V
Amount of intake air	≥ 10 g/s (0.35 oz/s)
Engine coolant temperature	≥ 72 °C (161.6 °F)
Misfire detection every 200 rotations	< 65535 time(s)
Front oxygen (A/F) sensor compensation coefficient	Not in limit value
Battery voltage	≥ 10.9 V
Deceleration fuel cut of 5000 ms or more.	Experienced

4. GENERAL DRIVING CYCLE

Perform the diagnosis once after starting the engine.

5. DIAGNOSTIC METHOD

• Abnormality Judgment

If the duration of time while the following conditions are met is longer than the time indicated, judge as NG.

Judgment Value

Malfunction Criteria	Threshold Value
Minimum output voltage	> 0.15 V
or	
Maximum output voltage	< 0.55 V

Time Needed for Diagnosis: 200000 ms
Malfunction Indicator Light Illumination: Illuminates when malfunction occurs in 2 continuous driving cycles.

• Normality Judgment

Judge as OK and clear the NG if the following conditions are established.

Judgment Value

Malfunction Criteria	Threshold Value
Diagnosis of the rear oxygen sensor voltage low side	Incomplete
Minimum output voltage	≤ 0.15 V
Maximum output voltage	≥ 0.55 V

AO:DTC P0141 O2 SENSOR HEATER CIRCUIT (BANK1 SENSOR2)

1. OUTLINE OF DIAGNOSIS

Detect the malfunction of rear oxygen sensor heater.
While observing the engine condition, judge as NG if the rear oxygen sensor impedance is great.

2. COMPONENT DESCRIPTION

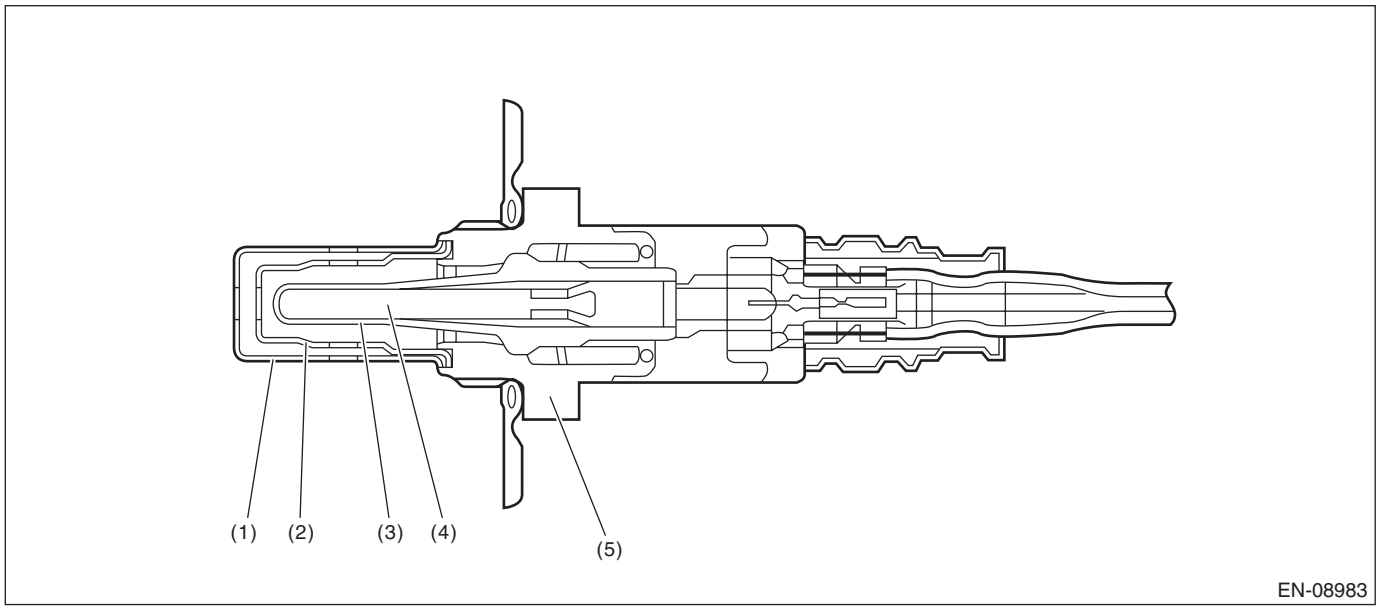

(1) Element cover (outer)
(2) Element cover (inner)
(3) Sensor element
(4) Ceramic heater
(5) Sensor housing

3. ENABLE CONDITIONS

Secondary Parameters	Enable Conditions
Battery voltage	≥ 10.9 V
Elapsed time after starting the engine	≥ 1000 ms
Engine coolant temperature	≥ 72 °C (161.6 °F)
A/F sensor element impedance	≤ 50 Ω
A/F sensor heater control duty	≤ 75 %
Rear oxygen sensor heater control duty	< 70 %

4. GENERAL DRIVING CYCLE

Perform the diagnosis continuously after 1000 ms seconds or more have passed since the engine started.

5. DIAGNOSTIC METHOD

• Abnormality Judgment

If the duration of time while the following conditions are met is longer than the time indicated, judge as NG.

Judgment Value

Malfunction Criteria	Threshold Value
Output terminal for heater characteristics failure detection	Low

Time Needed for Diagnosis: 4 ms × 2500 time(s)
Malfunction Indicator Light Illumination: Illuminates when malfunction occurs in 2 continuous driving cycles.

• Normality Judgment

Judge as OK and clear the NG if the continuous time while the following conditions are established is more than the predetermined time.

Judgment Value

Malfunction Criteria	Threshold Value
Output terminal for heater characteristics failure detection	High

Time Needed for Diagnosis: 4 ms × 2500 time(s)

AP:DTC P0171 SYSTEM TOO LEAN (BANK 1)

1. OUTLINE OF DIAGNOSIS

Detect fuel system malfunction by the amount of main feedback control.

DIAGNOSTIC METHOD

Fuel system is diagnosed by comparing the target air fuel ratio calculated by ECM with the actual air fuel ratio measured by sensor.

2. ENABLE CONDITION

Secondary Parameters	Enable Conditions
A/F main learning system	In operation
Engine coolant temperature	≥ 72 °C (161.6 °F)
Engine load change	< 0.02 g/rev (0 oz/rev)
Engine load	≥ Value of Map 1

Map 1

Engine speed (rpm)	Idling	700	1200	1600	2000	2400	2800	3200	3600	4000	4400
Measured value (g (oz)/rev)	na	0.230 (0.01)	0.217 (0.01)	0.213 (0.01)	0.210 (0.01)	0.210 (0.01)	0.220 (0.01)	0.223 (0.01)	0.240 (0.01)	0.252 (0.01)	0.261 (0.01)

3. GENERAL DRIVING CYCLE

Perform the diagnosis continuously at idling or at a constant speed after warming up the engine.

4. DIAGNOSTIC METHOD

• Abnormality Judgment

Compare the diagnostic value (fsobd) with the threshold value, and if a condition meeting the malfunction criteria below continues for 10 s × 5 time(s) or more, judge that there is a fault in the fuel system.

Judgment Value

Malfunction Criteria	Threshold Value
fsobd = (sglmd – tglmda) + faf + flaf In this case: sglmd = measured lambda tglmda = target lambda faf = main feedback compensation coefficient (every 64 milliseconds) flaf = main feedback learning compensation coefficient	≥ Value from Map 2

Map 2

Amount of air (g (oz)/s)	0 (0)	2.34375 (0.08)	4.6875 (0.17)	7.03125 (0.25)	9.375 (0.33)	11.71875 (0.41)	14.0625 (0.5)
fsobdL1 (%)	1.4	1.4	1.368623	1.319185	1.26975	1.265	1.265

Time Needed for Diagnosis: 10 s × 5 time(s)
Malfunction Indicator Light Illumination: Illuminates when malfunction occurs in 2 continuous driving cycles.

• Normality Judgment

Judge as OK and clear the NG if the continuous time while the following conditions are established is more than the predetermined time.

Judgment Value

Malfunction Criteria	Threshold Value
fsobd = (sglmd – tglmda) + faf + flaf	< 1.15

Time Needed for Diagnosis: 10 s

AQ:DTC P0172 SYSTEM TOO RICH (BANK 1)

1. OUTLINE OF DIAGNOSIS

Detect fuel system malfunction by the amount of main feedback control.

Diagnostic method

Fuel system is diagnosed by comparing the target air fuel ratio calculated by ECM with the actual air fuel ratio measured by sensor.

2. ENABLE CONDITION

Secondary Parameters	Enable Conditions
A/F main learning system	In operation
Engine coolant temperature	≥ 72 °C (161.6 °F)
Engine load change	≤ 0.02 g/rev (0 oz/rev)
Learning value of EVAP conc.	< 0.2
Cumulative time of canister purge after engine start	≥ 20 s
Continuous period after canister purge starting	≥ 5000 ms
Engine load	≥ Value of Map 1

Map 1

Engine speed (rpm)	Idling	700	1200	1600	2000	2400	2800	3200	3600	4000	4400
Measured value (g (oz)/rev)	na	0.230 (0.01)	0.217 (0.01)	0.213 (0.01)	0.210 (0.01)	0.210 (0.01)	0.220 (0.01)	0.223 (0.01)	0.240 (0.01)	0.252 (0.01)	0.261 (0.01)

3. GENERAL DRIVING CYCLE

Perform the diagnosis continuously at idling or at a constant speed after warming up the engine.

4. DIAGNOSTIC METHOD

• Abnormality Judgment

Compare the diagnostic value (fsobd) with the threshold value, and if a condition meeting the malfunction criteria below continues for 10 s × 5 time(s) or more, judge that there is a fault in the fuel system.

Judgment Value

Malfunction Criteria	Threshold Value
fsobd = (sglmd – tglmda) + faf + flaf In this case: sglmd = measured lambda tglmda = target lambda faf = main feedback compensation coefficient (every 64 milliseconds) flaf = main feedback learning compensation coefficient	< Value of Map 2

Map 2

Amount of air (g (oz)/s)	0 (0)	2.34375 (0.08)	4.6875 (0.17)	7.03125 (0.25)	9.375 (0.33)	11.71875 (0.41)	14.0625 (0.5)
fsobdL1 (%)	0.6	0.6	0.63137	0.68082	0.71025	0.72525	0.73025

Time Needed for Diagnosis: 10 s × 5 time(s)
Malfunction Indicator Light Illumination: Illuminates when malfunction occurs in 2 continuous driving cycles.

• Normality Judgment

Judge as OK if the status that the criteria below are met continues for 10 seconds.

Judgment Value

Malfunction Criteria	Threshold Value
fsobd = (sglmd – tglmda) + faf + flaf	≥ 0.85

Time Needed for Diagnosis: 10 s

AR:DTC P0181 FUEL TEMPERATURE SENSOR “A” CIRCUIT RANGE/PERFORMANCE

1. OUTLINE OF DIAGNOSIS

Detect faults in the fuel temperature sensor output properties.
Diagnosis is performed in two methods (drift diagnosis and stuck diagnosis). If either is NG, judge as NG. If both are OK, Judge as OK and clear the NG.

Drift Diagnosis

Normally fuel temperature is lower than engine coolant temperature. When the fuel temperature becomes higher than the engine coolant temperature, the range is considered to be shifted, and judged as NG.

Stuck Diagnosis

As the engine warms up (cumulative amount of intake air after starting is large), if the fuel temperature which should rise does not, determine as being stuck and NG.

2. COMPONENT DESCRIPTION

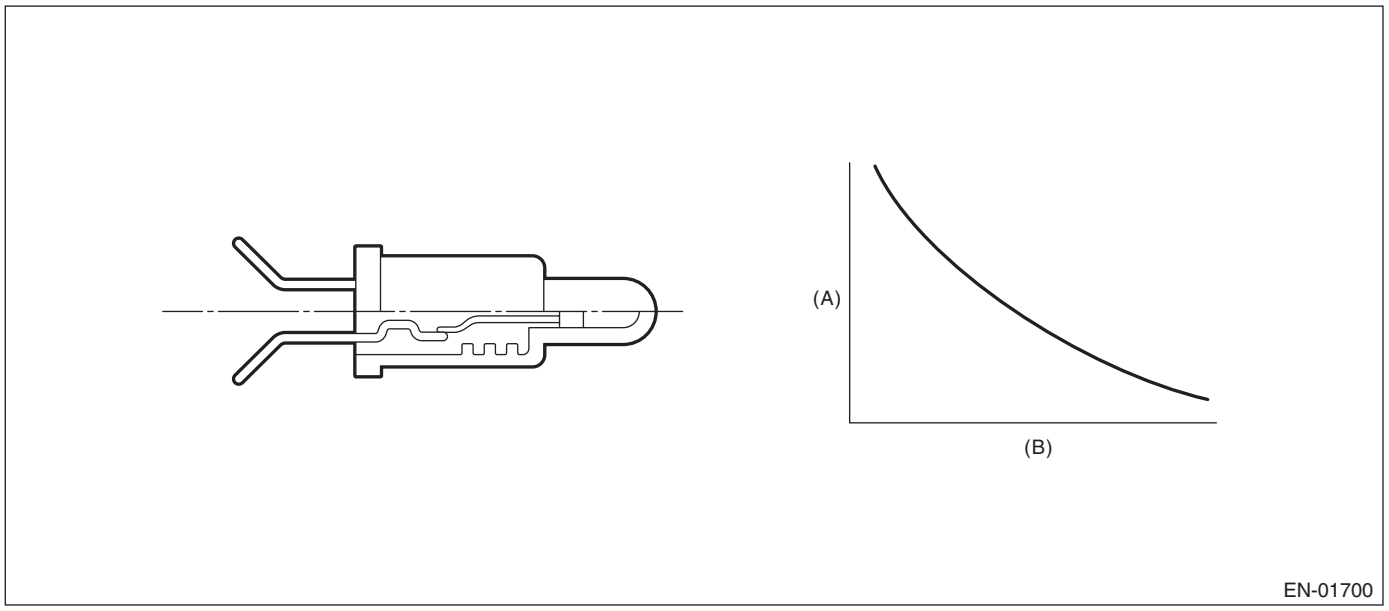

(A) Resistance value (Ω) (B) Fuel temperature °C (°F)

3. ENABLE CONDITION

DRIFT DIAGNOSIS

Secondary Parameters	Enable Conditions
None	

4. GENERAL DRIVING CYCLE

Always perform the diagnosis continuously.

5. DIAGNOSTIC METHOD

• Abnormality Judgment

If the duration of time while the following conditions are met is longer than the time indicated, judge as NG.

Judgment Value

Malfunction Criteria	Threshold Value
Fuel level	≥ 10.5 ℓ (2.77 US gal, 2.31 Imp gal)
Elapsed time after starting the engine	≥ 20 s
Engine coolant temperature – Engine coolant temperature at engine start	> 10 °C (18°F)
Fuel temperature – Engine coolant temperature	≥ 10 °C (18°F)
Battery voltage	≥ 10.9 V

Time Needed for Diagnosis: 120 s
Malfunction Indicator Light Illumination: Illuminates when malfunction occurs in 2 continuous driving cycles.

• Normality Judgment

Judge as OK and clear the NG if the continuous time while the following conditions are established is more than the predetermined time.

Judgment Value

Malfunction Criteria	Threshold Value
Fuel level	≥ 10.5 ℓ (2.77 US gal, 2.31 Imp gal)
Elapsed time after starting the engine	≥ 20 s
Engine coolant temperature – Engine coolant temperature at engine start	> 10 °C (18°F)
Fuel temperature – Engine coolant temperature	< 10 °C (18°F)
Battery voltage	≥ 10.9 V
Engine coolant temperature	< 70 °C (158 °F)

Time Needed for Diagnosis: Less than 1 second

6. ENABLE CONDITION

Stuck Diagnosis

Secondary Parameters	Enable Conditions
Elapsed time after starting the engine	≥ 20000 ms
Battery voltage	≥ 10.9 V

7. GENERAL DRIVING CYCLE

Perform the diagnosis continuously 20 seconds after starting engine.

8. DIAGNOSTIC METHOD

- **Abnormality Judgment**

Judge as NG when the following conditions are established.

Judgment Value

Malfunction Criteria	Threshold Value
Accumulated amount of intake air	≥ 551043 g (19435.29 oz)
Fuel temperature difference between Max. and Min.	< 2 °C (3.6°F)

Time Needed for Diagnosis: Less than 1 second
Malfunction Indicator Light Illumination: Illuminates when malfunction occurs in 2 continuous driving cycles.

- **Normality Judgment**

Judge as OK and clear the NG if the following conditions are established.

Judgment Value

Malfunction Criteria	Threshold Value
Fuel temperature difference between Max. and Min.	≥ 2 °C (3.6°F)

Time Needed for Diagnosis: Less than 1 second

AS:DTC P0182 FUEL TEMPERATURE SENSOR “A” CIRCUIT LOW INPUT

1. OUTLINE OF DIAGNOSIS

Detect the open or short circuit of fuel temperature sensor.
Judge as NG if out of specification.

2. COMPONENT DESCRIPTION

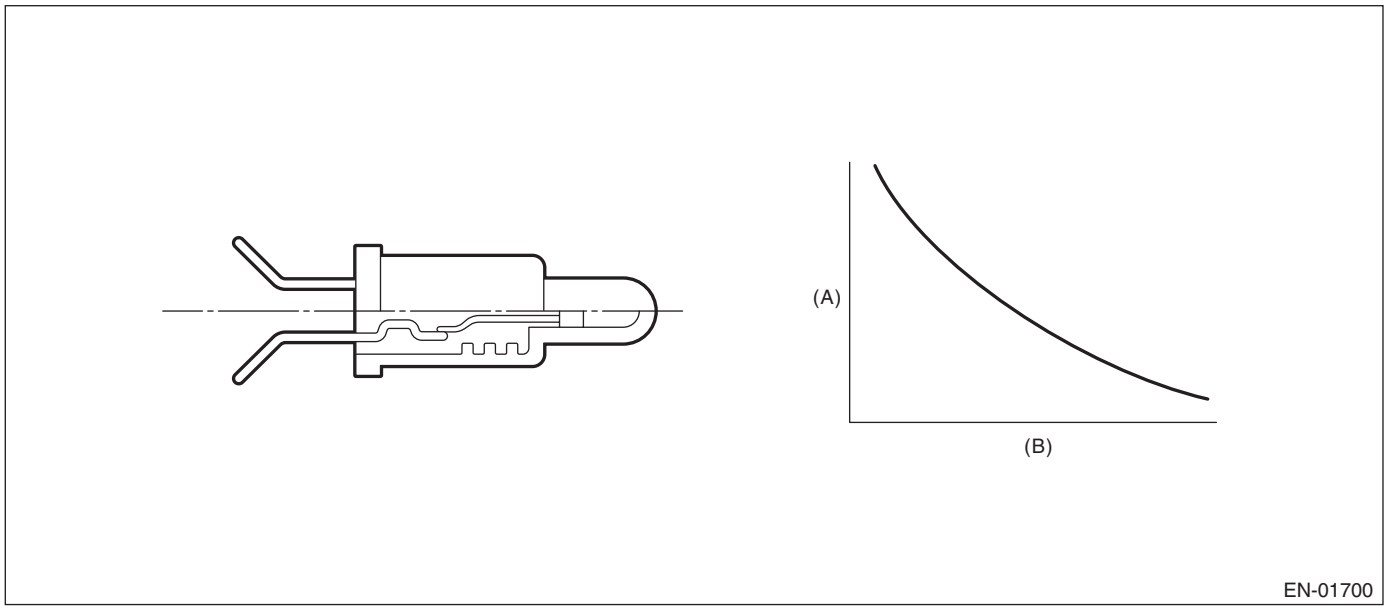

(A) Resistance value (Ω) (B) Fuel temperature °C (°F)

3. ENABLE CONDITION

Secondary Parameters	Enable Conditions
None	

4. GENERAL DRIVING CYCLE

Always perform the diagnosis continuously.

5. DIAGNOSTIC METHOD

• Abnormality Judgment

If the duration of time while the following conditions are met is longer than the time indicated, judge as NG.

Judgment Value

Malfunction Criteria	Threshold Value
Output voltage	< 0.344 V
Battery voltage	≥ 10.9 V

Time Needed for Diagnosis: 2500 ms
Malfunction Indicator Light Illumination: Illuminates as soon as a malfunction occurs.

• Normality Judgment

Judge as OK and clear the NG if the continuous time while the following conditions are established is more than the predetermined time.

Judgment Value

Malfunction Criteria	Threshold Value
Output voltage	≥ 0.344 V
Battery voltage	≥ 10.9 V

Time Needed for Diagnosis: Less than 1 second

AT:DTC P0183 FUEL TEMPERATURE SENSOR “A” CIRCUIT HIGH INPUT

1. OUTLINE OF DIAGNOSIS

Detect the open or short circuit of fuel temperature sensor.
Judge as NG if out of specification.

2. COMPONENT DESCRIPTION

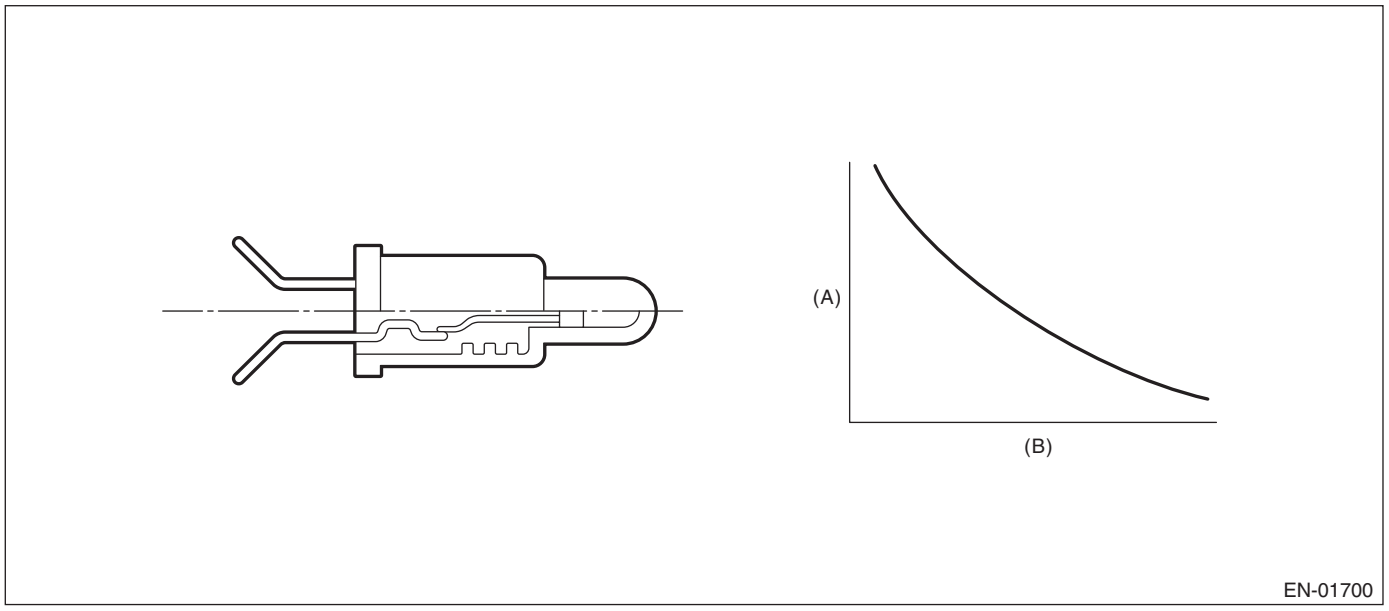

(A) Resistance value (Ω) (B) Fuel temperature °C (°F)

3. ENABLE CONDITION

Secondary Parameters	Enable Conditions
None	

4. GENERAL DRIVING CYCLE

Always perform the diagnosis continuously.

5. DIAGNOSTIC METHOD

- **Abnormality Judgment**

If the duration of time while the following conditions are met is longer than the time indicated, judge as NG.

Judgment Value

Malfunction Criteria	Threshold Value
Output voltage	≥ 4.714 V
Battery voltage	≥ 10.9 V

Time Needed for Diagnosis: 2500 ms
Malfunction Indicator Light Illumination: Illuminates as soon as a malfunction occurs.

- **Normality Judgment**

Judge as OK and clear the NG if the continuous time while the following conditions are established is more than the predetermined time.

Judgment Value

Malfunction Criteria	Threshold Value
Output voltage	< 4.714 V
Battery voltage	≥ 10.9 V

Time Needed for Diagnosis: Less than 1 second

AU:DTC P0201 INJECTOR #1

1. OUTLINE OF DIAGNOSIS

Based on the self-diagnostic result of the injector driving IC, judge the injector driving circuit as normal or abnormal.
Injector driving IC detects the status of “fuel remains injected” or “fuel is not injected” as a malfunction.

2. ENABLE CONDITIONS

Secondary Parameters	Enable Conditions
Battery voltage	≥ 10.9 V
Elapsed time after starting the engine	> 1 s
Engine speed	> 500 rpm
Injection time	≥ 1000 μs and < 120000000/engine speed – 1000 μs
Injection status	Not during fuel cut and Not during asynchronous injection controlled by crankshaft position sensor

3. GENERAL DRIVING CYCLE

Always perform the diagnosis continuously.

4. DIAGNOSTIC METHOD

- **Abnormality Judgment**

Judge as NG when the following conditions are established.

Judgment Value

Malfunction Criteria	Threshold Value
Injector driving IC information	Malfunction

Time Needed for Diagnosis: 2500 ms
Malfunction Indicator Light Illumination: Illuminates as soon as a malfunction occurs.

- **Normality Judgment**

Judge as OK and clear the NG if the following conditions are established.

Judgment Value

Malfunction Criteria	Threshold Value
Injector driving IC information	Normal

Time Needed for Diagnosis: Less than 1 second

AV:DTC P0202 INJECTOR #2

1. OUTLINE OF DIAGNOSIS

NOTE:
For the detection standard, refer to DTC P0201. <Ref. to GD(H4DOTC)-97, DTC P0201 INJECTOR #1, Diagnostic Trouble Code (DTC) Detecting Criteria.>

AW:DTC P0203 INJECTOR #3

1. OUTLINE OF DIAGNOSIS

NOTE:
For the detection standard, refer to DTC P0201. <Ref. to GD(H4DOTC)-97, DTC P0201 INJECTOR #1, Diagnostic Trouble Code (DTC) Detecting Criteria.>

AX:DTC P0204 INJECTOR #4

1. OUTLINE OF DIAGNOSIS

NOTE:
For the detection standard, refer to DTC P0201. <Ref. to GD(H4DOTC)-97, DTC P0201 INJECTOR #1, Diagnostic Trouble Code (DTC) Detecting Criteria.>

AY:DTC P0222 THROTTLE/PEDAL POSITION SENSOR/SWITCH “B” CIRCUIT LOW

1. OUTLINE OF DIAGNOSIS

Detect the open or short circuit of throttle position sensor 2.
Judge as NG if out of specification.

2. COMPONENT DESCRIPTION

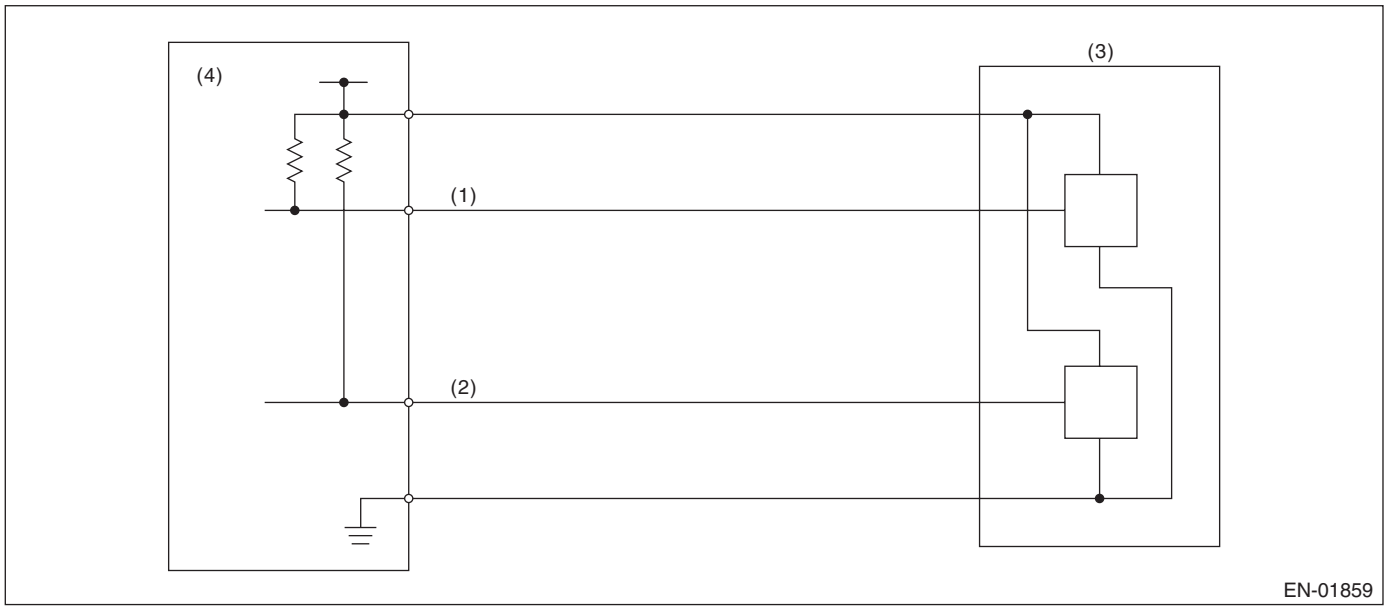

(1) Throttle position sensor 1 signal
(2) Throttle position sensor 2 signal
(3) Throttle position sensor
(4) Engine control module (ECM)

3. ENABLE CONDITION

Secondary Parameters	Enable Conditions
Ignition switch	ON
Battery voltage	≥ 6 V

4. GENERAL DRIVING CYCLE

Always perform the diagnosis continuously.

5. DIAGNOSTIC METHOD

- **Abnormality Judgment**

If the duration of time while the following conditions are met is longer than the time indicated, judge as NG.

Judgment Value

Malfunction Criteria	Threshold Value
Sensor 2 input voltage	≤ 1.07 V

Time Needed for Diagnosis: 24 ms
Malfunction Indicator Light Illumination: Illuminates as soon as a malfunction occurs.

- **Normality Judgment**

Judge as OK and clear the NG if the continuous time while the following conditions are established is more than the predetermined time.

Judgment Value

Malfunction Criteria	Threshold Value
Sensor 2 input voltage	> 1.07 V

Time Needed for Diagnosis: 24 ms

AZ:DTC P0223 THROTTLE/PEDAL POSITION SENSOR/SWITCH “B” CIRCUIT HIGH

1. OUTLINE OF DIAGNOSIS

Detect the open or short circuit of throttle position sensor 2.
Judge as NG if out of specification.

2. COMPONENT DESCRIPTION

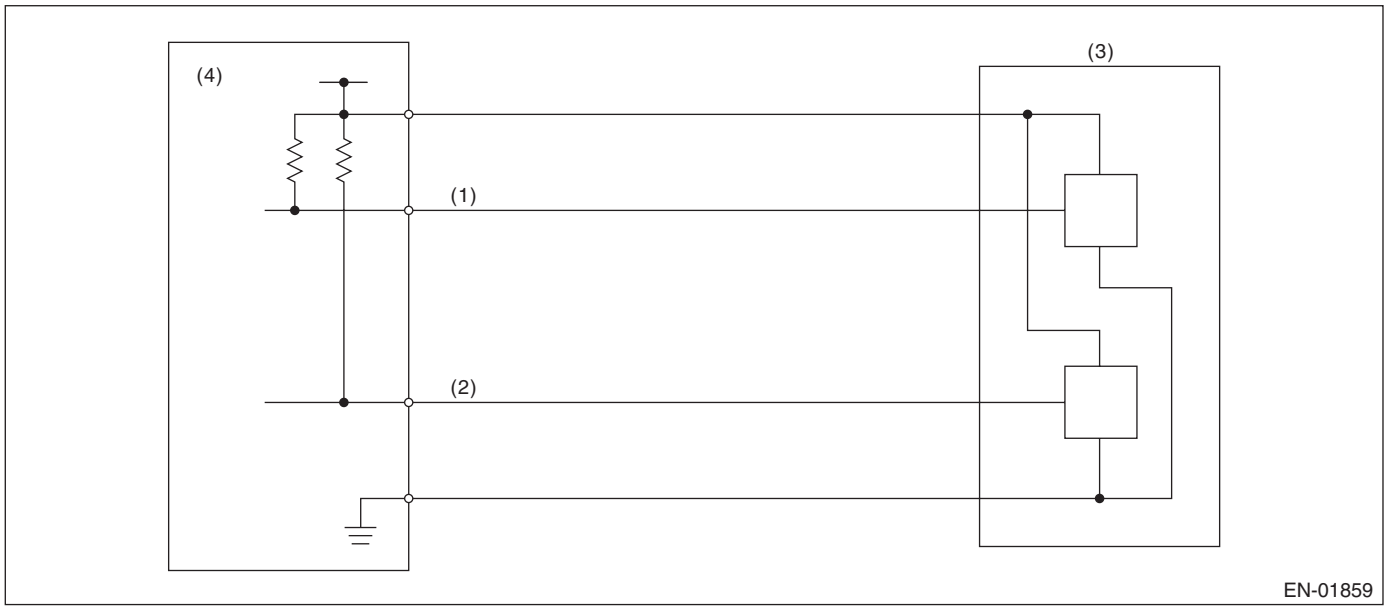

(1) Throttle position sensor 1 signal
(2) Throttle position sensor 2 signal
(3) Throttle position sensor
(4) Engine control module (ECM)

3. ENABLE CONDITION

Secondary Parameters	Enable Conditions
Ignition switch	ON
Battery voltage	≥ 6 V

4. GENERAL DRIVING CYCLE

Always perform the diagnosis continuously.

5. DIAGNOSTIC METHOD

- **Abnormality Judgment**

If the duration of time while the following conditions are met is longer than the time indicated, judge as NG.

Judgment Value

Malfunction Criteria	Threshold Value
Sensor 2 input voltage	≥ 4.858 V

Time Needed for Diagnosis: 24 ms
Malfunction Indicator Light Illumination: Illuminates as soon as a malfunction occurs.

- **Normality Judgment**

Judge as OK and clear the NG if the continuous time while the following conditions are established is more than the predetermined time.

Judgment Value

Malfunction Criteria	Threshold Value
Sensor 2 input voltage	< 4.858 V

Time Needed for Diagnosis: 24 ms

BA:DTC P0230 FUEL PUMP PRIMARY CIRCUIT

1. OUTLINE OF DIAGNOSIS

Detect the malfunction of fuel pump control unit.
Judge as NG when the NG signal is sent through a diagnostic line coming from the fuel pump control unit.
Fuel pump control unit detects the open or short circuit malfunction for each line, and then sends NG signals if one of them is found NG.

2. COMPONENT DESCRIPTION

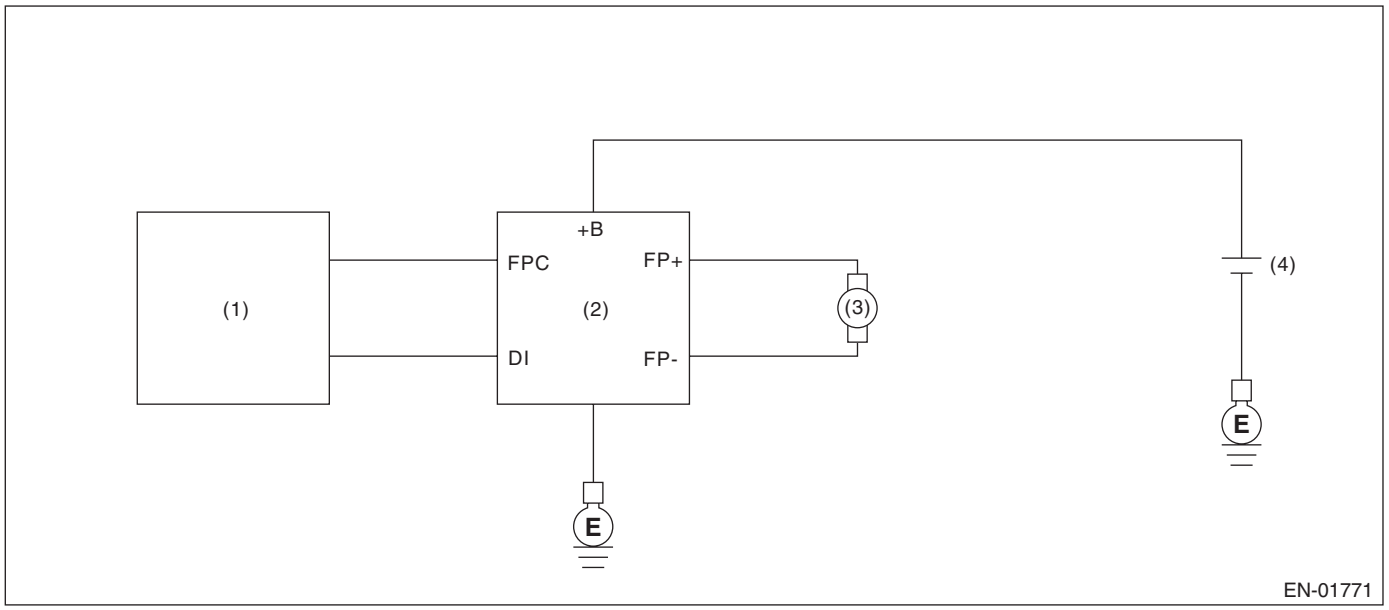

(1) Engine control module (ECM)
(2) Fuel pump control unit
(3) Fuel pump
(4) Battery

3. ENABLE CONDITION

Secondary Parameters	Enable Conditions
None	

4. GENERAL DRIVING CYCLE

Always perform the diagnosis continuously.

5. DIAGNOSTIC METHOD

• Abnormality Judgment

If the duration of time while the following conditions are met is longer than the time indicated, judge as NG.

Judgment Value

Malfunction Criteria	Threshold Value
Battery voltage	≥ 8 V
Elapsed time after starting the engine	≥ 180000 ms
Fuel pump control	ON
Fuel pump control unit output diagnosis signal	Low
Fuel level	≥ 10 ℓ (2.64 US gal, 2.2 Imp gal)

Time Needed for Diagnosis: 2500 ms
Malfunction Indicator Light Illumination: Illuminates when malfunction occurs in 2 continuous driving cycles.

• Normality Judgment

Judge as OK and clear the NG if the continuous time while the following conditions are established is more than the predetermined time.

Judgment Value

Malfunction Criteria	Threshold Value
Battery voltage	≥ 8 V
Elapsed time after starting the engine	≥ 180000 ms
Fuel pump control	ON
Fuel pump control unit output diagnosis signal	High
Fuel level	≥ 10 ℓ (2.64 US gal, 2.2 Imp gal)

Time Needed for Diagnosis: Less than 1 second

BB:DTC P0244 TURBO/SUPER CHARGER WASTEGATE SOLENOID “A” RANGE/PERFORMANCE

1. OUTLINE OF DIAGNOSIS

Detect the malfunction of wastegate control solenoid valve function.
Judge as NG when becoming high wastegate pressure.

2. COMPONENT DESCRIPTION

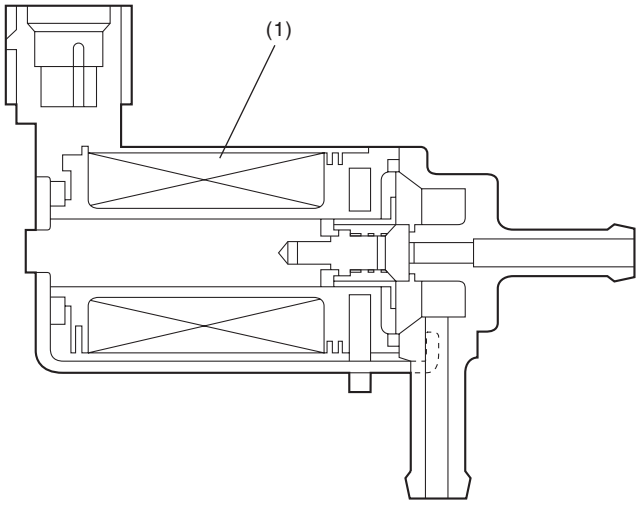

(1) Coil

3. ENABLE CONDITIONS

Secondary Parameters	Enable Conditions
None	

4. GENERAL DRIVING CYCLE

Always perform the diagnosis continuously.

5. DIAGNOSTIC METHOD

• Abnormality Judgment

If the duration of time while the following conditions are met is longer than the time indicated, judge as NG.

Judgment Value

Malfunction Criteria	Threshold Value
Intake manifold pressure	≥ Value from Map

Map

		Atmospheric pressure (kPa (mmHg, inHg))							
		64 (480, 18.9)	70.6 (530, 20.9)	77.3 (580, 22.8)	84 (630, 24.8)	90.6 (680, 26.8)	93.3 (700, 27.6)	96 (720, 28.3)	97.3 (730, 28.7)
Engine speed (rpm)	2000	194.6 (1460, 57.5)	194.6 (1460, 57.5)	194.6 (1460, 57.5)	194.6 (1460, 57.5)	194.6 (1460, 57.5)	194.6 (1460, 57.5)	194.6 (1460, 57.5)	194.6 (1460, 57.5)
	2400	197.3 (1480, 58.3)	197.3 (1480, 58.3)	197.3 (1480, 58.3)	197.3 (1480, 58.3)	197.3 (1480, 58.3)	197.3 (1480, 58.3)	197.3 (1480, 58.3)	197.3 (1480, 58.3)
	2800	197.3 (1480, 58.3)	197.3 (1480, 58.3)	197.3 (1480, 58.3)	197.3 (1480, 58.3)	197.3 (1480, 58.3)	197.3 (1480, 58.3)	197.3 (1480, 58.3)	197.3 (1480, 58.3)
	3200	193.9 (1454, 57.3)	194.7 (1461, 57.5)	195.6 (1467, 57.8)	196.4 (1474, 58)	197.3 (1480, 58.3)	197.3 (1480, 58.3)	197.3 (1480, 58.3)	197.3 (1480, 58.3)
	3600	188.3 (1413, 55.6)	190.9 (1432, 56.4)	193.5 (1451, 57.1)	196 (1471, 57.9)	198.6 (1490, 58.7)	198.6 (1490, 58.7)	198.6 (1490, 58.7)	198.6 (1490, 58.7)
	4000	182.6 (1370, 53.9)	187 (1403, 55.2)	191.3 (1435, 56.5)	195.6 (1468, 57.8)	200 (1500, 59.1)	200 (1500, 59.1)	200 (1500, 59.1)	200 (1500, 59.1)
	4400	172.2 (1292, 50.9)	178.3 (1338, 52.7)	184.4 (1383, 54.4)	190.4 (1429, 56.2)	196.5 (1474, 58)	198.2 (1487, 58.5)	200 (1500, 59.1)	200 (1500, 59.1)
	4800	161.8 (1214, 47.8)	169.6 (1273, 50.1)	177.4 (1331, 52.4)	185.2 (1390, 54.7)	193 (1448, 57)	196.5 (1474, 58)	200 (1500, 59.1)	200 (1500, 59.1)
	5200	155.2 (1164, 45.8)	164.9 (1237, 48.7)	174.7 (1311, 51.6)	184.4 (1384, 54.5)	194.2 (1457, 57.4)	198.6 (1490, 58.7)	203.1 (1523, 60)	203.9 (1530, 60.2)
	5600	149 (1118, 44)	160.8 (1206, 47.5)	172.6 (1295, 51)	184.4 (1383, 54.5)	196.2 (1472, 57.9)	200.7 (1506, 59.3)	205.2 (1540, 60.6)	207.9 (1560, 61.4)
	6000	138.3 (1038, 40.8)	151.7 (1138, 44.8)	165.1 (1239, 48.8)	178.5 (1339, 52.7)	191.9 (1440, 56.7)	196.4 (1473, 58)	200.8 (1507, 59.3)	205.3 (1540, 60.6)
	6400	137 (1028, 40.5)	150.3 (1128, 44.4)	163.5 (1227, 48.3)	176.8 (1326, 52.2)	190 (1426, 56.1)	194.5 (1459, 57.4)	198.9 (1492, 58.7)	203.3 (1525, 60)
kPa (mmHg, inHg)									

Time Needed for Diagnosis: 2000 ms
Malfunction Indicator Light Illumination: Illuminates as soon as a malfunction occurs.

• Normality Judgment

Judge as OK and clear the NG if the continuous time while the following conditions are established is more than the predetermined time.

Judgment Value

Malfunction Criteria	Threshold Value
Intake manifold pressure	< Value from Map – 20 kPa (150 mmHg, 5.9 inHg)

Time Needed for Diagnosis: Less than 1 second

BC:DTC P0245 TURBO/SUPER CHARGER WASTEGATE SOLENOID “A” LOW

1. OUTLINE OF DIAGNOSIS

Detect open or short circuit of the wastegate control solenoid valve.
Judge as NG when the terminal output voltage remains Low during outputting the duty signal.

2. COMPONENT DESCRIPTION

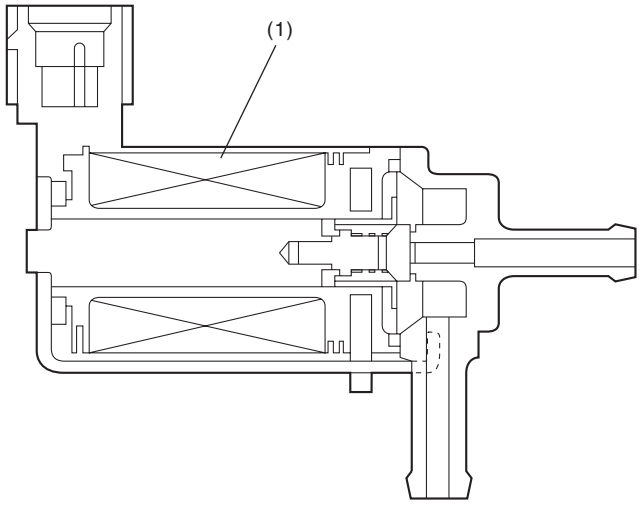

EN-01772

(1) Coil

3. ENABLE CONDITION

Secondary Parameters	Enable Conditions
Battery voltage	≥ 10.9 V
Elapsed time after starting the engine	≥ 1 second

4. GENERAL DRIVING CYCLE

Perform the diagnosis continuously after starting the engine.

5. DIAGNOSTIC METHOD

Abnormality Judgment

If the duration of time while the following conditions are met is longer than the time indicated, judge as NG.

Judgment Value

Malfunction Criteria	Threshold Value
Terminal output voltage	Low
Duty ratio of wastegate control	< 75%

Time Needed for Diagnosis: 4 ms × 640 ms
Malfunction Indicator Light Illumination: Illuminates as soon as a malfunction occurs.

Normality Judgment

Judge as OK and clear the NG if the continuous time while the following conditions are established is more than the predetermined time.

Judgment Value

Malfunction Criteria	Threshold Value
Terminal output voltage	High

Time Needed for Diagnosis: Less than 1 second

BD:DTC P0246 TURBO/SUPER CHARGER WASTEGATE SOLENOID “A” HIGH

1. OUTLINE OF DIAGNOSIS

Detect open or short circuit of the wastegate control solenoid valve.
Judge as NG when the terminal output voltage remains Low or High during outputting the duty signal.

2. COMPONENT DESCRIPTION

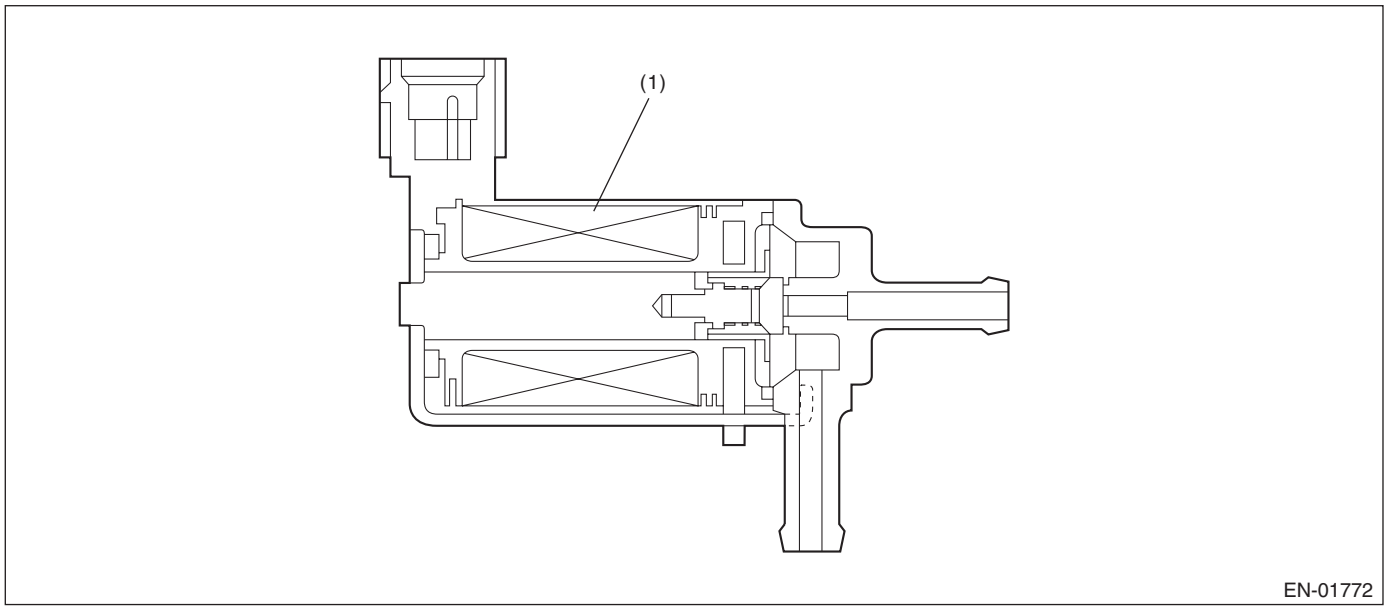

(1) Coil

3. ENABLE CONDITION

Secondary Parameters	Enable Conditions
Battery voltage	≥ 10.9 V
Elapsed time after starting the engine	≥ 1 second

4. GENERAL DRIVING CYCLE

Perform the diagnosis continuously after starting the engine.

5. DIAGNOSTIC METHOD

Abnormality Judgment

If the duration of time while the following conditions are met is longer than the time indicated, judge as NG.

Judgment Value

Malfunction Criteria	Threshold Value
Terminal output voltage	High
Duty ratio of wastegate control	≥ 25%

Time Needed for Diagnosis: 4 ms × 640 ms
Malfunction Indicator Light Illumination: Illuminates as soon as a malfunction occurs.

Normality Judgment

Judge as OK and clear the NG if the continuous time while the following conditions are established is more than the predetermined time.

Judgment Value

Malfunction Criteria	Threshold Value
Terminal output voltage	Low

Time Needed for Diagnosis: Less than 1 second

BE:DTC P0301 CYLINDER 1 MISFIRE DETECTED

1. OUTLINE OF DIAGNOSIS

Detect the presence of misfire occurrence. (Revolution fluctuation method)
Monitoring Misfire which influences exhaust deterioration (1.5 times of FTP) and catalyst damage is made obligatory by the law. Misfire affecting these two has two patterns below. :

- Intermittent misfire (The same cylinder misfires in random, or different cylinders misfire in random.): FTP 1.5 times misfire
- Every time misfire (The same cylinder misfires every time.): FTP 1.5 times misfire, Catalyst damage misfire

The following detecting methods are adopted for these detection.
1) Intermittent misfire: FTP 1.5 times misfire

- 180° Interval Difference Method
- 360° Interval Difference Method (whole range)
- 720° Interval Difference Method (3,000 rpm or more)

2) Misfire every time: FTP 1.5 times misfire, Catalyst damage misfire

- 360° Interval Difference Method

2. ENABLE CONDITION

Secondary Parameters	Enable Conditions
All secondary parameters enable conditions	≥ 1024 ms
Intake manifold pressure change at 180°CA	< Value of Map 1
Throttle position change during 16 milliseconds	< 14 °
Fuel shut-off function	Not in operation
Fuel level	≥ 10.5 ℓ (2.77 US gal, 2.31 Imp gal)
Vehicle dynamic control or AT torque control	Not in operation
Evaporative system leak check	Not in operation
Engine speed	550 rpm — 6700 rpm
Intake manifold pressure	≥ Value from Map 2
Battery voltage	≥ 8 V
Fuel parameter determination	Not extremely low volatility
Elapsed time after starting the engine	≥ 0 ms
Engine speed change during 32 milliseconds	< 1000 rpm

Map 1

rpm	700	6700
kPa (mmHg, inHg)	13.3 (100, 3.9)	13.3 (100, 3.9)

Map 2

- Normal ignition

		Barometric pressure (kPa (mmHg, inHg))						
		66.7 (500, 19.7)	76.6 (575, 22.6)	80 (600, 23.6)	84 (630, 24.8)	86.6 (650, 25.6)	92 (690, 27.2)	100.2 (752, 29.6)
Engine speed (rpm)	700	24.1 (180.6 , 7.1)	24.1 (180.6 , 7.1)	25.6 (191.7 , 7.5)	26.8 (200.7 , 7.9)	27 (202.5 , 8)	27.6 (207.4 , 8.2)	28 (210.0 , 8.3)
	1000	22.5 (168.5 , 6.6)	22.5 (168.5 , 6.6)	23.5 (176.6 , 7)	24.3 (182.6 , 7.2)	24.7 (185.3 , 7.3)	25.6 (192.0 , 7.6)	26.9 (201.5 , 7.9)
	1500	18.4 (137.7 , 5.4)	18.4 (137.7 , 5.4)	19 (142.2 , 5.6)	19.8 (148.4 , 5.8)	20.1 (150.5 , 5.9)	21.4 (160.8 , 6.3)	22.7 (170.1 , 6.7)
	2000	19 (142.2 , 5.6)	19 (142.2 , 5.6)	19.7 (147.9 , 5.8)	20.6 (154.7 , 6.1)	20.5 (154.0 , 6.1)	22 (165.4 , 6.5)	23.5 (176.0 , 6.9)
	2500	19.3 (145.1 , 5.7)	19.3 (145.1 , 5.7)	20.3 (152.6 , 6)	21.3 (159.6 , 6.3)	21.3 (160.0 , 6.3)	22.8 (171.0 , 6.7)	24.2 (181.5 , 7.1)
	3000	21.1 (158.2 , 6.2)	21.1 (158.2 , 6.2)	22.2 (166.4 , 6.6)	22.5 (169.1 , 6.7)	22.7 (170.2 , 6.7)	23.4 (175.3 , 6.9)	25.1 (188.1 , 7.4)
	3500	22.5 (168.5 , 6.6)	22.5 (168.5 , 6.6)	23.5 (176.2 , 6.9)	24.3 (182.1 , 7.2)	24.7 (185.0 , 7.3)	25.8 (193.3 , 7.6)	27.4 (205.4 , 8.1)
	4000	22.2 (166.7 , 6.6)	22.2 (166.7 , 6.6)	23.3 (174.7 , 6.9)	25.7 (193.0 , 7.6)	24.1 (180.5 , 7.1)	25.5 (191.2 , 7.5)	26.4 (198.4 , 7.8)
	4500	21 (157.9 , 6.2)	21 (157.9 , 6.2)	21.9 (164.2 , 6.5)	22.1 (165.9 , 6.5)	22.1 (165.9 , 6.5)	23.5 (176.0 , 6.9)	24.5 (183.8 , 7.2)
	5000	22.7 (170.5 , 6.7)	22.7 (170.5 , 6.7)	23.5 (176.1 , 6.9)	24.5 (183.8 , 7.2)	24.9 (187.0 , 7.4)	25.2 (188.7 , 7.4)	26.4 (197.9 , 7.8)
	5500	24.1 (181.0 , 7.1)	24.1 (181.0 , 7.1)	24.9 (186.8 , 7.4)	25.9 (194.5 , 7.7)	26.1 (196.1 , 7.7)	26.9 (201.7 , 7.9)	28.3 (212.5 , 8.4)
	6000	26.6 (199.6 , 7.9)	26.6 (199.6 , 7.9)	26.9 (202.0 , 8)	27.7 (208.1 , 8.2)	28 (210.1 , 8.3)	29.7 (223.0 , 8.8)	30 (225.3 , 8.9)
	6500	29.1 (218.4 , 8.6)	29.1 (218.4 , 8.6)	29.4 (220.7 , 8.7)	30.5 (229.0 , 9)	30.8 (230.7 , 9.1)	31.7 (237.6 , 9.4)	33.1 (248.6 , 9.8)
	6700	30.8 (230.9333333, 9.1)	30.8 (230.9333333, 9.1)	31.1 (233.1666667, 9.2)	32.4 (242.9333333, 9.6)	32.6 (244.4333333, 9.6)	33 (247.3333333, 9.7)	35.2 (264.1333333, 10.4)
kPa (mmHg, inHg)								

• Idling ignition

		Barometric pressure (kPa (mmHg, inHg))						
		66.7 (500, 19.7)	76.6 (575 , 22.6)	80 (600 , 23.6)	84 (630 , 24.8)	86.6 (650 , 25.6)	92 (690 , 27.2)	100.2 (752 , 29.6)
Engine speed (rpm)	700	24.1 (180.6 , 7.1)	24.1 (180.6 , 7.1)	25.6 (191.7 , 7.5)	26.8 (200.7 , 7.9)	27 (202.5 , 8)	27.6 (207.4 , 8.2)	28 (210.0 , 8.3)
	1000	24.3 (181.9 , 7.2)	24.3 (181.9 , 7.2)	25.2 (188.8 , 7.4)	25.9 (194.2 , 7.6)	27.1 (203.1 , 8)	27.5 (206.5 , 8.1)	29 (217.3 , 8.6)
	1500	20.7 (155.3 , 6.1)	20.7 (155.3 , 6.1)	21.6 (162.3 , 6.4)	22.5 (168.7 , 6.6)	22.9 (172.0 , 6.8)	23.8 (178.7 , 7)	25.1 (188.1 , 7.4)
	2000	20.8 (155.9 , 6.1)	20.8 (155.9 , 6.1)	21.3 (159.6 , 6.3)	22.7 (170.1 , 6.7)	23.2 (174.2 , 6.9)	25.4 (190.4 , 7.5)	25.6 (192.3 , 7.6)
	2500	22.7 (170.4 , 6.7)	22.7 (170.4 , 6.7)	22.9 (171.9 , 6.8)	23.3 (174.8 , 6.9)	23.8 (178.8 , 7)	25 (187.3 , 7.4)	26.3 (197.0 , 7.8)
	3000	22.2 (166.6 , 6.6)	22.2 (166.6 , 6.6)	23.1 (173.5 , 6.8)	23.5 (176.2 , 6.9)	23.7 (177.7 , 7)	25.1 (188.6 , 7.4)	26.2 (196.6 , 7.7)
	3500	28.4 (212.9 , 8.4)	28.4 (212.9 , 8.4)	29.5 (221.0 , 8.7)	30.9 (231.5 , 9.1)	31.4 (235.4 , 9.3)	32.2 (241.9 , 9.5)	33.8 (253.9 , 10)
	4000	27.6 (207.3 , 8.2)	27.6 (207.3 , 8.2)	28.8 (216.3 , 8.5)	29.9 (224.0 , 8.8)	30.3 (227.2 , 8.9)	31 (232.4 , 9.1)	32.8 (245.8 , 9.7)
	4500	24.7 (185.2 , 7.3)	24.7 (185.2 , 7.3)	26.2 (196.4 , 7.7)	26.5 (198.6 , 7.8)	26.6 (199.5 , 7.9)	27.8 (208.4 , 8.2)	28.7 (215.3 , 8.5)
	5000	26.7 (200.7 , 7.9)	26.7 (200.7 , 7.9)	27.4 (205.2 , 8.1)	29.4 (220.2 , 8.7)	28.7 (215.2 , 8.5)	30.2 (226.8 , 8.9)	31 (232.5 , 9.2)
	5500	27.8 (208.7 , 8.2)	27.8 (208.7 , 8.2)	28.6 (214.3 , 8.4)	30 (224.7 , 8.8)	30 (224.7 , 8.8)	31 (232.8 , 9.2)	32 (240.0 , 9.4)
	6000	28 (209.7 , 8.3)	28 (209.7 , 8.3)	29.3 (220.1 , 8.7)	31.3 (234.8 , 9.2)	31.4 (235.4 , 9.3)	32.9 (247.1 , 9.7)	33.3 (249.7 , 9.8)
	6500	32.1 (241.1 , 9.5)	32.1 (241.1 , 9.5)	33.8 (253.8 , 10)	35 (262.6 , 10.3)	35.7 (267.5 , 10.5)	37.3 (280.2 , 11)	37.2 (279.4 , 11)
	6700	34.9 (262.0 , 10.3)	34.9 (262.0 , 10.3)	36.8 (276.3 , 10.9)	37.5 (281.2 , 11.1)	38.5 (288.9 , 11.4)	40.3 (302.2 , 11.9)	39.9 (299.2 , 11.8)
kPa (mmHg, inHg)								

3. GENERAL DRIVING CYCLE

• If conditions are met, it is possible to detect the misfires from idling to high engine speed. However, to avoid excessive load or harm to the engine, perform diagnosis at idle.
• Perform the diagnosis continuously.

4. DIAGNOSTIC METHOD

When a misfire occurs, the engine speed will decrease and the crankshaft position speed will change. Calculate the interval difference value (diagnostic value) from crankshaft position speed by the following formula, and judge whether a misfire is occurring or not comparing the calculated result with judgment value. Count the number of misfires, if the misfire ratio is higher during 1000 revs. or 200 revs., judge corresponding cylinders as NG.

Diagnostic value calculation (Calculate from angle speed) →	Misfire detection every single ignition (Compare diagnostic value with judgment value) →	NG judgment (Misfire occurrence judgment required by the law) (Compare number of misfire with judgment value)
	• 180° Interval Difference Method • 360° Interval Difference Method • 720° Interval Difference Method	• FTP 1.5 times misfire NG judgment • Catalyst damage misfire NG judgment

As shown in the following figure, pick a cylinder as the standard and name it omg 0. And the former crankshaft position speed is named omg 1, the second former crankshaft position speed is named omg 2, the third is named omg 3, etc.

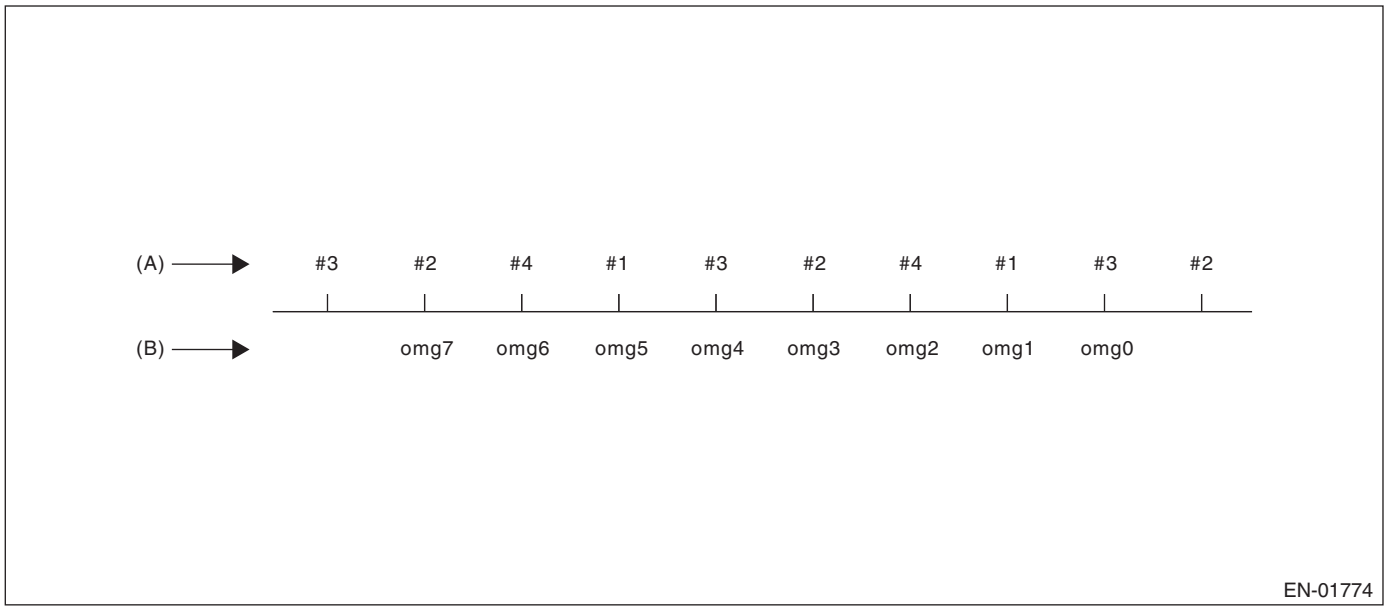

(A) Ignition order (B) Crankshaft position speed

180° Interval Difference Method

Diagnostic value	domg 180 = (omg 1 – omg 0) – (omg 5 – omg 1)/4
Judge as a misfire in the following cases. • domg 180 > judgment value of positive side • domg 180 ≤ judgment value of negative side (Diagnostic value before 180° CA)	

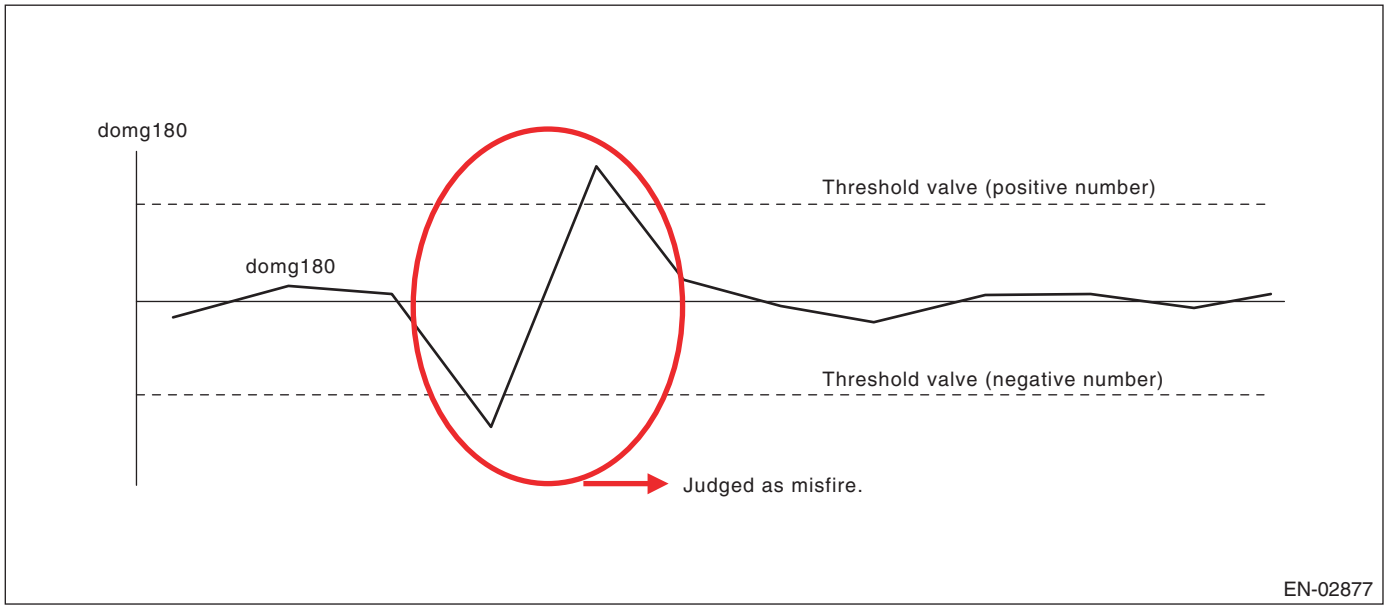

360° Interval Difference Method

Diagnostic value	domg 360 = (omg 1 – omg 0) – (omg 3 – omg 2)
Misfire judgment	domg 360 > Judgment value → Judge as misfire

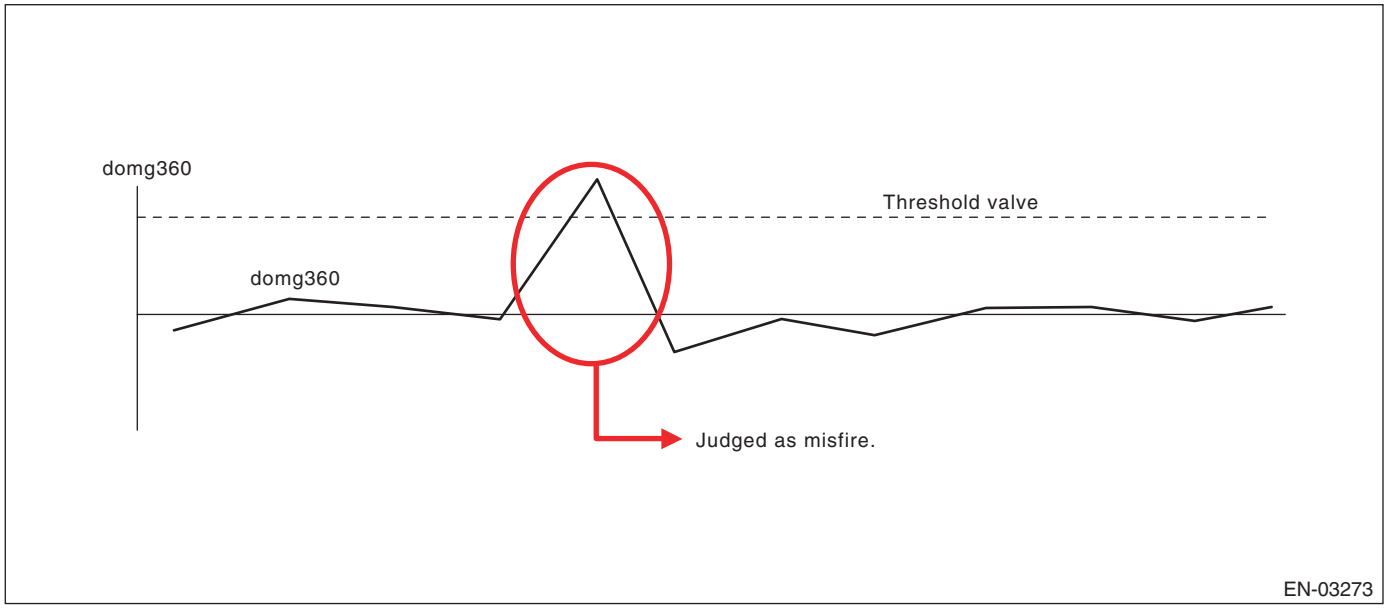

720° Interval Difference Method

Diagnostic value	domg 720 = (omg 1 – omg 0) – (omg 5 – omg 4)
Misfire judgment	domg 720 > Judgment value → Judge as misfire

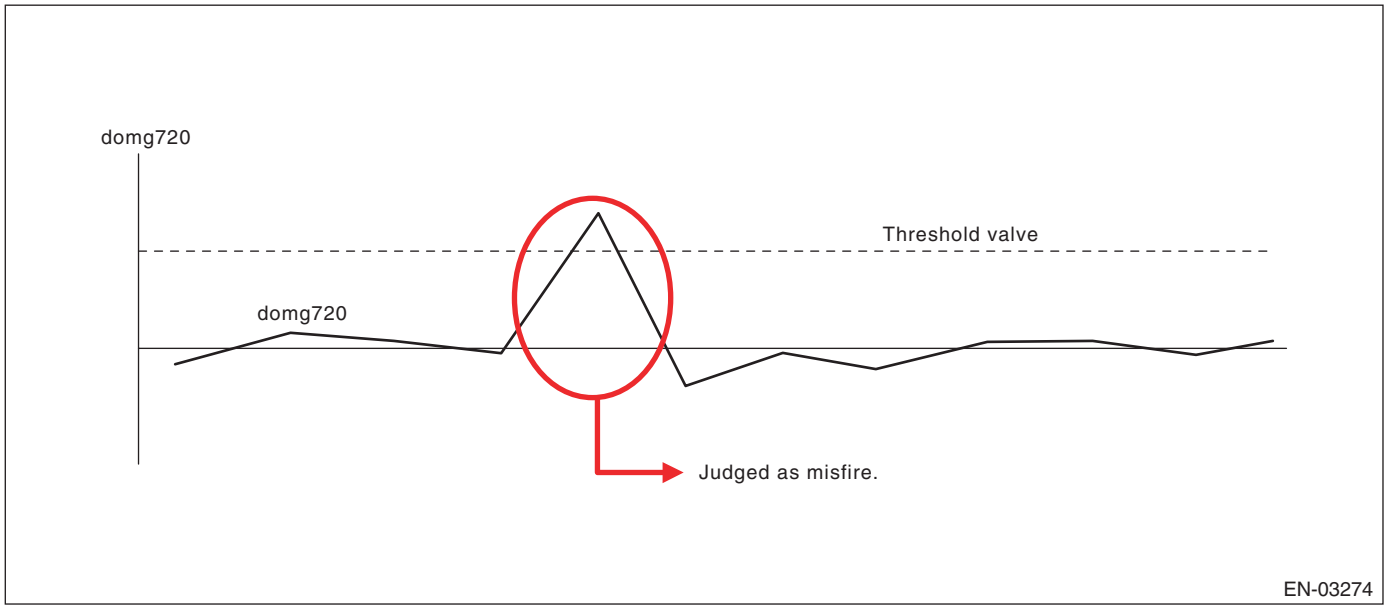

- **FTP 1.5 times misfire (Misfire occurrence level which influences exhaust gas)**
- **Abnormality Judgment**

Judgment Value (Judge that malfunction occurs when the misfire ratio is high in 1000 engine revs.)

Malfunction Criteria	Threshold Value
FTP emission diagnostic value	≥ 36 × 100/2000% in 1000 revs.

Time Needed for Diagnosis: 1000 engine revs.
Malfunction Indicator Light Illumination: Illuminates when malfunction occurs in 2 continuous driving cycles.

- **Normality Judgment**

Judgment Value

Malfunction Criteria	Threshold Value
FTP emission diagnostic value	< 36 × 100/2000% in 1000 revs.

Time Needed for Diagnosis: 1000 engine revs.

- **Catalyst damage misfire (Misfire occurrence level damaging catalyst)**
- **Abnormality Judgment**

Judgment Value

Malfunction Criteria	Threshold Value
Catalyst damage misfire diagnostic value	≥ Value from Map 3

Map 3

		Intake air (g(oz)/rev)									
		0.2 (0.01)	0.4 (0.01)	0.6 (0.02)	0.8 (0.03)	1 (0.04)	1.2 (0.04)	1.4 (0.05)	1.6 (0.06)	1.8 (0.06)	2 (0.07)
Engine speed (rpm)	700	100	100	99	90	85	77	77	77	77	77
	1000	100	100	97	88	78	72	72	72	72	72
	1500	100	100	87	77	72	72	72	61	61	61
	2000	100	77	77	62	49	37	34	31	27	20
	2500	99	74	48	38	33	31	29	27	26	20
	3000	92	74	49	33	31	31	27	26	24	20
	3500	83	63	37	23	20	20	20	20	20	20
	4000	59	52	34	23	20	20	20	20	20	20
	4500	51	47	29	21	20	20	20	20	20	20
	5000	47	47	29	20	20	20	20	20	20	20
	5500	46	46	28	20	20	20	20	20	20	20
	6000	44	44	27	20	20	20	20	20	20	20
	6500	43	43	26	20	20	20	20	20	20	20
	6700	43	43	26	20	20	20	20	20	20	20

Time Needed for Diagnosis: 200 engine revs.
Malfunction Indicator Light Illumination: Illuminates as soon as a malfunction occurs.

- **Normality Judgment**

Judgment Value

Malfunction Criteria	Threshold Value
Catalyst damage misfire diagnostic value	< Value of Map 3

Time Needed for Diagnosis: 200 engine revs.

BF:DTC P0302 CYLINDER 2 MISFIRE DETECTED

1. OUTLINE OF DIAGNOSIS

NOTE:
For the detection standard, refer to DTC P0301. <Ref. to GD(H4DOTC)-109, DTC P0301 CYLINDER 1 MISFIRE DETECTED, Diagnostic Trouble Code (DTC) Detecting Criteria.>

BG:DTC P0303 CYLINDER 3 MISFIRE DETECTED

1. OUTLINE OF DIAGNOSIS

NOTE:
For the detection standard, refer to DTC P0301. <Ref. to GD(H4DOTC)-109, DTC P0301 CYLINDER 1 MISFIRE DETECTED, Diagnostic Trouble Code (DTC) Detecting Criteria.>

BH:DTC P0304 CYLINDER 4 MISFIRE DETECTED

1. OUTLINE OF DIAGNOSIS

NOTE:
For the detection standard, refer to DTC P0301. <Ref. to GD(H4DOTC)-109, DTC P0301 CYLINDER 1 MISFIRE DETECTED, Diagnostic Trouble Code (DTC) Detecting Criteria.>

BI: DTC P0327 KNOCK SENSOR 1 CIRCUIT LOW (BANK 1 OR SINGLE SENSOR)

1. OUTLINE OF DIAGNOSIS

Detect the open or short circuit of knock sensor.
Judge as NG if out of specification.

2. COMPONENT DESCRIPTION

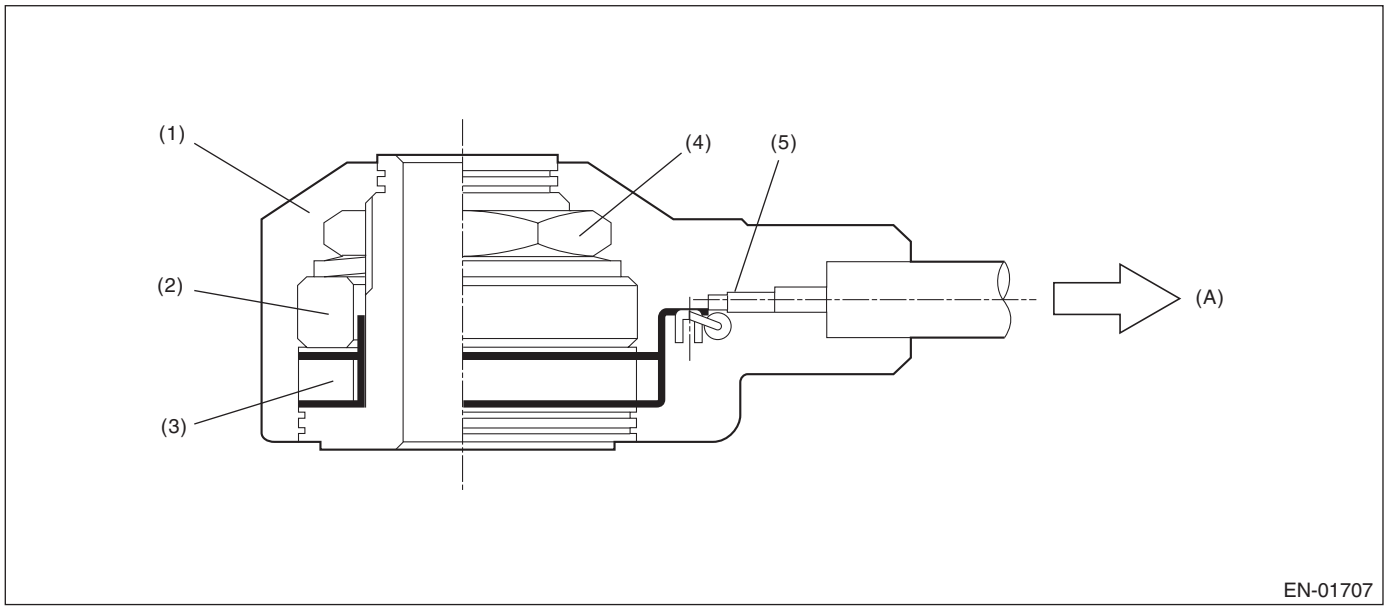

(A) To knock sensor harness

(1) Case
(2) Weight
(3) Piezoelectric element
(4) Nut
(5) Resistance

3. ENABLE CONDITION

Secondary Parameters	Enable Conditions
None	

4. GENERAL DRIVING CYCLE

Always perform the diagnosis continuously.

5. DIAGNOSTIC METHOD

- **Abnormality Judgment**

If the duration of time while the following conditions are met is longer than the time indicated, judge as NG.

Judgment Value

Malfunction Criteria	Threshold Value
Output voltage	< 0.243 V

Time Needed for Diagnosis: 1000 ms
Malfunction Indicator Light Illumination: Illuminates as soon as a malfunction occurs.

- **Normality Judgment**

Judge as OK and clear the NG if the continuous time while the following conditions are established is more than the predetermined time.

Judgment Value

Malfunction Criteria	Threshold Value
Output voltage	≥ 0.243 V

Time Needed for Diagnosis: Less than 1 second

BJ:DTC P0328 KNOCK SENSOR 1 CIRCUIT HIGH (BANK 1 OR SINGLE SENSOR)

1. OUTLINE OF DIAGNOSIS

Detect the open or short circuit of knock sensor.
Judge as NG if out of specification.

2. COMPONENT DESCRIPTION

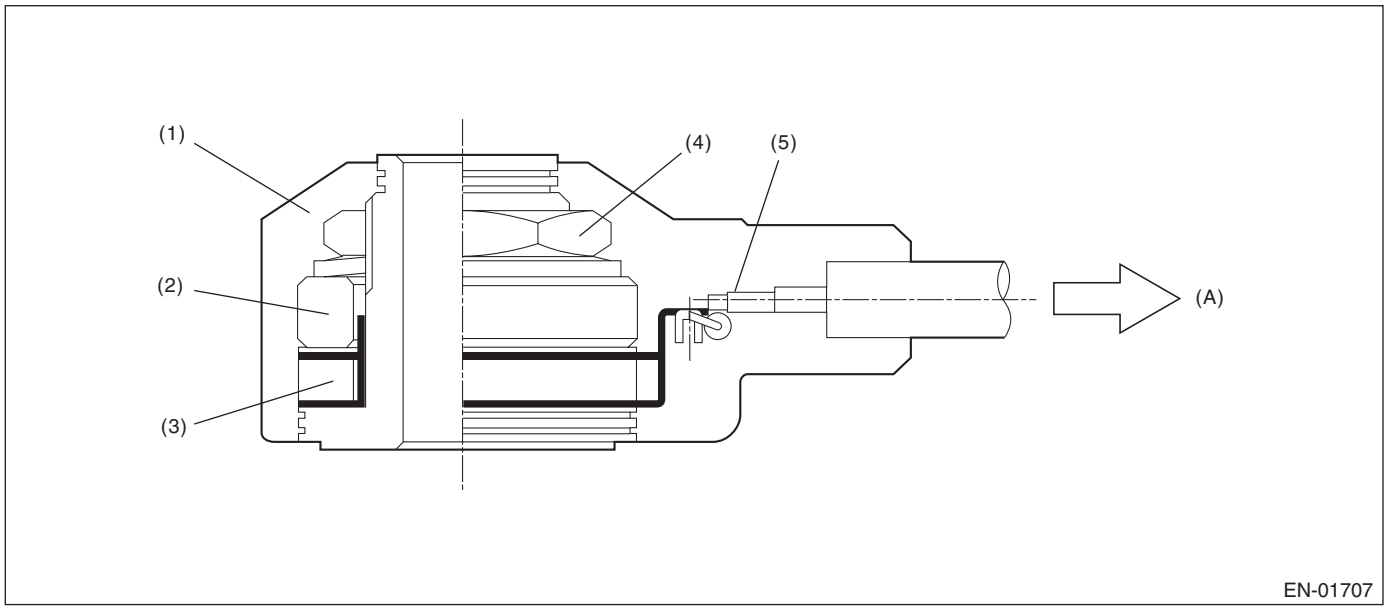

(A) To knock sensor harness

(1) Case
(2) Weight
(3) Piezoelectric element
(4) Nut
(5) Resistance

3. ENABLE CONDITION

Secondary Parameters	Enable Conditions
None	

4. GENERAL DRIVING CYCLE

Always perform the diagnosis continuously.

5. DIAGNOSTIC METHOD

- **Abnormality Judgment**

If the duration of time while the following conditions are met is longer than the time indicated, judge as NG.

Judgment Value

Malfunction Criteria	Threshold Value
Output voltage	≥ 4.709 V

Time Needed for Diagnosis: 1000 ms
Malfunction Indicator Light Illumination: Illuminates as soon as a malfunction occurs.

- **Normality Judgment**

Judge as OK and clear the NG if the continuous time while the following conditions are established is more than the predetermined time.

Judgment Value

Malfunction Criteria	Threshold Value
Output voltage	< 4.709 V

Time Needed for Diagnosis: Less than 1 second

BK:DTC P0335 CRANKSHAFT POSITION SENSOR “A” CIRCUIT

1. OUTLINE OF DIAGNOSIS

Detect the open or short circuit of the crankshaft position sensor.
Judge as NG when the crank signal is not input even though the starter was rotated.

2. COMPONENT DESCRIPTION

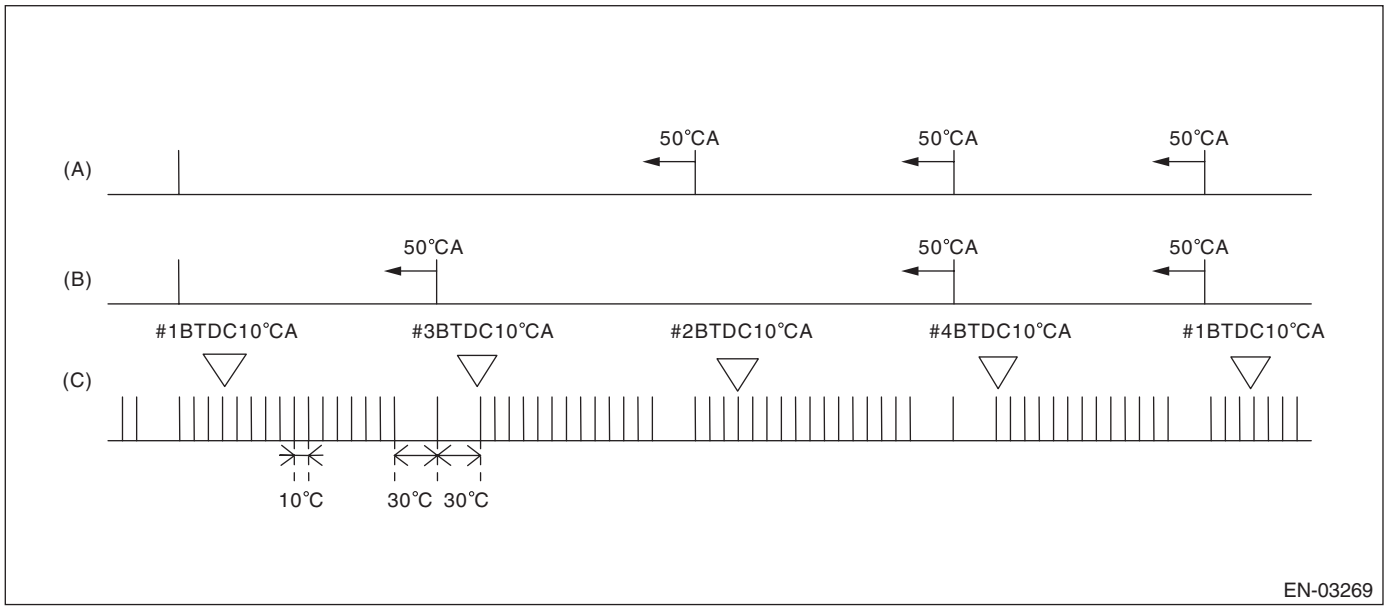

(A) Camshaft signal (RH) (B) Camshaft signal (LH) (C) Crankshaft signal

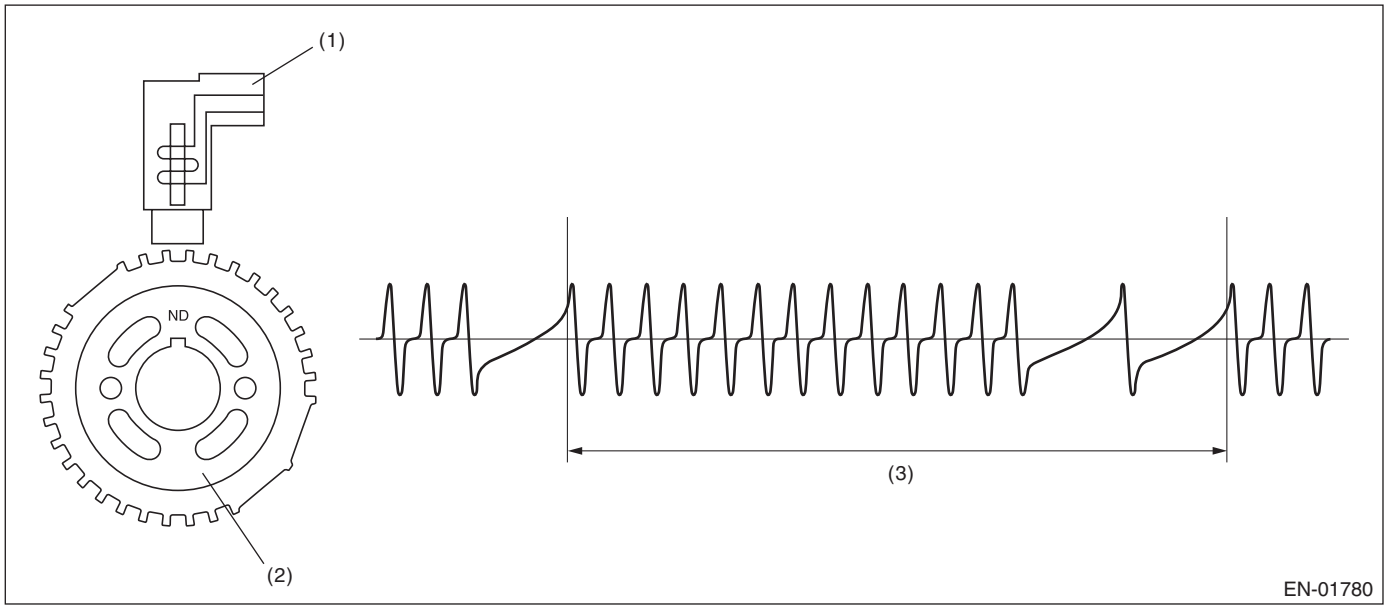

(1) Crankshaft position sensor (2) Crank sprocket (3) Crankshaft half-turn

3. ENABLE CONDITION

Secondary Parameters	Enable Conditions
None	

4. GENERAL DRIVING CYCLE

Always perform the diagnosis continuously.

5. DIAGNOSTIC METHOD

• Abnormality Judgment

If the duration of time while the following conditions are met is longer than the time indicated, judge as NG.

Judgment Value

Malfunction Criteria	Threshold Value
Starter switch	ON
Crankshaft position sensor signal	Not detected
Battery voltage	≥ 8 V

Time Needed for Diagnosis: 3000 ms
Malfunction Indicator Light Illumination: Illuminates as soon as a malfunction occurs.

• Normality Judgment

Judge as OK and clear the NG if the continuous time while the following conditions are established is more than the predetermined time.

Judgment Value

Malfunction Criteria	Threshold Value
Crankshaft position sensor signal	Input exists
Battery voltage	≥ 8 V

Time Needed for Diagnosis: Less than 1 second

BL:DTC P0336 CRANKSHAFT POSITION SENSOR “A” CIRCUIT RANGE/PERFORMANCE

1. OUTLINE OF DIAGNOSIS

Detect for faults in crankshaft position sensor output properties.
Judge as NG when there is a problem in the number of crankshaft signals for every revolution of crankshaft.

2. COMPONENT DESCRIPTION

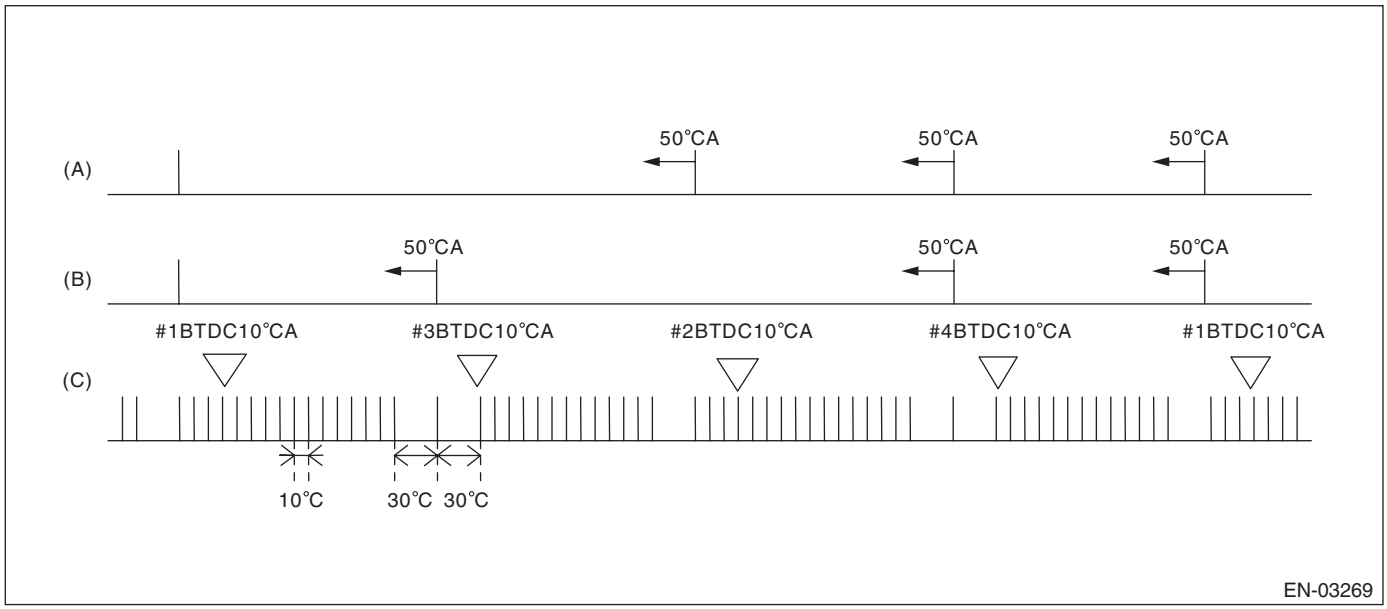

(A) Camshaft signal (RH) (B) Camshaft signal (LH) (C) Crankshaft signal

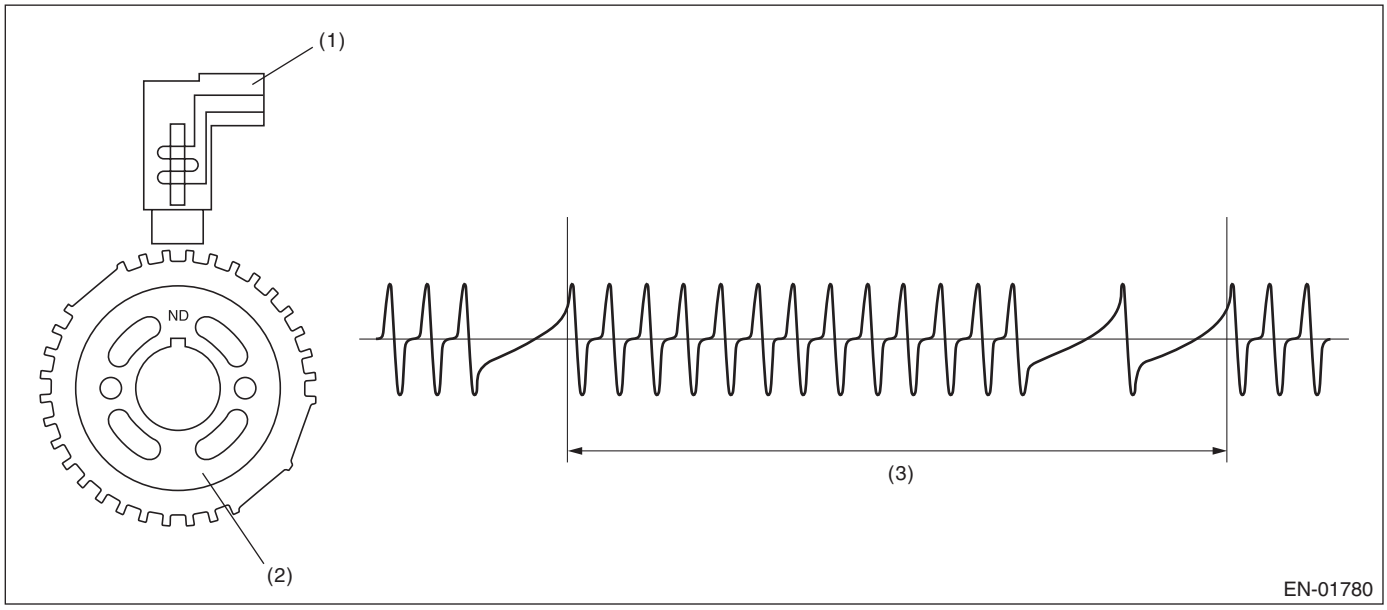

(1) Crankshaft position sensor (2) Crank sprocket (3) Crankshaft half-turn

3. ENABLE CONDITION

Secondary Parameters	Enable Conditions
Battery voltage	≥ 8 V
Engine speed	< 3000 rpm

4. GENERAL DRIVING CYCLE

Perform the diagnosis continuously under 3000 rpm engine speed.

5. DIAGNOSTIC METHOD

• Abnormality Judgment

Judge as NG when the following conditions are established.

Judgment Value

Malfunction Criteria	Threshold Value
Cylinder number identification	Completed
Amount of crank sensor signal during 1 rev of crankshaft.	Not = 30

Time Needed for Diagnosis: 10 engine revs.
Malfunction Indicator Light Illumination: Illuminates when malfunction occurs in 2 continuous driving cycles.

• Normality Judgment

Judge as OK and clear the NG if the continuous time while the following conditions are established is more than the predetermined time.

Judgment Value

Malfunction Criteria	Threshold Value
Cylinder number identification	Completed
Amount of crank sensor signal during 1 rev of crankshaft.	= 30

Time Needed for Diagnosis: Less than 1 second

BM:DTC P0340 CAMSHAFT POSITION SENSOR “A” CIRCUIT (BANK 1 OR SINGLE SENSOR)

1. OUTLINE OF DIAGNOSIS

Detect the open or short circuit of the camshaft position sensor.
Judge as NG when the number of camshaft signals remains abnormal.

2. COMPONENT DESCRIPTION

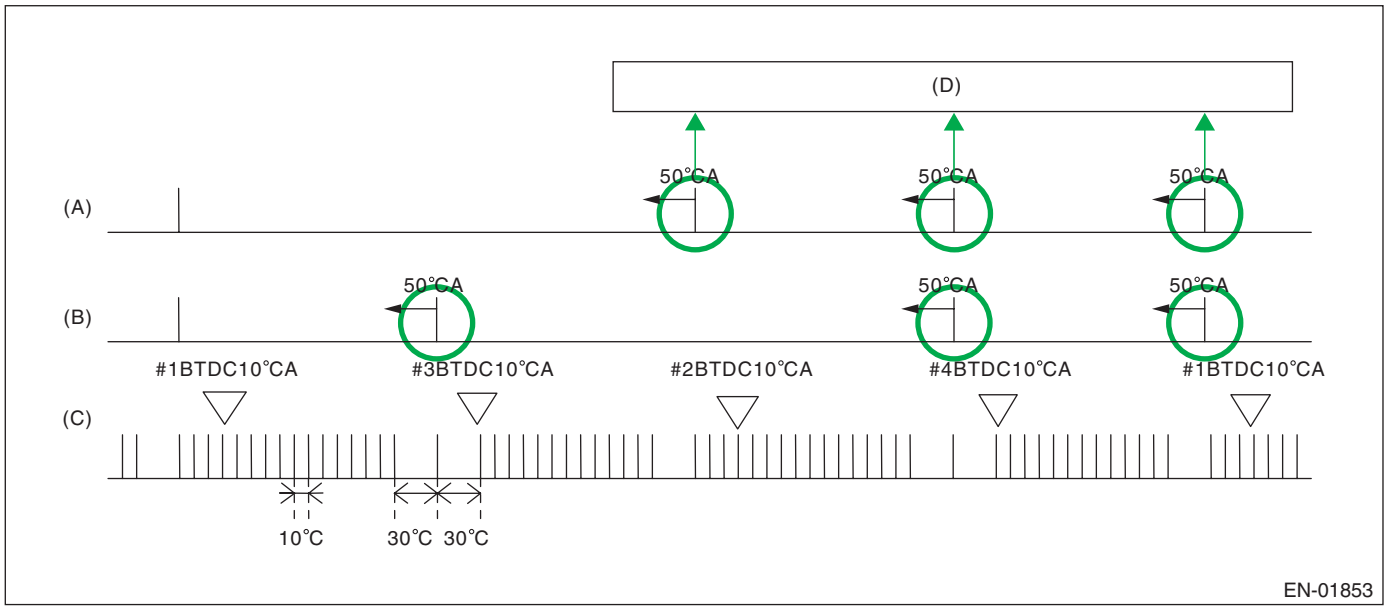

(A) Camshaft signal (RH)
(B) Camshaft signal (LH)
(C) Crankshaft signal
(D) Number of camshaft position signals = When normal, there will be 3 cam signals for every two engine revolutions.

3. ENABLE CONDITION

Secondary Parameters	Enable Conditions
Battery voltage	≥ 8 V

4. GENERAL DRIVING CYCLE

Always perform the diagnosis continuously.

5. DIAGNOSTIC METHOD

• Abnormality Judgment 1

Judge as NG when the status where the number of camshaft position sensor signal in two engine revolutions is less than 3 time(s).

Judgment Value

Malfunction Criteria	Threshold Value
Amount of camshaft sensor signal during 2 revs.	< 3 time(s)

Time Needed for Diagnosis: Engine two revolutions × 4 time(s)
Malfunction Indicator Light Illumination: Illuminates as soon as a malfunction occurs.

• Normality Judgment 1

Judge as OK and clear the NG when the malfunction criteria below are met.

Judgment Value

Malfunction Criteria	Threshold Value
Camshaft position sensor signal	≥ 3 time(s)

Time Needed for Diagnosis: Two engine revolutions

• Abnormality Judgment 2

If the duration of time while the following conditions are met is longer than the time indicated, judge as NG.

Judgment Value

Malfunction Criteria	Threshold Value
Starter	ON
Camshaft position sensor signal	No input

Time Needed for Diagnosis: 3000 ms

• Normality Judgment 2

Judge as OK and clear the NG if the continuous time while the following conditions are established is more than the predetermined time.

Judgment Value

Malfunction Criteria	Threshold Value
Camshaft position sensor signal	Input exists

Time Needed for Diagnosis: Less than 1 second

BN:DTC P0345 CAMSHAFT POSITION SENSOR “A” CIRCUIT (BANK 2)

1. OUTLINE OF DIAGNOSIS

NOTE:
For the detection standard, refer to DTC P0340. <Ref. to GD(H4DOTC)-124, DTC P0340 CAMSHAFT POSITION SENSOR “A” CIRCUIT (BANK 1 OR SINGLE SENSOR), Diagnostic Trouble Code (DTC) Detecting Criteria.>

BO:DTC P0351 IGNITION COIL A PRIMARY/SECONDARY CIRCUIT

1. OUTLINE OF DIAGNOSIS

Based on the self-diagnostic result of the ignition coil driving IC, judge the ignition coil driving circuit as normal or abnormal.
The ignition coil driving IC detects “no ignition” status as a malfunction.

2. ENABLE CONDITIONS

Secondary Parameters	Enable Conditions
Battery voltage	≥ 10.9 V
Elapsed time after starting the engine	> 1 s
Engine speed	> 500 rpm
Ignition energization time	> 2000 μs
Ignition status	Not during ignition cut

3. GENERAL DRIVING CYCLE

Always perform the diagnosis continuously.

4. DIAGNOSTIC METHOD

- **Abnormality Judgment**

Judge as NG when the following conditions are established.

Judgment Value

Malfunction Criteria	Threshold Value
Ignition driving IC information	Malfunction

Time Needed for Diagnosis: 2500 ms
Malfunction Indicator Light Illumination: Illuminates as soon as a malfunction occurs.

- **Normality Judgment**

Judge as OK and clear the NG if the following conditions are established.

Judgment Value

Malfunction Criteria	Threshold Value
Ignition driving IC information	Normal

Time Needed for Diagnosis: Less than 1 second

BP:DTC P0352 IGNITION COIL B PRIMARY/SECONDARY CIRCUIT

1. OUTLINE OF DIAGNOSIS

NOTE:
For the detection standard, refer to DTC P0351. <Ref. to GD(H4DOTC)-126, DTC P0351 IGNITION COIL A PRIMARY/SECONDARY CIRCUIT, Diagnostic Trouble Code (DTC) Detecting Criteria.>

BQ:DTC P0353 IGNITION COIL C PRIMARY/SECONDARY CIRCUIT

1. OUTLINE OF DIAGNOSIS

NOTE:
For the detection standard, refer to DTC P0351. <Ref. to GD(H4DOTC)-126, DTC P0351 IGNITION COIL A PRIMARY/SECONDARY CIRCUIT, Diagnostic Trouble Code (DTC) Detecting Criteria.>

BR:DTC P0354 IGNITION COIL D PRIMARY/SECONDARY CIRCUIT

1. OUTLINE OF DIAGNOSIS

NOTE:
For the detection standard, refer to DTC P0351. <Ref. to GD(H4DOTC)-126, DTC P0351 IGNITION COIL A PRIMARY/SECONDARY CIRCUIT, Diagnostic Trouble Code (DTC) Detecting Criteria.>

BS:DTC P0365 CAMSHAFT POSITION SENSOR “B” CIRCUIT (BANK 1)

1. OUTLINE OF DIAGNOSIS

Detect the open or short circuit of the camshaft position sensor.
Judge as NG when the number of camshaft signals remains abnormal.

2. ENABLE CONDITIONS

Secondary Parameters	Enable Conditions
Battery voltage	≥ 8 V

3. GENERAL DRIVING CYCLE

Always perform the diagnosis continuously.

4. DIAGNOSTIC METHOD

- **Abnormality Judgment**

Judge as NG when the status where the number of camshaft position sensor signal in two engine revolutions is less than 2 time(s).

Judgment Value

Malfunction Criteria	Threshold Value
Amount of camshaft sensor signal during 2 revs.	< 2 time(s)

Time Needed for Diagnosis: Engine two revolutions × 4 time(s)
Malfunction Indicator Light Illumination: Illuminates as soon as a malfunction occurs.

- **Normality Judgment**

Judge as OK and clear the NG when the malfunction criteria below are met.

Judgment Value

Malfunction Criteria	Threshold Value
Camshaft position sensor signal	≥ 2 time(s)

Time Needed for Diagnosis: Two engine revolutions

BT:DTC P0390 CAMSHAFT POSITION SENSOR “B” CIRCUIT (BANK 2)

1. OUTLINE OF DIAGNOSIS

NOTE:
For the detection standard, refer to DTC P0365. <Ref. to GD(H4DOTC)-127, DTC P0365 CAMSHAFT POSITION SENSOR “B” CIRCUIT (BANK 1), Diagnostic Trouble Code (DTC) Detecting Criteria.>

BU:DTC P0420 CATALYST SYSTEM EFFICIENCY BELOW THRESHOLD (BANK 1)

1. OUTLINE OF DIAGNOSIS

Detect the deterioration of the catalyst function.
Though the front oxygen sensor output would change slowly with a new catalyst, the sensor output with a deteriorated catalyst becomes high and the inversion time is shortened.
For this reason, the catalyst diagnosis is carried out by monitoring the front oxygen sensor output and comparing it with the front oxygen (A/F) sensor output.

2. COMPONENT DESCRIPTION

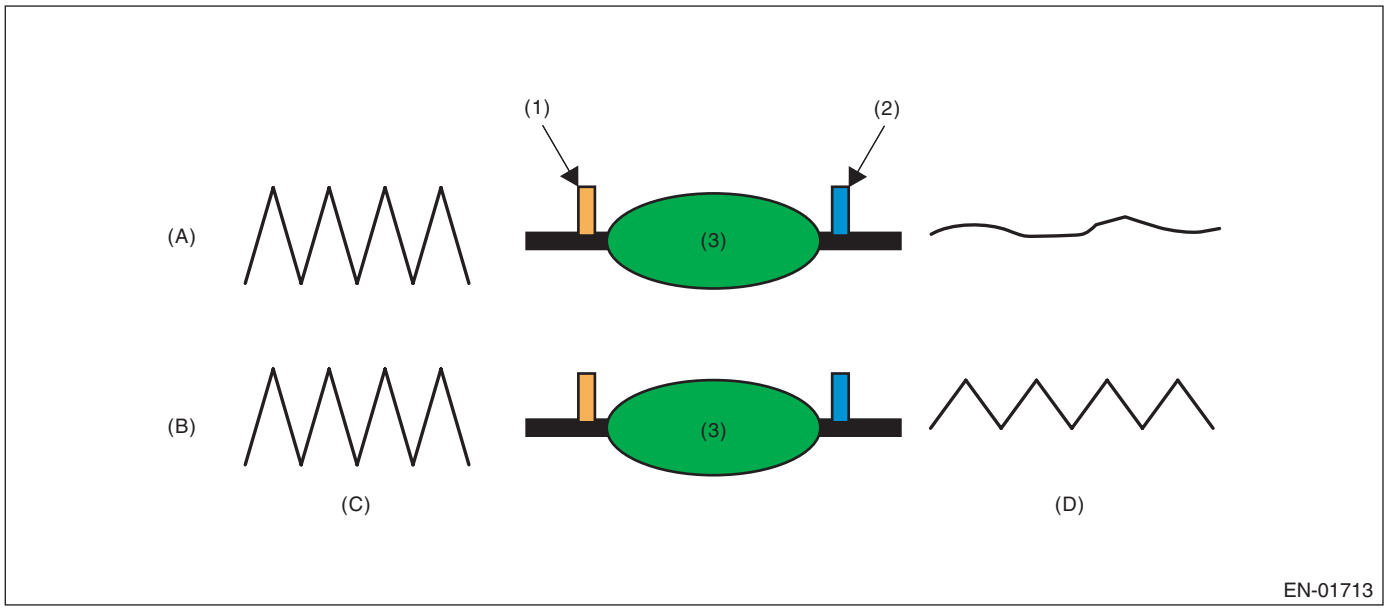

(A) Normal
(B) Deterioration
(C) Output waveform from the front oxygen (A/F) sensor
(D) Output waveform from the front oxygen sensor
(1) Front oxygen (A/F) sensor
(2) Front oxygen sensor
(3) Catalytic converter

3. ENABLE CONDITION

Secondary Parameters	Enable Conditions
Battery voltage	≥ 10.9 V
Atmospheric pressure	≥ 75 kPa (563 mmHg, 22.2 inHg)
Engine coolant temperature	≥ 72 °C (161.6 °F)
Estimated catalyst temperature	≥ 540 °C (1004 °F)
Misfire detection every 200 rotations	< 65535 time(s)
Learning value of evaporation gas density	< 0.2
Sub feedback	In operation
Evaporative system diagnosis	Not in operation
Time of difference (< 0.10) between actual lambda and target lambda	≥ 1000 ms
Vehicle speed	> 60 km/h (37.3 MPH)
Amount of intake air	≥ 6.5 g/s (0.23 oz/s) and < 50 g/s (1.76 oz/s)
Engine load change every 0.5 engine revs.	< 0.02 g/rev (0 oz/rev)
Rear oxygen output change from 660 mV or less to 660 mV or more	Experienced after fuel cut
Elapsed time after starting the engine	≥ 230 s
Purge execution calculated time	≥ 5 s

4. GENERAL DRIVING CYCLE

Perform the diagnosis only once at a constant speed of 60 km/h (37.3 MPH) or higher.

5. DIAGNOSTIC METHOD

After the enable conditions have been established, calculate the front oxygen (A/F) sensor lambda value deviation sum value (Σ |(sglmd$_n$ – sglmd$_{n-1}$)|), and rear oxygen sensor output voltage deviation sum value (Σ |(ro2sad$_n$ – ro2sad$_{n-1}$)|) in every 32 ms × 4 times. If the front oxygen (A/F) sensor lambda value deviation sum value (Σ |(sglmd$_n$ – sglmd$_{n-1}$)|) is the predetermined value or more, calculate the diagnostic value.

• Abnormality Judgment

If the duration of time while the following conditions are met is within the time indicated, judge as NG.

Judgment Value

Malfunction Criteria	Threshold Value
Σ |(ro2sad$_n$ – ro2sad$_{n-1}$)| / Σ |(sglmd$_n$ – sglmd$_{n-1}$)|	> 9.03

Time Needed for Diagnosis: 30 — 55 seconds
Malfunction Indicator Light Illumination: Illuminates when malfunction occurs in 2 continuous driving cycles.

• Normality Judgment

Judge as OK and clear the NG if the continuous time while the following conditions are established is within the predetermined time.

Judgment Value

Malfunction Criteria	Threshold Value
Σ |(ro2sad$_n$ – ro2sad$_{n-1}$)| / Σ |(sglmd$_n$ – sglmd$_{n-1}$)|	≤ 9.03

Time Needed for Diagnosis: 30 — 55 seconds

BV:DTC P0442 EVAPORATIVE EMISSION CONTROL SYSTEM LEAK DETECTED (SMALL LEAK)

1. OUTLINE OF DIAGNOSIS

The evaporative system monitor detects leak up to 0.020 inch in the fuel tank and evaporative emissions system. If the fuel cap is not present or has not been correctly tightened after a refueling event, a malfunction is also detected. These malfunctions are detected by monitoring the fuel tank and system pressure during an intrusive pull-down pressure test. Pull down is accomplished via the purge valve while the engine is running. Monitors run during the first idle after engine start and while driving.
The diagnostic is classified into two monitors. The first monitor detects a 0.040 inch leak, fuel cap loose/off, and canister purge valve stuck open/close whilst the other monitor detects a 0.020 inch leak when the vehicle is moving or during the first idle. Failures, DTCs and monitor methods are as follows.

P0457	Fuel cap loose/off or CPC valve stuck open/close	Monitor 1
P0442	0.040 inch leak	Monitor 1
P0456	0.020 inch leak	Monitor 2

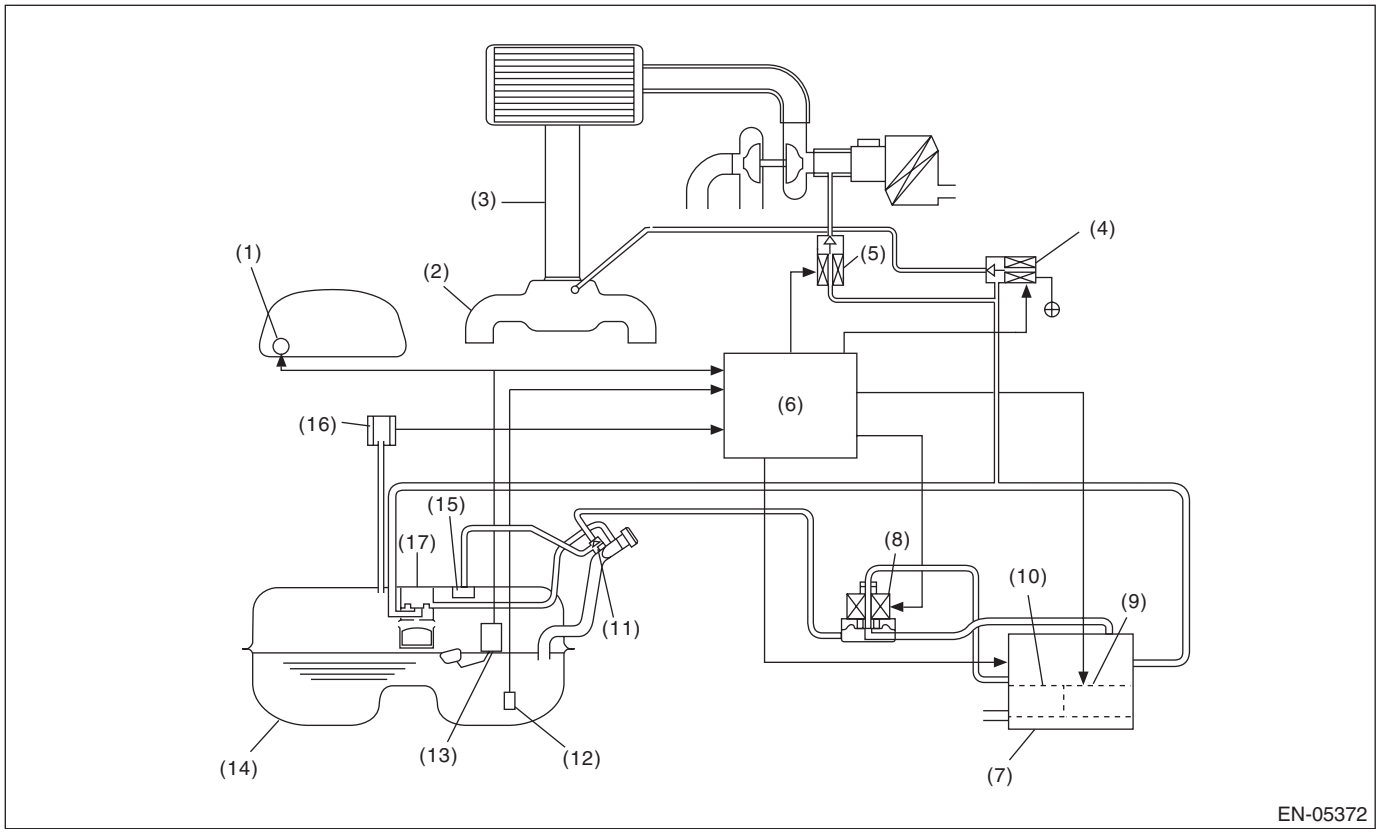

(1) Fuel gauge
(2) Intake manifold
(3) Throttle body
(4) Purge control solenoid valve (CPC valve)
(5) Purge control solenoid valve 2 (CPC valve)
(6) Engine control module (ECM)
(7) Canister
(8) Pressure control solenoid valve
(9) Drain valve (CCV)
(10) Drain filter
(11) Shut-off valve
(12) Fuel temperature sensor
(13) Fuel level sensor
(14) Fuel tank
(15) Fuel cut valve
(16) Fuel tank pressure sensor
(17) Vent valve

Monitor 1

- **P0457 Fuel cap loose/off or CPC valve stuck open/close**
- **P0442 0.040 inch leak check**

This monitor detects CPC valve stuck open/close, fuel cap loose/off, and 0.040 inch leak in the evaporative emission system by monitoring the fuel tank system pressure an intrusive pull-down pressure test. The monitor consists of Modes Z, A, B, C and D. There are three judgment times for these malfunctions. CPC valve stuck open is performed in Mode Z, CPC valve stuck closed or fuel cap loose/off is in Mode B, 0.040 inch leak is in Mode D.

Mode	Description of each mode	Required time for each mode
Mode Z (Monitoring of CPC stuck open)	CPC valve: Closed CCV: Closed The system requires 3000 ms to measure the pressure difference. (1) Pressure difference < 0.9 kPa (6.5 mmHg, 0.3 inHg) → Judged as “Fail of CPC stuck open” **[P0457]** (2) Pressure difference ≥ 0.4 kPa (3 mmHg, 0.1 inHg) → Move to Mode A	3000 ms
Mode A (Estimation of Evap. Generation)	The system requires 10000 ms to measure the pressure increase (evpp1), and then move to Mode B.	10000 ms
Mode B (Negative Pressure Introduction/ Monitoring of Fuel cap off or CPC stuck close)	CPC valve: Open Negative pressure is introduced to the fuel tank. (1) Elapsed time in Mode B ≥ 10000 ms and (Minimum tank pressure) – (Initial tank pressure) > –0.3 kPa (–2.5 mmHg, –0.1 inHg) → Judged as “Fail of Fuel cap off or CPC stuck close” **[P0457]** (2) Elapsed time in Mode B ≥ 10000 ms + 25000 ms → Judged as “Fail of Fuel cap off or CPC stuck close” **[P0457]** (3) Fuel tank pressure ≤ –1.4 kPa (–10.5 mmHg, –0.4 inHg) → Move to Mode C	Average: 7 s (Depends on the tank condition)
Mode C (Keeping Negative Pressure / Pass in Mode C)	CPC valve: Closed When the tank pressure comes up to the target pressure (–1.4 kPa (–10.5 mmHg, –0.4 inHg)), the monitor moves to Mode D. If the fuel tank pressure does not exceed the –1.4 kPa (–10.5 mmHg, –0.4 inHg) after 23635 ms, the system judges as “Pass in Mode C” and moves to “Final Judgment”.	Average: 7 s (Depends on the tank condition)
Mode D (Pressure Measurement / Pass Fail in Mode D)	The monitor requires 10000 ms to measure the pressure change (evpp2) and calculates the monitor value (evpp2 – 1.5 × evpp1), where Mode A (evpp1) is the generated vapor pressure. The calculated value (evpp2 – 1.5 × evpp1) is then compared to a calibrated threshold table as a function of fuel temperature and fuel level. The system judges as a “Pass/Fail in Mode D” and then moves to “Final Judgment”. (1) evpp2 – 1.5 × evpp1 > Fail Threshold (Map 1) → “Fail in Mode D” (2) evpp2 – 1.5 × evpp1 ≤ Pass Threshold (Map 1) → “Pass in Mode D”	10000 ms
Final Judgment (Pass / Fail)	The monitor is completed in the following order (1) Judged as “Fail in Mode D” → “Fail of 0.040 inch leak” **[P0442]** (2) Judged as “Pass in Mode C / Mode D” → “Pass of 0.040 inch leak”	0.128 s

Map 1 (Threshold value for 0.040 inch leak)

		Fuel temperature (°C (°F))			
		15 (59)	25 (77)	35 (95)	45 (113)
Fuel Level ℓ (US gal, Imp gal)	10.5 (2.77, 2.31)	0.3 (2.00, 0.1)	0.3 (2.17, 0.1)	0.3 (2.34, 0.1)	0.4 (2.66, 0.1)
	27 (7.13, 5.94)	0.3 (2.12, 0.1)	0.3 (2.22, 0.1)	0.3 (2.40, 0.1)	0.4 (3.07, 0.1)
	43 (11.36, 9.46)	0.4 (2.74, 0.1)	0.4 (2.91, 0.1)	0.4 (3.08, 0.1)	0.4 (3.26, 0.1)
	59.5 (15.72, 13.09)	0.5 (3.38, 0.1)	0.5 (3.86, 0.2)	0.5 (3.87, 0.2)	0.5 (4.07, 0.2)
kPa (mmHg, inHg)					

Monitor 2

P0456 0.020 inch leak check

This monitor detects a very small leak (0.020 inch) in the evaporative emissions system by monitoring the fuel tank and system pressure during an intrusive pull-down pressure test. Pull down is accomplished via the purge valve while the engine is running. The monitor runs during the first idle after engine start and also while the vehicle is running.

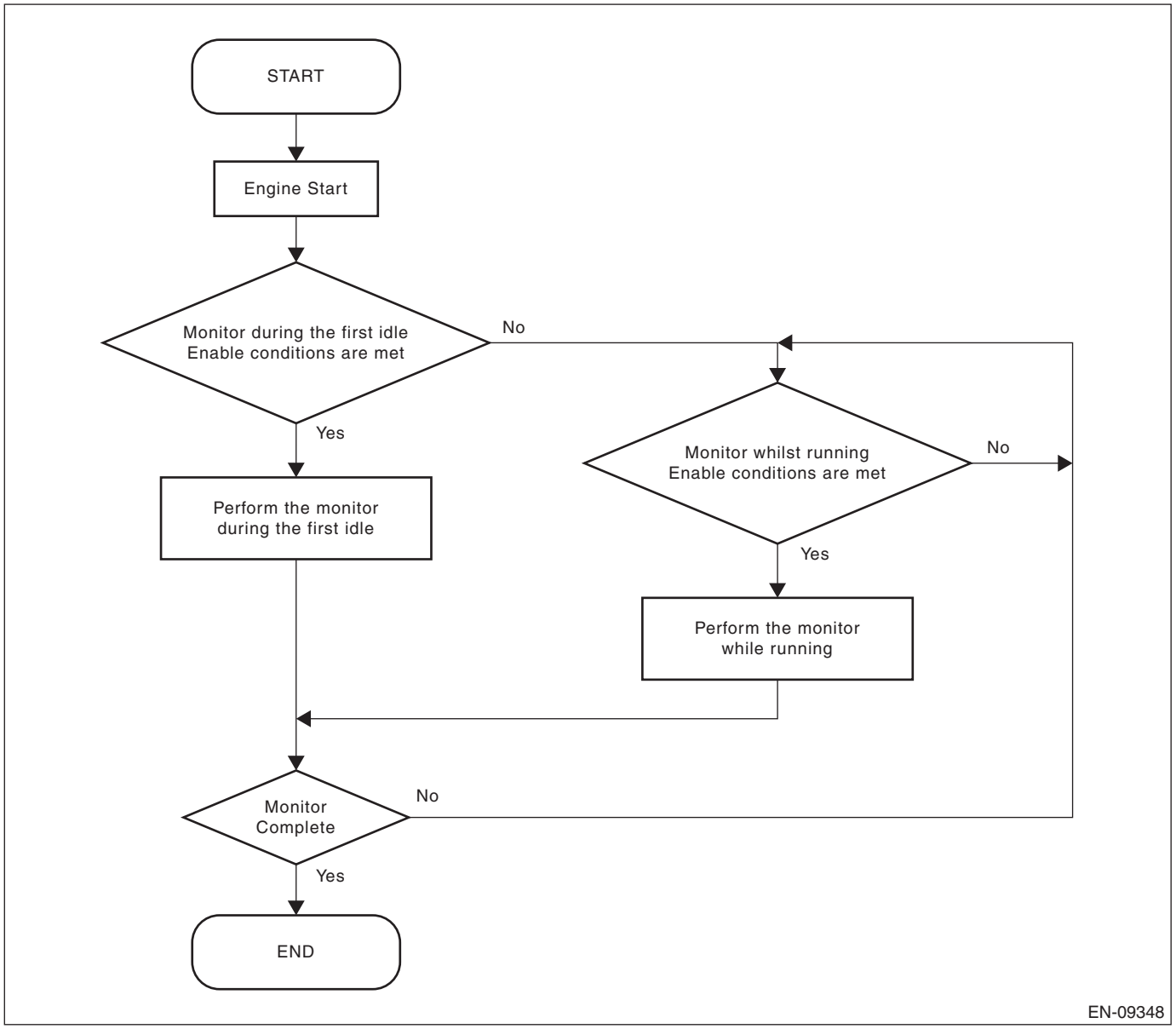

Monitor 2 (first idle condition)

Mode	Description of each mode	Required time for each mode
Mode A (Estimation of Evap. Generation)	CPC valve: Closed CCV: Closed Low vapor flag At the beginning of the monitor test when; → Fuel temperature is lower than Map 2 listed value → Intake air temperature is lower than Map 3 listed value The system sets “Low vapor flag = ON”. Low vapor flag is used in Mode A, Mode C, and Mode D. The system measures the generated vapor pressure increase (△ P1) in the specific time period (*1), and then moves to Mode B. (*1) Low vapor flag OFF: 10000 ms, Low vapor flag ON: 128 ms	Low vapor flag OFF 10000 ms Low vapor flag ON 128 ms
Mode B (Negative Pressure Introduction)	CPC valve: Open Negative pressure is introduced to the fuel tank via engine manifold vacuum. When the fuel tank pressure reaches the target pressure (–1.3 kPa (–10 mmHg, –0.4 inHg)), the monitor moves to Mode C.	Average: 13 s (Depends on the tank condition)
Mode C (Keeping Negative Pressure / Pass in Mode C)	CPC valve: Closed After a calibrated time period (*2) has elapsed since the tank pressure comes up to the target pressure (–1.3 kPa (–10 mmHg, –0.4 inHg)), move to Mode D. If the fuel tank pressure does not exceed the target pressure (–1.3 kPa (–10 mmHg, –0.4 inHg)) after Map 4 (ms), the system is judged as “Pass in Mode C” and moves to “Final Judgment”. (*2) Low vapor flag OFF: 10000 ms, Low vapor flag ON: 2000 ms	Low vapor flag OFF Average: 21 s Low vapor flag ON Average: 10 s (Depends on the tank condition)
Mode D (Pressure Measurement / Fail or Pass in Mode D)	The monitor requires 10000 ms to measure the pressure change (△ P2) and calculates the monitor value (△ P2- △ P1), where Mode A (△ P1) is the generated vapor pressure. The calculated value (△ P2- △ P1) is then compared to a calibrated threshold table as a function of fuel temperature and fuel level. The system judges as a “Pass/Fail in Mode D” and then moves to “Final Judgment”. (1) △ P2 – △ P1 > Fail Threshold (*3) → “Fail in Mode D” (2) △ P2 – △ P1 ≤ Pass Threshold (*4) → “Pass in Mode D” (*3) Low vapor flag OFF: Map 5, Low vapor flag ON: Map 7 (*4) Low vapor flag OFF: Map 6, Low vapor flag ON: Map 8	10000 ms
Final Judgment (Pass / Fail)	The monitor is completed in the following order (1) Judged as “Fail in Mode D” → “Fail of 0.020 inch leak” **[P0456]** (2) Judged as “Pass in Mode C / Mode D” → “Pass of 0.020 inch leak”	0.128 s

Map 2 (Fuel temperature threshold for “Low vapor flag”)

Fuel Level ℓ (US gal, Imp gal)	10.5 (2.77, 2.31)	35 (9.25, 7.7)	59.5 (15.72, 13.09)
Fuel temperature threshold °C (°F)	5 (41)	10 (50)	15 (59)

Map 3 (intake air temperature threshold for “Low Vapor Flag”)

Fuel Level ℓ (US gal, Imp gal)	10.5 (2.77, 2.31)	35 (9.25, 7.7)	59.5 (15.72, 13.09)
Intake air temperature threshold °C (°F)	5 (41)	10 (50)	15 (59)

Map 4 (Period for judgment of Pass in Mode C)

Fuel Level ℓ (US gal, Imp gal)	10.5 (2.77, 2.31)	35 (9.25, 7.7)	50 (13.21, 11)	59.5 (15.72, 13.09)
Period for Pass in Mode C (ms)	28000	18000	13000	11500

Map 5 (Threshold value for 0.020 inch leak in Mode D under normal condition)

		Fuel temperature (°C (°F))									
		0 (32)	10 (50)	15 (59)	20 (68)	25 (77)	30 (86)	35 (95)	40 (104)	45 (113)	50 (122)
Fuel Level ℓ (US gal, Imp gal)	10.5 (2.77, 2.31)	0.1 (0.70, 0)	0.1 (0.70, 0)	0.1 (0.70, 0)	0.1 (0.70, 0)	0.1 (0.90, 0)	0.1 (1.10, 0)	0.1 (1.10, 0)	0.1 (1.10, 0)	0.1 (1.10, 0)	0.1 (1.10, 0)
	35 (9.25, 7.7)	0.1 (0.80, 0)	0.1 (0.80, 0)	0.1 (0.80, 0)	0.1 (0.80, 0)	0.1 (1.00, 0)	0.2 (1.20, 0)	0.2 (1.20, 0)	0.2 (1.20, 0)	0.2 (1.20, 0)	0.2 (1.20, 0)
	59.5 (15.72, 13.09)	0.1 (0.90, 0)	0.1 (0.90, 0)	0.1 (0.90, 0)	0.1 (0.90, 0)	0.1 (1.10, 0)	0.2 (1.30, 0.1)	0.2 (1.30, 0.1)	0.2 (1.30, 0.1)	0.2 (1.30, 0.1)	0.2 (1.30, 0.1)
kPa (mmHg, inHg)											

Map 6 (Threshold value for Pass in Mode D under normal conditions)

		Fuel temperature (°C (°F))									
		0 (32)	10 (50)	15 (59)	20 (68)	25 (77)	30 (86)	35 (95)	40 (104)	45 (113)	50 (122)
Fuel Level ℓ (US gal, Imp gal)	10.5 (2.77, 2.31)	0.1 (0.60, 0)	0.1 (0.60, 0)	0.1 (0.60, 0)	0.1 (0.60, 0)	0.1 (0.60, 0)	0.1 (0.60, 0)	0.1 (0.60, 0)	0.1 (0.60, 0)	0.1 (0.60, 0)	0.1 (0.60, 0)
	35 (9.25, 7.7)	0.1 (0.60, 0)	0.1 (0.60, 0)	0.1 (0.60, 0)	0.1 (0.60, 0)	0.1 (0.60, 0)	0.1 (0.60, 0)	0.1 (0.60, 0)	0.1 (0.60, 0)	0.1 (0.60, 0)	0.1 (0.60, 0)
	59.5 (15.72, 13.09)	0.1 (0.80, 0)	0.1 (0.80, 0)	0.1 (0.80, 0)	0.1 (0.80, 0)	0.1 (0.80, 0)	0.1 (0.80, 0)	0.1 (0.80, 0)	0.1 (0.80, 0)	0.1 (0.80, 0)	0.1 (0.80, 0)
kPa (mmHg, inHg)											

Map 7 (Threshold value for 0.020 inch leak in Mode D with under low vapor conditions)

		Fuel temperature (°C (°F))			
		0 (32)	10 (50)	15 (59)	20 (68)
Fuel Level ℓ (US gal, Imp gal)	10.5 (2.77, 2.31)	0.1 (0.80, 0)	0.1 (0.80, 0)	0.1 (0.80, 0)	0.1 (0.80, 0)
	35 (9.25, 7.7)	0.1 (0.90, 0)	0.1 (0.90, 0)	0.1 (0.90, 0)	0.1 (0.90, 0)
	59.5 (15.72, 13.09)	0.1 (1, 0)	0.1 (1, 0)	0.1 (1, 0)	0.1 (1, 0)
kPa (mmHg, inHg)					

Map 8 (Threshold value for Pass in Mode D with under low vapor conditions)

		Fuel temperature (°C (°F))			
		0 (32)	10 (50)	15 (59)	20 (68)
Fuel Level ℓ (US gal, Imp gal)	10.5 (2.77, 2.31)	0.1 (0.60, 0)	0.1 (0.60, 0)	0.1 (0.60, 0)	0.1 (0.60, 0)
	35 (9.25, 7.7)	0.1 (0.7, 0)	0.1 (0.7, 0)	0.1 (0.7, 0)	0.1 (0.7, 0)
	59.5 (15.72, 13.09)	0.1 (0.80, 0)	0.1 (0.80, 0)	0.1 (0.80, 0)	0.1 (0.80, 0)
kPa (mmHg, inHg)					

Monitor 2 (vehicle running condition)

Mode	Description of each mode	Required time for each mode
Mode A-1 (Zero adjust)	CPC valve: Closed Fuel tank pressure is adjusted to zero. If the fuel tank pressure is close to the ambient pressure, the system waits 5000 ms for stabilization of the tank pressure prior to moving to Mode A-2.	Average: 7 s (Depends on the tank condition)
Mode A-2 (Estimation of Evap. Generation)	CCV: Closed The system requires 30000 ms to measure the pressure increase (P1), and then move to Mode B.	30000 ms
Mode B (Negative Pressure Introduction)	CPC valve: Open Negative pressure is introduced to the fuel tank via engine manifold vacuum. When the fuel tank pressure reaches the target pressure (–2 kPa (–15 mmHg, –0.6 inHg)), the monitor moves to Mode C.	Average: 22 s (Depends on the tank condition)
Mode C (Keeping Negative Pressure)	CPC valve: Closed When the tank pressure comes up to target pressure (–2 kPa (–15 mmHg, –0.6 inHg)) or the calibrated period (Map 9) has passed, move to Mode D.	Average: 5 s (Depends on the tank condition)
Mode D (Pressure Measurement / Pass Fail in Mode D)	The system calculates the integrated pressure change (ptepap1sum) which is compensated by “P1” (the generated vapor pressure), ptepap1sum (n) = ptepap1sum (n–1) + ptepap1 – (–2 kPa (–15 mmHg, –0.6 inHg)) ptepap1 = (Fuel tank pressure) – (“P1”) / (Mode A-2 time) × (Elapsed time in Mode D) When the calibrated period (Map 10) has passed or the tank pressure reaches the Ambient pressure (0 kPa (0 mmHg, 0 inHg)), the system compares the monitor value (ptepap1sum) to a calibrated threshold table as a function of elapsed time in Mode D and fuel level. The system judges as “Pass/Fail in Mode D” and then moves to “Final Judgment”. (1) ptepap1sum > Fail Threshold (Map 11) → “Fail in Mode D” (2) ptepap1sum ≤ Pass Threshold (Map 12) → “Pass in Mode D”	Average: 134 s (Depends on the tank condition)
Final Judgment (Pass / Fail)	The monitor is completed in the following order (1) Judged as “Fail in Mode D” → Fail of 0.020 inch leak **[P0456]** (2) Judged as “Pass in Mode D” → Pass of 0.020 inch leak	0.128 s

Map 9 (Maximum time of Mode C)

Fuel Level ℓ (US gal, Imp gal)	10.5 (2.77, 2.31)	27 (7.13, 5.94)	43 (11.36, 9.46)	59.5 (15.72, 13.09)
Maximum time of Mode C (ms)	21208	19288	9742	8057

Map 10 (Maximum time of Mode D)

Fuel Level ℓ (US gal, Imp gal)	10.5 (2.77, 2.31)	35 (9.25, 7.7)	60 (15.85, 13.2)
Maximum time of Mode D (ms)	210000	153000	92000

Map 11 (Threshold value for 0.020 inch leak in Mode D)

		Elapsed time in Mode D (ms)							
		14976	30080	45056	60032	75008	89984	104960	119936
Fuel Level ℓ (US gal, Imp gal)	10.5 (2.77, 2.31)	11.8 (89 , 3.5)	44.5 (334 , 13.2)	93.7 (703 , 27.7)	157.7 (1183 , 46.6)	235.2 (1764 , 69.5)	325.2 (2440 , 96.1)	427.1 (3204 , 126.2)	540.2 (4053 , 159.6)
	35 (9.25, 7.7)	16.6 (125 , 4.9)	59.9 (449 , 17.7)	124.3 (932 , 36.7)	207.6 (1558 , 61.3)	308 (2311 , 91)	424 (3181 , 125.2)	554.2 (4157 , 163.7)	698.1 (5237 , 206.2)
	60 (15.85, 13.2)	19.5 (147 , 5.8)	72.6 (544 , 21.4)	153.1 (1149 , 45.2)	258.3 (1938 , 76.3)	385.3 (2891 , 113.8)	531.9 (3990 , 157.1)	695.9 (5220 , 205.5)	874.7 (6562 , 258.3)
kPa (mmHg, inHg)									

		Elapsed time in Mode D (ms)						
		135040	150016	164992	179968	194944	209920	225024
Fuel Level ℓ (US gal, Imp gal)	10.5 (2.77, 2.31)	664.9 (4988 , 196.4)	798.3 (5988.759196, 235.8)	941.1 (7059.829331, 277.9)	1093 (8199.589852, 322.8)	1253.1 (9400.484819, 370.1)	1421.1 (10660.58808, 419.7)	1597.7 (11985.45394, 471.9)
	35 (9.25, 7.7)	855.3 (6417 , 252.6)	1022.1 (7667.574279, 301.9)	1198.3 (8989.295773, 353.9)	1383 (10375.1614, 408.5)	1575.5 (11819.51053, 465.3)	1774.4 (13311.35531, 524.1)	1979.4 (14848.89523, 584.6)
	60 (15.85, 13.2)	1067.4 (8007 , 315.2)	1268.4 (9515.072146, 374.6)	1476.9 (11079.18417, 436.2)	1690.4 (12681.30069, 499.3)	1907 (14306.15395, 563.2)	2125.6 (15945.85818, 627.8)	2346.1 (17599.98997, 692.9)
kPa (mmHg, inHg)								

Map 12 (Threshold value for Pass in Mode D)

		Elapsed time in Mode D (ms)							
		14976	30080	45056	60032	75008	89984	104960	119936
Fuel Level ℓ (US gal, Imp gal)	10.5 (2.77, 2.31)	8.7 (65 , 2.6)	32.8 (246 , 9.7)	69 (518 , 20.4)	116.2 (871 , 34.3)	173.3 (1300 , 51.2)	239.7 (1798 , 70.8)	314.7 (2361 , 93)	398.1 (2986 , 117.6)
	35 (9.25, 7.7)	12.3 (92 , 3.6)	44.1 (331 , 13)	91.6 (687 , 27)	153 (1148 , 45.2)	226.9 (1703 , 67)	312.4 (2344 , 92.3)	408.3 (3063 , 120.6)	514.4 (3859 , 151.9)
	60 (15.85, 13.2)	14.4 (108 , 4.3)	53.5 (401 , 15.8)	112.8 (846 , 33.3)	190.3 (1428 , 56.2)	283.9 (2130 , 83.9)	391.9 (2940 , 115.8)	512.7 (3847 , 151.4)	644.5 (4835 , 190.3)
kPa (mmHg, inHg)									

		Elapsed time in Mode D (ms)						
		135040	150016	164992	179968	194944	209920	225024
Fuel Level ℓ (US gal, Imp gal)	10.5 (2.77, 2.31)	489.9 (3675 , 144.7)	588.2 (4412.769934, 173.7)	693.4 (5201.979507, 204.8)	805.4 (6041.803049, 237.9)	923.3 (6926.673025, 272.7)	1047.1 (7855.170163, 309.3)	1177.2 (8831.38711, 347.7)
	35 (9.25, 7.7)	630.2 (4728 , 186.1)	753.1 (5649.791574, 222.4)	882.9 (6623.691622, 260.8)	1019.1 (7644.85577, 301)	1160.9 (8709.113019, 342.9)	1307.5 (9808.367067, 386.2)	1458.5 (10941.29122, 430.8)
	60 (15.85, 13.2)	786.5 (5900 , 232.3)	934.6 (7011.105792, 276)	1088.2 (8163.609387, 321.4)	1245.6 (9344.116297, 367.9)	1405.2 (10541.3766, 415)	1566.2 (11749.57971, 462.6)	1728.7 (12968.41366, 510.6)
kPa (mmHg, inHg)								

2. ENABLE CONDITION

Monitor 1

Secondary Parameters	Enable Conditions
Battery voltage	≥ 10.9 V
Ambient pressure	≥ 75 kPa (563 mmHg, 22.2 inHg)
Fuel tank pressure	≥ –4 kPa (–30 mmHg, –1.2 inHg) and < 2.7 kPa (20 mmHg, 0.8 inHg)
Elapsed time after previous EVAP monitor was finished/canceled	≥ 230000 ms
Total time of canister purge operation	≥ 120000 ms
Learning value of EVAP concentration	< 0.08
Engine speed	≥ 1050 rpm and < 4000 rpm
Intake manifold vacuum (= ambient pressure – intake manifold pressure)	≥ 13.3 kPa (100 mmHg, 3.9 inHg)
Vehicle speed	≥ 32 km/h (19.9 MPH)
Closed loop air fuel ratio control	Active
Fuel temperature	< 45 °C (113 °F)
Intake air temperature	≥ –10 °C (14 °F)
Fuel level	≥ 10.5 ℓ (2.77 US gal, 2.31 Imp gal) and < 59.5 ℓ (15.72 US gal, 13.09 Imp gal)

Monitor 2 (first idle condition)

Secondary Parameters	Enable Conditions
Battery voltage	≥ 10.9 V
Ambient pressure	≥ 75 kPa (563 mmHg, 22.2 inHg)
Soak time	≥ 18000 s
Accumulated intake air mass after engine start	≥ Map 13
Closed loop air fuel ratio control	Active
Fuel level	≥ 10.5 ℓ (2.77 US gal, 2.31 Imp gal) and < 59.5 ℓ (15.72 US gal, 13.09 Imp gal)
Fuel temperature	< 35 °C (95 °F)
Fuel tank pressure	≥ –0.7 kPa (–5.106 mmHg, –0.2 inHg) and < 0.7 kPa (5.106 mmHg, 0.2 inHg)
Adapted fuel tank pressure	≥ –0.3 kPa (–2.507 mmHg, –0.1 inHg) and < 0.3 kPa (2.507 mmHg, 0.1 inHg)
Engine speed	≥ 1000 rpm and < 2000 rpm
Intake manifold vacuum (= ambient pressure – intake manifold pressure)	≥ 13.3 kPa (100 mmHg, 3.9 inHg)
Vehicle speed	< 2 km/h (1.2 MPH)
Idle switch	ON
Intake air temperature	≥ –10 °C (14 °F)

Monitor 2 (vehicle running condition)

Secondary Parameters	Enable Conditions
Battery voltage	≥ 10.9 V
Ambient pressure	≥ 75 kPa (563 mmHg, 22.2 inHg)
Elapsed time after previous EVAP monitor was finished/canceled	≥ 60000 ms
Total time of canister purge operation	≥ 120000 ms
Fuel temperature	< 55 °C (131 °F)
Fuel level	≥ 10.5 ℓ (2.77 US gal, 2.31 Imp gal) and < 59.5 ℓ (15.72 US gal, 13.09 Imp gal)
Intake air temperature	≥ –10 °C (14 °F)
Vehicle speed	≥ 30 km/h (18.6 MPH)
All conditions below are satisfied	≥ 5000 ms
• Fuel tank pressure	≥ –0.7 kPa (–5 mmHg, –0.2 inHg) and < 1.4 kPa (10.7 mmHg, 0.4 inHg)
• Engine speed	≥ 1050 rpm and < 4000 rpm
• Intake manifold vacuum (= ambient pressure – intake manifold pressure)	≥ 13.3 kPa (100 mmHg, 3.9 inHg)
• Closed loop air fuel ratio control	Active
• Short term fuel trim	> 0.9
• Fuel level with large smoothing coefficient – Fuel level with small smoothing coefficient	< Map 14
• Learning value of EVAP density	< 0.08

Map 13 (Accumulated intake air mass after engine start)

Engine coolant temperature at start °C (°F)	–10 (14)	0 (32)	10 (50)	20 (68)	30 (86)	40 (104)	50 (122)	60 (140)	70 (158)
Accumulated intake air mass after engine start g (oz)	420 (14.81)	420 (14.81)	420 (14.81)	380 (13.4)	360 (12.7)	280 (9.88)	180 (6.35)	120 (4.23)	120 (4.23)

Map 14 (Threshold value the fuel slosh detection)

Fuel Level ℓ (US gal, Imp gal)	10 (2.64, 2.2)	20 (5.28, 4.4)	25 (6.61, 5.5)	30 (7.93, 6.6)	43 (11.36, 9.46)	45 (11.89, 9.9)	50 (13.21, 11)	60 (15.85, 13.2)
Fuel level change for detection of fuel slosh ℓ (US gal, Imp gal)	5 (1.32, 1.1)	5 (1.32, 1.1)	5 (1.32, 1.1)	5 (1.32, 1.1)	5 (1.32, 1.1)	5 (1.32, 1.1)	6 (1.59, 1.32)	8 (2.11, 1.76)

3. GENERAL DRIVING CYCLE

Monitor 1

Perform the diagnosis when the cumulative time of canister purge after engine start becomes 120 seconds or more, at a vehicle speed of 32 km/h (20 MPH) or more.
If judgment cannot be made, repeat the diagnosis after a predetermined interval has passed.

Monitor 2 (first idle condition)

Perform the diagnosis only once at the fast idle (the idling before starting to move) after soaking of 5 hours or more, in conditions that A/F feedback has been executed and catalytic converter has been warmed up (approx. 25 seconds after engine start).
If judgment cannot be made, or the diagnosis cannot be performed at fast idle, do not repeat the diagnosis in this driving cycle.

Monitor 2 (vehicle running condition)

Perform this procedure only when the diagnosis cannot be completed at fast idle.
Perform the diagnosis when the cumulative time of canister purge after engine start becomes 120 seconds or more, at a vehicle speed of 30 km/h (18.6 MPH) or more.
If judgment cannot be made, repeat the diagnosis after a predetermined interval has passed.

4. DIAGNOSTIC METHOD

- **Monitor 1**

• CPC valve stuck open

At the beginning of the Monitor 1, system performs CPC valve stuck open monitor in Mode Z. CPC valve and CCV are closed and the fuel tank pressure is monitored. The pressure transition over a calibrated time is then used to determine if the CPC valve is stuck open.

CPC valve stuck open test at Mode Z of Monitor 1

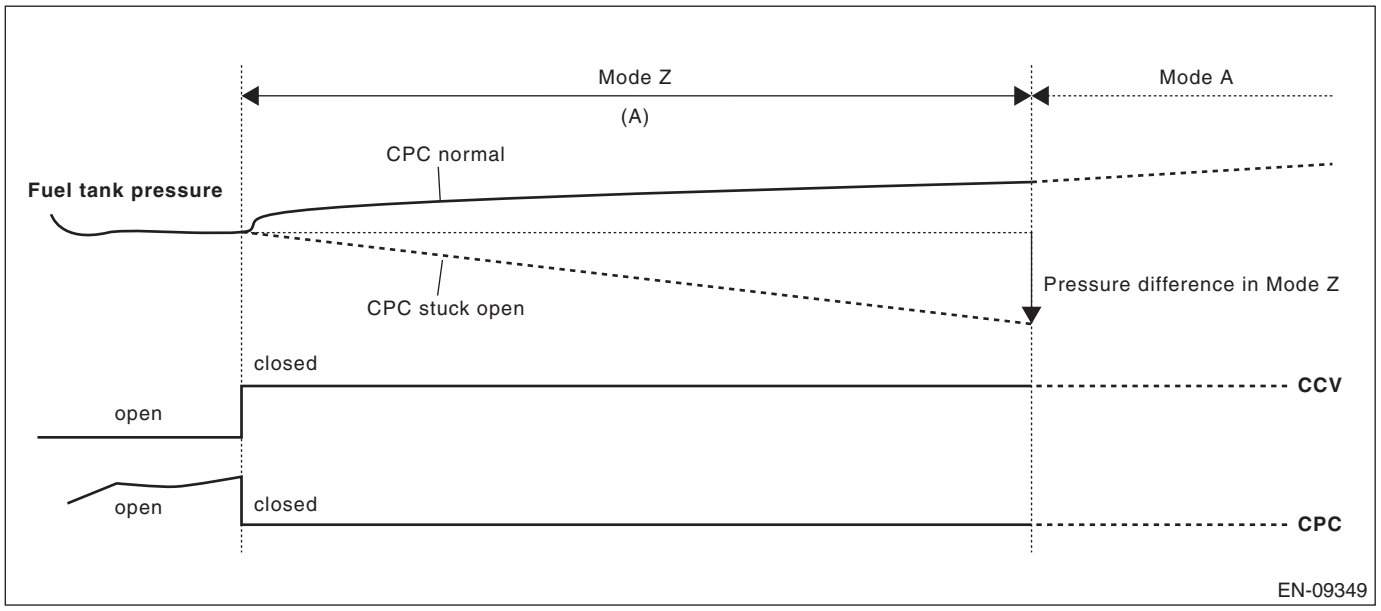

(A) 3000 ms

Judgment

- Pressure difference in Mode Z < 0.9 kPa (6.5 mmHg, 0.3 inHg) → Fail [CPC valve stuck open]: **P0457**
- Pressure difference in Mode Z ≥ 0.4 kPa (3 mmHg, 0.1 inHg) → Pass → move to **Mode A**

• Fuel cap loose/off and CPC valve stuck close

Fuel cap loose/off and CPC valve stuck close monitor is performed in Mode B of Monitor 1. The engine lowers the fuel tank pressure using intake manifold vacuum via the operation of the CPC valve. The pressure transition over a calibrated time is then used to determine if the Fuel cap loose/off or CPC valve stuck closed.

Fuel cap off or CPC stuck close at Mode B of Monitor 1

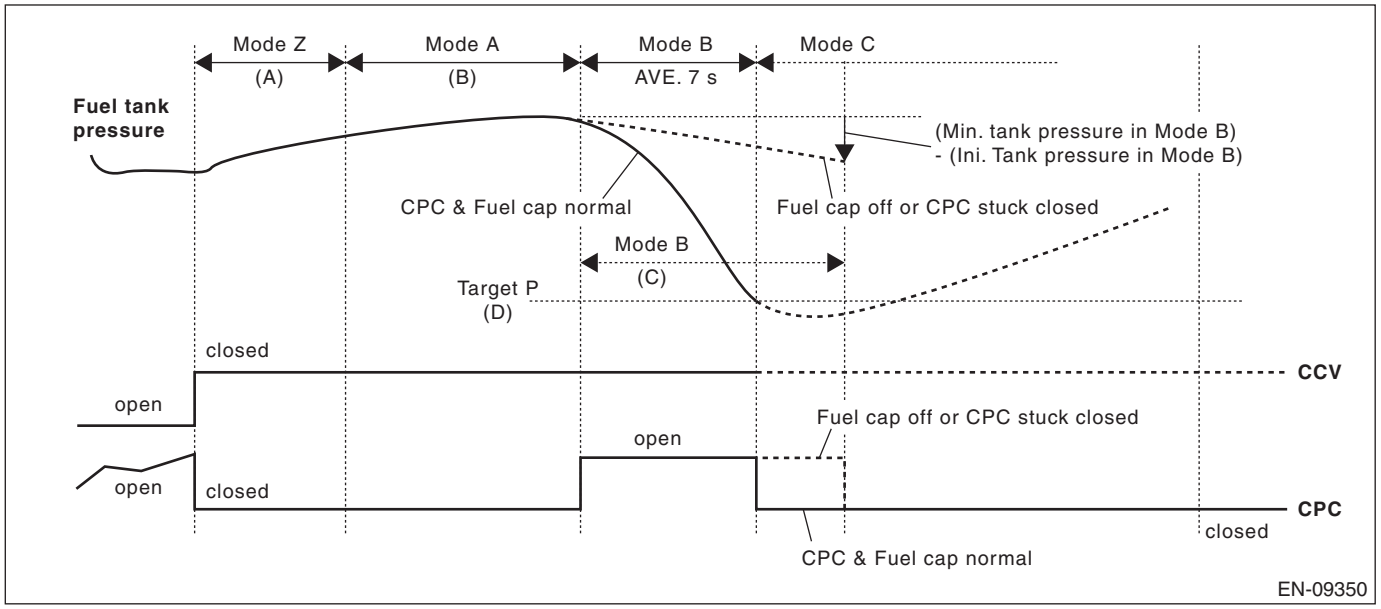

(A) 3000 ms (B) 10000 ms (C) 10000 ms

(D) –1.4 kPa (–10.5 mmHg, –0.4 inHg)

Judgment

- Elapsed time in Mode B ≥ 10000 ms and (Minimum tank pressure in Mode B) – (Initial tank pressure in Mode B) > –0.3 kPa (–2.5 mmHg, –0.1 inHg) → Fail [Fuel cap off or CPC valve stuck close]: **P0457**
- Fuel tank pressure ≤ –1.4 kPa (–10.5 mmHg, –0.4 inHg) → Pass → move to **Mode C**

Fuel cap loose at Mode B of Monitor 1

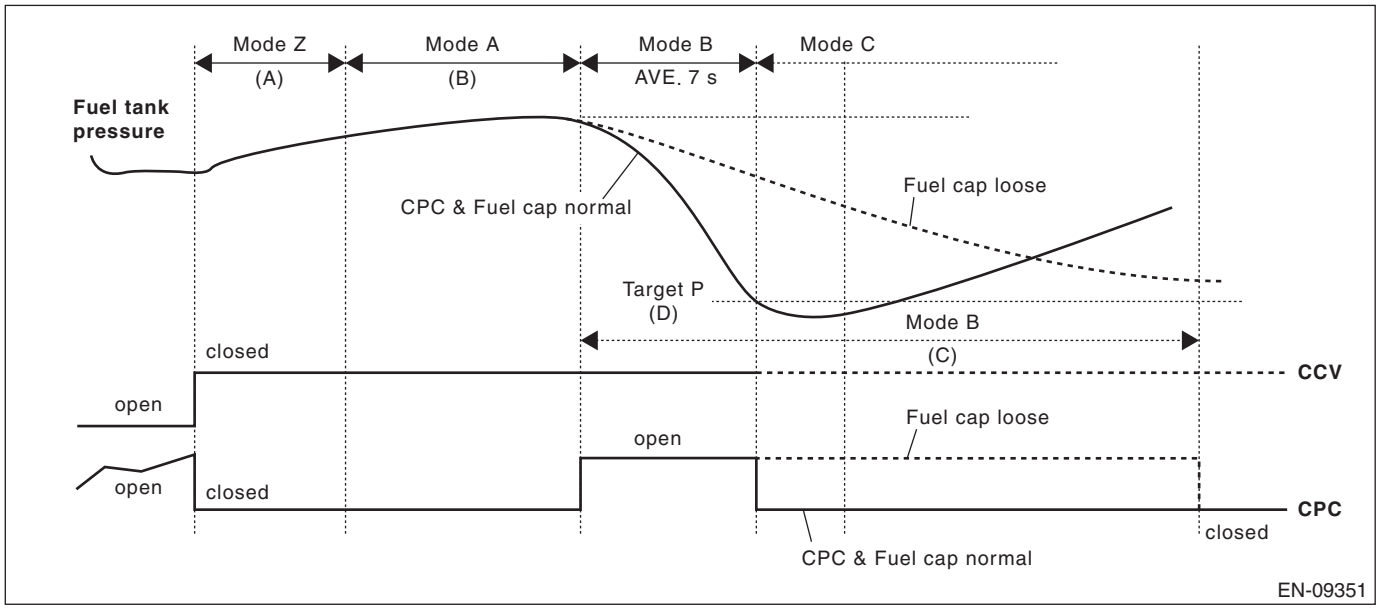

(A) 3000 ms (B) 10000 ms (C) 10000 ms + 25000 ms

(D) –1.4 kPa (–10.5 mmHg, –0.4 inHg)

Judgment
- Elapsed time in Mode B ≥ 10000 ms + 25000 ms → Fail [Fuel cap loose]: **P0457**
- Fuel tank pressure ≤ –1.4 kPa (–10.5 mmHg, –0.4 inHg) → Pass → move to **Mode C**

• 0.040 inch leak check

0.040 inch evaporative leak monitor is executed through Mode A to Mode D of Monitor 1. The engine lowers the fuel tank pressure using intake manifold vacuum via the canister purge operation during engine running. Once the tank pressure reaches a calibrated target (below atmospheric pressure) the purge valve is closed and the fuel tank pressure is monitored. The pressure transition over a calibrated time period is then used to determine if the fuel tank system has a leak.

0.040 inch EVAP monitor test

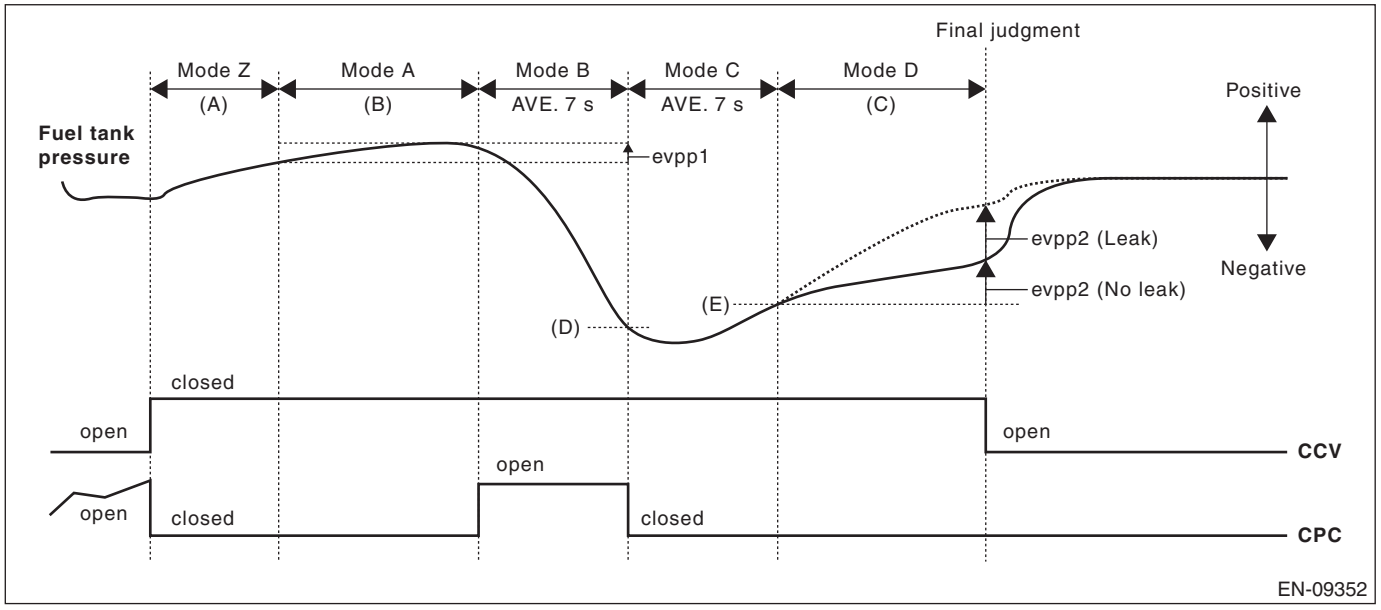

(A) 3000 ms
(B) 10000 ms
(C) 10000 ms
(D) –1.4 kPa (–10.5 mmHg, –0.4 inHg)
(E) –1.4 kPa (–10.5 mmHg, –0.4 inHg)

Judgment
- evpp2 – 1.5 × evpp1 > Map 1 → Fail [0.040 inch Leak]: **P0442**
- evpp2 – 1.5 × evpp1 ≤ Map 1 → Pass [No Leak]

- **Monitor 2 (first idle condition)**

0.020 inch leak check at first idle condition

An intrusive evaporative leak monitor test is run following the first engine start after a calibrated engine off soak period. The engine lowers the fuel tank pressure using intake manifold vacuum via the purge valve operation during engine idle. Once the tank pressure reaches a calibrated target (below atmospheric pressure) the purge valve is closed and the fuel tank pressure is monitored. The pressure transition over a calibrated time period is then used to determine if the fuel tank system has a leak.

Intrusive EVAP Monitor test at first Idle

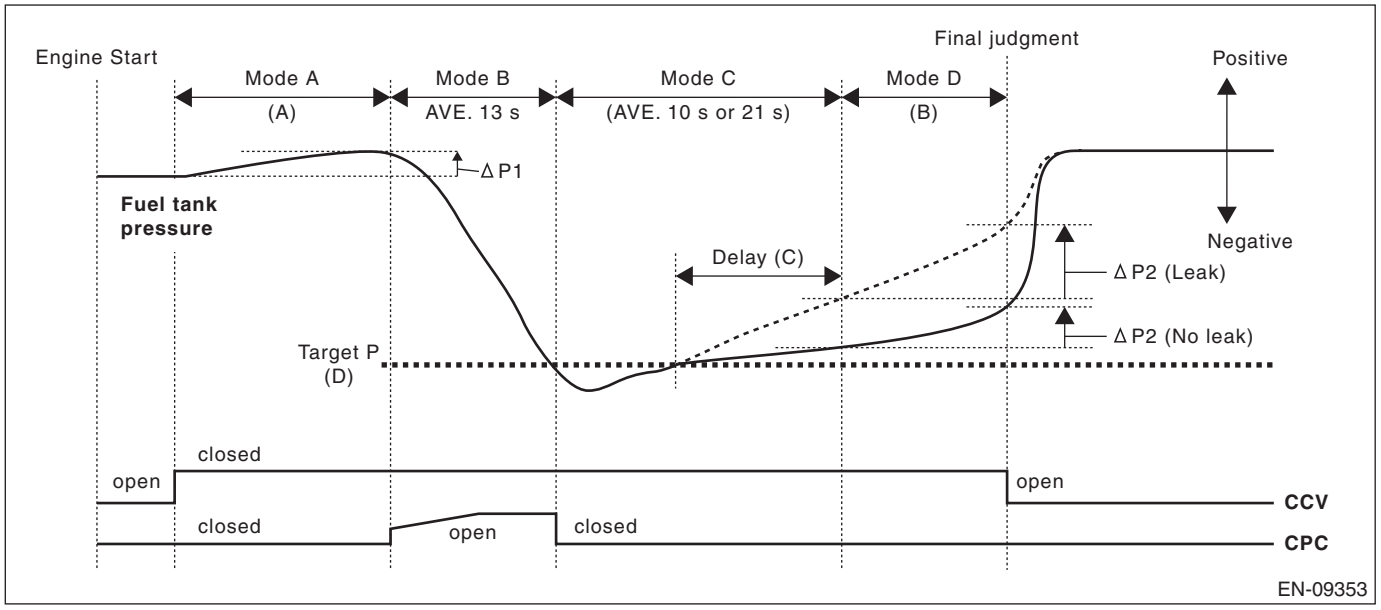

(A) 128 ms or 10000 ms (B) 10000 ms (C) 2000 ms or 10000 ms

(D) –1.3 kPa (–10 mmHg, –0.4 inHg)

Judgment

- $\triangle$P2 – $\triangle$P1 > Map 5 or Map 7 → Fail [0.020 inch Leak]: **P0456**
- $\triangle$P2 – $\triangle$P1 ≤ Map 6 or Map 8 → Pass [No Leak]

- **Monitor 2 (vehicle running condition)**

0.020 inch Monitor during Vehicle Running (moving) Conditions

While the vehicle is vehicle running, the diagnostic intrusively pulls-down the fuel tank pressure using manifold vacuum via the purge valve. Once the tank pressure reaches a calibrated target (below atmospheric pressure) the purge valve is closed and the fuel tank pressure is monitored. The pressure transition over a calibrated time period is then used to determine if the fuel tank system has a leak.

Intrusive EVAP Monitor Test (Vehicle Running)

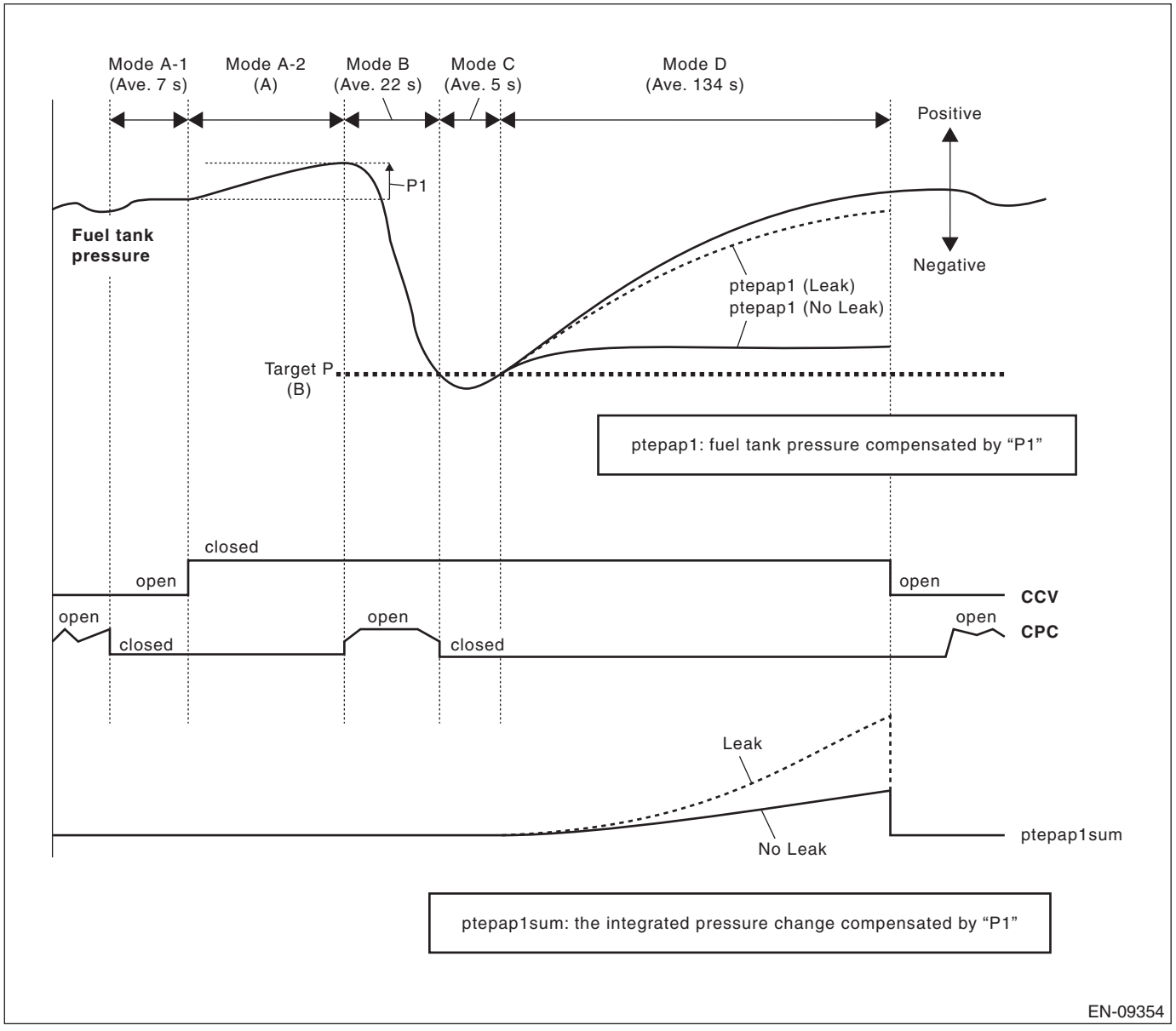

(A) 30000 ms (B) –2 kPa (–15 mmHg, –0.6 inHg)

Judgment

- ptepap1sum > Map 11 → Fail [0.020 inch Leak]: **P0456**
- ptepap1sum ≤ Map 12 → Pass [No Leak]

BW:DTC P0447 EVAPORATIVE EMISSION CONTROL SYSTEM VENT CONTROL CIRCUIT OPEN

1. OUTLINE OF DIAGNOSIS

Detect open or short circuit of the drain valve.
Judge as NG when the ECM output level differs from the actual terminal level.

2. COMPONENT DESCRIPTION

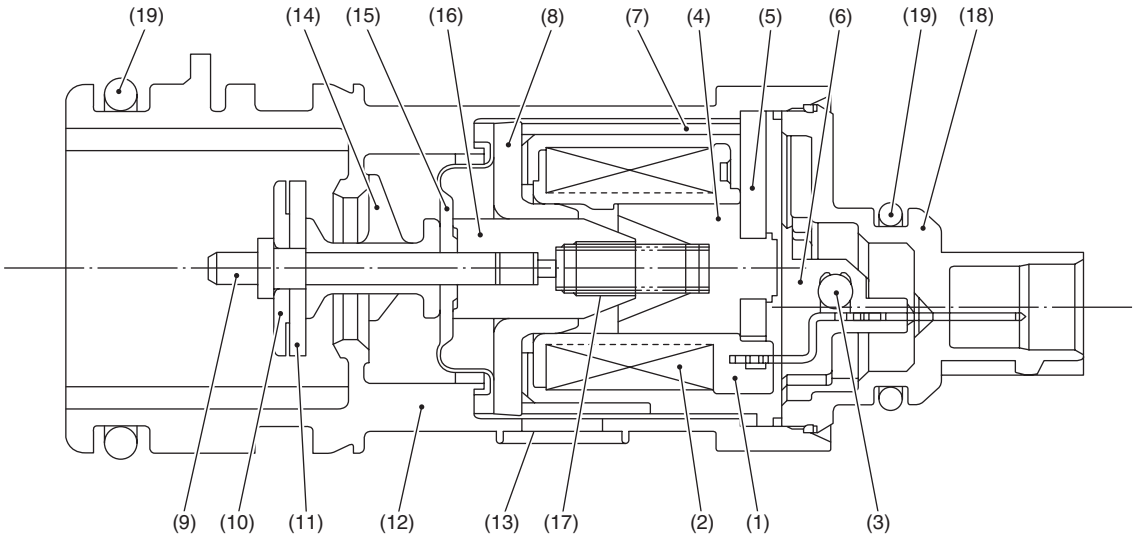

(1) Bobbin
(2) Coil
(3) Diode
(4) Stator core
(5) End plate
(6) Body
(7) Yoke
(8) Magnetic plate
(9) Shaft
(10) Plate
(11) Valve
(12) Housing
(13) Filter
(14) Retainer
(15) Diaphragm
(16) Movable core
(17) Spring
(18) Cover
(19) O-ring

3. ENABLE CONDITION

Secondary Parameters	Enable Conditions
None	

4. GENERAL DRIVING CYCLE

Always perform the diagnosis continuously.

5. DIAGNOSTIC METHOD

• Abnormality Judgment

If the duration of time while the following conditions are met is longer than the time indicated, judge as NG.

Judgment Value

Malfunction Criteria	Threshold Value
Battery voltage	≥ 10.9 V
Elapsed time after starting the engine	≥ 1 second
Terminal output voltage when ECM outputs OFF signal	Low

Time Needed for Diagnosis: 2500 ms
Malfunction Indicator Light Illumination: Illuminates as soon as a malfunction occurs.

• Normality Judgment

Judge as OK and clear the NG if the continuous time while the following conditions are established is more than the predetermined time.

Judgment Value

Malfunction Criteria	Threshold Value
Battery voltage	≥ 10.9 V
Elapsed time after starting the engine	≥ 1 second
Terminal output voltage when ECM outputs OFF signal	High

Time Needed for Diagnosis: Less than 1 second

BX:DTC P0448 EVAPORATIVE EMISSION CONTROL SYSTEM VENT CONTROL CIRCUIT SHORTED

1. OUTLINE OF DIAGNOSIS

Detect open or short circuit of the drain valve.
Judge as NG when the ECM output level differs from the actual terminal level.

2. COMPONENT DESCRIPTION

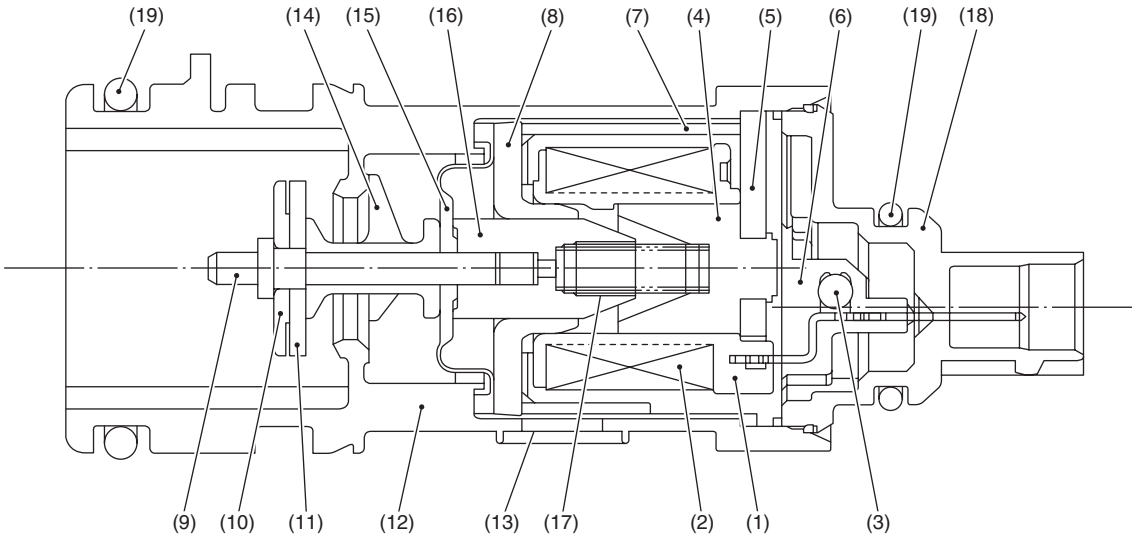

(1) Bobbin
(2) Coil
(3) Diode
(4) Stator core
(5) End plate
(6) Body
(7) Yoke
(8) Magnetic plate
(9) Shaft
(10) Plate
(11) Valve
(12) Housing
(13) Filter
(14) Retainer
(15) Diaphragm
(16) Movable core
(17) Spring
(18) Cover
(19) O-ring

3. ENABLE CONDITION

Secondary Parameters	Enable Conditions
None	

4. GENERAL DRIVING CYCLE

Always perform the diagnosis continuously.

5. DIAGNOSTIC METHOD

• Abnormality Judgment

If the duration of time while the following conditions are met is longer than the time indicated, judge as NG.

Judgment Value

Malfunction Criteria	Threshold Value
Battery voltage	≥ 10.9 V
Elapsed time after starting the engine	≥ 1 second
Terminal output voltage when ECM outputs ON signal	High

Time Needed for Diagnosis: 2500 ms
Malfunction Indicator Light Illumination: Illuminates as soon as a malfunction occurs.

• Normality Judgment

Judge as OK and clear the NG if the continuous time while the following conditions are established is more than the predetermined time.

Judgment Value

Malfunction Criteria	Threshold Value
Battery voltage	≥ 10.9 V
Elapsed time after starting the engine	≥ 1 second
Terminal output voltage when ECM outputs ON signal	Low

Time Needed for Diagnosis: Less than 1 second

BY:DTC P0451 EVAPORATIVE EMISSION CONTROL SYSTEM PRESSURE SENSOR

1. OUTLINE OF DIAGNOSIS

Detect malfunctions of tank pressure sensor output property by the following two diagnoses.

- **DRIFT DIAGNOSIS**

To detect drift malfunction and offset malfunction of tank pressure sensor, activate ECM in the predetermined soaking time after turning the ignition switch OFF, and check that the tank pressure sensor input value is equivalent to the barometric pressure.

For vehicles equipped with pressure control valve, be sure to open the pressure control valve when performing the diagnosis, because the pressure inside the tank increases if the ambient temperature rises during soaking.

- **Stuck Diagnosis**

When there is no pressure variation, which should have occurred in the tank considering the operation status, judge as NG.

2. COMPONENT DESCRIPTION

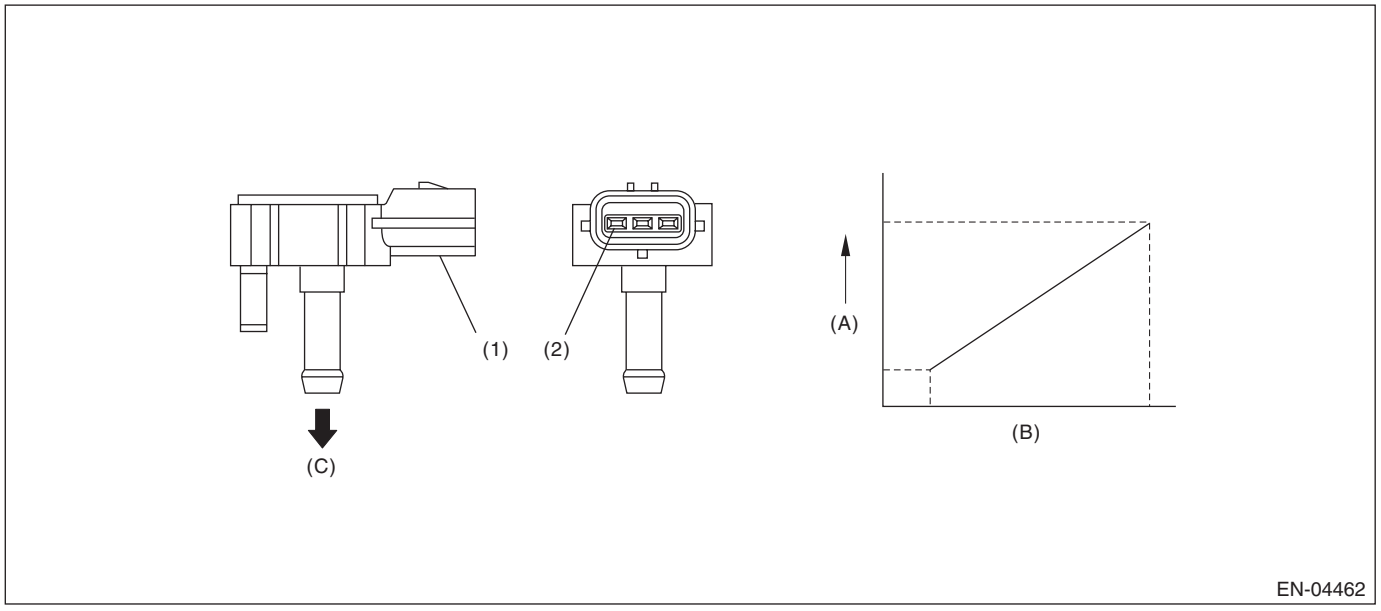

(A) Output voltage
(B) Input voltage
(C) To fuel tank
(1) Connector
(2) Terminals

3. ENABLE CONDITION

<DRIFT DIAGNOSIS>

Secondary Parameters	Enable Conditions
Soaking time	≥ 3600 s × 3 time(s)
Ignition switch	OFF
Battery voltage	≥ 10.9 V
Atmospheric pressure	≥ 75 kPa (563 mmHg, 22.2 inHg)
Fuel temperature	< 55 °C (131 °F)
Intake air temperature	> –10 °C (14 °F) and < 55 °C (131 °F)
Cumulative amount of purge during previous driving cycle	≥ Value from Map
Fuel level when the ignition switch is OFF	≥ 10.5 ℓ (2.77 US gal, 2.31 Imp gal) and < 59.5 ℓ (15.72 US gal, 13.09 Imp gal)

Map

Ambient air temperature °C (°F)	25 (77)	35 (95)	40 (104)	45 (113)
Cumulative amount of purge during previous driving cycle g (oz)	500 (17.64)	2200 (77.59)	3000 (105.81)	3800 (134.03)

<Stuck Diagnosis>

Secondary Parameters	Enable Conditions
Elapsed time after starting the engine	≥ 60 s
Fuel level	≥ 10.5 ℓ (2.77 US gal, 2.31 Imp gal)
Fuel temperature	< 55 °C (131 °F)
Battery voltage	≥ 10.9 V
Atmospheric pressure	≥ 75 kPa (563 mmHg, 22.2 inHg)

4. GENERAL DRIVING CYCLE

<DRIFT DIAGNOSIS>

Perform the diagnosis only once when 3600 s × 3 time(s) has passed after the ignition switch is OFF.

<Stuck Diagnosis>

- Perform the diagnosis continuously after 60 s have passed since the engine started.
- Pay attention to the fuel level and temperature.

5. DIAGNOSTIC METHOD

<DRIFT DIAGNOSIS>

Abnormality Judgment

Judge as NG when one of the following conditions is established.

Judgment Value

Malfunction Criteria	Threshold Value
Tank pressure sensor learning value	≥ 0.7 kPa (5.106 mmHg, 0.2 inHg) or < –0.7 kPa (–5.106 mmHg, –0.2 inHg)
Tank pressure sensor measured value – Tank pressure sensor learning value	≥ 0.3 kPa (2.507 mmHg, 0.1 inHg) or < –0.3 kPa (–2.507 mmHg, –0.1 inHg)

Time Needed for Diagnosis: 10 seconds

Malfunction Indicator Light Illumination: Illuminates when malfunction occurs in 2 continuous driving cycles.

Normality Judgment

Judge as OK and clear the NG if the following conditions are established.

Judgment Value

Malfunction Criteria	Threshold Value
Tank pressure sensor learning value	< 0.7 kPa (5.106 mmHg, 0.2 inHg) and ≥ –0.7 kPa (–5.106 mmHg, –0.2 inHg)
Tank pressure sensor measured value – Tank pressure sensor learning value	< 0.3 kPa (2.507 mmHg, 0.1 inHg) and ≥ –0.3 kPa (–2.507 mmHg, –0.1 inHg)

Time Needed for Diagnosis: 10 seconds

<Stuck Diagnosis>

Abnormality Judgment

If the duration of time while the following conditions are met is longer than the time indicated, judge as NG.

Judgment Value

Malfunction Criteria	Threshold Value
Number of times that the difference between the Max. fuel level every 60 s and Min. fuel level every 60 s is 2 ℓ (0.53 US gal, 0.44 Imp gal) or more (with enable condition established)	≥ 16 time(s)
Maximum – Minimum tank pressure (with enable condition completed)	< 0 kPa (0.375 mmHg, 0 inHg)
Maximum – Minimum fuel temperature (with enable condition completed)	≥ 7 °C (12.6°F)

If the difference between the Max. fuel level every 60 s and Min. fuel level every 60 s is less than 2 ℓ (0.53 US gal, 0.44 Imp gal), extend 60 s and make judgment with the Max. and Min. values for the fuel level in 60 s × 2. If there is no difference after the extension of 60 s, continue further to 60 s × 3, 60 s × 4, 60 s × 5. If the difference between the Max. fuel level every 60 s and Min. fuel level every 60 s is 2 ℓ (0.53 US gal, 0.44 Imp gal) or more, the diagnosis counter counts up.

Time Needed for Diagnosis: 60 s × 16 time(s) or more

Malfunction Indicator Light Illumination: Illuminates when malfunction occurs in 2 continuous driving cycles.

Normality Judgment

Judge as OK and clear the NG if the continuous time while the following conditions are established is more than the predetermined time.

Judgment Value

Malfunction Criteria	Threshold Value
Maximum – Minimum tank pressure	≥ 0 kPa (0.375 mmHg, 0 inHg)

Time Needed for Diagnosis: Less than 1 second

BZ:DTC P0452 EVAPORATIVE EMISSION CONTROL SYSTEM PRESSURE SENSOR LOW INPUT

1. OUTLINE OF DIAGNOSIS

Detect the open or short circuit of the fuel tank pressure sensor.
Judge as NG if out of specification.

2. COMPONENT DESCRIPTION

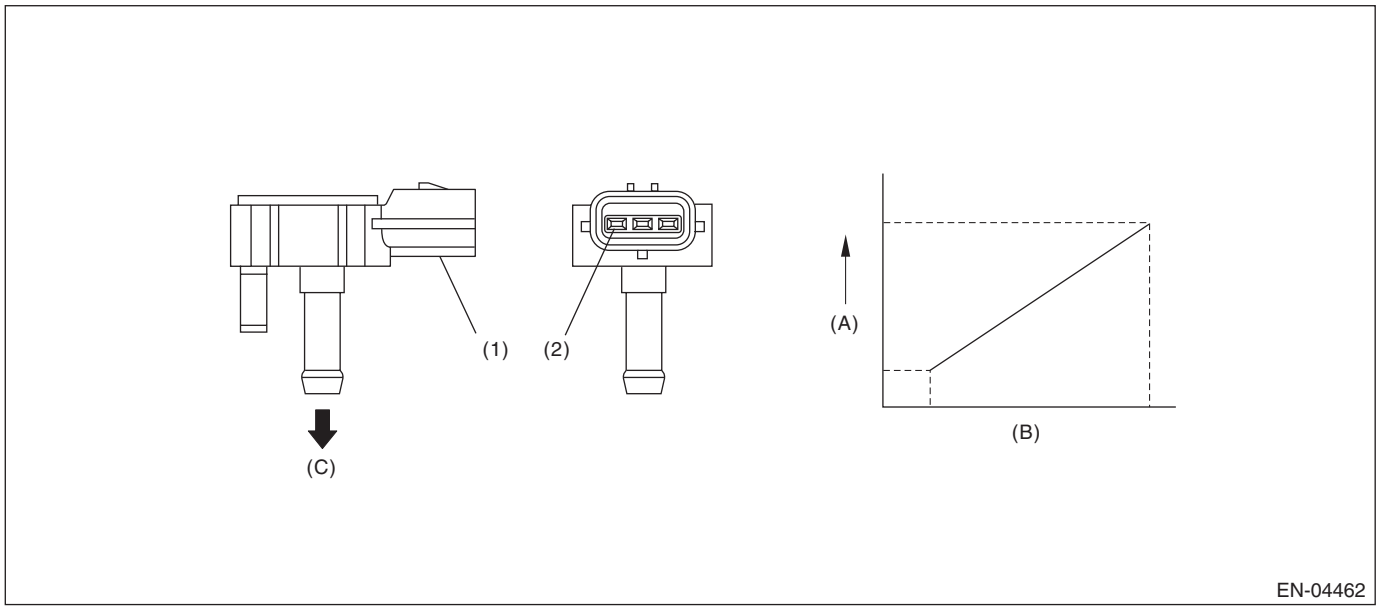

(A) Output voltage
(B) Input voltage
(C) To fuel tank
(1) Connector
(2) Terminals

3. ENABLE CONDITION

Secondary Parameters	Enable Conditions
None	

4. GENERAL DRIVING CYCLE

Always perform the diagnosis continuously.

5. DIAGNOSTIC METHOD

- **Abnormality Judgment**

If the duration of time while the following conditions are met is longer than the time indicated, judge as NG.

Judgment Value

Malfunction Criteria	Threshold Value
Fuel tank pressure	< –7.4 kPa (–55.6 mmHg, –2.2 inHg)
Battery voltage	≥ 10.9 V

Time Needed for Diagnosis: 15000 ms
Malfunction Indicator Light Illumination: Illuminates as soon as a malfunction occurs.

- **Normality Judgment**

Judge as OK and clear the NG if the continuous time while the following conditions are established is more than the predetermined time.

Judgment Value

Malfunction Criteria	Threshold Value
Fuel tank pressure	≥ –7.4 kPa (–55.6 mmHg, –2.2 inHg)
Battery voltage	≥ 10.9 V

Time Needed for Diagnosis: Less than 1 second

CA:DTC P0453 EVAPORATIVE EMISSION CONTROL SYSTEM PRESSURE SENSOR HIGH INPUT

1. OUTLINE OF DIAGNOSIS

Detect the open or short circuit of the fuel tank pressure sensor.
Judge as NG if out of specification.

2. COMPONENT DESCRIPTION

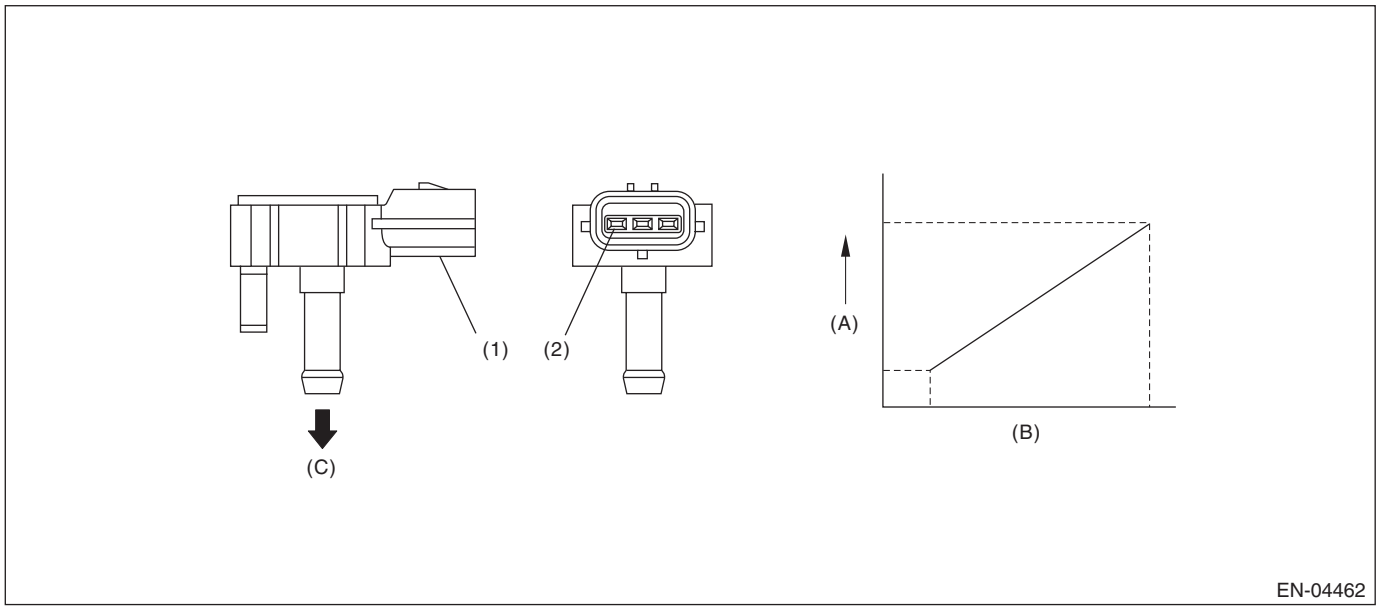

(A) Output voltage
(B) Input voltage
(C) To fuel tank
(1) Connector
(2) Terminals

3. ENABLE CONDITION

Secondary Parameters	Enable Conditions
Time needed for all secondary parameters to be in enable conditions	≥ 5000 ms
Vehicle speed	≥ 2 km/h (1.2 MPH)
All conditions of EVAP canister purge	Complete
Learning value of evaporation gas concentration (left and right)	< 0.08
Main feedback compensation coefficient (left and right)	≥ 0.9
Battery voltage	≥ 10.9 V

4. GENERAL DRIVING CYCLE

Perform the diagnosis when purging enable conditions are met without idling.

5. DIAGNOSTIC METHOD

• Abnormality Judgment

If the duration of time while the following conditions are met is longer than the time indicated, judge as NG.

Judgment Value

Malfunction Criteria	Threshold Value
Fuel tank pressure	≥ 7.9 kPa (59.6 mmHg, 2.3 inHg)
Fuel temperature	< 55 °C (131 °F)
Atmospheric pressure	≥ 75 kPa (563 mmHg, 22.2 inHg)

Time Needed for Diagnosis: 15000 ms
Malfunction Indicator Light Illumination: Illuminates as soon as a malfunction occurs.

• Normality Judgment

Judge as OK and clear the NG if the continuous time while the following conditions are established is more than the predetermined time.

Judgment Value

Malfunction Criteria	Threshold Value
Fuel tank pressure	< 7.9 kPa (59.6 mmHg, 2.3 inHg)

Time Needed for Diagnosis: Less than 1 second

CB:DTC P0456 EVAPORATIVE EMISSION CONTROL SYSTEM LEAK DETECTED (VERY SMALL LEAK)

1. OUTLINE OF DIAGNOSIS

NOTE:
For the detection standard, refer to DTC P0442. <Ref. to GD(H4DOTC)-130, DTC P0442 EVAPORATIVE EMISSION CONTROL SYSTEM LEAK DETECTED (SMALL LEAK), Diagnostic Trouble Code (DTC) Detecting Criteria.>

CC:DTC P0457 EVAPORATIVE EMISSION CONTROL SYSTEM LEAK DETECTED (FUEL CAP LOOSE/OFF)

1. OUTLINE OF DIAGNOSIS

NOTE:
For the detection standard, refer to DTC P0442. <Ref. to GD(H4DOTC)-130, DTC P0442 EVAPORATIVE EMISSION CONTROL SYSTEM LEAK DETECTED (SMALL LEAK), Diagnostic Trouble Code (DTC) Detecting Criteria.>

CD:DTC P0458 EVAPORATIVE EMISSION SYSTEM PURGE CONTROL VALVE CIRCUIT LOW

1. OUTLINE OF DIAGNOSIS

Detect open or short circuit of the purge control solenoid valve.
Judge as NG when the ECM output level differs from the actual terminal level.

2. COMPONENT DESCRIPTION

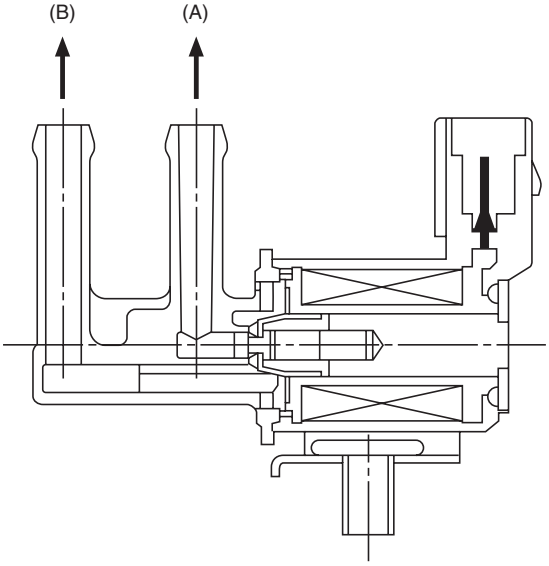

EN-02197

(A) To canister
(B) To intake manifold

3. ENABLE CONDITION

Secondary Parameters	Enable Conditions
Battery voltage	≥ 10.9 V
Elapsed time after starting the engine	≥ 1 second

4. GENERAL DRIVING CYCLE

Always perform the diagnosis after starting the engine.

5. DIAGNOSTIC METHOD

- **Abnormality Judgment**

If the duration of time while the following conditions are met is longer than the time indicated, judge as NG.

Judgment Value

Malfunction Criteria	Threshold Value
Duty ratio of “ON”	< 0.75
Terminal output voltage	Low

Time Needed for Diagnosis: 2500 ms
Malfunction Indicator Light Illumination: Illuminates when malfunction occurs in 2 continuous driving cycles.

- **Normality Judgment**

Judge as OK and clear the NG if the continuous time while the following conditions are established is more than the predetermined time.

Judgment Value

Malfunction Criteria	Threshold Value
Terminal output voltage	High

Time Needed for Diagnosis: Less than 1 second

CE:DTC P0459 EVAPORATIVE EMISSION SYSTEM PURGE CONTROL VALVE CIRCUIT HIGH

1. OUTLINE OF DIAGNOSIS

Detect open or short circuit of the purge control solenoid valve.
Judge as NG when the ECM output level differs from the actual terminal level.

2. COMPONENT DESCRIPTION

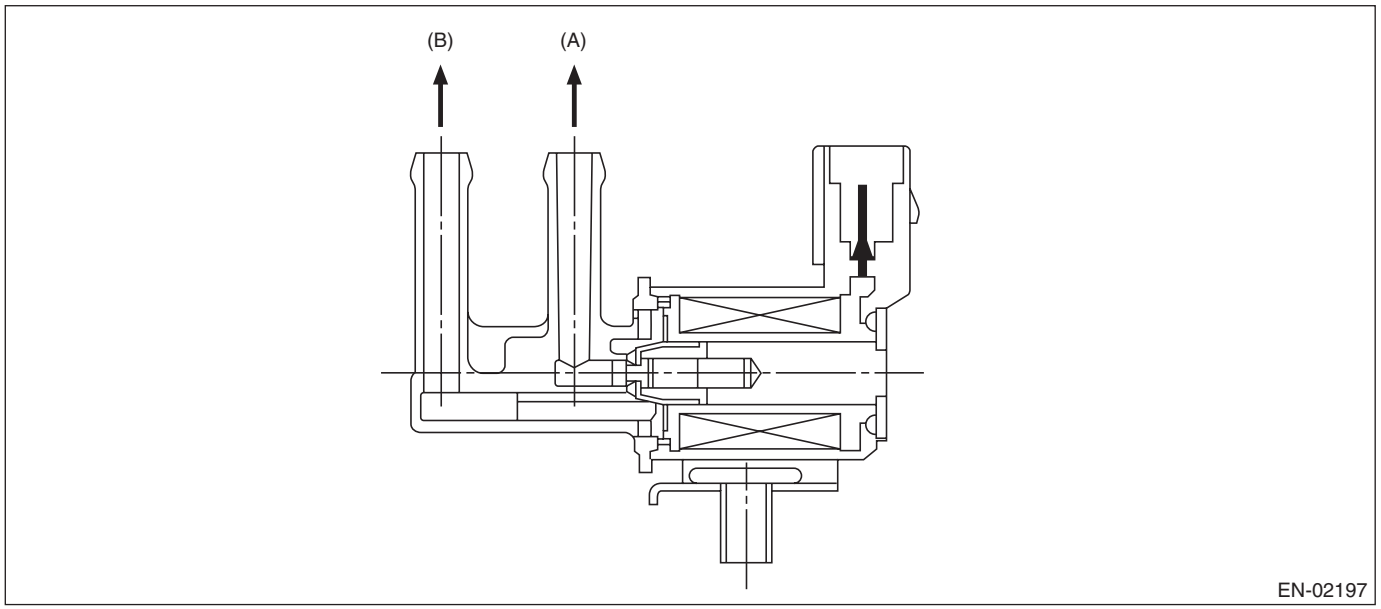

(A) To canister
(B) To intake manifold

3. ENABLE CONDITION

Secondary Parameters	Enable Conditions
Battery voltage	≥ 10.9 V
Elapsed time after starting the engine	≥ 1 second

4. GENERAL DRIVING CYCLE

Always perform the diagnosis after starting the engine.

5. DIAGNOSTIC METHOD

- **Abnormality Judgment**

If the duration of time while the following conditions are met is longer than the time indicated, judge as NG.

Judgment Value

Malfunction Criteria	Threshold Value
Duty ratio of "ON"	≥ 0.25
Terminal output voltage	High

Time Needed for Diagnosis: 2500 ms
Malfunction Indicator Light Illumination: Illuminates when malfunction occurs in 2 continuous driving cycles.

- **Normality Judgment**

Judge as OK and clear the NG if the continuous time while the following conditions are established is more than the predetermined time.

Judgment Value

Malfunction Criteria	Threshold Value
Terminal output voltage	Low

Time Needed for Diagnosis: Less than 1 second

CF:DTC P0461 FUEL LEVEL SENSOR “A” CIRCUIT RANGE/PERFORMANCE

1. OUTLINE OF DIAGNOSIS

Detect malfunctions of the fuel level sensor output property.
If the fuel level does not vary in a particular driving condition / engine condition where it should, judge as NG.

2. COMPONENT DESCRIPTION

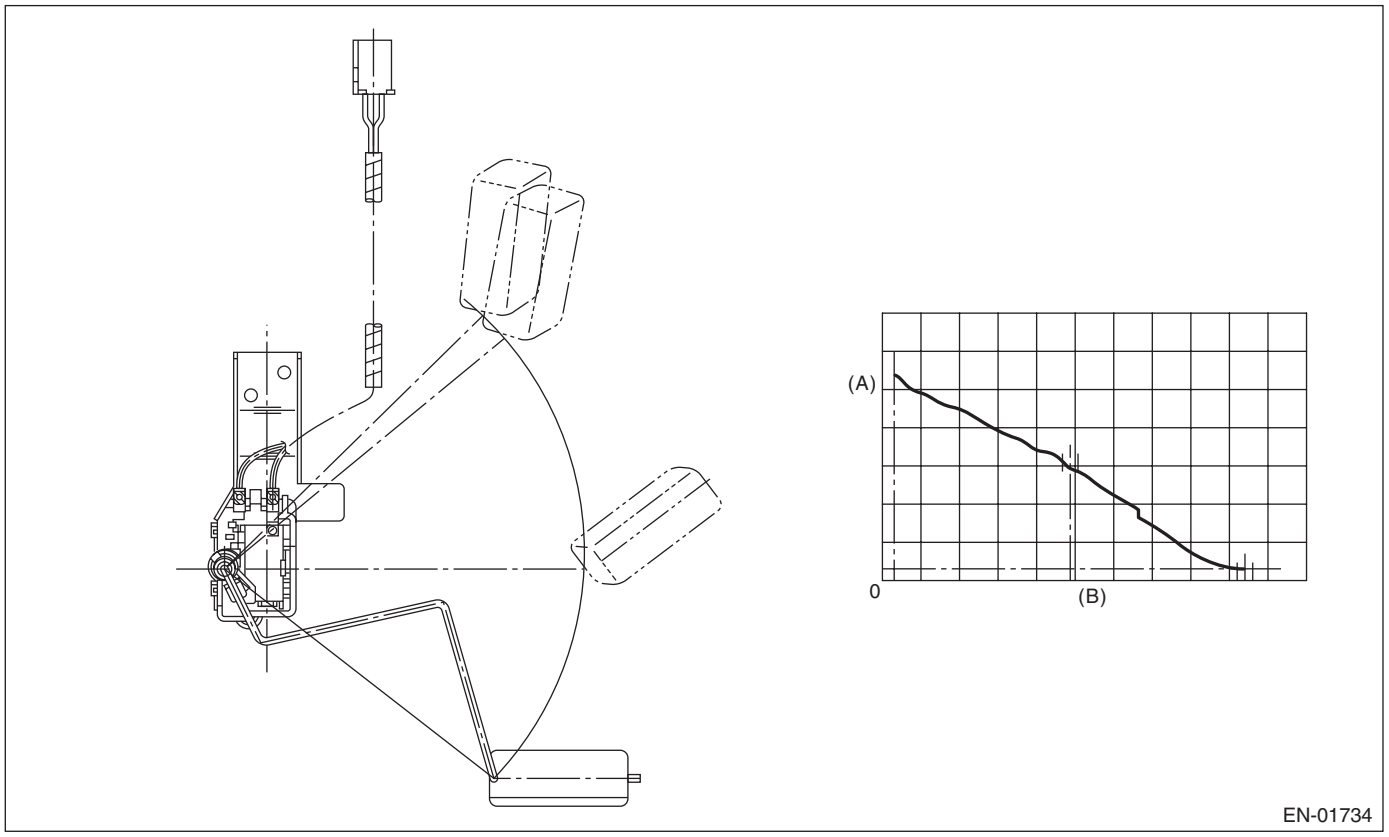

(A) Fuel level (B) Resistance

3. ENABLE CONDITION

Secondary Parameters	Enable Conditions
None	

4. GENERAL DRIVING CYCLE

Always perform the diagnosis continuously.

5. DIAGNOSTIC METHOD

• Abnormality Judgment

Judge as NG when the following conditions are established.

Judgment Value

Malfunction Criteria	Threshold Value
Accumulated amount of intake air	≥ 165375 g (5832.78 oz)
Max. – min. values of fuel level output	< 2.6 ℓ (0.69 US gal, 0.57 Imp gal)
Battery voltage	≥ 10.9 V
Engine speed	< 4000 rpm
Elapsed time after starting the engine	≥ 5000 ms

Time Needed for Diagnosis: Less than 1 second
Malfunction Indicator Light Illumination: Illuminates when malfunction occurs in 2 continuous driving cycles.

• Normality Judgment

Judge as OK and clear the NG if the following conditions are established.

Judgment Value

Malfunction Criteria	Threshold Value
Accumulated amount of intake air	≥ 165375 g (5832.78 oz)
Max. – min. values of fuel level output	≥ 2.6 ℓ (0.69 US gal, 0.57 Imp gal)
Battery voltage	≥ 10.9 V
Engine speed	< 4000 rpm
Elapsed time after starting the engine	≥ 5000 ms

Time Needed for Diagnosis: Less than 1 second

CG:DTC P0462 FUEL LEVEL SENSOR “A” CIRCUIT LOW

1. OUTLINE OF DIAGNOSIS

Detect the open or short circuit of fuel level sensor. Judge as NG if out of specification.

2. COMPONENT DESCRIPTION

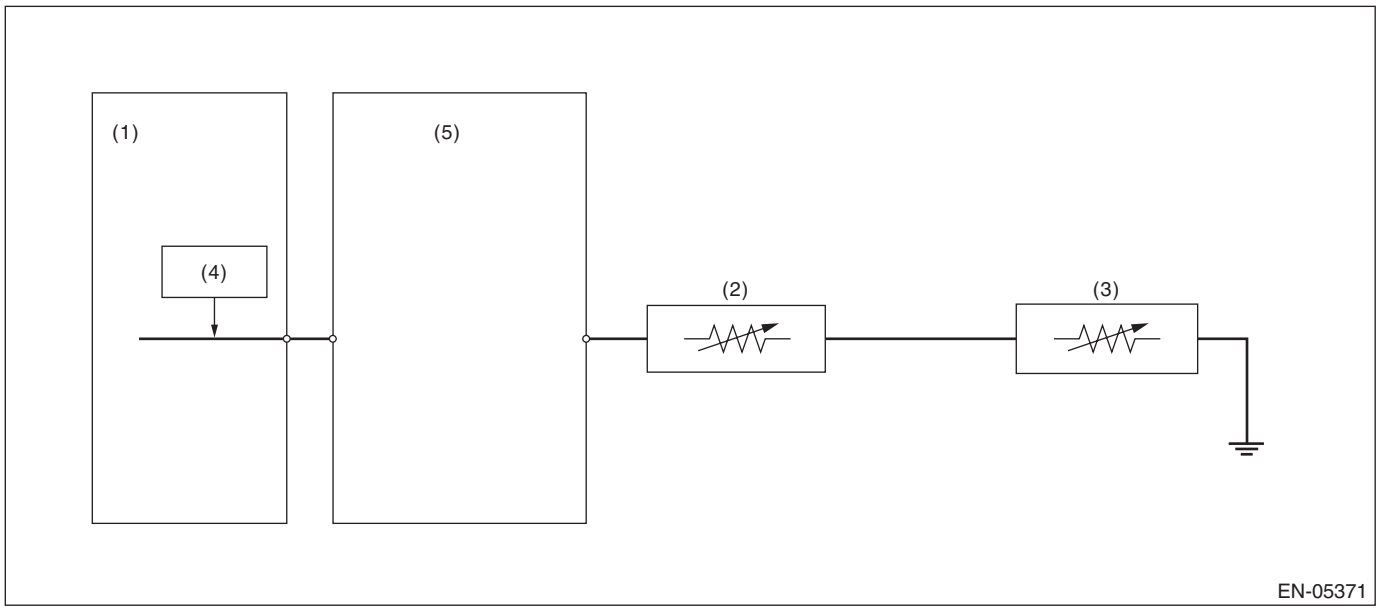

(1) Engine control module (ECM)
(2) Fuel level sensor
(3) Fuel sub level sensor
(4) Detecting circuit
(5) Body integrated unit

3. ENABLE CONDITION

Secondary Parameters	Enable Conditions
None	

4. GENERAL DRIVING CYCLE

Always perform the diagnosis continuously.

5. DIAGNOSTIC METHOD

• Abnormality Judgment

If the duration of time while the following conditions are met is longer than the time indicated, judge as NG.

Judgment Value

Malfunction Criteria	Threshold Value
Battery voltage	≥ 10.9 V
Elapsed time after starting the engine	≥ 3000 ms
Output voltage	< 0.173 V

Time Needed for Diagnosis: 2500 ms
Malfunction Indicator Light Illumination: Illuminates when malfunction occurs in 2 continuous driving cycles.

• Normality Judgment

Judge as OK and clear the NG if the continuous time while the following conditions are established is more than the predetermined time.

Judgment Value

Malfunction Criteria	Threshold Value
Battery voltage	≥ 10.9 V
Elapsed time after starting the engine	≥ 3000 ms
Output voltage	≥ 0.173 V

Time Needed for Diagnosis: Less than 1 second

CH:DTC P0463 FUEL LEVEL SENSOR “A” CIRCUIT HIGH

1. OUTLINE OF DIAGNOSIS

Detect the open or short circuit of fuel level sensor. Judge as NG if out of specification.

2. COMPONENT DESCRIPTION

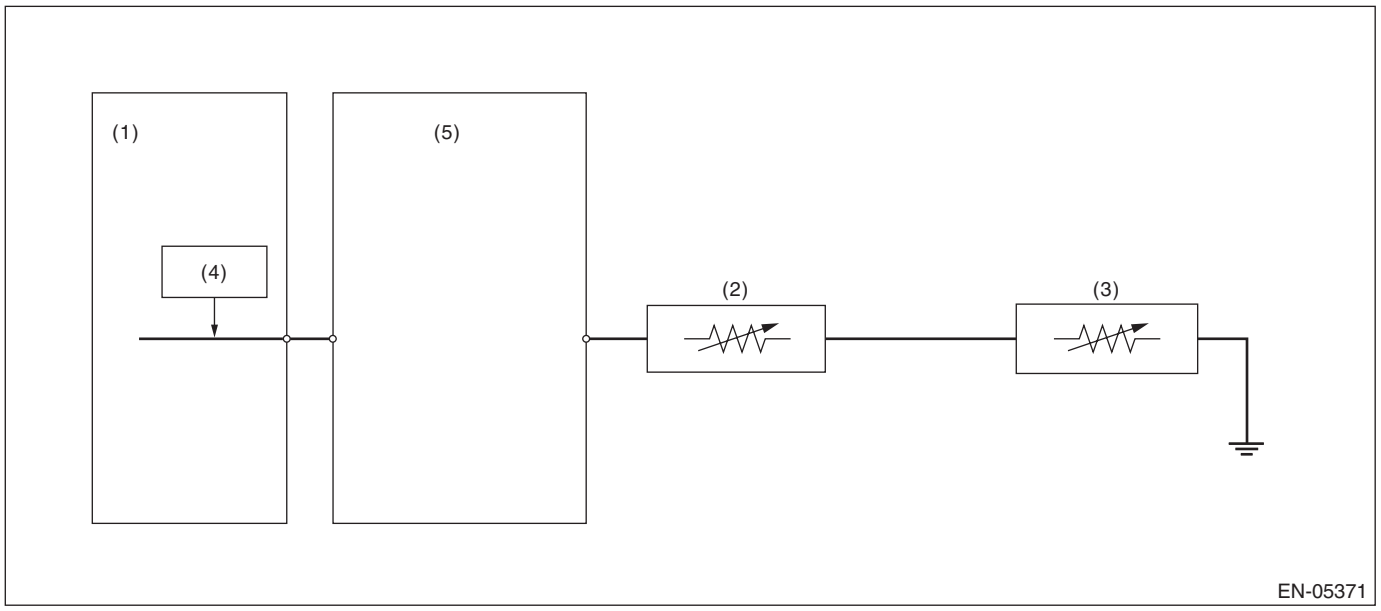

(1) Engine control module (ECM)
(2) Fuel level sensor
(3) Fuel sub level sensor
(4) Detecting circuit
(5) Body integrated unit

3. ENABLE CONDITION

Secondary Parameters	Enable Conditions
None	

4. GENERAL DRIVING CYCLE

Always perform the diagnosis continuously.

5. DIAGNOSTIC METHOD

• Abnormality Judgment

If the duration of time while the following conditions are met is longer than the time indicated, judge as NG.

Judgment Value

Malfunction Criteria	Threshold Value
Battery voltage	≥ 10.9 V
Elapsed time after starting the engine	≥ 3000 ms
Output voltage	≥ 7.212 V

Time Needed for Diagnosis: 1000 ms
Malfunction Indicator Light Illumination: Illuminates when malfunction occurs in 2 continuous driving cycles.

• Normality Judgment

Judge as OK and clear the NG if the continuous time while the following conditions are established is more than the predetermined time.

Judgment Value

Malfunction Criteria	Threshold Value
Battery voltage	≥ 10.9 V
Elapsed time after starting the engine	≥ 3000 ms
Output voltage	< 7.212 V

Time Needed for Diagnosis: Less than 1 second

CI: DTC P0464 FUEL LEVEL SENSOR CIRCUIT INTERMITTENT

1. OUTLINE OF DIAGNOSIS

Detect the unstable output faults from the fuel level sensor caused by noise. Judge as NG when the max. value and cumulative value of output voltage variation of the fuel level sensor is larger than the threshold value.

2. ENABLE CONDITION

Malfunction Criteria	Threshold Value
Engine speed	≥ 500 rpm
Elapsed time after starting the engine	≥ 1 s
Battery voltage	≥ 10.9 V
Idle switch	ON
Fuel level	≥ 10.5 ℓ (2.77 US gal, 2.31 Imp gal) and < 59.5 ℓ (15.72 US gal, 13.09 Imp gal)
Vehicle speed = 0 km/h (0 MPH)	≥ 10000 ms

3. GENERAL DRIVING CYCLE

- Always perform the diagnosis continuously at idle speed.
- Pay attention to the fuel level.

4. DIAGNOSTIC METHOD

Calculate the Max. value (DELFLMAX) and cumulative value (SUMFL) of output voltage variation of fuel level sensor during 12.2 seconds. Judge it normal when both max. and cumulative values are not over the threshold value. Otherwise, when either of them is over the threshold value, the diagnosis counter counts up. Judge as NG if the counter indicated 4 time(s).

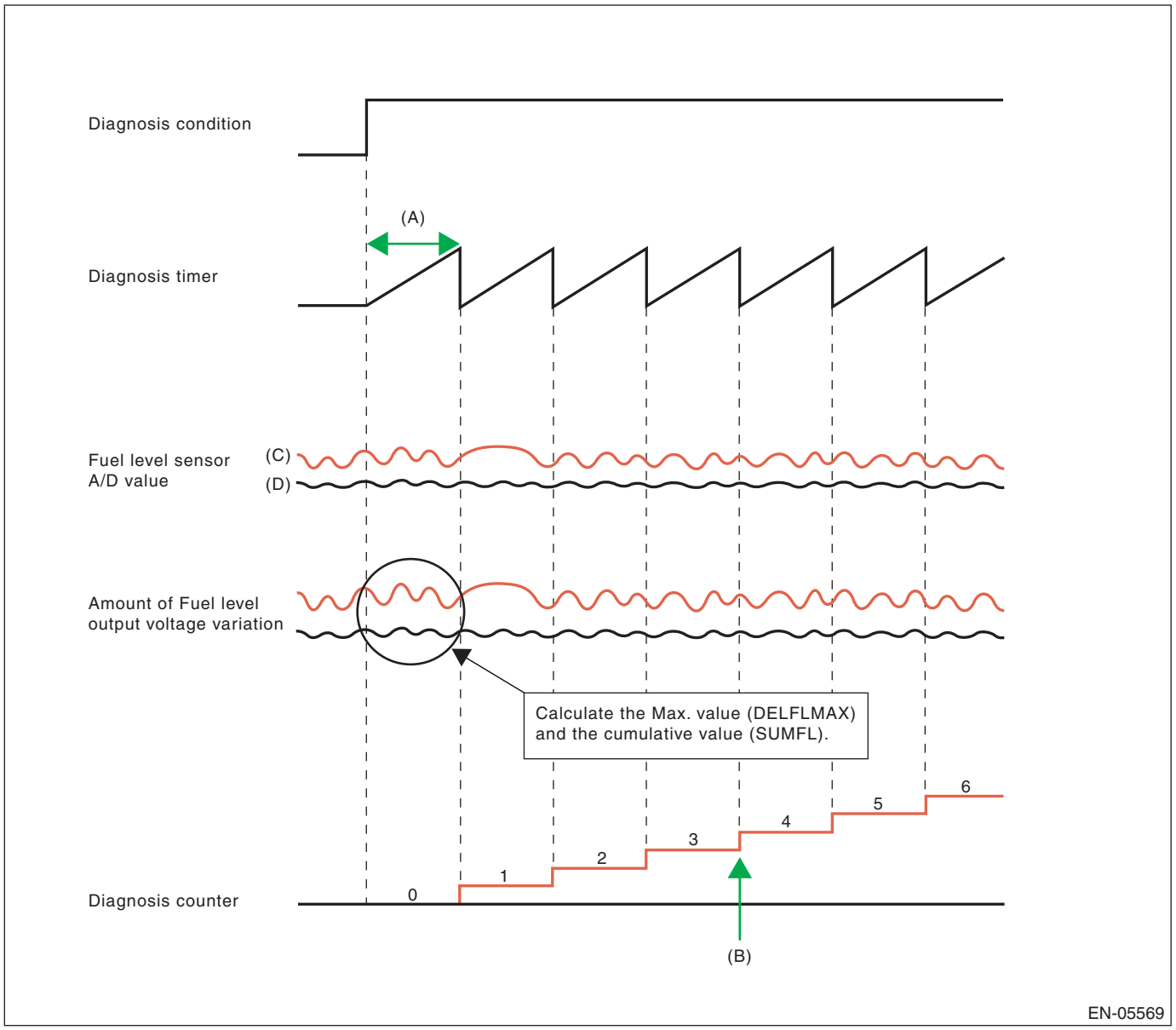

(A) 12288 ms (B) NG at 4 time(s) counts (C) Malfunction
(D) Normal

• Abnormality Judgment

If the duration of time while the following conditions are met is longer than the time indicated, judge as NG.

Judgment Value

Malfunction Criteria	Threshold Value
Integrated times of the condition reaching follows,	≥ 4 time(s)
DELFLMAX	≥ Value from Map
or	
SUMFL	≥ 23.8 V
At this time,	
DELFLMAX: Maximum difference of sensor output for 12288 ms	
SUMFL: Integrated value of the sensor output deviation for 12288 ms	

Map

Fuel level (ℓ , US gal, Imp gal)	10, 2.64, 2.2	20, 5.28, 4.4	25, 6.61, 5.5	30, 7.93, 6.6	43, 11.36, 9.46	45, 11.89, 9.9	50, 13.21, 11	60, 15.85, 13.2
Measured voltage (V)	0.248	0.519	0.796	0.6	1.025	1.069	1.402	2.186

The diagnosis counter does not count up when the following conditions are completed within 12288 ms.

Maximum value – minimum value of change of tank pressure during 12288 ms	≥ 0 kPa (0.375 mmHg, 0 inHg)
Maximum value – minimum value of battery voltage during 12288 ms	≥ 0.969 V

Time Needed for Diagnosis: 12288 ms × 4 time(s)
Malfunction Indicator Light Illumination: Illuminates when malfunction occurs in 2 continuous driving cycles.

• Normality Judgment

Judge as OK and clear the NG if the continuous time while the following conditions are established is more than the predetermined time.

Judgment Value

Malfunction Criteria	Threshold Value
DELFLMAX	< Value from Map
SUMFL	< 23.8 V
At this time,	
DELFLMAX: Maximum difference of sensor output for 12288 ms	
SUMFL: Integrated value of the sensor output deviation for 12288 ms	

Time Needed for Diagnosis: 12288 ms

CJ:DTC P0500 VEHICLE SPEED SENSOR “A”

1. OUTLINE OF DIAGNOSIS

Judge as NG when outside of the judgment value.
Judge NG when the received data from VDCCM&H/U is abnormal vehicle speed, and the vehicle speed data is impossible.

2. COMPONENT DESCRIPTION

Vehicle speed signals are taken in to the VDC control module and hydraulic control unit, and normal/erroneous data of the ABS wheel speed sensor is received by CAN communication from the VDC control module and hydraulic control unit.

3. ENABLE CONDITION

Secondary Parameters	Enable Conditions
Battery voltage	≥ 10.9 V
Elapsed time after starting the engine	≥ 2000 ms

4. GENERAL DRIVING CYCLE

Always perform diagnosis more than 2000 ms after starting the engine.

5. DIAGNOSTIC METHOD

- **Abnormality Judgment**

If the duration of time while the following conditions are met is longer than the time indicated, judge as NG.

Judgment Value

Malfunction Criteria	Threshold Value
Front ABS wheel speed sensor status	Malfunction
Either of the following is established	
Front left wheel speed	≥ 300 km/h (186.4 MPH)
Front right wheel speed	≥ 300 km/h (186.4 MPH)

Time Needed for Diagnosis: 2500 ms
Malfunction Indicator Light Illumination: Illuminates as soon as a malfunction occurs.

- **Normality Judgment**

Judge as OK and clear the NG if the continuous time while the following conditions are established is more than the predetermined time.

Judgment Value

Malfunction Criteria	Threshold Value
Front left wheel speed	> 0 km/h (0 MPH) and < 300 km/h (186.4 MPH)
Front right wheel speed	> 0 km/h (0 MPH) and < 300 km/h (186.4 MPH)

Time Needed for Diagnosis: 2500 ms

CK:DTC P0506 IDLE AIR CONTROL SYSTEM RPM LOWER THAN EXPECTED

1. OUTLINE OF DIAGNOSIS

Detect the malfunction that actual engine speed is not close to target engine speed during idling. Judge as NG when actual engine speed is not close to target engine speed during idling.

2. ENABLE CONDITION

Secondary Parameters	Enable Conditions
Engine coolant temperature	≥ 72 °C (161.6 °F)
Battery voltage	≥ 10.9 V
Atmospheric pressure	≥ 75 kPa (563 mmHg, 22.2 inHg)
Fuel level	≥ 10.5 ℓ (2.77 US gal, 2.31 Imp gal)
Elapsed time after starting the engine	≥ 10.49 s
Feedback of ISC	In operation
Lambda value (left and right)	≥ 0.9 and < 1.1
After switching air conditioner to ON/OFF	≥ 5.1 s
After intake manifold pressure changes by 4 kPa (30 mmHg, 1.2 inHg) or more.	> 5.1 s
Elapsed time after switching neutral position switch to ON/OFF	> 5.1 s
Vehicle speed	0 km/h (0 MPH)

3. GENERAL DRIVING CYCLE

Perform the diagnosis continuously at idling after warming up engine.

4. DIAGNOSTIC METHOD

- **Abnormality Judgment**

If the duration of time while the following conditions are met is longer than the time indicated, judge as NG.

Judgment Value

Malfunction Criteria	Threshold Value
Actual engine speed – Targeted engine speed	< –100 rpm
Feedback compensation for ISC	Max.

Time Needed for Diagnosis: 10 s × 3 time(s)
Malfunction Indicator Light Illumination: Illuminates when malfunction occurs in 2 continuous driving cycles.

- **Normality Judgment**

Judge as OK and clear the NG if the continuous time while the following conditions are established is more than the predetermined time.

Judgment Value

Malfunction Criteria	Threshold Value
Actual engine speed – Targeted engine speed	≥ –100 rpm

Time Needed for Diagnosis: 10 s

CL:DTC P0507 IDLE AIR CONTROL SYSTEM RPM HIGHER THAN EXPECTED

1. OUTLINE OF DIAGNOSIS

Detect the malfunction that actual engine speed is not close to target engine speed during idling. Judge as NG when actual engine speed is not close to target engine speed during idling.

2. ENABLE CONDITION

Secondary Parameters	Enable Conditions
Engine coolant temperature	≥ 72 °C (161.6 °F)
Battery voltage	≥ 10.9 V
Atmospheric pressure	≥ 75 kPa (563 mmHg, 22.2 inHg)
Fuel level	≥ 10.5 ℓ (2.77 US gal, 2.31 Imp gal)
Elapsed time after starting the engine	≥ 10.49 s
Feedback of ISC	In operation
Lambda value (left and right)	≥ 0.9 and < 1.1
After switching air conditioner to ON/OFF	≥ 5.1 s
After intake manifold pressure changes by 4 kPa (30 mmHg, 1.2 inHg) or more.	> 5.1 s
Elapsed time after switching neutral position switch to ON/OFF	> 5.1 s
Vehicle speed	0 km/h (0 MPH)

3. GENERAL DRIVING CYCLE

Perform the diagnosis continuously at idling after warming up engine.

4. DIAGNOSTIC METHOD

- **Abnormality Judgment**

If the duration of time while the following conditions are met is longer than the time indicated, judge as NG.

Judgment Value

Malfunction Criteria	Threshold Value
Actual – Target engine speed	≥ 200 rpm
Feedback compensation for ISC	Min.

Time Needed for Diagnosis: 10 s × 3 time(s)
Malfunction Indicator Light Illumination: Illuminates when malfunction occurs in 2 continuous driving cycles.

- **Normality Judgment**

Judge as OK and clear the NG if the continuous time while the following conditions are established is more than the predetermined time.

Judgment Value

Malfunction Criteria	Threshold Value
Actual – Target engine speed	< 200 rpm

Time Needed for Diagnosis: 10 s

CM:DTC P050A COLD START IDLE AIR CONTROL SYSTEM PERFORMANCE

1. OUTLINE OF DIAGNOSIS

• When cold, the abnormality in the control of target engine speed increase is detected. (P050A)

Judge as NG if the exhaust gas temperature diagnosis or idle speed diagnosis is NG.
• Exhaust gas temperature diagnosis
Judge as NG when the estimated exhausted gas temperature in 14 seconds after the cold start is below the specified value.
• Idle speed diagnosis
Judge as NG when actual engine speed is not close to target engine speed at cold start.

• Detect malfunctions of the catalyst advanced idling retard angle control. (P050B)

Judge as NG when ECM is not controlling the angle properly during catalyst advanced idling retard angle control.
• Final ignition timing diagnosis
Judge as NG when actual retard amount is under the specified value at cold start.

2. ENABLE CONDITIONS

Secondary Parameters	Enable Conditions
<Exhaust gas temperature diagnosis>	
Atmospheric pressure	≥ 75 kPa (563 mmHg, 22.2 inHg)
Battery voltage	> 10.9 V
Engine condition	In operation
Vehicle speed	≤ 2 km/h (1.2 MPH)
Elapsed time after gear position change (P ←→ D or N ←→ D)	≥ 3000 ms
ISC feedback	In operation
Throttle opening angle	< 0.37 °
Fuel property	Not extremely low volatility
Target retard amount	≥ 18 °CA
<Idle speed diagnosis>	
Atmospheric pressure	≥ 75 kPa (563 mmHg, 22.2 inHg)
Battery voltage	> 10.9 V
Engine condition	In operation
Vehicle speed	≤ 2 km/h (1.2 MPH)
Engine coolant temperature	≤ 60 °C (140 °F)
Intake air amount sum value	≤ Value of Map 1
Elapsed time after gear position change (P ←→ D or N ←→ D)	≥ 3000 ms
Throttle opening angle	< 0.37 °
Fuel property	Not extremely low volatility
Elapsed time after starting the engine	≥ 2000 ms
<Final ignition timing diagnosis>	
Atmospheric pressure	≥ 75 kPa (563 mmHg, 22.2 inHg)
Battery voltage	> 10.9 V
Engine condition	In operation
Vehicle speed	≤ 2 km/h (1.2 MPH)
Engine coolant temperature	≤ 60 °C (140 °F)
Intake air amount sum value	≤ Value of Map 2
Elapsed time after gear position change (P ←→ D or N ←→ D)	≥ 3000 ms
Throttle opening angle	< 0.37 °
Fuel property	Not extremely low volatility
Target retard amount	≥ Value from Map 3

Map 1

Engine coolant temperature at engine starting °C (°F)	–40 (–40)	–30 (–22)	–20 (–4)	–10 (14)	0 (32)	10 (50)	20 (68)	30 (86)
Intake air amount sum value g (oz)	970 (34.21)	860 (30.33)	750 (26.45)	660 (23.28)	590 (20.81)	550 (19.4)	530 (18.69)	520 (18.34)

Engine coolant temperature at engine starting °C (°F)	40 (104)	50 (122)	60 (140)	70 (158)	80 (176)	90 (194)	100 (212)	110 (230)
Intake air amount sum value g (oz)	500 (17.64)	460 (16.22)	350 (12.34)	350 (12.34)	350 (12.34)	350 (12.34)	350 (12.34)	350 (12.34)

Map 2

Engine coolant temperature at engine starting °C (°F)	–40 (–40)	–30 (–22)	–20 (–4)	–10 (14)	0 (32)	10 (50)	20 (68)	30 (86)
Intake air amount sum value g (oz)	970 (34.21)	860 (30.33)	750 (26.45)	660 (23.28)	590 (20.81)	550 (19.4)	530 (18.69)	520 (18.34)

Engine coolant temperature at engine starting °C (°F)	40 (104)	50 (122)	60 (140)	70 (158)	80 (176)	90 (194)	100 (212)	110 (230)
Intake air amount sum value g (oz)	500 (17.64)	460 (16.22)	350 (12.34)	350 (12.34)	350 (12.34)	350 (12.34)	350 (12.34)	350 (12.34)

Map 3

Engine coolant temperature	–40 °C (–40 °F)	–30 °C (–22 °F)	–20 °C (–4 °F)	–10 °C (14 °F)	0 °C (32 °F)	10 °C (50 °F)	20 °C (68 °F)	30 °C (86 °F)	40 °C (104 °F)	50 °C (122 °F)	60 °C (140 °F)
Target retard amount	6 °CA	6 °CA	6 °CA	6 °CA	6 °CA	6 °CA	6 °CA	6 °CA	6 °CA	6 °CA	6 °CA

3. GENERAL DRIVING CYCLE

Perform the diagnosis at cold start.

4. DIAGNOSTIC METHOD

• Exhaust gas temperature diagnosis

Abnormality Judgment
Calculate the estimated exhaust gas temperature when the diagnostic enable condition is established. Judge as NG when the following conditions are established.

Judgment Value

Malfunction Criteria	Threshold Value
Estimated exhaust gas temperature	< Value of Map 4

Map 4

Engine coolant temperature at engine starting	–40 °C (–40 °F)	–30 °C (–22 °F)	–20 °C (–4 °F)	–10 °C (14 °F)	0 °C (32 °F)	10 °C (50 °F)	20 °C (68 °F)	30 °C (86 °F)	40 °C (104 °F)	45 °C (113 °F)
Threshold Value	0 °C (32 °F)	0 °C (32 °F)	0 °C (32 °F)	79 °C (174.2 °F)	78 °C (172.4 °F)	76 °C (168.8 °F)	74 °C (165.2 °F)	72 °C (161.6 °F)	69 °C (156.2 °F)	65 °C (149 °F)

Time Needed for Diagnosis: 14 seconds
Malfunction Indicator Light Illumination: Illuminates when malfunction occurs in 2 continuous driving cycles.
Normality Judgment
Judge as OK and clear the NG if the following conditions are established.

Judgment Value

Malfunction Criteria	Threshold Value
Estimated exhaust gas temperature	≥ Value of Map 4

Time Needed for Diagnosis: Less than 1 second

• Idle speed diagnosis

Abnormality Judgment
Judge as NG when the following conditions are established.

Judgment Value

Malfunction Criteria	Threshold Value
Actual engine speed – Target engine speed	< – 125 rpm

Time Needed for Diagnosis: 5000 ms
Malfunction Indicator Light Illumination: Illuminates when malfunction occurs in 2 continuous driving cycles.
Normality Judgment
Judge as OK and clear the NG if the following conditions are established.

Judgment Value

Malfunction Criteria	Threshold Value
Actual engine speed – Target engine speed	≥ – 125 rpm

Time Needed for Diagnosis: 5000 ms

- **Final ignition timing diagnosis**

Abnormality Judgment
Judge as NG when the following conditions are established.

Judgment Value

Malfunction Criteria	Threshold Value
Final ignition timing – ignition timing during CSERS* *: Ignition timing during CSERS (Cold Start Emission Reduction Strategy) = Base ignition timing – retard amount	> Value of Map 5

Map 5

Engine coolant temperature	–40 °C (–40 °F)	–30 °C (–22 °F)	–20 °C (–4 °F)	–10 °C (14 °F)	0 °C (32 °F)	10 °C (50 °F)	20 °C (68 °F)	30 °C (86 °F)	40 °C (104 °F)	50 °C (122 °F)	60 °C (140 °F)
Threshold Value	6 °CA	6 °CA	6 °CA	6 °CA	6 °CA	6 °CA	6 °CA	6 °CA	6 °CA	6 °CA	6 °CA

Time Needed for Diagnosis: 5000 ms
Malfunction Indicator Light Illumination: Illuminates when malfunction occurs in 2 continuous driving cycles.
Normality Judgment
Judge as OK and clear the NG if the following conditions are established.

Judgment Value

Malfunction Criteria	Threshold Value
Final ignition timing – ignition timing during CSERS* *: Ignition timing during CSERS (Cold Start Emission Reduction Strategy) = Base ignition timing – retard amount	≤ Value of Map 5

Time Needed for Diagnosis: 5000 ms

CN:DTC P050B COLD START IGNITION TIMING PERFORMANCE

1. OUTLINE OF DIAGNOSIS

NOTE:
For the detection standard, refer to DTC P050A. <Ref. to GD(H4DOTC)-172, DTC P050A COLD START IDLE AIR CONTROL SYSTEM PERFORMANCE, Diagnostic Trouble Code (DTC) Detecting Criteria.>

CO:DTC P0512 STARTER REQUEST CIRCUIT

1. OUTLINE OF DIAGNOSIS

Detect the open or short circuit of starter SW.
Judge as ON NG when the starter SW signal remains ON.

2. ENABLE CONDITION

Secondary Parameters	Enable Conditions
None	

3. GENERAL DRIVING CYCLE

Always perform the diagnosis continuously.

4. DIAGNOSTIC METHOD

- **Abnormality Judgment**

If the duration of time while the following conditions are met is longer than the time indicated, judge as NG.

Judgment Value

Malfunction Criteria	Threshold Value
Engine condition	After engine starting
Starter OFF signal	Not detected
Battery voltage	≥ 8 V

Time Needed for Diagnosis: 30000 ms
Malfunction Indicator Light Illumination: Illuminates when malfunction occurs in 2 continuous driving cycles.

- **Normality Judgment**

Judge as OK and clear the NG if the continuous time while the following conditions are established is more than the predetermined time.

Judgment Value

Malfunction Criteria	Threshold Value
Starter OFF signal	Detected
Battery voltage	≥ 8 V

Time Needed for Diagnosis: Less than 1 second

CP:DTC P0513 INCORRECT IMMOBILIZER KEY

1. OUTLINE OF DIAGNOSIS

DTC	Item	Outline of Diagnosis
P0513	Incorrect Immobilizer Key	Incorrect immobilizer key (Use of unregistered key in body integrated unit)
P1570	Antenna	Faulty antenna
P1571	Reference Code Incompatibility	Reference code incompatibility between body integrated unit and ECM
P1572	IMM Circuit Failure (Except Antenna Circuit)	Communication failure between body integrated unit and ECM
P1574	Key Communication Failure	Failure of body integrated unit to verify key (transponder) ID code or transponder failure
P1576	EGI Control Module EEPROM	ECM malfunctioning
P1577	IMM Control Module EEPROM	Body integrated unit malfunctioning
P1578	Meter Failure	Reference code incompatibility between body integrated unit and combination meter

2. ENABLE CONDITION

When starting the engine.

3. GENERAL DRIVING CYCLE

Perform the diagnosis only after starting the engine.

4. DIAGNOSTIC METHOD

Judge as NG when the conditions for the outline of the diagnosis of the top are established.

CQ:DTC P0604 INTERNAL CONTROL MODULE RANDOM ACCESS MEMORY (RAM) ERROR

1. OUTLINE OF DIAGNOSIS

Detect the malfunction of microcomputer (RAM).
When there is a problem in the CPU normal RAM, judge as NG.
If it is possible to write data to the whole area of RAM in the initial routine, and is possible to read the same data, it is judged as OK, and if not, NG.

2. ENABLE CONDITION

Secondary Parameters	Enable Conditions
None	

Diagnosis with the initial routine.

3. GENERAL DRIVING CYCLE

Perform the diagnosis as soon as the ignition switch is turned to ON.

4. DIAGNOSTIC METHOD

- **Abnormality Judgment**

Judge as NG when the following conditions are established.

Judgment Value

Malfunction Criteria	Threshold Value
Write the specified value to RAM and then read.	The written value cannot be read.

Time Needed for Diagnosis: Less than 1 second
Malfunction Indicator Light Illumination: Illuminates as soon as a malfunction occurs.

- **Normality Judgment**

Judge as OK and clear the NG if the following conditions are established.

Judgment Value

Malfunction Criteria	Threshold Value
Write the specified value to RAM and then read.	The written value can be read.

Time Needed for Diagnosis: Less than 1 second

CR:DTC P0605 INTERNAL CONTROL MODULE READ ONLY MEMORY (ROM) ERROR

1. OUTLINE OF DIAGNOSIS

Judge as NG when SUM value of ROM is outside the standard value.

2. ENABLE CONDITION

Secondary Parameters	Enable Conditions
Ignition switch	ON

3. GENERAL DRIVING CYCLE

Always perform the diagnosis continuously.

4. DIAGNOSTIC METHOD

Abnormality Judgment

Judge as NG if the criteria below are met.

Judgment Value

Malfunction Criteria	Threshold Value
SUM value of ROM	Standard

Time Needed for Diagnosis: Undetermined
Malfunction Indicator Light Illumination: Illuminates as soon as a malfunction occurs.

CS:DTC P0607 THROTTLE CONTROL SYSTEM CIRCUIT RANGE/PERFORMANCE

1. OUTLINE OF DIAGNOSIS

Judge as NG when any one of the followings is established.
(1) Monitoring IC operates abnormally. (Monitoring IC malfunction)
(2) Input amplifier circuit of throttle position sensor 1 operates abnormally. (fourfold amplifier malfunction)
(3) CPU operates abnormally. (Instruction/flow check)
(4) A/D converter operates abnormally. (ADC malfunction)
(5) EEPROM operates abnormally. (EEPROM malfunction)
(6) Output IC operates abnormally. (Output driver malfunction)

2. COMPONENT DESCRIPTION

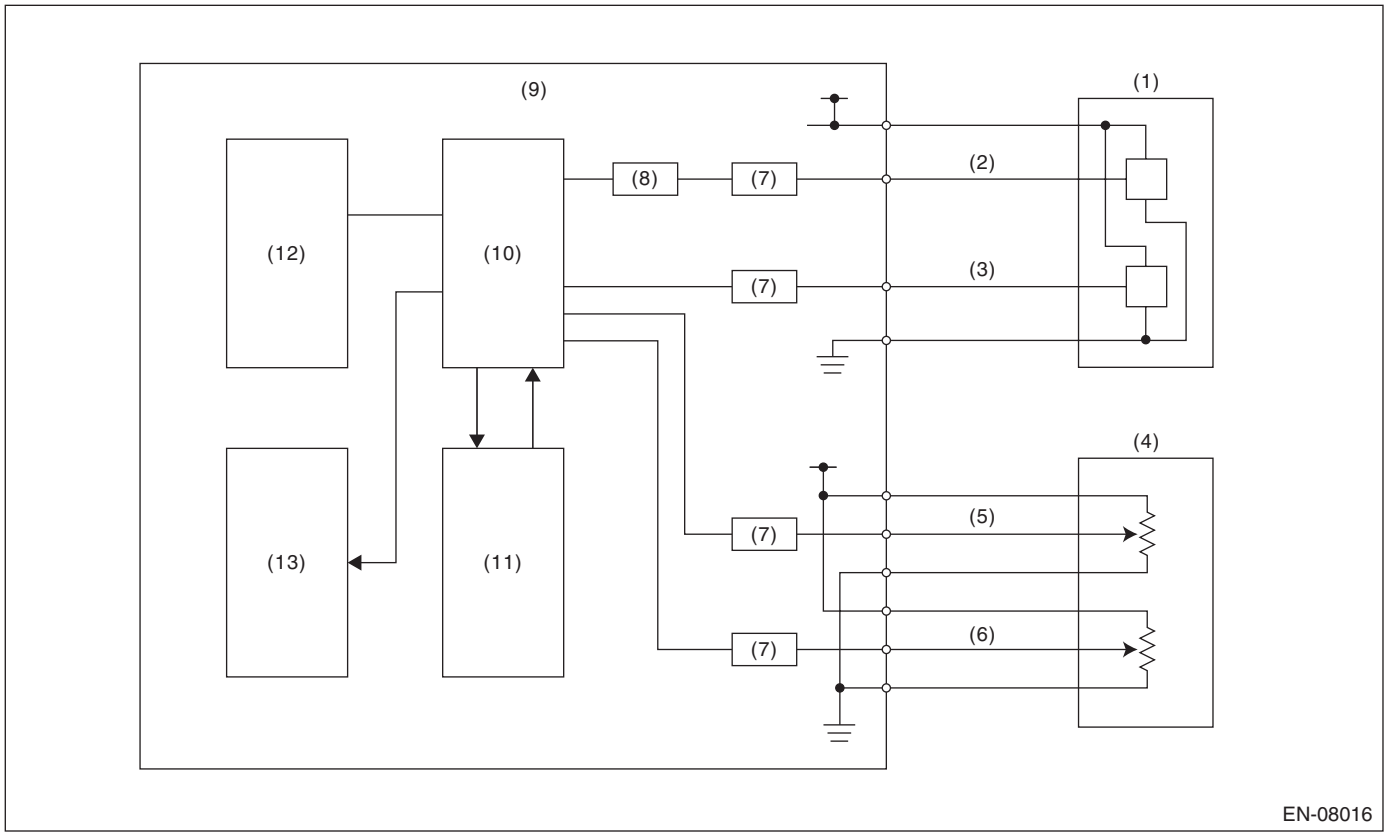

(1)	Throttle position sensor	(6)	Accelerator pedal position sensor 2	(10)	CPU
(2)	Throttle position sensor 1	(7)	I/F circuit	(11)	Monitoring IC
(3)	Throttle position sensor 2	(8)	Amplifier circuit	(12)	EEPROM
(4)	Accelerator pedal position sensor	(9)	Engine control module (ECM)	(13)	Output IC
(5)	Accelerator pedal position sensor 1				

3. ENABLE CONDITION

Secondary Parameters	Enable Conditions
(1) Battery voltage	≥ 6 V
(2) Ignition switch	ON
(2) Battery voltage	≥ 6 V
(3) Ignition switch	ON
(3) ETC control	Permitted
(4) Ignition switch	ON
(4) Battery voltage	≥ 6 V
(5) Starter switch	OFF
(5) Battery voltage	> 6 V
(6) Ignition switch	ON
(6) Battery voltage	≥ 10.9 V

4. GENERAL DRIVING CYCLE

Always perform the diagnosis continuously.

5. DIAGNOSTIC METHOD

Judge as OK and clear the NG when the malfunction criteria below are met.

Judgment Value

Malfunction Criteria	Threshold Value
(1) Monitoring IC operation	The result and estimated value match.
(2) | Throttle position sensor 1 opening angle – (Throttle position sensor 1 opening angle after passing amplifier)/4 |	< 3 °
(3) Main CPU calculation result	The result and estimated value match.
(4) | Standard voltage – Voltage reading |	< 0.078125 V
(5) EEPROM writing	Writing completed
(6) Communication with output IC	Possible to communicate

Time Needed for Diagnosis:
(1): 200 ms
(2): 24 ms
(3): 192 ms
(4): 200 ms
(5): 48 ms
(6): 2500 ms
Malfunction Indicator Light Illumination: Illuminates as soon as a malfunction occurs.

CT:DTC P0638 THROTTLE ACTUATOR CONTROL RANGE/PERFORMANCE (BANK 1)

1. OUTLINE OF DIAGNOSIS

Judge as NG when the target opening angle and actual opening angle is mismatched or the current to motor is the specified duty or more for specified time continuously.

2. COMPONENT DESCRIPTION

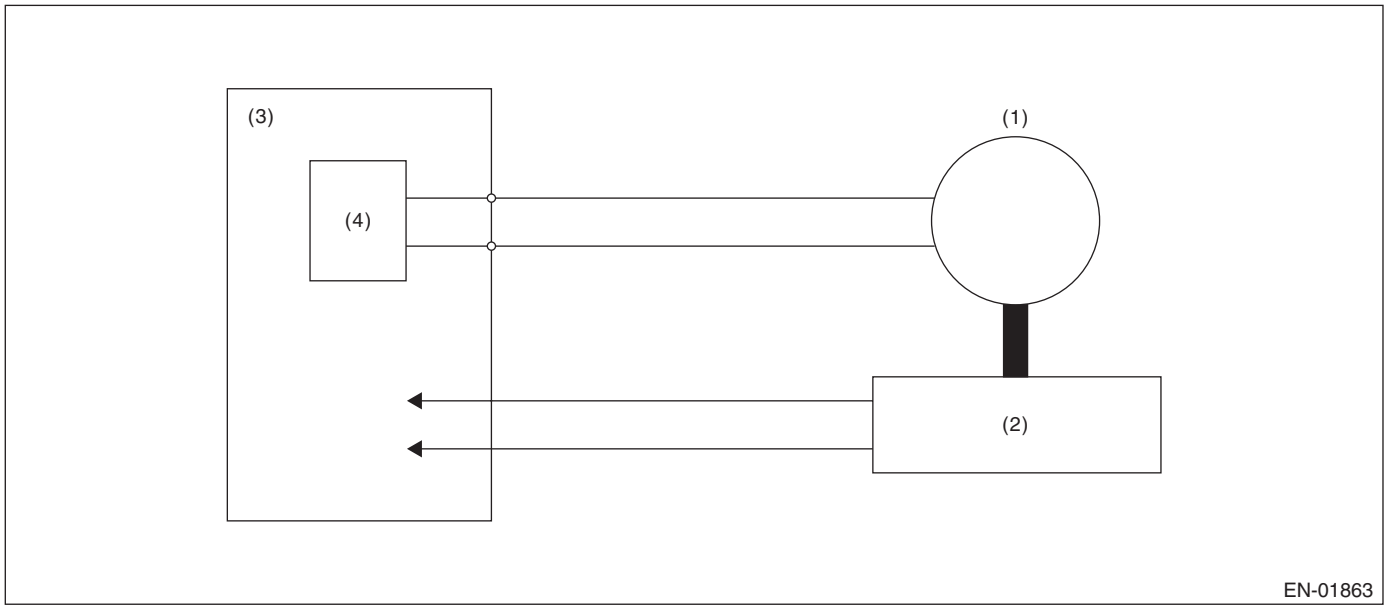

(1) Motor
(2) Throttle position sensor
(3) Engine control module (ECM)
(4) Drive circuit

3. ENABLE CONDITION

Secondary Parameters	Enable Conditions
Ignition switch	ON
Normal operation of electronic throttle control	ON

4. GENERAL DRIVING CYCLE

Always perform the diagnosis continuously when the electronic throttle control is operating.

5. DIAGNOSTIC METHOD

Judge as OK and clear the NG when the malfunction criteria below are met.

Judgment Value

Malfunction Criteria	Threshold Value
Difference between target opening angle and actual opening angle	Within the OK range of **judgment value detail**
Output duty to drive circuit	< 95 %

Time Needed for Diagnosis:

- Difference between target opening angle and actual opening angle:
  - NG judgment: Refer to the **judgment time detail**.
  - OK judgment: 2000 ms
- Output duty to drive circuit: 2000 ms

Details of Judgment Value

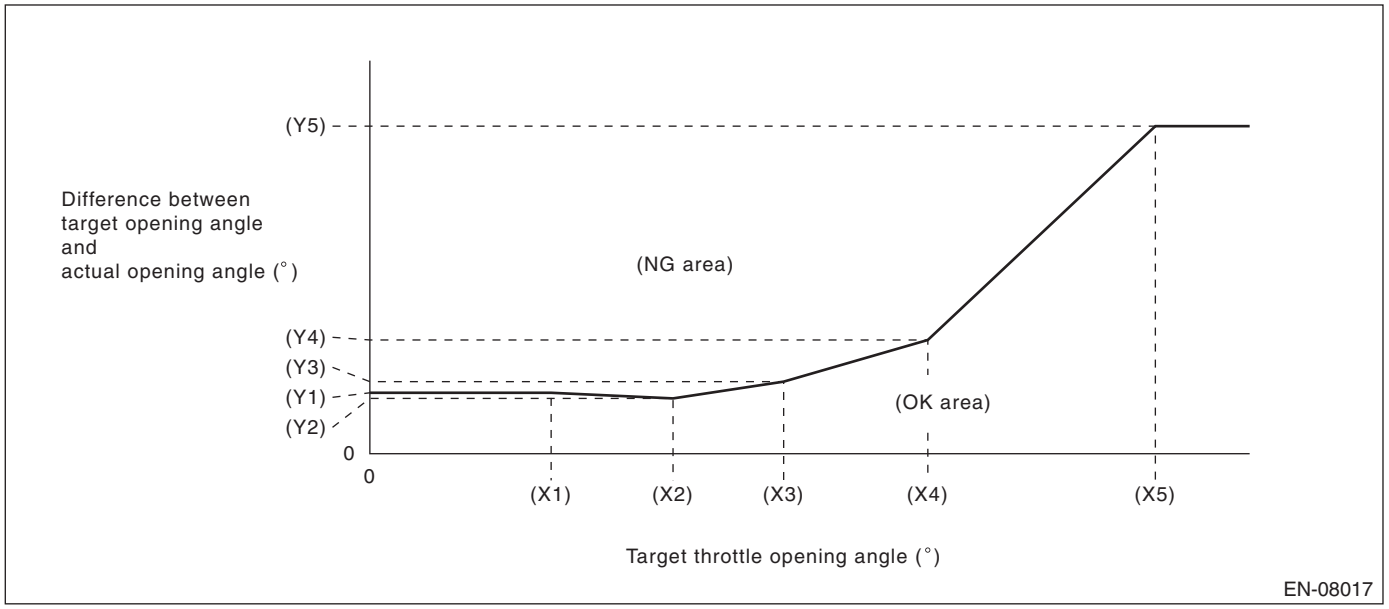

(X1) 6.915 °
(X2) 11.565 °
(X3) 15.785 °
(X4) 21.285 °
(X5) 29.965 °

(Y1) 4.65 °
(Y2) 4.22 °
(Y3) 5.5 °
(Y4) 8.68 °
(Y5) 25 °

Judgment time detail

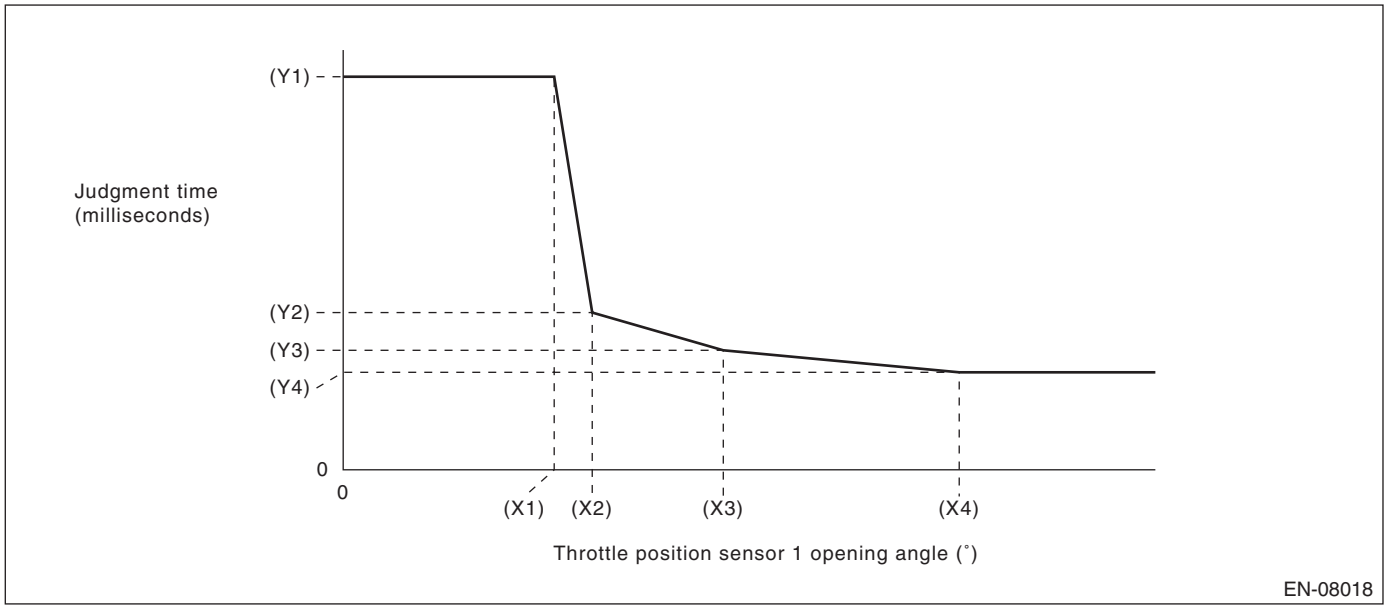

(X1) 8.049999237 °
(X2) 9.5 °
(X3) 14.5 °
(X4) 23.5 °

(Y1) 1000 ms
(Y2) 400 ms
(Y3) 304 ms
(Y4) 248 ms

NOTE:
Judgment time is constantly 1000 ms with Actual opening angle ≤ Target opening angle.
Malfunction Indicator Light Illumination: Illuminates as soon as a malfunction occurs.

CU:DTC P0851 NEUTRAL SWITCH INPUT CIRCUIT LOW (MT MODEL)

1. OUTLINE OF DIAGNOSIS

Detect the open or short circuit of neutral SW.
Judge as NG when there is no change in the neutral SW even if the driving shift was applied. (There is neutral SW ON/OFF inversion from the vehicle speed and engine speed.)

2. ENABLE CONDITION

Secondary Parameters	Enable Conditions
Battery voltage	≥ 10.9 V
Starter relay	OFF

3. GENERAL DRIVING CYCLE

Perform the diagnosis continuously in 2 seconds after starting the engine.

4. DIAGNOSTIC METHOD

• Abnormality Judgment

Judge NG when the malfunction criteria below are completed determined times or more after the neutral SW change.

Judgment Value

Malfunction Criteria	Threshold Value
Neutral switch signal (while changing from a to b below)	LOW (ON) continues.
Driving condition change	From a) to b)
a) Engine speed 600 rpm — 900 rpm & Vehicle speed = 0 km/h (0 MPH)	
b) Engine speed 1600 rpm — 2000 rpm & Vehicle speed ≥ 64 km/h (39.8 MPH)	

Time Needed for Diagnosis: 3 time(s)
Malfunction Indicator Light Illumination: Illuminates when malfunction occurs in 2 continuous driving cycles.

• Normality Judgment

Judge as OK and clear NG when there is change in the neutral SW.

Judgment Value

Malfunction Criteria	Threshold Value
Neutral switch signal (while changing from a to b below)	Changes to HIGH (OFF).
Driving condition change	From a) to b)
a) Engine speed 600 rpm — 900 rpm & Vehicle speed = 0 km/h (0 MPH)	
b) Engine speed 1600 rpm — 2000 rpm & Vehicle speed ≥ 64 km/h (39.8 MPH)	

Time Needed for Diagnosis: Less than 1 second

CV:DTC P0852 NEUTRAL SWITCH INPUT CIRCUIT HIGH (MT MODEL)

1. OUTLINE OF DIAGNOSIS

Detect the open or short circuit of neutral SW.
Judge as NG when there is no change in the neutral SW even if the driving shift was applied. (There is neutral SW ON/OFF inversion from the vehicle speed and engine speed.)

2. ENABLE CONDITION

Secondary Parameters	Enable Conditions
Battery voltage	≥ 10.9 V
Starter relay	OFF

3. GENERAL DRIVING CYCLE

Perform the diagnosis continuously in 2 seconds after starting the engine.

4. DIAGNOSTIC METHOD

- **Abnormality Judgment**

Judge NG when the malfunction criteria below are completed determined times or more after the neutral SW change.

Judgment Value

Malfunction Criteria	Threshold Value
Neutral switch signal (while changing from a to b below)	HIGH (OFF) continues.
Driving condition change	From a) to b)
a) Engine speed 600 rpm — 900 rpm & Vehicle speed = 0 km/h (0 MPH)	
b) Engine speed 1600 rpm — 2000 rpm & Vehicle speed ≥ 64 km/h (39.8 MPH)	

Time Needed for Diagnosis: 3 time(s)
Malfunction Indicator Light Illumination: Illuminates when malfunction occurs in 2 continuous driving cycles.

- **Normality Judgment**

Judge as OK and clear NG when there is change in the neutral SW.

Judgment Value

Malfunction Criteria	Threshold Value
Neutral switch signal (while changing from a to b below)	Changes to LOW (ON).
Driving condition change	From a) to b)
a) Engine speed 600 rpm — 900 rpm & Vehicle speed = 0 km/h (0 MPH)	
b) Engine speed 1600 rpm — 2000 rpm & Vehicle speed ≥ 64 km/h (39.8 MPH)	

Time Needed for Diagnosis: Less than 1 second

CW:DTC P1152 O2 SENSOR CIRCUIT RANGE/PERFORMANCE (LOW) (BANK1 SENSOR1)

1. OUTLINE OF DIAGNOSIS

Detect that λ value remains low.
Judge as NG when lambda value is abnormal in accordance with λ value of front oxygen (A/F) sensor and running conditions such as vehicle speed, amount of intake air, engine coolant temperature, sub feedback control, etc.

λ value = Actual air fuel ratio/Theoretical air fuel ratio
λ > 1: Lean
λ < 1: Rich

2. COMPONENT DESCRIPTION

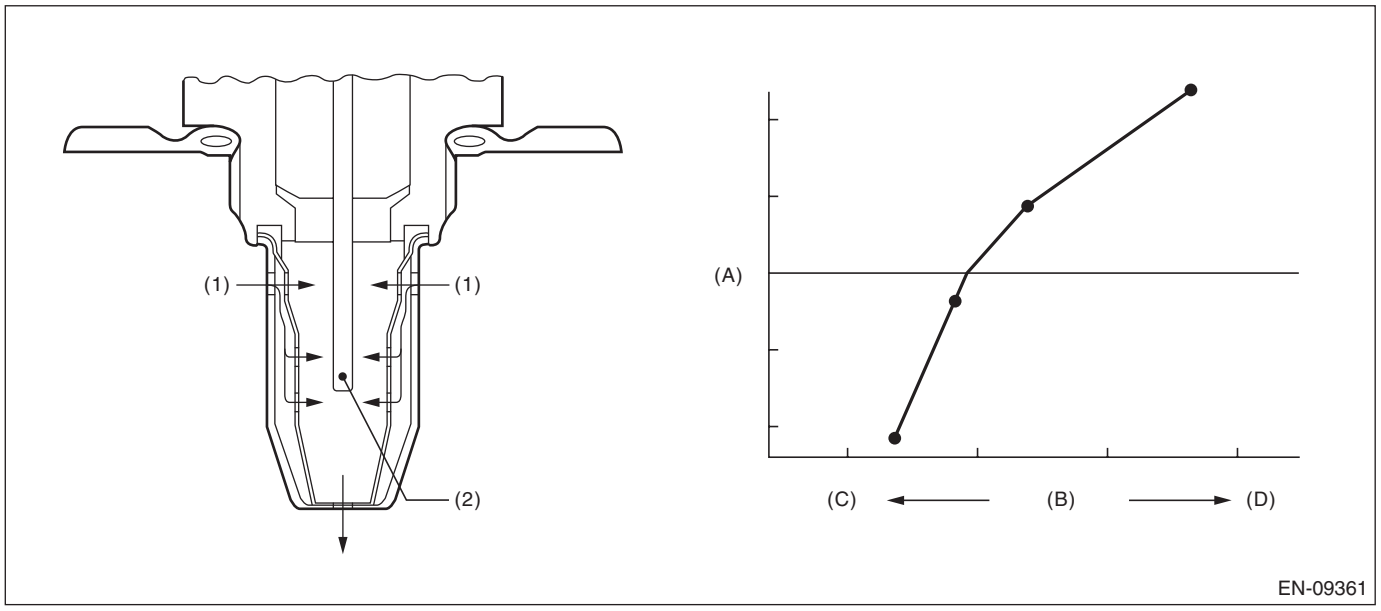

(A) Electromotive force
(B) Air fuel ratio
(C) Lean
(D) Rich

(1) Exhaust gas
(2) ZrO_2

3. ENABLE CONDITION

Secondary Parameters	Enable Conditions
Time needed for all secondary parameters to be in enable conditions	≥ 4096 ms
Battery voltage	≥ 10.9 V
Atmospheric pressure	≥ 75 kPa (563 mmHg, 22.2 inHg)
Rear oxygen sensor sub feedback	Execution
Rear oxygen sensor output voltage – Feedback target voltage	– 0.2 V — 0.1 V
or rear oxygen sensor sub feedback compensation coefficient	On Min.
or rear oxygen sensor sub feedback compensation coefficient	On Max.
Elapsed time after starting the engine	≥ 60000 ms
Engine coolant temperature	≥ 72 °C (161.6 °F)
Vehicle speed	≥ 20 km/h (12.4 MPH)
Amount of intake air	≥ 6 g/s (0.21 oz/s)
Load change at 180° CA	< 0.02 g/rev (0 oz/rev)
Front oxygen (A/F) sensor impedance	0 Ω — 50 Ω
Learning value of evaporation gas density	< 0.2
Total time of operating canister purge	≥ 19.9 s
Targeted lambda value load compensation coefficient	–1 — 1

4. GENERAL DRIVING CYCLE

Perform diagnosis continuously at a constant speed of 20 km/h (12.4 MPH) or more after 60000 ms have passed since the engine started.

5. DIAGNOSTIC METHOD

- **Abnormality Judgment**

If the duration of time while the following conditions are met is longer than the time indicated, judge as NG.

Judgment Value

Malfunction Criteria	Threshold Value
λ value	< 0.85

Time Needed for Diagnosis: 10000 ms
Malfunction Indicator Light Illumination: Illuminates when malfunction occurs in 2 continuous driving cycles.

- **Normality Judgment**

Judge as OK and clear the NG if the continuous time while the following conditions are established is more than the predetermined time.

Judgment Value

Malfunction Criteria	Threshold Value
λ value	≥ 0.85

Time Needed for Diagnosis: Less than 1 second

CX:DTC P1153 O2 SENSOR CIRCUIT RANGE/PERFORMANCE (HIGH) (BANK1 SENSOR1)

1. OUTLINE OF DIAGNOSIS

Detect that λ value remains high.
Judge as NG when lambda value is abnormal in accordance with λ value of front oxygen (A/F) sensor and running conditions such as vehicle speed, amount of intake air, engine coolant temperature, sub feedback control, etc.

λ value = Actual air fuel ratio/Theoretical air fuel ratio
λ > 1: Lean
λ < 1: Rich

2. COMPONENT DESCRIPTION

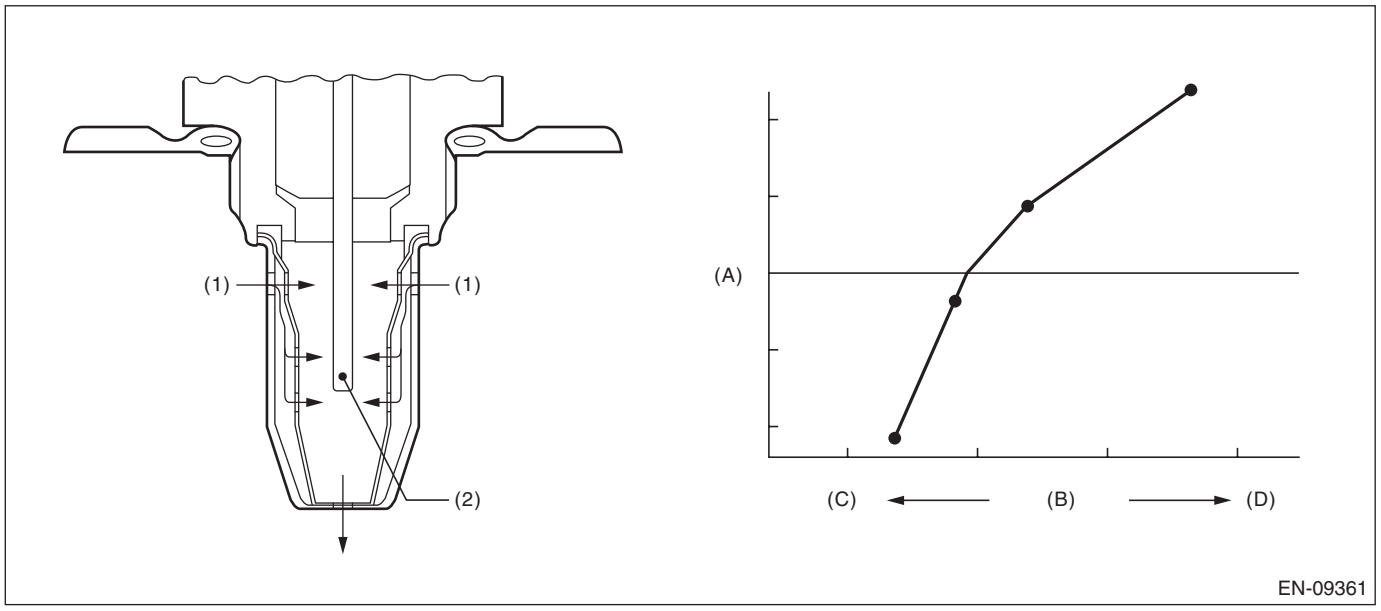

(A) Electromotive force (B) Air fuel ratio (C) Lean
(D) Rich

(1) Exhaust gas (2) ZrO_2

3. ENABLE CONDITION

Secondary Parameters	Enable Conditions
Time needed for all secondary parameters to be in enable conditions	≥ 4096 ms
Battery voltage	≥ 10.9 V
Atmospheric pressure	≥ 75 kPa (563 mmHg, 22.2 inHg)
Rear oxygen sensor sub feedback	Execution
Rear oxygen sensor output voltage – Feedback target voltage	– 0.2 V — 0.1 V
or rear oxygen sensor sub feedback compensation coefficient	On Min.
or rear oxygen sensor sub feedback compensation coefficient	On Max.
Elapsed time after starting the engine	≥ 60000 ms
Engine coolant temperature	≥ 72 °C (161.6 °F)
Vehicle speed	≥ 20 km/h (12.4 MPH)
Amount of intake air	≥ 6 g/s (0.21 oz/s)
Load change at 180° CA	< 0.02 g/rev (0 oz/rev)
Front oxygen (A/F) sensor impedance	0 Ω — 50 Ω
Learning value of evaporation gas density	< 0.2
Total time of operating canister purge	≥ 19.9 s
Targeted lambda value load compensation coefficient	–1 — 1

4. GENERAL DRIVING CYCLE

Perform diagnosis continuously at a constant speed of 20 km/h (12.4 MPH) or more after 60000 ms have passed since the engine started.

5. DIAGNOSTIC METHOD

- **Abnormality Judgment**

If the duration of time while the following conditions are met is longer than the time indicated, judge as NG.

Judgment Value

Malfunction Criteria	Threshold Value
λ value	> 1.15

Time Needed for Diagnosis: 10000 ms
Malfunction Indicator Light Illumination: Illuminates when malfunction occurs in 2 continuous driving cycles.

- **Normality Judgment**

Judge as OK and clear the NG if the continuous time while the following conditions are established is more than the predetermined time.

Judgment Value

Malfunction Criteria	Threshold Value
λ value	≤ 1.15

Time Needed for Diagnosis: Less than 1 second

CY:DTC P1160 RETURN SPRING FAILURE

1. OUTLINE OF DIAGNOSIS

Judge as NG when the valve is opened more than the default opening angle, but does not move to the close direction with the motor power stopped.

2. COMPONENT DESCRIPTION

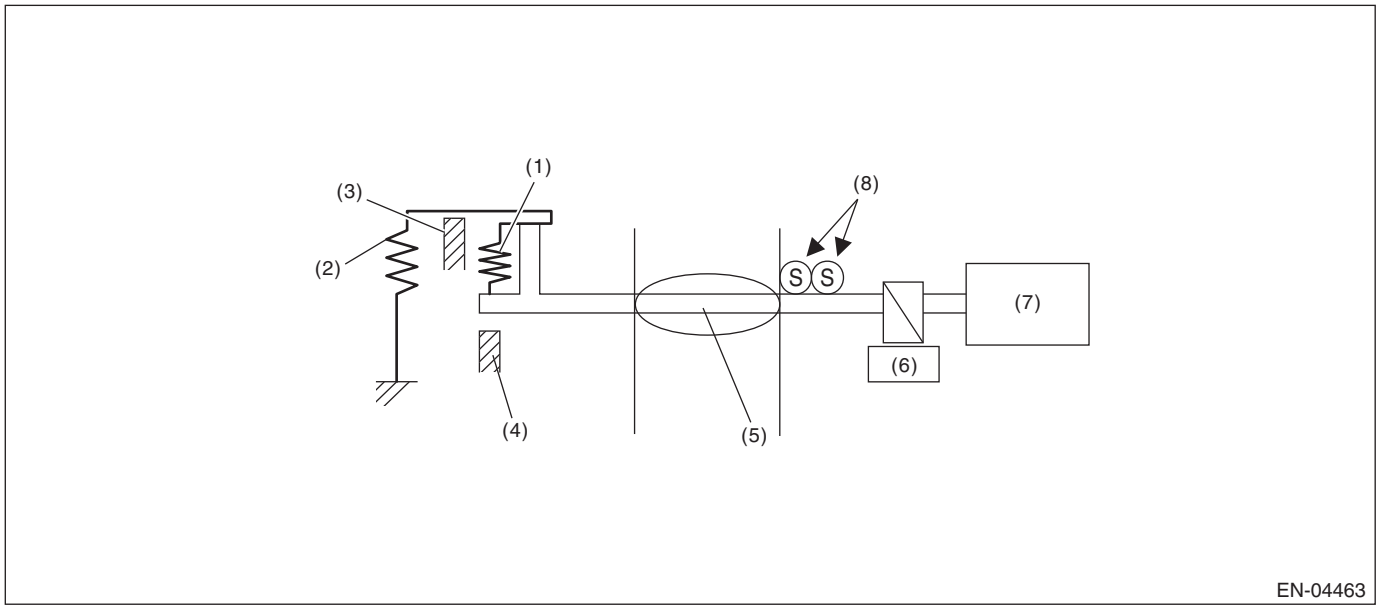

(1) Opener spring
(2) Return spring
(3) Intermediate stopper
(4) Full closed stopper
(5) Throttle valve
(6) Gear
(7) DC motor
(8) Main and sub throttle position sensor

3. ENABLE CONDITION

Secondary Parameters	Enable Conditions
Battery voltage	≥ 6 V
Throttle position sensor	Normal

4. GENERAL DRIVING CYCLE

- Ignition switch ON → OFF
- Ignition switch OFF → ON (Only after clearing memory)

5. DIAGNOSTIC METHOD

- **Abnormality Judgment**

Judge as NG when the following conditions are established.

Judgment Value

Malfunction Criteria	Threshold Value
Opening variation after continuity is set to OFF	< 2 °

Time Needed for Diagnosis: 24 ms
Malfunction Indicator Light Illumination: Illuminates as soon as a malfunction occurs.

- **Normality Judgment**

Judge as OK and clear the NG if the following conditions are established.

Judgment Value

Malfunction Criteria	Threshold Value
Opening variation after continuity is set to OFF	≥ 2 °

Time Needed for Diagnosis: 3400 ms

CZ:DTC P1400 FUEL TANK PRESSURE CONTROL SOLENOID VALVE CIRCUIT LOW

1. OUTLINE OF DIAGNOSIS

Detect the open/short circuit of pressure control solenoid valve.
Judge as NG when ECM output level is different from actual terminal level.

2. COMPONENT DESCRIPTION

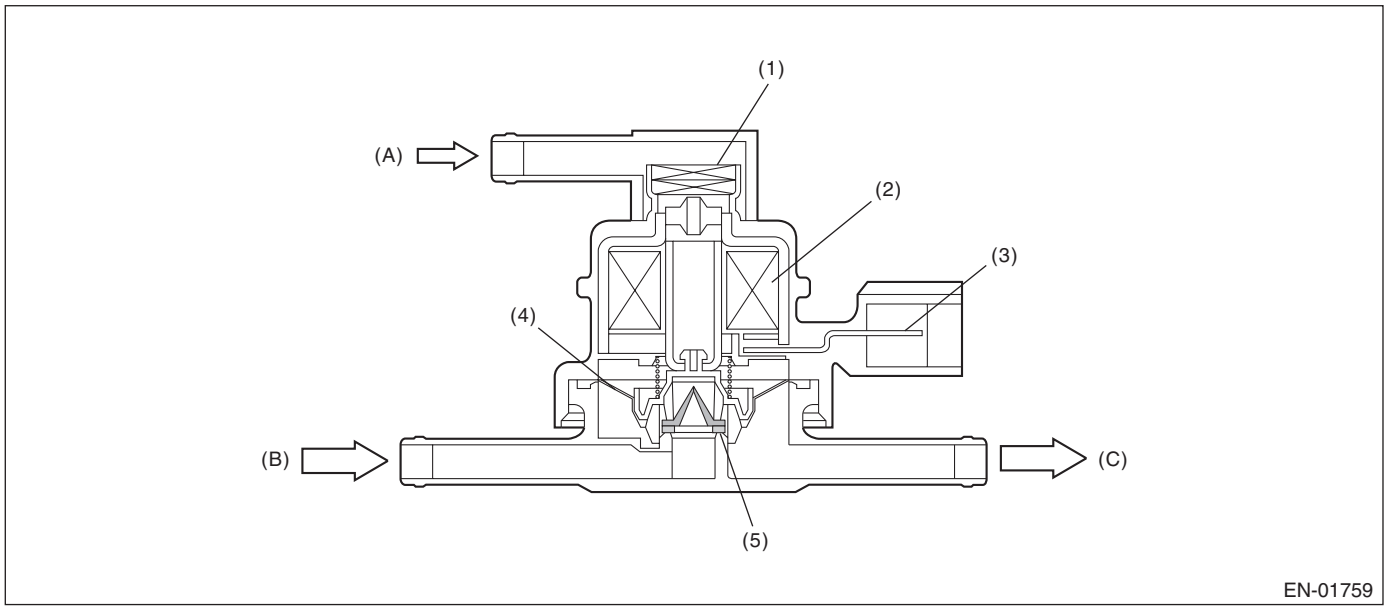

(A)	Atmospheric pressure	(B)	Shut-off valve	(C)	To fuel tank
(1)	Filter	(3)	Connector terminal	(5)	Valve
(2)	Coil	(4)	Diaphragm		

3. ENABLE CONDITION

Secondary Parameters	Enable Conditions
None	

4. GENERAL DRIVING CYCLE

Always perform the diagnosis after starting the engine.

5. DIAGNOSTIC METHOD

• Abnormality Judgment

If the duration of time while the following conditions are met is longer than the time indicated, judge as NG.

Judgment Value

Malfunction Criteria	Threshold Value
Battery voltage	≥ 10.9 V
Elapsed time after starting the engine	≥ 1 s
Terminal output voltage when ECM outputs OFF signal	Low

Time Needed for Diagnosis: 2500 ms
Malfunction Indicator Light Illumination: Illuminates when malfunction occurs in 2 continuous driving cycles.

• Normality Judgment

Judge as OK and clear the NG if the continuous time while the following conditions are established is more than the predetermined time.

Judgment Value

Malfunction Criteria	Threshold Value
Battery voltage	≥ 10.9 V
Elapsed time after starting the engine	≥ 1 s
Terminal output voltage when ECM outputs OFF signal	High

Time Needed for Diagnosis: Less than 1 second

DA:DTC P1420 FUEL TANK PRESSURE CONTROL SOL. VALVE CIRCUIT HIGH

1. OUTLINE OF DIAGNOSIS

Detect the open/short circuit of pressure control solenoid valve.
Judge as NG when ECM output level is different from actual terminal level.

2. COMPONENT DESCRIPTION

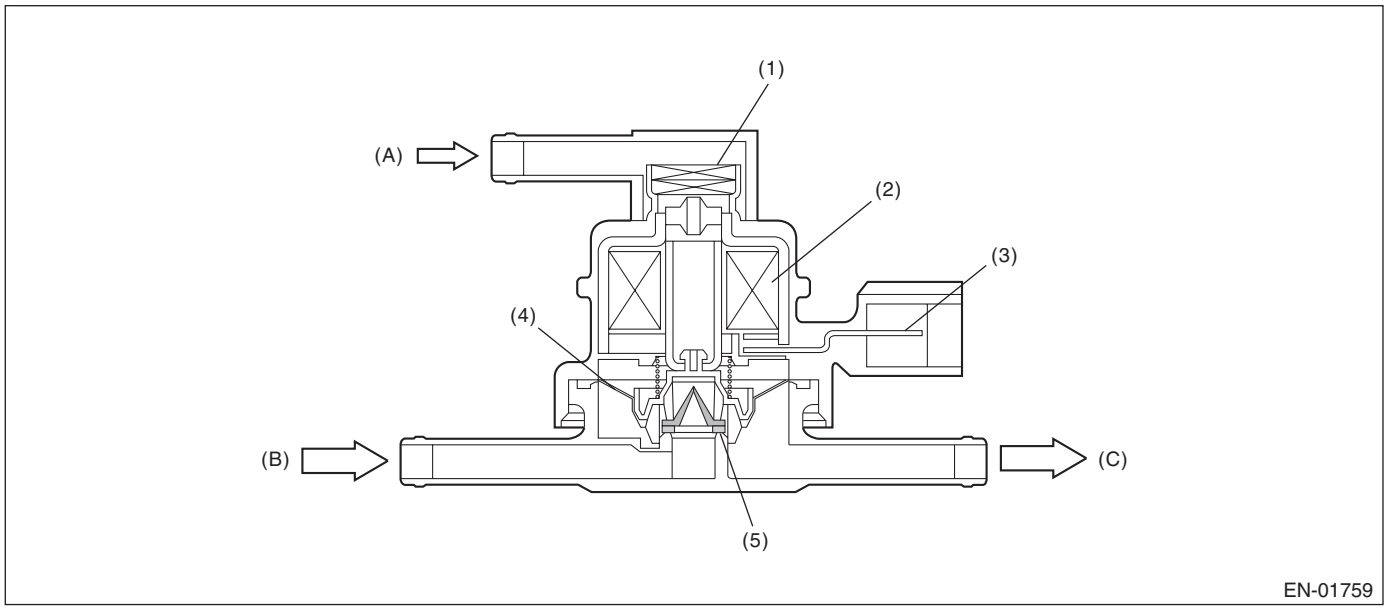

(A)	Atmospheric pressure	(B)	Shut-off valve	(C)	To fuel tank
(1)	Filter	(3)	Connector terminal	(5)	Valve
(2)	Coil	(4)	Diaphragm		

3. ENABLE CONDITION

Secondary Parameters	Enable Conditions
None	

4. GENERAL DRIVING CYCLE

Always perform the diagnosis after starting the engine.

5. DIAGNOSTIC METHOD

• Abnormality Judgment

If the duration of time while the following conditions are met is longer than the time indicated, judge as NG.

Judgment Value

Malfunction Criteria	Threshold Value
Battery voltage	≥ 10.9 V
Elapsed time after starting the engine	≥ 1 s
Terminal output voltage when ECM outputs ON signal	High

Time Needed for Diagnosis: 2500 ms
Malfunction Indicator Light Illumination: Illuminates when malfunction occurs in 2 continuous driving cycles.

• Normality Judgment

Judge as OK and clear the NG if the continuous time while the following conditions are established is more than the predetermined time.

Judgment Value

Malfunction Criteria	Threshold Value
Battery voltage	≥ 10.9 V
Elapsed time after starting the engine	≥ 1 s
Terminal output voltage when ECM outputs ON signal	Low

Time Needed for Diagnosis: Less than 1 second

DB:DTC P1443 VENT CONTROL SOLENOID VALVE FUNCTION PROBLEM

1. OUTLINE OF DIAGNOSIS

Detect the abnormal function (stuck closed) of the drain valve.
Judge as NG when fuel tank pressure is low.

2. COMPONENT DESCRIPTION

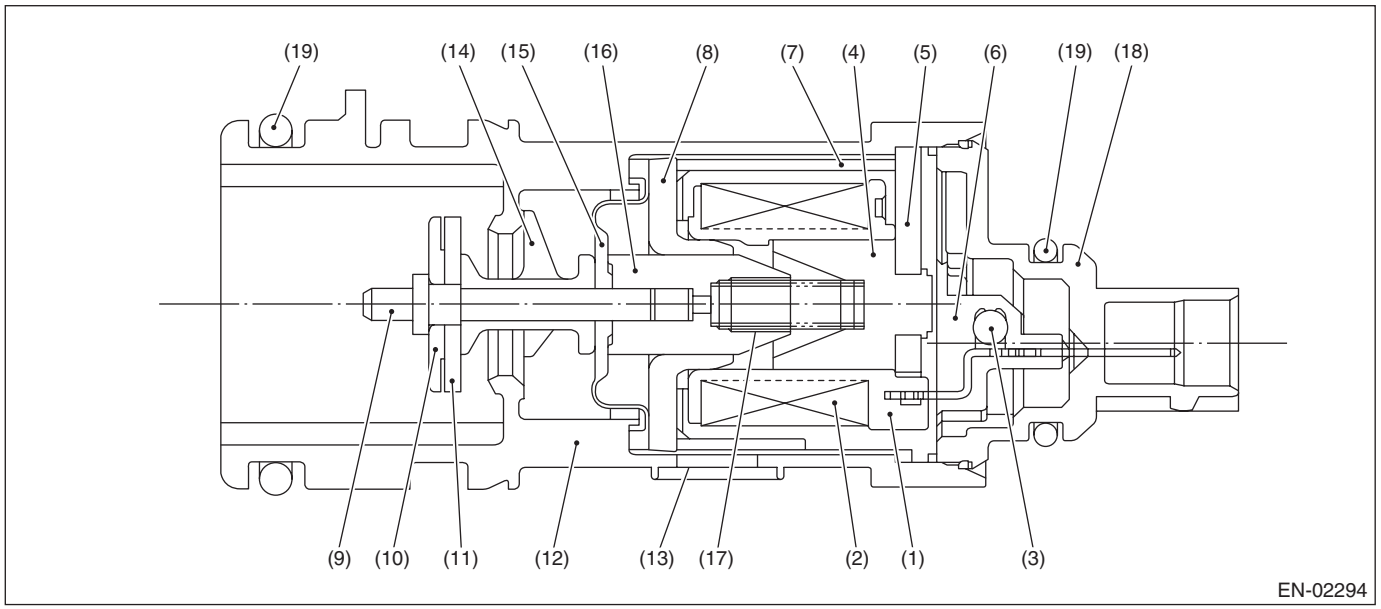

(1) Bobbin
(2) Coil
(3) Diode
(4) Stator core
(5) End plate
(6) Body
(7) Yoke
(8) Magnetic plate
(9) Shaft
(10) Plate
(11) Valve
(12) Housing
(13) Filter
(14) Retainer
(15) Diaphragm
(16) Movable core
(17) Spring
(18) Cover
(19) O-ring

3. ENABLE CONDITION

Secondary Parameters	Enable Conditions
Drain valve	Open
Battery voltage	≥ 10.9 V
Atmospheric pressure	≥ 75 kPa (563 mmHg, 22.2 inHg)
Tank pressure when starter is OFF → ON	–0.7 kPa (–5 mmHg, –0.2 inHg) and 1.4 kPa (10.7 mmHg, 0.4 inHg)

4. GENERAL DRIVING CYCLE

Always perform the diagnosis continuously.

5. DIAGNOSTIC METHOD

- **Abnormality Judgment**

If the duration of time while the following conditions are met is longer than the time indicated, judge as NG.

Judgment Value

Malfunction Criteria	Threshold Value
Fuel tank pressure	≤ –4 kPa (–30 mmHg, –1.2 inHg)

Time Needed for Diagnosis: 3000 ms
Malfunction Indicator Light Illumination: Illuminates as soon as a malfunction occurs.

- **Normality Judgment**

Judge as OK and clear the NG if the continuous time while the following conditions are established is more than the predetermined time.

Judgment Value

Malfunction Criteria	Threshold Value
Fuel tank pressure	> –4 kPa (–30 mmHg, –1.2 inHg)
Cumulative time when all the malfunction criteria below are met.	≥ 30000 ms
Purge control solenoid valve duty	Not = 0
Fuel temperature	–10 °C (14 °F) — 55 °C (131 °F)
Intake manifold relative pressure	≥ – 26.7 kPa (– 200 mmHg, – 7.9 inHg)

Time Needed for Diagnosis: Less than 1 second

DC:DTC P1458 CANISTER PURGE CONTROL SOLENOID VALVE 2

1. OUTLINE OF DIAGNOSIS

Detect open or short circuit of the purge control solenoid valve 2.
Judge as NG when the ECM output level differs from the actual terminal level.

2. ENABLE CONDITIONS

Secondary Parameters	Enable Conditions
None	

3. GENERAL DRIVING CYCLE

Always perform the diagnosis continuously.

4. DIAGNOSTIC METHOD

- **Abnormality Judgment**

If the duration of time while the following conditions are met is longer than the time indicated, judge as NG.

Judgment Value

Malfunction Criteria	Threshold Value
Battery voltage	≥ 10.9 V
Elapsed time after starting the engine	≥ 1 s
Terminal output voltage when ECM outputs OFF signal	Low

Time Needed for Diagnosis: 2500 ms
Malfunction Indicator Light Illumination: Illuminates when malfunction occurs in 2 continuous driving cycles.

- **Normality Judgment**

Judge as OK and clear the NG if the continuous time while the following conditions are established is more than the predetermined time.

Judgment Value

Malfunction Criteria	Threshold Value
Battery voltage	≥ 10.9 V
Elapsed time after starting the engine	≥ 1 s
Terminal output voltage when ECM outputs OFF signal	High

Time Needed for Diagnosis: Less than 1 second

DD:DTC P1459 CANISTER PURGE CONTROL SOLENOID VALVE 2

1. OUTLINE OF DIAGNOSIS

Detect open or short circuit of the purge control solenoid valve 2.
Judge as NG when the ECM output level differs from the actual terminal level.

2. ENABLE CONDITIONS

Secondary Parameters	Enable Conditions
None	

3. GENERAL DRIVING CYCLE

Always perform the diagnosis continuously.

4. DIAGNOSTIC METHOD

- **Abnormality Judgment**

If the duration of time while the following conditions are met is longer than the time indicated, judge as NG.

Judgment Value

Malfunction Criteria	Threshold Value
Battery voltage	≥ 10.9 V
Elapsed time after starting the engine	≥ 1 s
Terminal output voltage when ECM outputs ON signal	High

Time Needed for Diagnosis: 2500 ms
Malfunction Indicator Light Illumination: Illuminates when malfunction occurs in 2 continuous driving cycles.

- **Normality Judgment**

Judge as OK and clear the NG if the continuous time while the following conditions are established is more than the predetermined time.

Judgment Value

Malfunction Criteria	Threshold Value
Battery voltage	≥ 10.9 V
Elapsed time after starting the engine	≥ 1 s
Terminal output voltage when ECM outputs ON signal	Low

Time Needed for Diagnosis: Less than 1 second

DE:DTC P1518 STARTER SWITCH CIRCUIT LOW INPUT

1. OUTLINE OF DIAGNOSIS

Detect the open or short circuit of starter SW.
Judge as OFF NG when it becomes after engine start despite no starter ON experience.

2. ENABLE CONDITIONS

Secondary Parameters	Enable Conditions
None	

3. GENERAL DRIVING CYCLE

Always perform the diagnosis continuously.

4. DIAGNOSTIC METHOD

- **Abnormality Judgment**

Judge as OFF NG when the following conditions are established.

Judgment Value

Malfunction Criteria	Threshold Value
Vehicle speed	< 1 km/h (0.6 MPH)
Starter ON signal	Not detected
Engine condition	Change from pre-start to post-start
Battery voltage	≥ 8 V

Time Needed for Diagnosis: Less than 1 second
Malfunction Indicator Light Illumination: Illuminates when malfunction occurs in 2 continuous driving cycles.

- **Normality Judgment**

Judge as OFF OK and clear the NG if the following conditions are established.

Judgment Value

Malfunction Criteria	Threshold Value
Starter ON	Experienced
Starter ON diagnosis	No diagnosis experience
Battery voltage	≥ 8 V

Time Needed for Diagnosis: Less than 1 second

DF:DTC P1560 BACK-UP VOLTAGE CIRCUIT MALFUNCTION

1. OUTLINE OF DIAGNOSIS

Detect the open/short circuit of back-up power supply circuit.
Judge as NG when the backup power voltage is low.

2. ENABLE CONDITION

Secondary Parameters	Enable Conditions
None	

3. GENERAL DRIVING CYCLE

Always perform the diagnosis continuously.

4. DIAGNOSTIC METHOD

- **Abnormality Judgment**

If the duration of time while the following conditions are met is longer than the time indicated, judge as NG.

Judgment Value

Malfunction Criteria	Threshold Value
Voltage of back-up power supply	Low
Battery voltage	≥ 10.9 V
Engine condition	After engine starting

Time Needed for Diagnosis: 2500 ms
Malfunction Indicator Light Illumination: Illuminates as soon as a malfunction occurs.

- **Normality Judgment**

Judge as OK and clear the NG if the continuous time while the following conditions are established is more than the predetermined time.

Judgment Value

Malfunction Criteria	Threshold Value
Voltage of back-up power supply	High
Battery voltage	≥ 10.9 V
Engine condition	After engine starting

Time Needed for Diagnosis: Less than 1 second

DG:DTC P1570 ANTENNA

1. OUTLINE OF DIAGNOSIS

NOTE:
For the detection standard, refer to DTC P0513. <Ref. to GD(H4DOTC)-178, DTC P0513 INCORRECT IMMOBILIZER KEY, Diagnostic Trouble Code (DTC) Detecting Criteria.>

DH:DTC P1571 REFERENCE CODE INCOMPATIBILITY

1. OUTLINE OF DIAGNOSIS

NOTE:
For the detection standard, refer to DTC P0513. <Ref. to GD(H4DOTC)-178, DTC P0513 INCORRECT IMMOBILIZER KEY, Diagnostic Trouble Code (DTC) Detecting Criteria.>

DI: DTC P1572 IMM CIRCUIT FAILURE (EXCEPT ANTENNA CIRCUIT)

1. OUTLINE OF DIAGNOSIS

NOTE:
For the detection standard, refer to DTC P0513. <Ref. to GD(H4DOTC)-178, DTC P0513 INCORRECT IMMOBILIZER KEY, Diagnostic Trouble Code (DTC) Detecting Criteria.>

DJ:DTC P1574 KEY COMMUNICATION FAILURE

1. OUTLINE OF DIAGNOSIS

NOTE:
For the detection standard, refer to DTC P0513. <Ref. to GD(H4DOTC)-178, DTC P0513 INCORRECT IMMOBILIZER KEY, Diagnostic Trouble Code (DTC) Detecting Criteria.>

DK:DTC P1576 EGI CONTROL MODULE EEPROM

1. OUTLINE OF DIAGNOSIS

NOTE:
For the detection standard, refer to DTC P0513. <Ref. to GD(H4DOTC)-178, DTC P0513 INCORRECT IMMOBILIZER KEY, Diagnostic Trouble Code (DTC) Detecting Criteria.>

DL:DTC P1577 IMM CONTROL MODULE EEPROM

1. OUTLINE OF DIAGNOSIS

NOTE:
For the detection standard, refer to DTC P0513. <Ref. to GD(H4DOTC)-178, DTC P0513 INCORRECT IMMOBILIZER KEY, Diagnostic Trouble Code (DTC) Detecting Criteria.>

DM:DTC P1578 METER FAILURE

1. OUTLINE OF DIAGNOSIS

NOTE:
For the detection standard, refer to DTC P0513. <Ref. to GD(H4DOTC)-178, DTC P0513 INCORRECT IMMOBILIZER KEY, Diagnostic Trouble Code (DTC) Detecting Criteria.>

DN:DTC P2004 INTAKE MANIFOLD RUNNER CONTROL STUCK OPEN (BANK 1)

1. OUTLINE OF DIAGNOSIS

Detect the malfunction of tumble generator valve motor function.
Judge open fixing malfunction when the opening degree is large even after finishing the tumble generator valve closing driving.

2. ENABLE CONDITION

Secondary Parameters	Enable Conditions
Battery voltage	≥ 10.9 V
Engine coolant temperature	≥ –30 °C (–22 °F)
Ambient air temperature	≥ –30 °C (–22 °F)

3. GENERAL DRIVING CYCLE

Always perform the diagnosis continuously.

4. DIAGNOSTIC METHOD

- **Abnormality Judgment**

If the duration of time while the following conditions are met is longer than the time indicated, judge as NG.

Judgment Value

Malfunction Criteria	Threshold Value
Tumble generator valve opening	≥ 64.3 °
Tumble generator valve “close” signal output	≥ 3200 ms

Time Needed for Diagnosis: 3000 ms
Malfunction Indicator Light Illumination: Illuminates as soon as a malfunction occurs.

- **Normality Judgment**

Judge as OK and clear the NG if the continuous time while the following conditions are established is more than the predetermined time.

Judgment Value

Malfunction Criteria	Threshold Value
Tumble generator valve opening	< 64.3 °
Tumble generator valve “close” signal output	≥ 3200 ms

Time Needed for Diagnosis: Less than 1 second

DO:DTC P2005 INTAKE MANIFOLD RUNNER CONTROL STUCK OPEN (BANK 2)

1. OUTLINE OF DIAGNOSIS

Detect the malfunction of tumble generator valve motor function.
Judge open fixing malfunction when the opening degree is large even after finishing the tumble generator valve closing driving.

2. ENABLE CONDITION

Secondary Parameters	Enable Conditions
Battery voltage	≥ 10.9 V
Engine coolant temperature	≥ –30 °C (–22 °F)
Ambient air temperature	≥ –30 °C (–22 °F)

3. GENERAL DRIVING CYCLE

Always perform the diagnosis continuously.

4. DIAGNOSTIC METHOD

- **Abnormality Judgment**

If the duration of time while the following conditions are met is longer than the time indicated, judge as NG.

Judgment Value

Malfunction Criteria	Threshold Value
Tumble generator valve opening	≥ 64.3 °
Tumble generator valve “close” signal output	≥ 3200 ms

Time Needed for Diagnosis: 3000 ms
Malfunction Indicator Light Illumination: Illuminates as soon as a malfunction occurs.

- **Normality Judgment**

Judge as OK and clear the NG if the continuous time while the following conditions are established is more than the predetermined time.

Judgment Value

Malfunction Criteria	Threshold Value
Tumble generator valve opening	< 64.3 °
Tumble generator valve “close” signal output	≥ 3200 ms

Time Needed for Diagnosis: Less than 1 second

DP:DTC P2006 INTAKE MANIFOLD RUNNER CONTROL STUCK CLOSED (BANK 1)

1. OUTLINE OF DIAGNOSIS

Detect the malfunction of tumble generator valve motor function.
Judge close fixing malfunction when the opening degree is small even after finishing the tumble generator valve open driving.

2. ENABLE CONDITION

Secondary Parameters	Enable Conditions
Battery voltage	≥ 10.9 V
Engine coolant temperature	≥ –30 °C (–22 °F)
Ambient air temperature	≥ –30 °C (–22 °F)

3. GENERAL DRIVING CYCLE

Always perform the diagnosis continuously.

4. DIAGNOSTIC METHOD

- **Abnormality Judgment**

If the duration of time while the following conditions are met is longer than the time indicated, judge as NG.

Judgment Value

Malfunction Criteria	Threshold Value
Tumble generator valve opening	< 64.3 °
Tumble generator valve “open” signal output	≥ 4600 ms

Time Needed for Diagnosis: 3000 ms
Malfunction Indicator Light Illumination: Illuminates as soon as a malfunction occurs.

- **Normality Judgment**

Judge as OK and clear the NG if the continuous time while the following conditions are established is more than the predetermined time.

Judgment Value

Malfunction Criteria	Threshold Value
Tumble generator valve opening	≥ 64.3 °
Tumble generator valve “open” signal output	≥ 4600 ms

Time Needed for Diagnosis: Less than 1 second

DQ:DTC P2007 INTAKE MANIFOLD RUNNER CONTROL STUCK CLOSED (BANK 2)

1. OUTLINE OF DIAGNOSIS

Detect the malfunction of tumble generator valve motor function.
Judge close fixing malfunction when the opening degree is small even after finishing the tumble generator valve open driving.

2. ENABLE CONDITION

Secondary Parameters	Enable Conditions
Battery voltage	≥ 10.9 V
Engine coolant temperature	≥ –30 °C (–22 °F)
Ambient air temperature	≥ –30 °C (–22 °F)

3. GENERAL DRIVING CYCLE

Always perform the diagnosis continuously.

4. DIAGNOSTIC METHOD

- **Abnormality Judgment**

If the duration of time while the following conditions are met is longer than the time indicated, judge as NG.

Judgment Value

Malfunction Criteria	Threshold Value
Tumble generator valve opening	< 64.3 °
Tumble generator valve “open” signal output	≥ 4600 ms

Time Needed for Diagnosis: 3000 ms
Malfunction Indicator Light Illumination: Illuminates as soon as a malfunction occurs.

- **Normality Judgment**

Judge as OK and clear the NG if the continuous time while the following conditions are established is more than the predetermined time.

Judgment Value

Malfunction Criteria	Threshold Value
Tumble generator valve opening	≥ 64.3 °
Tumble generator valve “open” signal output	≥ 4600 ms

Time Needed for Diagnosis: Less than 1 second

DR:DTC P2008 INTAKE MANIFOLD RUNNER CONTROL CIRCUIT / OPEN (BANK 1)

1. OUTLINE OF DIAGNOSIS

Detect the open or short circuit of tumble generator valve motor.
Judge as NG when the open signal is sent from IC after tumble generator valve driving IC diagnosis.

2. COMPONENT DESCRIPTION

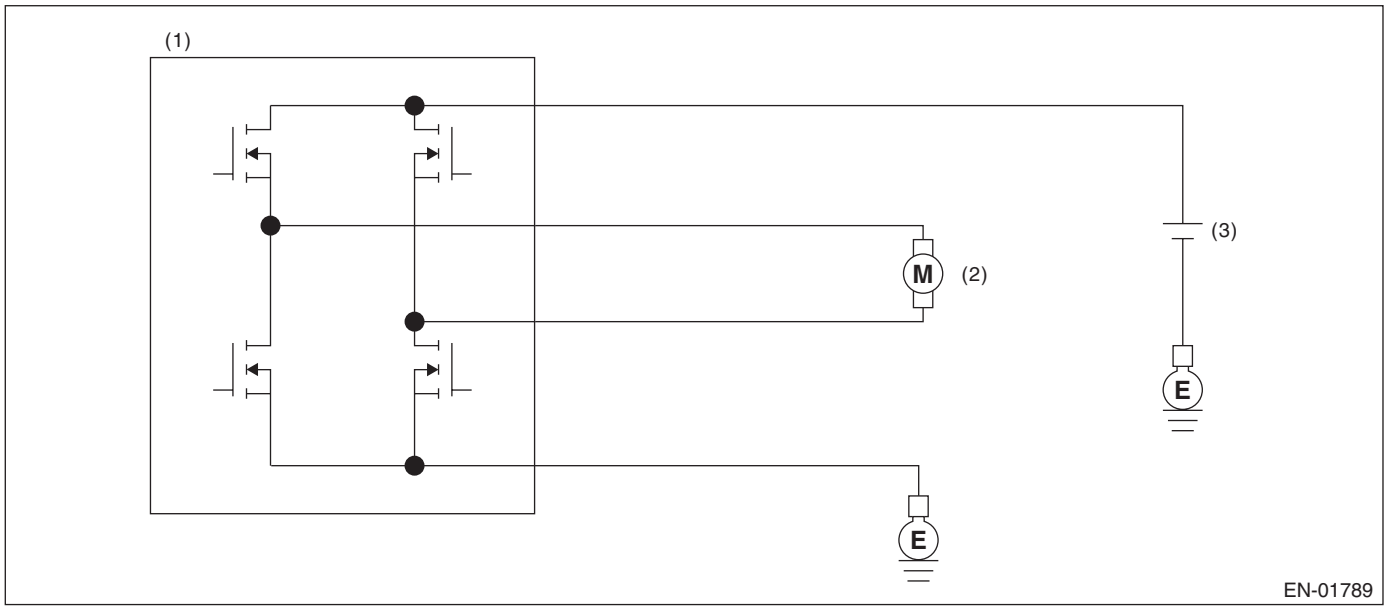

(1) Engine control module (ECM) (2) Tumble generator valve (3) Battery

3. ENABLE CONDITION

Secondary Parameters	Enable Conditions
Battery voltage	≥ 10.9 V

4. GENERAL DRIVING CYCLE

Always perform the diagnosis continuously.

5. DIAGNOSTIC METHOD

• Abnormality Judgment

At the main IC, check the sent signal at each timing which occurs immediately after the tumble generator valve output is set to ON → OFF, and judge open NG when the open NG signal is sent 96 ms × 20 time(s) in a row.

Judgment Value

Malfunction Criteria	Threshold Value
Open NG signal input	Low

Time Needed for Diagnosis: 96 ms × 20 time(s)
Malfunction Indicator Light Illumination: Illuminates as soon as a malfunction occurs.

• Normality Judgment

Judge as OK and clear the NG when the OK signal is sent.

Judgment Value

Malfunction Criteria	Threshold Value
Open NG signal input	High

Time Needed for Diagnosis: Less than 1 second

DS:DTC P2009 INTAKE MANIFOLD RUNNER CONTROL CIRCUIT LOW (BANK 1)

1. OUTLINE OF DIAGNOSIS

Detect the open or short circuit of tumble generator valve motor.
Judge as NG when the overcurrent signal is sent from IC after tumble generator valve driving IC diagnosis.

2. COMPONENT DESCRIPTION

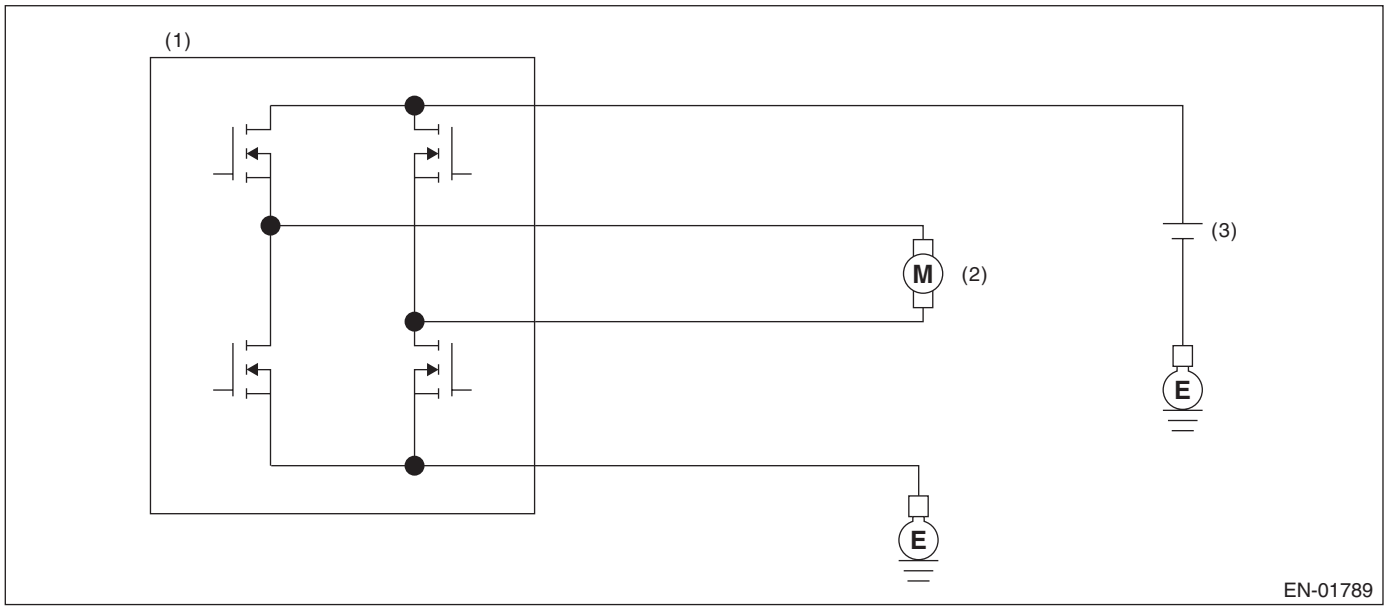

(1) Engine control module (ECM) (2) Tumble generator valve (3) Battery

3. ENABLE CONDITION

Secondary Parameters	Enable Conditions
Battery voltage	≥ 10.9 V

4. GENERAL DRIVING CYCLE

Always perform the diagnosis continuously.

5. DIAGNOSTIC METHOD

• Abnormality Judgment

At the main IC, check the sent signal at each timing which occurs just before the tumble generator valve output is set to ON → OFF, and judge open NG when the open NG signal is sent 96 ms × 10 time(s) in a row.

Judgment Value

Malfunction Criteria	Threshold Value
Overcurrent NG signal input	Low

Time Needed for Diagnosis: 96 ms × 10 time(s)
Malfunction Indicator Light Illumination: Illuminates as soon as a malfunction occurs.

• Normality Judgment

Judge as OK and clear the NG when the OK signal is sent.

Judgment Value

Malfunction Criteria	Threshold Value
Overcurrent NG signal input	High

Time Needed for Diagnosis: Less than 1 second

DT:DTC P2011 INTAKE MANIFOLD RUNNER CONTROL CIRCUIT / OPEN (BANK 2)

1. OUTLINE OF DIAGNOSIS

Detect the open or short circuit of tumble generator valve motor.
Judge as NG when the open signal is sent from IC after tumble generator valve driving IC diagnosis.

2. COMPONENT DESCRIPTION

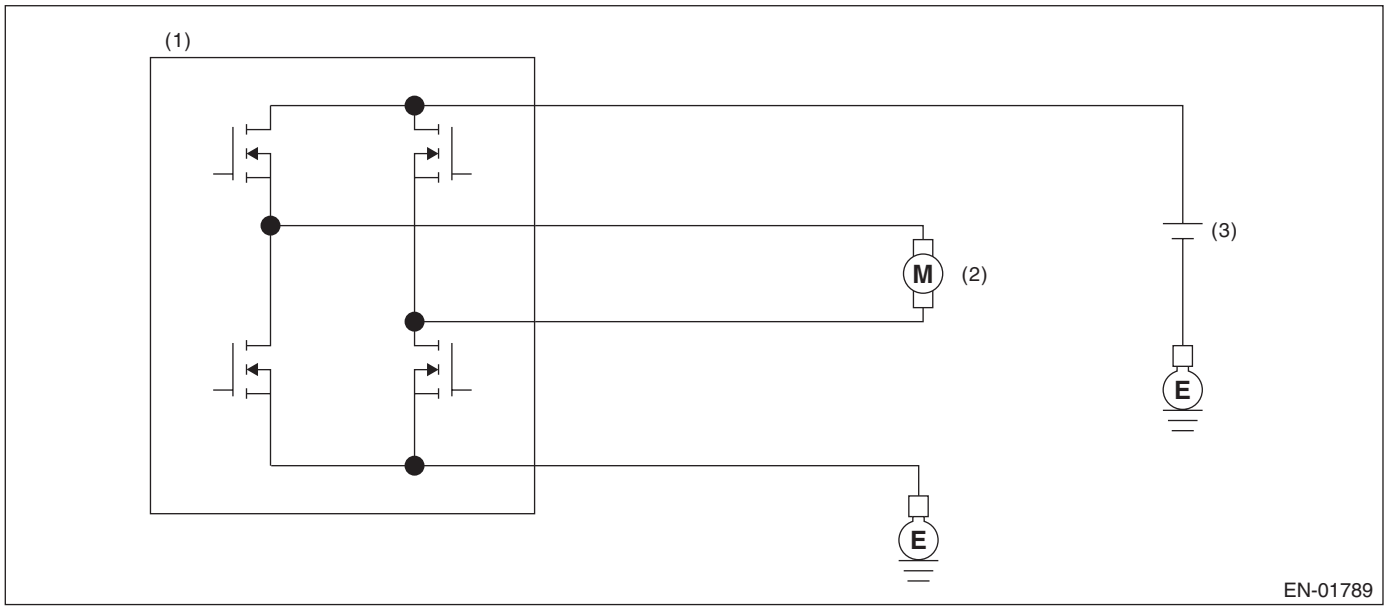

(1) Engine control module (ECM) (2) Tumble generator valve (3) Battery

3. ENABLE CONDITION

Secondary Parameters	Enable Conditions
Battery voltage	≥ 10.9 V

4. GENERAL DRIVING CYCLE

Always perform the diagnosis continuously.

5. DIAGNOSTIC METHOD

• Abnormality Judgment

At the main IC, check the sent signal at each timing which occurs just before the tumble generator valve output is set to ON → OFF, and judge open NG when the open NG signal is sent 96 ms × 20 time(s) in a row.

Judgment Value

Malfunction Criteria	Threshold Value
Open NG signal input	Low

Time Needed for Diagnosis: 96 ms × 20 time(s)
Malfunction Indicator Light Illumination: Illuminates as soon as a malfunction occurs.

• Normality Judgment

Judge as OK and clear the NG when the OK signal is sent.

Judgment Value

Malfunction Criteria	Threshold Value
Open NG signal input	High

Time Needed for Diagnosis: Less than 1 second

DU:DTC P2012 INTAKE MANIFOLD RUNNER CONTROL CIRCUIT LOW (BANK 2)

1. OUTLINE OF DIAGNOSIS

Detect the open or short circuit of tumble generator valve motor.
Judge as NG when the overcurrent signal is sent from IC after tumble generator valve driving IC diagnosis.

2. COMPONENT DESCRIPTION

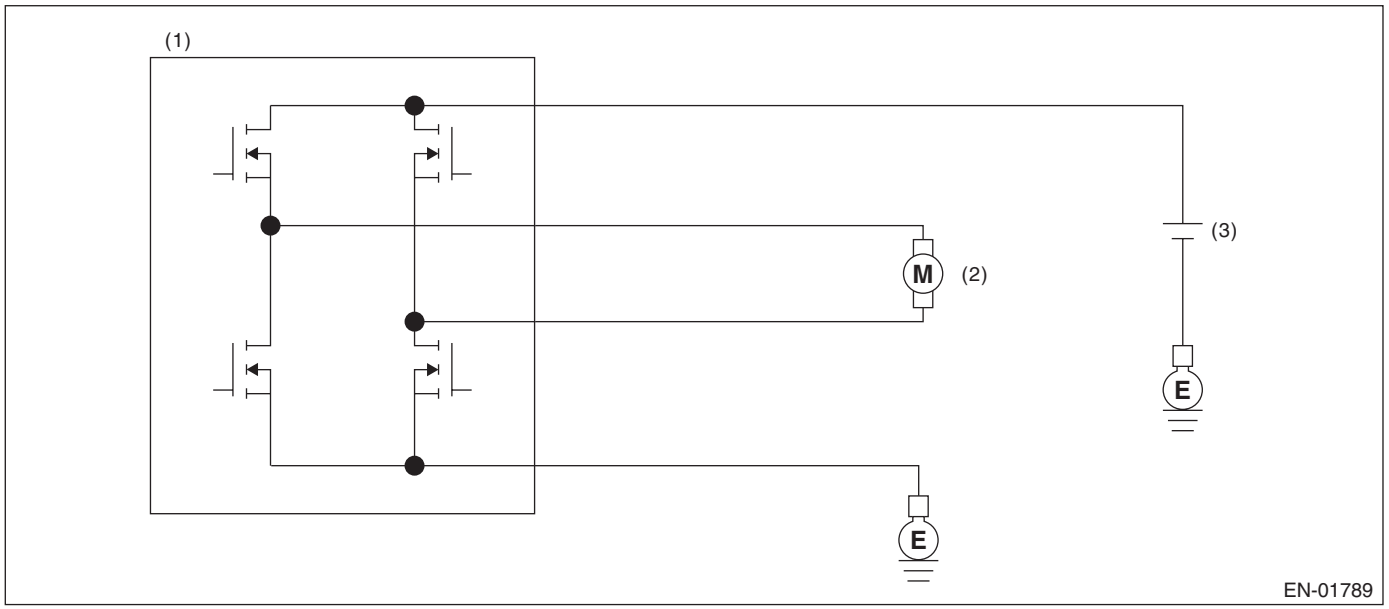

(1) Engine control module (ECM) (2) Tumble generator valve (3) Battery

3. ENABLE CONDITION

Secondary Parameters	Enable Conditions
Battery voltage	≥ 10.9 V

4. GENERAL DRIVING CYCLE

Always perform the diagnosis continuously.

5. DIAGNOSTIC METHOD

• Abnormality Judgment

At the main IC, check the sent signal at each timing which occurs just before the tumble generator valve output is set to ON → OFF, and judge open NG when the open NG signal is sent 96 ms × 10 time(s) in a row.

Judgment Value

Malfunction Criteria	Threshold Value
Overcurrent NG signal input	Low

Time Needed for Diagnosis: 96 ms × 10 time(s)
Malfunction Indicator Light Illumination: Illuminates as soon as a malfunction occurs.

• Normality Judgment

Judge as OK and clear the NG when the OK signal is sent.

Judgment Value

Malfunction Criteria	Threshold Value
Overcurrent NG signal input	High

Time Needed for Diagnosis: Less than 1 second

DV:DTC P2016 INTAKE MANIFOLD RUNNER POSITION SENSOR / SWITCH CIRCUIT LOW (BANK 1)

1. OUTLINE OF DIAGNOSIS

Detect open or short circuit of tumble generator valve position sensor.
Judge as NG if out of specification.

2. COMPONENT DESCRIPTION

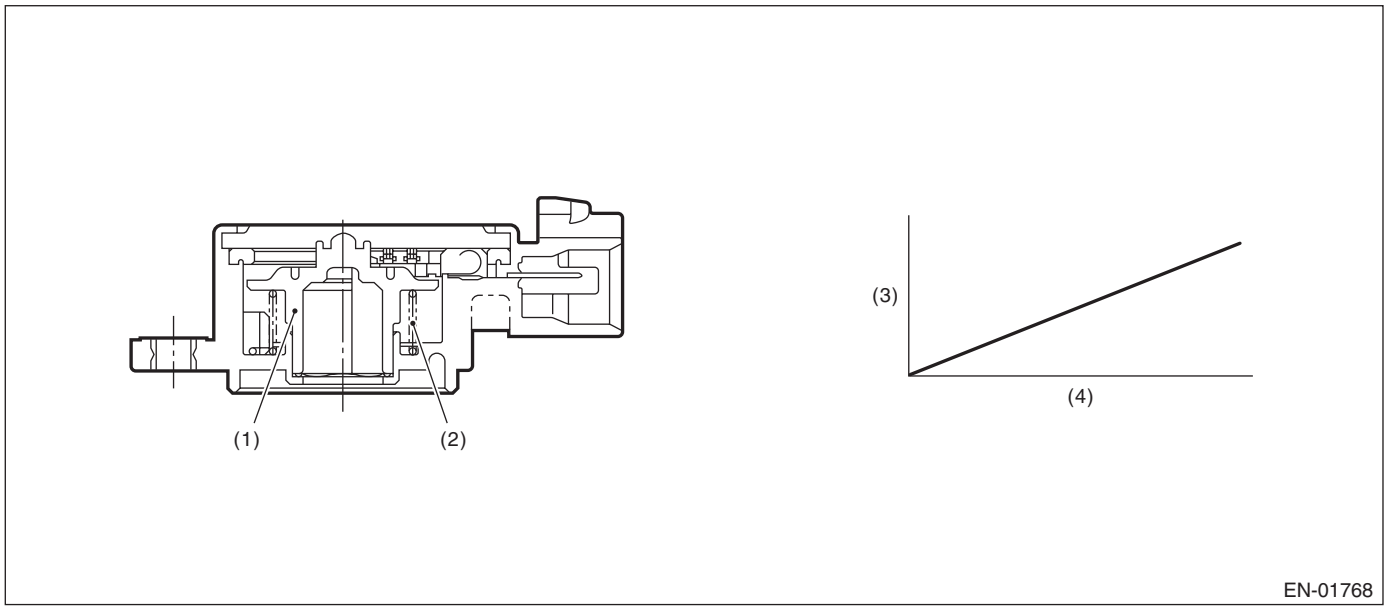

(1) Rotor
(2) Return spring
(3) Voltage (V)
(4) Tumble generator valve opening (°)

3. ENABLE CONDITION

Secondary Parameters	Enable Conditions
None	

4. GENERAL DRIVING CYCLE

Always perform the diagnosis continuously.

5. DIAGNOSTIC METHOD

- **Abnormality Judgment**

If the duration of time while the following conditions are met is longer than the time indicated, judge as NG.

Judgment Value

Malfunction Criteria	Threshold Value
Output voltage	< 0.264 V

Time Needed for Diagnosis: 500 ms
Malfunction Indicator Light Illumination: Illuminates as soon as a malfunction occurs.

- **Normality Judgment**

Judge as OK and clear the NG if the continuous time while the following conditions are established is more than the predetermined time.

Judgment Value

Malfunction Criteria	Threshold Value
Output voltage	≥ 0.264 V

Time Needed for Diagnosis: Less than 1 second

DW:DTC P2017 INTAKE MANIFOLD RUNNER POSITION SENSOR / SWITCH CIRCUIT HIGH (BANK 1)

1. OUTLINE OF DIAGNOSIS

Detect open or short circuit of tumble generator valve position sensor.
Judge as NG if out of specification.

2. COMPONENT DESCRIPTION

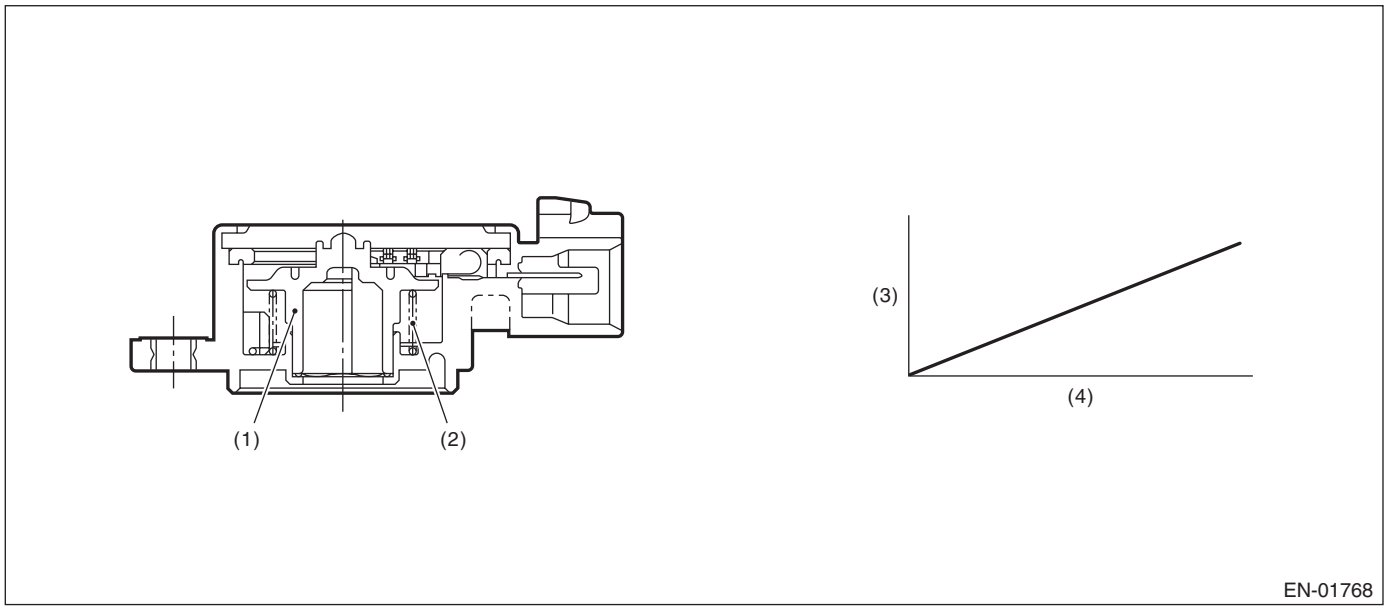

(1) Rotor
(2) Return spring
(3) Voltage (V)
(4) Throttle valve opening angle (°)

3. ENABLE CONDITION

Secondary Parameters	Enable Conditions
None	

4. GENERAL DRIVING CYCLE

Always perform the diagnosis continuously.

5. DIAGNOSTIC METHOD

- **Abnormality Judgment**

If the duration of time while the following conditions are met is longer than the time indicated, judge as NG.

Judgment Value

Malfunction Criteria	Threshold Value
Output voltage	≥ 4.783 V

Time Needed for Diagnosis: 500 ms
Malfunction Indicator Light Illumination: Illuminates as soon as a malfunction occurs.

- **Normality Judgment**

Judge as OK and clear the NG if the continuous time while the following conditions are established is more than the predetermined time.

Judgment Value

Malfunction Criteria	Threshold Value
Output voltage	< 4.783 V

Time Needed for Diagnosis: Less than 1 second

DX:DTC P2021 INTAKE MANIFOLD RUNNER POSITION SENSOR / SWITCH CIRCUIT LOW (BANK 2)

1. OUTLINE OF DIAGNOSIS

Detect open or short circuit of tumble generator valve position sensor.
Judge as NG if out of specification.

2. COMPONENT DESCRIPTION

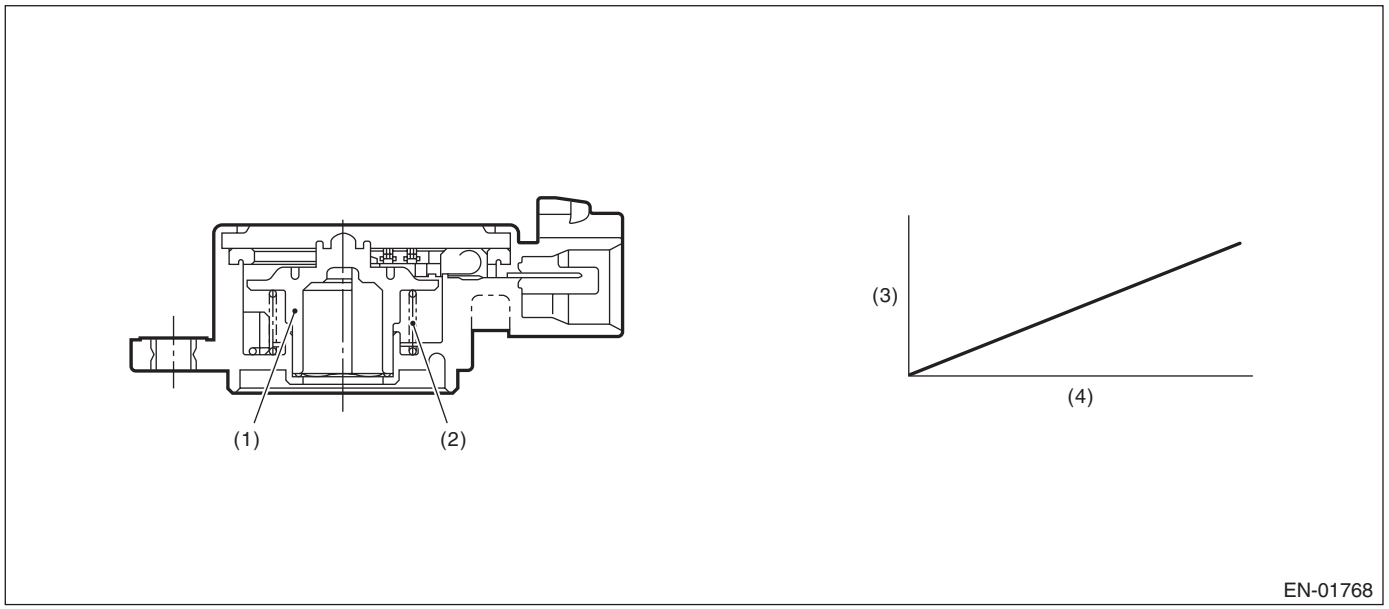

(1) Rotor
(2) Return spring
(3) Voltage (V)
(4) Tumble generator valve opening (°)

3. ENABLE CONDITION

Secondary Parameters	Enable Conditions
None	

4. GENERAL DRIVING CYCLE

Always perform the diagnosis continuously.

5. DIAGNOSTIC METHOD

- **Abnormality Judgment**

If the duration of time while the following conditions are met is longer than the time indicated, judge as NG.

Judgment Value

Malfunction Criteria	Threshold Value
Output voltage	< 0.264 V

Time Needed for Diagnosis: 500 ms
Malfunction Indicator Light Illumination: Illuminates as soon as a malfunction occurs.

- **Normality Judgment**

Judge as OK and clear the NG if the continuous time while the following conditions are established is more than the predetermined time.

Judgment Value

Malfunction Criteria	Threshold Value
Output voltage	≥ 0.264 V

Time Needed for Diagnosis: Less than 1 second

DY:DTC P2022 INTAKE MANIFOLD RUNNER POSITION SENSOR / SWITCH CIRCUIT HIGH (BANK 2)

1. OUTLINE OF DIAGNOSIS

Detect open or short circuit of tumble generator valve position sensor.
Judge as NG if out of specification.

2. COMPONENT DESCRIPTION

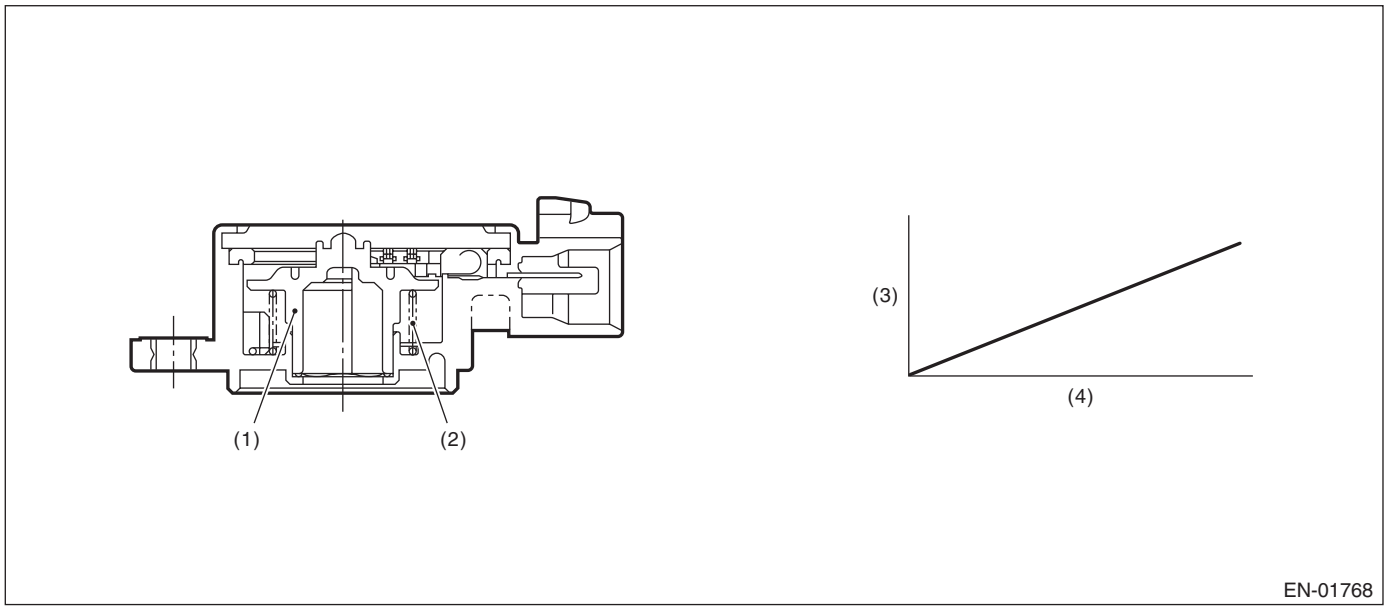

(1) Rotor
(2) Return spring
(3) Voltage (V)
(4) Tumble generator valve opening (°)

3. ENABLE CONDITION

Secondary Parameters	Enable Conditions
None	

4. GENERAL DRIVING CYCLE

Always perform the diagnosis continuously.

5. DIAGNOSTIC METHOD

- **Abnormality Judgment**

If the duration of time while the following conditions are met is longer than the time indicated, judge as NG.

Judgment Value

Malfunction Criteria	Threshold Value
Output voltage	≥ 4.783 V

Time Needed for Diagnosis: 500 ms
Malfunction Indicator Light Illumination: Illuminates as soon as a malfunction occurs.

- **Normality Judgment**

Judge as OK and clear the NG if the continuous time while the following conditions are established is more than the predetermined time.

Judgment Value

Malfunction Criteria	Threshold Value
Output voltage	< 4.783 V

Time Needed for Diagnosis: Less than 1 second

DZ:DTC P2088 INTAKE CAMSHAFT POSITION ACTUATOR CONTROL CIRCUIT LOW (BANK 1)

1. OUTLINE OF DIAGNOSIS

Detect open or short circuit of the oil flow control solenoid valve.
Judge as NG when the current is small even though the duty signal is large.

2. ENABLE CONDITION

Secondary Parameters	Enable Conditions
None	

3. GENERAL DRIVING CYCLE

Always perform the diagnosis continuously.

4. DIAGNOSTIC METHOD

- **Abnormality Judgment**

If the duration of time while the following conditions are met is longer than the time indicated, judge as NG.

Judgment Value

Malfunction Criteria	Threshold Value
Battery voltage	≥ 10.9 V
Oil flow control solenoid valve control duty	≥ 99.61 %
Oil control solenoid valve control present current	< 0.306 A

Time Needed for Diagnosis: 2000 ms
Malfunction Indicator Light Illumination: Illuminates as soon as a malfunction occurs.

- **Normality Judgment**

Judge as OK and clear the NG if the continuous time while the following conditions are established is more than the predetermined time.

Judgment Value

Malfunction Criteria	Threshold Value
Battery voltage	≥ 10.9 V
Target current value of the oil flow control solenoid valve	≥ 0.14 A
|Target current value of the oil flow control solenoid valve – oil flow control solenoid valve control current value|	< 0.08 A

Time Needed for Diagnosis: 2000 ms

EA:DTC P2089 INTAKE CAMSHAFT POSITION ACTUATOR CONTROL CIRCUIT HIGH (BANK 1)

1. OUTLINE OF DIAGNOSIS

Detect open or short circuit of oil flow control solenoid valve.
Judge as NG when the current is large even though the duty signal is small.

2. ENABLE CONDITION

Secondary Parameters	Enable Conditions
None	

3. GENERAL DRIVING CYCLE

Always perform the diagnosis continuously.

4. DIAGNOSTIC METHOD

- **Abnormality Judgment**

If the duration of time while the following conditions are met is longer than the time indicated, judge as NG.

Judgment Value

Malfunction Criteria	Threshold Value
Battery voltage	≥ 10.9 V
Oil flow control solenoid valve control duty	< 0.39 %
Oil control solenoid valve control present current	≥ 0.306 A

Time Needed for Diagnosis: 2000 ms
Malfunction Indicator Light Illumination: Illuminates as soon as a malfunction occurs.

- **Normality Judgment**

Judge as OK and clear the NG if the continuous time while the following conditions are established is more than the predetermined time.

Judgment Value

Malfunction Criteria	Threshold Value
Battery voltage	≥ 10.9 V
|Target current value of the oil flow control solenoid valve – oil flow control solenoid valve control current value|	< 0.08 A

Time Needed for Diagnosis: 2000 ms

EB:DTC P2090 EXHAUST CAMSHAFT POSITION ACTUATOR CONTROL CIRCUIT LOW (BANK 1)

1. OUTLINE OF DIAGNOSIS

Detect open or short circuit of the oil flow control solenoid valve.
Judge as NG when the current is small even though the duty signal is large.

2. ENABLE CONDITIONS

Secondary Parameters	Enable Conditions
None	

3. GENERAL DRIVING CYCLE

Always perform the diagnosis continuously.

4. DIAGNOSTIC METHOD

- **Abnormality Judgment**

If the duration of time while the following conditions are met is longer than the time indicated, judge as NG.

Judgment Value

Malfunction Criteria	Threshold Value
Battery voltage	≥ 10.9 V
Oil flow control solenoid valve control duty	≥ 99.61 %
Oil control solenoid valve control present current	< 0.306 A

Time Needed for Diagnosis: 2000 ms
Malfunction Indicator Light Illumination: Illuminates as soon as a malfunction occurs.

- **Normality Judgment**

Judge as OK and clear the NG if the continuous time while the following conditions are established is more than the predetermined time.

Judgment Value

Malfunction Criteria	Threshold Value
Battery voltage	≥ 10.9 V
Target current value of the oil flow control solenoid valve	≥ 0.14 A
|Target current value of the oil flow control solenoid valve – oil flow control solenoid valve control current value|	< 0.08 A

Time Needed for Diagnosis: 2000 ms

EC:DTC P2091 EXHAUST CAMSHAFT POSITION ACTUATOR CONTROL CIRCUIT HIGH (BANK 1)

1. OUTLINE OF DIAGNOSIS

Detect open or short circuit of oil flow control solenoid valve.
Judge as NG when the current is large even though the duty signal is small.

2. ENABLE CONDITIONS

Secondary Parameters	Enable Conditions
None	

3. GENERAL DRIVING CYCLE

Always perform the diagnosis continuously.

4. DIAGNOSTIC METHOD

- **Abnormality Judgment**

If the duration of time while the following conditions are met is longer than the time indicated, judge as NG.

Judgment Value

Malfunction Criteria	Threshold Value
Battery voltage	≥ 10.9 V
Oil flow control solenoid valve control duty	< 0.39 %
Oil control solenoid valve control present current	≥ 0.306 A

Time Needed for Diagnosis: 2000 ms
Malfunction Indicator Light Illumination: Illuminates as soon as a malfunction occurs.

- **Normality Judgment**

Judge as OK and clear the NG if the continuous time while the following conditions are established is more than the predetermined time.

Judgment Value

Malfunction Criteria	Threshold Value
Battery voltage	≥ 10.9 V
|Target current value of the oil flow control solenoid valve – oil flow control solenoid valve control current value|	< 0.08 A

Time Needed for Diagnosis: 2000 ms

ED:DTC P2092 INTAKE CAMSHAFT POSITION ACTUATOR CONTROL CIRCUIT LOW (BANK 2)

1. OUTLINE OF DIAGNOSIS

NOTE:
For the detection standard, refer to DTC P2088. <Ref. to GD(H4DOTC)-221, DTC P2088 INTAKE CAMSHAFT POSITION ACTUATOR CONTROL CIRCUIT LOW (BANK 1), Diagnostic Trouble Code (DTC) Detecting Criteria.>

EE:DTC P2093 INTAKE CAMSHAFT POSITION ACTUATOR CONTROL CIRCUIT HIGH (BANK 2)

1. OUTLINE OF DIAGNOSIS

NOTE:
For the detection standard, refer to DTC P2089. <Ref. to GD(H4DOTC)-222, DTC P2089 INTAKE CAMSHAFT POSITION ACTUATOR CONTROL CIRCUIT HIGH (BANK 1), Diagnostic Trouble Code (DTC) Detecting Criteria.>

EF:DTC P2094 EXHAUST CAMSHAFT POSITION ACTUATOR CONTROL CIRCUIT LOW (BANK 2)

1. OUTLINE OF DIAGNOSIS

NOTE:
For the detection standard, refer to DTC P2090. <Ref. to GD(H4DOTC)-223, DTC P2090 EXHAUST CAMSHAFT POSITION ACTUATOR CONTROL CIRCUIT LOW (BANK 1), Diagnostic Trouble Code (DTC) Detecting Criteria.>

EG:DTC P2095 EXHAUST CAMSHAFT POSITION ACTUATOR CONTROL CIRCUIT HIGH (BANK 2)

1. OUTLINE OF DIAGNOSIS

NOTE:
For the detection standard, refer to DTC P2091. <Ref. to GD(H4DOTC)-224, DTC P2091 EXHAUST CAMSHAFT POSITION ACTUATOR CONTROL CIRCUIT HIGH (BANK 1), Diagnostic Trouble Code (DTC) Detecting Criteria.>

EH:DTC P2096 POST CATALYST FUEL TRIM SYSTEM TOO LEAN (BANK 1)

1. OUTLINE OF DIAGNOSIS

Detect the malfunction of fuel system from the size of the sub feedback learning value.
Control the sub feedback learning and judge as NG when the learning value is in the lean zone.

2. COMPONENT DESCRIPTION

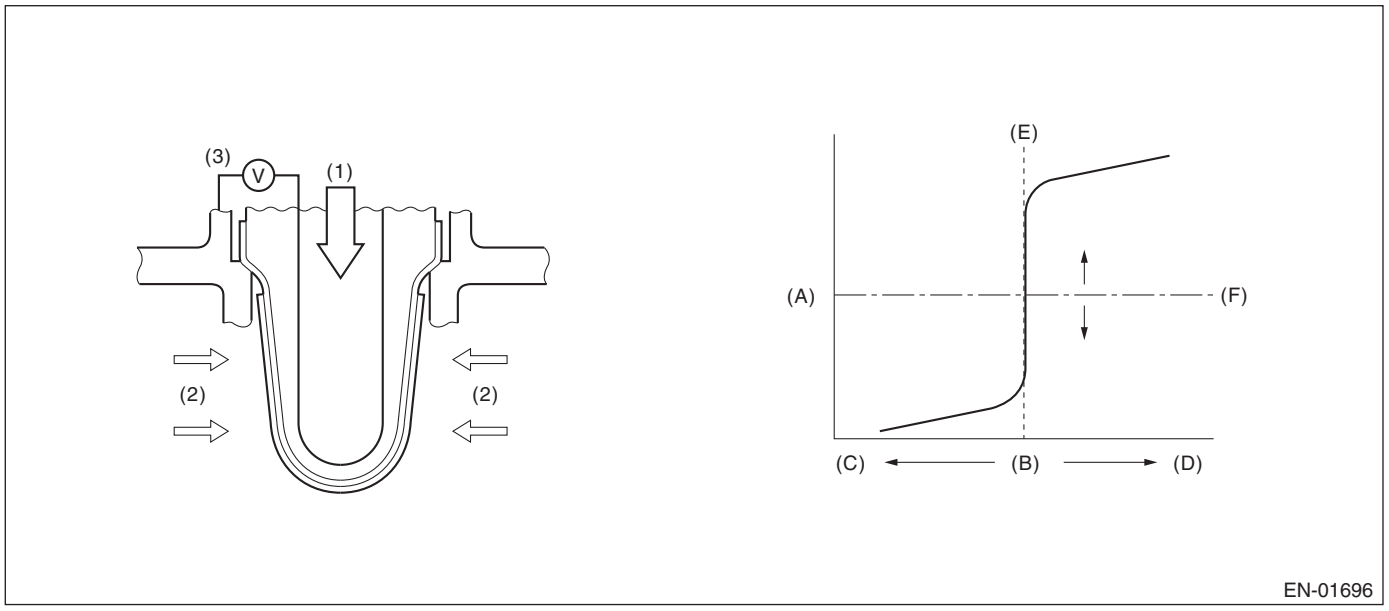

(A)	Electromotive force	(B)	Air fuel ratio	(C)	Rich
(D)	Lean	(E)	Theoretical air fuel ratio	(F)	Comparative voltage
(1)	Atmosphere	(2)	Exhaust gas	(3)	Electromotive force

3. ENABLE CONDITION

Secondary Parameters	Enable Conditions
Conditions for carrying out the sub feedback learning	Complete
Continuous time when all conditions are established.	≥ 1 s

4. GENERAL DRIVING CYCLE

Perform the diagnosis continuously when the vehicle is idling or running at a constant speed of 80 km/h (50 MPH) or more.

5. DIAGNOSTIC METHOD

• Abnormality Judgment

If the duration of time while the following conditions are met is longer than the time indicated, judge as NG.

Judgment Value

Malfunction Criteria	Threshold Value
Sub feedback learning value	< –0.05

Time Needed for Diagnosis: 1 s × 1 time(s)
Malfunction Indicator Light Illumination: Illuminates when malfunction occurs in 2 continuous driving cycles.

• Normality Judgment

Judge as OK and clear the NG if the continuous time while the following conditions are established is more than the predetermined time.

Judgment Value

Malfunction Criteria	Threshold Value
Sub feedback learning value	≥ –0.05 + 0

Time Needed for Diagnosis: 1 s

EI: DTC P2097 POST CATALYST FUEL TRIM SYSTEM TOO RICH (BANK 1)

1. OUTLINE OF DIAGNOSIS

Detect the malfunction of fuel system from the size of the sub feedback learning value.
Sub feedback learning is being performed. When the learning value goes to the rich side, judge as NG.

2. COMPONENT DESCRIPTION

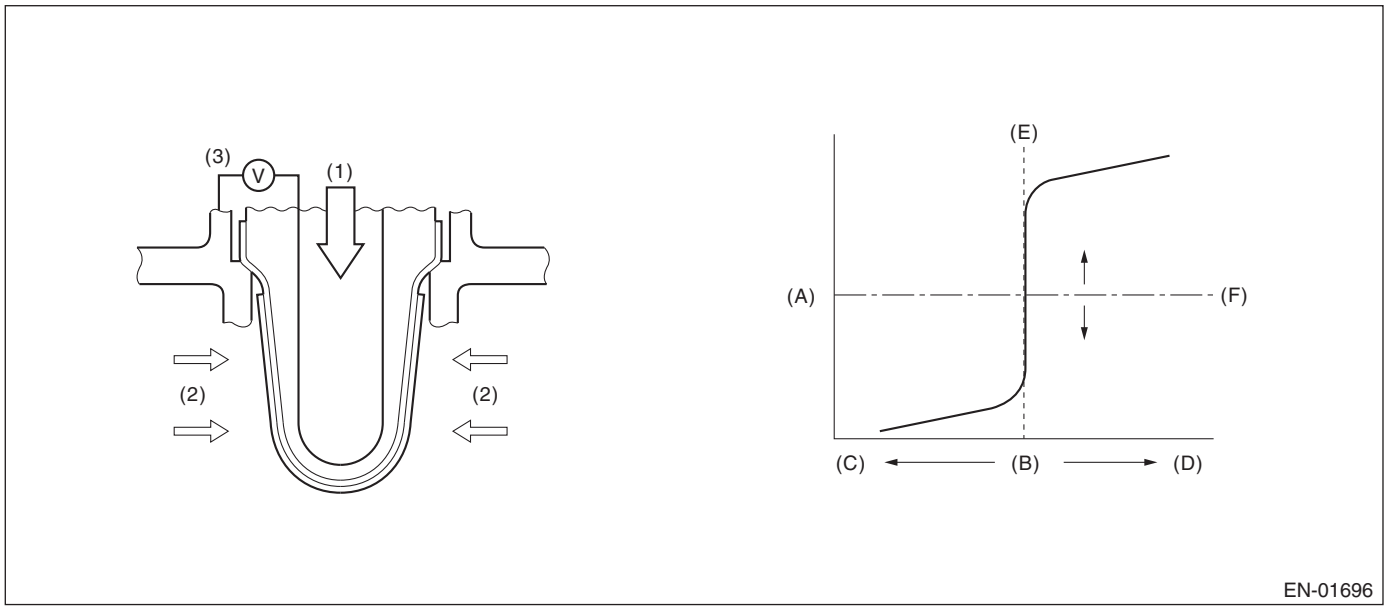

(A)	Electromotive force	(B)	Air fuel ratio	(C)	Rich
(D)	Lean	(E)	Theoretical air fuel ratio	(F)	Comparative voltage
(1)	Atmosphere	(2)	Exhaust gas	(3)	Electromotive force

3. ENABLE CONDITION

Secondary Parameters	Enable Conditions
Conditions for carrying out the sub feedback learning	Complete
Continuous time when all conditions are established.	≥ 1 s

4. GENERAL DRIVING CYCLE

Perform the diagnosis continuously when the vehicle is idling or running at a constant speed of 80 km/h (50 MPH) or more.

5. DIAGNOSTIC METHOD

• Abnormality Judgment

If the duration of time while the following conditions are met is longer than the time indicated, judge as NG.

Judgment Value

Malfunction Criteria	Threshold Value
Sub feedback learning value	≥ 0.03

Time Needed for Diagnosis: 1 s × 1 time(s)
Malfunction Indicator Light Illumination: Illuminates when malfunction occurs in 2 continuous driving cycles.

• Normality Judgment

Judge as OK and clear the NG if the continuous time while the following conditions are established is more than the predetermined time.

Judgment Value

Malfunction Criteria	Threshold Value
Sub feedback learning value	< 0.03 + 0

Time Needed for Diagnosis: 1 s

EJ: DTC P2101 THROTTLE ACTUATOR CONTROL MOTOR CIRCUIT RANGE/ PERFORMANCE

1. OUTLINE OF DIAGNOSIS

Judge as NG when the motor current becomes large or drive circuit is heated.

2. COMPONENT DESCRIPTION

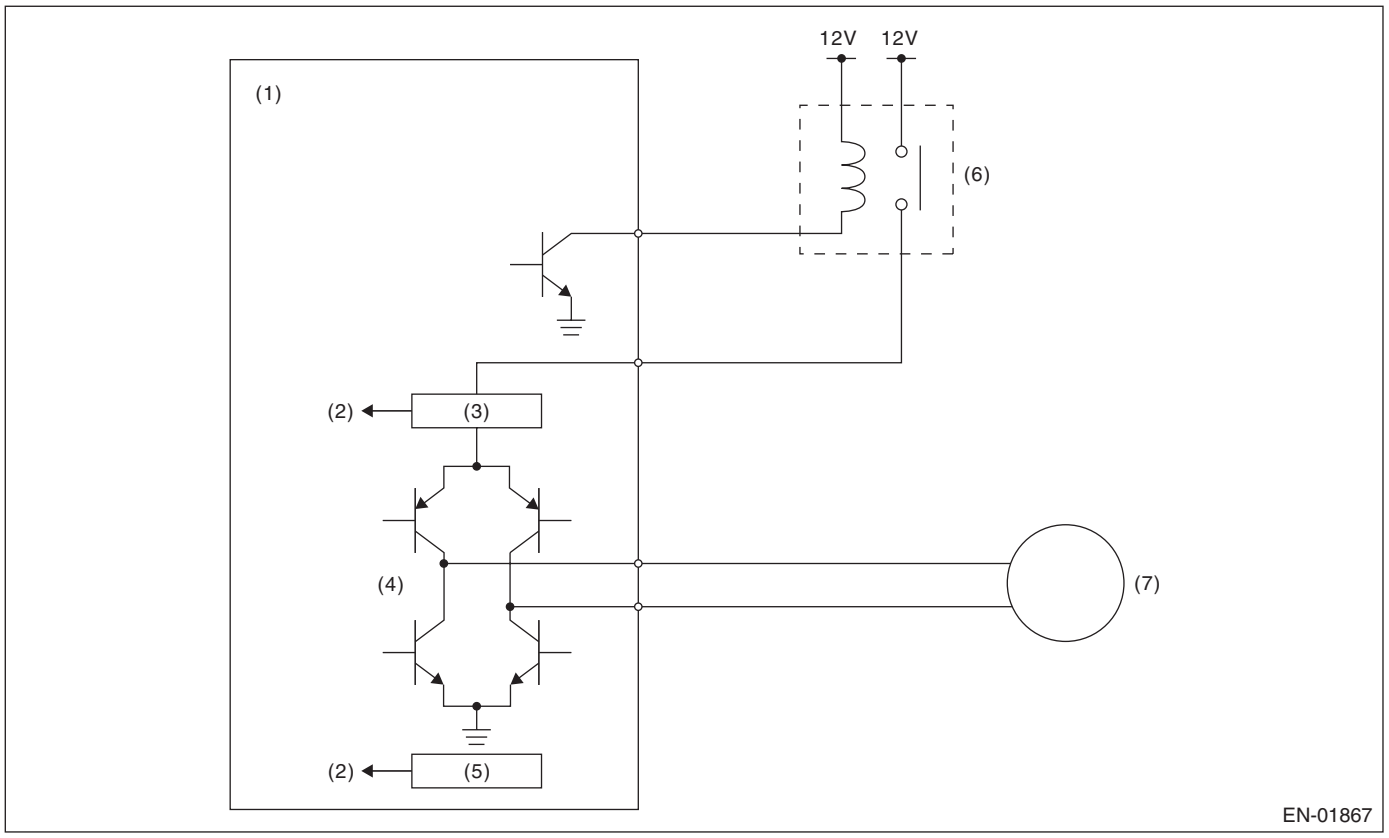

(1) Engine control module (ECM)
(2) Detecting circuit
(3) Overcurrent detection circuit
(4) Drive circuit
(5) Temperature detection circuit
(6) Electronic throttle control relay
(7) Motor

3. ENABLE CONDITION

Secondary Parameters	Enable Conditions
Under control of electronic throttle control	ON
CPU communication line sub → main normal judgment	Normal

4. GENERAL DRIVING CYCLE

Always perform the diagnosis continuously.

5. DIAGNOSTIC METHOD

- **Abnormality Judgment**

If the duration of time while the following conditions are met is longer than the time indicated, judge as NG.

Judgment Value

Malfunction Criteria	Threshold Value
Motor current	> 8 A
or	
Drive circuit inner temperature	> 175°C (347°F)

Time Needed for Diagnosis: 512 ms
Malfunction Indicator Light Illumination: Illuminates as soon as a malfunction occurs.

- **Normality Judgment**

Judge as OK and clear the NG if the continuous time while the following conditions are established is more than the predetermined time.

Judgment Value

Malfunction Criteria	Threshold Value
Motor current	≤ 8 A
Drive circuit inner temperature	≤ 175°C (347°F)

Time Needed for Diagnosis: 2000 ms

EK:DTC P2102 THROTTLE ACTUATOR CONTROL MOTOR CIRCUIT LOW

1. OUTLINE OF DIAGNOSIS

Judge as NG when the electronic throttle control power is not supplied even when ECM sets the electronic throttle control relay to ON.

2. COMPONENT DESCRIPTION

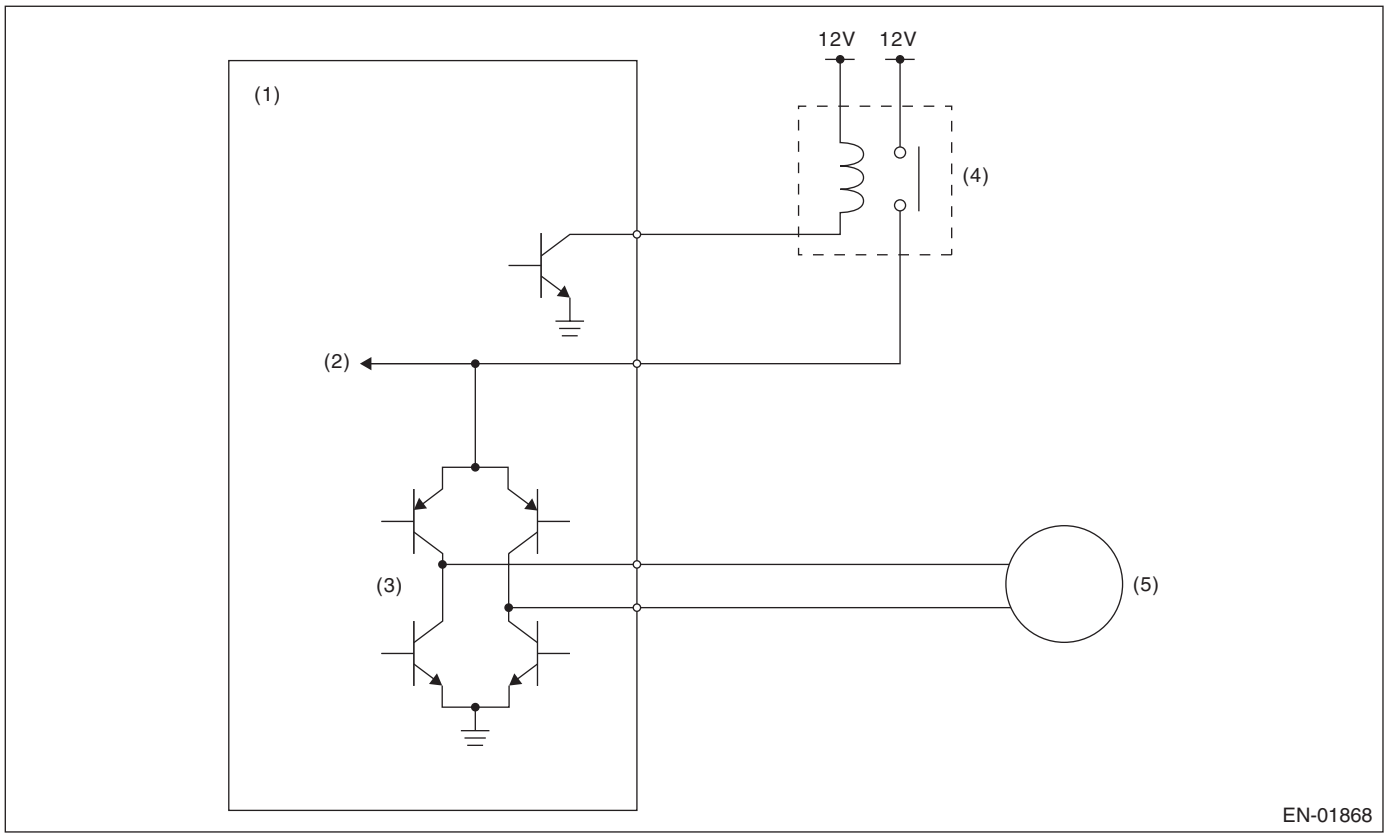

(1) Engine control module (ECM)
(2) Voltage detection circuit
(3) Drive circuit
(4) Electronic throttle control relay
(5) Motor

3. ENABLE CONDITION

Secondary Parameters	Enable Conditions
Battery voltage	≥ 11 V
Electronic throttle control relay output	ON

4. GENERAL DRIVING CYCLE

Always perform the diagnosis continuously.

5. DIAGNOSTIC METHOD

• Abnormality Judgment

If the duration of time while the following conditions are met is longer than the time indicated, judge as NG.

Judgment Value

Malfunction Criteria	Threshold Value
Motor power voltage	≤ 5 V

Time Needed for Diagnosis: 352 ms
Malfunction Indicator Light Illumination: Illuminates as soon as a malfunction occurs.

• Normality Judgment

Judge as OK and clear the NG if the continuous time while the following conditions are established is more than the predetermined time.

Judgment Value

Malfunction Criteria	Threshold Value
Motor power voltage	> 5 V

Time Needed for Diagnosis: 2000 ms

EL:DTC P2103 THROTTLE ACTUATOR CONTROL MOTOR CIRCUIT HIGH

1. OUTLINE OF DIAGNOSIS

Judge as NG when the electronic throttle control power is supplied even when ECM sets the electronic throttle control relay to OFF.

2. COMPONENT DESCRIPTION

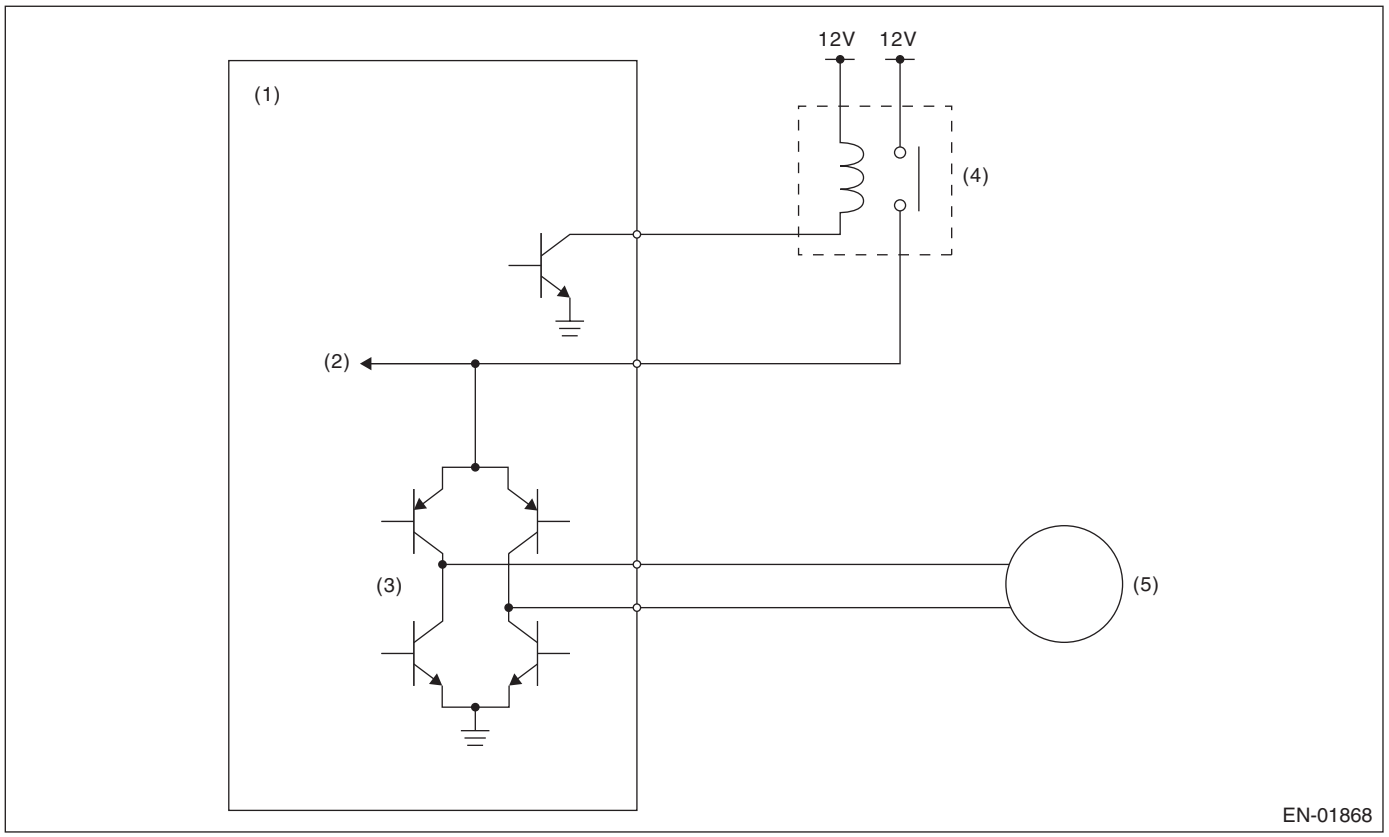

(1) Engine control module (ECM)
(2) Voltage detection circuit
(3) Drive circuit
(4) Electronic throttle control relay
(5) Motor

3. ENABLE CONDITION

Secondary Parameters	Enable Conditions
Battery voltage	≥ 6 V
Electronic throttle control relay output	OFF

4. GENERAL DRIVING CYCLE

- When ignition switch ON → OFF
- Ignition switch OFF → ON (Only after clearing memory)

5. DIAGNOSTIC METHOD

• Abnormality Judgment

If the duration of time while the following conditions are met is longer than the time indicated, judge as NG.

Judgment Value

Malfunction Criteria	Threshold Value
Motor power voltage	≥ 5 V

Time Needed for Diagnosis: 600 ms
Malfunction Indicator Light Illumination: Illuminates as soon as a malfunction occurs.

• Normality Judgment

Judge as OK and clear the NG if the continuous time while the following conditions are established is more than the predetermined time.

Judgment Value

Malfunction Criteria	Threshold Value
Motor power voltage	< 5 V

Time Needed for Diagnosis: 400 ms

EM:DTC P2109 THROTTLE/PEDAL POSITION SENSOR “A” MINIMUM STOP PERFORMANCE

1. OUTLINE OF DIAGNOSIS

Judge as NG when full close point learning cannot conducted or abnormal value is detected.

2. COMPONENT DESCRIPTION

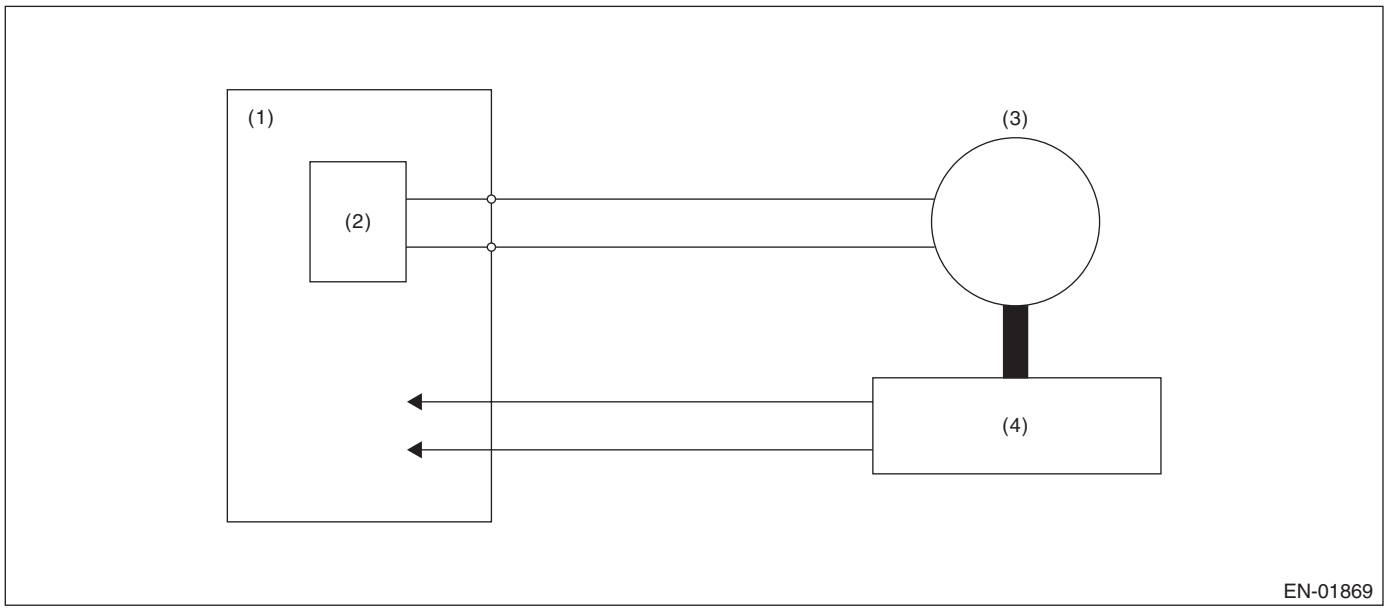

(1) Engine control module (ECM)
(2) Drive circuit
(3) Motor
(4) Throttle position sensor

3. ENABLE CONDITION

Secondary Parameters	Enable Conditions
Ignition switch	ON → OFF
Ignition switch (only after clear memory)	OFF → ON

4. GENERAL DRIVING CYCLE

Perform the diagnosis at full closed point learning.

5. DIAGNOSTIC METHOD

- **Abnormality Judgment**

If the duration of time while the following conditions are met is longer than the time indicated, judge as NG.

Judgment Value

Malfunction Criteria	Threshold Value
Throttle sensor opening angle at full close point learning or	< 9.884 ° or > 20.116 °
Throttle opening angle when the ignition switch is ON – Throttle minimum stop position	< 0.887 °

Time Needed for Diagnosis: 8 ms — 80 ms
Malfunction Indicator Light Illumination: Illuminates as soon as a malfunction occurs.

- **Normality Judgment**

Judge as OK and clear the NG if the continuous time while the following conditions are established is more than the predetermined time.

Judgment Value

Malfunction Criteria	Threshold Value
Throttle sensor opening angle at full close point learning	≥ 9.884 ° and ≤ 20.116 °
Throttle opening angle when the ignition switch is ON – Throttle minimum stop position	≥ 0.887 °

Time Needed for Diagnosis: 8 ms

EN:DTC P2122 THROTTLE/PEDAL POSITION SENSOR/SWITCH “D” CIRCUIT LOW INPUT

1. OUTLINE OF DIAGNOSIS

Detect the open or short circuit of accelerator pedal position sensor 1.
Judge as NG if out of specification.

2. COMPONENT DESCRIPTION

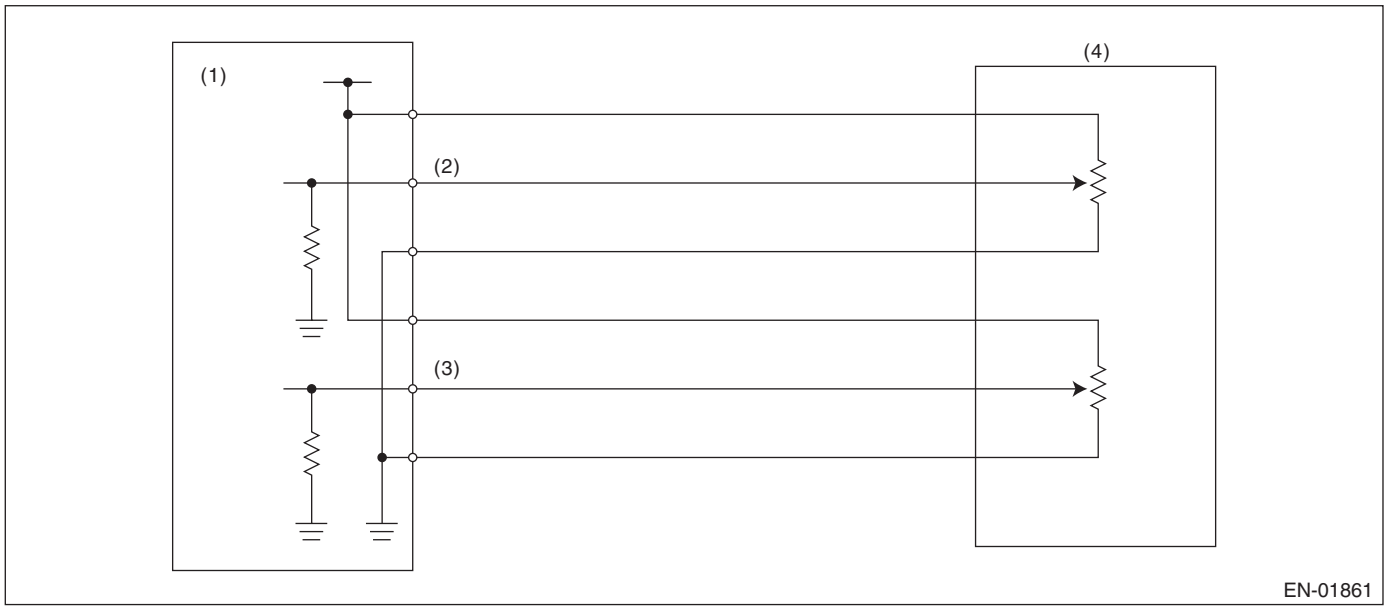

(1) Engine control module (ECM)
(2) Accelerator pedal position sensor 1 signal
(3) Accelerator pedal position sensor 2 signal
(4) Accelerator pedal position sensor

3. ENABLE CONDITION

Secondary Parameters	Enable Conditions
Ignition switch	ON
Battery voltage	≥ 6 V

4. GENERAL DRIVING CYCLE

Always perform the diagnosis continuously.

5. DIAGNOSTIC METHOD

• Abnormality Judgment

If the duration of time while the following conditions are met is longer than the time indicated, judge as NG.

Judgment Value

Malfunction Criteria	Threshold Value
Sensor 1 input voltage	< 0.295 V

Time Needed for Diagnosis: 100 ms
Malfunction Indicator Light Illumination: Illuminates as soon as a malfunction occurs.

• Normality Judgment

Judge as OK and clear the NG if the continuous time while the following conditions are established is more than the predetermined time.

Judgment Value

Malfunction Criteria	Threshold Value
Sensor 1 input voltage	≥ 0.295 V

Time Needed for Diagnosis: 100 ms

EO:DTC P2123 THROTTLE/PEDAL POSITION SENSOR/SWITCH “D” CIRCUIT HIGH INPUT

1. OUTLINE OF DIAGNOSIS

Detect the open or short circuit of accelerator pedal position sensor 1.
Judge as NG if out of specification.

2. COMPONENT DESCRIPTION

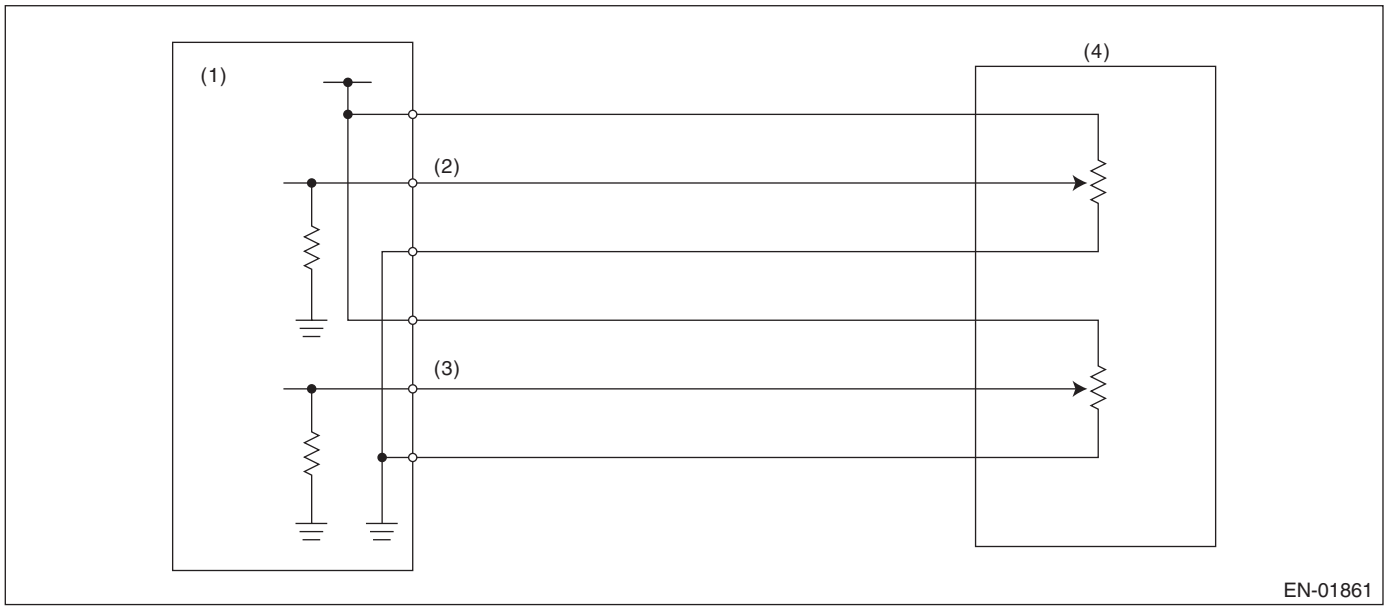

(1) Engine control module (ECM)
(2) Accelerator pedal position sensor 1 signal
(3) Accelerator pedal position sensor 2 signal
(4) Accelerator pedal position sensor

3. ENABLE CONDITION

Secondary Parameters	Enable Conditions
Ignition switch	ON
Battery voltage	≥ 6 V

4. GENERAL DRIVING CYCLE

Always perform the diagnosis continuously.

5. DIAGNOSTIC METHOD

- **Abnormality Judgment**

If the duration of time while the following conditions are met is longer than the time indicated, judge as NG.

Judgment Value

Malfunction Criteria	Threshold Value
Sensor 1 input voltage	≥ 4.783 V

Time Needed for Diagnosis: 32 ms
Malfunction Indicator Light Illumination: Illuminates as soon as a malfunction occurs.

- **Normality Judgment**

Judge as OK and clear the NG if the continuous time while the following conditions are established is more than the predetermined time.

Judgment Value

Malfunction Criteria	Threshold Value
Sensor 1 input voltage	< 4.783 V

Time Needed for Diagnosis: 32 ms

EP:DTC P2127 THROTTLE/PEDAL POSITION SENSOR/SWITCH “E” CIRCUIT LOW INPUT

1. OUTLINE OF DIAGNOSIS

Detect the open or short circuit of accelerator pedal position sensor 2.
Judge as NG if out of specification.

2. COMPONENT DESCRIPTION

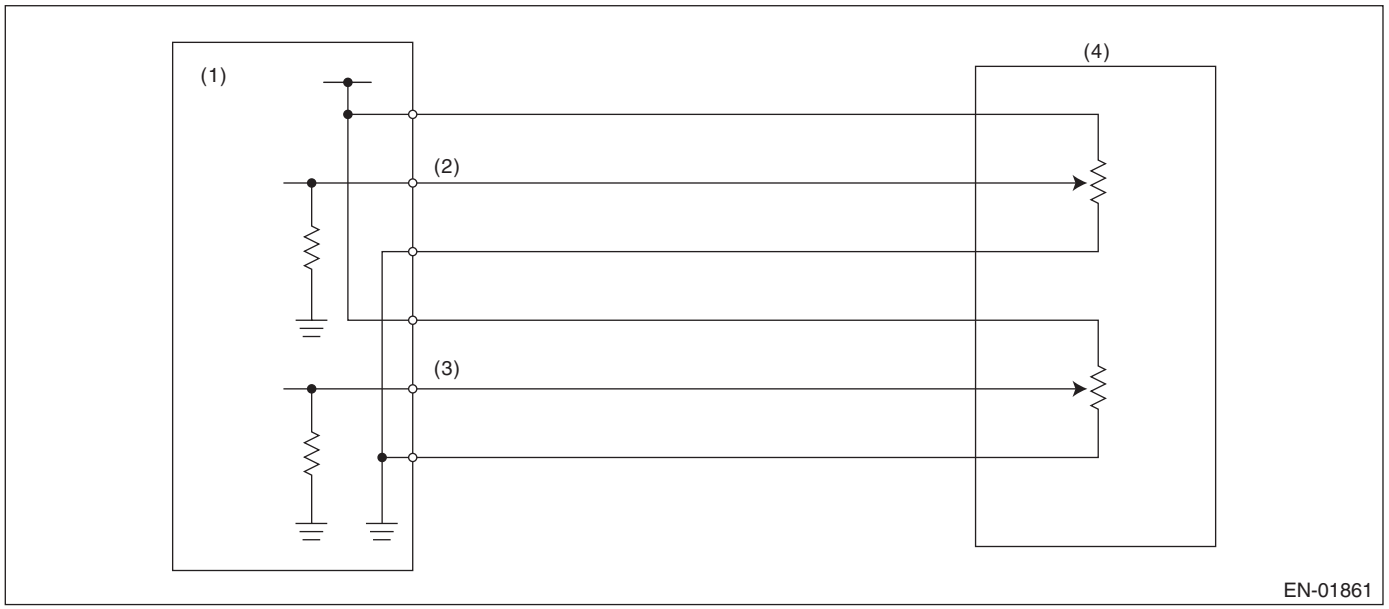

(1) Engine control module (ECM)
(2) Accelerator pedal position sensor 1 signal
(3) Accelerator pedal position sensor 2 signal
(4) Accelerator pedal position sensor

3. ENABLE CONDITION

Secondary Parameters	Enable Conditions
Ignition switch	ON
Battery voltage	≥ 6 V

4. GENERAL DRIVING CYCLE

Always perform the diagnosis continuously.

5. DIAGNOSTIC METHOD

• Abnormality Judgment

If the duration of time while the following conditions are met is longer than the time indicated, judge as NG.

Judgment Value

Malfunction Criteria	Threshold Value
Sensor 2 input voltage	< 0.295 V

Time Needed for Diagnosis: 100 ms
Malfunction Indicator Light Illumination: Illuminates as soon as a malfunction occurs.

• Normality Judgment

Judge as OK and clear the NG if the continuous time while the following conditions are established is more than the predetermined time.

Judgment Value

Malfunction Criteria	Threshold Value
Sensor 2 input voltage	≥ 0.295 V

Time Needed for Diagnosis: 100 ms

EQ:DTC P2128 THROTTLE/PEDAL POSITION SENSOR/SWITCH “E” CIRCUIT HIGH INPUT

1. OUTLINE OF DIAGNOSIS

Detect the open or short circuit of accelerator pedal position sensor 2.
Judge as NG if out of specification.

2. COMPONENT DESCRIPTION

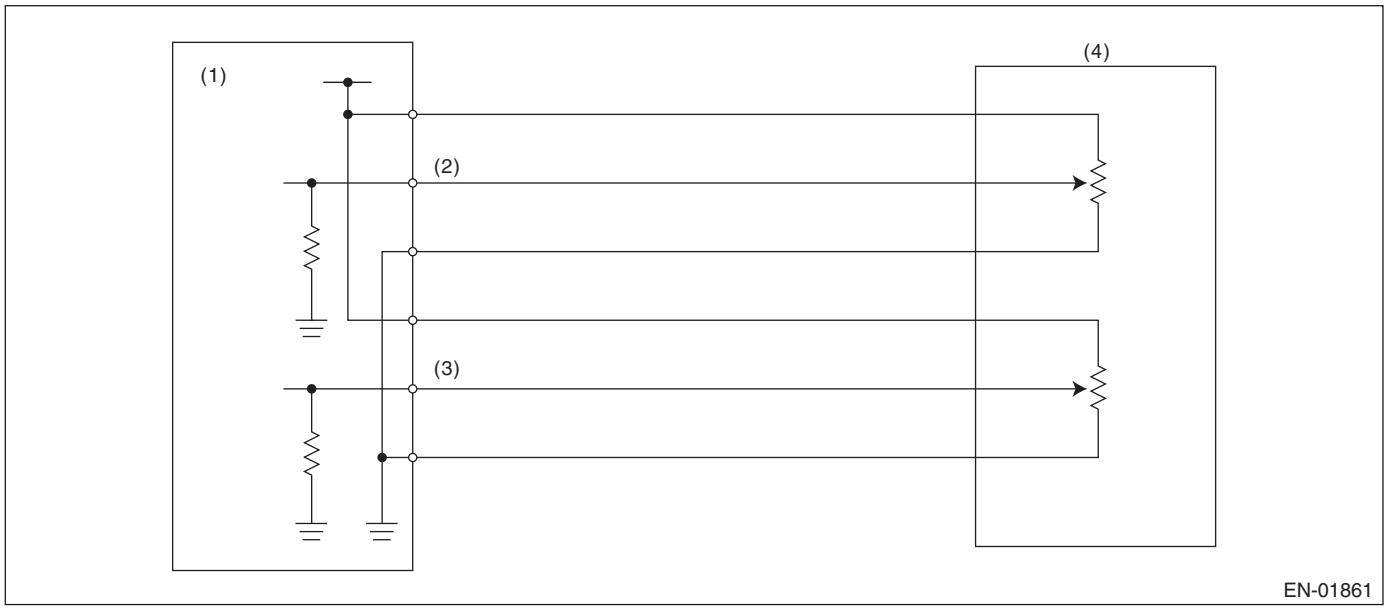

(1) Engine control module (ECM)
(2) Accelerator pedal position sensor 1 signal
(3) Accelerator pedal position sensor 2 signal
(4) Accelerator pedal position sensor

3. ENABLE CONDITION

Secondary Parameters	Enable Conditions
Ignition switch	ON
Battery voltage	≥ 6 V

4. GENERAL DRIVING CYCLE

Always perform the diagnosis continuously.

5. DIAGNOSTIC METHOD

- **Abnormality Judgment**

If the duration of time while the following conditions are met is longer than the time indicated, judge as NG.

Judgment Value

Malfunction Criteria	Threshold Value
Sensor 2 input voltage	≥ 4.783 V

Time Needed for Diagnosis: 100 ms
Malfunction Indicator Light Illumination: Illuminates as soon as a malfunction occurs.

- **Normality Judgment**

Judge as OK and clear the NG if the continuous time while the following conditions are established is more than the predetermined time.

Judgment Value

Malfunction Criteria	Threshold Value
Sensor 2 input voltage	< 4.783 V

Time Needed for Diagnosis: 100 ms

ER:DTC P2135 THROTTLE/PEDAL POSITION SENSOR/SWITCH “A”/“B” VOLTAGE CORRELATION

1. OUTLINE OF DIAGNOSIS

Judge as NG when the signal level of throttle position sensor 1 is different from the throttle position sensor 2.

2. COMPONENT DESCRIPTION

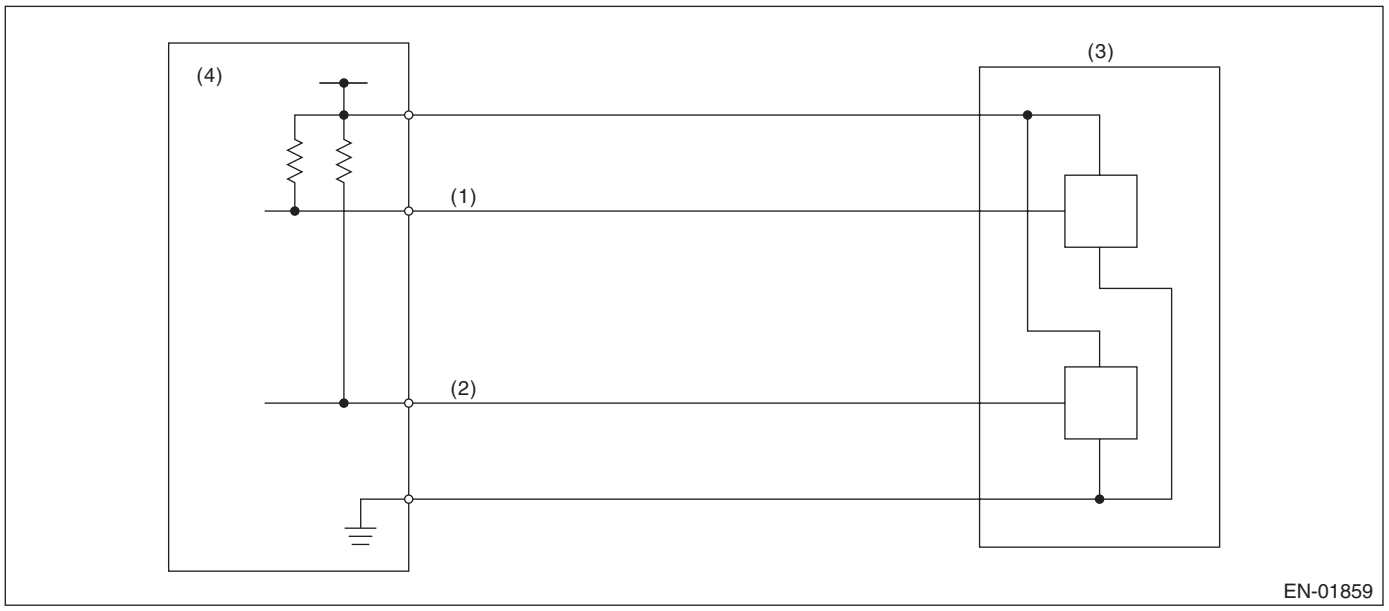

(1) Throttle position sensor 1 signal
(2) Throttle position sensor 2 signal
(3) Throttle position sensor
(4) Engine control module (ECM)

3. ENABLE CONDITION

Secondary Parameters	Enable Conditions
Ignition switch	ON
Battery voltage	≥ 6 V

4. GENERAL DRIVING CYCLE

Always perform the diagnosis continuously.

5. DIAGNOSTIC METHOD

• Abnormality Judgment

If the duration of time while the following conditions are met is longer than the time indicated, judge as NG.

Judgment Value

Malfunction Criteria	Threshold Value
Signal difference between two sensors	Within the NG range of **judgment value detail**

Details of Judgment Value

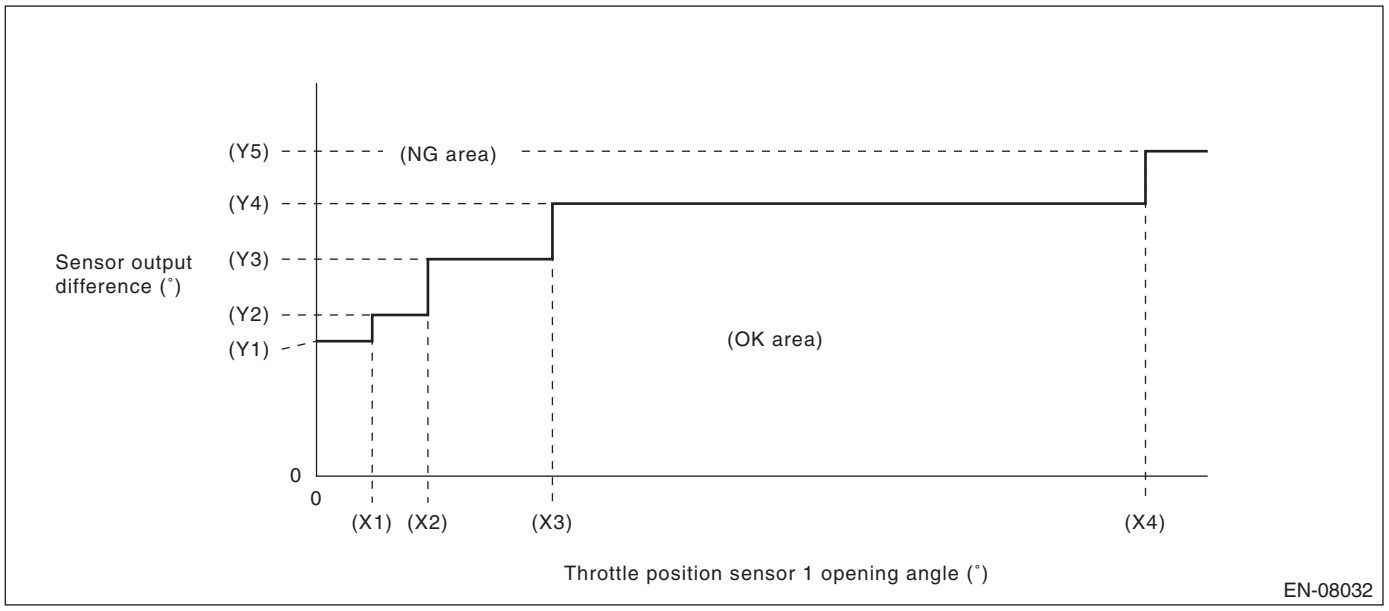

(X1) 2.125 °
(X2) 4.25 °
(X3) 9 °
(X4) 31.625 °

(Y1) 5.15 °
(Y2) 6.15 °
(Y3) 8.28 °
(Y4) 10.4 °
(Y5) 12.4 °

Time Needed for Diagnosis: 212 ms
Malfunction Indicator Light Illumination: Illuminates as soon as a malfunction occurs.

• Normality Judgment

Judge as OK and clear the NG if the continuous time while the following conditions are established is more than the predetermined time.

Judgment Value

Malfunction Criteria	Threshold Value
Signal difference between two sensors	Within the OK range of **judgment value detail**

Time Needed for Diagnosis: 24 ms

ES:DTC P2138 THROTTLE/PEDAL POSITION SENSOR/SWITCH “D”/“E” VOLTAGE CORRELATION

1. OUTLINE OF DIAGNOSIS

Judge as NG when the signal level of throttle position sensor 1 is different from the throttle position sensor 2.

2. COMPONENT DESCRIPTION

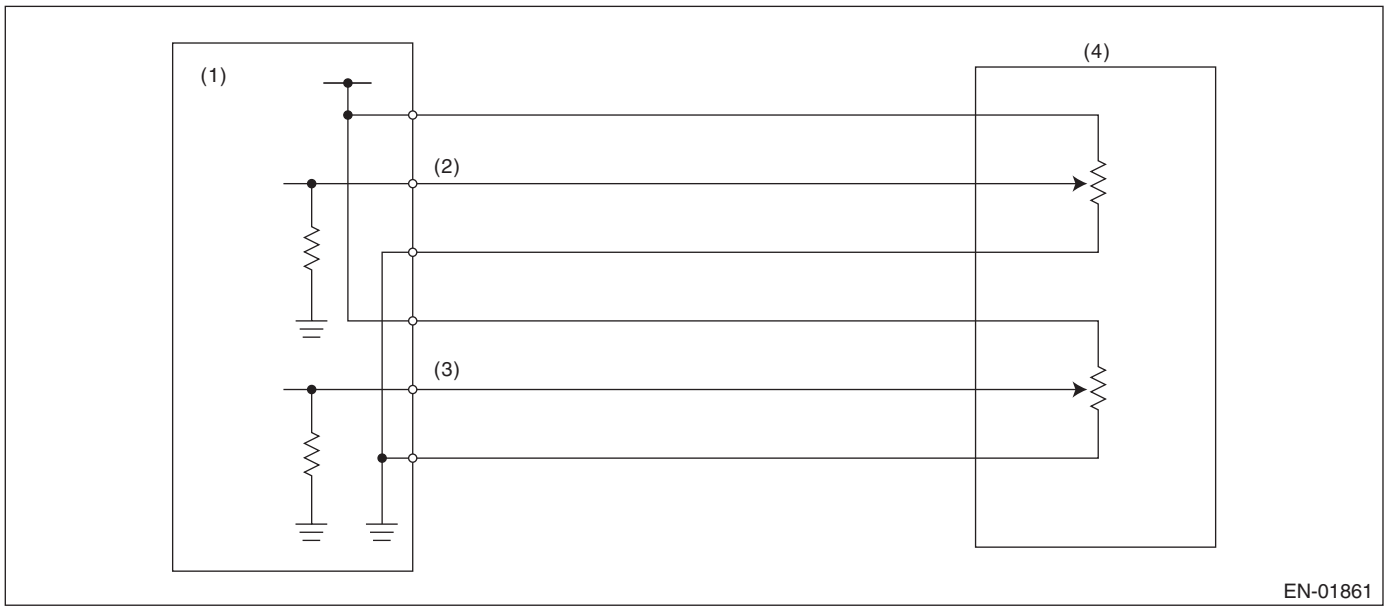

(1) Engine control module (ECM)
(2) Accelerator pedal position sensor 1 signal
(3) Accelerator pedal position sensor 2 signal
(4) Accelerator pedal position sensor

3. ENABLE CONDITION

Secondary Parameters	Enable Conditions
Ignition switch	ON
Battery voltage	≥ 6 V

4. GENERAL DRIVING CYCLE

Always perform the diagnosis continuously.

5. DIAGNOSTIC METHOD

• Abnormality Judgment

If the duration of time while the following conditions are met is longer than the time indicated, judge as NG.

Judgment Value

Malfunction Criteria	Threshold Value
Signal difference between two sensors	Within the NG range of **judgment value detail**

Details of Judgment Value

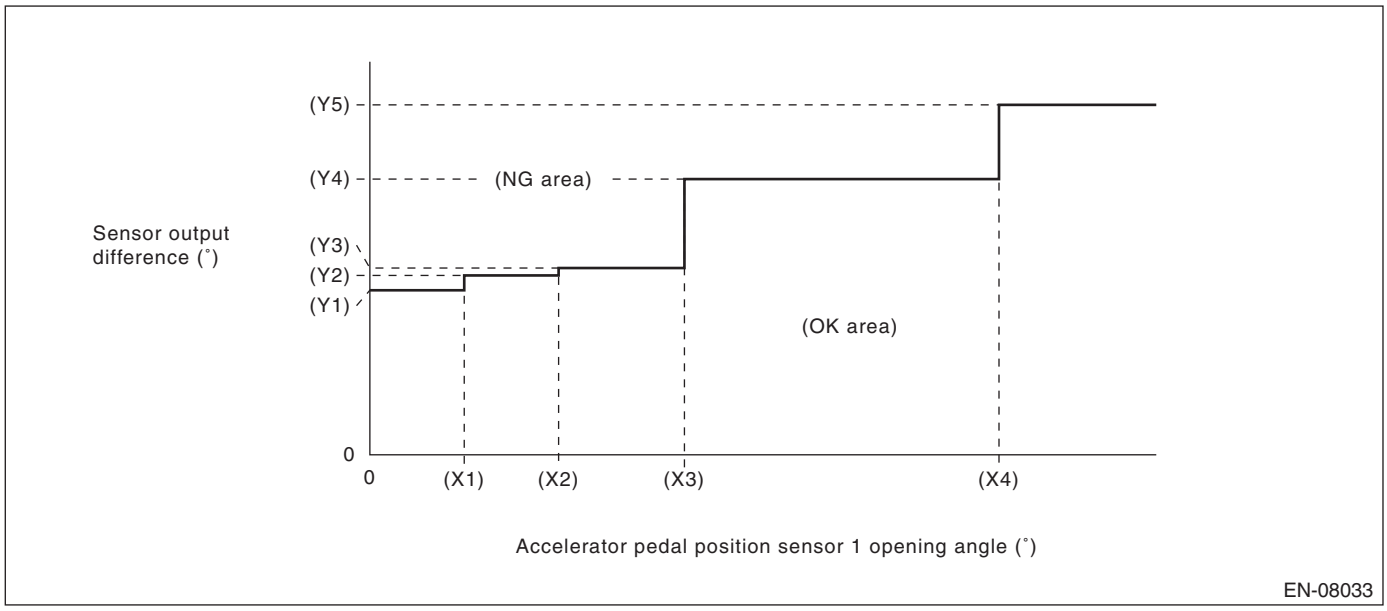

(X1) 0.6 °
(X2) 1.2 °
(X3) 2 °
(X4) 4 °

(Y1) 1.465 °
(Y2) 1.597 °
(Y3) 1.663 °
(Y4) 2.455 °
(Y5) 3.116 °

Time Needed for Diagnosis: 116 ms
Malfunction Indicator Light Illumination: Illuminates as soon as a malfunction occurs.

• Normality Judgment

Judge as OK and clear the NG if the continuous time while the following conditions are established is more than the predetermined time.

Judgment Value

Malfunction Criteria	Threshold Value
Signal difference between two sensors	Within the OK range of **judgment value detail**

Time Needed for Diagnosis: 116 ms

ET:DTC P219A BANK 1 AIR-FUEL RATIO IMBALANCE

1. OUTLINE OF DIAGNOSIS

Detect malfunction of air fuel ratio deviation between cylinders from main feedback learning value, sub feedback learning value and engine speed variation.

2. ENABLE CONDITIONS

Secondary Parameters	Enable Conditions
Battery voltage	> 10.9 V
Atmospheric pressure	> 75 kPa (563 mmHg, 22.2 inHg)
A/F main learning system	In operation
Engine speed	> 550 rpm
Engine coolant temperature	> 72 °C (161.6 °F)
Intake air temperature	< 70 °C (158 °F)
Engine load	> Value of Map 1
Engine load change	< 0.02 g/rev (0 oz/rev)
Evaporative system leak check	Not in operation
Cumulative time of canister purge after engine start	≥ 20 s
Learning value of EVAP conc.	< 0.2
Vehicle dynamic control or AT torque control	Not in operation
Intake manifold pressure change at 180°CA	< Value of Map 2
Throttle position change during 16 milliseconds	< 14 °
Fuel shut-off function	Not in operation

Map 1

Engine speed (rpm)	Idling	700	1200	1600	2000	2400	2800	3200	3600	4000
Measured value (g (oz)/rev)	na	0.230 (0.01)	0.217 (0.01)	0.213 (0.01)	0.210 (0.01)	0.210 (0.01)	0.220 (0.01)	0.223 (0.01)	0.240 (0.01)	0.252 (0.01)

Map 2

rpm	700	6700
kPa (mmHg, inHg)	13.3 (100, 3.9)	13.3 (100, 3.9)

3. GENERAL DRIVING CYCLE

Always perform the diagnosis continuously.

4. DIAGNOSTIC METHOD

• Abnormality Judgment

Judge as NG when the following conditions are established.

Judgment Value

Malfunction Criteria	Threshold Value
Rich	
Main feedback learning value	< –0.125
Sub feedback learning value	< –0.0327
When any one of the followings is established.	
• any one of the rich side misfire counters for each cylinder when in idling	> 13 time(s)
• total of the rich side misfire counters for each cylinder when in idling	> 13 time(s)
• any one of the rich side misfire counters for each cylinder when not in idling	> 30 time(s)
• total of the rich side misfire counters for each cylinder when not in idling	> 30 time(s)
Lean	
Main feedback learning value	> –0.035
Sub feedback learning value	< –0.0143
When any one of the followings is established.	
• any one of the lean side misfire counters for each cylinder when in idling	> 25 time(s)
• total of the lean side misfire counters for each cylinder when in idling	> 65535 time(s)
• any one of the lean side misfire counters for each cylinder when not in idling	> 30 time(s)
• total of the lean side misfire counters for each cylinder when not in idling	> 65535 time(s)

Time Needed for Diagnosis: 1000 engine revs.
Malfunction Indicator Light Illumination: Illuminates when malfunction occurs in 2 continuous driving cycles.

- **Normality Judgment**

Judge as OK and clear the NG if the following conditions are established.

Judgment Value

Malfunction Criteria	Threshold Value
Rich	
Main feedback learning value	≥ –0.125
or	
Sub feedback learning value	≥ –0.0327
or	
All of the following conditions are established.	
• any one of the rich side misfire counters for each cylinder when in idling	≤ 13 time(s)
• total of the rich side misfire counters for each cylinder when in idling	≤ 13 time(s)
• any one of the rich side misfire counters for each cylinder when not in idling	≤ 30 time(s)
• total of the rich side misfire counters for each cylinder when not in idling	≤ 30 time(s)
Lean	
Main feedback learning value	≤ –0.035
or	
Sub feedback learning value	≥ –0.0143
or	
All of the following conditions are established.	
• any one of the lean side misfire counters for each cylinder when in idling	≤ 25 time(s)
• total of the lean side misfire counters for each cylinder when in idling	≤ 65535 time(s)
• any one of the lean side misfire counters for each cylinder when not in idling	≤ 30 time(s)
• total of the lean side misfire counters for each cylinder when not in idling	≤ 65535 time(s)

Time Needed for Diagnosis: 1000 engine revs.

EU:DTC P2227 BAROMETRIC PRESSURE CIRCUIT RANGE/PERFORMANCE

1. OUTLINE OF DIAGNOSIS

Detect the malfunction of barometric pressure sensor output property.
Judge as NG when the barometric pressure sensor output is largely different from the intake manifold pressure at engine start.

2. COMPONENT DESCRIPTION

The barometric pressure sensor is built into the ECM.

3. ENABLE CONDITIONS

Secondary Parameters	Enable Conditions
Engine speed	< 300 rpm
Vehicle speed	< 1 km/h (0.6 MPH)

4. GENERAL DRIVING CYCLE

Perform the diagnosis once at ignition switch ON.

5. DIAGNOSTIC METHOD

- **Abnormality Judgment**

If the duration of time while the following conditions are met is longer than the time indicated, judge as NG.

Judgment Value

Malfunction Criteria	Threshold Value
|Barometric pressure – Intake manifold pressure|	≥ 26.7 kPa (200 mmHg, 7.9 inHg)
|Intake manifold pressure at engine start – Intake manifold pressure|	< 1.3 kPa (9.99 mmHg, 0.4 inHg)

Time Needed for Diagnosis: 328 ms
Malfunction Indicator Light Illumination: Illuminates when malfunction occurs in 2 continuous driving cycles.

- **Normality Judgment**

Judge as OK and clear the NG if the continuous time while the following conditions are established is more than the predetermined time.

Judgment Value

Malfunction Criteria	Threshold Value
|Barometric pressure – Intake manifold pressure|	< 26.7 kPa (200 mmHg, 7.9 inHg)

Time Needed for Diagnosis: 262 ms

EV:DTC P2228 BAROMETRIC PRESSURE CIRCUIT LOW

1. OUTLINE OF DIAGNOSIS

Detect the open/short circuit of the barometric pressure sensor.
Judge as NG if out of specification.

2. COMPONENT DESCRIPTION

The barometric pressure sensor is built into the ECM.

3. ENABLE CONDITIONS

Secondary Parameters	Enable Conditions
None	

4. GENERAL DRIVING CYCLE

Always perform the diagnosis continuously.

5. DIAGNOSTIC METHOD

- **Abnormality Judgment**

If the duration of time while the following conditions are met is longer than the time indicated, judge as NG.

Judgment Value

Malfunction Criteria	Threshold Value
Output voltage	< 2.146 V

Time Needed for Diagnosis: 500 ms
Malfunction Indicator Light Illumination: Illuminates as soon as a malfunction occurs.

- **Normality Judgment**

Judge as OK and clear the NG if the continuous time while the following conditions are established is more than the predetermined time.

Judgment Value

Malfunction Criteria	Threshold Value
Output voltage	≥ 2.146 V

Time Needed for Diagnosis: Less than 1 second

EW:DTC P2229 BAROMETRIC PRESSURE CIRCUIT HIGH

1. OUTLINE OF DIAGNOSIS

Detect the open/short circuit of the barometric pressure sensor.
Judge as NG if out of specification.

2. COMPONENT DESCRIPTION

The barometric pressure sensor is built into the ECM.

3. ENABLE CONDITIONS

Secondary Parameters	Enable Conditions
None	

4. GENERAL DRIVING CYCLE

Always perform the diagnosis continuously.

5. DIAGNOSTIC METHOD

- **Abnormality Judgment**

If the duration of time while the following conditions are met is longer than the time indicated, judge as NG.

Judgment Value

Malfunction Criteria	Threshold Value
Output voltage	≥ 3.875 V

Time Needed for Diagnosis: 500 ms
Malfunction Indicator Light Illumination: Illuminates as soon as a malfunction occurs.

- **Normality Judgment**

Judge as OK and clear the NG if the continuous time while the following conditions are established is more than the predetermined time.

Judgment Value

Malfunction Criteria	Threshold Value
Output voltage	< 3.875 V

Time Needed for Diagnosis: Less than 1 second

EX:DTC P2610 ECM/PCM INTERNAL ENGINE OFF TIMER PERFORMANCE

1. OUTLINE OF DIAGNOSIS

Detect malfunction of soaking timer IC by the five diagnoses below.

Monitor Number	Explanation	Time required for diagnosis
Monitor #1 <Timer diagnosis>	Perform diagnosis of the soaking timer IC accuracy	196 ms
Monitor #2 <Full count diagnosis>	Perform diagnosis of the soaking timer IC counter function	4000 ms
Monitor #3 <Soaking timer IC setting diagnosis>	Perform diagnosis of communication between ECM and soaking timer IC	196 ms
Monitor #4 <Timer diagnosis (during soaking)>	Perform diagnosis of the soaking timer IC accuracy during soaking	3000 ms
Monitor #5 <Wake-up diagnosis>	Perform diagnosis of wake-up function	64 ms

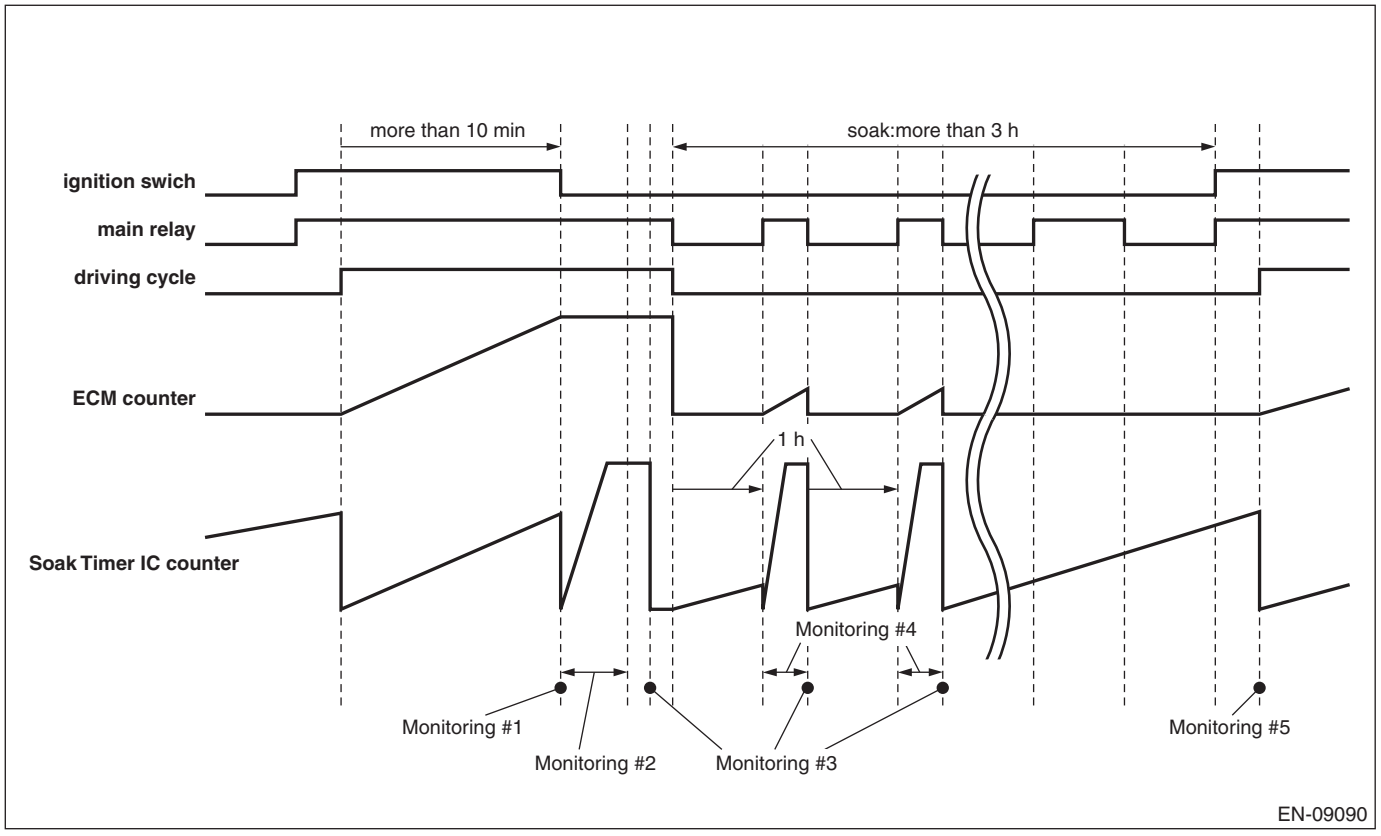

2. COMPONENT DESCRIPTION

The soaking timer IC is built into the ECM.

3. ENABLE CONDITIONS

Secondary Parameters	Enable Conditions
<Timer diagnosis>	
Battery voltage	≥ 10.9 V
Ignition switch	OFF
Elapsed time after starting the engine	> 600 s
< Full count diagnosis & soaking timer IC setting diagnosis>	
Battery voltage	≥ 10.9 V
Ignition switch	OFF
<Timer diagnosis (during soaking)>	
Battery voltage	≥ 10.9 V
Ignition switch	OFF
Number of wake-up	< 3 time(s)
<Wake-up diagnosis>	
Ignition switch	ON
Wake-up activation time setting	Completed
Time in the soaking timer IC	> 3600 s × 3 time(s)

4. GENERAL DRIVING CYCLE

Perform the diagnosis only once when 10 minutes have passed after the engine start and the ignition switch is OFF, and also when the ignition switch is ON after the soaking of five hours or more.

5. DIAGNOSTIC METHOD

<Timer diagnosis>

Start the count up operation of counters in ECM and in soaking timer IC when the engine is started.
Judge as timer malfunction if the difference between the counter in ECM and counter in soaking timer IC exceeds the allowable limit when the ignition switch is OFF.

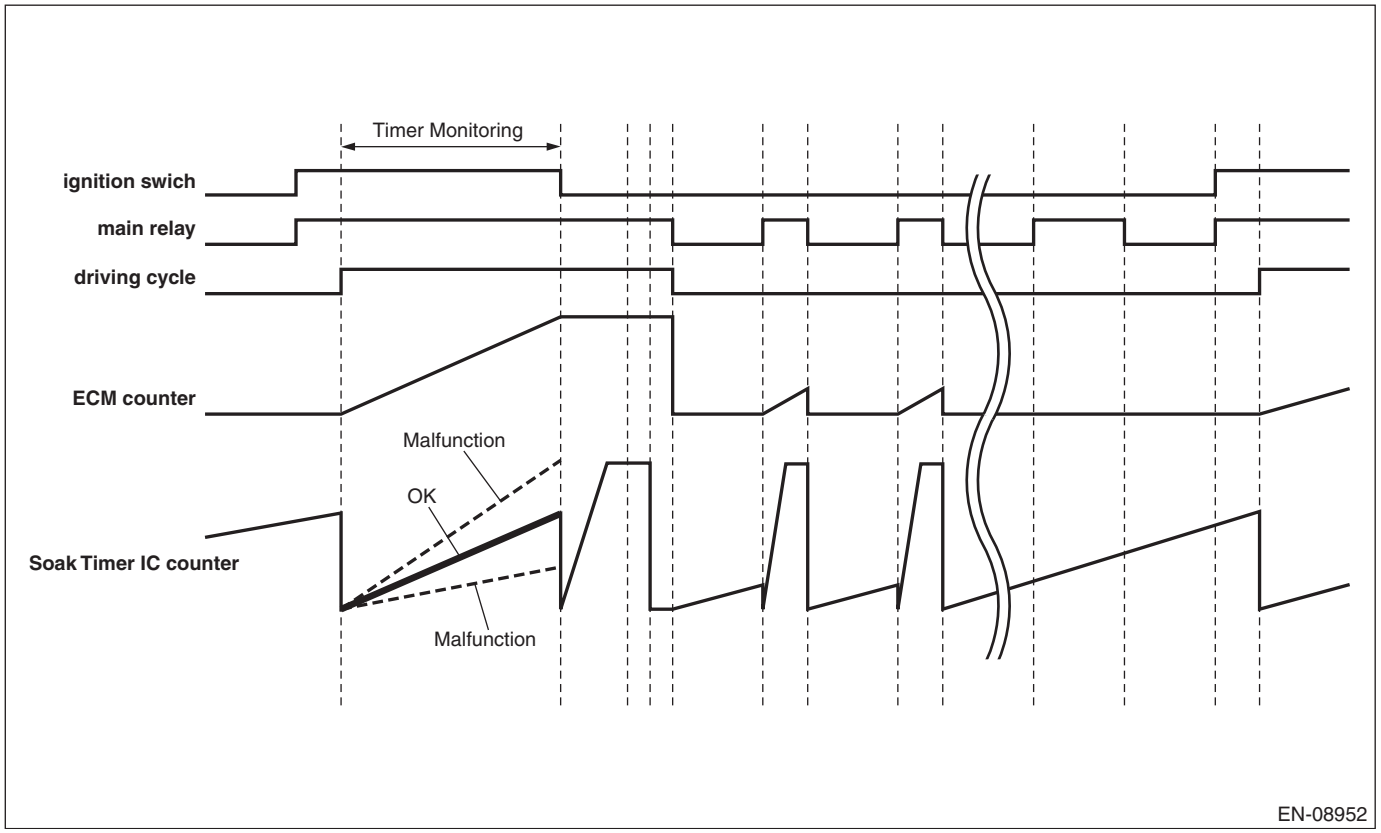

- **Abnormality Judgment**

Judge as NG when the following conditions are established.

Judgment Value

Malfunction Criteria	Threshold Value
|osoaktimcpu – osoaktimic| / osoaktimcpu osoaktimcpu = Counter in ECM osoaktimic = Counter in soaking timer IC	> 0.24

- **Normality Judgment**

Judge as OK when the following conditions are established.

Judgment Value

Malfunction Criteria	Threshold Value
|osoaktimcpu – osoaktimic| / osoaktimcpu	≤ 0.24

<Full count diagnosis>

After the timer diagnosis is completed, reset the counter in soaking timer IC and start the count up operation. Judge as full count diagnosis malfunction if counter in soaking timer IC is not $3FF (1023 count) after 4 seconds.

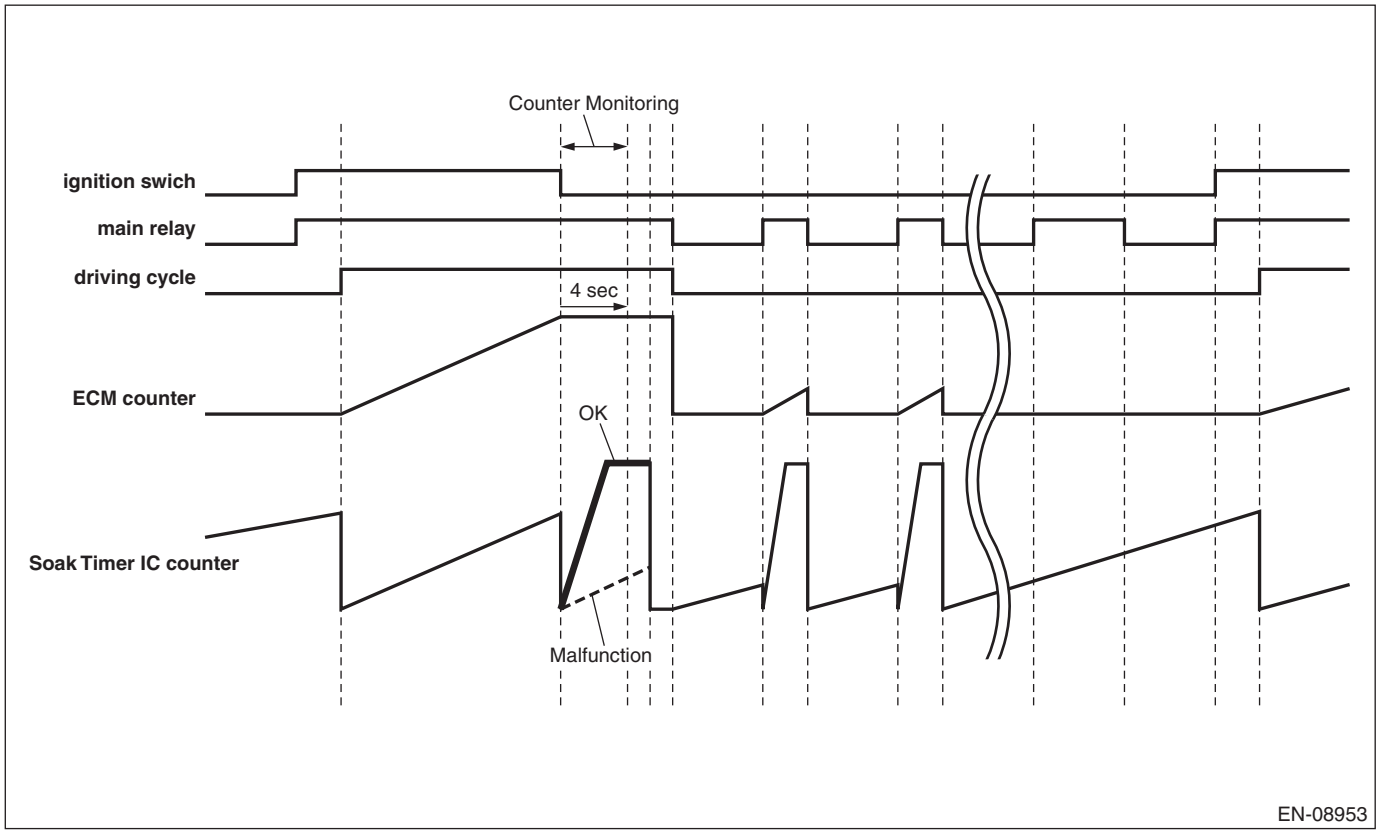

- **Abnormality Judgment**

Judge as NG when the following conditions are established.

Judgment Value

Malfunction Criteria	Threshold Value
osoakfcntic osoakfcntic = Counter in soaking timer IC	≠ $3FF (1023 count)

- **Normality Judgment**

Judge as OK when the following conditions are established.

Judgment Value

Malfunction Criteria	Threshold Value
osoakfcntic	= $3FF (1023 count)

<Soaking timer IC setting diagnosis>

When setting the activation setting time to soaking timer IC, compare the writing value to soaking timer IC with read out value. Judge as malfunction if the values do not match 3 times in a row.

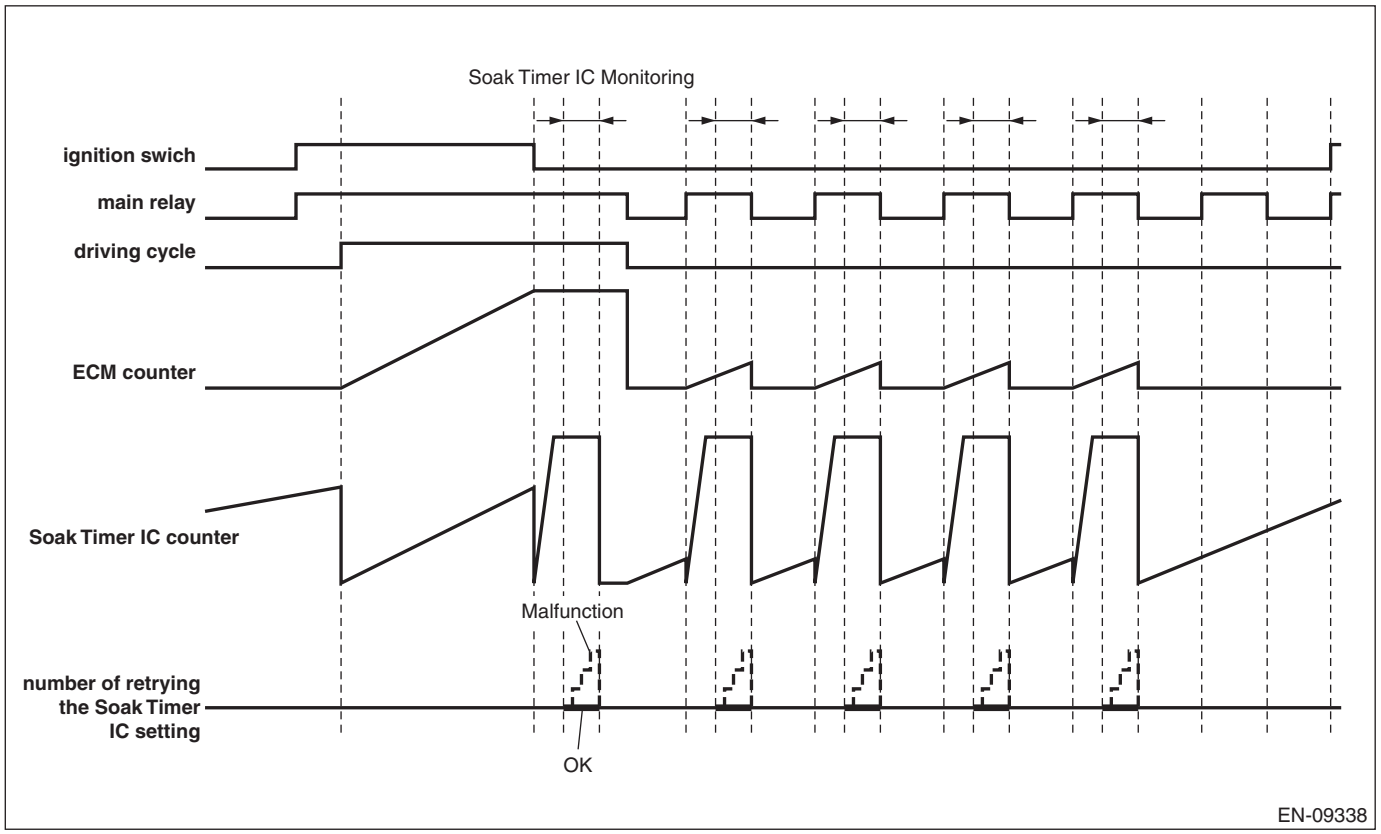

- **Abnormality Judgment**

Judge as NG when the following conditions are established.

Judgment Value

Malfunction Criteria	Threshold Value
Writing value and read out value when setting the soaking timer	Unmatch
Number of retrying the soaking timer setting	≥ 3 times

- **Normality Judgment**

Judge as OK when the following conditions are established.

Judgment Value

Malfunction Criteria	Threshold Value
Writing value and read out value when setting the soaking timer	Match

<Timer diagnosis (during soaking)>

Wake-up at the predetermined interval until five hours have passed after the ignition switch is OFF, and compare the counter in soaking timer IC with the counter in ECM.
Judge as malfunction if the counter in soaking timer IC is counted up to maximum value (1023 count) when the counter in ECM is 1637 ms, or if the counter in soaking timer IC is not counted up to maximum value (1023 count) when the counter in ECM is 2455 ms.

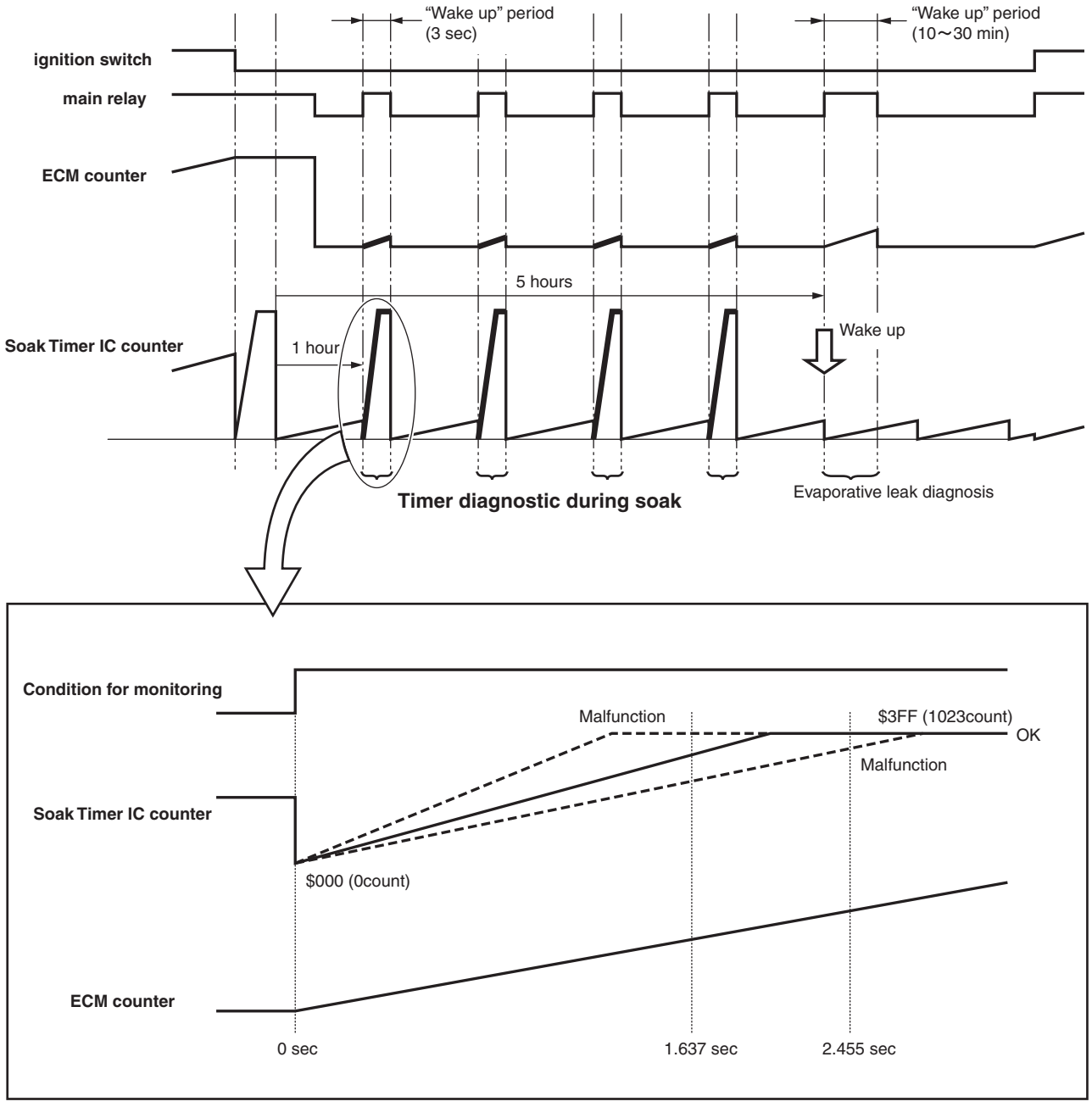

EN-08981

- **Abnormality Judgment**

Judge as NG when the following conditions are established.

Judgment Value

Malfunction Criteria	Threshold Value
When any one of the followings is established.	
• All of the following conditions are established.	
Counter in ECM	≤ 1637 ms
Counter in soaking timer IC	= $3FF (1023 count)
• All of the following conditions are established.	
Counter in ECM	≥ 2455 ms
Counter in soaking timer IC	≠ $3FF (1023 count)

- **Normality Judgment**

Judge as OK when the following conditions are established.

Judgment Value

Malfunction Criteria	Threshold Value
Following conditions are established.	
• All of the following conditions are established.	
Counter in ECM	≤ 1637 ms
Counter in soaking timer IC	≠ $3FF (1023 count)
• All of the following conditions are established.	
Counter in ECM	≥ 2455 ms
Counter in soaking timer IC	= $3FF (1023 count)

<Wake-up diagnosis>

Store the number of wake-up activation when the ECM wakes up by the soaking timer IC.
Next time when the ignition switch is ON, if the number of wake-up activation does not reach the predetermined value even though the counter in soaking timer IC exceeds the activation setting time, judge as wake-up malfunction.

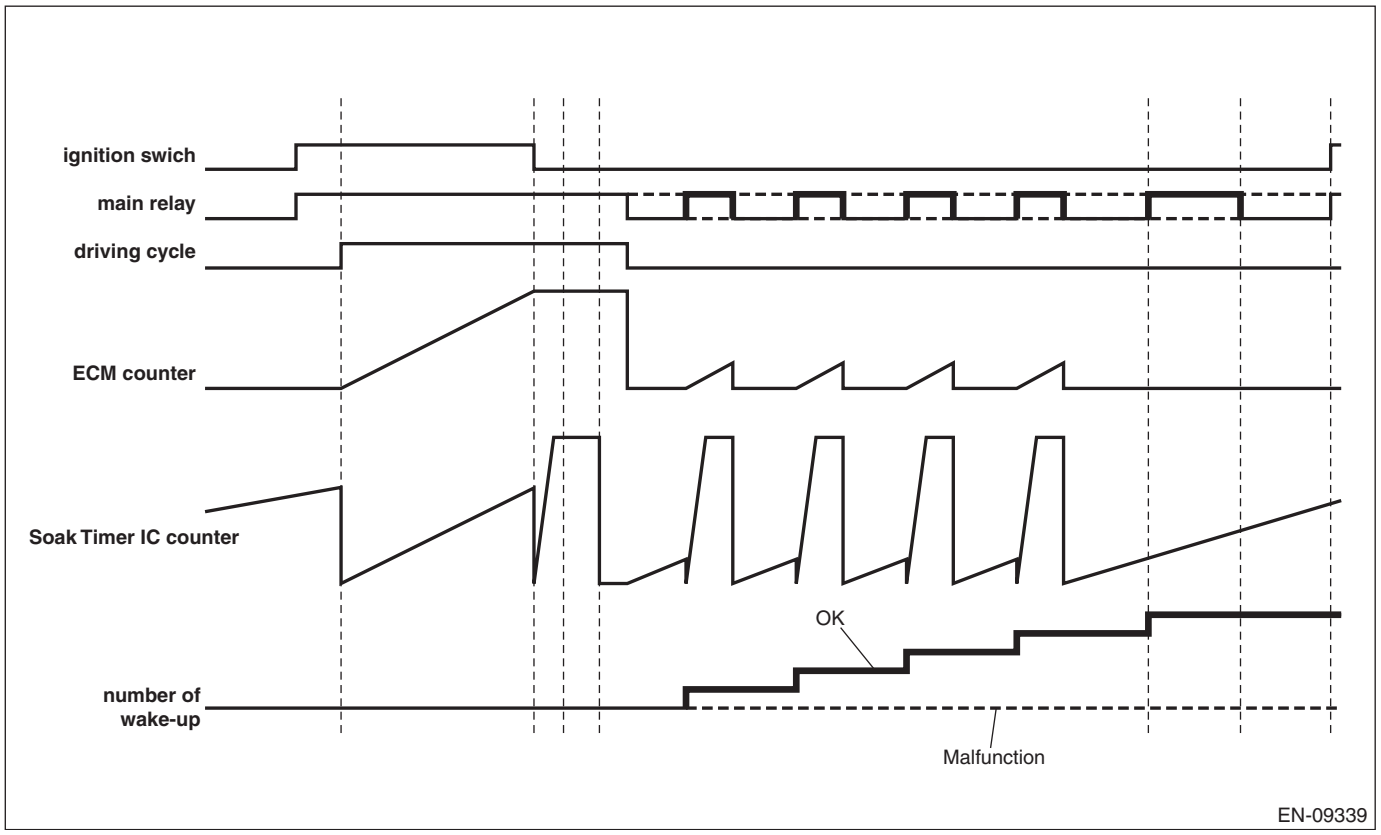

- **Abnormality Judgment**

Judge as NG when the following conditions are established.

Judgment Value

Malfunction Criteria	Threshold Value
Number of wake-up	< 3 time(s)

- **Normality Judgment**

Judge as OK when the following conditions are established.

Judgment Value

Malfunction Criteria	Threshold Value
Number of wake-up	≥ 3 time(s)

- **Abnormality Judgment**

Judge as NG when the following conditions are established.

Judgment Value

Malfunction Criteria	Threshold Value
Ignition switch	ON
Driving cycle	Completed
When any one of the followings is established.	
• Timer diagnosis	NG
• Full count diagnosis	NG
• Soaking timer IC setting diagnosis	NG
• Timer diagnosis (during soaking)	NG
• Wake-up diagnosis	NG

Time Needed for Diagnosis: 18620 s (Approx. 5 hours)
Malfunction Indicator Light Illumination: Illuminates when malfunction occurs in 2 continuous driving cycles.

- **Normality Judgment**

Judge as OK and clear the NG if the following conditions are established.

Judgment Value

Malfunction Criteria	Threshold Value
Ignition switch	ON
Driving cycle	Completed
All of the following conditions are established.	
• Timer diagnosis	OK
• Full count diagnosis	OK
• Soaking timer IC setting diagnosis	OK
• Timer diagnosis (during soaking)	OK
• Wake-up diagnosis	OK

Time Needed for Diagnosis: 18620 s (Approx. 5 hours)

EY:DTC U0073 CAN FAILURE, BUS 'OFF' DETECTION

1. OUTLINE OF DIAGNOSIS

Detect malfunction of CAN communication.
Judge as NG when CAN communication failure has occurred.

2. COMPONENT DESCRIPTION

(Common Specifications)
CAN Protocol 2.0 B (Active)
Frame Format: 11 Bit ID Frame (Standard Frame)
Conforms to ISO11898
Communication Speed: 500 kbps

3. ENABLE CONDITIONS

Secondary Parameters	Enable Conditions
None	

4. GENERAL DRIVING CYCLE

Perform the diagnosis continuously after starting the engine.

5. DIAGNOSTIC METHOD

• Abnormality Judgment

Judge as NG when the following conditions are established.

Judgment Value

Malfunction Criteria	Threshold Value
Battery voltage	> 10.9 V
Starter switch	OFF
Engine	run
bus off flag or error warning flag	set (error)

Time Needed for Diagnosis: 436 ms
Malfunction Indicator Light Illumination: Illuminates as soon as a malfunction occurs.

• Normality Judgment

Judge as OK and clear the NG if the continuous time while the following conditions are established is more than the predetermined time.

Judgment Value

Malfunction Criteria	Threshold Value
Engine	run
bus off flag or error warning flag	clear (No error)

Time Needed for Diagnosis: 1000 ms

EZ:DTC U0101 CAN (TCU) DATA NOT LOADED

1. OUTLINE OF DIAGNOSIS

Detect malfunction of CAN communication.
Judge as NG when CAN communication failure has occurred between TCM, VDC CM and body integrated unit.

2. COMPONENT DESCRIPTION

(Common Specifications)
CAN Protocol 2.0 B (Active)
Frame Format: 11 Bit ID Frame (Standard Frame)
Conforms to ISO11898
Communication Speed: 500 kbps

3. ENABLE CONDITIONS

Secondary Parameters	Enable Conditions
None	

4. GENERAL DRIVING CYCLE

Perform the diagnosis continuously after starting the engine.

5. DIAGNOSTIC METHOD

• Abnormality Judgment

Judge as NG when the following conditions are established.

Judgment Value

Malfunction Criteria	Threshold Value
Battery voltage	> 10.9 V
Starter switch	OFF
Engine	run
ID received from control module connected to CAN	None during 500 milliseconds

Time Needed for Diagnosis: 500 ms
Malfunction Indicator Light Illumination: Illuminates as soon as a malfunction occurs.

• Normality Judgment

Judge as OK and clear the NG if the continuous time while the following conditions are established is more than the predetermined time.

Judgment Value

Malfunction Criteria	Threshold Value
Engine	run
ID received from control module connected to CAN	Yes

Time Needed for Diagnosis: 1000 ms

FA:DTC U0122 CAN (VDC) DATA NOT LOADED

1. OUTLINE OF DIAGNOSIS

NOTE:
For the detection standard, refer to DTC U0101. <Ref. to GD(H4DOTC)-266, DTC U0101 CAN (TCU) DATA NOT LOADED, Diagnostic Trouble Code (DTC) Detecting Criteria.>

FB:DTC U0140 CAN (BCU) DATA NOT LOADED

1. OUTLINE OF DIAGNOSIS

NOTE:
For the detection standard, refer to DTC U0101. <Ref. to GD(H4DOTC)-266, DTC U0101 CAN (TCU) DATA NOT LOADED, Diagnostic Trouble Code (DTC) Detecting Criteria.>

FC:DTC U0402 CAN (TCU) DATA ABNORMAL

1. OUTLINE OF DIAGNOSIS

Detect malfunction of CAN communication.
Judge as NG when data received from TCM, VDC CM and body integrated unit is not normal.

2. COMPONENT DESCRIPTION

(Common Specifications)
CAN Protocol 2.0 B (Active)
Frame Format: 11 Bit ID Frame (Standard Frame)
Conforms to ISO11898
Communication Speed: 500 kbps

3. ENABLE CONDITIONS

Secondary Parameters	Enable Conditions
None	

4. GENERAL DRIVING CYCLE

Perform the diagnosis continuously after starting the engine.

5. DIAGNOSTIC METHOD

• Abnormality Judgment

Judge as NG when the following conditions are established.

Judgment Value

Malfunction Criteria	Threshold Value
Battery voltage	> 10.9 V
Starter switch	OFF
Engine	run
Data updated from control module connected to CAN	None during 2000 milliseconds

Time Needed for Diagnosis: 2 seconds
Malfunction Indicator Light Illumination: Illuminates as soon as a malfunction occurs.

• Normality Judgment

Judge as OK and clear the NG if the continuous time while the following conditions are established is more than the predetermined time.

Judgment Value

Malfunction Criteria	Threshold Value
Engine	run
Data updated from control module connected to CAN	Yes

Time Needed for Diagnosis: 1000 ms

FD:DTC U0416 CAN (VDC) DATA ABNORMAL

1. OUTLINE OF DIAGNOSIS

NOTE:
For the detection standard, refer to DTC U0402. <Ref. to GD(H4DOTC)-268, DTC U0402 CAN (TCU) DATA ABNORMAL, Diagnostic Trouble Code (DTC) Detecting Criteria.>

FE:DTC U0422 CAN (BCU) DATA ABNORMAL

1. OUTLINE OF DIAGNOSIS

NOTE:
For the detection standard, refer to DTC U0402. <Ref. to GD(H4DOTC)-268, DTC U0402 CAN (TCU) DATA ABNORMAL, Diagnostic Trouble Code (DTC) Detecting Criteria.>

ENGINE 3 SECTION

This service manual has been prepared to provide SUBARU service personnel with the necessary information and data for the correct maintenance and repair of SUBARU vehicles.
This manual includes the procedures for maintenance, disassembling, reassembling, inspection and adjustment of components and diagnostics for guidance of experienced mechanics.
Please peruse and utilize this manual fully to ensure complete repair work for satisfying our customers by keeping their vehicle in optimum condition. When replacement of parts during repair work is needed, be sure to use SUBARU genuine parts.

All information, illustration and specifications contained in this manual are based on the latest product information available at the time of publication approval.

FUEL INJECTION (FUEL SYSTEMS)	FU(H6DO)
EMISSION CONTROL (AUX. EMISSION CONTROL DEVICES)	EC(H6DO)
INTAKE (INDUCTION)	IN(H6DO)
MECHANICAL	ME(H6DO)
EXHAUST	EX(H6DO)
COOLING	CO(H6DO)
LUBRICATION	LU(H6DO)
SPEED CONTROL SYSTEMS	SP(H6DO)
IGNITION	IG(H6DO)
STARTING/CHARGING SYSTEMS	SC(H6DO)
ENGINE (DIAGNOSTICS)	EN(H6DO) (diag)
GENERAL DESCRIPTION	GD(H6DO)

FUEL INJECTION (FUEL SYSTEMS)

FU(H6DO)

		Page
1.	General Description	2
2.	Throttle Body	19
3.	Intake Manifold	21
4.	Engine Coolant Temperature Sensor	29
5.	Crankshaft Position Sensor	31
6.	Camshaft Position Sensor	34
7.	Knock Sensor	37
8.	Throttle Position Sensor	38
9.	Manifold Absolute Pressure Sensor	39
10.	Mass Air Flow and Intake Air Temperature Sensor	41
11.	EGR Valve	42
12.	Fuel Injector	44
13.	Oil Flow Control Solenoid Valve	47
14.	Oil Temperature Sensor	49
15.	Front Oxygen (A/F) Sensor	50
16.	Rear Oxygen Sensor	52
17.	Engine Control Module (ECM)	54
18.	Main Relay	55
19.	Fuel Pump Relay	56
20.	Electronic Throttle Control Relay	57
21.	Fuel Pump Control Unit	58
22.	Fuel	59
23.	Fuel Tank	61
24.	Fuel Filler Pipe	68
25.	Fuel Pump	71
26.	Fuel Level Sensor	73
27.	Fuel Sub Level Sensor	75
28.	Fuel Filter	77
29.	Fuel Damper	79
30.	Fuel Delivery and Evaporation Lines	80
31.	Fuel System Trouble in General	86

1. General Description

A: SPECIFICATION

Fuel tank	Capacity	70 ℓ (18.5 US gal, 15.4 Imp gal)
	Location	Rear floor under
Fuel pump	Type	Impeller
	Shutoff discharge pressure	850 kPa (8.67 kg/cm^2, 123.3 psi), or less
	Discharge rate	155 ℓ (41 US gal, 34.1 Imp gal)/h or more [12 V at 300 kPa (3.06 kg/cm^2, 43.5 psi)]
Fuel filter		In-tank type

B: COMPONENT

1. INTAKE MANIFOLD

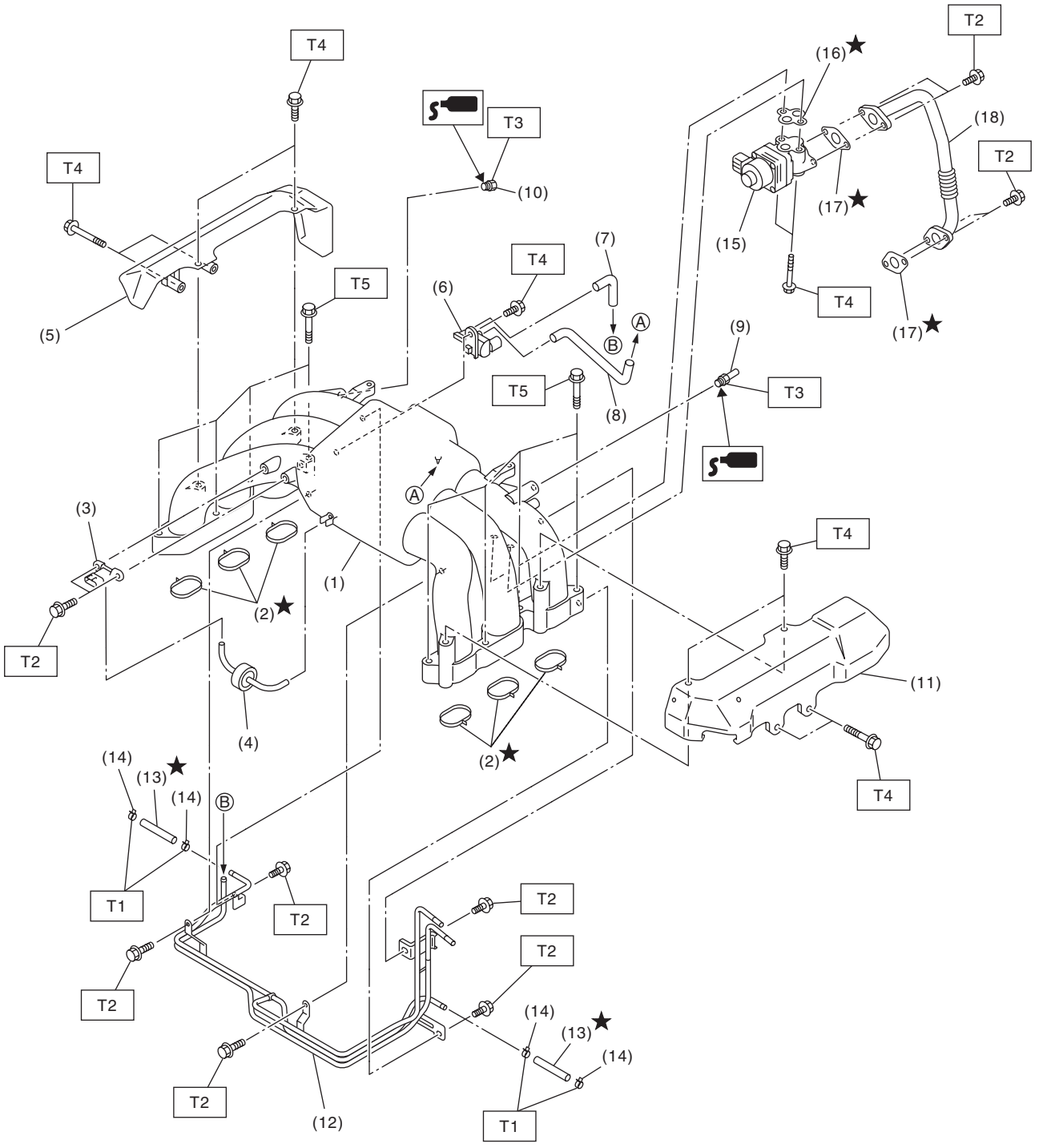

FU-06469

(1)	Intake manifold	(10)	Plug
(2)	O-ring	(11)	Fuel pipe protector LH
(3)	Manifold absolute pressure sensor	(12)	Fuel pipe ASSY
(4)	Filter	(13)	Fuel hose
(5)	Fuel pipe protector RH	(14)	Clamp
(6)	Purge control solenoid valve	(15)	EGR valve
(7)	Hose	(16)	Gasket
(8)	Hose	(17)	Gasket
(9)	Nipple	(18)	EGR pipe

Tightening torque:N·m (kgf-m, ft-lb)	
T1:	*1.25 (0.1, 0.9)*
T2:	*6.4 (0.7, 4.7)*
T3:	*17 (1.7, 12.5)*
T4:	*19 (1.9, 14.0)*
T5:	*25 (2.5, 18.4)*

2. FUEL INJECTOR

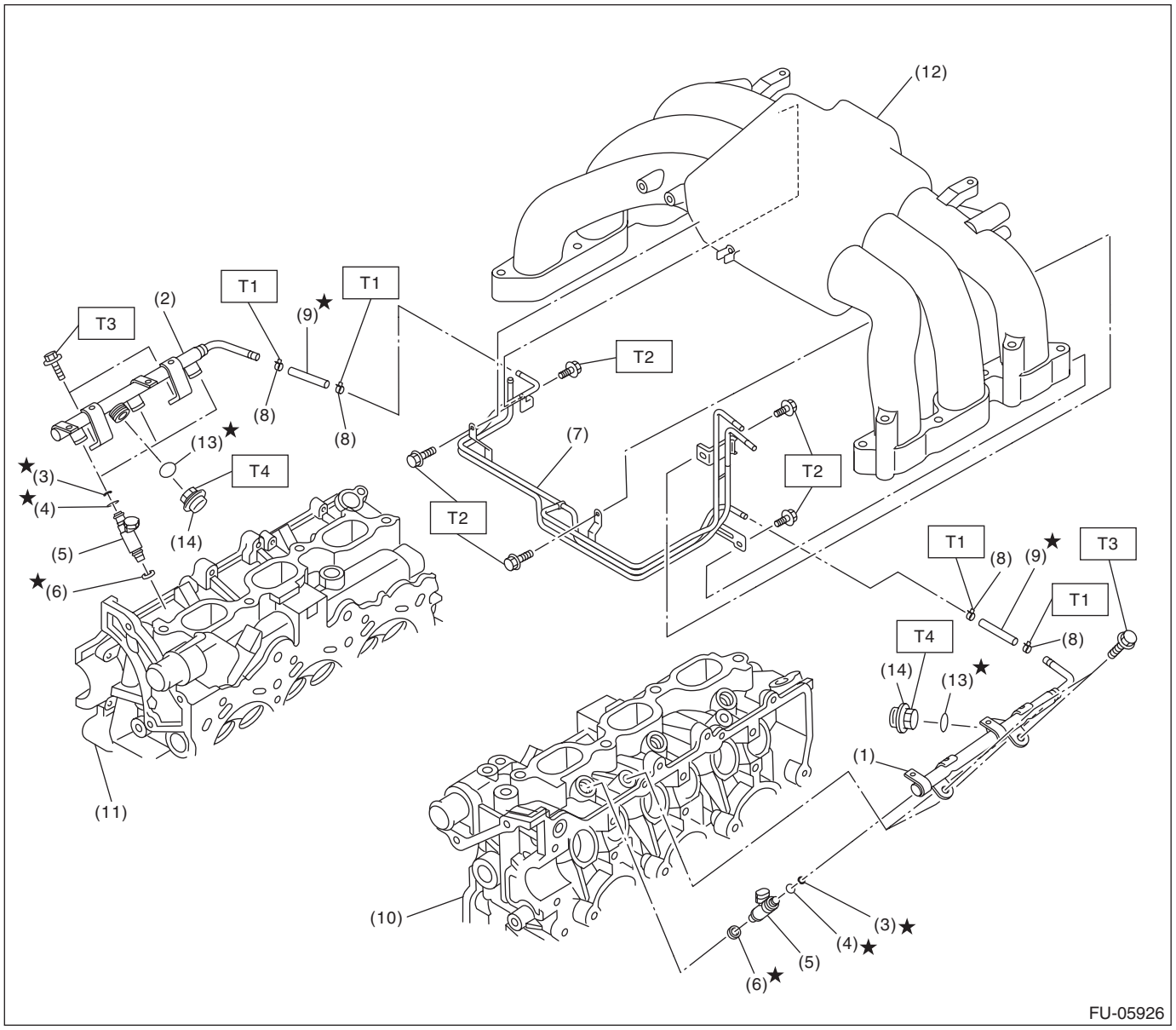

(1)	Fuel injector pipe LH	(8)	Clamp
(2)	Fuel injector pipe RH	(9)	Fuel hose
(3)	O-ring	(10)	Cylinder head LH
(4)	Injection rubber	(11)	Cylinder head RH
(5)	Fuel injector	(12)	Intake manifold
(6)	Seal ring	(13)	Gasket
(7)	Fuel pipe ASSY	(14)	Pulsation damper

Tightening torque:N·m (kgf-m, ft-lb)
T1: 1.25 (0.1, 0.9)
T2: 6.4 (0.7, 4.7)
T3: 19 (1.9, 14.0)
T4: 21.6 (2.2, 15.9)

3. AIR INTAKE SYSTEM

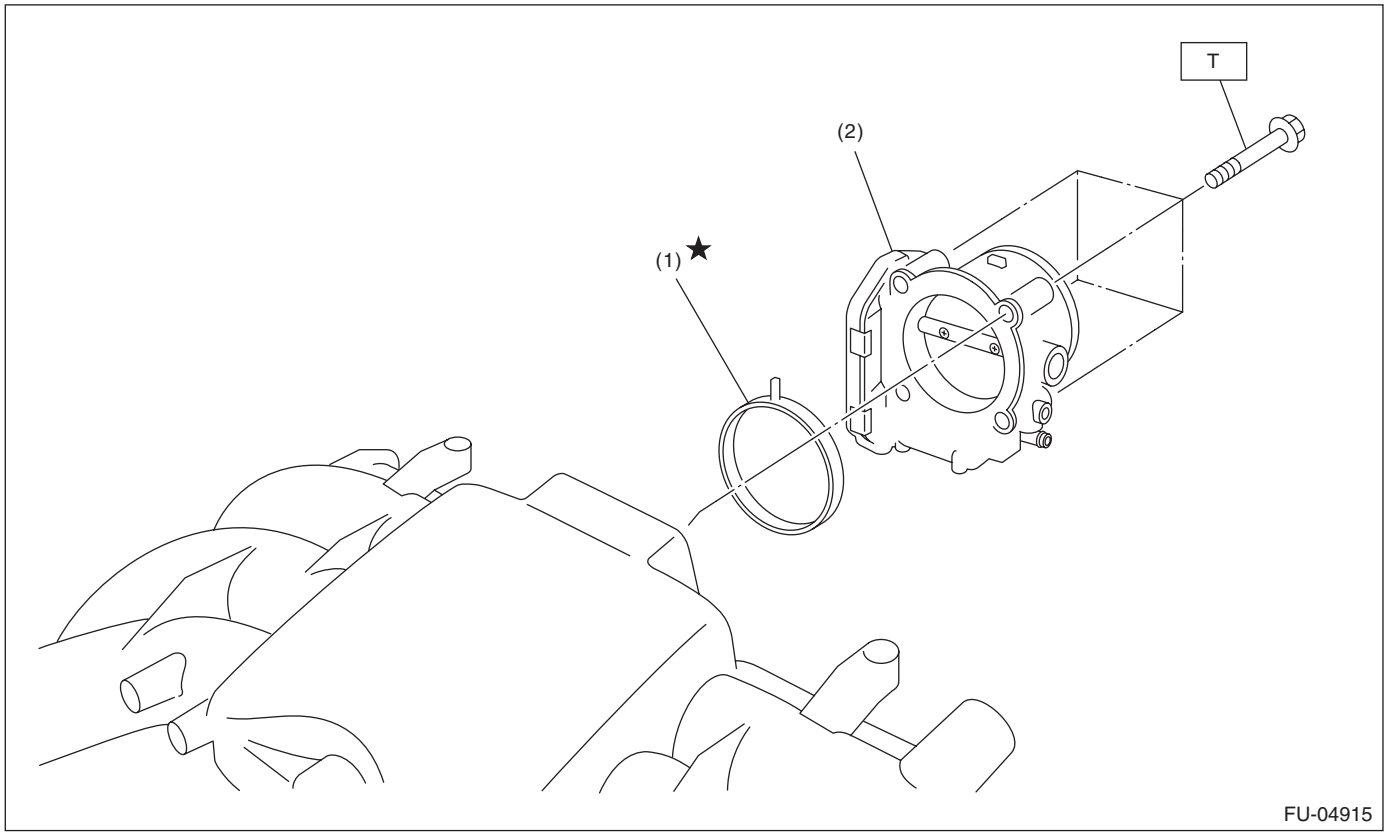

(1) O-ring
(2) Throttle body

Tightening torque:N·m (kgf-m, ft-lb)
T: 8 (0.8, 5.9)

4. SENSOR

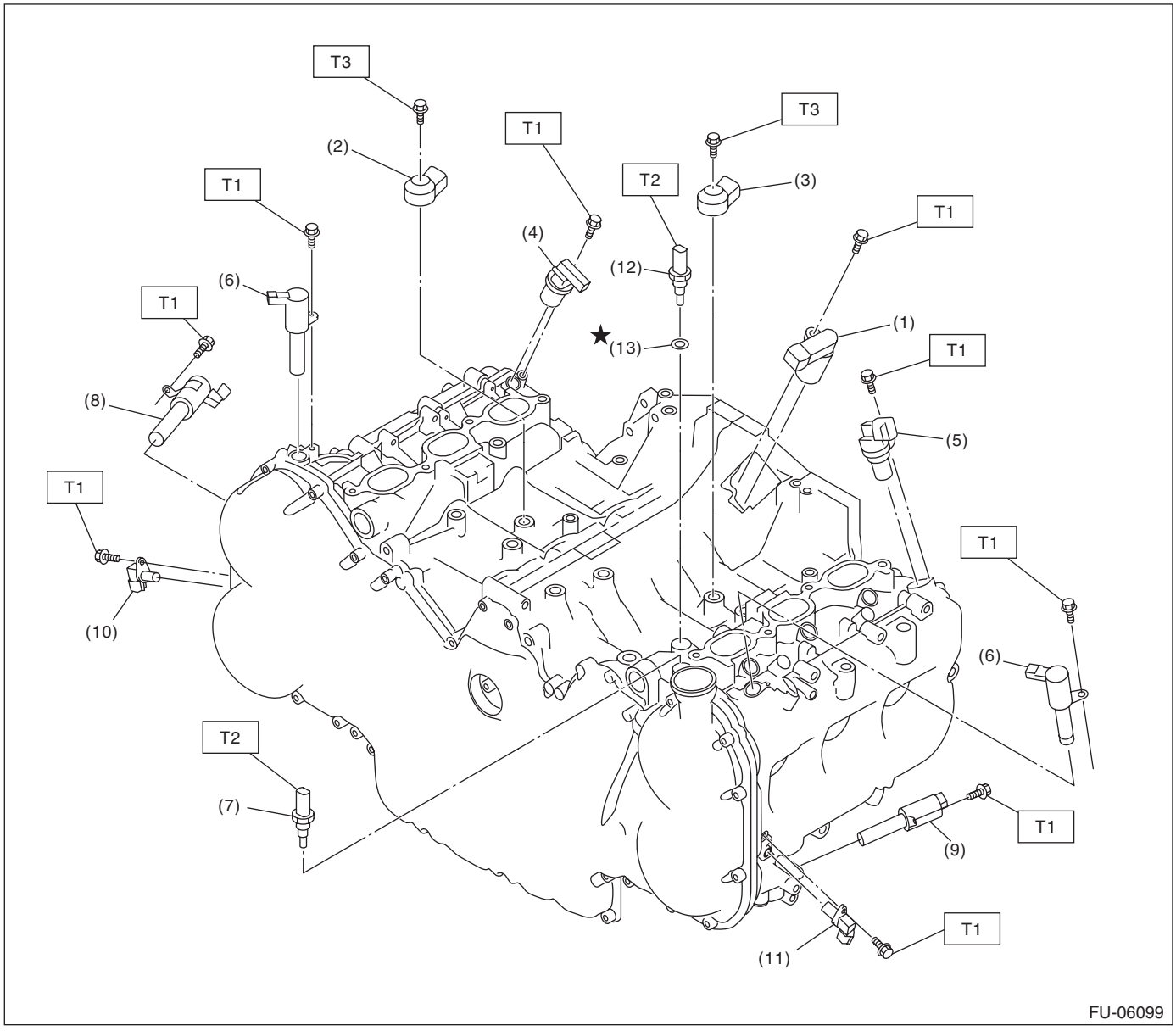

(1)	Crankshaft position sensor	(7)	Oil temperature sensor	(13)	Gasket
(2)	Knock sensor RH	(8)	Exhaust oil flow control solenoid valve RH		
(3)	Knock sensor LH	(9)	Exhaust oil flow control solenoid valve LH	***Tightening torque:N·m (kgf-m, ft-lb)***	
(4)	Intake camshaft position sensor RH	(10)	Exhaust camshaft position sensor RH	***T1:***	***6.4 (0.7, 4.7)***
(5)	Intake camshaft position sensor LH	(11)	Exhaust camshaft position sensor LH	***T2:***	***22 (2.2, 16.2)***
(6)	Intake oil flow control solenoid valve	(12)	Engine coolant temperature sensor	***T3:***	***25 (2.5, 18.4)***

5. ENGINE HARNESS

Engine harness assembly diagram 1

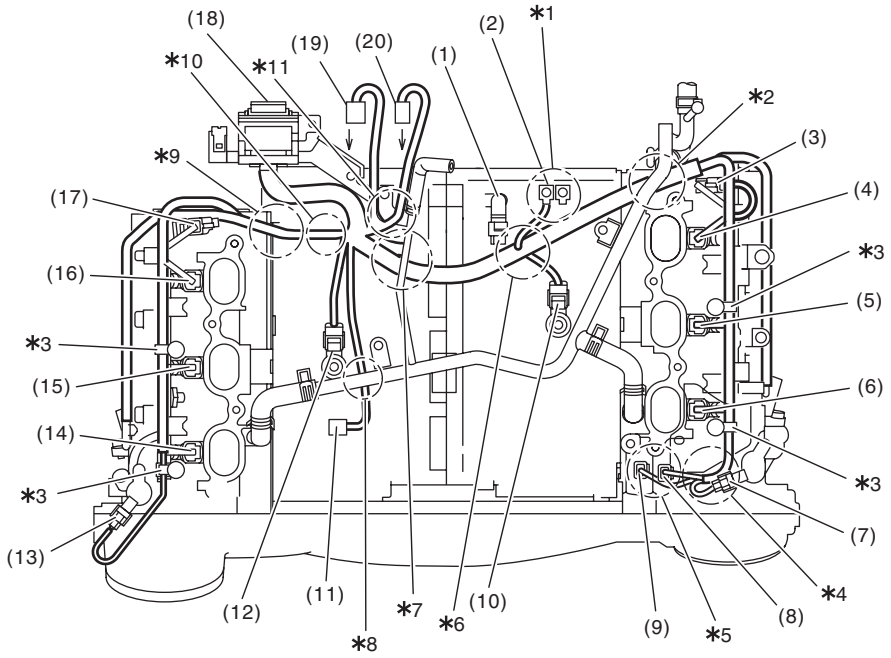

(A)

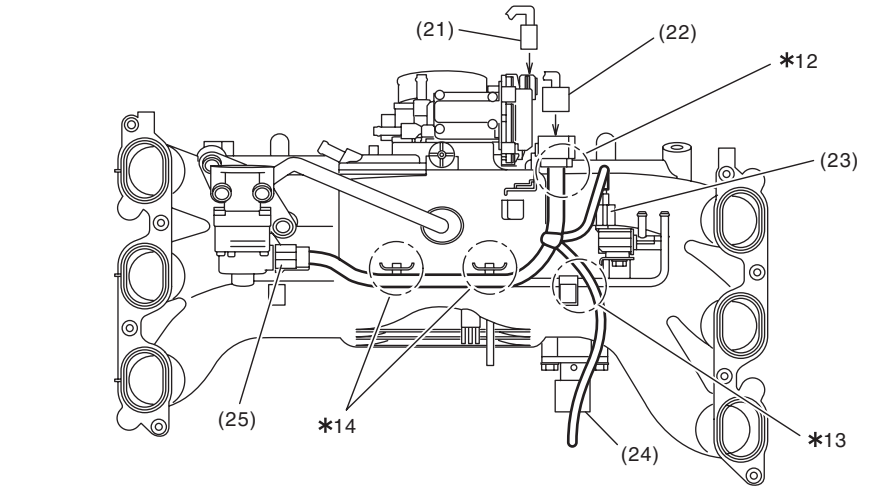

(B)

ME-04534

(A)	Cylinder block upper face	(B)	Intake manifold back surface		
(1)	Crankshaft position sensor connector	(10)	Knock sensor LH connector	(19)	Upper/lower connection connector (to intake manifold)
(2)	Engine ground	(11)	Power steering switch connector	(20)	Electronic throttle control connector (to intake manifold)
(3)	Intake camshaft position sensor LH connector	(12)	Knock sensor RH connector	(21)	Electronic throttle control connector (from upper part of the cylinder block)
(4)	#6 injector connector	(13)	Intake oil flow control solenoid valve RH connector	(22)	Upper/lower connection connector (from upper part of the cylinder block)
(5)	#4 injector connector	(14)	#1 injector connector	(23)	Purge control solenoid valve connector
(6)	#2 injector connector	(15)	#3 injector connector	(24)	Manifold absolute pressure sensor connector
(7)	Intake oil flow control solenoid valve LH connector	(16)	#5 injector connector	(25)	EGR valve connector
(8)	Oil temperature sensor connector	(17)	Intake camshaft position sensor RH connector		
(9)	Engine coolant temperature sensor connector	(18)	Engine harness docking connector		

*1: Install so that engine ground terminals face the rear side of vehicle.
*2: Route under the heater pipe.
*3: Attach the engine harness fixing clip to the fuel pipe stay.
*4: Route from the cutout portion on the fuel pipe protector LH.
*5: Be careful not to mix up the connectors of oil temperature sensor and engine coolant temperature sensor.
*6: Route between crankshaft position sensor and knock sensor LH.
*7: Route under the heater pipe.
*8: Route under the heater pipe.
*9: Route under the fuel pipe.
*10: Attach the engine harness fixing clip to the fixing boss on the cylinder block.
*11: Route over the heater pipe stay.
*12: Securely install the engine harness fixing stay.
*13: Route outside the fuel pipe.
*14: Attach the engine harness fixing clip to the fixing stay on the intake manifold.

Engine harness assembly diagram 2

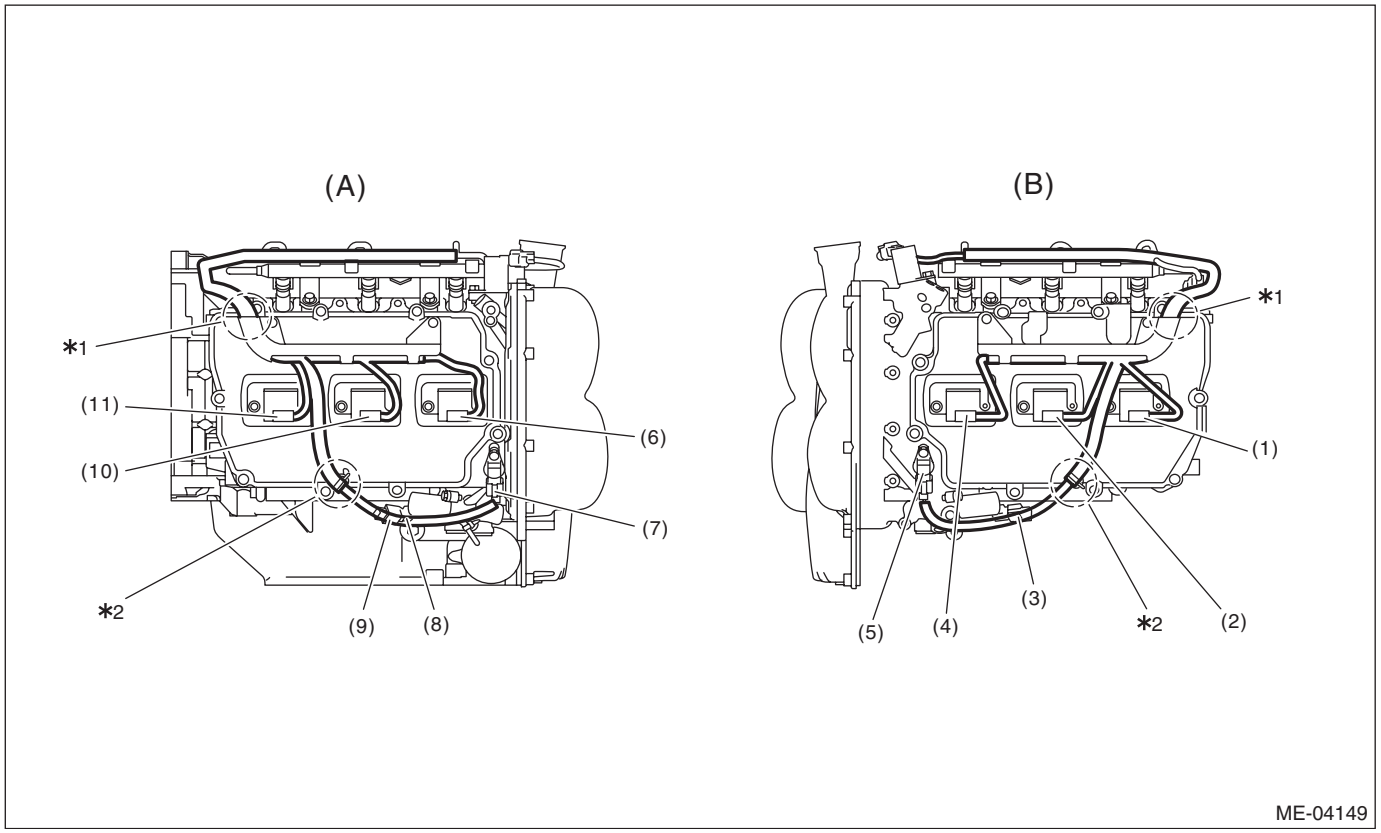

(A)	Right side of the engine	(B)	Left side of the engine		
(1)	#6 ignition coil connector	(5)	Exhaust camshaft position sensor LH connector	(9)	Exhaust oil flow control valve solenoid RH connector
(2)	#4 ignition coil connector	(6)	#1 injector connector	(10)	#3 ignition coil connector
(3)	Exhaust oil flow control valve solenoid LH connector	(7)	Exhaust camshaft position sensor RH connector	(11)	#5 ignition coil connector
(4)	#2 ignition coil connector	(8)	Oil pressure switch connector		

*1: Align the engine harness stay end with the end of engine harness identification tape.
*2: Attach the engine harness fixing clip to the fixing boss on the rocker cover.

6. FUEL TANK

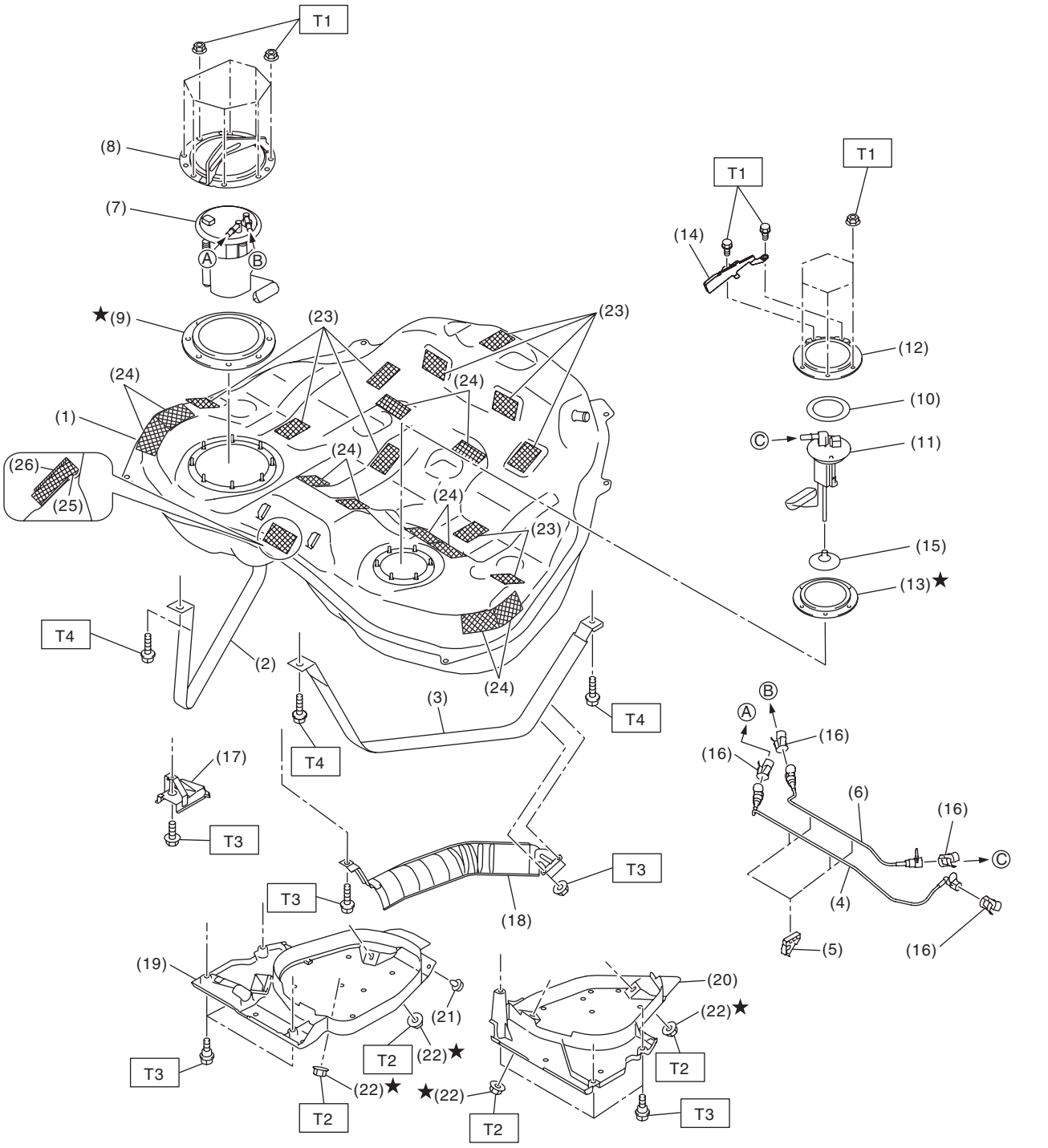

FU-06684

(1) Fuel tank
(2) Fuel tank band RH
(3) Fuel tank band LH
(4) Fuel delivery tube
(5) Tube clamp
(6) Fuel sub delivery tube
(7) Fuel pump assembly
(8) Fuel pump upper plate
(9) Fuel pump gasket
(10) Fuel sub level sensor upper plate cushion
(11) Fuel sub level sensor
(12) Fuel sub level sensor upper plate
(13) Fuel sub level sensor gasket
(14) Fuel sub level sensor protector
(15) Fuel sub level sensor filter
(16) Retainer
(17) Stopper
(18) Heat shield cover
(19) Fuel tank protector RH
(20) Fuel tank protector LH
(21) Clip
(22) Self-locking nut
(23) Cushion
(24) Cushion
(25) Cushion
(26) Cushion

Tightening torque:N·m (kgf-m, ft-lb)
T1: 4.4 (0.4, 3.2)
T2: 9 (0.9, 6.6)
T3: 18 (1.8, 13.3)
T4: 33 (3.4, 24.3)

7. FUEL LINE

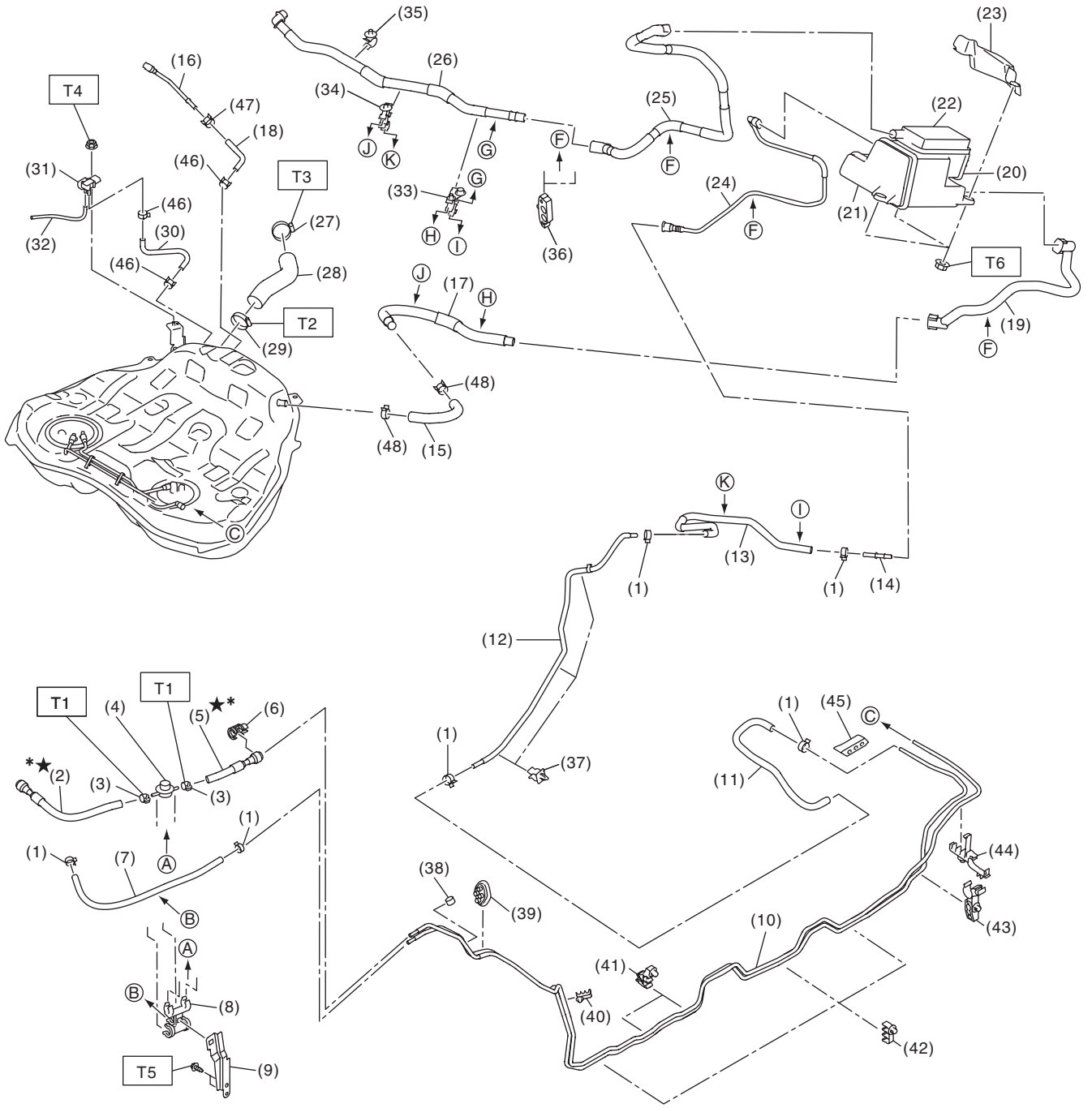

FU-06712

(1) Clip
(2) Fuel delivery hose A
(3) Clamp
(4) Fuel damper
(5) Fuel delivery hose B
(6) Connect check cover
(7) Evaporation hose
(8) Fuel damper holder
(9) Damper bracket
(10) Fuel pipe ASSY
(11) Purge hose A
(12) Purge pipe
(13) Purge hose B
(14) Connector
(15) Air vent hose A
(16) Circulate tube
(17) Air vent tube
(18) Circulate hose
(19) Vent tube
(20) Drain valve
(21) Canister
(22) Drain filter
(23) Canister protector
(24) Charge tube
(25) Canister drain tube
(26) Drain tube ASSY
(27) Clamp
(28) Fuel filler hose
(29) Clamp
(30) Pressure hose
(31) Fuel tank pressure sensor
(32) Vacuum hose
(33) Tube clamp
(34) Tube clamp
(35) Tube clamp
(36) Tube clamp
(37) Pipe clamp
(38) Bushing
(39) Fuel pipe front grommet
(40) Pipe clamp
(41) Pipe clamp
(42) Pipe clamp
(43) Pipe clamp
(44) Pipe clamp
(45) Fuel pipe rear grommet
(46) Clip
(47) Clip
(48) Clip

Tightening torque:N·m (kgf-m, ft-lb)

T1:	***1.25 (0.1, 2.9)***
T2:	***2 (0.2, 1.5)***
T3:	***2.5 (0.3, 1.8)***
T4:	***7.35 (0.7, 5.4)***
T5:	***7.5 (0.8, 5.5)***
T6:	***8 (0.8, 5.9)***

*: It can be reused if the quick connector side is disconnected.

8. FUEL FILLER PIPE

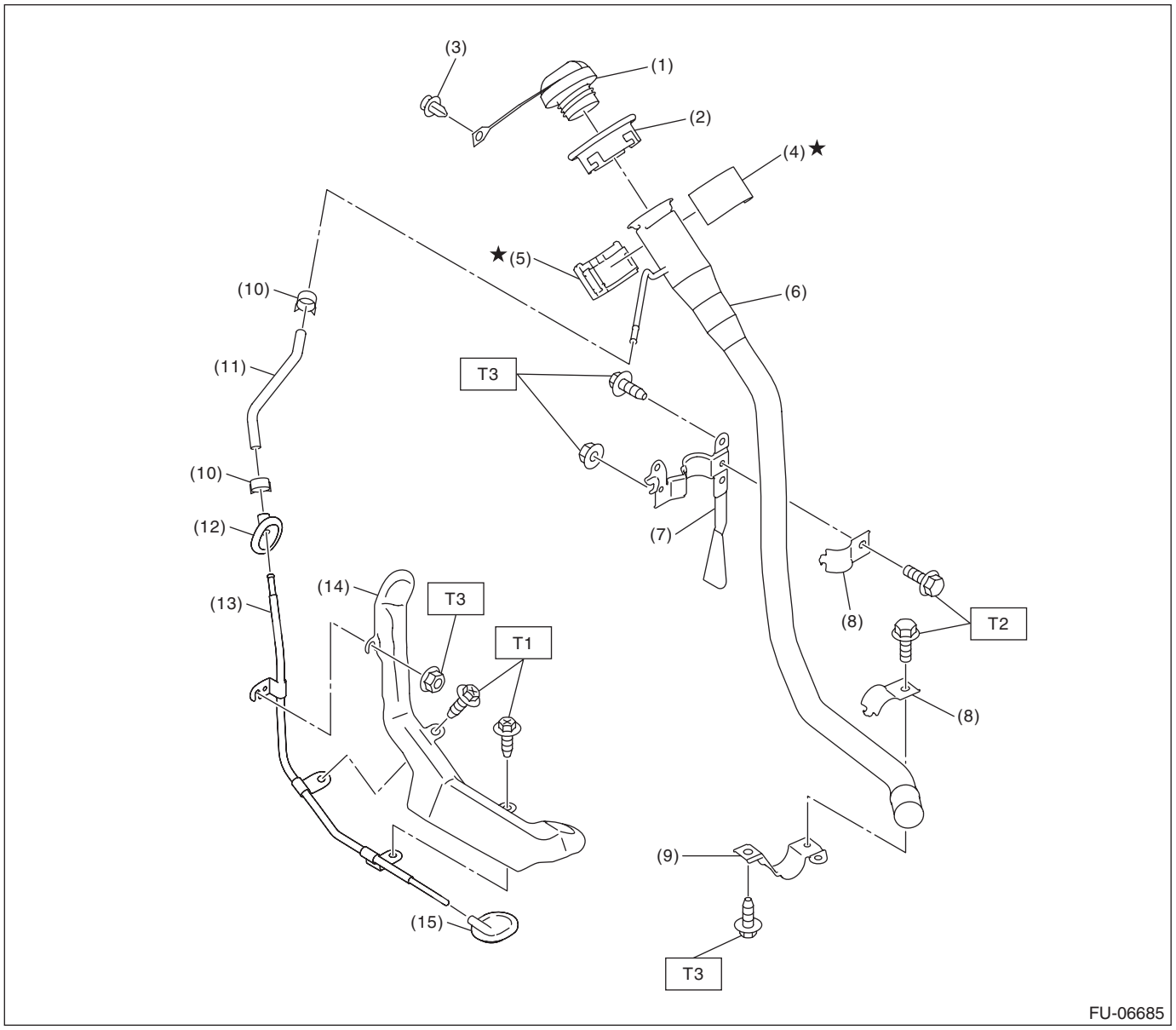

(1) Fuel filler cap
(2) Fuel filler pipe protector
(3) Clip
(4) Neck holder A
(5) Neck holder B
(6) Fuel filler pipe
(7) Fuel filler pipe bracket A
(8) Fuel filler pipe bracket B
(9) Fuel filler pipe bracket C
(10) Clip
(11) Evaporation hose
(12) Grommet
(13) Evaporation pipe
(14) Evaporation pipe protector
(15) Grommet

Tightening torque:N·m (kgf-m, ft-lb)
T1: 1 (0.1, 0.7)
T2: 7.35 (0.7, 5.4)
T3: 7.5 (0.8, 5.5)

9. FUEL PUMP

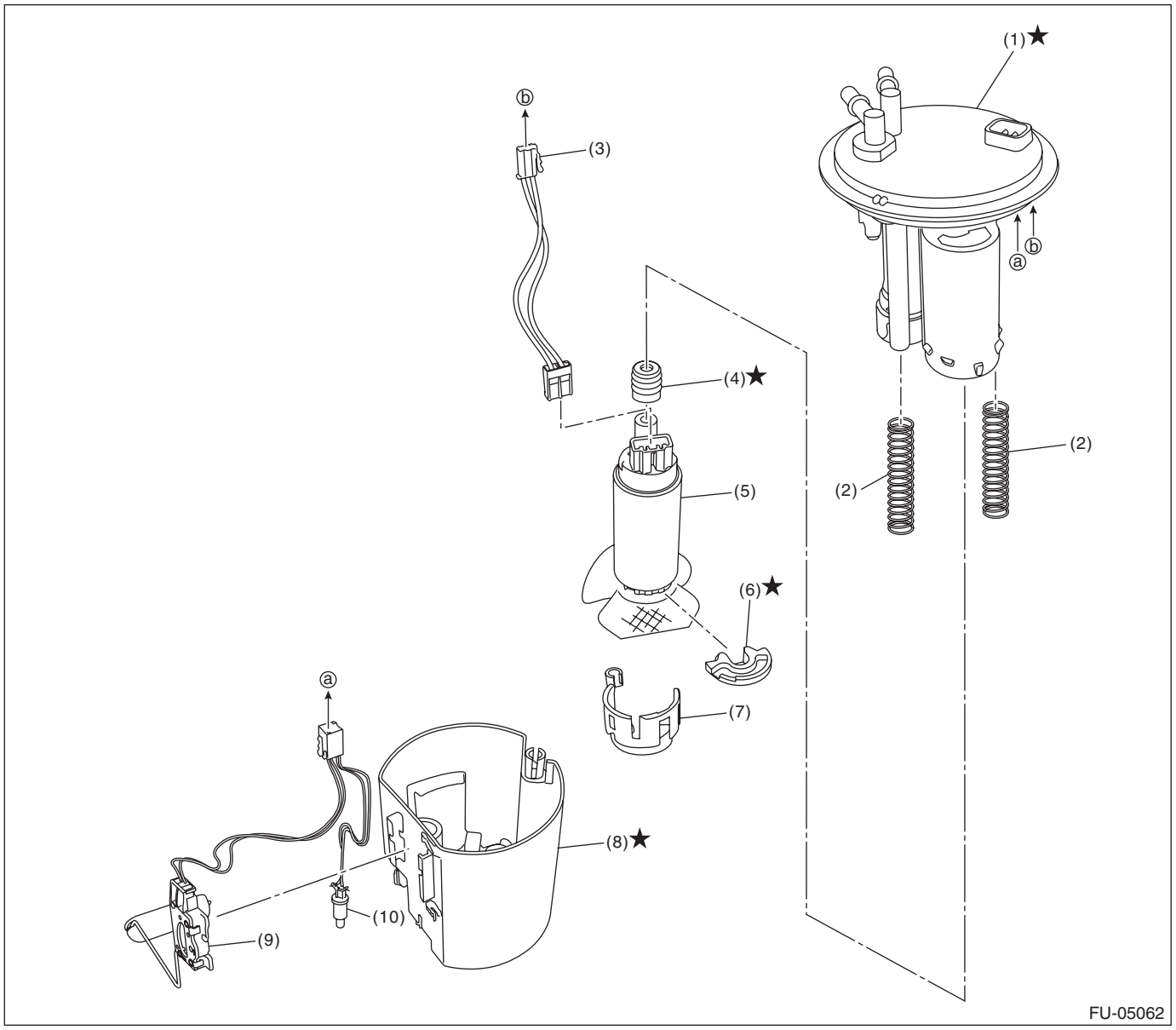

(1) Fuel filter assembly
(2) Pump module spring
(3) Fuel pump harness
(4) Gasket spacer
(5) Fuel pump
(6) Support rubber cushion
(7) Fuel pump holder
(8) Fuel chamber ASSY
(9) Fuel level sensor
(10) Fuel temperature sensor

C: CAUTION

• Wear appropriate work clothing, including a cap, protective goggles and protective shoes when performing any work.
• Remove contamination including dirt and corrosion before removal, installation or disassembly.
• Keep the disassembled parts in order and protect them from dust and dirt.
• Before removal, installation or disassembly, be sure to clarify the failure. Avoid unnecessary removal, installation, disassembly and replacement.
• Vehicle components are extremely hot after driving. Be wary of receiving burns from heated parts.
• Be sure to tighten fasteners including bolts and nuts to the specified torque.
• Place shop jacks or rigid racks at the specified points.
• Before disconnecting connectors of sensors or units, be sure to disconnect the ground cable from battery.
• Place “NO OPEN FLAMES” signs near the working area.
• Prepare a container and cloth to prevent scattering of fuels when performing work where fuels can be spilled. If the oil spills, wipe it off immediately to prevent from penetrating into floor or flowing out for environmental protection.
• Follow all government and local regulations concerning disposal of refuse when disposing fuel.

D: PREPARATION TOOL

1. SPECIAL TOOL

ILLUSTRATION	TOOL NUMBER	DESCRIPTION	REMARKS
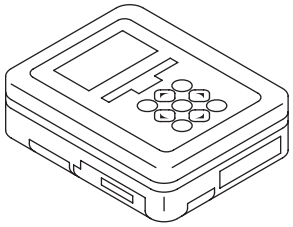 ST1B022XU0	1B022XU0	SUBARU SELECT MONITOR III KIT	Used for draining fuel and each inspection.
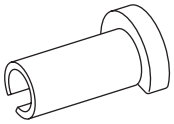 ST42099AE000	42099AE000	QUICK CONNECTOR RELEASE	Used for removing the quick connector.
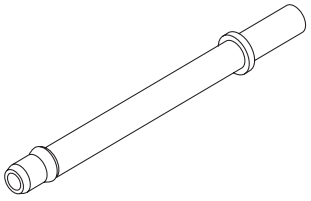 ST18471AA000	18471AA000	FUEL PIPE ADAPTER	Used for draining fuel.

2. GENERAL TOOL

TOOL NAME	REMARKS
Circuit tester	Used for measuring resistance and voltage.
Oscilloscope	Used for inspecting the waveform of each sensor.

2. Throttle Body

A: REMOVAL

1) Remove the collector cover.

NOTE:
Follow the steps below when removing the collector cover.
(1) Pull up the two points at the rear (A).
(2) Pull up the two points at the front (B) while moving them forward.

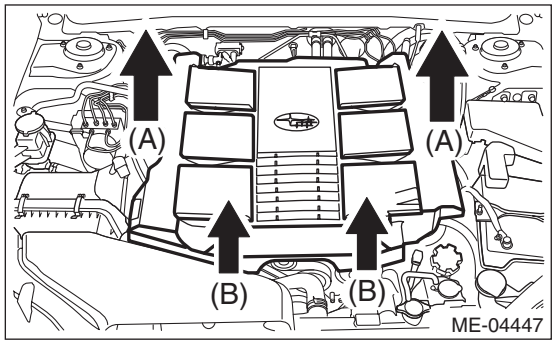

2) Disconnect the ground cable from battery.
3) Loosen the clamp (A) which connects the air intake boot assembly.
4) Loosen the bolt (B) which secures the air intake boot assembly to the collector cover bracket.

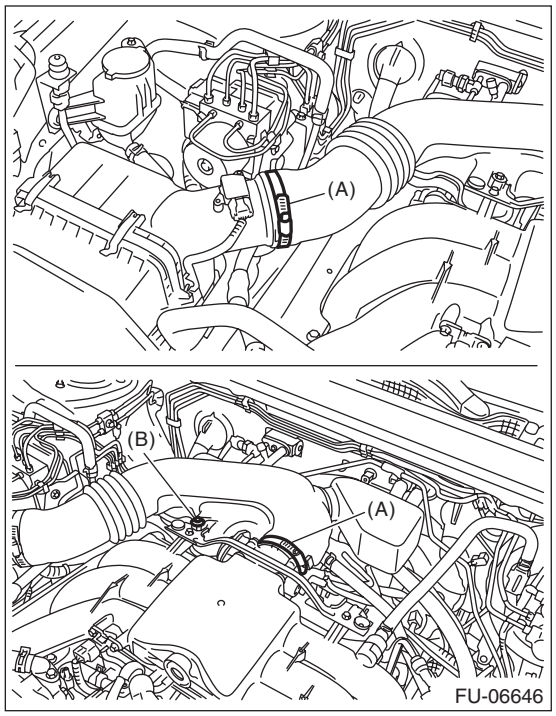

5) Remove the air intake boot assembly, and move it to the left side wheel apron.

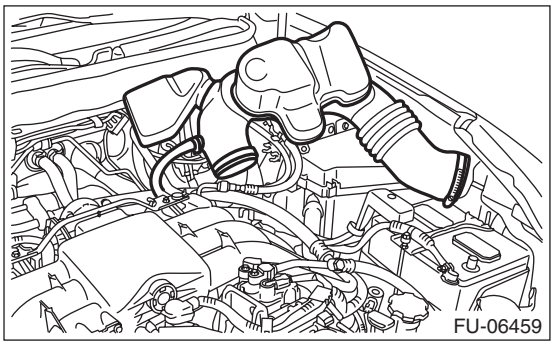

6) Disconnect the connector from the throttle body.

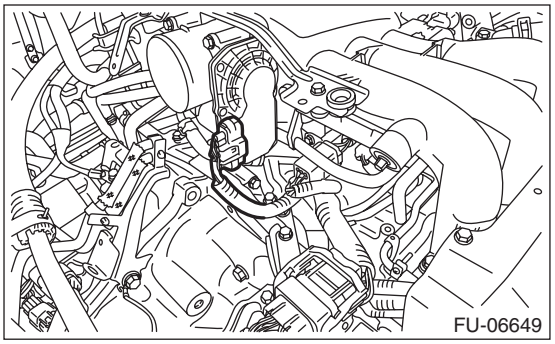

7) Disconnect the engine coolant hoses (A) from throttle body.
8) Remove the bolts which secure the throttle body to the intake manifold.

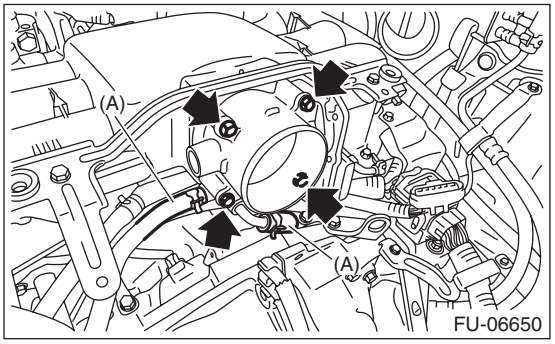

B: INSTALLATION

Install in the reverse order of removal.

NOTE:
Use new O-rings.

Tightening torque:
8 N·m (0.8 kgf-m, 5.9 ft-lb)

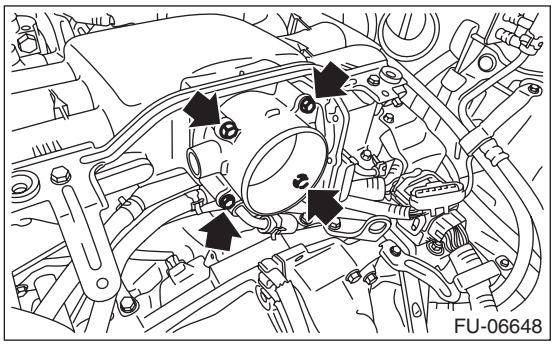

Tightening torque:
Clamp (A)
3 N·m (0.3 kgf-m, 2.2 ft-lb)
Bolt (B)
6.5 N·m (0.7 kgf-m, 4.8 ft-lb)

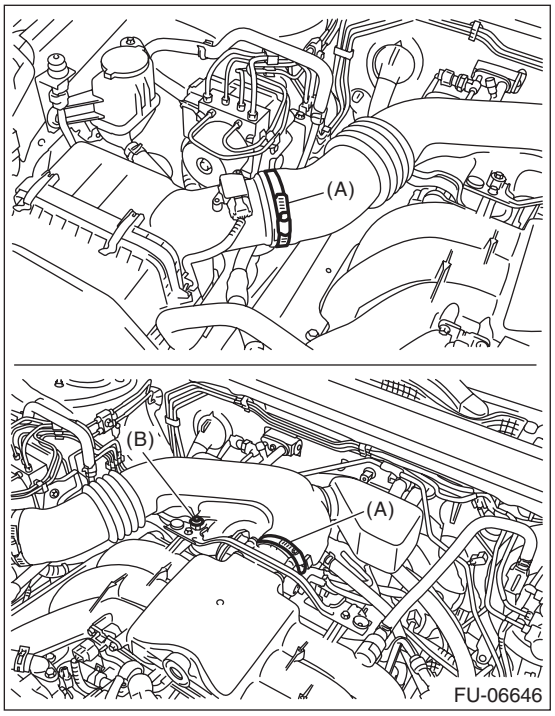

C: INSPECTION

1. THROTTLE SENSOR (METHOD WITH CIRCUIT TESTER)

1) Remove the glove box lid assembly. <Ref. to EI-66, REMOVAL, Glove Box.>
2) Turn the ignition switch to ON. (engine OFF)
3) Measure the voltage between ECM connector terminals.

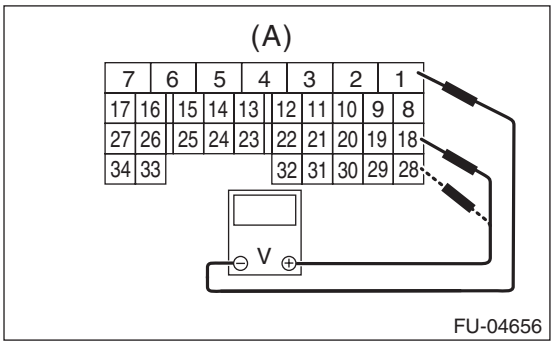

(A) To ECM connector

Throttle sensor	Accelerator pedal	Terminal No.	Standard
Main	Not depressed (Full closed)	18 (+) and 1 (–)	Approx. 0.6 V
	Depressed (Full opened)		Approx. 4.04 V
Sub	Not depressed (Full closed)	28 (+) and 1 (–)	Approx. 1.48 V
	Depressed (Full opened)		Approx. 4.23 V

4) After inspection, install the related parts in the reverse order of removal.

2. THROTTLE SENSOR (METHOD WITH SUBARU SELECT MONITOR)

1) Turn the ignition switch to ON. (engine OFF)
2) Read the throttle opening angle signal and voltage of throttle sensor using Subaru Select Monitor. <Ref. to EN(H6DO)(diag)-35, READ CURRENT DATA FOR ENGINE (NORMAL MODE), OPERATION, Subaru Select Monitor.>

Throttle sensor	Throttle opening angle signal	Standard
Main	0.0%	Approx. 0.6 V
	100.0%	Approx. 4.04 V
Sub	0.0%	Approx. 1.48 V
	100.0%	Approx. 4.23 V

3. OTHER INSPECTIONS

1) Check that the throttle body has no deformation, cracks or other damages.
2) Check that the engine coolant hose has no cracks, damage or loose part.

3. Intake Manifold

A: REMOVAL

1) Remove the collector cover.

NOTE:
Follow the steps below when removing the collector cover.
(1) Pull up the two points at the rear (A).
(2) Pull up the two points at the front (B) while moving them forward.

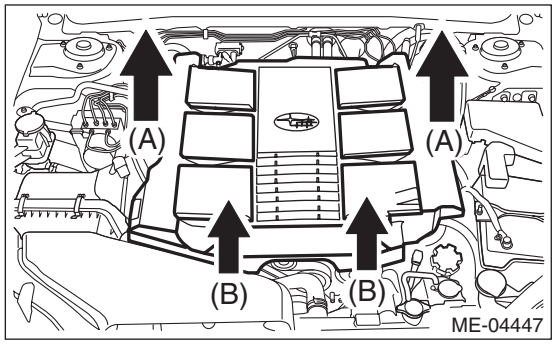

2) Release the fuel pressure. <Ref. to FU(H6DO)-59, RELEASING OF FUEL PRESSURE, PROCEDURE, Fuel.>
3) Remove the battery and battery carrier. <Ref. to SC(H4SO)-28, REMOVAL, Battery.>
4) Open the fuel filler lid and remove the fuel filler cap.
5) Disconnect the brake booster vacuum hose.

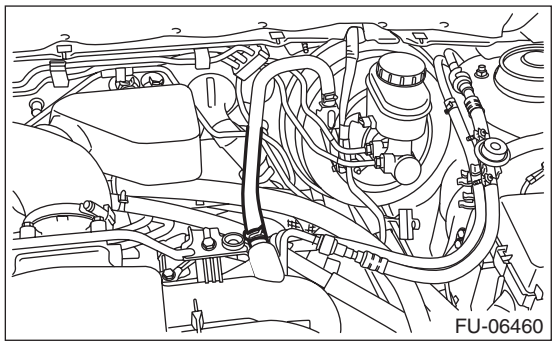

6) Loosen the clamp (A) which connects the air intake boot assembly.
7) Loosen the bolt (B) which secures the air intake boot assembly to the collector cover bracket.

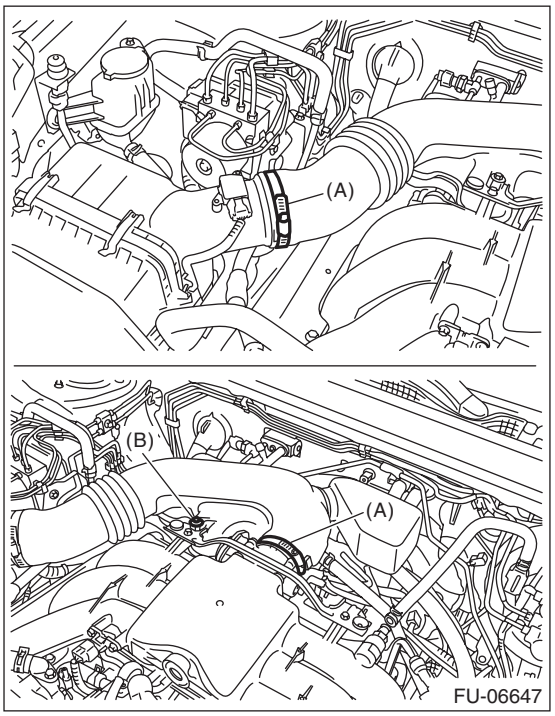

8) Remove the air intake boot assembly, and move it to the left side wheel apron.

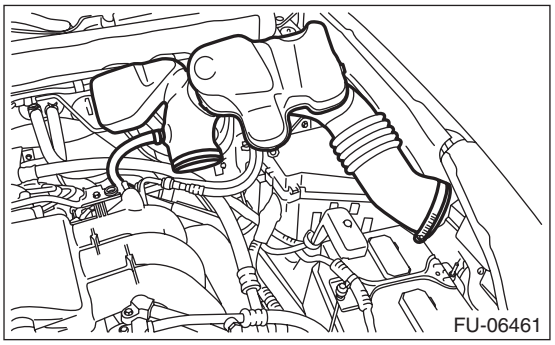

9) Remove the air cleaner case. <Ref. to IN(H6DO)-5, REMOVAL, Air Cleaner Case.>
10) Disconnect the following connector.
(1) Remove the securing clips from the two locations on the fuel pipe protector LH.

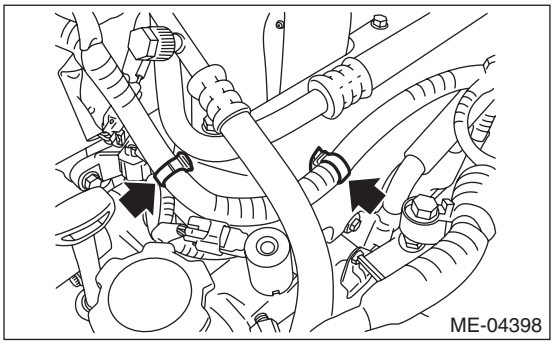

(2) Generator connector
(3) Generator terminal B

(4) Remove the harness cover from collector cover bracket.
(5) A/C compressor solenoid connector
(6) Flow sensor connector

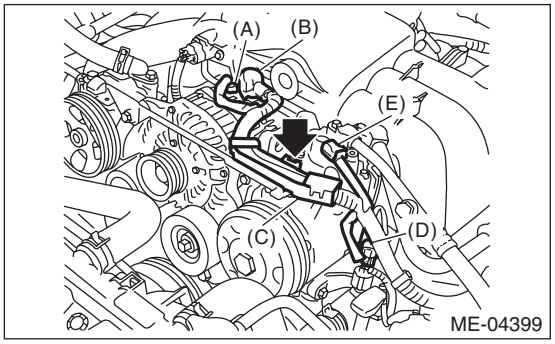

(A) Generator connector
(B) Terminal B
(C) Harness cover
(D) A/C compressor solenoid connector
(E) Flow sensor connector

(7) Slide the harness and connector to the battery side.

11) Disconnect the PCV hose.

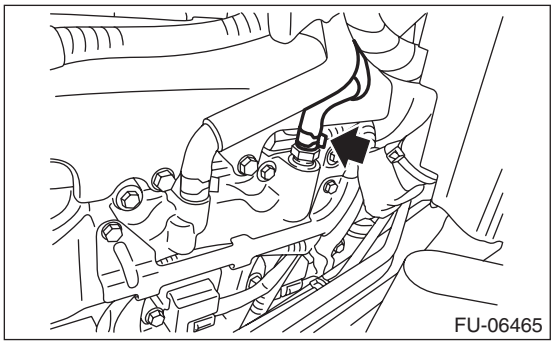

12) Disconnect the connector (A) from throttle body.
13) Disconnect the engine harness connector (B).

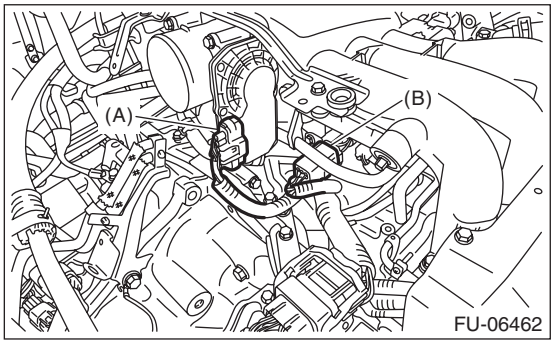

14) Remove the throttle body from the intake manifold.

NOTE:
Do not disconnect the inlet and outlet hoses of engine coolant.

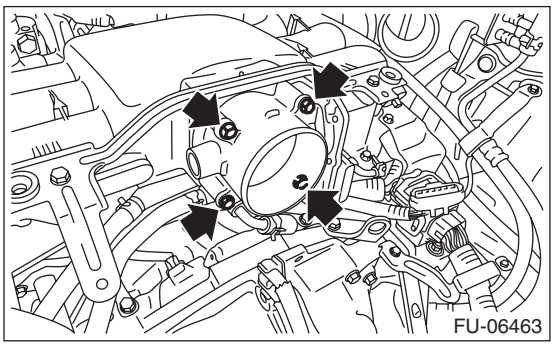

15) Disconnect the fuel delivery hose and evaporation hose.

CAUTION:
• Be careful not to spill fuel.
• Catch the fuel from hoses using a container or cloth.

(1) Attach ST to the fuel delivery pipe and push ST in the direction of arrow mark to disconnect the quick connector of the fuel delivery hose.

ST 42099AE000 QUICK CONNECTOR RELEASE

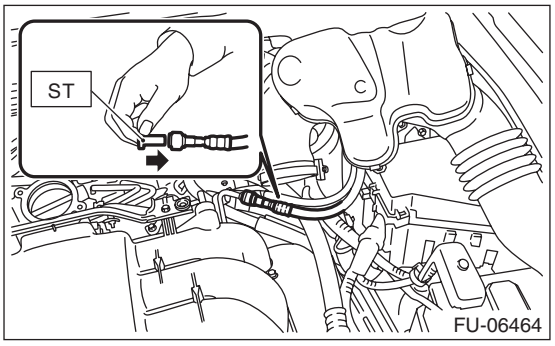

(2) Remove the clip and disconnect the evaporation hose.

16) Remove the fuel pipe protector LH.

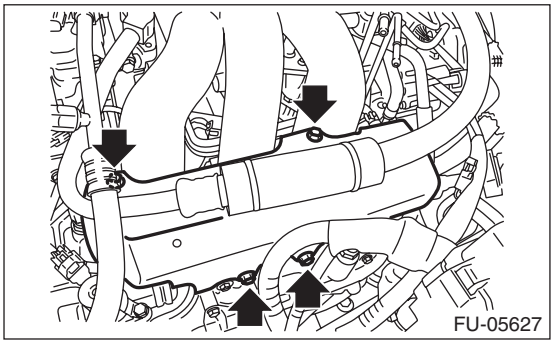

17) Disconnect #2, #4, and #6 fuel injector connectors.

18) Disconnect the connectors of the oil temperature sensor, engine coolant temperature sensor and intake oil flow control solenoid valve LH.

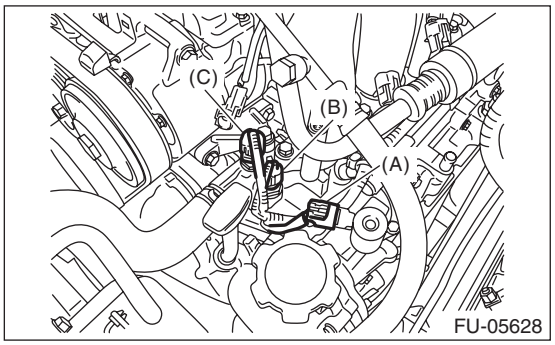

(A) Intake oil flow control solenoid valve LH
(B) Oil temperature sensor
(C) Engine coolant temperature sensor

19) Remove the bolts which hold fuel injector pipe LH to cylinder head.

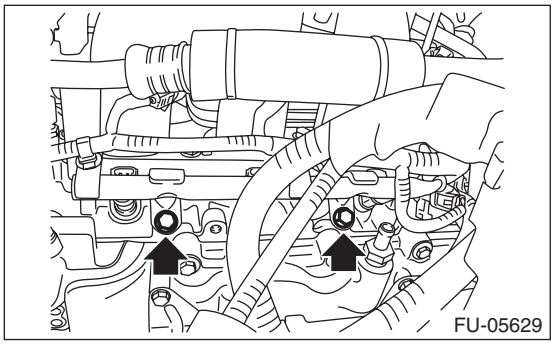

20) Disconnect the connectors of the intake oil flow control solenoid valve RH.

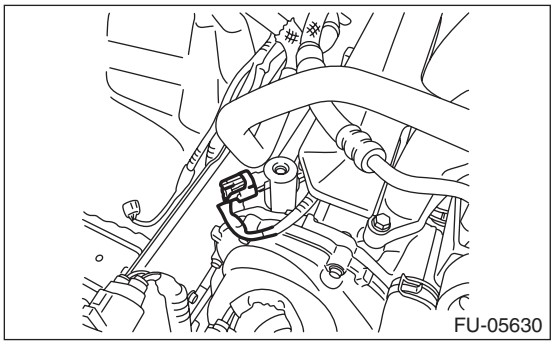

21) Remove the fuel pipe protector RH.

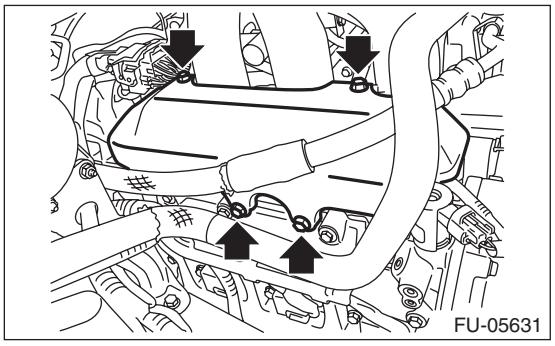

22) Disconnect #1, #3, and #5 fuel injector connectors.
23) Remove the bolts which hold the fuel injector pipe RH to the cylinder head.

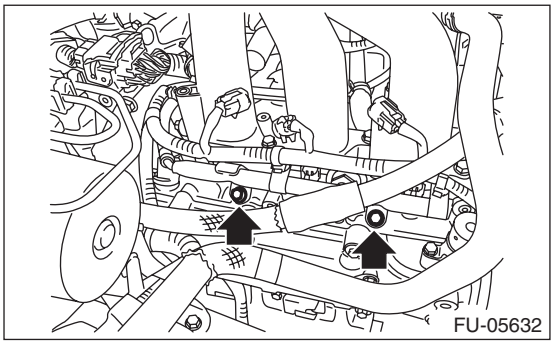

24) Remove the bolts which hold the intake manifold to the cylinder head.
- LH side

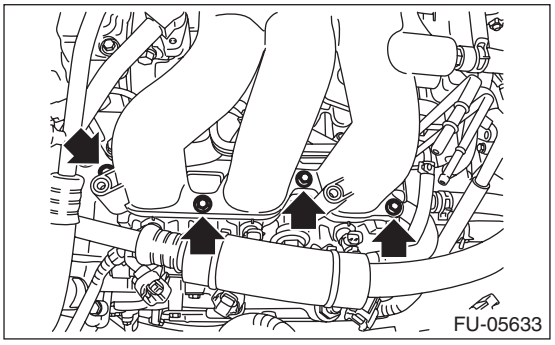

- RH side

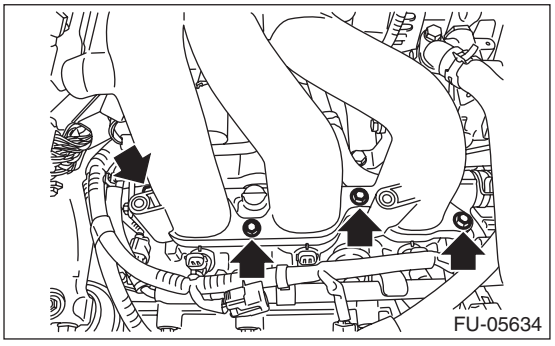

25) Remove the EGR pipe securing bolt.

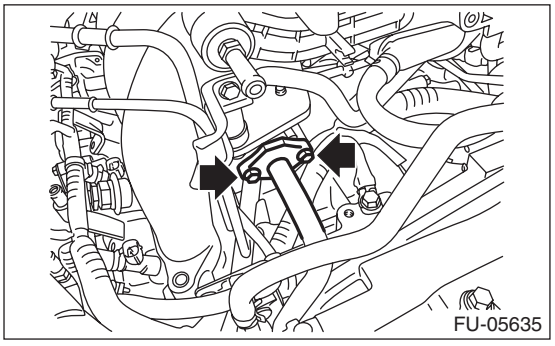

26) Remove the engine harness from the fuel injector pipe RH.

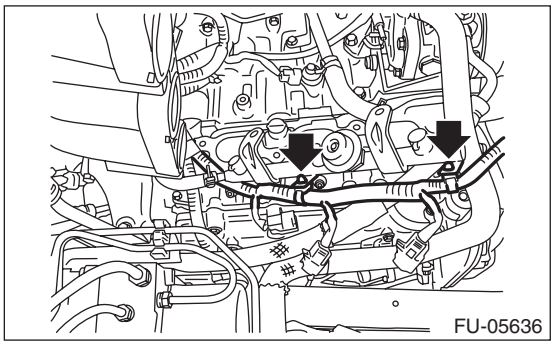

27) Remove the engine harness from the fuel injector pipe LH.

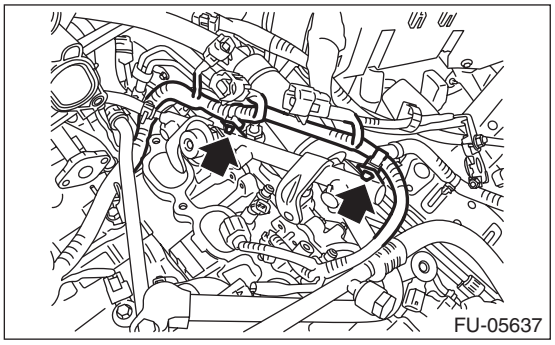

28) Remove the intake manifold.

B: INSTALLATION

1) Install the engine harness to fuel injector pipe LH.

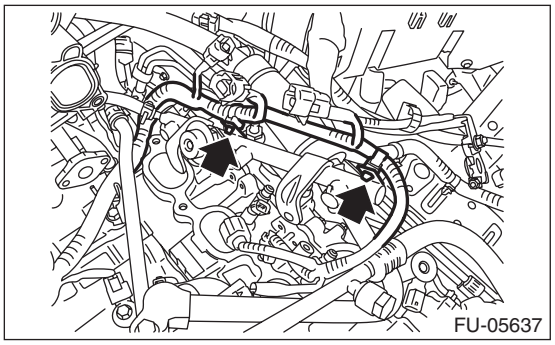

2) Install the engine harness to fuel injector pipe RH.

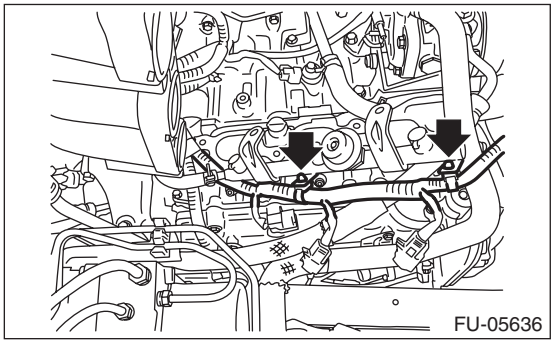

3) Install the intake manifold onto cylinder heads.

NOTE:
Use new O-rings.

Tightening torque:
25 N·m (2.5 kgf-m, 18.4 ft-lb)

- RH side

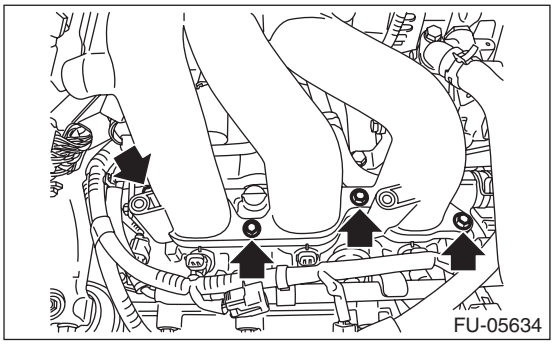

- LH side

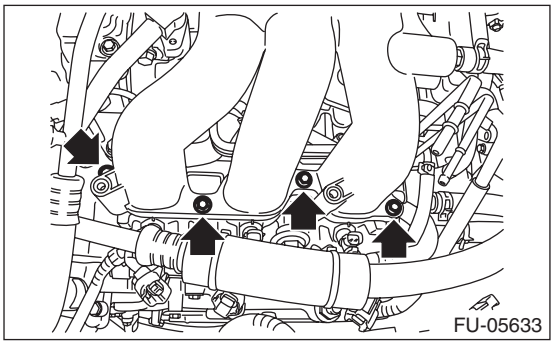

4) Install the EGR pipe securing bolt.

NOTE:
Use a new gasket.

Tightening torque:
6.4 N·m (0.7 kgf-m, 4.7 ft-lb)

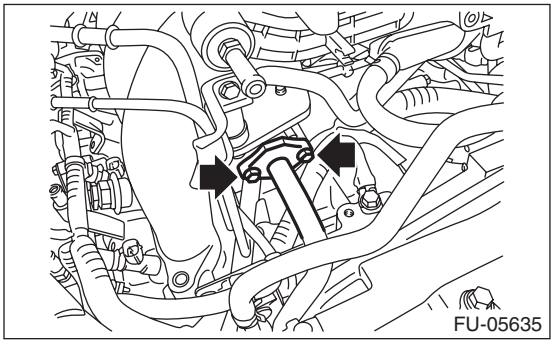

5) Install the bolts which hold fuel injector pipe RH to cylinder head.

NOTE:
Use new O-rings, injection rubbers, and seal rings.

Tightening torque:
19 N·m (1.9 kgf-m, 14.0 ft-lb)

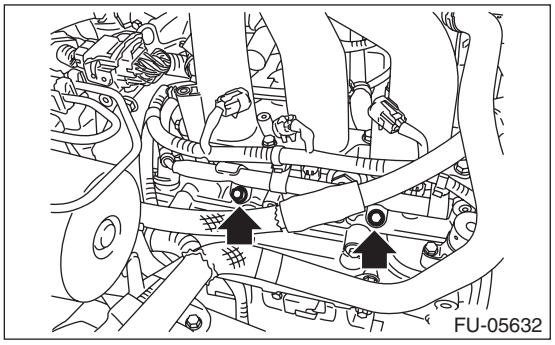

6) Connect #1, #3, and #5 fuel injector connectors.
7) Install the fuel pipe protector RH.

Tightening torque:
19 N·m (1.9 kgf-m, 14.0 ft-lb)

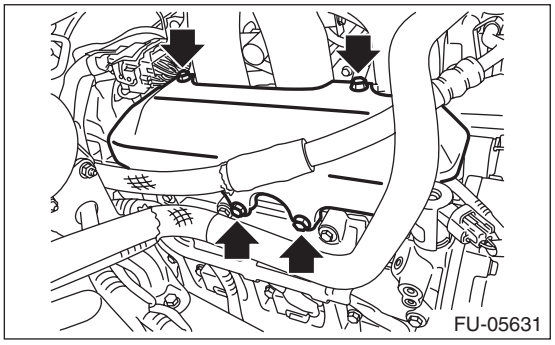

8) Connect the connectors of the intake oil flow control solenoid valve RH.

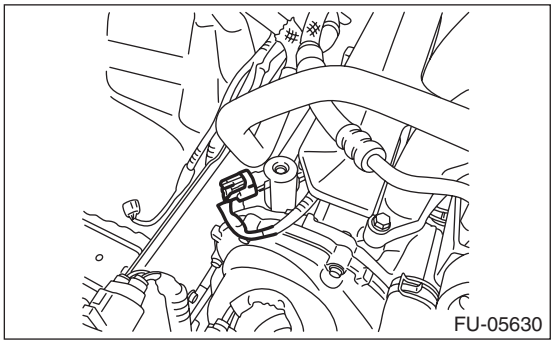

9) Install the bolts which hold fuel injector pipe LH to cylinder head.

NOTE:
Use new O-rings, injection rubbers, and seal rings.

Tightening torque:
19 N·m (1.9 kgf-m, 14.0 ft-lb)

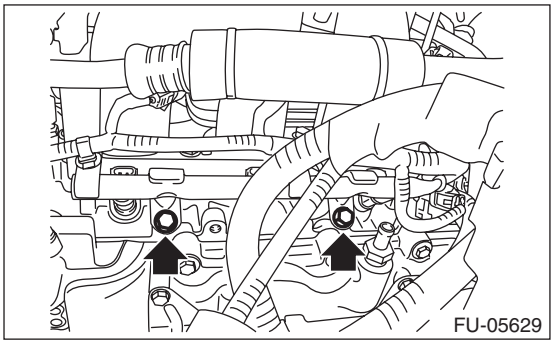

10) Connect the connectors of the oil temperature sensor, engine coolant temperature sensor and intake oil flow control solenoid valve LH.

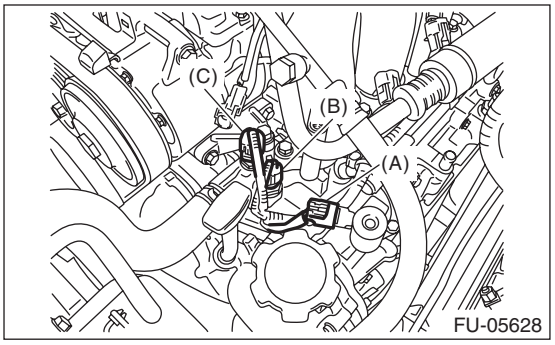

(A) Intake oil flow control solenoid valve LH
(B) Oil temperature sensor
(C) Engine coolant temperature sensor

11) Connect #2, #4, and #6 fuel injector connectors.
12) Install the fuel pipe protector LH.

Tightening torque:
19 N·m (1.9 kgf-m, 14.0 ft-lb)

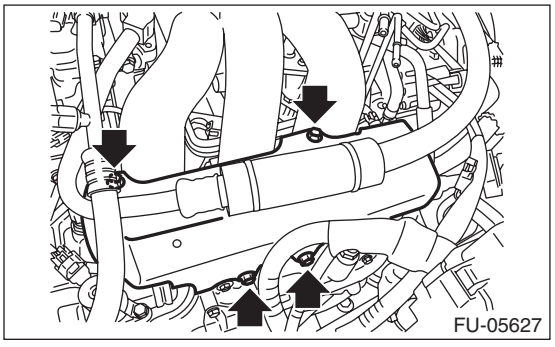

13) Connect the fuel delivery hose (A) and evaporation hose (B).

NOTE:
If fuel hoses or clamps are damaged, replace them with new parts.

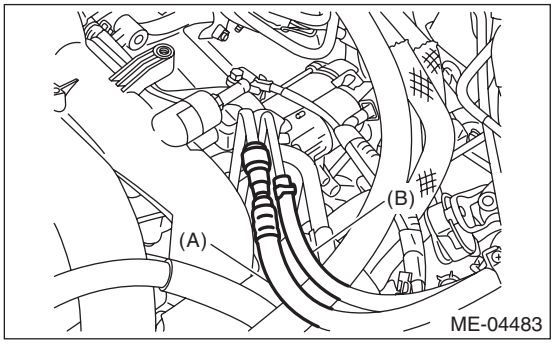

14) Install the throttle body to the intake manifold.

NOTE:
Use new O-rings.

Tightening torque:
8 N·m (0.8 kgf-m, 5.9 ft-lb)

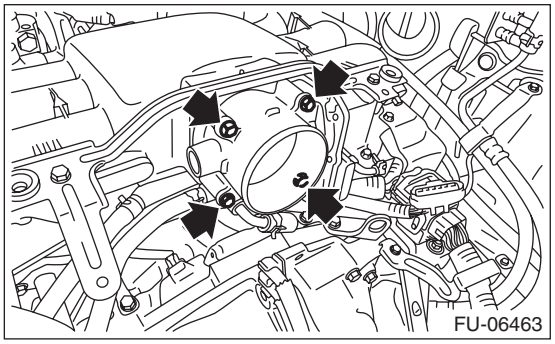

15) Connect the connector (A) to throttle body.
16) Connect the engine harness connector (B).

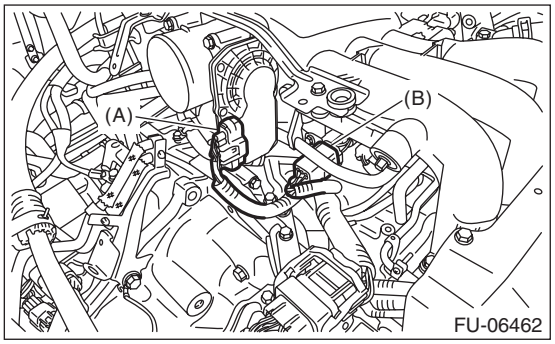

17) Connect the PCV hose.

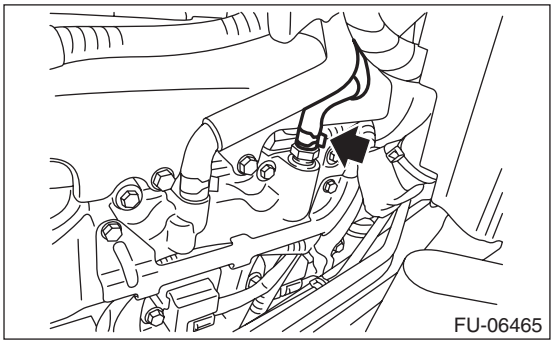

18) Connect the following connectors.
(1) Install the securing clips to the two locations on the fuel pipe protector LH.

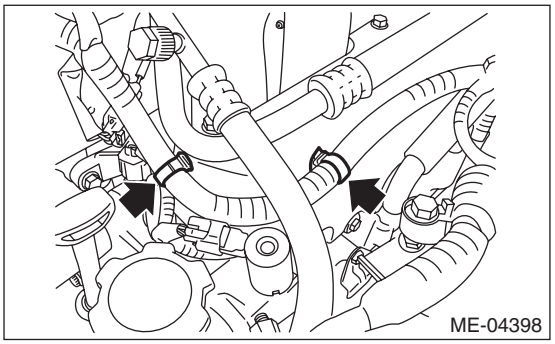

(2) Generator connector
(3) Generator terminal B

Tightening torque:
16 N·m (1.6 kgf-m, 11.8 ft-lb)

(4) Install the harness cover to the collector cover bracket.
(5) A/C compressor solenoid connector
(6) Flow sensor connector

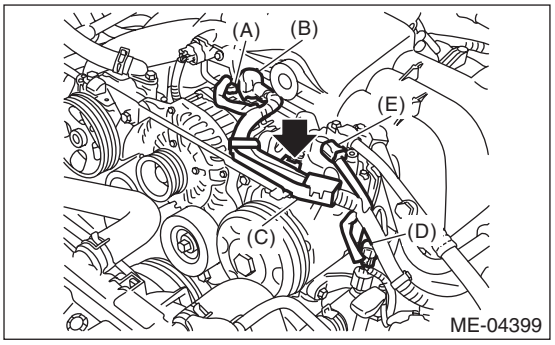

(A) Generator connector
(B) Terminal B
(C) Harness cover
(D) A/C compressor solenoid connector
(E) Flow sensor connector

19) Install the air cleaner case. <Ref. to IN(H6DO)-5, INSTALLATION, Air Cleaner Case.>

20) Install the air intake boot assembly.

Tightening torque:
Clamp (A)
3 N·m (0.3 kgf-m, 2.2 ft-lb)
Bolt (B)
6.5 N·m (0.7 kgf-m, 4.8 ft-lb)

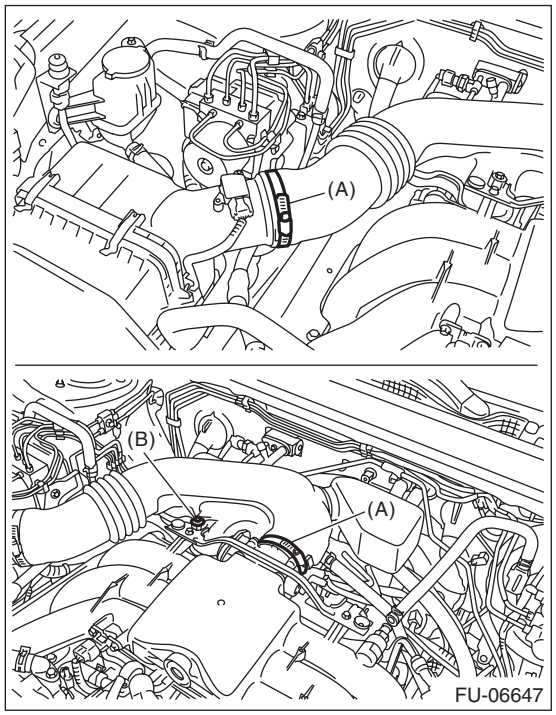

21) Connect the brake booster vacuum hose.

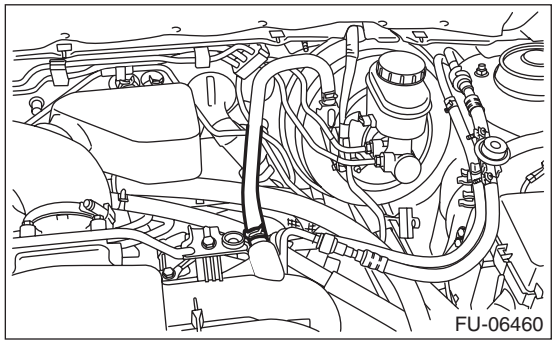

22) Install the battery and battery carrier. <Ref. to SC(H4SO)-28, INSTALLATION, Battery.>
23) Install the collector cover.

C: DISASSEMBLY

1) Remove the engine harness from intake manifold. <Ref. to FU(H6DO)-8, ENGINE HARNESS, COMPONENT, General Description.>

2) Remove the fuel injector pipe and the fuel hose.

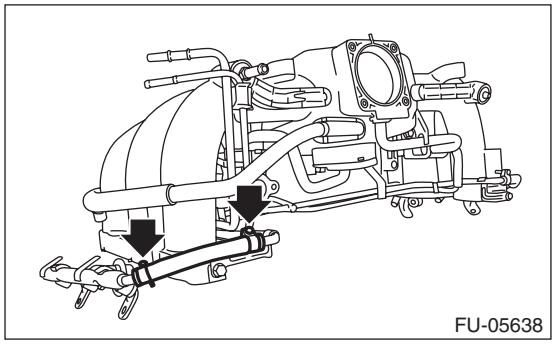

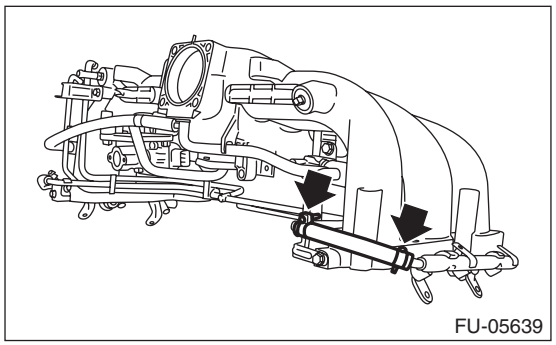

3) Remove the fuel pipe assembly.

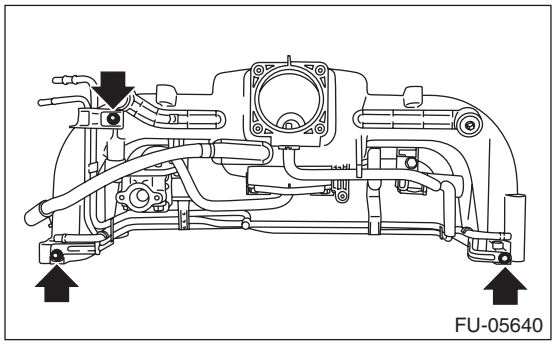

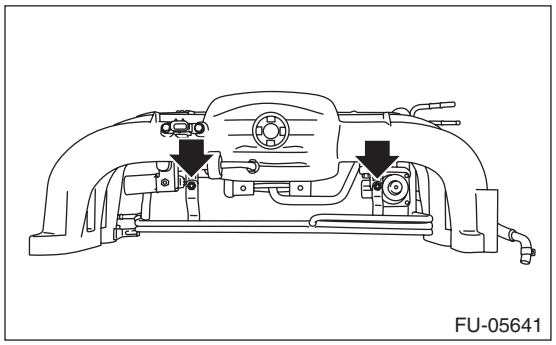

4) Remove the EGR valve. <Ref. to FU(H6DO)-42, REMOVAL, EGR Valve.>
5) Remove the manifold absolute pressure sensor. <Ref. to FU(H6DO)-39, REMOVAL, Manifold Absolute Pressure Sensor.>
6) Remove the purge control solenoid valve. <Ref. to EC(H6DO)-10, REMOVAL, Purge Control Solenoid Valve.>

D: ASSEMBLY

NOTE:
When assembling the nipple, apply liquid gasket.

Liquid gasket:
THREE BOND 1105 (Part No. 004403010) or equivalent

Tightening torque:
17 N·m (1.7 kgf-m, 12.5 ft-lb)

1) Install the purge control solenoid valve. <Ref. to EC(H6DO)-10, INSTALLATION, Purge Control Solenoid Valve.>
2) Install the manifold absolute pressure sensor. <Ref. to FU(H6DO)-39, INSTALLATION, Manifold Absolute Pressure Sensor.>
3) Install the EGR valve. <Ref. to FU(H6DO)-43, INSTALLATION, EGR Valve.>
4) Install the fuel pipe assembly.

Tightening torque:
6.4 N·m (0.7 kgf-m, 4.7 ft-lb)

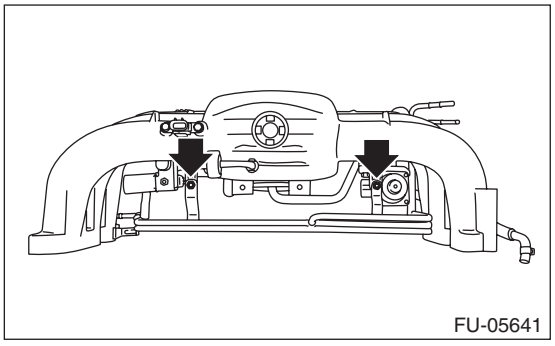
FU-05641

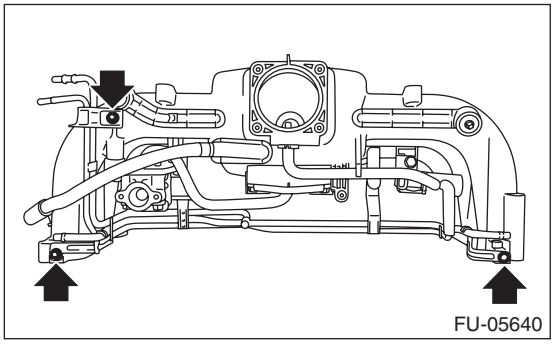
FU-05640

5) Install the fuel injector pipe and the fuel hose.

Tightening torque:
1.25 N·m (0.1 kgf-m, 0.9 ft-lb)

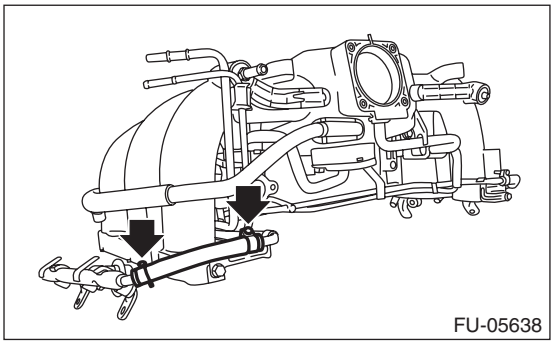
FU-05638

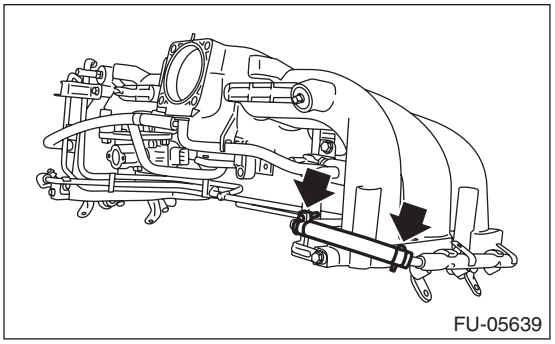
FU-05639

6) Install the engine harness to the intake manifold. <Ref. to FU(H6DO)-8, ENGINE HARNESS, COMPONENT, General Description.>

E: INSPECTION

1) Check that the intake manifold and fuel pipe have no deformation, cracks and other damages.
2) Check that the hose has no cracks, damage or loose part.

4. Engine Coolant Temperature Sensor

A: REMOVAL

1) Remove the collector cover.

NOTE:
Follow these procedures for removal of the collector cover.

(1) Lift up the rear side holding two positions (A).
(2) Lift up the front side holding two positions (B) while moving it in the forward direction of the vehicle.

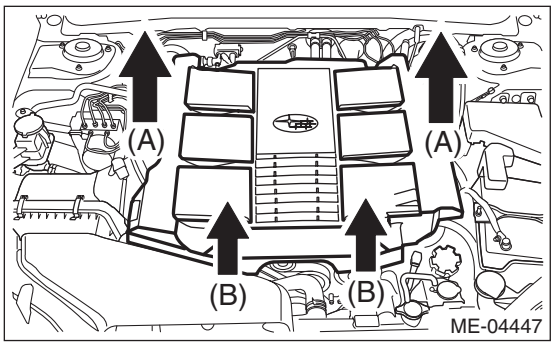

2) Disconnect the ground cable from battery.
3) Drain engine coolant. <Ref. to CO(H6DO)-12, DRAINING OF ENGINE COOLANT, REPLACEMENT, Engine Coolant.>
4) Disconnect the connectors from the engine coolant temperature sensor.

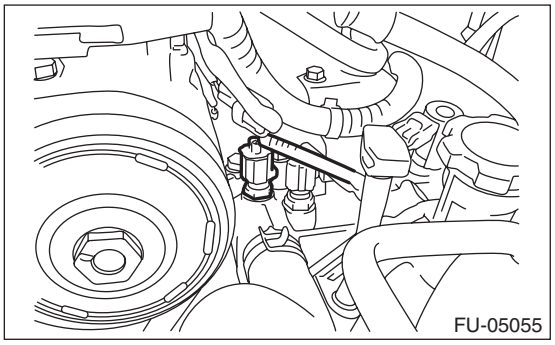

5) Remove the engine coolant temperature sensor.

B: INSTALLATION

Install in the reverse order of removal.

Tightening torque:
22 N·m (2.2 kgf-m, 16.2 ft-lb)

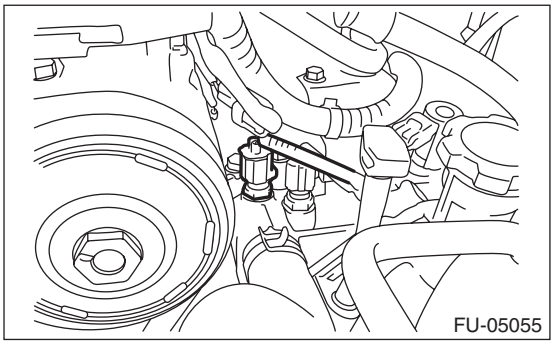

C: INSPECTION

1) Check that the engine coolant temperature sensor has no deformation, cracks or other damages.
2) Immerse the engine coolant temperature sensor and a thermometer in water.

CAUTION:
Take care not to allow water to get into the engine coolant temperature sensor connector. Completely remove any water inside.

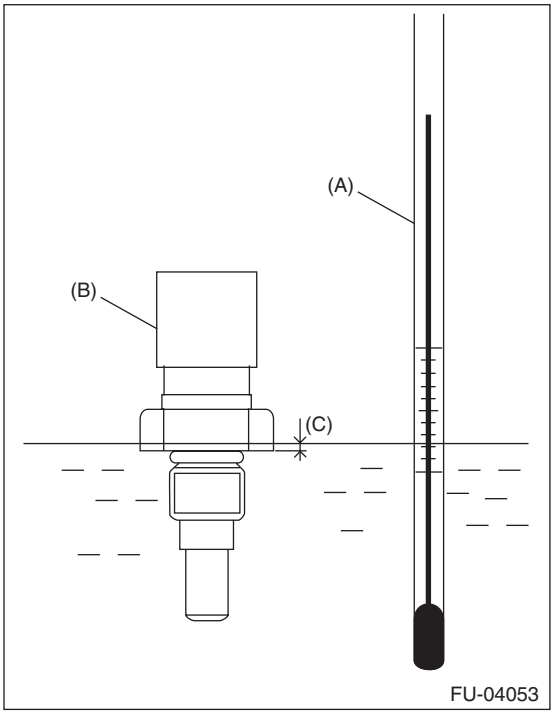

(A) Thermometer
(B) Engine coolant temperature sensor
(C) Hexagonal part height: To approx. $^{1}/_{3}$

3) Raise water temperature gradually, measure the resistance between the engine coolant temperature sensor terminals when the temperature is 20°C (68°F) and 80°C (176°F).

NOTE:
Agitate the water for even temperature distribution.

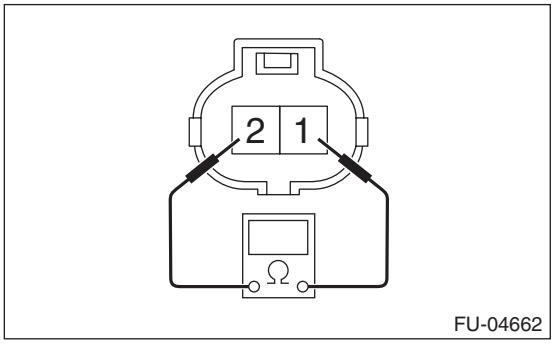

Water temperature	Terminal No.	Standard
20°C (68°F)	1 and 2	2.45±0.2 kΩ
80°C (176°F)		0.318±0.013 kΩ

5. Crankshaft Position Sensor

A: REMOVAL

1) Remove the collector cover.

NOTE:
Follow the steps below when removing the collector cover.
(1) Pull up the two points at the rear (A).
(2) Pull up the two points at the front (B) while moving them forward.

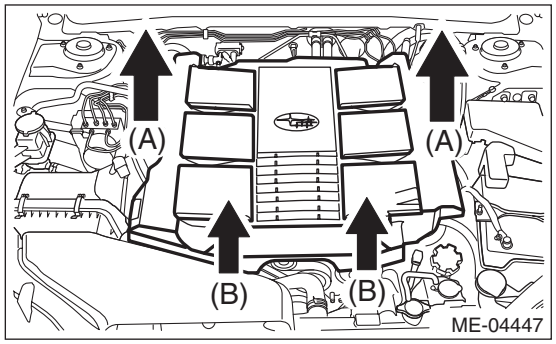

2) Disconnect the ground cable from battery.
3) Loosen the clamp (A) which connects the air intake boot assembly.
4) Loosen the bolt (B) which secures the air intake boot assembly to the collector cover bracket.

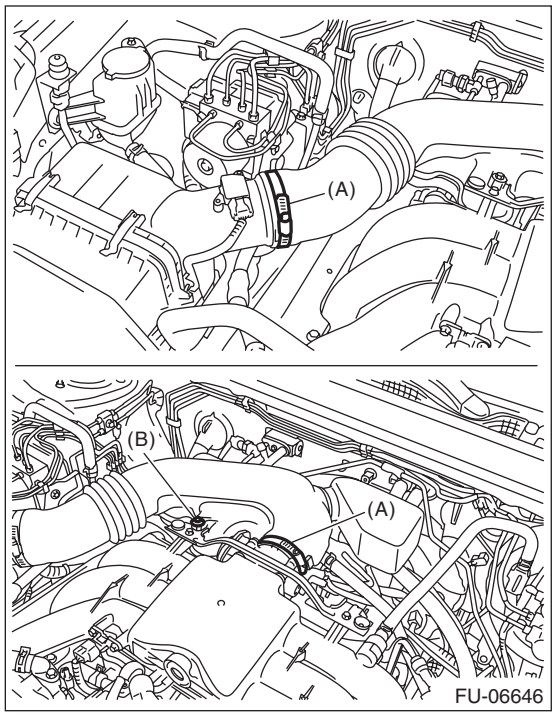

5) Remove the air intake boot assembly, and move it to the left side wheel apron.

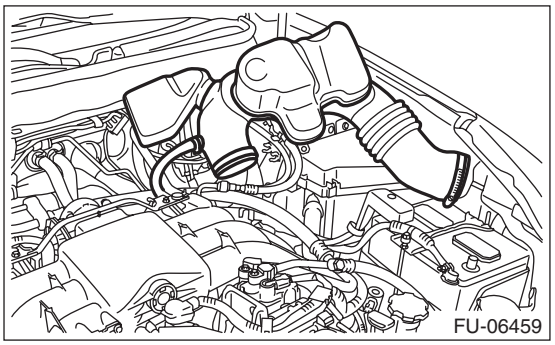

6) Remove the throttle body from the intake manifold.

NOTE:
Do not disconnect the inlet and outlet hoses of engine coolant.
7) Remove the service hole plug.

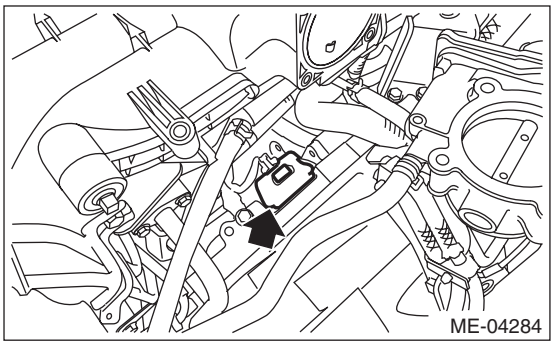

8) Remove the crankshaft position sensor.

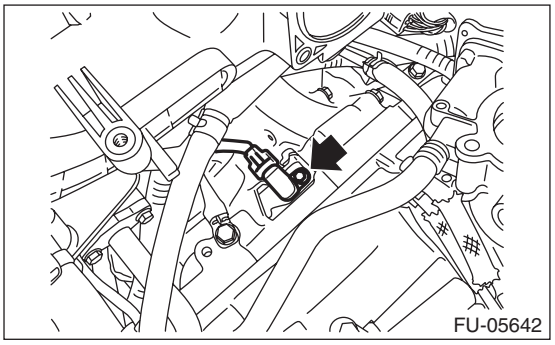

9) Disconnect the connector from the crankshaft position sensor.

B: INSTALLATION

Install in the reverse order of removal.

Tightening torque:
6.4 N·m (0.7 kgf-m, 4.7 ft-lb)

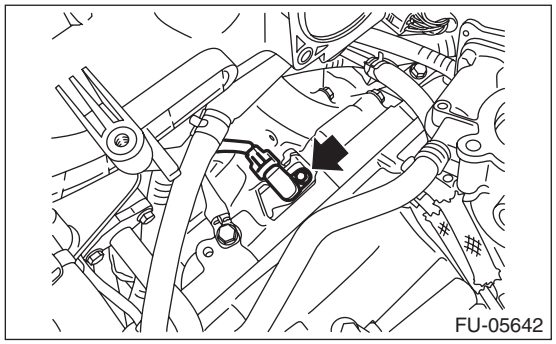

Tightening torque:
Clamp (A)
3 N·m (0.3 kgf-m, 2.2 ft-lb)
Bolt (B)
6.5 N·m (0.7 kgf-m, 4.8 ft-lb)

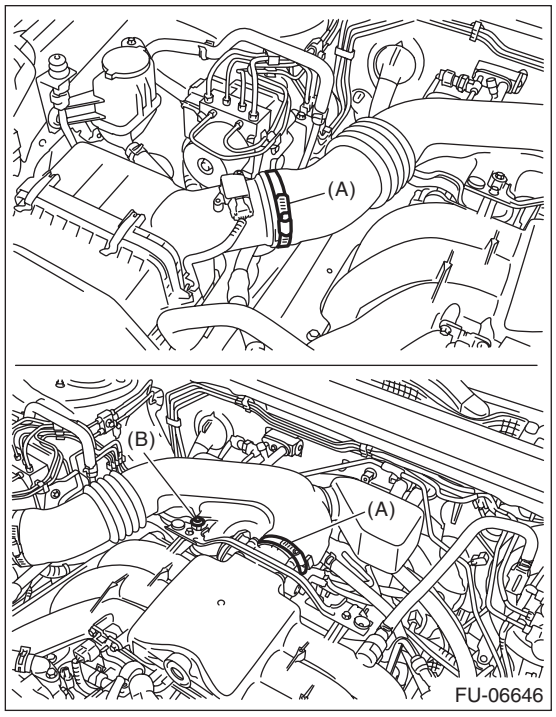

C: INSPECTION

1. CRANKSHAFT POSITION SENSOR (METHOD WITH CIRCUIT TESTER)

Measure the resistance between crankshaft position sensor terminals.

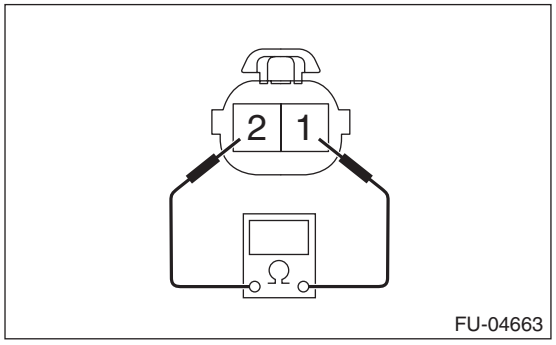

Terminal No.	Standard
1 and 2	1.86±0.186 kΩ

2. CRANKSHAFT POSITION SENSOR (METHOD WITH OSCILLOSCOPE)

1) Prepare an oscilloscope.
2) Remove the glove box lid assembly. <Ref. to EI-66, REMOVAL, Glove Box.>
3) Connect the probe to ECM connector.

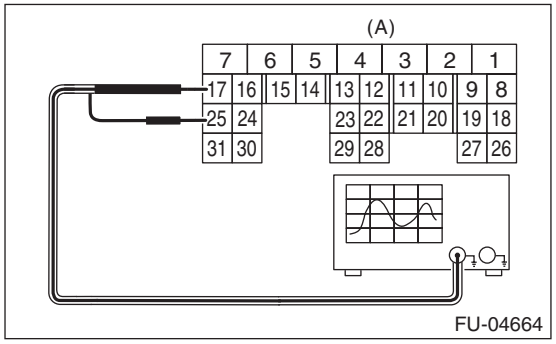

(A) To ECM connector

Terminal No.	Probe
17	+
25	–

4) Start the engine and let it idle.

5) Check that the pattern is the same as the waveform and voltage shown below.

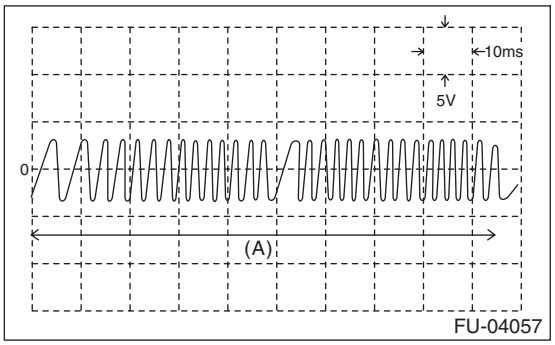

(A) One crankshaft rotation

6) After inspection, install the related parts in the reverse order of removal.

3. OTHER INSPECTIONS

Check that the crankshaft position sensor has no deformation, cracks or other damages.

6. Camshaft Position Sensor

A: REMOVAL

1. INTAKE SIDE

1) Remove the collector cover.

NOTE:
Follow the steps below when removing the collector cover.
(1) Pull up the two points at the rear (A).
(2) Pull up the two points at the front (B) while moving them forward.

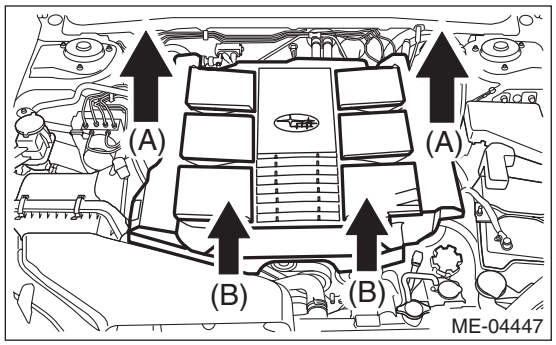

2) Release the fuel pressure. <Ref. to FU(H6DO)-59, RELEASING OF FUEL PRESSURE, PROCEDURE, Fuel.>
3) Remove the battery and battery carrier. <Ref. to SC(H4SO)-28, REMOVAL, Battery.>
4) Open the fuel filler lid and remove the fuel filler cap.
5) Remove the securing clips from the two locations on the fuel pipe protector LH.

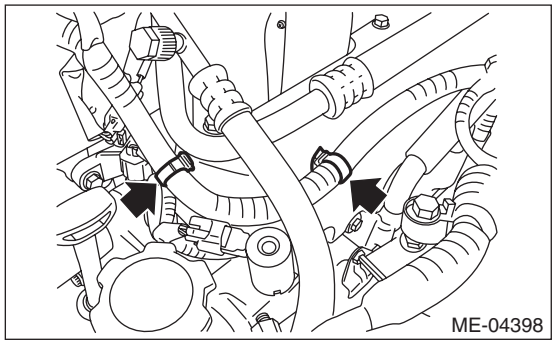

6) Disconnect the PCV hose.

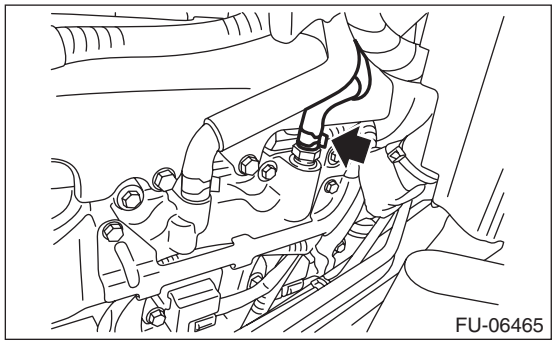

7) Remove the fuel pipe protector LH.

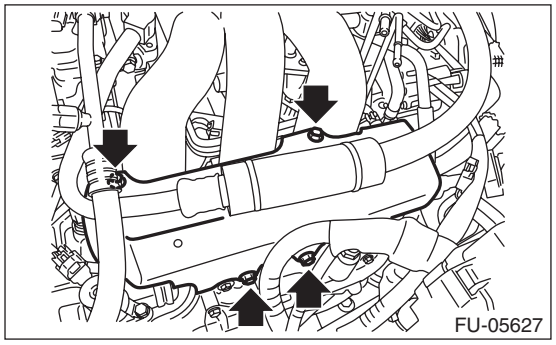

8) Disconnect the connectors of the oil temperature sensor, engine coolant temperature sensor and intake oil flow control solenoid valve LH.

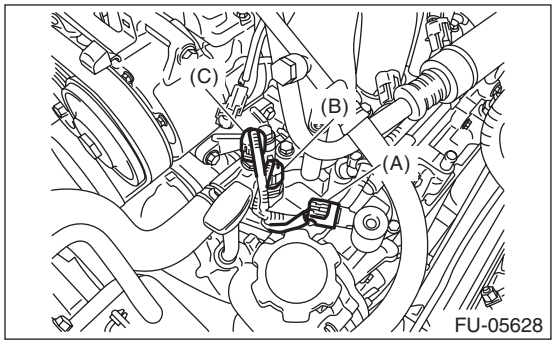

(A) Intake oil flow control solenoid valve LH
(B) Oil temperature sensor
(C) Engine coolant temperature sensor

9) Remove the bolts which hold fuel injector pipe LH to cylinder head.

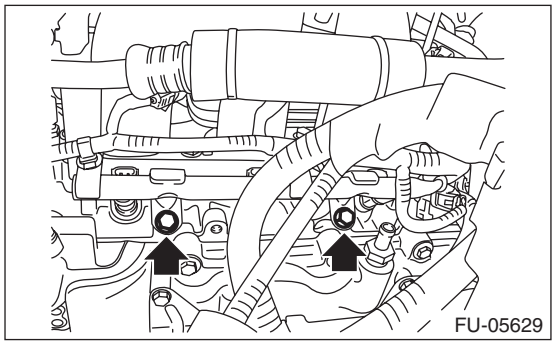

10) Slightly raise the fuel injector pipe LH.
11) Disconnect the connector from intake camshaft position sensor LH.

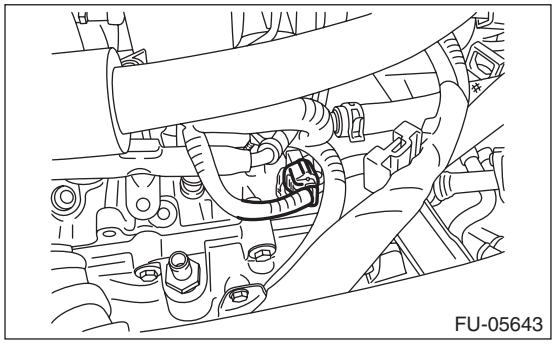

12) Remove the intake camshaft position sensor LH.

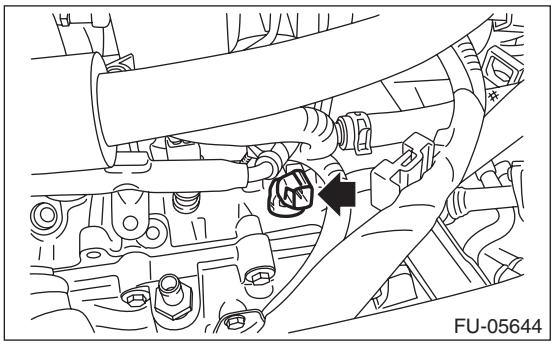

13) Remove the intake camshaft position sensor RH in the same procedure as LH side.

2. EXHAUST SIDE

1) Disconnect the ground cable from battery.
2) Lift up the vehicle.
3) Remove the under cover. <Ref. to EI-35, REMOVAL, Front Under Cover.>
4) Disconnect the connector from exhaust camshaft position sensor LH.

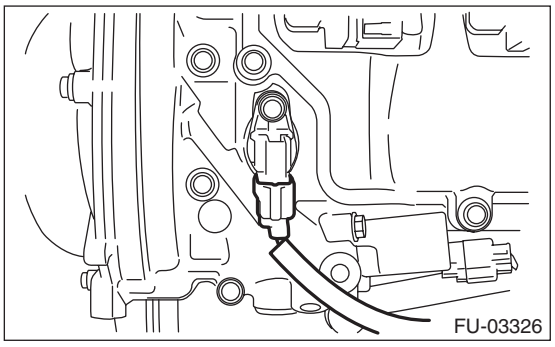

5) Remove the exhaust camshaft position sensor LH.

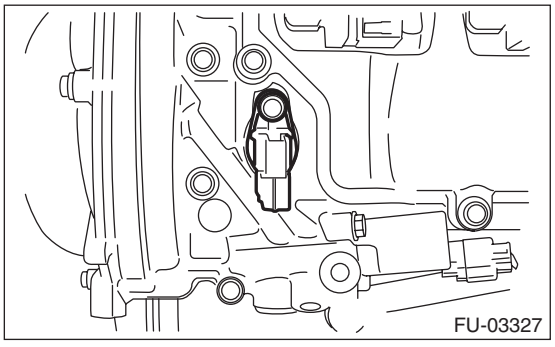

6) Remove the exhaust camshaft position sensor RH in the same procedure as LH side.

B: INSTALLATION

1. INTAKE SIDE

Install in the reverse order of removal.

Tightening torque:
Intake camshaft position sensor
6.4 N·m (0.7 kgf-m, 4.7 ft-lb)
Fuel pipe protector
19 N·m (1.9 kgf-m, 14.0 ft-lb)

2. EXHAUST SIDE

Tightening torque:
Exhaust camshaft position sensor
6.4 N·m (0.7 kgf-m, 4.7 ft-lb)

C: INSPECTION

1. CAMSHAFT POSITION SENSOR (METHOD WITH OSCILLOSCOPE)

1) Prepare an oscilloscope.
2) Remove the glove box lid assembly. <Ref. to EI-66, REMOVAL, Glove Box.>
3) Connect the probe to ECM connector.
- Intake camshaft position sensor

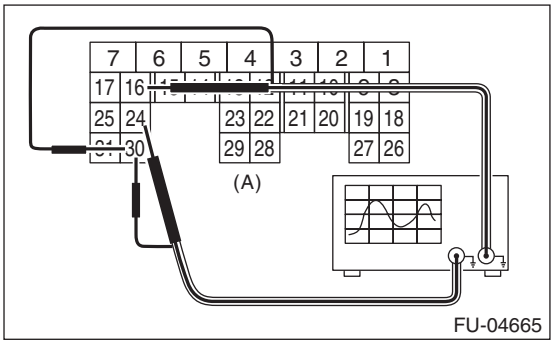

(A) To ECM connector

Camshaft position sensor	Terminal No.	Probe
RH	24	+
LH	16	+
RH and LH	30	–

- Exhaust camshaft position sensor

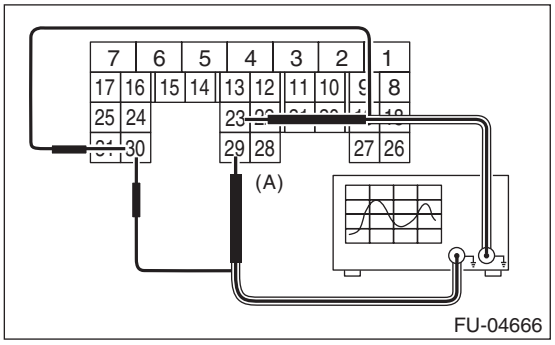

(A) To ECM connector

Camshaft position sensor	Terminal No.	Probe
RH	23	+
LH	29	+
RH and LH	30	–

4) Start the engine and let it idle.
5) Check that the pattern is the same as the waveform and voltage shown below.

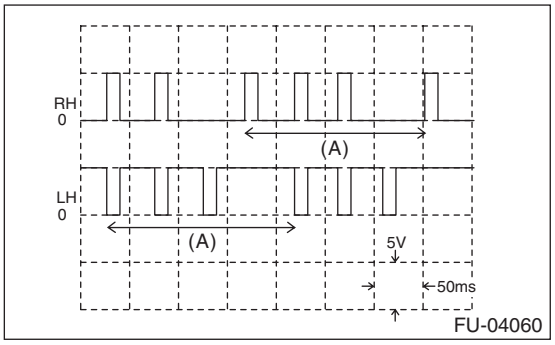

(A) One camshaft rotation

6) After inspection, install the related parts in the reverse order of removal.

2. OTHER INSPECTIONS

Check that the camshaft position sensor has no deformation, cracks or other damages.

7. Knock Sensor

A: REMOVAL

1) Remove the collector cover.

NOTE:
Follow these procedures for removal of the collector cover.

(1) Lift up the rear side holding two positions (A).
(2) Lift up the front side holding two positions (B) while moving it in the forward direction of the vehicle.

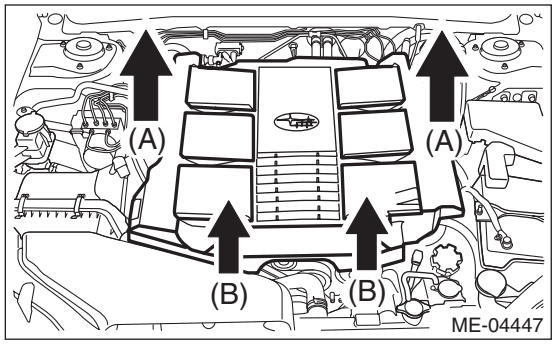

2) Disconnect the ground cable from battery.
3) Remove the intake manifold. <Ref. to FU(H6DO)-21, REMOVAL, Intake Manifold.>
4) Disconnect the knock sensor connector.
5) Remove the knock sensor from cylinder block.

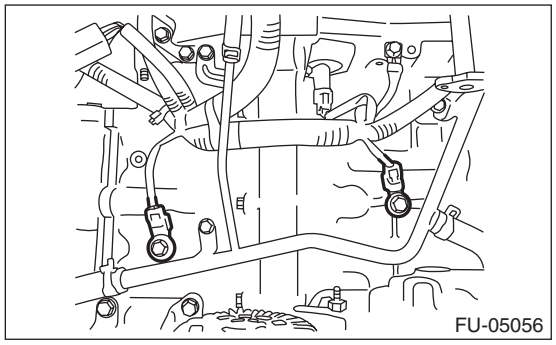

B: INSTALLATION

1) Install the knock sensor to the cylinder block.

Tightening torque:
25 N·m (2.5 kgf-m, 18.4 ft-lb)

NOTE:
For the knock sensor installation angle, refer to the figure below.

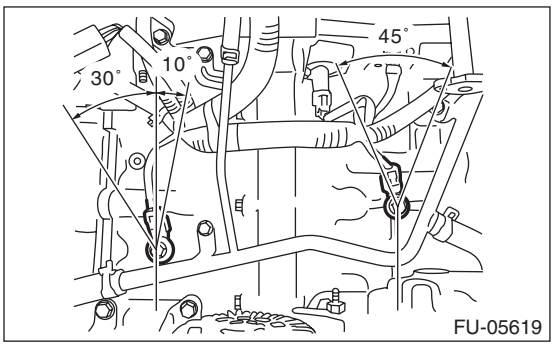

2) Connect the knock sensor connector.
3) Install the intake manifold. <Ref. to FU(H6DO)-24, INSTALLATION, Intake Manifold.>
4) Connect the battery ground terminal.
5) Install the collector cover.

C: INSPECTION

1) Check that the knock sensor has no deformation, cracks or other damages.
2) Measure the resistance between knock sensor terminals.

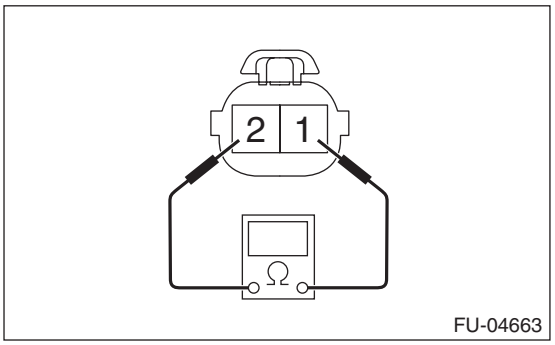

Terminal No.	Standard
1 and 2	560±28 kΩ

8. Throttle Position Sensor

A: SPECIFICATION

Throttle body is a non-disassembled part, so do not remove the throttle position sensor from throttle body.
Refer to “Throttle Body” for removal and installation procedure. <Ref. to FU(H6DO)-19, REMOVAL, Throttle Body.> <Ref. to FU(H6DO)-20, INSTALLATION, Throttle Body.>

9. Manifold Absolute Pressure Sensor

A: REMOVAL

1) Remove the collector cover.

NOTE:
Follow these procedures for removal of the collector cover.

(1) Lift up the rear side holding two positions (A).
(2) Lift up the front side holding two positions (B) while moving it in the forward direction of the vehicle.

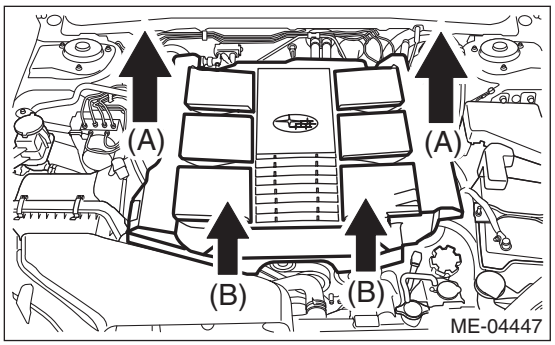

2) Disconnect the ground cable from battery.
3) Disconnect the manifold pressure sensor connector.

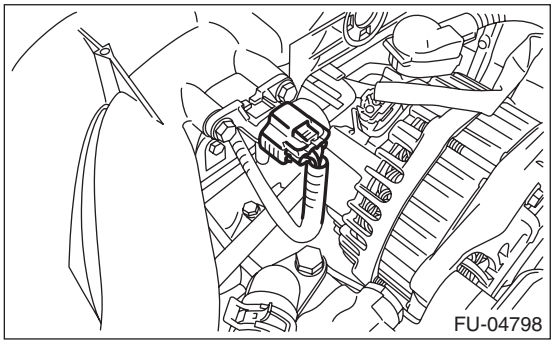

4) Remove the manifold pressure sensor and the filter and hose from intake manifold.

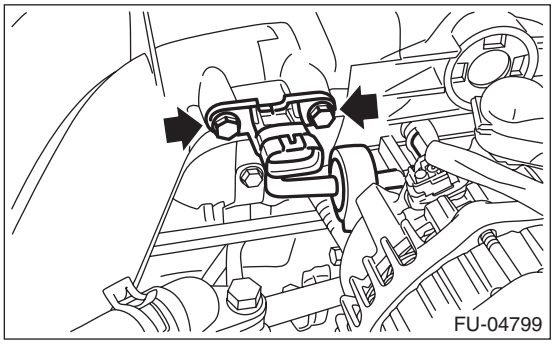

B: INSTALLATION

Install in the reverse order of removal.

Tightening torque:
6.4 N·m (0.7 kgf-m, 4.7 ft-lb)

C: INSPECTION

1) Check that the manifold absolute pressure sensor has no deformation, cracks or other damages.
2) Connect dry-cell battery positive terminal to terminal No. 3 and dry-cell battery ground terminal to terminal No. 2, circuit tester ground terminal to terminal No. 2 and the circuit tester positive terminal to terminal No. 1.

NOTE:
- Use new dry-cell batteries.
- Using circuit tester, check the voltage of a single dry-cell battery is 1.6 V or more. And also check the voltage of three batteries in series is between 4.8 V and 5.2 V.

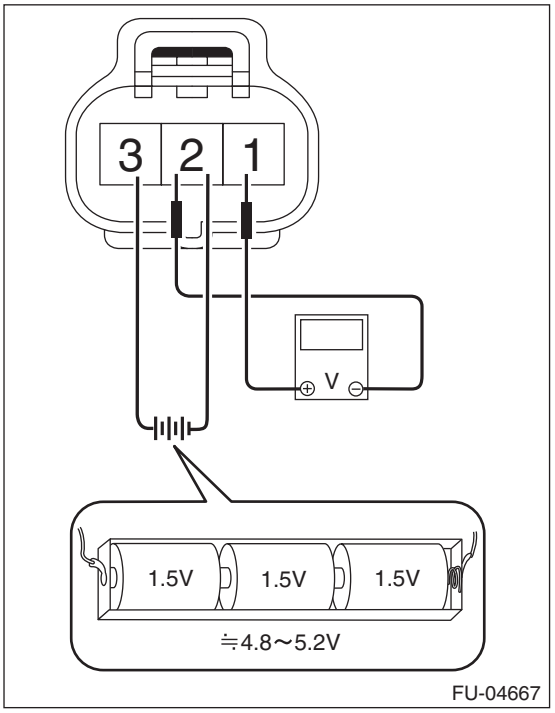

3) Connect the Mighty Vac to the pressure port (A) of manifold absolute pressure sensor.

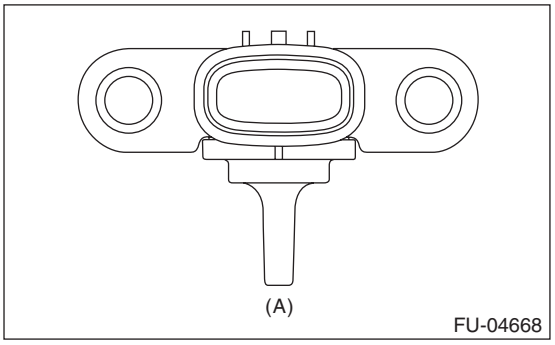

4) Check the voltage when generating vacuum and positive pressure using Mighty Vac.

CAUTION:
Do not apply vacuum of less than –88 kPa (–0.9 kgf/cm^2, –12.8 psi). Doing so may damage the manifold absolute pressure sensor.

NOTE:
When vacuum occurs at the pressure port of manifold absolute pressure sensor, the voltage will drop from the value as in step 3). When positive pressure occurs, on the other hand, the voltage will rise.

Pressure	Terminal No.	Standard
–88 kPa (–0.9 kgf/cm^2, –12.8 psi)	2 (+) and 1 (–)	Approx. 1 V (when 25°C (77°F))
–35 kPa (–0.4 kgf/cm^2, –5.1 psi)		Approx. 2.6 V (when 25°C (77°F))
19 kPa (–0.2 kgf/cm^2, 2.8 psi)		Approx. 4.2 V (when 25°C (77°F))

10.Mass Air Flow and Intake Air Temperature Sensor

A: REMOVAL

1) Disconnect the ground cable from battery.
2) Disconnect the connector (A) from air flow and intake air temperature sensor.

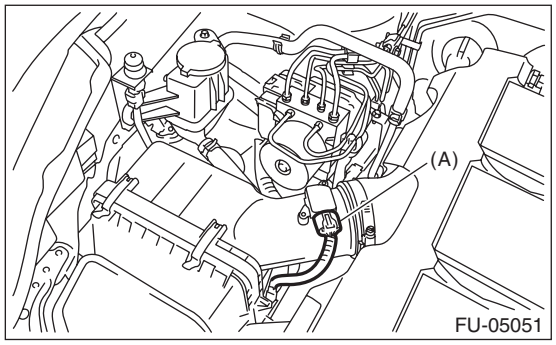

3) Remove the mass air flow and intake air temperature sensor.

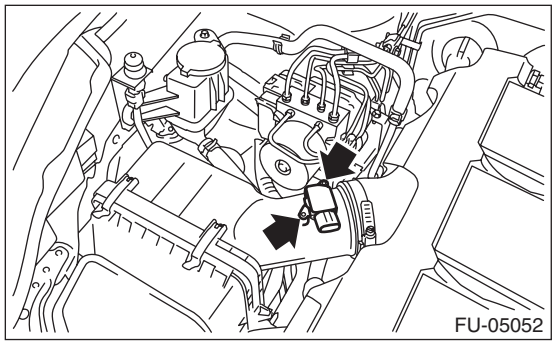

B: INSTALLATION

Install in the reverse order of removal.

Tightening torque:
1 N·m (0.1 kgf-m, 0.7 ft-lb)

C: INSPECTION

1. CHECK MASS AIR FLOW SENSOR UNIT

1) Connect battery positive terminal to terminal No. 3 and battery ground terminal to terminal No. 4, circuit tester positive terminal to terminal No. 5 and the circuit tester negative terminal to terminal No. 4.

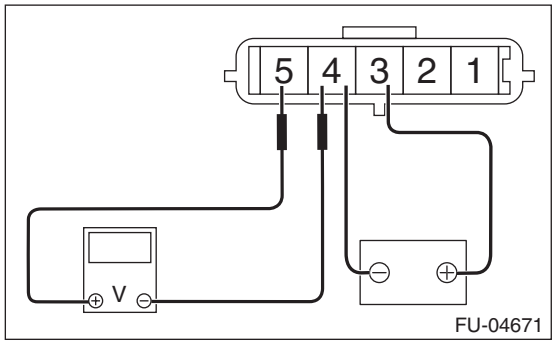

2) Check that the voltage changes when air is blown to the mass air flow sensor unit from arrow direction.

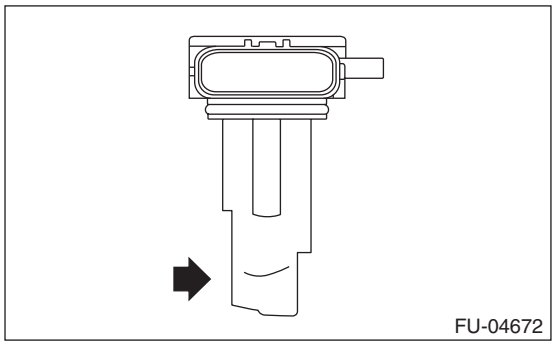

2. CHECK INTAKE AIR TEMPERATURE SENSOR UNIT

Measure the resistance between intake air temperature sensor terminals.

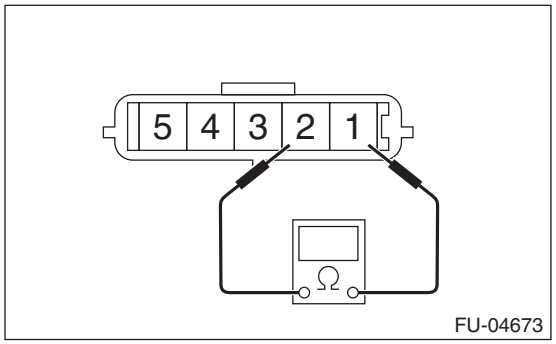

Temperature	Terminal No.	Standard
–20°C (–4°F)	1 and 2	16.0±2.4 kΩ
20°C (68°F)		2.45±0.24 kΩ
60°C (140°F)		0.58±0.087 kΩ

3. OTHER INSPECTIONS

1) Check that the mass air flow and intake air temperature sensor has no deformation, cracks or other damages.
2) Check that the mass air flow and intake air temperature sensor has no dirt.

11.EGR Valve

A: REMOVAL

1) Remove the collector cover.

NOTE:
Follow the steps below when removing the collector cover.
(1) Pull up the two points at the rear (A).
(2) Pull up the two points at the front (B) while moving them forward.

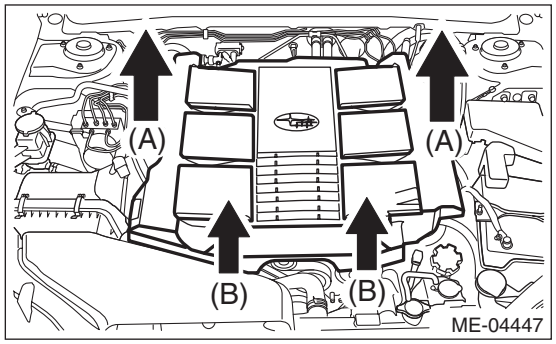

2) Disconnect the ground cable from battery.
3) Loosen the clamp (A) which connects the air intake boot assembly.
4) Loosen the bolt (B) which secures the air intake boot assembly to the collector cover bracket.

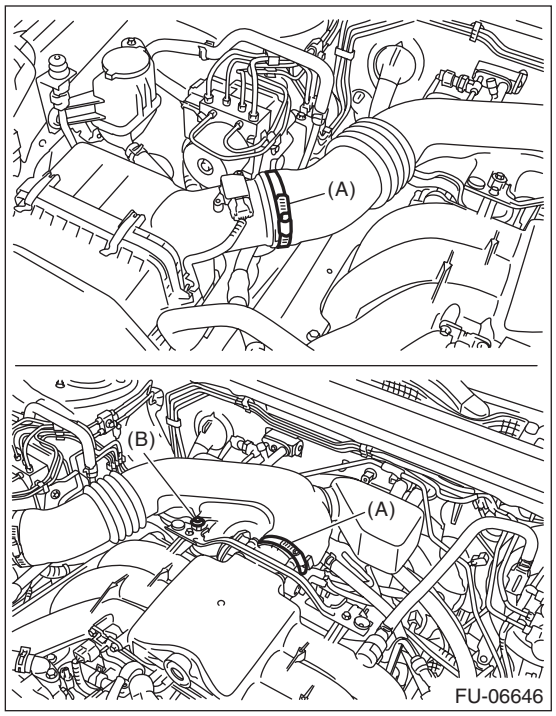

5) Remove the air intake boot assembly, and move it to the left side wheel apron.

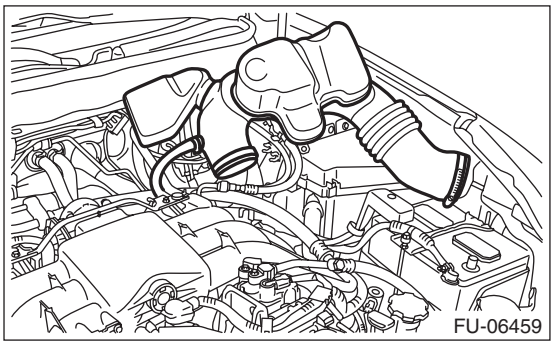

6) Remove the starter. <Ref. to SC(H4SO)-9, REMOVAL, Starter.>
7) Remove the EGR pipe from EGR valve and cylinder head.
8) Remove the EGR valve from intake manifold.

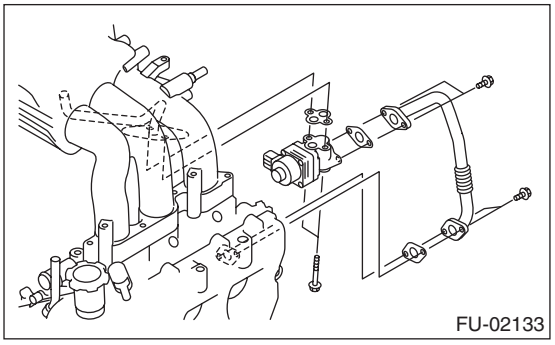

9) Disconnect the connector from EGR valve.

B: INSTALLATION

Install in the reverse order of removal.

NOTE:
Use a new gasket.

Tightening torque:
EGR valve
19 N·m (1.9 kgf-m, 14.0 ft-lb)
EGR pipe
6.4 N·m (0.7 kgf-m, 4.7 ft-lb)

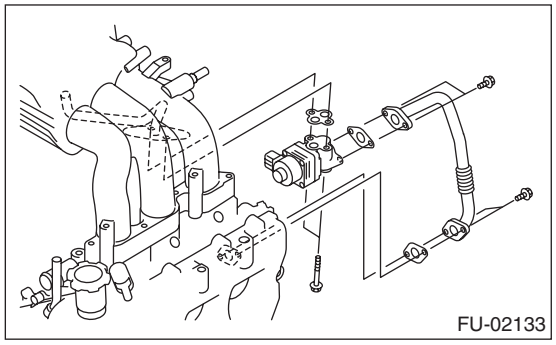

Tightening torque:
Clamp (A)
3 N·m (0.3 kgf-m, 2.2 ft-lb)
Bolt (B)
6.5 N·m (0.7 kgf-m, 4.8 ft-lb)

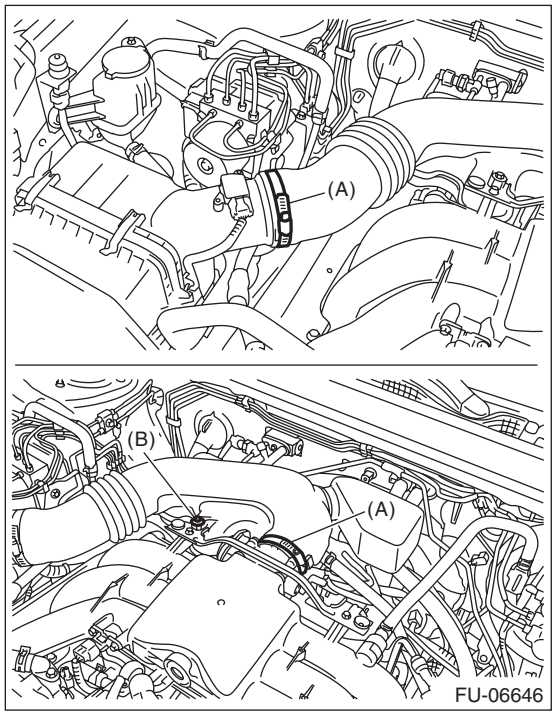

C: INSPECTION

1) Check that the EGR valve has no deformation, cracks or other damages.
2) Measure the resistance between EGR valve terminals.

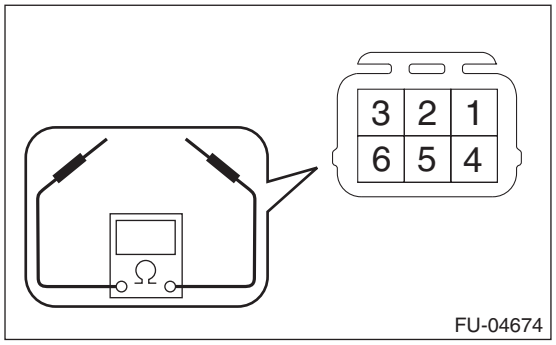

Terminal No.	Standard
2 and 1	22±2 Ω
2 and 3	22±2 Ω
5 and 4	22±2 Ω
5 and 6	22±2 Ω

12.Fuel Injector

A: REMOVAL

1. RH SIDE

1) Remove the collector cover.

NOTE:
Follow the steps below when removing the collector cover.
(1) Pull up the two points at the rear (A).
(2) Pull up the two points at the front (B) while moving them forward.

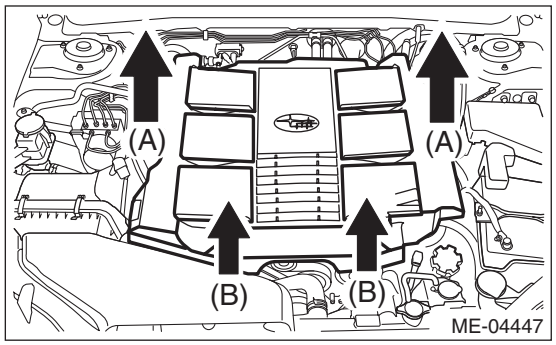

2) Release the fuel pressure. <Ref. to FU(H6DO)-59, RELEASING OF FUEL PRESSURE, PROCEDURE, Fuel.>
3) Disconnect the ground cable from battery.
4) Open the fuel filler lid and remove the fuel filler cap.
5) Loosen the clamp (A) which connects the air intake boot assembly.
6) Loosen the bolt (B) which secures the air intake boot assembly to the collector cover bracket.

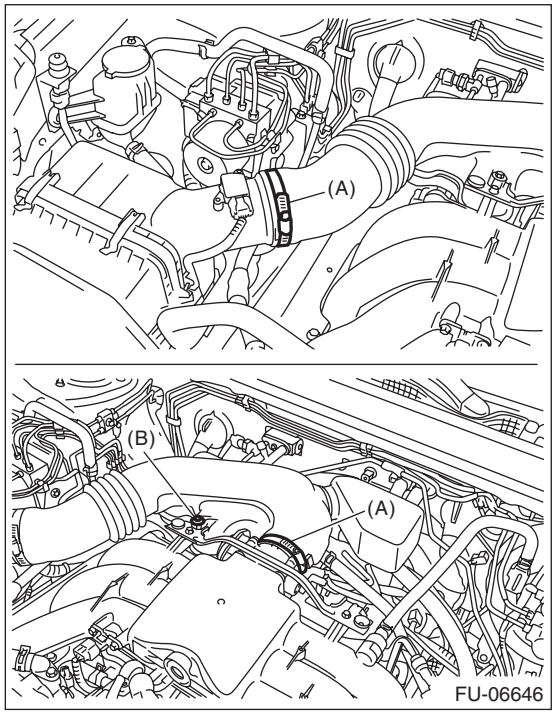

7) Remove the air intake boot assembly, and move it to the left side wheel apron.

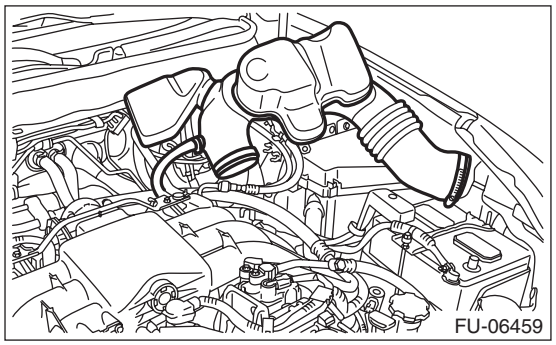

8) Remove the air cleaner case. <Ref. to IN(H6DO)-5, REMOVAL, Air Cleaner Case.>
9) Remove the fuel pipe protector RH.

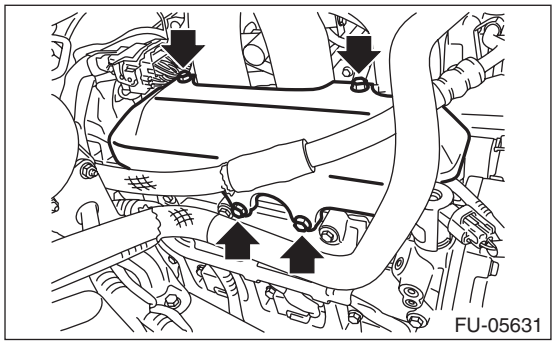

10) Disconnect the connector from fuel injector.
11) Remove the bolt which holds fuel injector pipe onto cylinder head.

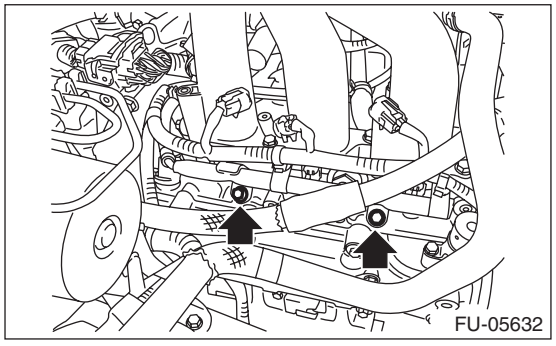

12) Remove the fuel injector while lifting up the fuel injector pipe.

2. LH SIDE

1) Remove the collector cover.

NOTE:
Follow the steps below when removing the collector cover.
(1) Pull up the two points at the rear (A).
(2) Pull up the two points at the front (B) while moving them forward.

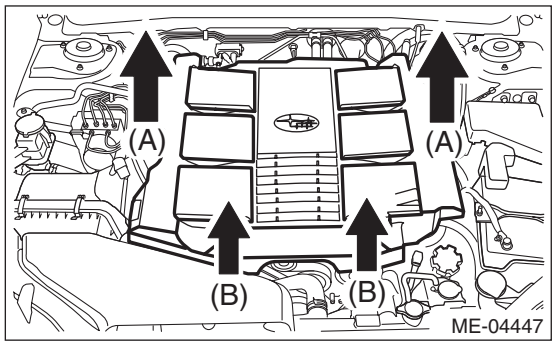

2) Release the fuel pressure. <Ref. to FU(H6DO)-59, RELEASING OF FUEL PRESSURE, PROCEDURE, Fuel.>
3) Remove the battery and battery carrier. <Ref. to SC(H4SO)-28, REMOVAL, Battery.>
4) Open the fuel filler lid and remove the fuel filler cap.
5) Remove the securing clips from the two locations on the fuel pipe protector LH.

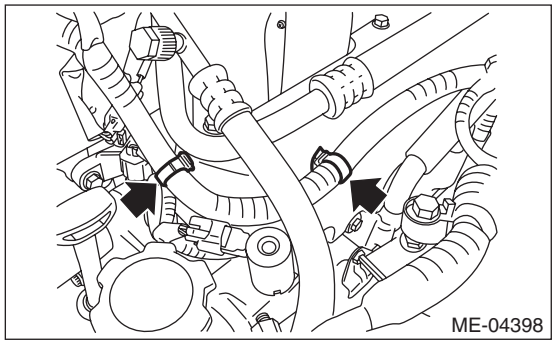

6) Disconnect the PCV hose.

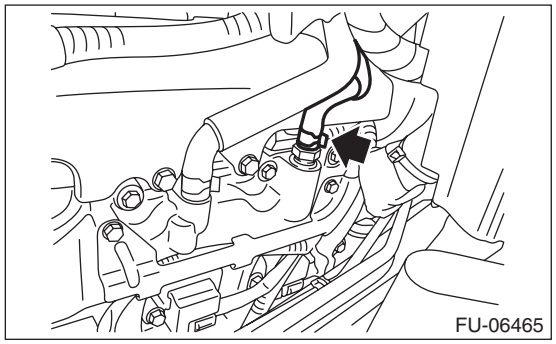

7) Remove the fuel pipe protector LH.

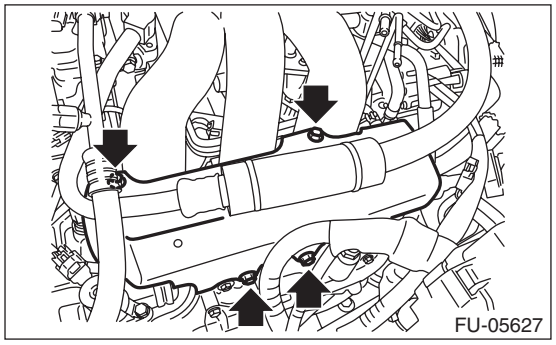

8) Disconnect the connector from fuel injector.
9) Remove the bolt which holds fuel injector pipe onto cylinder head.

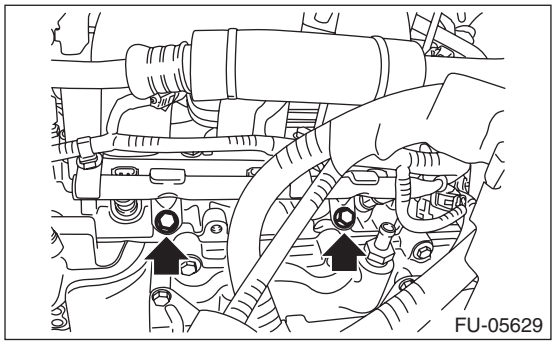

10) Remove the fuel injector while lifting up the fuel injector pipe.

B: INSTALLATION

1. RH SIDE

Install in the reverse order of removal.

NOTE:
Use new O-rings, injection rubbers, and seal rings.

Tightening torque:
19 N·m (1.9 kgf-m, 14.0 ft-lb)

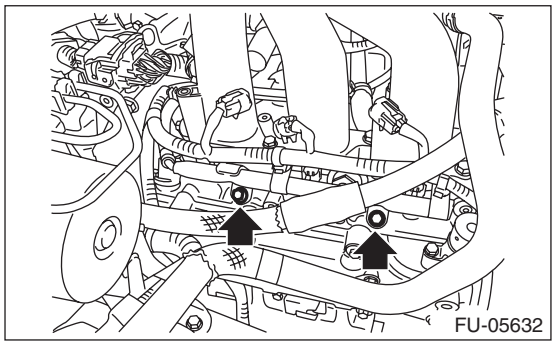

Tightening torque:
19 N·m (1.9 kgf-m, 14.0 ft-lb)

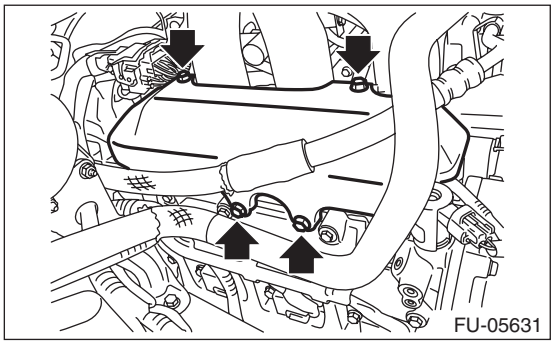

Tightening torque:
Clamp (A)
3 N·m (0.3 kgf-m, 2.2 ft-lb)
Bolt (B)
6.5 N·m (0.7 kgf-m, 4.8 ft-lb)

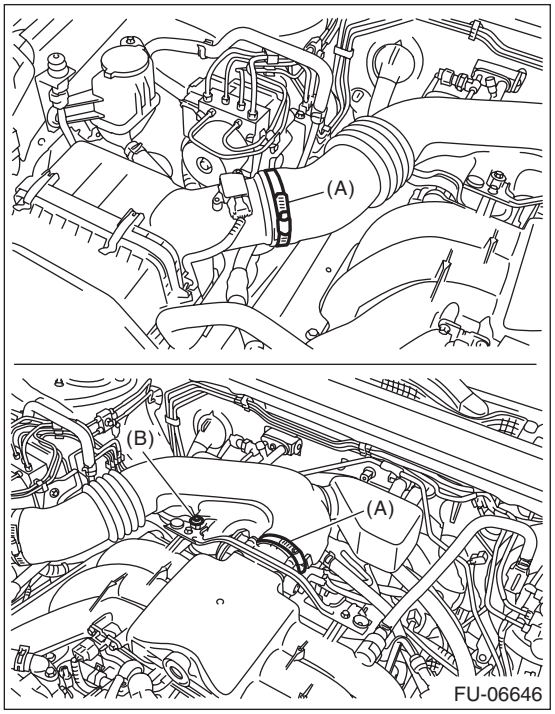

2. LH SIDE

Install in the reverse order of removal.

NOTE:
Use new O-rings, injection rubbers, and seal rings.

Tightening torque:
19 N·m (1.9 kgf-m, 14.0 ft-lb)

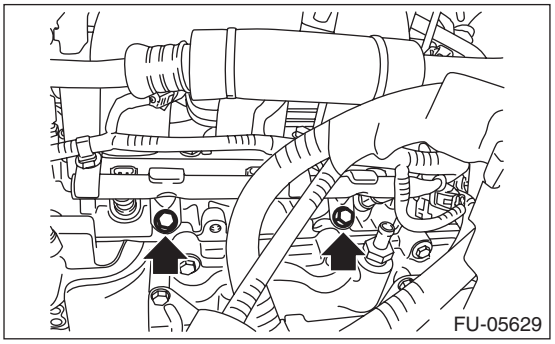

Tightening torque:
19 N·m (1.9 kgf-m, 14.0 ft-lb)

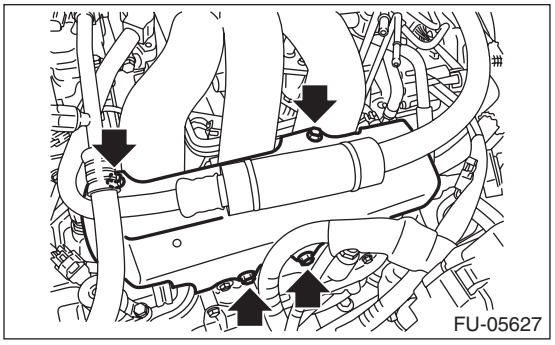

C: INSPECTION

1) Check that the fuel injector has no deformation, cracks or other damages.
2) Measure the resistance between fuel injector terminals.

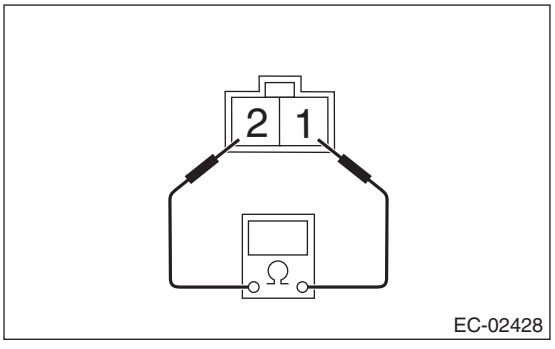

Terminal No.	Standard
1 and 2	Approx. 12.0 Ω (when 20°C (68°F))

13. Oil Flow Control Solenoid Valve

A: REMOVAL

1. INTAKE SIDE

1) Remove the collector cover.

NOTE:
Follow the steps below when removing the collector cover.
(1) Pull up the two points at the rear (A).
(2) Pull up the two points at the front (B) while moving them forward.

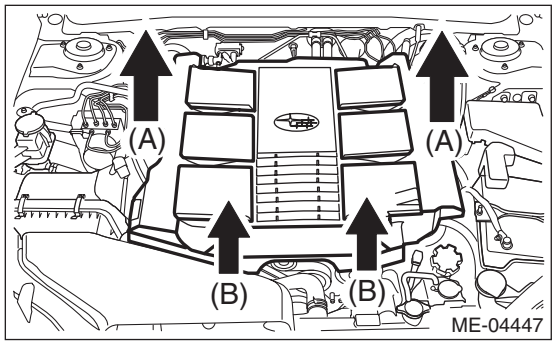

2) Disconnect the ground cable from battery.
3) Disconnect the connector from the intake oil flow control solenoid valve RH.

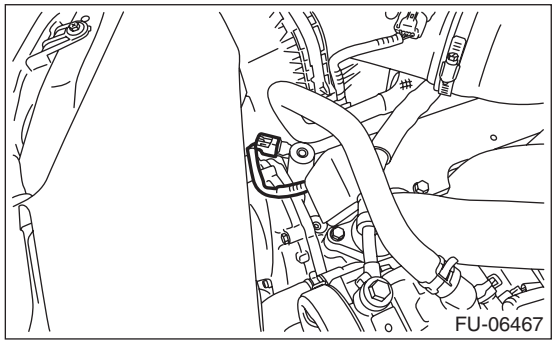

4) Remove the intake oil flow control solenoid valve RH.

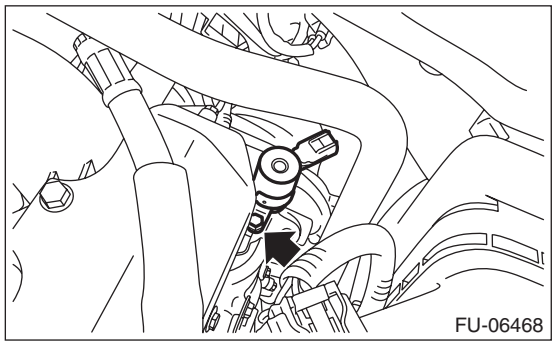

5) Remove the intake oil flow control solenoid valve LH in the same procedure as the intake oil flow control solenoid valve RH.

2. EXHAUST SIDE

1) Disconnect the ground cable from battery.
2) Lift up the vehicle.
3) Remove the under cover. <Ref. to EI-35, REMOVAL, Front Under Cover.>
4) Disconnect the connector from the exhaust oil flow control solenoid valve LH.

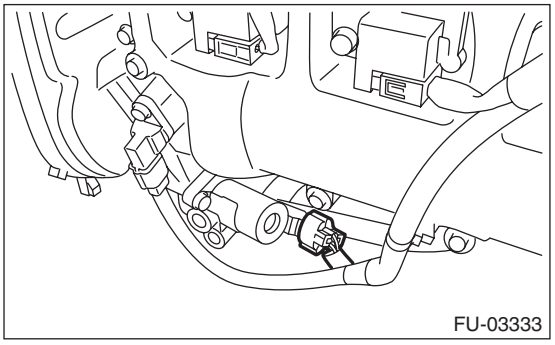

5) Remove the exhaust oil flow control solenoid valve LH.

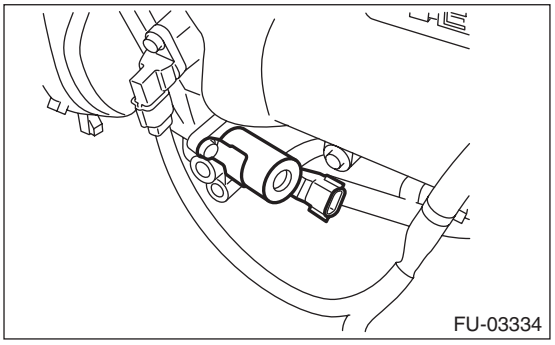

6) Remove the exhaust oil flow control solenoid valve RH in the same procedure as the exhaust oil flow control solenoid valve LH.

B: INSTALLATION

1. INTAKE SIDE

Install in the reverse order of removal.

Tightening torque:
Intake oil flow control solenoid valve
6.4 N·m (0.7 kgf-m, 4.7 ft-lb)

2. EXHAUST SIDE

Tightening torque:
Exhaust oil flow control solenoid valve
6.4 N·m (0.7 kgf-m, 4.7 ft-lb)

C: INSPECTION

1) Check that the oil flow control solenoid valve has no deformation, cracks or other damages.
2) Measure the resistance between the oil flow control solenoid valve terminals.

- Intake oil flow control solenoid valve

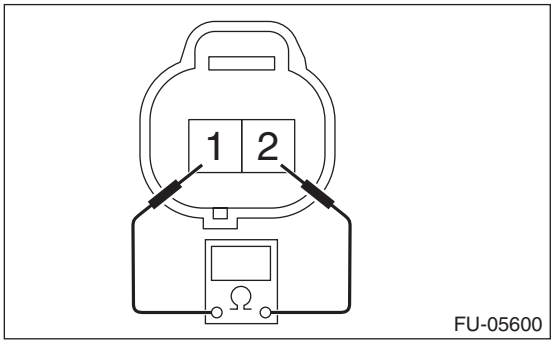

- Exhaust oil flow control solenoid valve

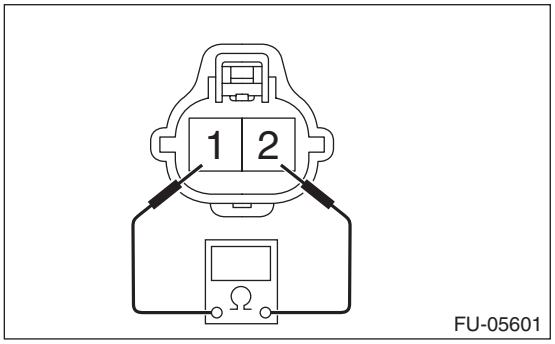

Terminal No.	Standard
1 and 2	7.4±0.5 Ω (when 20°C (68°F))

14.Oil Temperature Sensor

A: REMOVAL

1) Remove the collector cover.

NOTE:
Follow these procedures for removal of the collector cover.

(1) Lift up the rear side holding two positions (A).
(2) Lift up the front side holding two positions (B) while moving it in the forward direction of the vehicle.

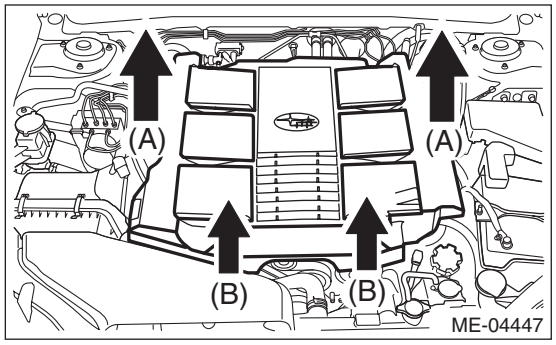

2) Disconnect the ground cable from battery.
3) Disconnect the connector from oil temperature sensor.

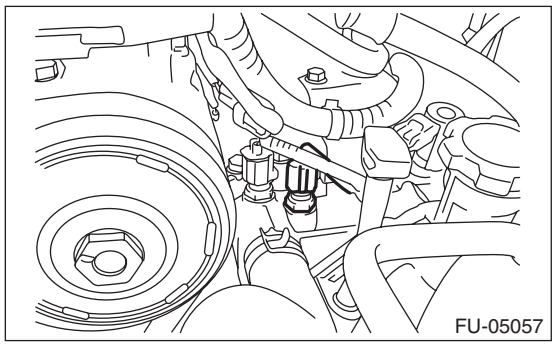

4) Remove the oil temperature sensor.

B: INSTALLATION

Install in the reverse order of removal.

Tightening torque:
22 N·m (2.2 kgf-m, 16.2 ft-lb)

C: INSPECTION

1) Check that the oil temperature sensor has no deformation, cracks or other damages.
2) Check the resistance between the oil temperature sensor terminals.

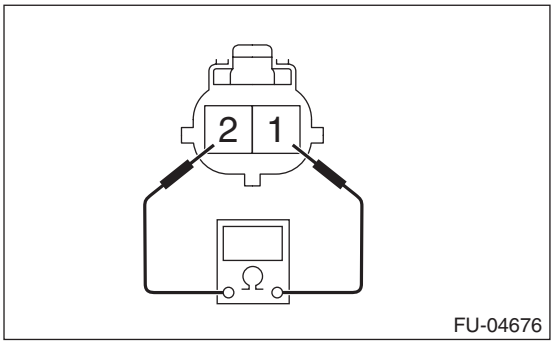

Terminal No.	Standard
1 and 2	2.45±0.2 Ω (when 20°C (68°F))

15.Front Oxygen (A/F) Sensor

A: REMOVAL

1) Disconnect the ground cable from battery.
2) Lift up the vehicle.
3) Disconnect the connector (A) of the front oxygen (A/F) sensor.

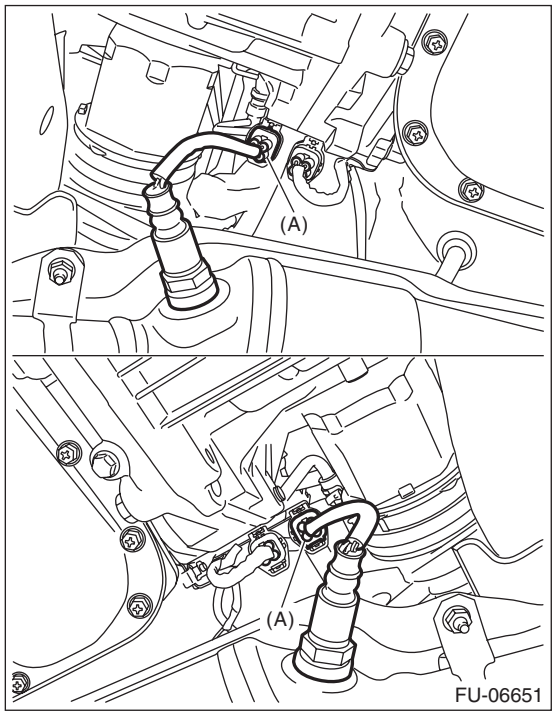

4) Apply spray-type lubricant to the threaded portion of front oxygen (A/F) sensor, and leave it for one minute or more.
5) Remove the front oxygen (A/F) sensor.

CAUTION:
When removing the front oxygen (A/F) sensor, wait until exhaust pipe cools, otherwise it will damage the exhaust pipe.

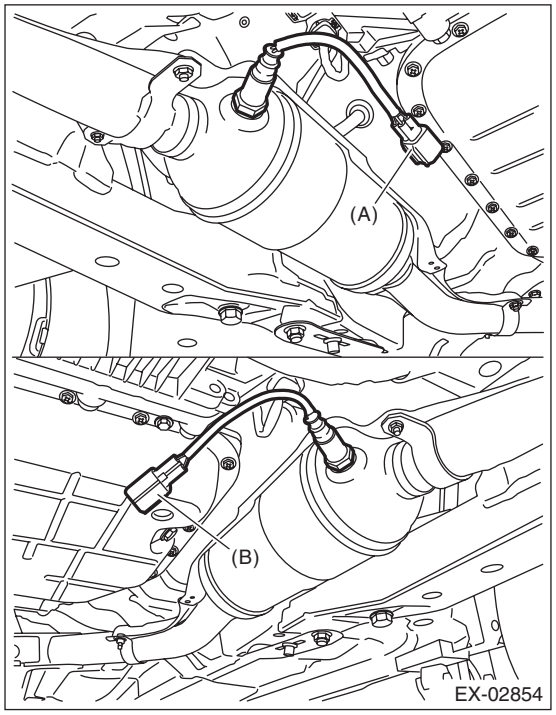

(A) Front oxygen (A/F) sensor RH
(B) Front oxygen (A/F) sensor LH

B: INSTALLATION

CAUTION:
If lubricant is spilt over the exhaust pipe, wipe it off with cloth to avoid emission of smoke or causing a fire.
1) Before installing front oxygen (A/F) sensor, apply anti-seize compound only to the threaded portion of front oxygen (A/F) sensor to make the next removal easier.

CAUTION:
Never apply anti-seize compound to the protector of front oxygen (A/F) sensor.

Anti-seize compound:
NEVER-SEEZ NSN, JET LUBE SS-30 or equivalent

2) Install the front oxygen (A/F) sensor.

Tightening torque:
21 N·m (2.1 kgf-m, 15.5 ft-lb)

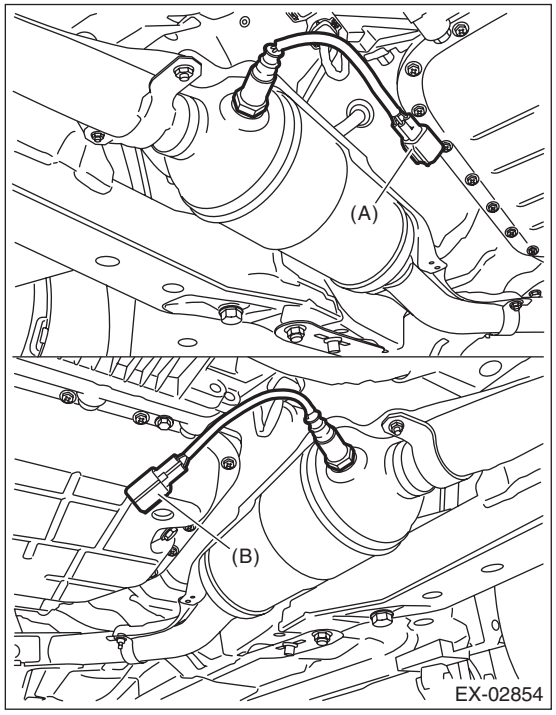

(A) Front oxygen (A/F) sensor RH
(B) Front oxygen (A/F) sensor LH

3) Connect the connector (A) of front oxygen (A/F) sensor.

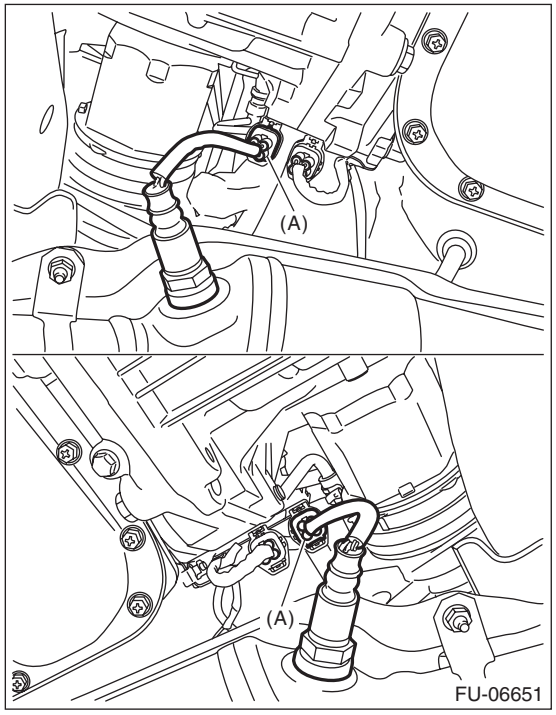

4) Lower the vehicle.
5) Connect the battery ground terminal.

C: INSPECTION

1) Check that the front oxygen (A/F) sensor has no deformation, cracks or other damages.
2) Measure the resistance between front oxygen (A/F) sensor terminals.

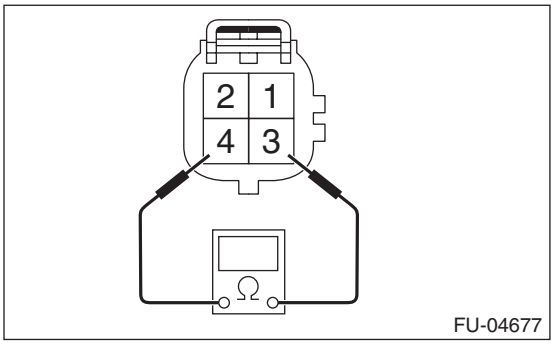

Terminal No.	Standard
3 and 4	2.4±0.24 Ω (when 20°C (68°F))

16.Rear Oxygen Sensor

A: REMOVAL

1) Disconnect the ground cable from battery.
2) Lift up the vehicle.
3) Remove the front exhaust pipe. <Ref. to EX(H6DO)-5, REMOVAL, Front Exhaust Pipe.>
4) Apply spray-type lubricant to the threaded portion of rear oxygen sensor, and leave it for one minute or more.
5) Remove the rear oxygen sensor.

CAUTION:
When removing the rear oxygen sensor, wait until exhaust pipe cools, otherwise it will damage the exhaust pipe.

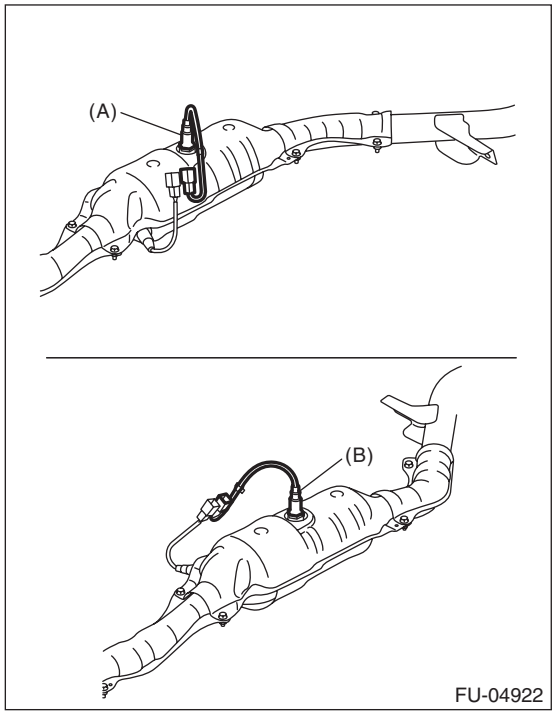

(A) Rear oxygen sensor RH
(B) Rear oxygen sensor LH

B: INSTALLATION

CAUTION:
If lubricant is spilt over the exhaust pipe, wipe it off with cloth to avoid emission of smoke or causing a fire.

1) Before installing rear oxygen sensor, apply the anti-seize compound only to the threaded portion of rear oxygen sensor to make the next removal easier.

CAUTION:
Never apply anti-seize compound to the protector of rear oxygen sensor.

Anti-seize compound:
NEVER-SEEZ NSN, JET LUBE SS-30 or equivalent

2) Install the rear oxygen sensor.

Tightening torque:
21 N·m (2.1 kgf-m, 15.5 ft-lb)

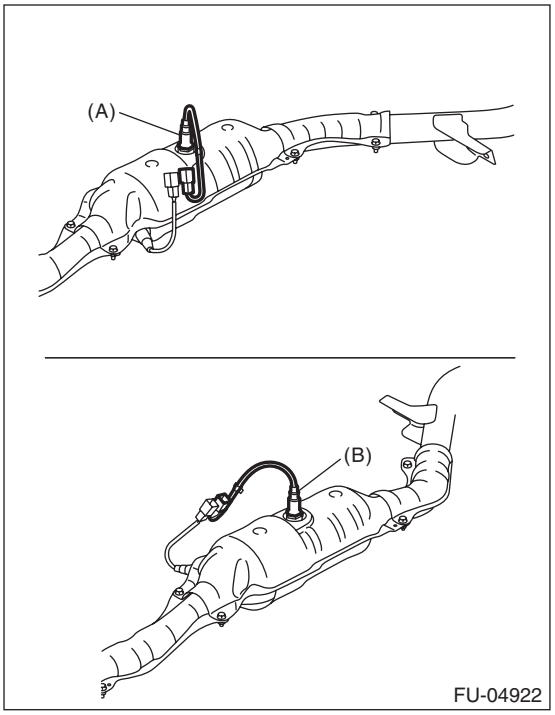

(A) Rear oxygen sensor RH
(B) Rear oxygen sensor LH

3) Install the front exhaust pipe. <Ref. to EX(H6DO)-6, INSTALLATION, Front Exhaust Pipe.>
4) Lower the vehicle.
5) Connect the ground cable to battery.

C: INSPECTION

1) Check the rear oxygen (A/F) sensor for deformation, cracks or other damages.
2) Check the resistance between rear oxygen (A/F) sensor terminals.

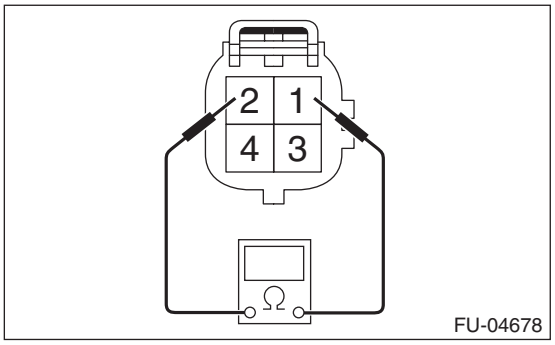

Terminal No.	Standard
1 and 2	$5.6^{+0.8}_{-0.6}$ Ω (when 20°C (68°F))

17.Engine Control Module (ECM)

A: REMOVAL

1) Disconnect the ground cable from battery.
2) Remove the glove box lid assembly. <Ref. to EI-66, REMOVAL, Glove Box.>
3) Disconnect the connectors from ECM.

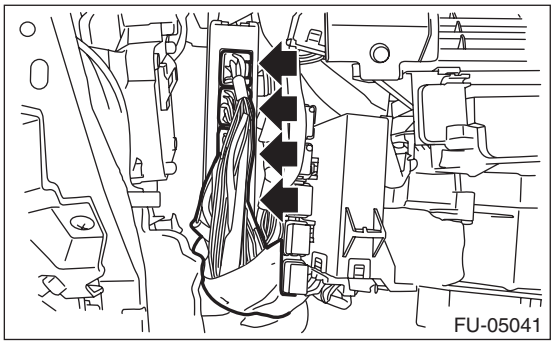

4) Remove the ECM from vehicle.

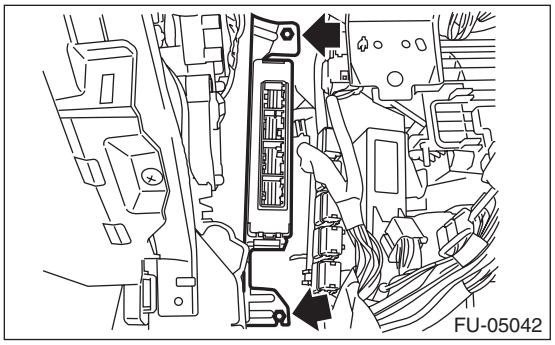

B: INSTALLATION

Install in the reverse order of removal.

Tightening torque:
7.5 N·m (0.8 kgf-m, 5.5 ft-lb)

CAUTION:
• When the ECM of model with immobilizer has been replaced, be sure to perform the registration of immobilizer system. (Refer to "PC application help for Subaru Select Monitor".)
• If replacing ECM or the bracket, replace both parts with new parts at a time.
• After installing the bracket to ECM, do not separate the bracket.
• If the bracket has been installed to ECM in the wrong direction, replace both parts to new parts.

NOTE:
When replacing the ECM, be careful not to use the wrong spec. ECM to avoid any damage on the fuel injection system.

C: INSPECTION

Check that the ECM has no deformation, cracks or other damages.

18.Main Relay

A: REMOVAL

1) Disconnect the ground cable from battery.
2) Remove the glove box lid assembly. <Ref. to EI-66, REMOVAL, Glove Box.>
3) Remove the main relay.

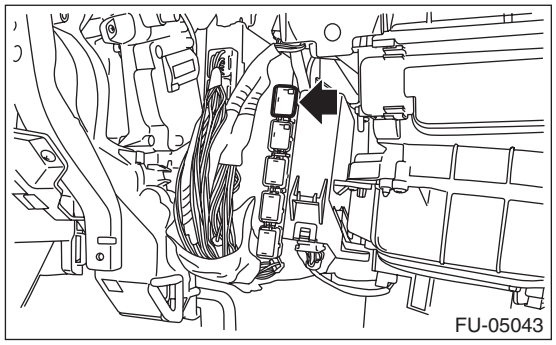

B: INSTALLATION

Install in the reverse order of removal.

C: INSPECTION

1) Check that the main relay has no deformation, cracks or other damages.
2) Measure the resistance between main relay terminals.

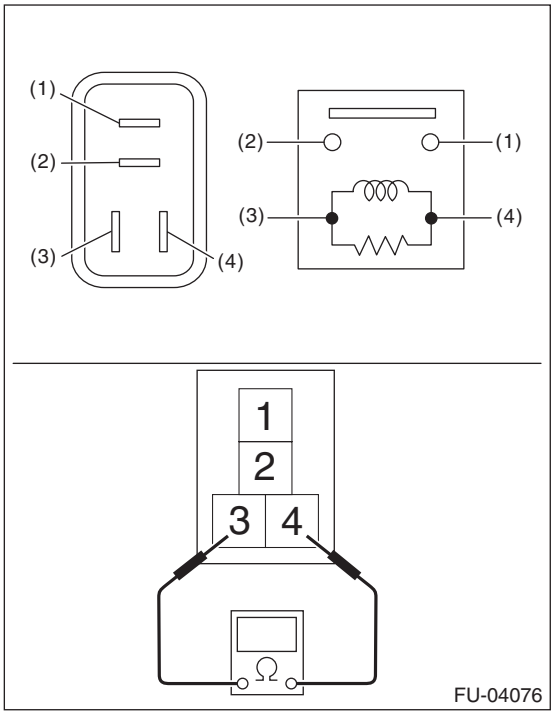

Terminal No.	Standard
1 and 2	1 MΩ or more
3 and 4	130.4 — 230.8 Ω (when 20°C (68°F))

3) Connect battery positive terminal to terminal No. 3 and battery ground terminal to terminal No. 4, and measure the resistance between the main relay terminals.

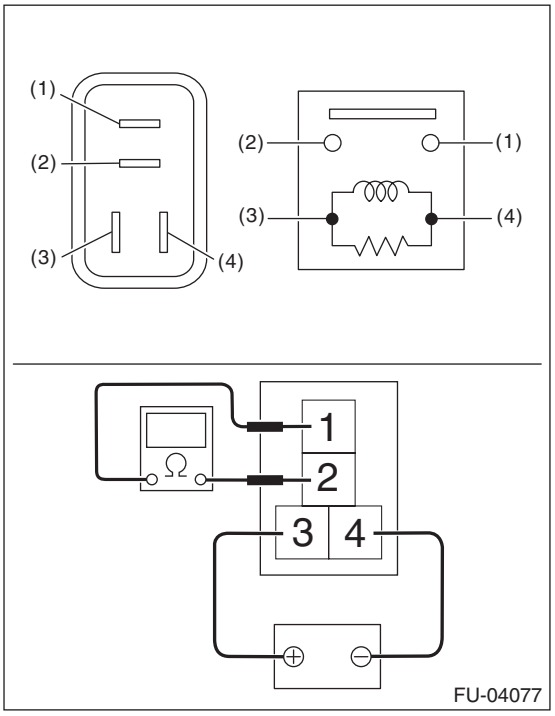

Terminal No.	Standard
1 and 2	Less than 1 Ω

19.Fuel Pump Relay

A: REMOVAL

1) Disconnect the ground cable from battery.
2) Remove the glove box lid assembly. <Ref. to EI-66, REMOVAL, Glove Box.>
3) Remove the fuel pump relay.

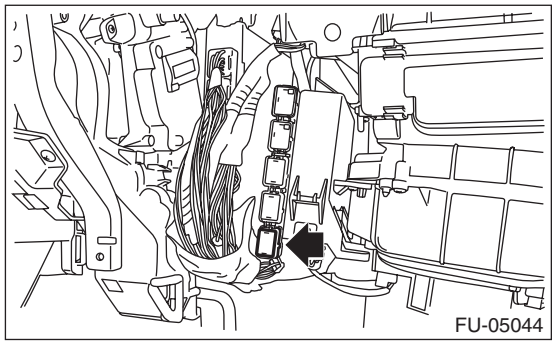

B: INSTALLATION

Install in the reverse order of removal.

C: INSPECTION

1) Check that the fuel pump relay has no deformation, cracks or other damages.
2) Measure the resistance between fuel pump relay terminals.

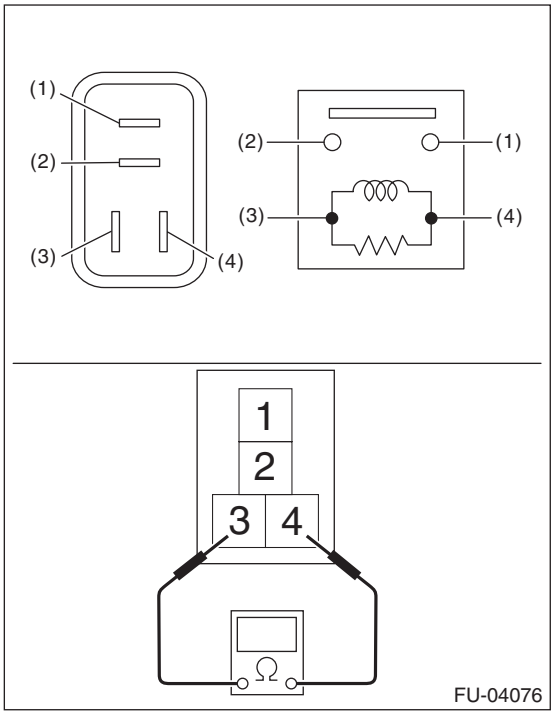

Terminal No.	Standard
1 and 2	1 MΩ or more
3 and 4	93.8 — 136.4 Ω (when 20°C (68°F))

3) Connect battery positive terminal to terminal No. 3 and battery ground terminal to terminal No. 4, and measure the resistance between the fuel pump relay terminals.

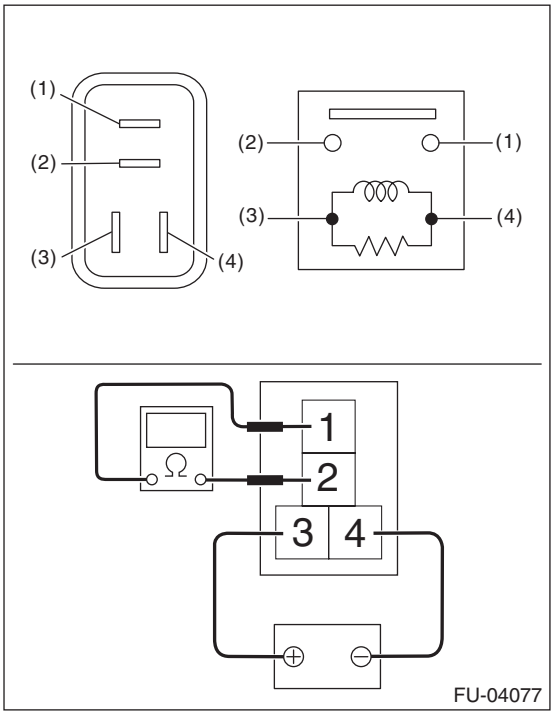

Terminal No.	Standard
1 and 2	Less than 1 Ω

20. Electronic Throttle Control Relay

A: REMOVAL

1) Disconnect the ground cable from battery.
2) Remove the glove box lid assembly. <Ref. to EI-66, REMOVAL, Glove Box.>
3) Remove the electronic throttle control relay.

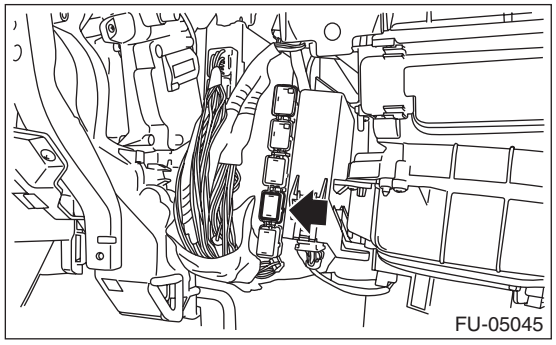

B: INSTALLATION

Install in the reverse order of removal.

C: INSPECTION

1) Check that the electronic throttle control relay has no deformation, cracks or other damages.
2) Measure the resistance between electronic throttle control relay terminals.

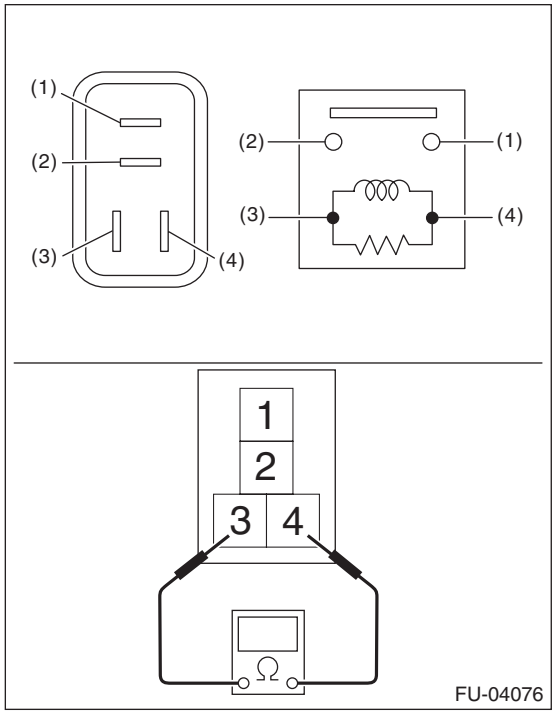

Terminal No.	Standard
1 and 2	1 MΩ or more
3 and 4	93.8 — 136.4 Ω (when 20°C (68°F))

3) Connect battery positive terminal to terminal No. 3 and battery ground terminal to terminal No. 4, and measure the resistance between the electronic throttle control relay terminals.

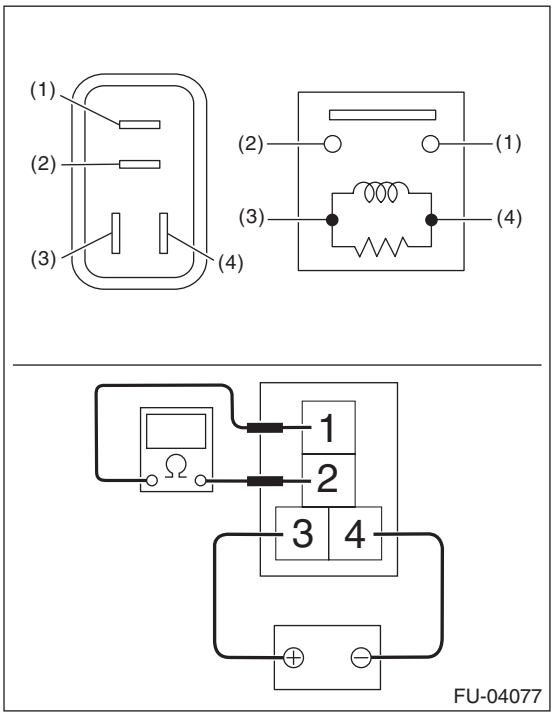

Terminal No.	Standard
1 and 2	Less than 1 Ω

21.Fuel Pump Control Unit

A: REMOVAL

1) Disconnect the ground cable from battery.
2) Remove the trunk trim panel assembly - side on the RH side. (Sedan model) <Ref. to EI-110, REMOVAL, Rear Quarter Trim.>
3) Remove the right side rear quarter trim. (OUTBACK model) <Ref. to EI-110, REMOVAL, Rear Quarter Trim.>
4) Remove the fuel pump control unit.
- Sedan model

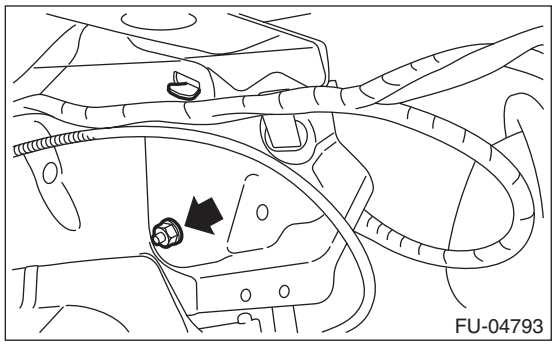

- OUTBACK model

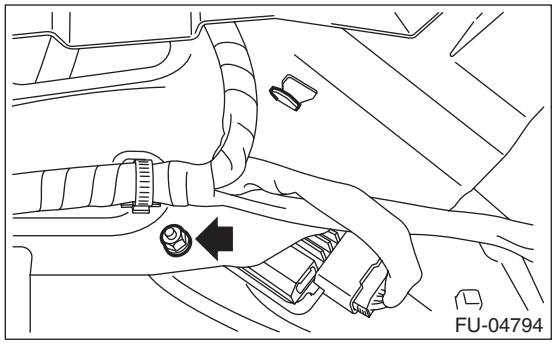

5) Disconnect the connector from fuel pump control unit.
- Sedan model

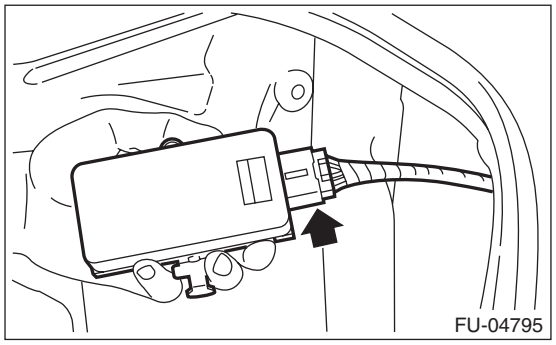

- OUTBACK model

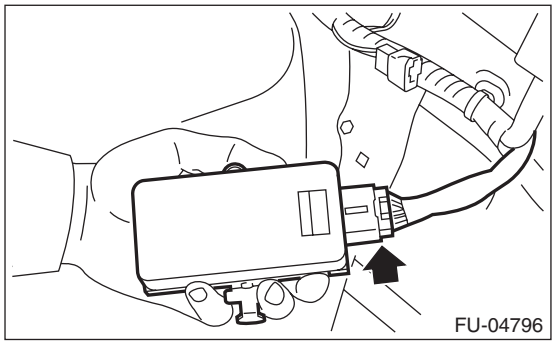

B: INSTALLATION

Install in the reverse order of removal.

Tightening torque:
5 N·m (0.5 kgf-m, 3.7 ft-lb)

C: INSPECTION

Check that the fuel pump control unit has no deformation, cracks or other damages.

22.Fuel

A: PROCEDURE

1. RELEASING OF FUEL PRESSURE

WARNING:
Place "NO OPEN FLAMES" signs near the working area.

CAUTION:
Be careful not to spill fuel.

1) Remove the fuse of fuel pump from main fuse box.

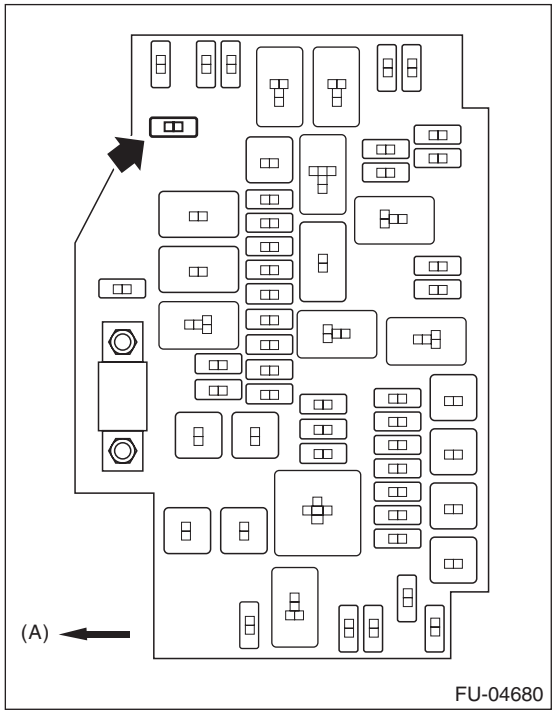

(A) Front side

2) Start the engine and run it until it stalls.
3) After the engine stalls, crank it for five more seconds.
4) Turn the ignition switch to OFF.
5) Install the fuse of fuel pump to the main fuse box.

2. DRAINING FUEL (WITH SUBARU SELECT MONITOR)

WARNING:
Place "NO OPEN FLAMES" signs near the working area.

CAUTION:
Be careful not to spill fuel.

NOTE:
• If the fuel pump cannot be driven, refer to the procedures for draining from the fuel filler hose. <Ref. to FU(H6DO)-60, DRAINING FUEL (THROUGH THE FUEL FILLER HOSE), PROCEDURE, Fuel.>
• Be careful not to let the battery run-out.

1) Release the fuel pressure. <Ref. to FU(H6DO)-59, RELEASING OF FUEL PRESSURE, PROCEDURE, Fuel.>
2) Remove the collector cover.

NOTE:
Follow the steps below when removing the collector cover.
(1) Pull up the two points at the rear (A).
(2) Pull up the two points at the front (B) while moving them forward.

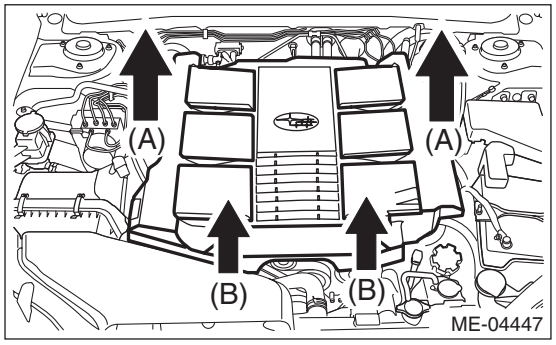

3) Attach ST to the fuel delivery pipe and push ST in the direction of arrow mark to disconnect the fuel delivery hose.

ST 42099AE000 QUICK CONNECTOR RELEASE

CAUTION:
• Be careful not to spill fuel.
• Catch the fuel from hoses using a container or cloth.

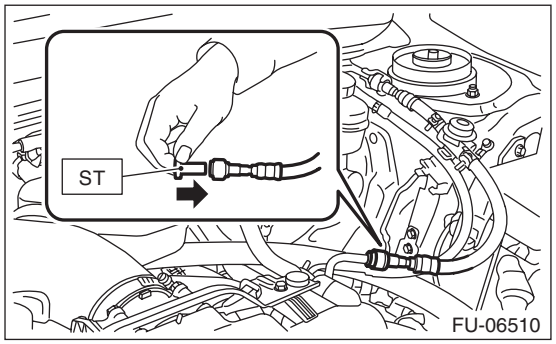

4) Connect ST to the fuel delivery hose.
ST 18471AA000 FUEL PIPE ADAPTER
5) Connect the gasoline proof hose to ST and put the end of the hose in the container.
6) Drive the fuel pump and drain the fuel using Subaru Select Monitor. (Refer to “PC application help for Subaru Select Monitor”.)

CAUTION:
Be careful not to spill fuel.
7) Install the related parts in the reverse order after draining the fuel.

3. DRAINING FUEL (THROUGH THE FUEL FILLER HOSE)

WARNING:
Place “NO OPEN FLAMES” signs near the working area.

CAUTION:
- **Be careful not to spill fuel.**
- **Fuel may remain in the fuel filler pipe. Draining the fuel from the fuel filler pipe through the fill opening using the gasoline proof pump and the gasoline proof hose (ø10 or less) before the operation.**

1) Lift up the vehicle.
2) Remove the rear exhaust pipe and muffler. <Ref. to EX(H6DO)-8, REMOVAL, Rear Exhaust Pipe.> <Ref. to EX(H6DO)-10, REMOVAL, Muffler.>
3) Open the fuel filler lid and remove the fuel filler cap.
4) Drain the fuel from the fuel filler pipe through the filler opening using the gasoline proof pump and the gasoline proof hose (ø10 or less).
5) Disconnect the fuel filler hoses from the fuel filler pipe.

CAUTION:
- **Be careful not to spill fuel.**
- **Catch the fuel from hoses using a container or cloth.**

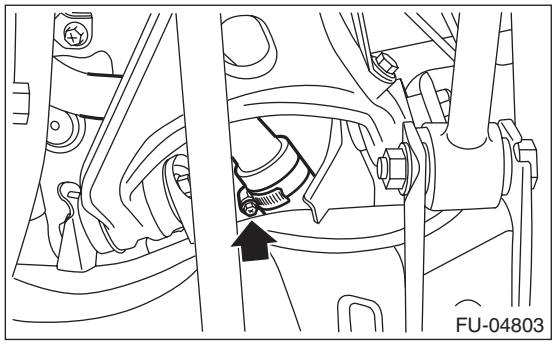

6) Set the container under the vehicle and insert the gasoline proof hose (ø10 or less) into the fuel filler hose to drain the fuel.

CAUTION:
Be careful not to spill fuel.
7) Install the related parts in the reverse order after draining the fuel.

Tightening torque:
2.5 N·m (0.3 kgf-m, 1.8 ft-lb)

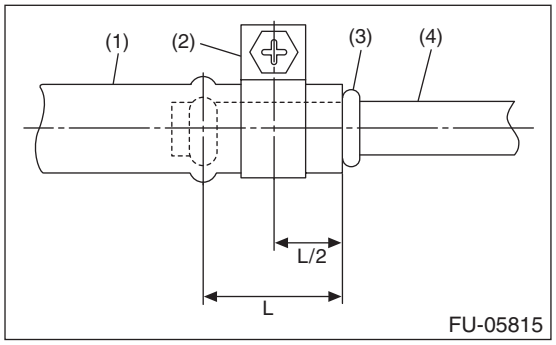

(1) Fuel filler hose
(2) Clamp
(3) Spool
(4) Fuel filler pipe

23.Fuel Tank

A: REMOVAL

WARNING:
Place "NO OPEN FLAMES" signs near the working area.

CAUTION:
Be careful not to spill fuel.

1) Release the fuel pressure. <Ref. to FU(H6DO)-59, RELEASING OF FUEL PRESSURE, PROCEDURE, Fuel.>
2) Drain fuel. <Ref. to FU(H6DO)-59, DRAINING FUEL (WITH SUBARU SELECT MONITOR), PROCEDURE, Fuel.>
3) Disconnect the ground cable from battery.
4) Remove the rear seat cushion. <Ref. to SE-34, REMOVAL, Rear Seat.>
5) Remove the clips (A) and seat cushion hooks (B), and turn over the floor mat (C).

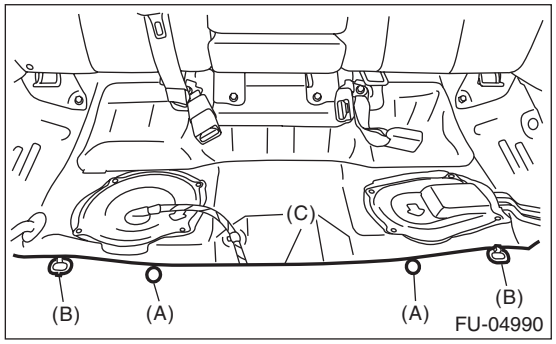

6) Remove the service hole cover of fuel pump.
   (1) Disconnect the fuel cord connector (A), and remove the clip (B).
   (2) Remove the screw (C).
   (3) Push the grommet (D) down and remove the service hole cover.

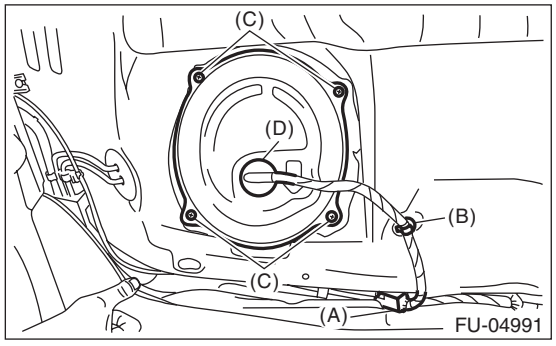

7) Remove the service hole cover of fuel sub level sensor.

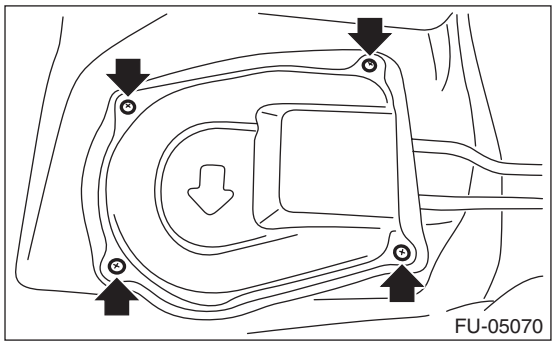

8) Disconnect the quick connector on the fuel delivery tube (A). <Ref. to FU(H6DO)-80, REMOVAL, Fuel Delivery and Evaporation Lines.>

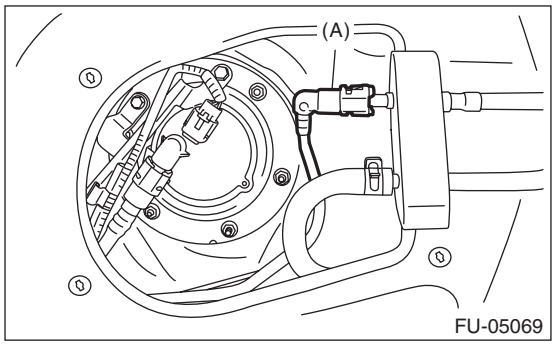

9) Remove the rear wheels.
10) Lift up the vehicle.
11) Remove the rear ABS wheel speed sensor from the rear housing.

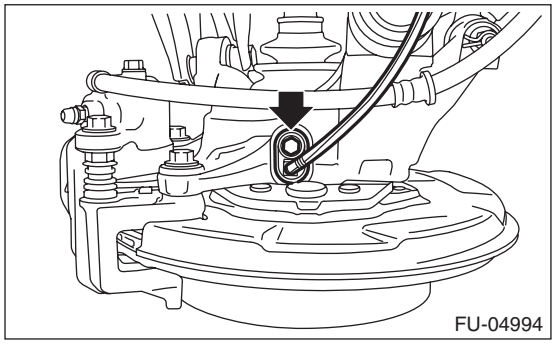

12) Remove the rear ABS wheel speed sensor harness bracket from the upper arm.

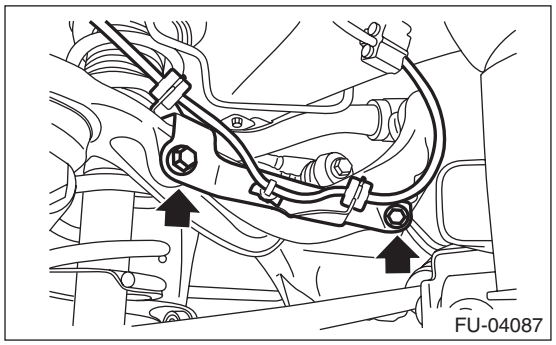

13) Remove the rear brake hose bracket from rear housing.

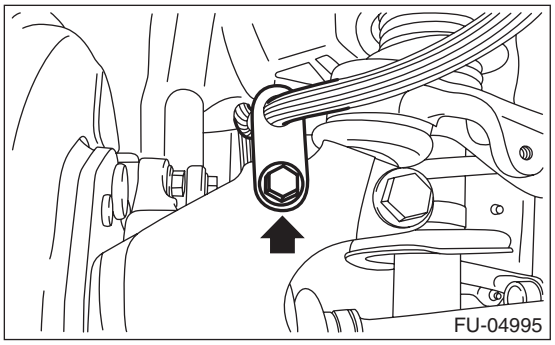

14) Remove the rear disc brake assembly and tie it to the body side of the vehicle.

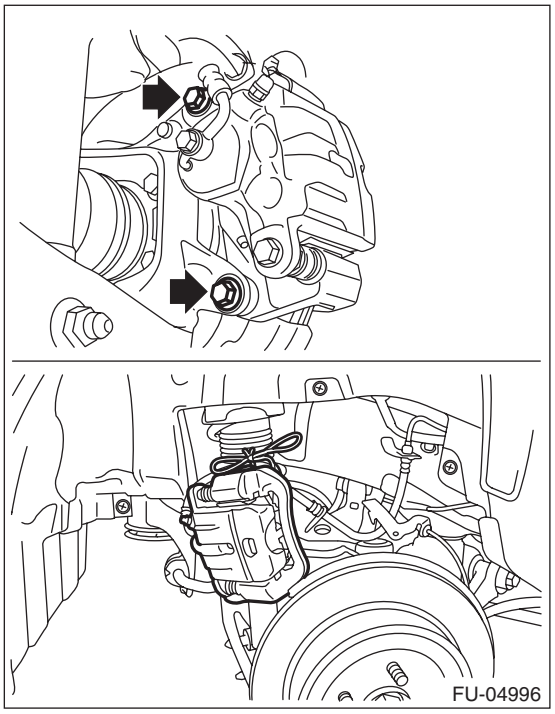

15) Remove the parking brake cable from parking brake assembly. <Ref. to PB-10, REMOVAL, Parking Brake Assembly (Rear Disc Brake).>

16) Remove the rear exhaust pipe and muffler. <Ref. to EX(H6DO)-8, REMOVAL, Rear Exhaust Pipe.> <Ref. to EX(H6DO)-10, REMOVAL, Muffler.>

17) Remove the heat shield cover.

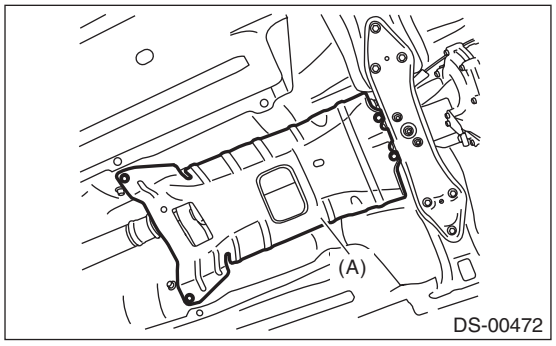

(A) Heat shield cover

18) Remove the propeller shaft. <Ref. to DS-10, REMOVAL, Propeller Shaft.>

19) Remove the clip (A) securing the fuel tank protector and heat shield cover.

20) Remove the bolts (B) and nuts (C) securing the fuel tank protector, and remove the fuel tank protector.

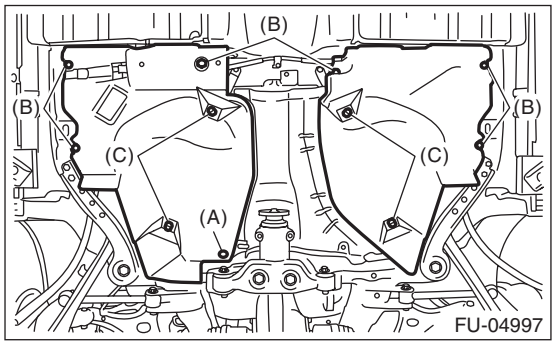

21) Remove the bolts and nuts securing the heat shield cover and remove the heat shield cover.

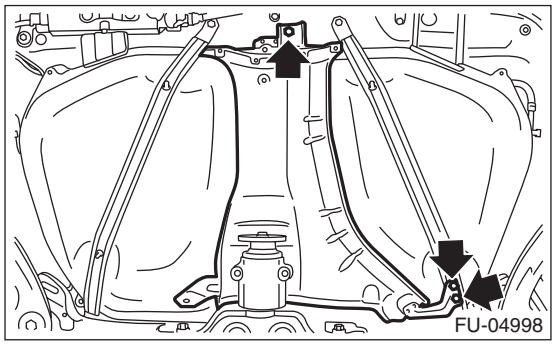

22) Remove the rear suspension assembly.

WARNING:
A helper is required to perform this work.

(1) Support the rear differential with the transmission jack.

(2) Remove the bolt and nut which secures rear shock absorber to rear suspension arm.

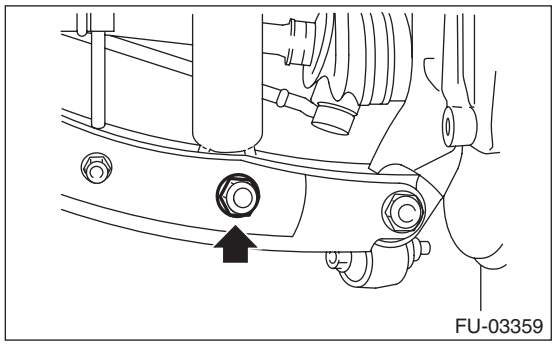

(3) Remove the bolts which secure the rear suspension assembly to the body.

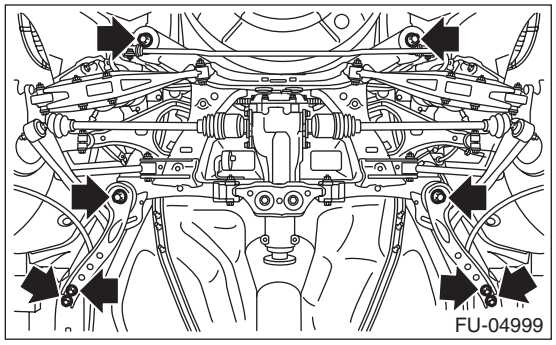

(4) Remove the rear suspension assembly.

23) Disconnect the air vent hose from the fuel tank.

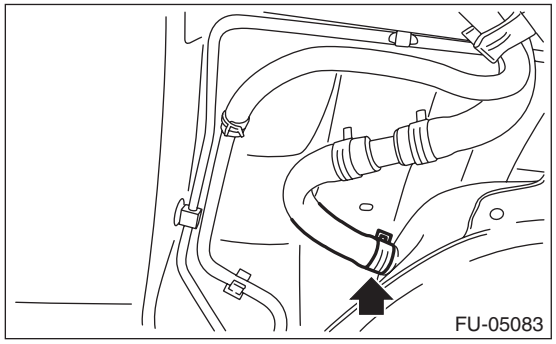

24) Disconnect the quick connector of the circulate tube from evaporation pipe.

NOTE:
Disconnect the quick connector as shown in the figure.

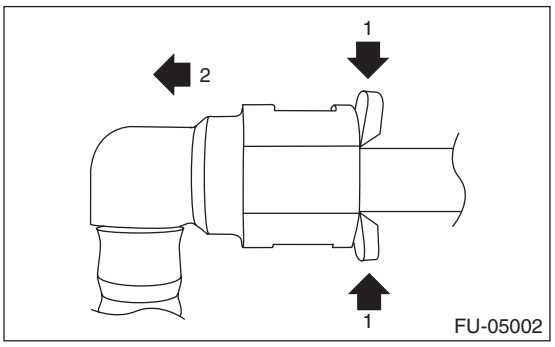

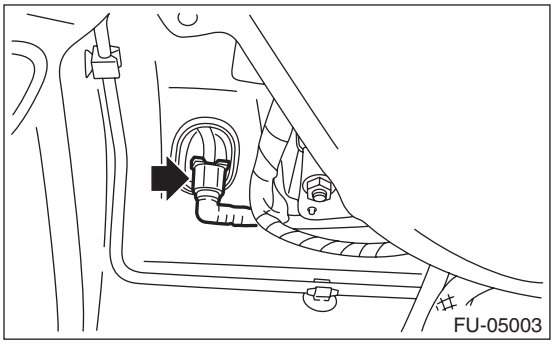

25) Disconnect the fuel filler hose from the fuel filler pipe assembly.

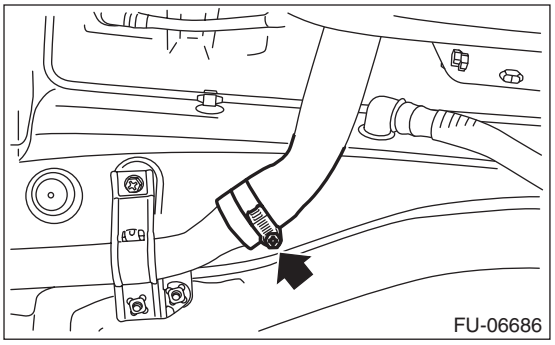

26) Support the fuel tank with a transmission jack, remove the bolts from the fuel tank band, and remove the fuel tank from the vehicle.

WARNING:
- **A helper is required to perform this work.**
- **Fuel may remain in the fuel tank. This will cause the left and right sides to be unbalanced. Be careful not to drop the fuel tank when removing.**

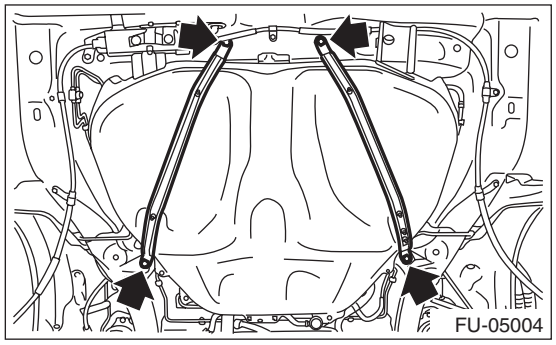

B: INSTALLATION

1) Support the fuel tank with a transmission jack, set the fuel tank in place, and temporarily tighten the bolts of the fuel tank band.

WARNING:
A helper is required to perform this work.

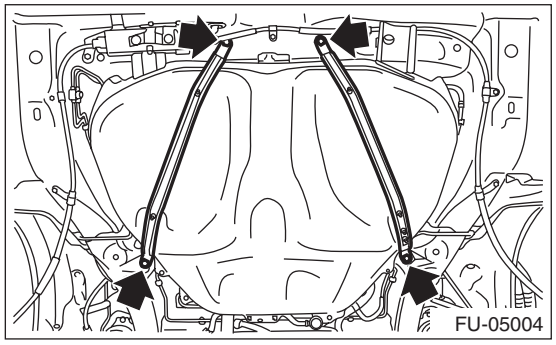

2) Securely insert the fuel filler hose to the spool, and then install a clamp or clip as shown.

Tightening torque:
2.5 N·m (0.3 kgf-m, 1.8 ft-lb)

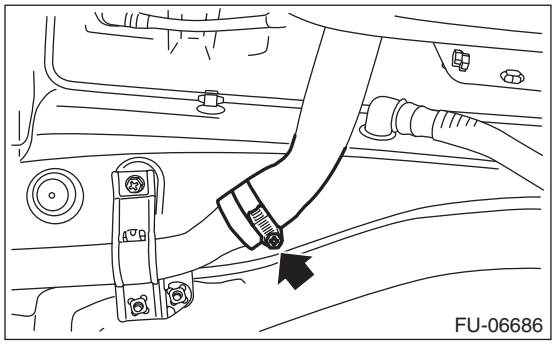

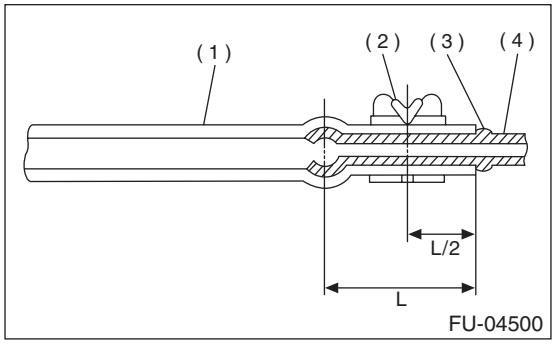

(1) Hose
(2) Clamp or clip
(3) Spool
(4) Pipe

3) Connect the quick connector of the circulate tube to the evaporation pipe as shown in the figure.

CAUTION:
• Check that there is no damage or dust on the quick connector. If necessary, clean the seal surface of the pipe.
• Make sure that the quick connector is securely connected.

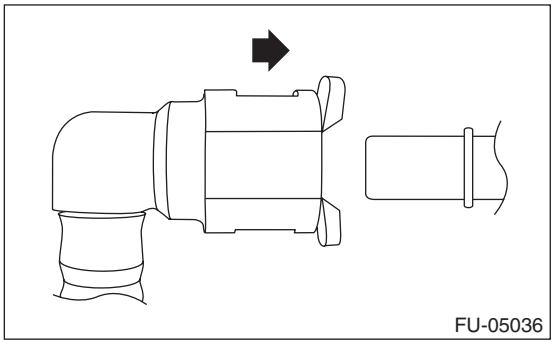
FU-05036

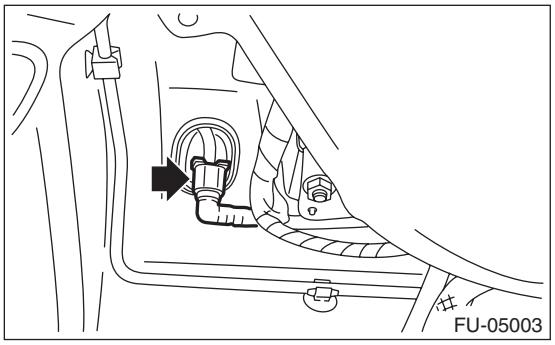
FU-05003

4) Connect the air vent hose to fuel tank.

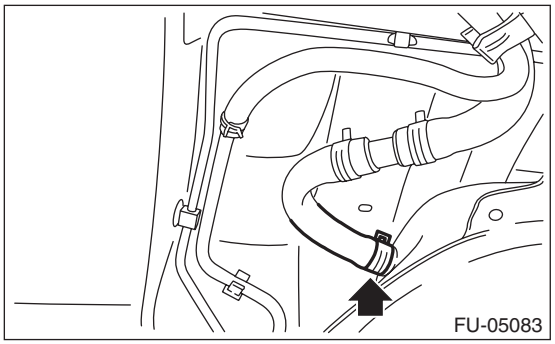
FU-05083

5) Move the fuel tank so that the distance between the center of the positioning hole for the body (A) and the front end of the fuel tank flange (B) becomes L, and tighten the bolts of the fuel tank bands in the sequence shown in the figure.

CAUTION:
To prevent the fuel tank from damage, after tightening the bolts of the fuel tank bands, make sure that the distance between the center of the positioning hole for the body (A) and the front end of the fuel tank flange (B) is L.

Distance L: Center of the positioning hole for the body (A) — Front end of the fuel tank flange (B)
14.5 mm (0.571 in) or less

Tightening torque:
33 N·m (3.4 kgf-m, 24.3 ft-lb)

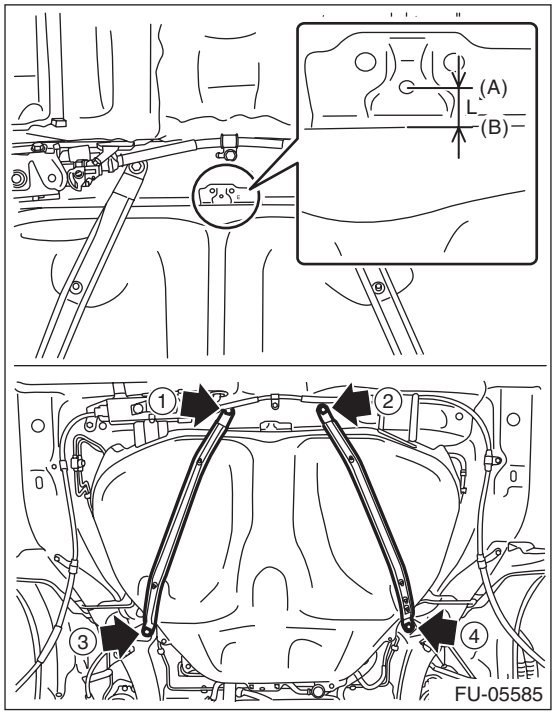

FU-05585

6) Install the rear suspension assembly.

WARNING:
A helper is required to perform this work.
(1) Support the rear differential with the transmission jack.
(2) Support the rear suspension assembly and install the rear suspension assembly to the body.

Tightening torque:
T1: 70 N·m (7.1 kgf-m, 51.6 ft-lb)
T2: 200 N·m (20.4 kgf-m, 147.5 ft-lb)

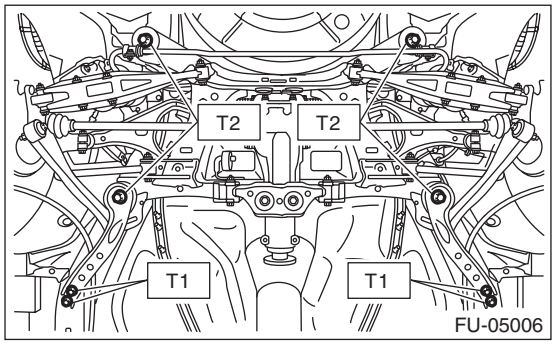

FU-05006

(3) Install the rear shock absorber to the rear suspension arm.

NOTE:
Use a new self-locking nut.

Tightening torque:
120 N·m (12.2 kgf-m, 88.5 ft-lb)

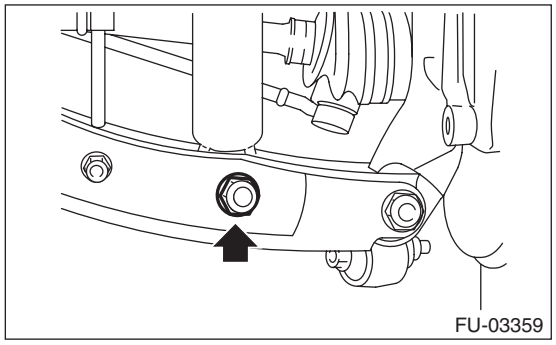

7) Install the heat shield cover.

Tightening torque:
18 N·m (1.8 kgf-m, 13.3 ft-lb)

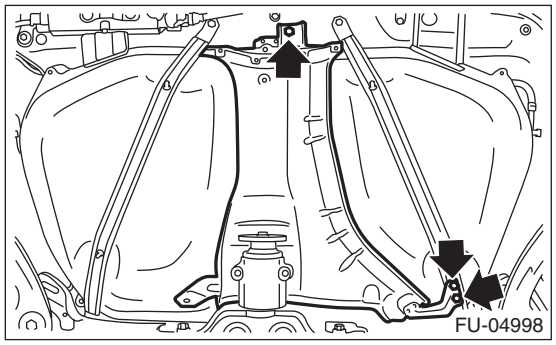

8) Install the bolts (B) and nuts (C) securing the fuel tank protector and install the clip (A) securing the fuel tank protector and heat shield cover.

Tightening torque:
Nut (C): 9 N·m (0.9 kgf-m, 6.6 ft-lb)
Bolt (B): 18 N·m (1.8 kgf-m, 13.3 ft-lb)

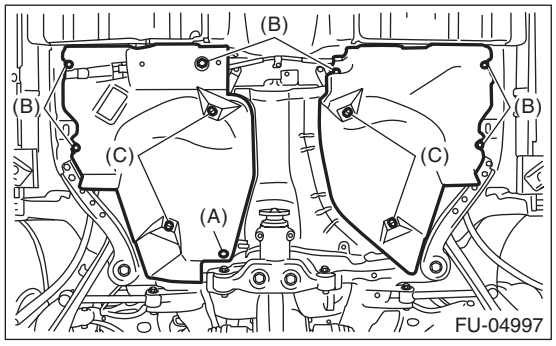

9) Install the propeller shaft. <Ref. to DS-11, INSTALLATION, Propeller Shaft.>

10) Install the heat shield cover.

Tightening torque:
18 N·m (1.8 kgf-m, 13.3 ft-lb)

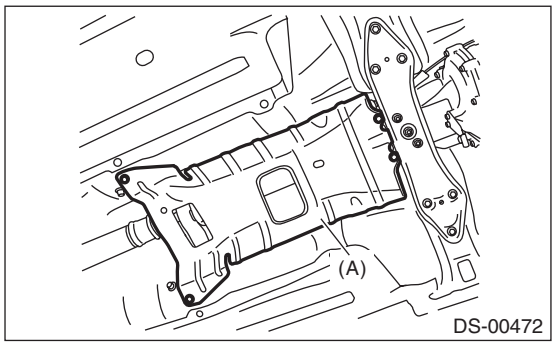

(A) Heat shield cover

11) Install the rear exhaust pipe and muffler. <Ref. to EX(H6DO)-8, INSTALLATION, Rear Exhaust Pipe.> <Ref. to EX(H6DO)-10, INSTALLATION, Muffler.>
12) Lower the vehicle.
13) Connect the parking brake cable to the parking brake assembly. <Ref. to PB-14, INSTALLATION, Parking Brake Assembly (Rear Disc Brake).>
14) Install the rear disc brake assembly.

Tightening torque:
66 N·m (6.7 kgf-m, 48.7 ft-lb)

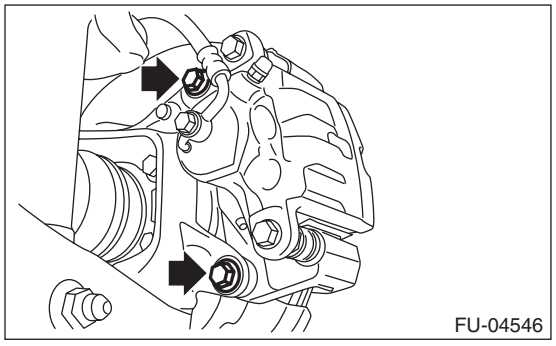

15) Install the rear brake hose bracket to the rear housing.

Tightening torque:
33 N·m (3.4 kgf-m, 24.3 ft-lb)

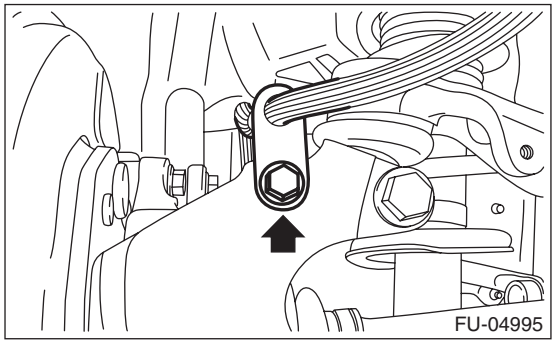

16) Install the rear ABS wheel speed sensor harness bracket to the upper arm.

Tightening torque:
7.5 N·m (0.8 kgf-m, 5.5 ft-lb)

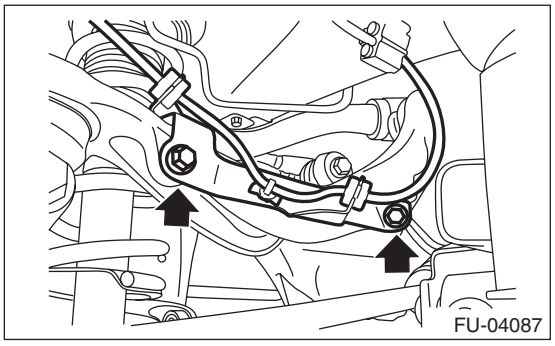

17) Attach the rear ABS wheel speed sensor to the rear housing.

Tightening torque:
7.5 N·m (0.8 kgf-m, 5.5 ft-lb)

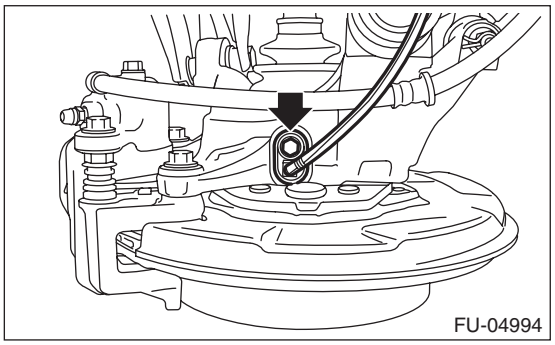

18) Install the rear wheels.

Tightening torque:
120 N·m (12.2 kgf-m, 88.5 ft-lb)

19) Connect the quick connector of the fuel delivery tube (A). <Ref. to FU(H6DO)-83, INSTALLATION, Fuel Delivery and Evaporation Lines.>

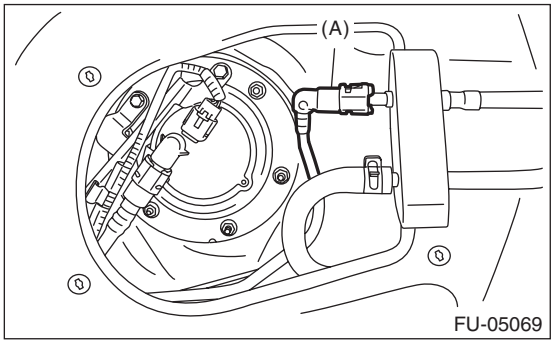

20) Install the service hole cover of fuel sub level sensor.

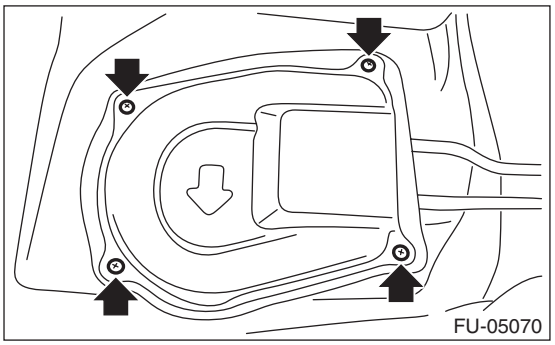

21) Attach the service hole cover of the fuel pump, and attach the connector and clip.

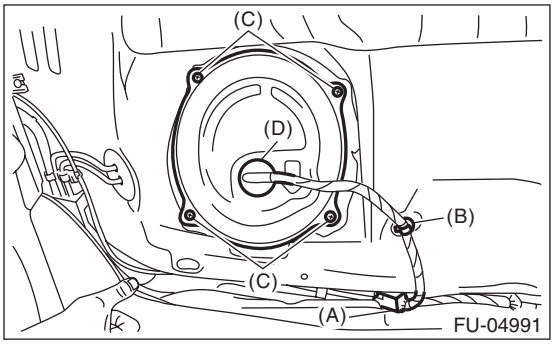

(A) Connector
(B) Clip
(C) Screw
(D) Grommet

22) Set the floor mat (C), and install clips (A) and seat cushion hooks (B).

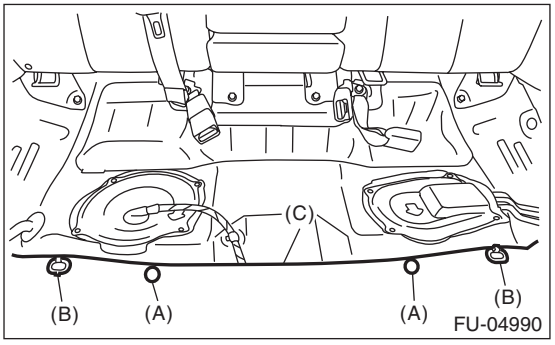

23) Install the rear seat cushion. <Ref. to SE-49, INSTALLATION, Rear Seat.>
24) Connect the battery ground terminal.
25) Inspect the wheel alignment and adjust if necessary.

C: INSPECTION

1) Check that the fuel tank and fuel pipe have no deformation, cracks and other damages.
2) Check that the fuel hose has no cracks, damage or loose part.

24.Fuel Filler Pipe

A: REMOVAL

WARNING:
Place "NO OPEN FLAMES" signs near the working area.

CAUTION:
Be careful not to spill fuel.

1) Release the fuel pressure. <Ref. to FU(H6DO)-59, RELEASING OF FUEL PRESSURE, PROCEDURE, Fuel.>
2) Drain fuel. <Ref. to FU(H6DO)-59, DRAINING FUEL (WITH SUBARU SELECT MONITOR), PROCEDURE, Fuel.>
3) Disconnect the ground cable from battery.
4) Open the fuel filler lid, and remove the filler cap.
5) Turn the fuel filler pipe protector in the direction of the arrow to unlock and remove it.

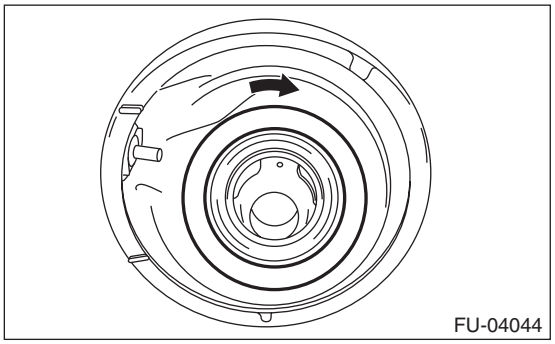
FU-04044

6) Remove the rear wheel RH.
7) Lift up the vehicle.
8) Remove the rear mud guard RH. <Ref. to EI-38, REMOVAL, Mud Guard.>
9) Remove the rear sub frame. <Ref. to RS-16, REMOVAL, Rear Sub Frame.>
10) Disconnect the fuel filler hose from the fuel filler pipe assembly.

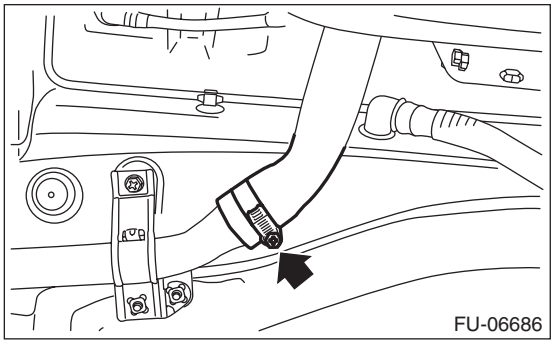
FU-06686

11) Disconnect the evaporation hose (A) from fuel filler pipe assembly and remove the bolts and nuts securing the fuel filler pipe assembly to the vehicle body.

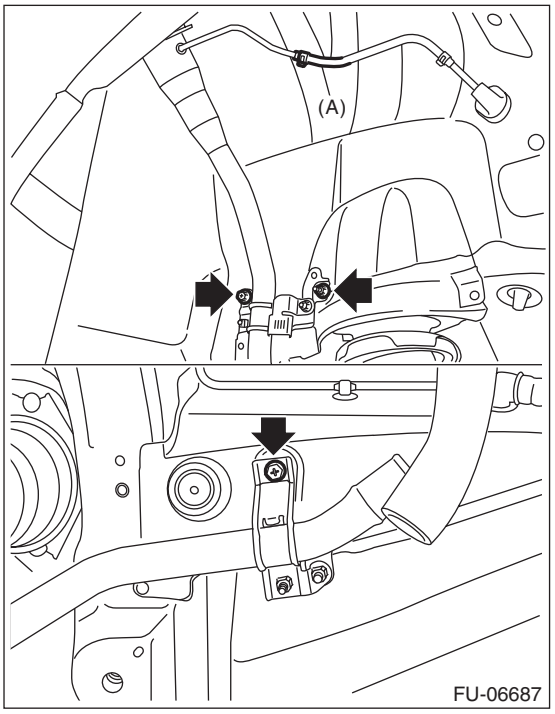

FU-06687

12) Remove the fuel filler pipe assembly from the underside of the vehicle.

B: INSTALLATION

1) Open the fuel filler lid.
2) Insert the fuel filler pipe assembly into the rubber saucer from inside of the rear fender.
3) Install the fuel filler pipe assembly to the vehicle body and connect the evaporation hose (A) to the fuel filler pipe assembly.

Tightening torque:
7.5 N·m (0.8 kgf-m, 5.5 ft-lb)

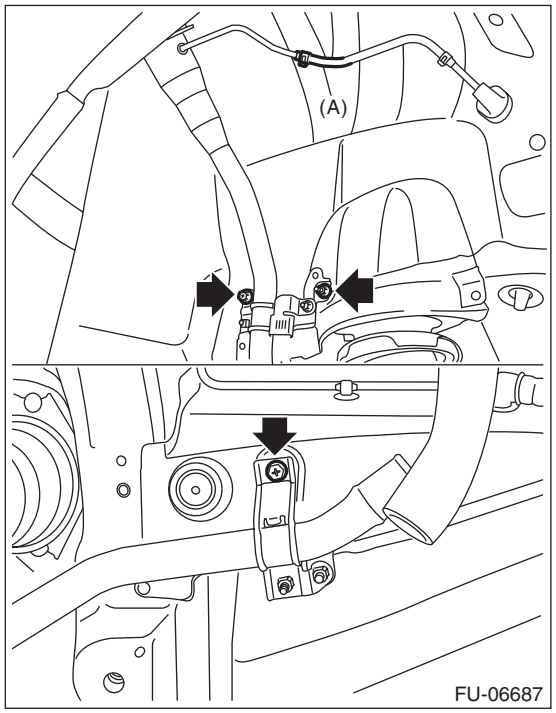

4) Align the cutout on the fuel filler pipe protector and the protrusion of the neck holder and insert them all the way, and then turn the fuel filler pipe protector in the direction of the arrow until it is locked.

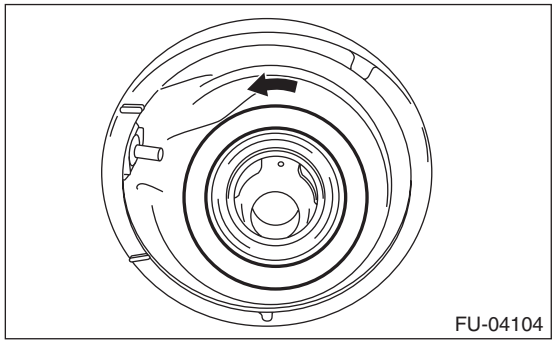

5) Securely insert the fuel filler hose (A) and circulate hose (B) to the spool, then attach the clamp or clip as shown in the figure.

Tightening torque:
2.5 N·m (0.3 kgf-m, 1.8 ft-lb)

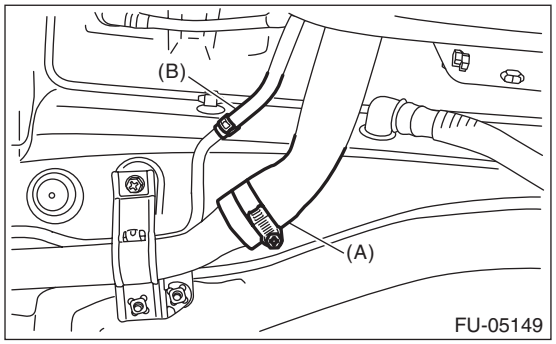

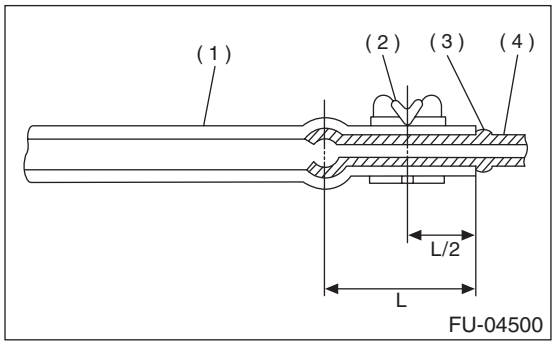

(1) Hose
(2) Clamp or clip
(3) Spool
(4) Pipe

6) Install the rear sub frame. <Ref. to RS-18, INSTALLATION, Rear Sub Frame.>
7) Install the rear mud guard RH. <Ref. to EI-38, INSTALLATION, Mud Guard.>
8) Lower the vehicle.
9) Install the rear wheel RH.

Tightening torque:
120 N·m (12.2 kgf-m, 88.5 ft-lb)

10) Connect the battery ground terminal.
11) Inspect the wheel alignment and adjust if necessary.

C: DISASSEMBLY

Remove the fuel filler pipe bracket from the fuel filler pipe.

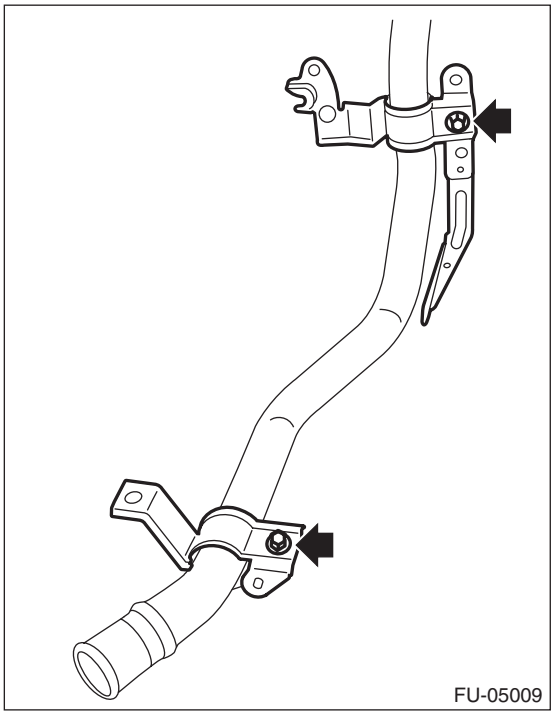

D: ASSEMBLY

Install the fuel filler pipe bracket to the fuel filler pipe.

Tightening torque:
7.35 N·m (0.7 kgf-m, 5.4 ft-lb)

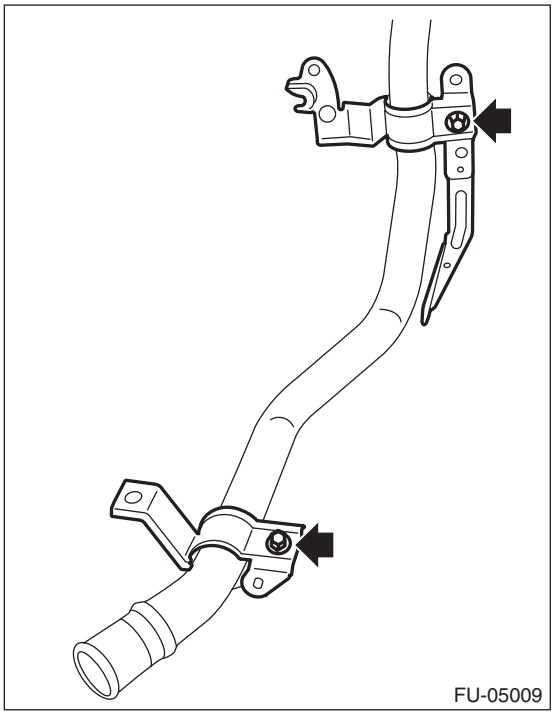

E: INSPECTION

Check that the fuel filler pipe does not have deformation, cracks or other damages.

25.Fuel Pump

A: REMOVAL

WARNING:
Place "NO OPEN FLAMES" signs near the working area.

CAUTION:
- **Be careful not to spill fuel.**
- **If the fuel gauge indicates that two thirds or more of the fuel is remaining, be sure to drain fuel before starting work to avoid the fuel to spill.**

NOTE:
Fuel pump assembly consists of fuel pump, fuel filter, fuel chamber and fuel level sensor.

1) Release the fuel pressure. <Ref. to FU(H6DO)-59, RELEASING OF FUEL PRESSURE, PROCEDURE, Fuel.>
2) Drain fuel. <Ref. to FU(H6DO)-59, DRAINING FUEL (WITH SUBARU SELECT MONITOR), PROCEDURE, Fuel.>
3) Disconnect the ground cable from battery.
4) Remove the rear seat cushion. <Ref. to SE-34, REMOVAL, Rear Seat.>
5) Remove the clips (A) and seat cushion hooks (B), and turn over the floor mat (C).

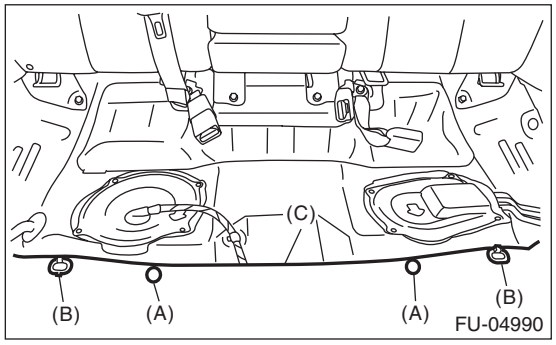

6) Remove the service hole cover.
   (1) Disconnect the fuel cord connector (A), and remove the clip (B).
   (2) Remove the screw (C).
   (3) Push the grommet (D) down and remove the service hole cover.

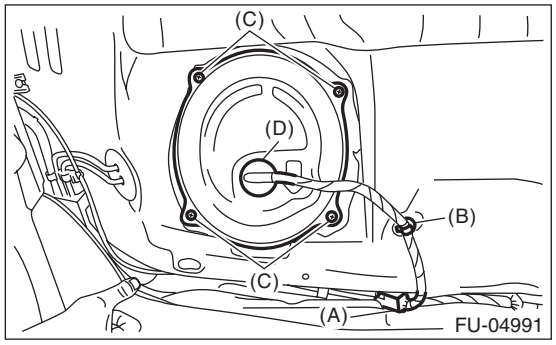

7) Disconnect the connector (A) from fuel pump, and remove the clip (B) securing the harness.
8) Disconnect the quick connector of fuel delivery tube (C) and fuel sub delivery tube (D). <Ref. to FU(H6DO)-80, REMOVAL, Fuel Delivery and Evaporation Lines.>

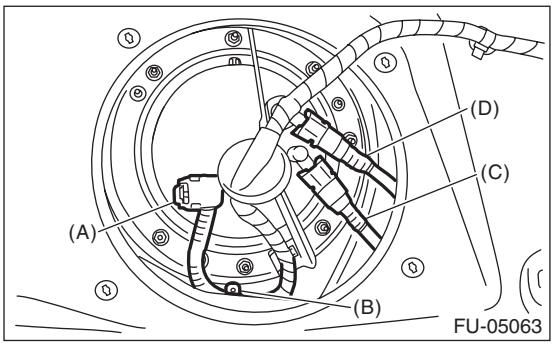

9) Remove the nuts securing the fuel pump upper plate to the fuel tank and remove the fuel pump upper plate.

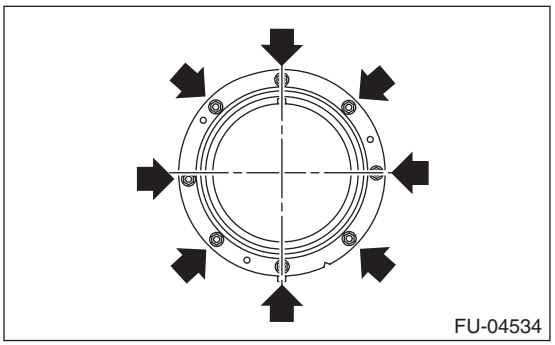

10) Remove the fuel pump assembly from the fuel tank.

B: INSTALLATION

Install in the reverse order of removal while being careful of the following.
• Make sure the sealing portion is free from fuel or foreign matter before installation.
• Align protrusion (A) of the gasket to the position shown in the figure.
• Insert the protrusion (B) of gasket to the fuel pump upper plate. (3 places)
• Align the protrusion (C) of fuel pump assembly with the cutout on the fuel pump upper plate.
• Tighten the nuts to the specified torque in the order as shown in the figure.

NOTE:
Use a new gasket.

Tightening torque:
4.4 N·m (0.4 kgf-m, 3.2 ft-lb)

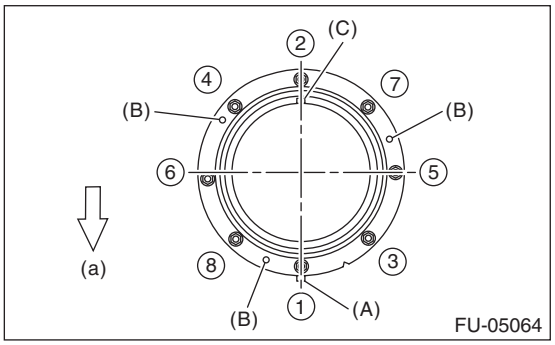

(a) Front side of vehicle

C: INSPECTION

1) Check that the fuel pump has no deformation, cracks or other damages.
2) Connect battery positive terminal to terminal No. 5 and battery ground terminal to terminal No. 6, and inspect the fuel pump operation.

WARNING:
• Wipe off fuel completely.
• Keep the battery as far apart from fuel pump as possible.
• Do not run the fuel pump for a long time under non-load condition.

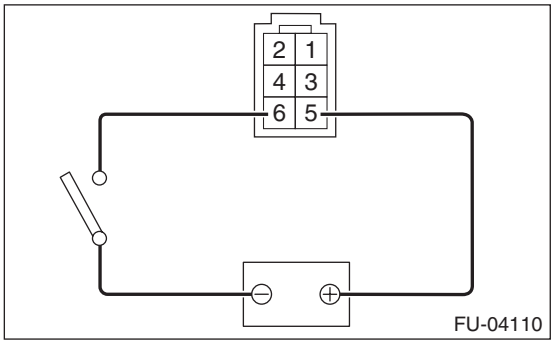

26.Fuel Level Sensor

A: REMOVAL

WARNING:
Place "NO OPEN FLAMES" signs near the working area.

CAUTION:
- **Be careful not to spill fuel.**
- **If the fuel gauge indicates that two thirds or more of the fuel is remaining, be sure to drain fuel before starting work to avoid the fuel to spill.**

NOTE:
The fuel level sensor is built in fuel pump assembly.
1) Remove the fuel pump assembly. <Ref. to FU(H6DO)-71, REMOVAL, Fuel Pump.>
2) Disconnect the connector from the fuel filter assembly.

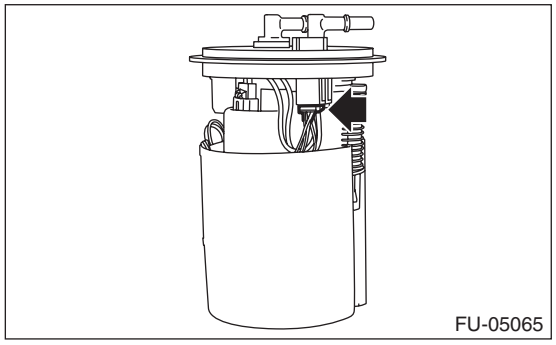
FU-05065

3) Remove the harness from the hooks (A) on the fuel chamber assembly and remove the fuel temperature sensor (B) from fuel chamber assembly.

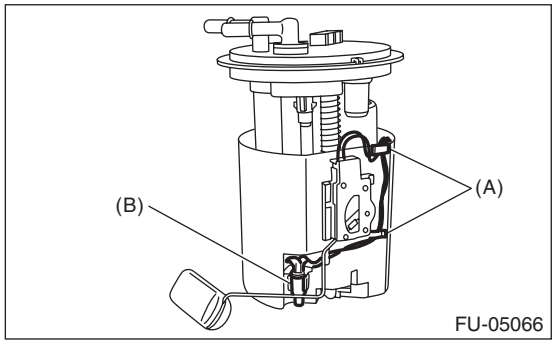

FU-05066

4) Press two claws (A) of the fuel level sensor, and slide the fuel level sensor in the direction of the arrow to remove the fuel level sensor.

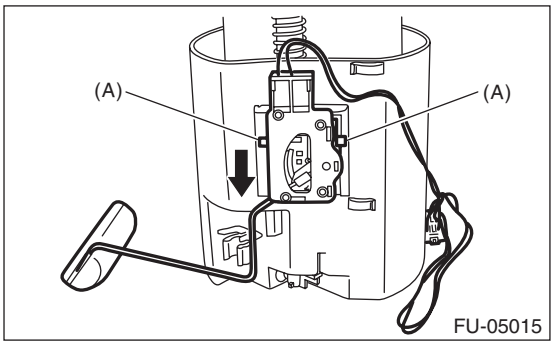

FU-05015

B: INSTALLATION

Install in the reverse order of removal.

C: INSPECTION

1) Check that the fuel level sensor has no damage.
2) Measure the fuel level sensor float position.

NOTE:
When inspecting the fuel level sensor, perform the work with the sensor installed to the fuel pump.

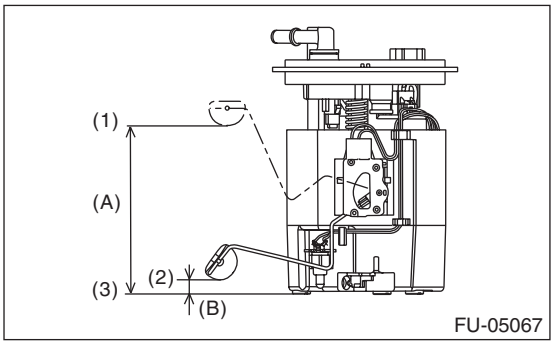

FU-05067

(1) FULL
(2) EMPTY
(3) Fuel tank seating surface

Float position	Standard
FULL to Fuel tank seating surface (A)	126.4±4 mm (4.976±0.157 in)
EMPTY to Fuel tank seating surface (B)	11.0±4 mm (0.433±0.157 in)

3) Measure the resistance between fuel level sensor terminals.

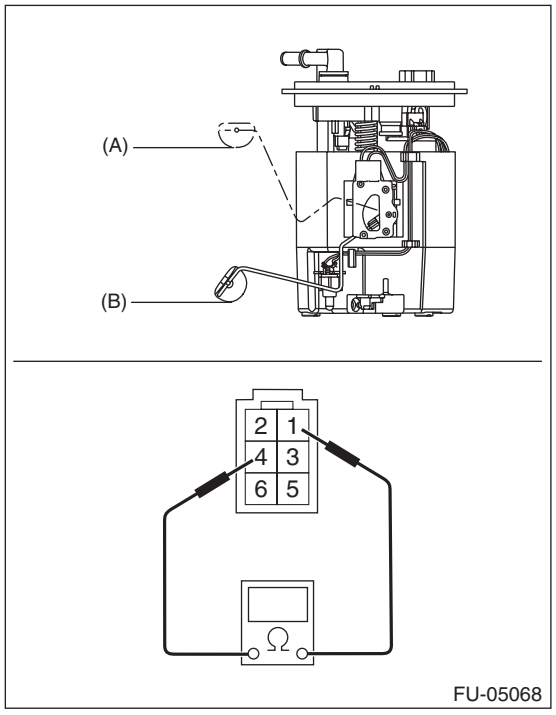

Float position	Terminal No.	Standard
FULL (A)	1 and 4	8.7±1.0 Ω
EMPTY (B)		139.1±2.0 Ω

27.Fuel Sub Level Sensor

A: REMOVAL

WARNING:
Place "NO OPEN FLAMES" signs near the working area.

CAUTION:
- **Be careful not to spill fuel.**
- **If the fuel gauge indicates that two thirds or more of the fuel is remaining, be sure to drain fuel before starting work to avoid the fuel to spill.**

1) Release the fuel pressure. <Ref. to FU(H6DO)-59, RELEASING OF FUEL PRESSURE, PROCEDURE, Fuel.>
2) Drain fuel. <Ref. to FU(H6DO)-59, DRAINING FUEL (WITH SUBARU SELECT MONITOR), PROCEDURE, Fuel.>
3) Disconnect the ground cable from battery.
4) Remove the rear seat cushion. <Ref. to SE-34, REMOVAL, Rear Seat.>
5) Remove the service hole cover.

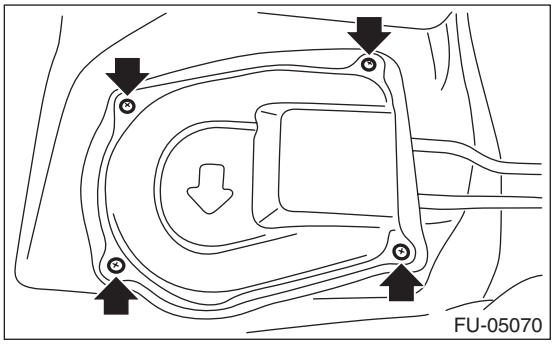
FU-05070

6) Disconnect the connector (A) from fuel sub level sensor, and remove the clip (B) securing the fuel cord from fuel sub level sensor protector.

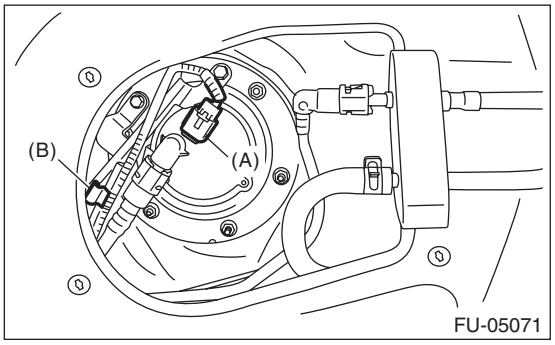

FU-05071

7) Remove the bolts (A) securing the fuel sub level sensor protector to the fuel sub level sensor upper plate, and remove the fuel sub level sensor protector.
8) Disconnect the quick connector on the fuel sub delivery tube (B). <Ref. to FU(H6DO)-80, REMOVAL, Fuel Delivery and Evaporation Lines.>

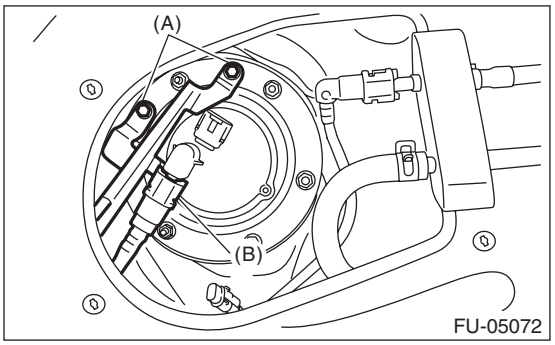

FU-05072

9) Remove the nuts securing the fuel sub level sensor upper plate to the fuel tank and remove the fuel sub level sensor upper plate.

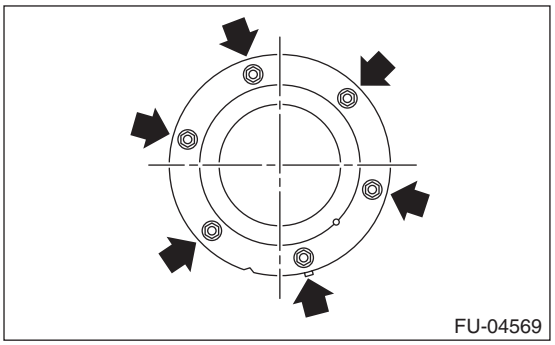
FU-04569

10) Remove the fuel sub level sensor from the fuel tank.

B: INSTALLATION

Install in the reverse order of removal while being careful of the following.
- Make sure the sealing portion is free from fuel or foreign matter before installation.
- Align protrusion (A) of the gasket to the position shown in the figure.
- Align protrusion (B) of the fuel sub level sensor to the cutout in the fuel sub level sensor upper plate.
- After tightening the bolts to the specified torque in the order indicated in the figure, install the fuel sub level sensor protector.

NOTE:
Use a new gasket.

Tightening torque:
4.4 N·m (0.4 kgf-m, 3.2 ft-lb)

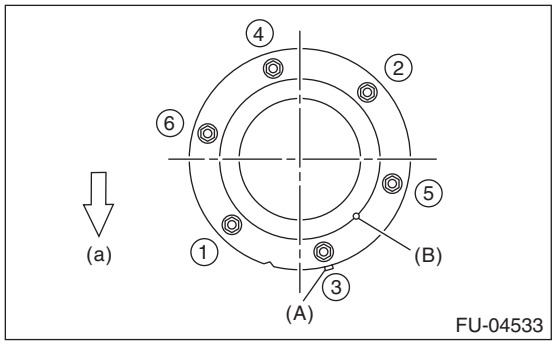

(a) Front side of vehicle

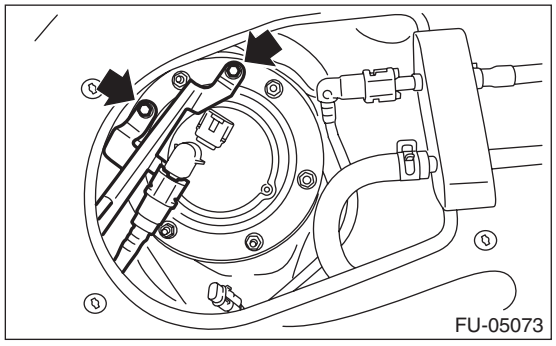

C: INSPECTION

1) Check that the fuel sub level sensor has no damage.
2) Measure the fuel sub level sensor float position.

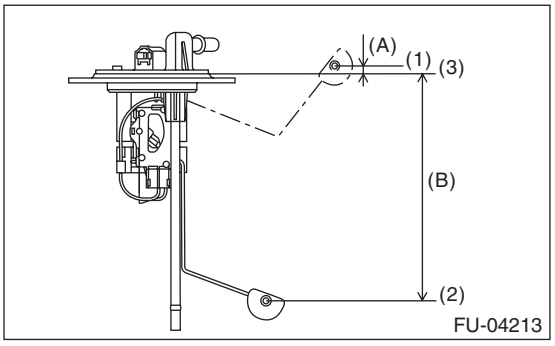

(1) FULL
(2) EMPTY
(3) Datum points

Float position	Standard
FULL to Datum point (A)	6.4±3.5 mm (0.252±0.138 in)
EMPTY to Datum point (B)	163.3±3.5 mm (6.429±0.138 in)

3) Measure the resistance between fuel sub level sensor terminals.

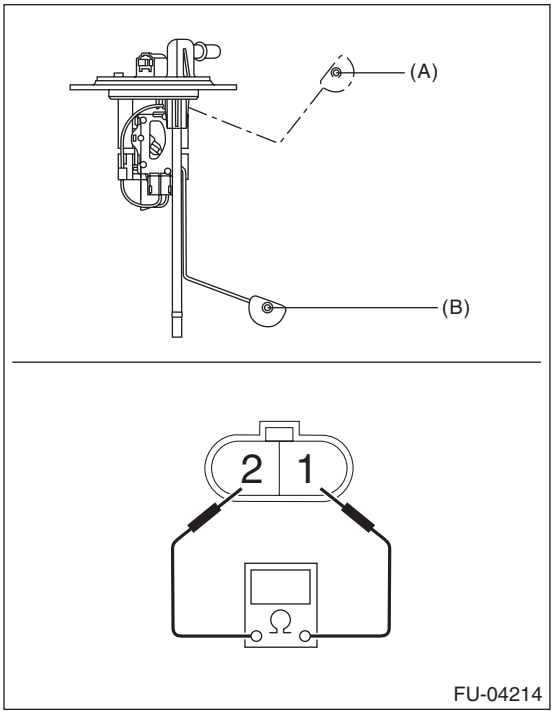

Float position	Terminal No.	Standard
FULL (A)	1 and 2	8.7±1.0 Ω
EMPTY (B)		270.9±4.0 Ω

28.Fuel Filter

A: REMOVAL

WARNING:
Place "NO OPEN FLAMES" signs near the working area.

CAUTION:
- **Be careful not to spill fuel.**
- **If the fuel gauge indicates that two thirds or more of the fuel is remaining, be sure to drain fuel before starting work to avoid the fuel to spill.**
- **Be careful not to drop or apply any impact to the fuel pump during work. This may deteriorate its performance.**

NOTE:
The fuel filter is built in fuel pump assembly.
1) Remove the fuel pump assembly. <Ref. to FU(H6DO)-71, REMOVAL, Fuel Pump.>
2) Remove the fuel level sensor and fuel temperature sensor. <Ref. to FU(H6DO)-73, REMOVAL, Fuel Level Sensor.>
3) Disconnect the connector from the fuel filter assembly.

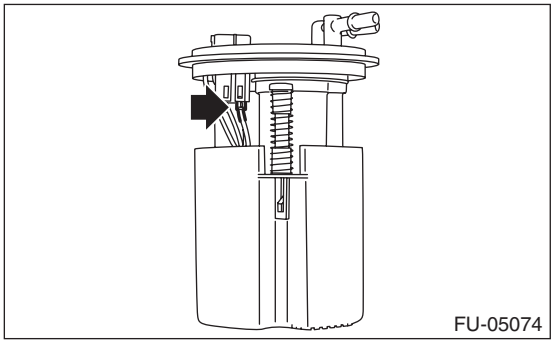
FU-05074

4) Disengage the claw connecting the fuel filter assembly and fuel chamber assembly, and separate fuel filter assembly and fuel chamber assembly.

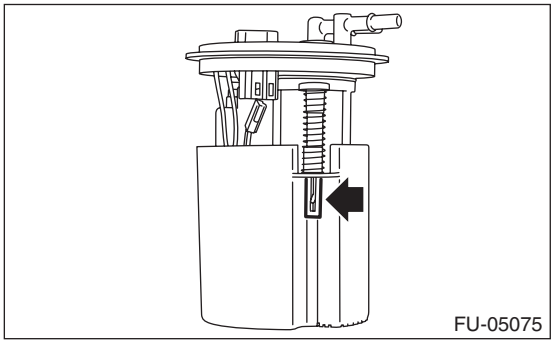
FU-05075

5) Remove the fuel pump holder from the fuel filter assembly.

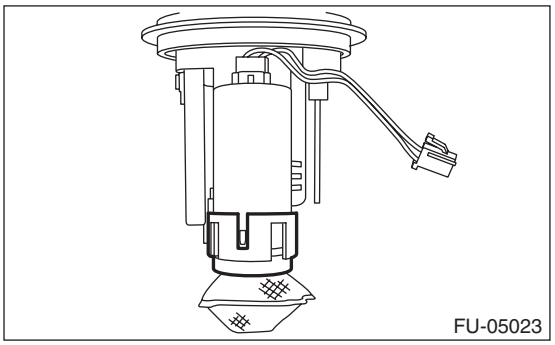
FU-05023

6) Remove the fuel pump from the fuel filter assembly.

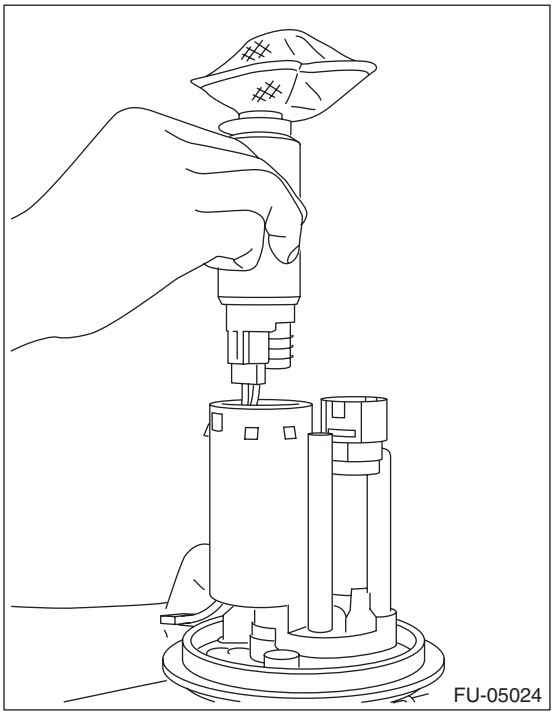
FU-05024

B: INSTALLATION

1) Assemble the gasket spacer (A) and support rubber cushion (B) to the fuel pump, and install the fuel pump to the fuel filter assembly.

NOTE:
- Use a new gasket spacer.
- Use a new support rubber cushion.
- Apply gasoline to the surface of gasket spacer and support rubber cushion.

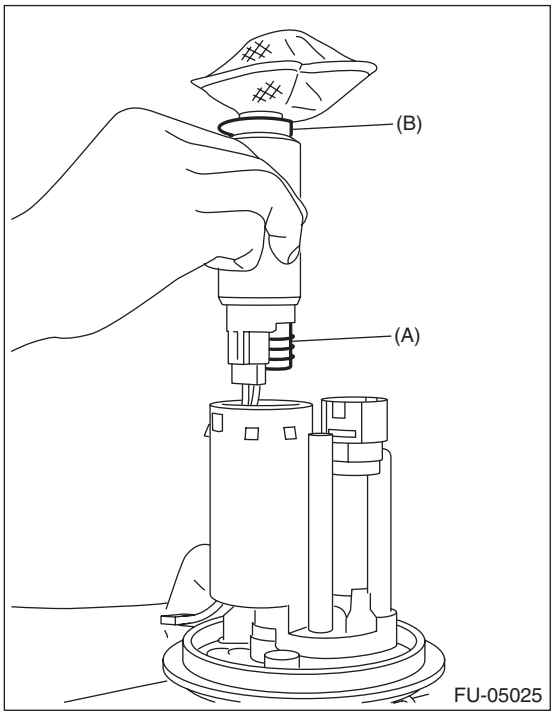

2) Install the fuel pump holder to the fuel filter assembly.

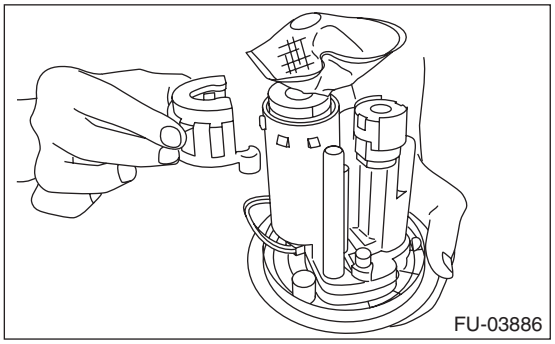

3) Install the pump module spring (A) to fuel filter assembly, and install the fuel chamber assembly (B).

NOTE:
- Use a new fuel chamber assembly.
- Check that the claw connecting the fuel filter assembly and fuel chamber assembly is securely fastened.

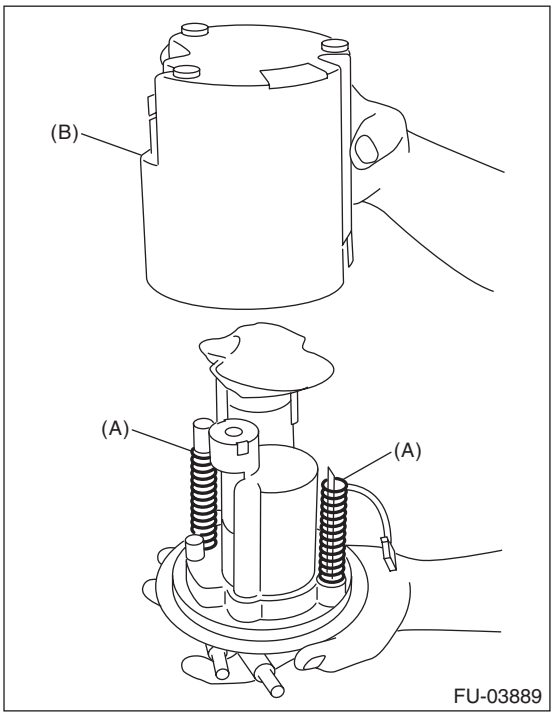

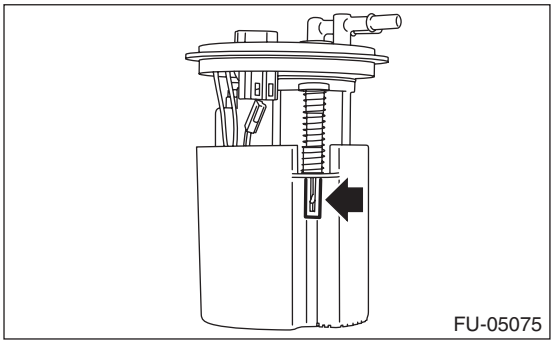

4) Connect the fuel pump connector.

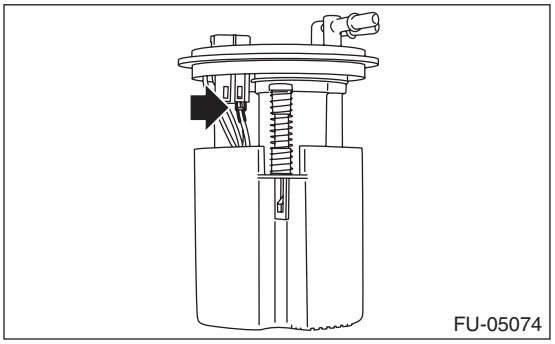

5) Install the fuel level sensor and fuel temperature sensor. <Ref. to FU(H6DO)-73, INSTALLATION, Fuel Level Sensor.>
6) Inspect the fuel level sensor. <Ref. to FU(H6DO)-73, INSPECTION, Fuel Level Sensor.>
7) Install the fuel pump assembly. <Ref. to FU(H6DO)-72, INSTALLATION, Fuel Pump.>

29.Fuel Damper

A: REMOVAL

WARNING:
Place "NO OPEN FLAMES" signs near the working area.

CAUTION:
- **Be careful not to spill fuel.**
- **Catch the fuel from hoses using a container or cloth.**

1) Release the fuel pressure. <Ref. to FU(H6DO)-59, RELEASING OF FUEL PRESSURE, PROCEDURE, Fuel.>
2) Disconnect the fuel delivery hose (A) from fuel damper and remove the fuel damper.

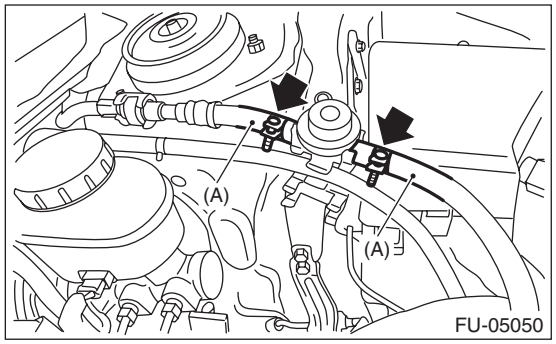

B: INSTALLATION

Install in the reverse order of removal.

NOTE:
If fuel hoses or clamps are damaged, replace them with new parts.

Tightening torque:
1.25 N·m (0.1 kgf-m, 0.9 ft-lb)

C: INSPECTION

1) Check that the fuel damper has no deformation, cracks or other damages.
2) Check the fuel delivery hose for cracks, damage or looseness.

30.Fuel Delivery and Evaporation Lines

A: REMOVAL

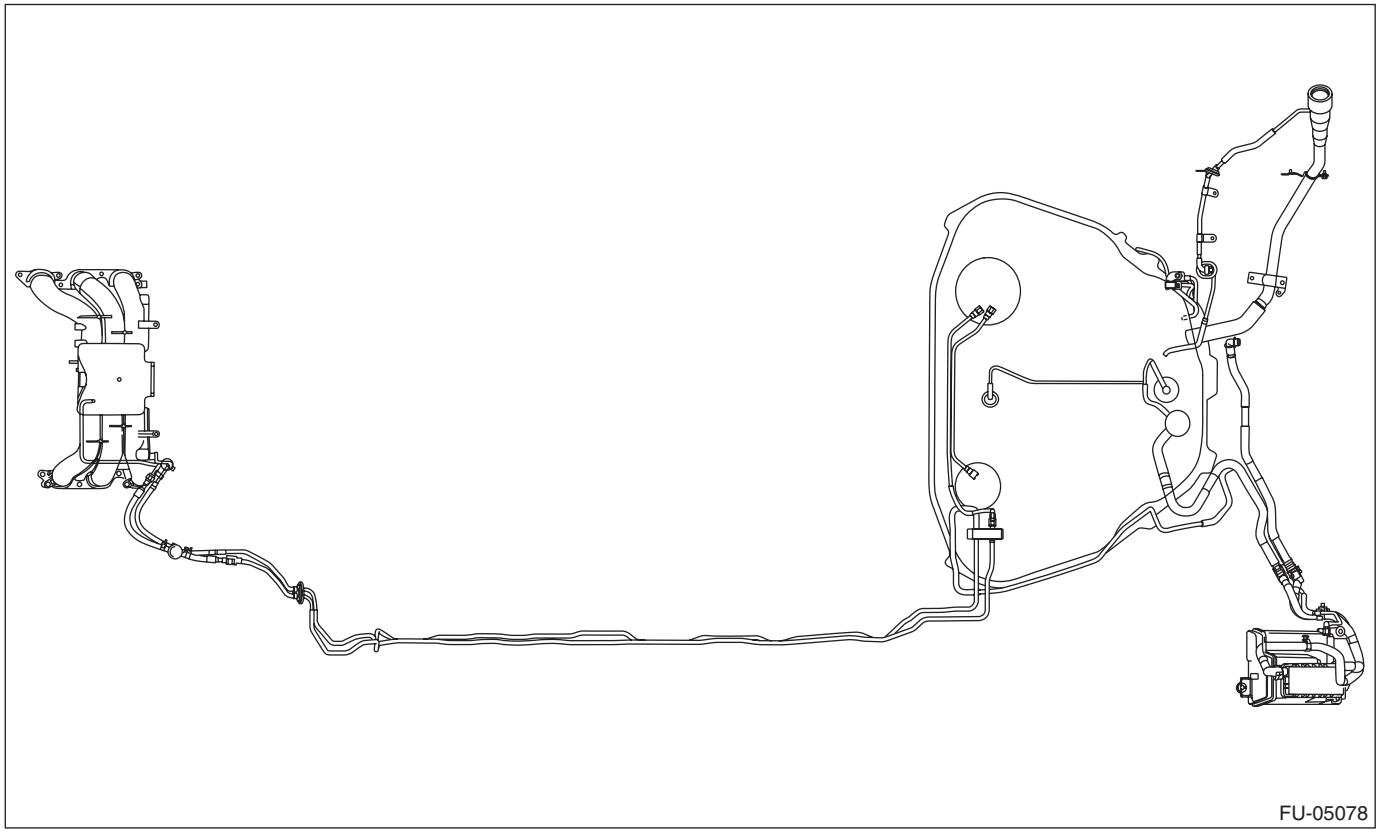

WARNING:
Place "NO OPEN FLAMES" signs near the working area.

CAUTION:
Be careful not to spill fuel.

1) Release the fuel pressure. <Ref. to FU(H6DO)-59, RELEASING OF FUEL PRESSURE, PROCEDURE, Fuel.>
2) Open the fuel filler lid and remove the fuel filler cap.
3) Remove the floor mat. <Ref. to EI-162, REMOVAL, Floor Mat.>
4) In the engine compartment, disconnect the fuel delivery hoses and evaporation hose.

CAUTION:
- **Be careful not to spill fuel.**
- **Catch the fuel from hoses using a container or cloth.**

(1) Remove the connect check cover from the fuel delivery hose.

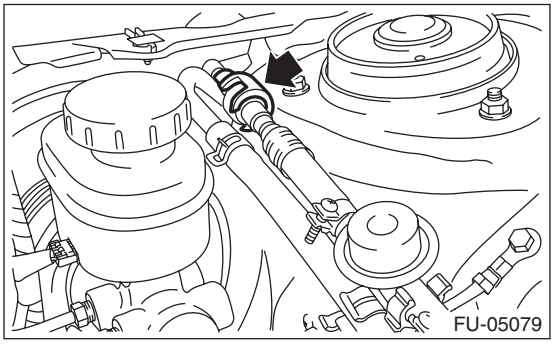

(2) Set the ST to the fuel pipe.

ST 42099AE000 QUICK CONNECTOR RELEASE

(3) Disconnect the quick connector of the fuel delivery hose by pushing the ST in the direction of the arrow.

(4) Remove the clip and disconnect the evaporation hose from the fuel pipe.

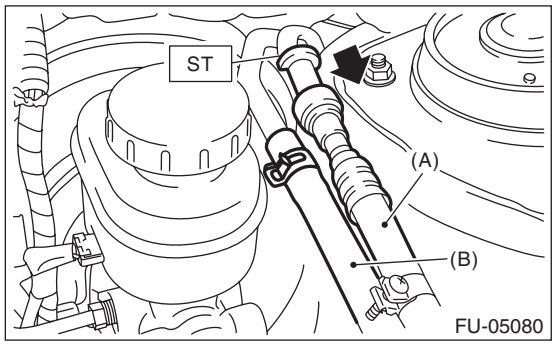

(A) Fuel delivery hose
(B) Evaporation hose

5) Remove the fuel tank. <Ref. to FU(H6DO)-61, REMOVAL, Fuel Tank.>
6) Remove the rear mud guard LH. <Ref. to EI-38, REMOVAL, Mud Guard.>
7) Remove the purge hose (A), purge pipe (B), vent hose (C) and drain tube assembly (D).

NOTE:
Disconnect the quick connector as shown in the figure.

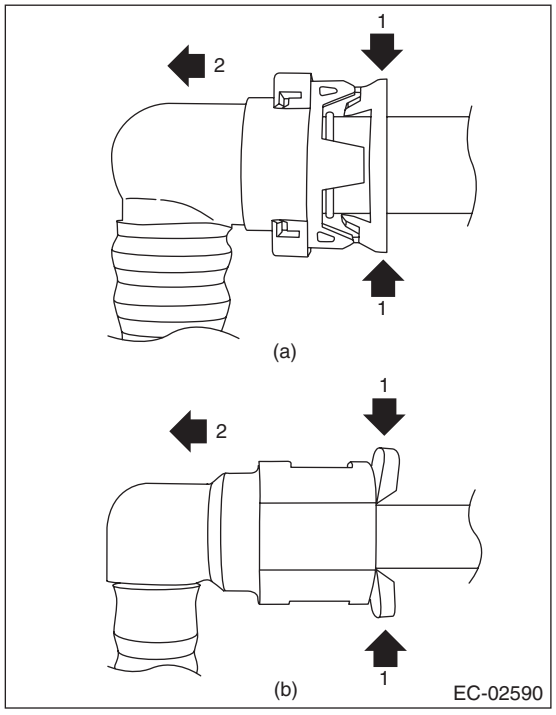

(a) Vent hose (C) and drain tube ASSY (D)
(b) Purge pipe (B)

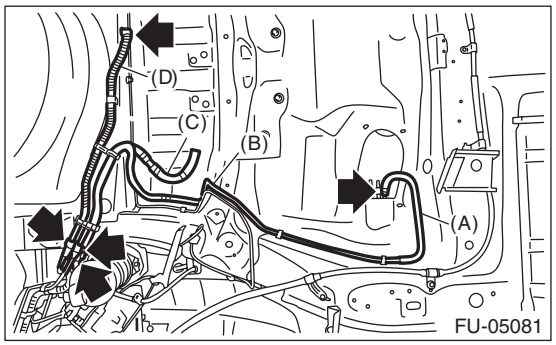

8) Remove the fuel pipe assembly from vehicle.
9) Disconnect the quick connector, and remove the fuel delivery tube and fuel sub delivery tube from the fuel tank.

• When using ST

1. Attach ST to the pipe and push ST in the direction of arrow mark to disconnect the quick connector.

ST 42099AE000 QUICK CONNECTOR RELEASE

CAUTION:
• Be careful not to spill fuel.
• Catch the fuel from hoses using a container or cloth.
• To disconnect the connector, hold (C) shown in the figure and pull in axial direction.
• If the connector and pipe are sticking to each other, push and pull the connector with ST pushed, and then pull the connector after it starts moving freely.
• When disconnecting the connector, do not bend or twist the tube forcibly. If the tube is bent, replace with a new part.

NOTE:
Clean the pipe and quick connector, if they are covered with dust.

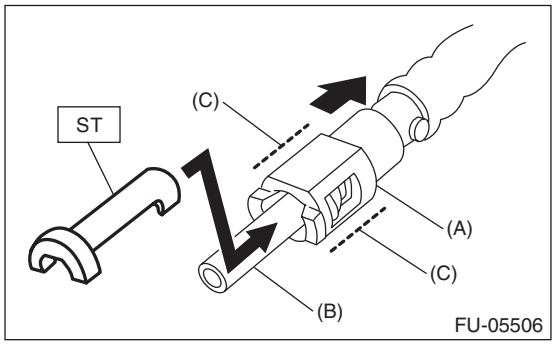

(A) Quick connector
(B) Pipe
(C) Connector holding position

2. To prevent from damaging or entering foreign matter, wrap the pipes and quick connectors with plastic bag etc.

CAUTION:
When reusing the retainer, do not disconnect the retainer from the connector.

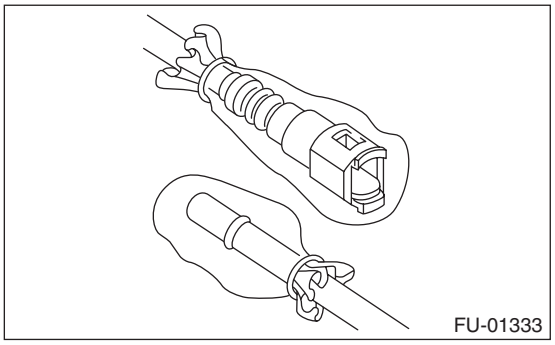

- When not using ST

1. Push the retainer in the direction of the arrow, disconnect the quick connector from pipe.

CAUTION:
- **Be careful not to spill fuel.**
- **Catch the fuel from hoses using a container or cloth.**
- **To disconnect the connector, hold (D) shown in the figure and pull in axial direction.**
- **If the connector and pipe are sticking to each other, push and pull the connector with the retainer pushed in the direction of the arrow, and then pull the connector after it starts moving freely.**
- **When disconnecting the connector, do not bend or twist the tube forcibly. If the tube is bent, replace with a new part.**

NOTE:
Clean the pipe and quick connector, if they are covered with dust.

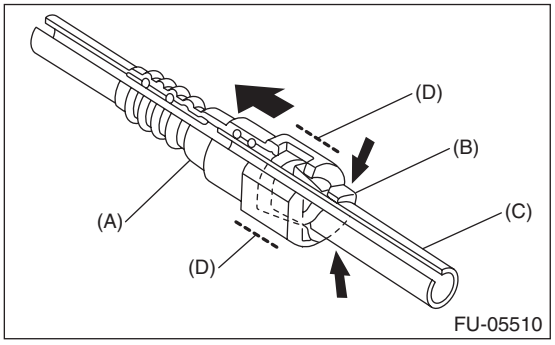

(A) Quick connector
(B) Retainer
(C) Pipe
(D) Connector holding position

2. To prevent from damaging or entering foreign matter, wrap the pipes and quick connectors with plastic bag etc.

CAUTION:
When reusing the retainer, do not disconnect the retainer from the pipe.

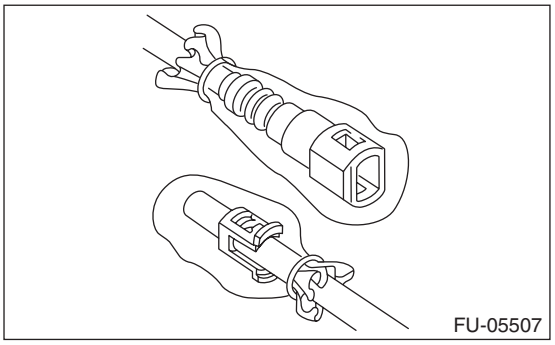

10) Remove the evaporation pipe.
(1) Remove the rear mud guard RH. <Ref. to EI-38, REMOVAL, Mud Guard.>
(2) Remove the evaporation hose.

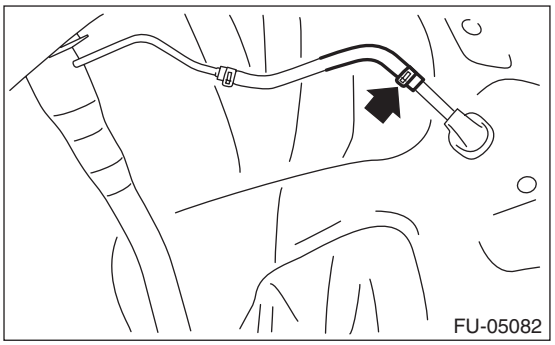

(3) Remove the trunk side trim panel assembly - side on the RH side. <Ref. to EI-110, REMOVAL, Rear Quarter Trim.>
(4) Remove the evaporation pipe protector.

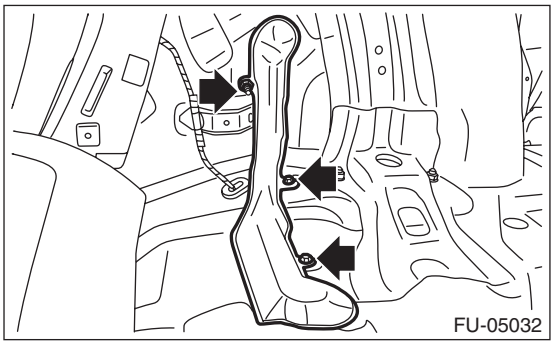

(5) Remove the evaporation pipe from vehicle.

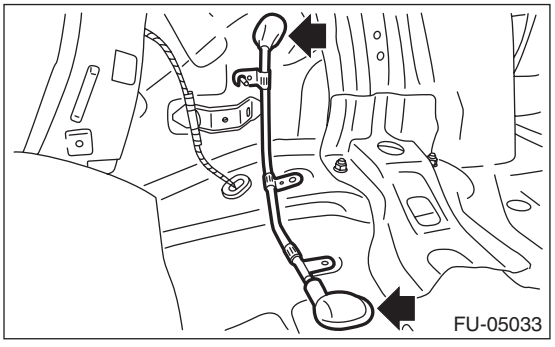

B: INSTALLATION

Install in the reverse order of removal while being careful of the following.

1. INSTALLATION OF EVAPORATION PIPE

1) Install the evaporation pipe to the vehicle.

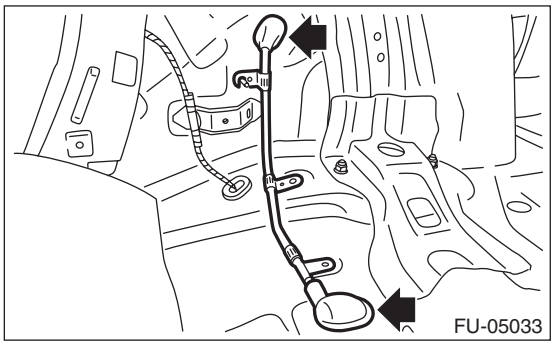

2) Install the evaporation pipe protector.

Tightening torque:
T1: 1 N·m (0.1 kgf-m, 0.7 ft-lb)
T2: 7.5 N·m (0.7 kgf-m, 5.4 ft-lb)

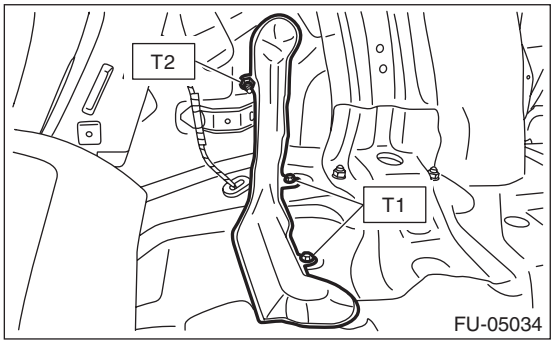

3) Install the trunk side trim panel assembly - side on RH side. <Ref. to EI-119, INSTALLATION, Rear Quarter Trim.>
4) Install the evaporation hose.

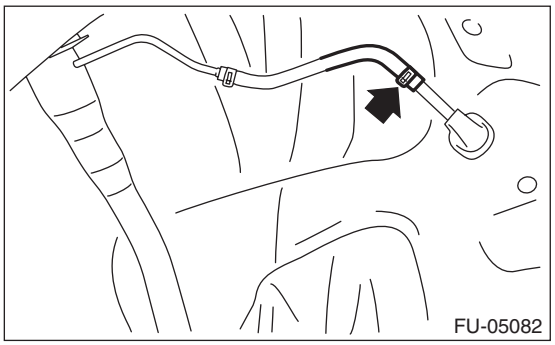

5) Install the rear mud guard RH. <Ref. to EI-38, INSTALLATION, Mud Guard.>

2. CONNECTING THE FUEL LINE QUICK CONNECTOR

CAUTION:
• Make sure there are no damage or dust on connections. If necessary, clean seal surface of pipe.

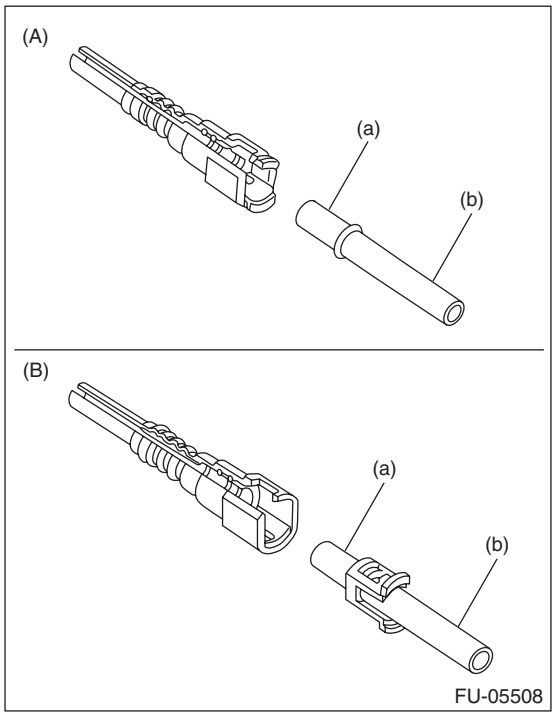

(A) When removed using ST
(B) When removed without using ST
(a) Seal surface
(b) Pipe

• When reusing the retainer, make sure that neither scratches nor deformation exist on the retainer. If it is faulty, use a new part.
1) Connect the quick connector to pipe.

CAUTION:
• Make sure that the quick connector is securely connected.

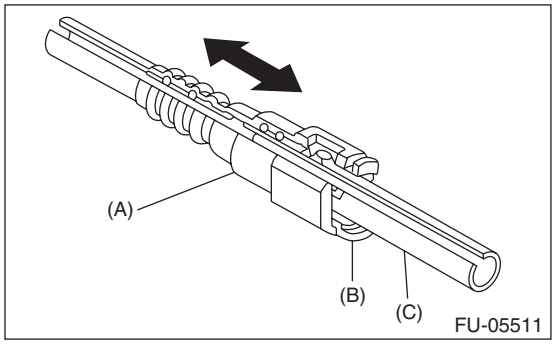

(A) Quick connector
(B) Retainer
(C) Pipe

• Make sure the two retainer pawls are engaged in their mating positions in the quick connector.
• Be sure to inspect tubes and their connections for any leakage of fuel.
• To connect the connector, hold (d) shown in the figure and push in axial direction.
• When connecting the connector, do not bend or twist the tube forcibly. If the tube is bent, replace with a new part.

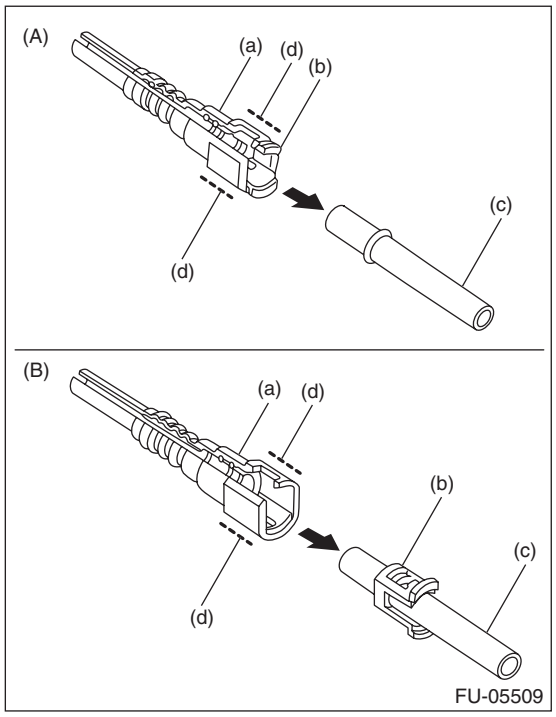

(A) When removed using ST
(B) When removed without using ST
(a) Quick connector
(b) Retainer
(c) Pipe
(d) Connector holding position

3. CONNECTING THE FUEL DELIVERY HOSE AND FUEL HOSE

Connect the fuel delivery hose as shown in the figure.

CAUTION:
• If the connection portion has a spool or stopper, do not allow the end of the hose to bend or ride over by inserting the hose too deep.
• Be sure to inspect hoses and their connections for any leakage of fuel.

NOTE:
Use new fuel delivery hose and fuel hose.

Tightening torque:
1.25 N·m (0.1 kgf-m, 0.9 ft-lb)

L1: 2.5±1.5 mm (0.098±0.059 in)

L2: 22.5±2.5 mm (0.886±0.098 in)

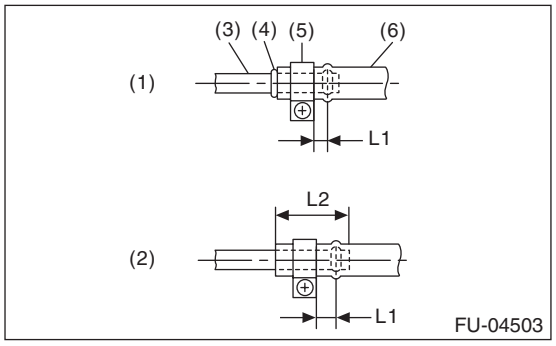

(1) When there is a spool or bump
(2) When there is no spool or bump
(3) Pipe
(4) Spool or bump
(5) Clamp
(6) Hose

4. EVAPORATION HOSE CONNECTION

Connect the evaporation hose to the pipe with an overlap of 15 to 20 mm (0.59 to 0.79 in).

L = 17.5±2.5 mm (0.689±0.098 in)

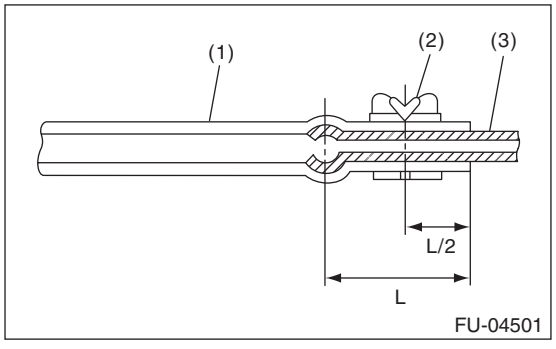

(1) Hose
(2) Clip
(3) Pipe

5. CONNECTING THE EVAPORATION LINE QUICK CONNECTOR

CAUTION:
• Make sure there are no damage or dust on connections. If necessary, clean the seal surface of the pipe.
• Make sure that the quick connector is securely connected.
Connect the quick connector as shown in the figure.

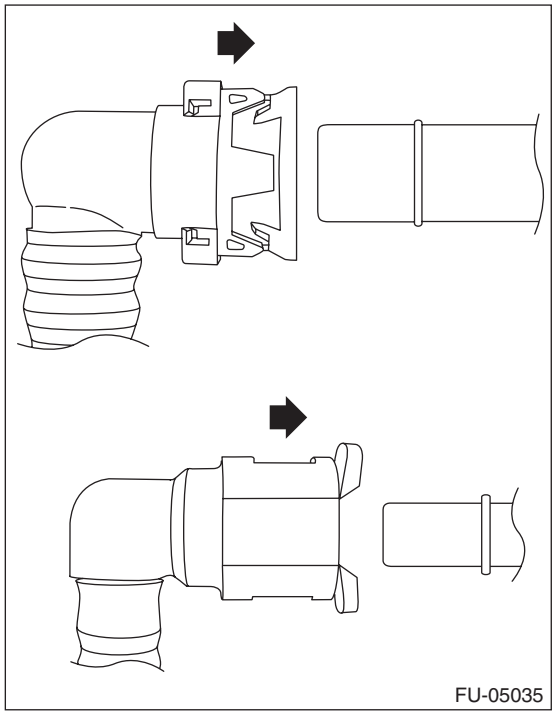

C: INSPECTION

1) Check that the fuel pipe has no deformation, cracks or other damages.
2) Check that the hose and tube have no cracks, damage or loose part.

31.Fuel System Trouble in General

A: INSPECTION

Trouble	Possible cause	Corrective action
Insufficient fuel supply to injector	a. Fuel pump does not operate.	
	❍ Defective terminal contact	Inspect contact, especially ground, and tighten it securely.
	❍ Trouble in electromagnetic or electronic circuit parts	Replace the faulty parts.
	b. Decline of fuel pump function	Replace the fuel pump.
	c. Clogged fuel filter	Replace the fuel filter. Clean or replace the fuel tank if necessary.
	d. Clogged or bent pipe, hose or tube of fuel line	Clean, correct or replace the pipe, hose or tube of the fuel line.
	e. Air is mixed in fuel system.	Check the fuel line connections, and repair or replace the defective part.
	f. Damaged diaphragm of pressure regulator	Replace the pressure regulator.
Leakage or run-out of fuel	a. Loose connection in pipe, hose or tube of fuel line	Check the fuel line connections, and repair or replace the defective part.
	b. Cracks in pipe, hose or tube of fuel line	Replace the pipe, hose or tube of the fuel line.
	c. Cracks or defective welded part of fuel tank	Replace the fuel tank.
	d. Clogged or bent pipe, hose or tube of fuel line	Clean, correct or replace the pipe, hose or tube of the fuel line.
Gasoline smell inside of compartment	a. Loose connection in pipe, hose or tube of fuel line	Check the fuel line connections, and repair or replace the defective part.
	b. Improper installation of rubber saucer	Correct or replace the rubber saucer.
	c. Defective canister	Replace the canister.
Defective fuel gauge	a. Defective operation of fuel level sensor	Replace the fuel level sensor.
	b. Defective operation of combination meter	Replace the combination meter.
Noise	a. Big operation noise or vibration from fuel pump	Replace the fuel pump.

NOTE:
• When the vehicle is left unattended for an extended period of time, water may accumulate in the fuel tank. Fill fuel fully to prevent the problem.
• In snow-covered areas, mountainous areas, skiing areas, etc. where ambient temperatures drop to 0°C (32°F) or less throughout the winter season, use a water removing agent in the fuel system to prevent freezing fuel system and accumulating water.
• When water is accumulated in fuel filter, fill the water removing agent in the fuel tank.
• Before using water removing agent, follow the cautions noted on the bottle.

EMISSION CONTROL (AUX. EMISSION CONTROL DEVICES)

EC(H6DO)

		Page
1.	General Description	2
2.	Front Catalytic Converter	3
3.	Rear Catalytic Converter	4
4.	EGR Valve	5
5.	Canister	6
6.	Purge Control Solenoid Valve	10
7.	Fuel Level Sensor	12
8.	Fuel Temperature Sensor	13
9.	Fuel Sub Level Sensor	14
10.	Fuel Tank Pressure Sensor	15
11.	Drain Filter	17
12.	Drain Valve	18
13.	PCV Valve	19

1. General Description

A: CAUTION

• Wear appropriate work clothing, including a cap, protective goggles and protective shoes when performing any work.
• Remove contamination including dirt and corrosion before removal, installation or disassembly.
• Keep the disassembled parts in order and protect them from dust and dirt.
• Before removal, installation or disassembly, be sure to clarify the failure. Avoid unnecessary removal, installation, disassembly and replacement.
• Vehicle components are extremely hot after driving. Be wary of receiving burns from heated parts.
• Be sure to tighten fasteners including bolts and nuts to the specified torque.
• Place shop jacks or rigid racks at the specified points.
• Before disconnecting connectors of sensors or units, be sure to disconnect the ground cable from battery.

B: PREPARATION TOOL

1. GENERAL TOOL

TOOL NAME	REMARKS
Circuit tester	Used for measuring resistance.
Mighty Vac	Used for inspecting the fuel tank pressure sensor.

2. Front Catalytic Converter

A: REMOVAL

The front and rear catalytic converters are integrated into the front exhaust pipe; therefore, refer to “Front Exhaust Pipe” for the removal procedure. <Ref. to EX(H6DO)-5, REMOVAL, Front Exhaust Pipe.>

B: INSTALLATION

The front and rear catalytic converters are integrated into front exhaust pipe as one unit; therefore, refer to “Front Exhaust Pipe” for installation procedure. <Ref. to EX(H6DO)-6, INSTALLATION, Front Exhaust Pipe.>

C: INSPECTION

1) Check the connections and welds for exhaust leaks.
2) Check for hole or rust.

3. Rear Catalytic Converter

A: REMOVAL

The front and rear catalytic converters are integrated into the front exhaust pipe; therefore, refer to “Front Exhaust Pipe” for the removal procedure. <Ref. to EX(H6DO)-5, REMOVAL, Front Exhaust Pipe.>

B: INSTALLATION

The front and rear catalytic converters are integrated into front exhaust pipe as one unit; therefore, refer to “Front Exhaust Pipe” for installation procedure. <Ref. to EX(H6DO)-6, INSTALLATION, Front Exhaust Pipe.>

C: INSPECTION

1) Check the connections and welds for exhaust leaks.
2) Check for hole or rust.

4. EGR Valve

A: REMOVAL

For removal procedure, refer to “FU(H6DO)” section. <Ref. to FU(H6DO)-42, REMOVAL, EGR Valve.>

B: INSTALLATION

For installation procedure, refer to “FU(H6DO)” section. <Ref. to FU(H6DO)-43, INSTALLATION, EGR Valve.>

C: INSPECTION

For inspection procedures, refer to the “FU(H6DO)” section. <Ref. to FU(H6DO)-43, INSPECTION, EGR Valve.>

5. Canister

A: REMOVAL

1) Remove the rear wheel LH.
2) Lift up the vehicle.
3) Remove the rear mud guard LH. <Ref. to EI-38, REMOVAL, Mud Guard.>
4) Disconnect the quick connectors of the vent tube (A), canister drain tube (B) and charge tube (C), and remove the tubes from clips (D).

NOTE:
Disconnect the quick connector as shown in the figure.

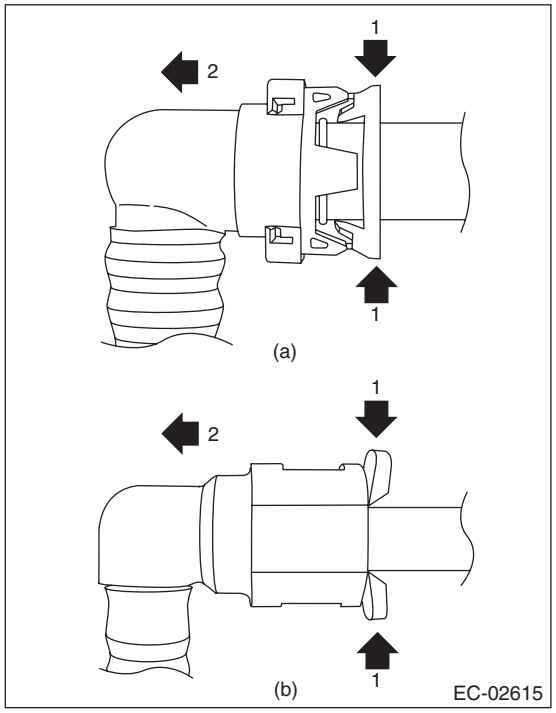

(a) Vent tube (A) and canister drain tube (B)
(b) Charge tube (C)

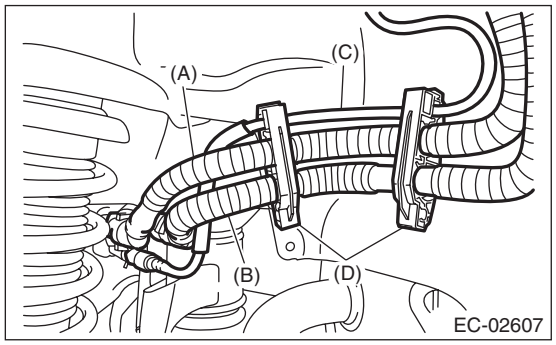

5) Remove the clip holding the rear wiring harness.

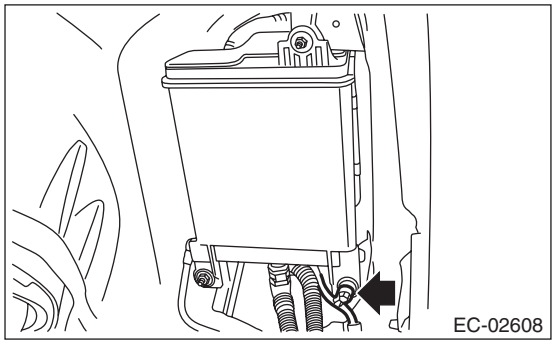

6) Remove the canister from vehicle.

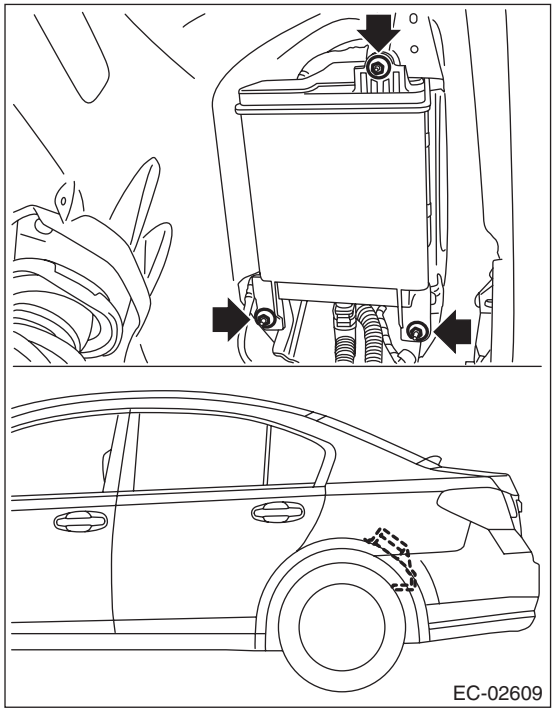

7) Disconnect the connector from drain valve.

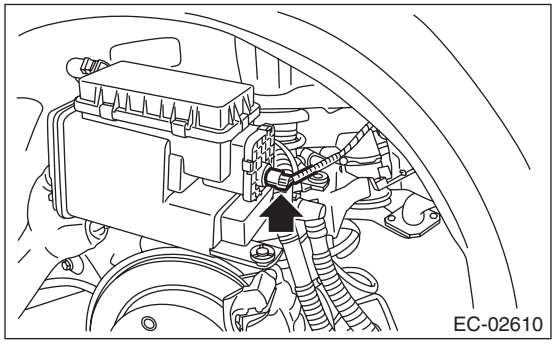

8) Disconnect the vent tube (A), canister drain tube (B) and charge tube (C), and remove the canister drain tube (B) from clip (D).

NOTE:
Disconnect the quick connector as shown in the figure.

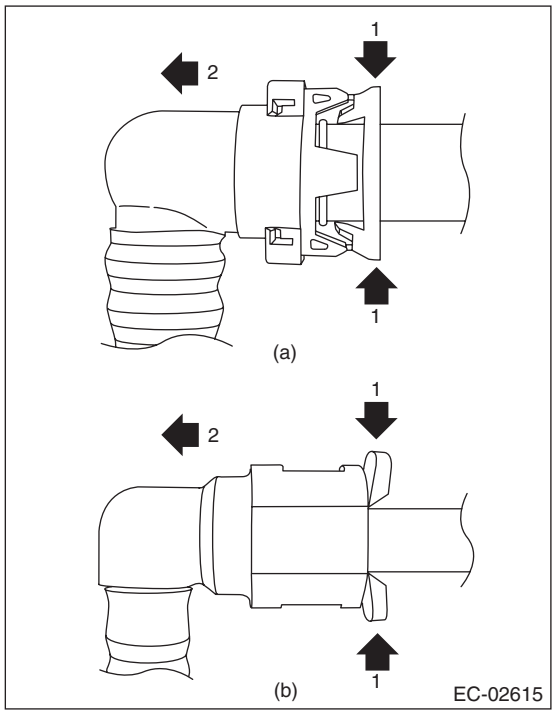

(a) Vent tube (A) and canister drain tube (B)
(b) Charge tube (C)

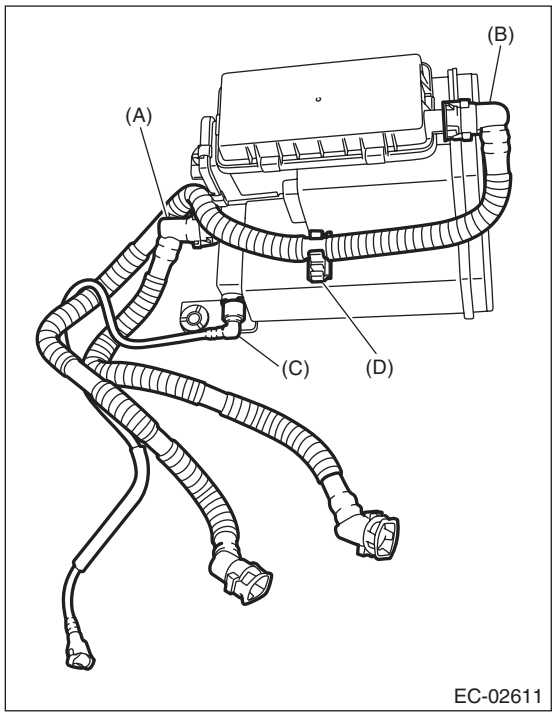

B: INSTALLATION

1) Install the vent tube (A), canister drain tube (B) and charge tube (C), and install the canister drain tube (B) to clip (D).

CAUTION:
• Make sure there are no damage or dust on connections. If necessary, clean the seal surface of the pipe.
• Make sure that the quick connector is securely connected.

NOTE:
Connect the quick connector as shown in the figure.

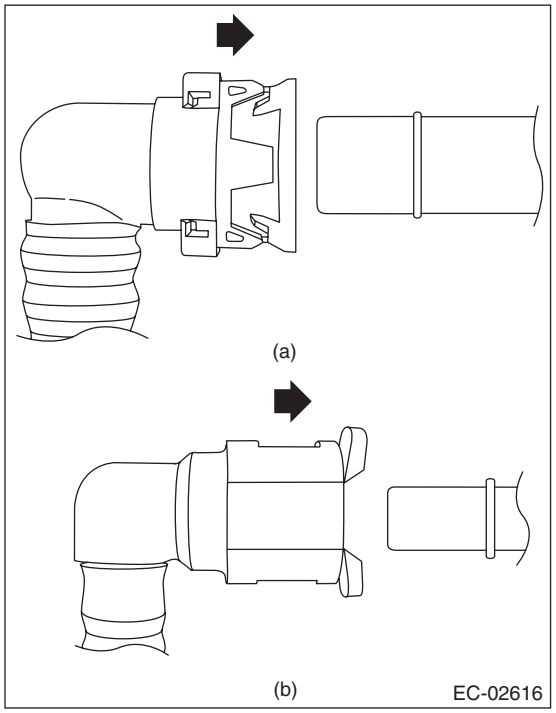

(a) Vent tube (A) and canister drain tube (B)
(b) Charge tube (C)

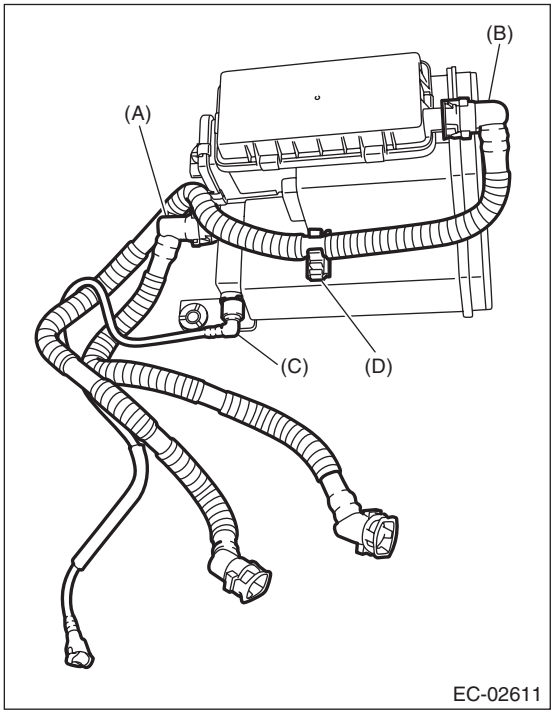

2) Connect the connector to the drain valve.

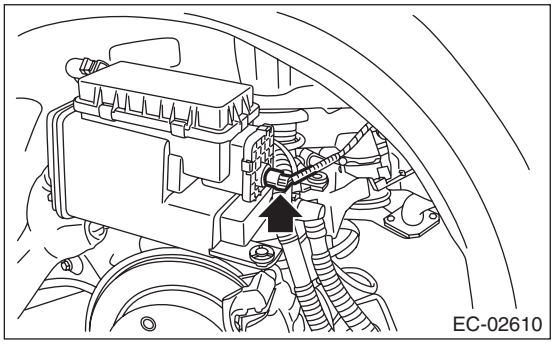

3) Install the canister to the vehicle.

Tightening torque:
8 N·m (0.8 kgf-m, 5.9 ft-lb)

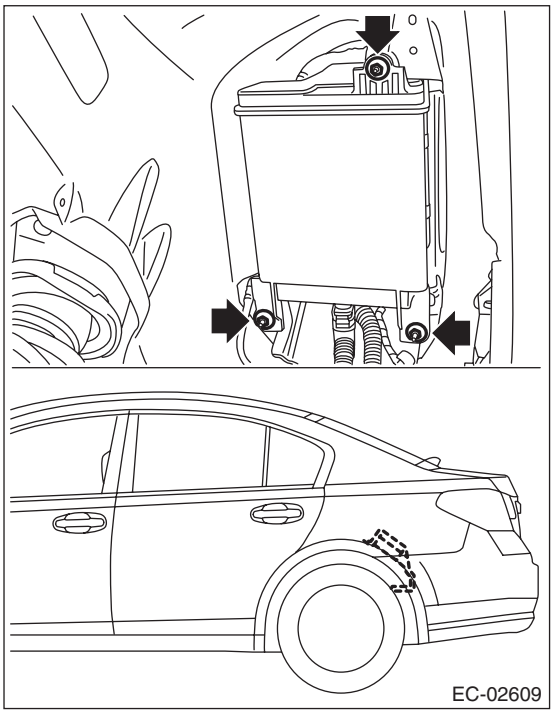

4) Secure the rear wiring harness with clip.

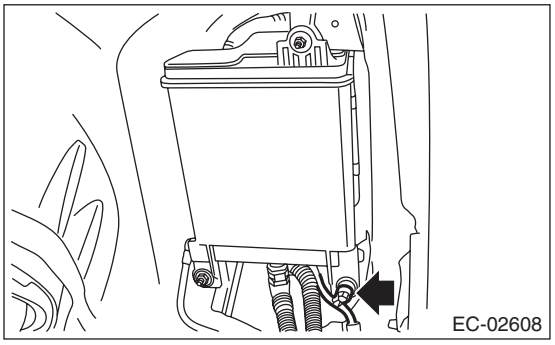

5) Attach all tubes to clips (D), and connect the quick connectors of the vent tube (A), canister drain tube (B) and charge tube (C).

CAUTION:
• Make sure there are no damage or dust on connections. If necessary, clean the seal surface of the pipe.
• Make sure that the quick connector is securely connected.

NOTE:
Connect the quick connector as shown in the figure.

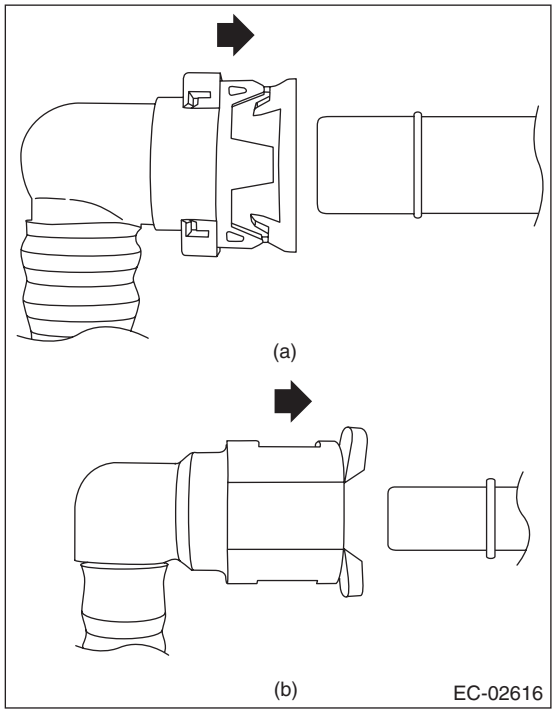

(a) Vent tube (A) and canister drain tube (B)
(b) Charge tube (C)

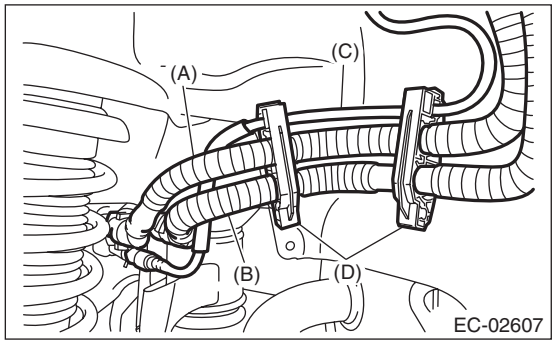

6) Install the rear mud guard LH. <Ref. to EI-38, INSTALLATION, Mud Guard.>
7) Lower the vehicle.
8) Install the rear wheel LH.

Tightening torque:
120 N·m (12.2 kgf-m, 88.5 ft-lb)

C: INSPECTION

1) Check that the canister has no deformation, cracks or other damages.
2) Check that the tube has no cracks, damage or loose part.

6. Purge Control Solenoid Valve

A: REMOVAL

1) Remove the collector cover.

NOTE:
Follow the steps below when removing the collector cover.
(1) Pull up the two points at the rear (A).
(2) Pull up the two points at the front (B) while moving them forward.

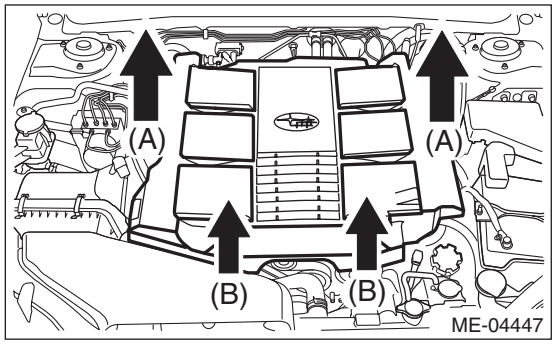

2) Disconnect the ground cable from battery.
3) Loosen the clamp (A) which connects the air intake boot assembly.
4) Loosen the bolt (B) which secures the air intake boot assembly to the collector cover bracket.

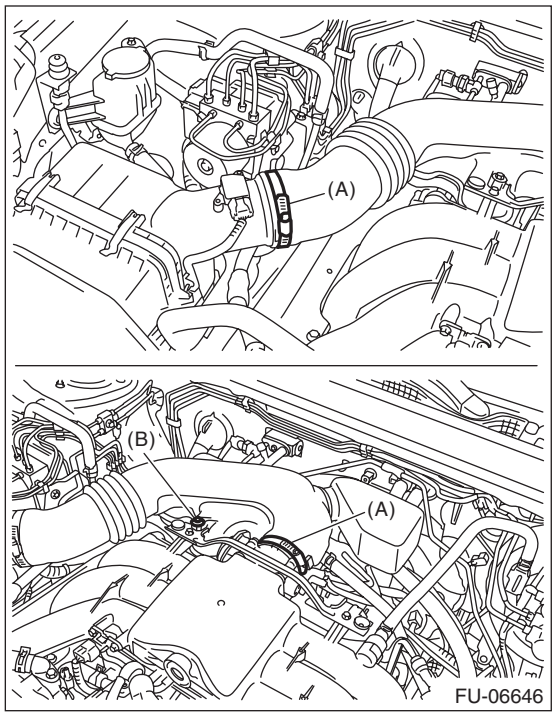

5) Remove the air intake boot assembly, and move it to the left side wheel apron.

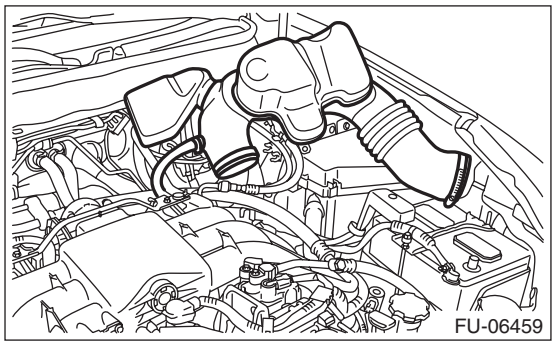

6) Disconnect the connector and hoses of purge control solenoid valve, and then remove the purge control solenoid valve.

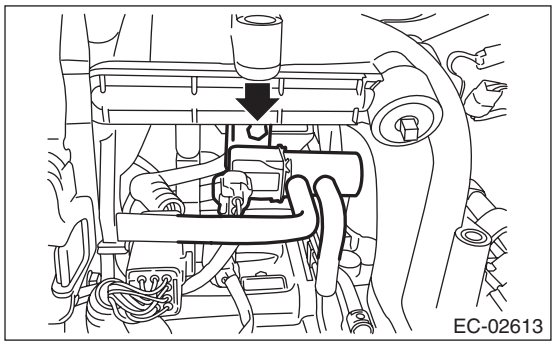

B: INSTALLATION

Install in the reverse order of removal.

Tightening torque:
19 N·m (1.9 kgf-m, 14.0 ft-lb)

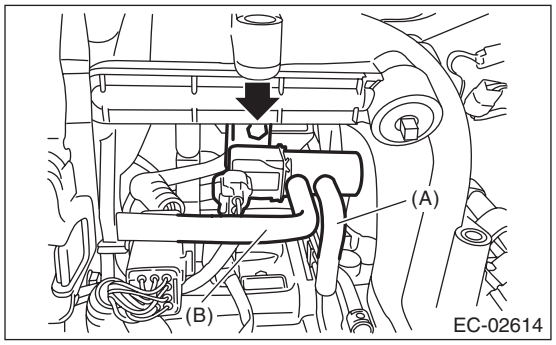

(A) To fuel pipe (evaporation line)
(B) To intake manifold

Tightening torque:
Clamp (A)
3 N·m (0.3 kgf-m, 2.2 ft-lb)
Bolt (B)
6.5 N·m (0.7 kgf-m, 4.8 ft-lb)

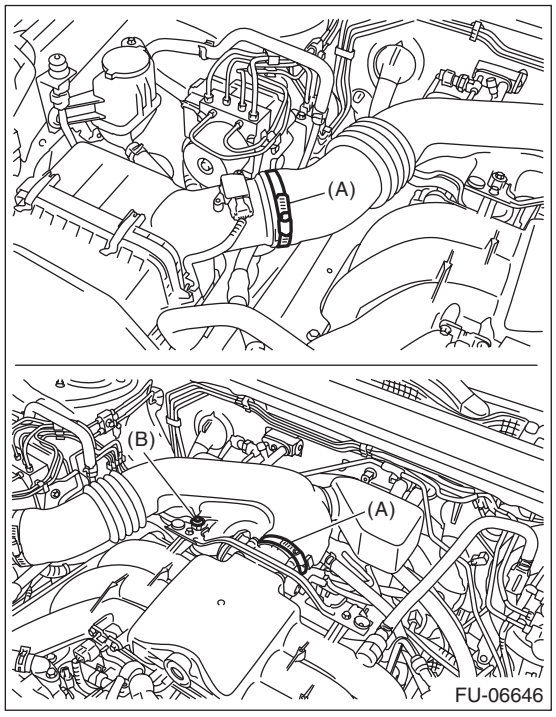

C: INSPECTION

1. PURGE CONTROL SOLENOID VALVE

1) Check that the purge control solenoid valve has no deformation, cracks or other damages.
2) Measure the resistance between the purge control solenoid valve terminals.

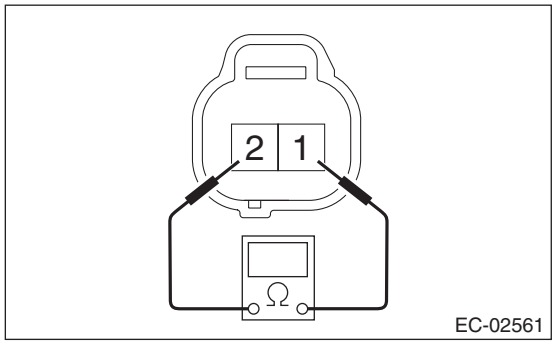

	Terminal No.	Standard
Purge control solenoid valve	1 and 2	32±3 Ω (when 20°C (68°F))

3) Check that air does not come out from (B) when air is blown into (A).

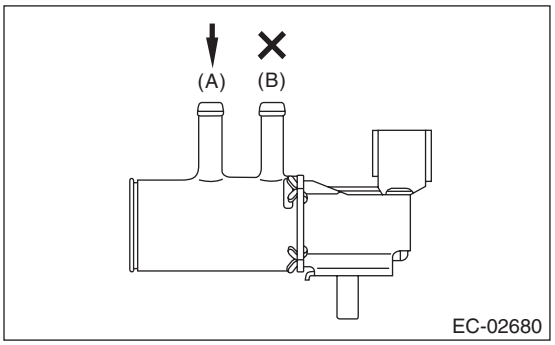

4) Connect the battery positive terminal to the terminal No. 1 and the battery negative terminal to the terminal No. 2. Check that air is discharged from (B), when supplying air to (A).

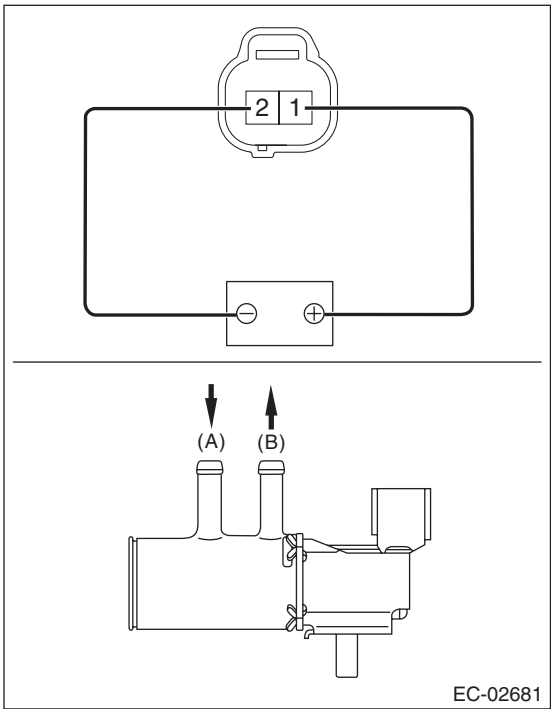

2. OTHER INSPECTIONS

Check that the evaporation hose has no cracks, damage or loose part.

7. Fuel Level Sensor

A: REMOVAL

For removal procedure, refer to “FU(H6DO)” section. <Ref. to FU(H6DO)-73, REMOVAL, Fuel Level Sensor.>

B: INSTALLATION

For installation procedure, refer to “FU(H6DO)” section. <Ref. to FU(H6DO)-73, INSTALLATION, Fuel Level Sensor.>

C: INSPECTION

For inspection procedures, refer to the “FU(H6DO)” section. <Ref. to FU(H6DO)-73, INSPECTION, Fuel Level Sensor.>

8. Fuel Temperature Sensor

A: REMOVAL

Fuel temperature sensor is integrated with the fuel level sensor. Refer to “Fuel Level Sensor” for removal procedure. <Ref. to FU(H6DO)-73, REMOVAL, Fuel Level Sensor.>

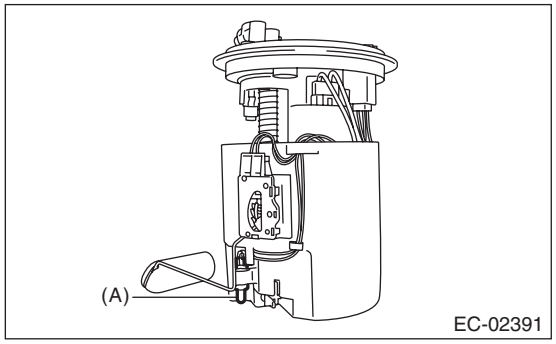

(A) Fuel temperature sensor

B: INSTALLATION

Refer to “Fuel Level Sensor” for the installation procedure. <Ref. to FU(H6DO)-73, INSTALLATION, Fuel Level Sensor.>

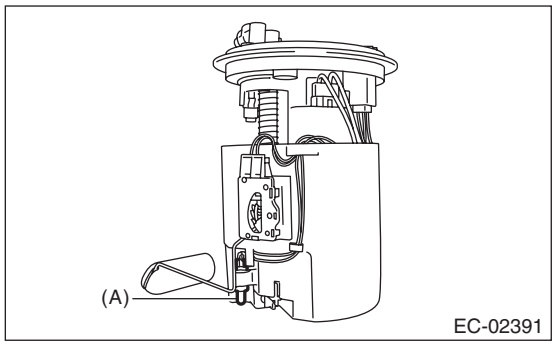

(A) Fuel temperature sensor

C: INSPECTION

1) Check that the fuel temperature sensor has no deformation, cracks or other damages.
2) Check the resistance between the fuel temperature sensor terminals.

CAUTION:
When measuring the resistance, check the circuit tester specification and be careful not to turn on electricity 3 V or more to prevent damaging the fuel temperature sensor.

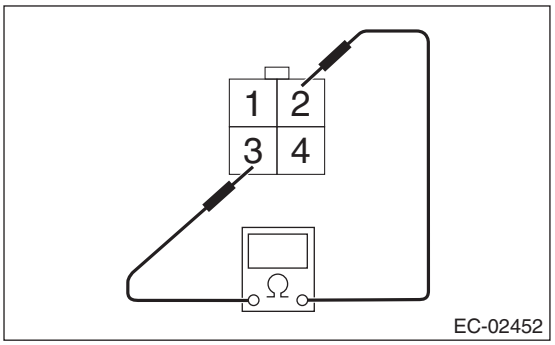

Temperature	Terminal No.	Standard
–10°C (14°F)	2 and 3	9.2±2.2 kΩ (when the measured current is 0.5 mA)
20°C (68°F)		2.5±0.2 kΩ (when the measured current is 1.0 mA)
50°C (122°F)		$0.84^{+0.06}_{-0.05}$ kΩ (when the measured current is 1.0 mA)

9. Fuel Sub Level Sensor

A: REMOVAL

For removal procedure, refer to “FU(H6DO)” section. <Ref. to FU(H6DO)-75, REMOVAL, Fuel Sub Level Sensor.>

B: INSTALLATION

For installation procedure, refer to “FU(H6DO)” section. <Ref. to FU(H6DO)-76, INSTALLATION, Fuel Sub Level Sensor.>

C: INSPECTION

For inspection procedures, refer to the “FU(H6DO)” section. <Ref. to FU(H6DO)-76, INSPECTION, Fuel Sub Level Sensor.>

10.Fuel Tank Pressure Sensor

A: REMOVAL

WARNING:
Place "NO OPEN FLAMES" signs near the working area.
1) Disconnect the ground cable from battery.
2) Open the fuel filler lid and remove the fuel filler cap.
3) Lift up the vehicle.
4) Disconnect connector (A) from fuel tank pressure sensor.
5) Pull out the vacuum hose (B) from vehicle.
6) Remove the fuel tank pressure sensor from the bracket.

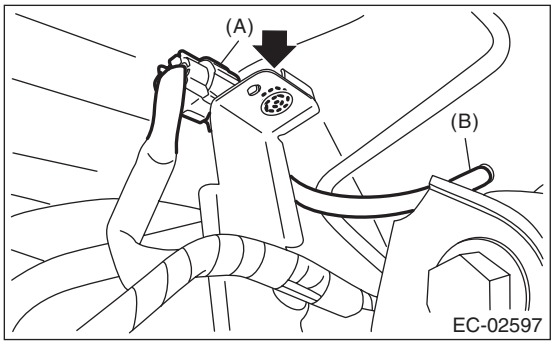

7) Disconnect the pressure hose from fuel tank pressure sensor and remove the fuel tank pressure sensor.

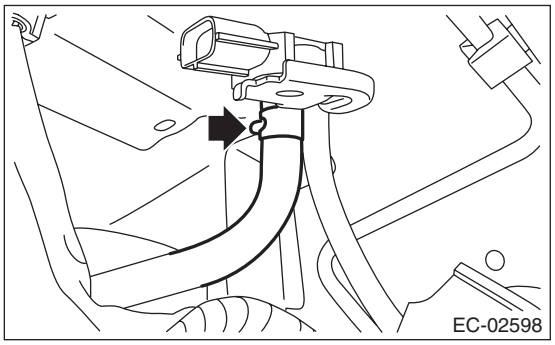

B: INSTALLATION

Install in the reverse order of removal.

Tightening torque:
7.35 N·m (0.7 kgf-m, 5.4 ft-lb)

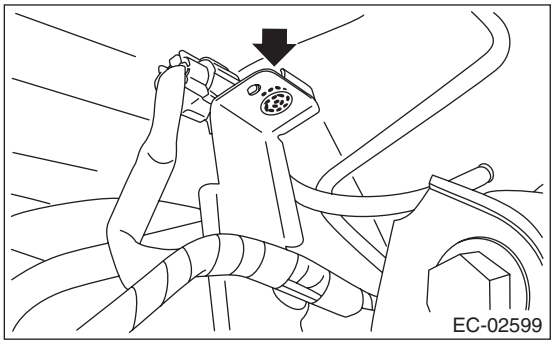

C: INSPECTION

1. FUEL TANK PRESSURE SENSOR

1) Check that the fuel tank pressure sensor does not have deformation, cracks or other damages.
2) Connect dry-cell battery positive terminal to terminal No. 3 and dry-cell battery ground terminal to terminal No. 1, circuit tester positive terminal to terminal No. 2 and the circuit tester negative terminal to terminal No. 1.

NOTE:
- Use new dry-cell batteries.
- Using circuit tester, check the voltage of a single dry-cell battery is 1.6 V or more. And also check the voltage of three batteries in series is between 4.8 V and 5.2 V.

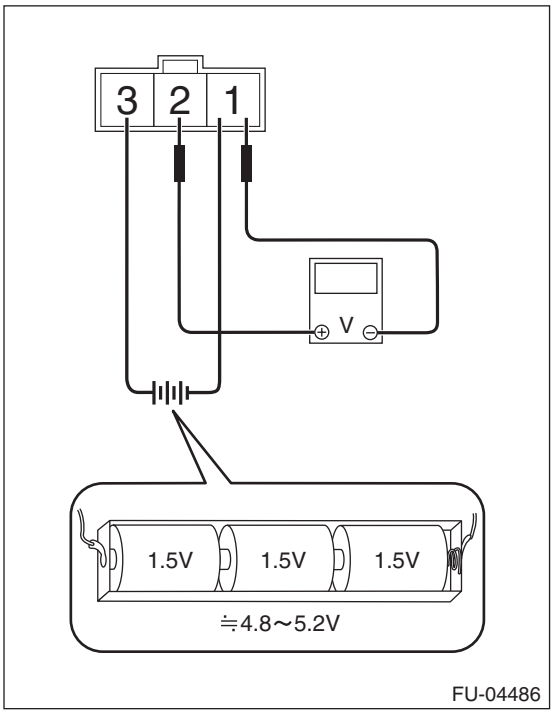

3) Check the voltage at a normal atmospheric pressure.

NOTE:
The atmospheric pressure at higher altitude is lower than normal. Therefore, the voltage is lower than the standard value.

Terminal No.	Standard
2 (+) and 1 (–)	Approx. 2.5 V (when 25°C (77°F))

4) Connect the Mighty Vac to the pressure port (A) on the fuel tank pressure sensor.

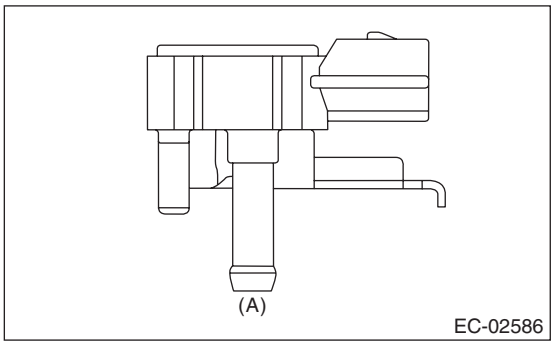

5) Check the voltage when generating vacuum and positive pressure using Mighty Vac.

CAUTION:
Be sure to apply pressure within a range of –10 — 20 kPa (–0.1 — 0.2 kgf/cm^2, –1.45 — 2.90 psi). Otherwise the fuel tank pressure sensor will be damaged.

Pressure	Terminal No.	Standard
–6.67 kPa (–0.07 kgf/cm^2, –0.97 psi)	2 (+) and 1 (–)	Approx. 0.5 V (when 25°C (77°F))
6.67 kPa (0.07 kgf/cm^2, 0.97 psi)		Approx. 4.5 V (when 25°C (77°F))

2. OTHER INSPECTIONS

Check that the hose has no cracks, damage or loose part.

11.Drain Filter

A: SPECIFICATION

Drain valve is a non-disassembled part, so do not remove the drain filter from drain valve. Refer to “Canister” for removal and installation procedures. <Ref. to EC(H6DO)-6, REMOVAL, Canister.> <Ref. to EC(H6DO)-7, INSTALLATION, Canister.>

12.Drain Valve

A: REMOVAL

Drain valve is integrated with canister. Refer to “Canister” for removal procedure. <Ref. to EC(H6DO)-6, REMOVAL, Canister.>

B: INSTALLATION

Refer to “Canister” for the installation procedure. <Ref. to EC(H6DO)-7, INSTALLATION, Canister.>

C: INSPECTION

Check the resistance between drain valve terminals.

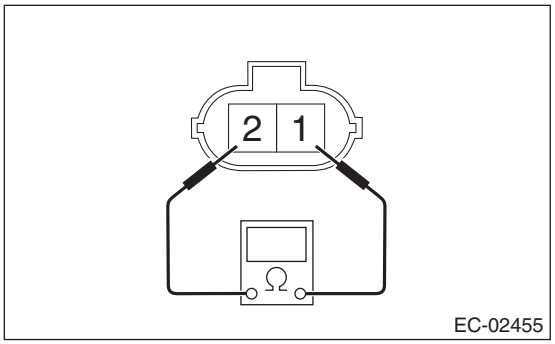

Terminal No.	Standard
1 and 2	20 — 30 Ω

13.PCV Valve

A: REMOVAL

CAUTION:
Do not remove unless the PCV valve is broken.
1) Remove the collector cover.

NOTE:
Follow the steps below when removing the collector cover.
(1) Pull up the two points at the rear (A).
(2) Pull up the two points at the front (B) while moving them forward.

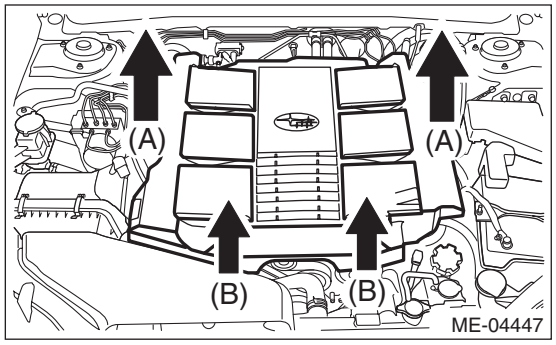

2) Remove the battery and battery carrier. <Ref. to SC(H4SO)-28, REMOVAL, Battery.>
3) Disconnect the PCV hose.

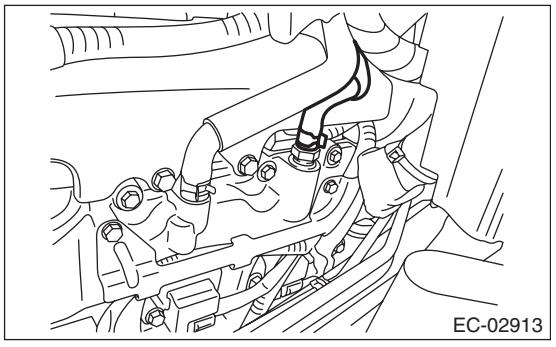

4) Remove the PCV valve from rocker cover.

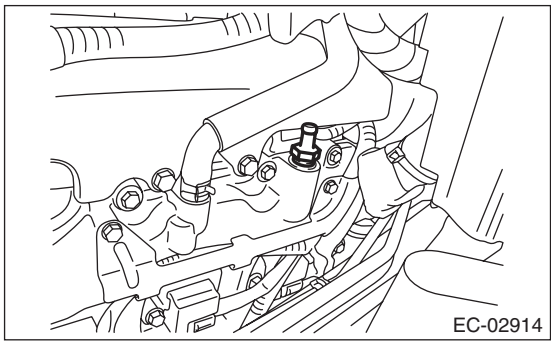

B: INSTALLATION

Install in the reverse order of removal.

NOTE:
Apply liquid gasket to the bolt threads of PCV valve.

Liquid gasket:
THREE BOND 1324 (Part No. 004403042) or equivalent

Tightening torque:
25 N·m (2.5 kgf-m, 18.4 ft-lb)

C: INSPECTION

1. PCV VALVE

1) Check that the PCV valve has no deformation, cracks or other damages.
2) Check that air is discharged from (B) when air is blown into (A).

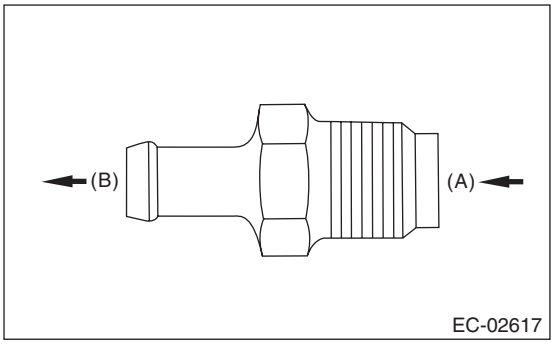

3) Check that air does not come out from (B) when air is blown into (A).

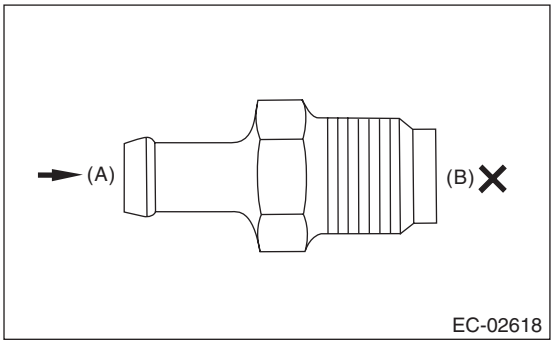

2. OTHER INSPECTIONS

Check that the PCV hose has no cracks, damage or loose part.

INTAKE (INDUCTION)

IN(H6DO)

Page

1. General Description 2
2. Air Cleaner Element 4
3. Air Cleaner Case 5
4. Air Intake Boot 7
5. Air Intake Duct 8
6. Resonator Chamber 9

1. General Description

A: COMPONENT

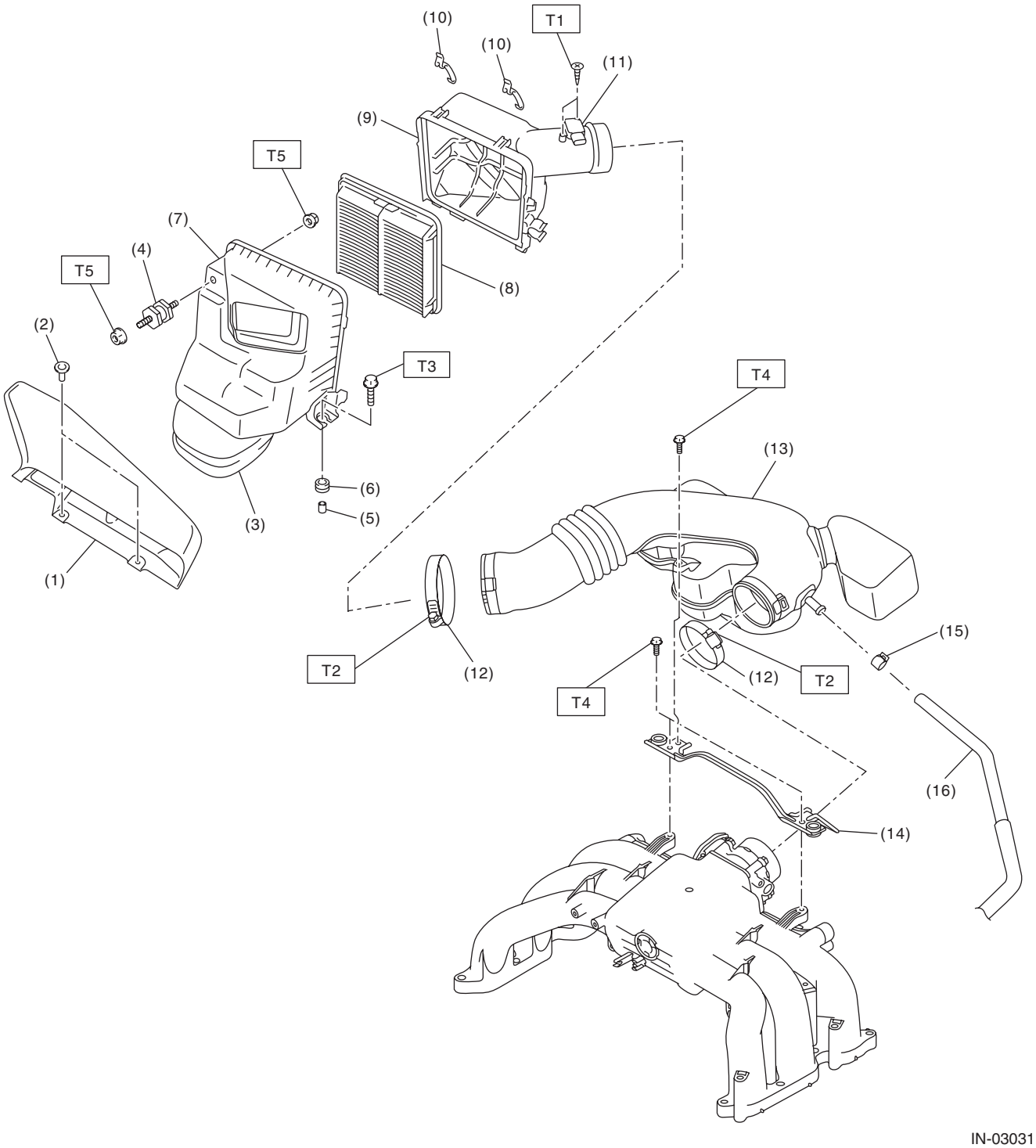

(1)	Air intake duct	(9)	Air cleaner case (rear)	***Tightening torque:N·m (kgf-m, ft-lb)***
(2)	Clip	(10)	Clip	***T1: 1 (0.1, 0.7)***
(3)	Resonator chamber	(11)	Mass air flow and intake air temperature sensor	***T2: 3 (0.3, 2.2)***
(4)	Cushion	(12)	Clamp	***T3: 6 (0.6, 4.4)***
(5)	Spacer	(13)	Air intake boot ASSY	***T4: 6.5 (0.7, 4.8)***
(6)	Cushion	(14)	Collector cover bracket	***T5: 7.5 (0.8, 5.5)***
(7)	Air cleaner case (front)	(15)	Clip	
(8)	Air cleaner element	(16)	Blow-by hose	

B: CAUTION

- Wear appropriate work clothing, including a cap, protective goggles and protective shoes when performing any work.
- Remove contamination including dirt and corrosion before removal, installation or disassembly.
- Keep the disassembled parts in order and protect them from dust and dirt.
- Before removal, installation or disassembly, be sure to clarify the failure. Avoid unnecessary removal, installation, disassembly and replacement.
- Vehicle components are extremely hot after driving. Be wary of receiving burns from heated parts.
- Be sure to tighten fasteners including bolts and nuts to the specified torque.
- Place shop jacks or rigid racks at the specified points.
- Before disconnecting connectors of sensors or units, be sure to disconnect the ground cable from the battery.

2. Air Cleaner Element

A: REMOVAL

1) Disconnect the ground cable from battery.
2) Disconnect the power steering oil pressure hose (suction hose) from the clip on the side of air cleaner case (rear).

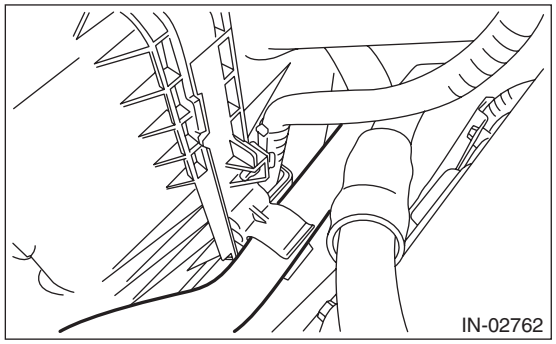

3) Disconnect the connector (A) from the mass air flow and intake air temperature sensor, and remove the clip (B).

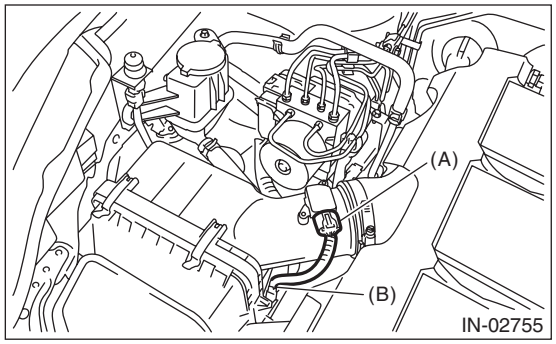

4) Loosen the clamp (A) which connects the air cleaner case (rear) and air intake boot assembly.
5) Remove the clip (B) securing the upper side of air cleaner case.

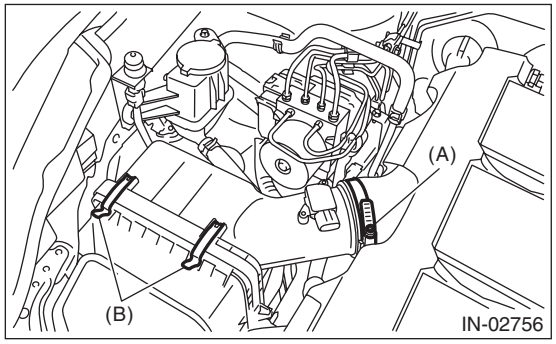

6) Pull the air cleaner case (rear) backward of the vehicle, and remove the air cleaner element.

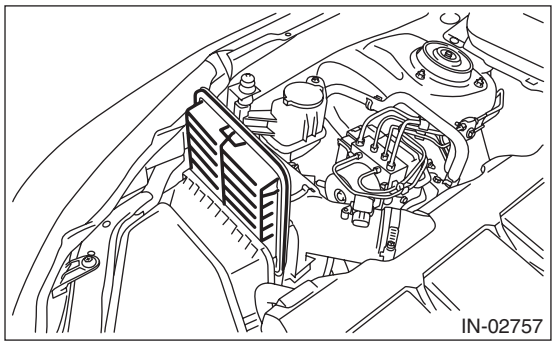

B: INSTALLATION

Install in the reverse order of removal.

CAUTION:
Be sure to use SUBARU genuine air cleaner element depending on the engine type when replacing the air cleaner elements. Using other air cleaner element may affect the engine performance.

NOTE:
• Check that there are no foreign objects in the air cleaner case.
• When installing the air cleaner case (rear), align the protrusion of the air cleaner case (rear) to the hole on the air cleaner case (front) to install.

Tightening torque:
3 N·m (0.3 kgf-m, 2.2 ft-lb)

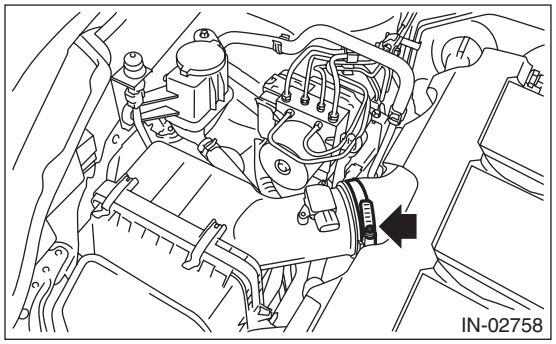

C: INSPECTION

1) Check that the air cleaner element has no deformation, cracks or other damages.
2) Check if the air cleaner element is extremely dirty.

3. Air Cleaner Case

A: REMOVAL

1) Disconnect the ground cable from battery.
2) Disconnect the power steering oil pressure hose (suction hose) from the clip on the side of air cleaner case (rear).

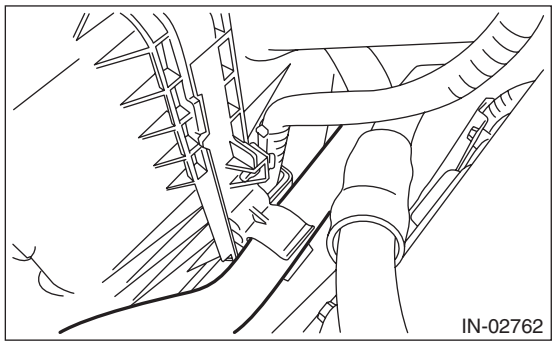

3) Disconnect the connector (A) from the mass air flow and intake air temperature sensor, and remove the clip (B).

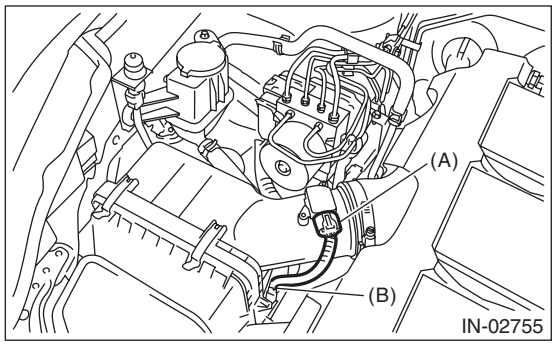

4) Loosen the clamp (A) which connects the air cleaner case (rear) and air intake boot.
5) Remove the clip (B) securing the upper side of air cleaner case (rear).

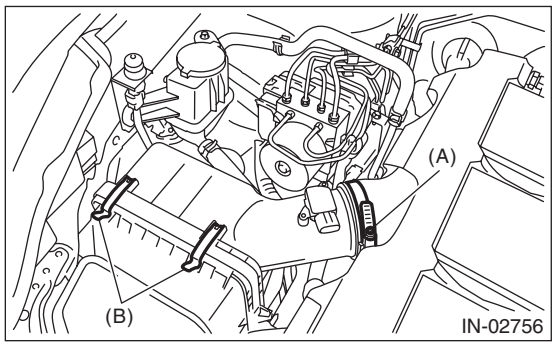

6) Remove the air intake duct. <Ref. to IN(H6DO)-8, REMOVAL, Air Intake Duct.>
7) Remove the air cleaner case (rear) and air cleaner element.
8) Remove the bolts (A) and nuts (B) which secure the air cleaner case (front) to the body.

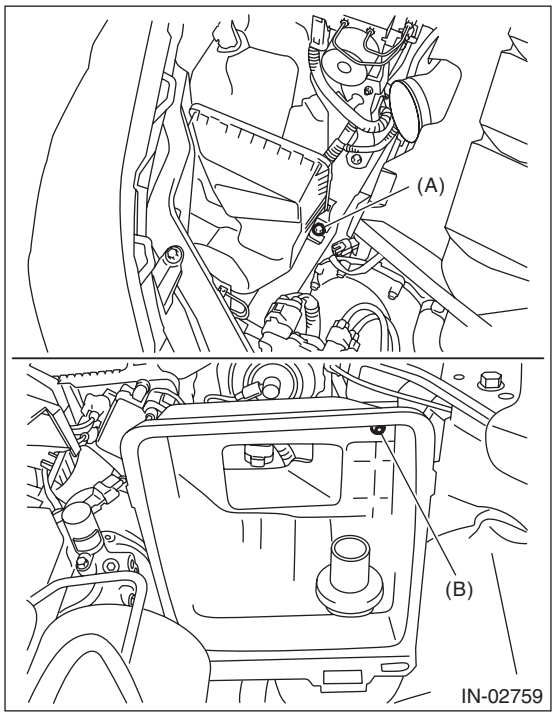

9) Remove the air cleaner case (front).

B: INSTALLATION

1) Install the bolt (A) and nut (B) which secure the air cleaner case (front) to the body.

Tightening torque:
Bolt (A)
6 N·m (0.6 kgf-m, 4.4 ft-lb)
Nut (B)
7.5 N·m (0.8 kgf-m, 5.5 ft-lb)

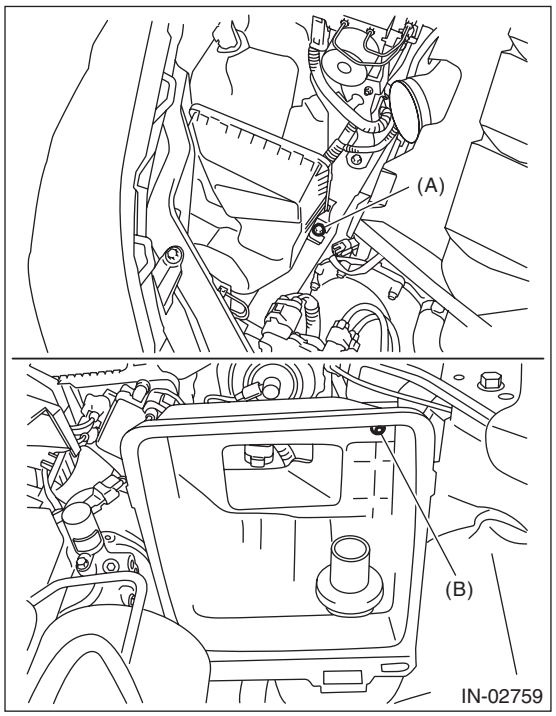

2) Install the air cleaner case (rear) and the air cleaner element.

NOTE:
When installing the air cleaner case (rear), align the protrusion of the air cleaner case (rear) to the hole on the air cleaner case (front) to install.

3) Install the air intake duct. <Ref. to IN(H6DO)-8, INSTALLATION, Air Intake Duct.>

4) Attach the clip (B) to the air cleaner case (front), and tighten the clamp (A) connecting the air cleaner case (rear) and air intake boot assembly.

Tightening torque:
Clamp (A)
3 N·m (0.3 kgf-m, 2.2 ft-lb)

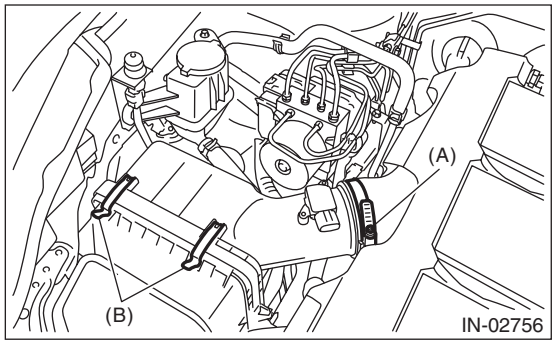

5) Connect the connector (A) to the mass air flow and intake air temperature sensor, and fasten the harness to clip (B).

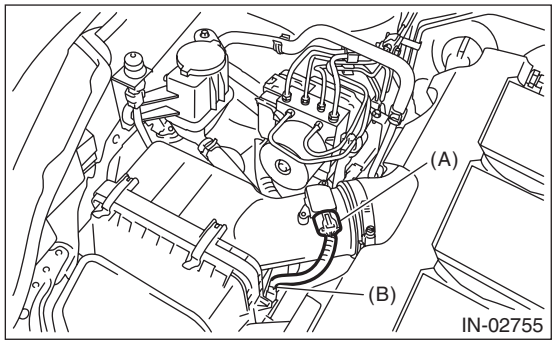

6) Connect the power steering oil pressure hose (suction hose) to the clip on the side of air cleaner case (rear).

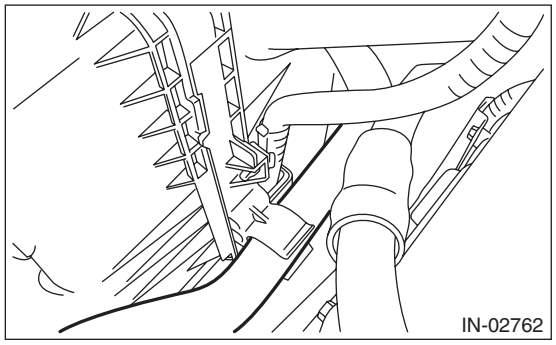

7) Connect the ground cable to battery.

C: INSPECTION

1) Check that the air cleaner case has no deformation, cracks or other damages.
2) Check the air intake boot assembly for cracks, damage or looseness.

4. Air Intake Boot

A: REMOVAL

1) Remove the collector cover.

NOTE:
Follow the steps below when removing the collector cover.
(1) Pull up the two points at the rear (A).
(2) Pull up the two points at the front (B) while moving them forward.

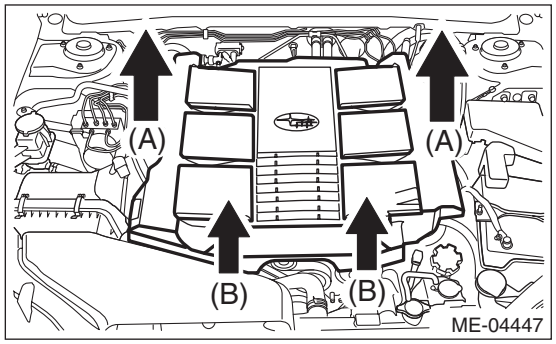

2) Loosen the clamp which connects the air intake boot assembly and air cleaner case (rear).

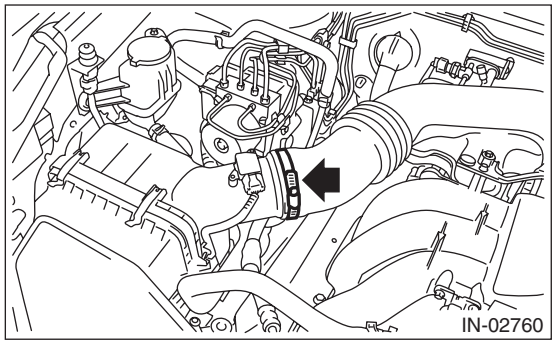

3) Loosen the clamp (A) which connects the air intake boot assembly and throttle body.
4) Loosen the bolt (B) which secures the air intake boot assembly and collector cover bracket.

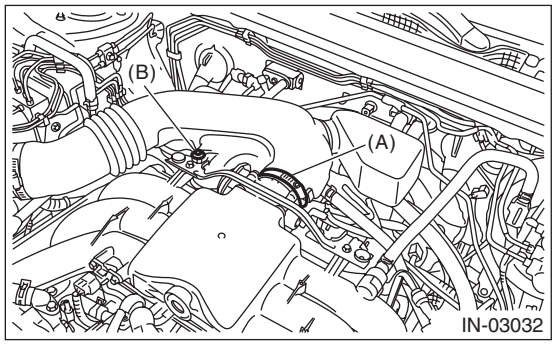

5) Disconnect the blow-by hose and remove the air intake boot assembly.

B: INSTALLATION

1) Install the air intake boot assembly and connect the blow-by hose.
2) Tighten the clamp (A) which connects the air intake boot assembly and throttle body.
3) Tighten the bolt (B) which secures the air intake boot assembly and collector cover bracket.

Tightening torque:
Clamp (A)
3 N·m (0.3 kgf-m, 2.2 ft-lb)
Bolt (B)
6.5 N·m (0.7 kgf-m, 4.8 ft-lb)

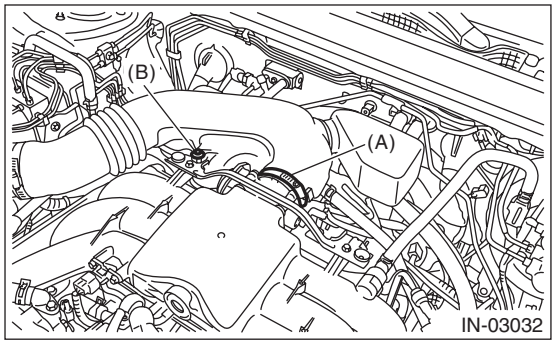

4) Tighten the clamp which connects the air intake boot assembly and air cleaner case (rear).

Tightening torque:
3 N·m (0.3 kgf-m, 2.2 ft-lb)

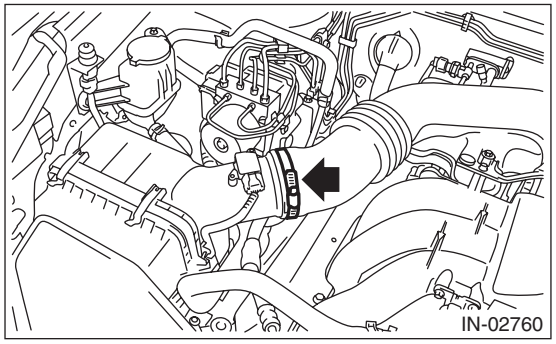

5) Install the collector cover.

C: INSPECTION

1) Check that the air intake boot assembly does not have deformation, cracks or other damages.
2) Check there is no foreign matter in the air intake boot assembly.

5. Air Intake Duct

A: REMOVAL

1) Remove the clip securing the air intake duct.
2) Remove the air intake duct.

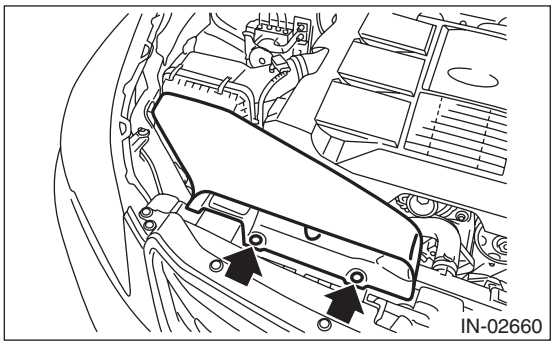

B: INSTALLATION

Install in the reverse order of removal.

C: INSPECTION

1) Check that the air intake duct has no deformation, cracks or other damages.
2) Check that no foreign matter is mixed in air intake duct.

6. Resonator Chamber

A: REMOVAL

The resonator chamber and air cleaner case are integrated into one unit; therefore, refer to “Air Cleaner Case” for removal procedure. <Ref. to IN(H6DO)-5, REMOVAL, Air Cleaner Case.>

B: INSTALLATION

The resonator chamber and air cleaner case are integrated into one unit; therefore, refer to “Air Cleaner Case” for installation procedure. <Ref. to IN(H6DO)-5, INSTALLATION, Air Cleaner Case.>

C: INSPECTION

Check that the resonator chamber has no deformation, cracks or other damages.

MECHANICAL

ME(H6DO)

		Page
1.	General Description	2
2.	Compression	26
3.	Idle Speed	27
4.	Ignition Timing	28
5.	Intake Manifold Vacuum	29
6.	Engine Oil Pressure	30
7.	Fuel Pressure	31
8.	Valve Clearance	32
9.	Engine Assembly	36
10.	Engine Mounting	45
11.	Preparation for Overhaul	50
12.	V-belt	51
13.	Crank Pulley	52
14.	Chain Cover	53
15.	Timing Chain Assembly	62
16.	Cam Sprocket	82
17.	Crank Sprocket	83
18.	Camshaft	84
19.	Cylinder Head	92
20.	Cylinder Block	104
21.	Oil Flow Control Solenoid Valve	127
22.	Intake and Exhaust Valve	128
23.	Piston	129
24.	Connecting Rod	130
25.	Crankshaft	131
26.	Engine Trouble in General	132
27.	Engine Noise	138

1. General Description

A: SPECIFICATION

Engine	Model			3.6 L
	Cylinder arrangement			Horizontally opposed, liquid cooled, 6-cylinder, 4-stroke gasoline engine
	Valve system mechanism			Chain driven, double overhead camshaft, 4-valve/cylinder
	Bore × Stroke	mm (in)		92 × 91 (3.622 × 3.583)
	Displacement	cm^3 (cu in)		3,630 (221.5)
	Compression ratio			10.5
	Compression (350 rpm and fully open throttle)	kPa (kgf/cm^2, psi)	Standard	1,275 — 1,471 (13.0 — 15.0, 185 — 213)
	Number of piston rings			Pressure ring: 2, Oil ring: 1
	Intake valve timing	Open	Max. retard	ATDC 10°
			Min. advance	BTDC 40°
		Close	Max. retard	ABDC 74°
			Min. advance	ABDC 24°
	Exhaust valve timing	Open	Max. retard	BBDC 4°
			Min. advance	BBDC 44°
		Close	Max. retard	ATDC 44°
			Min. advance	ATDC 4°
	Valve clearance mm (in)	Intake		$0.20^{+0.04}_{-0.06}$ ($0.0079^{+0.0016}_{-0.0024}$)
		Exhaust		0.35±0.05 (0.0138±0.0020)
	Idle speed ["P" or "N" range] rpm	No load	Standard	700±100
		A/C ON	Standard	700 — 910±100
	Ignition order			1 → 6 → 3 → 2 → 5 → 4
	Ignition timing	BTDC/rpm	Standard	15°±8°/700

NOTE:
OS: Oversize
US: Undersize

Camshaft	Bending limit			mm (in)	0.020 (0.00079)
	Cam lobe height mm (in)	Intake		Standard	45.90 — 46.00 (1.8071 — 1.8110)
		Exhaust		Standard	44.65 — 44.75 (1.7579 — 1.7618)
	Cam base circle diameter mm (in)	Intake		Standard	36.00 (1.4173)
		Exhaust		Standard	36.00 (1.4173)
	Journal O.D. mm (in)	Front		Standard	37.946 — 37.963 (1.4939 — 1.4946)
		Except for front		Standard	25.946 — 25.963 (1.0215 — 1.0222)
	Oil clearance		mm (in)	Standard	0.037 — 0.072 (0.0015 — 0.0028)
	Thrust clearance mm (in)	Intake		Standard	0.075 — 0.135 (0.0030 — 0.0053)
		Exhaust		Standard	0.075 — 0.135 (0.0030 — 0.0053)
Cylinder head	Warping limit (Mating surface with cylinder block)			mm (in)	0.020 (0.0008)
	Standard height			mm (in)	124±0.05 (4.88±0.0020)
Valve seat	Seating angle between valve and valve seat				90°
	Contacting width between valve and valve seat mm (in)	Intake		Standard	1.0 (0.039)
		Exhaust		Standard	1.5 (0.059)
Valve guide	Clearance between the valve guide and valve stem mm (in)	Intake		Standard	0.030 — 0.057 (0.0012 — 0.0022)
		Exhaust		Standard	0.040 — 0.067 (0.0016 — 0.0026)
	Inside diameter			mm (in)	5.500 — 5.512 (0.2165 — 0.2170)
	Valve stem outer diameters mm (in)		Intake		5.455 — 5.470 (0.2148 — 0.2154)
			Exhaust		5.445 — 5.460 (0.2144 — 0.2150)
	Valve guide protrusion amount	Intake		mm (in)	8.6 — 9.0 (0.3386 — 0.3543)
		Exhaust		mm (in)	10.7 — 11.1 (0.4213 — 0.4370)
Valve	Head edge thickness mm (in)	Intake		Standard	1.0 (0.039)
		Exhaust		Standard	1.2 (0.047)
	Overall length mm (in)		Intake		103.5 (4.075)
			Exhaust		103.2 (4.063)
Valve spring	Free length mm (in)	Intake			49.06 (1.9315)
		Exhaust			49.06 (1.9315)
	Tension/spring height N (kgf, lb)/mm (in)			Set	182 — 210 (18.6 — 21.4, 40.9 — 47.2) / 31.0 (1.220)
				Lift	316 — 350 (32.2 — 35.7, 71.0 — 78.7) / 21.0 (0.827)
	Squareness				2.5°, 2.1 mm (0.083 in)
Valve lifter	Outer diameter		mm (in)	Standard	32.959 — 32.975 (1.2976 — 1.2982)
	Valve lifter mating surface inner diameter		mm (in)	Standard	32.994 — 33.016 (1.2990 — 1.2998)
	Valve lifter and valve lifter mating surface clearance		mm (in)	Standard	0.019 — 0.057 (0.0007 — 0.0022)
Cylinder block	Warping limit (Mating surface with cylinder head)			mm (in)	0.020 (0.0008)
	Standard height			mm (in)	202 (7.95)
	Cylindricality		mm (in)	Limit	0.030 (0.0012)
	Out-of-roundness		mm (in)	Limit	0.010 (0.0004)
	Clearance between cylinder and piston at 20°C (68°F)		mm (in)	Standard	–0.010 — 0.010 (–0.0004 — 0.0004)
	Cylinder inner diameter boring limit (diameter)			mm (in)	92.515 (3.6717)

Piston	Piston grade point mm (in)			37.3 (1.4685)
	Outer diameter mm (in)	Standard	A	92.005 — 92.015 (3.6222 — 3.6226)
			B	91.995 — 92.005 (3.6218 — 3.6222)
		0.25 (0.0098) OS		92.245 — 92.265 (3.6317 — 3.6325)
		0.50 (0.0197) OS		92.495 — 92.515 (3.6415 — 3.6423)
	Inner diameter of piston pin hole mm (in)		Standard	22.000 — 22.006 (0.8661 — 0.8664)
Piston pin	Degree of fit			Piston pin must be fitted into position with thumb at 20°C (68°F).
	Outer diameter mm (in)		Standard	21.994 — 22.000 (0.8659 — 0.8661)
	Clearance between piston and piston pin mm (in)		Standard	0.004 — 0.008 (0.0002 — 0.0003)
Piston ring	Piston ring gap mm (in)	Top ring	Standard	0.20 — 0.35 (0.0079 — 0.0138)
		Second ring	Standard	0.40 — 0.50 (0.0157 — 0.0197)
		Oil ring	Standard	0.20 — 0.50 (0.0079 — 0.0197)
	Clearance between piston ring and piston ring groove mm (in)	Top ring	Standard	0.040 — 0.080 (0.0016 — 0.0031)
		Second ring	Standard	0.030 — 0.070 (0.0012 — 0.0028)
		Oil ring	Standard	0.065 — 0.165 (0.0026 — 0.0065)
Connecting rod and connecting rod bearing	Bend or twist per 100 mm (3.94 in) in length mm (in)		Limit	0.10 (0.0039 in)
	Thrust clearance mm (in)		Standard	0.070 — 0.330 (0.0028 — 0.0130)
	Oil clearance mm (in)		Standard	0.016 — 0.043 (0.0006 — 0.0017)
	Bearing size (Thickness at center) mm (in)	Standard		1.489 — 1.505 (0.0586 — 0.0593)
		0.03 (0.0012) US		1.507 — 1.515 (0.0593 — 0.0596)
		0.05 (0.0020) US		1.517 — 1.525 (0.0597 — 0.0600)
		0.25 (0.0098) US		1.617 — 1.625 (0.0637 — 0.0640)
Bushing of small end	Clearance between piston pin and bushing mm (in)		Standard	0 — 0.022 (0 — 0.0009)

Crankshaft and crankshaft bearing	Bending limit			mm (in)	0.035 (0.0014)
	Crank pin	Out-of-roundness	mm (in)	Limit	0.005 (0.0002)
		Cylindricality	mm (in)	Limit	0.006 (0.0002)
		Grinding limit		mm (in)	51.734 (2.0368)
	Crank journal	Out-of-roundness	mm (in)	Limit	0.005 (0.0002)
		Cylindricality	mm (in)	Limit	0.006 (0.0002)
		Grinding limit		mm (in)	63.742 (2.5095)
	Crank pin outer diameter mm (in)			Standard	51.976 — 52.000 (2.0463 — 2.0472)
				0.03 (0.0012) US	51.954 — 51.970 (2.0454 — 2.0461)
				0.05 (0.0020) US	51.934 — 51.950 (2.0446 — 2.0453)
				0.25 (0.0098) US	51.734 — 51.750 (2.0368 — 2.0374)
	Crank journal outer diameter mm (in)		#1, #3, #5, #7	Standard	63.992 — 64.016 (2.5194 — 2.5203)
				0.03 (0.0012) US	63.962 — 63.978 (2.5182 — 2.5188)
				0.05 (0.0020) US	63.942 — 63.958 (2.5174 — 2.5180)
				0.25 (0.0098) US	63.742 — 63.758 (2.5095 — 2.5102)
			#2, #4, #6	Standard	63.992 — 64.016 (2.5194 — 2.5203)
				0.03 (0.0012) US	63.962 — 63.978 (2.5182 — 2.5188)
				0.05 (0.0020) US	63.942 — 63.958 (2.5174 — 2.5180)
				0.25 (0.0098) US	63.742 — 63.758 (2.5095 — 2.5102)
	Bearing size (Thickness at center) mm (in)		#1, #3, #5	Standard	1.996 — 2.013 (0.0786 — 0.0793)
				0.03 (0.0012) US	2.011 — 2.014 (0.0792 — 0.0793)
				0.05 (0.0020) US	2.021 — 2.024 (0.0796 — 0.0797)
				0.25 (0.0098) US	2.121 — 2.124 (0.0835 — 0.0836)
			#2, #4, #6	Standard	1.996 — 2.013 (0.0786 — 0.0793)
				0.03 (0.0012) US	2.015 — 2.018 (0.0793 — 0.0794)
				0.05 (0.0020) US	2.025 — 2.028 (0.0797 — 0.0798)
				0.25 (0.0098) US	2.125 — 2.128 (0.0837 — 0.0838)
			#7	Standard	1.992 — 2.009 (0.0784 — 0.0791)
				0.03 (0.0012) US	2.011 — 2.014 (0.0792 — 0.0793)
				0.05 (0.0020) US	2.021 — 2.024 (0.0796 — 0.0797)
				0.25 (0.0098) US	2.121 — 2.124 (0.0835 — 0.0836)
	Thrust clearance mm (in)			Standard	0.030 — 0.115 (0.0012 — 0.0045)
	Oil clearance mm (in)			Standard	0.010 — 0.030 (0.0004 — 0.0012)

B: COMPONENT

1. V-BELT

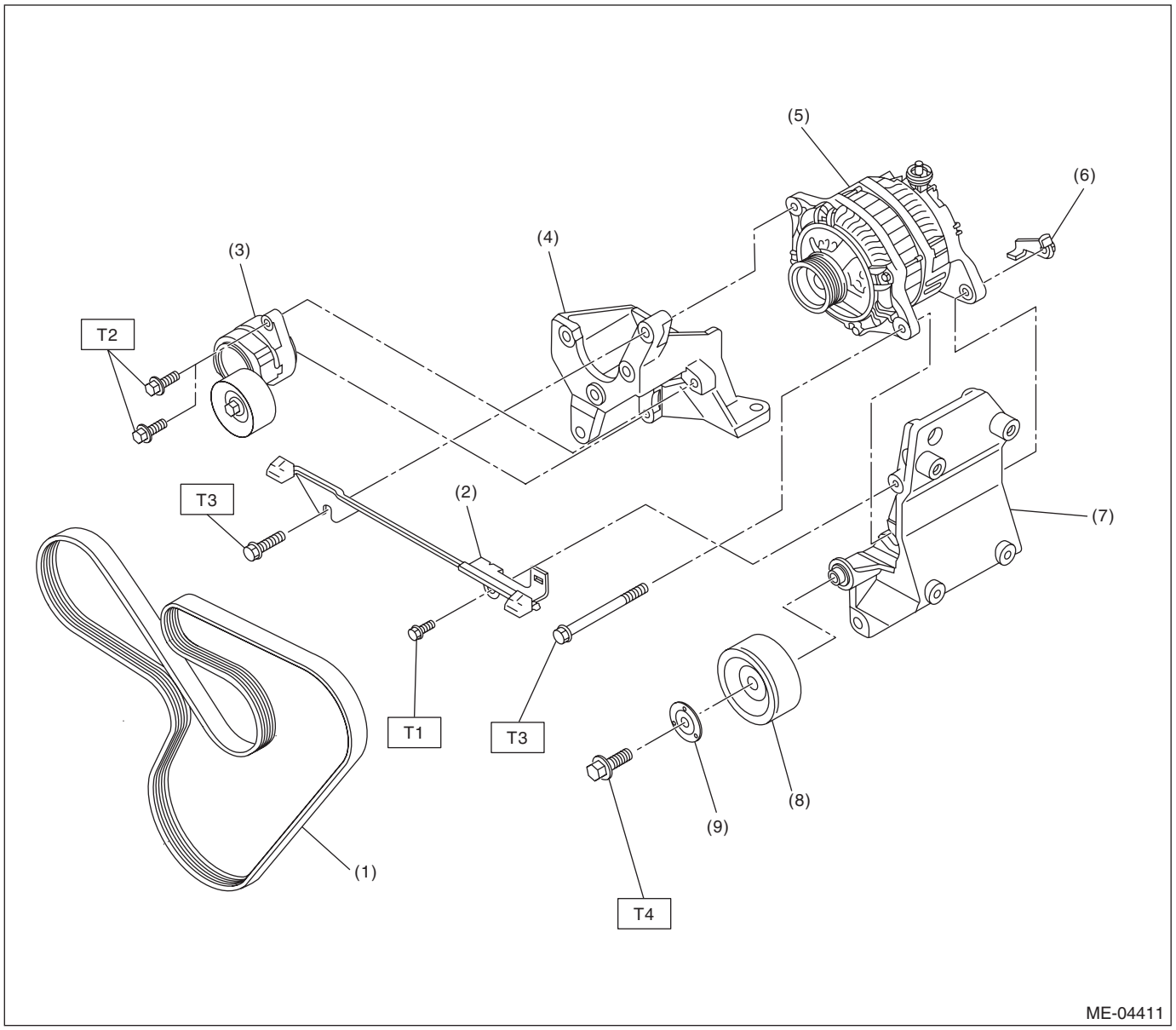

(1)	V-belt	(6)	Generator plate
(2)	Collector cover bracket	(7)	A/C compressor stay
(3)	Belt tensioner ASSY	(8)	Idler pulley
(4)	Power steering pump bracket	(9)	Idler pulley cover
(5)	Generator		

Tightening torque:N·m (kgf-m, ft-lb)

T1: 6.4 (0.7, 4.7)

T2: 20 (2.0, 14.8)

T3: 25 (2.5, 18.4)

T4: 33 (3.4, 24.3)

2. CHAIN COVER

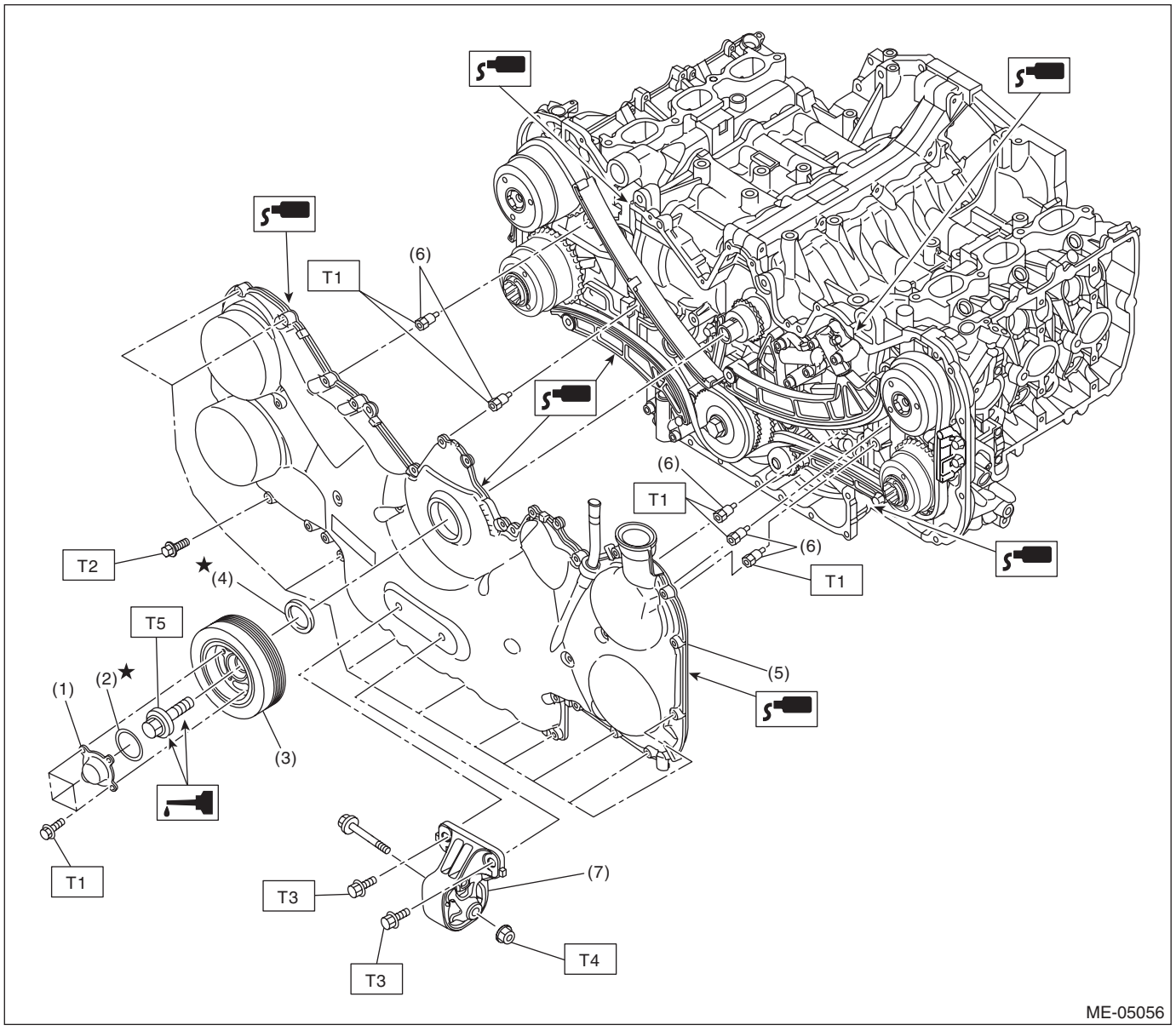

(1) Crank pulley cover
(2) O-ring
(3) Crank pulley
(4) Oil seal
(5) Chain cover
(6) Bolt
(7) Front mount

Tightening torque:N·m (kgf-m, ft-lb)
T1: 6.4 (0.7, 4.7)
T2: 10 (1.0, 7.4)
T3: 25 (2.5, 18.4)
T4: 45 (4.6, 33.2)
T5: 195 (19.9, 143.8)

3. TIMING CHAIN

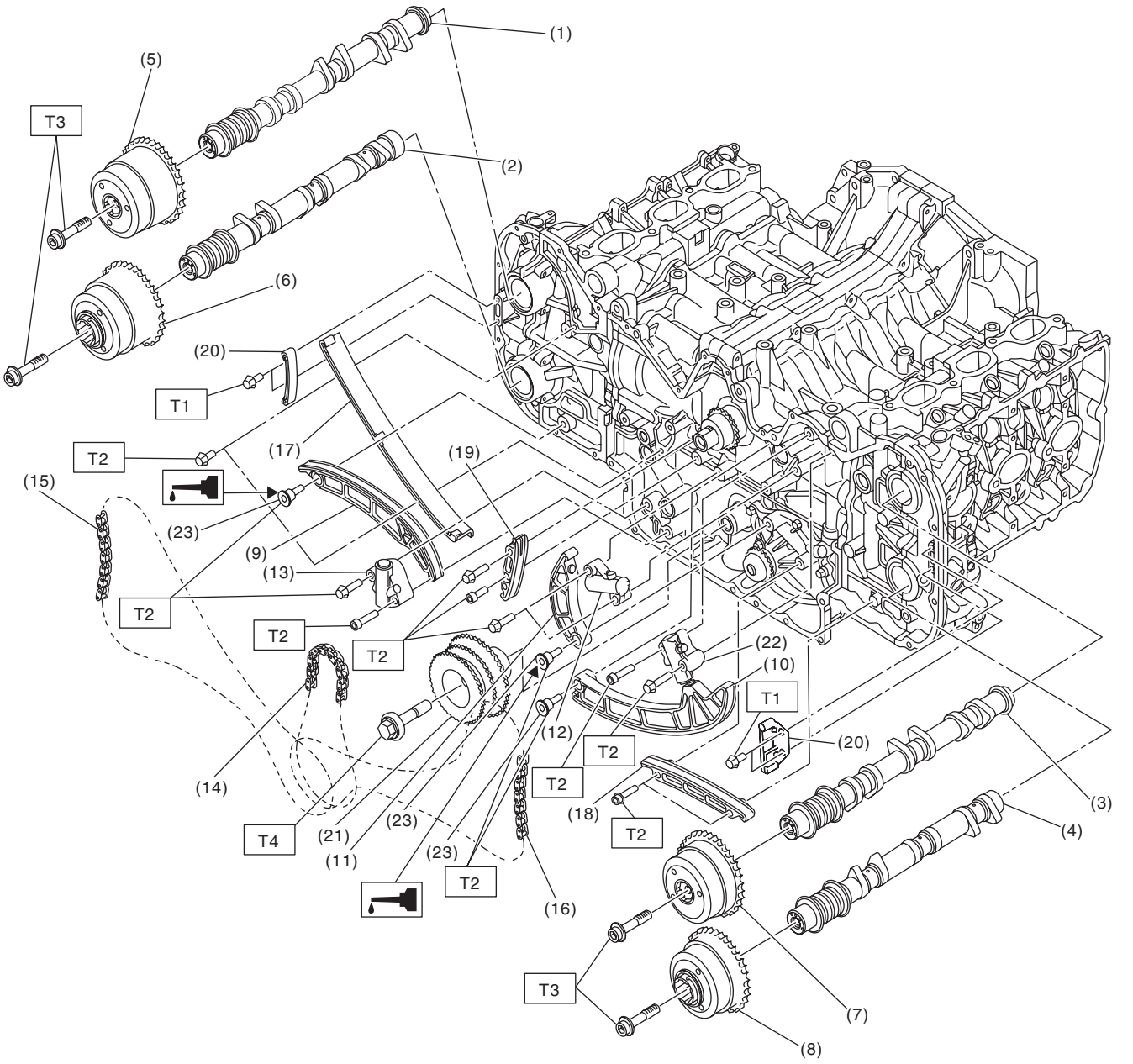

ME-04428

(1) Intake camshaft (RH)
(2) Exhaust camshaft (RH)
(3) Intake camshaft (LH)
(4) Exhaust camshaft (LH)
(5) Intake cam sprocket (RH)
(6) Exhaust cam sprocket (RH)
(7) Intake cam sprocket (LH)
(8) Exhaust cam sprocket (LH)
(9) Chain tensioner lever (RH)
(10) Chain tensioner lever (LH)
(11) Chain tensioner lever (main)
(12) Chain tensioner (main)
(13) Chain tensioner (RH)
(14) Timing chain (main)
(15) Timing chain (RH)
(16) Timing chain (LH)
(17) Chain guide (RH)
(18) Chain guide (LH)
(19) Chain guide (main)
(20) Chain guide (between cams)
(21) Idler sprocket
(22) Chain tensioner (LH)
(23) Chain tensioner lever shaft

Tightening torque:N·m (kgf-m, ft-lb)

T1:	***6.4 (0.7, 4.7)***
T2:	***16 (1.6, 11.8)***
T3:	***<Ref. to ME(H6DO)-82, Cam Sprocket.>***
T4:	***120 (12.2, 88.5)***

4. CYLINDER HEAD AND CAMSHAFT

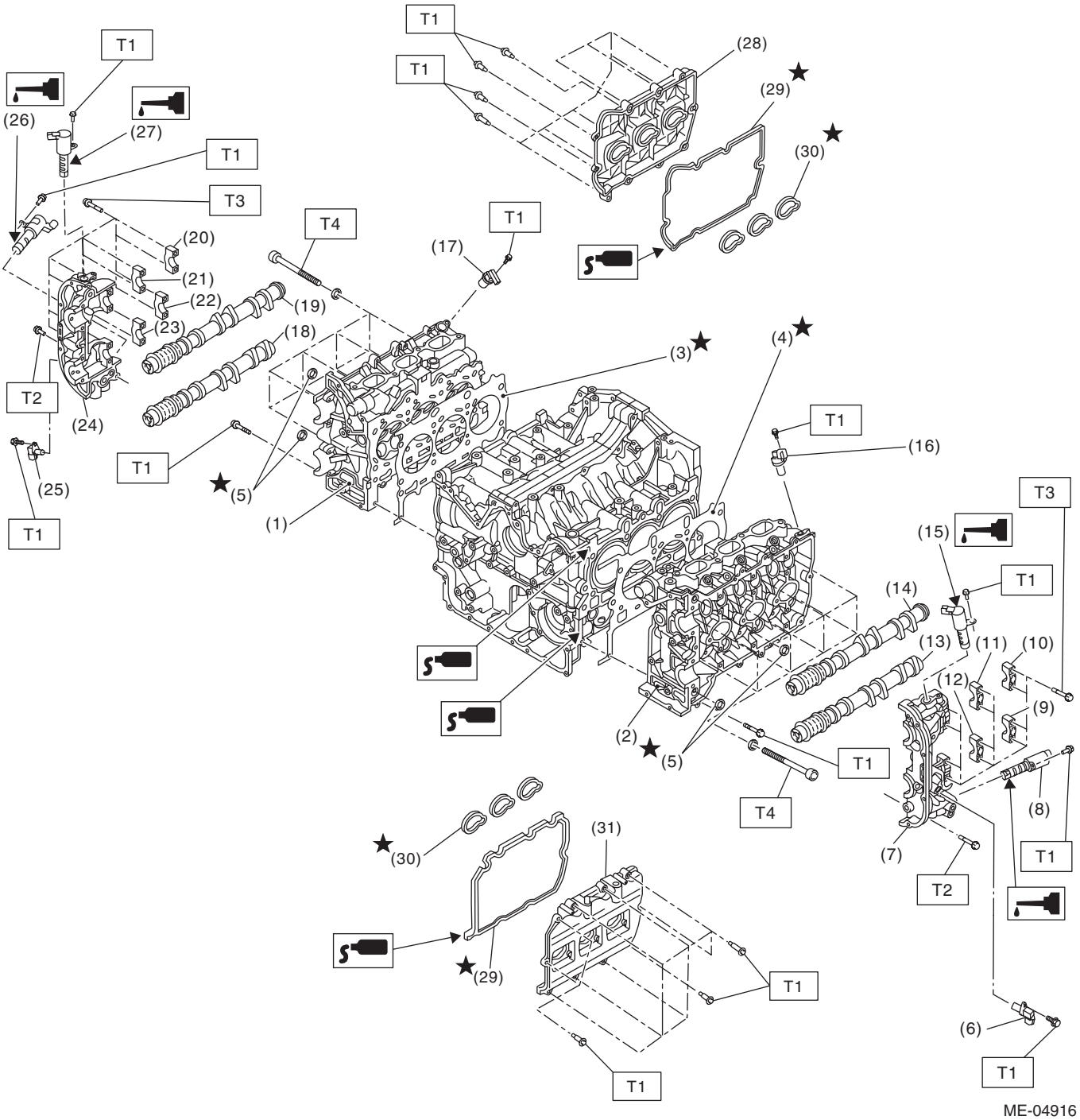

(1) Cylinder head (RH)
(2) Cylinder head (LH)
(3) Cylinder head gasket (RH)
(4) Cylinder head gasket (LH)
(5) O-ring
(6) Exhaust camshaft position sensor (LH)
(7) Front camshaft cap (LH)
(8) Exhaust oil flow control solenoid valve (LH)
(9) Exhaust camshaft cap (rear LH)
(10) Intake camshaft cap (rear LH)
(11) Intake camshaft cap (center LH)
(12) Exhaust camshaft cap (center LH)
(13) Exhaust camshaft (LH)
(14) Intake camshaft (LH)
(15) Intake oil flow control solenoid valve (LH)
(16) Intake camshaft position sensor (LH)
(17) Intake camshaft position sensor (RH)
(18) Exhaust camshaft (RH)
(19) Intake camshaft (RH)
(20) Intake camshaft cap (rear RH)
(21) Intake camshaft cap (center RH)
(22) Exhaust camshaft cap (rear RH)
(23) Exhaust camshaft cap (center RH)
(24) Front camshaft cap (RH)
(25) Exhaust camshaft position sensor (RH)
(26) Exhaust oil flow control solenoid valve (RH)
(27) Intake oil flow control solenoid valve (RH)
(28) Rocker cover (RH)
(29) Gasket
(30) Gasket
(31) Rocker cover (LH)

Tightening torque:N·m (kgf-m, ft-lb)

T1:	***6.4 (0.7, 4.7)***
T2:	***9.75 (1.0, 7.2)***
T3:	***16 (1.6, 11.8)***
T4:	***<Ref. to ME(H6DO)-92, Cylinder Head.>***

5. CYLINDER HEAD AND VALVE ASSEMBLY

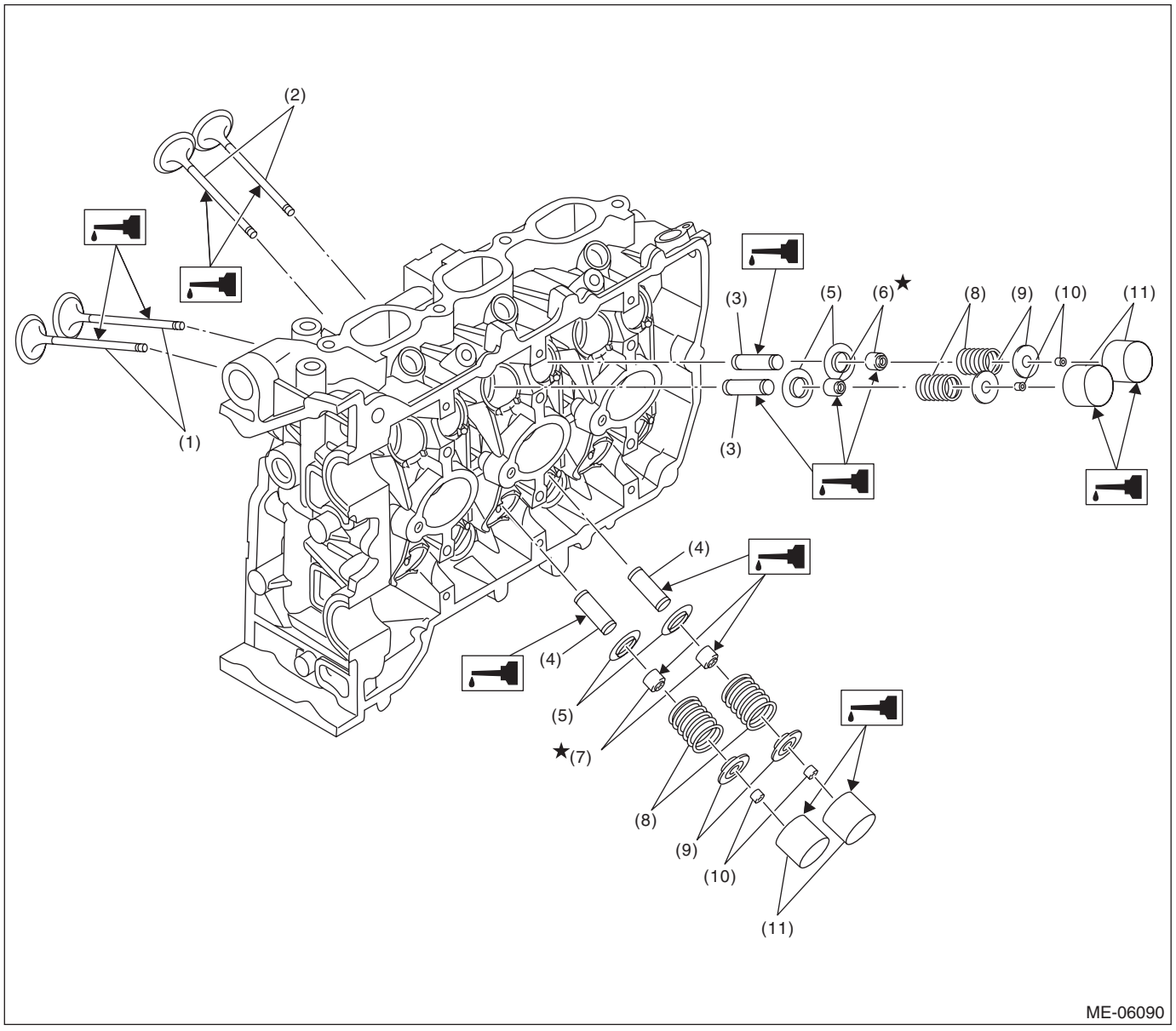

(1) Intake valve
(2) Exhaust valve
(3) Valve guide (intake)
(4) Valve guide (exhaust)
(5) Valve spring seat
(6) Stem seal (intake)
(7) Stem seal (exhaust)
(8) Valve spring
(9) Valve spring retainer
(10) Valve collet
(11) Valve lifter

6. CYLINDER BLOCK

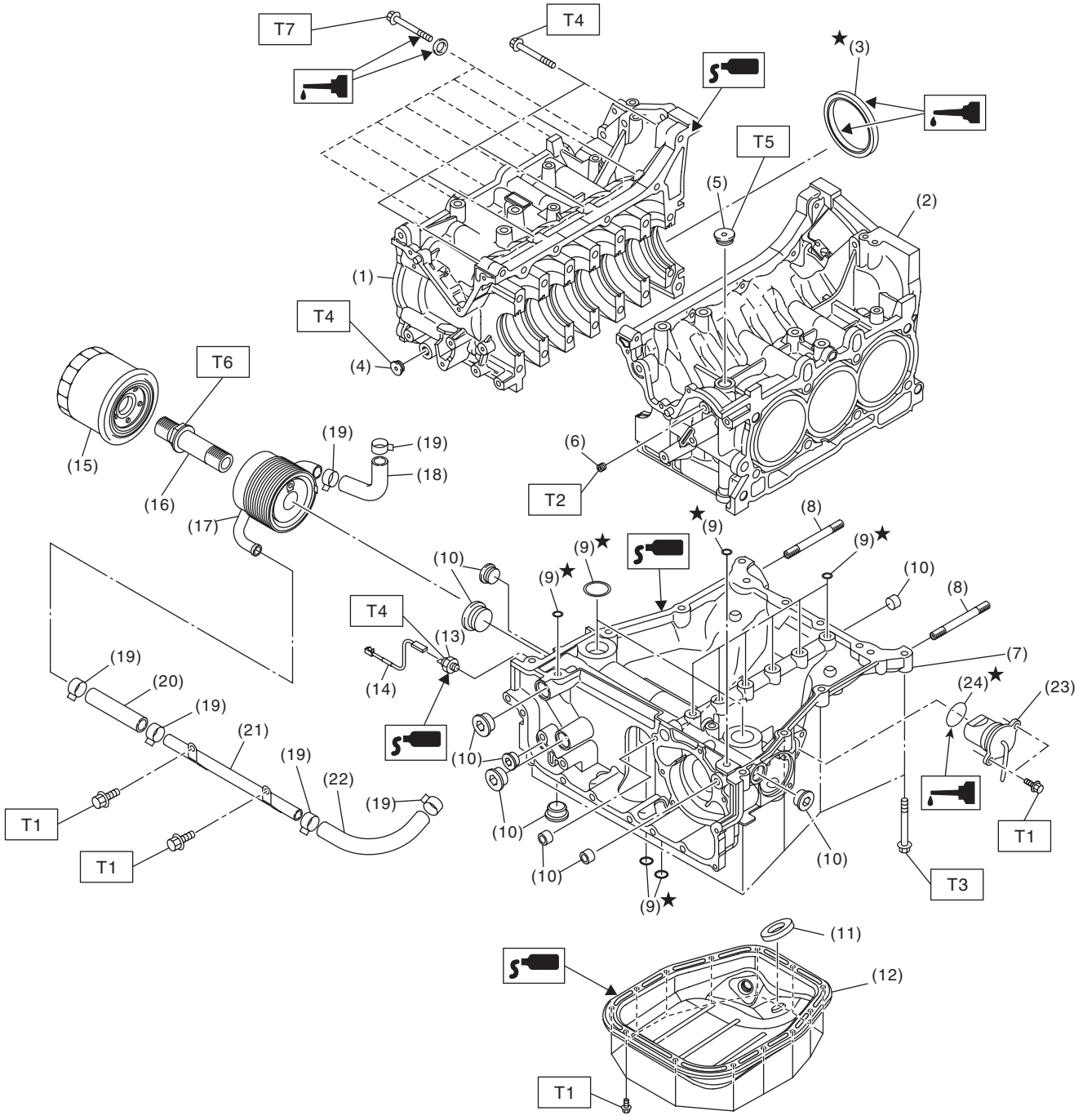

ME-05816

(1) Cylinder block (RH)
(2) Cylinder block (LH)
(3) Oil seal
(4) Plug
(5) Plug
(6) Orifice
(7) Oil pan upper
(8) Stud bolt
(9) O-ring
(10) Plug
(11) Magnet
(12) Oil pan lower
(13) Oil pressure switch
(14) Oil pressure switch harness
(15) Oil filter
(16) Oil cooler connector
(17) Oil cooler
(18) Hose
(19) Clamp
(20) Hose
(21) Oil cooler pipe
(22) Hose
(23) Oil level switch
(24) O-ring

Tightening torque:N·m (kgf-m, ft-lb)
T1: 6.4 (0.7, 4.7)
T2: 17 (1.7, 12.5)
T3: 18 (1.8, 13.3)
T4: 25 (2.5, 18.4)
T5: 37 (3.8, 27.3)
T6: 54 (5.5, 39.8)
T7: <Ref. to ME(H6DO)-104, Cylinder Block.>

7. CRANKSHAFT AND PISTON

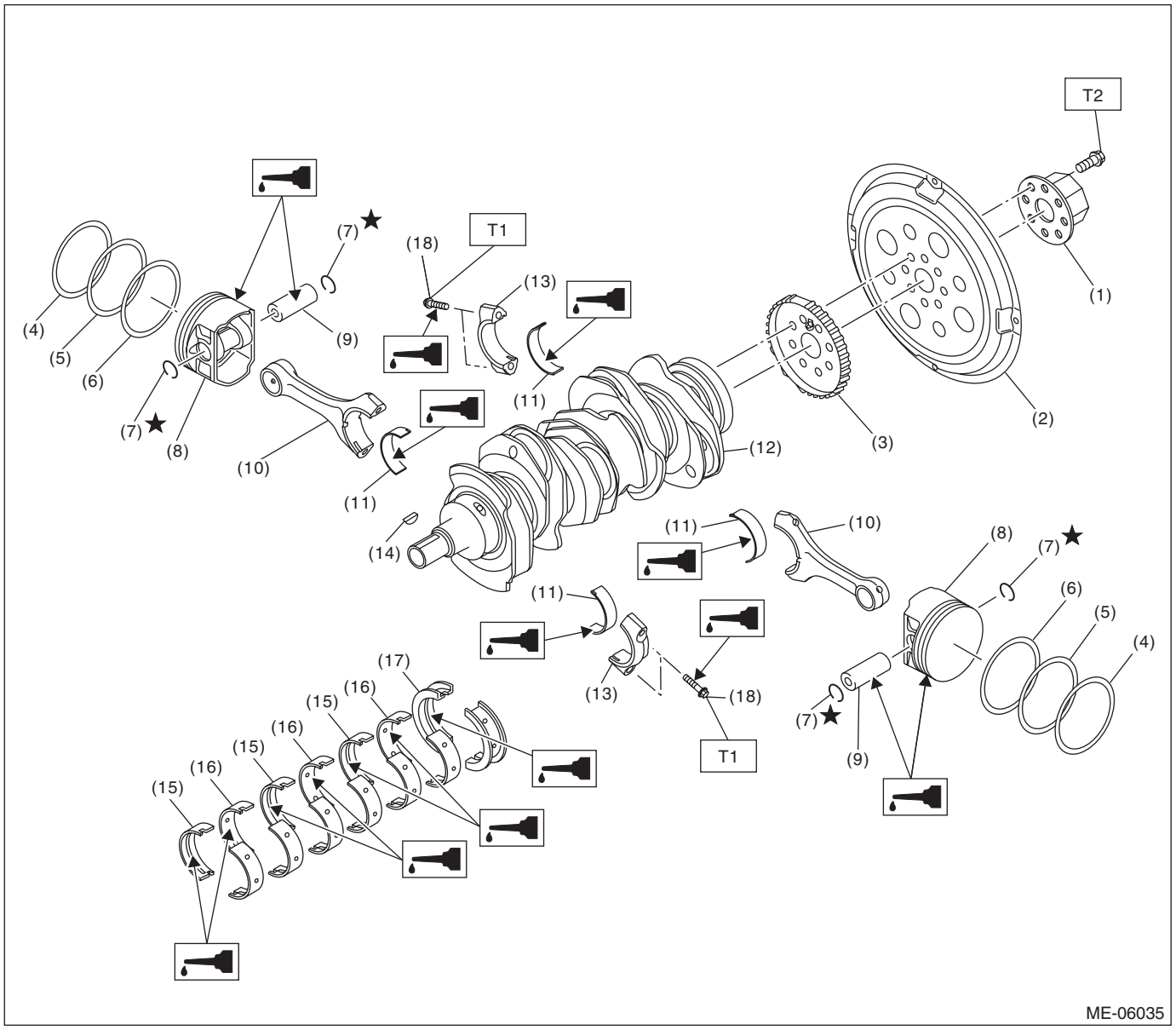

(1) Reinforcement
(2) Drive plate
(3) Crankshaft sensor plate
(4) Top ring
(5) Second ring
(6) Oil ring

(7) Circlip
(8) Piston

(9) Piston pin
(10) Connecting rod
(11) Connecting rod bearing
(12) Crankshaft
(13) Connecting rod cap
(14) Woodruff key

(15) Crankshaft bearing #1, #3, #5
(16) Crankshaft bearing #2, #4, #6

(17) Crankshaft bearing #7
(18) Connecting rod cap bolt

Tightening torque:N·m (kgf-m, ft-lb)

T1: 60 (6.1, 44.3)

T2: <Ref. to 5AT-64, INSTALLATION, Drive Plate.>

8. ENGINE HARNESS

Engine harness assembly diagram 1

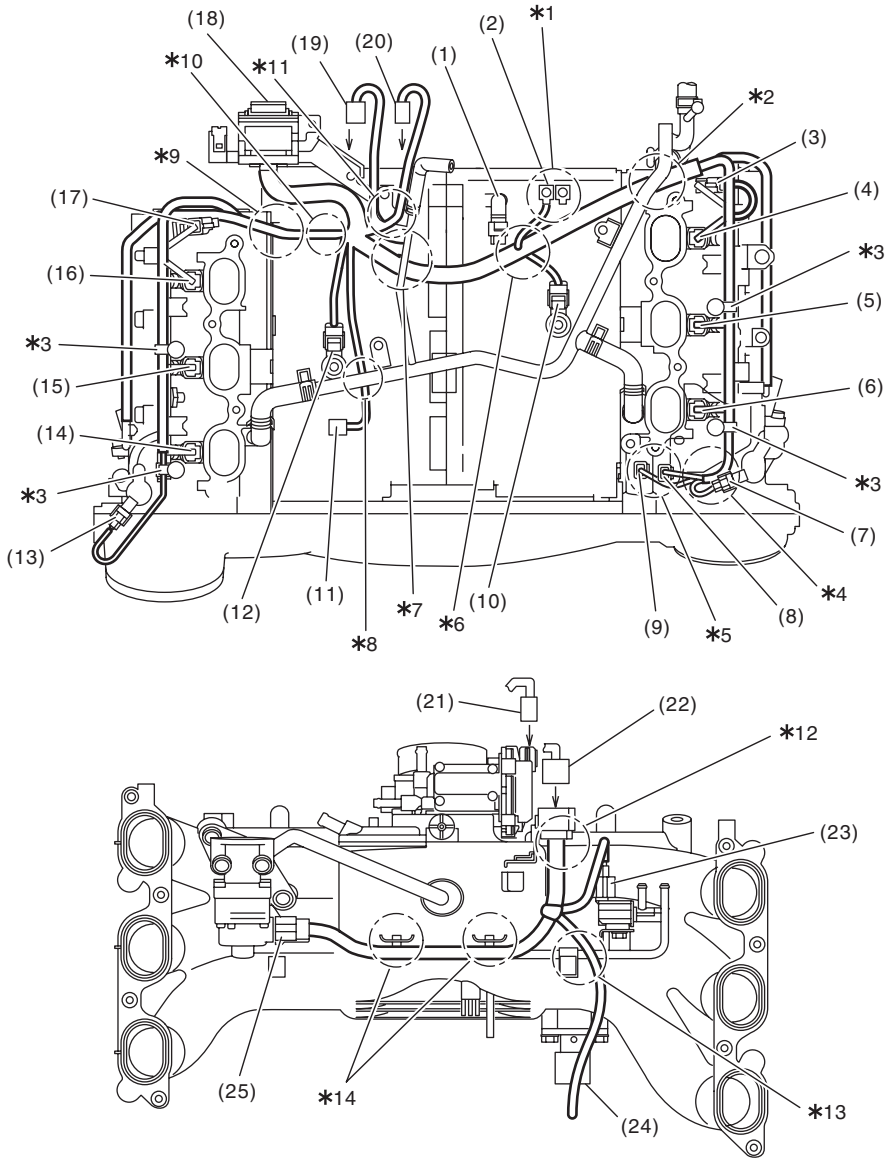

(A)	Cylinder block upper face	(B)	Intake manifold back surface		
(1)	Crankshaft position sensor connector	(10)	Knock sensor LH connector	(19)	Upper/lower connection connector (to intake manifold)
(2)	Engine ground	(11)	Power steering switch connector	(20)	Electronic throttle control connector (to intake manifold)
(3)	Intake camshaft position sensor LH connector	(12)	Knock sensor RH connector	(21)	Electronic throttle control connector (from upper part of the cylinder block)
(4)	#6 injector connector	(13)	Intake oil flow control solenoid valve RH connector	(22)	Upper/lower connection connector (from upper part of the cylinder block)
(5)	#4 injector connector	(14)	#1 injector connector	(23)	Purge control solenoid valve connector
(6)	#2 injector connector	(15)	#3 injector connector	(24)	Manifold absolute pressure sensor connector
(7)	Intake oil flow control solenoid valve LH connector	(16)	#5 injector connector	(25)	EGR valve connector
(8)	Oil temperature sensor connector	(17)	Intake camshaft position sensor RH connector		
(9)	Engine coolant temperature sensor connector	(18)	Engine harness docking connector		

*1: Install so that engine ground terminals face the rear side of vehicle.
*2: Route under the heater pipe.
*3: Attach the engine harness fixing clip to the fuel pipe stay.
*4: Route from the cutout portion on the fuel pipe protector LH.
*5: Be careful not to mix up the connectors of oil temperature sensor and engine coolant temperature sensor.
*6: Route between crankshaft position sensor and knock sensor LH.
*7: Route under the heater pipe.
*8: Route under the heater pipe.
*9: Route under the fuel pipe.
*10: Attach the engine harness fixing clip to the fixing boss on the cylinder block.
*11: Route over the heater pipe stay.
*12: Securely install the engine harness fixing stay.
*13: Route outside the fuel pipe.
*14: Attach the engine harness fixing clip to the fixing stay on the intake manifold.

Engine harness assembly diagram 2

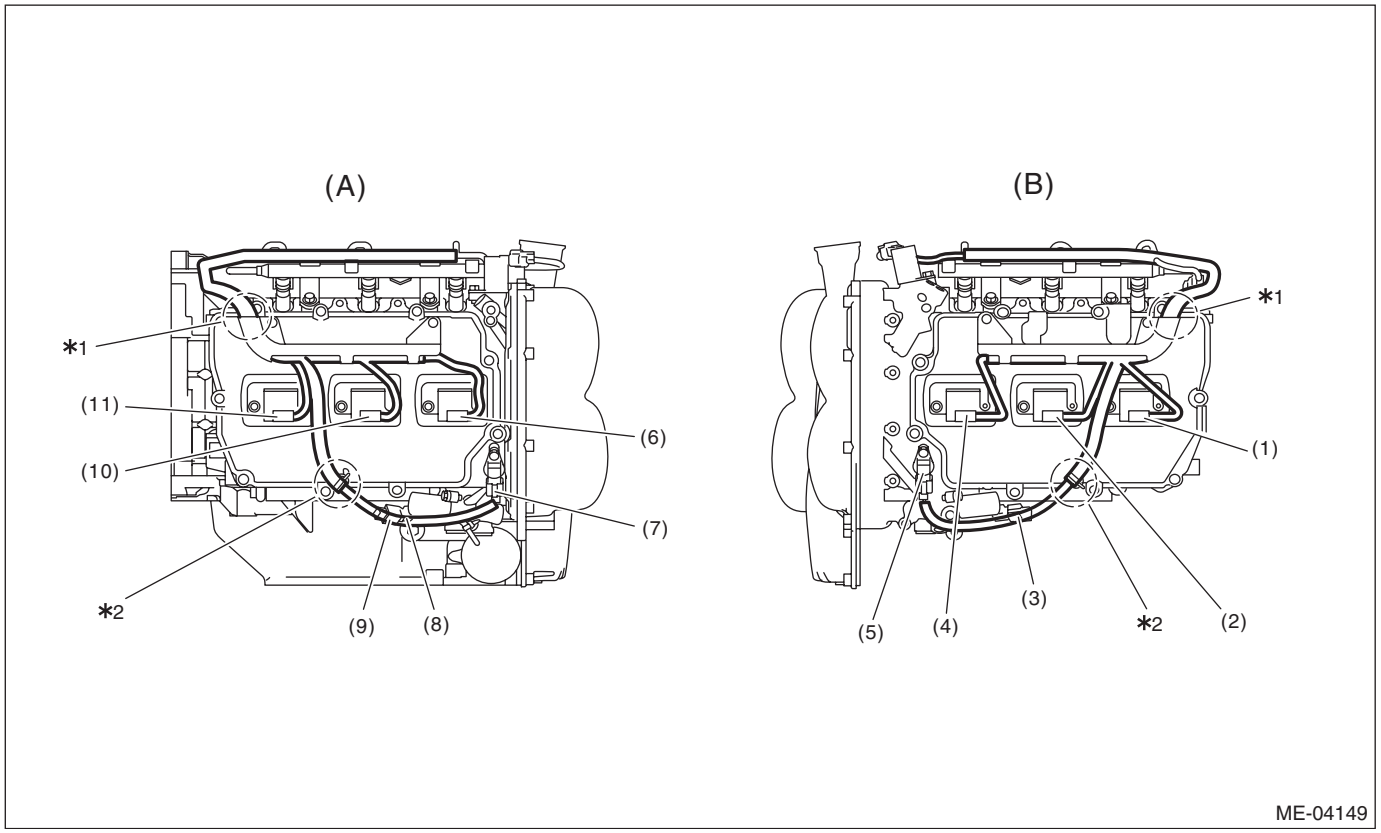

(A)	Right side of the engine	(B)	Left side of the engine		
(1)	#6 ignition coil connector	(5)	Exhaust camshaft position sensor LH connector	(9)	Exhaust oil flow control valve solenoid RH connector
(2)	#4 ignition coil connector	(6)	#1 injector connector	(10)	#3 ignition coil connector
(3)	Exhaust oil flow control valve solenoid LH connector	(7)	Exhaust camshaft position sensor RH connector	(11)	#5 ignition coil connector
(4)	#2 ignition coil connector	(8)	Oil pressure switch connector		

*1: Align the engine harness stay end with the end of engine harness identification tape.
*2: Attach the engine harness fixing clip to the fixing boss on the rocker cover.

9. ENGINE MOUNTING

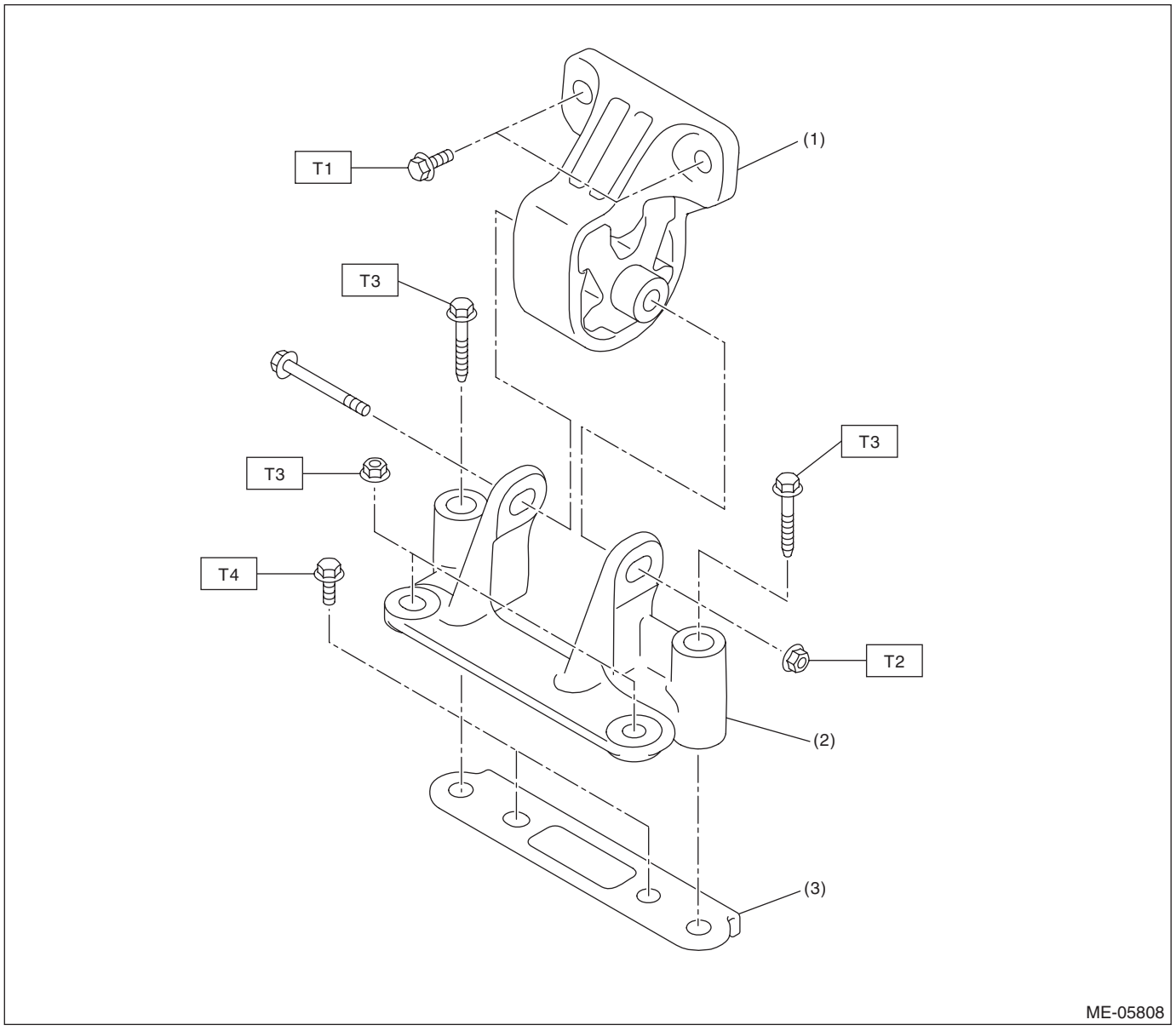

(1) Front mount
(2) Front mounting bracket
(3) Bracket

Tightening torque:N·m (kgf-m, ft-lb)
T1: 25 (2.5, 18.4)
T2: 45 (4.6, 33.2)
T3: 60 (6.1, 44.3)
T4: 65 (6.6, 47.9)

C: CAUTION

• Wear appropriate work clothing, including a cap, protective goggles and protective shoes when performing any work.
• Remove contamination including dirt and corrosion before removal, installation or disassembly.
• Keep the disassembled parts in order and protect them from dust and dirt.
• Before removal, installation or disassembly, be sure to clarify the failure. Avoid unnecessary removal, installation, disassembly and replacement.
• Vehicle components are extremely hot after driving. Be wary of receiving burns from heated parts.
• Be sure to tighten fasteners including bolts and nuts to the specified torque.
• Place shop jacks or rigid racks at the specified points.
• Before disconnecting connectors of sensors or units, be sure to disconnect the ground cable from battery.
• All parts should be thoroughly cleaned, paying special attention to engine oil passages, pistons and bearings.
• Before applying liquid gasket, completely remove the old liquid gasket and degrease it.
• Rotating parts and sliding parts such as piston, bearing and gear should be coated with oil prior to assembly.
• All removed parts, if to be reused, should be reinstalled in the original positions and directions.
• Bolts, nuts and washers should be replaced with new parts as required.
• Even if necessary inspections have been made in advance, proceed with assembly work while making rechecks.
• Remove or install the engine in an area where chain hoists, lifting devices, etc. are available for ready use.
• Be sure not to damage coated surfaces of body panels with tools, or not to stain seats and windows with coolant or oil. Place a cover over fender, as required, for protection.
• Prior to starting work, prepare the following:
Service tools, clean cloth, containers to catch coolant and oil, wire ropes, chain hoist, transmission jacks, etc.
• Lift up or lower the vehicle when necessary. Make sure to support the correct positions.

D: PREPARATION TOOL

1. SPECIAL TOOL

ILLUSTRATION	TOOL NUMBER	DESCRIPTION	REMARKS
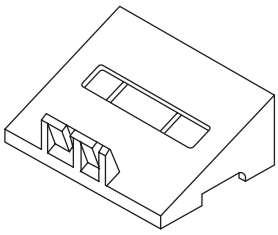 ST18250AA010	18250AA010	CYLINDER HEAD TABLE	• Used for replacing valve guides. • Used for removing and installing valve spring.
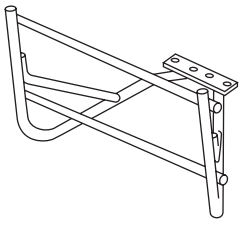 ST18232AA000	18232AA000	ENGINE STAND	Used for disassembling and assembling engine.

ILLUSTRATION	TOOL NUMBER	DESCRIPTION	REMARKS
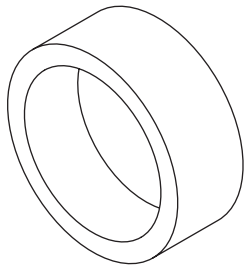 ST-398744300	398744300	PISTON GUIDE	Used for installing piston in cylinder.
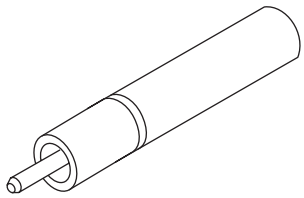 ST18261AA010	18261AA010	VALVE OIL SEAL GUIDE	Used for press-fitting of intake valve guide oil seals and exhaust valve guide oil seals.
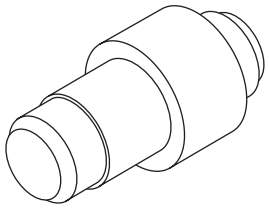 ST18350AA000	18350AA000	CONNECTING ROD BUSHING REMOVER AND INSTALLER	Used for removing and installing connecting rod bushing.
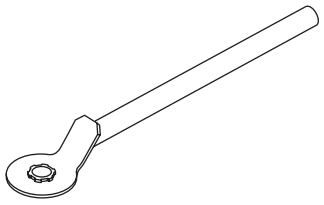 ST-499977500	499977500	CAM SPROCKET WRENCH	Used for removing and installing cam sprocket.
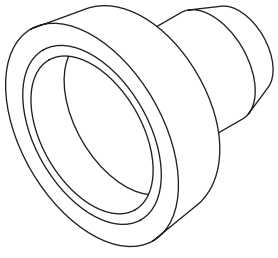 ST-499587200	499587200	CRANKSHAFT OIL SEAL INSTALLER	• Used for installing crankshaft oil seal. • Used together with CRANKSHAFT OIL SEAL GUIDE (499597100).

ILLUSTRATION	TOOL NUMBER	DESCRIPTION	REMARKS
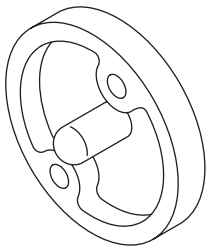 ST-499597100	499597100	CRANKSHAFT OIL SEAL GUIDE	• Used for installing crankshaft oil seal. • Used together with CRANKSHAFT OIL SEAL INSTALLER (499587200).
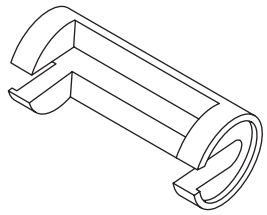 ST-499718000	499718000	VALVE SPRING REMOVER	Used for removing and installing valve spring.
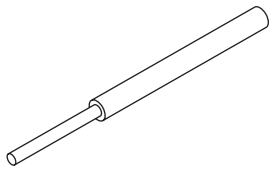 ST-499765700	499765700	VALVE GUIDE REMOVER	Used for removing valve guides.
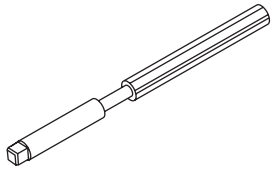 ST-499765900	499765900	VALVE GUIDE REAMER	Used for reaming valve guides.
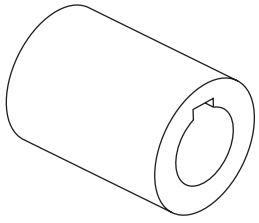 ST18252AA000	18252AA000	CRANKSHAFT SOCKET	Used for rotating crankshaft.

ILLUSTRATION	TOOL NUMBER	DESCRIPTION	REMARKS
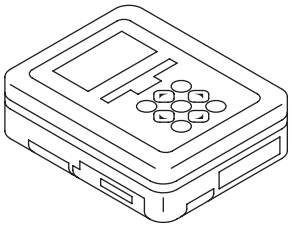 ST1B022XU0	1B022XU0	SUBARU SELECT MONITOR III KIT	Used for various inspections.
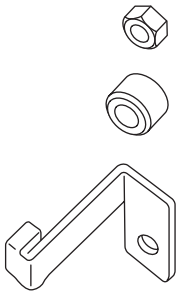 ST-498277200	498277200	STOPPER SET	Used for installing automatic transmission assembly to engine.
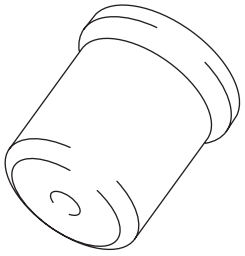 ST-499585700	499585700	OIL SEAL GUIDE	Used for installing the chain cover oil seal.
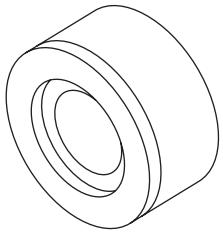 ST18251AA050	18251AA050	VALVE GUIDE ADJUSTER	Used for installing intake valve guides.
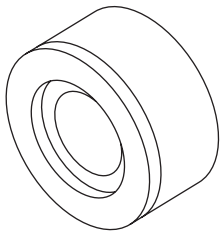 ST18251AA060	18251AA060	VALVE GUIDE ADJUSTER	Used for installing exhaust valve guides.

ILLUSTRATION	TOOL NUMBER	DESCRIPTION	REMARKS
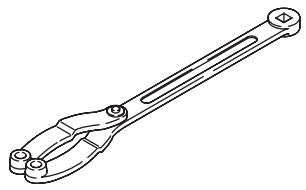 ST18355AA000	18355AA000	PULLEY WRENCH	• Used for removing and installing the crank pulley. • Used for removing and installing the idler sprocket. • Used together with PULLEY WRENCH PIN SET (18334AA000).
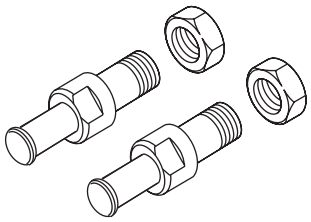 ST18334AA000	18334AA000	PULLEY WRENCH PIN SET	• Used for removing and installing the crank pulley. • Used for removing and installing the idler sprocket. • Used together with PULLEY WRENCH (18355AA000).
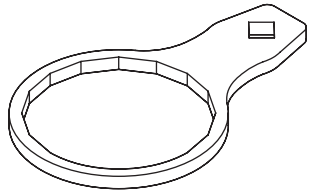 ST18332AA020	18332AA020	OIL FILTER WRENCH	Used for removing and installing oil filter.
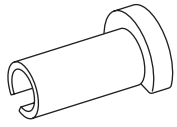 ST42099AE000	42099AE000	QUICK CONNECTOR RELEASE	Used for disconnecting quick connector of the engine compartment.
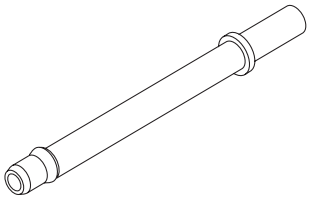 ST18471AA000	18471AA000	FUEL PIPE ADAPTER	Used for inspecting the fuel pressure.

ILLUSTRATION	TOOL NUMBER	DESCRIPTION	REMARKS
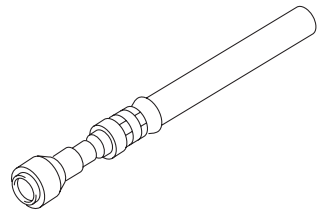 ST42075AG690	42075AG690	FUEL HOSE	Used for inspecting the fuel pressure. NOTE: This is the SUBARU genuine part.
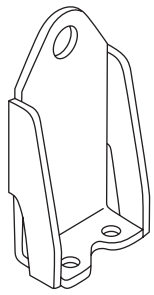 ST18360AA020	18360AA020	HANGER	Used for hanging the engine.

2. GENERAL TOOL

TOOL NAME	REMARKS
Compression gauge	Used for inspecting compression pressure.
Timing light	Used for inspecting the ignition timing.
Vacuum gauge	Used for inspecting intake manifold vacuum.
Oil pressure gauge	Used for inspecting engine oil pressure.
Fuel pressure gauge	Used for inspecting fuel pressure.
TORX® socket (E12)	Used for removing and installing connecting rod cap.

2. Compression

A: INSPECTION

CAUTION:
After warming-up, engine becomes very hot. Be careful not to burn yourself during measurement.

1) Remove the collector cover.

NOTE:
Follow the steps below when removing the collector cover.
(1) Pull up the two points at the rear (A).
(2) Pull up the two points at the front (B) while moving them forward.

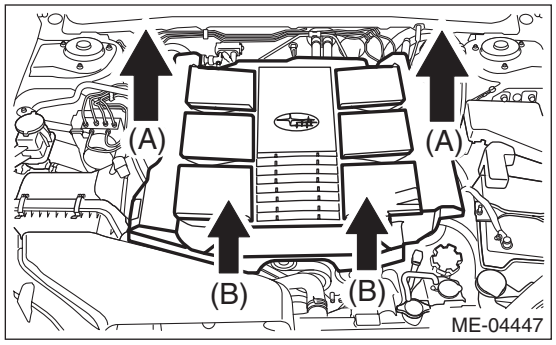

2) After warming-up the engine, turn the ignition switch to OFF.
3) Make sure that the battery is fully charged.
4) Remove the fuse of fuel pump from main fuse box.

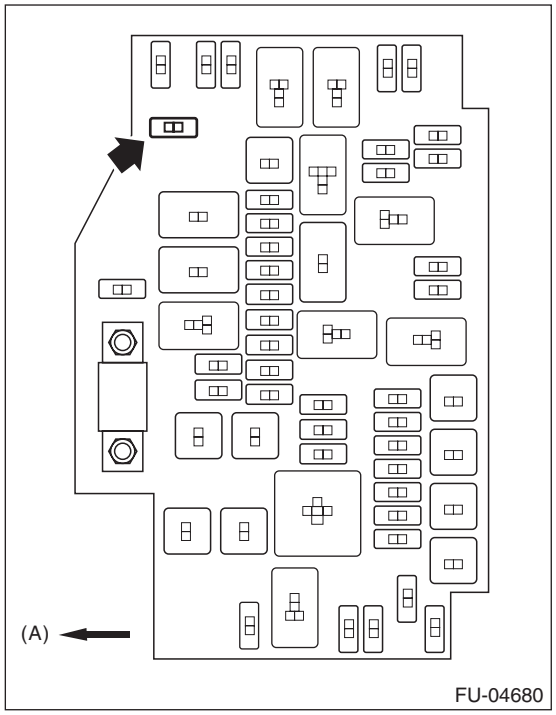

(A) Front side

5) Start the engine and run it until it stalls.
6) After the engine stalls, crank it for five more seconds.
7) Turn the ignition switch to OFF.
8) Remove all spark plugs. <Ref. to IG(H6DO)-4, REMOVAL, Spark Plug.>
9) Fully open the throttle valve.
10) Check the starter motor for satisfactory performance and operation.
11) Secure the compression gauge tightly against the spark plug hole.

NOTE:
When using a screw-in type compression gauge, the screw should be less than 18 mm (0.71 in) long.
12) Crank the engine by the starter motor, and read the maximum value on the gauge when the needle of gauge is steady.

NOTE:
• Perform at least two measurements per cylinder, and make sure that the values are correct.
• If the compression pressure is out of standard, check or adjust the pistons, valves and cylinders.

Compression (350 rpm and fully open throttle):
Standard
1,275 — 1,471 kPa (13.0 — 15.0 kgf/cm^2, 185 — 213 psi)
Limit
1,128 kPa (11.5 kgf/cm^2, 164 psi)
Difference between cylinders
49 kPa (0.5 kgf/cm^2, 7 psi) or less

13) After inspection, install the related parts in the reverse order of removal.

3. Idle Speed

A: INSPECTION

1) Before checking the idle speed, check the following item:
   (1) Check the air cleaner element is free from clogging, ignition timing is correct, spark plugs are in good condition, and hoses are connected properly.
   (2) Check the malfunction indicator light does not illuminate.
2) Warm up the engine.
3) Read the engine idle speed using Subaru Select Monitor. <Ref. to EN(H6DO)(diag)-35, READ CURRENT DATA FOR ENGINE (NORMAL MODE), OPERATION, Subaru Select Monitor.>

NOTE:
• Idle speed cannot be adjusted manually, because the idle speed is automatically adjusted.
• If idle speed is out of standard, refer to the General Diagnosis Table under “Engine Control System”. <Ref. to EN(H6DO)(diag)-2, Basic Diagnostic Procedure.>

(1) Check the idle speed when no-loaded. (Headlight, heater fan, rear defroster, radiator fan, A/C and etc. are OFF)

Idle speed (No load and gears in “P” or “N” range):
Standard
700±100 rpm

(2) Check the idle speed when loaded. (Turn the A/C switch to “ON” and operate the compressor for at least one minute before measurement.)

Idle speed (A/C ON and gear in “P” or “N” range):
Standard
700 — 910±100 rpm

4. Ignition Timing

A: INSPECTION

CAUTION:
After warming-up, engine becomes very hot. Be careful not to burn yourself at measurement.

1. METHOD WITH SUBARU SELECT MONITOR

1) Before checking the ignition timing, check the following item:
   (1) Check the air cleaner element is free from clogging, spark plugs are in good condition, and hoses are connected properly.
   (2) Check the malfunction indicator light does not illuminate.
2) Warm up the engine.
3) Read the ignition timing using Subaru Select Monitor. <Ref. to EN(H6DO)(diag)-35, READ CURRENT DATA FOR ENGINE (NORMAL MODE), OPERATION, Subaru Select Monitor.>

NOTE:
If ignition timing is out of standard, check the ignition control system. Refer to “Engine Control System”. <Ref. to EN(H6DO)(diag)-2, Basic Diagnostic Procedure.>

Ignition timing [BTDC/rpm]:
Standard
15°±8°/700

2. METHOD WITH TIMING LIGHT

1) Before checking the ignition timing, check the following item:
   (1) Check the air cleaner element is free from clogging, spark plugs are in good condition, and hoses are connected properly.
   (2) Check the malfunction indicator light does not illuminate.
2) Warm up the engine.
3) Stop the engine, and turn the ignition switch to OFF.
4) Remove the collector cover.

NOTE:
Follow these procedures for removal of the collector cover.
   (1) Lift up the rear side holding two positions (A).
   (2) Lift up the front side holding two positions (B) while moving it in the forward direction of the vehicle.

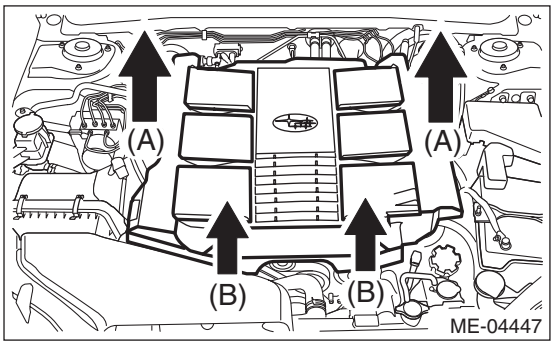

5) Disconnect the ground cable from battery.
6) Remove the air intake duct. <Ref. to IN(H6DO)-8, REMOVAL, Air Intake Duct.>
7) Disconnect the connector from mass air flow and intake air temperature sensor.
8) Remove the air cleaner case and element.
9) Connect the timing light to the power wire of #1 ignition coil.
10) Install the connectors of air cleaner case, element, and the mass air flow and intake air temperature sensor.
11) Connect the ground cable to battery.
12) Start the engine, turn the timing light to the crank pulley, and check the ignition timing through the chain cover gauge.

NOTE:
If ignition timing is out of standard, check the ignition control system. Refer to “Engine Control System”. <Ref. to EN(H6DO)(diag)-2, Basic Diagnostic Procedure.>

Ignition timing [BTDC/rpm]:
Standard
15°±8°/700

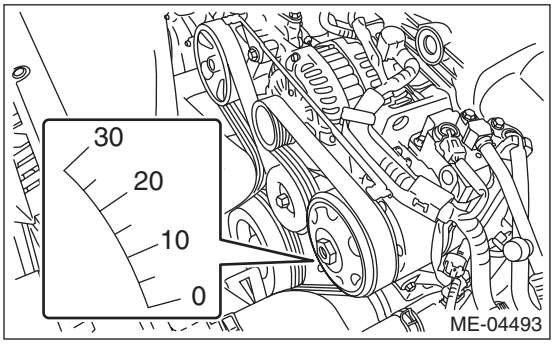

13) After inspection, install the related parts in the reverse order of removal.

5. Intake Manifold Vacuum

A: INSPECTION

1) Warm up the engine.
2) Remove the collector cover.

NOTE:
Follow the steps below when removing the collector cover.
(1) Pull up the two points at the rear (A).
(2) Pull up the two points at the front (B) while moving them forward.

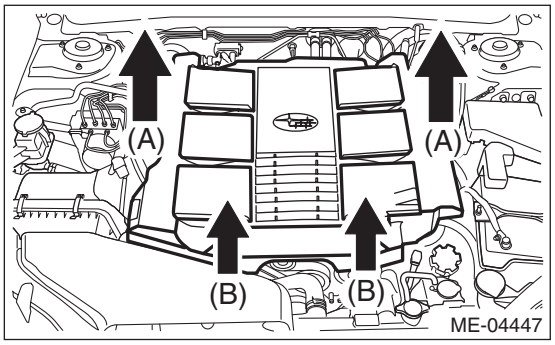

3) Disconnect the brake booster vacuum hose from the intake manifold, and attach the vacuum gauge.

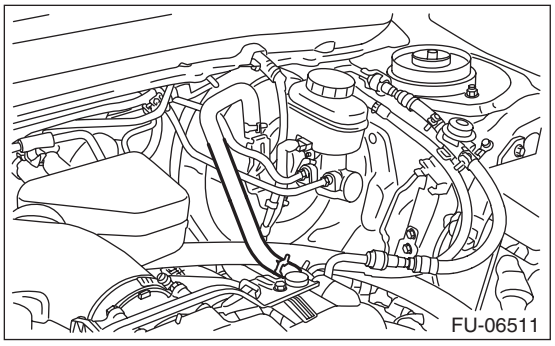

4) Keep the engine at idle speed and read the vacuum gauge indication.

NOTE:
Condition of engine inside can be diagnosed by observing the behavior of the vacuum gauge needle as described in table below.

Intake manifold vacuum (at idling, A/C OFF):
Standard
Less than –60.0 kPa (–450 mmHg, –17.72 inHg)

5) After inspection, install the related parts in the reverse order of removal.

Diagnosis of engine condition by measurement of intake manifold vacuum	
Vacuum gauge indication	Possible engine condition
1. Needle is steady but lower than standard value. This tendency becomes more evident as engine temperature rises.	Leakage around intake manifold gasket, disconnection or damage of vacuum hose
2. Needle intermittently drops to position lower than standard value.	Leakage around cylinder
3. Needle drops suddenly and intermittently from standard value.	Sticky valve
4. When engine speed is gradually increased, needle begins to vibrate rapidly at certain speed, and then vibration increases as engine speed increases.	Weak or broken valve springs
5. Needle vibrates above and below standard value in narrow range.	Defective ignition system

6. Engine Oil Pressure

A: INSPECTION

1) Disconnect the ground cable from battery.
2) Remove the oil pressure switch from the oil pan upper. <Ref. to LU(H6DO)-14, REMOVAL, Oil Pressure Switch.>
3) Attach the oil pressure gauge to the oil pan upper.
4) Connect the battery ground terminal.
5) Start the engine, and check the oil pressure.

NOTE:
• If the oil pressure is out of specification, check oil pump, oil filter and lubrication line. <Ref. to LU(H6DO)-24, Engine Lubrication System Trouble in General.>
• If the oil pressure warning light is ON and oil pressure is within specification, check the oil pressure switch. <Ref. to LU(H6DO)-7, Oil Pressure System.> <Ref. to LU(H6DO)-14, Oil Pressure Switch.>

Engine oil pressure (at oil temperature of 120°C (248°F)):
Standard
98 kPa (1.0 kgf/cm^2, 14 psi) or more (at 600 rpm)
392 kPa (4.0 kgf/cm^2, 57 psi) or more (at 6,000 rpm)

6) After inspection, install the related parts in the reverse order of removal.

7. Fuel Pressure

A: INSPECTION

CAUTION:
• Before removing the fuel pressure gauge, release the fuel pressure.
• Be careful not to spill fuel.
• Catch the fuel from hoses using a container or cloth.

1) Remove the collector cover.

NOTE:
Follow the steps below when removing the collector cover.
(1) Pull up the two points at the rear (A).
(2) Pull up the two points at the front (B) while moving them forward.

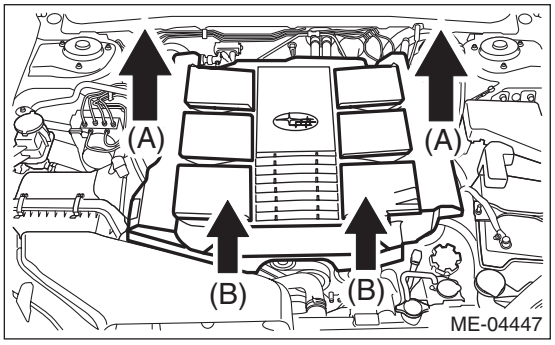

2) Release the fuel pressure. <Ref. to FU(H6DO)-59, RELEASING OF FUEL PRESSURE, PROCEDURE, Fuel.>
3) Open the fuel filler lid and remove the fuel filler cap.
4) Disconnect the fuel delivery hose from fuel damper, and connect fuel pressure gauge.

CAUTION:
• Be careful not to spill fuel.
• Catch the fuel from hoses using a container or cloth.

(1) Attach ST to the fuel delivery pipe and push ST in the direction of arrow mark to disconnect the quick connector of the fuel delivery hose.

ST 42099AE000 QUICK CONNECTOR RELEASE

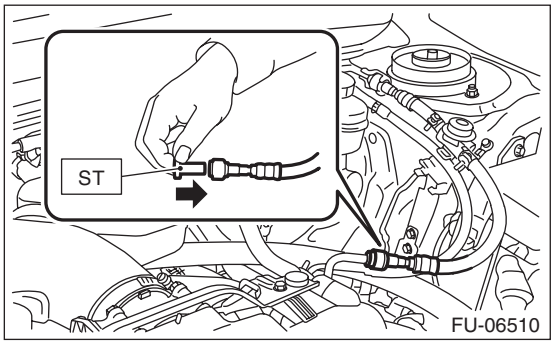

(2) Connect the fuel pressure gauge with ST1 and ST2.

NOTE:
ST1 is a SUBARU genuine part.
ST1 42075AG690 FUEL HOSE
ST2 18471AA000 FUEL PIPE ADAPTER

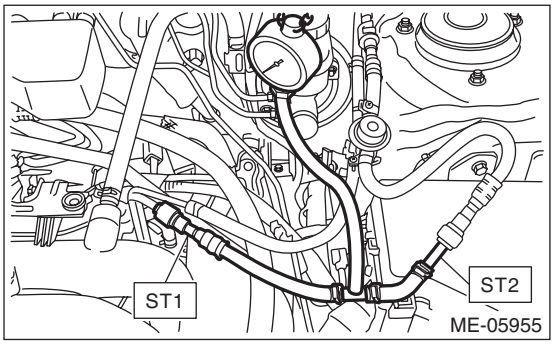

5) Start the engine.
6) Check the fuel pressure after warming up the engine.

NOTE:
• The fuel pressure gauge registers 10 to 20 kPa (0.1 to 0.2 kgf/cm^2, 1 to 3 psi) higher than standard values during high-altitude operations.
• Check or replace the fuel pump and fuel delivery line if the fuel pressure is out of the standard.

Fuel pressure:
Standard
340 — 400 kPa (3.5 — 4.1 kgf/cm^2, 49.3 — 58 psi)

7) After inspection, install the related parts in the reverse order of removal.

8. Valve Clearance

A: INSPECTION

CAUTION:
If engine oil is spilt onto the exhaust pipe, wipe it off with cloth to avoid emission of smoke or causing a fire.

NOTE:
Inspection of valve clearance should be performed while engine is cold.

1) Remove the collector cover.

NOTE:
Follow the steps below when removing the collector cover.

(1) Pull up the two points at the rear (A).
(2) Pull up the two points at the front (B) while moving them forward.

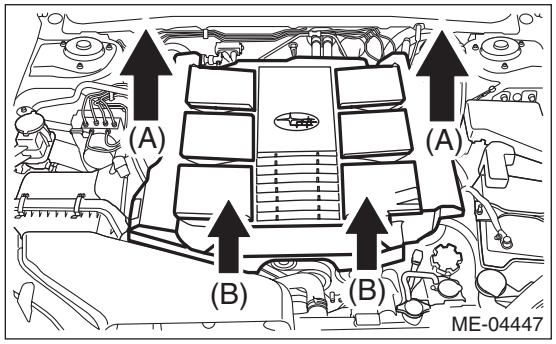

2) Disconnect the ground cable from battery.
3) Lift up the vehicle.
4) Remove the under cover. <Ref. to EI-35, REMOVAL, Front Under Cover.>
5) Lower the vehicle.
6) When inspecting valve clearances for #1, #3 and #5
7) Loosen the clamp (A) which connects the air intake boot assembly.
8) Loosen the bolt (B) which secures the air intake boot assembly to the collector cover bracket.

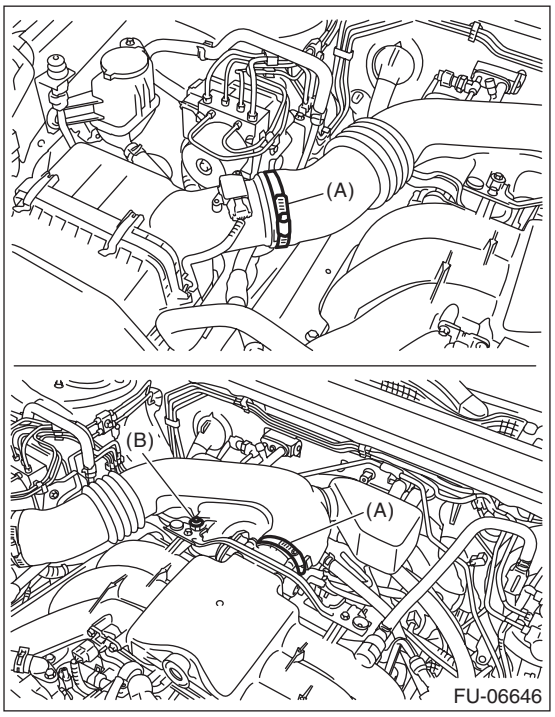

(1) Remove the air intake boot assembly, and move it to the left side wheel apron.

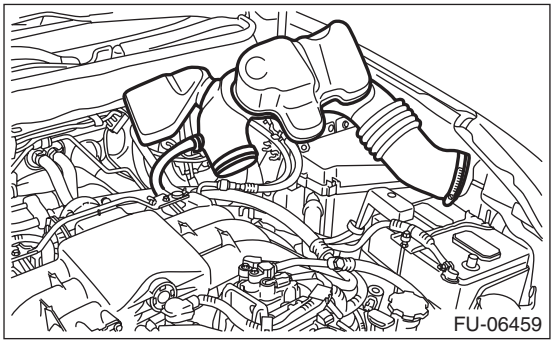

(2) Remove the air intake duct and air cleaner case. <Ref. to IN(H6DO)-8, REMOVAL, Air Intake Duct.> <Ref. to IN(H6DO)-5, REMOVAL, Air Cleaner Case.>
(3) Remove the fuel pipe protector (RH).

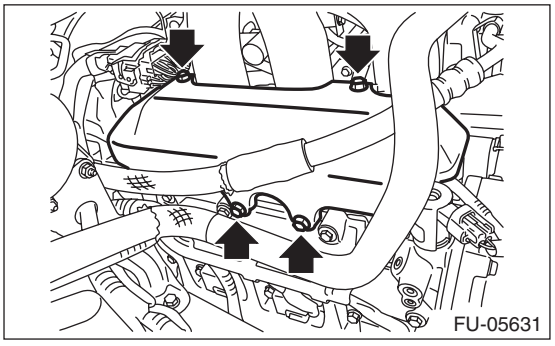

(4) Disconnect the connector of oil pressure switch.

(5) Remove the ignition coil. <Ref. to IG(H6DO)-7, REMOVAL, Ignition Coil.>
(6) Remove the rocker cover (RH). <Ref. to ME(H6DO)-84, REMOVAL, Camshaft.>

9) When inspecting valve clearances for #2, #4 and #6

(1) Remove the battery and battery carrier. <Ref. to SC(H4SO)-28, REMOVAL, Battery.>
(2) Remove two fixing clips on the fuel pipe protector (LH).

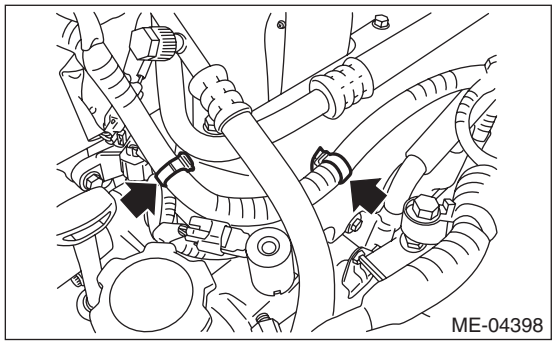
ME-04398

(3) Generator connector
(4) Generator terminal B
(5) Remove the harness cover from collector cover bracket.
(6) A/C compressor solenoid connector
(7) Flow sensor connector

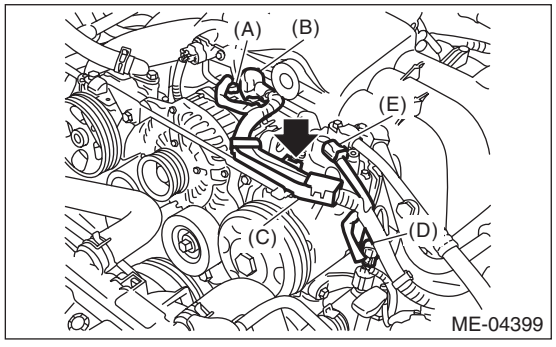

ME-04399

(A) Generator connector
(B) Terminal B
(C) Harness cover
(D) A/C compressor solenoid connector
(E) Flow sensor connector

(8) Slide the harness and connector to the battery side.

(9) Disconnect the PCV hose from rocker cover (LH).

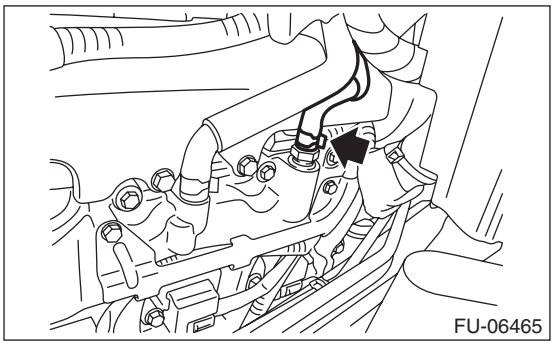
FU-06465

(10) Remove the fuel pipe protector (LH).

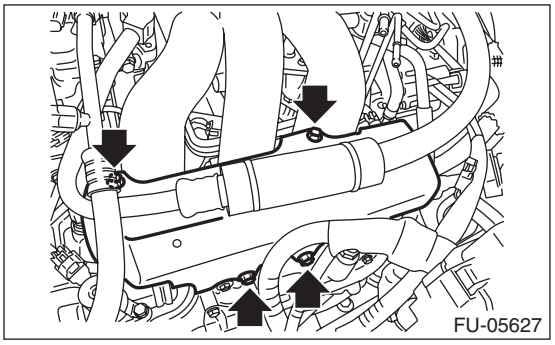
FU-05627

(11) Remove the ignition coil. <Ref. to IG(H6DO)-7, REMOVAL, Ignition Coil.>
(12) Remove the rocker cover (LH). <Ref. to ME(H6DO)-84, REMOVAL, Camshaft.>

10) Turn the crankshaft clockwise until the camshaft is set to position shown in the figure.

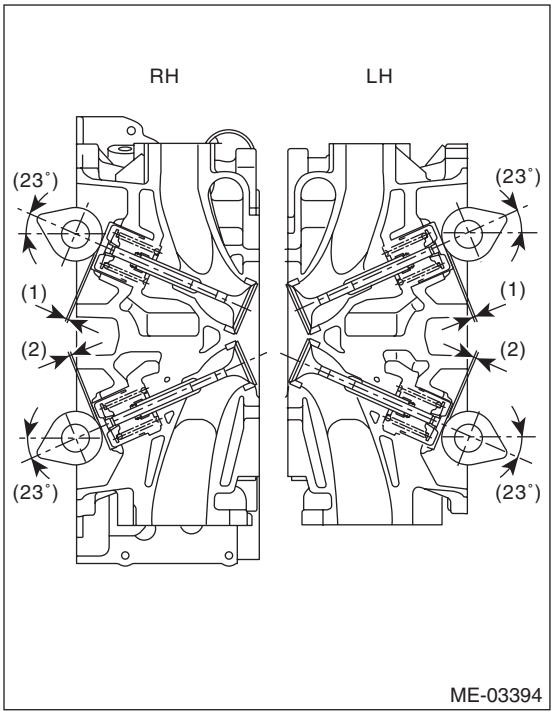

ME-03394

(1) Valve clearance (Intake side)
(2) Valve clearance (Exhaust side)

11) Measure the clearance of intake valve and exhaust valve using thickness gauge (A).

NOTE:
• Measure it within the range of ±30° from specified position shown in the figure.
• Insert a thickness gauge in a direction as horizontal as possible with respect to the valve lifter.

Valve clearance (inspection value):
Intake
$0.20^{+0.04}_{-0.06}$ mm ($0.0079^{+0.0016}_{-0.0024}$ in)
Exhaust
0.35±0.05 mm (0.0138±0.0020 in)

• If the measured value is not within specification, take notes of the value in order to adjust the valve clearance later on.

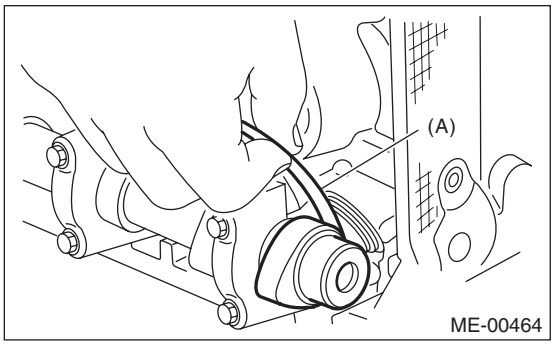

12) If necessary, adjust the valve clearance. <Ref. to ME(H6DO)-34, ADJUSTMENT, Valve Clearance.>
13) Further turn the crank pulley clockwise and then measure the valve clearances again.
14) After inspection, install the related parts in the reverse order of removal. <Ref. to ME(H6DO)-85, INSTALLATION, Camshaft.>

B: ADJUSTMENT

1. INTAKE SIDE

1) Remove the engine from vehicle. <Ref. to ME(H6DO)-36, REMOVAL, Engine Assembly.>
2) Measure all the valve clearances. <Ref. to ME(H6DO)-32, INSPECTION, Valve Clearance.>

NOTE:
Record each valve clearance after measurement.
3) Remove the timing chain assembly. <Ref. to ME(H6DO)-63, REMOVAL, Timing Chain Assembly.>
4) Remove the cam sprocket. <Ref. to ME(H6DO)-82, REMOVAL, Cam Sprocket.>
5) Remove the camshaft. <Ref. to ME(H6DO)-84, REMOVAL, Camshaft.>
6) Remove the valve lifter.
7) Measure the thickness of valve lifter using micrometer.

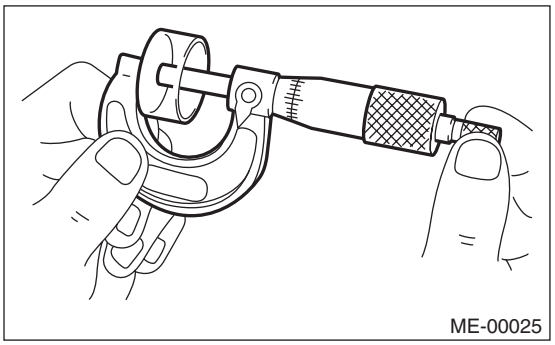

8) Select a valve lifter of suitable thickness using the measured valve clearance and valve lifter thickness, and install it.

NOTE:
Use a new valve lifter.

Unit: mm (in)
S = (V + T) – 0.20 (0.0079)
S: Valve lifter thickness required V: Measured valve clearance T: Current valve lifter thickness

9) Install the camshaft. <Ref. to ME(H6DO)-85, INSTALLATION, Camshaft.>
10) Install the cam sprocket. <Ref. to ME(H6DO)-82, INSTALLATION, Cam Sprocket.>
11) Install the timing chain assembly. <Ref. to ME(H6DO)-69, INSTALLATION, Timing Chain Assembly.>
12) Measure all valve clearance again at this time. If the valve clearance is not within the adjustment value, repeat the procedure from step 3).

Valve clearance (adjustment value):
$0.20^{+0.04}_{-0.06}$ mm ($0.0079^{+0.0016}_{-0.0024}$ in)

13) After adjustment, install the related parts in the reverse order of removal.

NOTE:
Refer to “Camshaft” when installing the rocker cover. <Ref. to ME(H6DO)-85, INSTALLATION, Camshaft.>

2. EXHAUST SIDE

1) Remove the engine from vehicle. <Ref. to ME(H6DO)-36, REMOVAL, Engine Assembly.>
2) Measure all the valve clearances. <Ref. to ME(H6DO)-32, INSPECTION, Valve Clearance.>

NOTE:
Record each valve clearance after measurement.

3) Remove the camshaft. <Ref. to ME(H6DO)-84, REMOVAL, Camshaft.>
4) Remove the valve lifter.
5) Measure the thickness of valve lifter using micrometer.

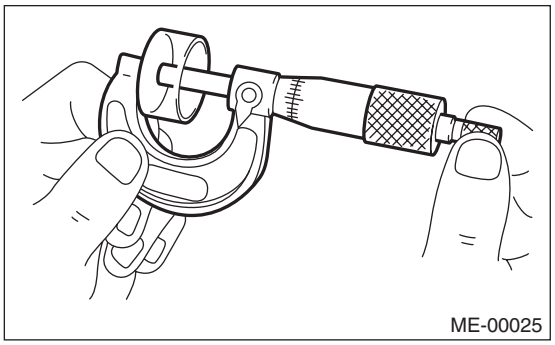

6) Select a valve lifter of suitable thickness using the measured valve clearance and valve lifter thickness, and install it.

NOTE:
Use a new valve lifter.

Unit: mm (in)
S = (V + T) – 0.35 (0.0138)
S: Valve lifter thickness required V: Measured valve clearance T: Current valve lifter thickness

7) Install the camshaft. <Ref. to ME(H6DO)-85, INSTALLATION, Camshaft.>
8) Install the cam sprocket. <Ref. to ME(H6DO)-82, INSTALLATION, Cam Sprocket.>
9) Install the timing chain assembly. <Ref. to ME(H6DO)-69, INSTALLATION, Timing Chain Assembly.>
10) Measure all valve clearance again at this time. If the valve clearance is not within the adjustment value, repeat the procedure from step 3).

Valve clearance (adjustment value):
0.35±0.05 mm (0.0138±0.0020 in)

11) After adjustment, install the related parts in the reverse order of removal.

NOTE:
Refer to “Camshaft” when installing the rocker cover. <Ref. to ME(H6DO)-85, INSTALLATION, Camshaft.>

9. Engine Assembly

A: REMOVAL

1) Change the front hood damper bolt mounting position from (A) to (B), and completely open the front hood.

Tightening torque:
20 N·m (2.0 kgf-m, 14.8 ft-lb)

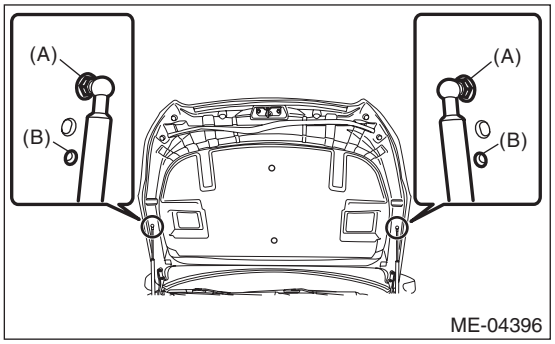

2) Remove the collector cover.

NOTE:
Follow the steps below when removing the collector cover.
(1) Pull up the two points at the rear (A).
(2) Pull up the two points at the front (B) while moving them forward.

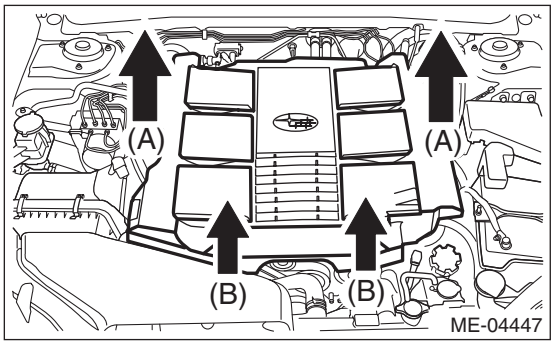

3) Collect the refrigerant from A/C system. <Ref. to AC-24, PROCEDURE, Refrigerant Recovery Procedure.>
4) Release the fuel pressure. <Ref. to FU(H6DO)-59, PROCEDURE, Fuel.>
5) Disconnect the ground cable from battery.
6) Open the fuel filler lid and remove the fuel filler cap.
7) Remove the air intake duct, air cleaner case and air intake boot assembly. <Ref. to IN(H6DO)-8, REMOVAL, Air Intake Duct.> <Ref. to IN(H6DO)-5, REMOVAL, Air Cleaner Case.> <Ref. to IN(H6DO)-7, REMOVAL, Air Intake Boot.>
8) Remove the V-belts. <Ref. to ME(H6DO)-51, REMOVAL, V-belt.>
9) Disconnect the following connector.
(1) Remove two fixing clips on the fuel pipe protector (LH).

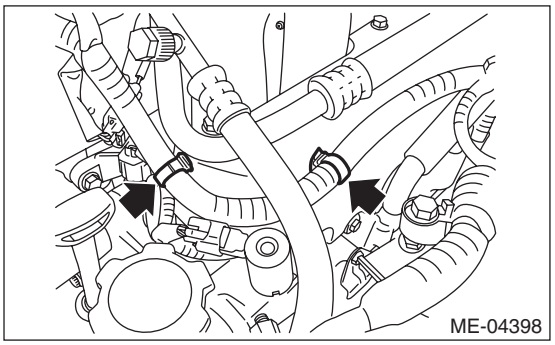

(2) Generator connector
(3) Generator terminal B
(4) Remove the harness cover from collector cover bracket.
(5) A/C compressor solenoid connector
(6) Flow sensor connector

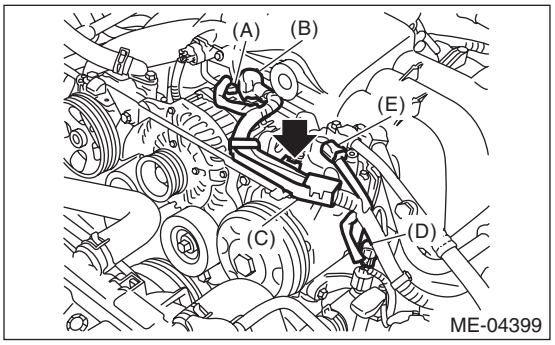

(A) Generator connector
(B) Terminal B
(C) Harness cover
(D) A/C compressor solenoid connector
(E) Flow sensor connector

(7) Slide the harness and connector to the battery side.
10) Remove the power steering pump together with the bracket.

NOTE:
Do not disconnect the hose and pipe from the power steering pump.

(1) Disconnect the manifold absolute pressure sensor connector (A) and power steering pump connector (B).

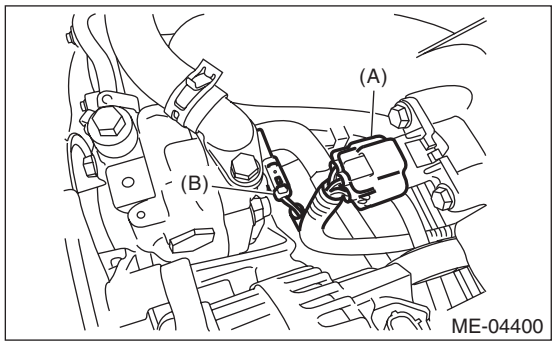

(2) Remove the securing bolts of collector cover bracket and power steering pump bracket.

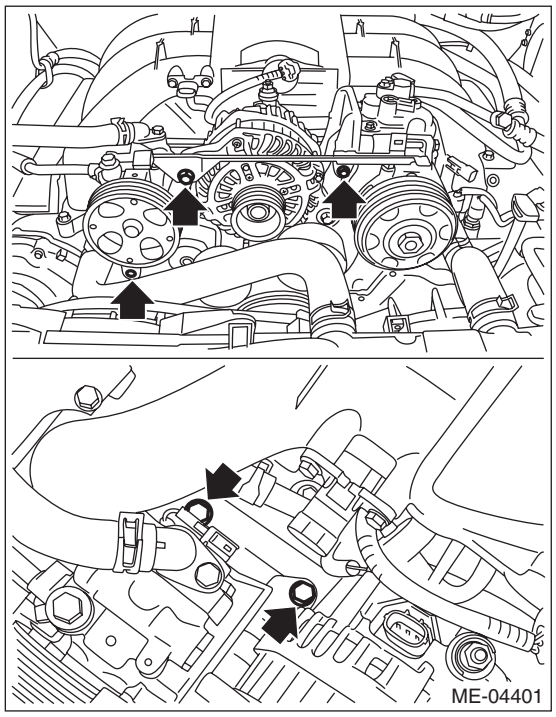

(3) Use a cloth to protect the power steering pump and place it on the RH front strut using a wire.

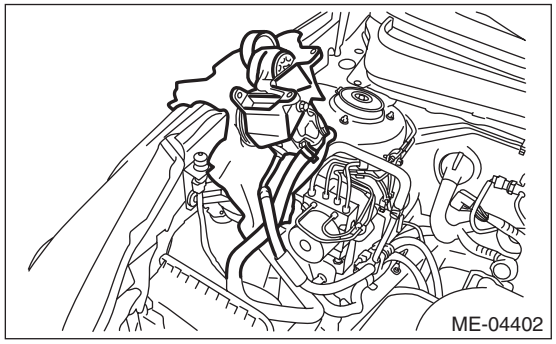

11) Remove the brake booster vacuum hose.

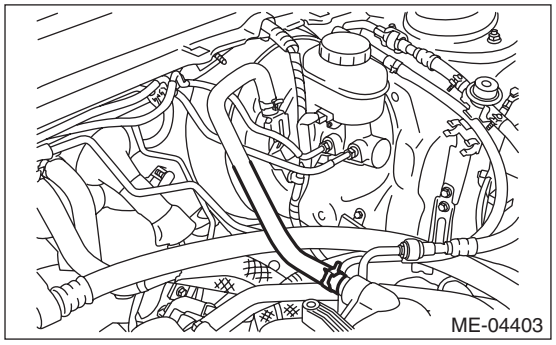

12) Remove the engine ground.

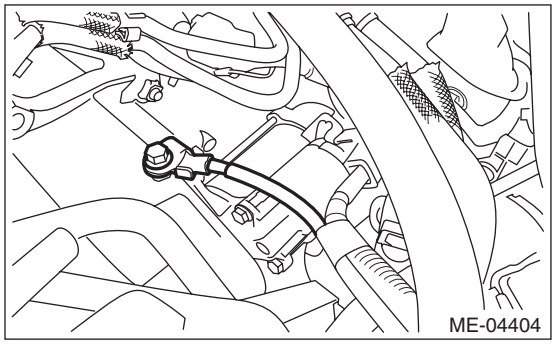

13) Remove the starter harness and engine ground from bracket.

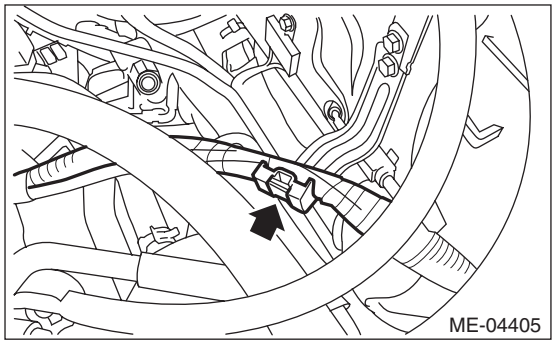

14) Remove the starter. <Ref. to SC(H4SO)-9, REMOVAL, Starter.>
15) Remove the grille bracket.

NOTE:
Remove ten clips when removing the grille bracket.

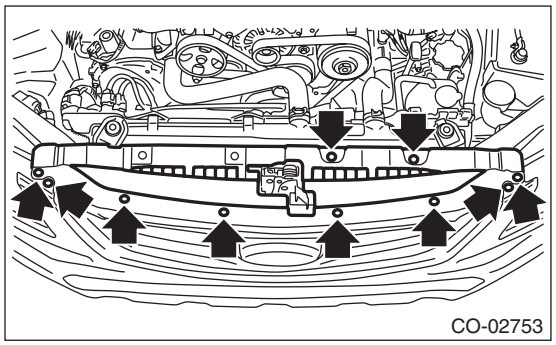

16) Lift up the vehicle.
17) Remove the under cover. <Ref. to EI-35, REMOVAL, Front Under Cover.>

18) Drain engine coolant completely. <Ref. to CO(H6DO)-12, DRAINING OF ENGINE COOLANT, REPLACEMENT, Engine Coolant.>
19) Remove the front exhaust pipe. <Ref. to EX(H6DO)-5, REMOVAL, Front Exhaust Pipe.>
20) Remove the ground cable from the underside of chain cover.

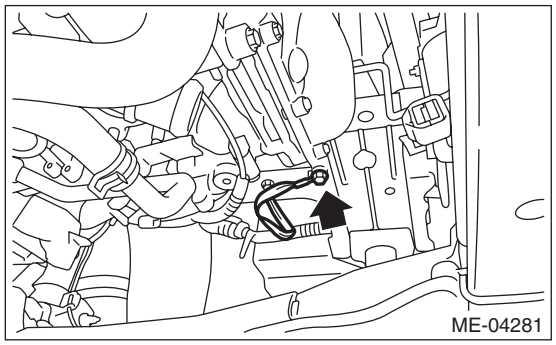
ME-04281

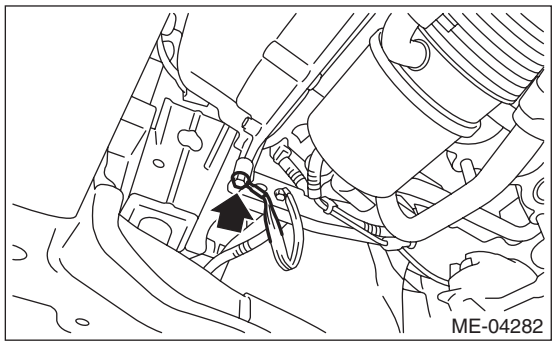
ME-04282

21) Remove the connecting bolts and nuts (lower side) between the engine and transmission.

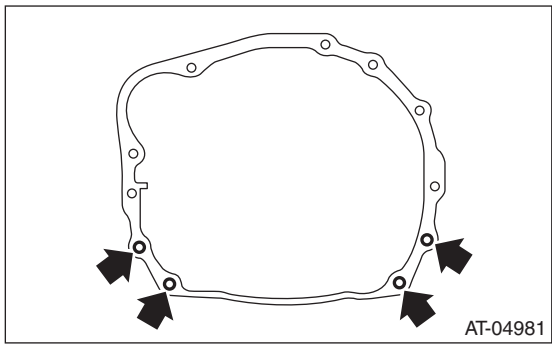
AT-04981

22) Lower the vehicle.
23) Remove the radiator main fan & fan motor and radiator sub fan & fan motor. <Ref. to CO(H6DO)-21, REMOVAL, Radiator Main Fan and Fan Motor.> <Ref. to CO(H6DO)-24, REMOVAL, Radiator Sub Fan and Fan Motor.>
24) Remove the radiator. <Ref. to CO(H6DO)-17, REMOVAL, Radiator.>
25) Remove the heater inlet hose and heater outlet hose.

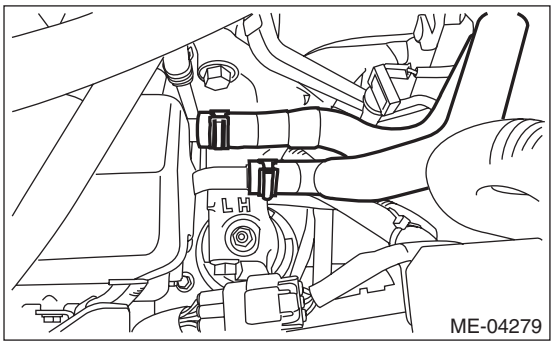

ME-04279

26) Disconnect the engine harness connector.

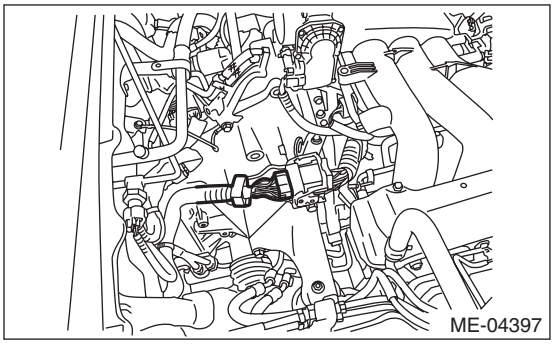
ME-04397

27) Disconnect the connector from the throttle body.

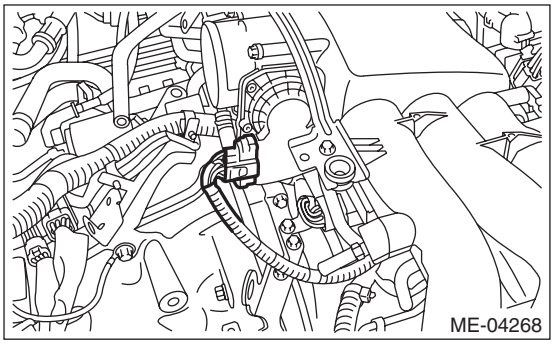
ME-04268

28) Remove the engine harness connector from the engine hanger bracket.

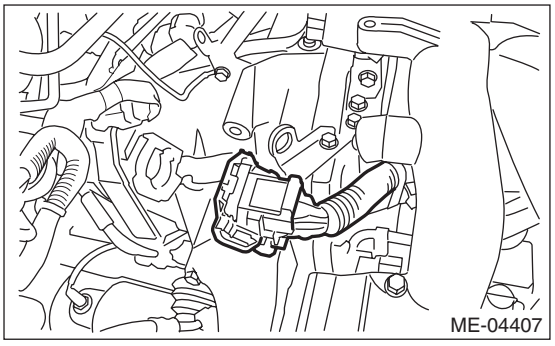
ME-04407

29) Remove the engine hanger bracket.

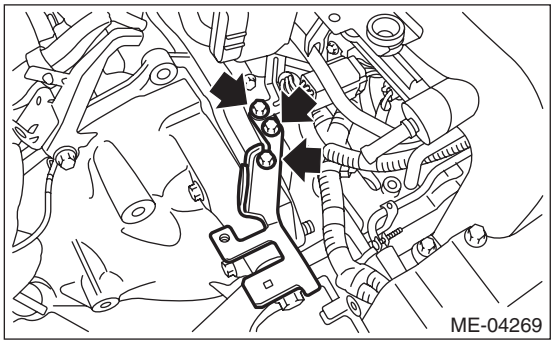

30) Remove the throttle body from the intake manifold.

NOTE:
Do not disconnect the inlet and outlet hoses of engine coolant.

31) Attach the ST.
ST 18360AA020 HANGER

Tightening torque:
19 N·m (1.9 kgf-m, 14.0 ft-lb)

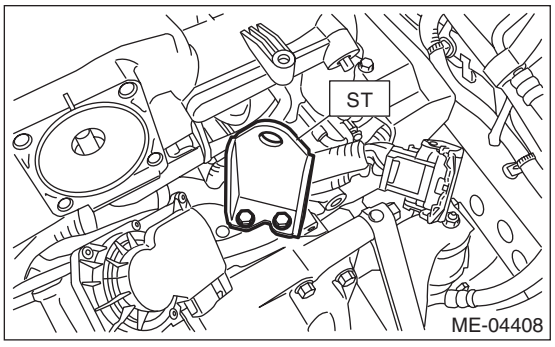

32) Separate the torque converter clutch from drive plate.

(1) Remove the service hole plug.

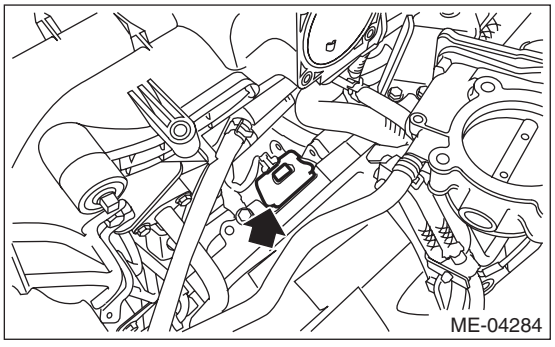

(2) Rotate the clank pulley to align the drive plate to the service hole, and remove four bolts.

33) Disconnect the fuel delivery hose and evaporation hose.

CAUTION:
• Be careful not to spill fuel.
• Catch the fuel from hoses using a container or cloth.

(1) Attach ST to the fuel delivery pipe and push ST in the direction of arrow mark to disconnect the quick connector of the fuel delivery hose.
ST 42099AE000 QUICK CONNECTOR RELEASE

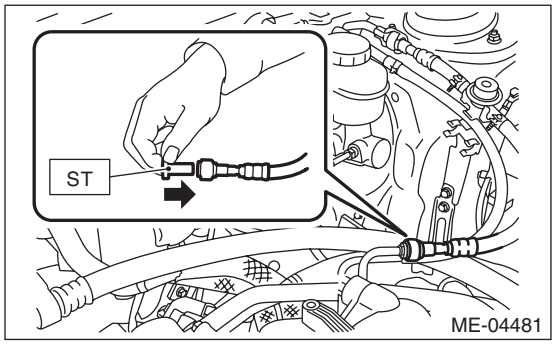

(2) Remove the clip and disconnect the evaporation hose.

34) Disconnect the A/C pressure hoses from A/C compressor. <Ref. to AC-76, REMOVAL, Hose and Pipe.>

35) Remove the connecting bolts (upper side) between engine and transmission.

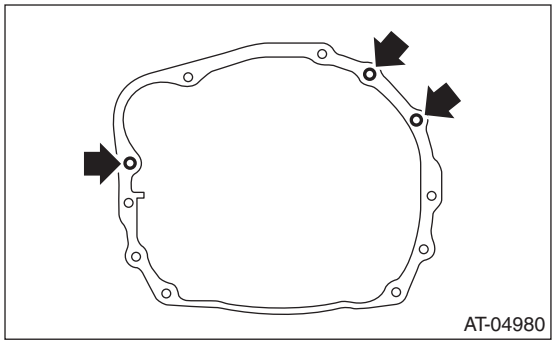

36) Set the ST to torque converter clutch case.
ST 498277200 STOPPER SET

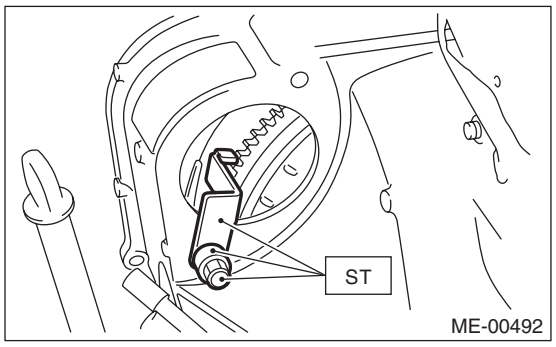

37) Support the engine with a lifting device and wire ropes.

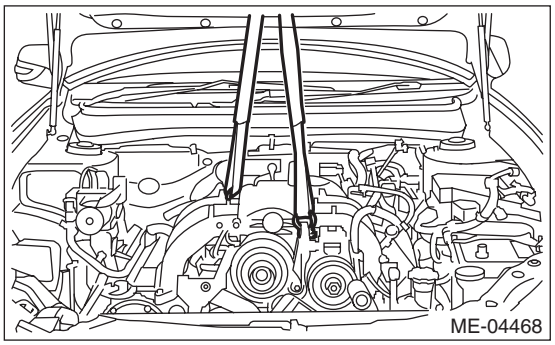

38) Remove the front mount.

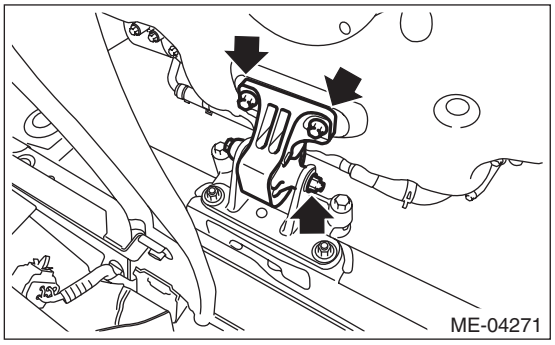

39) Remove the front mounting bracket from the cradle.

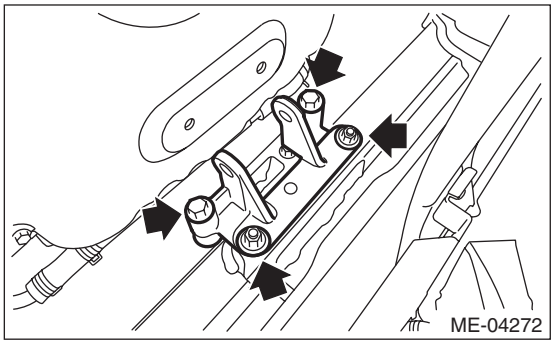

40) Remove the engine from the engine compartment.

(1) Operate the lifter to set the engine horizontally.

(2) Move the engine towards the front of the vehicle to disconnect it from the torque converter clutch case.

(3) Operate the lifter to take out the engine from the engine compartment.

NOTE:
Be careful not to damage adjacent parts or body panels with crank pulley, oil level gauge, etc.

B: INSTALLATION

1) Install the engine to the vehicle.

(1) Operate the lifter to place the engine in the engine compartment.

(2) Operate the lifter to set the engine horizontally.

(3) Move the engine towards the rear of the vehicle to connect it to the torque converter clutch case.

NOTE:
Be careful not to damage adjacent parts or body panels with crank pulley, oil level gauge, etc.

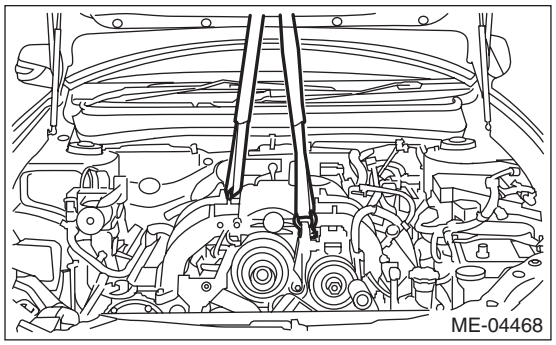

2) Install front mounting bracket to the cradle.

Tightening torque:
60 N·m (6.1 kgf-m, 44.3 ft-lb)

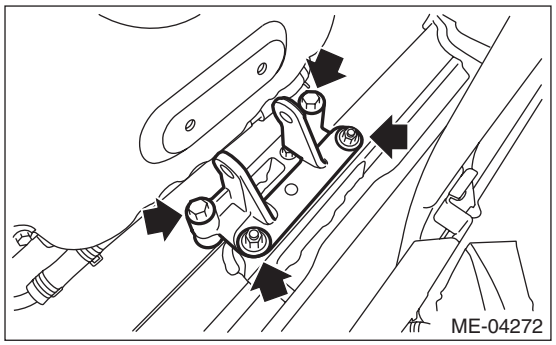

3) Install the front mount.

Tightening torque:
T1: 25 N·m (2.5 kgf-m, 18.4 ft-lb)
T2: 45 N·m (4.6 kgf-m, 33.2 ft-lb)

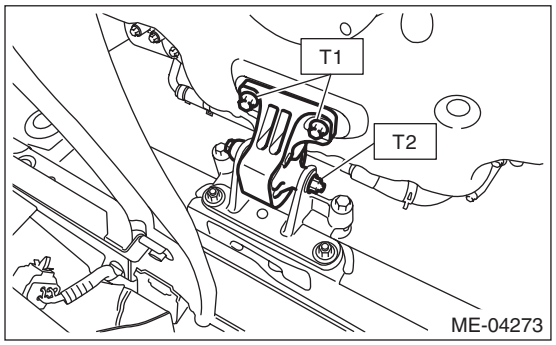

4) Install the connecting bolts (upper side) between engine and transmission.

Tightening torque:
50 N·m (5.1 kgf-m, 36.9 ft-lb)

NOTE:
Make sure there are no gaps in the mating surfaces between engine and transmission. If there are gaps, loosen the connecting bolts, and adjust the position while retightening the bolts.

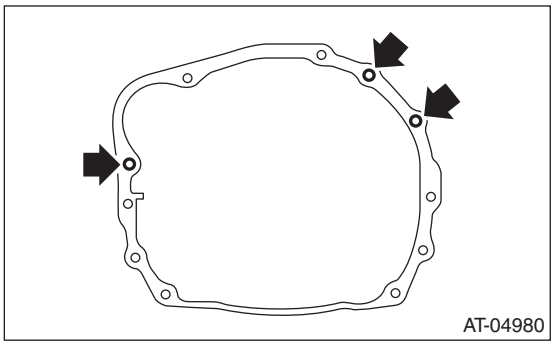

5) Remove the lifting device and wire ropes.
6) Remove the ST from torque converter clutch case.

NOTE:
Be careful not to drop the ST into the torque converter clutch case when removing the ST.
7) Install the radiator. <Ref. to CO(H6DO)-18, INSTALLATION, Radiator.>
8) Install the radiator main fan & fan motor and radiator sub fan & fan motor. <Ref. to CO(H6DO)-22, INSTALLATION, Radiator Main Fan and Fan Motor.> <Ref. to CO(H6DO)-24, INSTALLATION, Radiator Sub Fan and Fan Motor.>
9) Lift up the vehicle.
10) Attach the connecting bolts and nuts (lower side) between the engine and transmission.

Tightening torque:
50 N·m (5.1 kgf-m, 36.9 ft-lb)

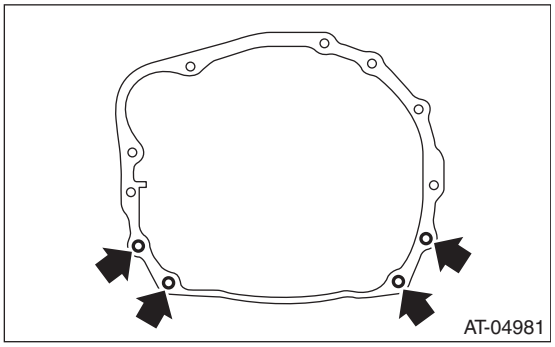

11) Install the ground cable to the underside of chain cover.

Tightening torque:
7.5 N·m (0.8 kgf-m, 5.5 ft-lb)

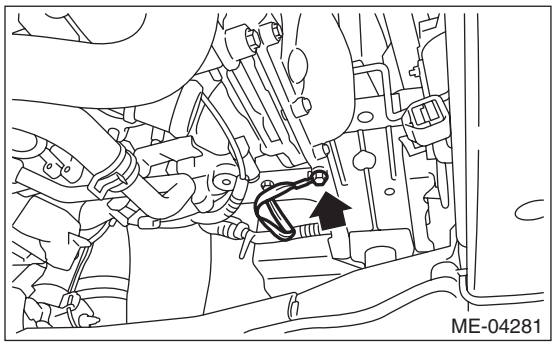

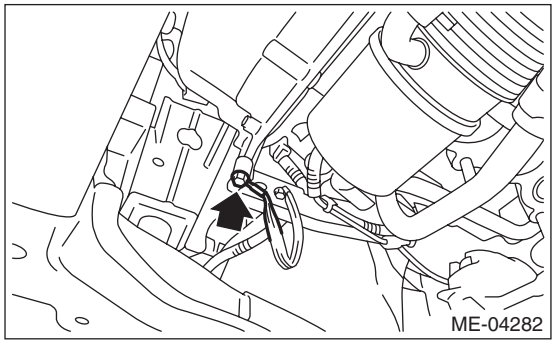

12) Install the front exhaust pipe. <Ref. to EX(H6DO)-6, INSTALLATION, Front Exhaust Pipe.>
13) Install the under cover. <Ref. to EI-35, INSTALLATION, Front Under Cover.>
14) Lower the vehicle.
15) Install the A/C pressure hoses to A/C compressor. <Ref. to AC-76, INSTALLATION, Hose and Pipe.>
16) Connect the fuel delivery hose (A) and evaporation hose (B).

NOTE:
If fuel hoses or clamps are damaged, replace them with new parts.

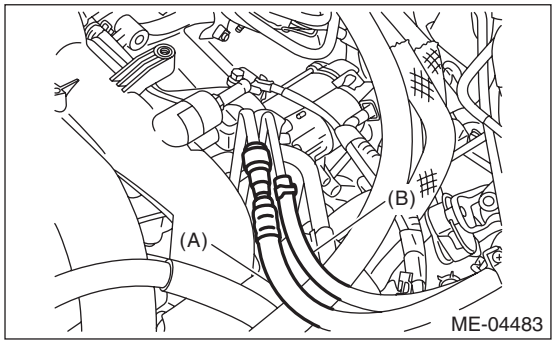

17) Connect the torque converter clutch to the drive plate.
(1) Rotate the clank pulley to align the drive plate to the service hole, and tighten four bolts.

Tightening torque:
25 N·m (2.5 kgf-m, 18.4 ft-lb)

(2) Install the service hole plug.

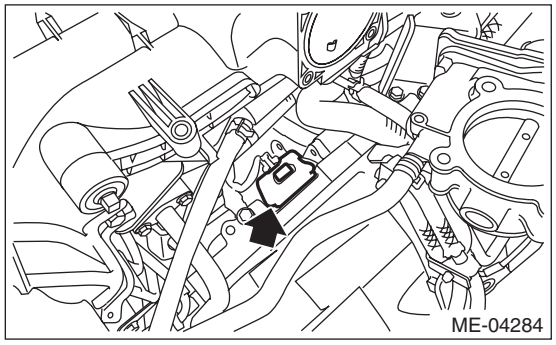

18) Remove the ST.

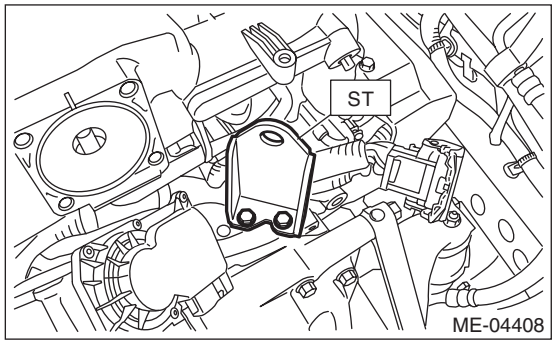

19) Install the throttle body to intake manifold.

NOTE:
Use a new gasket.

Tightening torque:
8 N·m (0.8 kgf-m, 5.9 ft-lb)

20) Install the engine hanger bracket.

Tightening torque:
19 N·m (1.9 kgf-m, 14.0 ft-lb)

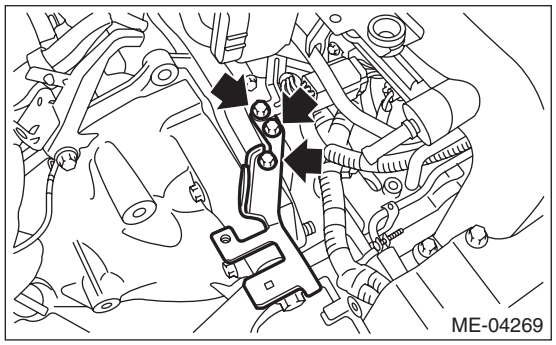

21) Install the engine harness connector to the engine hanger bracket.

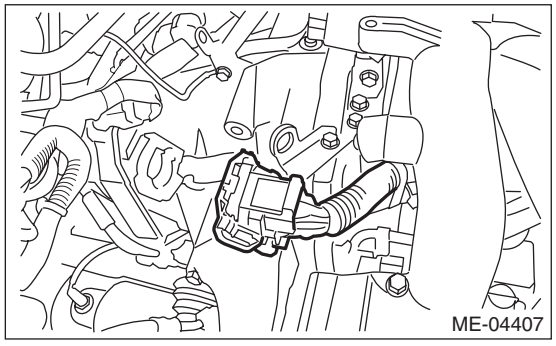

22) Connect the connector to the throttle body.

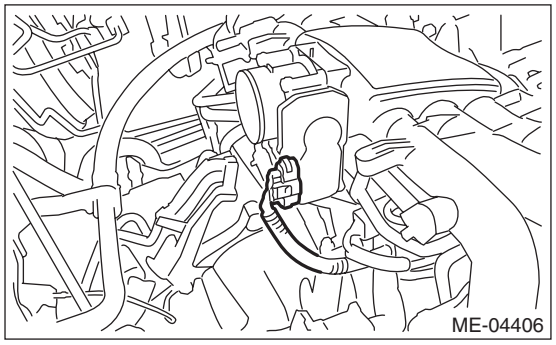

23) Connect the engine harness.

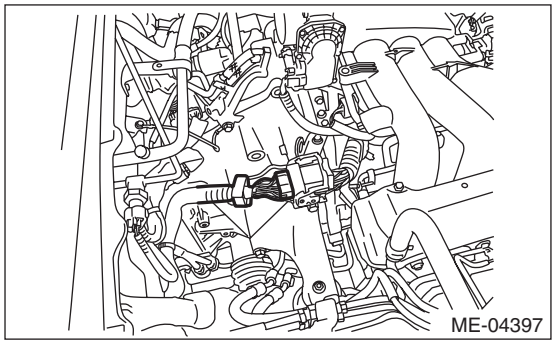

24) Install the heater inlet hose and heater outlet hose.

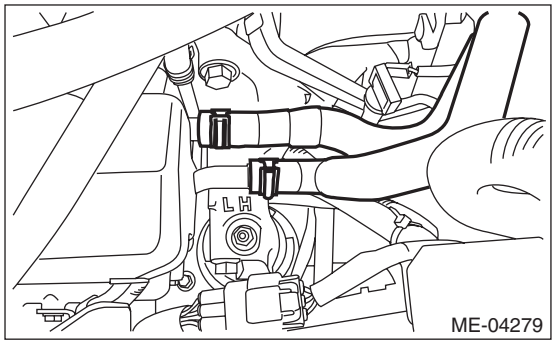

25) Attach the grille bracket.

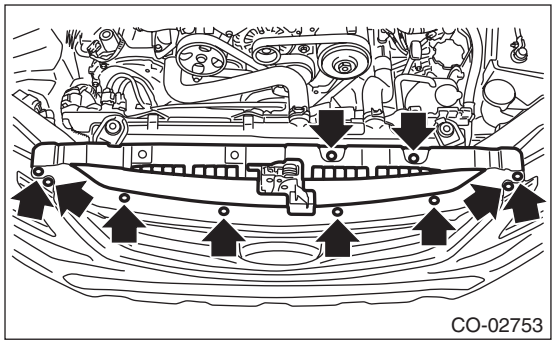

26) Install the starter. <Ref. to SC(H4SO)-10, INSTALLATION, Starter.>

27) Install the starter harness and engine ground to the bracket.

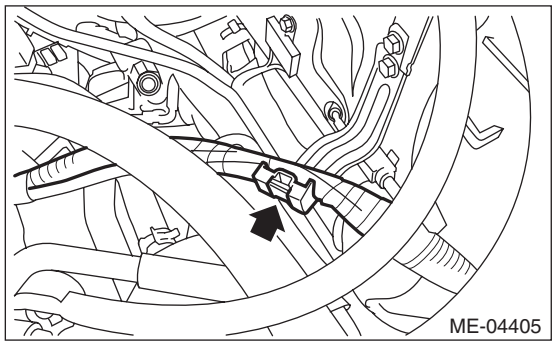

28) Install the engine ground.

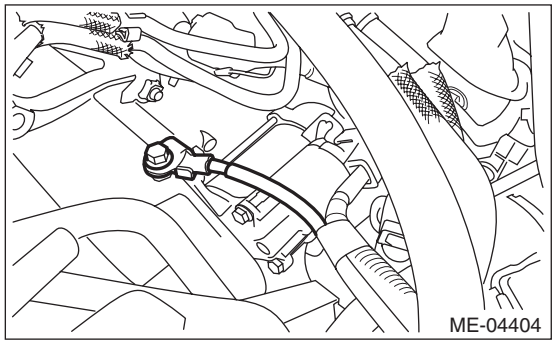

29) Install the brake booster vacuum hose.

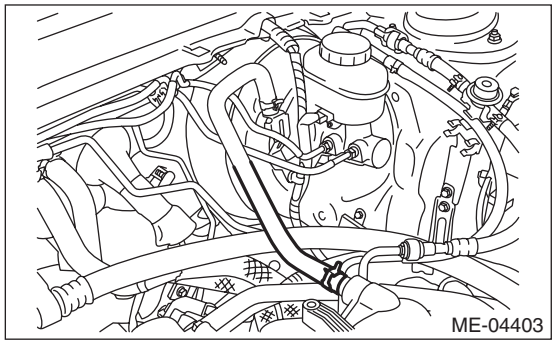

30) Install the power steering pump together with the bracket.
(1) Install the power steering pump and power steering pump bracket to the cylinder block.
(2) Install the collector cover bracket and power steering pump bracket.

Tightening torque:
T1: 6.4 N·m (0.7 kgf-m, 4.7 ft-lb)
T2: 25 N·m (2.5 kgf-m, 18.4 ft-lb)
T3: 33 N·m (3.4 kgf-m, 24.3 ft-lb)

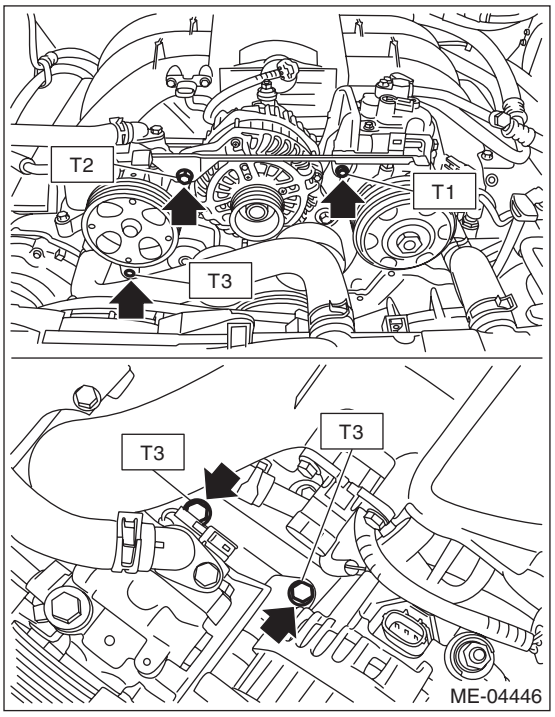

(3) Connect the manifold absolute pressure sensor connector (A) and power steering pump connector (B).

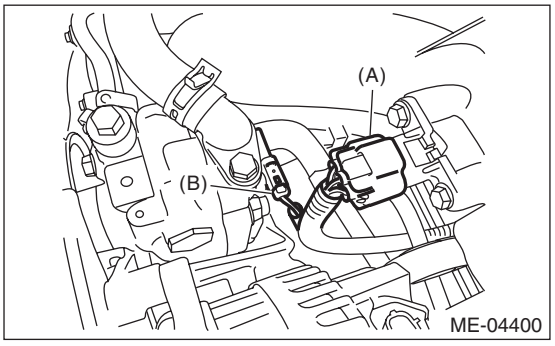

31) Connect the following connectors.
(1) Generator connector
(2) Generator terminal B

Tightening torque:
16 N·m (1.6 kgf-m, 11.8 ft-lb)
(3) Install the harness cover to the collector cover bracket.
(4) A/C compressor solenoid connector

(5) Flow sensor connector

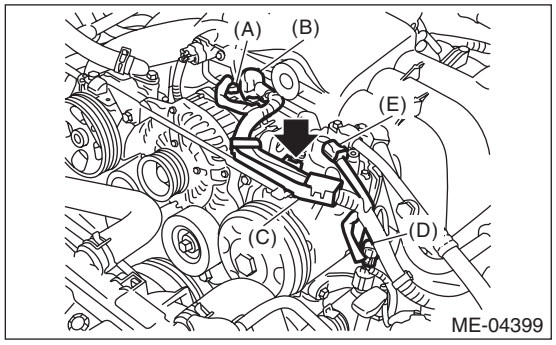

(A) Generator connector
(B) Generator terminal B
(C) Install the harness cover to the collector cover bracket.
(D) A/C compressor solenoid connector
(E) Flow sensor connector

(6) Install with the securing clips to the two locations on the fuel pipe protector (LH).

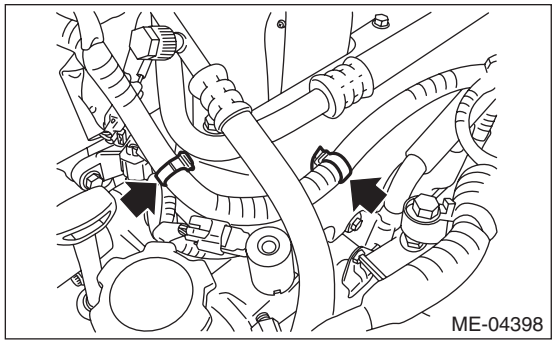

32) Install the V-belts. <Ref. to ME(H6DO)-51, INSTALLATION, V-belt.>
33) Install the air intake duct, air cleaner case and air intake boot assembly. <Ref. to IN(H6DO)-8, INSTALLATION, Air Intake Duct.> <Ref. to IN(H6DO)-5, INSTALLATION, Air Cleaner Case.> <Ref. to IN(H6DO)-7, INSTALLATION, Air Intake Boot.>
34) Connect the ground cable to battery.
35) Fill engine coolant. <Ref. to CO(H6DO)-12, FILLING OF ENGINE COOLANT, REPLACEMENT, Engine Coolant.>
36) Charge the A/C system with refrigerant. <Ref. to AC-25, PROCEDURE, Refrigerant Charging Procedure.>
37) Check the ATF level and replenish it if necessary. <Ref. to 5AT-29, INSPECTION, Automatic Transmission Fluid.>
38) Install the collector cover.
39) Change the front hood damper bolt mounting position from (B) to (A), and completely close the front hood.

Tightening torque:
20 N·m (2.0 kgf-m, 14.8 ft-lb)

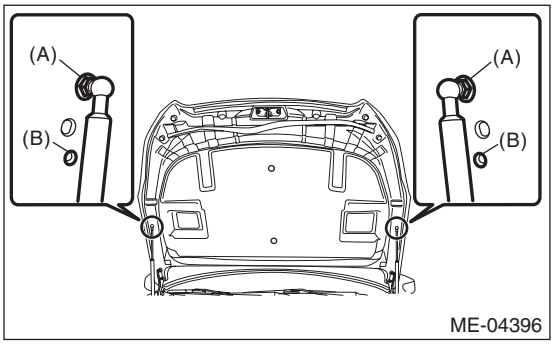

C: INSPECTION

1) Check that the pipes, hoses, connectors and clips are securely connected.
2) Check that the engine coolant is up to specified level.
3) Check that the ATF is up to specified level.
4) Start the engine and check for exhaust gas, engine coolant, leaks of fuel, etc. Also check for noise and vibrations.

10.Engine Mounting

A: REMOVAL

1) Change the front hood damper bolt mounting position from (A) to (B), and completely open the front hood.

Tightening torque:
20 N·m (2.0 kgf-m, 14.8 ft-lb)

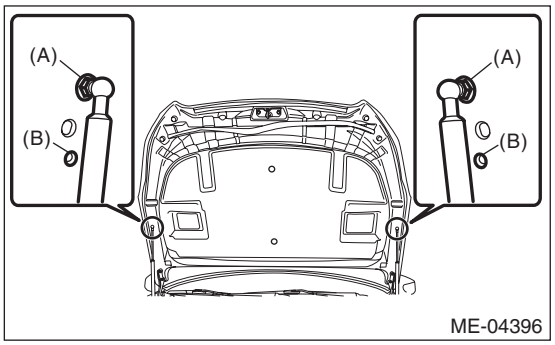

2) Remove the collector cover.

NOTE:
Follow the steps below when removing the collector cover.
(1) Pull up the two points at the rear (A).
(2) Pull up the two points at the front (B) while moving them forward.

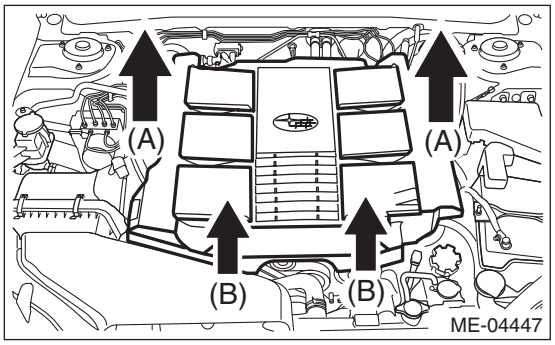

3) Loosen the clamp (A) which connects the air intake boot assembly.

4) Loosen the bolt (B) which secures the air intake boot assembly to the collector cover bracket.

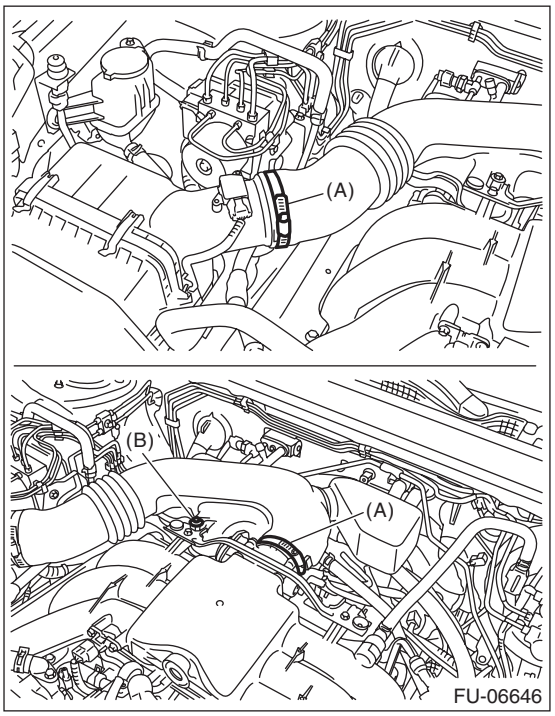

5) Remove the air intake boot assembly, and move it to the left side wheel apron.

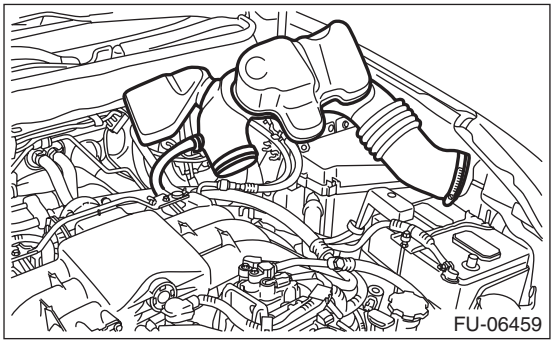

6) Remove the air intake duct and air cleaner case. <Ref. to IN(H6DO)-8, REMOVAL, Air Intake Duct.> <Ref. to IN(H6DO)-5, REMOVAL, Air Cleaner Case.>

7) Remove the grille bracket.

NOTE:
Remove ten clips when removing the grille bracket.

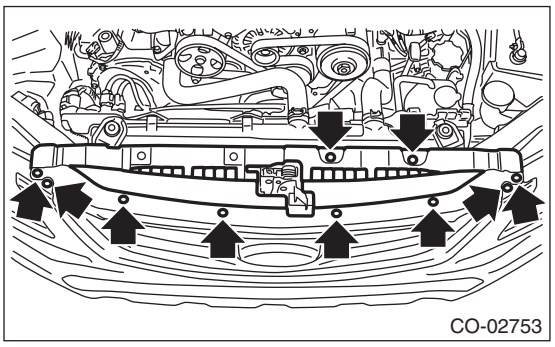

8) Lift up the vehicle.

9) Remove the under cover. <Ref. to EI-35, REMOVAL, Front Under Cover.>
10) Drain engine coolant completely. <Ref. to CO(H6DO)-12, DRAINING OF ENGINE COOLANT, REPLACEMENT, Engine Coolant.>
11) Lower the vehicle.
12) Remove the radiator main fan & fan motor and radiator sub fan & fan motor. <Ref. to CO(H6DO)-21, REMOVAL, Radiator Main Fan and Fan Motor.> <Ref. to CO(H6DO)-24, REMOVAL, Radiator Sub Fan and Fan Motor.>
13) Disconnect the engine harness.

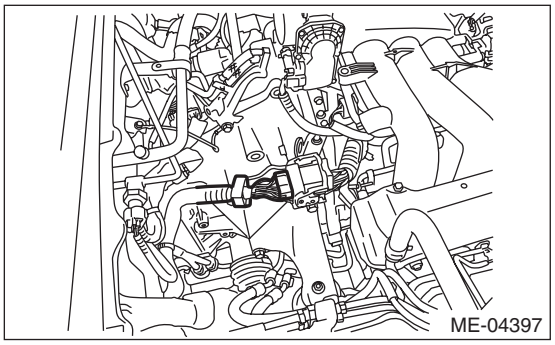
ME-04397

14) Disconnect the connector from the throttle body.

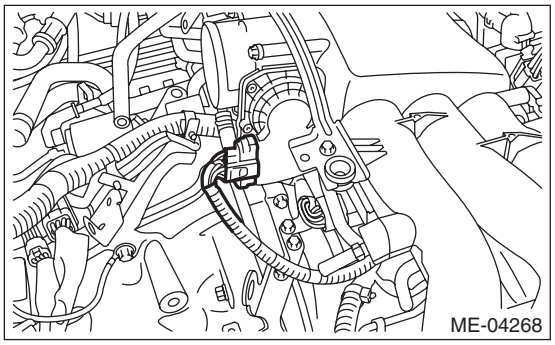
ME-04268

15) Remove the engine harness connector from the engine hanger bracket.

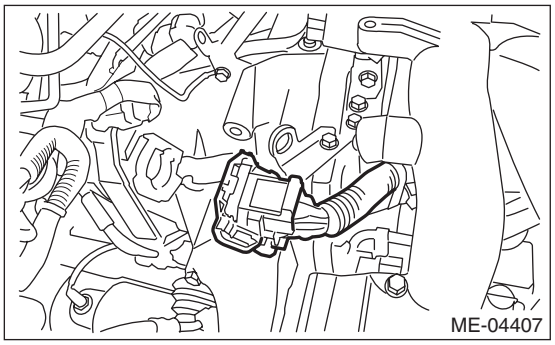
ME-04407

16) Remove the engine hanger bracket.

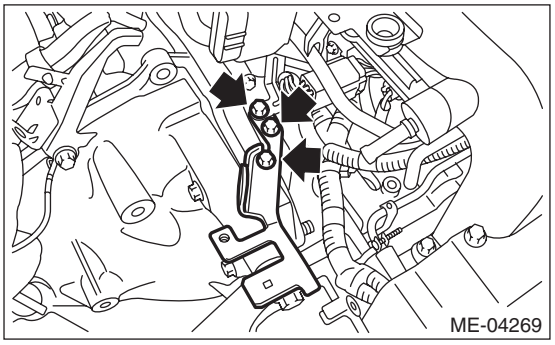
ME-04269

17) Remove the throttle body from the intake manifold.

NOTE:
Do not disconnect the inlet and outlet hoses of engine coolant.
18) Attach the ST.
ST 18360AA020 HANGER

Tightening torque:
19 N·m (1.9 kgf-m, 14.0 ft-lb)

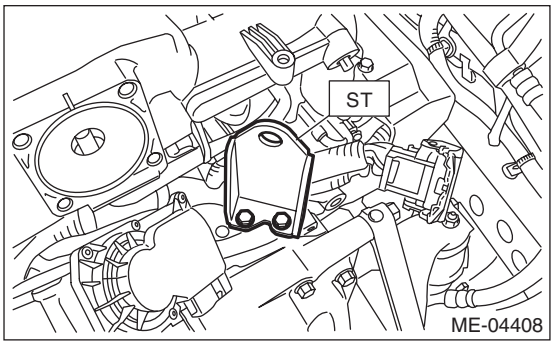

ME-04408

19) Support the engine with a lifting device and wire ropes.

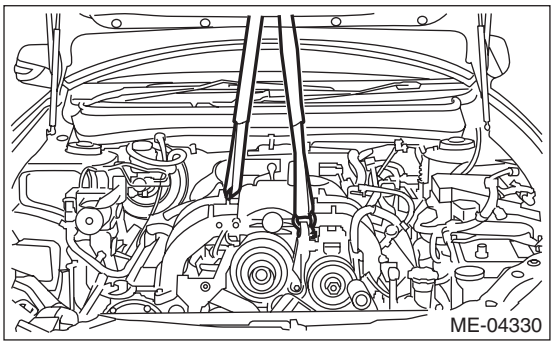
ME-04330

20) Remove the front mount.

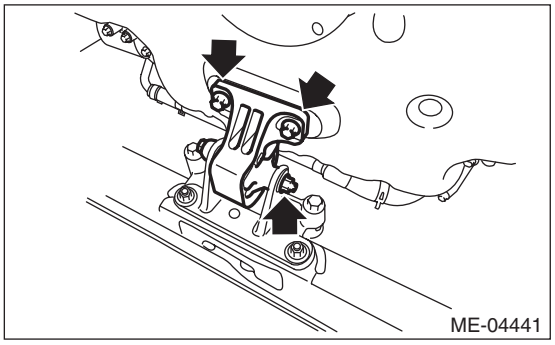

21) Remove the front mounting bracket from the cradle.

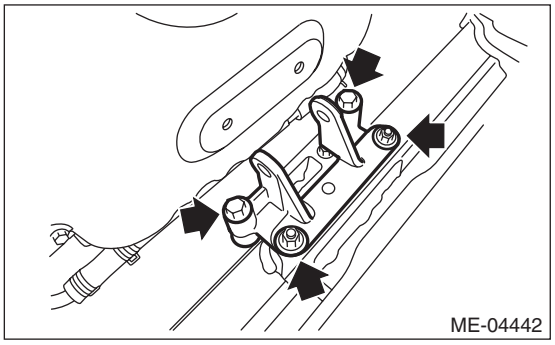

22) Remove the bracket from the cradle.

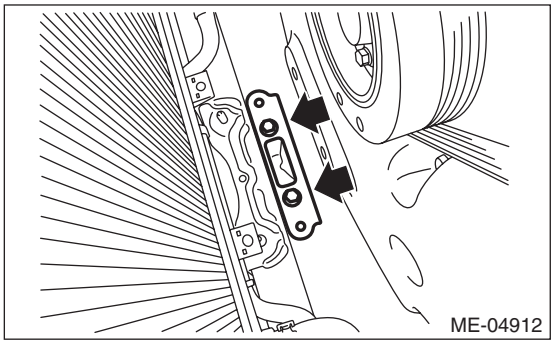

B: INSTALLATION

1) Install the bracket to the cradle.

Tightening torque:
65 N·m (6.6 kgf-m, 47.9 ft-lb)

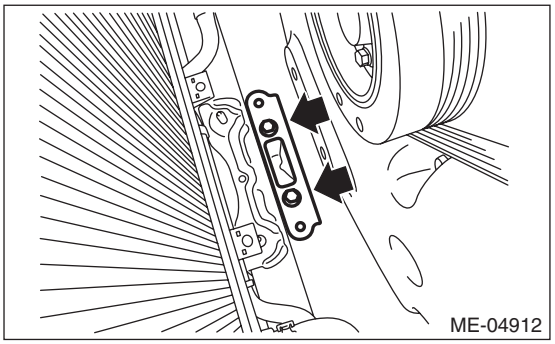

2) Install front mounting bracket to the cradle.

Tightening torque:
60 N·m (6.1 kgf-m, 44.3 ft-lb)

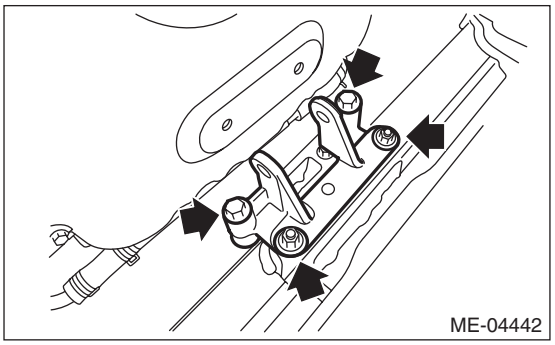

3) Install the front mount.

Tightening torque:
T1: 25 N·m (2.5 kgf-m, 18.4 ft-lb)
T2: 45 N·m (4.6 kgf-m, 33.2 ft-lb)

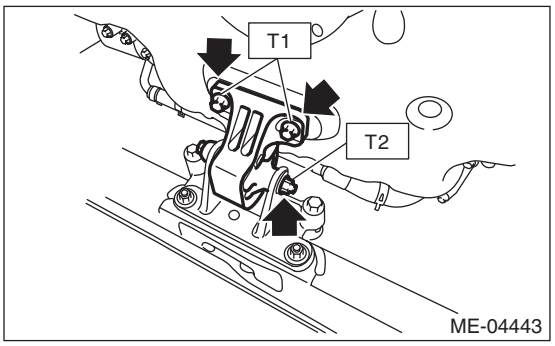

4) Remove the lifting device and wire ropes.

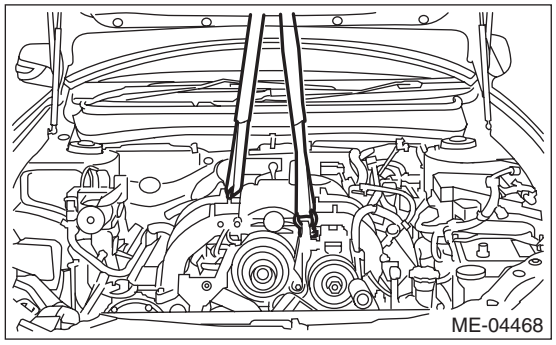

5) Install the radiator main fan & fan motor and radiator sub fan & fan motor. <Ref. to CO(H6DO)-22, INSTALLATION, Radiator Main Fan and Fan Motor.> <Ref. to CO(H6DO)-24, INSTALLATION, Radiator Sub Fan and Fan Motor.>
6) Lift up the vehicle.
7) Install the under cover. <Ref. to EI-35, INSTALLATION, Front Under Cover.>
8) Lower the vehicle.
9) Remove the ST.

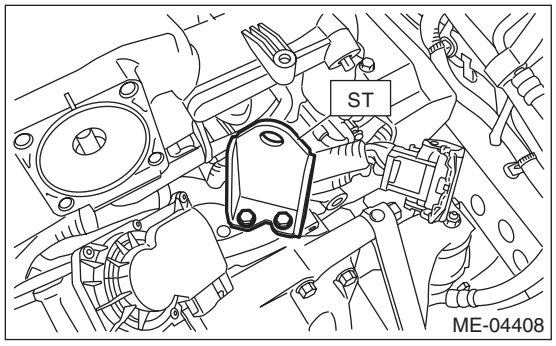

10) Install the throttle body to intake manifold.

NOTE:
Use a new gasket.

Tightening torque:
8 N·m (0.8 kgf-m, 5.9 ft-lb)

11) Install the engine hanger bracket.

Tightening torque:
19 N·m (1.9 kgf-m, 14.0 ft-lb)

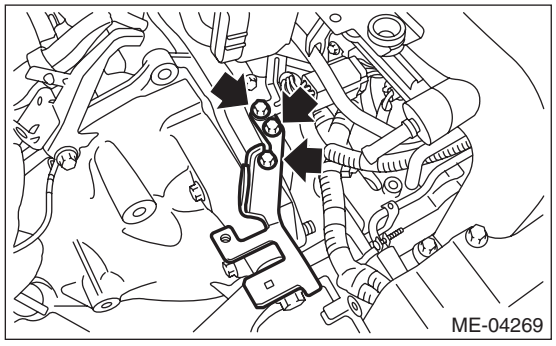

12) Install the engine harness connector to the engine hanger bracket.

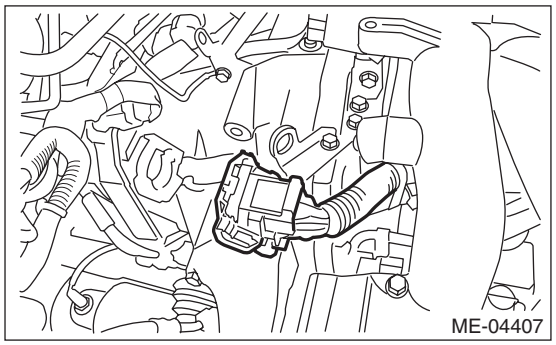

13) Connect the connector to the throttle body.

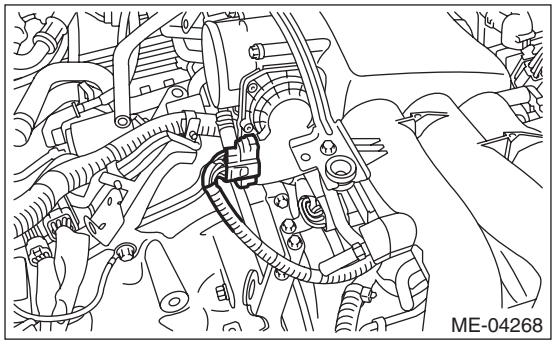

14) Connect the engine harness.

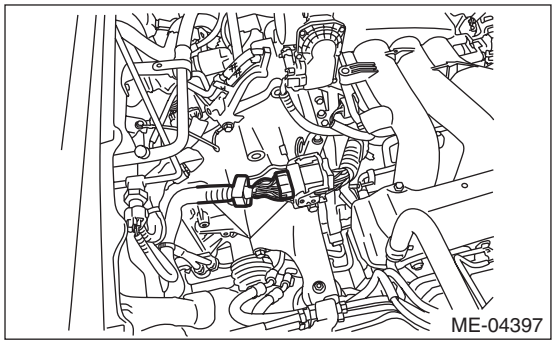

15) Attach the grille bracket.

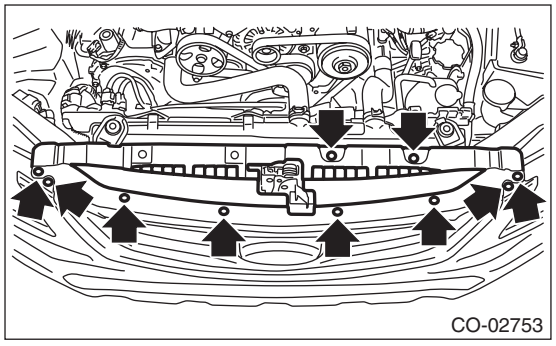

16) Install the air intake duct and air cleaner case. <Ref. to IN(H6DO)-8, INSTALLATION, Air Intake Duct.> <Ref. to IN(H6DO)-5, INSTALLATION, Air Cleaner Case.>

17) Install the air intake boot assembly.

Tightening torque:
Clamp (A)
3 N·m (0.3 kgf-m, 2.2 ft-lb)
Bolt (B)
6.5 N·m (0.7 kgf-m, 4.8 ft-lb)

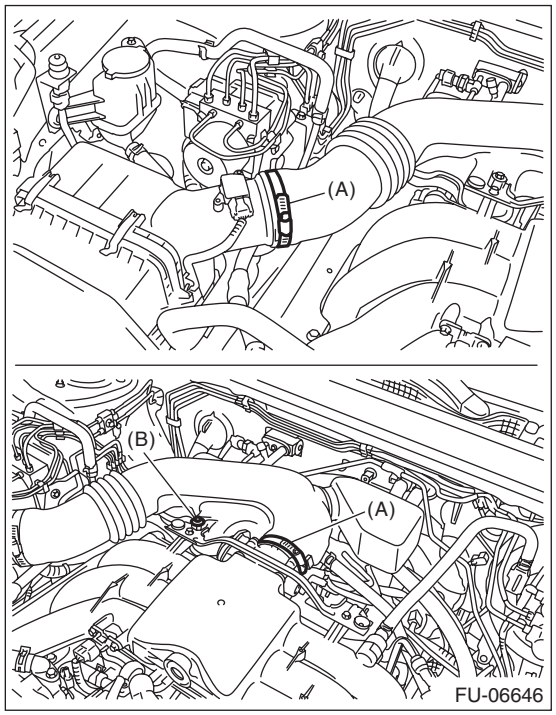

18) Connect the ground cable to battery.
19) Fill engine coolant. <Ref. to CO(H6DO)-12, FILLING OF ENGINE COOLANT, REPLACEMENT, Engine Coolant.>
20) Install the collector cover.
21) Change the front hood damper bolt mounting position from (B) to (A), and completely close the front hood.

Tightening torque:
20 N·m (2.0 kgf-m, 14.8 ft-lb)

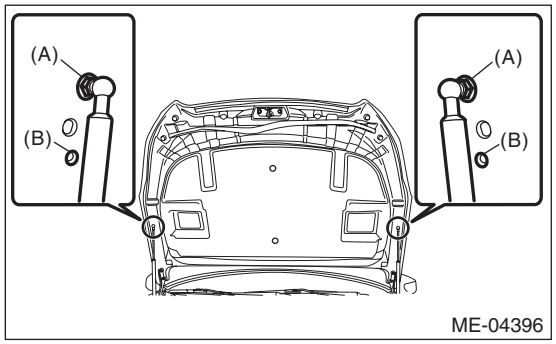

C: INSPECTION

Check that the front mount and front mount bracket have no deformation, cracks and other damages.

11.Preparation for Overhaul

A: REMOVAL

1) Remove the engine from vehicle. <Ref. to ME(H6DO)-36, REMOVAL, Engine Assembly.>
2) Set the engine on ST.
ST 18232AA000 ENGINE STAND

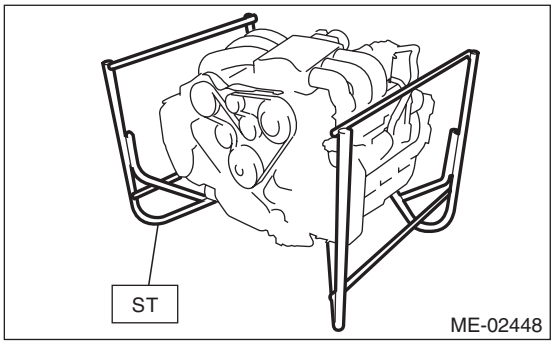

3) Before servicing overhaul, remove the sensor, pipe and hose that installed to engine.
(1) Remove the intake manifold. <Ref. to FU(H6DO)-21, REMOVAL, Intake Manifold.>
(2) Remove the generator. <Ref. to SC(H4SO)-18, REMOVAL, Generator.>
(3) Remove the A/C compressor. <Ref. to AC-55, REMOVAL, Compressor.>
(4) Disconnect the water pipe and hose.
(5) Disconnect the engine harness.
(6) Remove the spark plug. <Ref. to IG(H6DO)-4, REMOVAL, Spark Plug.>
(7) Remove the camshaft position sensor. <Ref. to FU(H6DO)-34, REMOVAL, Camshaft Position Sensor.>
(8) Remove the crankshaft position sensor. <Ref. to FU(H6DO)-31, REMOVAL, Crankshaft Position Sensor.>
(9) Remove the knock sensor. <Ref. to FU(H6DO)-37, REMOVAL, Knock Sensor.>
(10) Remove the engine coolant temperature sensor. <Ref. to FU(H6DO)-29, REMOVAL, Engine Coolant Temperature Sensor.>
(11) Remove the oil temperature sensor. <Ref. to FU(H6DO)-49, REMOVAL, Oil Temperature Sensor.>
(12) Remove the oil flow control solenoid valve. <Ref. to FU(H6DO)-47, REMOVAL, Oil Flow Control Solenoid Valve.>
(13) Remove the oil pressure switch. <Ref. to LU(H6DO)-14, REMOVAL, Oil Pressure Switch.>
(14) Remove the oil filter. <Ref. to LU(H6DO)-15, REMOVAL, Engine Oil Filter.>
(15) Remove the oil cooler. <Ref. to LU(H6DO)-16, REMOVAL, Oil Cooler.>

12.V-belt

A: REMOVAL

1) Remove the collector cover.

NOTE:
Follow the steps below when removing the collector cover.
(1) Pull up the two points at the rear (A).
(2) Pull up the two points at the front (B) while moving them forward.

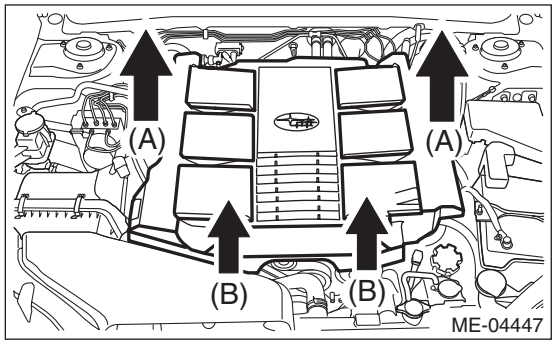

2) Remove the air intake duct. <Ref. to IN(H6DO)-8, REMOVAL, Air Intake Duct.>
3) Install the tool to the pulley bolt of the belt tension adjuster assembly.
4) Rotate the tool clockwise and loosen the V-belt to remove.

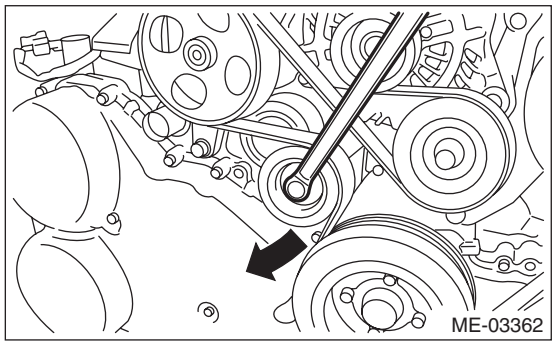

B: INSTALLATION

Install in the reverse order of removal.

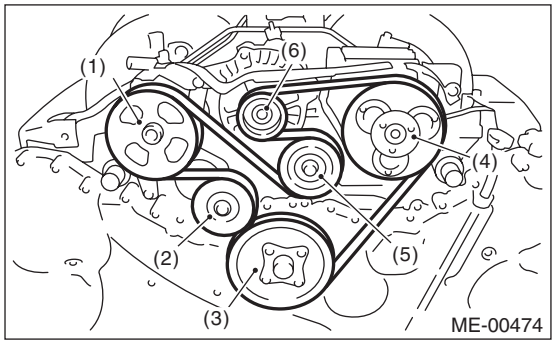

(1) Power steering oil pump pulley
(2) Belt tension adjuster ASSY
(3) Crank pulley
(4) A/C compressor pulley
(5) Belt idler
(6) Generator

C: INSPECTION

1) Replace the V-belt, if cracks, fraying or wear is found.
2) Make sure that the V-belt automatic belt tension indicator (A) is within the range (D).

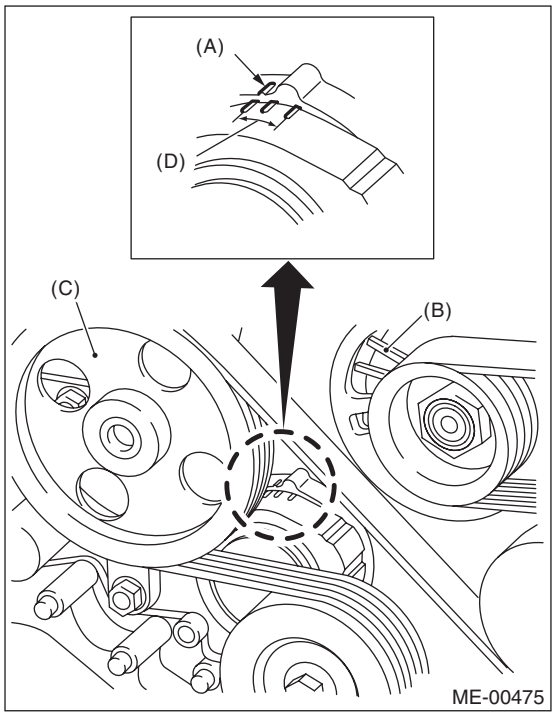

(A) Indicator
(B) Generator
(C) Power steering oil pump pulley
(D) Service limit

13.Crank Pulley

A: REMOVAL

1) Remove the V-belts. <Ref. to ME(H6DO)-51, REMOVAL, V-belt.>
2) Remove the crank pulley cover.

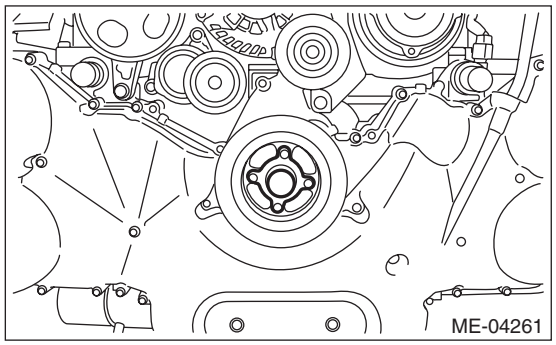

3) Use the ST to lock the crank pulley, and remove the crank pulley bolt.

ST1	18355AA000	PULLEY WRENCH
ST2	18334AA000	PULLEY WRENCH PIN SET

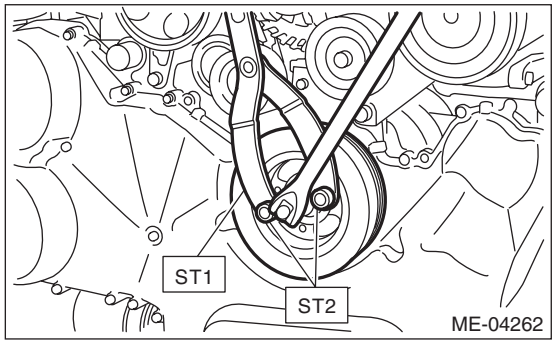

4) Remove the crank pulley.

B: INSTALLATION

1) Clean the crankshaft thread using compressed air.
2) Install the crank pulley.
3) Apply engine oil to the crank pulley bolt seat and thread.
4) Use the ST to lock the crank pulley, and tighten the crank pulley bolt.

ST1	18355AA000	PULLEY WRENCH
ST2	18334AA000	PULLEY WRENCH PIN SET

Tightening torque:
195 N·m (19.9 kgf-m, 143.8 ft-lb)

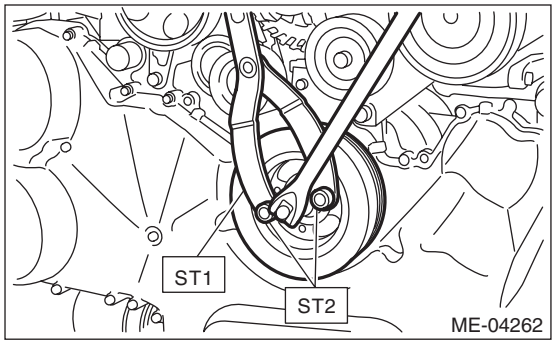

5) Install the O-ring, and install the crank pulley cover.

NOTE:
Use new O-rings.

Tightening torque:
6.4 N·m (0.7 kgf-m, 4.7 ft-lb)

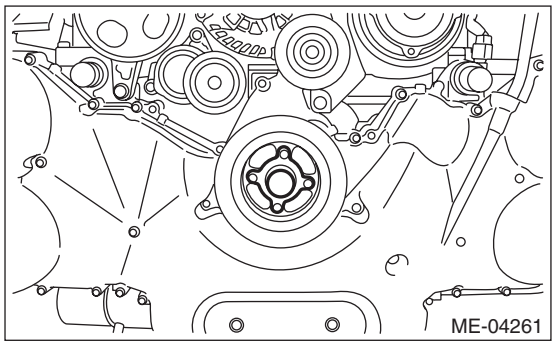

6) Install the V-belts. <Ref. to ME(H6DO)-51, INSTALLATION, V-belt.>

C: INSPECTION

1) Check for oil leaks in the crank pulley cover.
2) Check the crank pulley for looseness.

14.Chain Cover

A: REMOVAL

1) Drain the engine oil. <Ref. to LU(H6DO)-9, REPLACEMENT, Engine Oil.>
2) Lift up the vehicle.
3) Remove the under cover. <Ref. to EI-35, REMOVAL, Front Under Cover.>
4) Drain engine coolant. <Ref. to CO(H6DO)-12, DRAINING OF ENGINE COOLANT, REPLACEMENT, Engine Coolant.>
5) Remove the front exhaust pipe. <Ref. to EX(H6DO)-5, REMOVAL, Front Exhaust Pipe.>
6) Lower the vehicle.
7) Change the bolt mounting position from (A) to (B), and completely open the front hood.

Tightening torque:
20 N·m (2.0 kgf-m, 14.8 ft-lb)

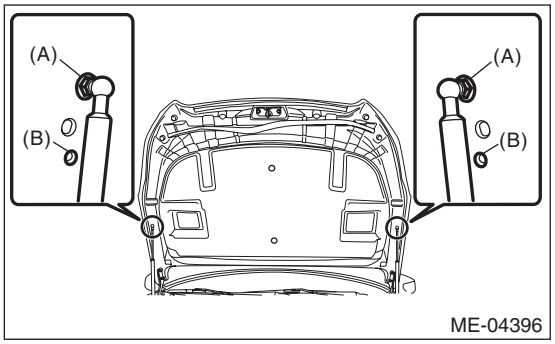

8) Loosen the clamp (A) which connects the air intake boot assembly.
9) Loosen the bolt (B) which secures the air intake boot assembly to the collector cover bracket.

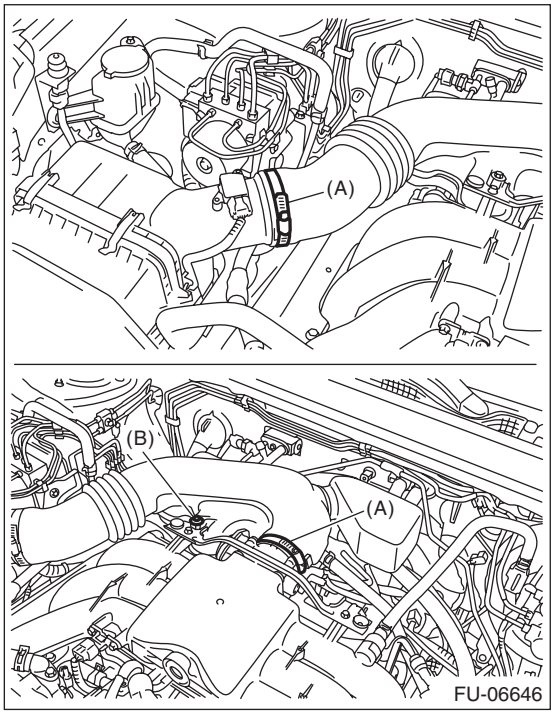

10) Remove the air intake boot assembly, and move it to the left side wheel apron.

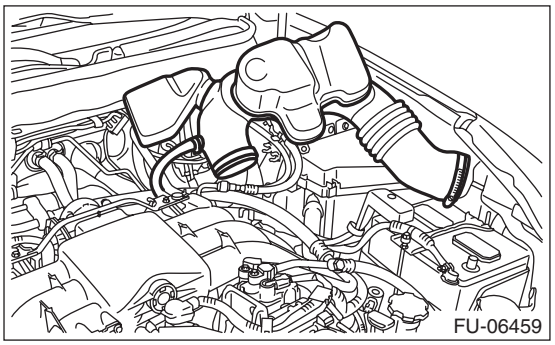

11) Remove the air intake duct. <Ref. to IN(H6DO)-8, REMOVAL, Air Intake Duct.>
12) Disconnect the engine harness connector.

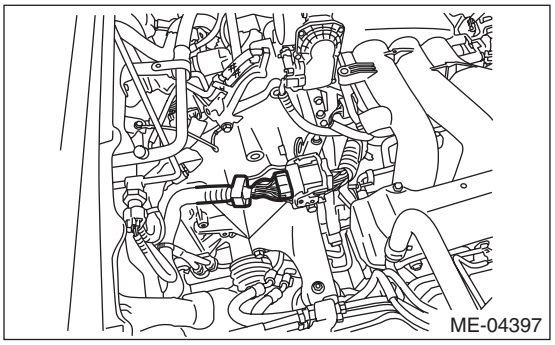

13) Disconnect the connector from the throttle body.

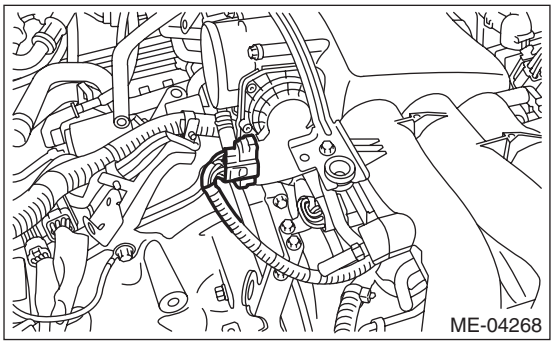

14) Remove the engine harness connector from the engine hanger bracket.

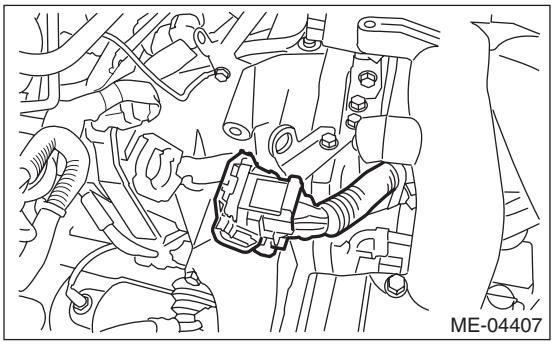

15) Remove the engine hanger bracket.

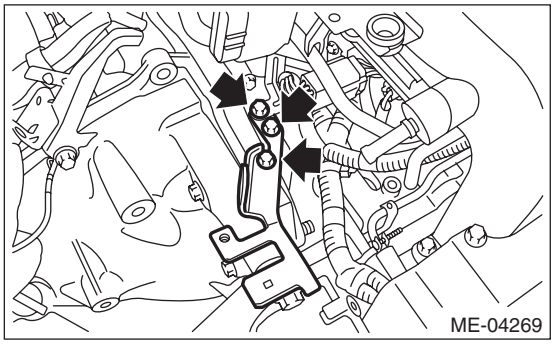

16) Remove the throttle body from the intake manifold.

NOTE:
Do not disconnect the inlet and outlet hoses of engine coolant.

17) Attach the ST.
ST 18360AA020 HANGER

Tightening torque:
19 N·m (1.9 kgf-m, 14.0 ft-lb)

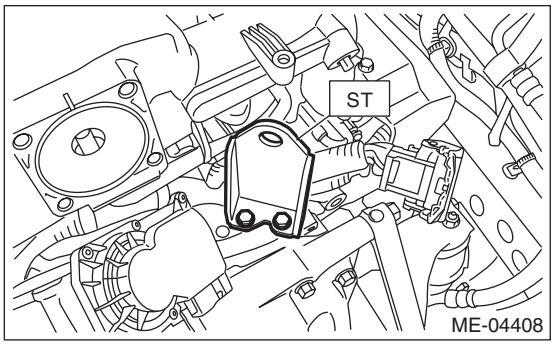

18) Remove the grille bracket.

NOTE:
Remove ten clips when removing the grille bracket.

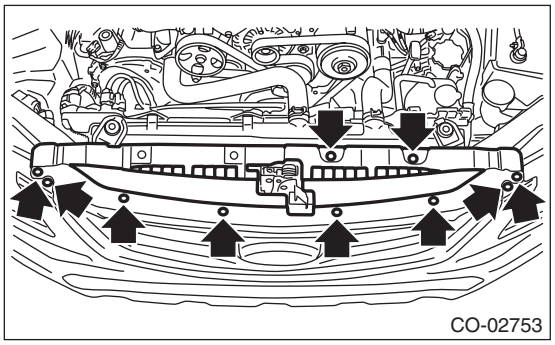

19) Remove the V-belts. <Ref. to ME(H6DO)-51, REMOVAL, V-belt.>
20) Remove the reservoir tank. <Ref. to CO(H6DO)-25, REMOVAL, Reservoir Tank.>
21) Remove the radiator main fan & fan motor and radiator sub fan & fan motor. <Ref. to CO(H6DO)-21, REMOVAL, Radiator Main Fan and Fan Motor.>
22) Remove the radiator. <Ref. to CO(H6DO)-17, REMOVAL, Radiator.>
23) Remove the crank pulley. <Ref. to ME(H6DO)-52, REMOVAL, Crank Pulley.>
24) Support the engine with a lifting device and wire ropes.
25) Remove the front mount from the chain cover.

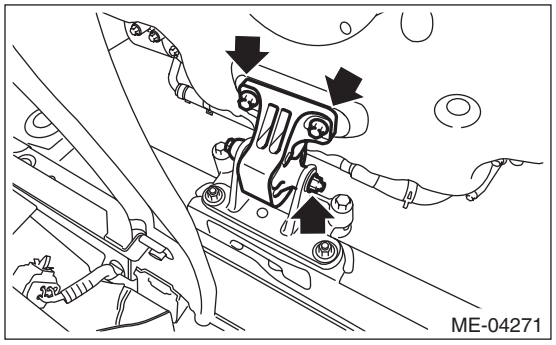

26) Remove the front mounting bracket from the cradle.

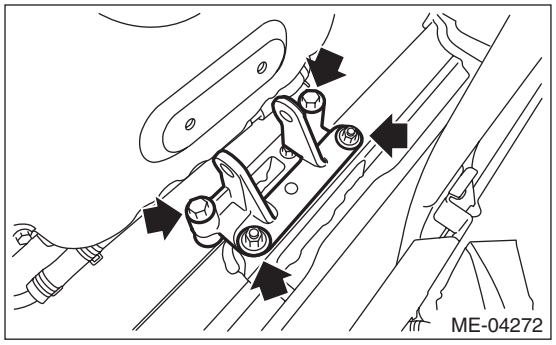

27) Remove the oil cooler pipe from the chain cover.

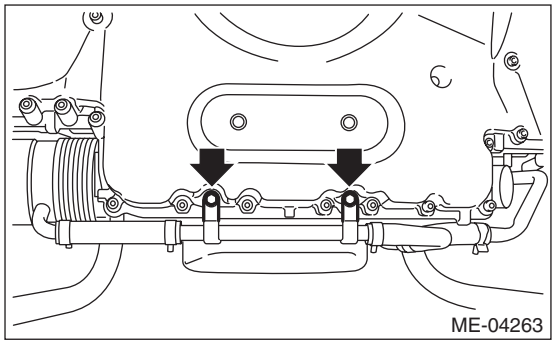

28) Remove the chain cover.

NOTE:
Chain cover installation bolt has three different sizes. To prevent the confusion in installation, keep these bolts on container individually.

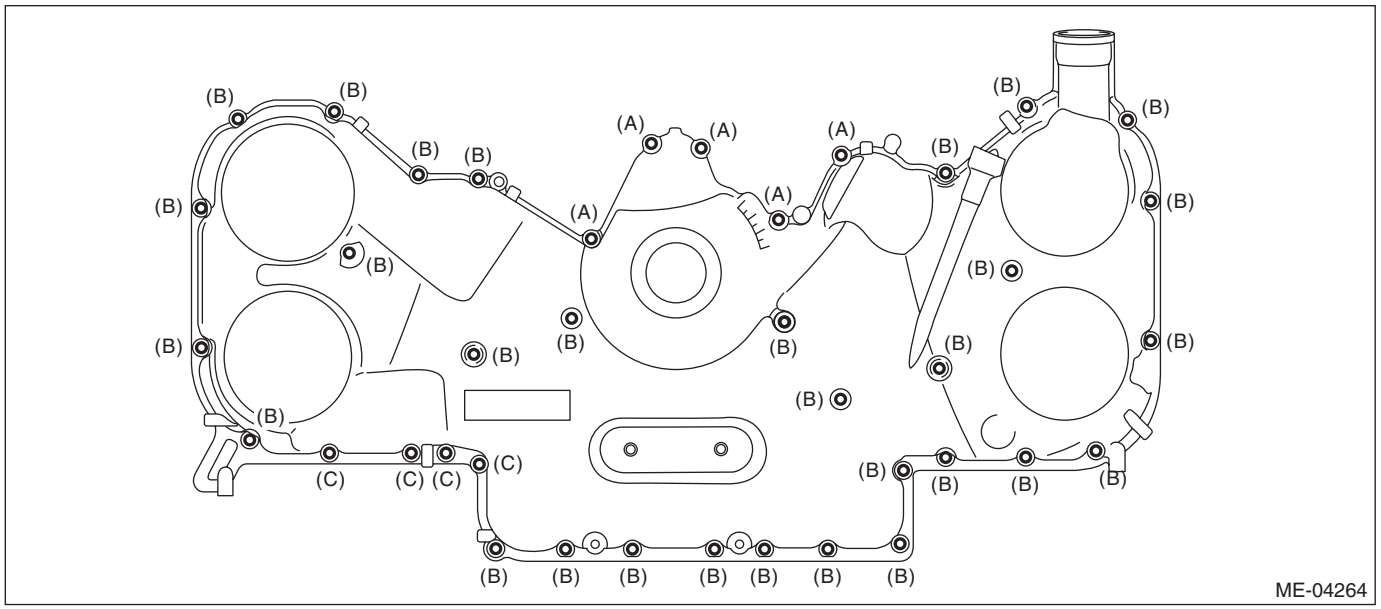

(A) M6 × 21 (B) M6 × 30 (C) M6 × 53

B: INSTALLATION

1) Apply liquid gasket to the mating surfaces of the cylinder block, cylinder head and oil pan upper as shown in the figure.

Liquid gasket:
THREE BOND 1217G (Part No. K0877Y0100) or equivalent

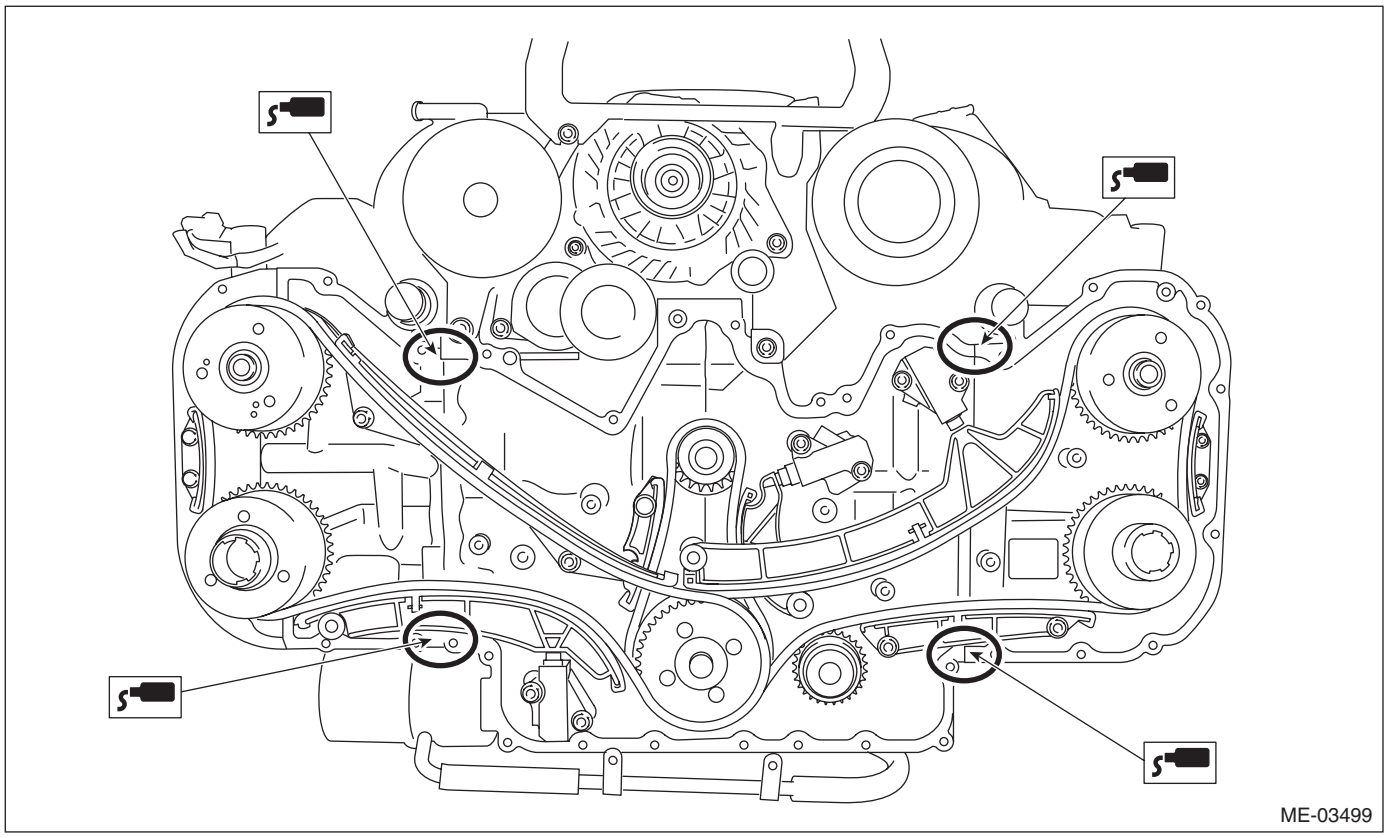

2) Apply liquid gasket to the mating surface of the chain cover.

NOTE:
Install within 5 min. after applying liquid gasket.

Liquid gasket:
THREE BOND 1217G (Part No. K0877Y0100) or equivalent

Liquid gasket applying diameter:
3.5±0.5 mm (0.138±0.020 in)

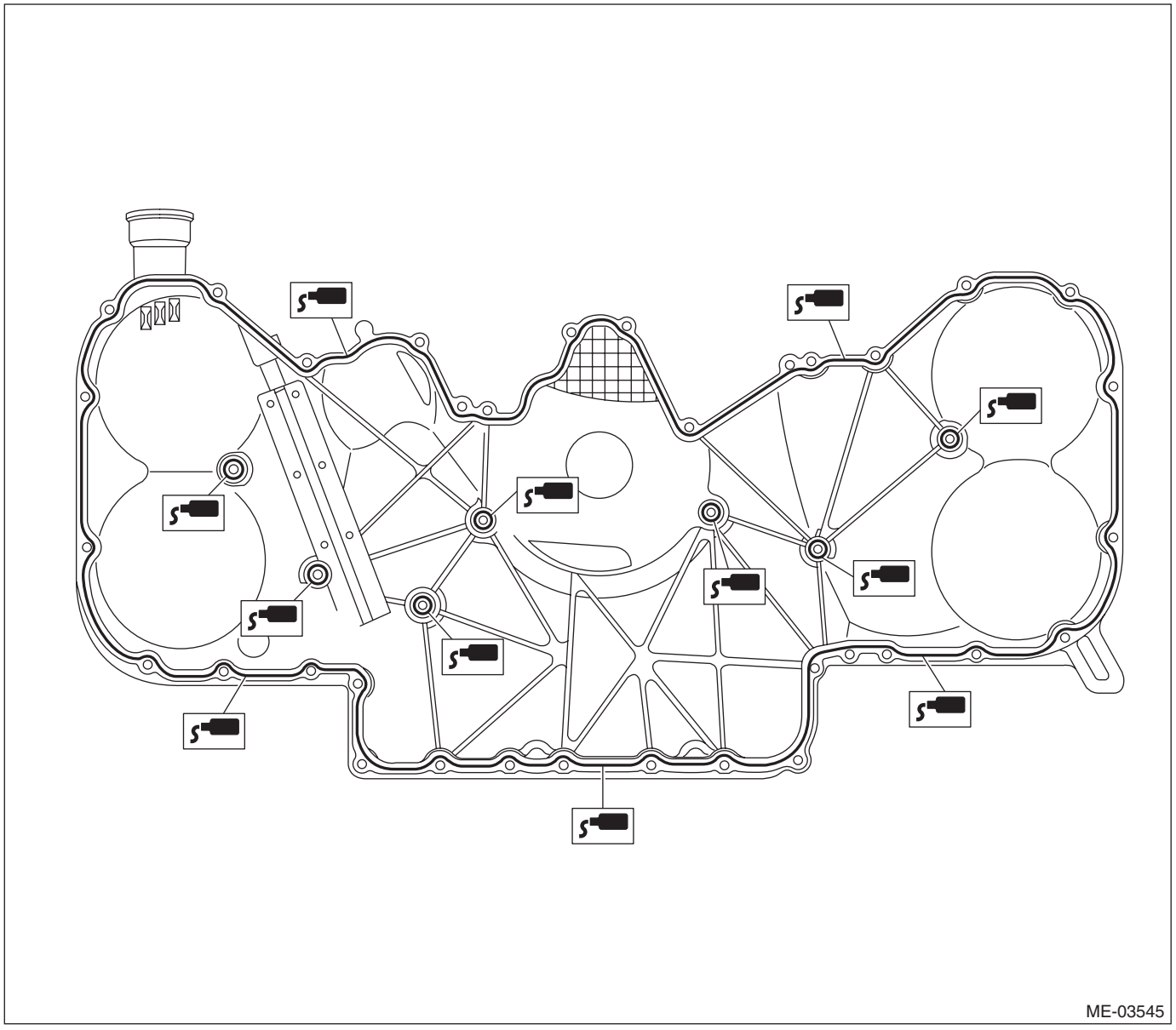

3) Attach the chain cover and temporarily tighten the chain cover installation bolts.

CAUTION:
Do not install the chain cover installation bolts in wrong place.

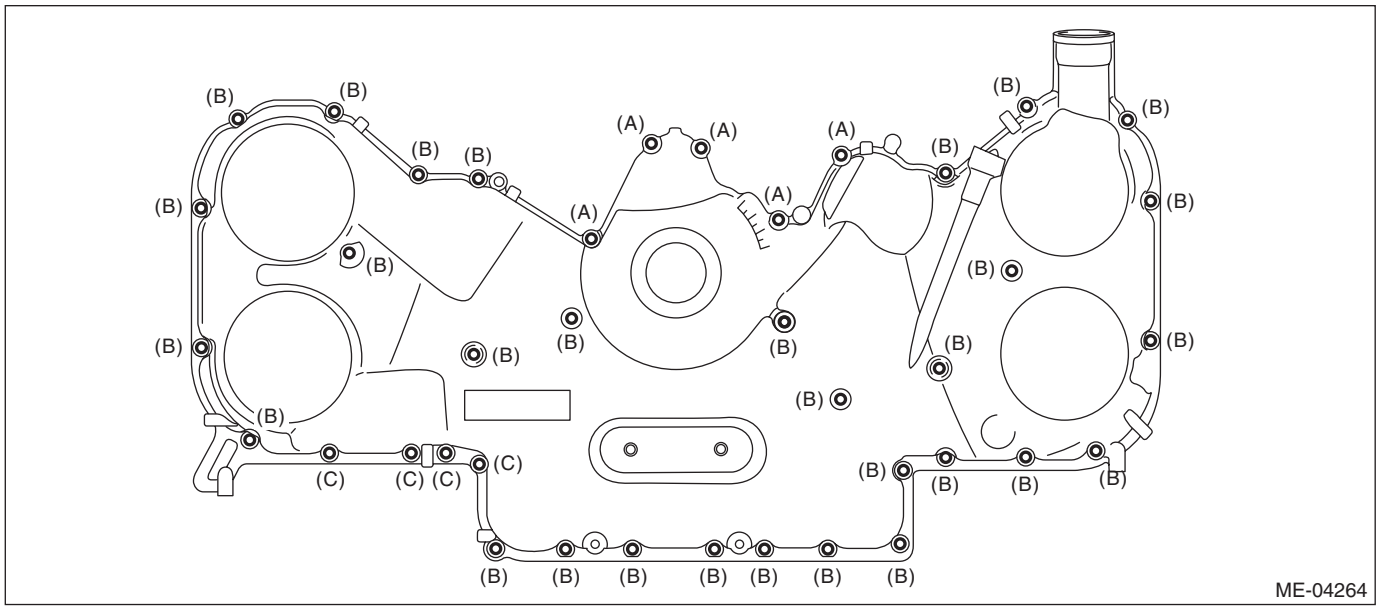

(A) M6 × 21 (B) M6 × 30 (C) M6 × 53

4) Tighten the chain cover installing bolts in the numerical order as shown in the figure.

Tightening torque:
10 N·m (1.0 kgf-m, 7.4 ft-lb)

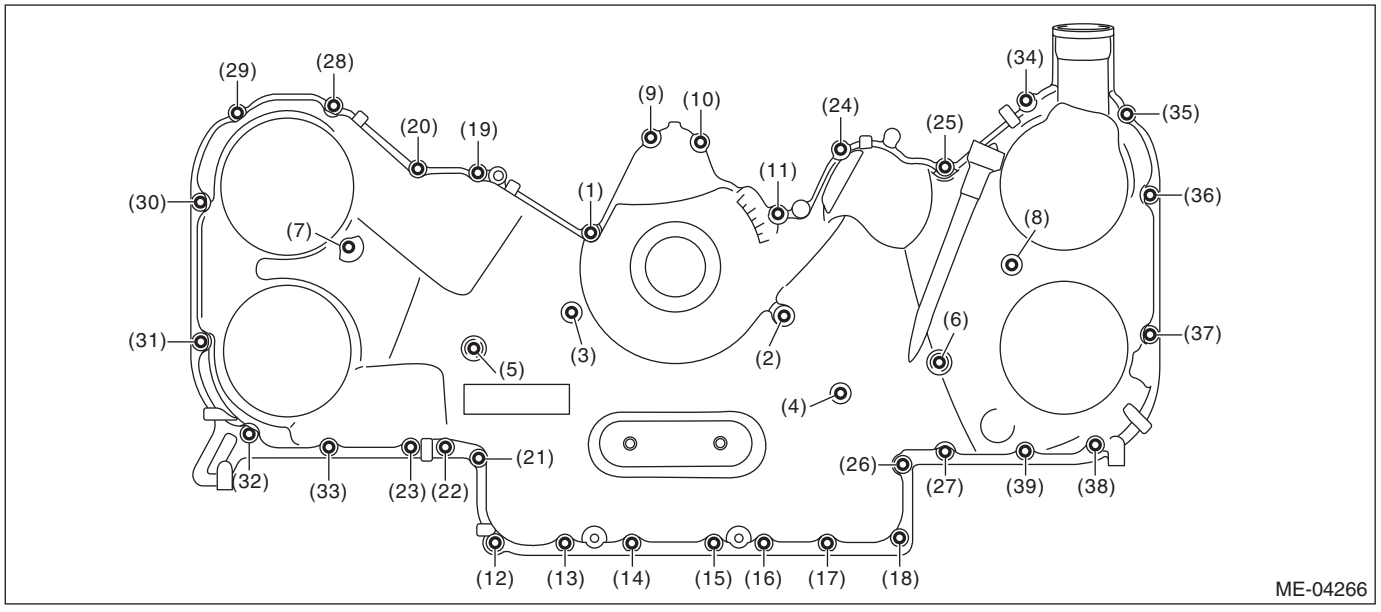

5) Install the oil cooler pipe to the chain cover.

Tightening torque:
6.4 N·m (0.7 kgf-m, 4.7 ft-lb)

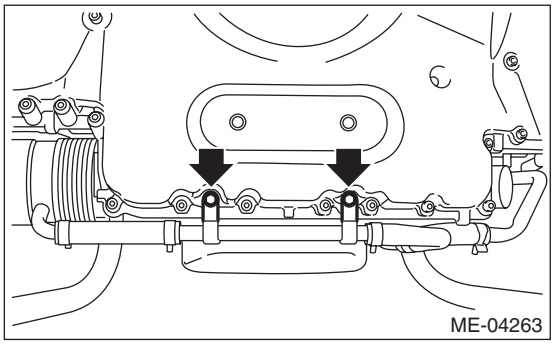

6) Install front mounting bracket to the cradle.

Tightening torque:
60 N·m (6.1 kgf-m, 44.3 ft-lb)

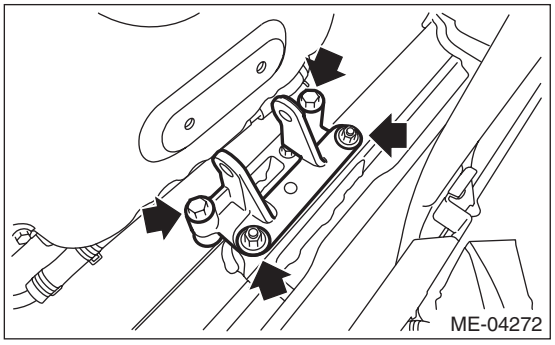

7) Install the front mount.

Tightening torque:
T1: 25 N·m (2.5 kgf-m, 18.4 ft-lb)
T2: 45 N·m (4.6 kgf-m, 33.2 ft-lb)

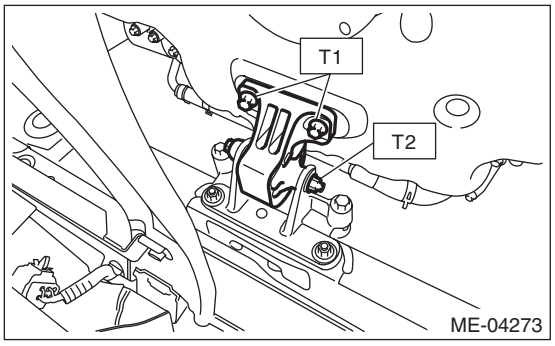

8) Remove the lifting device and wire ropes.
9) Install the crank pulley. <Ref. to ME(H6DO)-52, INSTALLATION, Crank Pulley.>
10) Install the radiator. <Ref. to CO(H6DO)-18, INSTALLATION, Radiator.>
11) Install the radiator main & fan motor and radiator sub fan & fan motor. <Ref. to CO(H6DO)-22, INSTALLATION, Radiator Main Fan and Fan Motor.>
12) Install the reservoir tank. <Ref. to CO(H6DO)-25, REMOVAL, Reservoir Tank.>
13) Install the V-belts. <Ref. to ME(H6DO)-51, INSTALLATION, V-belt.>

14) Attach the grille bracket.

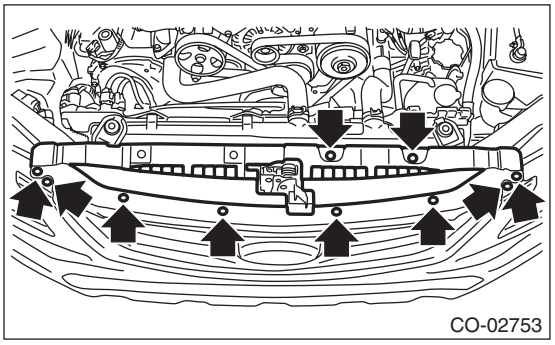

15) Install the throttle body to intake manifold.

NOTE:
Use a new gasket.

Tightening torque:
8 N·m (0.8 kgf-m, 5.9 ft-lb)

16) Remove the ST (HANGER) and install the engine hanger bracket.

Tightening torque:
19 N·m (1.9 kgf-m, 14.0 ft-lb)

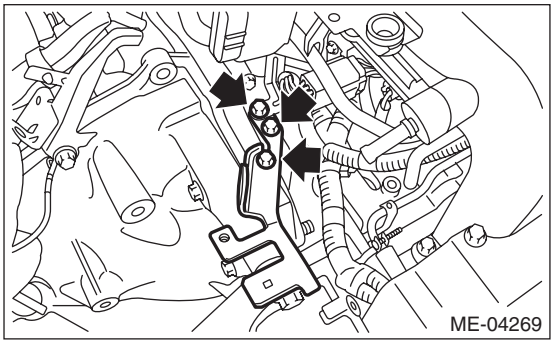

17) Install the engine harness connector to the engine hanger bracket.

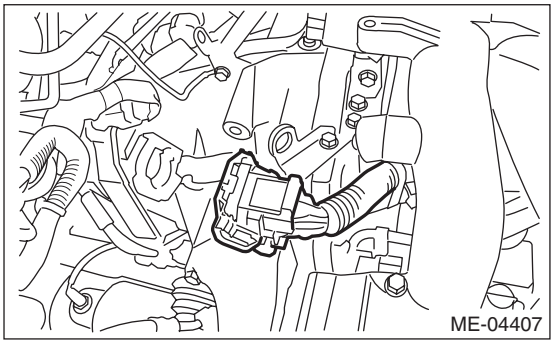

18) Connect the connector to the throttle body.

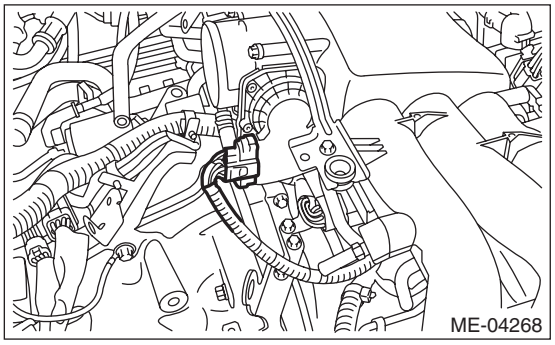

19) Connect the engine harness connector.

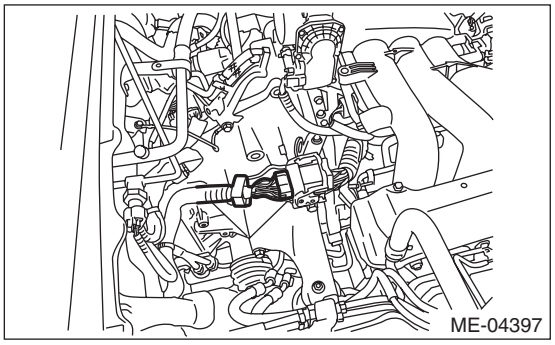

20) Install the V-belts. <Ref. to ME(H6DO)-51, INSTALLATION, V-belt.>
21) Install the air intake boot assembly.

Tightening torque:
Clamp (A)
3 N·m (0.3 kgf-m, 2.2 ft-lb)
Bolt (B)
6.5 N·m (0.7 kgf-m, 4.8 ft-lb)

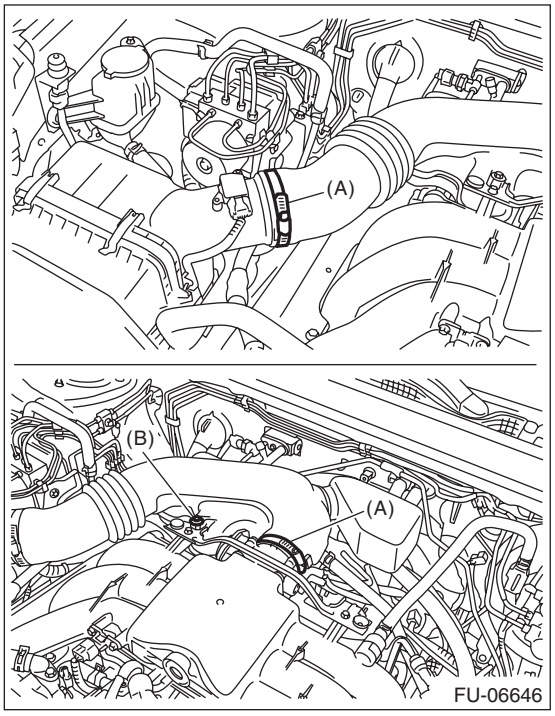

22) Install the air intake duct. <Ref. to IN(H6DO)-8, INSTALLATION, Air Intake Duct.>
23) Install the front exhaust pipe. <Ref. to EX(H6DO)-6, INSTALLATION, Front Exhaust Pipe.>
24) Fill engine coolant. <Ref. to CO(H6DO)-12, FILLING OF ENGINE COOLANT, REPLACEMENT, Engine Coolant.>
25) Fill engine oil. <Ref. to LU(H6DO)-9, REPLACEMENT, Engine Oil.>
26) Make sure there is no oil leaks in the chain cover mating surface.
27) Install the under cover. <Ref. to EI-35, INSTALLATION, Front Under Cover.>
28) Install the collector cover.
29) Change the bolt mounting position from (B) to (A), and completely close the front hood.

Tightening torque:
20 N·m (2.0 kgf-m, 14.8 ft-lb)

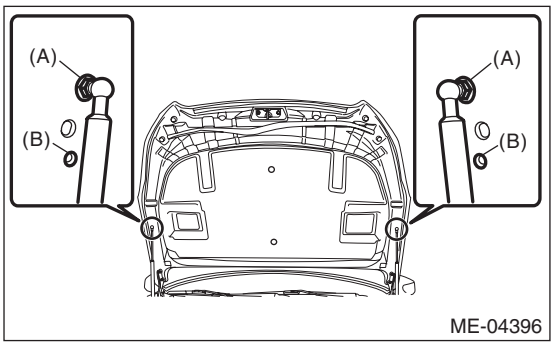

C: INSPECTION

1) Check the chain cover surface for scratches or dents.
2) Check for oil leakage on the chain cover mating surface and installation part of crank pulley.
If there is an oil leak from the oil seal, perform replacement with a new oil seal.
ST 499585700 OIL SEAL GUIDE

Oil seal press-fit position:
Chain cover end face — Position –1 mm (–0.039 in) from the chain cover end face.

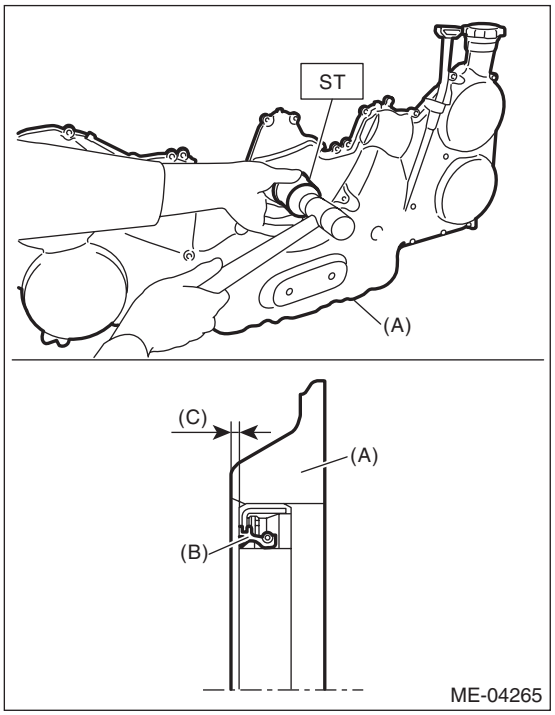

(A) Chain cover
(B) Oil seal
(C) Oil seal press-fit position
(chain cover edge –1mm (–0.039 in) position)

15.Timing Chain Assembly

A: LOCATION

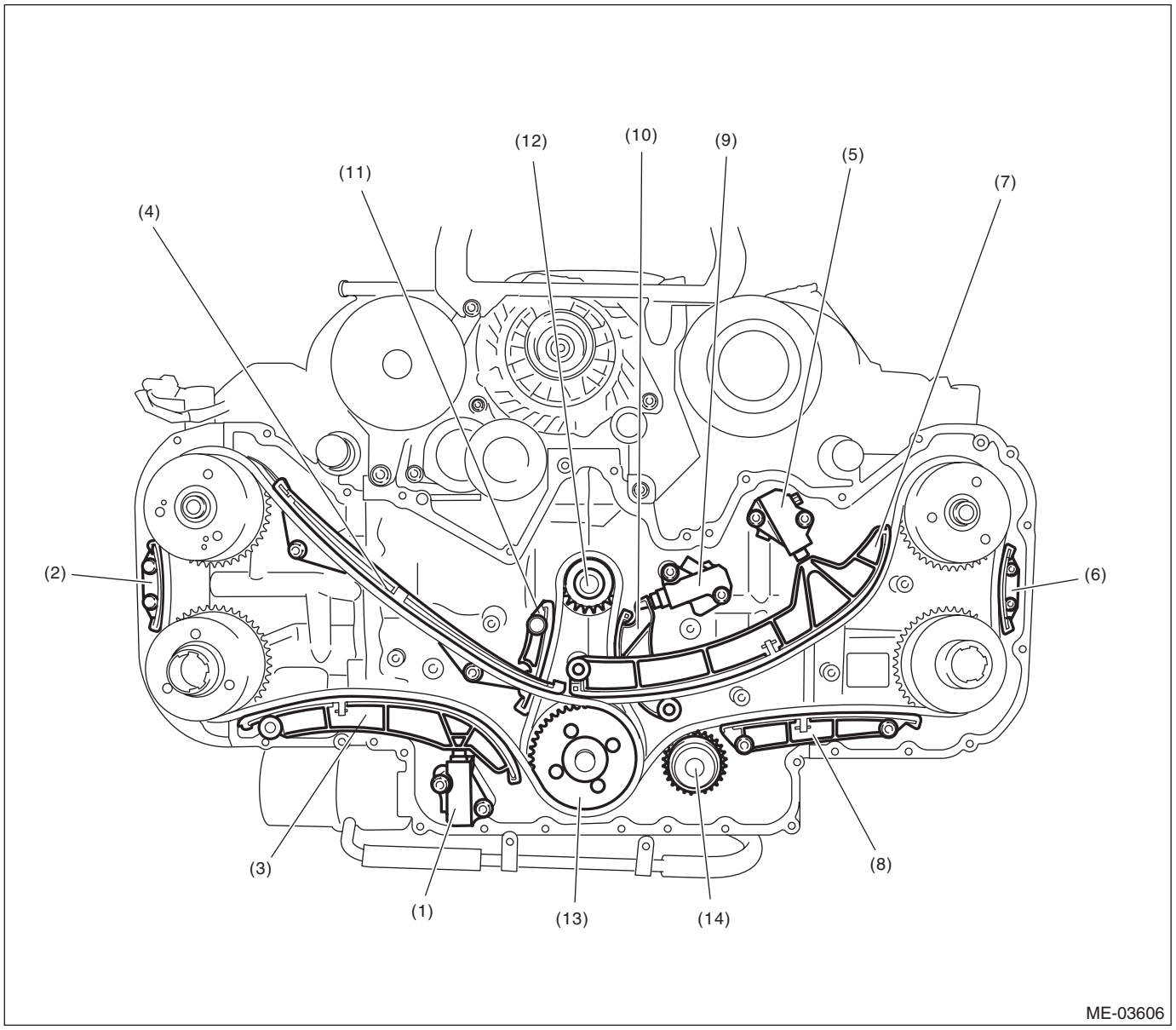

(1) Chain tensioner (RH)
(2) Chain guide (between cams, RH)
(3) Chain tensioner lever (RH)
(4) Chain guide (RH)
(5) Chain tensioner (LH)
(6) Chain guide (between cams, LH)
(7) Chain tensioner lever (LH)
(8) Chain guide (LH)
(9) Chain tensioner (main)
(10) Chain tensioner lever (main)
(11) Chain guide (main)
(12) Crank sprocket
(13) Idler sprocket
(14) Water pump sprocket

B: REMOVAL

NOTE:
To avoid mixing the timing chain component parts, separate each part after their removal.
1) Drain the engine oil. <Ref. to LU(H6DO)-9, REPLACEMENT, Engine Oil.>
2) Remove the radiator. <Ref. to CO(H6DO)-17, REMOVAL, Radiator.>
3) Remove the V-belts. <Ref. to ME(H6DO)-51, REMOVAL, V-belt.>
4) Remove the crank pulley. <Ref. to ME(H6DO)-52, REMOVAL, Crank Pulley.>
5) Remove the chain cover. <Ref. to ME(H6DO)-53, REMOVAL, Chain Cover.>
6) Remove the chain tensioner (RH).

NOTE:
When removing chain tensioner (RH), hold the plunger by hand so that it does not come flying out.

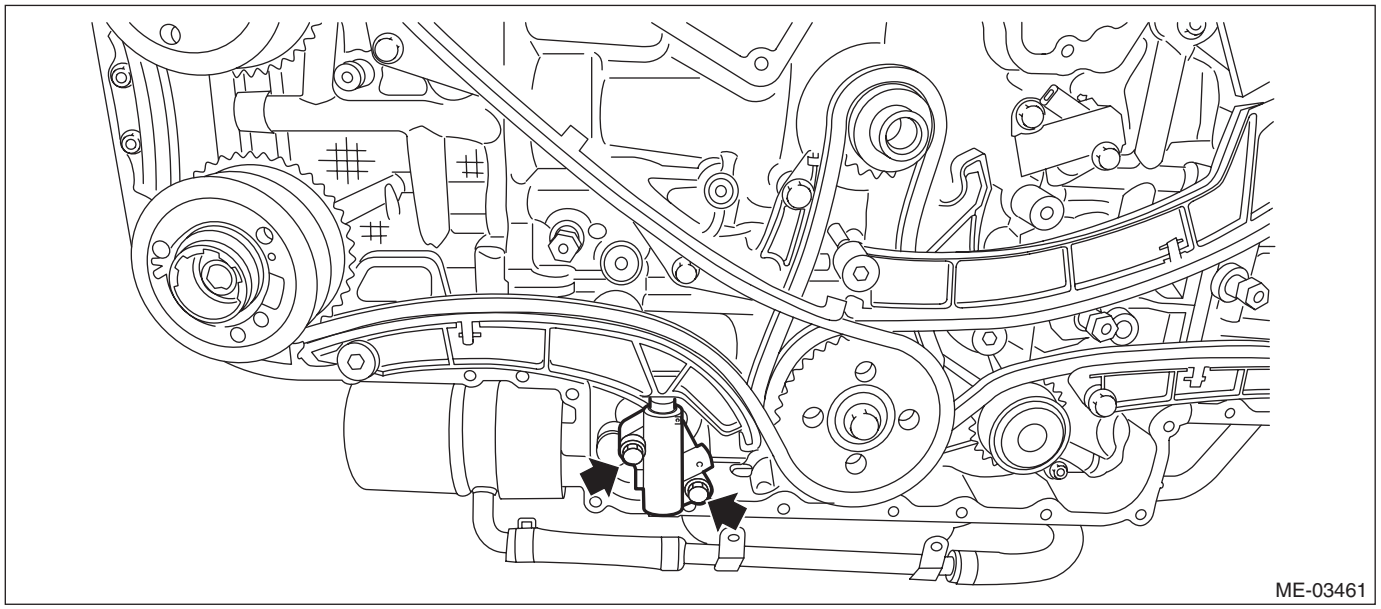
ME-03461

7) Remove the chain guide (RH: between cams).

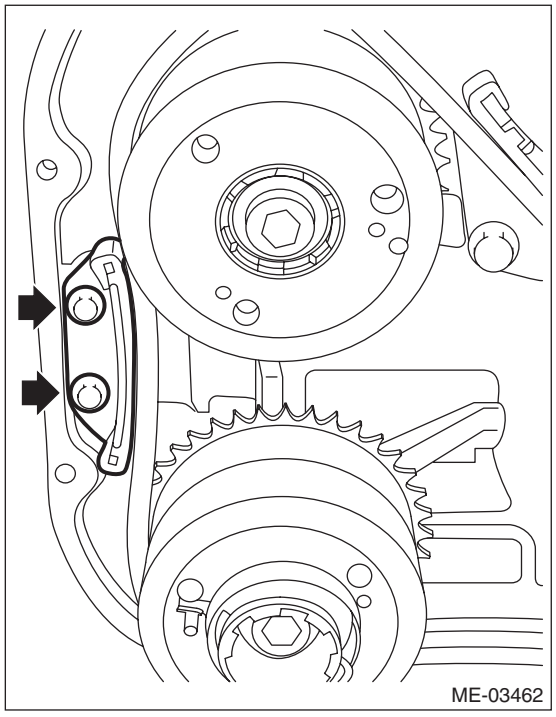
ME-03462

8) Remove the chain tensioner lever (RH).

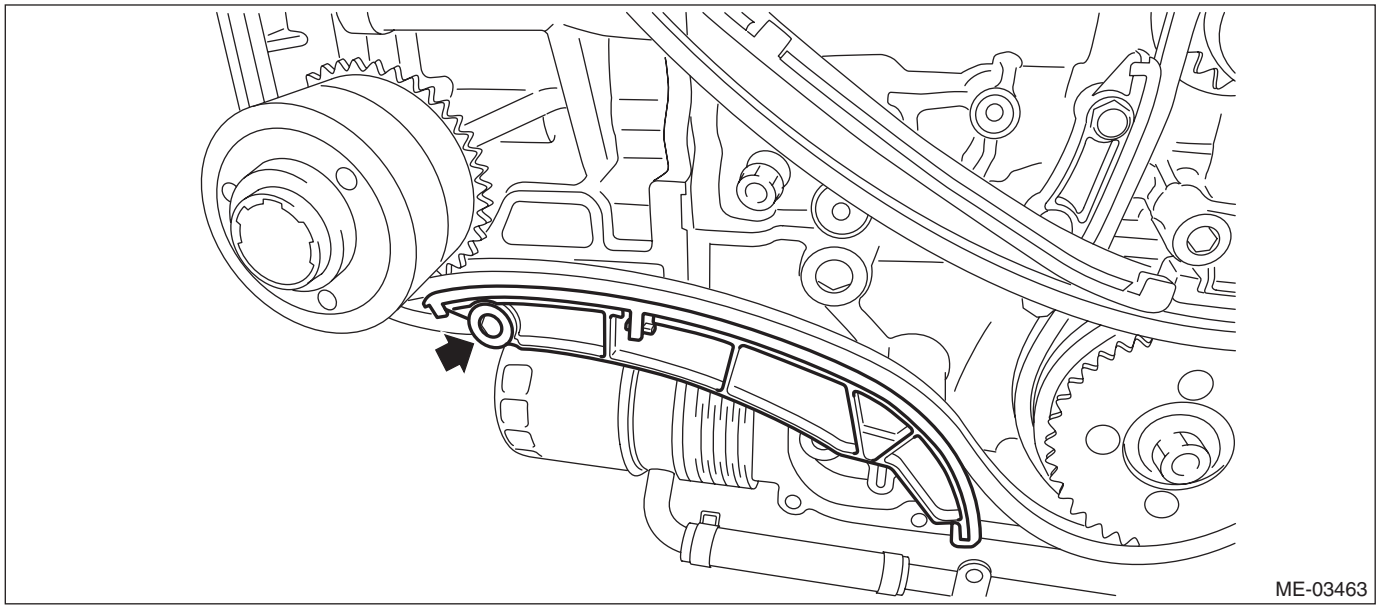

9) Remove the chain guide (RH).

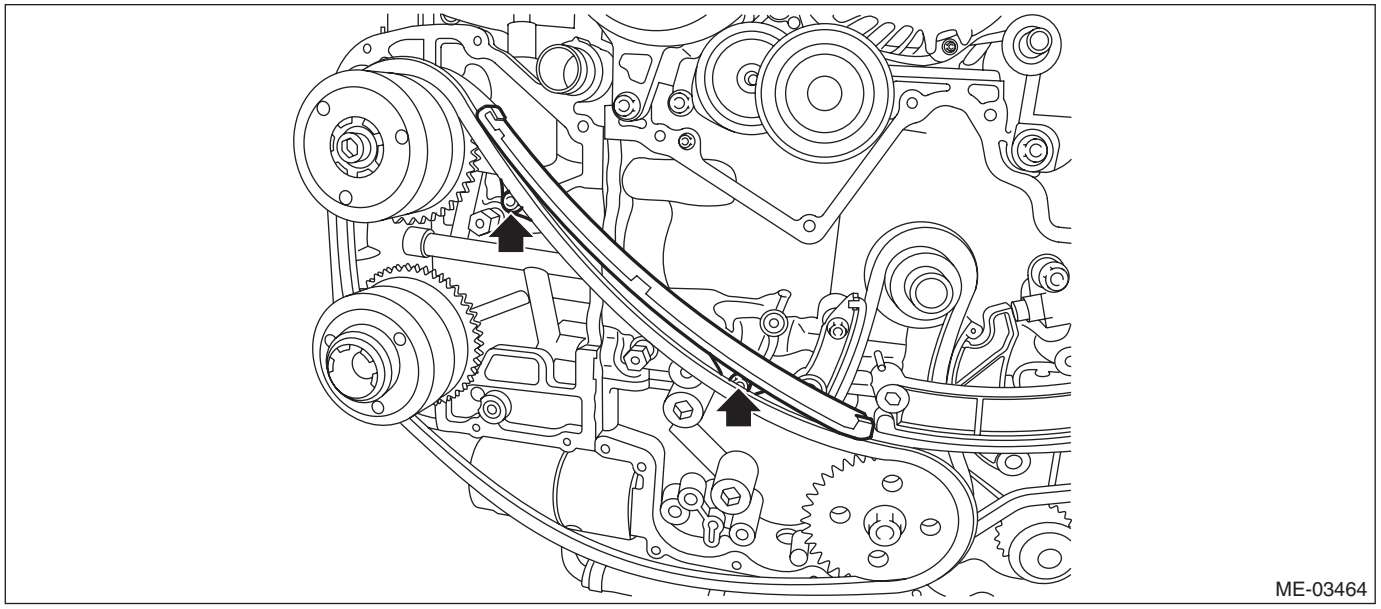

10) Remove the timing chain (RH).

11) Remove the chain tensioner (LH).

NOTE:
When removing chain tensioner (LH), hold the plunger by hand so that it does not come flying out.

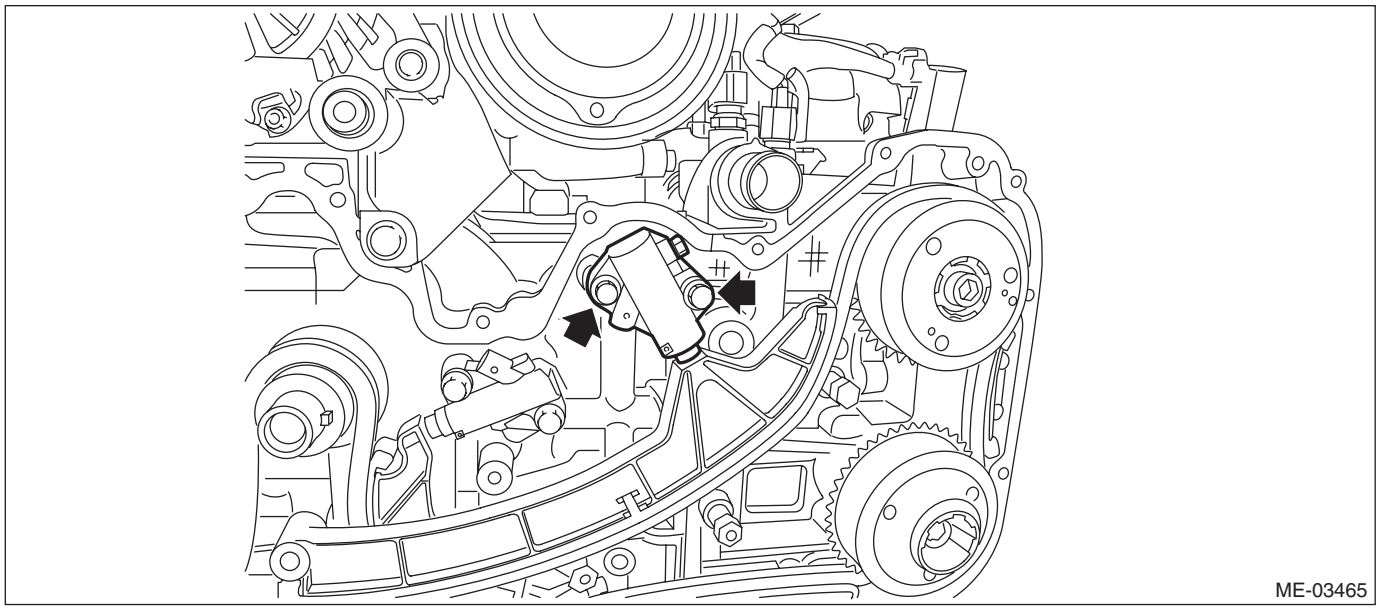

12) Remove the chain guide (LH: between cams).

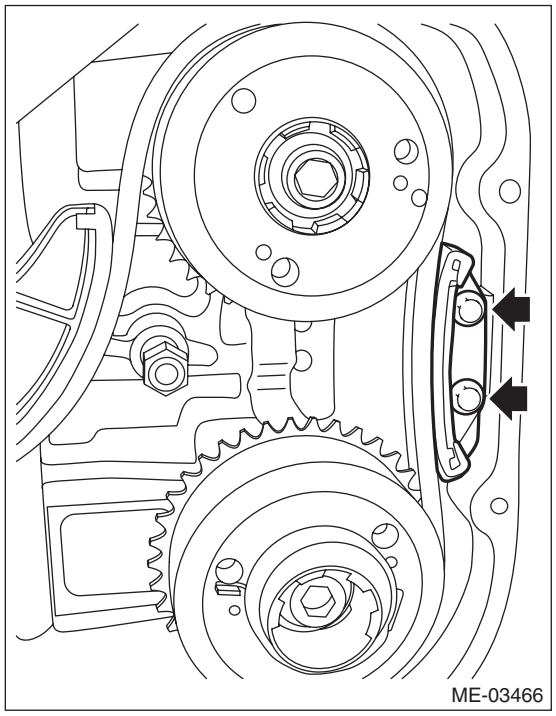

13) Remove the chain tensioner lever (LH).

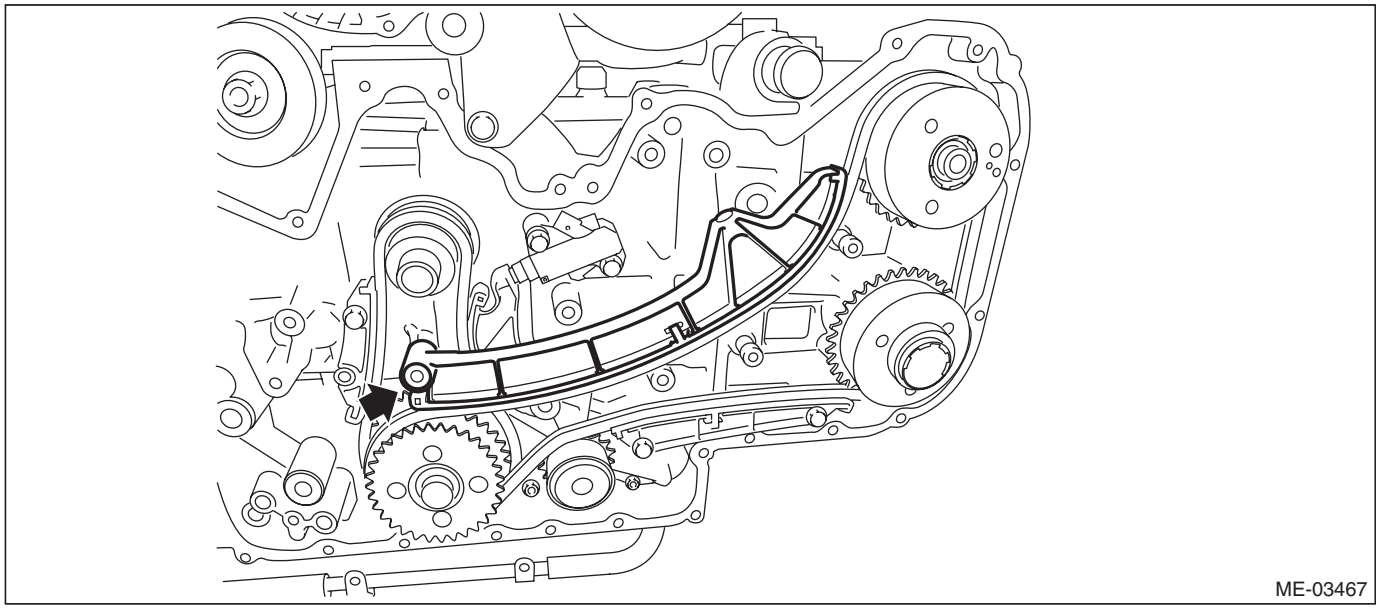

14) Remove the chain guide (LH).

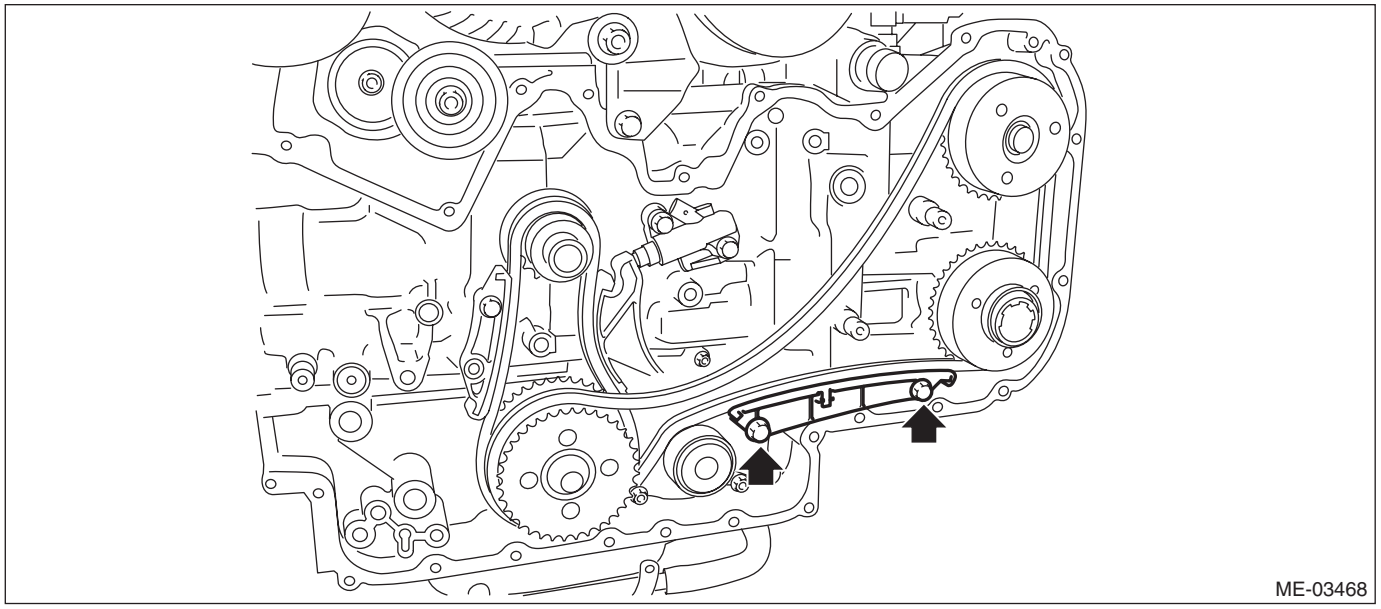

15) Remove the timing chain (LH).

16) Remove the chain tensioner (main).

NOTE:
When removing chain tensioner (main), hold the plunger by hand so that it does not come flying out.

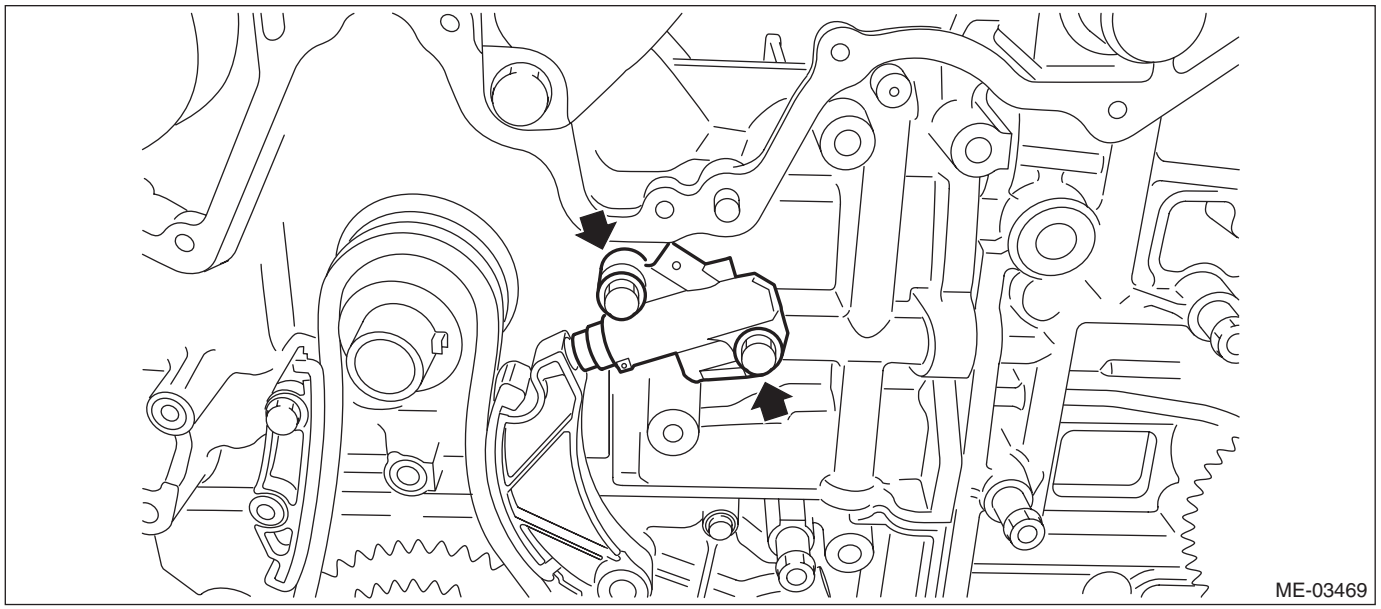

17) Remove the chain guide (main).

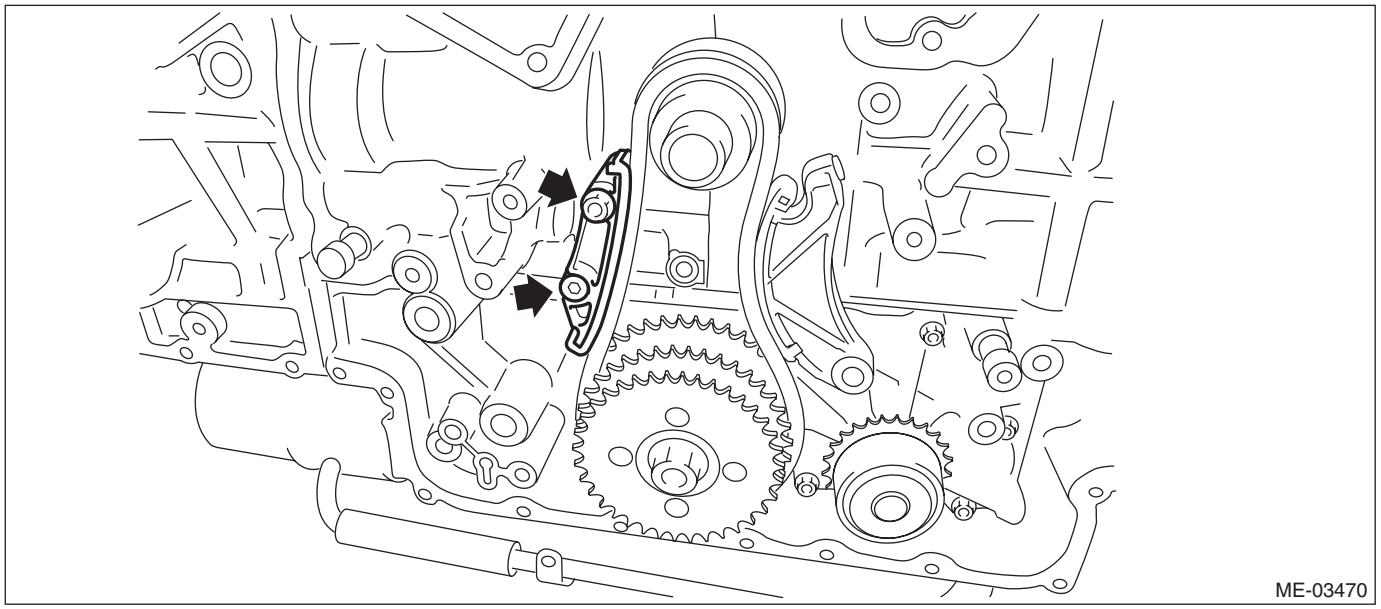

18) Remove the chain tensioner lever (main).

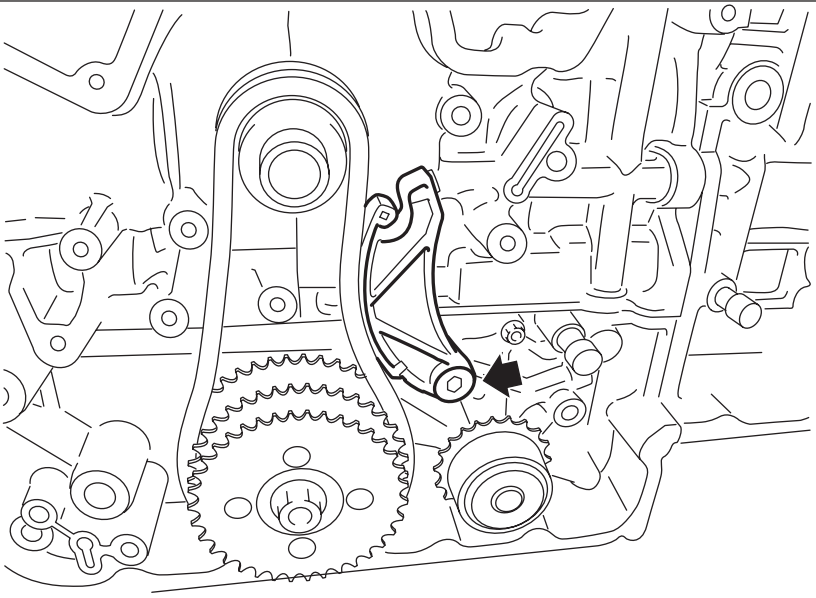

19) Use the ST to lock the idler sprocket, and loosen the idler sprocket bolt.
ST1 18355AA000 PULLEY WRENCH
ST2 18334AA000 PULLEY WRENCH PIN SET
20) Remove the idler sprocket bolts, and remove the idler sprocket and timing chain (main).

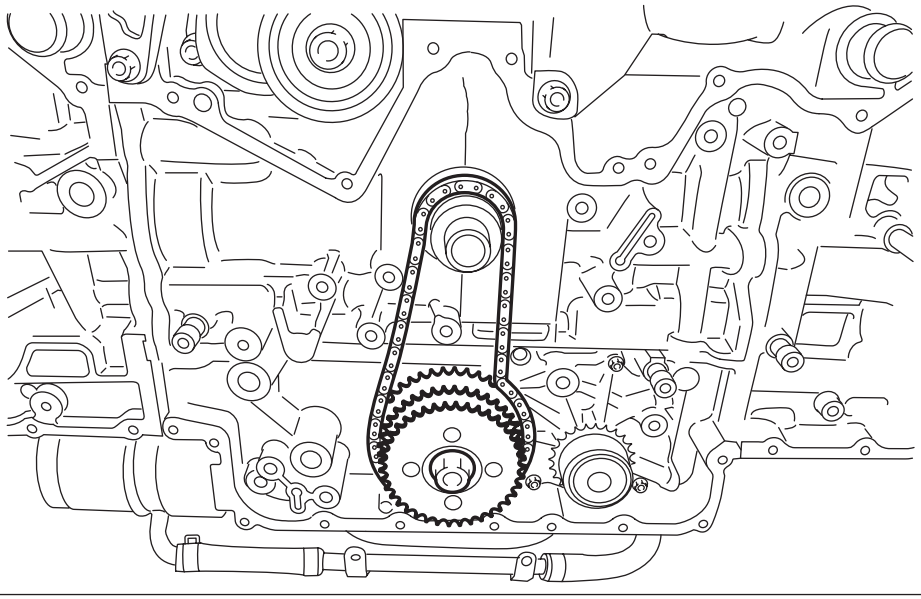

C: INSTALLATION

NOTE:
- Be careful that the foreign matter is not into or onto the assembled component during installation.
- Apply engine oil to all component parts of the timing chain.

1) Prepare to attach the chain tensioner.
   (1) Insert the screw, spring pin and plunger into the tensioner body.
   (2) As shown in the figure, turn the rubber mat counterclockwise while holding the chain tensioner from above by hand.

NOTE:
Degrease the contact surface between the plunger head and rubber mat, so that they do not slip.

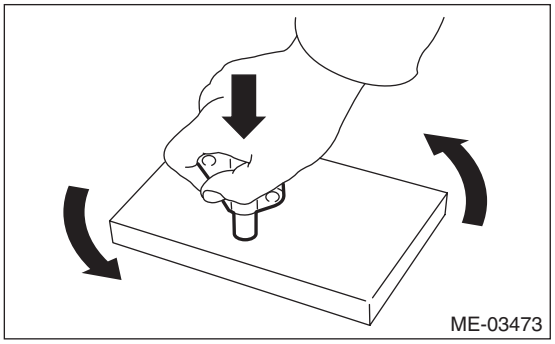
ME-03473

   (3) Insert the stopper pin into the hole on the chain tensioner body.

2) Align the position of oil pump shaft knock pin to six o'clock position as shown in the figure.

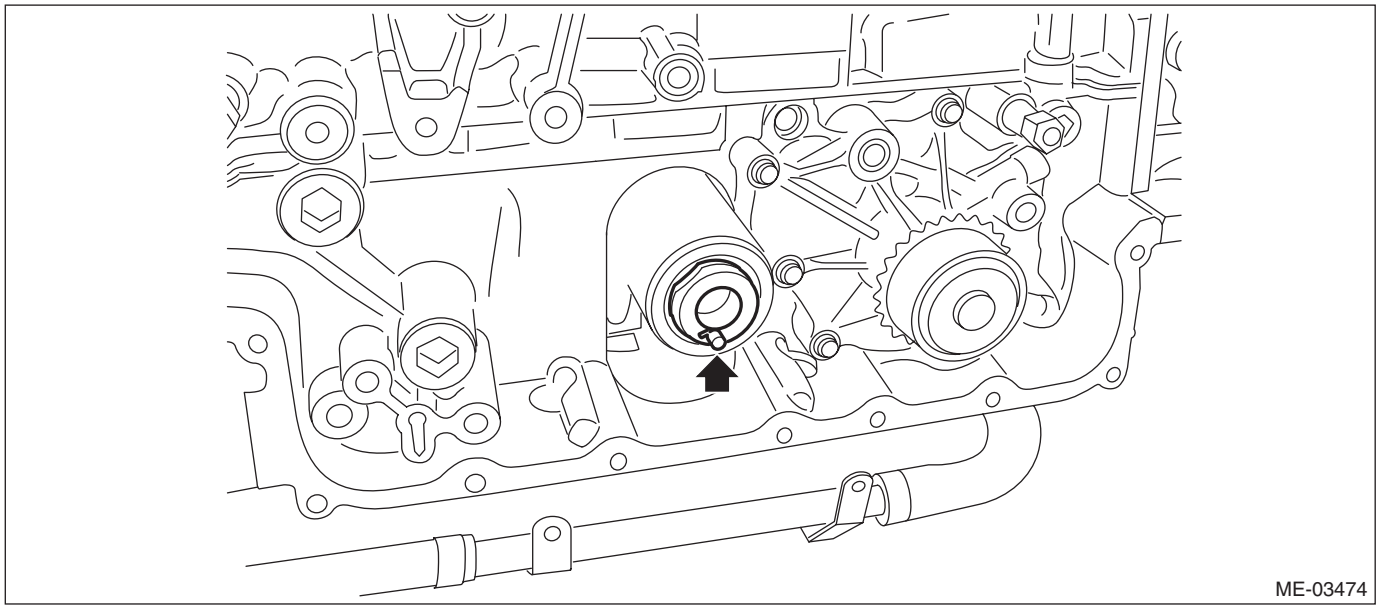
ME-03474

3) Using ST, align the “Top mark” on crank sprocket to nine o’clock position as shown in the figure.
ST 18252AA000 CRANKSHAFT SOCKET

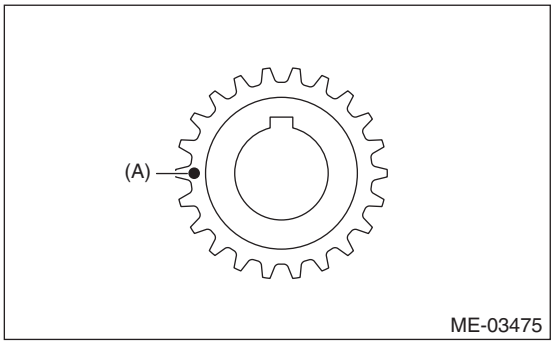

(A) Top mark

4) Align the intake cam sprocket to twelve o’clock position as shown in the figure.
ST 499977500 CAM SPROCKET WRENCH

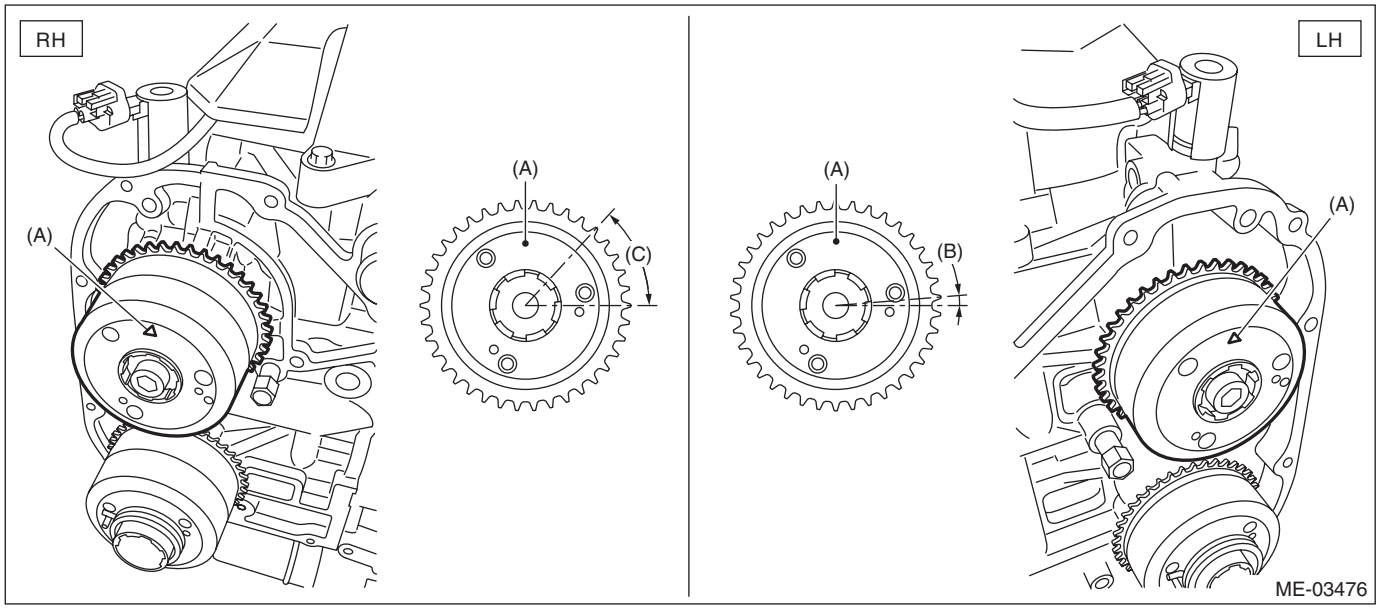

(A) Align the marking (top mark) to twelve o’clock position.
(B) 6°
(C) 47°

5) Align the exhaust cam sprocket to twelve o'clock position as shown in the figure.
ST 499977500 CAM SPROCKET WRENCH

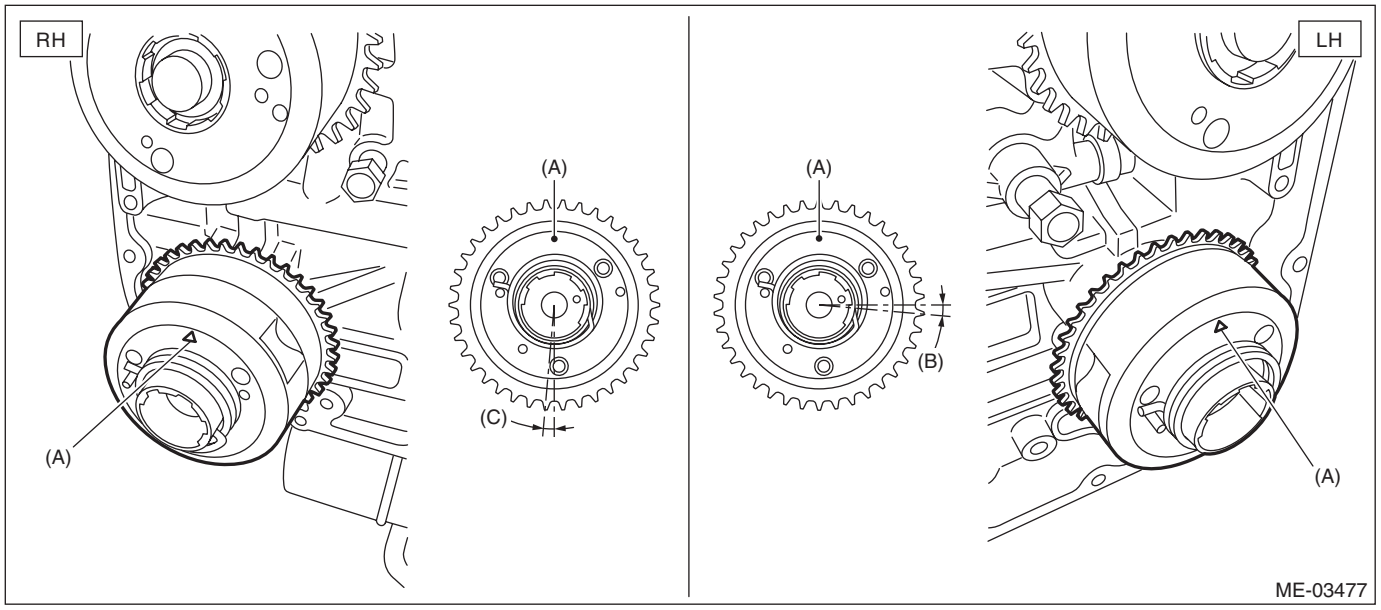

(A) Align the marking (top mark) to twelve o'clock position.
(B) 5.5°
(C) 3.5°

6) Using ST, align the "Top mark" on crank sprocket to twelve o'clock position as shown in the figure.

NOTE:
- The #1 piston is positioned at TDC.
- Do not rotate the crankshaft and cam sprocket before completing timing chain installation.
- At this time, crank sprocket key is at three o'clock position.

ST 18252AA000 CRANKSHAFT SOCKET

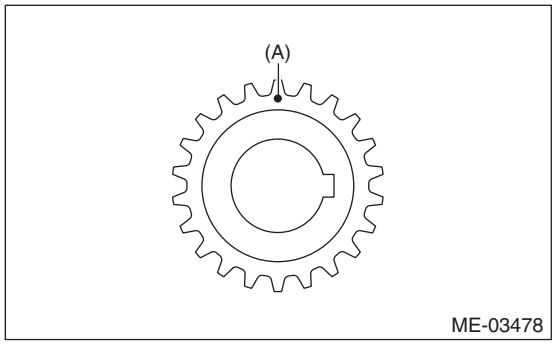

(A) Top mark

7) Install the chain guide (main).

Tightening torque:
16 N·m (1.6 kgf-m, 11.8 ft-lb)

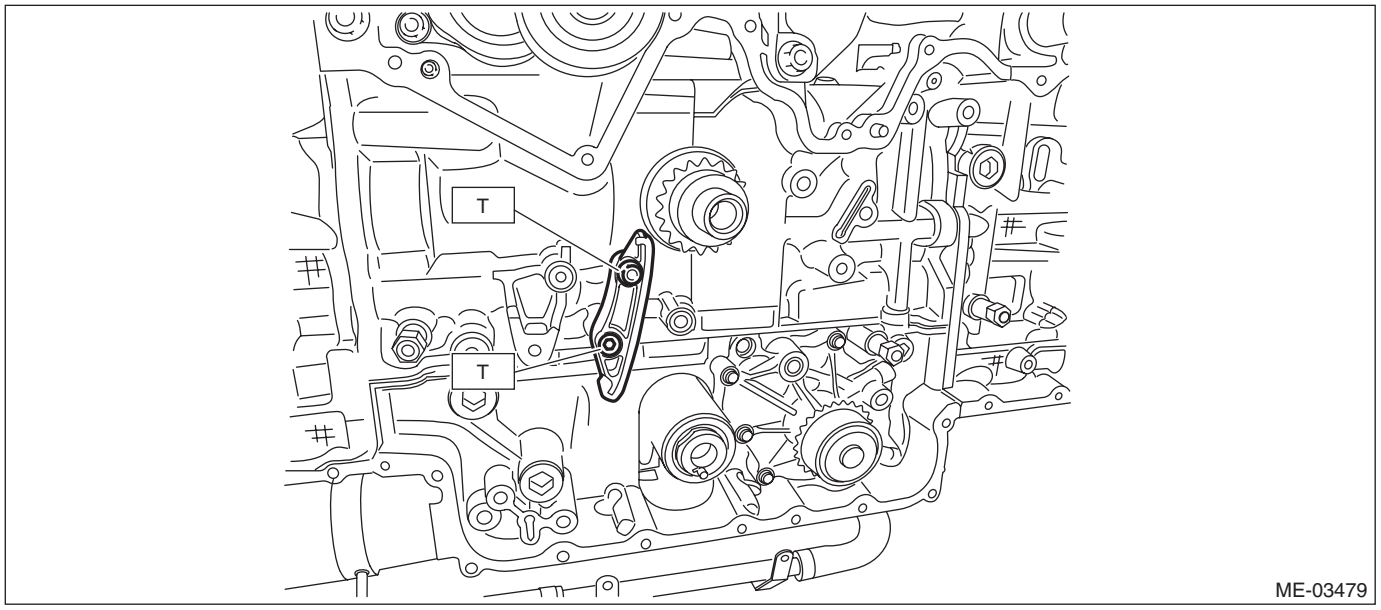

8) Install the idler sprocket and timing chain (main).
(1) Match the timing chain mark (gold) to the timing mark position of the idler sprocket.
(2) Align the idler sprocket timing mark at six o'clock position, and install the idler sprocket and timing chain.
(3) Make sure that the timing chain mark (gold) is located at twelve o'clock position on the crank sprocket.
(4) Use the ST to lock the idler sprocket, and install the idler sprocket bolt.

ST1 18355AA000 PULLEY WRENCH
ST2 18334AA000 PULLEY WRENCH PIN SET

Tightening torque:
120 N·m (12.2 kgf-m, 88.5 ft-lb)

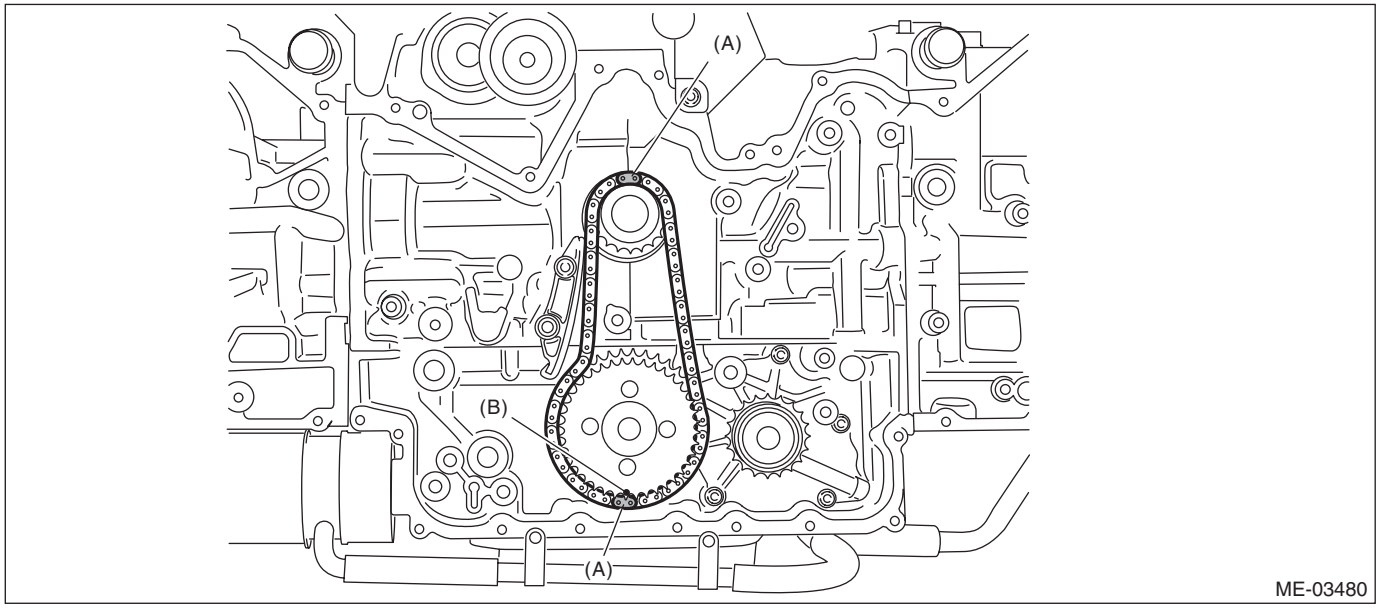

(A) Gold (B) Timing mark

9) Install the chain tensioner lever (main).

Tightening torque:
16 N·m (1.6 kgf-m, 11.8 ft-lb)

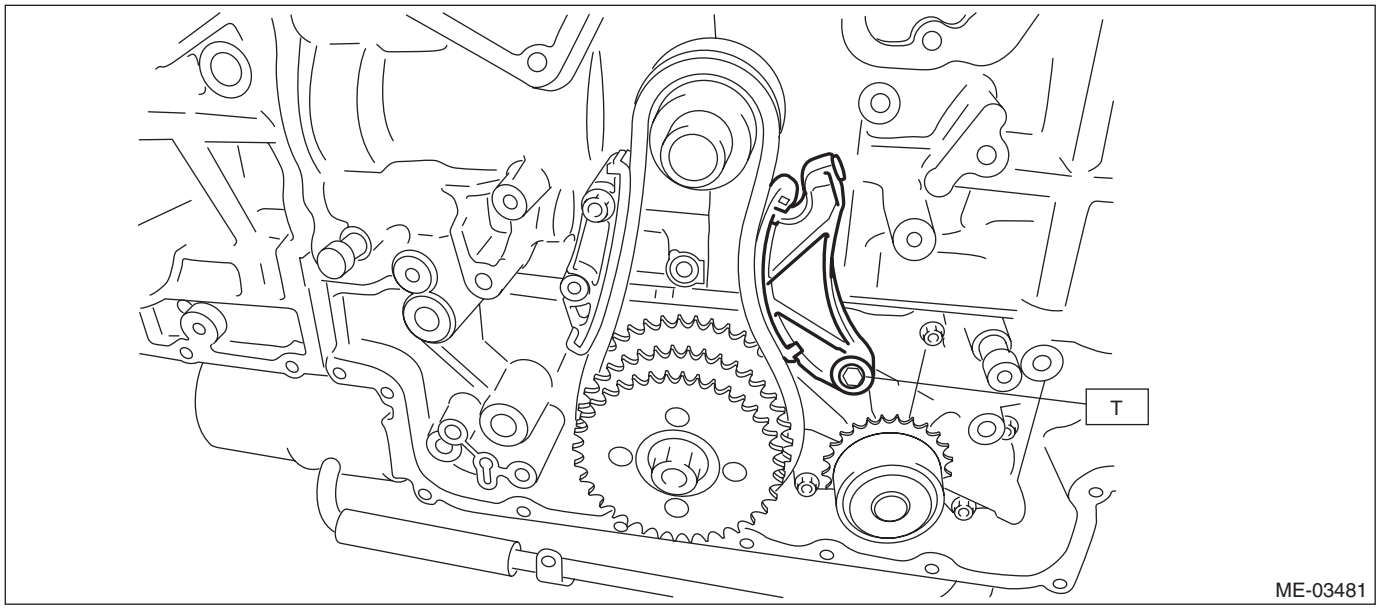

10) Install the chain tensioner (main) and pull out the stopper pin.

NOTE:
The timing chain (main) line will be complete.

Tightening torque:
16 N·m (1.6 kgf-m, 11.8 ft-lb)

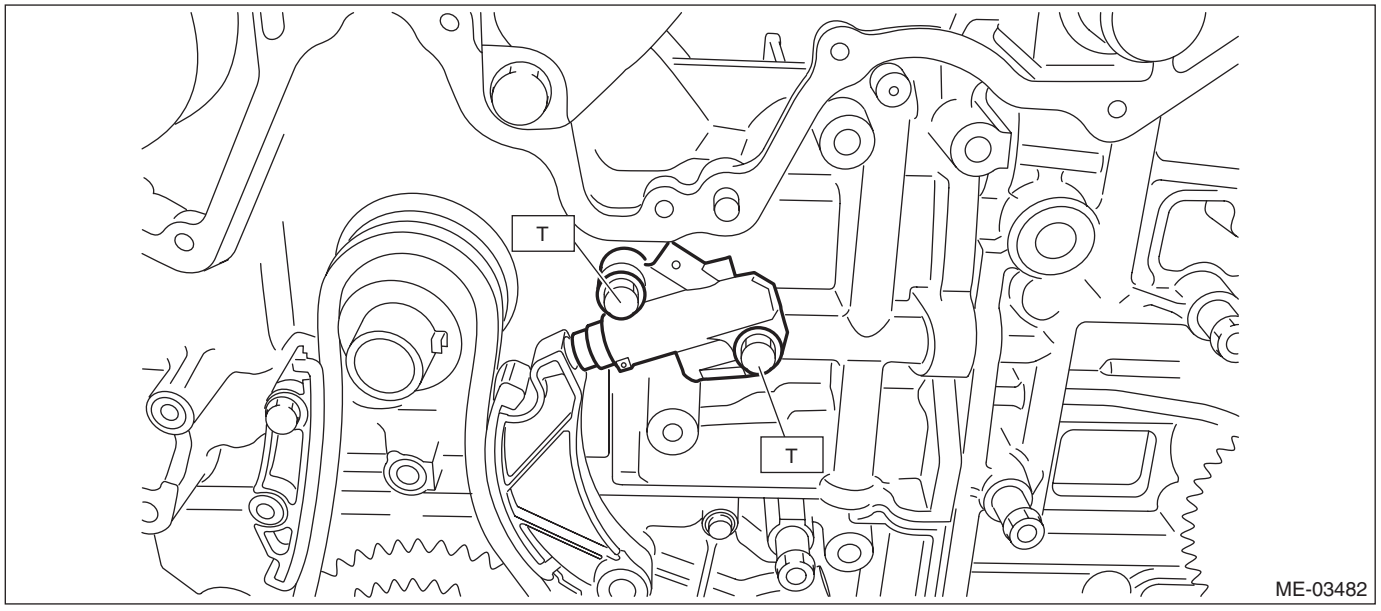

11) Install the chain guide (LH).

Tightening torque:
16 N·m (1.6 kgf-m, 11.8 ft-lb)

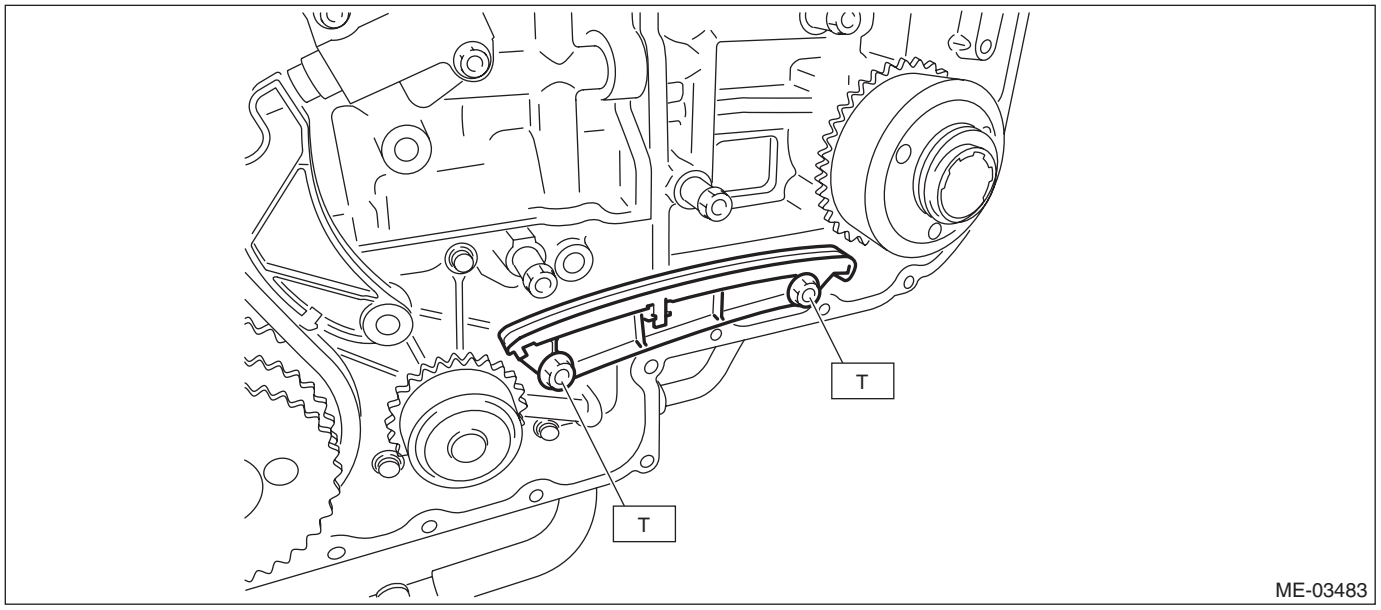

12) Install the chain guide (LH: between cams).

Tightening torque:
6.4 N·m (0.7 kgf-m, 4.7 ft-lb)

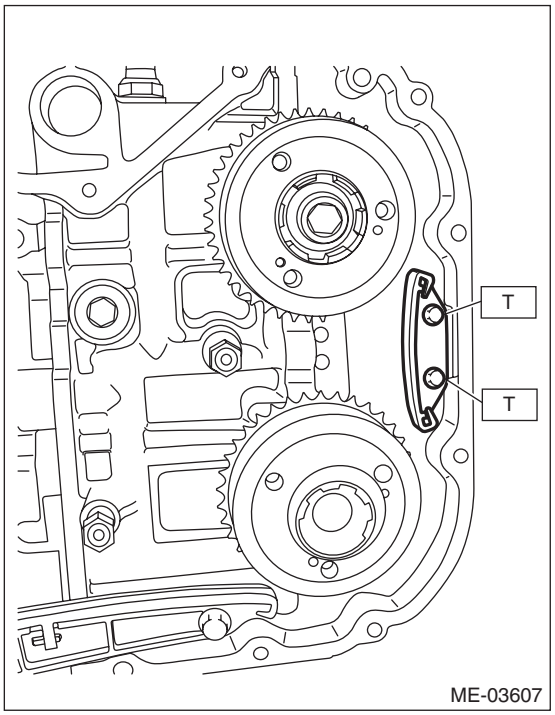

13) Install timing chain (LH).

(1) Match the timing mark of intake cam sprocket (LH) to the timing chain mark (blue).

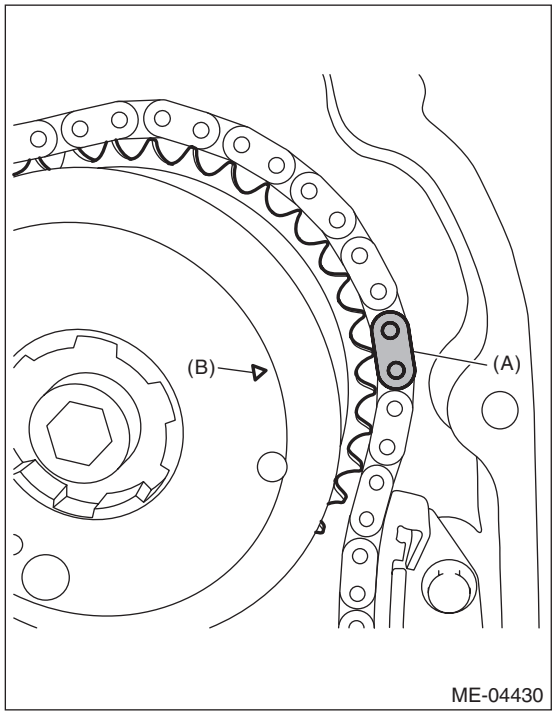

(A) Blue
(B) Timing mark

(2) Match the timing mark of exhaust cam sprocket (LH) to the timing chain mark (blue).

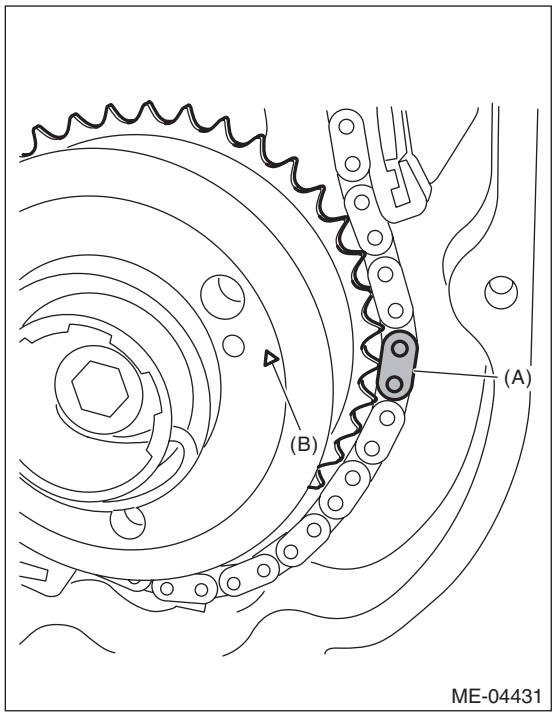

(A) Blue
(B) Timing mark

(3) Install the timing chain to the water pump sprocket.

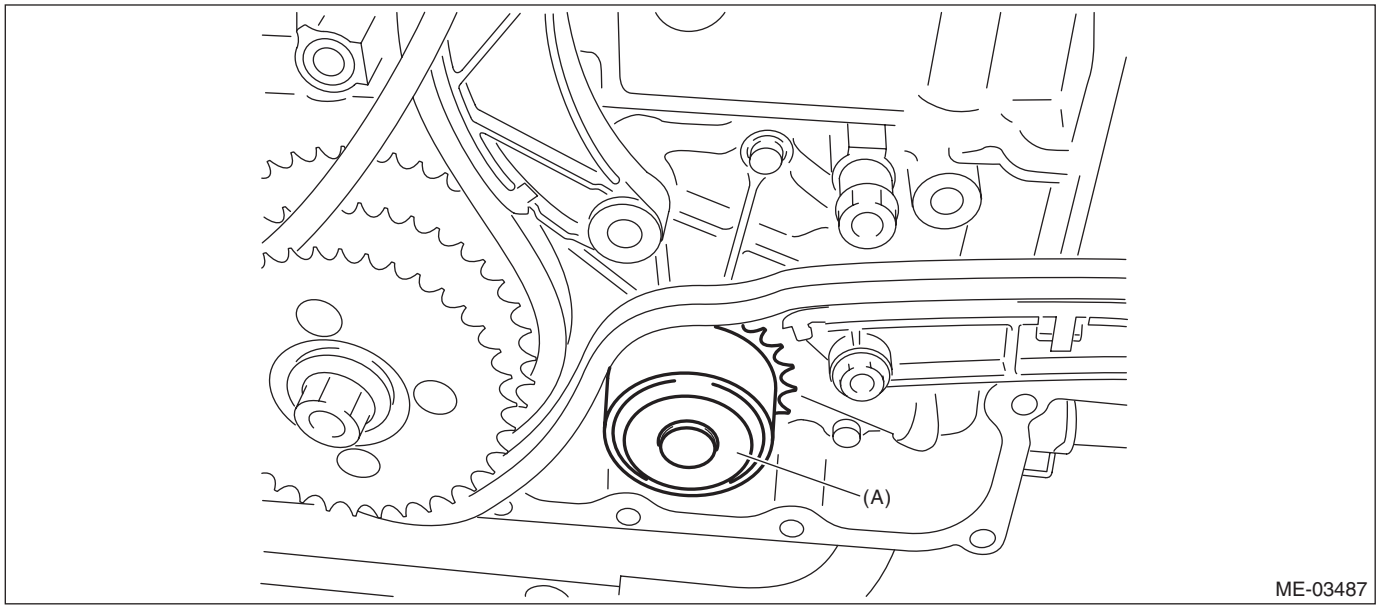

(A) Water pump sprocket

(4) Match the timing mark of idler sprocket to the timing chain mark (gold).

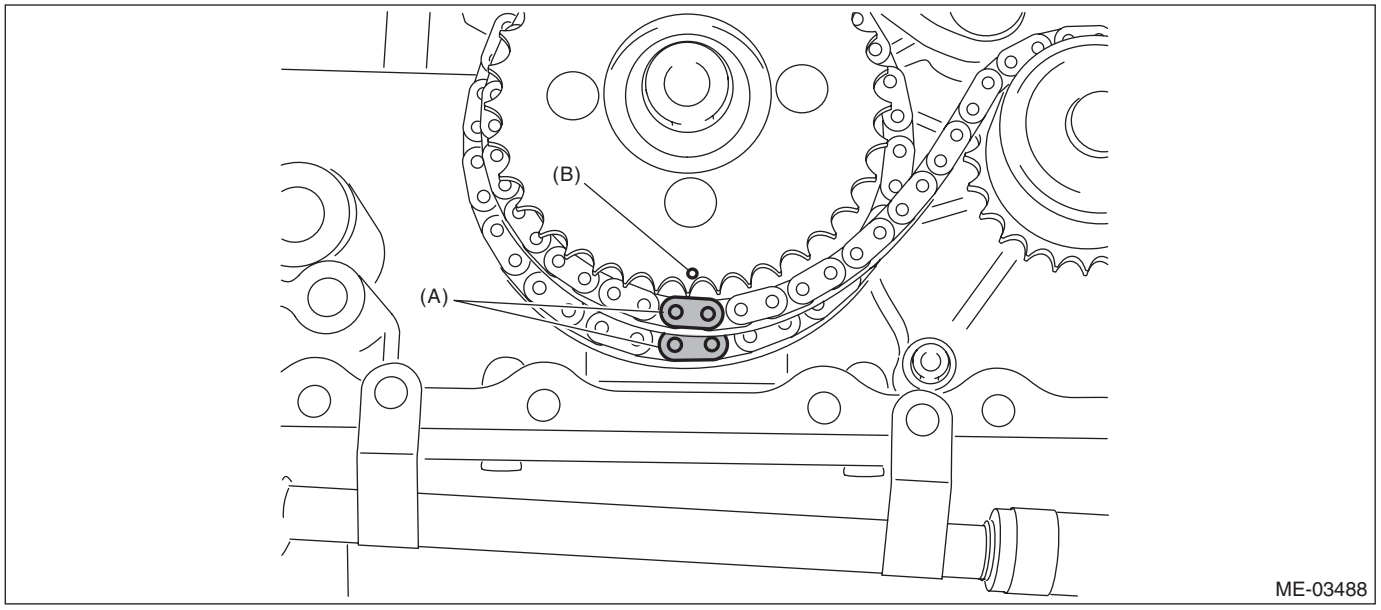

(A) Gold (B) Timing mark

14) Install the chain tensioner lever (LH).

Tightening torque:
16 N·m (1.6 kgf-m, 11.8 ft-lb)

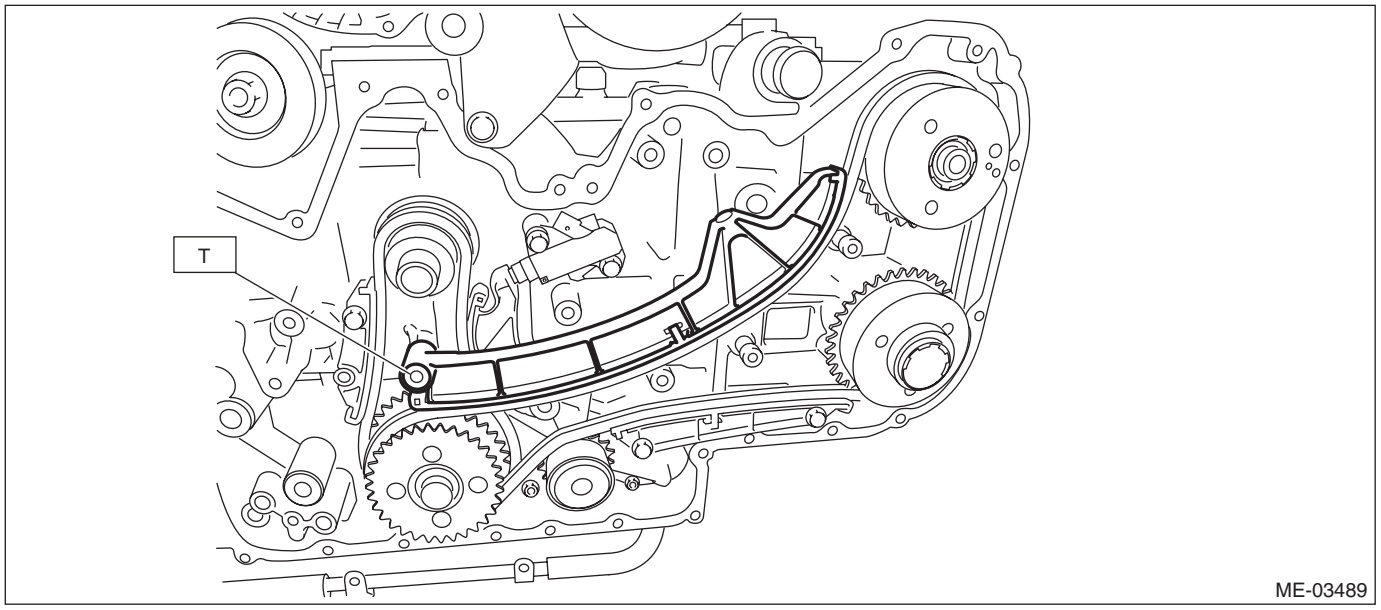

15) Install the chain tensioner (LH) and pull out the stopper pin.

NOTE:
- Make sure that there is a bolt attached on the side face of the chain tensioner housing.
- The timing chain (LH) line will be complete.

Tightening torque:
16 N·m (1.6 kgf-m, 11.8 ft-lb)

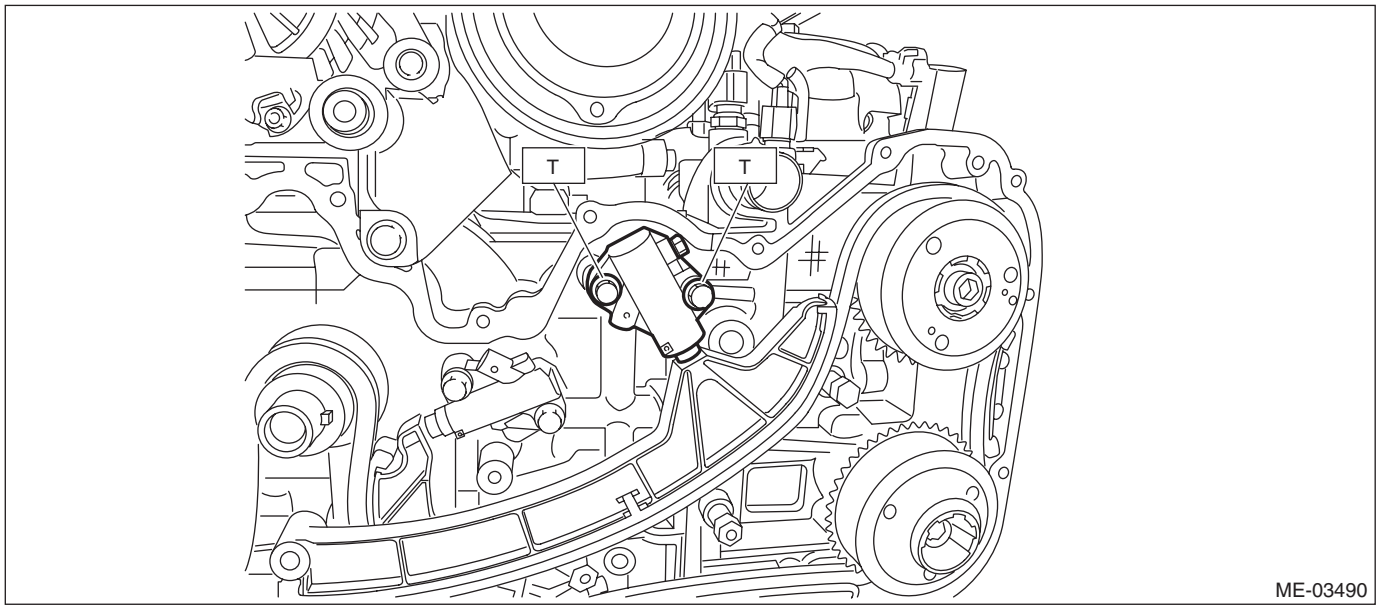

16) Install the chain guide (RH).

Tightening torque:
16 N·m (1.6 kgf-m, 11.8 ft-lb)

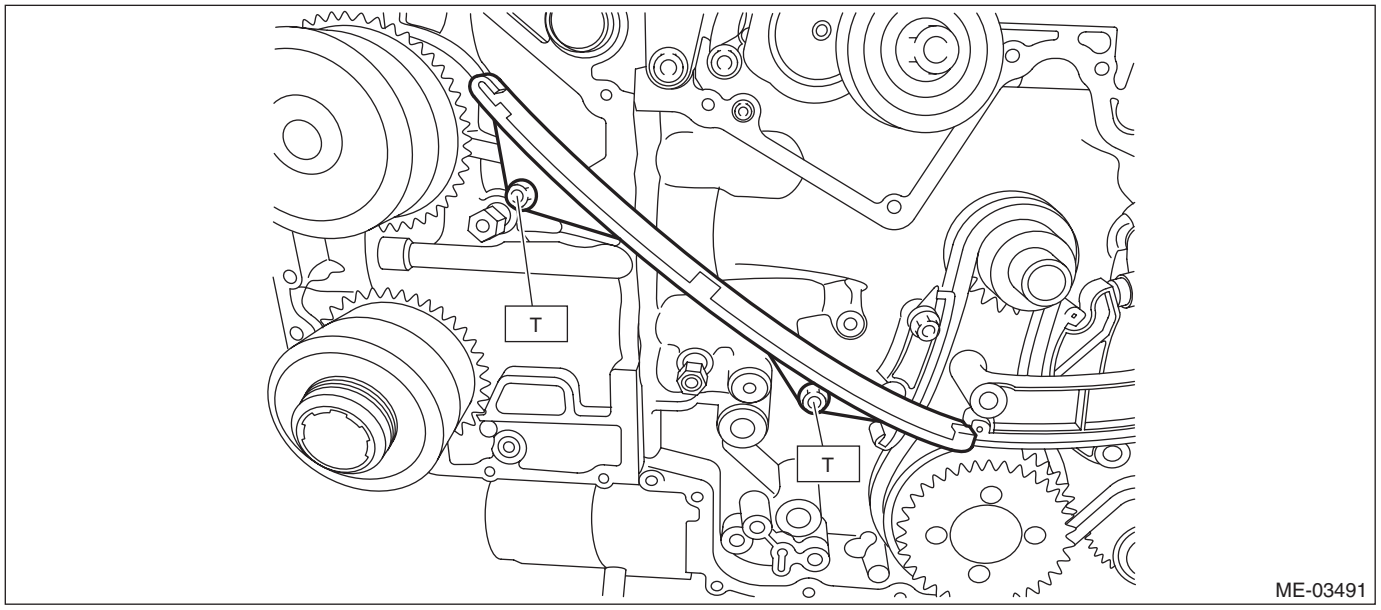

17) Install the chain guide (RH: between cams).

Tightening torque:
6.4 N·m (0.7 kgf-m, 4.7 ft-lb)

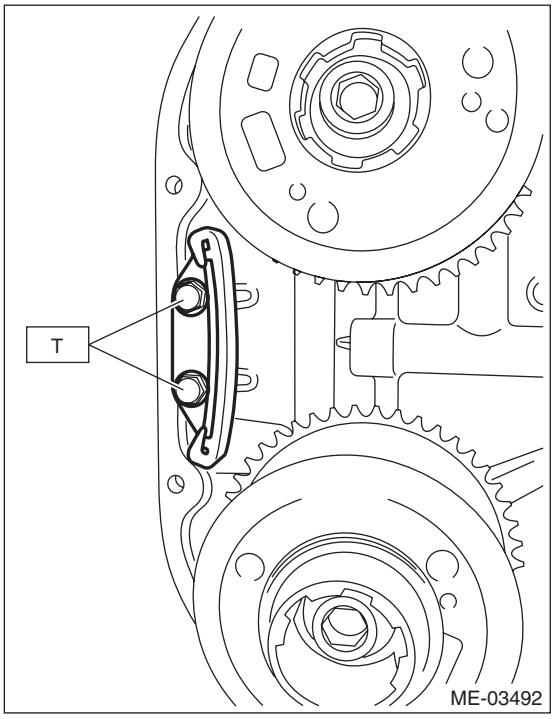

18) Install timing chain (RH).

(1) Match the timing mark of intake cam sprocket (RH) to the timing chain mark (blue).

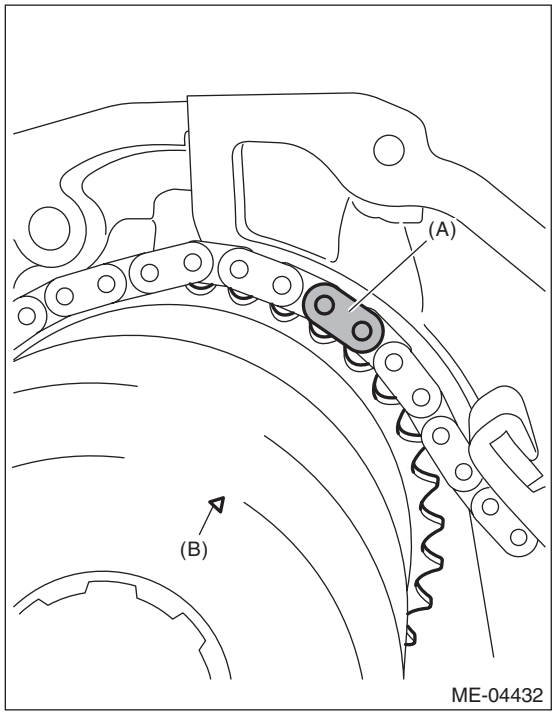

(A) Blue
(B) Timing mark

(2) Match the timing mark of exhaust cam sprocket (RH) to the timing chain mark (blue).

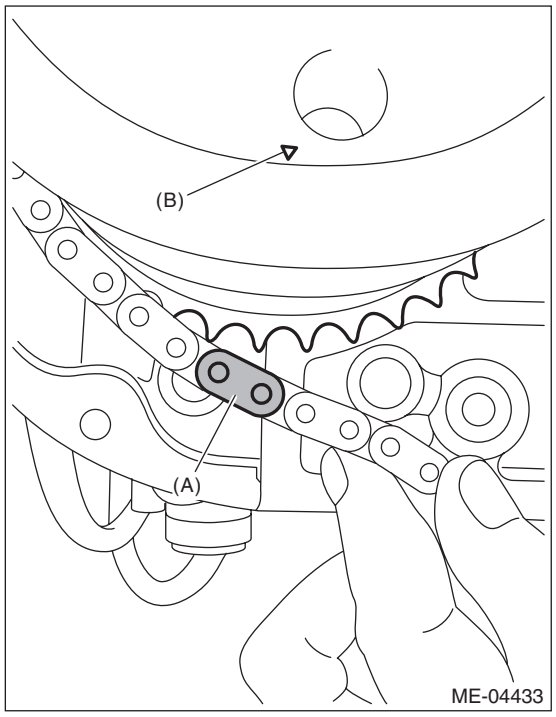

(A) Blue
(B) Timing mark

(3) Match the timing mark of idler sprocket to the timing chain mark (gold).

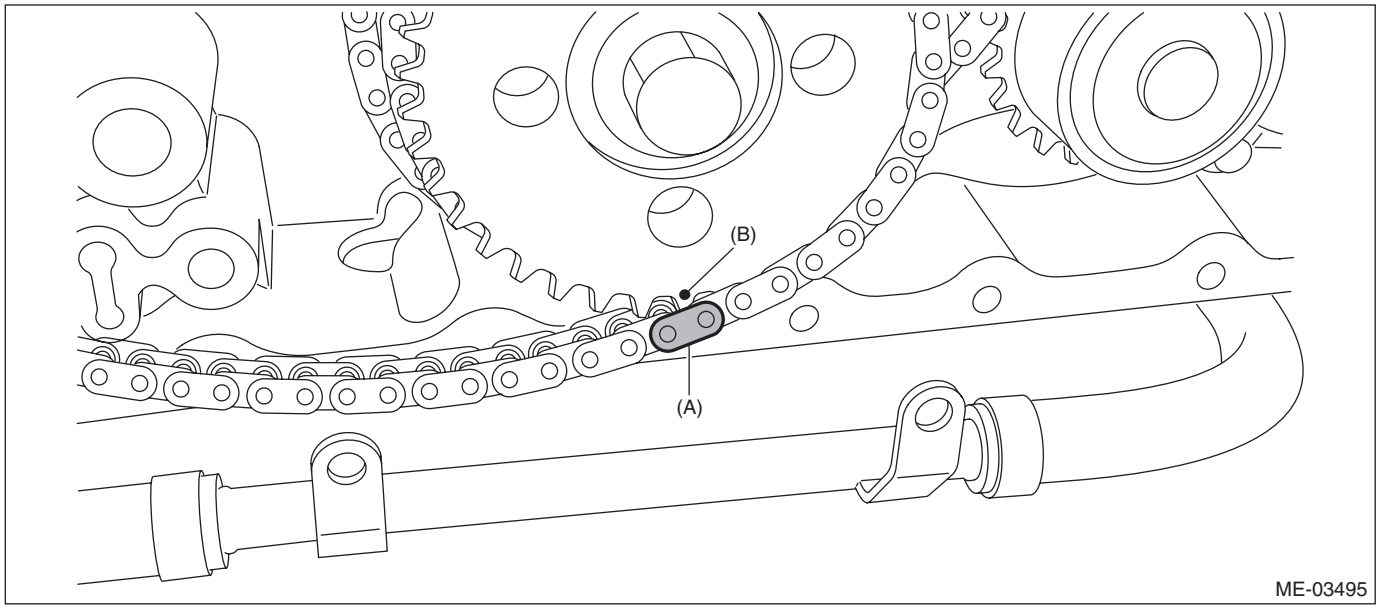

(A) Gold (B) Timing mark

19) Install the chain tensioner lever (RH).

Tightening torque:
16 N·m (1.6 kgf-m, 11.8 ft-lb)

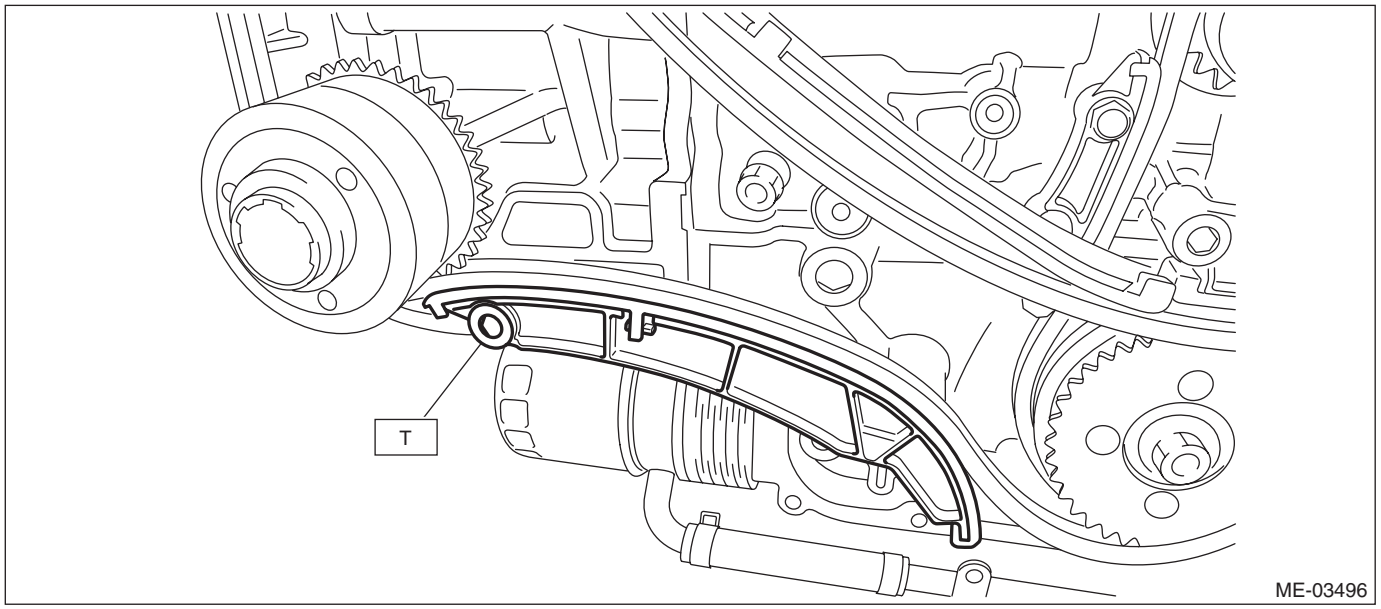

20) Install the chain tensioner (RH) and pull out the stopper pin.

NOTE:
The timing chain (RH) line will be complete.

Tightening torque:
16 N·m (1.6 kgf-m, 11.8 ft-lb)

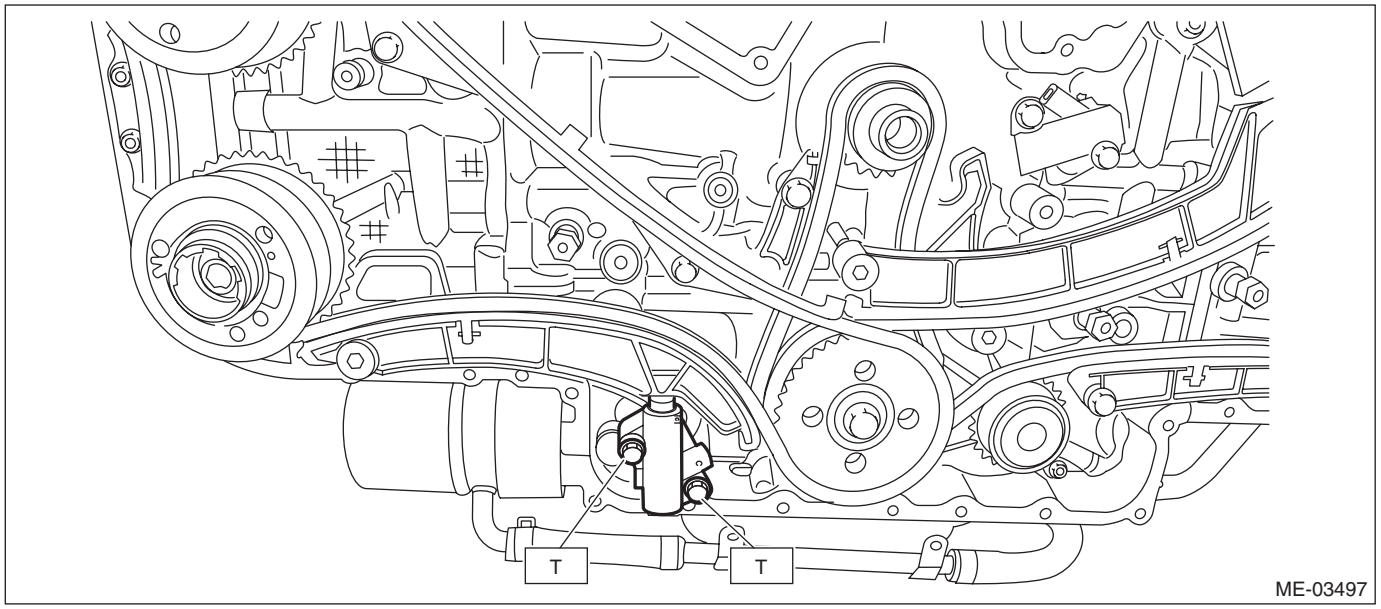

21) After installation, perform the following confirmations.

CAUTION:
Always make sure to perform this confirmation.
(1) Make sure that the timing mark of idler sprocket is aligned to three timing chain marks (gold).
(2) Make sure that the twelve o'clock position on the crank sprocket is aligned to the timing chain (main) mark (gold).
(3) Make sure that the LH side cam sprocket timing mark is aligned to the timing chain mark (blue).
(4) Make sure that the RH side cam sprocket timing mark is aligned to the timing chain mark (blue).
(5) Make sure that all bolts are tightened at the specified torque.

22) Using the ST, turn the crankshaft in the direction of engine rotation, and make sure that there are no abnormal conditions.

CAUTION:
Always make sure to perform this confirmation.

23) Install the chain cover. <Ref. to ME(H6DO)-56, INSTALLATION, Chain Cover.>
24) Install the crank pulley. <Ref. to ME(H6DO)-52, INSTALLATION, Crank Pulley.>
25) Install the V-belts. <Ref. to ME(H6DO)-51, INSTALLATION, V-belt.>
26) Fill engine oil. <Ref. to LU(H6DO)-9, REPLACEMENT, Engine Oil.>
27) Make sure there is no oil leaks in the chain cover mating surface.
28) Install the radiator. <Ref. to CO(H6DO)-18, INSTALLATION, Radiator.>

16.Cam Sprocket

A: REMOVAL

1) Remove the V-belts. <Ref. to ME(H6DO)-51, REMOVAL, V-belt.>
2) Remove the crank pulley. <Ref. to ME(H6DO)-52, REMOVAL, Crank Pulley.>
3) Remove the chain cover. <Ref. to ME(H6DO)-53, REMOVAL, Chain Cover.>
4) Remove the timing chain assembly. <Ref. to ME(H6DO)-63, REMOVAL, Timing Chain Assembly.>
5) Use the ST to lock the cam sprocket, and remove the cam sprocket bolt.
ST 499977500 CAM SPROCKET WRENCH

- IN side

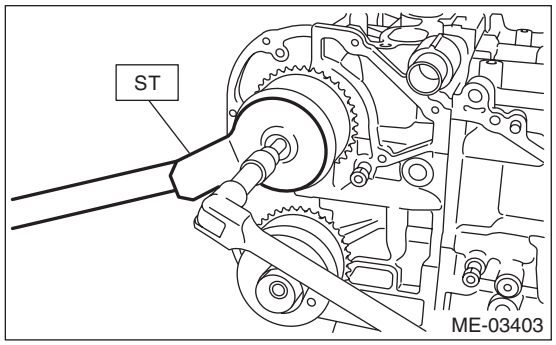

- EX side

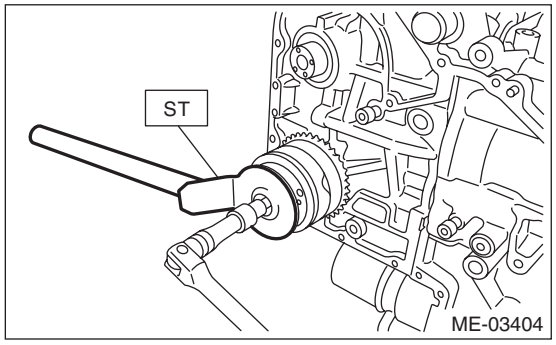

6) Remove the cam sprocket.

B: INSTALLATION

1) Remove the cam sprocket.
2) Use the ST to lock the cam sprocket, and install the cam sprocket bolt.

Tightening torque:
Tighten to 29.5 N·m (3.0 kgf-m, 21.8 ft-lb) of torque, and then tighten further by 45°.

ST 499977500 CAM SPROCKET WRENCH

- IN side

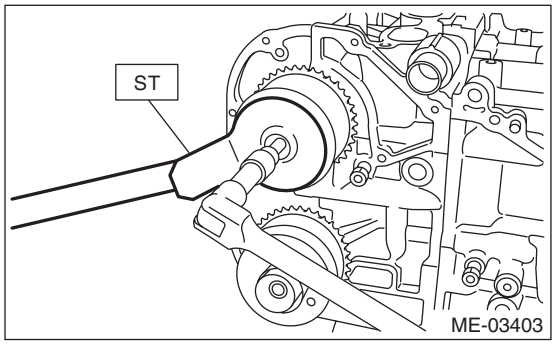

- EX side

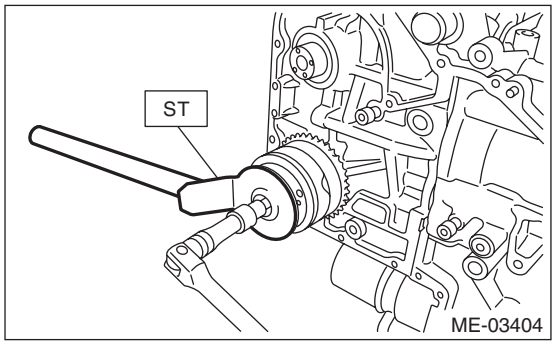

3) Install the timing chain assembly. <Ref. to ME(H6DO)-69, INSTALLATION, Timing Chain Assembly.>
4) Install the chain cover. <Ref. to ME(H6DO)-56, INSTALLATION, Chain Cover.>
5) Install the crank pulley. <Ref. to ME(H6DO)-52, INSTALLATION, Crank Pulley.>
6) Install the V-belts. <Ref. to ME(H6DO)-51, INSTALLATION, V-belt.>

C: INSPECTION

1) Check the cam sprocket teeth for abnormal wear and scratches.
2) Make sure there is no free play between cam sprocket and key.

17.Crank Sprocket

A: REMOVAL

1) Remove the V-belts. <Ref. to ME(H6DO)-51, REMOVAL, V-belt.>
2) Remove the crank pulley. <Ref. to ME(H6DO)-52, REMOVAL, Crank Pulley.>
3) Remove the chain cover. <Ref. to ME(H6DO)-53, REMOVAL, Chain Cover.>
4) Remove the timing chain assembly. <Ref. to ME(H6DO)-63, REMOVAL, Timing Chain Assembly.>
5) Remove the crank sprocket (A).

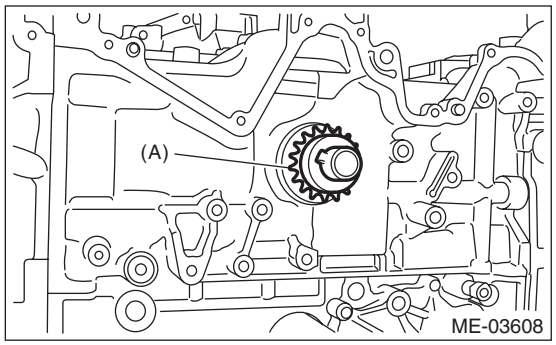

B: INSTALLATION

1) Install the crank sprocket (A).

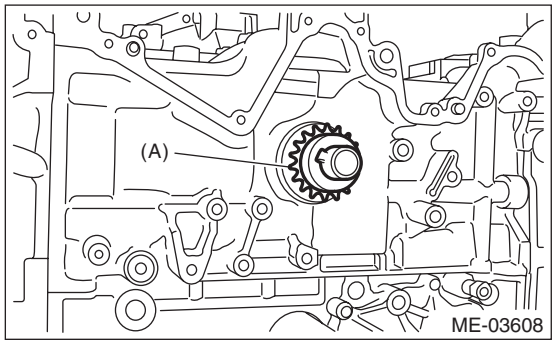

2) Install the timing chain assembly. <Ref. to ME(H6DO)-69, INSTALLATION, Timing Chain Assembly.>
3) Install the chain cover. <Ref. to ME(H6DO)-56, INSTALLATION, Chain Cover.>
4) Install the crank pulley. <Ref. to ME(H6DO)-52, INSTALLATION, Crank Pulley.>
5) Install the V-belts. <Ref. to ME(H6DO)-51, INSTALLATION, V-belt.>

C: INSPECTION

1) Check the crank sprocket teeth for abnormal wear and scratches.
2) Make sure there is no free play between crank sprocket and key.

18.Camshaft

A: REMOVAL

1) Remove the engine from vehicle. <Ref. to ME(H6DO)-36, REMOVAL, Engine Assembly.>
2) Remove the crank pulley. <Ref. to ME(H6DO)-52, REMOVAL, Crank Pulley.>
3) Remove the chain cover. <Ref. to ME(H6DO)-53, REMOVAL, Chain Cover.>
4) Remove the timing chain assembly. <Ref. to ME(H6DO)-63, REMOVAL, Timing Chain Assembly.>
5) Remove the cam sprocket. <Ref. to ME(H6DO)-82, REMOVAL, Cam Sprocket.>
6) Remove the crank sprocket. <Ref. to ME(H6DO)-83, REMOVAL, Crank Sprocket.>
7) Remove the exhaust oil flow control solenoid valve. <Ref. to FU(H6DO)-47, REMOVAL, Oil Flow Control Solenoid Valve.>
8) Remove the camshaft position sensor. <Ref. to FU(H6DO)-34, REMOVAL, Camshaft Position Sensor.>
9) Loosen the rocker cover bolts in the order indicated in the figure, and remove the rocker cover.
- LH side

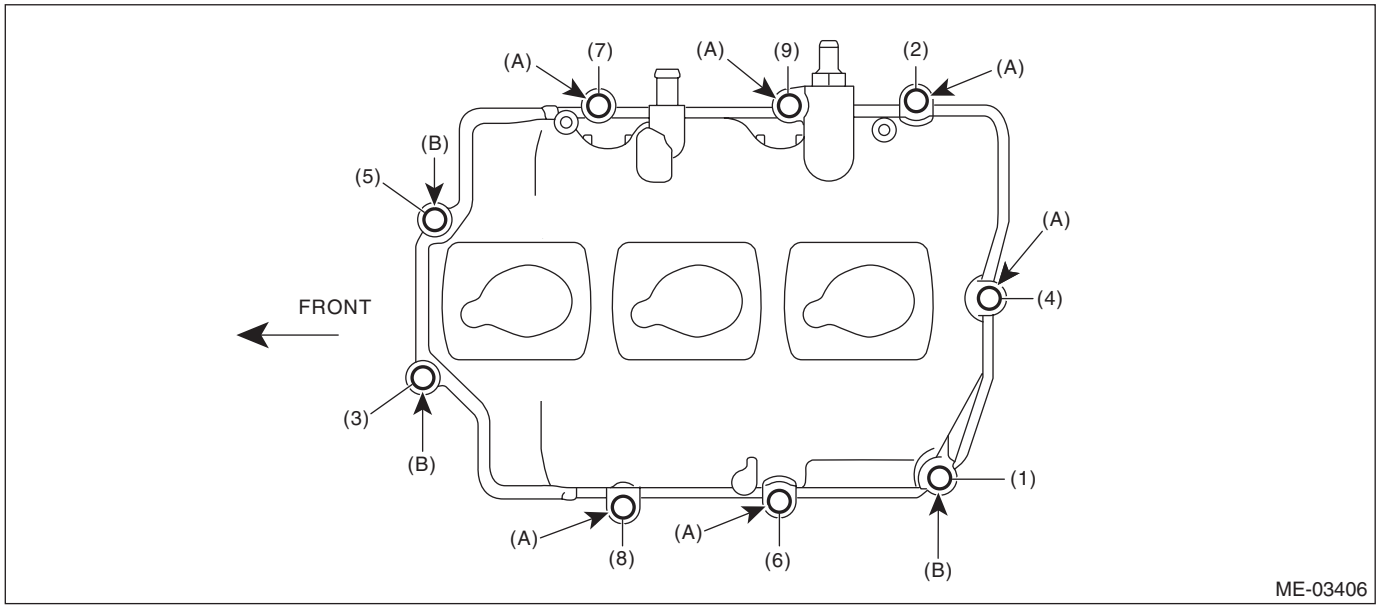

(A) M6 × 39.5 (B) M6 × 26.3

• RH side

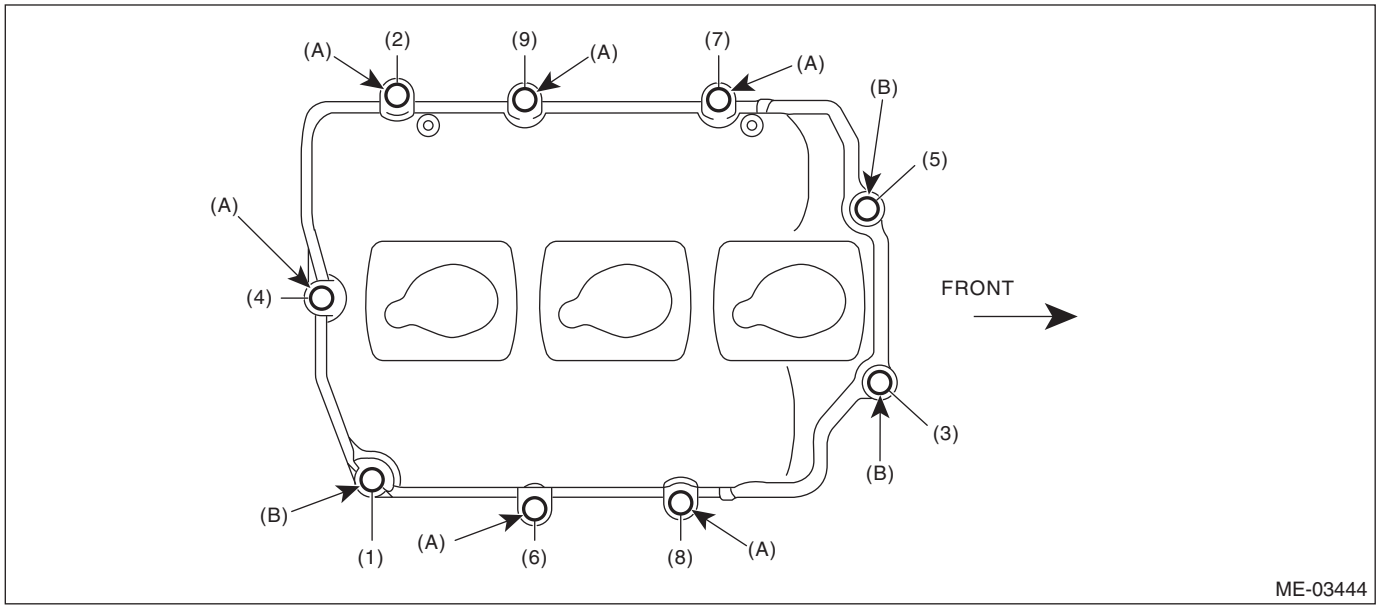

(A) M6 × 39.5 (B) M6 × 26.3

10) Loosen the camshaft cap bolts equally, a little at a time in numerical sequence, as shown in the figure.

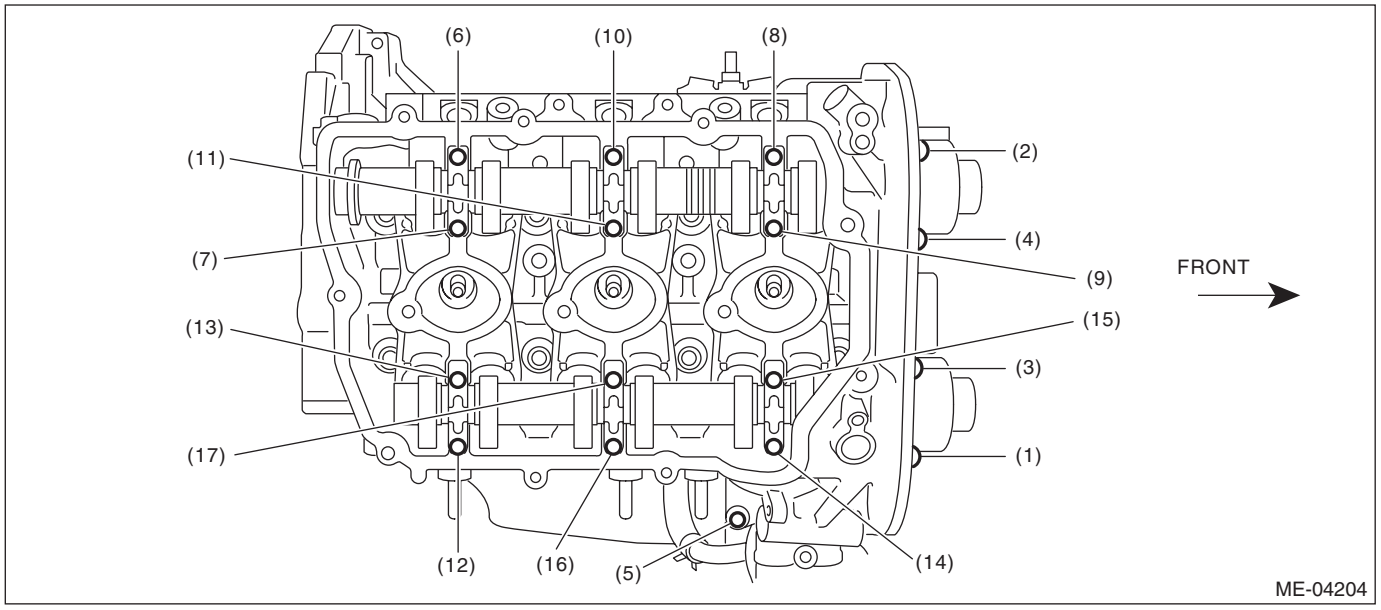

11) Remove the camshaft caps and camshaft (RH).

NOTE:
Arrange camshaft caps in order so that they can be installed in their original positions.

12) Similarly, remove the camshaft (LH) and related parts.

B: INSTALLATION

1) Apply engine oil to camshaft journals, and install the camshaft.
2) Install the camshaft cap.
   (1) Apply liquid gasket sparingly to back side of the front camshaft cap as shown in the figure.

NOTE:
• Install within 5 min. after applying liquid gasket.
• Do not apply liquid gasket excessively. Applying excessively may cause excess gasket to come out and flow toward cam journal, resulting in engine seizure.

Liquid gasket:
THREE BOND 1217G (Part No. K0877Y0100) or equivalent

Liquid gasket applying diameter:
2.0±0.5 mm (0.079±0.020 in)

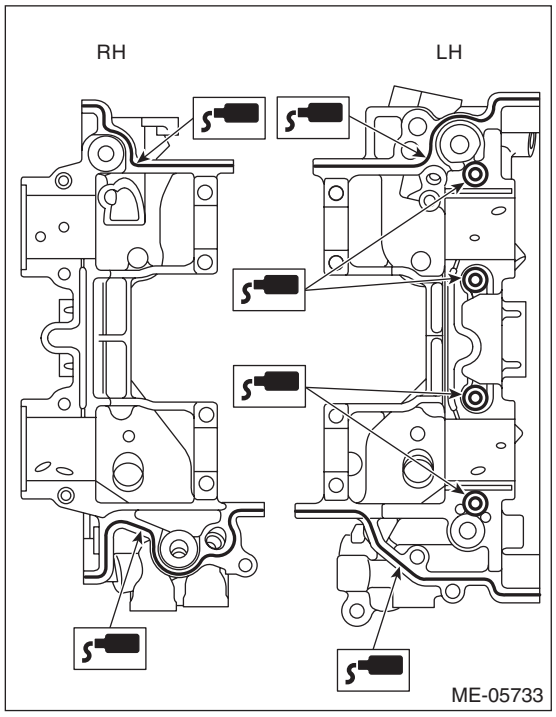

(2) Install the O-ring to the front camshaft cap.

NOTE:
Use new O-rings.

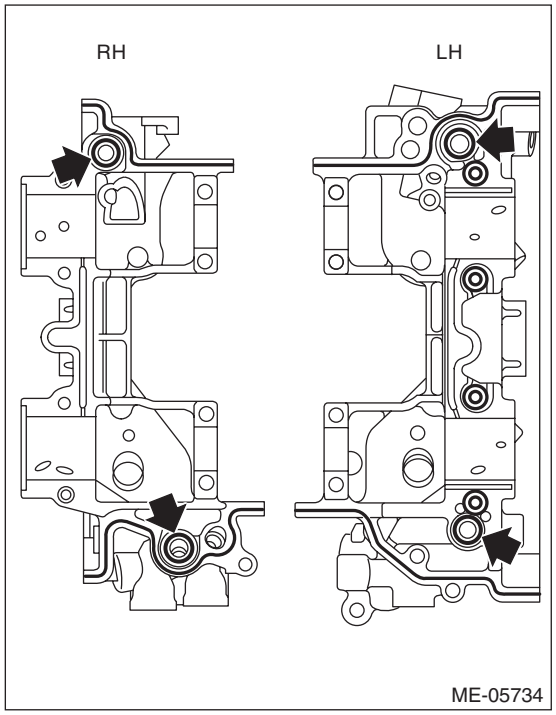

(3) Apply a thin coat of engine oil to the cap journal surface, and install the camshaft cap to the camshaft.

(4) Gradually tighten the camshaft cap in at least two stages in the numerical order shown in the figure, then tighten to specified torque.

Tightening torque:
(1) — (12): 16 N·m (1.6 kgf-m, 11.8 ft-lb)
(13) — (17): 9.75 N·m (1.0 kgf-m, 7.2 ft-lb)

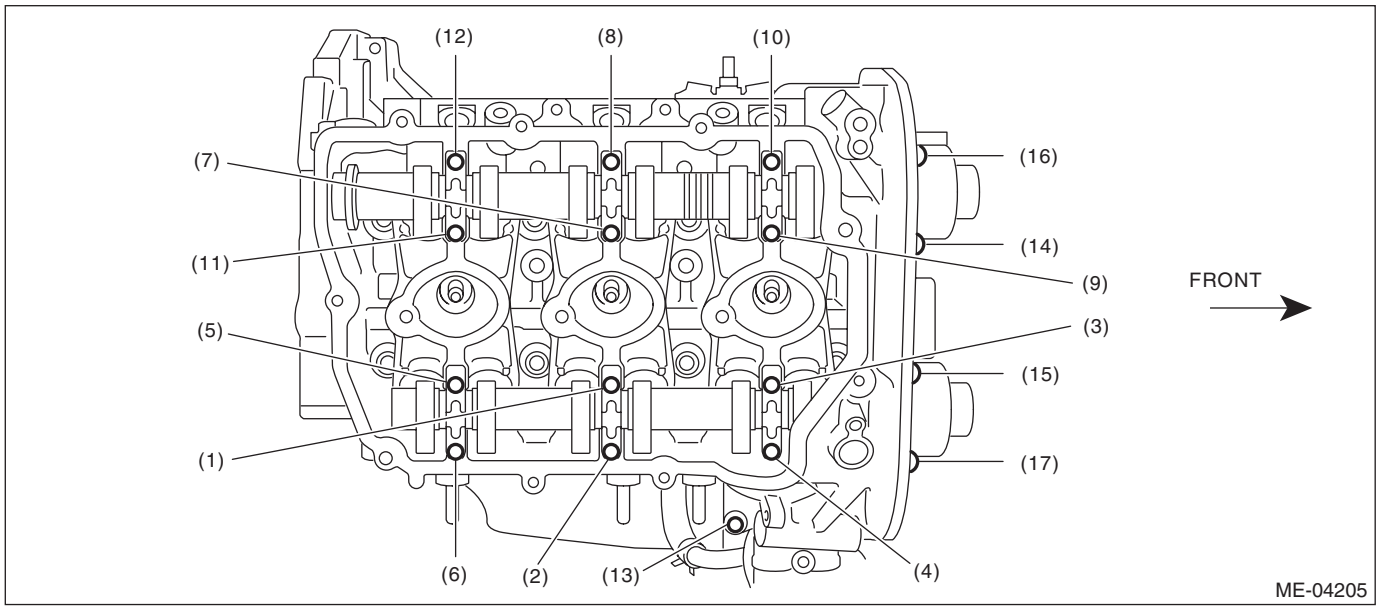

(5) After tightening the camshaft cap, ensure the camshaft rotates only slightly while holding it at base circle.

3) Install the rocker cover.
(1) Install the rocker cover gasket to the rocker cover.

NOTE:
Use a new rocker cover gasket.

(2) Apply liquid gasket sparingly to the mating surface of cylinder head and rocker cover as shown in the figure.

NOTE:
- Install within 5 min. after applying liquid gasket.
- Do not apply liquid gasket excessively. Applying excessively may cause excess gasket to come out and flow toward cam journal, resulting in engine seizure.

Liquid gasket:
THREE BOND 1217G (Part No. K0877Y0100) or equivalent

Liquid gasket applying diameter:
3.5±0.5 mm (0.138±0.020 in)

- LH side

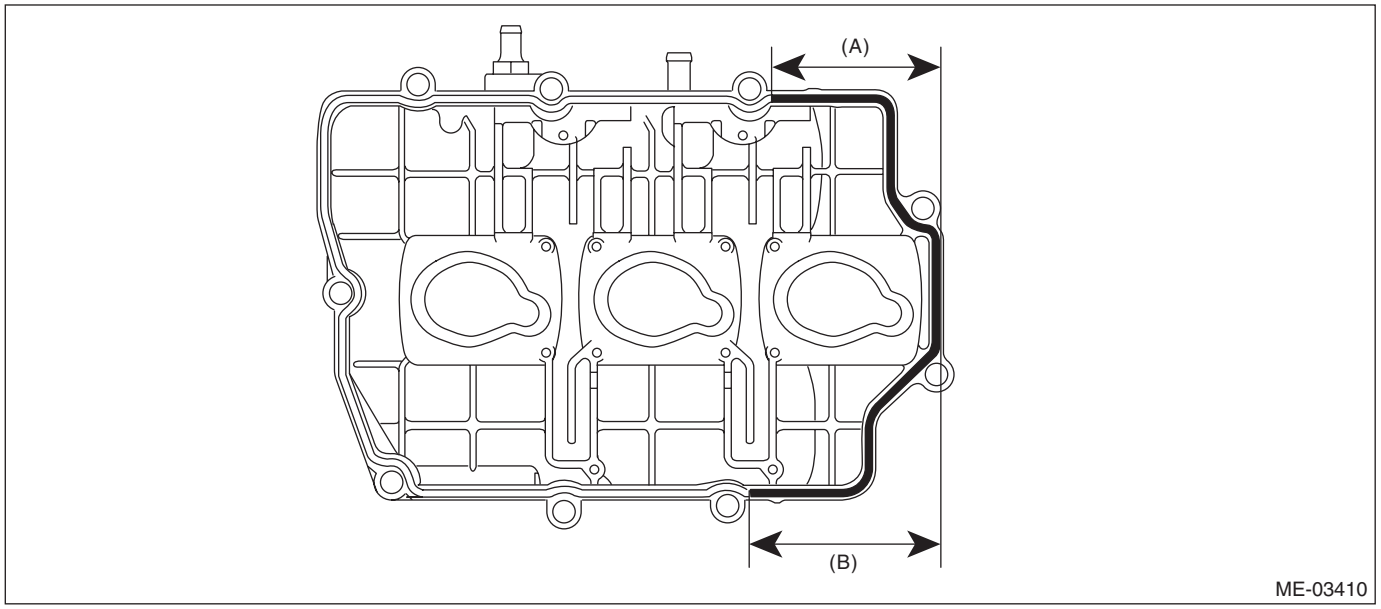

(A) 90 mm (3.543 in) or more (B) 105 mm (4.134 in) or more

- RH side

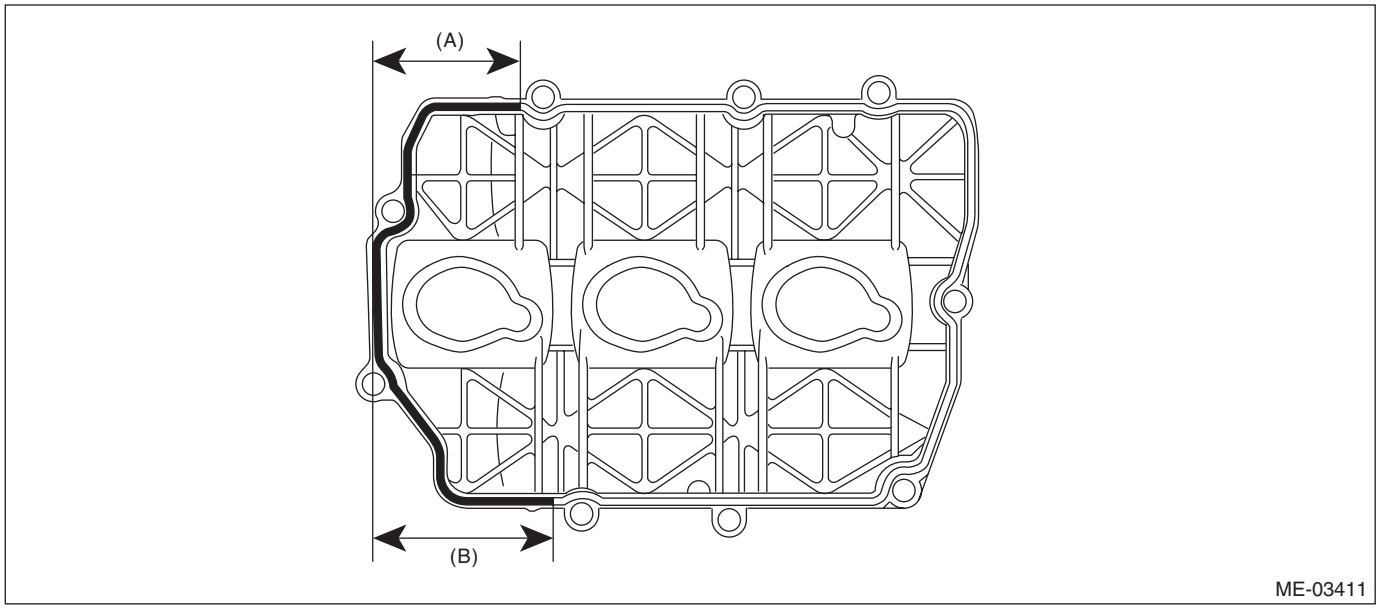

(A) 80 mm (3.150 in) or more (B) 100 mm (3.937 in) or more

(3) Tighten the rocker cover bolts in the numerical order as shown in the figure.

Tightening torque:
6.4 N·m (0.7 kgf-m, 4.7 ft-lb)

- LH side

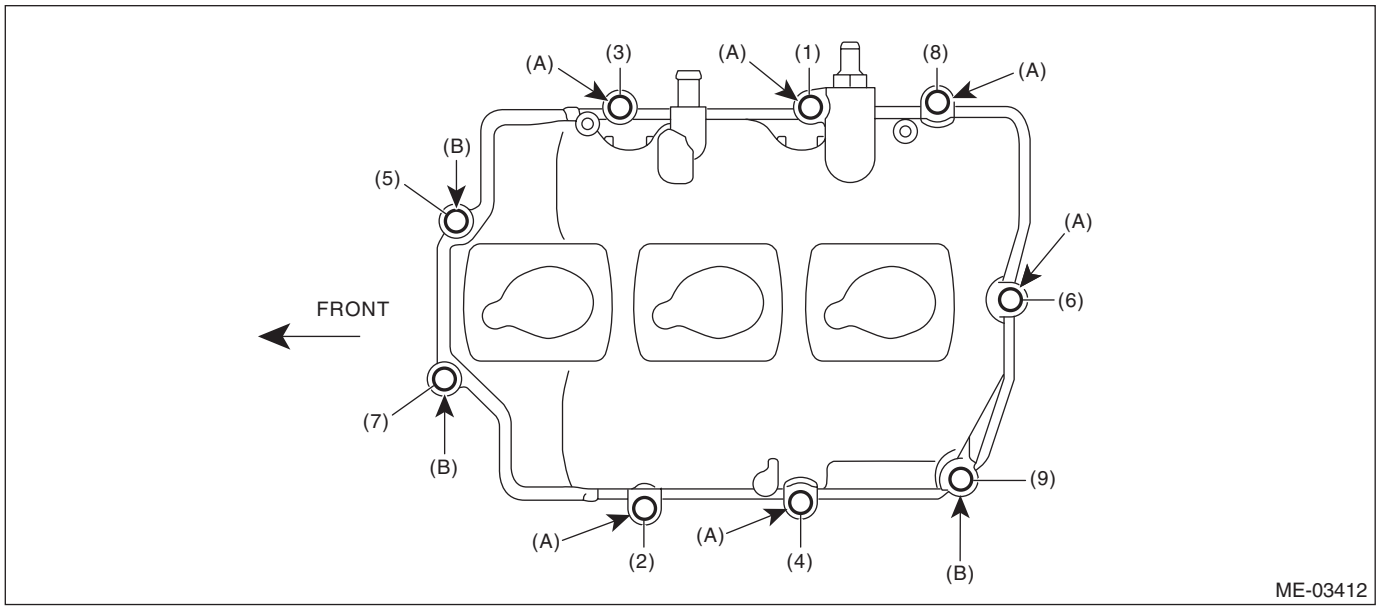

(A) M6 × 39.5 (B) M6 × 26.3

- RH side

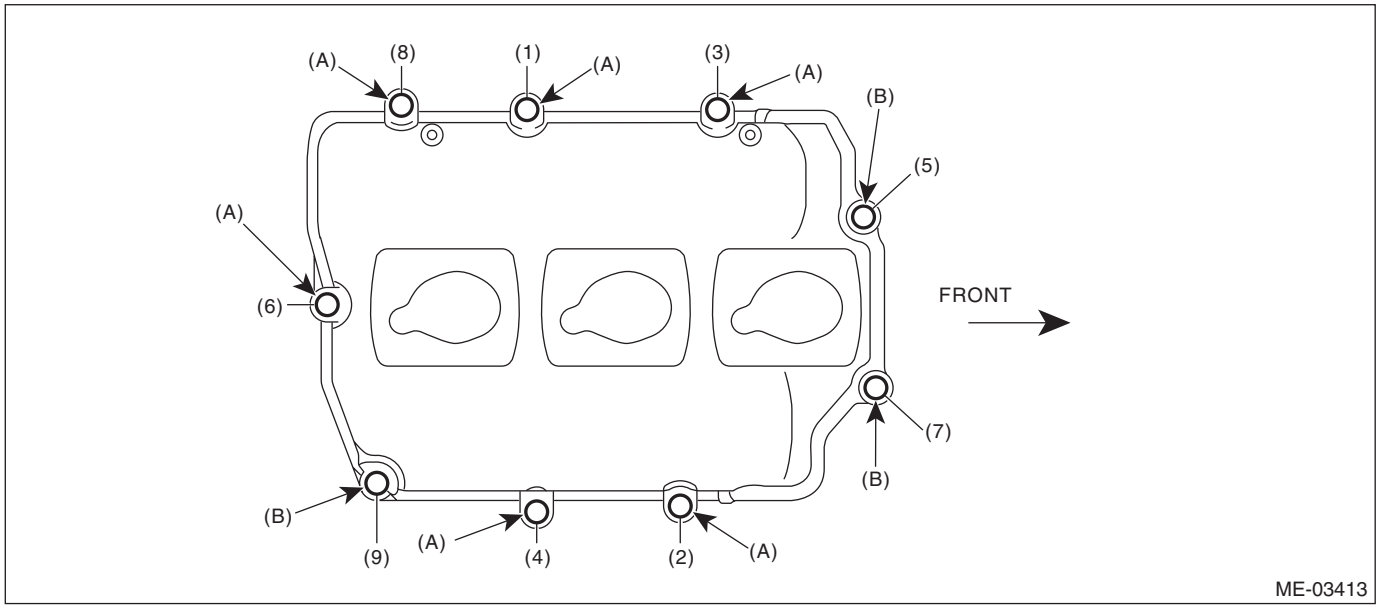

(A) M6 × 39.5 (B) M6 × 26.3

4) Install the crank sprocket. <Ref. to ME(H6DO)-83, INSTALLATION, Crank Sprocket.>
5) Install the cam sprocket. <Ref. to ME(H6DO)-82, INSTALLATION, Cam Sprocket.>
6) Install the timing chain assembly. <Ref. to ME(H6DO)-69, INSTALLATION, Timing Chain Assembly.>
7) Install the chain cover. <Ref. to ME(H6DO)-56, INSTALLATION, Chain Cover.>
8) Install the crank pulley. <Ref. to ME(H6DO)-52, INSTALLATION, Crank Pulley.>
9) Install the engine to the vehicle. <Ref. to ME(H6DO)-40, INSTALLATION, Engine Assembly.>

C: INSPECTION

1) Measure the bend, and repair or replace if necessary.

Camshaft bend limit:
0.020 mm (0.00079 in)

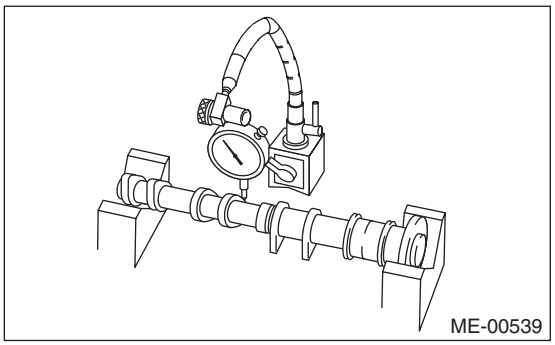

2) Check the journal for damage and wear. Replace if faulty.
3) Check the cutout portion used for camshaft sensor for damage. Replace if faulty.
4) Check the cam face condition; remove the minor faults by grinding with oil stone. Replace if there is uneven wear or others.
5) Measure the cam lobe height “H” and cam base circle diameter “A”. If it exceeds the standard or offset wear occurs, replace it.

Cam lobe height H:

Standard
Intake
45.90 — 46.00 mm (1.8071 — 1.8110 in)
Exhaust
44.65 — 44.75 mm (1.7579 — 1.7618 in)

Cam base circle diameter A:

Standard
Intake
36.00 mm (1.4173 in)
Exhaust
36.00 mm (1.4137 in)

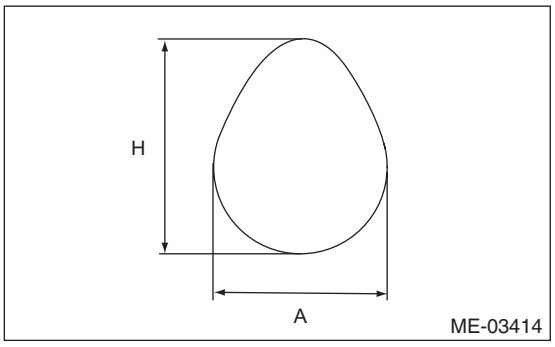

6) Measure the outside diameter of camshaft journal. If the journal diameter is not within specification, check the oil clearance.

	Camshaft journal	
	Front	Except for front
Standard mm (in)	37.946 — 37.963 (1.4939 — 1.4946)	25.946 — 25.963 (1.0215 — 1.0222)

7) Measure the oil clearance of camshaft journal.
(1) Clean the camshaft cap and cylinder head camshaft journal.
(2) Place the camshaft on cylinder head. (Without installing the valve lifter)
(3) Place a plastigauge across each camshaft journals.
(4) Gradually tighten the camshaft cap in at least two stages in the numerical order shown in the figure, then tighten to specified torque. Do not turn the camshaft.

Tightening torque:
(1) — (12): 16 N·m (1.6 kgf-m, 11.8 ft-lb)
(13) — (17): 9.75 N·m (1.0 kgf-m, 7.2 ft-lb)

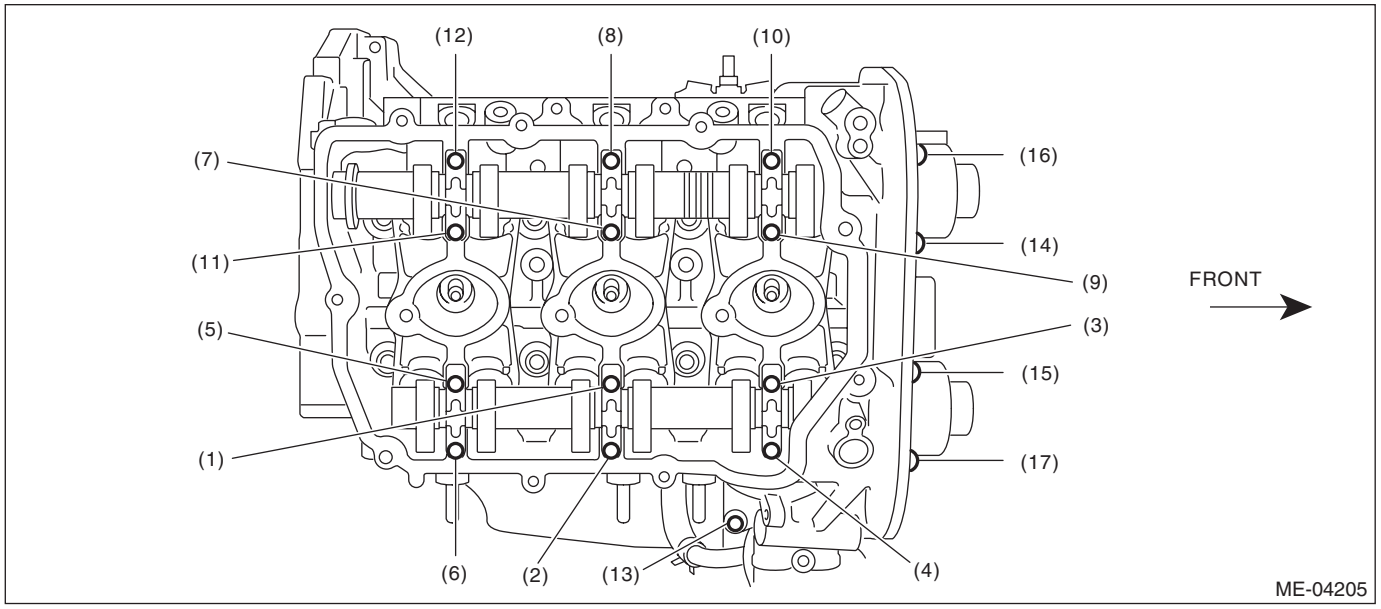

(5) Remove the camshaft cap.
(6) Measure the widest point of the plastigauge on each journal. If oil clearance exceeds the standard, replace the camshaft. If necessary, replace the camshaft caps and cylinder head as a set.

Camshaft oil clearance:
Standard
0.037 — 0.072 mm (0.0015 — 0.0028 in)

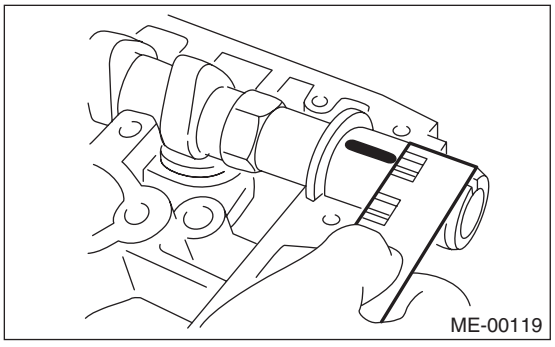

(7) Completely remove the plastigauge.
8) Measure the thrust clearance with setting the dial gauge at end surface of camshaft. If the thrust clearance is not within the standard or there is off-set wear, replace the camshaft caps and cylinder head as a set. If necessary replace the camshaft.

Camshaft thrust clearance:

Standard
Intake
0.075 — 0.135 mm (0.0030 — 0.0053 in)
Exhaust
0.075 — 0.135 mm (0.0030 — 0.0053 in)

19.Cylinder Head

A: REMOVAL

1) Remove the engine from vehicle. <Ref. to ME(H6DO)-36, REMOVAL, Engine Assembly.>
2) Remove the crank pulley. <Ref. to ME(H6DO)-52, REMOVAL, Crank Pulley.>
3) Remove the chain cover. <Ref. to ME(H6DO)-53, REMOVAL, Chain Cover.>
4) Remove the timing chain assembly. <Ref. to ME(H6DO)-63, REMOVAL, Timing Chain Assembly.>
5) Remove the cam sprocket. <Ref. to ME(H6DO)-82, REMOVAL, Cam Sprocket.>
6) Remove the crank sprocket. <Ref. to ME(H6DO)-83, REMOVAL, Crank Sprocket.>
7) Remove the camshaft. <Ref. to ME(H6DO)-84, REMOVAL, Camshaft.>
8) Remove the seal bolt shown in the figure.

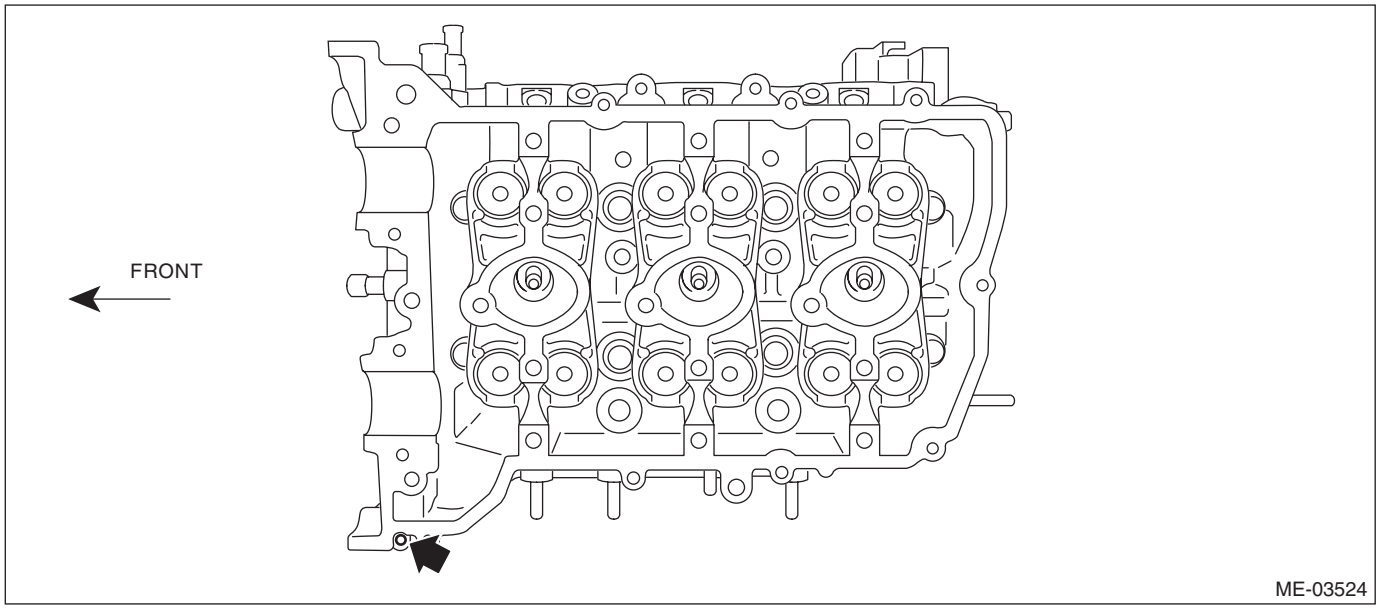

9) Remove the cylinder head bolts in the numerical order as shown in the figure.

NOTE:
Leave bolts (2) and (4) engaged by three or four threads to prevent the cylinder head from falling.

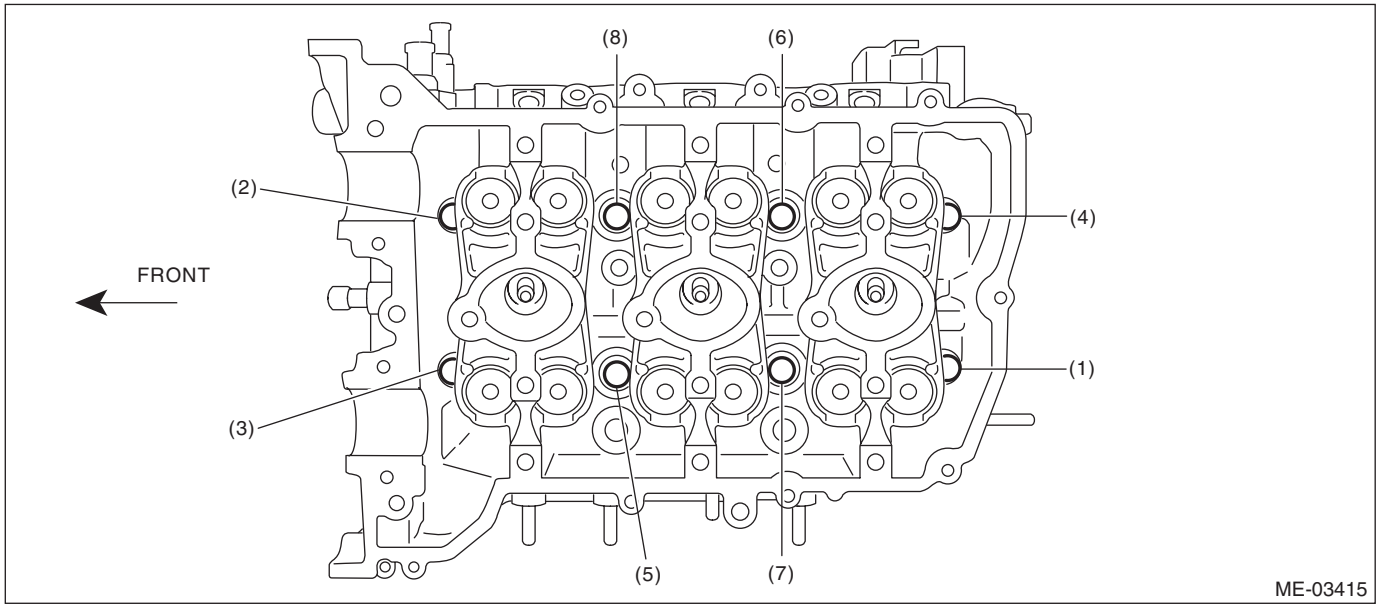

10) While tapping the cylinder head with a plastic hammer, separate it from cylinder block.
11) Remove the bolts (2) and (4) to remove cylinder head.
12) Remove the cylinder head gasket.

CAUTION:
Be careful not to scratch the mating surface of cylinder head and cylinder block.
13) Similarly, remove the cylinder head (RH).

B: INSTALLATION

1) Apply liquid gasket to the mating surface of cylinder block shown in the figure.

NOTE:
- Install within 5 min. after applying liquid gasket.
- Do not apply liquid gasket excessively. If too much is applied, remove any liquid gasket that is squeezed out.

Liquid gasket:
THREE BOND 1217G (Part No. K0877Y0100) or equivalent

Liquid gasket applying diameter:
3.5±1.0 mm (0.138±0.039 in)
- LH side

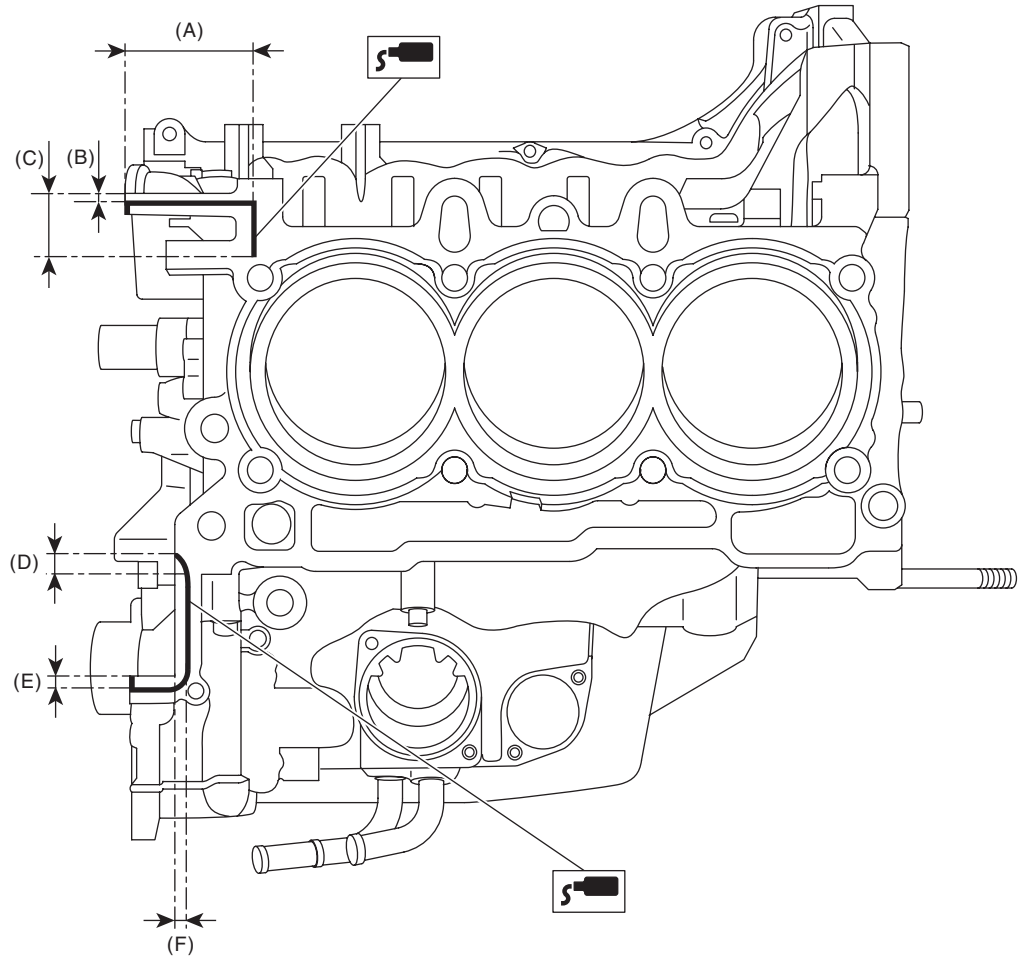

(A) 59 mm (2.323 in)
(B) 2 mm (0.079 in)
(C) 20 mm (0.787 in)
(D) 7 mm (0.276 in)
(E) 4 mm (0.157 in)
(F) 4 mm (0.157 in)

- RH side

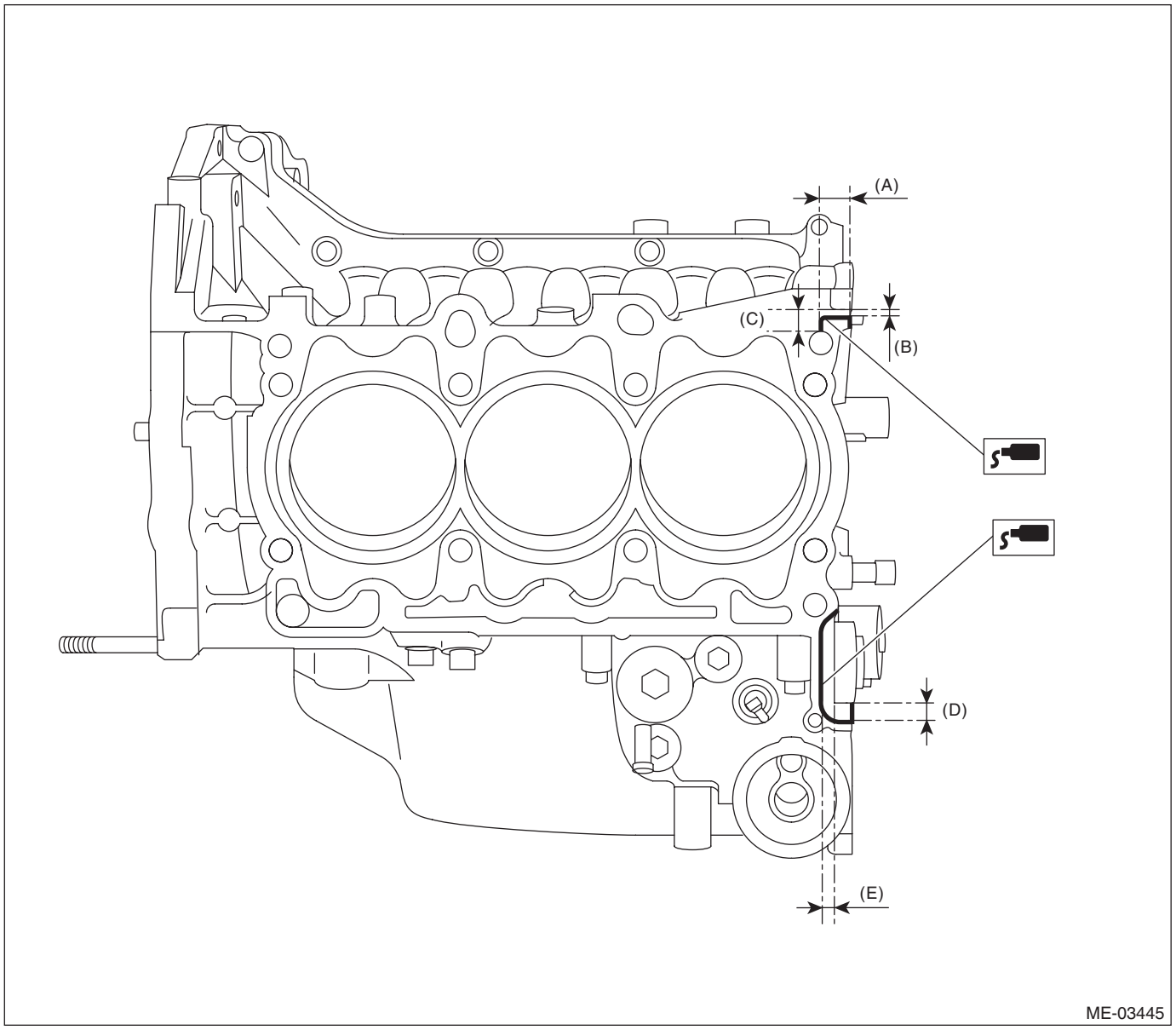

(A) 17 mm (0.669 in)
(B) 2 mm (0.079 in)
(C) 9 mm (0.354 in)
(D) 4 mm (0.157 in)
(E) 4 mm (0.157 in)

2) Install the cylinder head gaskets LH and RH onto the cylinder block.

NOTE:
Use a new cylinder head gasket.

3) Apply liquid gasket to the mating surface of cylinder head gasket shown in the figure.

NOTE:
- Install within 5 min. after applying liquid gasket.
- Do not apply liquid gasket excessively. If too much is applied, remove any liquid gasket that is squeezed out.

Liquid gasket:
THREE BOND 1217G (Part No. K0877Y0100) or equivalent

Liquid gasket applying diameter:
3.5±1.0 mm (0.138±0.039 in)

- LH side

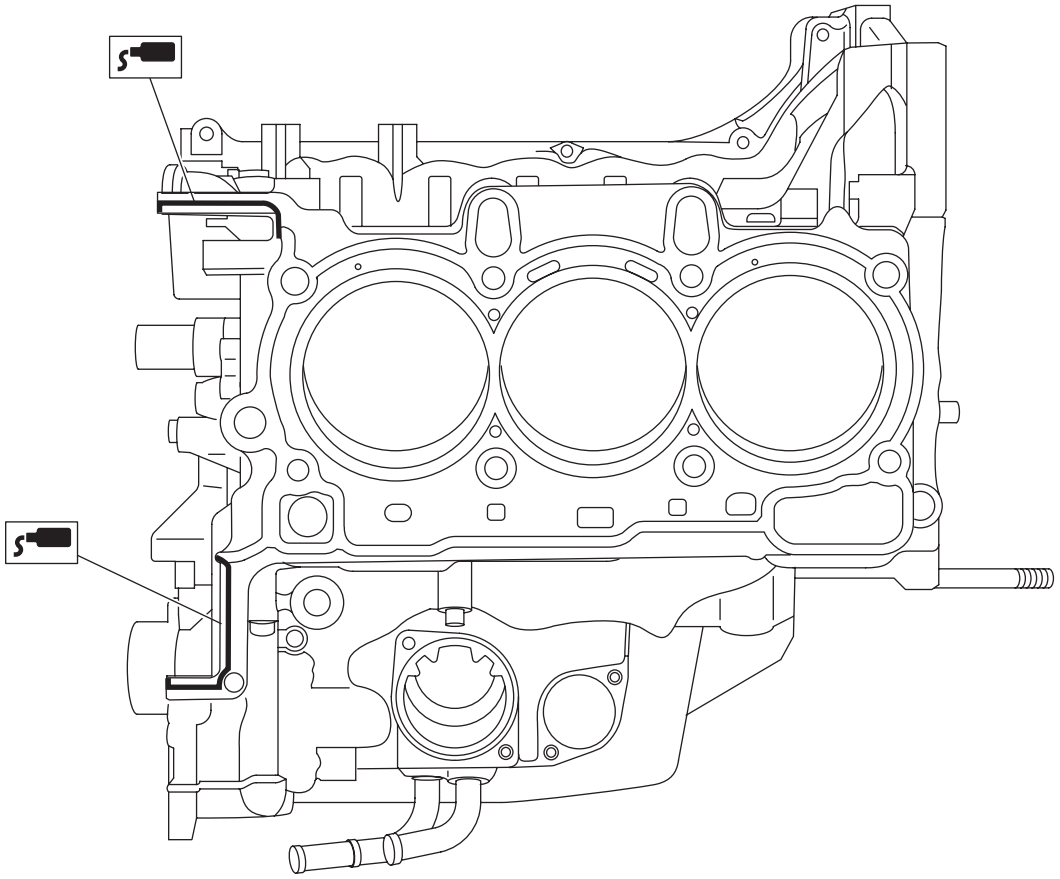

ME-04498

- RH side

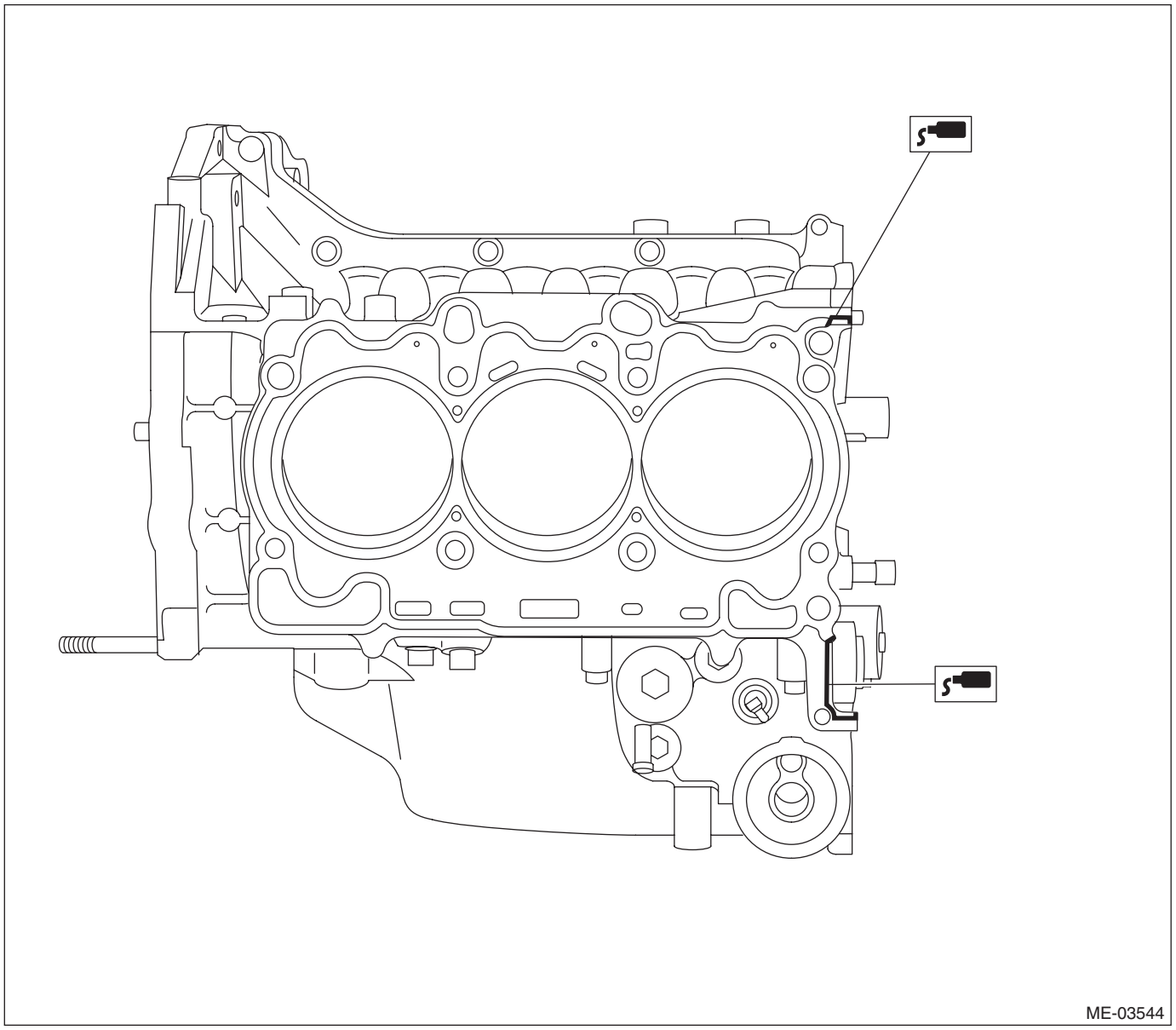

4) Attach the cylinder head to the cylinder block.

CAUTION:
Be careful not to scratch the mating surface of cylinder head and cylinder block.

5) Tighten the cylinder head bolts.
(1) Apply a thin coat of engine oil to washers and cylinder head bolt threads.
(2) Mount the cylinder head onto the cylinder block, then tighten the bolts with a torque of 20 N·m (2.0 kgf-m, 14.8 ft-lb) in the order indicated in the figure.
(3) Tighten the bolts with a torque of 50 N·m (5.1 kgf-m, 36.9 ft-lb) in the order indicated in the figure.
(4) Loosen all the bolts by 180° in the reverse order of installing, and loosen them further by 180°.
(5) Tighten the bolts with torque of 20 N·m (2.0 kgf-m, 14.8 ft-lb) in numerical sequence as shown in the figure.
(6) Tighten the bolts (1) — (4) in the order indicated with a torque of 48 N·m (4.9 kgf-m, 35.4 ft-lb).
(7) Tighten the bolts (5) — (8) in the order indicated with a torque of 44 N·m (4.5 kgf-m, 32.5 ft-lb).
(8) Tighten all bolts 90° in the numerical order as shown in the figure.

(9) Tighten the bolt (1) — (4) by 45° in the numerical order.

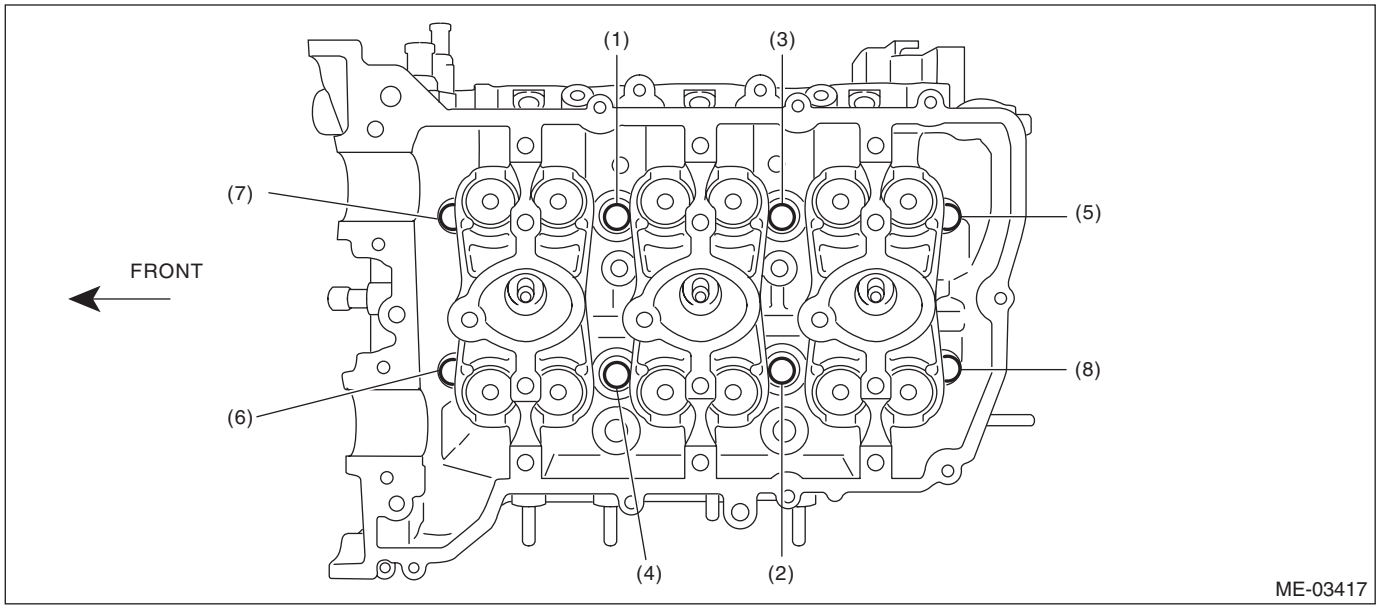

6) Install the seal bolt shown in the figure.

NOTE:
Before installing seal bolts, apply a sealing material to bolt threads.

Seal material:
THREE BOND 1324 (Part No. 004403042) or equivalent

Tightening torque:
6.4 N·m (0.7 kgf-m, 4.7 ft-lb)

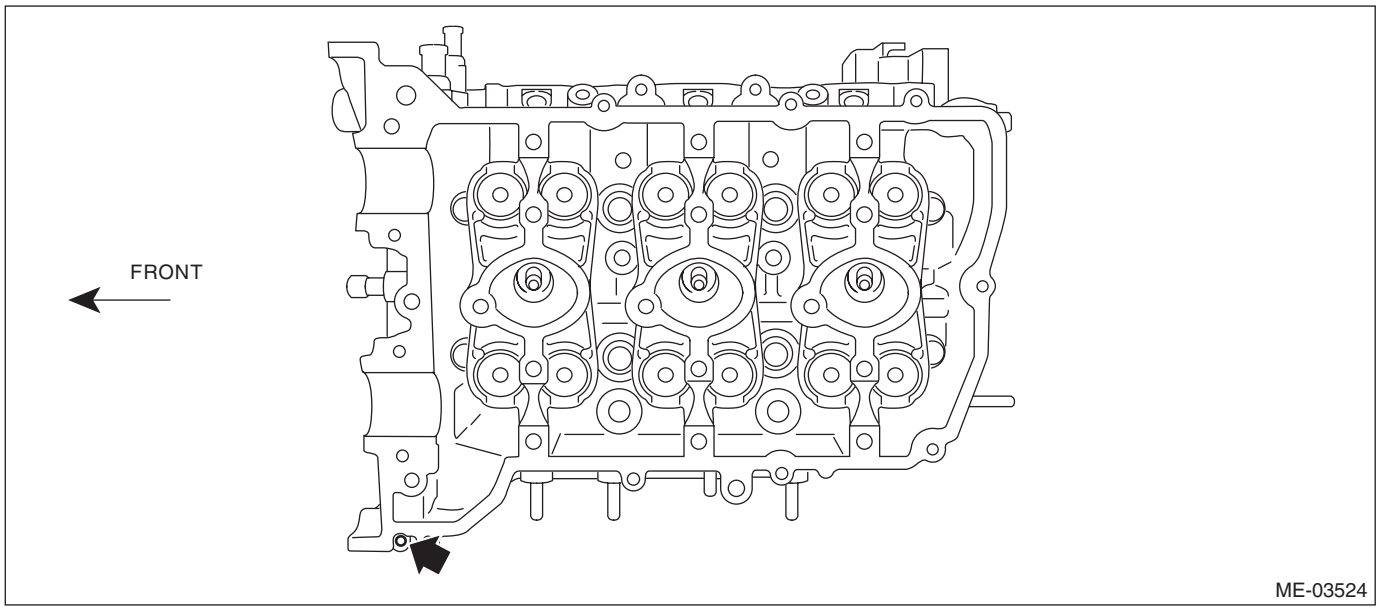

7) Install the camshaft. <Ref. to ME(H6DO)-85, INSTALLATION, Camshaft.>
8) Install the crank sprocket. <Ref. to ME(H6DO)-83, INSTALLATION, Crank Sprocket.>
9) Install the cam sprocket. <Ref. to ME(H6DO)-82, INSTALLATION, Cam Sprocket.>
10) Install the timing chain assembly. <Ref. to ME(H6DO)-69, INSTALLATION, Timing Chain Assembly.>
11) Install the chain cover. <Ref. to ME(H6DO)-56, INSTALLATION, Chain Cover.>
12) Install the crank pulley. <Ref. to ME(H6DO)-52, INSTALLATION, Crank Pulley.>
13) Install the engine to the vehicle. <Ref. to ME(H6DO)-40, INSTALLATION, Engine Assembly.>

C: DISASSEMBLY

1) Set the cylinder head on ST.
ST 18250AA010 CYLINDER HEAD TABLE
2) Remove the valve lifter.
3) Compress the valve spring using ST, and remove the valve spring retainer key, each valve and valve spring.
ST 499718000 VALVE SPRING REMOVER

NOTE:
- Mark each valve to prevent confusion.
- Pay careful attention not to damage the lips of intake valve oil seals and exhaust valve oil seals.
- Keep all the removed parts in order for re-installing in their original positions.
- For removal and installation procedures of the valve guide, intake valve oil seal and exhaust valve oil seal, refer to “INSPECTION”. <Ref. to ME(H6DO)-101, VALVE GUIDE, INSPECTION, Cylinder Head.> <Ref. to ME(H6DO)-103, INTAKE AND EXHAUST VALVE OIL SEAL, INSPECTION, Cylinder Head.>

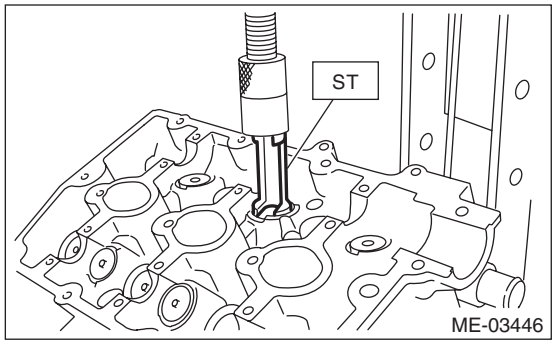

4) Remove the plug and filter from the front camshaft cap as necessary.

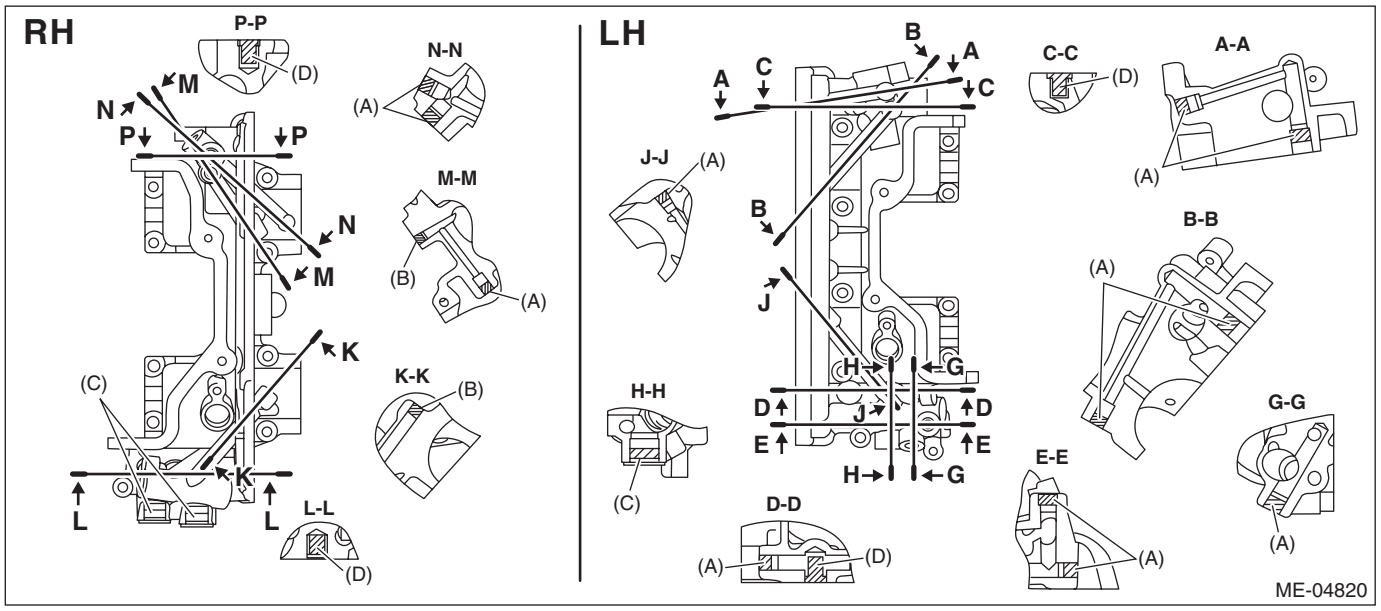

(A) Plug (PT 1/8)
(B) Plug (PT 1/16)
(C) Plug (M16 × 1.5)
(D) Filter

D: ASSEMBLY

1) Install the valve spring and valve.
   (1) Set the cylinder head on ST.

ST 18250AA010 CYLINDER HEAD TABLE

   (2) Coat the stem of each valve with engine oil and insert the valve into valve guide.

NOTE:
When inserting the valve into valve guide, use special care not to damage the oil seal lip.

   (3) Install the valve spring and retainer.

NOTE:
- Be sure to install the valve spring with its close-coiled end facing the seat on cylinder head.
- Install the valve spring with the painted side facing to retainer.

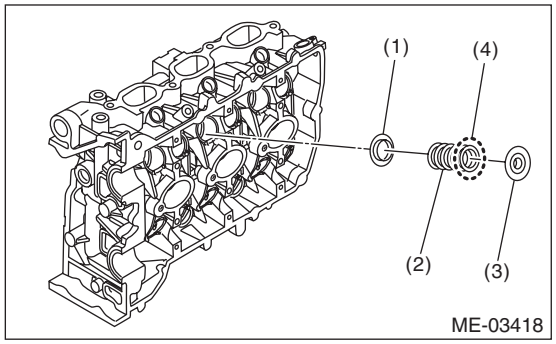

(1) Seat
(2) Valve spring
(3) Retainer
(4) Painted face

   (4) Set the ST on valve spring.

ST 499718000 VALVE SPRING REMOVER

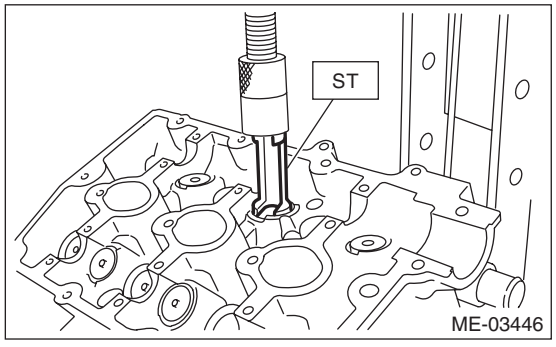

   (5) Compress the valve spring and fit the valve spring retainer key.
   (6) After installing, tap the valve spring retainers lightly with a wooden hammer for better seating.
2) Apply oil to the surface of valve lifter.
3) Install the valve lifter.

4) Install the plug and filter to the front camshaft cap as necessary.

Tightening torque:
T1: 9 N·m (0.9 kgf-m, 6.6 ft-lb)
T2: 17 N·m (1.7 kgf-m, 12.5 ft-lb)
T3: 23 N·m (2.3 kgf-m, 17.0 ft-lb)

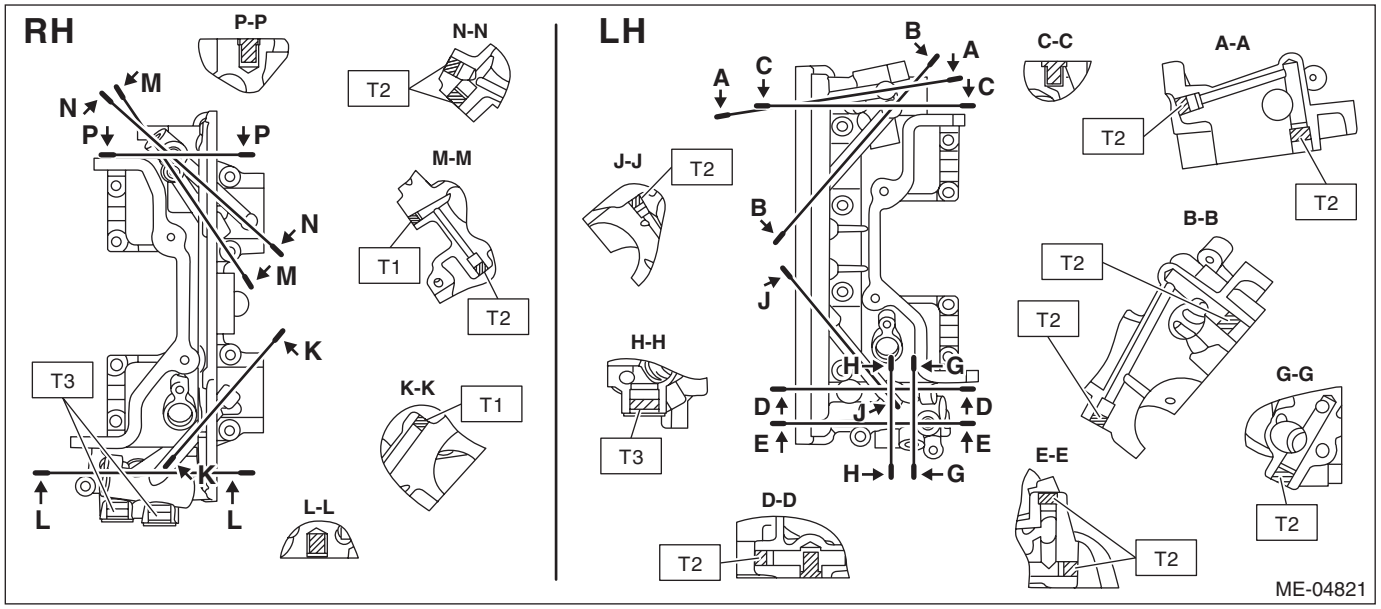

E: INSPECTION

1. CYLINDER HEAD

1) Make sure that there are no cracks or other damages. Perform visual check, and use liquid penetrant tester on the important sections. Check that there are no marks of gas leaking or water leaking on gasket installing surface.
2) Set the cylinder head on ST.
ST 18250AA010 CYLINDER HEAD TABLE
3) Check for warpage at mating surface between the cylinder block and cylinder head using a straight edge (A) and thickness gauge (B). If the warpage exceeds limit, replace the cylinder head.

Warping limit:
0.020 mm (0.0008 in)

Standard height of cylinder head:
124±0.05 mm (4.88±0.0020 in)

NOTE:
Uneven torque for the cylinder head bolts can cause warpage. When reinstalling, pay special attention to the torque so as to tighten evenly.

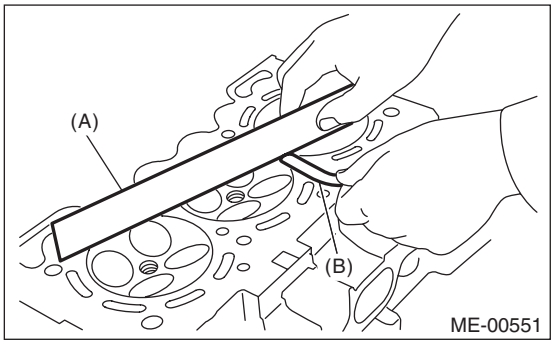

2. VALVE SEAT

Inspect the intake and exhaust valve seats, and correct the contact surfaces with a valve seat cutter if they are defective or when valve guides are replaced.

Contacting width of valve seat W:

Standard
Intake
1.0 mm (0.039 in)
Exhaust
1.5 mm (0.059 in)

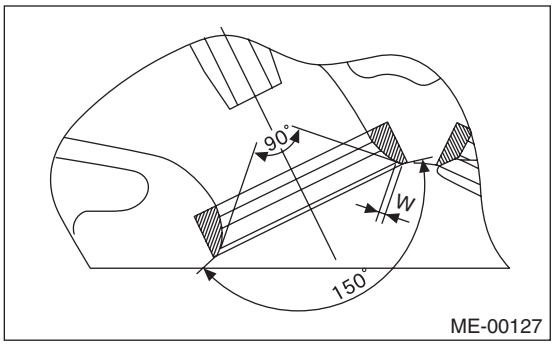

3. VALVE GUIDE

1) Check the clearance between valve guide and valve stem. The clearance can be checked by measuring respectively the outer diameter of valve stem with a micrometer and the inner diameter of valve guide with a caliper gauge.

Clearance between the valve guide and valve stem:

Standard
Intake
0.030 — 0.057 mm (0.0012 — 0.0022 in)
Exhaust
0.040 — 0.067 mm (0.0016 — 0.0026 in)

2) If the clearance between valve guide and valve stem exceeds the standard, replace the valve guide or valve itself, whichever shows the greater amount of wear or damage. See the following procedure for valve guide replacement.

Valve guide inner diameter:
5.500 — 5.512 mm (0.2165 — 0.2170 in)

Valve stem outer diameters:
Intake
5.455 — 5.470 mm (0.2148 — 0.2154 in)
Exhaust
5.445 — 5.460 mm (0.2144 — 0.2150 in)

(1) Place the cylinder head on ST1 with the combustion chamber upward so that valve guides fit the holes in ST1.

(2) Insert the ST2 into valve guide and press it down to remove the valve guide.

ST1 18250AA010 CYLINDER HEAD TABLE
ST2 499765700 VALVE GUIDE REMOVER

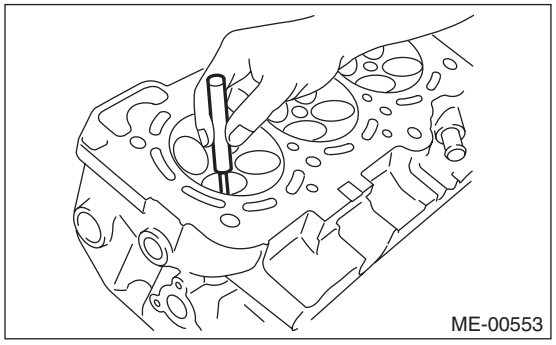

(3) Turn the cylinder head upside down and place the ST as shown in the figure.

ST 18251AA050 VALVE GUIDE ADJUSTER (INTAKE SIDE)
ST 18251AA060 VALVE GUIDE ADJUSTER (EXHAUST SIDE)

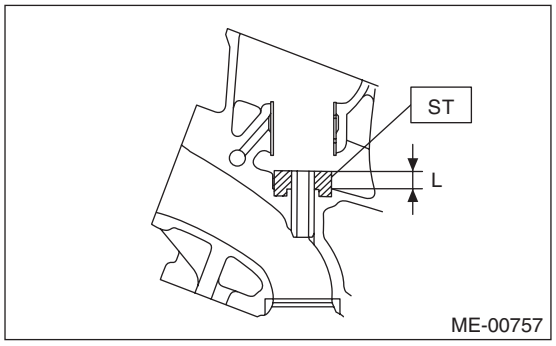

(4) Before installing a new valve guide, make sure that neither scratches nor damages exist on the inner surface of valve guide holes in cylinder head.

(5) Put a new valve guide, coated with sufficient oil, in the cylinder head, and insert the ST1 into valve guide. Press in until the valve guide upper end is flush with the upper surface of ST2.

ST1 499765700 VALVE GUIDE REMOVER
ST2 18251AA050 VALVE GUIDE ADJUSTER (INTAKE SIDE)
ST2 18251AA060 VALVE GUIDE ADJUSTER (EXHAUST SIDE)

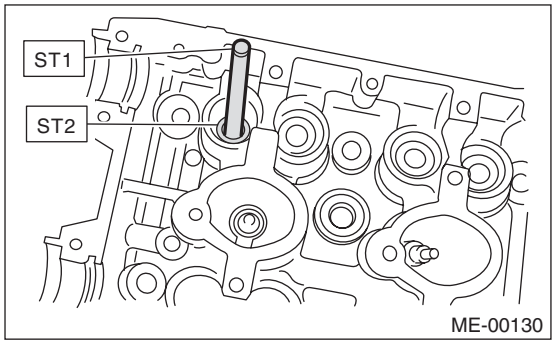

(6) Check the valve guide protrusion amount "L".

Valve guide protrusion amount L:
Intake
8.6 — 9.0 mm (0.3386 — 0.3543 in)
Exhaust
10.7 — 11.1 mm (0.4213 — 0.4370 in)

(7) Ream the inside of valve guide using ST. Put the ST in valve guide, and rotate the ST slowly clockwise while pushing it lightly. Bring the ST back while rotating it clockwise.

ST 499765900 VALVE GUIDE REAMER

NOTE:
• Apply engine oil to the ST when reaming.
• If the inner surface of valve guide is damaged, the edge of ST should be slightly ground with oil stone.
• If the inner surface of valve guide becomes lustrous and the ST does not chip, use a new ST or remedy the ST.

(8) After reaming, clean the valve guide to remove chips.

(9) Recheck the contact condition between valve and valve seat after replacing the valve guide.

4. INTAKE AND EXHAUST VALVE

1) Check the flange and stem of the valve, and replace the valve with new one if damaged, worn, or deformed, "H" exceeds the standard, or if there is uneven wear.

Head edge thickness H:

Standard
Intake (A)
1.0 mm (0.039 in)
Exhaust (B)
1.2 mm (0.047 in)

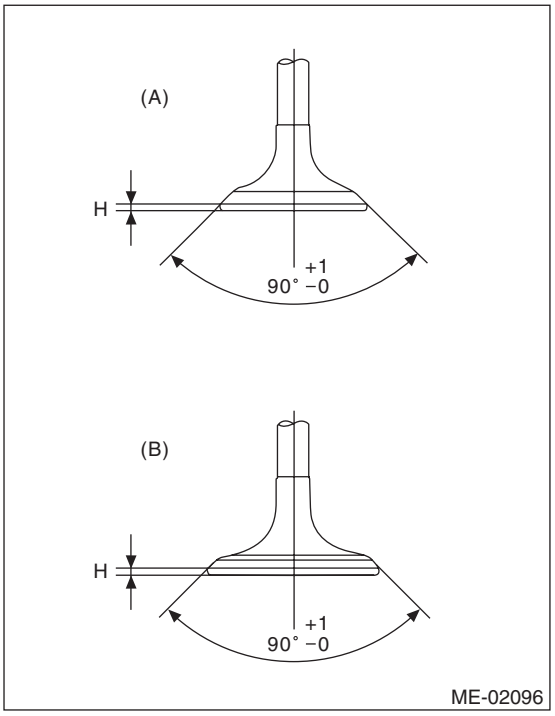

2) Put a small amount of grinding compound on the valve seat surface, and lap the valve and valve seat surface. Install a new valve oil seal after lapping.

NOTE:
It is possible to differentiate between the intake valve and the exhaust valve by their overall length.

Valve overall length:
Intake
103.5 mm (4.075 in)
Exhaust
103.2 mm (4.063 in)

5. VALVE SPRING

1) Check the valve springs for damage, free length, and tension. Replace the valve spring if it is not within the standard value presented in the table.
2) To measure the squareness of the valve spring, stand the valve spring on a surface plate and measure its deflection at the top of the spring using a try square.

Free length	mm (in)	49.06 (1.9315)
Tension/spring height N (kgf, lb)/mm (in)	Set	182 — 210 (18.6 — 21.4, 40.9 — 47.2) /31.0 (1.220 in)
	Lift	316 — 350 (32.2 — 35.7, 71.0 — 78.7) /21.0 (0.827 in)
Squareness		2.5°, 2.1 mm (0.083 in) or less

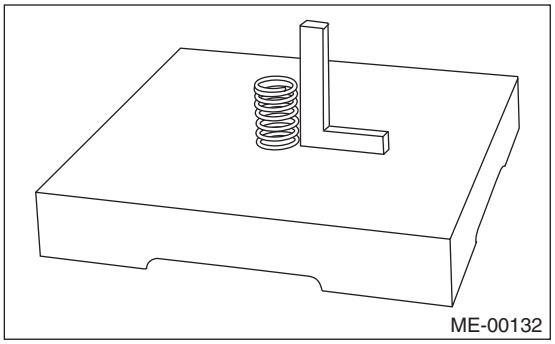
ME-00132

6. INTAKE AND EXHAUST VALVE OIL SEAL

1) For the following, replace the oil seal with a new part.
- When the lip is damaged.
- When the spring is out of the specified position.
- When readjusting the surfaces of valve and valve seat.
- When replacing the valve guide.

2) Set the cylinder head on ST1.
3) Using the ST2, press in the oil seal.

ST1 18250AA010 CYLINDER HEAD TABLE
ST2 18261AA010 VALVE OIL SEAL GUIDE

NOTE:
- Apply engine oil to oil seal before press-fitting.
- When press-fitting the oil seal, do not use a hammer to strike in.

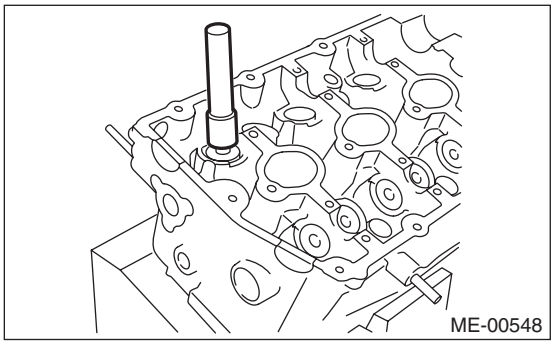
ME-00548

7. VALVE LIFTER

1) Check the valve lifter visually.
2) Measure the outer diameter of valve lifter.

Outer diameter of valve lifter:
32.959 — 32.975 mm (1.2976 — 1.2982 in)

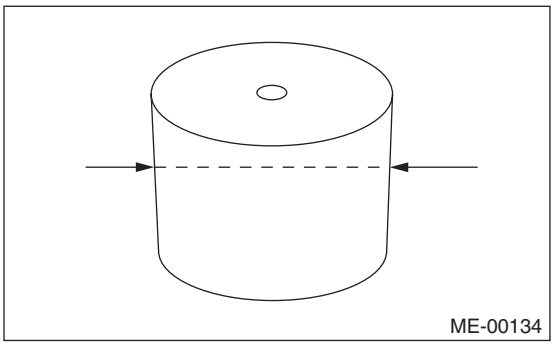
ME-00134

3) Measure the inner diameter of valve lifter mating surface on cylinder head.

Inner diameter of valve lifter mating surface:
32.994 — 33.016 mm (1.2990 — 1.2998 in)

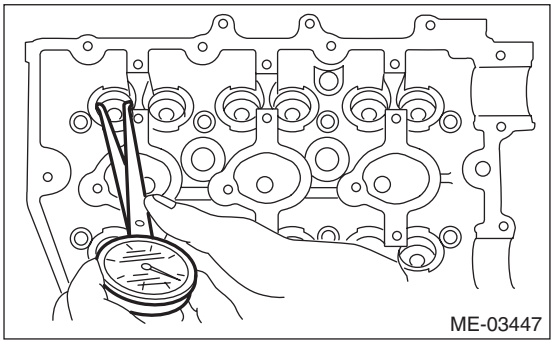
ME-03447

4) Check the clearance between valve lifter and valve lifter mating surface. The clearance can be checked by measuring the outer diameter of valve lifter and the inner diameter of valve lifter. If it exceeds the standard or offset wear occurs, replace the cylinder head.

Valve lifter and valve lifter mating surface clearance:
Standard
0.019 — 0.057 mm (0.0007 — 0.0022 in)

20.Cylinder Block

A: REMOVAL

NOTE:
Before conducting this procedure, drain the engine oil completely.
1) Remove the engine from vehicle. <Ref. to ME(H6DO)-36, REMOVAL, Engine Assembly.>
2) Remove the crank pulley. <Ref. to ME(H6DO)-52, REMOVAL, Crank Pulley.>
3) Remove the chain cover. <Ref. to ME(H6DO)-53, REMOVAL, Chain Cover.>
4) Remove the timing chain assembly. <Ref. to ME(H6DO)-63, REMOVAL, Timing Chain Assembly.>
5) Remove the cam sprocket. <Ref. to ME(H6DO)-82, REMOVAL, Cam Sprocket.>
6) Remove the crank sprocket. <Ref. to ME(H6DO)-83, REMOVAL, Crank Sprocket.>
7) Remove the camshaft. <Ref. to ME(H6DO)-84, REMOVAL, Camshaft.>
8) Remove the cylinder head. <Ref. to ME(H6DO)-92, REMOVAL, Cylinder Head.>
9) Remove the drive plate. <Ref. to 5AT-64, REMOVAL, Drive Plate.>
10) Remove the crankshaft position sensor.

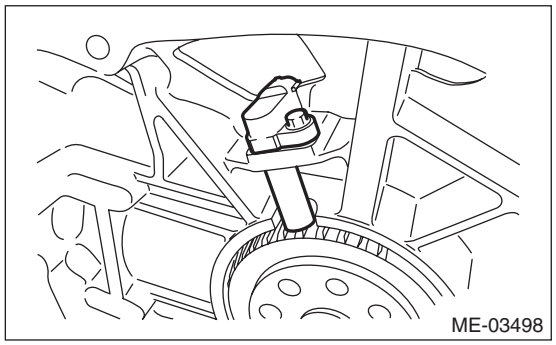
ME-03498

11) Remove the crankshaft position sensor plate.

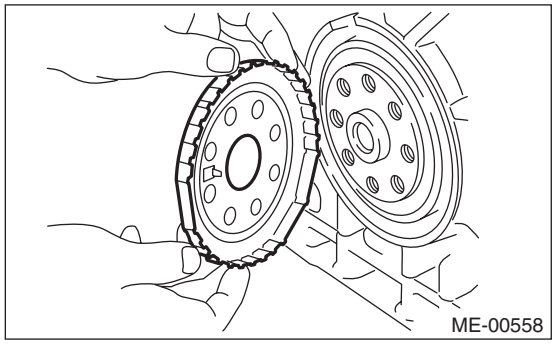
ME-00558

12) Rotate the engine to set oil pan upper.
13) Remove the bolts which secure oil pan lower to oil pan upper.

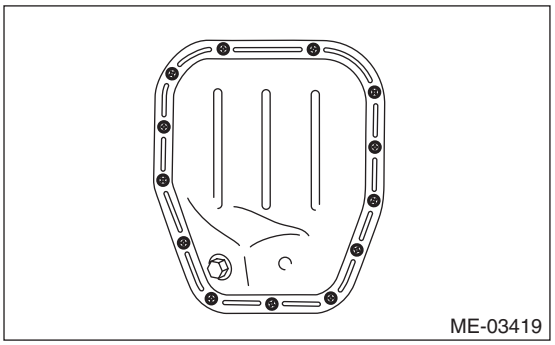
ME-03419

14) Insert an oil pan cutter blade into the gap between oil pan upper and oil pan lower, and remove the oil pan lower.

CAUTION:
Do not use a screwdriver or similar tools in place of oil pan cutter.
15) Remove the oil cooler connector and remove the oil cooler.

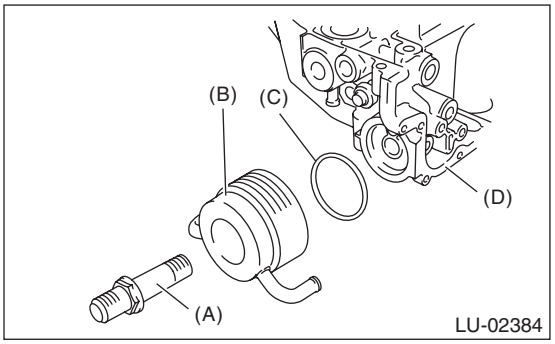

LU-02384

(A) Oil cooler connector
(B) Oil cooler
(C) O-ring
(D) Oil pan upper

16) Remove the oil pump. <Ref. to LU(H6DO)-12, REMOVAL, Oil Pump.>
17) Remove the oil level switch. <Ref. to LU(H6DO)-17, REMOVAL, Oil Level Switch.>

18) Remove the thermostat cover, and then remove the thermostat.

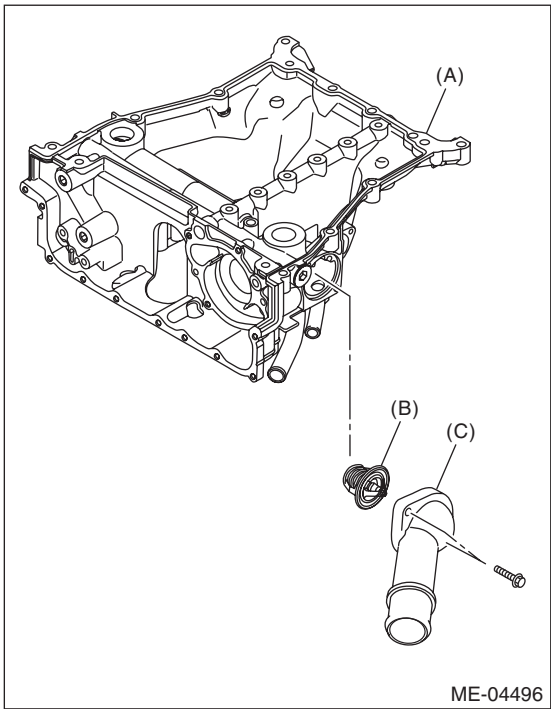

(A) Oil pan upper
(B) Thermostat
(C) Thermostat cover

19) Remove the oil pan upper.

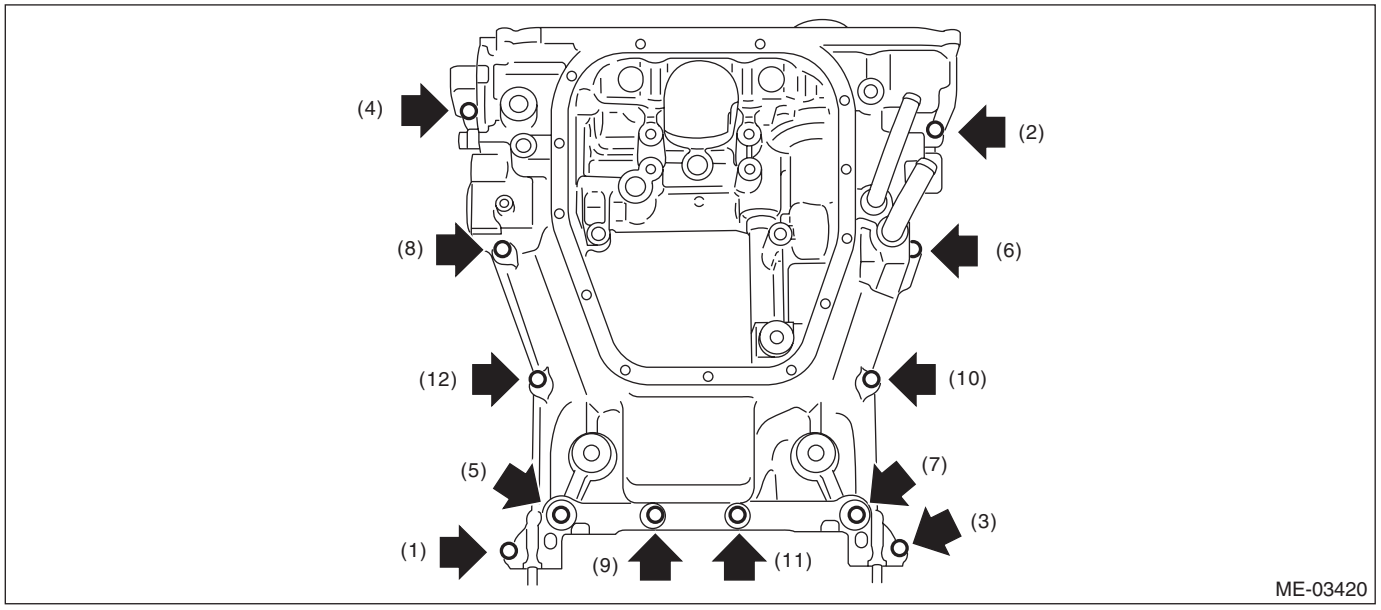

20) Face the front of the engine up, standing the engine on one end.

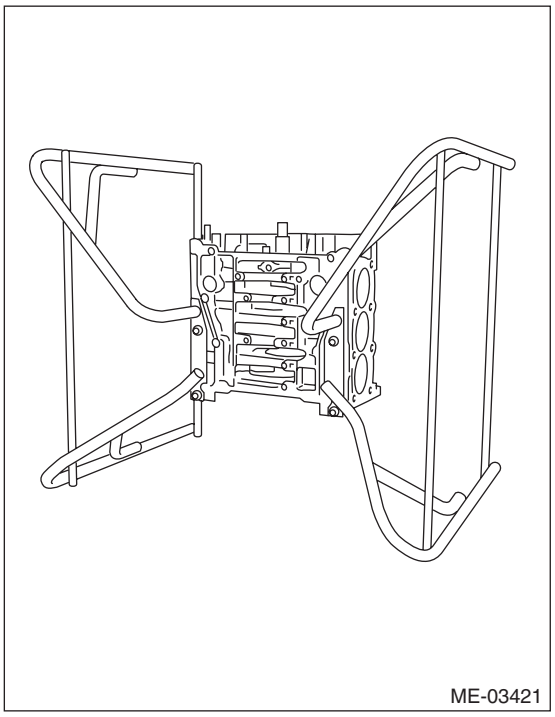

21) Remove ten O-rings from the underside of the cylinder block.

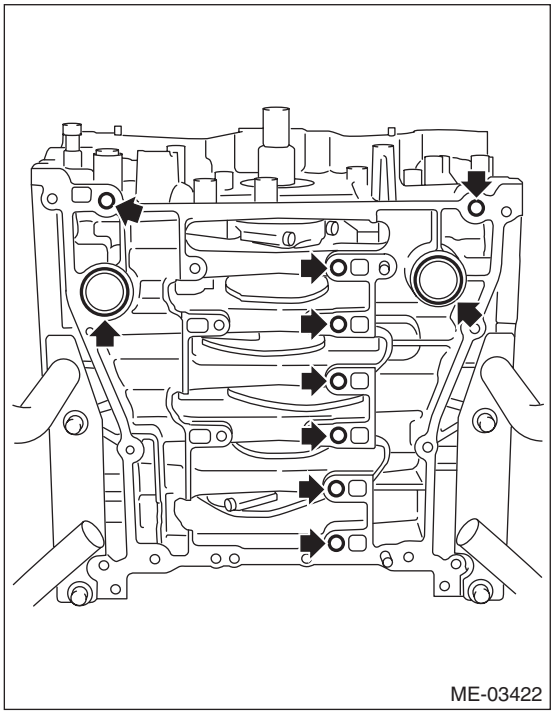

22) Mark the direction of front and the number of connecting rod caps.

23) Remove the #1 and #4 connecting rod caps and pistons from the cylinder block.

NOTE:
• Use 3/8 inch (9.5 sq.) for the extension and TORX® socket (E12).
• After removing the two connecting rod connection bolts, turning the crankshaft (ST) counterclockwise will remove the connecting rod cap.
• Mark each connecting rod cap and piston with connecting rod cap number and piston number.
• The removal of all connecting rod caps and pistons are performed in three separate steps. First, remove the #1 and #4 connecting rod caps and pistons are simultaneously, then the #2 and #5 connecting rod caps and pistons simultaneously, and then the #3 and #6 connecting rod caps and pistons simultaneously.

(1) Using the ST, turn the crankshaft and set the #1 piston at the mid point between TDC and BDC.

ST 18252AA000 CRANKSHAFT SOCKET

(2) Remove the two #1 connecting rod cap connection bolts, and remove the connecting rod cap.

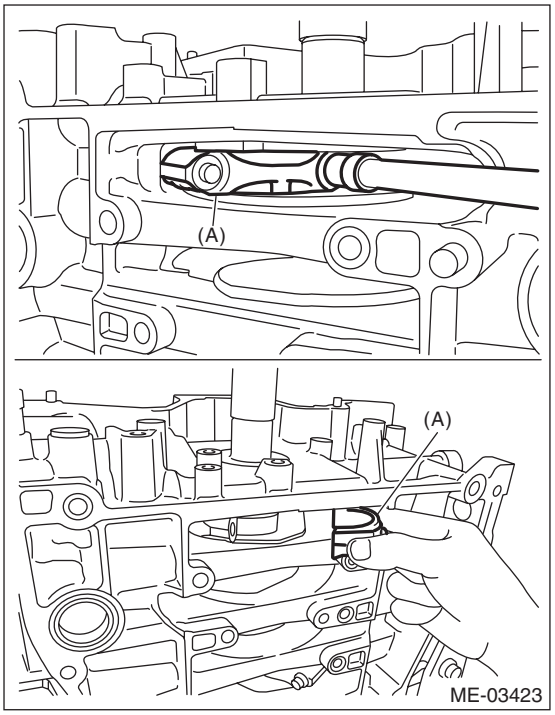

(A) #1 connecting rod cap

(3) Remove the two #4 connecting rod cap connection bolts, and remove the connecting rod cap.

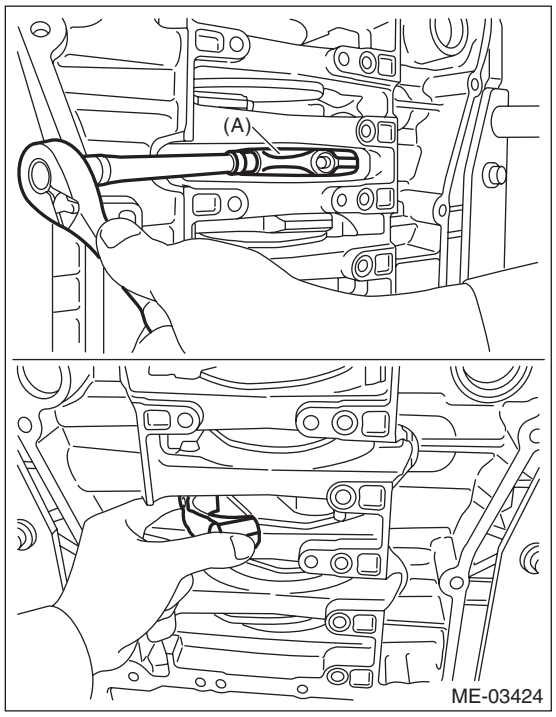

(A) #4 connecting rod cap

(4) Using the ST, turn the crankshaft and separate the positions of the crank pin and the large end of the #1 connecting rod.

ST 18252AA000 CRANKSHAFT SOCKET

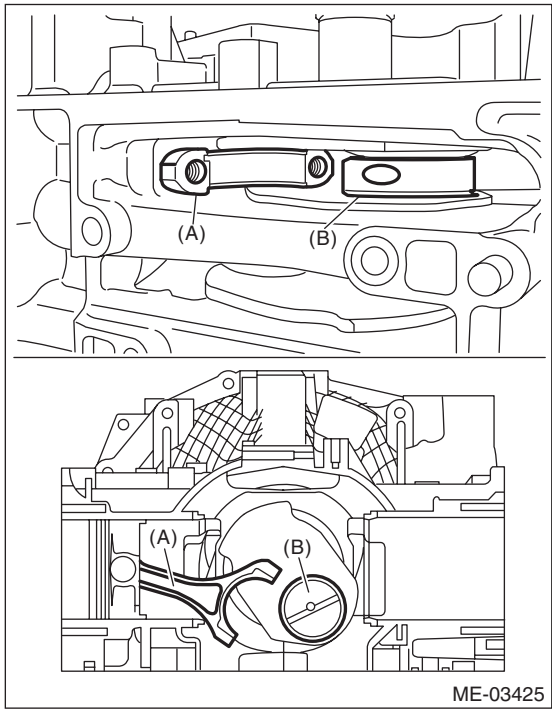

(A) #1 connecting rod
(B) Crank pin

(5) Push the #1 connecting rod in the direction of the arrow, and remove the #1 piston and connecting rod from the cylinder block.

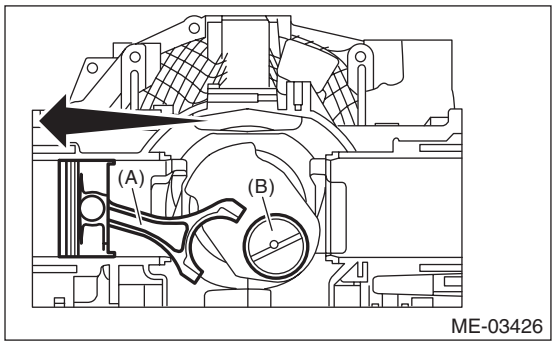

(A) #1 connecting rod
(B) Crank pin

(6) Using the ST, turn the crankshaft and separate the positions of the crank pin and the large end of the #4 connecting rod.

ST 18252AA000 CRANKSHAFT SOCKET

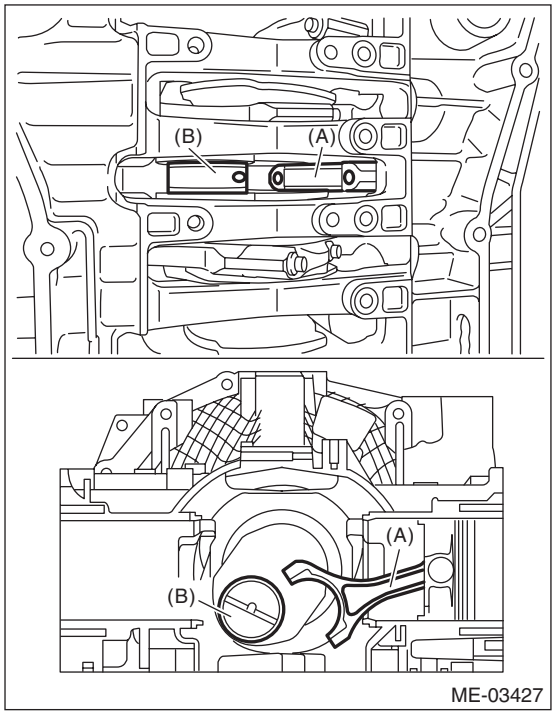

(A) #4 connecting rod
(B) Crank pin

(7) Push the #4 connecting rod in the direction of the arrow, and remove the #4 piston and connecting rod from the cylinder block.

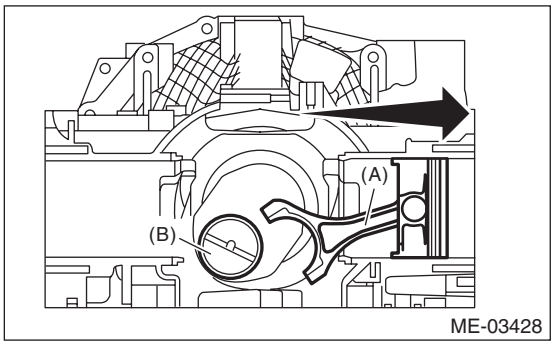

(A) #4 connecting rod
(B) Crank pin

24) Remove the #2 and #5 connecting rods and pistons from the cylinder block in the same manner.
ST 18252AA000 CRANKSHAFT SOCKET
25) Remove the #3 and #6 connecting rods and pistons from the cylinder block in the same manner.
ST 18252AA000 CRANKSHAFT SOCKET
26) Face the cylinder block (RH) up.

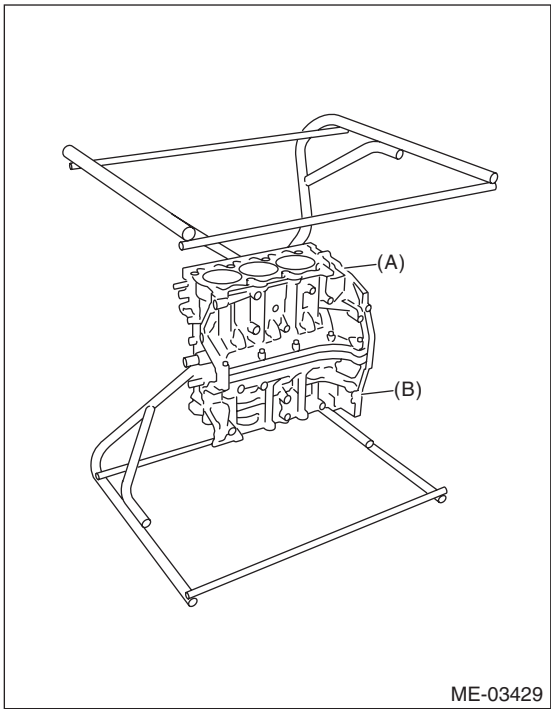

(A) Cylinder block (RH)
(B) Cylinder block (LH)

27) Remove the upper bolt.

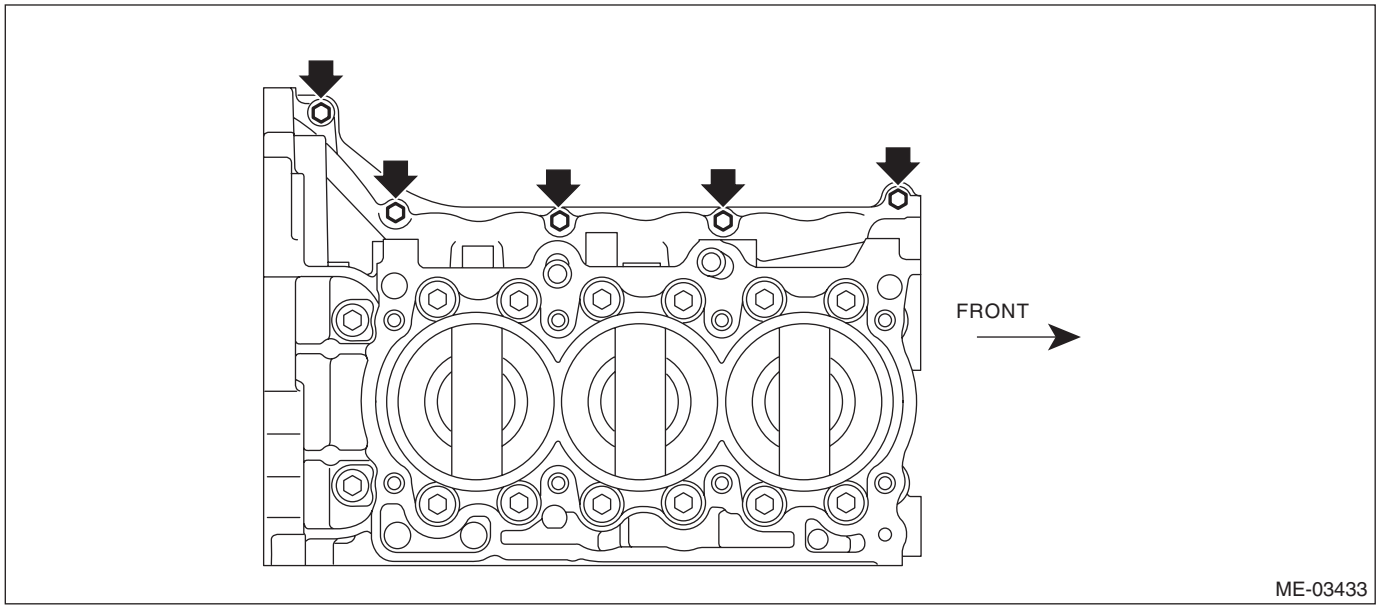

28) Loosen the cylinder block bolts in the order indicated in the figure, and separate cylinder block (RH) and (LH).

NOTE:
Confirm that the crankshaft is remaining in the cylinder block (LH).
If the cylinder block (RH) is lifted carelessly when separating, the crankshaft may stick to cylinder block (RH), then fall off.

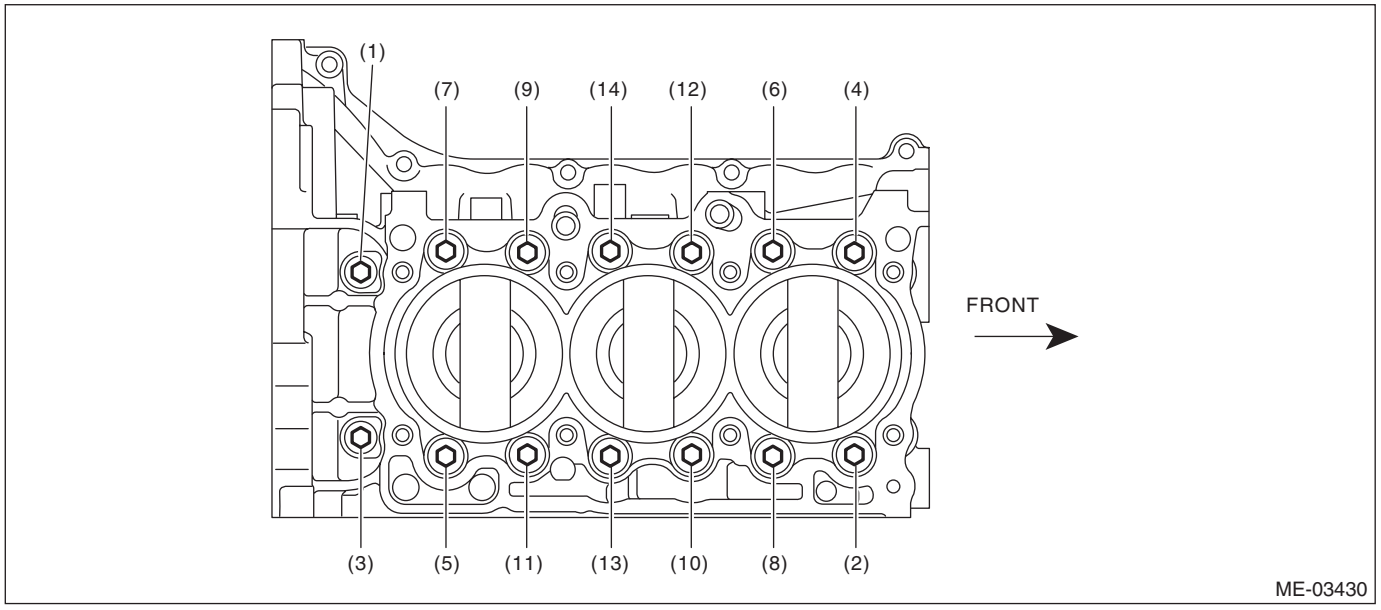

29) Remove the rear oil seal.
30) Remove the crankshaft from cylinder block (LH).
31) Remove the crankshaft bearings from cylinder block using a hammer handle.

NOTE:
- Do not confuse the combination of crankshaft bearings.
- Press the bearing at the end opposite to locking lip.

B: INSTALLATION

1) After setting the cylinder block to ST, install the crankshaft bearing.
ST 18232AA000 ENGINE STAND

NOTE:
Apply a coat of engine oil to the bearing and crankshaft journal.
2) Mount the crankshaft in cylinder block (LH).
3) Apply liquid gasket to the mating surfaces of cylinder block (RH).

CAUTION:
Do not allow liquid gasket to run over into oil passages, bearing grooves, etc.

NOTE:
Install within 5 min. after applying liquid gasket.

Liquid gasket:
THREE BOND 1217G (Part No. K0877Y0100) or equivalent

Liquid gasket applying diameter:
1.0±0.2 mm (0.039±0.008 in)

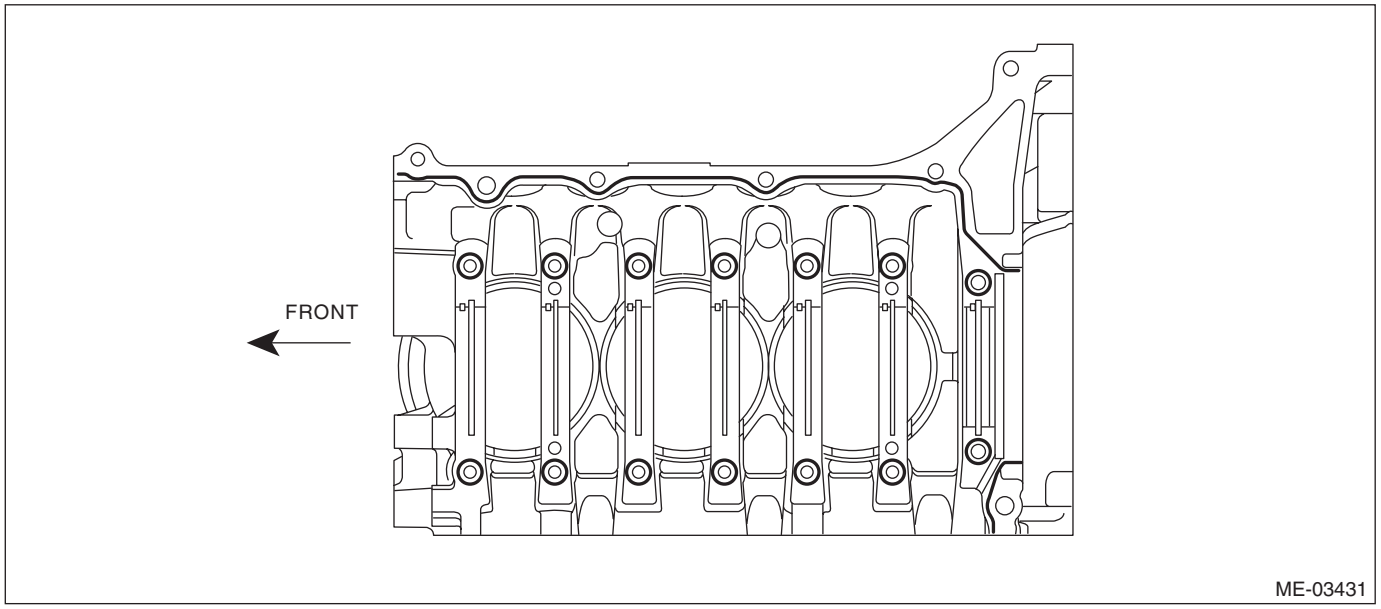

4) Attach cylinder block (RH) to cylinder block (LH).
5) Apply a coat of engine oil to the washer and bolt thread.

6) Tighten all bolts in the numerical order as shown in the figure.

Tightening torque:
12 N·m (1.2 kgf-m, 8.9 ft-lb)

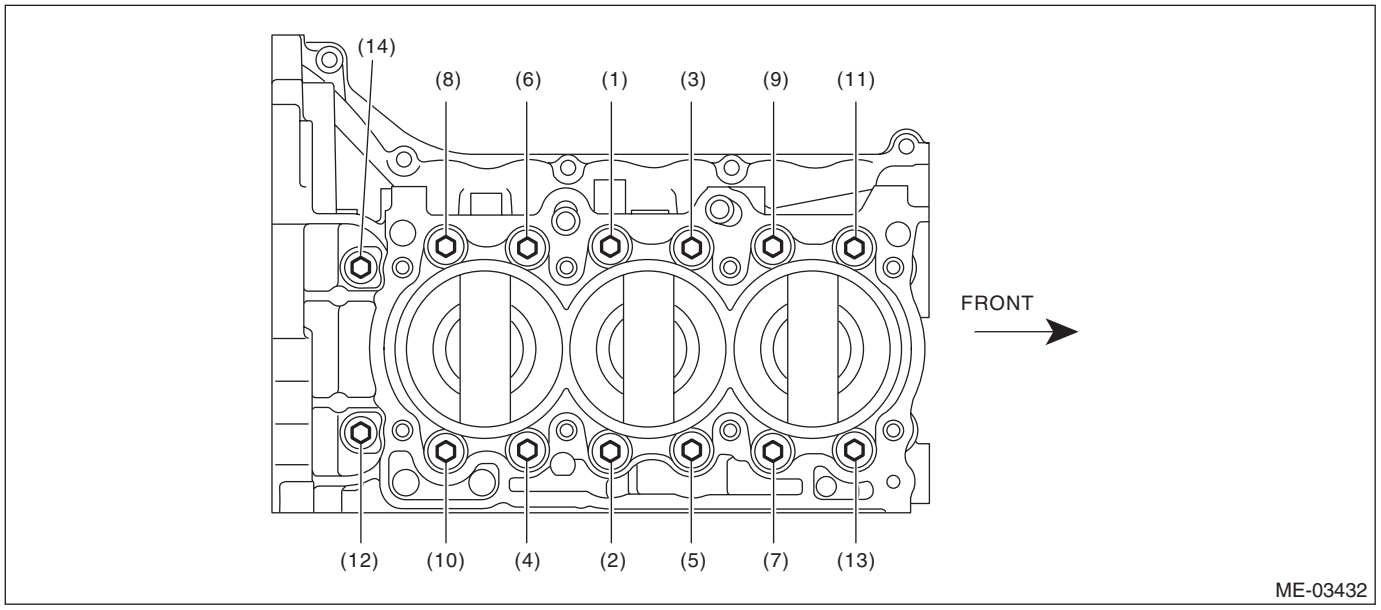

7) Retighten all bolts in the numerical order as shown in the figure.

Tightening torque:
18 N·m (1.8 kgf-m, 13.3 ft-lb)

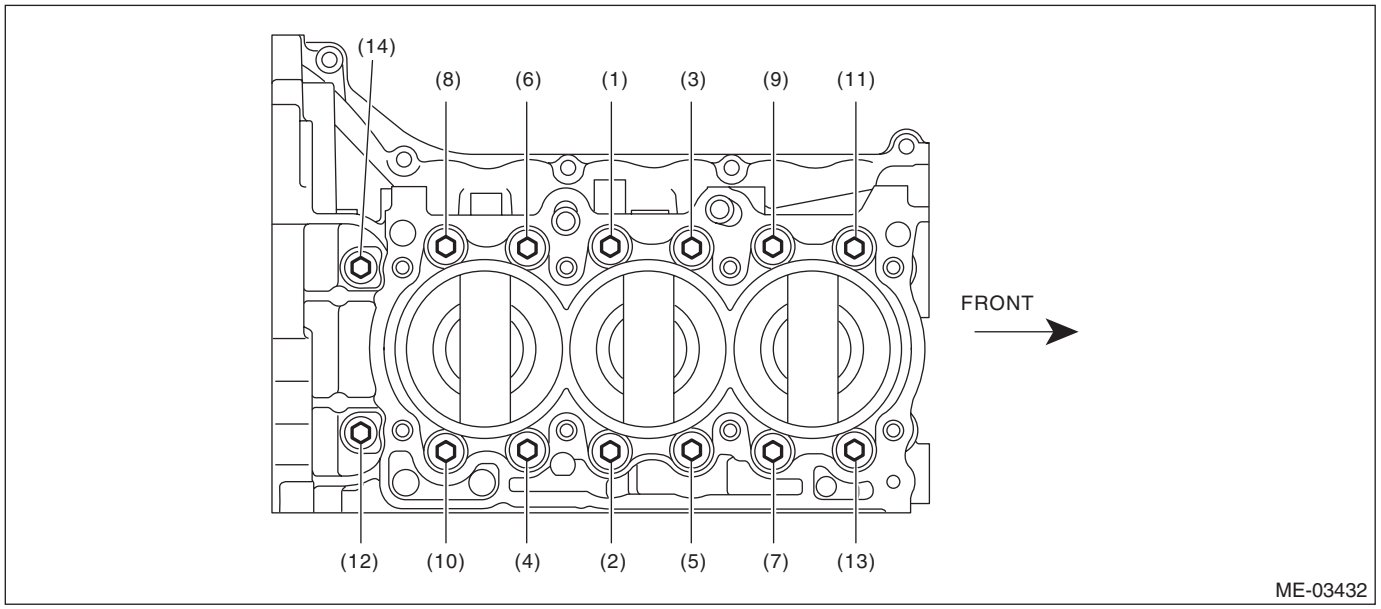

8) Tighten all bolts by 90° in numerical order as shown in the figure.

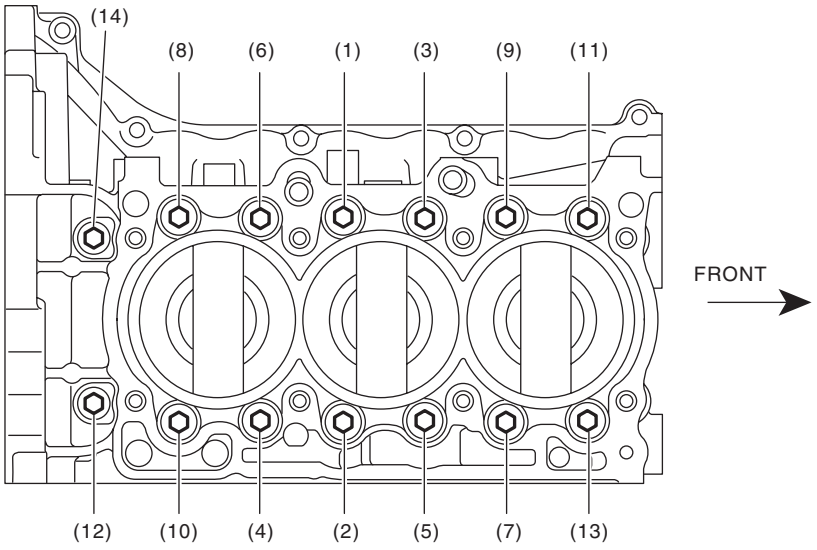

9) Install the upper bolt to cylinder block.

Tightening torque:
25 N·m (2.5 kgf-m, 18.4 ft-lb)

NOTE:
Remove any liquid gasket squeezed out onto the seal surface between the chain cover and oil pan upper, after tightening the cylinder block connecting bolts.

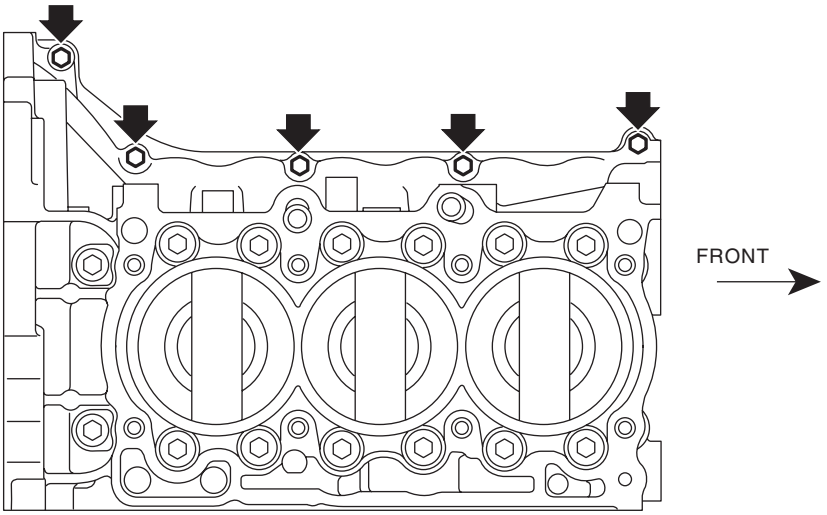

10) Apply a coat of engine oil to the oil seal inner periphery and outer periphery, and install the rear oil seal using ST1 and ST2.

NOTE:
Use a new rear oil seal.

ST1	499597100	CRANKSHAFT OIL SEAL GUIDE
ST2	499587200	CRANKSHAFT OIL SEAL INSTALLER

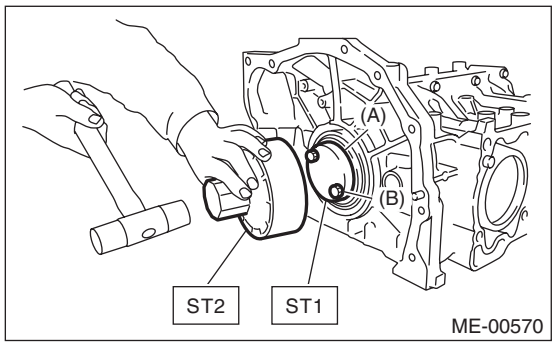

(A) Rear oil seal
(B) Drive plate installation bolt

11) Face the front of the engine up, standing the engine on one end.

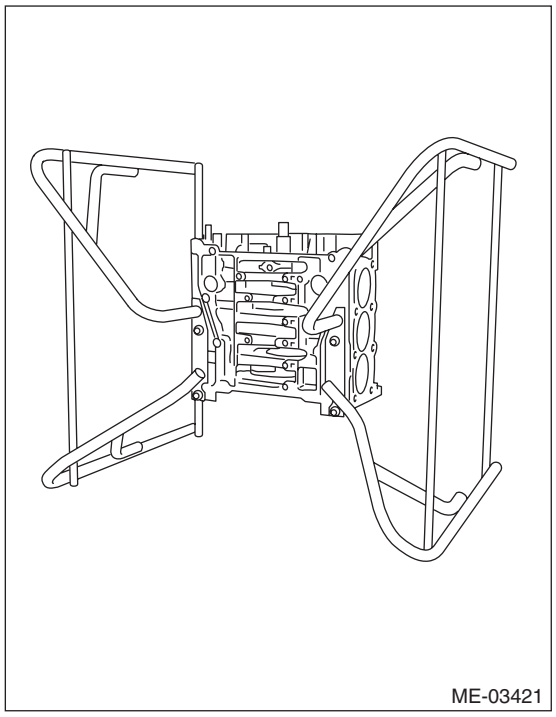

12) Attach the piston ring and oil ring to the piston.
(1) Position the top ring gap at (A) in the figure.
(2) Position the second ring gap at (B).

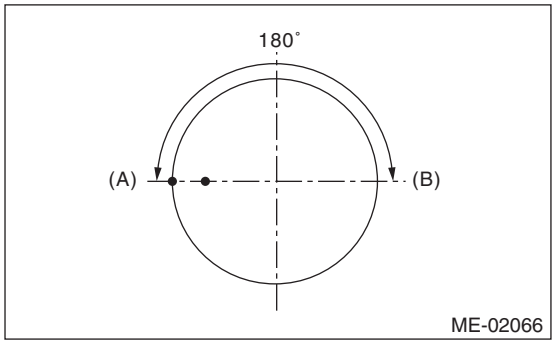

(3) Position the upper rail gap at (C) in the figure.
(4) Position the expander gap at (D) in the figure.
(5) Position the lower rail gap at (E) in the figure.

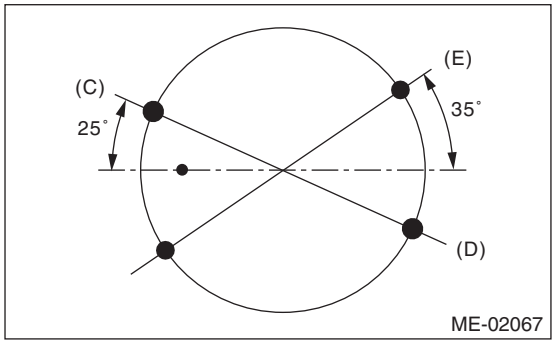

CAUTION:
• Make sure ring gaps do not face the same direction.
• Make sure ring gaps are not within the piston skirt area.
• Assemble so that the stamp mark N faces towards the top of the piston.

13) Install the #1 piston and connecting rod to the cylinder block.
(1) Apply engine oil to the outer circumference of the piston and in the cylinder block.
(2) Face the front mark of piston (A) towards the front of the engine, and set the piston to the ST.

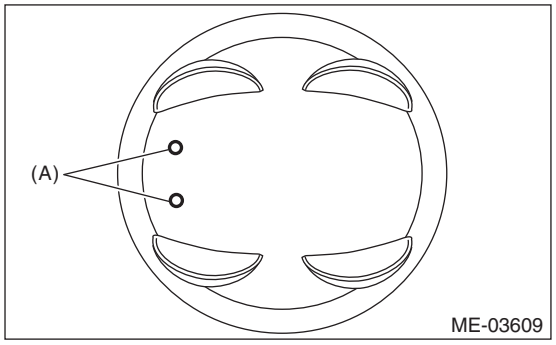

(3) Using ST, press-fit the piston into cylinder block.

NOTE:
When inserting the piston into the cylinder block, perform according to the items listed below.
• Insert while lightly tapping the top of the piston with the handle of a plastic hammer.
• Insert while making sure that the large end of the connecting rod does not scratch the cylinder liner.
• Insert while continually making sure that the large end of the connecting rod does not touch the crankshaft.

ST 398744300 PISTON GUIDE

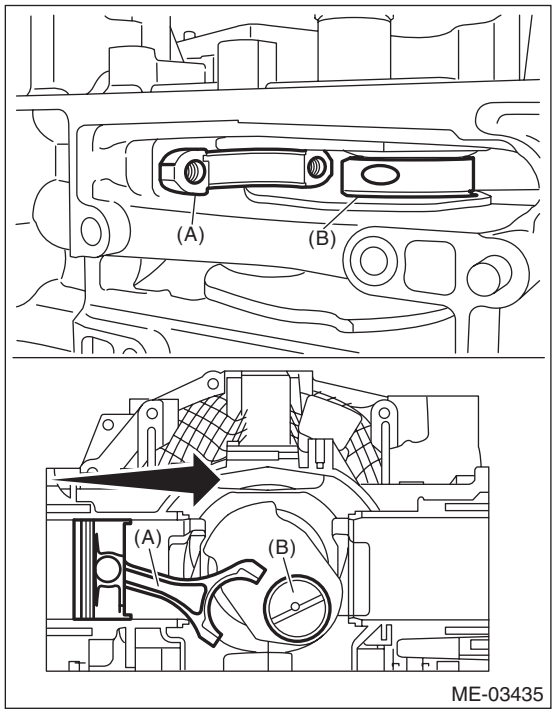

(A) #1 connecting rod
(B) Crank pin

(4) Using the ST, turn the crankshaft and match the positions of the crank pin and the large end of the connecting rod.

ST 18252AA000 CRANKSHAFT SOCKET

(5) Install the connecting rod cap.

Tightening torque:
60 N·m (6.1 kgf-m, 44.3 ft-lb)

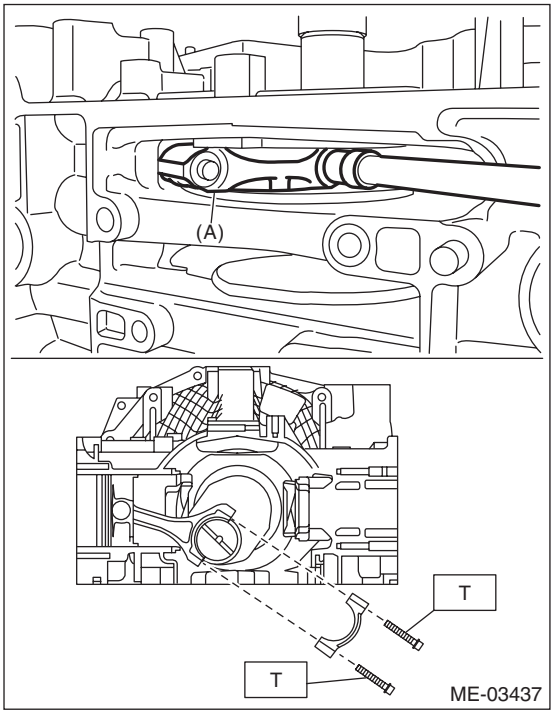

(A) #1 connecting rod

14) In the same procedures as for the #1 piston, install the piston and connecting rods to the cylinder block, in the order of #2, #3, #4, #5 and #6.

15) Install the O-ring to the underside of the cylinder block.

NOTE:
Use new O-rings.

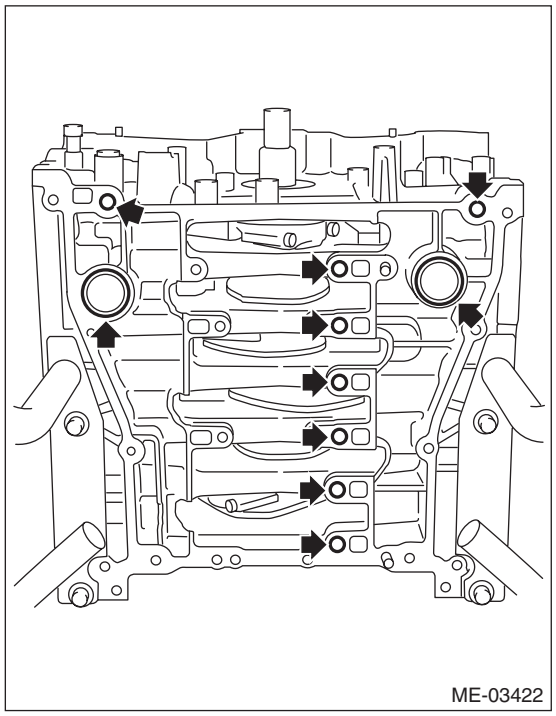

16) Apply liquid gasket to the mating surface of oil pan upper.

NOTE:
Install within 5 min. after applying liquid gasket.

Liquid gasket:
THREE BOND 1217G (Part No. K0877Y0100) or equivalent

Liquid gasket applying diameter:
5.0±1.0 mm (0.20±0.04 in)

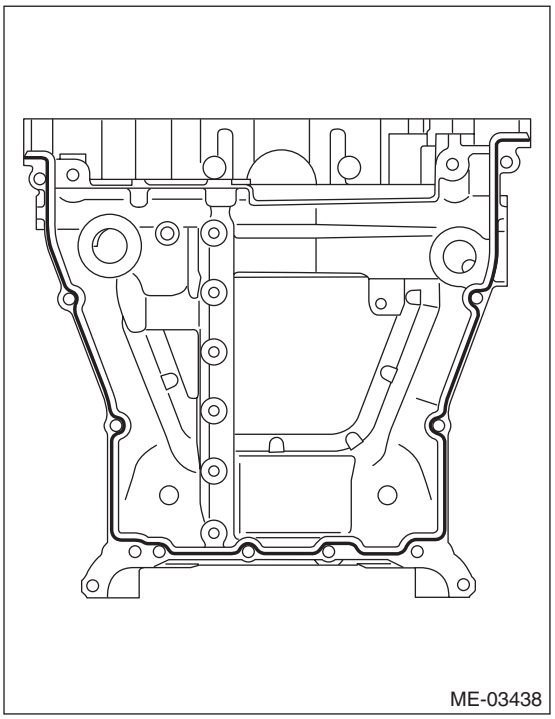

17) Temporarily tighten the oil pan upper.
18) Tighten the oil pan upper installing bolts in the numerical order as shown in the figure.

Tightening torque:
18 N·m (1.8 kgf-m, 13.3 ft-lb)

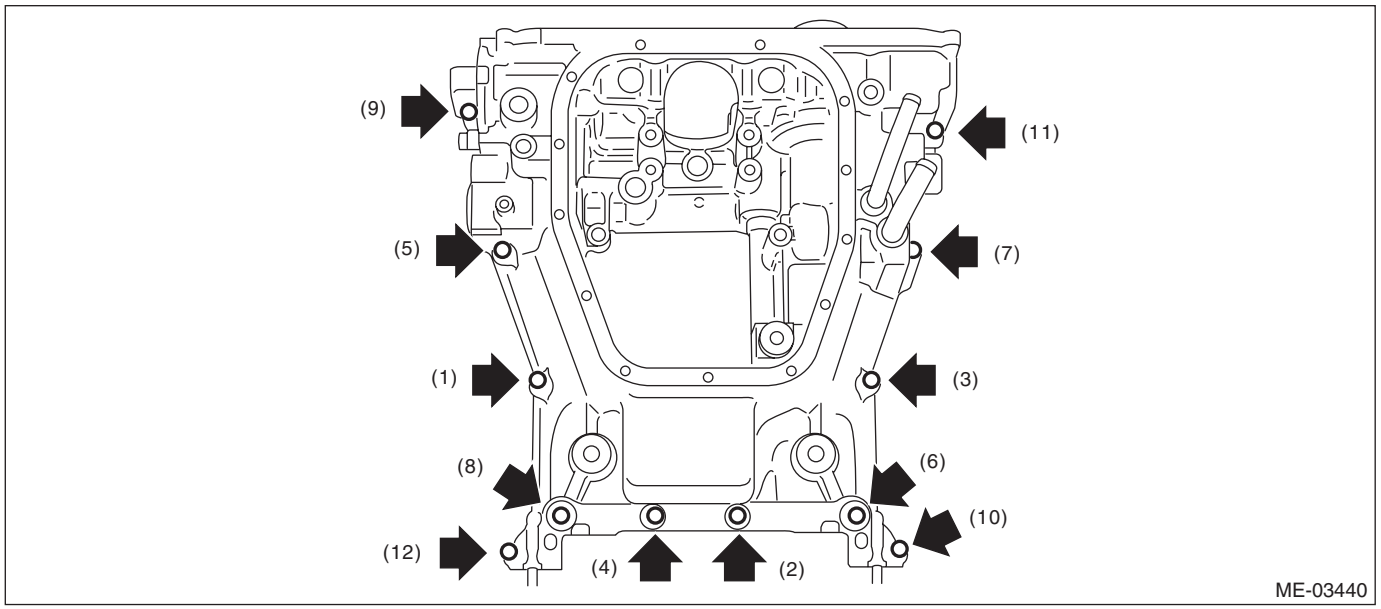

19) Install the thermostat and thermostat cover.

Tightening torque:
6.4 N·m (0.7 kgf-m, 4.7 ft-lb)

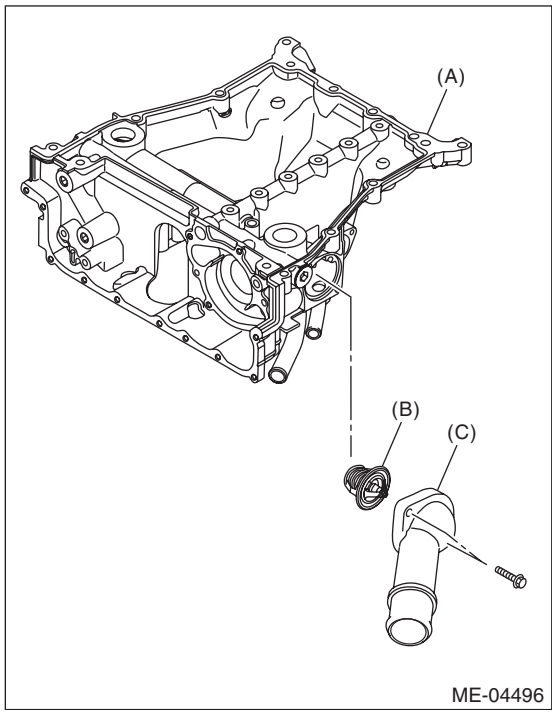

(A) Oil pan upper
(B) Thermostat
(C) Thermostat cover

20) Install the oil level switch. <Ref. to LU(H6DO)-17, INSTALLATION, Oil Level Switch.>
21) Install the oil pump. <Ref. to LU(H6DO)-13, INSTALLATION, Oil Pump.>

22) Tighten the oil cooler connector to install the oil cooler to the oil pan upper.

Tightening torque:
54 N·m (5.5 kgf-m, 39.8 ft-lb)

NOTE:
Use new O-rings.

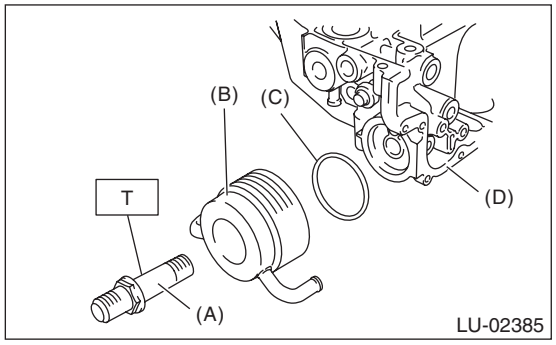

(A) Oil cooler connector
(B) Oil cooler
(C) O-ring
(D) Oil pan upper

23) Apply liquid gasket to the matching surface of oil pan lower.

NOTE:
Install within 5 min. after applying liquid gasket.

Liquid gasket:
THREE BOND 1217G (Part No. K0877Y0100) or equivalent

Liquid gasket applying diameter:
5.0±1.0 mm (0.20±0.04 in)

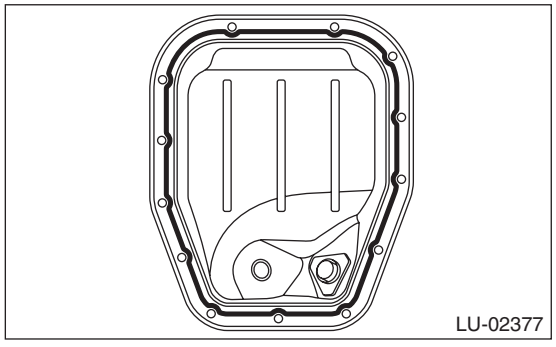

24) Tighten the oil pan lower installing bolts in the numerical order as shown in the figure.

Tightening torque:
6.4 N·m (0.7 kgf-m, 4.7 ft-lb)

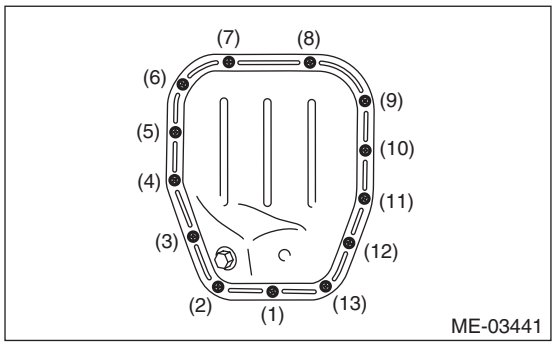

25) Install the crankshaft position sensor plate.

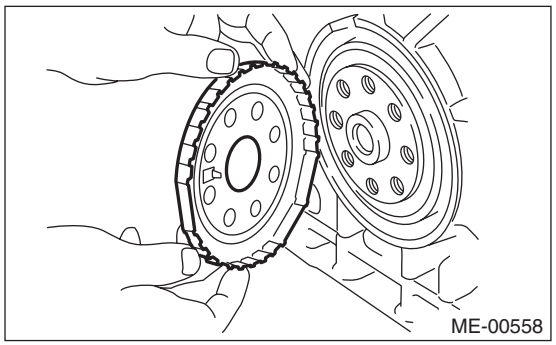

26) Install the crankshaft position sensor.

Tightening torque:
6.4 N·m (0.7 kgf-m, 4.7 ft-lb)

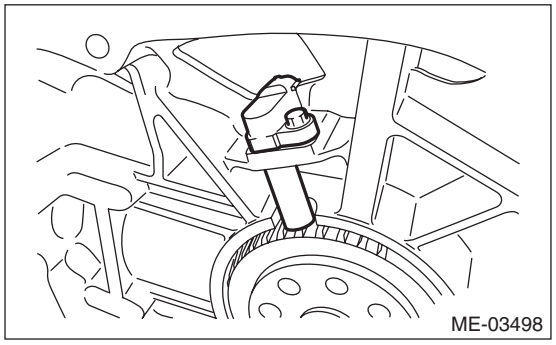

27) Install the drive plate. <Ref. to 5AT-64, INSTALLATION, Drive Plate.>
28) Install the cylinder head. <Ref. to ME(H6DO)-93, INSTALLATION, Cylinder Head.>
29) Install the camshaft. <Ref. to ME(H6DO)-85, INSTALLATION, Camshaft.>
30) Install the crank sprocket. <Ref. to ME(H6DO)-83, INSTALLATION, Crank Sprocket.>
31) Install the cam sprocket. <Ref. to ME(H6DO)-82, INSTALLATION, Cam Sprocket.>
32) Install the timing chain assembly. <Ref. to ME(H6DO)-69, INSTALLATION, Timing Chain Assembly.>
33) Install the chain cover. <Ref. to ME(H6DO)-56, INSTALLATION, Chain Cover.>

34) Install the crank pulley. <Ref. to ME(H6DO)-52, INSTALLATION, Crank Pulley.>
35) Install the engine to the vehicle. <Ref. to ME(H6DO)-40, INSTALLATION, Engine Assembly.>

C: DISASSEMBLY

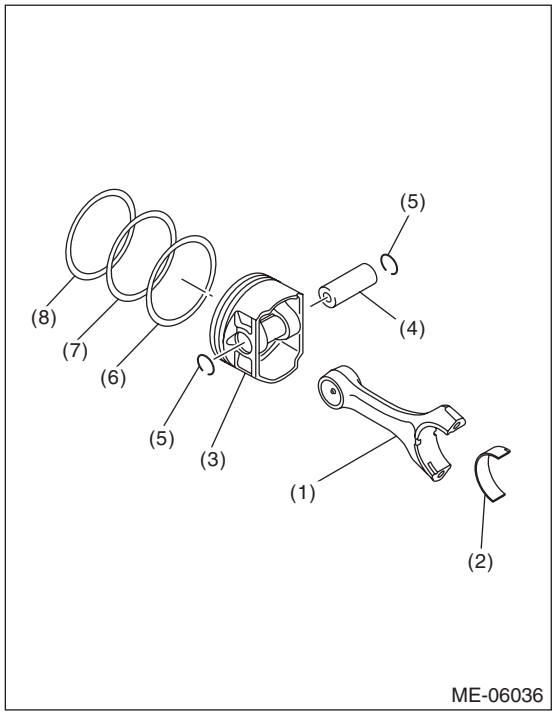

(1) Connecting rod
(2) Connecting rod bearing
(3) Piston
(4) Piston pin
(5) Circlip
(6) Oil ring
(7) Second ring
(8) Top ring

NOTE:
To prevent confusion of various parts, mark each part.
1) Remove the connecting rod bearing.
2) Remove the piston rings using piston ring expander.
3) Remove the oil ring by hand.

NOTE:
Arrange the removed piston rings in proper order, to prevent confusion.
4) Remove the circlip on one end from the piston using a flat tip screwdriver.

NOTE:
Be careful not damage the piston, by wrapping the tip of flat tip screwdriver with tape.
5) Remove the piston pin from the piston.
6) Separate the piston and connecting rod.

NOTE:
Mark the direction of front side to each connecting rod.
7) Remove the circlip on other end from the piston using a flat tip screwdriver.

NOTE:
Be careful not damage the piston, by wrapping the tip of flat tip screwdriver with tape.
8) Remove the plug and orifice from the cylinder block as necessary. <Ref. to ME(H6DO)-13, CYLINDER BLOCK, COMPONENT, General Description.>

D: ASSEMBLY

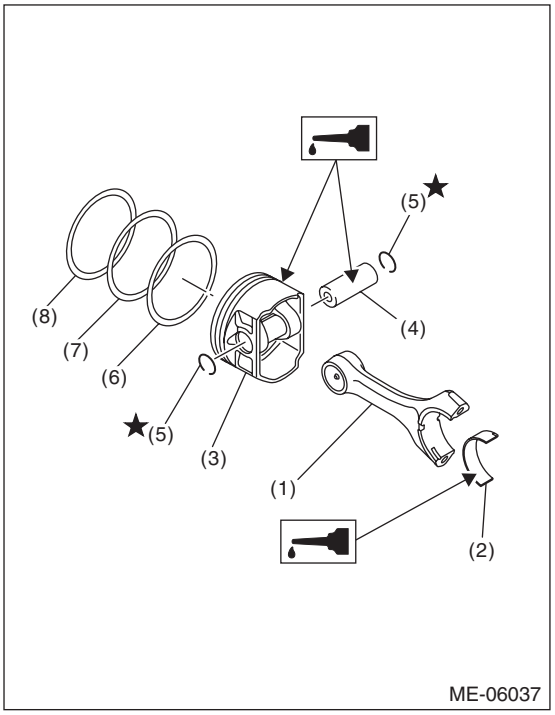

(1) Connecting rod
(2) Connecting rod bearing
(3) Piston
(4) Piston pin
(5) Circlip
(6) Oil ring
(7) Second ring
(8) Top ring

1) Apply engine oil to the surface of the connecting rod bearing. Attach the connecting rod bearing to the connecting rod.

2) Install the circlip on one end of the piston using a flat tip screwdriver.

NOTE:
- Be careful not damage the piston, by wrapping the tip of flat tip screwdriver with tape.
- Make sure the circlip is firmly inserted into the circlip groove.
- After installing the circlip, rotate the circlip so that its end part (a) and the cutout portion of circlip groove (b) do not match.

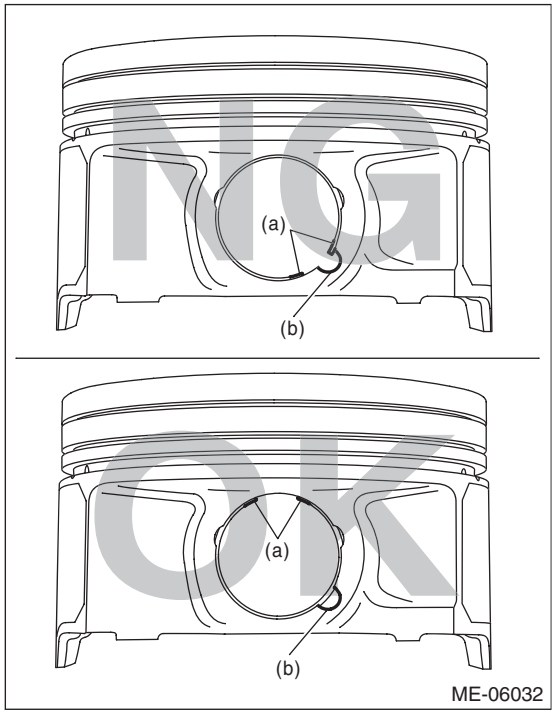

3) Set the piston to the connecting rod.

NOTE:
Align the front mark of piston and the connecting rod direction correctly as shown in the figure.

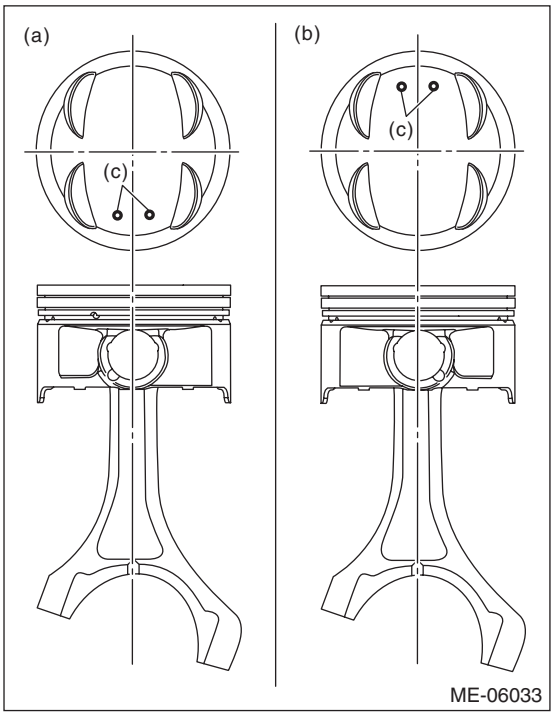

(a) RH side (#1, #3 and #5)
(b) LH side (#2, #4 and #6)
(c) Front mark

4) Apply engine oil to the piston pin, and attach the piston pin.

5) Install the circlip on the piston using a flat tip screwdriver.

NOTE:
• Be careful not damage the piston and piston pin, by wrapping the tip of flat tip screwdriver with tape.
• Make sure the circlip is firmly inserted into the circlip groove.
• After installing the circlip, rotate the circlip so that its end part (a) and the cutout portion of circlip groove (b) do not match.

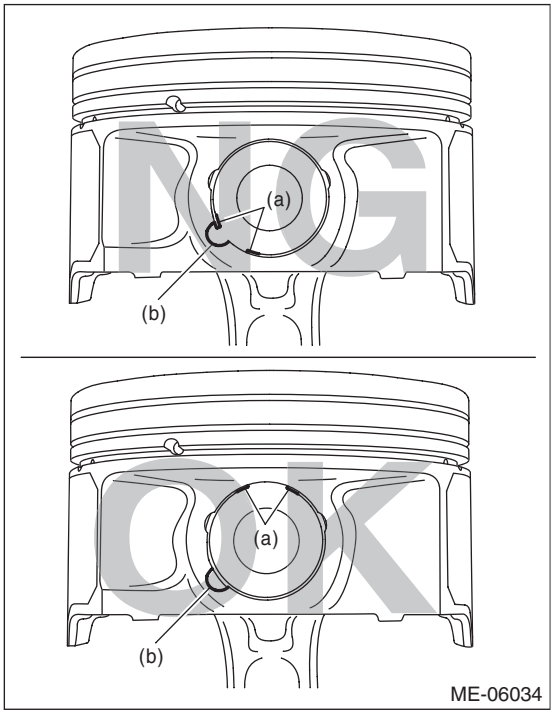

6) Install the oil ring upper rail, expander and lower rail by hand.
7) Install the second ring and top ring using piston ring expander.
8) Install the plug and orifice to the cylinder block as necessary. <Ref. to ME(H6DO)-13, CYLINDER BLOCK, COMPONENT, General Description.>

E: INSPECTION

1. CYLINDER BLOCK

1) Visually check for cracks or damage. Use liquid penetrant tester on the important sections for checking. Check that there are no marks of gas leaking or water leaking on gasket installing surface.
2) Check the oil passages for clogging.
3) Inspect the cylinder block surface that mates with cylinder head for warping by using a straight edge If the warpage exceeds limit, replace the cylinder block.

Warping limit:
0.020 mm (0.0008 in)

Standard height of cylinder block:
202 mm (7.95 in)

2. CYLINDER AND PISTON

1) The cylinder bore size is stamped on the front upper face of the cylinder block.

NOTE:
• Measurement should be performed at a temperature of 20°C (68°F).
• Standard sized pistons are classified into two grades, “A” and “B”. These grades should be used as guide lines in selecting a standard piston.

Standard diameter:
A: 92.005 — 92.015 mm (3.6222 — 3.6226 in)
B: 91.995 — 92.005 mm (3.6218 — 3.6222 in)

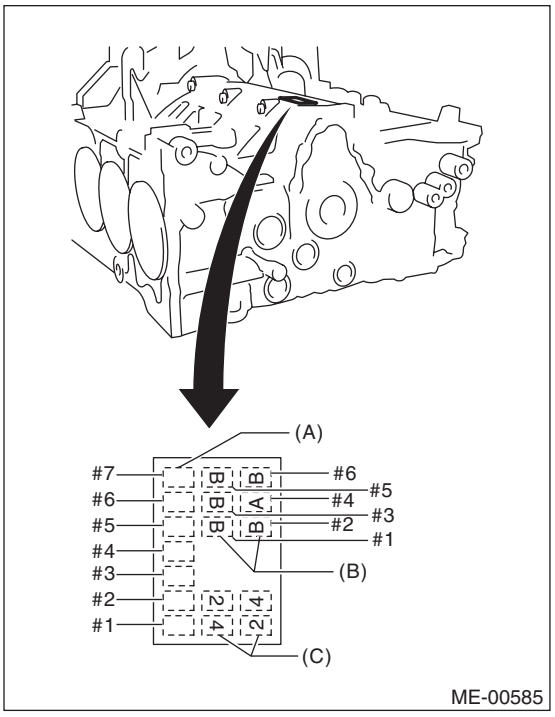

(A) Main journal size mark
(B) Cylinder bore size mark
(C) Cylinder block (RH) – (LH) combination mark

2) Measure inner diameter of each cylinder.
Measure the inner diameter of each cylinder in both the thrust and piston pin directions at the heights as shown in the figure, using a cylinder bore gauge.

NOTE:
Measurement should be performed at a temperature of 20°C (68°F).

Cylindricality:
Limit
0.030 mm (0.0012 in)

Out-of-roundness:
Limit
0.010 mm (0.0004 in)

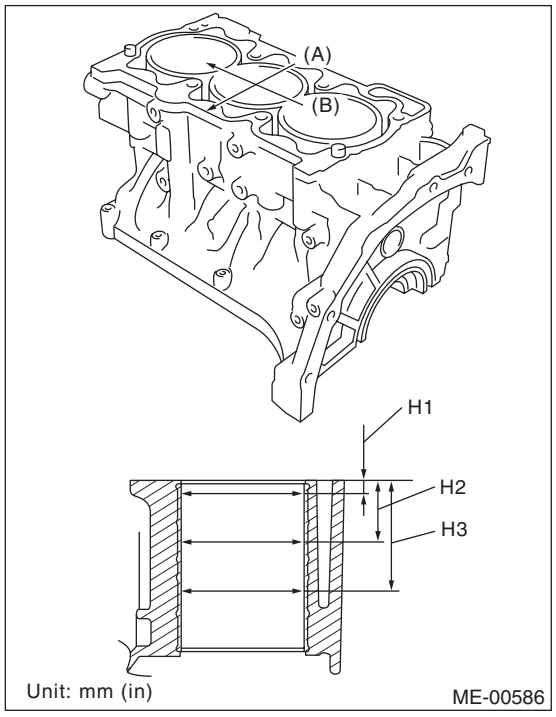

(A) Thrust direction
(B) Piston pin direction
H1: 10 mm (0.39 in)
H2: 45 mm (1.77 in)
H3: 80 mm (3.15 in)

3) When the piston is to be replaced due to general or cylinder wear, select a suitable sized piston by measuring the piston clearance.
4) Measure outer diameter of each piston.
Measure the outer diameter of each piston at the height as shown in the figure. (Thrust direction)

NOTE:
Measurement should be performed at a temperature of 20°C (68°F).

Piston grade point H:
37.3 mm (1.4685 in)

Piston outer diameter:
Standard
A: 92.005 — 92.015 mm (3.6222 — 3.6226 in)
B: 91.995 — 92.005 mm (3.6218 — 3.6222 in)
0.25 mm (0.0098 in) oversize
92.245 — 92.265 mm (3.6317 — 3.6325 in)
0.50 mm (0.0197 in) oversize
92.495 — 92.515 mm (3.6415 — 3.6423 in)

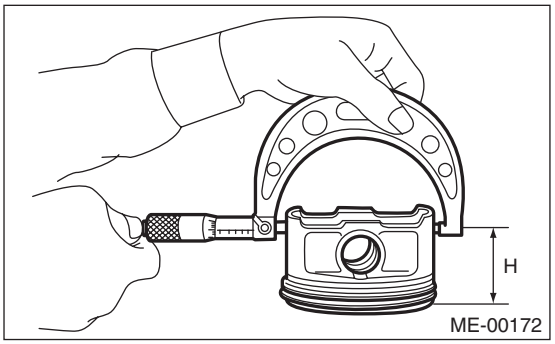

5) Calculate the clearance between cylinder and piston.

NOTE:
Measurement should be performed at a temperature of 20°C (68°F).

Clearance between cylinder and piston at 20°C (68°F):
Standard
–0.010 — 0.010 mm (–0.0004 — 0.0004 in)

6) Boring and honing:
(1) If any of the measured value of cylindricality, out-of-roundness or cylinder-to-piston clearance is out of standard or if there is any damage on the cylinder wall, rebore it to replace with an oversize piston.

CAUTION:
When any of the cylinders needs reboring, all other cylinders must be bored at the same time, and replaced with oversize pistons.

(2) If the cylinder inner diameter exceeds the limit after boring and honing, replace the cylinder block.

NOTE:
Immediately after reboring, the cylinder diameter may differ from its real diameter due to temperature rise. Thus, when measuring the cylinder diameter, wait until it has cooled to room temperature.

Cylinder inner diameter boring limit (diameter):
To 92.515 mm (3.6717 in)

3. PISTON AND PISTON PIN

1) Check the piston and piston pin for damage, cracks or wear. Replace if faulty.
2) Check the piston ring groove for wear or damage. Replace if faulty.
3) Make sure that the piston pin can be inserted into the piston pin hole with a thumb at 20°C (68°F). Replace if faulty.

Clearance between piston pin hole and piston pin:

Standard

0.004 — 0.008 mm (0.0002 — 0.0003 in)

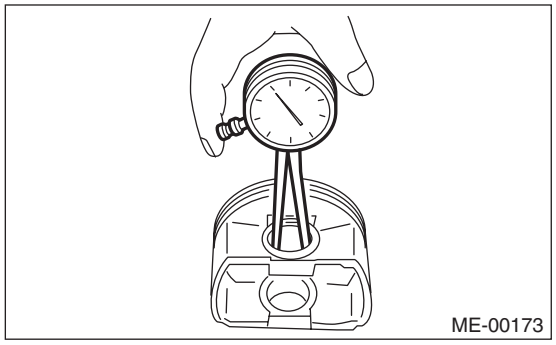

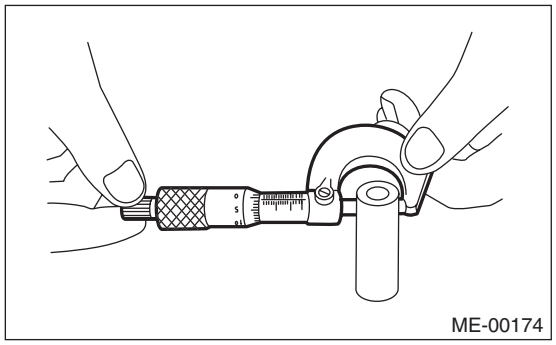

4) Check the snap ring installation groove (A) on the piston for burr. If necessary, remove burr from the groove so that the piston pin can lightly move.

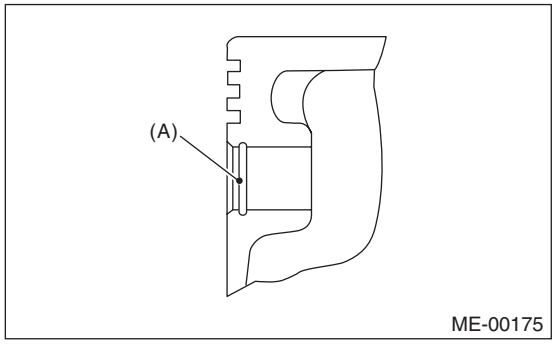

5) Check the piston pin snap ring for distortion, cracks and wear.

4. PISTON RING

1) If the piston ring is broken, damaged or worn, or if its tension is insufficient, or when the piston is replaced, replace the piston ring with a new part of the same size as piston.

NOTE:
• The top ring and second ring have the mark to determine the direction for installing. When installing the ring to piston, face marks to the top side.
• Oil ring consists of the upper rail, expander and lower rail. When installing to the piston, be careful of the direction of each rail.

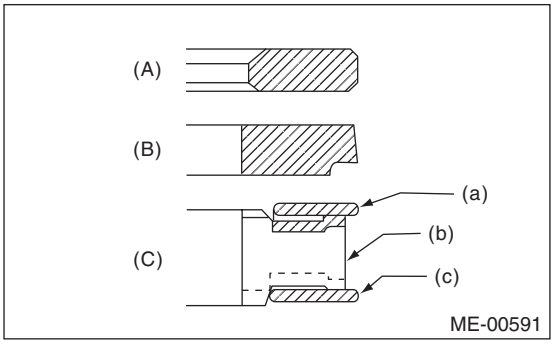

(A) Top ring
(B) Second ring
(C) Oil ring
(a) Upper rail
(b) Expander
(c) Lower rail

2) Squarely place the piston ring and oil ring in cylinder, and measure the piston ring gap with a thickness gauge.

		Standard mm (in)
Piston ring gap	Top ring	0.20 — 0.35 (0.0079 — 0.0138)
	Second ring	0.40 — 0.50 (0.0157 — 0.0197)
	Oil ring	0.20 — 0.50 (0.0079 — 0.0197)

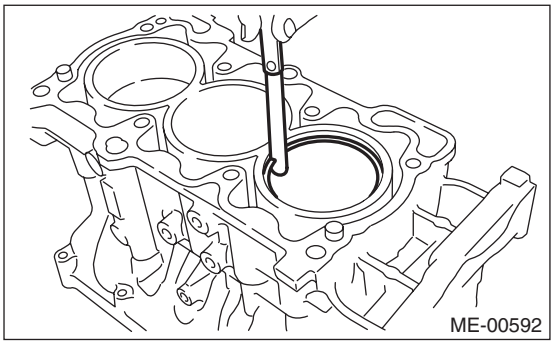

3) Fit the piston ring straight into the piston ring groove, then measure the clearance between piston ring and piston ring groove with a thickness gauge.

NOTE:
Before measuring the clearance, clean the piston ring groove and piston ring.

		Standard mm (in)
Clearance between piston ring and piston ring groove	Top ring	0.040 — 0.080 (0.0016 — 0.0031)
	Second ring	0.030 — 0.070 (0.0012 — 0.0028)
Clearance between oil ring and oil ring groove		0.065 — 0.165 (0.0026 — 0.0065)

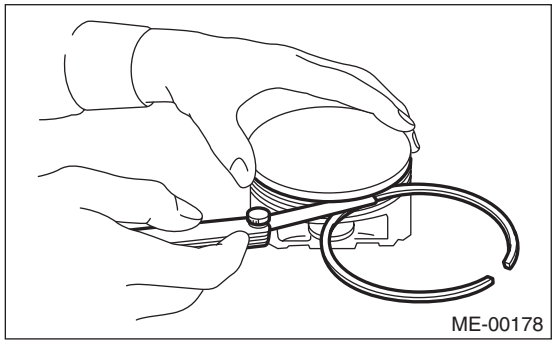
ME-00178

5. CONNECTING ROD

1) Replace the connecting rod, if the large or small end thrust surface is damaged.
2) Check for bend or twist using a connecting rod aligner. Replace the connecting rod if the bend or twist exceeds the limit.

Limit of bend or twist per 100 mm (3.94 in) in length:
0.10 mm (0.0039 in)

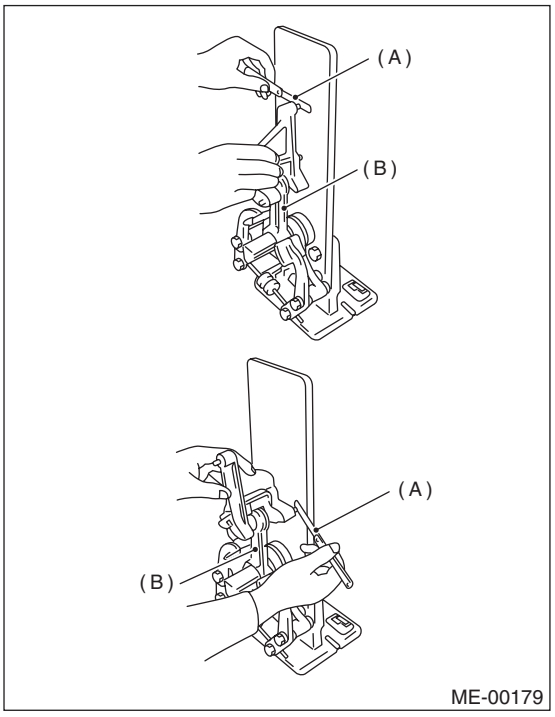

ME-00179

(A) Thickness gauge
(B) Connecting rod

3) Install the connecting rod with bearings attached to the crankshaft, and using a thickness gauge, measure the thrust clearance. If the thrust clearance exceeds the standard or uneven wear is found, replace the connecting rod.

Connecting rod thrust clearance:
Standard
0.070 — 0.330 mm (0.0028 — 0.0130 in)

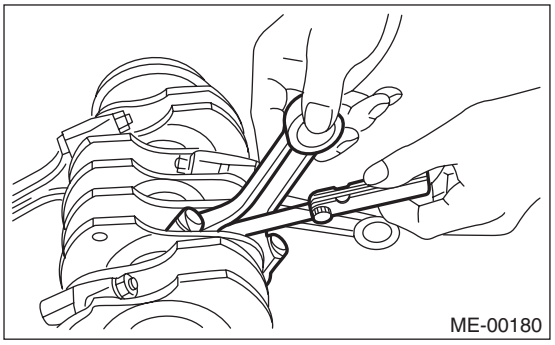
ME-00180

4) Inspect the connecting rod bearing for scar, peeling, seizure, melting, wear, etc.

5) Measure the oil clearance on each connecting rod bearing using plastigauge. If any oil clearance is not within the standard, replace the defective bearing with a new part of standard size or undersize as necessary.

Connecting rod oil clearance:
Standard
0.016 — 0.043 mm (0.0006 — 0.0017 in)

Unit: mm (in)

Bearing	Bearing size (Thickness at center)	Outer diameter of crank pin
Standard	1.489 — 1.505 (0.0586 — 0.0593)	51.976 — 52.000 (2.0463 — 2.0472)
0.03 (0.0012) Undersize	1.507 — 1.515 (0.0593 — 0.0596)	51.954 — 51.970 (2.0454 — 2.0461)
0.05 (0.0020) Undersize	1.517 — 1.525 (0.0597 — 0.0600)	51.934 — 51.950 (2.0446 — 2.0453)
0.25 (0.0098) Undersize	1.617 — 1.625 (0.0637 — 0.0640)	51.734 — 51.750 (2.0368 — 2.0374)

6) Inspect the bushing at connecting rod small end, and replace with a new part if worn or damaged.
7) Measure the piston pin clearance at connecting rod small end. If the measured value is not within the standard, replace it with a new part.

Clearance between piston pin and bushing:
Standard
0 — 0.022 mm (0 — 0.0009 in)

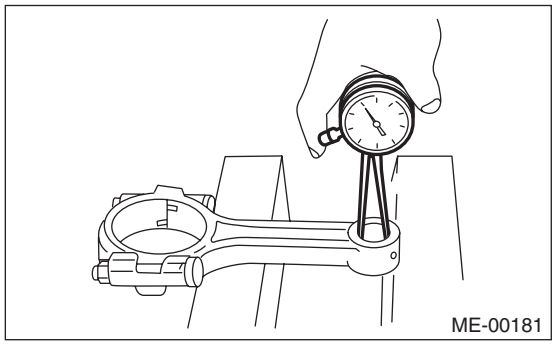
ME-00181

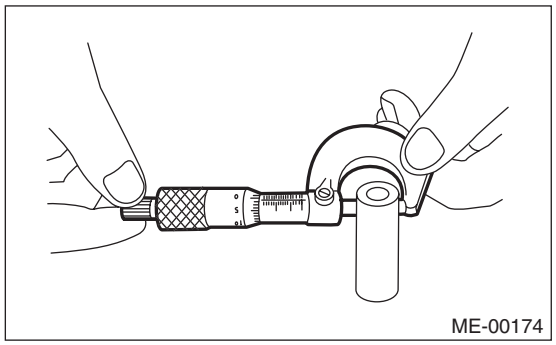
ME-00174

8) The replacement procedure for the connecting rod small end bushing is as follows.
(1) Remove the bushing from connecting rod with ST and press.
(2) Press the bushing with the ST after applying oil on the periphery of new bushing.

ST 18350AA000 CONNECTING ROD BUSHING REMOVER AND INSTALLER

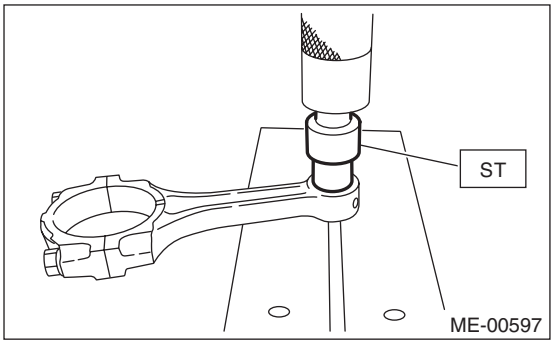

ME-00597

(3) Make two 3 mm (0.12 in) holes in the pressed bushing to match the pre-manufactured holes on the connecting rod, then ream the inside of the bushing.
(4) After completion of reaming, clean the bushing to remove chips.

6. CRANKSHAFT AND CRANKSHAFT BEARING

1) Clean the crankshaft completely, and check it for cracks using liquid penetrant tester. If defective, replace the crankshaft.
2) Check the crankshaft for bend, and repair or replace if needed. If it exceeds the limit, correct or replace it.

NOTE:
If a suitable V-block is not available, using the #1 and #7 crankshaft bearings on cylinder block, position the crankshaft on cylinder block. Then, measure the crankshaft bend using a dial gauge.

Crankshaft bend limit:
0.035 mm (0.0014 in)

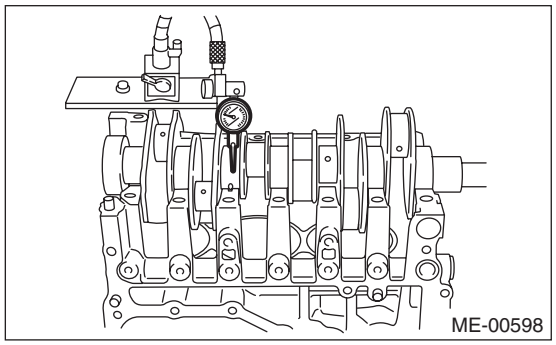

3) Inspect the crank journal and crank pin for wear. If they are not within the standard, replace the bearing with a suitable (undersize) one, and replace or grind to correct the crankshaft as necessary. When grinding the crank journal or crank pin, finish them to the specified dimensions according to the undersize bearing to be used.

Crank pin:
Out-of-roundness
Limit
0.005 mm (0.0002 in)
Cylindricality
Limit
0.006 mm (0.0002 in)
Grinding limit (dia.)
To 51.734 mm (2.0368 in)

Crank journal:
Out-of-roundness
Limit
0.005 mm (0.0002 in)
Cylindricality
Limit
0.006 mm (0.0002 in)
Grinding limit (dia.)
To 63.742 mm (2.5095 in)

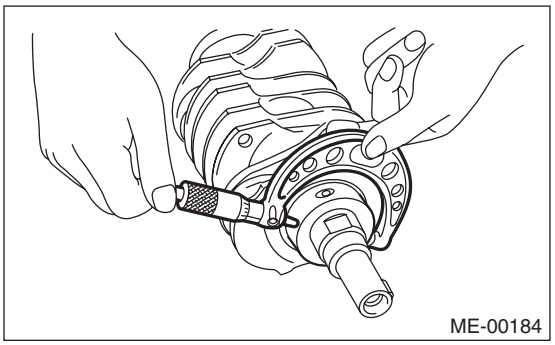

Unit: mm (in)

		Crank journal diameter			Crank pin outer diameter
		#1, #3, #5	#7	#2, #4, #6	
Standard	Journal O.D.	63.992 — 64.016 (2.5194 — 2.5203)			51.976 — 52.000 (2.0463 — 2.0472)
	Bearing size (Thickness at center)	1.996 — 2.013 (0.0786 — 0.0793)	1.992 — 2.009 (0.0784 — 0.0791)	1.996 — 2.013 (0.0786 — 0.0793)	1.489 — 1.505 (0.0586 — 0.0593)
0.03 (0.0012) Undersize	Journal O.D.	63.962 — 63.978 (2.5182 — 2.5188)			51.954 — 51.970 (2.0454 — 2.0461)
	Bearing size (Thickness at center)	2.011 — 2.014 (0.0792 — 0.0793)	2.011 — 2.014 (0.0792 — 0.0793)	2.015 — 2.018 (0.0793 — 0.0794)	1.507 — 1.515 (0.0593 — 0.0596)
0.05 (0.0020) Undersize	Journal O.D.	63.942 — 63.958 (2.5174 — 2.5180)			51.934 — 51.950 (2.0446 — 2.0453)
	Bearing size (Thickness at center)	2.021 — 2.024 (0.0796 — 0.0797)	2.021 — 2.024 (0.0796 — 0.0797)	2.025 — 2.028 (0.0797 — 0.0798)	1.517 — 1.525 (0.0597 — 0.0600)
0.25 (0.0098) Undersize	Journal O.D.	63.742 — 63.758 (2.5095 — 2.5102)			51.734 — 51.750 (2.0368 — 2.0374)
	Bearing size (Thickness at center)	2.121 — 2.124 (0.0835 — 0.0836)	2.121 — 2.124 (0.0835 — 0.0836)	2.125 — 2.128 (0.0837 — 0.0838)	1.617 — 1.625 (0.0637 — 0.0640)

4) Use a thickness gauge to measure the thrust clearance of crankshaft at center bearing. If clearance exceeds the standard, replace the bearing.

Crankshaft thrust clearance:
Standard
0.030 — 0.115 mm (0.0012 — 0.0045 in)

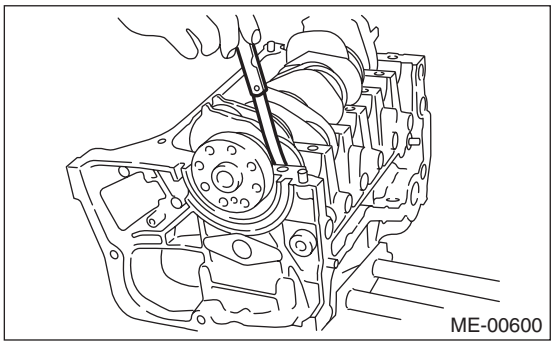

5) Inspect individual crankshaft bearings for signs of flaking, seizure, melting and wear.
6) Measure the oil clearance on each crankshaft bearing using plastigauge. If the measured value is out of standard, replace the defective bearing with an undersize one, and replace or grind to correct the crankshaft as necessary.

Crankshaft oil clearance:
Standard
0.010 — 0.030 mm (0.0004 — 0.0012 in)

21.Oil Flow Control Solenoid Valve

A: REMOVAL

Specifications for the oil flow control solenoid valve are included in the FU section. <Ref. to FU(H6DO)-47, REMOVAL, Oil Flow Control Solenoid Valve.>

B: INSTALLATION

Specifications for the oil flow control solenoid valve are included in the FU section. <Ref. to FU(H6DO)-47, INSTALLATION, Oil Flow Control Solenoid Valve.>

22.Intake and Exhaust Valve

A: SPECIFICATION

Refer to “Cylinder Head” for removal and installation procedures of the intake and exhaust valves. <Ref. to ME(H6DO)-92, REMOVAL, Cylinder Head.> <Ref. to ME(H6DO)-93, INSTALLATION, Cylinder Head.>

23.Piston

A: SPECIFICATION

Refer to “Cylinder Block” for removal and installation procedures of pistons. <Ref. to ME(H6DO)-104, REMOVAL, Cylinder Block.> <Ref. to ME(H6DO)-110, INSTALLATION, Cylinder Block.>

24.Connecting Rod

A: SPECIFICATION

Refer to “Cylinder Block” for removal and installation procedures of connecting rods. <Ref. to ME(H6DO)-104, REMOVAL, Cylinder Block.> <Ref. to ME(H6DO)-110, INSTALLATION, Cylinder Block.>

25.Crankshaft

A: SPECIFICATION

Refer to “Cylinder Block” for removal and installation procedures of the crankshaft. <Ref. to ME(H6DO)-104, REMOVAL, Cylinder Block.> <Ref. to ME(H6DO)-110, INSTALLATION, Cylinder Block.>

26.Engine Trouble in General

A: INSPECTION

NOTE:
The “RANK” shown in the chart shows the possibilities of the cause of trouble in order from “Very often” to “Rarely”.
A — Very often
B — Sometimes
C — Rarely

Symptoms	Problem parts etc.	Possible cause	RANK
1. Engine does not start.			
1) Starter does not turn.	Starter	Defective battery-to-starter harness	B
		Defective starter switch	C
		Defective inhibitor switch	C
		Defective starter	B
	Battery	Improper connection of terminal	A
		Run-down battery	A
		Defective charging system	B
	Friction	Seizure of crankshaft and connecting rod bearing	C
		Seized camshaft	C
		Seized or stuck piston and cylinder	C
2) Initial combustion does not occur.	Starter	Defective starter	C
	Engine control system <Ref. to EN(H6DO)(diag)-2, Basic Diagnostic Procedure.>		A
	Fuel line	Defective fuel pump and relay	A
		Clogged fuel line	C
		Lack of fuel or insufficient fuel	B
	Timing chain	Trouble	B
		Defective timing	B
	Compression	Incorrect valve clearance	C
		Loosened spark plug or defective gasket	C
		Loosened cylinder head bolt or defective gasket	C
		Improper valve sealing	C
		Defective valve stem	C
		Worn or broken valve spring	B
		Worn or stuck piston rings, cylinder and piston	C
		Incorrect valve timing	B
		Improper engine oil (low viscosity)	B

Symptoms	Problem parts etc.	Possible cause	RANK
3) Initial combustion occurs.	Engine control system <Ref. to EN(H6DO)(diag)-2, Basic Diagnostic Procedure.>		A
	Intake system	Defective intake manifold gasket	B
		Defective throttle body gasket	B
	Fuel line	Defective fuel pump and relay	C
		Clogged fuel line	C
		Lack of fuel or insufficient fuel	B
	Timing chain	Trouble	B
		Defective timing	B
	Compression	Incorrect valve clearance	C
		Loosened spark plug or defective gasket	C
		Loosened cylinder head bolt or defective gasket	C
		Improper valve sealing	C
		Defective valve stem	C
		Worn or broken valve spring	B
		Worn or stuck piston rings, cylinder and piston	C
		Incorrect valve timing	B
		Improper engine oil (low viscosity)	B
4) Engine stalls after initial combustion.	Engine control system <Ref. to EN(H6DO)(diag)-2, Basic Diagnostic Procedure.>		A
	Intake system	Loosened or cracked intake duct	B
		Loosened or cracked PCV hose	C
		Loosened or cracked vacuum hose	C
		Defective intake manifold gasket	B
		Defective throttle body gasket	B
		Dirty air cleaner element	C
	Fuel line	Clogged fuel line	C
		Lack of fuel or insufficient fuel	B
	Timing chain	Trouble	B
		Defective timing	B
	Compression	Incorrect valve clearance	C
		Loosened spark plug or defective gasket	C
		Loosened cylinder head bolt or defective gasket	C
		Improper valve sealing	C
		Defective valve stem	C
		Worn or broken valve spring	B
		Worn or stuck piston rings, cylinder and piston	C
		Incorrect valve timing	B
		Improper engine oil (low viscosity)	B

Symptoms	Problem parts etc.	Possible cause	RANK
2. Rough idle and engine stall	Engine control system <Ref. to EN(H6DO)(diag)-2, Basic Diagnostic Procedure.>		A
	Intake system	Loosened or cracked intake duct	A
		Loosened or cracked PCV hose	A
		Loosened or cracked vacuum hose	A
		Defective intake manifold gasket	B
		Defective throttle body gasket	B
		Defective PCV valve	C
		Loosened oil filler cap	B
		Dirty air cleaner element	C
	Fuel line	Defective fuel pump and relay	C
		Clogged fuel line	C
		Lack of fuel or insufficient fuel	B
	Timing chain	Defective timing	C
	Compression	Incorrect valve clearance	B
		Loosened spark plug or defective gasket	B
		Loosened cylinder head bolt or defective gasket	B
		Improper valve sealing	B
		Defective valve stem	C
		Worn or broken valve spring	B
		Worn or stuck piston rings, cylinder and piston	B
		Incorrect valve timing	A
		Improper engine oil (low viscosity)	B
	Lubrication system	Incorrect oil pressure	B
		Defective rocker cover gasket	C
	Cooling system	Over-heating	C
	Others	Evaporative emission control system malfunction	A
		Stuck or damaged throttle valve	B

Symptoms	Problem parts etc.	Possible cause	RANK
3. Low output, hesitation and poor acceleration	Engine control system <Ref. to EN(H6DO)(diag)-2, Basic Diagnostic Procedure.>		A
	Intake system	Loosened or cracked intake duct	A
		Loosened or cracked PCV hose	A
		Loosened or cracked vacuum hose	B
		Defective intake manifold gasket	B
		Defective throttle body gasket	B
		Defective PCV valve	B
		Loosened oil filler cap	B
		Dirty air cleaner element	A
	Fuel line	Defective fuel pump and relay	B
		Clogged fuel line	B
		Lack of fuel or insufficient fuel	C
	Timing chain	Defective timing	B
	Compression	Incorrect valve clearance	B
		Loosened spark plug or defective gasket	B
		Loosened cylinder head bolt or defective gasket	B
		Improper valve sealing	B
		Defective valve stem	C
		Worn or broken valve spring	B
		Worn or stuck piston rings, cylinder and piston	C
		Incorrect valve timing	A
		Improper engine oil (low viscosity)	B
	Lubrication system	Incorrect oil pressure	B
		Defective rocker cover gasket	C
	Cooling system	Over-heating	C
		Over-cooling	C
	Others	Evaporative emission control system malfunction	A

Symptoms	Problem parts etc.	Possible cause	RANK
4. Surging	Engine control system <Ref. to EN(H6DO)(diag)-2, Basic Diagnostic Procedure.>		A
	Intake system	Loosened or cracked intake duct	A
		Loosened or cracked PCV hose	A
		Loosened or cracked vacuum hose	A
		Defective intake manifold gasket	B
		Defective throttle body gasket	B
		Defective PCV valve	B
		Loosened oil filler cap	B
		Dirty air cleaner element	B
	Fuel line	Defective fuel pump and relay	B
		Clogged fuel line	B
		Lack of fuel or insufficient fuel	C
	Timing chain	Defective timing	B
	Compression	Incorrect valve clearance	B
		Loosened spark plug or defective gasket	C
		Loosened cylinder head bolt or defective gasket	C
		Improper valve sealing	C
		Defective valve stem	C
		Worn or broken valve spring	C
		Worn or stuck piston rings, cylinder and piston	C
		Incorrect valve timing	A
		Improper engine oil (low viscosity)	B
	Cooling system	Over-heating	B
	Others	Evaporative emission control system malfunction	C
5. Engine does not return to idle.	Engine control system <Ref. to EN(H6DO)(diag)-2, Basic Diagnostic Procedure.>		A
	Intake system	Loosened or cracked vacuum hose	A
	Others	Stuck or damaged throttle valve	A
6. Dieseling (Run-on)	Engine control system <Ref. to EN(H6DO)(diag)-2, Basic Diagnostic Procedure.>		A
	Cooling system	Over-heating	B
	Others	Evaporative emission control system malfunction	B
7. After burning in exhaust system	Engine control system <Ref. to EN(H6DO)(diag)-2, Basic Diagnostic Procedure.>		A
	Intake system	Loosened or cracked intake duct	C
		Loosened or cracked PCV hose	C
		Loosened or cracked vacuum hose	B
		Defective PCV valve	B
		Loosened oil filler cap	C
	Timing chain	Defective timing	B
	Compression	Incorrect valve clearance	B
		Loosened spark plug or defective gasket	C
		Loosened cylinder head bolt or defective gasket	C
		Improper valve sealing	B
		Defective valve stem	C
		Worn or broken valve spring	C
		Worn or stuck piston rings, cylinder and piston	C
		Incorrect valve timing	A
	Lubrication system	Incorrect oil pressure	C
	Cooling system	Over-cooling	C
	Others	Evaporative emission control system malfunction	C

Symptoms	Problem parts etc.	Possible cause	RANK
8. Knocking	Engine control system <Ref. to EN(H6DO)(diag)-2, Basic Diagnostic Procedure.>		A
	Intake system	Loosened oil filler cap	B
	Timing chain	Defective timing	B
	Compression	Incorrect valve clearance	C
		Incorrect valve timing	B
	Cooling system	Over-heating	A
9. Excessive engine oil consumption	Intake system	Loosened or cracked PCV hose	A
		Defective PCV valve	B
		Loosened oil filler cap	C
	Compression	Defective valve stem	A
		Worn or stuck piston rings, cylinder and piston	A
	Lubrication system	Loosened oil pump attaching bolts and defective gasket	B
		Defective oil filter O-ring	B
		Defective crankshaft oil seal	B
		Defective rocker cover gasket	B
		Loosened oil drain plug or defective gasket	B
		Loosened oil pan fitting bolts or defective oil pan	B
10. Excessive fuel consumption	Engine control system <Ref. to EN(H6DO)(diag)-2, Basic Diagnostic Procedure.>		A
	Intake system	Dirty air cleaner element	A
	Timing chain	Defective timing	B
	Compression	Incorrect valve clearance	B
		Loosened spark plug or defective gasket	C
		Loosened cylinder head bolt or defective gasket	C
		Improper valve sealing	B
		Defective valve stem	C
		Worn or broken valve spring	C
		Worn or stuck piston rings, cylinder and piston	B
		Incorrect valve timing	B
	Lubrication system	Incorrect oil pressure	C
	Cooling system	Over-cooling	C

27.Engine Noise

A: INSPECTION

Type of sound	Condition	Possible cause
Regular clicking sound	Sound increases as engine speed increases.	• Valve mechanism is defective. • Incorrect valve clearance • Worn camshaft • Broken valve spring • Trouble of valve lifter
Heavy and dull clank	Oil pressure is low.	• Worn camshaft main bearing • Worn connecting rod bearing (large end)
	Oil pressure is normal.	Damaged front mount
High-pitched clank	Sound is noticeable when accelerating with an overload condition.	• Ignition timing advanced • Accumulation of carbon inside combustion chamber • Wrong heat range of spark plug • Improper octane value gasoline
Clank when engine speed is between 1,000 and 2,000 rpm.	Noise is reduced when fuel injector connector of noisy cylinder is disconnected. *	• Worn crankshaft main bearing • Worn connecting rod bearing (large end)
Knocking sound when engine is operating under idling speed and engine is warm	Noise is reduced when fuel injector connector of noisy cylinder is disconnected. *	• Worn cylinder liner and piston ring • Broken or stuck piston ring • Worn piston pin and hole at piston end of connecting rod
	Sound is not reduced if each fuel injector connector is disconnected in turn. *	• Unusually worn valve lifter • Worn cam gear • Worn camshaft journal bore in cylinder head
Squeaky sound	—	Insufficient generator lubrication
Rubbing sound	—	Poor contact of generator brush and rotor
Gear scream when starting engine	—	• Defective ignition starter switch • Worn gear and starter pinion
Sound like polishing glass with a dry cloth	—	• V-belt • Defective water pump shaft
Hissing sound	—	• Insufficient compression • Air leakage in air intake system, hose, connection or manifold
Timing chain noise	—	• Loose timing chain • Timing chain contacting with adjacent part
Valve lifter noise	—	Incorrect valve clearance

* When disconnecting the fuel injector connector, the malfunction indicator light illuminates and DTC is stored in ECM memory. Therefore, perform the Clear Memory Mode <Ref. to EN(H6DO)(diag)-57, OPERATION, Clear Memory Mode.> and Inspection Mode <Ref. to EN(H6DO)(diag)-44, PROCEDURE, Inspection Mode.> after connecting the fuel injector connector.

EXHAUST

EX(H6DO)

Page

1. General Description 2
2. Front Exhaust Pipe 5
3. Rear Exhaust Pipe 8
4. Muffler 10

1. General Description

A: COMPONENT

1. FRONT EXHAUST PIPE

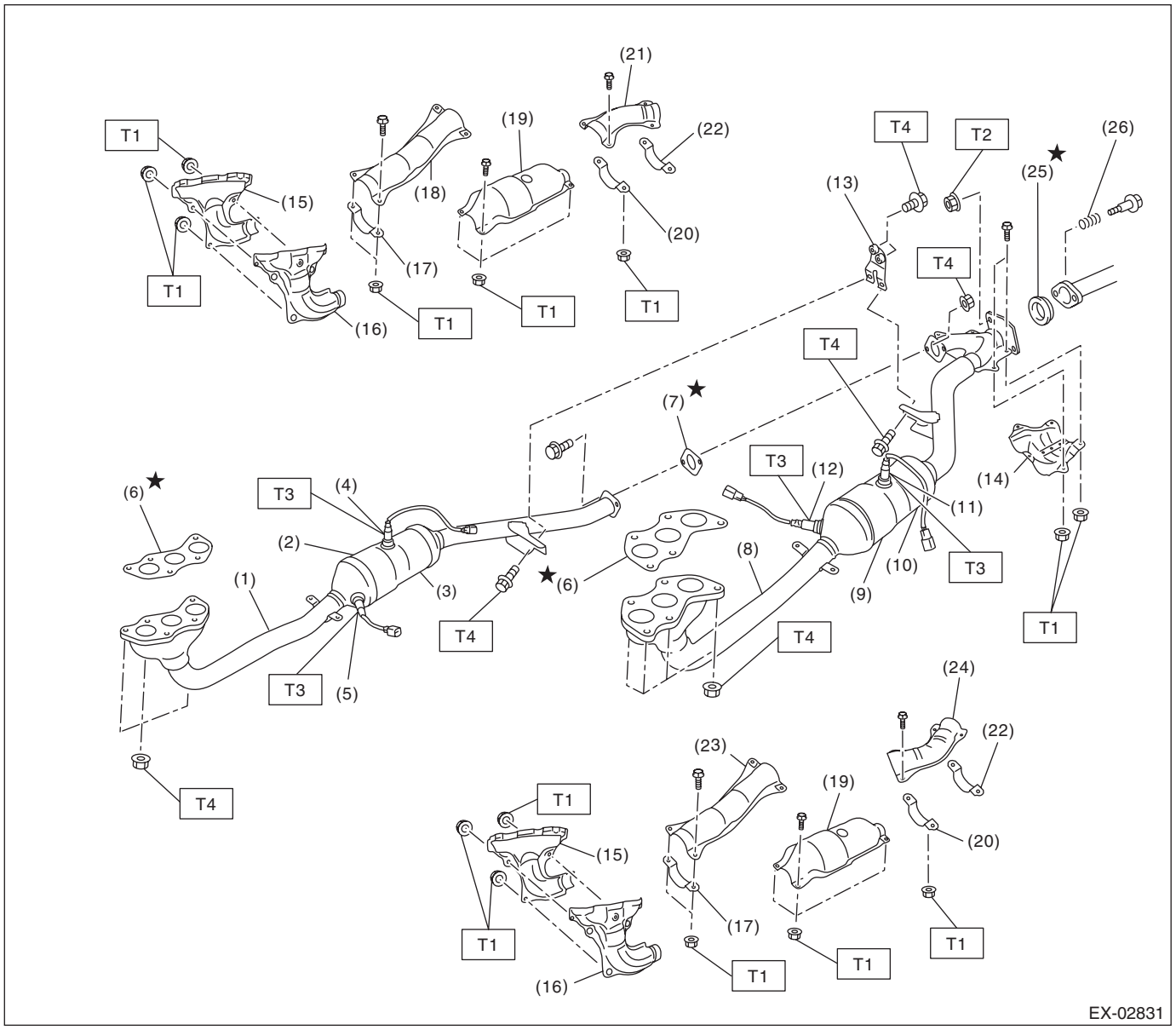

(1) Front exhaust pipe (RH)
(2) Front catalytic converter (RH)
(3) Rear catalytic converter (RH)
(4) Rear oxygen sensor (RH)
(5) Front oxygen sensor (RH)
(6) Gasket
(7) Gasket
(8) Front exhaust pipe (LH)
(9) Front catalytic converter (LH)
(10) Rear catalytic converter (LH)
(11) Rear oxygen sensor (LH)
(12) Front oxygen sensor (LH)
(13) Bracket
(14) Protector
(15) Front exhaust pipe cover (RH)
(16) Front exhaust pipe cover (LH)
(17) Clamp
(18) Front exhaust pipe upper cover (RH) (front)
(19) Catalytic converter upper cover
(20) Clamp
(21) Front exhaust pipe upper cover (RH) (rear)
(22) Clamp
(23) Front exhaust pipe upper cover (LH) (front)
(24) Front exhaust pipe upper cover (LH) (rear)
(25) Gasket
(26) Spring

Tightening torque:N·m (kgf-m, ft-lb)

T1: 13 (1.3, 9.6)
T2: 18 (1.8, 13.3)
T3: 21 (2.1, 15.5)
T4: 30 (3.1, 22.1)

2. REAR EXHAUST PIPE AND MUFFLER

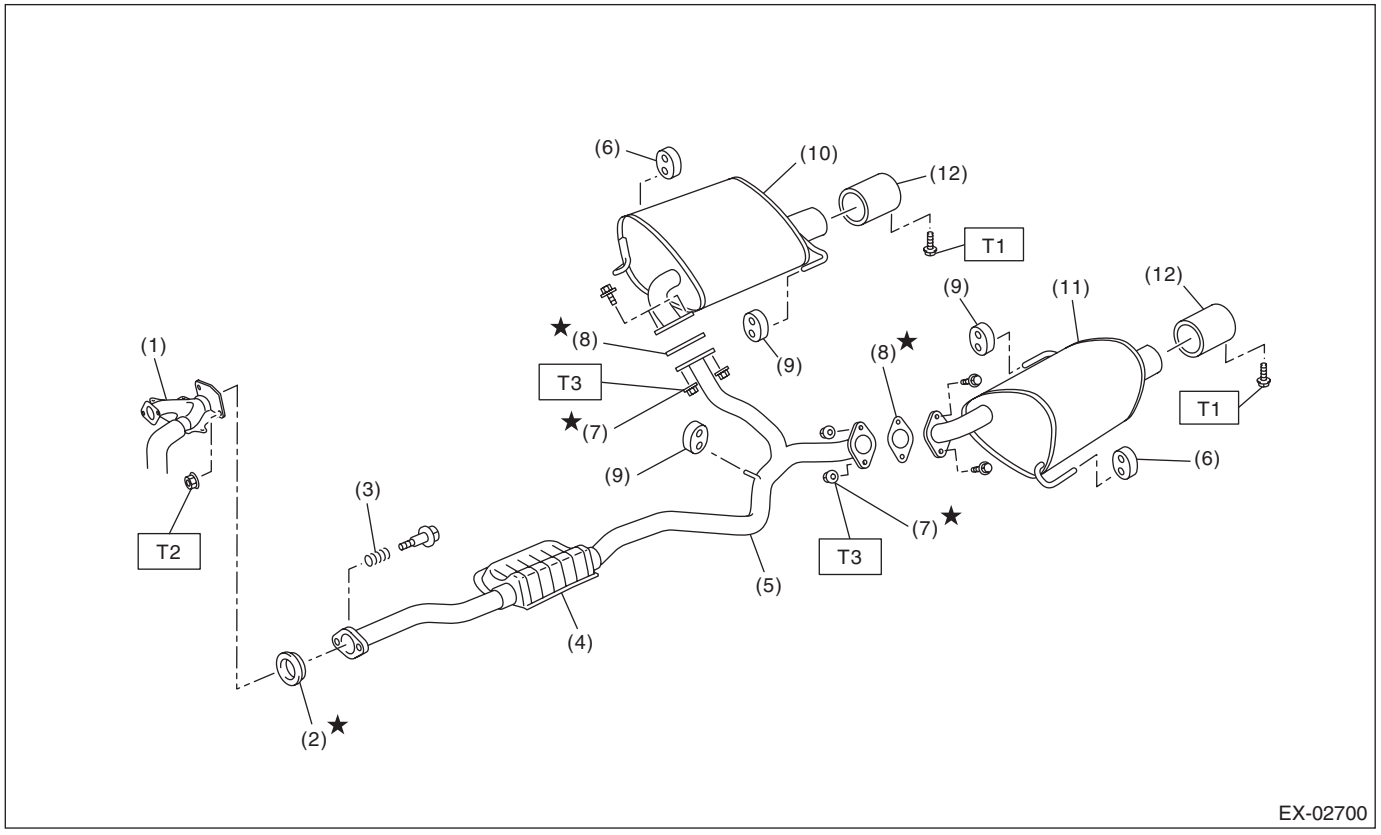

(1) Front exhaust pipe (LH)
(2) Gasket
(3) Spring
(4) Chamber
(5) Rear exhaust pipe
(6) Cushion rubber (with protrusion)
(7) Self-locking nut
(8) Gasket
(9) Cushion rubber (without protrusion)
(10) Muffler (RH)
(11) Muffler (LH)
(12) Muffler cutter

Tightening torque:N·m (kgf-m, ft-lb)

T1: 7.5 (0.8, 5.5)
T2: 18 (1.8, 13.3)
T3: 48 (4.9, 35.4)

B: CAUTION

• Wear appropriate work clothing, including a cap, protective goggles and protective shoes when performing any work.
• Remove contamination including dirt and corrosion before removal, installation or disassembly.
• Keep the disassembled parts in order and protect them from dust and dirt.
• Before removal, installation or disassembly, be sure to clarify the failure. Avoid unnecessary removal, installation, disassembly and replacement.
• Vehicle components are extremely hot after driving. Be wary of receiving burns from heated parts.
• Be sure to tighten fasteners including bolts and nuts to the specified torque.
• Place shop jacks or rigid racks at the specified points.
• Before disconnecting connectors of sensors or units, be sure to disconnect the ground cable from the battery.
• If any fat adheres to the exhaust pipe, wipe it off. Otherwise a fire may happen.

2. Front Exhaust Pipe

A: REMOVAL

CAUTION:
Vehicle components are extremely hot after driving. Be wary of receiving burns from heated parts.

1) Disconnect the ground cable from battery.
2) Lift up the vehicle.
3) Remove the under cover. <Ref. to EI-35, REMOVAL, Front Under Cover.>
4) Disconnect the front oxygen (A/F) sensor connector (A) and rear oxygen sensor connector (B).

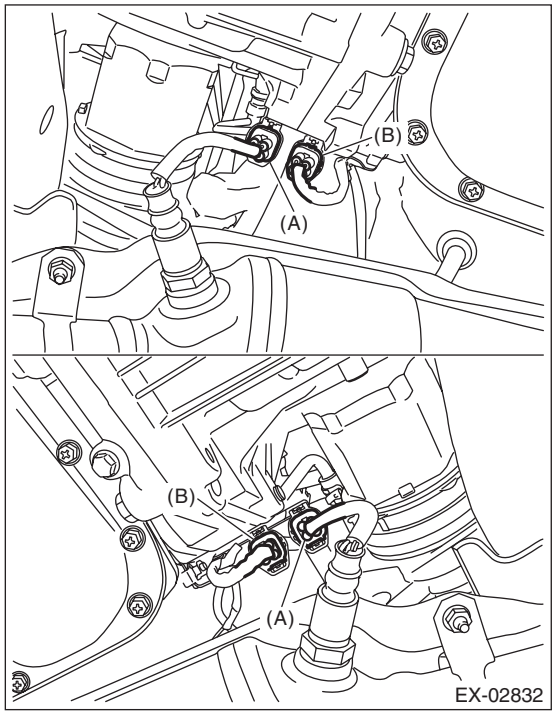

5) Remove the rear exhaust pipe from the front exhaust pipe assembly.

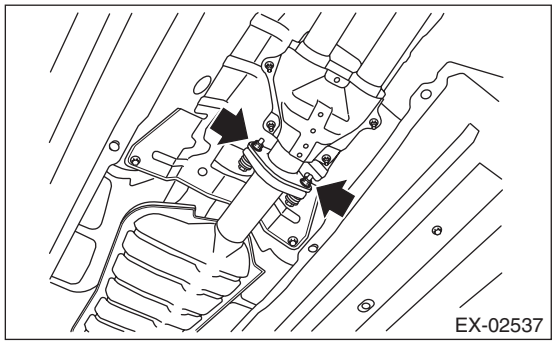

6) Remove the nuts which hold front exhaust pipe assembly onto cylinder heads.

CAUTION:
Be careful not to drop the front exhaust pipe assembly.

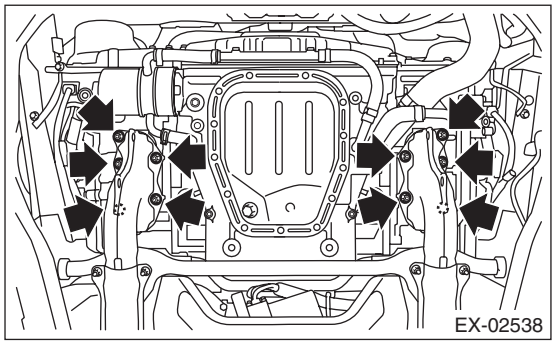

7) Remove the bolt which holds front exhaust pipe assembly to hanger bracket.

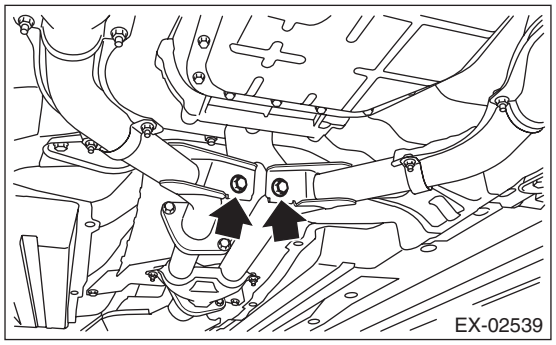

8) Remove the front exhaust pipe assembly.

CAUTION:
- **Be careful not to let the front exhaust pipe assembly fall off when removing, since it is very heavy.**
- **After removing the front exhaust pipe assembly, do not apply excessive pulling force on the rear exhaust pipe.**

9) Separate the front exhaust pipe (RH) from the front exhaust pipe (LH).

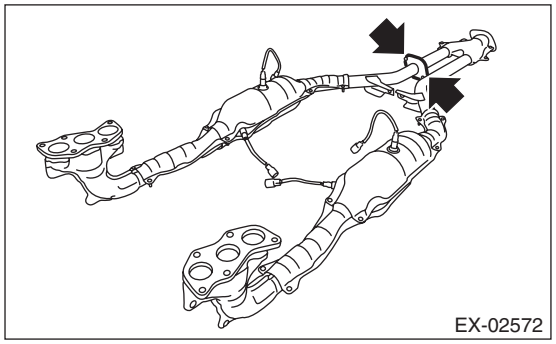

10) Remove the front oxygen (A/F) sensor and rear oxygen sensor. <Ref. to FU(H6DO)-50, REMOVAL, Front Oxygen (A/F) Sensor.> <Ref. to FU(H6DO)-52, REMOVAL, Rear Oxygen Sensor.>

B: INSTALLATION

1) Install the front oxygen (A/F) sensor and rear oxygen sensor. <Ref. to FU(H6DO)-50, INSTALLATION, Front Oxygen (A/F) Sensor.> <Ref. to FU(H6DO)-52, INSTALLATION, Rear Oxygen Sensor.>
2) Install the front exhaust pipe (RH) to the front exhaust pipe (LH).

NOTE:
Use a new gasket.

Tightening torque:
30 N·m (3.1 kgf-m, 22.1 ft-lb)

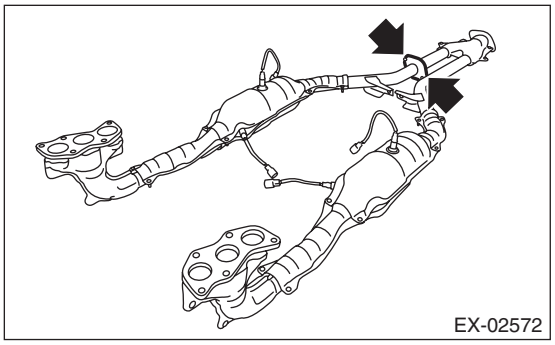

3) Install the front exhaust pipe assembly.

NOTE:
Use a new gasket.
4) Temporarily tighten the nuts which hold front exhaust pipe assembly to cylinder heads.

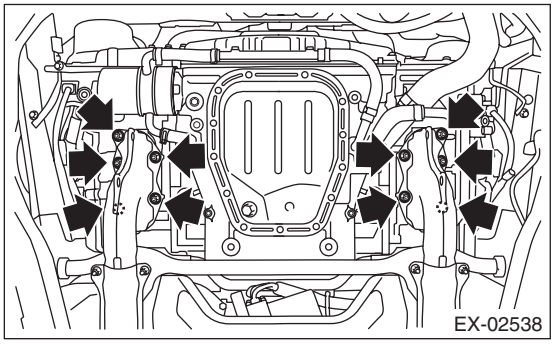

5) Install the front exhaust pipe assembly to the rear exhaust pipe.

NOTE:
Use a new gasket.

Tightening torque:
18 N·m (1.8 kgf-m, 13.3 ft-lb)

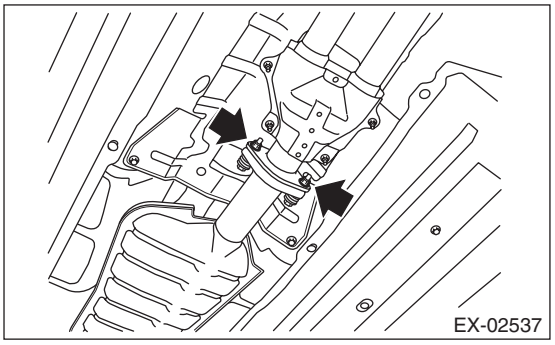

6) Tighten the bolts which hold front exhaust pipe assembly to hanger bracket.

Tightening torque:
30 N·m (3.1 kgf-m, 22.1 ft-lb)

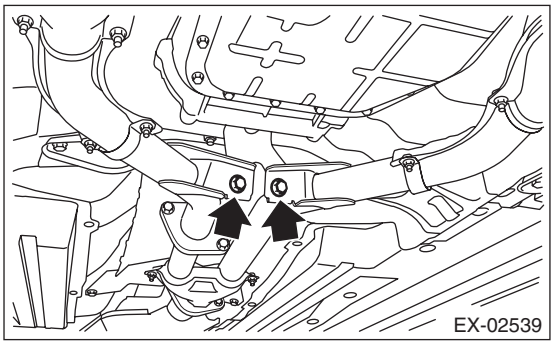

7) Tighten the nuts which hold the front exhaust pipe assembly to the cylinder heads in the numerical sequence as shown in the figure.

Tightening torque:
30 N·m (3.1 kgf-m, 22.1 ft-lb)

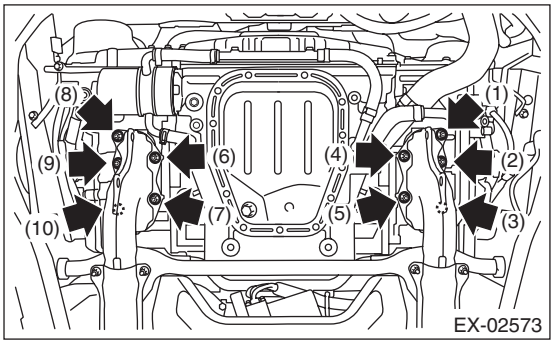

8) Connect the front oxygen (A/F) sensor connector (A) and rear oxygen sensor connector (B).

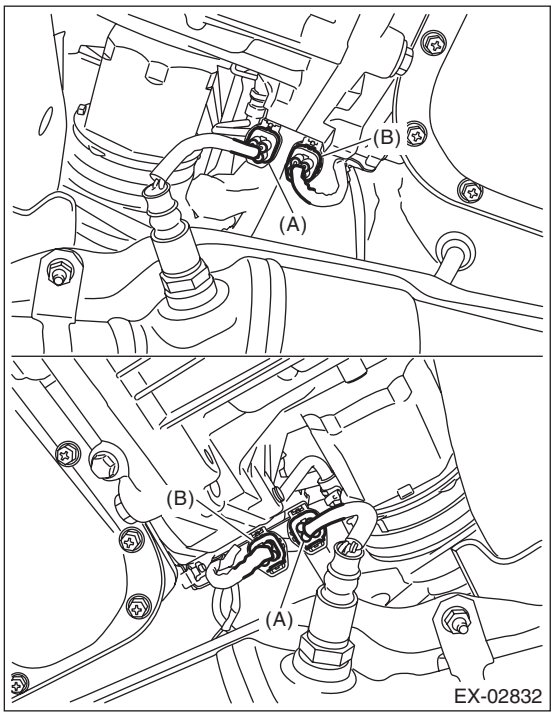

9) Install the under cover. <Ref. to EI-35, INSTALLATION, Front Under Cover.>
10) Lower the vehicle.
11) Connect the battery ground terminal.

C: INSPECTION

1) Check the connections and welds for exhaust leaks.
2) Make sure there are no holes or rusting.

3. Rear Exhaust Pipe

A: REMOVAL

CAUTION:
Vehicle components are extremely hot after driving. Be wary of receiving burns from heated parts.

1) Lift up the vehicle.
2) Remove the rear exhaust pipe from the front exhaust pipe assembly.

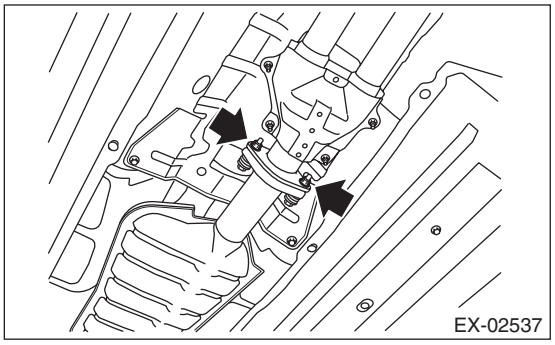

3) Remove the rear exhaust pipe from the muffler.

CAUTION:
Be careful not to drop the rear exhaust pipe.

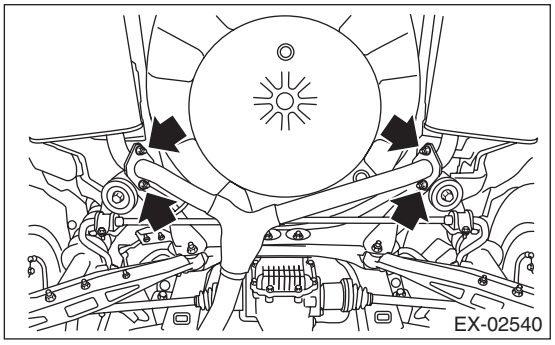

4) Apply a coat of spray type lubricant to the mating area of cushion rubber.
5) Remove the rear exhaust pipe from the cushion rubber.

CAUTION:
Be careful not to let the muffler contact the rear bumper.

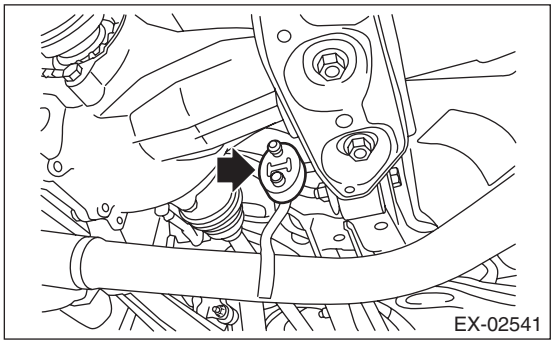

B: INSTALLATION

1) Apply a coat of spray type lubricant to the mating area of cushion rubber.
2) Install the rear exhaust pipe to the cushion rubber.

NOTE:
After assembling, degrease the lubricant which was applied to the cushion rubber while removing/installing.

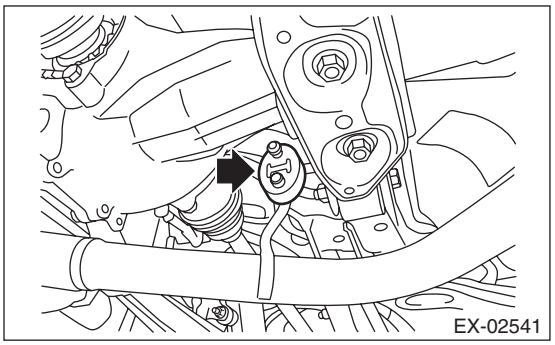

3) Install the rear exhaust pipe to the muffler.

NOTE:
Use a new gasket and self-locking nut.

Tightening torque:
48 N·m (4.9 kgf-m, 35.4 ft-lb)

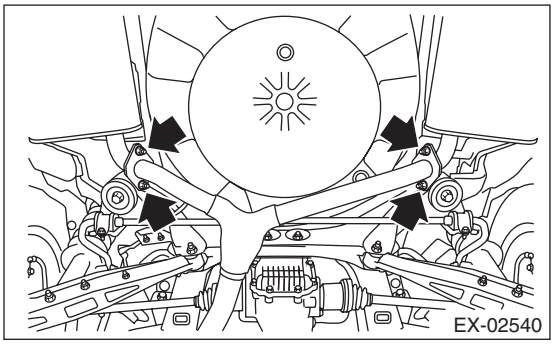

4) Install the rear exhaust pipe to the front exhaust pipe assembly.

NOTE:
Use a new gasket.

Tightening torque:
18 N·m (1.8 kgf-m, 13.3 ft-lb)

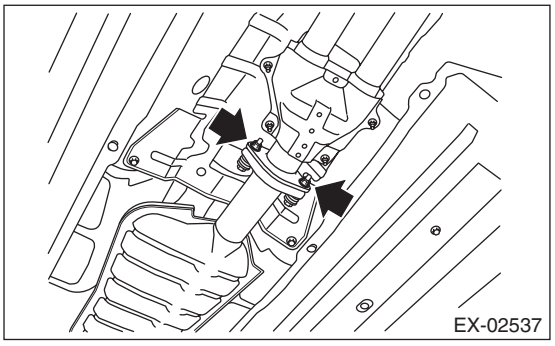

5) Lower the vehicle.

C: INSPECTION

1) Check the connections and welds for exhaust leaks.
2) Make sure there are no holes or rusting.
3) Check the cushion rubber for wear or crack.

4. Muffler

A: REMOVAL

CAUTION:
Vehicle components are extremely hot after driving. Be wary of receiving burns from heated parts.

1) Lift up the vehicle.
2) Remove the muffler from rear exhaust pipe.

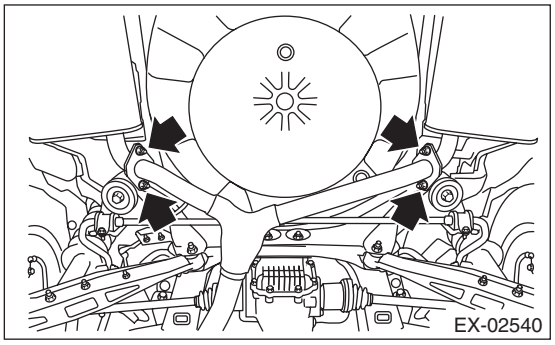

3) Apply a coat of spray type lubricant to the mating area of cushion rubber.
4) Remove the muffler from the cushion rubber.

CAUTION:
Be careful not to drop the muffler during removal.

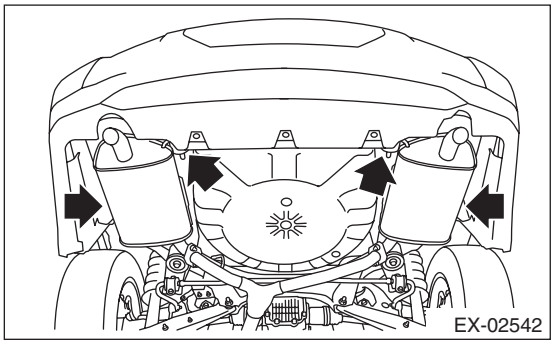

B: INSTALLATION

Install in the reverse order of removal.

NOTE:
- Use a new gasket and self-locking nut.
- After assembling, degrease the lubricant which was applied to the cushion rubber while removing/installing.

Tightening torque:
48 N·m (4.9 kgf-m, 35.4 ft-lb)

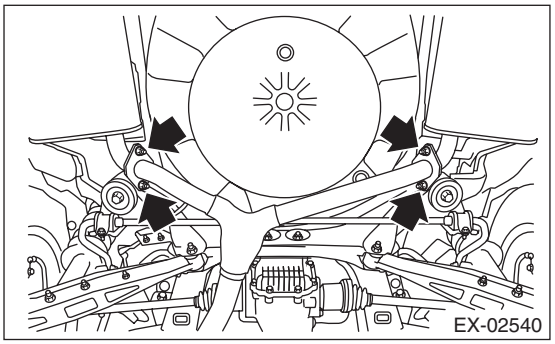

C: INSPECTION

1) Check the connections and welds for exhaust leaks.
2) Make sure there are no holes or rusting.
3) Check the cushion rubber for wear or crack.

COOLING

CO(H6DO)

Page

1. General Description 2
2. Radiator Fan System 8
3. Engine Coolant 12
4. Water Pump 14
5. Thermostat 15
6. Radiator 17
7. Radiator Cap 20
8. Radiator Main Fan and Fan Motor 21
9. Radiator Sub Fan and Fan Motor 24
10. Reservoir Tank 25
11. Radiator Fan Control Unit 26
12. Engine Cooling System Trouble in General 27

1. General Description

A: SPECIFICATION

Cooling system					Electric fan + Forced engine coolant circulation system
Total engine coolant capacity				ℓ (US qt, Imp qt)	6.5 (6.9, 5.7)
Water pump	Type				Centrifugal impeller type
	Discharge performance	Discharge rate		ℓ (US gal, Imp gal) /min.	240 (63.4, 52.8)
		Pump speed — Discharge pressure			4,956 rpm — 140 kPa (14.0 mAq)
		Engine coolant temperature			80°C (176°F)
	Impeller diameter			mm (in)	66 (2.60)
	Number of impeller blades				8
	Pump sprocket outer diameter			mm (in)	60.60 (2.39)
Thermostat	Type				Wax pellet type
	Starting temperature to open				80 — 84°C (176 — 183°F)
	Fully opens				95°C (203°F)
	Valve lift			mm (in)	9.0 (0.354) or more
	Valve bore			mm (in)	35 (1.38)
Radiator fan	Motor input	Main fan		W	200
		Sub fan		W	200
	Fan diameter / Blade	Main fan			320 mm (12.6 in)/5
		Sub fan			320 mm (12.6 in)/7
Radiator	Type				Down flow, pressure type
	Core dimensions	Width × Height × Thickness		mm (in)	689.8 × 349.2 × 16 (27.16 × 13.75 × 0.63)
	Pressure range in which cap valve is open		Positive pressure side	Standard	93 — 123 (0.95 — 1.25, 14 — 18)
				Limit	83 (0.85, 12)
		kPa (kg/cm^2, psi)	Negative pressure side	Standard	–1.0 — –4.9 (–0.01 — –0.05, –0.1 — –0.7)
	Fins				Corrugated fin type
Reservoir tank	Capacity			ℓ (US qt, Imp qt)	0.45 (0.48, 0.40)

	Recommended materials	Item number	Alternative
Coolant	SUBARU SUPER COOLANT (Concentrated type)	—	—
	SUBARU SUPER COOLANT (Diluted type)	K0670Y0001	
Water for dilution	Distilled water	—	Soft water or tap water
Cooling system protective agent	Cooling system conditioner	SOA345001	—

B: COMPONENT

1. WATER PUMP AND WATER PIPE

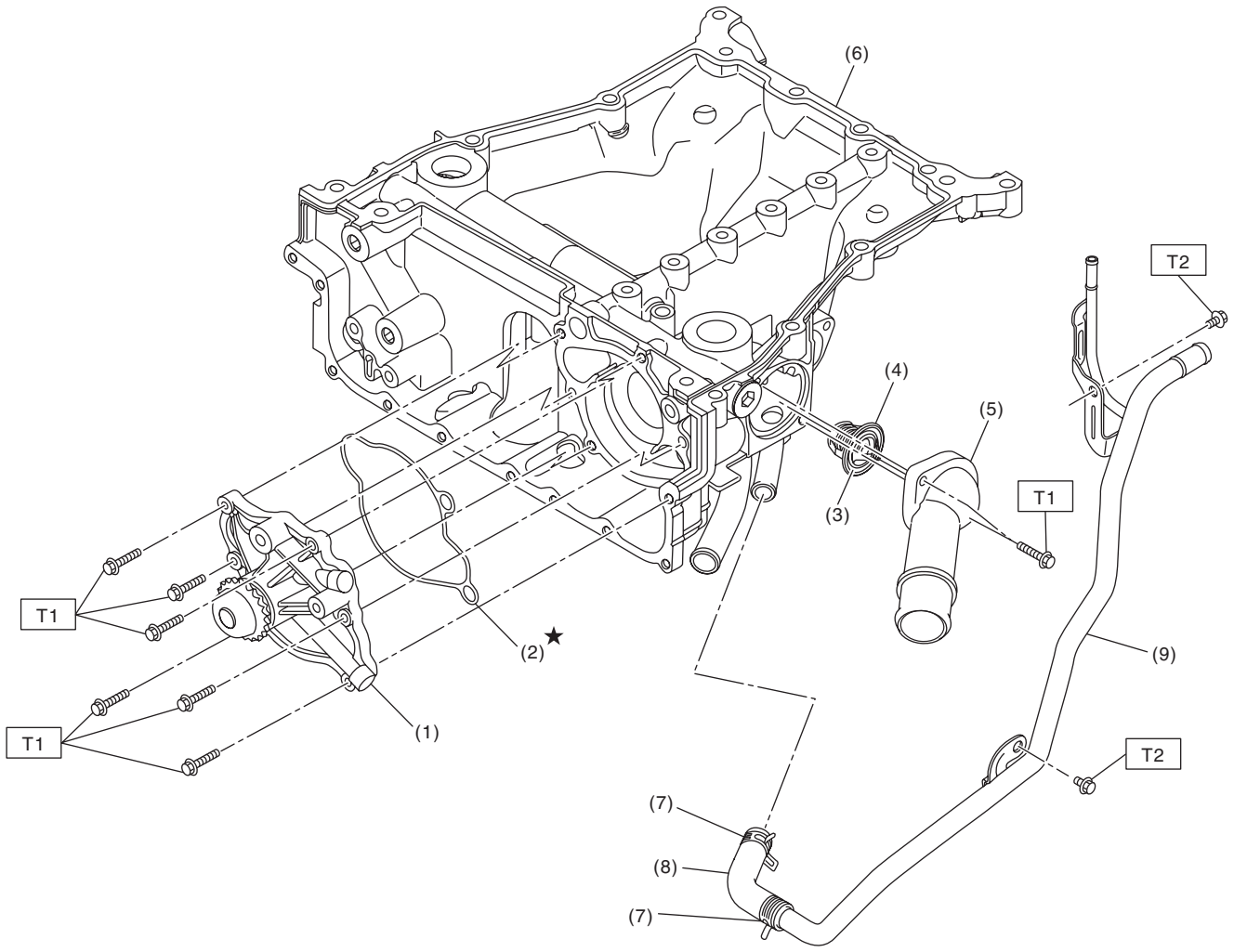

CO-02862

(1) Water pump ASSY
(2) O-ring
(3) Thermostat
(4) Gasket
(5) Thermostat cover
(6) Oil pan upper
(7) Clip
(8) Hose
(9) Water return pipe

Tightening torque:N·m (kgf-m, ft-lb)
T1: 6.4 (0.7, 4.7)
T2: 16 (1.6, 11.8)

2. ENGINE COOLANT TEMPERATURE SENSOR AND HEATER HOSE

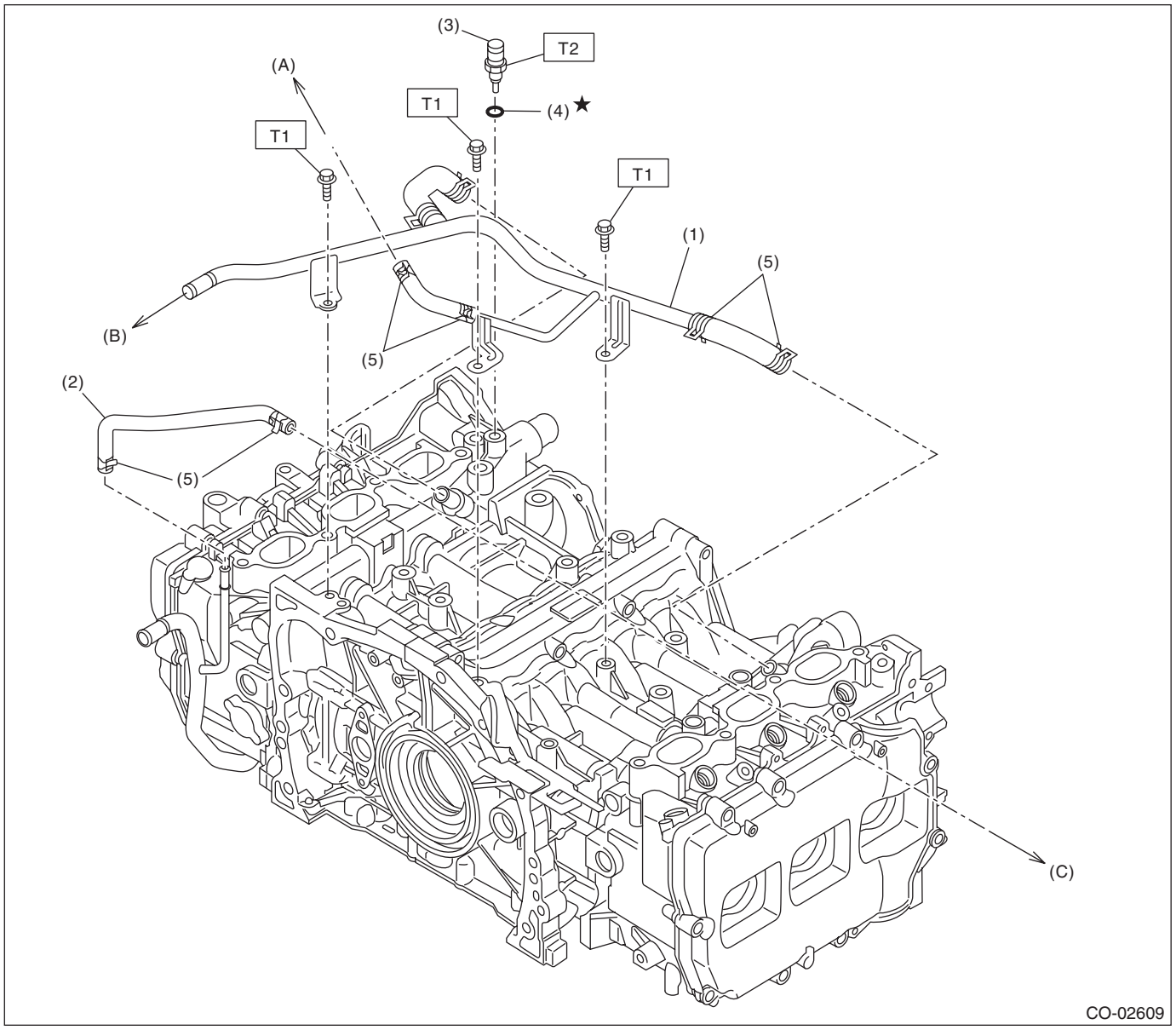

(A) To the throttle body
(B) To the heater hose on body side
(C) To the throttle body
(1) Heater pipe
(2) Preheater hose
(3) Engine coolant temperature sensor
(4) Gasket
(5) Clip

Tightening torque:N·m (kgf-m, ft-lb)
T1: 19 (1.9, 14.0)
T2: 22 (2.2, 16.2)

3. RADIATOR AND RADIATOR FAN

- Radiator

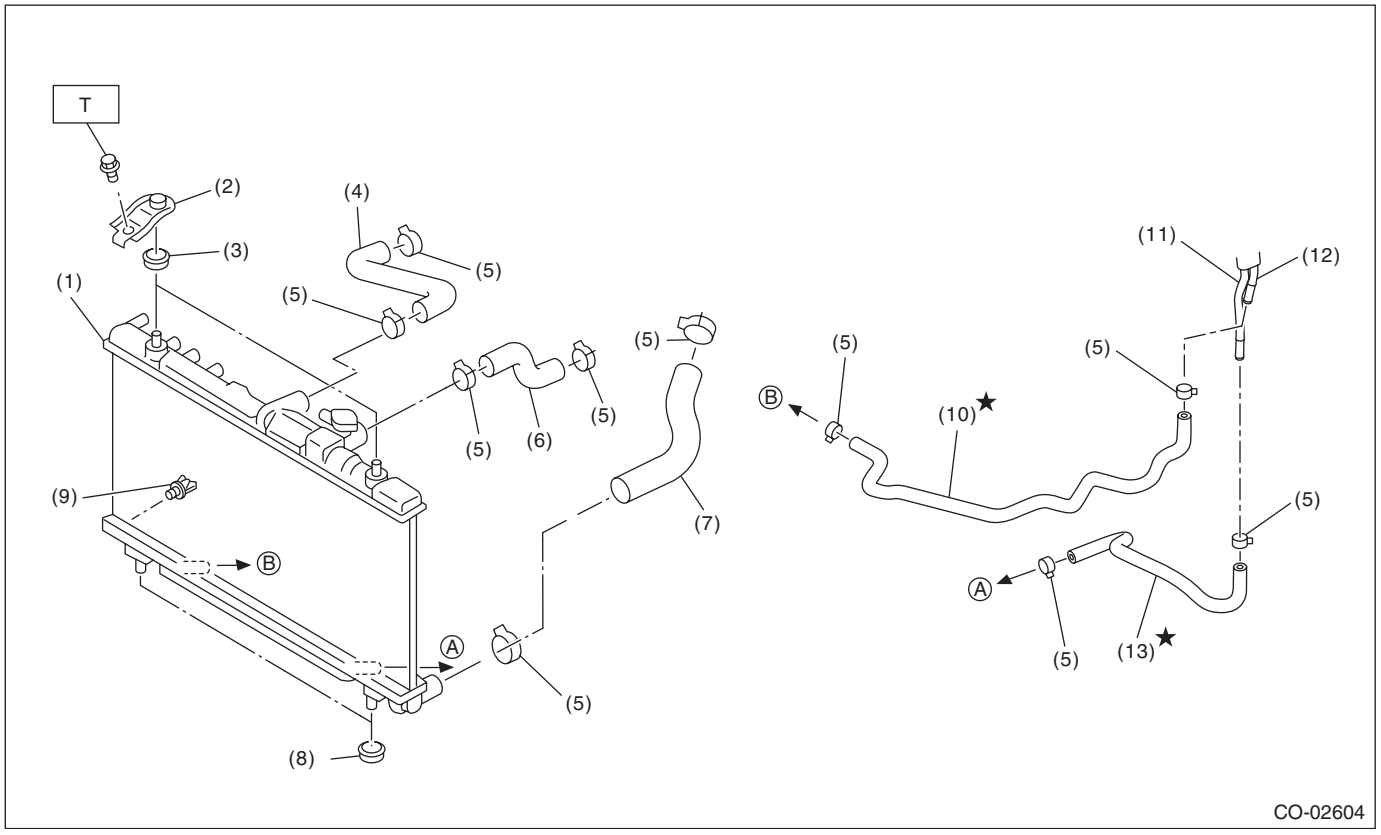

(1) Radiator
(2) Radiator upper bracket
(3) Radiator upper cushion
(4) Radiator inlet hose RH
(5) Clip
(6) Radiator inlet hose LH
(7) Radiator outlet hose
(8) Radiator lower cushion
(9) Drain plug
(10) ATF radiator inlet hose
(11) ATF pipe B
(12) ATF pipe A
(13) ATF radiator outlet hose

Tightening torque:N·m (kgf-m, ft-lb)
T: 12 (1.2, 8.9)

- Radiator fan

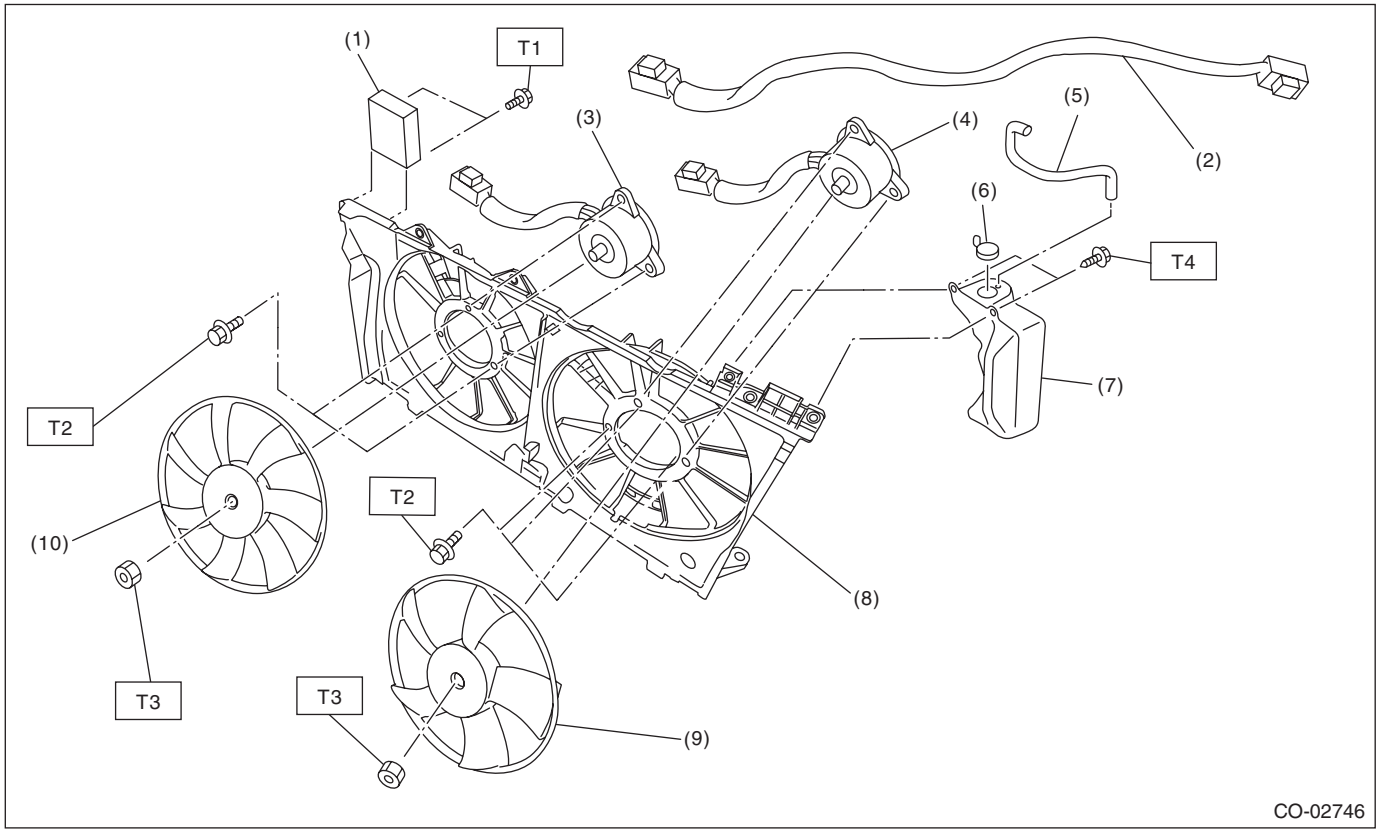

(1)	Radiator fan control unit	(6)	Reservoir tank cap	***Tightening torque:N·m (kgf-m, ft-lb)***
(2)	Radiator fan harness	(7)	Reservoir tank	***T1: 2.6 (0.3, 1.9)***
(3)	Radiator sub fan motor	(8)	Radiator fan shroud	***T2: 3.8 (0.4, 2.8)***
(4)	Radiator main fan motor	(9)	Radiator main fan	***T3: 6.3 (0.6, 4.6)***
(5)	Over flow hose	(10)	Radiator sub fan	***T4: 7.5 (0.8, 5.5)***

C: CAUTION

• Wear appropriate work clothing, including a cap, protective goggles and protective shoes when performing any work.
• Remove contamination including dirt and corrosion before removal, installation or disassembly.
• Keep the disassembled parts in order and protect them from dust and dirt.
• Before removal, installation or disassembly, be sure to clarify the failure. Avoid unnecessary removal, installation, disassembly and replacement.
• Vehicle components are extremely hot after driving. Be wary of receiving burns from heated parts.
• Be sure to tighten fasteners including bolts and nuts to the specified torque.
• Place shop jacks or rigid racks at the specified points.
• Before disconnecting connectors of sensors or units, be sure to disconnect the ground cable from battery.
• Prepare a container and cloth to prevent scattering of engine coolant when performing work where engine coolant can be spilled. If the fuel spills, wipe it off immediately to prevent from penetrating into floor or flowing out for environmental protection.
• Follow all government and local regulations concerning disposal of refuse when disposing engine coolant.

D: PREPARATION TOOL

1. SPECIAL TOOL

ILLUSTRATION	TOOL NUMBER	DESCRIPTION	REMARKS
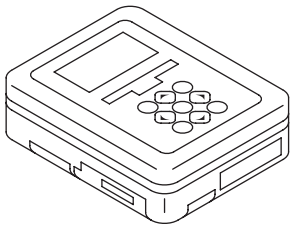 ST1B022XU0	1B022XU0	SUBARU SELECT MONITOR III KIT	Used for troubleshooting the electrical system.

2. GENERAL TOOL

TOOL NAME	REMARKS
Circuit tester	Used for measuring resistance and voltage.
Radiator cap tester	Used for checking radiator and radiator cap.

2. Radiator Fan System

A: WIRING DIAGRAM

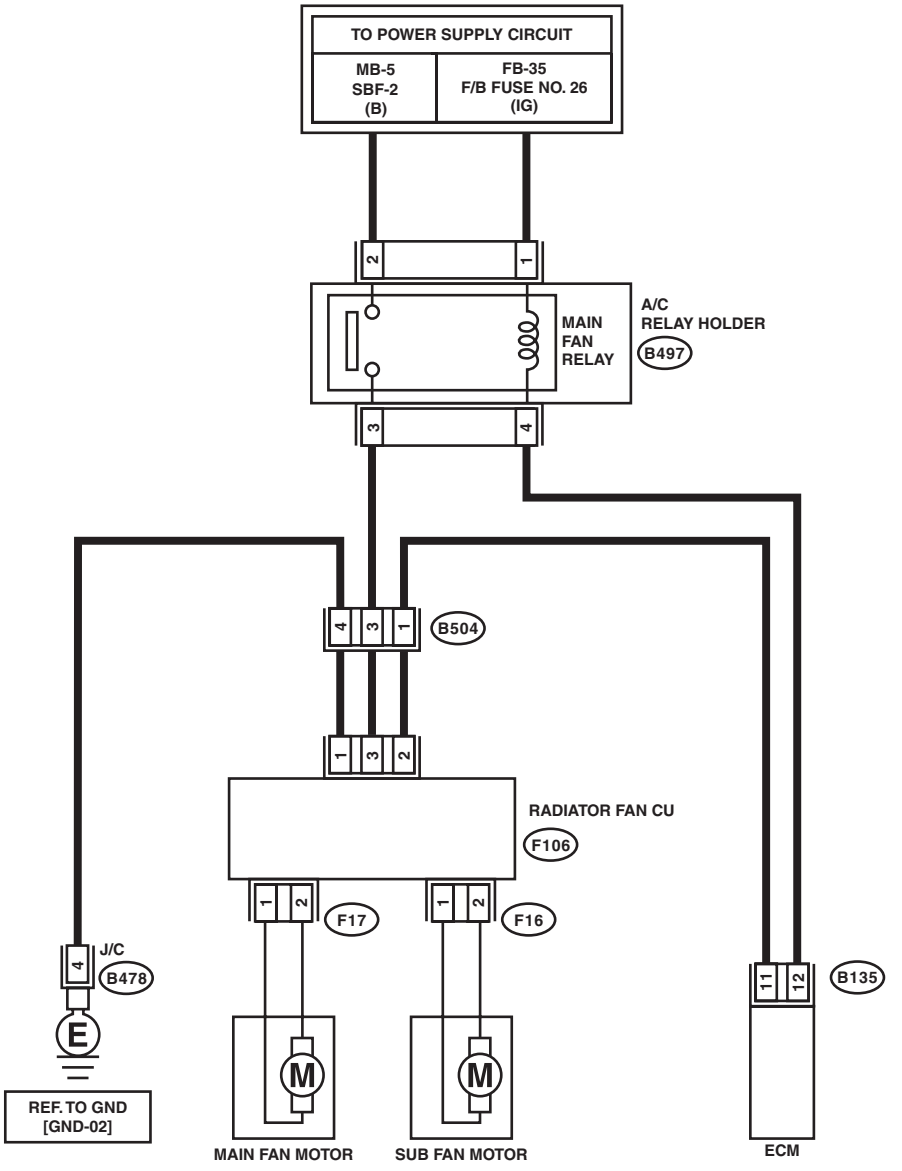

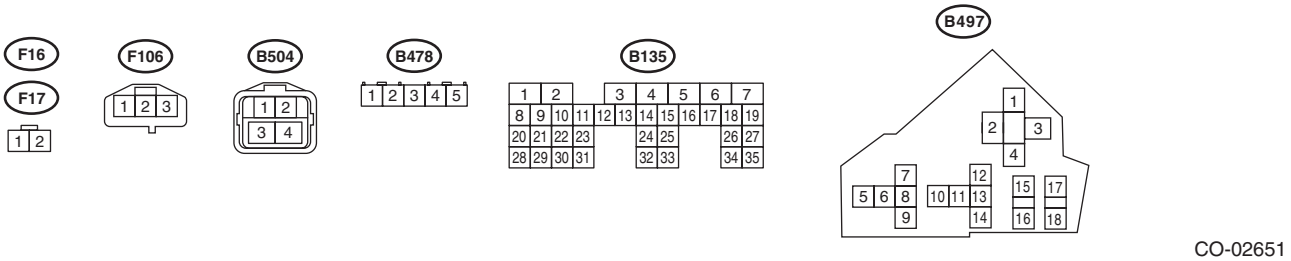

CO-02651

B: RADIATOR FAN CONTROL OUTPUT WAVEFORM

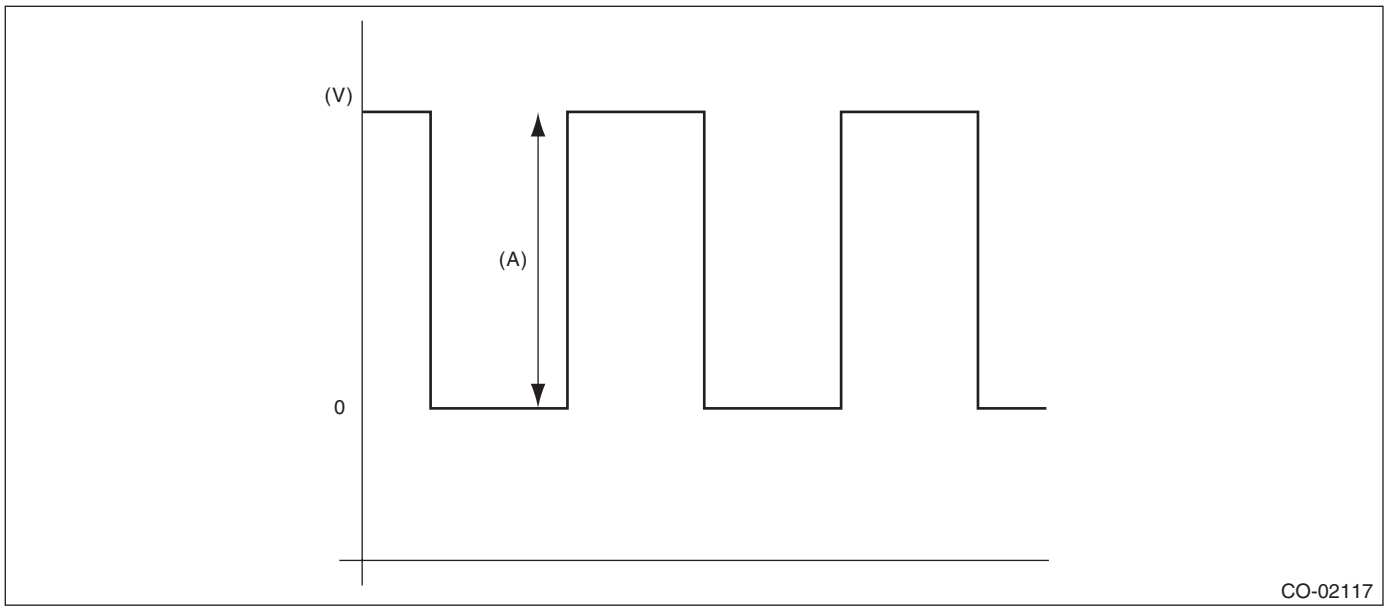

(A) 5 V

C: INSPECTION

Operating condition:

Radiator fan operates depending on the radiator fan speed related to engine coolant temperature or the radiator fan speed related to A/C compressor load, whichever is higher as a load condition.

- Radiator fan speed related to engine coolant temperature

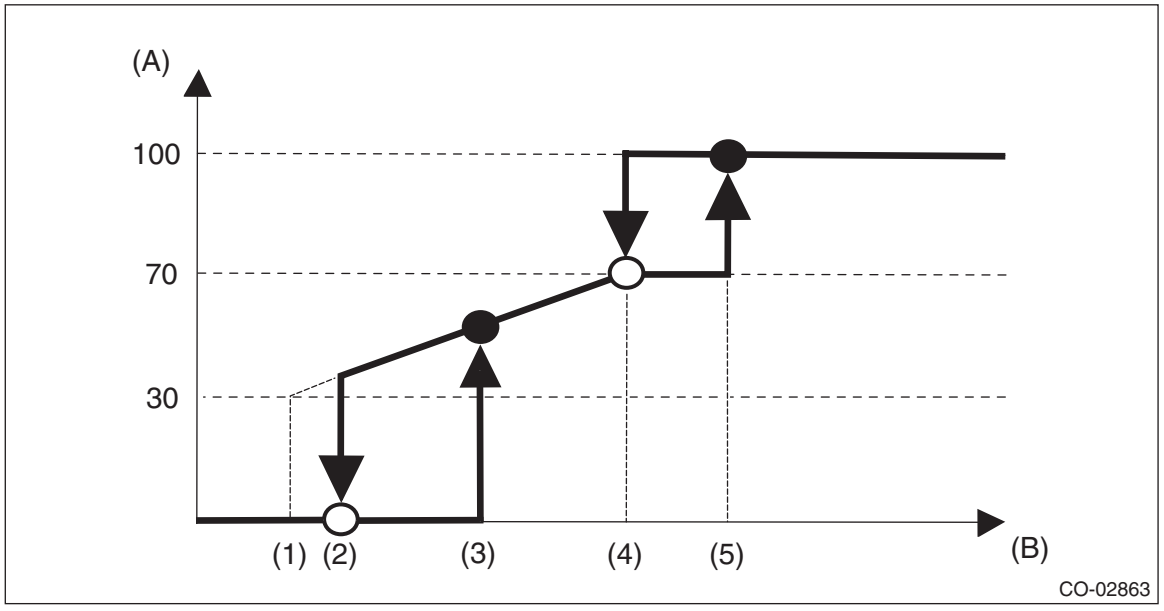

(A) Radiator fan speed (%)
(B) Engine coolant temperature

(1) 95°C (203°F)
(2) 96°C (205°F)
(3) 98°C (208°F)
(4) 100°C (212°F)
(5) 101°C (214°F)

- Radiator fan speed related to A/C compressor load

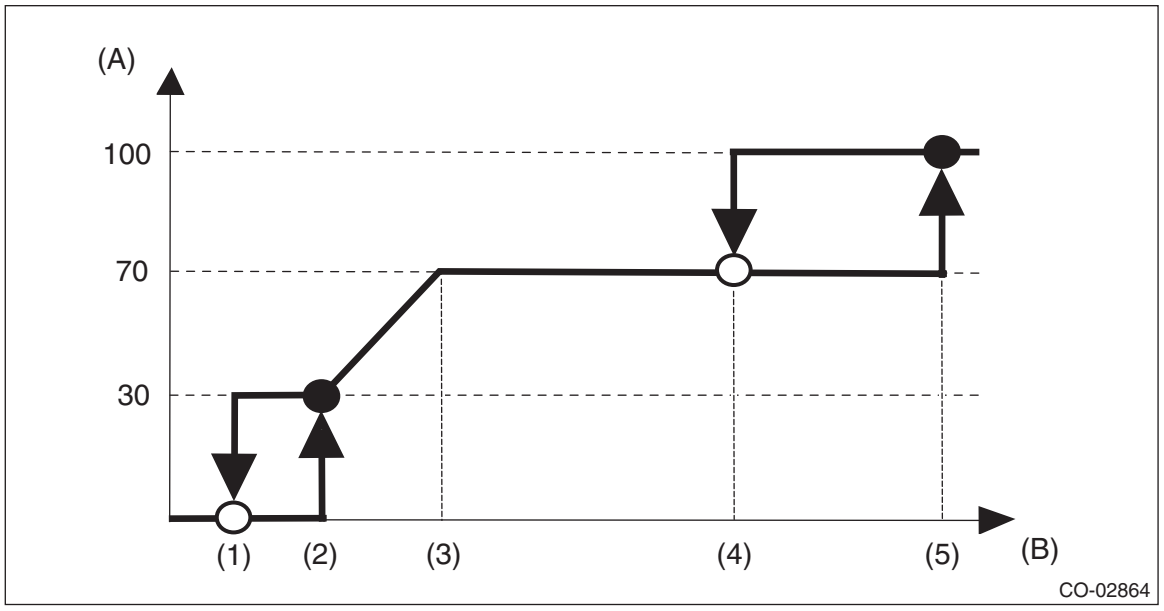

(A) Radiator fan speed (%)
(B) A/C compressor refrigerant pressure
(1) 0.8 MPa (8.16 kgf/cm^2, 116 psi)
(2) 1.0 MPa (10.20 kgf/cm^2, 145 psi)
(3) 1.5 MPa (15.30 kgf/cm^2, 218 psi)
(4) 4.0 MPa (40.79 kgf/cm^2, 580 psi)
(5) 5.0 MPa (50.98 kgf/cm^2, 725 psi)

DIAGNOSIS:
Radiator main and sub fans do not rotate under the above conditions.

	Step	Check	Yes	No
1	**CHECK MAIN FAN RELAY.** 1) Turn the ignition switch to OFF. 2) Remove the main fan relay from the relay holder. 3) Measure the resistance between main fan relay switch terminals.	Is the resistance 1 MΩ or more?	Go to step **2**.	Replace the main fan relay.
2	**CHECK MAIN FAN RELAY.** 1) Connect the battery to the terminal on main fan relay coil side. 2) Measure the resistance between main fan relay switch terminals.	Is the resistance less than 1 Ω?	Go to step **3**.	Replace the main fan relay.
3	**CHECK POWER SUPPLY FOR ECM.** 1) Turn the ignition switch to OFF. 2) Disconnect the connector from ECM. 3) Turn the ignition switch to ON. 4) Measure the voltage between ECM terminal and chassis ground. ***Connector & terminal*** ***(B135) No. 12 (+) — Chassis ground (–):***	Is the voltage 10 V or more?	Go to step **4**.	Repair the power supply line.

	Step	Check	Yes	No
4	**CHECK POWER SUPPLY FOR RADIATOR FAN CONTROL UNIT.** 1) Turn the ignition switch to OFF. 2) Connect the connector to ECM. 3) Disconnect the connector from radiator fan control unit. 4) Turn the ignition switch to ON. 5) Measure the voltage between radiator fan control unit terminal and chassis ground. ***Connector & terminal*** ***(F106) No. 3 (+) — Chassis ground (–):***	Is the voltage 10 V or more?	Go to step **5**.	Repair the power supply line.
5	**CHECK HARNESS BETWEEN ECM AND RADIATOR FAN CONTROL UNIT.** 1) Turn the ignition switch to OFF. 2) Disconnect the connector from ECM. 3) Measure the resistance between radiator fan control unit and ECM connector. ***Connector & terminal*** ***(B135) No. 11 — (F106) No. 2:***	Is the resistance less than 1 Ω?	Go to step **6**.	Repair the open circuit of harness between ECM and radiator fan control unit.
6	**CHECK GROUND CIRCUIT FOR RADIATOR FAN CONTROL UNIT.** 1) Connect the connector to ECM and radiator fan control unit. 2) Measure the resistance between radiator fan control unit connector and chassis ground. ***Connector & terminal*** ***(F106) No. 1 — Chassis ground:***	Is the resistance less than 5 Ω?	Go to step **7**.	Repair the open circuit of harness between radiator fan control unit connector and chassis ground.
7	**CHECK MAIN FAN MOTOR.** 1) Disconnect the connector from radiator fan control unit. 2) Connect the battery positive (+) terminal to terminal No. 1 of the main fan motor, and the ground (–) terminal to terminal No. 2.	Does the main fan motor rotate?	Go to step **8**.	Replace the main fan motor.
8	**CHECK SUB FAN MOTOR.** 1) Disconnect the connector from radiator fan control unit. 2) Connect the battery positive (+) terminal to terminal No. 1 of the sub fan motor, and the ground (–) terminal to terminal No. 2.	Does the sub fan motor rotate?	Go to step **9**.	Replace the sub fan motor.
9	**CHECK OUTPUT SIGNAL FROM ECM.** 1) Turn the ignition switch to OFF. 2) Connect the delivery mode fuse. 3) Turn the ignition switch to ON. 4) Check the output waveform using oscilloscope. <Ref. to CO(H6DO)-9, RADIATOR FAN CONTROL OUTPUT WAVEFORM, Radiator Fan System.> ***Connector & terminal*** ***(B135) No. 11 (+) — Chassis ground (–):***	Is waveform being output?	Replace the radiator fan control unit. <Ref. to CO(H6DO)-26, Radiator Fan Control Unit.>	Replace the ECM. <Ref. to FU(H6DO)-54, Engine Control Module (ECM).>

3. Engine Coolant

A: REPLACEMENT

1. DRAINING OF ENGINE COOLANT

1) Lift up the vehicle.
2) Remove the under cover. <Ref. to EI-35, REMOVAL, Front Under Cover.>
3) Remove the drain plug to drain engine coolant into container.

NOTE:
Remove the radiator cap so that engine coolant will drain faster.

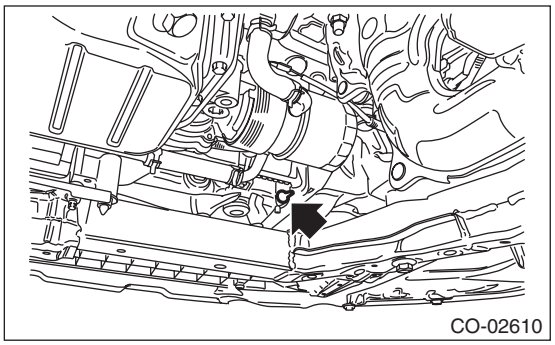
CO-02610

4) Install the drain plug.
5) Install the under cover. <Ref. to EI-35, INSTALLATION, Front Under Cover.>

2. FILLING OF ENGINE COOLANT

1) Pour cooling system conditioner from the filler neck of the radiator.

Cooling system protective agent:
Refer to "SPECIFICATION" for cooling system protective agent. <Ref. to CO(H6DO)-2, SPECIFICATION, General Description.>

2) Pour engine coolant into the radiator up to the filler neck position.

Recommended engine coolant:
Refer to "SPECIFICATION" for recommended engine coolant. <Ref. to CO(H6DO)-2, SPECIFICATION, General Description.>

Engine coolant level:
Refer to "SPECIFICATION" for engine coolant level. <Ref. to CO(H6DO)-2, SPECIFICATION, General Description.>

Engine coolant concentration:
Refer to "ADJUSTMENT" for the recommended engine coolant concentration. <Ref. to CO(H6DO)-13, ADJUSTMENT, Engine Coolant.>

NOTE:
The SUBARU Super Coolant contains anti-freeze and anti-rust agents, and is especially made for Subaru engines with an aluminum cylinder block. Always use SUBARU Super Coolant, since other coolant may cause corrosion.
3) Fill engine coolant into the reservoir tank up to "FULL" level.

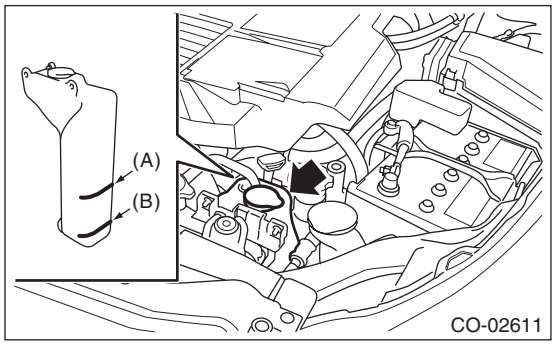

CO-02611

(A) FULL
(B) LOW

4) Close the radiator cap and start the engine. Race 5 to 6 times at 3,000 rpm or less, then stop the engine. (Complete this operation within 40 seconds.)
5) Wait for one minute after the engine stops, and open the radiator cap. If the engine coolant level drops, add engine coolant into radiator up to the filler neck position.
6) Perform the procedures 4) and 5) again.
7) Attach the radiator cap and reservoir tank cap properly.
8) Start the engine and operate the heater at maximum hot position and the blower speed setting to "LO".
9) Run the engine at 2,000 rpm or less until radiator fan starts and stops.

NOTE:
Be careful with the engine coolant temperature to prevent overheating.
10) Stop the engine and wait until the engine coolant temperature lowers to 30°C (86°F) or less.
11) Open the radiator cap. If the engine coolant level drops, add engine coolant into the radiator up to the filler neck position and the reservoir tank to "FULL" level.
12) Attach the radiator cap and reservoir tank cap properly.
13) Set the heater setting to maximum hot position and the blower speed setting to "LO" and start the engine. Perform racing at 3,000 rpm or less. If the flowing sound is heard from the heater core, repeat the procedures from step 9).

B: ADJUSTMENT

1. PROCEDURE TO ADJUST THE SUBARU SUPER COOLANT CONCENTRATION

CAUTION:
Use the SUBARU Super Coolant with a 50 — 60% concentration in order to obtain maximum anti-freeze and anti-rust performance.
To adjust the concentration of SUBARU Super Coolant according to temperature, find the proper SUBARU Super Coolant concentration in the table, and add diluting water to the SUBARU Super Coolant (concentrated type) until it reaches the proper dilution.

Relationship of Subaru Super Coolant concentration and freezing temperature			
SUBARU Super Coolant concentration	50%	55%	60%
Freezing temperature	–36°C (–33°F)	–41°C (–42°F)	–50°C (–58°F)

Engine coolant and diluting water:
Refer to "SPECIFICATION" for the recommended engine coolant and diluting water. <Ref. to CO(H6DO)-2, SPECIFICATION, General Description.>

4. Water Pump

A: REMOVAL

1) Remove the radiator. <Ref. to CO(H6DO)-17, REMOVAL, Radiator.>
2) Remove the V-belts. <Ref. to ME(H6DO)-51, REMOVAL, V-belt.>
3) Remove the crank pulley. <Ref. to ME(H6DO)-52, REMOVAL, Crank Pulley.>
4) Remove the chain cover. <Ref. to ME(H6DO)-53, REMOVAL, Chain Cover.>
5) Remove the timing chain assembly. <Ref. to ME(H6DO)-63, REMOVAL, Timing Chain Assembly.>
6) Remove the water pump from the oil pan upper.

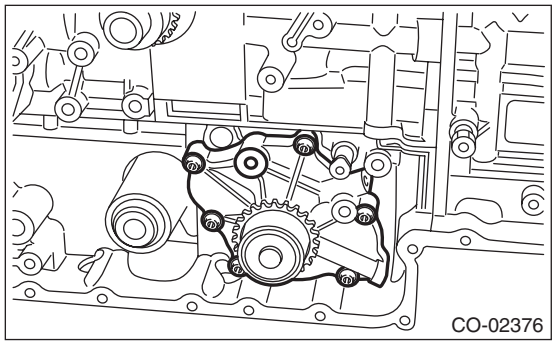

B: INSTALLATION

1) Tighten the bolts in the numerical order as shown in the figure, and install water pump to the oil pan upper.

NOTE:
Use new O-rings.

Tightening torque:
6.4 N·m (0.7 kgf-m, 4.7 ft-lb)

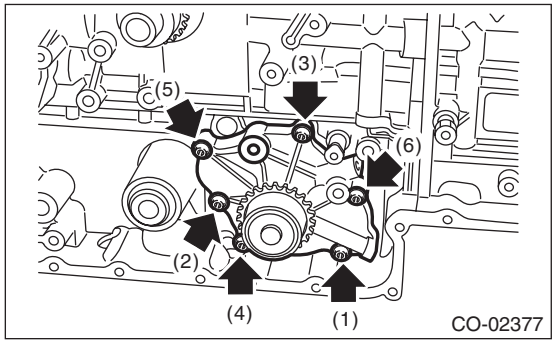

2) Install the timing chain assembly. <Ref. to ME(H6DO)-69, INSTALLATION, Timing Chain Assembly.>
3) Install the chain cover. <Ref. to ME(H6DO)-56, INSTALLATION, Chain Cover.>
4) Install the crank pulley. <Ref. to ME(H6DO)-52, INSTALLATION, Crank Pulley.>
5) Install the V-belts. <Ref. to ME(H6DO)-51, INSTALLATION, V-belt.>
6) Install the radiator. <Ref. to CO(H6DO)-18, INSTALLATION, Radiator.>
7) Fill engine coolant. <Ref. to CO(H6DO)-12, FILLING OF ENGINE COOLANT, REPLACEMENT, Engine Coolant.>

C: INSPECTION

1) Check the water pump bearing for smooth rotation.
2) Check the water pump sprocket for abnormalities.
3) Make sure the impeller is not abnormally deformed or damaged.
4) After water pump installation, check pulley shaft for engine coolant leaks or noise. If leaks or noise are noted, replace the water pump assembly.

5. Thermostat

A: REMOVAL

1) Lift up the vehicle.
2) Remove the under cover. <Ref. to EI-35, REMOVAL, Front Under Cover.>
3) Drain engine coolant. <Ref. to CO(H6DO)-12, DRAINING OF ENGINE COOLANT, REPLACEMENT, Engine Coolant.>
4) Remove the radiator outlet hose from the radiator lower and the thermostat cover.

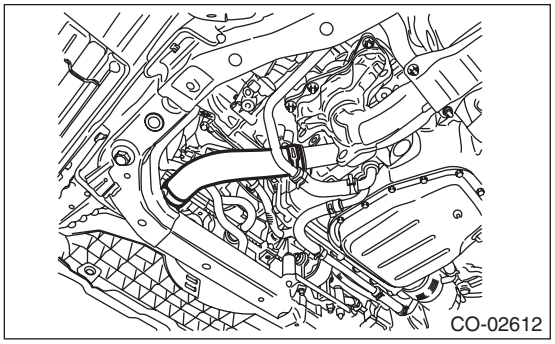
CO-02612

5) Remove the thermostat cover, and then remove the thermostat.

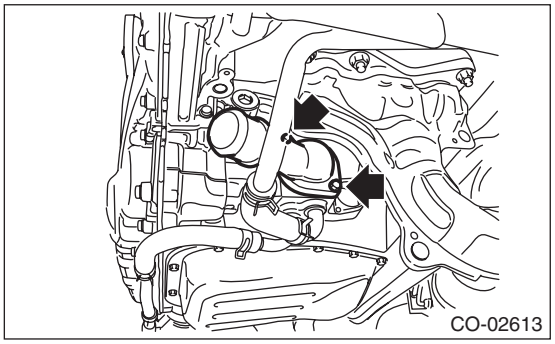
CO-02613

B: INSTALLATION

1) Install a gasket to thermostat.

NOTE:
Use a new gasket.
2) Install the thermostat and thermostat cover.

NOTE:
Install the parts with the jiggle pin facing the upside.

Tightening torque:
6.4 N·m (0.7 kgf-m, 4.7 ft-lb)

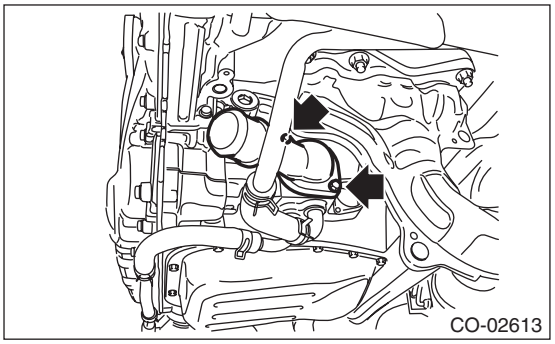
CO-02613

3) Install the radiator outlet hose to the radiator lower and the thermostat cover.

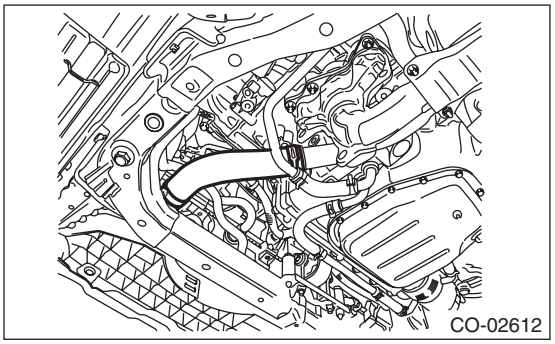
CO-02612

4) Install the under cover. <Ref. to EI-35, INSTALLATION, Front Under Cover.>
5) Lower the vehicle.
6) Fill engine coolant. <Ref. to CO(H6DO)-12, FILLING OF ENGINE COOLANT, REPLACEMENT, Engine Coolant.>

C: INSPECTION

1) Check that the thermostat does not have deformation, cracks or damage.
2) Check that the thermostat valve closes completely at an ambient temperature.
3) Immerse the thermostat and a thermometer in water. Raise water temperature gradually, and check the temperature and valve lift when the valve begins to open and when the valve is fully opened. Replace the thermostat if faulty.

NOTE:
• During the test, agitate the water for even temperature distribution.
• Leave the thermostat in the boiling water for five minutes or more before measuring the valve lift.
• Hold the thermostat with a wire or the like to avoid contacting the container.

Starting temperature to open:
80 — 84°C (176 — 183°F)

Full open temperature:
95°C (203°F)

Total valve lift:
9.0 mm (0.354 in) or more

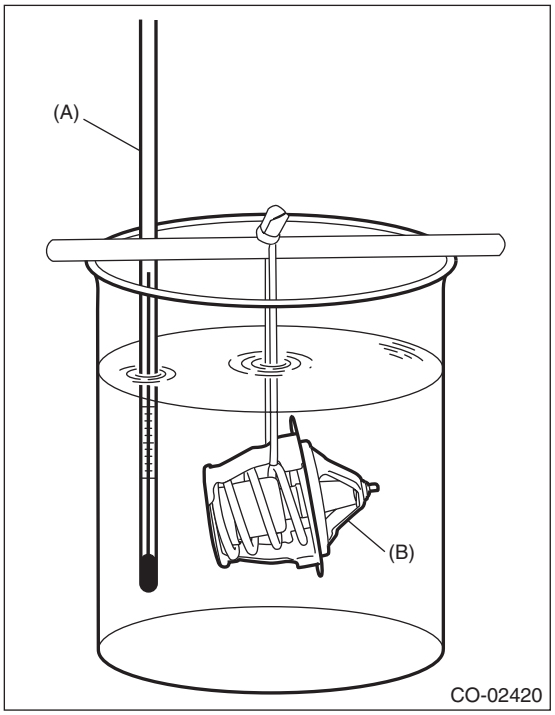

(A) Thermometer
(B) Thermostat

6. Radiator

A: REMOVAL

CAUTION:
The radiator is pressurized when the engine and radiator are hot. Wait until engine and radiator cool down before working on the radiator.
1) Remove the collector cover.

NOTE:
Follow the steps below when removing the collector cover.
(1) Pull up the two points at the rear (A).
(2) Pull up the two points at the front (B) while moving them forward.

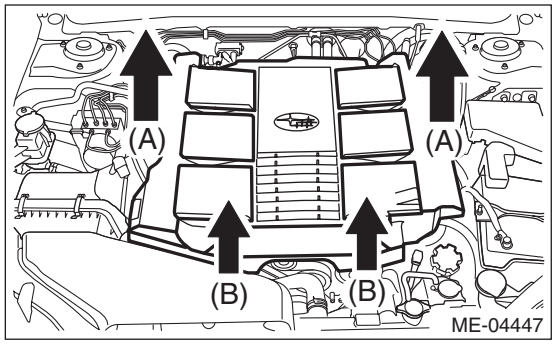

2) Disconnect the ground cable from battery.
3) Lift up the vehicle.
4) Remove the under cover. <Ref. to EI-35, REMOVAL, Front Under Cover.>
5) Drain engine coolant. <Ref. to CO(H6DO)-12, DRAINING OF ENGINE COOLANT, REPLACEMENT, Engine Coolant.>
6) Disconnect the integrated connector of radiator main fan & fan motor and radiator sub fan & fan motor.

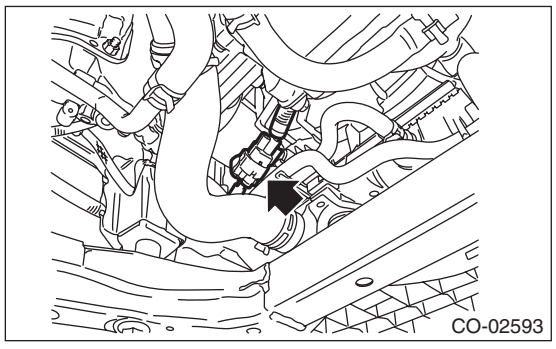

7) Disconnect the radiator outlet hose from radiator lower.

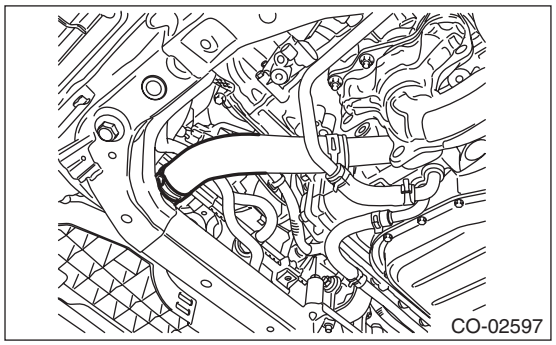

8) Lower the vehicle.
9) Remove the air intake duct. <Ref. to IN(H6DO)-8, REMOVAL, Air Intake Duct.>
10) Remove the grille bracket.

NOTE:
Remove ten clips when removing the grille bracket.

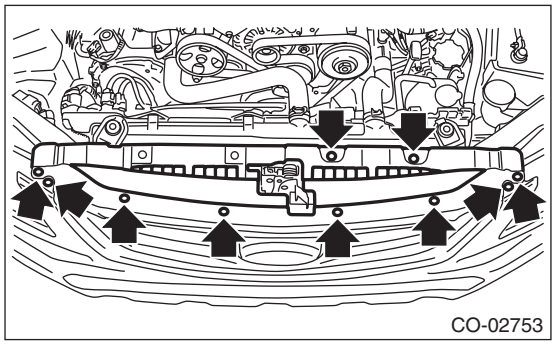

11) Remove the radiator main fan & fan motor and radiator sub fan & fan motor. <Ref. to CO(H6DO)-21, REMOVAL, Radiator Main Fan and Fan Motor.> <Ref. to CO(H6DO)-24, REMOVAL, Radiator Sub Fan and Fan Motor.>
12) Disconnect the ATF radiator inlet hose and outlet hose from the radiator.

NOTE:
Plug the ATF radiator inlet hose and outlet hose to prevent ATF from leaking.

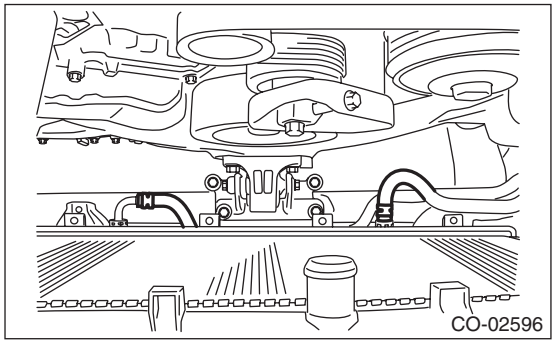

13) Remove the radiator upper brackets.

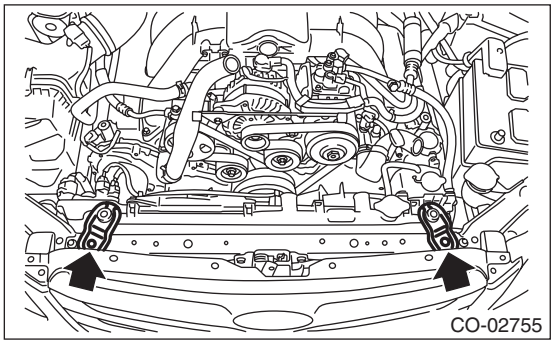

14) Lift the radiator up and away from vehicle.
15) Remove the radiator lower cushion.

B: INSTALLATION

1) Install the radiator lower cushion.
2) Install the radiator to vehicle.

NOTE:
Insert pins on the lower side of radiator into the radiator lower cushions on vehicle side.

3) Install the radiator upper brackets.

Tightening torque:
12 N·m (1.2 kgf-m, 8.9 ft-lb)

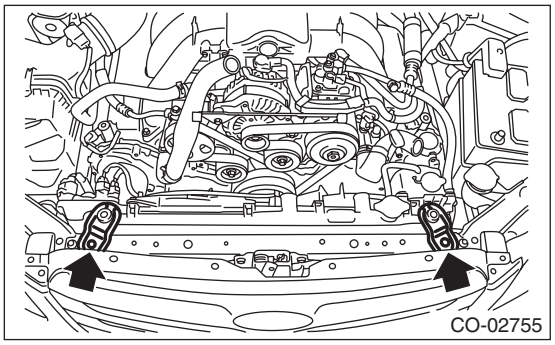

4) Connect the ATF radiator inlet hose and outlet hose.

NOTE:
Use new ATF radiator inlet hose and outlet hose.

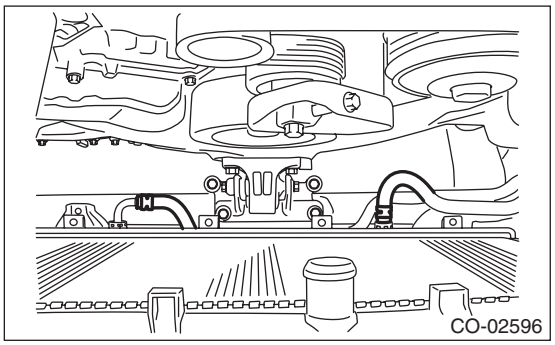

5) Install the radiator main fan & fan motor and radiator sub fan & fan motor. <Ref. to CO(H6DO)-22, INSTALLATION, Radiator Main Fan and Fan Motor.> <Ref. to CO(H6DO)-24, INSTALLATION, Radiator Sub Fan and Fan Motor.>

6) Attach the grille bracket.

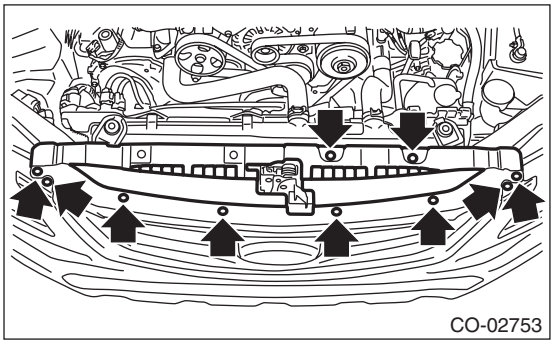

7) Lift up the vehicle.
8) Connect the radiator outlet hose to the radiator lower.

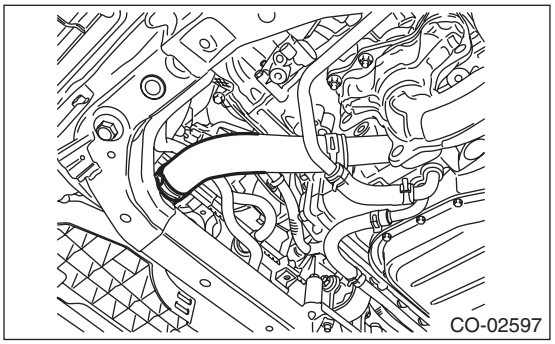

9) Connect the integrated connector of radiator main fan & fan motor and radiator sub fan & fan motor.

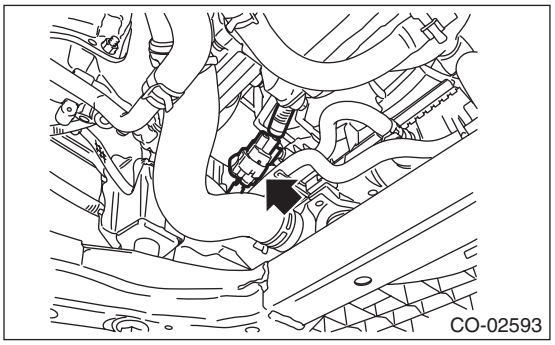

10) Install the under cover. <Ref. to EI-35, INSTALLATION, Front Under Cover.>
11) Lower the vehicle.
12) Connect the battery ground terminal.
13) Fill engine coolant. <Ref. to CO(H6DO)-12, FILLING OF ENGINE COOLANT, REPLACEMENT, Engine Coolant.>
14) Check the ATF level and replenish it if necessary. <Ref. to 5AT-29, INSPECTION, Automatic Transmission Fluid.>
15) Install the air intake duct. <Ref. to IN(H6DO)-8, INSTALLATION, Air Intake Duct.>
16) Install the collector cover.

C: INSPECTION

1) Check that the radiator does not have deformation, cracks or damage.
2) Check that the hose has no cracks, damage or loose part.
3) Remove the radiator cap, fill the radiator with engine coolant, and then install the radiator cap tester to the filler neck of radiator.
4) Apply a pressure of 157 kPa (1.6 kgf/cm^2, 23 psi) to the radiator, and check the following items.
- Leakage from the radiator or its vicinity
- Leakage from the hose or its connections

CAUTION:
- **Engine should be turned off.**
- **Wipe engine coolant from check points in advance.**
- **Be careful not to deform the filler neck of the radiator when installing and removing the radiator cap tester.**
- **Be careful of engine coolant from spurting out when removing the radiator cap tester.**

7. Radiator Cap

A: INSPECTION

1) Check that the radiator cap does not have deformation, cracks or damage.
2) Attach the radiator cap tester to radiator cap.

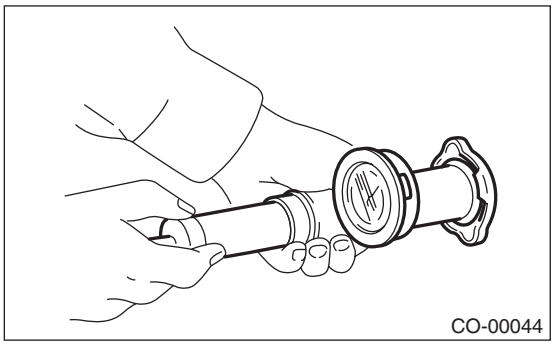

3) Increase pressure until the radiator cap tester gauge needle stops. Radiator cap is functioning properly if it holds the service limit pressure for 5 — 6 seconds. Replace the radiator cap if its valve opens at less than the service limit.

Standard:
93 — 123 kPa (0.95 — 1.25 kgf/cm^2, 14 — 18 psi)

Service limit:
83 kPa (0.85 kgf/cm^2, 12 psi)

CAUTION:
Be sure to remove foreign matter and rust from the cap in advance. Otherwise, results of pressure test will be incorrect.

8. Radiator Main Fan and Fan Motor

A: REMOVAL

1) Remove the collector cover.

NOTE:
Follow the steps below when removing the collector cover.
(1) Pull up the two points at the rear (A).
(2) Pull up the two points at the front (B) while moving them forward.

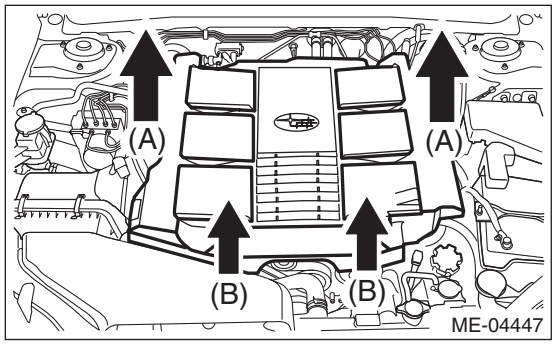

2) Disconnect the ground cable from battery.
3) Lift up the vehicle.
4) Remove the under cover. <Ref. to EI-35, REMOVAL, Front Under Cover.>
5) Drain engine coolant. <Ref. to CO(H6DO)-12, DRAINING OF ENGINE COOLANT, REPLACEMENT, Engine Coolant.>
6) Disconnect the integrated connector of radiator main fan & fan motor and radiator sub fan & fan motor.

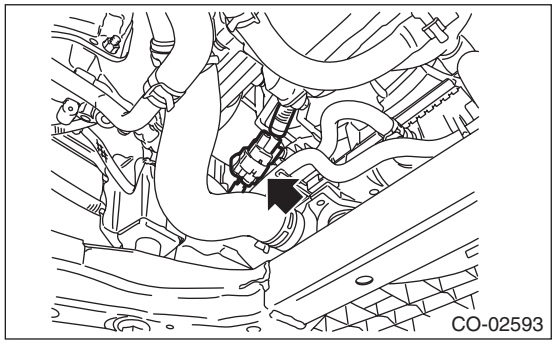

7) Lower the vehicle.
8) Remove the air intake duct. <Ref. to IN(H6DO)-8, REMOVAL, Air Intake Duct.>
9) Remove the grille bracket.

NOTE:
Remove ten clips when removing the grille bracket.

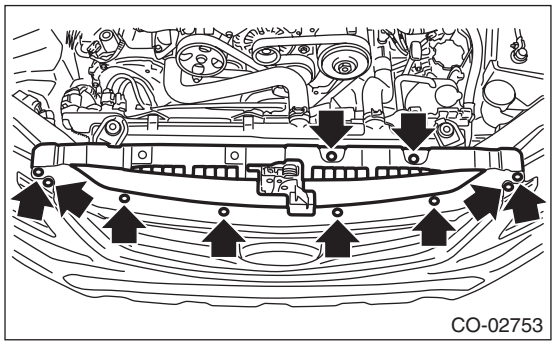

10) Remove the reservoir tank. <Ref. to CO(H6DO)-25, REMOVAL, Reservoir Tank.>
11) Remove radiator inlet hoses LH and RH only on radiator side.

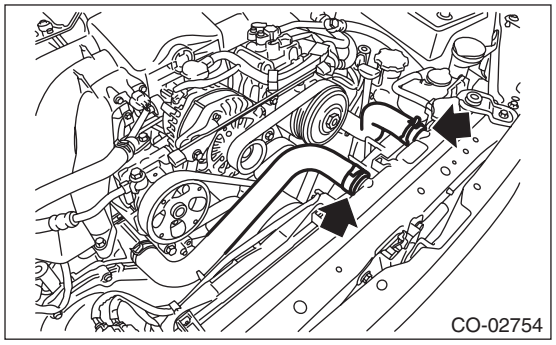

12) Remove the ATF radiator hose from the clip of the radiator fan shroud.
13) Remove bolts on the upper side of radiator fan shroud.

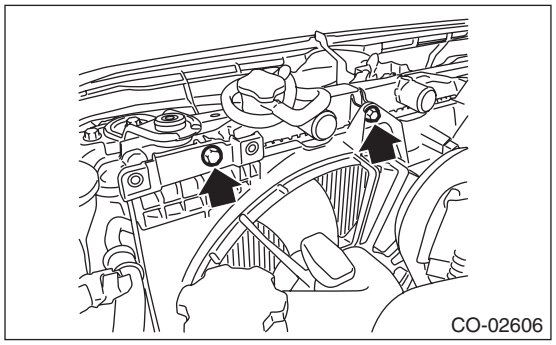

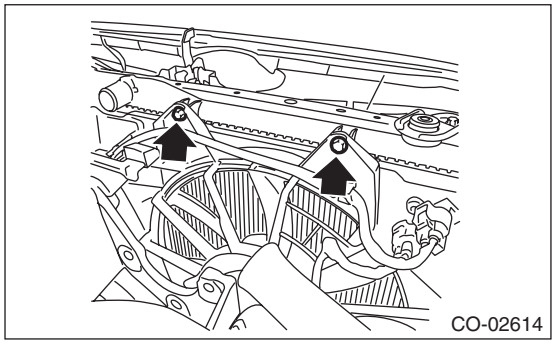

14) Remove the radiator fan shroud.

NOTE:
When pulling up the radiator fan shroud, be careful not to damage the radiator hose or ATF radiator hose.

B: INSTALLATION

1) Tighten the bolts on the upper side of radiator fan shroud.

Tightening torque:
7.5 N·m (0.8 kgf-m, 5.5 ft-lb)

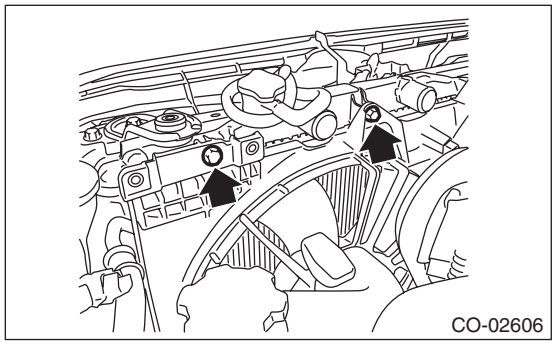
CO-02606

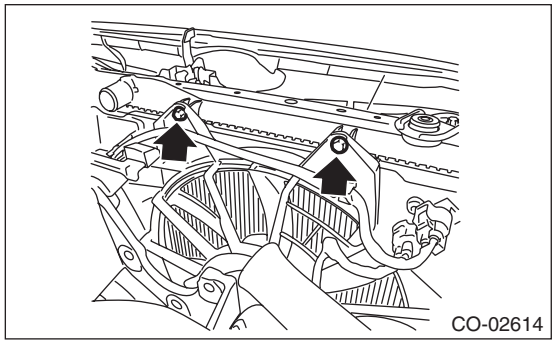
CO-02614

2) Install radiator inlet hoses LH and RH to the radiator.

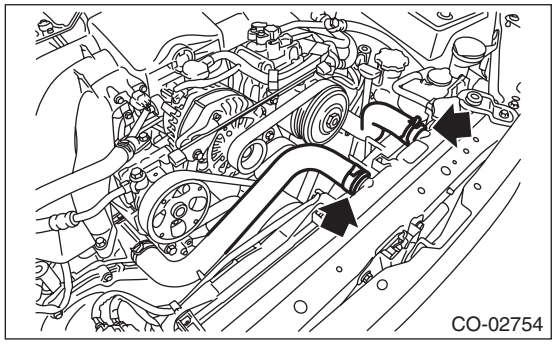
CO-02754

3) Install the reservoir tank. <Ref. to CO(H6DO)-25, INSTALLATION, Reservoir Tank.>

4) Attach the grille bracket.

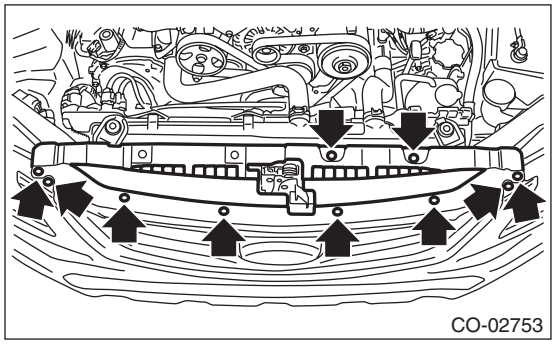
CO-02753

5) Install the air intake duct. <Ref. to IN(H6DO)-8, INSTALLATION, Air Intake Duct.>
6) Lift up the vehicle.
7) Connect the integrated connector of radiator main fan & fan motor and radiator sub fan & fan motor.

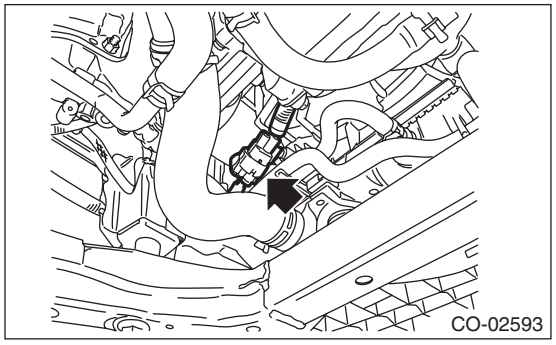
CO-02593

8) Install the under cover. <Ref. to EI-35, INSTALLATION, Front Under Cover.>
9) Lower the vehicle.
10) Fill engine coolant. <Ref. to CO(H6DO)-12, FILLING OF ENGINE COOLANT, REPLACEMENT, Engine Coolant.>
11) Connect the battery ground terminal.
12) Install the collector cover.

C: DISASSEMBLY

1) Disconnect the connector from the radiator fan control unit, and remove the harness.

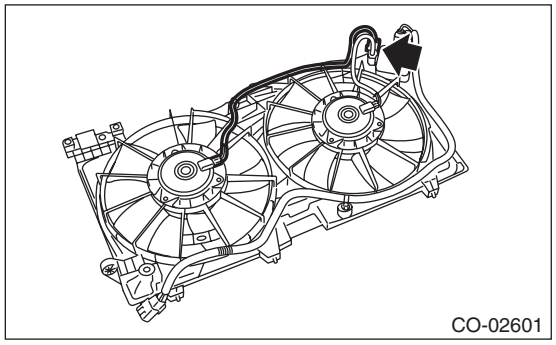
CO-02601

2) Remove the radiator main fan.

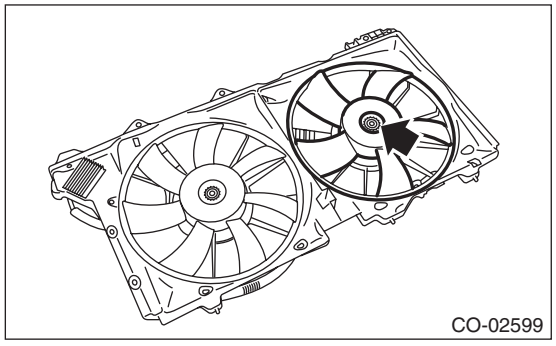
CO-02599

3) Remove the radiator main fan motor.

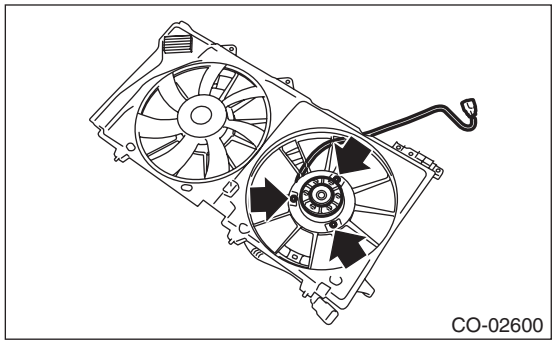
CO-02600

D: ASSEMBLY

Assemble in the reverse order of disassembly.

Tightening torque:
3.8 N·m (0.4 kgf-m, 2.8 ft-lb)

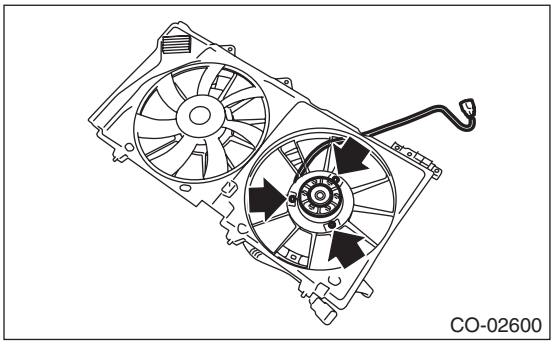
CO-02600

Tightening torque:
6.3 N·m (0.6 kgf-m, 4.6 ft-lb)

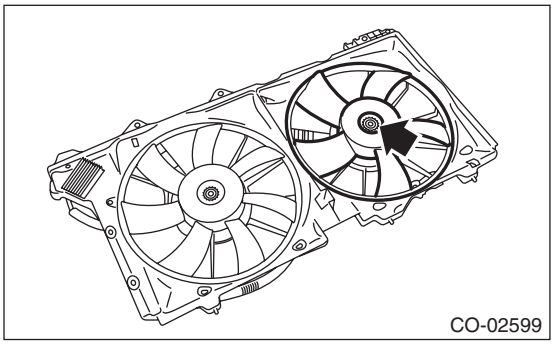
CO-02599

E: INSPECTION

Check that the radiator main fan, radiator main fan shroud and main fan motor do not have deformation, cracks or damage.

9. Radiator Sub Fan and Fan Motor

A: REMOVAL

Refer to the Radiator Main Fan and Fan Motor. <Ref. to CO(H6DO)-21, REMOVAL, Radiator Main Fan and Fan Motor.>

B: INSTALLATION

Refer to the Radiator Main Fan and Fan Motor. <Ref. to CO(H6DO)-22, INSTALLATION, Radiator Main Fan and Fan Motor.>

C: DISASSEMBLY

1) Disconnect the connector from the radiator fan control unit, and remove the harness.

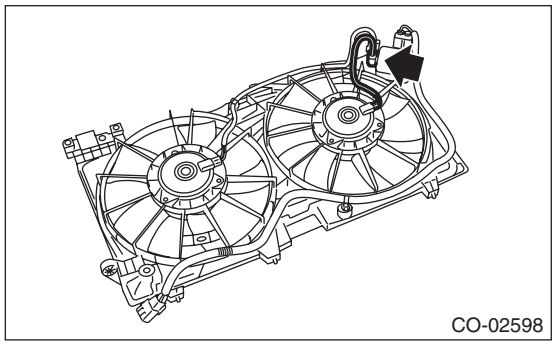
CO-02598

2) Remove the radiator sub fan.

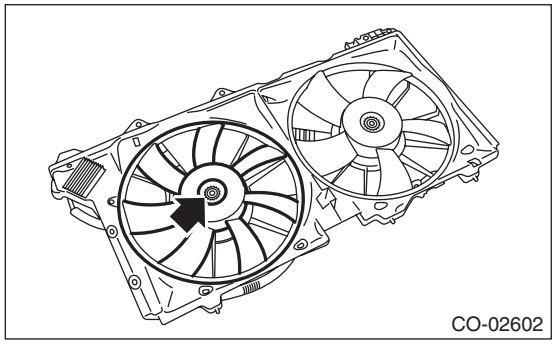
CO-02602

3) Remove the radiator sub fan motor.

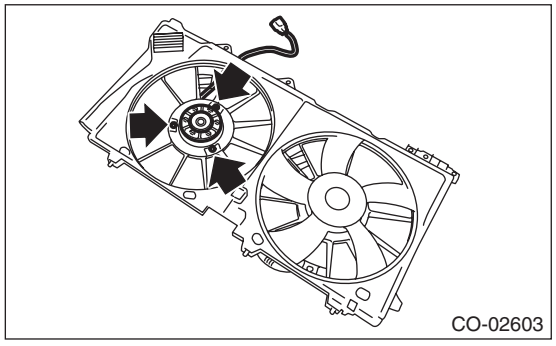
CO-02603

D: ASSEMBLY

Assemble in the reverse order of disassembly.

Tightening torque:
3.8 N·m (0.4 kgf-m, 2.8 ft-lb)

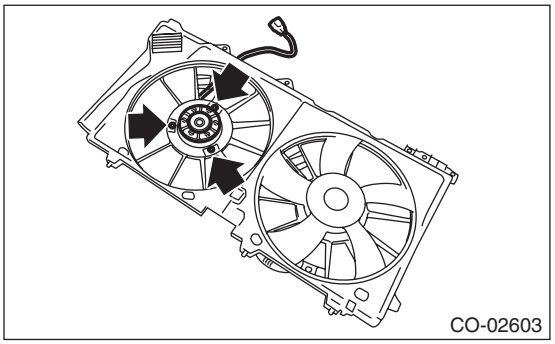
CO-02603

Tightening torque:
6.3 N·m (0.6 kgf-m, 4.6 ft-lb)

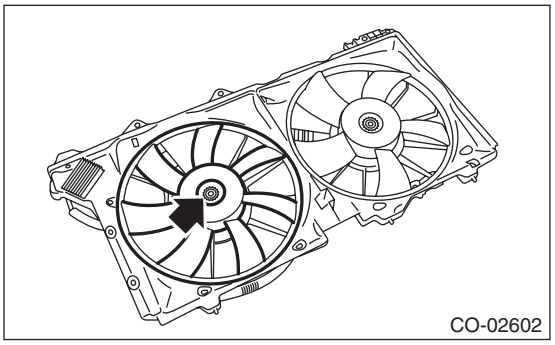
CO-02602

E: INSPECTION

Check that the radiator sub fan, radiator sub fan shroud and sub fan motor do not have deformation, cracks or damage.

10.Reservoir Tank

A: REMOVAL

1) Pull out the over flow hose.
2) Remove bolts which secure the reservoir tank, and remove the reservoir tank.

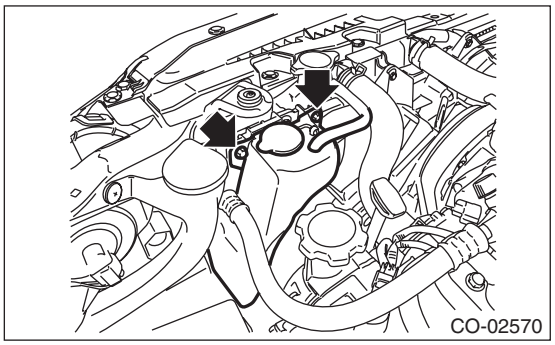

B: INSTALLATION

Install in the reverse order of removal.

Tightening torque:
7.5 N·m (0.8 kgf-m, 5.5 ft-lb)

C: INSPECTION

1) Check that the reservoir tank does not have deformation, cracks or damage.
2) Check the over flow hose for cracks or damage.
3) Make sure the engine coolant level is between “FULL” and “LOW”.

11.Radiator Fan Control Unit

A: REMOVAL

1) Disconnect the ground cable from battery.
2) Remove the radiator fan control unit.
   (1) Disconnect the connector (A) from the radiator fan control unit.
   (2) Remove screws which secure the radiator fan control unit.

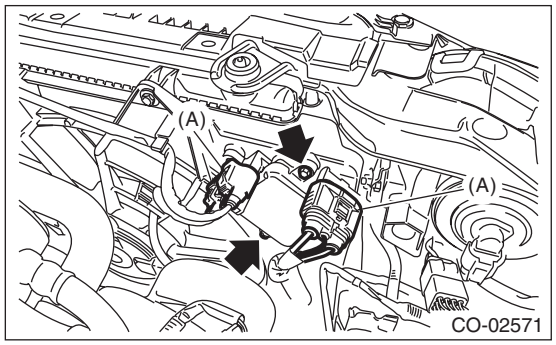

B: INSTALLATION

Install in the reverse order of removal.

Tightening torque:
2.6 N·m (0.3 kgf-m, 1.9 ft-lb)

12.Engine Cooling System Trouble in General

A: INSPECTION

Trouble	Possible cause	Corrective action
Over-heating	a. Insufficient engine coolant	Replenish engine coolant, inspect for leakage, and repair it if necessary.
	b. Defective thermostat	Replace.
	c. Malfunction of water pump	Replace.
	d. Clogged engine coolant passage	Clean.
	e. Improper ignition timing	Inspect and repair the ignition control system. <Ref. to EN(H6DO)(diag)-2, PROCEDURE, Basic Diagnostic Procedure.>
	f. Clogged or leaking radiator	Clean, repair or replace.
	g. Defective radiator cap	Replace.
	h. Improper engine oil in engine coolant	Replace the engine coolant. If ineffective, check, repair or replace engine components.
	i. Air/fuel mixture ratio too lean	Inspect and repair the fuel injection system. <Ref. to EN(H6DO)(diag)-2, PROCEDURE, Basic Diagnostic Procedure.>
	j. Excessive back pressure in exhaust system	Clean or replace.
	k. Insufficient clearance between piston and cylinder	Adjust or replace.
	l. Dragging brake	Adjust.
	m. Defective radiator fan	Inspect the radiator fan relay, engine coolant temperature sensor or fan motor and replace them.
Over-cooling	a. Ambient temperature extremely low	Partly cover radiator front area.
	b. Defective thermostat	Replace.
Engine coolant leaks	a. Loosened or damaged connecting units on hoses	Repair or replace.
	b. Leakage from water pump	Replace.
	c. Leakage from water pipe	Repair or replace.
	d. Leakage around cylinder head gasket	Retighten cylinder head bolts or replace cylinder head gasket.
	e. Damaged or cracked cylinder head and cylinder block	Repair or replace.
	f. Damaged or cracked thermostat cover	Repair or replace.
	g. Leakage from radiator	Repair or replace.
Noise	a. Defective radiator fan	Replace.
	b. Defective water pump bearing	Replace water pump.
	c. Defective water pump mechanical seal	Replace water pump.

LUBRICATION

LU(H6DO)

Page

1. General Description 2
2. Oil Pressure System 7
3. Engine Oil 9
4. Oil Pan 11
5. Oil Pump 12
6. Oil Pressure Switch 14
7. Engine Oil Filter 15
8. Oil Cooler 16
9. Oil Level Switch 17
10. Engine Lubrication System Trouble in General 24

1. General Description

A: SPECIFICATION

Lubrication method					Forced lubrication
Oil pump	Pump type				Trochoid type
	Number of teeth	Inner rotor			7
		Outer rotor			8
	Outer rotor diameter × thickness			mm (in)	76 × 30.2 (2.99 × 1.19)
	Performance (Oil temperature 80°C (176°F))	600 rpm	Discharge pressure	kPa (kgf/cm^2, psi)	98 (1.0, 14)
			Discharge rate	ℓ (US qt, Imp qt)/min.	5.0 (5.3, 4.4) or more
		6,000 rpm	Discharge pressure	kPa (kgf/cm^2, psi)	392 (4.0, 57)
			Discharge rate	ℓ (US qt, Imp qt)/min.	82.8 (87.5, 72.9) or more
Oil filter	Filter type				Full-flow filter type
	Filtration area			cm^2 (sq in)	1,300 (201.5)
	By-pass valve opening pressure			kPa (kgf/cm^2, psi)	160 (1.63, 23.2)
	Outer diameter × width			mm (in)	80 × 75 (3.15 × 2.95)
	Installation screw specifications				M 20 × 1.5
Oil pressure switch	Type				Immersed contact point type
	Operating voltage — power consumption				12 V — 3.4 W or less
	Warning light operating pressure			kPa (kgf/cm^2, psi)	14.7 (0.15, 2.1)
	Proof pressure			kPa (kgf/cm^2, psi)	980 (10.0, 142) or more
Engine oil	Total capacity (at overhaul)			ℓ (US qt, Imp qt)	7.8 (8.2, 6.9)
	When replacing engine oil and oil filter			ℓ (US qt, Imp qt)	6.5 (6.9, 5.7)
	When replacing engine oil only			ℓ (US qt, Imp qt)	6.3 (6.7, 5.5)

Recommended oil:

CAUTION:
It is acceptable to fill an engine with oil of another brand when replacing the oil, but make sure to use the following engine oil specified by Subaru.

Engine oil standard		SAE viscosity No.
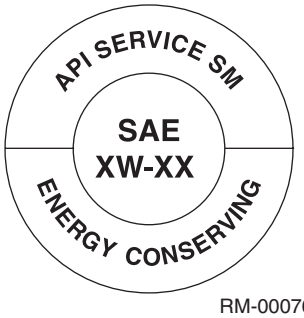 RM-00076 Those with the API standard SM "Energy Conserving" or SN "Resource Conserving" logo.	or RM-00002 Those with the ILSAC standard GF-4 or GF-5 "starburst mark" displayed on top of the container.	5W-30 (synthetic oil)

NOTE:
The proper viscosity oil helps the engine maintain its ideal temperature, and cranking speed increased by reducing viscosity friction in hot condition.

B: COMPONENT

1. OIL PAN UPPER, OIL COOLER, AND OIL FILTER

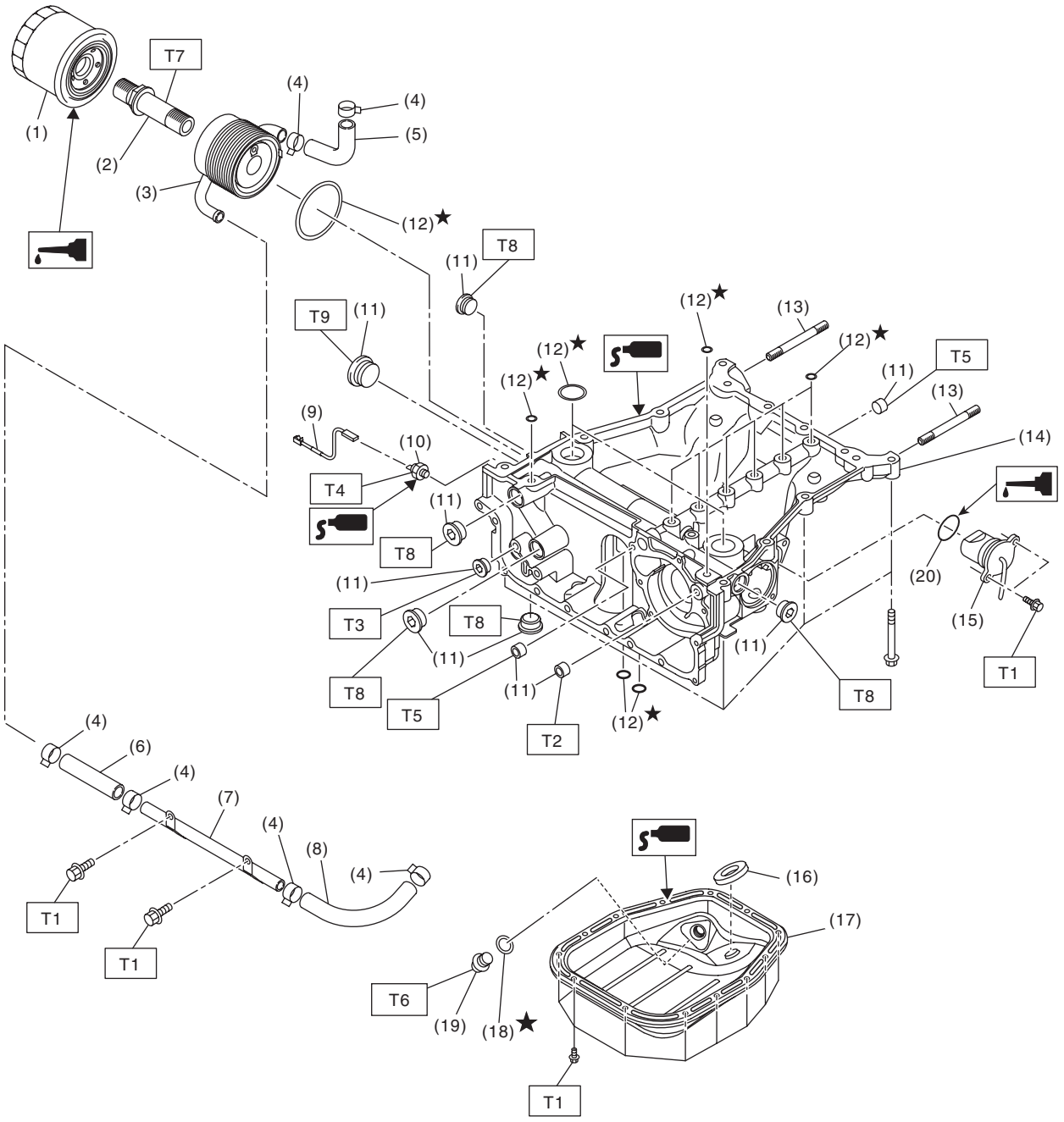

LU-02804

(1)	Oil filter	(11)	Plug	***Tightening torque:N·m (kgf-m, ft-lb)***
(2)	Oil cooler connector	(12)	O-ring	***T1: 6.4 (0.7, 4.7)***
(3)	Oil cooler	(13)	Stud bolt	***T2: 17 (1.7, 12.5)***
(4)	Clamp	(14)	Oil pan upper	***T3: 23 (2.3, 17.0)***
(5)	Water hose	(15)	Oil level switch	***T4: 25 (2.5, 18.4)***
(6)	Water hose	(16)	Oil pan magnet	***T5: 34 (3.5, 25.1)***
(7)	Engine oil cooler water pipe	(17)	Oil pan lower	***T6: 44 (4.5, 32.5)***
(8)	Water hose	(18)	Gasket	***T7: 54 (5.5, 39.8)***
(9)	Oil pressure switch harness	(19)	Drain plug	***T8: 60 (6.1, 44.3)***
(10)	Oil pressure switch	(20)	O-ring	***T9: 90 (9.2, 66.4)***

2. OIL PUMP

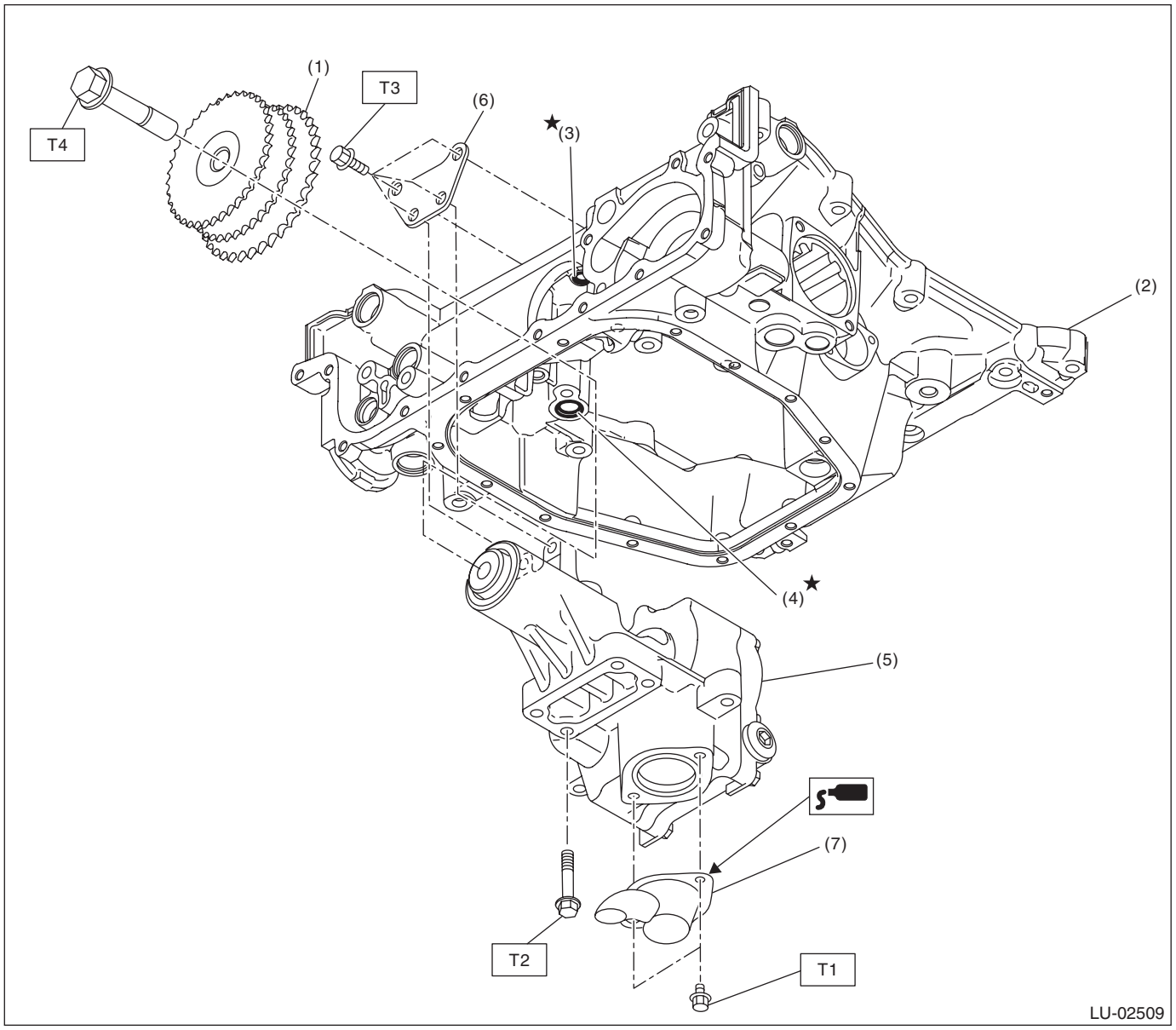

(1) Idler sprocket
(2) Oil pan upper
(3) O-ring
(4) O-ring
(5) Oil pump
(6) Stiffener
(7) Strainer

Tightening torque:N·m (kgf-m, ft-lb)
T1: 6.4 (0.7, 4.7)
T2: 13 (1.3, 9.6)
T3: 24 (2.4, 17.7)
T4: 120 (12.2, 88.5)

C: CAUTION

• Wear appropriate work clothing, including a cap, protective goggles and protective shoes when performing any work.
• Remove contamination including dirt and corrosion before removal, installation or disassembly.
• Keep the disassembled parts in order and protect them from dust and dirt.
• Before removal, installation or disassembly, be sure to clarify the failure. Avoid unnecessary removal, installation, disassembly and replacement.
• Before applying liquid gasket, completely remove the old liquid gasket and degrease it.
• Vehicle components are extremely hot after driving. Be wary of receiving burns from heated parts.
• Be sure to tighten fasteners including bolts and nuts to the specified torque.
• Place shop jacks or rigid racks at the specified points.
• Before disconnecting connectors of sensors or units, be sure to disconnect the ground cable from battery.
• If the engine oil is spilt over exhaust pipe or the under cover, wipe it off with cloth to avoid emitting smoke or causing a fire.
• Prepare a container and cloth to prevent scattering of oil when performing work where fuels can be spilled. If the oil spills, wipe it off immediately to prevent from penetrating into floor or flowing out for environmental protection.
• Follow all government and local regulations concerning disposal of refuse when disposing of oil.

D: PREPARATION TOOL

1. SPECIAL TOOL

ILLUSTRATION	TOOL NUMBER	DESCRIPTION	REMARKS
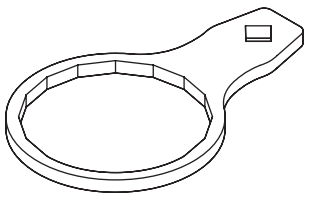 ST18332AA020	18332AA020	OIL FILTER WRENCH	Used for removing and installing oil filter.

2. GENERAL TOOL

TOOL NAME	REMARKS
Circuit tester	Used for measuring resistance and voltage.

2. Oil Pressure System

A: WIRING DIAGRAM

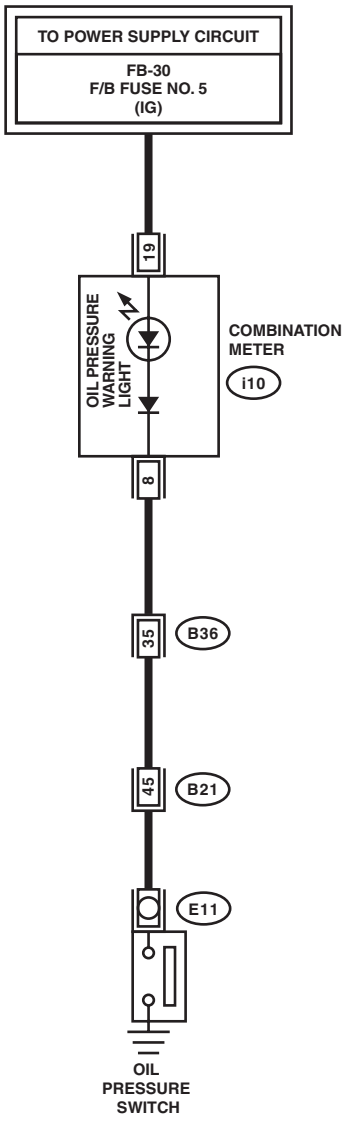

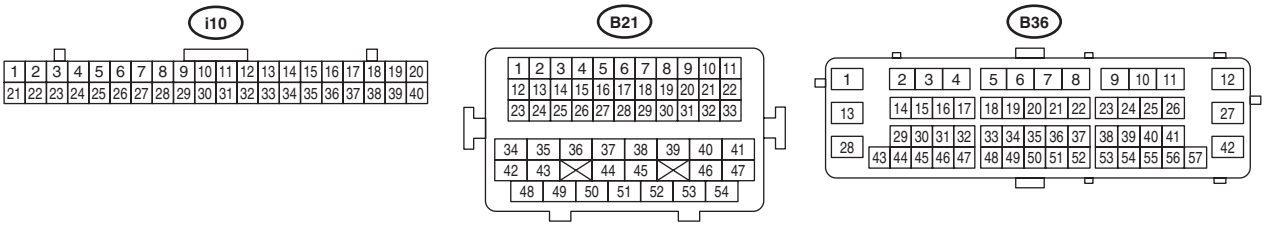

LU-02589

B: INSPECTION

Step		Check	Yes	No
1	**CHECK COMBINATION METER.** 1) Turn the ignition switch to ON. (engine OFF) 2) Check the warning light of combination meter.	Does the warning light illuminate?	Go to step **2**.	Repair or replace the combination meter. <Ref. to IDI-11, INSPECTION, Combination Meter System.>
2	**CHECK HARNESS CONNECTOR BETWEEN COMBINATION METER AND OIL PRESSURE SWITCH.** 1) Turn the ignition switch to OFF. 2) Disconnect the connector from oil pressure switch. 3) Turn the ignition switch to ON. 4) Measure the voltage of harness between oil pressure switch connector and chassis ground. ***Connector & terminal*** ***(E11) No. 1 (+) — Chassis ground (–):***	Is the voltage 10 V or more?	Replace the oil pressure switch. <Ref. to LU(H6DO)-14, Oil Pressure Switch.>	Go to step **3**.
3	**CHECK COMBINATION METER.** 1) Turn the ignition switch to OFF. 2) Remove the combination meter. 3) Measure the resistance of combination meter. ***Terminals*** ***(i10) No. 8 — (i10) No. 19:***	Is the resistance less than 10 Ω?	Repair the harness and connector. NOTE: In this case, repair the following item: • Open circuit of harness between combination meter and oil pressure switch • Poor contact of combination meter connector • Poor contact of oil pressure switch connector • Poor contact of coupling connector	Repair or replace the combination meter. <Ref. to IDI-11, INSPECTION, Combination Meter System.>

3. Engine Oil

A: INSPECTION

CAUTION:
If the engine oil is spilt over exhaust pipe or the under cover, wipe it off with cloth to avoid emitting smoke or causing a fire.

1) Park the vehicle on a level surface.
2) Remove the oil level gauge and wipe away the oil.
3) Reinsert the oil level gauge all the way. Be sure that the oil level gauge is correctly inserted and properly orientated.
4) Pull out the oil level gauge again, and check the oil level. If the engine oil level is below “L” line, make sure that there is no oil leakage from the engine, then add oil to raise the level up to the “F” line.
5) Start the engine to circulate the oil in engine room.
6) After turning off the engine, wait a few minutes for the oil to return to the oil pan before checking the level.

NOTE:
• Just after driving or while the engine is warm, engine oil level may be exceeding the “F” line. This is caused by thermal expansion of engine oil.
• To prevent overfilling of engine oil, do not add oil above “F” line when the engine is cold.
• As the oil level gauge is used for daily inspection, standard of “F” line and “L” line of the oil level gauge is set for the condition that engine is cold.

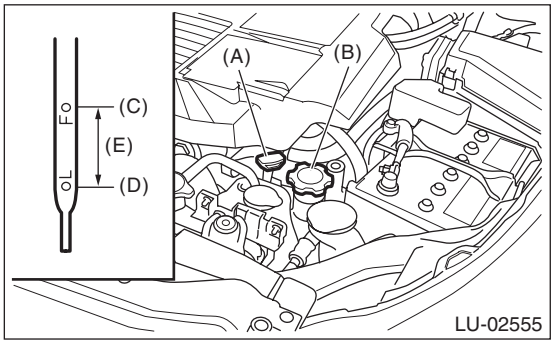

(A) Oil level gauge
(B) Engine oil filler cap
(C) “F” line
(D) “L” line
(E) Approx. 1.0 ℓ (1.1 US qt, 0.9 Imp qt)

B: REPLACEMENT

CAUTION:
If the engine oil is spilt over exhaust pipe or the under cover, wipe it off with cloth to avoid emitting smoke or causing a fire.

1) Open the engine oil filler cap for quick draining of engine oil.
2) Lift up the vehicle.
3) Remove the under cover. <Ref. to EI-35, REMOVAL, Front Under Cover.>
4) Drain engine oil by loosening the engine oil drain plug.

NOTE:
Prepare the container for draining of engine oil.

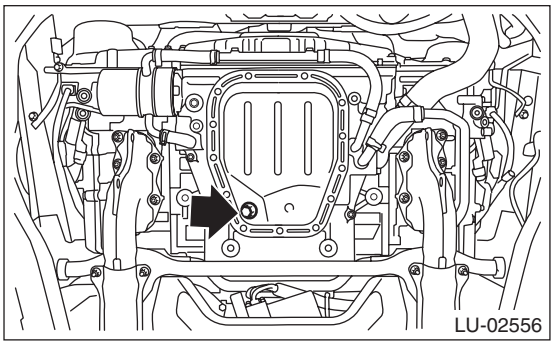

5) Tighten the engine oil drain plug after draining engine oil.

NOTE:
Use a new drain plug gasket.

Tightening torque:
44 N·m (4.5 kgf-m, 32.5 ft-lb)

6) Install the under cover. <Ref. to EI-35, INSTALLATION, Front Under Cover.>
7) Lower the vehicle.
8) Using engine oil of proper quality and viscosity, fill engine oil through the oil filler duct to the “F” line on level gauge. Make sure that the vehicle is parked on a level surface when checking oil level.

Recommended oil:
Refer to “SPECIFICATION” for recommended oil. <Ref. to LU(H6DO)-2, SPECIFICATION, General Description.>

Engine oil capacity:
Refer to “SPECIFICATION” for engine oil capacity. <Ref. to LU(H6DO)-2, SPECIFICATION, General Description.>

9) Close the engine oil filler cap.
10) Start the engine to circulate the oil in engine room.

11) After the engine stops, recheck the oil level. If necessary, add engine oil up to the “F” line on level gauge.

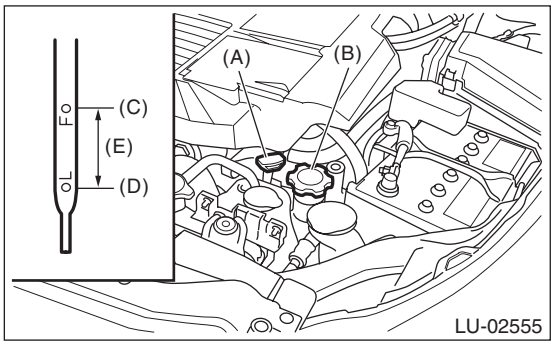

(A) Oil level gauge
(B) Engine oil filler cap
(C) “F” line
(D) “L” line
(E) Approx. 1.0 ℓ (1.1 US qt, 0.9 Imp qt)

4. Oil Pan

A: REMOVAL

NOTE:
Before removing the oil pan upper, remove the engine from vehicle. <Ref. to ME(H6DO)-36, REMOVAL, Engine Assembly.> <Ref. to ME(H6DO)-104, REMOVAL, Cylinder Block.>
1) Lift up the vehicle.
2) Remove the under cover. <Ref. to EI-35, REMOVAL, Front Under Cover.>
3) Drain the engine oil. <Ref. to LU(H6DO)-9, REPLACEMENT, Engine Oil.>
4) Insert an oil pan cutter blade into the gap between oil pan upper and oil pan lower, and remove the oil pan.

CAUTION:
Do not use a screwdriver or similar tool in place of oil pan cutter.
5) Remove the oil pan lower.

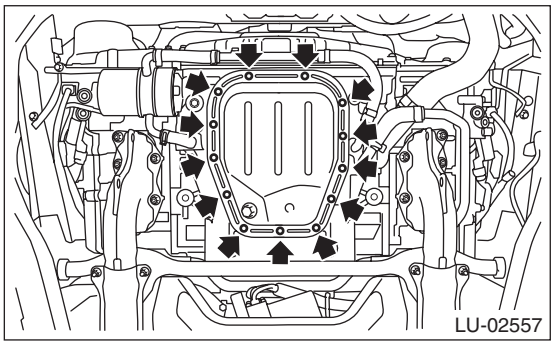

B: INSTALLATION

1) Apply liquid gasket to the mating surfaces of oil pan, and install the oil pan lower.

NOTE:
Install within 5 min. after applying liquid gasket.

Liquid gasket:
THREE BOND 1217G (Part No. K0877Y0100) or equivalent

Liquid gasket applying diameter:
5.0±1.0 mm (0.197±0.039 in)

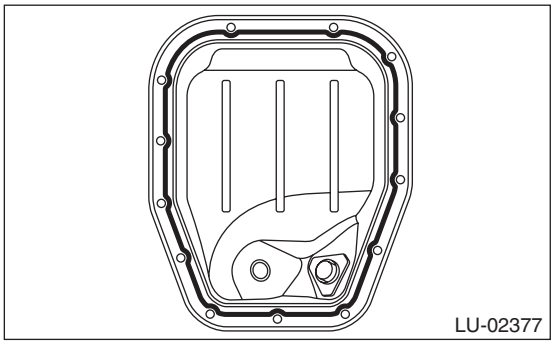

2) Tighten the oil pan lower installing bolts in the numerical order as shown in the figure.

Tightening torque:
6.4 N·m (0.7 kgf-m, 4.7 ft-lb)

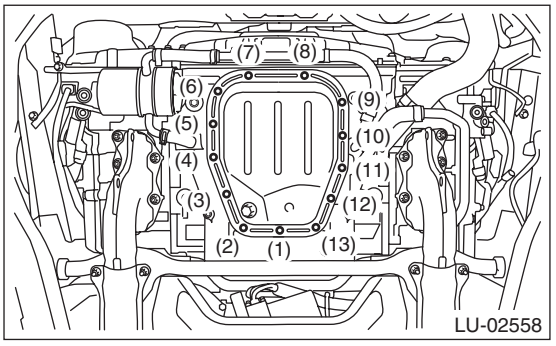

3) Install the under cover. <Ref. to EI-35, INSTALLATION, Front Under Cover.>
4) Lower the vehicle.
5) Refill the engine oil. <Ref. to LU(H6DO)-9, REPLACEMENT, Engine Oil.>
6) Check the engine oil level. <Ref. to LU(H6DO)-9, INSPECTION, Engine Oil.>

C: INSPECTION

Check that the oil pan upper and oil pan lower have no deformation, cracks or other damages.

5. Oil Pump

A: REMOVAL

1) Remove the collector cover.

NOTE:
Follow the steps below when removing the collector cover.
(1) Lift up (A) in two positions at the rear.
(2) Moving (B) in two positions at the front toward the vehicle, lift them up.

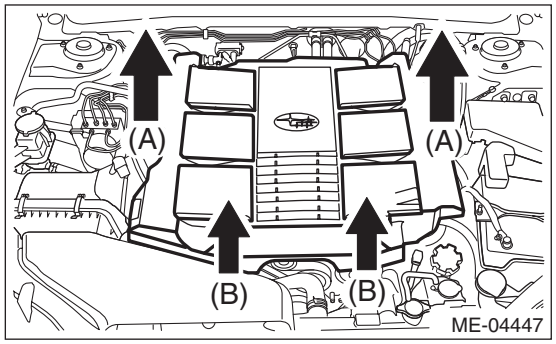

2) Disconnect the ground cable from battery.
3) Lift up the vehicle.
4) Remove the under cover. <Ref. to EI-35, REMOVAL, Front Under Cover.>
5) Drain the engine oil. <Ref. to LU(H6DO)-9, REPLACEMENT, Engine Oil.>
6) Drain engine coolant. <Ref. to CO(H6DO)-12, DRAINING OF ENGINE COOLANT, REPLACEMENT, Engine Coolant.>
7) Lower the vehicle.
8) Remove the radiator. <Ref. to CO(H6DO)-17, REMOVAL, Radiator.>
9) Remove the V-belts. <Ref. to ME(H6DO)-51, REMOVAL, V-belt.>
10) Remove the crank pulley. <Ref. to ME(H6DO)-52, REMOVAL, Crank Pulley.>
11) Remove the chain cover. <Ref. to ME(H6DO)-53, REMOVAL, Chain Cover.>
12) Remove the timing chain. <Ref. to ME(H6DO)-63, REMOVAL, Timing Chain Assembly.>
13) Remove the oil pan lower. <Ref. to LU(H6DO)-11, REMOVAL, Oil Pan.>
14) Remove the stiffener and the oil pump.

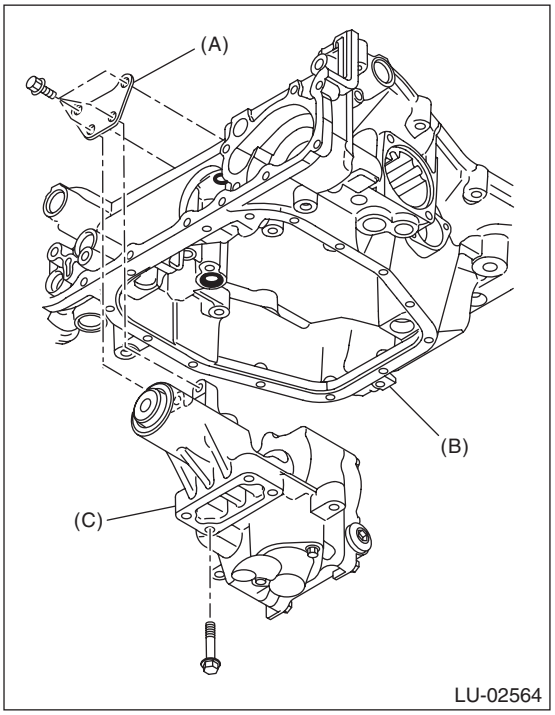

(A) Stiffener
(B) Oil pan upper
(C) Oil pump

15) Remove the strainer from the oil pump.
16) Remove the O-ring from oil pan upper.

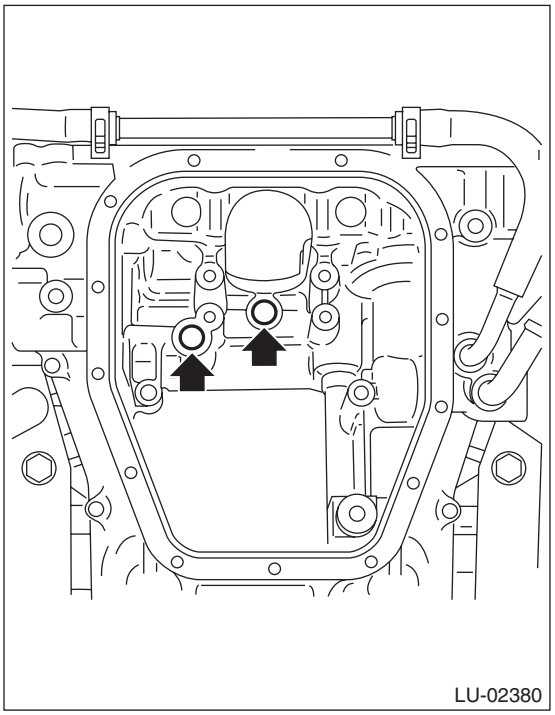

B: INSTALLATION

1) Apply engine oil to the O-ring and attach it to the oil pan upper.

NOTE:
Use new O-rings.

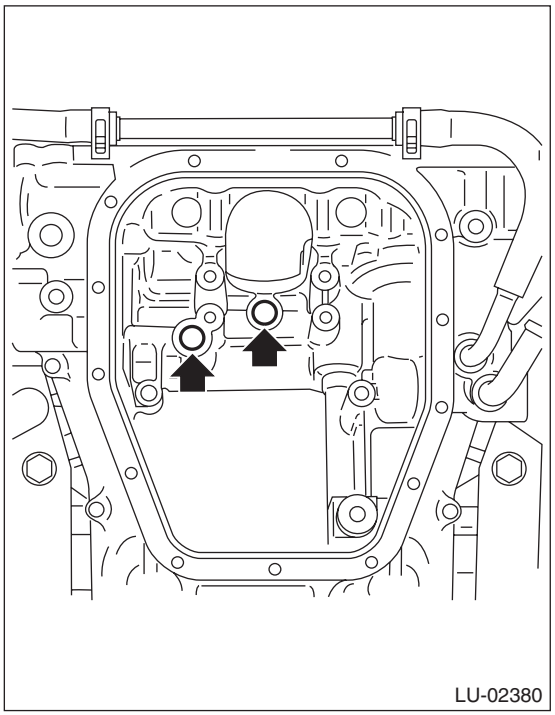

2) Apply liquid gasket to the mating surfaces of strainer.

Liquid gasket:
THREE BOND 1217G (Part No. K0877Y0100) or equivalent

Liquid gasket applying diameter:
2.0±1.0 mm (0.079±0.039 in)

NOTE:
- Install within 5 min. after applying liquid gasket.
- After installing the strainer, remove any liquid gasket that is squeezed out.

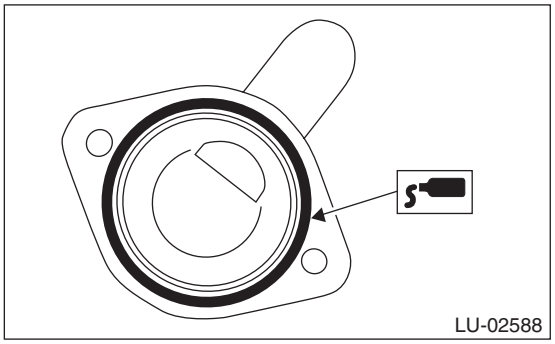

3) Install the strainer to the oil pump.

Tightening torque:
6.4 N·m (0.7 kgf-m, 4.7 ft-lb)

4) Install the stiffener and the oil pump.

Tightening torque:
T1: 13 N·m (1.3 kgf-m, 9.6 ft-lb)
T2: 24 N·m (2.4 kgf-m, 17.7 ft-lb)

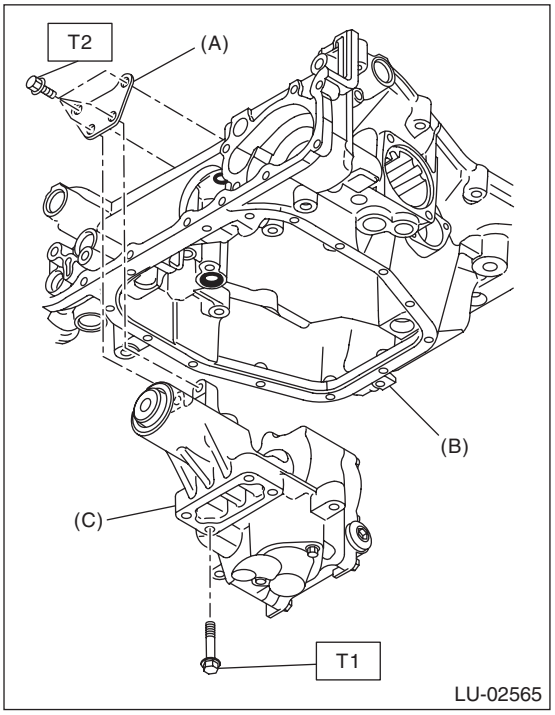

(A) Stiffener
(B) Oil pan upper
(C) Oil pump

5) Install the oil pan lower. <Ref. to LU(H6DO)-11, INSTALLATION, Oil Pan.>
6) Install the timing chain. <Ref. to ME(H6DO)-69, INSTALLATION, Timing Chain Assembly.>
7) Install the chain cover. <Ref. to ME(H6DO)-56, INSTALLATION, Chain Cover.>
8) Install the crank pulley. <Ref. to ME(H6DO)-52, INSTALLATION, Crank Pulley.>
9) Install the V-belts. <Ref. to ME(H6DO)-51, INSTALLATION, V-belt.>
10) Install the radiator. <Ref. to CO(H6DO)-18, INSTALLATION, Radiator.>
11) Lift up the vehicle.
12) Install the under cover. <Ref. to EI-35, INSTALLATION, Front Under Cover.>
13) Lower the vehicle.
14) Fill the ATF. <Ref. to CO(H6DO)-12, FILLING OF ENGINE COOLANT, REPLACEMENT, Engine Coolant.>
15) Refill the engine oil. <Ref. to LU(H6DO)-9, REPLACEMENT, Engine Oil.>
16) Check the engine oil level. <Ref. to LU(H6DO)-9, INSPECTION, Engine Oil.>

C: INSPECTION

- Visually check the oil pump for breakage.
- Visually check the strainer portion for clogging.

6. Oil Pressure Switch

A: REMOVAL

1) Disconnect the ground cable from battery.
2) Lift up the vehicle.
3) Remove the under cover. <Ref. to EI-35, REMOVAL, Front Under Cover.>
4) Drain the engine oil. <Ref. to LU(H6DO)-9, REPLACEMENT, Engine Oil.>
5) Disconnect the terminal from oil pressure switch.

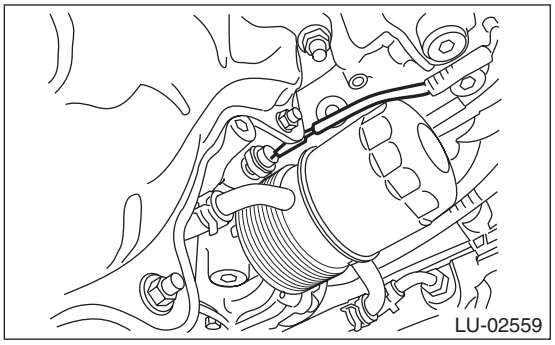

6) Remove the oil pressure switch.

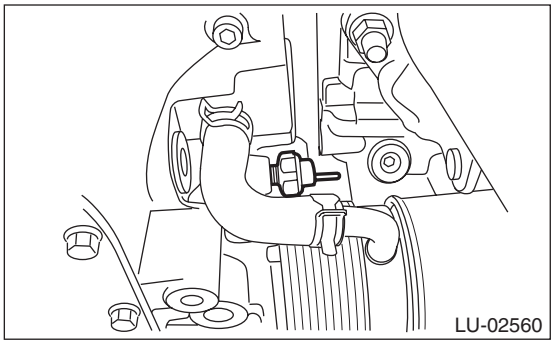

B: INSTALLATION

1) Apply liquid gasket to the oil pressure switch threads.

Liquid gasket:
THREE BOND 1324 (Part No. 004403042) or equivalent

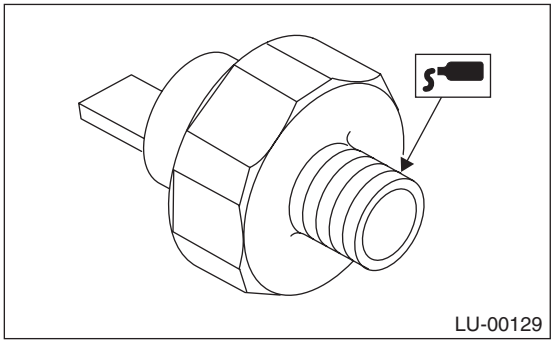

2) Install the oil pressure switch.

Tightening torque:
25 N·m (2.5 kgf-m, 18.4 ft-lb)

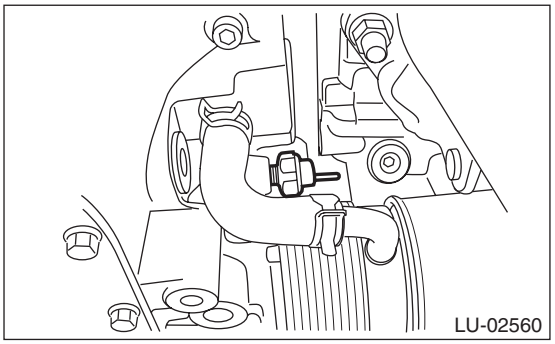

3) Connect the terminal of the oil pressure switch.

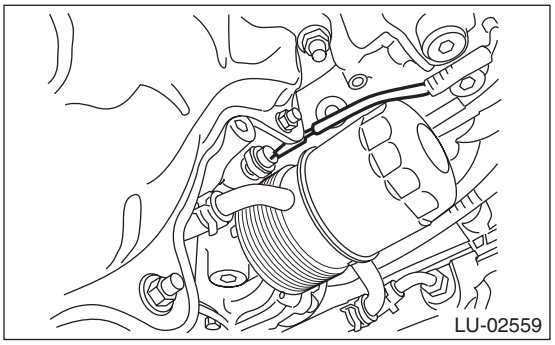

4) Install the under cover. <Ref. to EI-35, INSTALLATION, Front Under Cover.>
5) Refill the engine oil. <Ref. to LU(H6DO)-9, REPLACEMENT, Engine Oil.>
6) Check the engine oil level. <Ref. to LU(H6DO)-9, INSPECTION, Engine Oil.>

C: INSPECTION

1) Check that the oil pressure switch does not have deformation, cracks or damage.
2) Check the oil pressure switch installation portion for oil leakage and oil seepage.

7. Engine Oil Filter

A: REMOVAL

CAUTION:
If the engine oil is spilt over exhaust pipe or the under cover, wipe it off with cloth to avoid emitting smoke or causing a fire.

1) Lift up the vehicle.
2) Drain the engine oil. <Ref. to LU(H6DO)-9, REPLACEMENT, Engine Oil.>
3) Remove the under cover. <Ref. to EI-35, REMOVAL, Front Under Cover.>
4) Remove the engine oil filter using the ST.
ST 18332AA020 OIL FILTER WRENCH

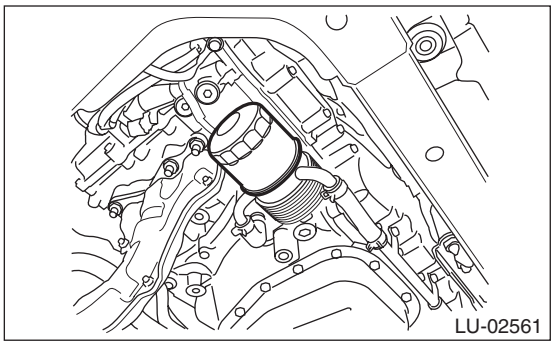

B: INSTALLATION

CAUTION:
Do not tighten excessively, or oil may leak.

1) Clean the engine oil filter installation surface of the oil cooler.
2) Obtain a new engine oil filter and apply a thin coat of engine oil to the seal rubber.
3) Install the engine oil filter turning it by hand, being careful not to damage the seal rubber.
4) Tighten more (approx. 3/4 turn) after the seal rubber contacts the oil cooler. When using a torque wrench, tighten to 14 N·m (1.4 kgf-m, 10.3 ft-lb).
5) Install the under cover. <Ref. to EI-35, INSTALLATION, Front Under Cover.>
6) Lower the vehicle.
7) Refill the engine oil. <Ref. to LU(H6DO)-9, REPLACEMENT, Engine Oil.>
8) Check the engine oil level. <Ref. to LU(H6DO)-9, INSPECTION, Engine Oil.>

C: INSPECTION

1) After installing the engine oil filter, run the engine and make sure that no oil is leaking around seal rubber.

NOTE:
The filter element and filter case are permanently jointed; therefore, interior cleaning is not necessary.
2) Check the engine oil level. <Ref. to LU(H6DO)-9, INSPECTION, Engine Oil.>

8. Oil Cooler

A: REMOVAL

CAUTION:
If the engine oil is spilt over exhaust pipe or the under cover, wipe it off with cloth to avoid emitting smoke or causing a fire.

1) Lift up the vehicle.
2) Remove the under cover. <Ref. to EI-35, REMOVAL, Front Under Cover.>
3) Drain engine coolant. <Ref. to CO(H6DO)-12, DRAINING OF ENGINE COOLANT, REPLACEMENT, Engine Coolant.>
4) Drain the engine oil. <Ref. to LU(H6DO)-9, REPLACEMENT, Engine Oil.>
5) Remove the bolts which hold the engine oil cooler water pipe to chain cover and disconnect the water hose from oil cooler.

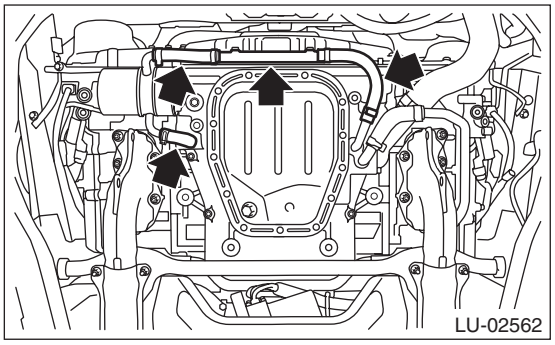

6) Remove the engine oil filter using the ST. <Ref. to LU(H6DO)-15, REMOVAL, Engine Oil Filter.>
ST 18332AA020 OIL FILTER WRENCH
7) Remove the oil cooler connector and remove the oil cooler.

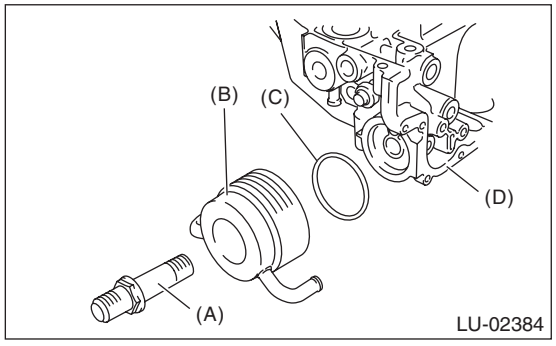

(A) Oil cooler connector
(B) Oil cooler
(C) O-ring
(D) Oil pan upper

B: INSTALLATION

1) Tighten the oil cooler connector to install the oil cooler to the oil pan upper.

Tightening torque:
54 N·m (5.5 kgf-m, 39.8 ft-lb)

NOTE:
Use new O-rings.

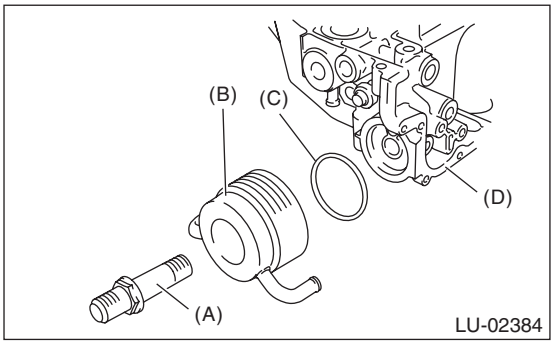

(A) Oil cooler connector
(B) Oil cooler
(C) O-ring
(D) Oil pan upper

2) Attach the engine oil filter. <Ref. to LU(H6DO)-15, INSTALLATION, Engine Oil Filter.>
3) Attach the bolts which hold the engine oil cooler water pipe to chain cover and connect the water hose to oil cooler.

Tightening torque:
T: 6.4 N·m (0.7 kgf-m, 4.7 ft-lb)

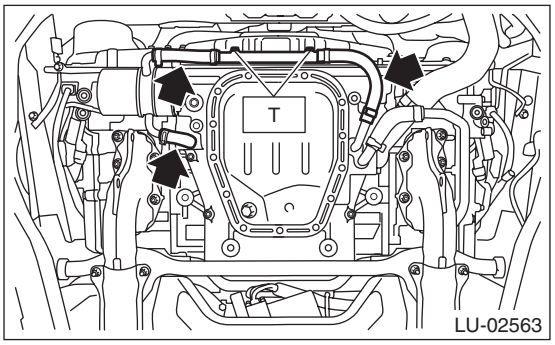

4) Install the under cover. <Ref. to EI-35, INSTALLATION, Front Under Cover.>
5) Lower the vehicle.
6) Fill the ATF. <Ref. to CO(H6DO)-12, FILLING OF ENGINE COOLANT, REPLACEMENT, Engine Coolant.>
7) Refill the engine oil. <Ref. to LU(H6DO)-9, REPLACEMENT, Engine Oil.>
8) Check the engine oil level. <Ref. to LU(H6DO)-9, INSPECTION, Engine Oil.>

C: INSPECTION

1) Check that coolant passages are not clogged using an compressed air.
2) Check that the oil pan upper and O-ring installing surface of oil filter are not damaged.

9. Oil Level Switch

A: REMOVAL

1) Disconnect the ground cable from battery.
2) Lift up the vehicle.
3) Remove the under cover. <Ref. to EI-35, REMOVAL, Front Under Cover.>
4) Drain the engine oil. <Ref. to LU(H6DO)-9, REPLACEMENT, Engine Oil.>
5) Disconnect the connector of oil level switch from the engine harness.

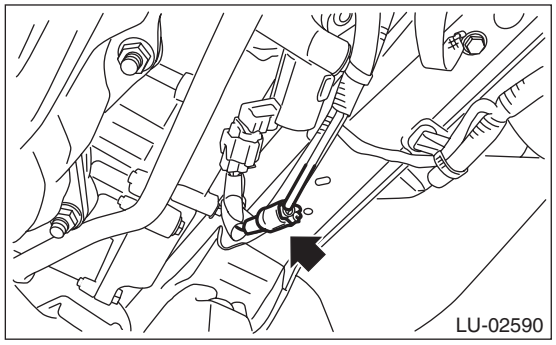

6) Remove the clips which hold the front camshaft cap (LH) and cylinder head (LH).

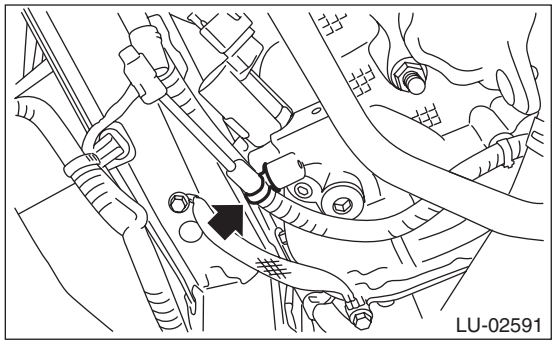

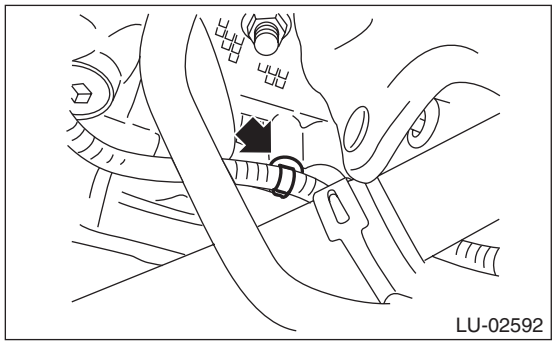

7) Remove the oil level switch from the oil pan upper.

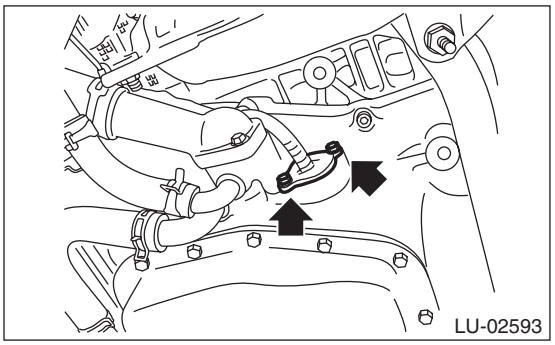

8) Remove the oil level switch.

B: INSTALLATION

1) Route the oil level switch harness as shown in the figure.

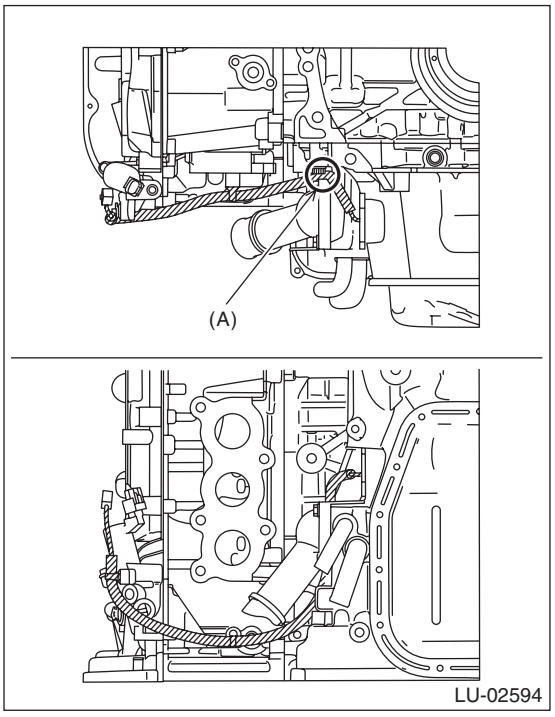

(A) Route the oil level switch harness through inside of oil pan upper bolt.

2) Attach the oil level switch to the oil pan upper.

NOTE:
- Use new O-rings.
- Apply engine oil to O-ring.

Tightening torque:
6.4 N·m (0.7 kgf-m, 4.7 ft-lb)

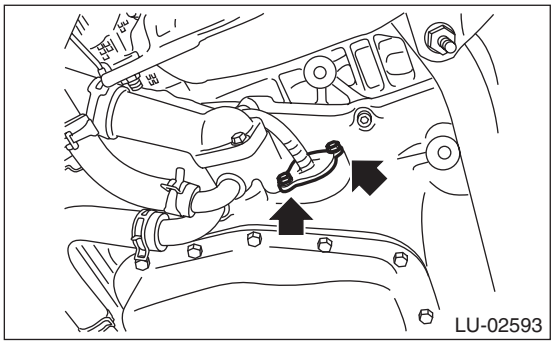

3) Attach the clips which hold the front camshaft cap (LH) and cylinder head (LH).

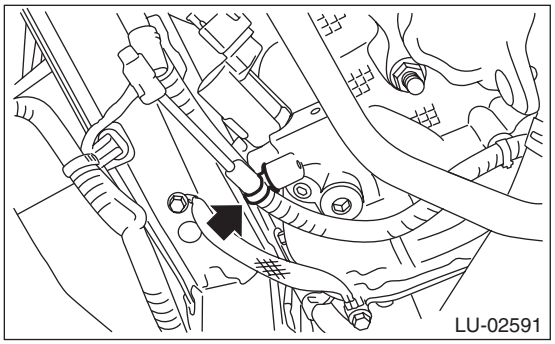

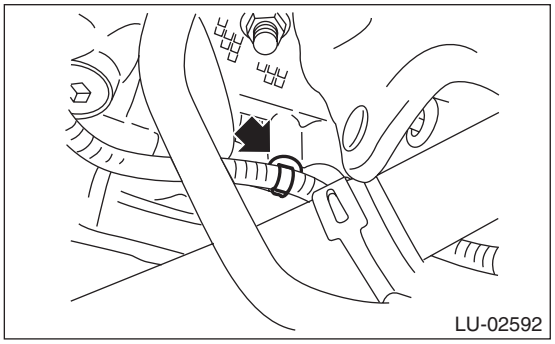

4) Connect the connector of the oil level switch to the engine harness.

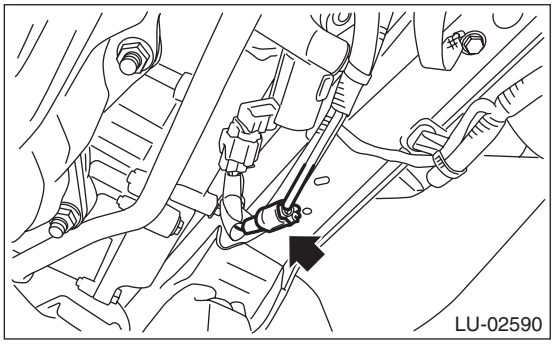

5) Install the under cover. <Ref. to EI-35, INSTALLATION, Front Under Cover.>

6) Lower the vehicle.
7) Refill the engine oil. <Ref. to LU(H6DO)-9, REPLACEMENT, Engine Oil.>
8) Check the engine oil level. <Ref. to LU(H6DO)-9, INSPECTION, Engine Oil.>

C: WIRING DIAGRAM

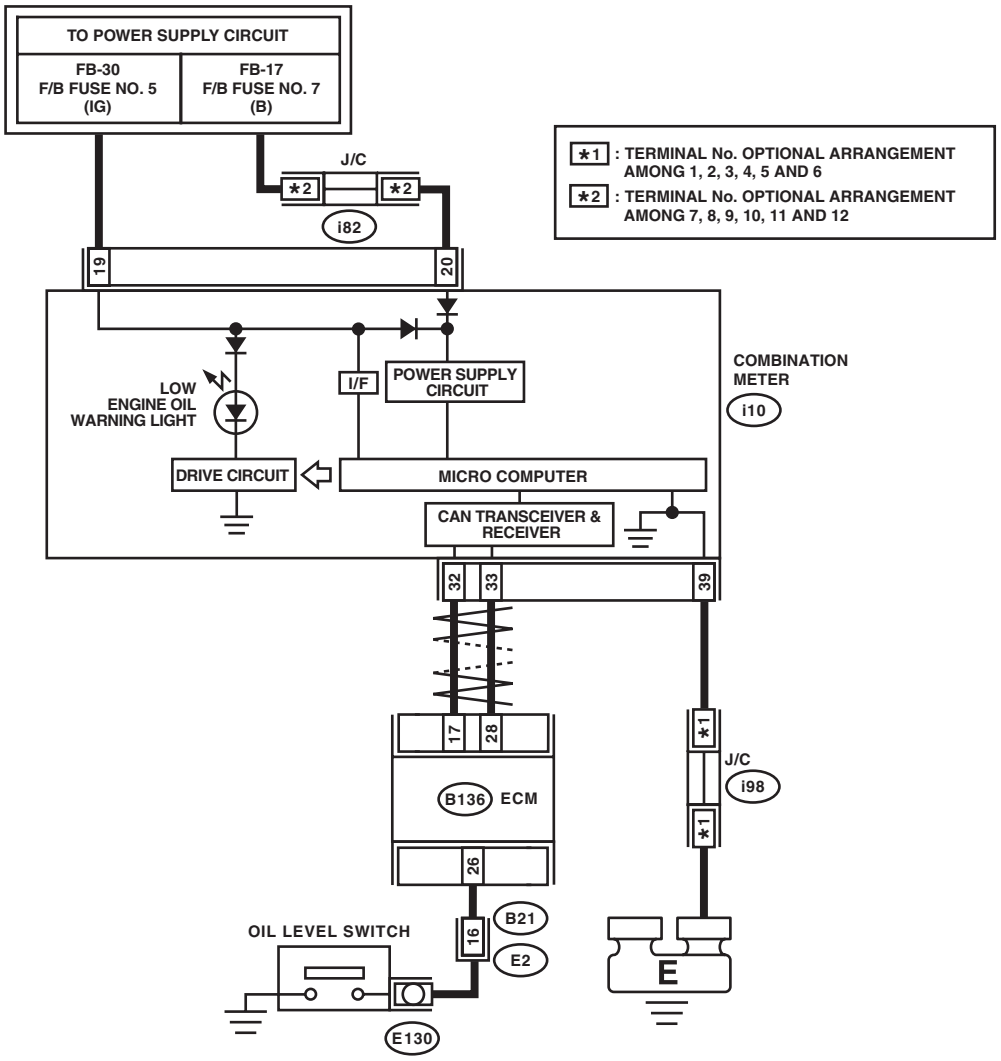

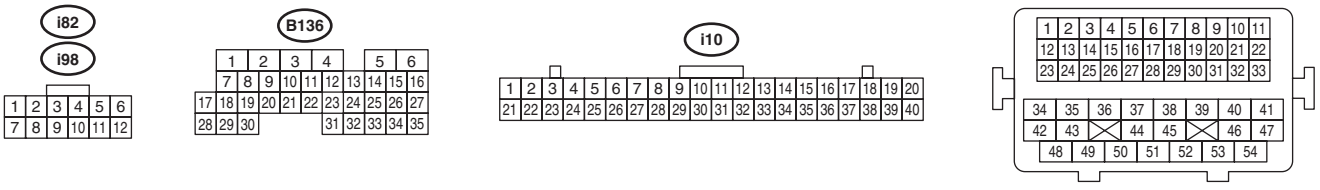

LU-02654

D: INSPECTION

1. INSPECTION WHEN LOW ENGINE OIL WARNING LIGHT IS ILLUMINATED

Step	Check	Yes	No
1 **CHECK ENGINE OIL LEVEL.**	Is engine oil level normal?	Go to step **2**.	Replace engine oil or refill, and check again while the oil level is normal condition. <Ref. to LU(H6DO)-9, REPLACEMENT, Engine Oil.> To turn off the low engine oil warning light, install the spare fuse at the delivery (test) mode fuse in the main fuse box. Then turn the ignition switch to ON (engine off) again, to confirm the low engine oil warning light turns off. Remove the spare fuse installed to finish. NOTE: The engine oil level switch is normal, if the low engine oil level warning light turns off with the delivery (test) mode fuse installed.
2 **CHECK LAN SYSTEM.**	Has a DTC of the LAN system been input?	Perform the diagnosis according to DTC.	Go to step **3**.

	Step	Check	Yes	No
3	**CHECK OIL LEVEL SWITCH CIRCUIT.** 1) Turn the ignition switch to ON (engine OFF). 2) Read the current data for engine in the Subaru Select Monitor to confirm the item for "Oil level switch". <Ref. to EN(H6DO)(diag)-35, READ CURRENT DATA FOR ENGINE (NORMAL MODE), OPERATION, Subaru Select Monitor.>	Is the "Oil level switch" signal displayed in Subaru Select Monitor HIGH?	To turn off the low engine oil warning light, install the spare fuse at the delivery (test) mode fuse in the main fuse box. Then turn the ignition switch to ON (engine off) again, to confirm the low engine oil warning light turns off. Remove the spare fuse installed to finish. NOTE: The engine oil level switch is normal, if the low engine oil level warning light turns off with the delivery (test) mode fuse installed.	Go to step **4**.
4	**CHECK COMBINATION METER.** Perform the self-diagnosis of combination meter to check if there are any faults in the combination meter. <Ref. to IDI-6, OPERATION, Combination Meter System.>	Is combination meter OK?	Go to step **5**.	Replace the combination meter. <Ref. to IDI-21, REMOVAL, Combination Meter.>
5	**CHECK SECURE CONNECTION OF CONNECTOR BETWEEN ENGINE HARNESS AND OIL LEVEL SWITCH.**	Is there any insecure connection?	Remedy the connection condition. Then, to turn off the low engine oil warning light, install the spare fuse at the delivery (test) mode fuse in the main fuse box. Then turn the ignition switch to ON (engine off) again, to confirm the low engine oil warning light turns off. Remove the spare fuse installed to finish. NOTE: The engine oil level switch is normal, if the low engine oil level warning light turns off with the delivery (test) mode fuse installed.	Go to step **6**.

	Step	Check	Yes	No
6	**CHECK OIL LEVEL SWITCH.** 1) Deliberately short circuits by connecting the engine harness connector terminal and chassis ground. 2) Turn the ignition switch to ON (engine OFF). 3) Read the current data for engine in the Subaru Select Monitor to confirm the item for "Oil level switch". <Ref. to EN(H6DO)(diag)-35, READ CURRENT DATA FOR ENGINE (NORMAL MODE), OPERATION, Subaru Select Monitor.> ***Connector & terminal*** ***(E130) No. 1 — Chassis ground:***	Is the "Oil level switch" signal displayed in Subaru Select Monitor HIGH?	Replace the oil level switch. <Ref. to LU(H6DO)-17, REMOVAL, Oil Level Switch.>	Go to step **7**.
7	**CHECK SECURE CONNECTION OF CONNECTOR BETWEEN BULKHEAD HARNESS AND ENGINE HARNESS.**	Is there any insecure connection?	Remedy the connection condition. Then, to turn off the low engine oil warning light, install the spare fuse at the delivery (test) mode fuse in the main fuse box. Then turn the ignition switch to ON (engine off) again, to confirm the low engine oil warning light turns off. Remove the spare fuse installed to finish. NOTE: The engine oil level switch is normal, if the low engine oil level warning light turns off with the delivery (test) mode fuse installed.	Go to step **8**.
8	**CHECK ENGINE HARNESS.** 1) Disconnect the connector on the oil level switch side for the engine harness. 2) Disconnect the connector on the bulkhead harness side for the engine harness. 3) Measure the resistance between connector terminals. ***Connector & terminal*** ***(E2) No. 16 — (E130) No. 1:***	Is the resistance less than 1 Ω?	Go to step **9**.	Repair or replace the open circuit of engine harness.

	Step	Check	Yes	No
9	**CHECK SECURE CONNECTION OF CONNECTOR BETWEEN ENGINE CONTROL MODULE (ECM) AND BULKHEAD HARNESS.** Remove the glove box lid assembly. <Ref. to EI-66, REMOVAL, Glove Box.>	Is there any insecure connection?	Remedy the connection condition. Then, to turn off the low engine oil warning light, install the spare fuse at the delivery (test) mode fuse in the main fuse box. Then turn the ignition switch to ON (engine off) again, to confirm the low engine oil warning light turns off. Remove the spare fuse installed to finish. NOTE: The engine oil level switch is normal, if the low engine oil level warning light turns off with the delivery (test) mode fuse installed.	Go to step **10**.
10	**CHECK BULKHEAD HARNESS.** 1) Remove the glove box lid assembly. <Ref. to EI-66, REMOVAL, Glove Box.> 2) Disconnect the engine control module (ECM) side connector for the bulkhead harness. 3) Disconnect the engine harness connectors from the bulkhead harness. 4) Measure the resistance between connector terminals. ***Connector & terminal*** ***(B136) No. 26 — (B21) No. 16:***	Is the resistance less than 1 Ω?	Replace the engine control module (ECM). <Ref. to FU(H6DO)-54, REMOVAL, Engine Control Module (ECM).>	Repair or replace the open circuit of the bulkhead harness.

2. OTHER INSPECTIONS

1) Check that the oil level switch does not have deformation, cracks, or damage.
2) Check the oil level switch installation part for oil leakage and oil seepage.

10.Engine Lubrication System Trouble in General

A: INSPECTION

Before performing diagnostics, make sure that the engine oil level is correct and no oil leakage exists.

Trouble	Possible cause	Corrective action
Warning light remains ON.	a. Oil pressure switch failure	
	❍ Cracked diaphragm or oil leakage within switch	Replace.
	❍ Broken spring or seized contacts	Replace.
	b. Low oil pressure	
	❍ Clogging of oil filter	Replace.
	❍ Malfunction of oil by-pass valve in oil filter	Replace.
	❍ Malfunction of oil relief valve in oil pump	Replace.
	❍ Clogged oil passage	Clean.
	❍ Excessive tip clearance and side clearance of oil pump rotor	Replace.
	❍ Clogged oil strainer or broken pipe	Clean or replace.
	c. No oil pressure	
	❍ Insufficient engine oil (degradation, etc.)	Replace.
	❍ Broken pipe of oil strainer	Replace.
	❍ Stuck oil pump rotor	Replace.
Warning light does not illuminate.	a. Defective combination meter	Replace.
	b. Poor contact of switch contact points	Replace.
	c. Disconnection of wiring	Repair.
Warning light flickers momentarily.	a. Defective terminal contact	Repair.
	b. Defective wiring harness	Repair.
	c. Oil pressure switch failure	
	❍ Cracked diaphragm or oil leakage within switch	Replace.
	❍ Broken spring or seized contacts	Replace.
	d. Low oil pressure	
	❍ Clogging of oil filter	Replace.
	❍ Malfunction of oil by-pass valve in oil filter	Replace.
	❍ Malfunction of oil relief valve in oil pump	Replace.
	❍ Clogged oil passage	Clean.
	❍ Excessive tip clearance and side clearance of oil pump rotor	Replace.
	❍ Clogged oil strainer or broken pipe	Clean or replace.

SPEED CONTROL SYSTEMS

SP(H6DO)

Page

1. General Description 2

1. General Description

A: SPECIFICATION

Specifications for the 3.6 L DOHC non-turbo model are the same as the 2.5 L SOHC non-turbo model. <Ref. to SP(H4SO)-2, General Description.>

IGNITION

IG(H6DO)

Page

1. General Description 2
2. Spark Plug 4
3. Ignition Coil 7

1. General Description

A: SPECIFICATION

Item			SPECIFICATION
Ignition coil	Type		FK0368
	Ignition system		Independent ignition coil
	Manufacturer		Diamond Electric
Spark plug	Manufacturer and type		NGK: SILFR6C11
	Thread size (diameter, pitch, length) mm		14, 1.25, 26.5
	Spark plug gap mm (in)	Standard	1.0 — 1.1 (0.039 — 0.043)
	Electrode		Iridium

B: COMPONENT

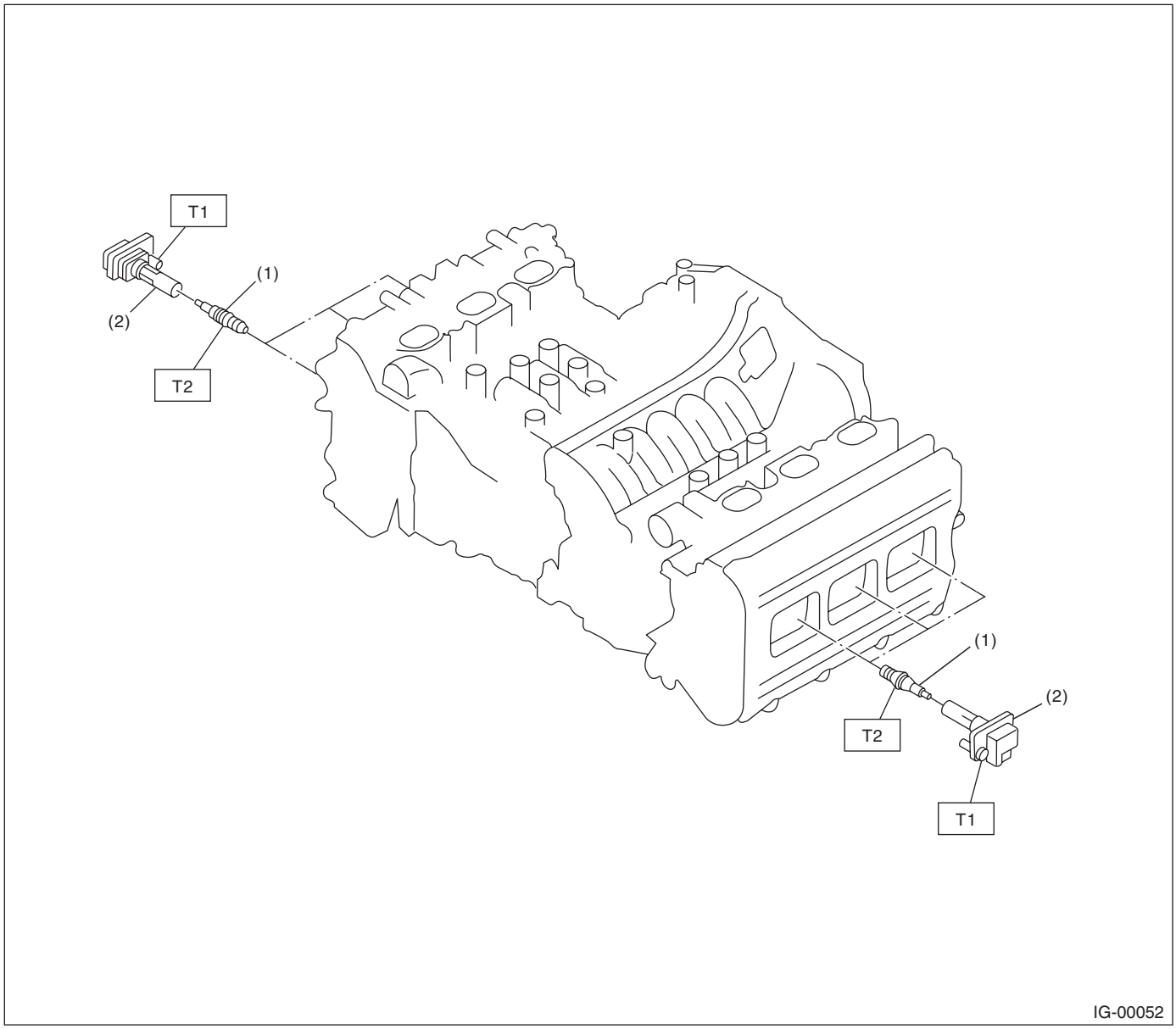

(1) Spark plug
(2) Ignition coil

Tightening torque:N·m (kgf-m, ft-lb)
T1: 16 (1.6, 11.8)
T2: 21 (2.1, 15.5)

C: CAUTION

• Wear appropriate work clothing, including a cap, protective goggles and protective shoes when performing any work.
• Remove contamination including dirt and corrosion before removal, installation or disassembly.
• Keep the disassembled parts in order and protect them from dust and dirt.
• Before removal, installation or disassembly, be sure to clarify the failure. Avoid unnecessary removal, installation, disassembly and replacement.
• Vehicle components are extremely hot after driving. Be wary of receiving burns from heated parts.
• Be sure to tighten fasteners including bolts and nuts to the specified torque.
• Place shop jacks or rigid racks at the specified points.
• Before disconnecting connectors of sensors or units, be sure to disconnect the ground cable from the battery.

2. Spark Plug

A: REMOVAL

Spark plug:
<Ref. to IG(H6DO)-2, SPECIFICATION, General Description.>

1. RH SIDE

1) Remove the collector cover.

NOTE:
Follow the steps below when removing the collector cover.
(1) Pull up the two points at the rear (A).
(2) Pull up the two points at the front (B) while moving them forward.

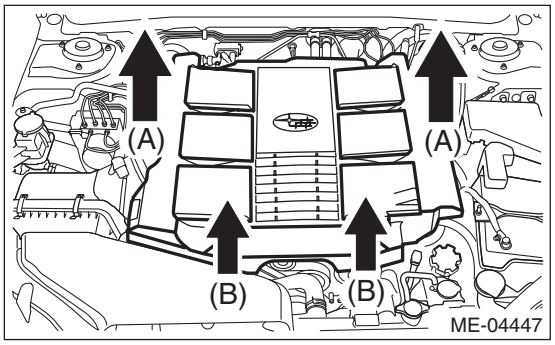

2) Disconnect the ground cable from battery.
3) Remove the air cleaner case. <Ref. to IN(H6DO)-5, REMOVAL, Air Cleaner Case.>
4) Remove the engine harness stay (A).
5) Disconnect the connector (B) from ignition coil.

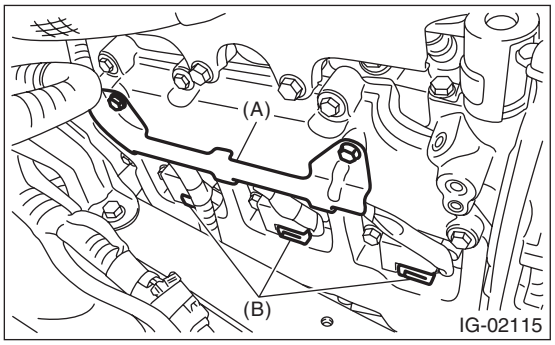

6) Remove the ignition coil.

NOTE:
Turn the #5 ignition coil to remove it.

7) Remove the spark plug with a spark plug socket.

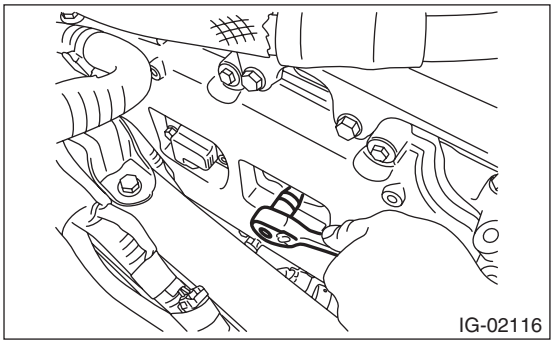

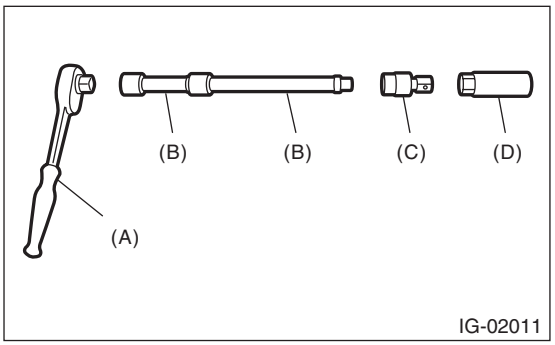

(A) Ratchet handle
(B) Extension bar
(C) Universal joint
(D) Spark plug socket

2. LH SIDE

1) Remove the collector cover.

NOTE:
Follow the steps below when removing the collector cover.
(1) Pull up the two points at the rear (A).
(2) Pull up the two points at the front (B) while moving them forward.

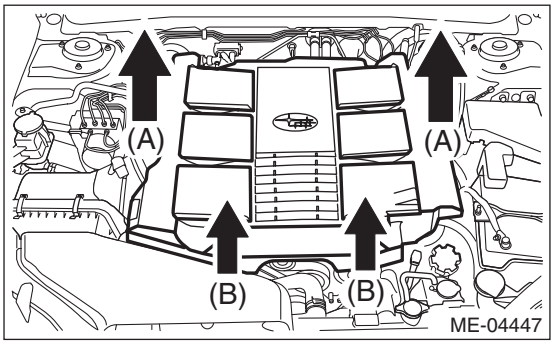

2) Remove the battery and battery carrier. <Ref. to SC(H4SO)-28, REMOVAL, Battery.>
3) Remove the engine harness stay (A).

4) Disconnect the connector (B) from ignition coil.

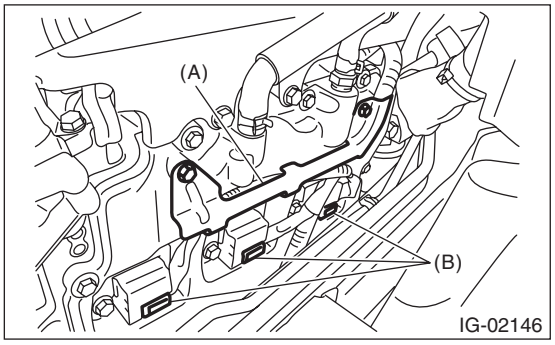

5) Remove the ignition coil.

NOTE:
Turn the #6 ignition coil to remove it.

6) Remove the spark plug with a spark plug socket.

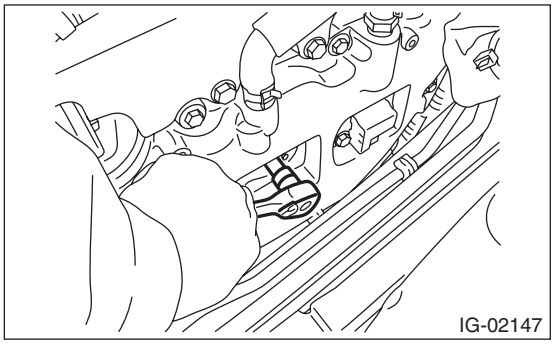

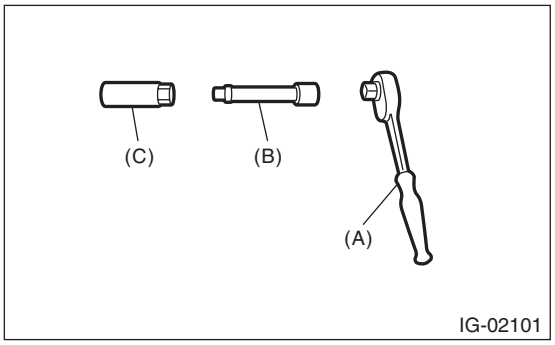

(A) Ratchet handle
(B) Extension bar
(C) Spark plug socket

B: INSTALLATION

1. RH SIDE

Install in the reverse order of removal.

Tightening torque:
Spark plug
21 N·m (2.1 kgf-m, 15.5 ft-lb)
Ignition coil
16 N·m (1.6 kgf-m, 11.8 ft-lb)
Engine harness stay
6.4 N·m (0.7 kgf-m, 4.7 ft-lb)

2. LH SIDE

Install in the reverse order of removal.

Tightening torque:
Spark plug
21 N·m (2.1 kgf-m, 15.5 ft-lb)
Ignition coil
16 N·m (1.6 kgf-m, 11.8 ft-lb)
Engine harness stay
6.4 N·m (0.7 kgf-m, 4.7 ft-lb)

C: INSPECTION

1) Check the spark plug for abnormalities. If defective, replace the spark plug.

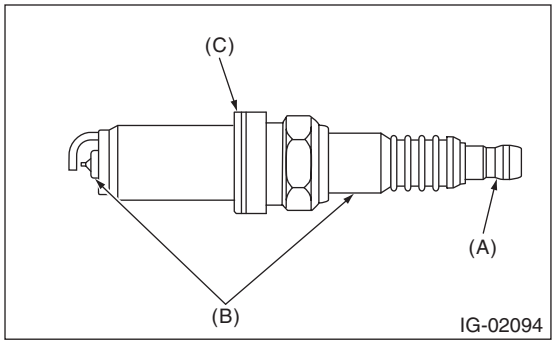

(A) Terminal damage
(B) Crack or damage in insulator
(C) Damaged gasket

2) Check the spark plug electrode and condition of the insulator. If abnormal, check and repair the cause and replace the spark plug.

(1) Normal:
Brown to grayish-tan deposits and slight electrode wear indicate correct spark plug heat range.

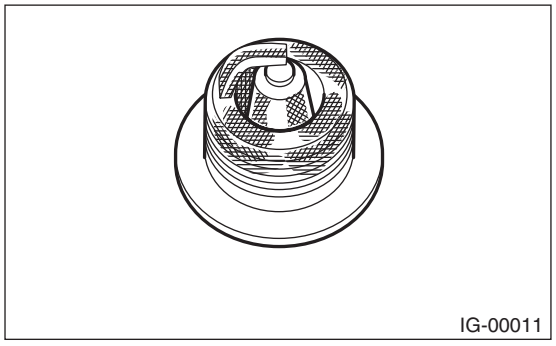

(2) Carbon fouled:
Dry fluffy carbon deposits on insulator and electrode are mostly caused by slow speed driving in the city, weak ignition, too rich fuel mixture, etc.

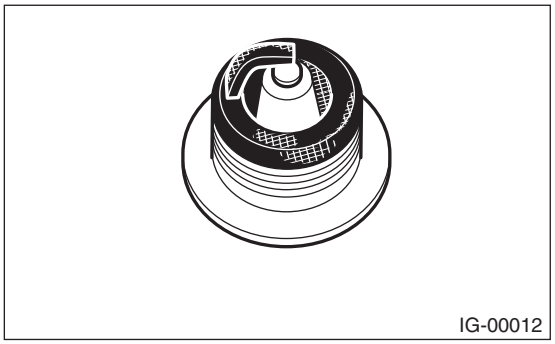
IG-00012

(3) Oil fouled:
Wet black deposits show oil entrance into combustion chamber through worn piston rings or increased clearance between valve guides and valve stems.

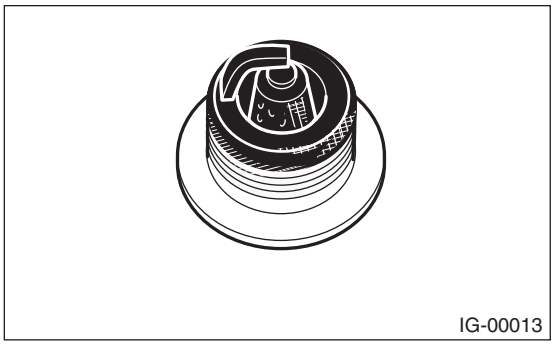
IG-00013

(4) Overheating:
White or light gray insulator with black or brown spots and bluish burnt electrodes indicate engine overheating, wrong selection of fuel, or loose spark plugs.

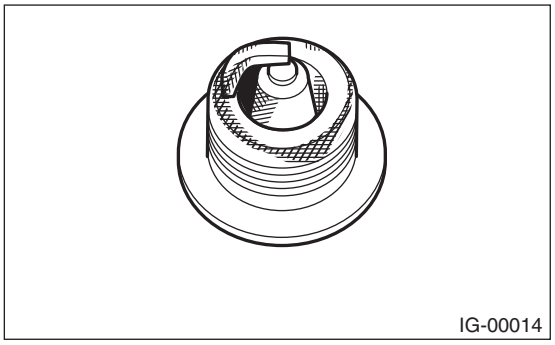
IG-00014

3) Using a nylon brush, etc., clean and remove the carbon or oxide deposits from the spark plug. If deposits are too stubborn, replace the spark plugs. After cleaning the spark plugs, check the spark plug gap "L" using a gap gauge. If it is not within the standard, replace the spark plug.

NOTE:
- Never use a plug cleaner.
- Do not use a metal brush as it may damage the electrode area.

Spark plug gap L:
Standard
1.0 — 1.1 mm (0.039 — 0.043 in)

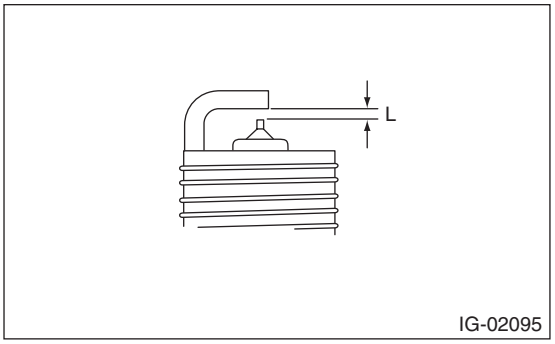

IG-02095

3. Ignition Coil

A: REMOVAL

Direct ignition type has been adopted. Refer to “Spark Plug” for removal procedure. <Ref. to IG(H6DO)-4, REMOVAL, Spark Plug.>

B: INSTALLATION

Install in the reverse order of removal.

Tightening torque:
16 N·m (1.6 kgf-m, 11.8 ft-lb)

C: INSPECTION

For inspection procedure, refer to “Diagnostics for Engine Starting Failure”. <Ref. to EN(H6DO)(diag)-77, IGNITION CONTROL SYSTEM, Diagnostics for Engine Starting Failure.>

STARTING/CHARGING SYSTEMS

SC(H6DO)

Page

1. General Description 2

1. General Description

A: SPECIFICATION

Specifications for the 3.6 L DOHC non-turbo model are included in the SC (H4SO) section. <Ref. to SC(H4SO)-2, General Description.>

ENGINE (DIAGNOSTICS)

EN(H6DO)(diag)

		Page
1.	Basic Diagnostic Procedure	2
2.	Check List for Interview	4
3.	General Description	6
4.	Electrical Component Location	9
5.	Engine Control Module (ECM) I/O Signal	18
6.	Engine Condition Data	27
7.	Data Link Connector	28
8.	General Scan Tool	29
9.	Subaru Select Monitor	35
10.	Read Diagnostic Trouble Code (DTC)	43
11.	Inspection Mode	44
12.	Drive Cycle	50
13.	Clear Memory Mode	57
14.	System Operation Check Mode	58
15.	Malfunction Indicator Light	59
16.	Diagnostics for Engine Starting Failure	70
17.	Diagnostic Procedure for Subaru Select Monitor Communication	83
18.	List of Diagnostic Trouble Code (DTC)	85
19.	Diagnostic Procedure with Diagnostic Trouble Code (DTC)	95
20.	General Diagnostic Table	381

1. Basic Diagnostic Procedure

A: PROCEDURE

1. ENGINE

	Step	Check	Yes	No
1	**CHECK ENGINE START FAILURE.** 1) Ask the customer when and how the trouble occurred using the interview check list. <Ref. to EN(H6DO)(diag)-4, CHECK, Check List for Interview.> 2) Start the engine.	Does the engine start?	Go to step **2**.	Inspection using "Diagnostics for Engine Start Failure". <Ref. to EN(H6DO)(diag)-70, Diagnostics for Engine Starting Failure.>
2	**CHECK ILLUMINATION OF MALFUNCTION INDICATOR LIGHT.**	Does the malfunction indicator light illuminate?	Go to step **3**.	Inspection using "General Diagnostic Table". <Ref. to EN(H6DO)(diag)-381, INSPECTION, General Diagnostic Table.>
3	**CHECK COMMUNICATION STATUS.** 1) Turn the ignition switch to OFF. 2) Connect the Subaru Select Monitor or general scan tool to the data link connector. 3) Turn the ignition switch to ON, and run the Subaru Select Monitor or general scan tool. NOTE: • Subaru Select Monitor For detailed procedures, refer to "Subaru Select Monitor". <Ref. to EN(H6DO)(diag)-35, Subaru Select Monitor.> • General scan tool For detailed operation procedures, refer to the general scan tool operation manual.	Does Subaru Select Monitor or general scan tool communicate with vehicle normally?	Go to step **4**.	Inspection using "Diagnostics Procedure for Subaru Select Monitor Communication". <Ref. to EN(H6DO)(diag)-83, Diagnostic Procedure for Subaru Select Monitor Communication.>
4	**CHECK DTC.** Read DTC using Subaru Select Monitor or general scan tool. NOTE: • Subaru Select Monitor Refer to "Read Diagnostic Trouble Code" for detailed operation procedure. <Ref. to EN(H6DO)(diag)-43, Read Diagnostic Trouble Code (DTC).> • General scan tool For detailed operation procedures, refer to the general scan tool operation manual.	Is DTC displayed on Subaru Select Monitor or general scan tool?	Record the DTC. Repair the trouble cause. <Ref. to EN(H6DO)(diag)-85, List of Diagnostic Trouble Code (DTC).> Go to step **5**.	Repair the related parts. NOTE: If DTC is not shown on display although the malfunction indicator light illuminates, perform the diagnosis of malfunction indicator light circuit or combination meter. <Ref. to EN(H6DO)(diag)-59, Malfunction Indicator Light.>

	Step	Check	Yes	No
5	**CHECK FREEZE FRAME DATA.** Check the freeze frame data using the Subaru Select Monitor or general scan tool. NOTE: • Subaru Select Monitor For detailed procedures, refer to "Subaru Select Monitor". <Ref. to EN(H6DO)(diag)-35, Subaru Select Monitor.> • General scan tool For detailed operation procedures, refer to the general scan tool operation manual.	Is freeze frame data displayed on Subaru Select Monitor or general scan tool?	Record the freeze frame data. Repair the cause of fault, and go to the next step. Go to step **6**.	Go to step **6**.
6	**PERFORM DIAGNOSIS.** 1) Perform the Clear Memory Mode. <Ref. to EN(H6DO)(diag)-57, Clear Memory Mode.> 2) Perform the Inspection Mode or Drive Cycle. <Ref. to EN(H6DO)(diag)-44, Inspection Mode.> <Ref. to EN(H6DO)(diag)-50, Drive Cycle.>	Is DTC displayed on Subaru Select Monitor or general scan tool?	Inspect using "Diagnostic Procedure with Diagnostic Trouble Code (DTC)". <Ref. to EN(H6DO)(diag)-95, Diagnostic Procedure with Diagnostic Trouble Code (DTC).>	Finish the diagnosis.

2. Check List for Interview

A: CHECK

1. CHECK LIST NO. 1

Check the following item when problem has occurred.

NOTE:
Use copies of this page for interviewing customers.

<table>
<tr><td>Customer's name</td><td></td><td>Engine No.</td><td></td></tr>
<tr><td>Date of purchase</td><td></td><td>Fuel type</td><td></td></tr>
<tr><td>Date of repair</td><td></td><td rowspan="2">Odometer reading</td><td>km</td></tr>
<tr><td>V.I.N.</td><td></td><td>miles</td></tr>
<tr><td>Weather</td><td colspan="3">❑ Fine
❑ Cloudy
❑ Rainy
❑ Snowy
❑ Various/Others:</td></tr>
<tr><td rowspan="2">Ambient air temperature</td><td>°C (°F)</td><td colspan="2"></td></tr>
<tr><td colspan="3">❑ Hot
❑ Warm
❑ Cool
❑ Cold</td></tr>
<tr><td>Place</td><td colspan="3">❑ Highway
❑ Suburbs
❑ Inner city
❑ Uphill
❑ Downhill
❑ Rough road
❑ Others:</td></tr>
<tr><td>Engine temperature</td><td colspan="3">❑ Cold
❑ Warming-up
❑ After warming-up
❑ Any temperature
❑ Others:</td></tr>
<tr><td>Engine speed</td><td>rpm</td><td colspan="2"></td></tr>
<tr><td>Vehicle speed</td><td>km/h (MPH)</td><td colspan="2"></td></tr>
<tr><td>Driving conditions</td><td colspan="3">❑ Not affected
❑ At starting
❑ While idling
❑ At racing
❑ While accelerating
❑ While cruising
❑ While decelerating
❑ While turning (RH/LH)</td></tr>
<tr><td>Headlight</td><td>❑ ON/❑ OFF</td><td>Rear defogger</td><td>❑ ON/❑ OFF</td></tr>
<tr><td>Blower</td><td>❑ ON/❑ OFF</td><td>Audio</td><td>❑ ON/❑ OFF</td></tr>
<tr><td>A/C compressor</td><td>❑ ON/❑ OFF</td><td>Rear entertainment system</td><td>❑ ON/❑ OFF</td></tr>
<tr><td>Radiator fan</td><td>❑ ON/❑ OFF</td><td>Car phone</td><td>❑ ON/❑ OFF</td></tr>
<tr><td>Front wiper</td><td>❑ ON/❑ OFF</td><td>Wireless device</td><td>❑ ON/❑ OFF</td></tr>
<tr><td>Rear wiper</td><td>❑ ON/❑ OFF</td><td colspan="2"></td></tr>
</table>

2. CHECK LIST NO. 2

Check the following item about the vehicle's state when the malfunction indicator light turns on.

NOTE:
Use copies of this page for interviewing customers.

a) Other warning lights or indicators illuminate: ❑ Yes / ❑ No
❑ Fuel level warning light ❑ Charge warning light ❑ Engine coolant temperature warning light ❑ Oil pressure warning light ❑ ATF temperature warning light or SPORT indicator light ❑ Driver's control center differential indicator light ❑ ABS warning light ❑ VDC warning light ❑ Cruise indicator light ❑ SI-CRUISE warning light ❑ Immobilizer indicator light ❑ STEERING warning light ❑ Glow indicator light ❑ Sedimenter warning light ❑ Electronic parking brake warning light ❑ Others:
b) Fuel level
• Lack of fuel: ❑ Yes / ❑ No • Indicator position of fuel gauge: • Experienced running out of fuel: ❑ Yes / ❑ No
c) Intentional connecting or disconnecting of harness connectors or spark plug cords: ❑ Yes / ❑ No
• What:
d) Intentional connecting or disconnecting of hoses: ❑ Yes / ❑ No
• What:
e) Installing of other parts except genuine parts: ❑ Yes / ❑ No
• What: • Where:
f) Occurrence of noise: ❑ Yes / ❑ No
• From where: • What kind:
g) Occurrence of smell: ❑ Yes / ❑ No
• From where: • What kind:
h) Intrusion of water into engine compartment or passenger compartment: ❑ Yes / ❑ No
i) Troubles occurred
❑ Engine does not start. ❑ Engine stalls during idling. ❑ Engine stalls while driving. ❑ Engine speed decreases. ❑ Engine speed does not decrease. ❑ Rough idling ❑ Poor acceleration ❑ Back fire ❑ After fire ❑ Does not shift. ❑ Excessive shift shock

3. General Description

A: CAUTION

1) Airbag system wiring harness is routed near the ECM, main relay and fuel pump relay.

CAUTION:
• Do not use electrical test equipment on the airbag system circuit.
• Be careful not to damage the airbag system wiring harness when servicing the ECM, TCM, main relay and fuel pump relay.

2) Never connect the battery in reverse polarity. Doing so will damage the ECM instantly, and other parts will also be damaged.
3) Do not disconnect the battery terminals while the engine is running. A large counter electromotive force will be generated in the generator, and this voltage may damage electronic parts such as ECM etc.
4) Before disconnecting the connectors of each sensor and ECM, be sure to turn the ignition switch to OFF. Perform the Clear Memory Mode after connecting the connectors. <Ref. to EN(H6DO)(diag)-57, Clear Memory Mode.>
5) When measuring the voltage or resistance of individual sensor or all electrical control modules, use a tapered pin with a diameter of less than 0.6 mm (0.024 in). Do not insert the pin 4 mm (0.16 in) or more into the part.

CAUTION:
When replacing the ECM, be careful not to use the wrong spec. ECM to avoid any damage on the fuel injection system.

NOTE:
When replacing the ECM of the models with Immobilizer, immobilizer system must be registered. To do so, all ignition keys and ID cards need to be prepared. Refer to the “PC application help for Subaru Select Monitor”.
6) Take care not to allow water to get into the connectors when servicing or washing the vehicle in rainy weather. Avoid exposure to water even if the connectors are waterproof.
7) Use ECM mounting stud bolts at the body side grounding point when measuring voltage and resistance inside the passenger compartment.

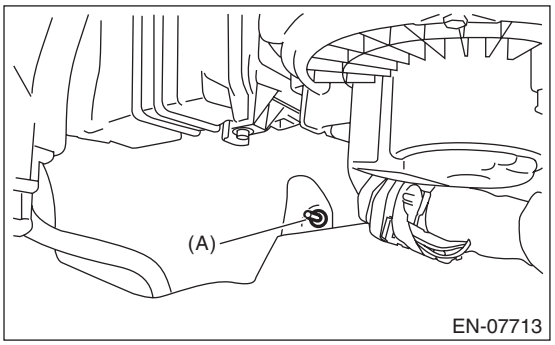

(A) Stud bolt

8) Use the engine ground terminal or engine assembly as the grounding point to chassis when measuring the voltage and resistance in engine compartment.

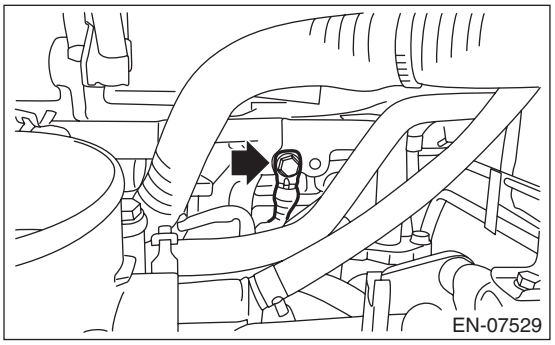

9) Every MFI-related part is a precision part. Do not drop them.
10) Observe the following cautions when installing a radio in vehicle.

CAUTION:
• The antenna must be kept as far apart as possible from control module. (ECM is installed at the back of the glove box.)
• The antenna feeder must be placed as far apart as possible from the ECM and engine control system harness.
• Carefully adjust the antenna for correct matching.
• When mounting a large power type radio, pay special attention to the three items mentioned above.
• Incorrect installation of the radio may affect the operation of ECM.

11) When disconnecting the fuel hose, release the fuel pressure. <Ref. to FU(H6DO)-59, RELEASING OF FUEL PRESSURE, PROCEDURE, Fuel.>

12) For the model with ABS, the ABS warning light may illuminate when performing driving test with jacked-up or lifted-up condition, but this is not a system malfunction. The reason for this is the speed difference between the front and rear wheels. When engine control system diagnosis is finished, perform the VDC memory clearance procedure of self-diagnosis function. <Ref. to VDC(diag)-25, Clear Memory Mode.>

B: INSPECTION

Before performing diagnostics, check the following item which might affect engine problems.

1. BATTERY

1) Measure the battery voltage and specific gravity of the electrolyte.

Standard voltage: 12 V

Specific gravity: 1.260 or more

2) Check the condition of the main and other fuses, and harnesses and connectors. Also check for proper grounding.

2. ENGINE GROUND

Make sure that the engine ground terminal is properly connected to the engine.

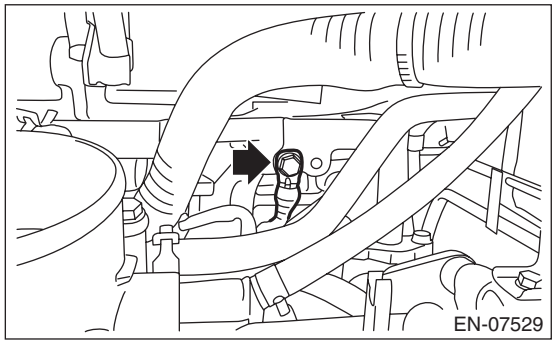

C: NOTE

- The on-board diagnostic (OBD) system detects and indicates a fault in various inputs and outputs of the complex electronic control. Malfunction indicator light in the combination meter indicates occurrence of a fault or trouble.
- Further, against such a failure of sensors as may disable the drive, the fail-safe function is provided to ensure the minimal drivability.
- The OBD system incorporated with the vehicles within this type of engine complies with OBD-II regulations. The OBD system monitors the components and the system malfunction listed in “Engine Section” which affects on emissions.
- When the system decides that a malfunction occurs, malfunction indicator light illuminates. At the same time of the malfunction indicator light illumination or blinking, a DTC and a freeze frame engine conditions are stored into on-board computer.
- The OBD system stores freeze frame engine condition data (engine load, engine coolant temperature, fuel trim, engine speed and vehicle speed, etc.) into on-board computer when it detects a malfunction.
- Freeze frame engine condition data are stored until the DTCs are cleared. However when such malfunctions as fuel trim fault and misfire are detected with the freeze frame engine condition data stored, they are rewritten into those related to the fuel trim fault and misfire.
- When the malfunction does not occur again for three consecutive driving cycles*, malfunction indicator light is turned off, but DTC remains at on-board computer.

*: One driving cycle means the period between the ignition switch ON and the ignition switch OFF after driving.

- When performing diagnosis, connect the Subaru Select Monitor or general scan tool to the vehicle.

D: PREPARATION TOOL

ILLUSTRATION	TOOL NUMBER	DESCRIPTION	REMARKS
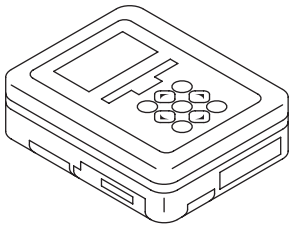 ST1B022XU0	1B022XU0	SUBARU SELECT MONITOR III KIT	Used for troubleshooting the electrical system.
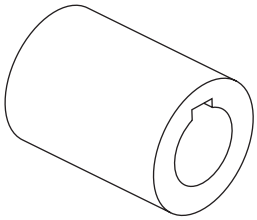 ST18252AA000	18252AA000	CRANKSHAFT SOCKET	Used for rotating crankshaft.

4. Electrical Component Location

A: LOCATION

1. CONTROL MODULE

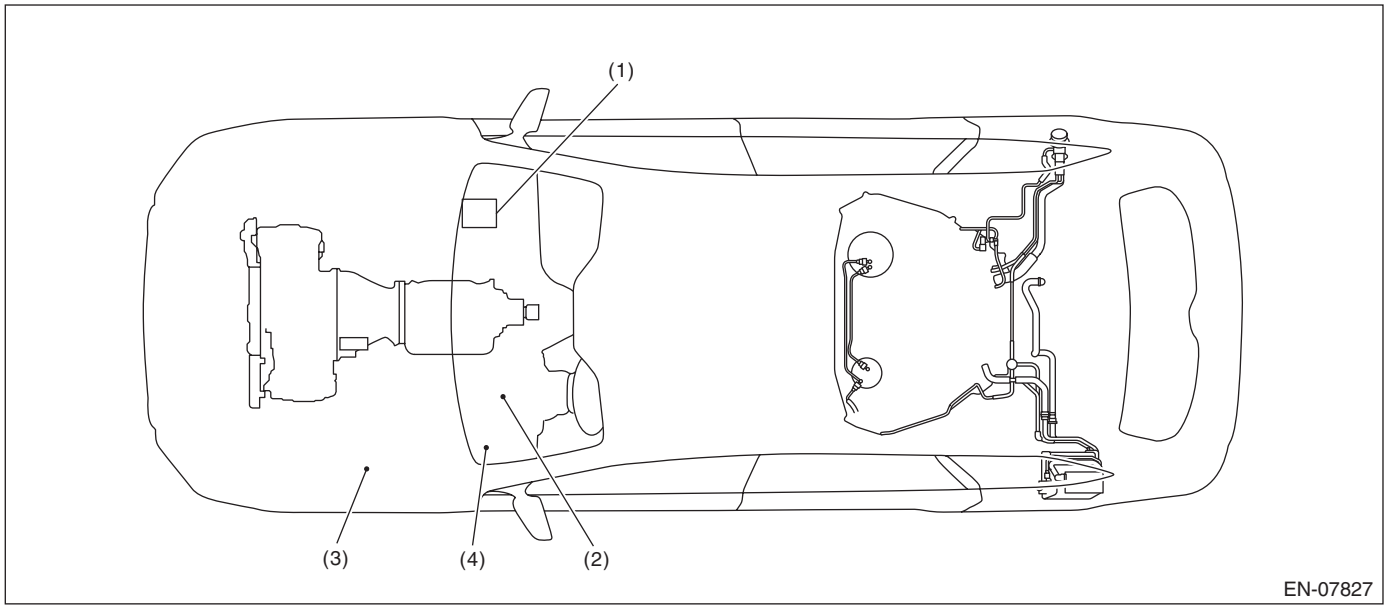

(1) Engine control module (ECM)
(2) Malfunction indicator light
(3) Delivery (test) mode fuse
(4) Data link connector

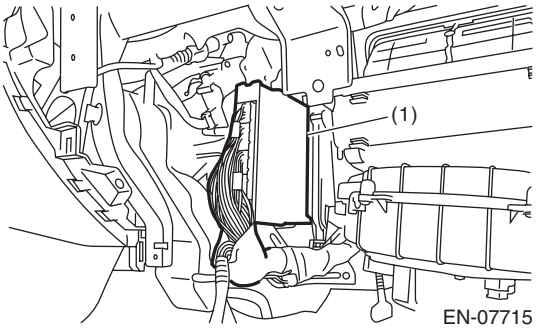

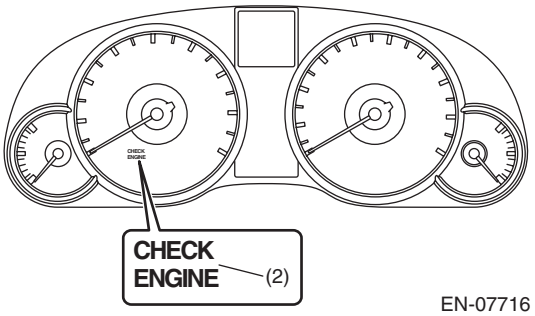

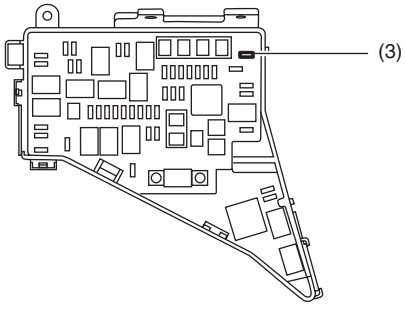

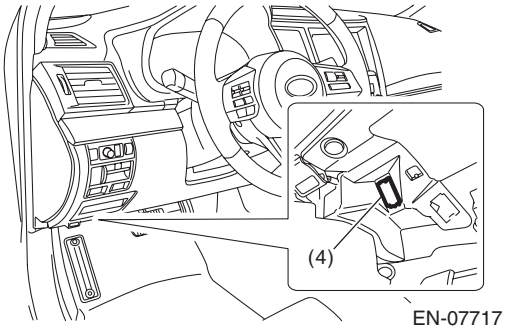

2. SENSOR

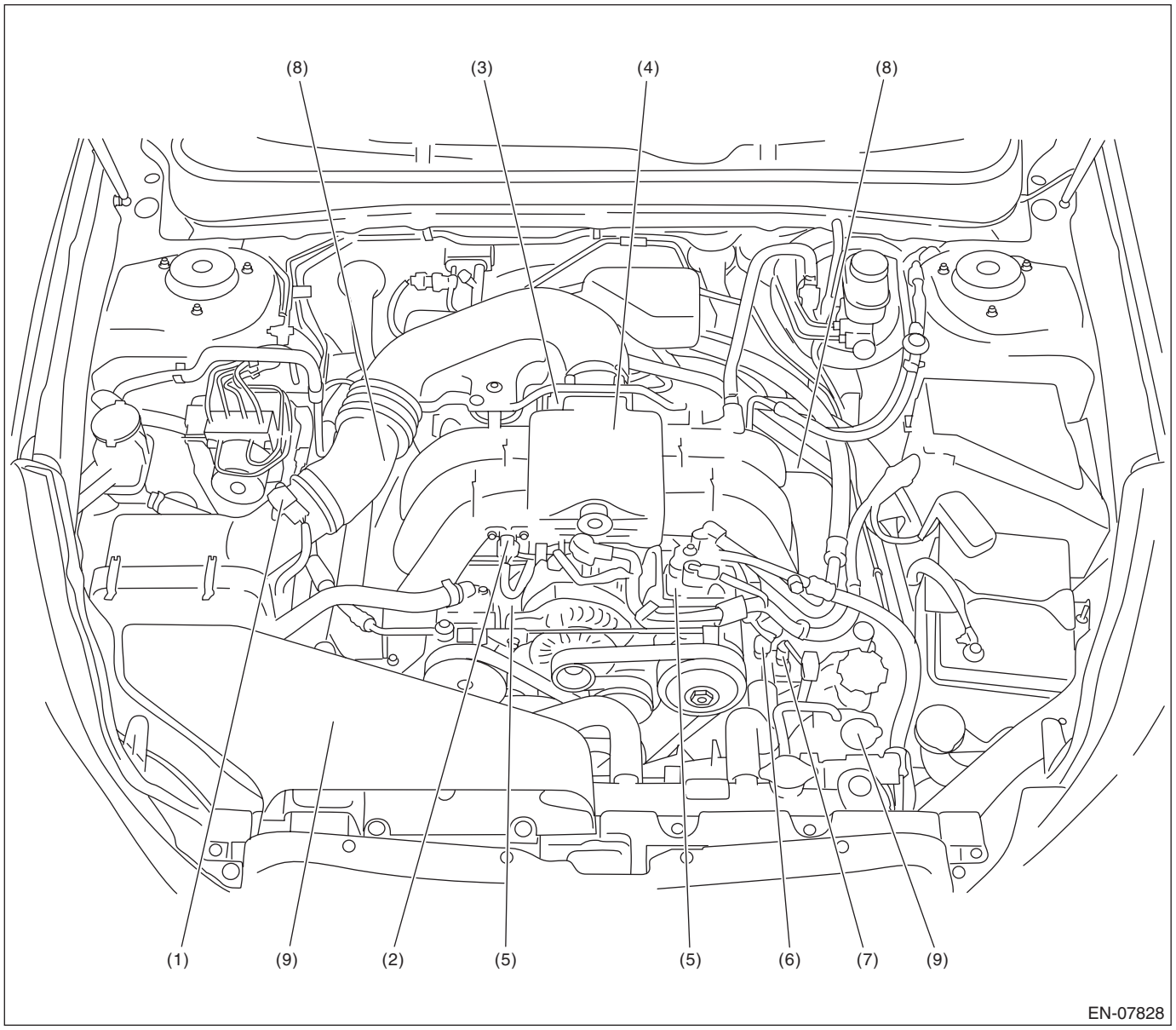

(1) Mass air flow and intake air temperature sensor
(2) Manifold absolute pressure sensor
(3) Electronic throttle control
(4) Crankshaft position sensor
(5) Knock sensor
(6) Engine coolant temperature sensor
(7) Engine oil temperature sensor
(8) Intake camshaft position sensor
(9) Exhaust camshaft position sensor

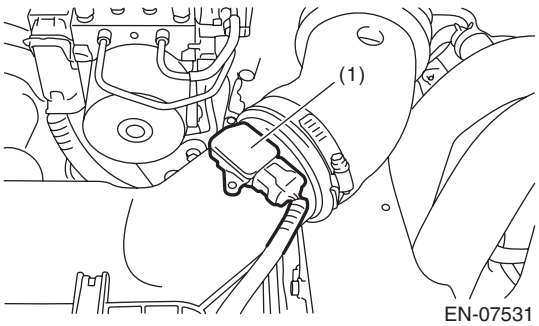
(1)
EN-07531

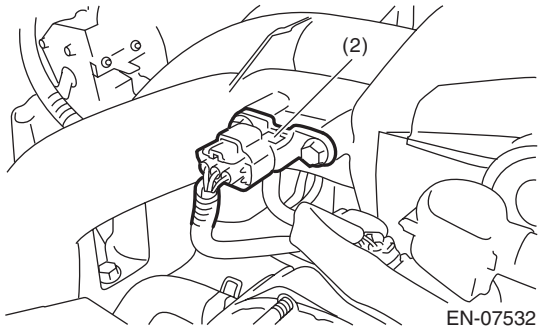
(2)
EN-07532

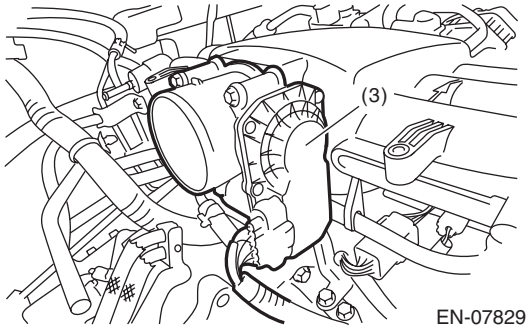
(3)
EN-07829

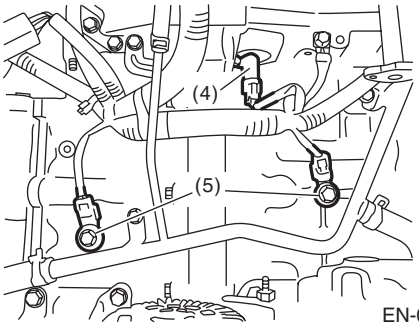
(4)
(5)
EN-07830

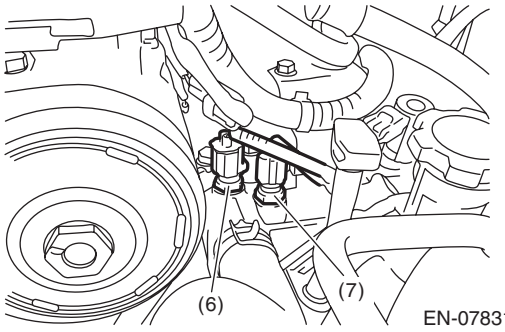
(6)
(7)
EN-07831

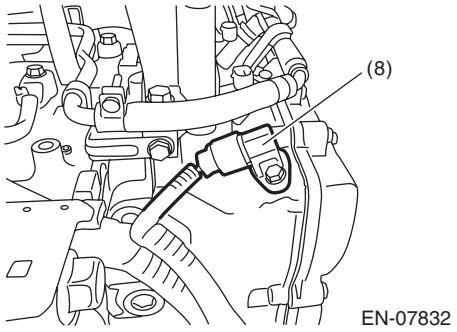
(8)
EN-07832

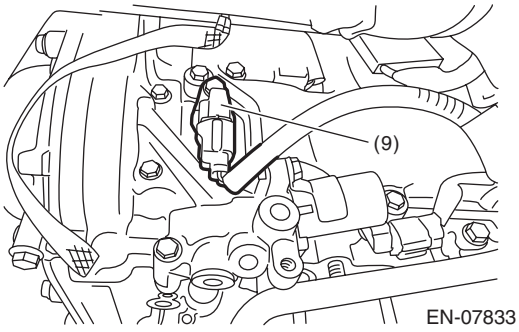
(9)
EN-07833

Electrical Component Location

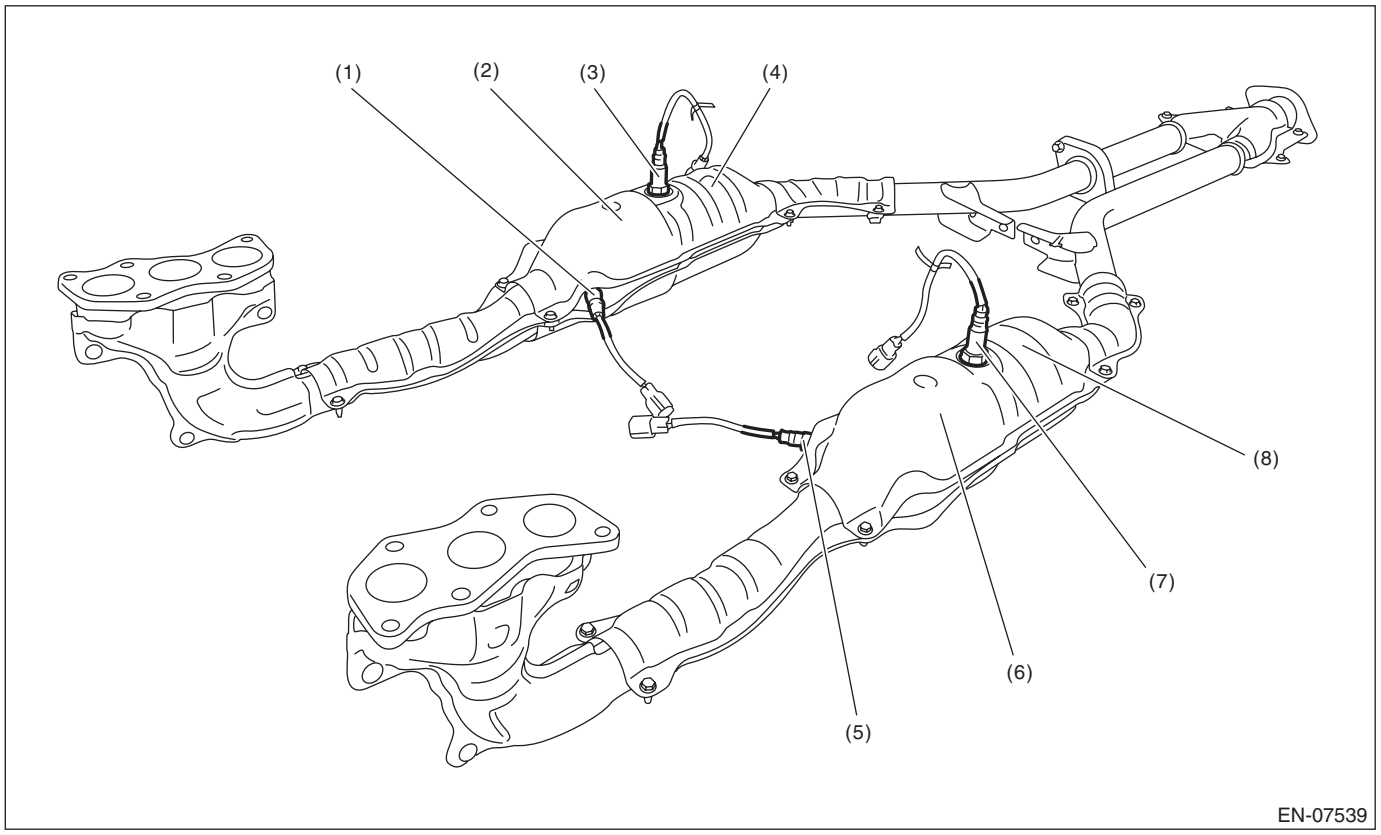

(1) Front oxygen (A/F) sensor RH
(2) Front catalytic converter RH
(3) Rear oxygen sensor RH
(4) Rear catalytic converter RH
(5) Front oxygen (A/F) sensor LH
(6) Front catalytic converter LH
(7) Rear oxygen sensor LH
(8) Rear catalytic converter LH

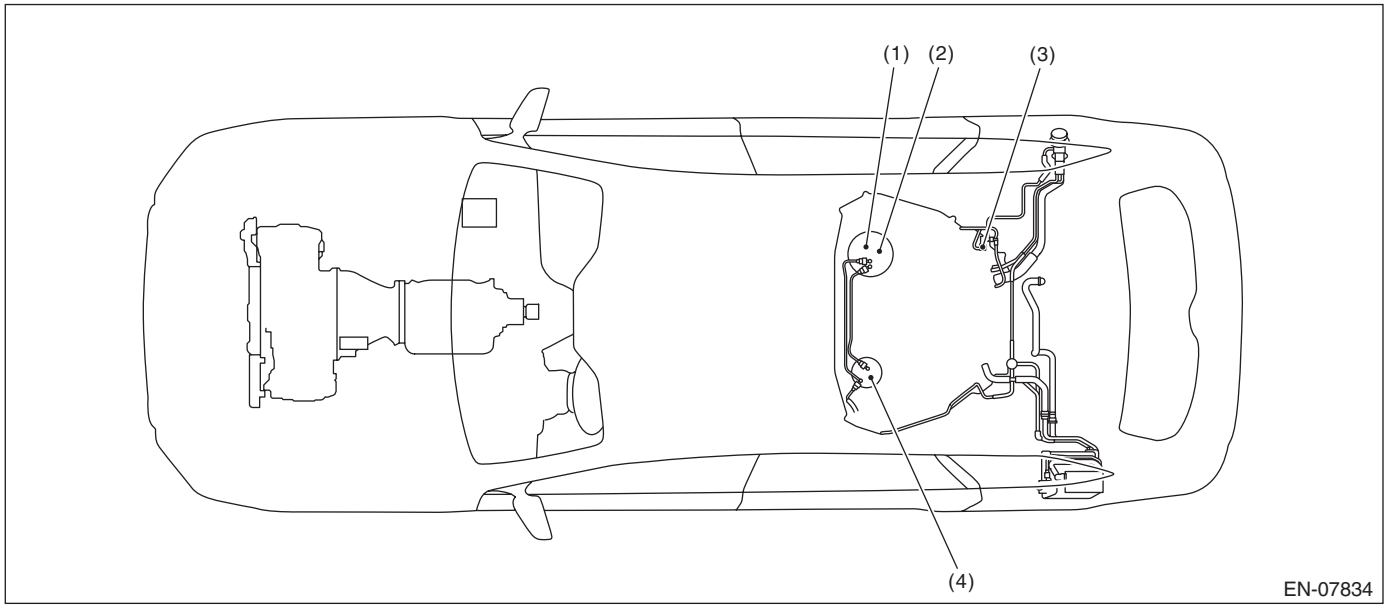

(1) Fuel level sensor
(2) Fuel temperature sensor
(3) Fuel tank pressure sensor
(4) Fuel sub level sensor

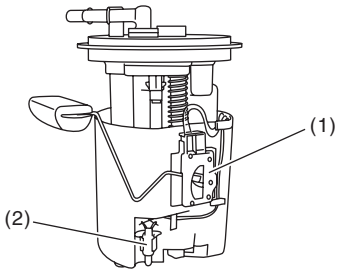

EN-07718

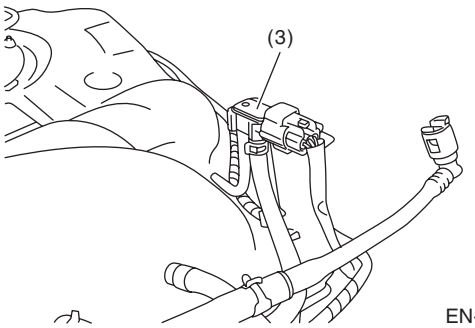

EN-07719

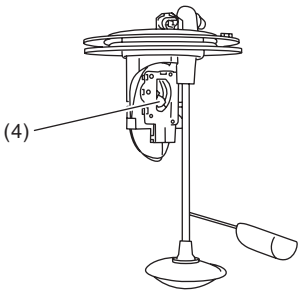

EN-07720

3. SOLENOID VALVE, ACTUATOR, EMISSION CONTROL SYSTEM PARTS AND IGNITION SYSTEM PARTS

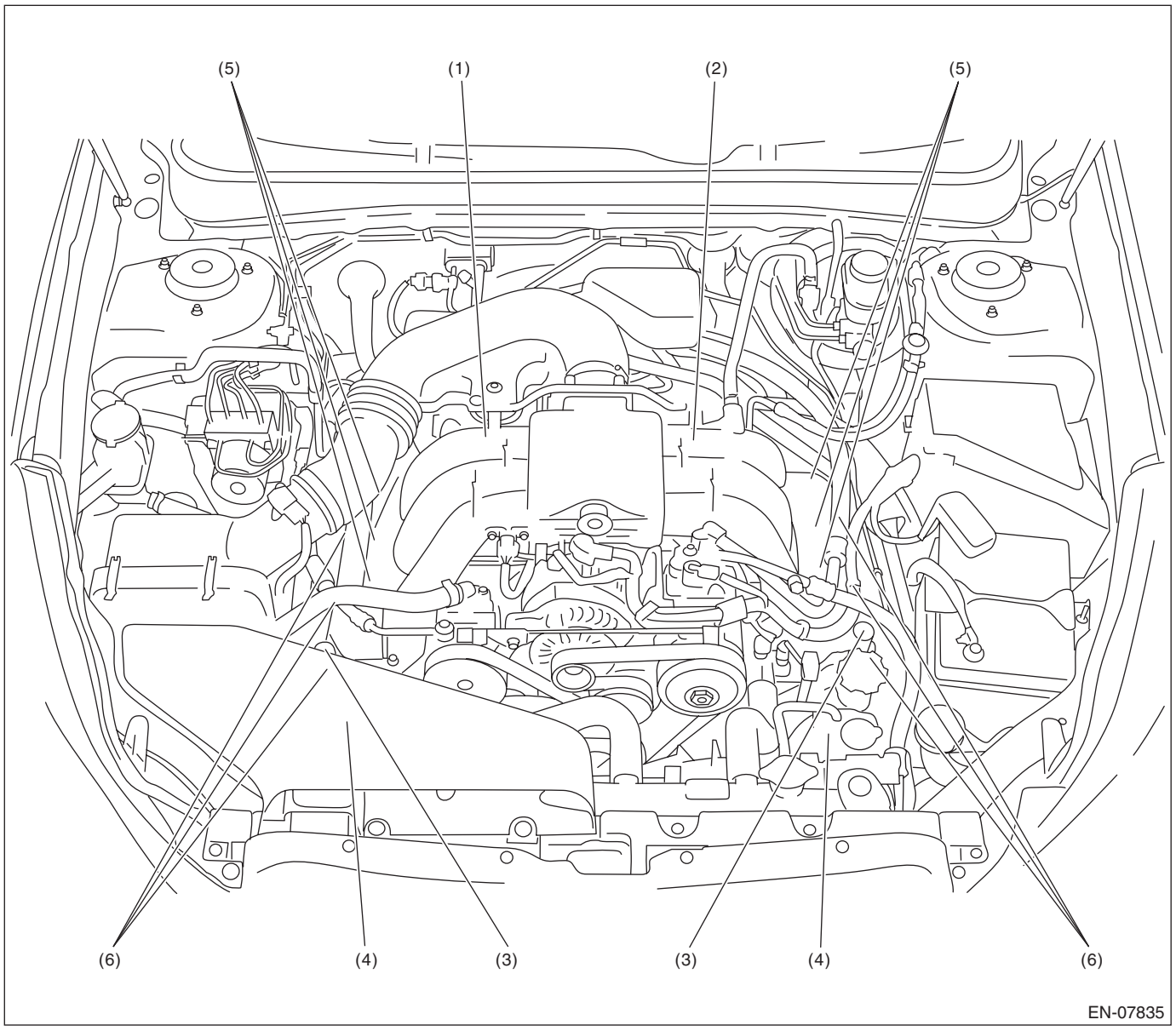

(1)	Purge control solenoid valve	(3)	Intake oil flow control solenoid valve	(5)	Fuel injector
(2)	EGR control valve	(4)	Exhaust oil flow control solenoid valve	(6)	Ignition coil

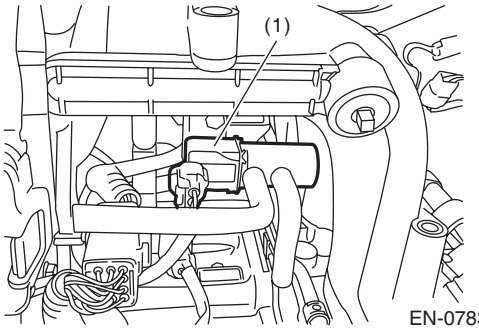

EN-07836

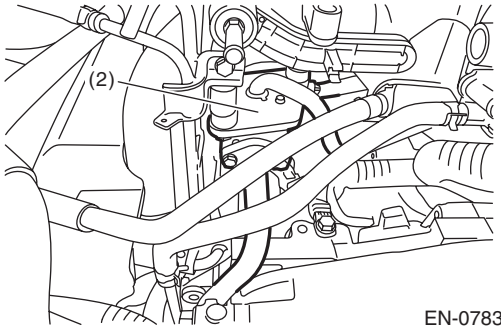

EN-07837

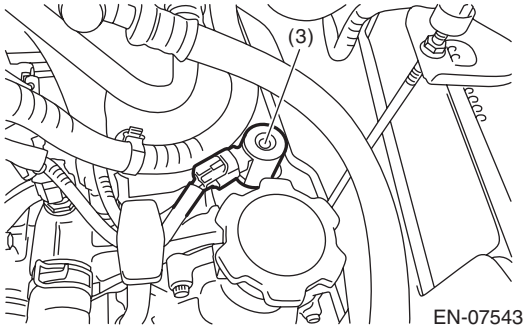

EN-07543

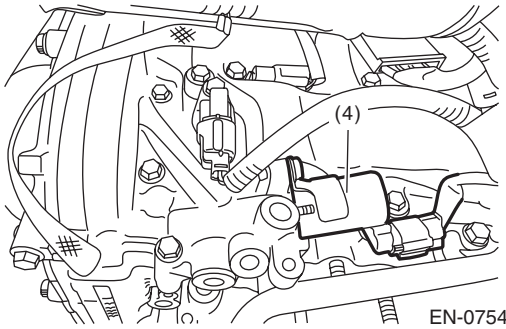

EN-07544

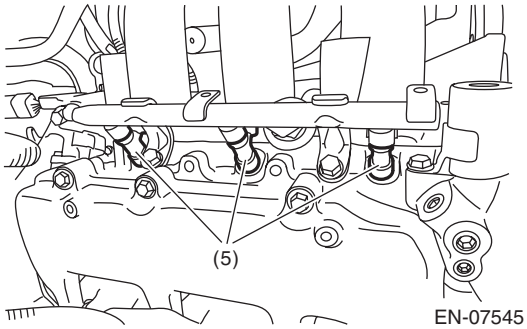

EN-07545

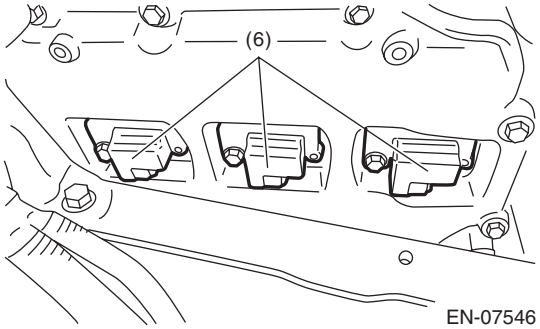

EN-07546

Electrical Component Location

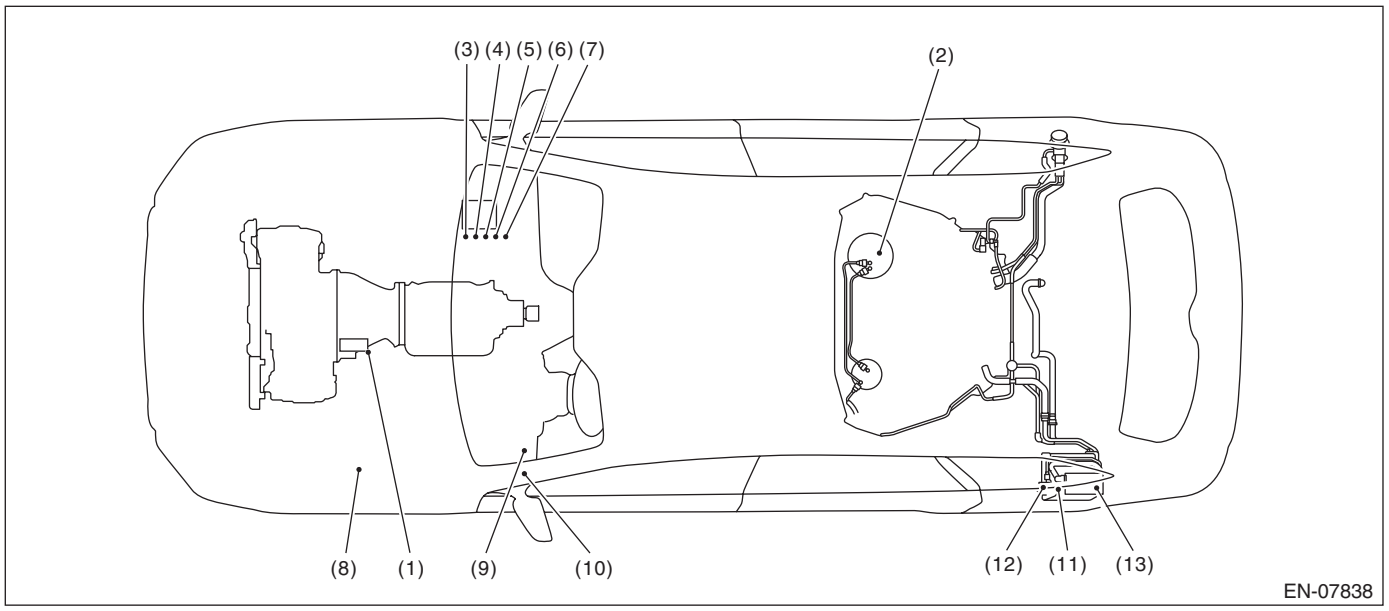

(1) Starter
(2) Fuel pump
(3) Main relay
(4) IG relay
(5) A/F, oxygen sensor relay
(6) Electronic throttle control relay
(7) Fuel pump relay
(8) Main fan relay
(9) Starter relay
(10) Inhibitor relay
(11) Canister
(12) Drain valve
(13) Drain filter

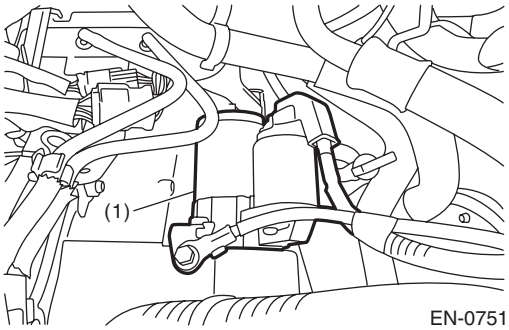

EN-07519

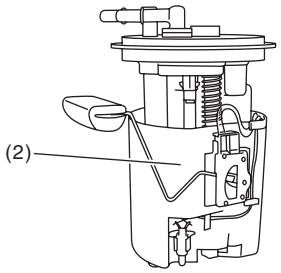

EN-07752

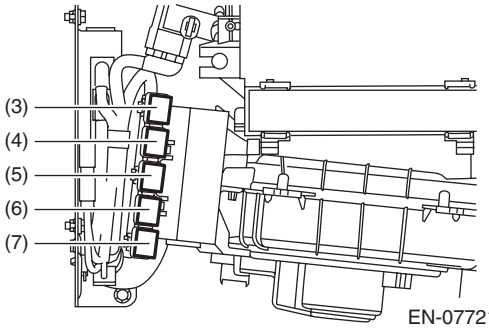

EN-07721

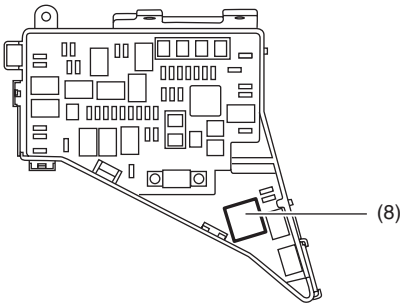

EN-07525

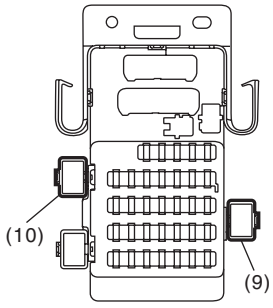

EN-07728

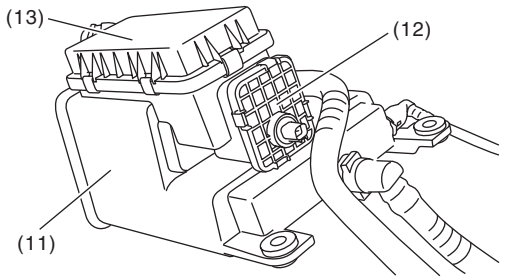

EN-07729

5. Engine Control Module (ECM) I/O Signal

A: ELECTRICAL SPECIFICATION

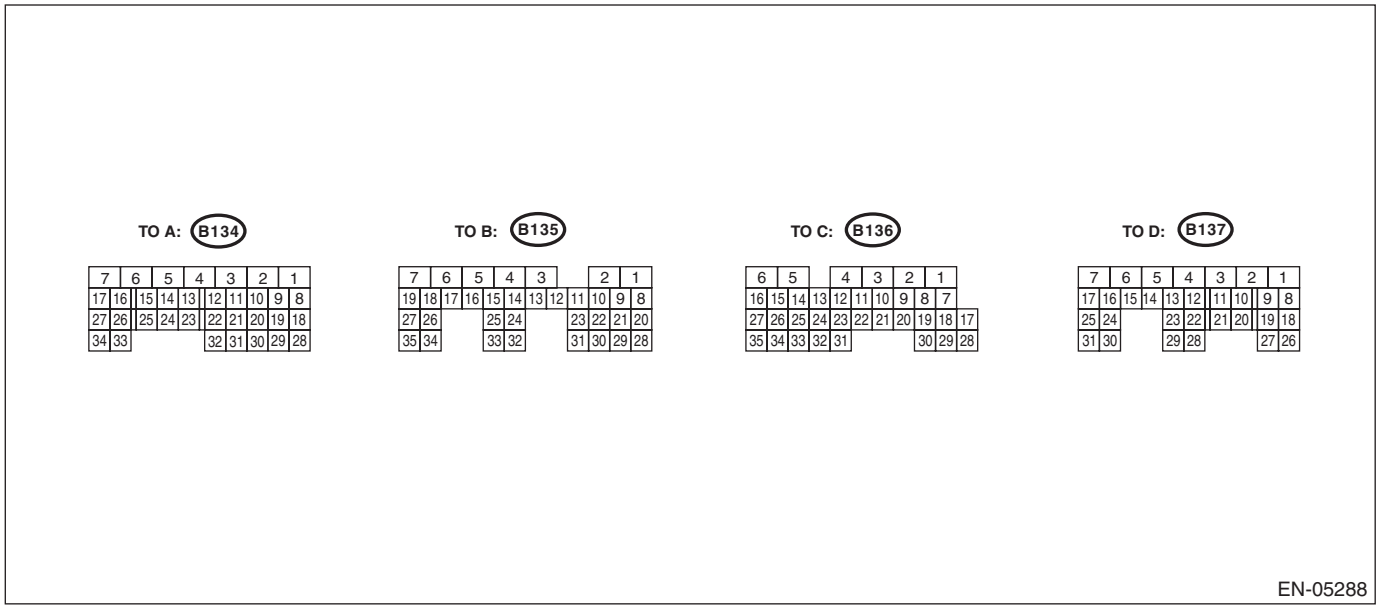

Description		Connector No.	Terminal No.	Signal (V)		Note
				Ignition SW ON (engine OFF)	Engine ON (idling)	
Crankshaft position sensor	Signal (+)	B137	17	0	–7 — +7	Waveform
	Signal (–)	B137	25	0	0	—
	Shield	B137	31	0	0	—
Intake camshaft position sensor (LH)		B137	16	0 or 5	0 or 5	Waveform
Intake camshaft position sensor (RH)		B137	24	0 or 5	0 or 5	Waveform
Exhaust camshaft position sensor (LH)		B137	29	0 or 5	0 or 5	Waveform
Exhaust camshaft position sensor (RH)		B137	23	0 or 5	0 or 5	Waveform
Camshaft position sensor ground		B137	30	0	0	—
Electronic throttle control	Main	B134	18	Approx. 0.9 (After engine is warmed up.)	Approx. 0.6 — 0.7 (After engine is warmed up.)	Fully closed: Approx. 0.6 Fully open: Approx. 4.0
	Sub	B134	28	Approx. 1.7 (After engine is warmed up.)	Approx. 1.5 — 1.6 (After engine is warmed up.)	Fully closed: Approx. 1.5 Fully open: Approx. 4.2
Electronic throttle control motor (+)		B134	2	Duty waveform	Duty waveform	Drive frequency: 500 Hz
Electronic throttle control motor (–)		B134	1	Duty waveform	Duty waveform	Drive frequency: 500 Hz
Electronic throttle control motor power supply		B135	7	10 — 13	12 — 14	—
Electronic throttle control motor relay		B135	17	ON: 0 OFF: 10 — 13	ON: 0 OFF: 12 — 14	When ignition switch is turned to ON: ON

Description		Connector No.	Terminal No.	Signal (V)		Note
				Ignition SW ON (engine OFF)	Engine ON (idling)	
Accelerator pedal position sensor	Main sensor signal	B135	23	Fully closed: 1 Fully opened: 3.6	Fully closed: 1 Fully opened: 3.3	—
	Main power supply	B135	21	5	5	—
	Ground (main sensor)	B135	29	0	0	—
	Sub sensor signal	B135	31	Fully closed: 1 Fully opened: 3.7	Fully closed: 1 Fully opened: 3.3	—
	Sub power supply	B135	22	5	5	—
	Ground (sub sensor)	B135	30	0	0	—
Engine coolant temperature sensor		B137	22	1.0 — 1.4	1.0 — 1.4	After engine is warmed up.
Starter switch		B136	16	0	0	Cranking: 8 — 14
Starter relay		B135	26	ON: 0 OFF: 10 — 13	ON: 0 OFF: 12 — 14	—
Ignition switch		B136	30	10 — 13	12 — 14	—
Neutral position switch		B136	35	ON: 0 OFF: 12±0.5		Switch is ON when select lever is in “P” range or “N” range.
Delivery (test) mode switch		B136	34	10 — 13	12 — 14	When fuse is installed: 0
Knock sensor 1		B137	2	2.4	2.4	—
Knock sensor 2		B137	4	2.4	2.4	—
Knock sensor shield		B137	8	0	0	—
Back-up power supply		B136	2	10 — 13	12 — 14	Ignition switch “OFF”: 10 — 13
Control module power supply		B137	7	10 — 13	12 — 14	—
		B136	1	10 — 13	12 — 14	—
Sensor power supply		B134	19	5	5	—
Ignition control	#1	B134	21	0	0 or 5	Waveform
	#2	B134	22	0	0 or 5	Waveform
	#3	B134	31	0	0 or 5	Waveform
	#4	B134	32	0	0 or 5	Waveform
	#5	B134	25	0	0 or 5	Waveform
	#6	B134	26	0	0 or 5	Waveform
Fuel injector	#1	B134	10	10 — 13	1 — 14	Waveform
	#2	B134	11	10 — 13	1 — 14	Waveform
	#3	B134	12	10 — 13	1 — 14	Waveform
	#4	B134	13	10 — 13	1 — 14	Waveform
	#5	B134	23	10 — 13	1 — 14	Waveform
	#6	B134	24	10 — 13	1 — 14	Waveform
Radiator fan control		B135	11	ON: 0.5 or less OFF: 10 — 13	ON: 0.5 or less OFF: 12 — 14	—
Radiator fan control power supply		B135	12	ON: 0.5 or less OFF: 10 — 13	ON: 0.5 or less OFF: 12 — 14	—
Self-shutoff control		B135	13	0	0	—

Engine Control Module (ECM) I/O Signal

Description		Connector No.	Terminal No.	Signal (V)		Note
				Ignition SW ON (engine OFF)	Engine ON (idling)	
Malfunction indicator light		B135	33	—	—	C6 model Light “ON”: 1 or less Light “OFF”: 10 — 14
Engine speed output		B135	15	—	0 — 13 or more	Waveform
Purge control solenoid valve		B137	6	ON: 1 or less OFF: 10 — 13	ON: 1 or less OFF: 12 — 14	—
EGR control valve	Signal 1	B134	8	0 or 10 — 13	0 or 12 — 14	—
	Signal 2	B134	9	0 or 10 — 13	0 or 12 — 14	—
	Signal 3	B134	20	0 or 10 — 13	0 or 12 — 14	—
	Signal 4	B134	30	0 or 10 — 13	0 or 12 — 14	—
Manifold absolute pressure sensor		B137	20	3.5 — 4.8	1.1 — 1.9	—
Air flow sensor	Signal	B136	22	0.74	0.3 — 4.5	—
	Shield	B136	10	0	0	—
	Ground	B136	11	0	0	—
Intake air temperature sensor		B136	31	3.15 — 3.33	3.15 — 3.33	Ambient air temperature
Front oxygen (A/F) sensor LH	Signal (+)	B135	8	2.8 — 3.2	2.8 — 3.2	—
	Signal (–)	B135	20	2.4 — 2.7	2.4 — 2.7	—
	Shield	B136	9	0	0	—
Front oxygen (A/F) sensor heater LH	Signal 1	B135	2	12 — 14	—	Waveform
	Signal 2	B135	1	12 — 14	—	Waveform
Front oxygen (A/F) sensor RH	Signal (+)	B136	19	2.8 — 3.2	2.8 — 3.2	—
	Signal (–)	B136	18	2.4 — 2.7	2.4 — 2.7	—
	Shield	B136	9	0	0	—
Front oxygen (A/F) sensor heater RH	Signal 1	B136	6	12 — 14	—	Waveform
	Signal 2	B136	5	12 — 14	—	Waveform
Rear oxygen sensor LH	Signal	B135	28	0	0 — 0.9	—
	Shield	B136	9	0	0	—
Rear oxygen sensor heater LH signal		B135	5	12 — 14	—	Waveform
Rear oxygen sensor RH	Signal	B136	20	0	0 — 0.9	—
	Shield	B136	9	0	0	—
Rear oxygen sensor heater RH signal		B135	6	12 — 14	—	Waveform
Immobilizer communication		B135	25	—	—	—
Fuel pump control unit	Control	B136	33	0 or 5	0 or 5	Waveform
	Diagnostic signal	B135	10	0 or 10 — 13	12 — 14	—
Brake switch 1 (brake switch)		B136	15	When brake pedal is depressed: 0 When brake pedal is released: 10 — 13	When brake pedal is depressed: 0 When brake pedal is released: 12 — 14	—
Brake switch 2 (stop light switch)		B136	3	When brake pedal is depressed: 10 — 13 When brake pedal is released: 0	When brake pedal is depressed: 12 — 14 When brake pedal is released: 0	—

Description		Connector No.	Terminal No.	Signal (V)		Note
				Ignition SW ON (engine OFF)	Engine ON (idling)	
Cruise control command switch		B136	12	When operating nothing: 3.5 — 4.5 When operating RES/ACC: 2.5 — 3.5 When operating vehicle distance setting: 1.5 — 2.5 When operating SET/COAST: 0.5 — 1.5 When operating CANCEL: 0 — 0.5	When operating nothing: 3.5 — 4.5 When operating RES/ACC: 2.5 — 3.5 When operating vehicle distance setting: 1.5 — 2.5 When operating SET/COAST: 0.5 — 1.5 When operating CANCEL: 0 — 0.5	—
Cruise control main switch		B136	13	ON: 0 OFF: 5	ON: 0 OFF: 5	—
Intake oil flow control solenoid valve LH	Signal (+)	B134	17	0	0.6	—
	Signal (–)	B134	16	0	0	—
Intake oil flow control solenoid valve RH	Signal (+)	B134	34	0	0.6	—
	Signal (–)	B134	27	0	0	—
Exhaust oil flow control solenoid valve LH	Signal (+)	B134	5	0	1.9	—
	Signal (–)	B134	14	0	0	—
Exhaust oil flow control solenoid valve RH	Signal (+)	B134	7	0	1.9	—
	Signal (–)	B134	15	0	0	—
Engine oil temperature sensor signal		B137	21	1.0 — 1.4	1.0 — 1.4	After engine is warmed up.
Oil level switch		B136	26	0	0	Oil level Low: 10 — 14
Power steering oil pressure switch		B137	28	ON: 1 or less OFF: 10 — 13	ON: 1 or less OFF: 12 — 14	—
SSM communication		B135	14	1 or less ←→ 4 or more	1 or less ←→ 4 or more	—
Clutch switch		B135	9	10 — 13	12 — 14	—
Ground	Sensor	B134	29	0	0	—
		B135	30	0	0	—
	Engine 1	B134	6	0	0	—
	Engine 2	B134	4	0	0	—
	Engine 3	B134	3	0	0	—
	Engine 4	B137	1	0	0	—
	Engine 5	B137	3	0	0	—
	Engine 6	B137	5	0	0	—
	Body	B136	4	0	0	—
CAN communication	(Hi)	B136	17	Pulse signal		—
	(Lo)	B136	28	Pulse signal		—
Fuel tank pressure sensor		B136	21	2.3 — 2.7	2.3 — 2.7	Value after detaching and attaching the fuel filler cap
Drain valve		B135	4	ON: 1 or less OFF: 10 — 13	ON: 1 or less OFF: 12 — 14	—
Fuel temperature sensor		B136	23	2.5 — 3.8	2.5 — 3.8	Ambient temperature: 25°C (77°F)

Input/output name:
- Crankshaft position sensor
- Intake camshaft position sensor RH
- Intake camshaft position sensor LH
- Exhaust camshaft position sensor RH
- Exhaust camshaft position sensor LH

Measuring condition:
- After warming-up
- At idling

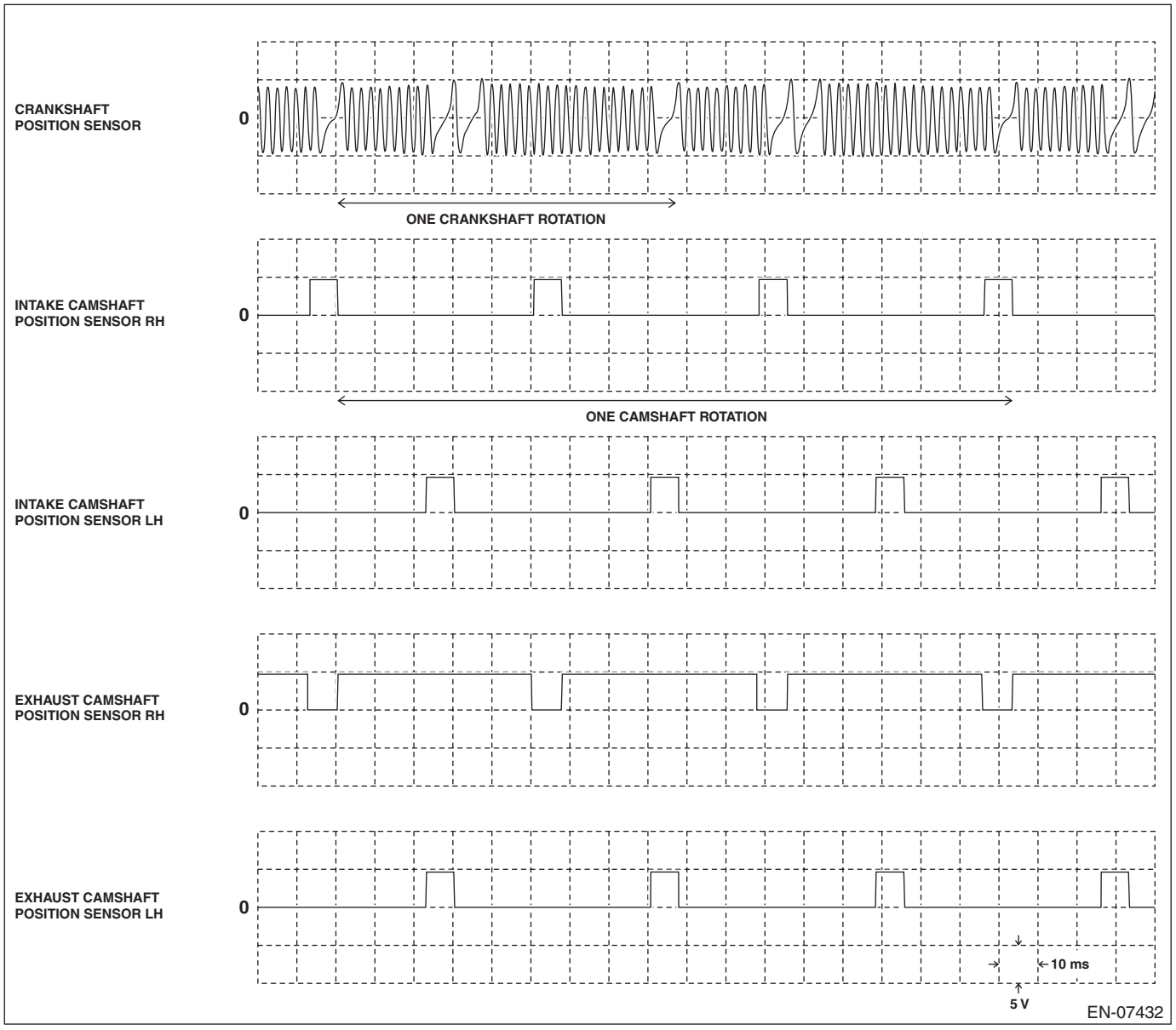

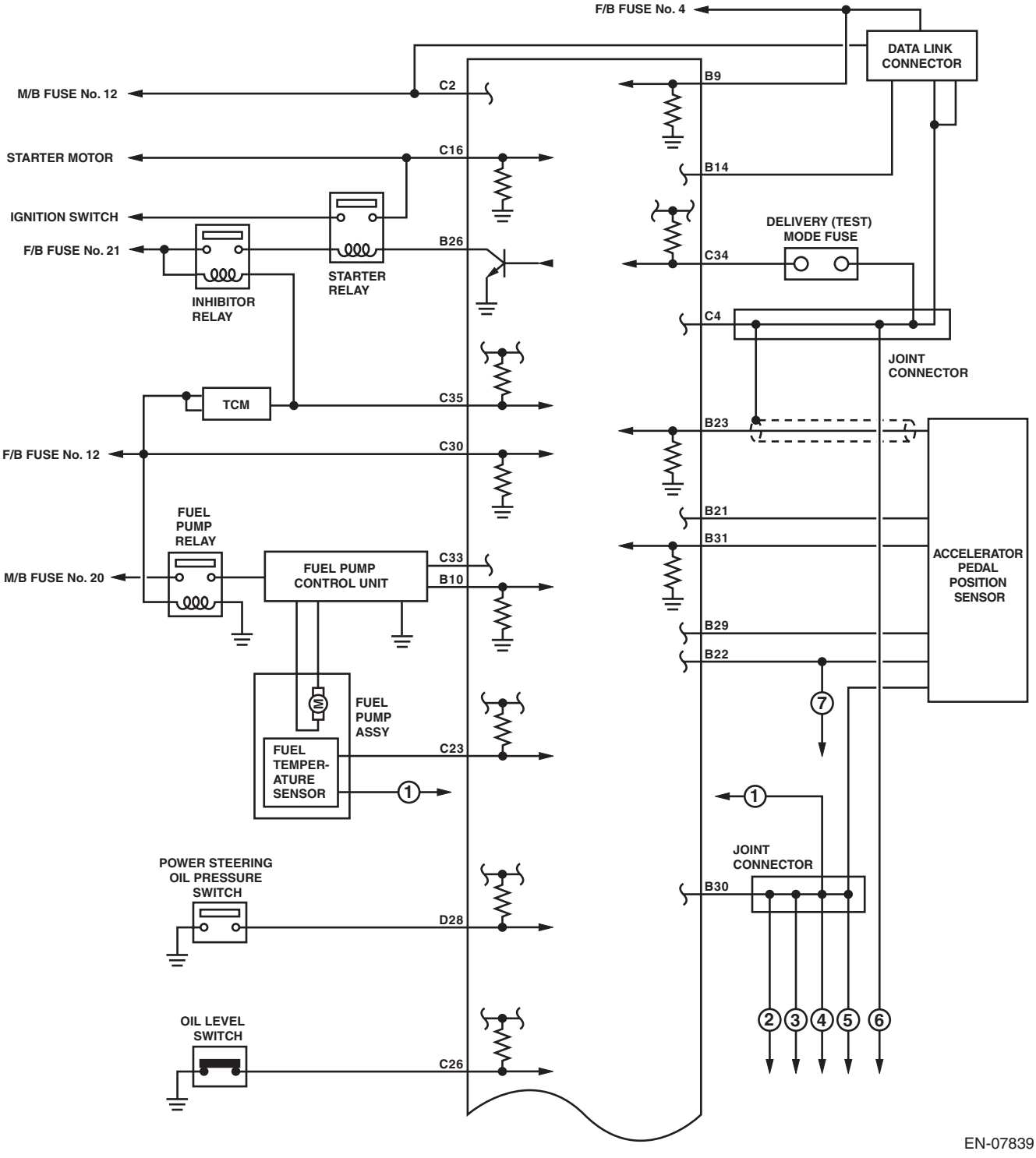
F/B FUSE No. 4
DATA LINK CONNECTOR
M/B FUSE No. 12
C2
B9
STARTER MOTOR
C16
B14
IGNITION SWITCH
F/B FUSE No. 21
B26
DELIVERY (TEST) MODE FUSE
C34
INHIBITOR RELAY
STARTER RELAY
C4
JOINT CONNECTOR
TCM
C35
B23
F/B FUSE No. 12
C30
FUEL PUMP RELAY
B21
B31
M/B FUSE No. 20
FUEL PUMP CONTROL UNIT
C33
B10
ACCELERATOR PEDAL POSITION SENSOR
B29
B22
FUEL PUMP ASSY
FUEL TEMPER-ATURE SENSOR
C23
JOINT CONNECTOR
B30
POWER STEERING OIL PRESSURE SWITCH
D28
OIL LEVEL SWITCH
C26
EN-07839

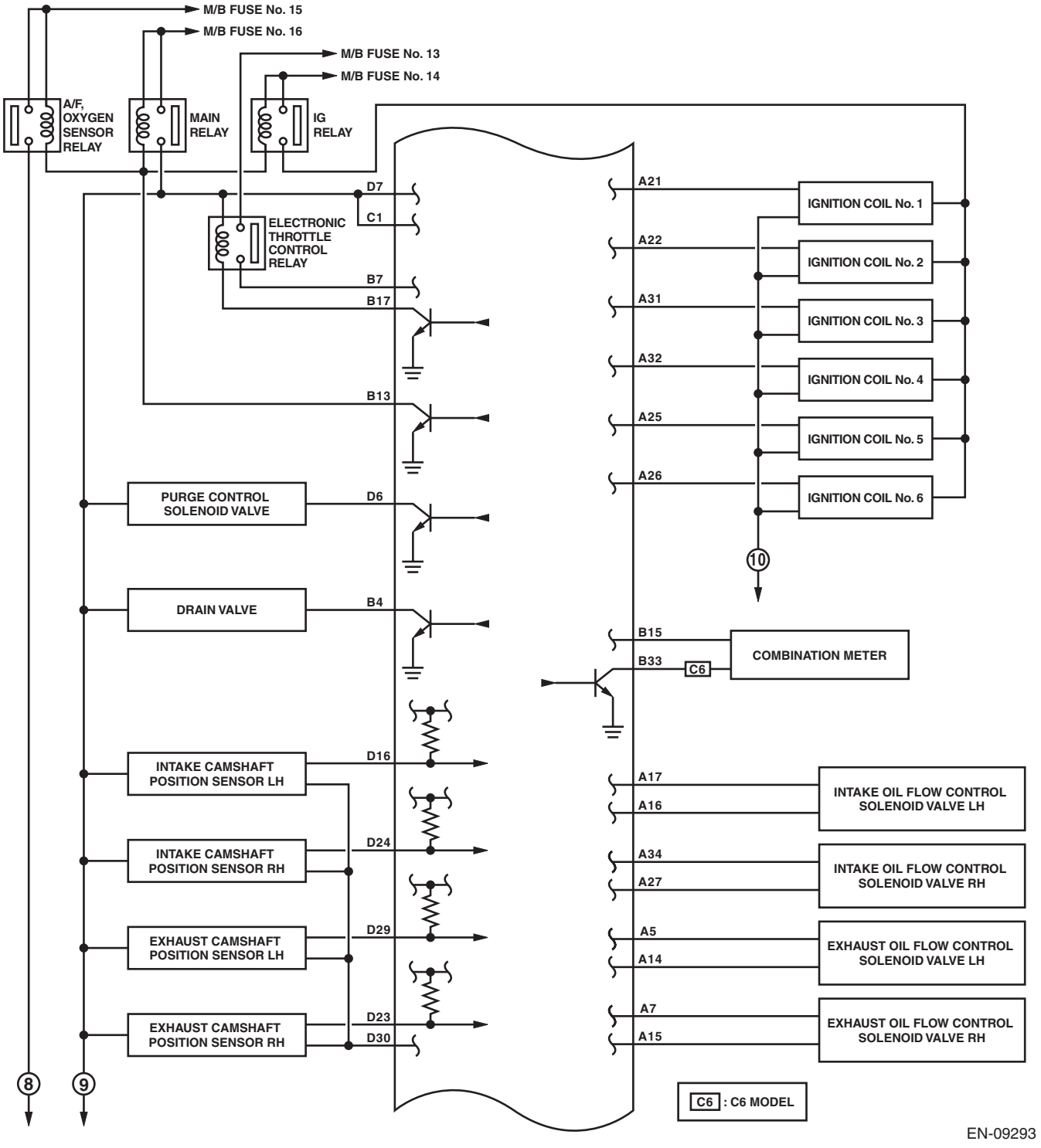
M/B FUSE No. 15
M/B FUSE No. 16
M/B FUSE No. 13
M/B FUSE No. 14
A/F, OXYGEN SENSOR RELAY
MAIN RELAY
IG RELAY
ELECTRONIC THROTTLE CONTROL RELAY
D7
C1
B7
B17
B13
PURGE CONTROL SOLENOID VALVE
D6
DRAIN VALVE
B4
INTAKE CAMSHAFT POSITION SENSOR LH
D16
INTAKE CAMSHAFT POSITION SENSOR RH
D24
EXHAUST CAMSHAFT POSITION SENSOR LH
D29
EXHAUST CAMSHAFT POSITION SENSOR RH
D23
D30
8
9
A21
A22
A31
A32
A25
A26
IGNITION COIL No. 1
IGNITION COIL No. 2
IGNITION COIL No. 3
IGNITION COIL No. 4
IGNITION COIL No. 5
IGNITION COIL No. 6
10
B15
B33
C6
COMBINATION METER
A17
A16
INTAKE OIL FLOW CONTROL SOLENOID VALVE LH
A34
A27
INTAKE OIL FLOW CONTROL SOLENOID VALVE RH
A5
A14
EXHAUST OIL FLOW CONTROL SOLENOID VALVE LH
A7
A15
EXHAUST OIL FLOW CONTROL SOLENOID VALVE RH
C6 : C6 MODEL
EN-09293

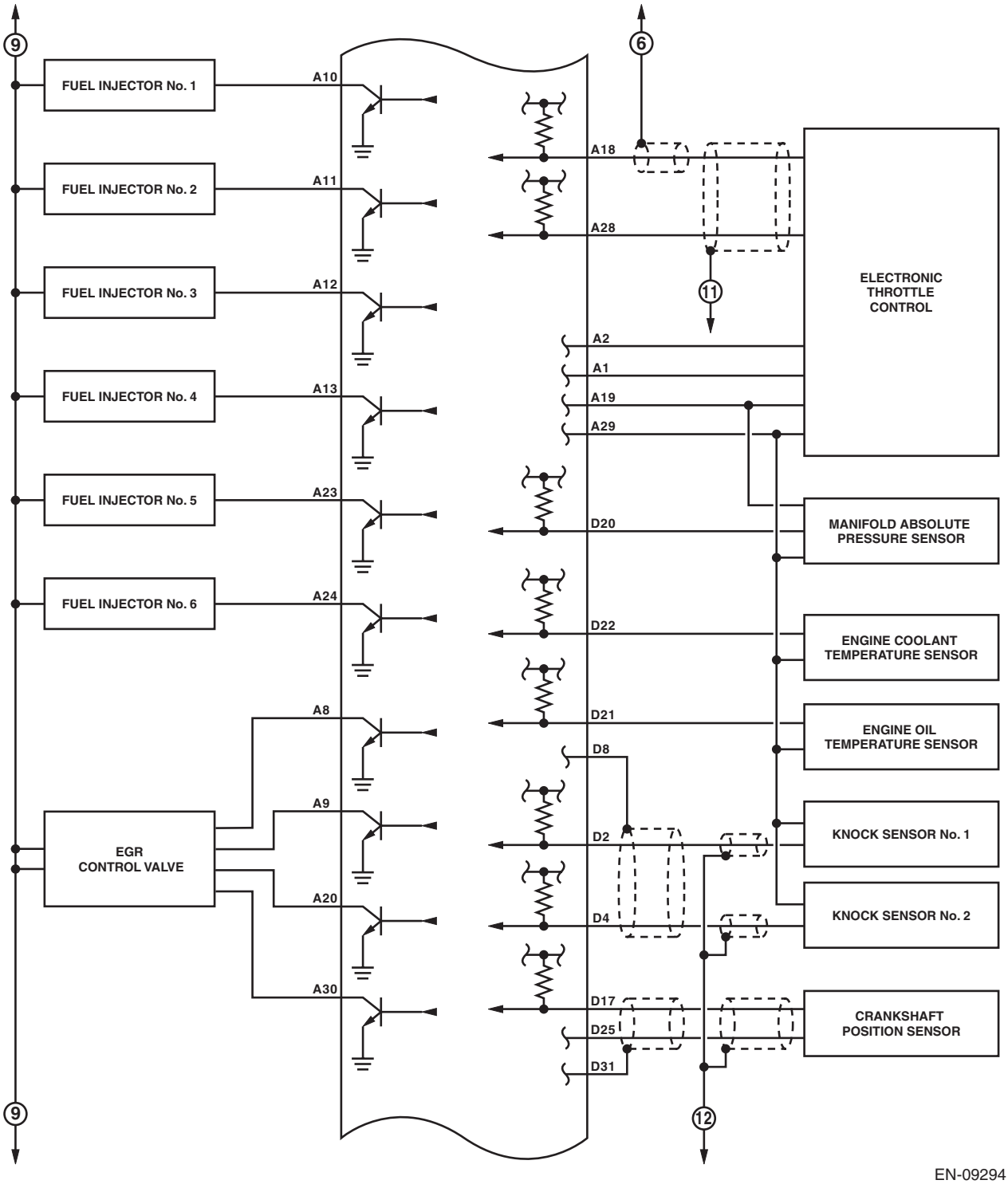
9
FUEL INJECTOR No. 1
FUEL INJECTOR No. 2
FUEL INJECTOR No. 3
FUEL INJECTOR No. 4
FUEL INJECTOR No. 5
FUEL INJECTOR No. 6
EGR CONTROL VALVE
9
A10
A11
A12
A13
A23
A24
A8
A9
A20
A30
6
A18
A28
11
A2
A1
A19
A29
D20
D22
D21
D8
D2
D4
D17
D25
D31
12
ELECTRONIC THROTTLE CONTROL
MANIFOLD ABSOLUTE PRESSURE SENSOR
ENGINE COOLANT TEMPERATURE SENSOR
ENGINE OIL TEMPERATURE SENSOR
KNOCK SENSOR No. 1
KNOCK SENSOR No. 2
CRANKSHAFT POSITION SENSOR

EN-09294

Engine Control Module (ECM) I/O Signal

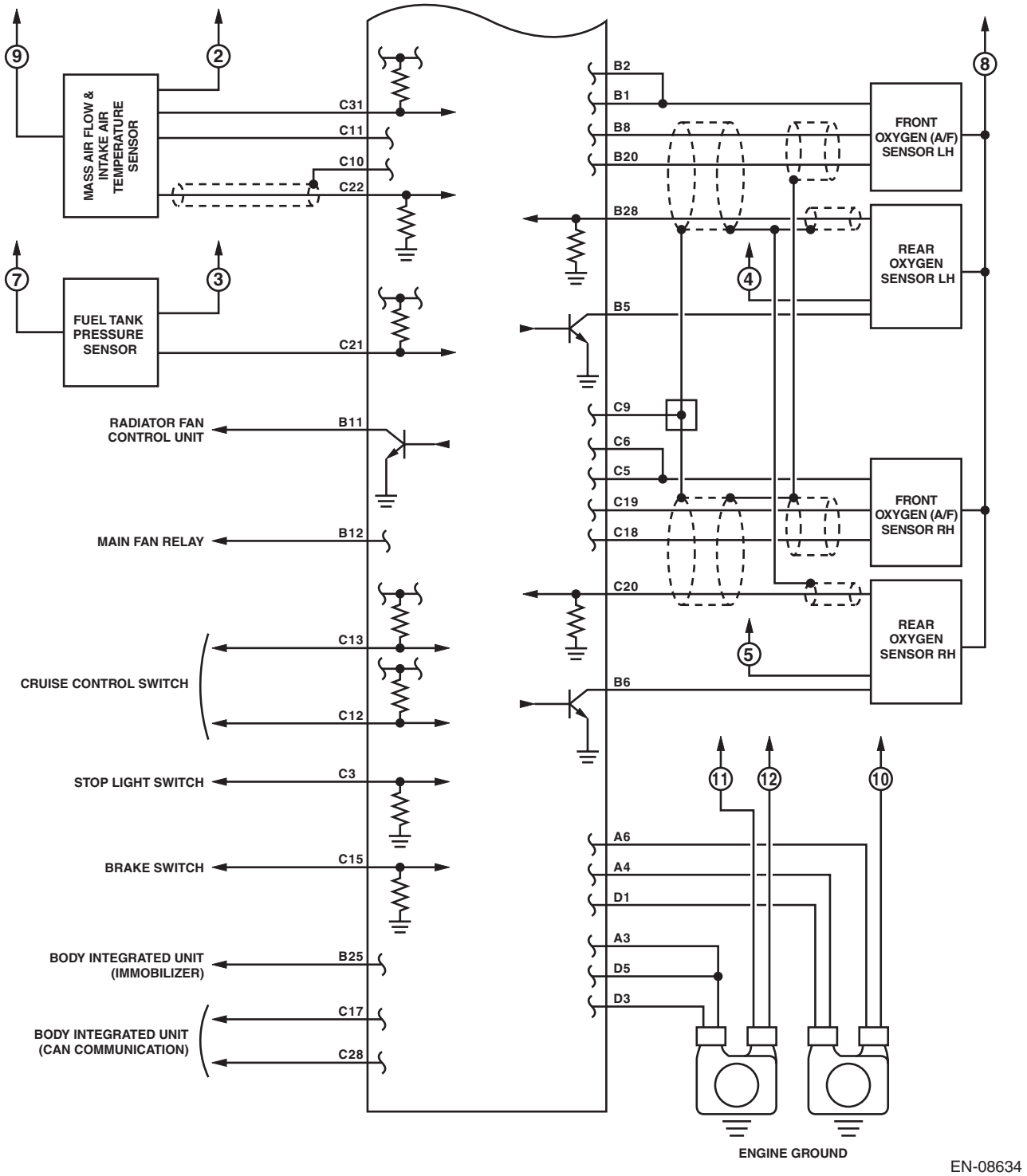

EN-08634

6. Engine Condition Data

A: ELECTRICAL SPECIFICATION

Contents	Specification
Engine load	17.9 — 38.8(%): Idling
	16.6 — 33.7(%): 2,500 rpm racing

Measuring condition:
- After engine is warmed up.
- Place the select lever in “P” range or “N” range.
- Turn the A/C to OFF.
- Turn all the accessory switches to OFF.

7. Data Link Connector

A: NOTE

This connector is used for Subaru Select Monitor.

CAUTION:
Do not connect any scan tools other than Subaru Select Monitor or general scan tool because the circuit for Subaru Select Monitor may be damaged.

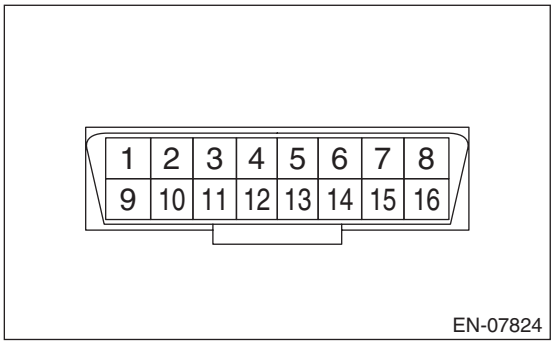

Terminal No.	Contents	Terminal No.	Contents
1	Empty	9	Empty
2	Empty	10	Empty
3	Empty	11	Empty
4	Ground	12	Empty
5	Ground	13	Empty
6	CAN communication (Hi)	14	CAN communication (Lo)
7	Subaru Select Monitor signal	15	Empty
8	Empty	16	Power supply

8. General Scan Tool

A: OPERATION

1. HOW TO USE GENERAL SCAN TOOL

1) Prepare a scan tool (general scan tool) required by SAE J1978.
2) Connect the general scan tool to data link connector located in the lower portion of the instrument panel (on the driver's side).

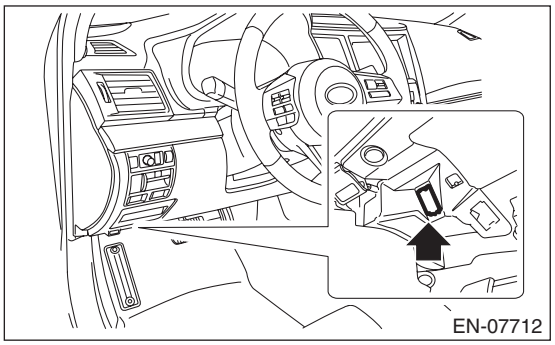

3) Using the general scan tool, call up each data. General scan tool functions consist of:
   (1) MODE $01: Current powertrain diagnostic data
   (2) MODE $02: Powertrain freeze frame data
   (3) MODE $03: Emission-related powertrain DTC
   (4) MODE $04: Clear/Reset emission-related diagnostic information
   (5) MODE $06: Request on-board monitoring test results for intermittently monitored systems
   (6) MODE $07: Request on-board monitoring test results for continuously monitored systems
   (7) MODE $09: Request vehicle information
4) Read out the data according to repair procedures. (For detailed operation procedure, refer to the general scan tool operation manual.)

NOTE:
For details concerning DTC, refer to "List of Diagnostic Trouble Code (DTC)". <Ref. to EN(H6DO)(diag)-85, List of Diagnostic Trouble Code (DTC).>

2. MODE $01 (CURRENT POWERTRAIN DIAGNOSTIC DATA)

Refer to data denoting the current operating condition of analog input/output, digital input/output or the powertrain system.
A list of the support data and PID (Parameter Identification) codes are shown in the following table.

PID	Data	Unit of measure
$01	Number of emission-related powertrain DTC and malfunction indicator light status	—
$03	Fuel system control status	—
$04	Calculated engine load value	%
$05	Engine coolant temperature	°C
$06	Short term fuel trim (Bank 1)	%
$07	Long term fuel trim (Bank 1)	%
$08	Short term fuel trim (Bank 2)	%
$09	Long term fuel trim (Bank 2)	%
$0B	Intake manifold absolute pressure	kPa
$0C	Engine speed	rpm
$0D	Vehicle speed	MPH
$0E	Ignition timing advance	°
$0F	Intake air temperature	°C
$10	Intake air amount	g/s
$11	Throttle valve opening angle	%
$13	Air fuel ratio sensor	—
$15	Oxygen sensor output voltage (Bank 1 Sensor 2)	V
$15	Oxygen sensor correction (Bank 1 Sensor 2)	%
$19	Oxygen sensor output voltage (Bank 2 Sensor 2)	V
$19	Oxygen sensor correction (Bank 2 Sensor 2)	%
$1C	On-board diagnostic system	—
$1F	Elapsed time after starting the engine	sec
$21	Travel distance after the malfunction indicator light illuminates	miles
$24	Oxygen sensor output voltage and short term fuel trim associated with oxygen sensor (Bank 1)	– and V
$28	Oxygen sensor output voltage and short term fuel trim associated with oxygen sensor (Bank 2)	– and V
$2C	Target EGR	%
$2D	EGR deviation	%
$2E	Evaporative purge	%
$2F	Fuel level	%
$30	Number of warm ups after DTC clear	—
$31	Travel distance after DTC clear	miles
$32	Fuel tank pressure	Pa
$33	Barometric pressure	kPa
$34	A/F sensor lambda value (Bank 1 Sensor 1)	—
$34	A/F sensor current value (Bank 1 Sensor 1)	mA
$38	A/F sensor lambda value (Bank 2 Sensor 1)	—
$38	A/F sensor current value (Bank 2 Sensor 1)	mA
$3C	Catalyst temperature #1	°C
$3D	Catalyst temperature #2	°C
$41	Diagnostic monitor of each drive cycle	—
$42	ECM power voltage	V
$43	Absolute load	%
$44	A/F target lambda	—
$45	Relative throttle opening angle	%
$46	Ambient temperature	°C
$47	Absolute throttle opening angle 2	%

PID	Data	Unit of measure
$49	Absolute accelerator opening angle 1	%
$4A	Absolute accelerator opening angle 2	%
$4C	Target throttle opening angle	%
$4D	Engine operating time while malfunction indicator light lit	min
$4E	Elapsed time after DTC clear	min
$51	Fuel used	—
$5A	Relative accelerator opening angle	%
$65	Neutral status	—

NOTE:
Refer to general scan tool manufacturer's operation manual to access current powertrain diagnostic data (MODE $01).

3. MODE $02 (POWERTRAIN FREEZE FRAME DATA)

Refer to data denoting the operating condition when trouble is sensed by the on-board diagnosis system. A list of the support data and PID (Parameter Identification) codes are shown in the following table.

PID	Data	Unit of measure
$02	DTC that caused the freeze frame data storage required by CARB	—
$03	Fuel system control status	—
$04	Calculated engine load value	%
$05	Engine coolant temperature	°C
$06	Short term fuel trim (Bank 1)	%
$07	Long term fuel trim (Bank 1)	%
$08	Short term fuel trim (Bank 2)	%
$09	Long term fuel trim (Bank 2)	%
$0B	Intake manifold absolute pressure	kPa
$0C	Engine speed	rpm
$0D	Vehicle speed	MPH
$0E	Ignition timing advance	°
$0F	Intake air temperature	°C
$10	Intake air amount	g/s
$11	Throttle valve opening angle	%
$13	Air fuel ratio sensor	—
$15	Oxygen sensor output voltage (Bank 1 Sensor 2)	V
$15	Oxygen sensor correction (Bank 2 Sensor 1)	%
$19	Oxygen sensor output voltage (Bank 2 Sensor 2)	V
$19	Oxygen sensor correction (Bank 2 Sensor 2)	%
$1C	On-board diagnostic system	—
$1F	Elapsed time after starting the engine	sec
$2C	Target EGR	%
$2D	EGR deviation	%
$2E	Evaporative purge	%
$2F	Fuel level	%
$32	Fuel tank pressure	Pa
$33	Atmospheric pressure	kPa
$42	ECM power voltage	V
$43	Absolute load	%
$44	A/F target lambda	—
$45	Relative throttle opening angle	%
$46	Ambient temperature	°C
$47	Absolute throttle opening angle 2	%

PID	Data	Unit of measure
$49	Absolute acceleration opening angle 1	%
$4A	Absolute acceleration opening angle 2	%
$4C	Target throttle opening angle	%
$65	Neutral status	—

NOTE:
Refer to general scan tool manufacturer's operation manual to access freeze frame data (MODE $02).

4. MODE $03 (EMISSION-RELATED POWERTRAIN DTC)

Refer to "List of Diagnostic Trouble Code (DTC)" for information about data denoting emission-related powertrain DTC. <Ref. to EN(H6DO)(diag)-85, List of Diagnostic Trouble Code (DTC).>

5. MODE $04 (CLEAR/RESET EMISSION-RELATED DIAGNOSTIC INFORMATION)

Refer to the mode used to clear or reset emission-related diagnostic information (OBD-II trouble diagnostic information).

NOTE:
- Refer to general scan tool manufacturer's instruction manual to clear the emission-related diagnostic information (MODE $04).
- Initial diagnosis of electronic throttle control is performed after memory clearance. Wait for 10 seconds or more after turning the ignition switch to ON, and then start the engine.

6. MODE $06

Refer to diagnostic value of troubleshooting and data of test limit indicated on the support data bit sequence table. A list of the support data is shown in the following table.

OBDMID	TID	SID	Diagnostic item
$01	$84	$1E	A/F sensor range failure (Bank 1 Sensor 1)
	$85	$1E	
	$86	$20	A/F sensor response failure (Bank 1 Sensor 1)
	$91	$20	
	$92	$10	
	$A3	$20	
	$A4	$10	
	$AC	$10	
	$AD	$10	
	$AE	$10	
	$AF	$10	
	$CD	$20	
	$CF	$20	
$02	$07	$0B	Oxygen sensor drop failure (Bank 1 Sensor 2)
	$08	$0B	
	$A5	$0B	
	$05	$10	Oxygen sensor response failure (Bank 1 Sensor 2)
	$06	$10	
	$D1	$10	Oxygen sensor delay failure (Bank 1 Sensor 2)
	$D2	$01	
$05	$84	$1E	A/F sensor range failure (Bank 2 Sensor 1)
	$85	$1E	
	$86	$20	A/F sensor response failure (Bank 2 Sensor 1)
	$91	$20	
	$92	$10	
	$A3	$20	
	$A4	$10	
	$AC	$10	
	$AD	$10	
	$AE	$10	
	$AF	$10	
	$CE	$20	
	$D0	$20	
$06	$07	$0B	Oxygen sensor drop failure (Bank 2 Sensor 2)
	$08	$0B	
	$A5	$0B	
	$05	$10	Oxygen sensor response failure (Bank 2 Sensor 2)
	$06	$10	
	$D1	$10	Oxygen sensor delay failure (Bank 2 Sensor 2)
	$D2	$01	
$21	$89	$20	Catalyst deterioration diagnosis (Bank 1)
$31	$8A	$FD	EGR system diagnosis
$35	$8B	$9D	VVT monitor (Bank 1)
	$8C	$9D	
	$8D	$9D	
	$8E	$9D	

OBDMID	TID	SID	Diagnostic item
$36	$8B	$9D	VVT monitor (Bank 2)
	$8C	$9D	
	$8D	$9D	
	$8E	$9D	
$39	$93	$FE	Evaporative emission control system (Cap off)
$3B	$94	$FE	Evaporative emission control system (0.04 inch leak)
	$95	$FE	
	$A6	$FE	
$3C	$96	$FE	Evaporative emission control system (0.02 inch leak)
	$C1	$FE	
	$C2	$FE	
	$C3	$FE	
	$C4	$FE	
	$C5	$FE	
	$C6	$35	
	$C7	$FE	
	$C8	$FE	
	$C9	$FE	
	$CA	$FE	
$3D	$98	$FE	Evaporative emission control system (Purge flow)
$41	$9B	$14	A/F sensor heater characteristics failure (Bank 1 Sensor 1)
$42	$A2	$24	Oxygen sensor heater characteristics failure (Bank 1 Sensor 2)
$45	$9B	$14	A/F sensor heater characteristics failure (Bank 2 Sensor 1)
$46	$A2	$24	Oxygen sensor heater characteristics failure (Bank 2 Sensor 2)
$A1	$0B	$24	Misfire monitoring (All cylinders)
	$0C	$24	
$A2	$0B	$24	Misfire monitoring (#1 cylinder)
	$0C	$24	
$A3	$0B	$24	Misfire monitoring (#2 cylinder)
	$0C	$24	
$A4	$0B	$24	Misfire monitoring (#3 cylinder)
	$0C	$24	
$A5	$0B	$24	Misfire monitoring (#4 cylinder)
	$0C	$24	
$A6	$0B	$24	Misfire monitoring (#5 cylinder)
	$0C	$24	
$A7	$0B	$24	Misfire monitoring (#6 cylinder)
	$0C	$24	

7. MODE $07

Refer to the data of DTC (pending code) for troubleshooting result about emission in the first time.

8. MODE $09

Refer to the data of vehicle specification (V.I.N., calibration ID, diagnosis frequency, etc.).

9. Subaru Select Monitor

A: OPERATION

1. HOW TO USE THE SUBARU SELECT MONITOR

NOTE:
For detailed operation procedures, refer to “PC application help for Subaru Select Monitor”.

2. READ CURRENT DATA FOR ENGINE (NORMAL MODE)

NOTE:
- For detailed operation procedures, refer to “PC application help for Subaru Select Monitor”.
- A list of the support data is shown in the following table.
- *: For models without cruise control, the brake switch signal does not change.

Content	Display	Unit of measure	Note (at idling)
Engine load	Engine Load	%	2.4%
Engine coolant temperature signal	Coolant Temperature	°C or °F	≥ 85°C or 185°F (after warm-up)
A/F correction #1	A/F Correction #1	%	–10% — +10%
A/F learning #1	A/F Learning #1	%	–10% — +10%
A/F correction #2	A/F Correction #2	%	–10% — +10%
A/F learning #2	A/F Learning #2	%	–10% — +10%
Intake manifold absolute pressure	Mani. Absolute Pressure	mmHg, kPa, inHg or psig	210 mmHg, 28 kPa, 8.3 inHg or 4.1 psig
Engine speed signal	Engine Speed	rpm	600 — 800 rpm (after warm-up)
Meter vehicle speed signal	Vehicle Speed	km/h or MPH	0 km/h or 0 MPH
Ignition timing signal	Ignition Timing	deg	13 — 15 deg
Intake air temperature signal	Intake Air Temp.	°C or °F	(Ambient air temperature)
Intake air amount	Mass Air Flow	g/s or lb/m	2.5 g/s — 5.0 g/s or 0.31 lb/m — 0.71 lb/m
Throttle opening angle signal	Throttle Opening Angle	%	2%
Front oxygen sensor voltage value 1	Front O2 Sensor #1	V	0.900 V
Front oxygen sensor voltage value 2	Front O2 Sensor #2	V	0.900 V
Battery voltage	Battery Voltage	V	12 — 13 V
Mass air flow voltage	Air Flow Sensor Voltage	V	1.2 — 1.3 V
Injection 1 pulse width	Fuel Injection #1 Pulse	ms	2.5 ms — 3.5 ms
Injection 2 pulse width	Fuel Injection #2 Pulse	ms	2.5 ms — 3.5 ms
Atmospheric pressure signal	Atmosphere Pressure	mmHg, kPa, inHg or psig	(Atmospheric pressure)
Intake manifold relative pressure	Mani. Relative Pressure	mmHg, kPa, inHg or psig	(Air intake absolute pressure — Atmospheric pressure)
Learned ignition timing	Learned Ignition Timing	deg	+0.0 deg
Acceleration opening angle signal	Accel. Opening Angle	%	0%
Fuel temperature signal	Fuel Temperature	°C or °F	+28°C or +82°F
Radiator fan output	Radiator Fan Control	%	0% (Water temperature 90°C (194°F) when air conditioner is OFF)
Purge control solenoid valve duty ratio	CPC Valve Duty Ratio	%	18%
Number of EGR steps	No. of EGR steps	STEP	0 STEP
Fuel pump duty ratio	Fuel Pump Duty	%	33%

Content	Display	Unit of measure	Note (at idling)
AVCS advance angle amount RH	VVT Adv. Ang. Amount R	deg	0 deg — +1 deg
AVCS advance angle amount LH	VVT Adv. Ang. Amount L	deg	0 deg — +1 deg
Oil flow control solenoid valve duty ratio RH	OCV Duty R	%	9.4%
Oil flow control solenoid valve duty ratio LH	OCV Duty L	%	9.4%
Oil flow control solenoid valve current RH	OCV Current R	mA	64 mA
Oil flow control solenoid valve current LH	OCV Current L	mA	64 mA
Front oxygen (A/F) sensor current value 1	A/F Sensor #1 Current	mA	0.0 mA
Front oxygen (A/F) sensor current value 2	A/F Sensor #2 Current	mA	0.0 mA
Front oxygen (A/F) sensor resistance value 1	A/F Sensor #1 Resistance	Ω	31 Ω
Front oxygen (A/F) sensor resistance value 2	A/F Sensor #2 Resistance	Ω	31 Ω
Front oxygen (A/F) sensor output lambda 1	A/F Sensor #1	—	1.01
Front oxygen (A/F) sensor output lambda 2	A/F Sensor #2	—	1.01
A/F correction #3	A/F Correction #3	%	0% — 1%
A/F learning #3	A/F Learning #3	%	0.0%
Throttle motor duty	Throttle Motor Duty	%	–20% — +20%
Throttle motor voltage	Throttle Motor Voltage	V	(Battery voltage)
Sub throttle sensor voltage	Sub-Throttle Sensor	V	1.4 V — 1.5 V
Main throttle sensor voltage	Main-Throttle Sensor	V	0.62 V — 0.70 V
Sub accelerator sensor voltage	Sub-Accelerator Sensor	V	1.0 V — 1.2 V
Main acceleration sensor voltage	Main-Accelerator Sensor	V	0.9 V — 1.1 V
Memory vehicle speed	Memorized Cruise Speed	km/h or MPH	0 km/h or 0 MPH
A/F correction #4	A/F Correction #4	%	–1% — 1%
A/F learning #4	A/F Learning #4	%	0.0%
Fuel level sensor resistance	Fuel level resistance	Ω	4 — 96 Ω
Engine oil temperature signal	Engine Oil Temperature	°C or °F	≥ 85°C or 185°F (after warm-up)
Exhaust AVCS retard angle amount RH	Exh. VVT Retard Ang. R	deg	0 deg — +1 deg
Exhaust AVCS retard angle amount LH	Exh. VVT Retard Ang. L	deg	0 deg — +1 deg
Exhaust oil flow control solenoid valve duty ratio RH	Exh. OCV Duty R	%	9.4%
Exhaust oil flow control solenoid valve duty ratio LH	Exh. OCV Duty L	%	9.4%
Exhaust oil flow control solenoid valve current RH	Exh. OCV Current R	mA	64 mA
Exhaust oil flow control solenoid valve current LH	Exh. OCV Current L	mA	64 mA
#1 cylinder roughness monitor	Roughness Monitor #1	—	0
#2 cylinder roughness monitor	Roughness Monitor #2	—	0
#3 cylinder roughness monitor	Roughness Monitor #3	—	0
#4 cylinder roughness monitor	Roughness Monitor #4	—	0
#5 cylinder roughness monitor	Roughness Monitor #5	—	0
#6 cylinder roughness monitor	Roughness Monitor #6	—	0
Knock sensor correction	Knocking Correction	deg	0 deg
Fuel tank pressure signal	Fuel Tank Pressure	mmHg, kPa, inHg or psig	7.5 mmHg, 1 kPa, 0.3 inHg or 0.14 psi
AT/MT identification	AT Vehicle ID Signal	—	AT vehicle
D-check require Flag	D-check Require Flag	—	OFF
Delivery (test) mode terminal	Delivery Mode Connector (Test Mode Connector)	—	OFF
Neutral position switch signal	Neutral Position Switch	—	ON

Content	Display	Unit of measure	Note (at idling)
Idle switch signal	Idle Switch Signal	—	ON
Ignition switch signal	Ignition Switch	—	ON
Power steering switch signal	P/S Switch	—	OFF (when OFF)
Air conditioning switch signal	A/C Switch	—	OFF (when OFF)
Starter switch signal	Starter Switch	—	OFF
Front oxygen monitor 1	Front O2 #1 Rich Signal	—	Rich, Lean
Front oxygen monitor 2	Front O2 #2 Rich Signal	—	Rich, Lean
Knocking signal	Knocking Signal	—	OFF
Crankshaft position sensor signal	Crankshaft Position Sig.	—	ON
Camshaft position sensor signal	Camshaft Position Sig.	—	ON
Rear defogger switch signal	Rear Defogger SW	—	OFF (when OFF)
Blower fan switch signal	Blower Fan SW	—	OFF (when OFF)
Light switch signal	Light Switch	—	OFF (when OFF)
Drain valve signal	Vent. Solenoid Valve	—	OFF (when OFF)
AT coordinate retard angle demand signal	Retard Signal from AT	—	OFF
AT coordinate fuel cut demand signal	Fuel Cut signal from AT	—	OFF
Vehicle dynamics control (VDC) torque down prohibition output	Ban of Torque Down	—	ON
Vehicle dynamics control (VDC) torque down demand	Request Torque Down VDC	—	OFF
AT coordinate permission signal	Torque Permission Signal	—	ON
Electronic throttle control motor relay signal	ETC Motor Relay	—	ON
Stop light switch signal	Stop Light Switch	—	OFF (when brake is OFF)
SET/COAST switch signal	SET/COAST Switch	—	OFF (when levers are not operated)
RESUME/ACCEL switch signal	RESUME/ACCEL Switch	—	OFF (when levers are not operated)
Brake switch signal *	Brake Switch	—	OFF (when brake is OFF)
Main switch signal	Main Switch	—	OFF (when levers are not operated)
Cruise control cancel switch signal	CC Cancel SW	—	OFF (when levers are not operated)
Malfunction indicator light on flag	MIL On Flag	—	Light OFF
Oil level switch signal	Oil level switch	—	HIGH level

3. READ CURRENT DATA FOR ENGINE (OBD MODE)

NOTE:
- For detailed operation procedures, refer to “PC application help for Subaru Select Monitor”.
- A list of the support data is shown in the following table.

Contents	Display	Referential value (at idling)	Unit of measure
Number of diagnosis code	Number of Diag. Code:	0	—
Condition of malfunction indicator light	MI(MIL)	OFF	—
Monitoring test of misfire	Misfire monitoring (Supp)	YES	—
Monitoring test of misfire	Misfire monitoring (Rdy)	YES	—
Monitoring test of fuel system	Fuel system monitoring (Supp)	YES	—
Monitoring test of fuel system	Fuel system monitoring (Rdy)	YES	—
Monitoring test of comprehensive component	Component monitoring (Supp)	YES	—
Monitoring test of comprehensive component	Component monitoring (Rdy)	YES	—
Test of catalyst	Catalyst Diagnosis (Supp)	YES	—
Test of catalyst	Catalyst Diagnosis (Rdy)	NO	—
Test of heating-type catalyst	Heated catalyst (Supp)	NO	—
Test of heating-type catalyst	Heated catalyst (Rdy)	N/A	—
Test of evaporative emission purge control system	Evaporative purge system (Supp)	YES	—
Test of evaporative emission purge control system	Evaporative purge system (Rdy)	NO	—
Secondary air system test	Secondary air system (Supp)	NO	—
Secondary air system test	Secondary air system (Rdy)	N/A	—
Test of air conditioning system refrigerant	A/C system refrigerant (Supp)	NO	—
Test of air conditioning system refrigerant	A/C system refrigerant (Rdy)	N/A	—
Test of oxygen sensor	Oxygen sensor (Supp)	YES	—
Test of oxygen sensor	Oxygen sensor (Rdy)	NO	—
Test of oxygen sensor heater	O2 Heater Diagnosis (Supp)	YES	—
Test of oxygen sensor heater	O2 Heater Diagnosis (Rdy)	NO	—
Test of EGR system	EGR system (Supp)	YES	—
Test of EGR system	EGR system (Rdy)	NO	—
Air fuel ratio control system for bank 1	Fuel system for Bank 1	Cl_normal	—
Air fuel ratio control system for bank 2	Fuel system for Bank 2	Cl_normal	—
Engine load data	Calculated load value	21.0	%
Engine coolant temperature signal	Coolant Temp.	91	°C
Short term fuel trim by front oxygen (A/F) sensor (Bank 1)	Short term fuel trim B1	17.2	%
Long term fuel trim by front oxygen (A/F) sensor (Bank 1)	Long term fuel trim B1	5.5	%
Short term fuel trim by front oxygen (A/F) sensor (Bank 2)	Short term fuel trim B2	17.2	%
Long term fuel trim by front oxygen (A/F) sensor (Bank 2)	Long term fuel trim B2	5.5	%
Intake manifold absolute pressure signal	Mani. Absolute Pressure	233	mmHg
Engine speed signal	Engine Speed	700	rpm

Contents	Display	Referential value (at idling)	Unit of measure
Vehicle speed signal	Vehicle Speed	0	km/h
#1 Cylinder ignition timing	Ignition timing adv. #1	16.5	°
Intake air temperature signal	Intake Air Temp.	54	°C
Intake air amount	Mass Air Flow	2.8	g/s
Throttle position signal	Throttle Opening Angle	13	%
Oxygen sensor (Bank 1 Sensor 2)	Oxygen sensor #12	0.1 — 0.7	V
A/F correction (Bank 1 Sensor 2)	Short term fuel trim #12	0.0	%
Oxygen sensor (Bank 2 Sensor 2)	Oxygen sensor #22	0.1 — 0.7	V
A/F correction (Bank 2 Sensor 2)	Short term fuel trim #22	0.0	%
On-board diagnostic system	OBD System	OBD/OBD2	—
Front oxygen (A/F) sensor (Bank 1 Sensor 1)	Oxygen sensor #11	Supported	—
Oxygen sensor (Bank 1 Sensor 2)	Oxygen sensor #12	Supported	—
Front oxygen (A/F) sensor (Bank 2 Sensor 1)	Oxygen sensor #21	Supported	—
Oxygen sensor (Bank 2 Sensor 2)	Oxygen sensor #22	Supported	—
Elapsed time after engine start	Time Since Engine Start	—	sec
Travel distance after the malfunction indicator light illuminates	Lighted MI lamp history	—	km
A/F lambda signal (Bank 1 Sensor 1)	A/F Sensor #11	1.001	—
A/F sensor output signal (Bank 1 Sensor 1)	A/F Sensor #11	2.805	V
A/F lambda signal (Bank 2 Sensor 1)	A/F Sensor #21	1.001	—
A/F sensor output signal (Bank 2 Sensor 1)	A/F Sensor #21	2.805	V
Target EGR	Commanded EGR	0	%
EGR deviation	EGR Error	0.0	%
Evaporative purge	Commanded Evap Purge	0	%
Fuel level signal	Fuel Level	—	%
Number of warm ups after DTC clear	Number of warm-ups	—	—
Travel distance after DTC clear	Meter since DTC cleared	—	km
Fuel tank pressure signal	Fuel Tank Pressure	8.8	mmHg
Atmospheric pressure signal	Atmosphere Pressure	Atmospheric pressure	mmHg
A/F lambda signal (Bank 1 Sensor 1)	A/F Sensor #11	0.999	—
A/F sensor current (Bank 1 Sensor 1)	A/F Sensor #11	0.02	mA
A/F lambda signal (Bank 2 Sensor 1)	A/F Sensor #21	0.999	—
A/F sensor current (Bank 2 Sensor 1)	A/F Sensor #21	0.02	mA
Catalyst temperature #1	Catalyst Temperature #11	—	°C
Catalyst temperature #2	Catalyst Temperature #21	—	°C
Monitoring test of misfire	Misfire monitoring (Enable)	YES	—
Monitoring test of misfire	Misfire monitoring (Comp)	NO	—
Monitoring test of fuel system	Fuel system monitoring (Enable)	YES	—
Monitoring test of fuel system	Fuel system monitoring (Comp)	NO	—
Monitoring test of comprehensive component	Component monitoring (Enable)	YES	—
Monitoring test of comprehensive component	Component monitoring (Comp)	NO	—
Test of catalyst	Catalyst Diagnosis (Enable)	YES	—
Test of catalyst	Catalyst Diagnosis (Comp)	NO	—

Contents	Display	Referential value (at idling)	Unit of measure
Test of heating-type catalyst	Heated catalyst (Enable)	N/A	—
Test of heating-type catalyst	Heated catalyst (Comp)	N/A	—
Test of evaporative emission purge control system	Evaporative purge system (Enable)	YES	—
Test of evaporative emission purge control system	Evaporative purge system (Comp)	NO	—
Secondary air system test	Secondary air system (Enable)	N/A	—
Secondary air system test	Secondary air system (Comp)	N/A	—
Test of air conditioning system refrigerant	A/C system refrigerant (Enable)	N/A	—
Test of air conditioning system refrigerant	A/C system refrigerant (Comp)	N/A	—
Test of oxygen sensor	Oxygen sensor (Enable)	YES	—
Test of oxygen sensor	Oxygen sensor (Comp)	NO	—
Test of oxygen sensor heater	O2 Heater Diagnosis (Enable)	YES	—
Test of oxygen sensor heater	O2 Heater Diagnosis (Comp)	NO	—
Test of EGR system	EGR system (Enable)	YES	—
Test of EGR system	EGR system (Comp)	NO	—
ECM power supply voltage	Control module voltage	13.789	V
Absolute load	Absolute Load Value	22	%
A/F target lambda	Target Equivalence Ratio	0.976	—
Relative throttle opening angle	Relative Throttle Pos.	2	%
Ambient temperature	Ambient Temperature	Ambient air temperature	°C
Absolute throttle opening angle 2	Absolute Throttle Pos.#2	32	%
Absolute accelerator opening angle 1	Accelerator Pedal Pos.#1	13	%
Absolute accelerator opening angle 2	Accelerator Pedal Pos.#2	13	%
Target throttle opening angle	Target Throt. Act. Cont.	0	%
Engine operating time while malfunction indicator light lit	Time while MIL lighted	—	min
Elapsed time after DTC clear	Time since DTC cleared	—	min
Type of fuel	Type of fuel	GAS	—
Relative acceleration opening angle	Relative Accelera. Pos.	0	%
Neutral condition	AT drive status	NEUT	—

4. READ FREEZE FRAME DATA FOR ENGINE (OBD MODE)

NOTE:
- For detailed operation procedures, refer to “PC application help for Subaru Select Monitor”.
- A list of the support data is shown in the following table.

Description	Display	Unit of measure
DTC of freeze frame data	Freeze frame data	—
Air fuel ratio control system for bank 1	Fuel system for Bank 1	—
Air fuel ratio control system for bank 2	Fuel system for Bank 2	—
Engine load data	Calculated load value	%
Engine coolant temperature signal	Coolant Temp.	°C or °F
Short term fuel trim by front oxygen (A/F) sensor (Bank 1)	Short term fuel trim B1	%
Long term fuel trim by front oxygen (A/F) sensor (Bank 1)	Long term fuel trim B1	%
Short term fuel trim by front oxygen (A/F) sensor (Bank 2)	Short term fuel trim B2	%
Long term fuel trim by front oxygen (A/F) sensor (Bank 2)	Long term fuel trim B2	%
Intake manifold absolute pressure signal	Mani. Absolute Pressure	mmHg, kPa, inHg or psig
Engine speed signal	Engine Speed	rpm
Vehicle speed signal	Vehicle Speed	km/h or MPH
Ignition timing adv. #1	Ignition timing adv. #1	°
Intake air temperature	Intake Air Temp.	°C or °F
Amount of intake air	Mass Air Flow	g/s
Throttle valve angle	Throttle Opening Angle	%
Oxygen sensor #12	Oxygen sensor #12	V
A/F correction value #12	Short term fuel trim #12	%
Oxygen sensor #22	Oxygen sensor #22	V
A/F correction value #22	Short term fuel trim #22	%
On-board diagnostic system	OBD System	—
Oxygen sensor #11	Oxygen sensor #11	—
Oxygen sensor #12	Oxygen sensor #12	—
Oxygen sensor #21	Oxygen sensor #21	—
Oxygen sensor #22	Oxygen sensor #22	—
Elapsed time after engine start	Time Since Engine Start	sec
Target EGR	Commanded EGR	%
EGR deviation	EGR Error	%
Evaporative purge	Commanded Evap Purge	%
Fuel level signal	Fuel Level	%
Fuel tank pressure signal	Fuel Tank Pressure	mmHg, kPa, inHg or psig
Atmospheric pressure	Atmosphere Pressure	mmHg, kPa, inHg or psig
ECM power supply voltage	Control module voltage	V
Absolute load	Absolute Load Value	%
A/F target lambda	Target Equivalence Ratio	—
Relative throttle opening angle	Relative Throttle Pos.	%
Ambient temperature	Ambient Temperature	°C or °F
Absolute throttle opening angle 2	Absolute Throttle Pos.#2	%
Absolute accelerator opening angle 1	Accelerator Pedal Pos.#1	%
Absolute accelerator opening angle 2	Accelerator Pedal Pos.#2	%
Target throttle opening angle	Target Throt. Act. Cont.	%
Neutral condition	AT drive status	—

5. V.I.N. REGISTRATION

1) On «Main Menu» display, select {Each System Check}.
2) On «System Selection Menu» display, select {Engine Control System}.
3) Click the [OK] button after the information of engine type has been displayed.
4) On «Engine Diagnosis» display, select {Entry VIN}.
5) Perform the procedures shown on the display screen.

10.Read Diagnostic Trouble Code (DTC)

A: OPERATION

1. SUBARU SELECT MONITOR (NORMAL MODE)

NOTE:
• For detailed operation procedures, refer to “PC application help for Subaru Select Monitor”.
• For details concerning DTC, refer to “List of Diagnostic Trouble Code (DTC)”. <Ref. to EN(H6DO)(diag)-85, List of Diagnostic Trouble Code (DTC).>

2. GENERAL SCAN TOOL

Refer to the data denoting emission-related powertrain DTC.
For details concerning DTC, refer to “List of Diagnostic Trouble Code (DTC)”. <Ref. to EN(H6DO)(diag)-85, List of Diagnostic Trouble Code (DTC).>

NOTE:
Refer to the general scan tool manufacturer’s operation manual to access powertrain DTC (MODE $03).

11.Inspection Mode

A: PROCEDURE

Perform the diagnosis shown in the following DTC table.
When performing the diagnosis not listed in “List of Diagnostic Trouble Code (DTC)”, refer to the item on the drive cycle. <Ref. to EN(H6DO)(diag)-50, Drive Cycle.>

DTC	Item	Condition
P0011	Intake Camshaft Position - Timing Over-Advanced or System Performance (Bank 1)	—
P0014	Exhaust AVCS System 1 (Range/Performance)	—
P0016	Crankshaft Position - Camshaft Position Correlation (Bank1)	—
P0017	Crank and Cam Timing B System Failure (Bank 1)	—
P0018	Crankshaft Position - Camshaft Position Correlation (Bank2)	—
P0019	Crank and Cam Timing B System Failure (Bank 2)	—
P0021	Intake Camshaft Position - Timing Over-Advanced or System Performance (Bank 2)	—
P0024	Exhaust AVCS System 2 (Range/Performance)	—
P0031	HO2S Heater Control Circuit Low (Bank 1 Sensor 1)	—
P0032	HO2S Heater Control Circuit High (Bank 1 Sensor 1)	—
P0037	HO2S Heater Control Circuit Low (Bank 1 Sensor 2)	—
P0038	HO2S Heater Control Circuit High (Bank 1 Sensor 2)	—
P0051	HO2S Heater Control Circuit Low (Bank 2 Sensor 1)	—
P0052	HO2S Heater Control Circuit High (Bank 2 Sensor 1)	—
P0057	HO2S Heater Control Circuit Low (Bank 2 Sensor 2)	—
P0058	HO2S Heater Control Circuit High (Bank 2 Sensor 2)	—
P0102	Mass or Volume Air Flow Circuit Low Input	—
P0103	Mass or Volume Air Flow Circuit High Input	—
P0107	Manifold Absolute Pressure/Barometric Pressure Circuit Low Input	—
P0108	Manifold Absolute Pressure/Barometric Pressure Circuit High Input	—
P0112	Intake Air Temperature Sensor 1 Circuit Low	—
P0113	Intake Air Temperature Sensor 1 Circuit High	—
P0117	Engine Coolant Temperature Circuit Low	—
P0118	Engine Coolant Temperature Circuit High	—
P0122	Throttle/Pedal Position Sensor/Switch “A” Circuit Low	—
P0123	Throttle/Pedal Position Sensor/Switch “A” Circuit High	—
P0131	O2 Sensor Circuit Low Voltage (Bank 1 Sensor 1)	—
P0132	O2 Sensor Circuit High Voltage (Bank 1 Sensor 1)	—
P0137	O2 Sensor Circuit Low Voltage (Bank 1 Sensor 2)	—
P0138	O2 Sensor Circuit High Voltage (Bank 1 Sensor 2)	—
P0140	O2 Sensor Circuit No Activity Detected (Bank1 Sensor2)	—
P0151	O2 Sensor Circuit Low Voltage (Bank 2 Sensor 1)	—
P0152	O2 Sensor Circuit High Voltage (Bank 2 Sensor 1)	—
P0157	O2 Sensor Circuit Low Voltage (Bank 2 Sensor 2)	—
P0158	O2 Sensor Circuit High Voltage (Bank 2 Sensor 2)	—
P0160	O2 Sensor Circuit No Activity Detected (Bank2 Sensor2)	—
P0182	Fuel Temperature Sensor “A” Circuit Low Input	—
P0183	Fuel Temperature Sensor “A” Circuit High Input	—
P0197	Engine Oil Temperature Sensor Low	—
P0198	Engine Oil Temperature Sensor High	—
P0201	Injector #1	—
P0202	Injector #2	—

DTC	Item	Condition
P0203	Injector #3	—
P0204	Injector #4	—
P0205	Injector #5	—
P0206	Injector #6	—
P0222	Throttle/Pedal Position Sensor/Switch “B” Circuit Low	—
P0223	Throttle/Pedal Position Sensor/Switch “B” Circuit High	—
P0230	Fuel Pump Primary Circuit	—
P0327	Knock Sensor 1 Circuit Low (Bank 1 or Single Sensor)	—
P0328	Knock Sensor 1 Circuit High (Bank 1 or Single Sensor)	—
P0332	Knock Sensor 2 Circuit Low (Bank 2)	—
P0333	Knock Sensor 2 Circuit High (Bank 2)	—
P0335	Crankshaft Position Sensor “A” Circuit	—
P0336	Crankshaft Position Sensor “A” Circuit Range/Performance	—
P0340	Camshaft Position Sensor “A” Circuit (Bank 1 or Single Sensor)	—
P0345	Camshaft Position Sensor “A” Circuit (Bank 2)	—
P0351	Ignition Coil A Primary/Secondary Circuit	—
P0352	Ignition Coil B Primary/Secondary Circuit	—
P0353	Ignition Coil C Primary/Secondary Circuit	—
P0354	Ignition Coil D Primary/Secondary Circuit	—
P0355	Ignition Coil E Primary/Secondary Circuit	—
P0356	Ignition Coil F Primary/Secondary Circuit	—
P0365	Camshaft Position Sensor “B” Circuit (Bank 1)	—
P0390	Camshaft Position Sensor “B” Circuit (Bank 2)	—
P0447	Evaporative Emission Control System Vent Control Circuit Open	—
P0448	Evaporative Emission Control System Vent Control Circuit Shorted	—
P0452	Evaporative Emission Control System Pressure Sensor Low Input	—
P0453	Evaporative Emission Control System Pressure Sensor High Input	—
P0458	Evaporative Emission System Purge Control Valve Circuit Low	—
P0462	Fuel Level Sensor “A” Circuit Low	—
P0463	Fuel Level Sensor “A” Circuit High	—
P0500	Vehicle Speed Sensor “A”	—
P0512	Starter Request Circuit	—
P0513	Incorrect Immobilizer Key	—
P0604	Internal Control Module Random Access Memory (RAM) Error	—
P0605	Internal Control Module Read Only Memory (ROM) Error	—
P0607	Throttle Control System Circuit Range/Performance	—
P0638	Throttle Actuator Control Range/Performance (Bank 1)	—
P0700	Transmission Control System (MIL Request)	—
P1152	O2 Sensor Circuit Range/Performance (Low) (Bank1 Sensor1)	—
P1153	O2 Sensor Circuit Range/Performance (High) (Bank1 Sensor1)	—
P1154	O2 Sensor Circuit Range/Performance (Low) (Bank 2 Sensor 1)	—
P1155	O2 Sensor Circuit Range/Performance (High) (Bank 2 Sensor 1)	—
P1160	Return Spring Failure	—
P1518	Starter Switch Circuit Low Input	—
P1560	Back-Up Voltage Circuit Malfunction	—
P1570	Antenna	—
P1571	Reference Code Incompatibility	—
P1572	IMM Circuit Failure (Except Antenna Circuit)	—
P1574	Key Communication Failure	—
P1576	EGI Control Module EEPROM	—

DTC	Item	Condition
P1577	IMM Control Module EEPROM	—
P1578	Meter Failure	—
P2088	Intake Camshaft Position Actuator Control Circuit Low (Bank 1)	—
P2089	Intake Camshaft Position Actuator Control Circuit High (Bank 1)	—
P2090	Exhaust Camshaft Position Actuator Control Circuit Low (Bank 1)	—
P2091	Exhaust Camshaft Position Actuator Control Circuit High (Bank 1)	—
P2092	Intake Camshaft Position Actuator Control Circuit Low (Bank 2)	—
P2093	Intake Camshaft Position Actuator Control Circuit High (Bank 2)	—
P2094	Exhaust Camshaft Position Actuator Control Circuit Low (Bank 2)	—
P2095	Exhaust Camshaft Position Actuator Control Circuit High (Bank 2)	—
P2101	Throttle Actuator Control Motor Circuit Range/Performance	—
P2102	Throttle Actuator Control Motor Circuit Low	—
P2103	Throttle Actuator Control Motor Circuit High	—
P2109	Throttle/Pedal Position Sensor “A” Minimum Stop Performance	—
P2122	Throttle/Pedal Position Sensor/Switch “D” Circuit Low Input	—
P2123	Throttle/Pedal Position Sensor/Switch “D” Circuit High Input	—
P2127	Throttle/Pedal Position Sensor/Switch “E” Circuit Low Input	—
P2128	Throttle/Pedal Position Sensor/Switch “E” Circuit High Input	—
P2135	Throttle/Pedal Position Sensor/Switch “A”/“B” Voltage Correlation	—
P2138	Throttle/Pedal Position Sensor/Switch “D”/“E” Voltage Correlation	—
P2227	Barometric Pressure Circuit Range/Performance	—
P2228	Barometric Pressure Circuit Low	—
P2229	Barometric Pressure Circuit High	—
U0073	CAN Failure, Bus ‘Off’ Detection	—
U0101	CAN (TCU) Data Not Loaded	—
U0122	CAN (VDC) Data Not Loaded	—
U0140	CAN (BCU) Data Not Loaded	—
U0402	CAN (TCU) Data Abnormal	—
U0416	CAN (VDC) Data Abnormal	—
U0422	CAN (BCU) Data Abnormal	—

1. PREPARATION FOR THE INSPECTION MODE

1) Check that the battery voltage is 12 V or more and fuel remains approx. half [20 — 40 ℓ (5.3 — 10.6 US gal, 4.4 — 8.8 Imp gal)].
2) Lift up the vehicle using a garage jack and place it on rigid racks, or drive the vehicle onto free rollers.

WARNING:
• Before lifting up the vehicle, ensure parking brake is applied.
• Do not use a pantograph jack in place of a rigid rack.
• Secure a rope or wire to the front or rear towing hooks to prevent the lateral runout of front wheels.
• Before rotating the wheels, make sure that there is no one in front of the vehicle. Besides while the wheels are rotating, make sure that no one approaches the vehicle front side.
• Make sure that there is nothing around the wheels. For AWD model, pay attention to all four wheels.
• While servicing, do not depress or release the clutch pedal or accelerator pedal quickly regardless of the engine speed. Quick operation may cause the vehicle to drop off the free roller.
• To prevent the vehicle from slipping due to vibration, do not place anything between rigid rack and the vehicle.

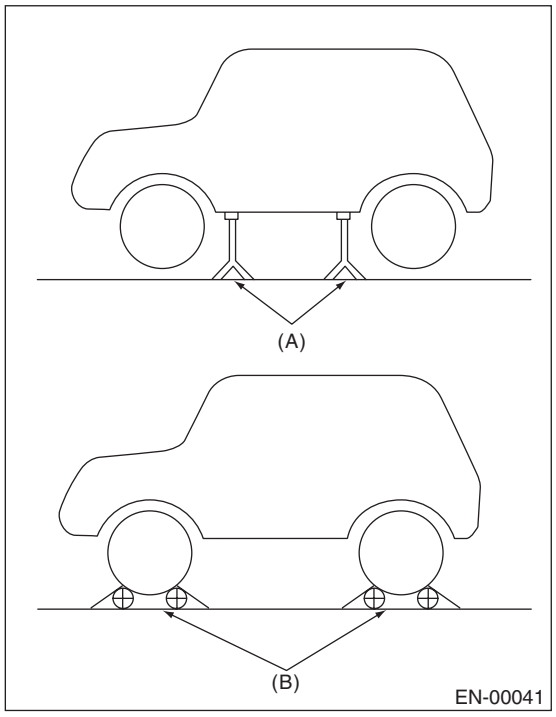

(A) Rigid rack
(B) Free roller

2. SUBARU SELECT MONITOR

1) Check that no DTC remains after clearing memory. <Ref. to EN(H6DO)(diag)-57, Clear Memory Mode.>
2) Warm up the engine.
3) Prepare the Subaru Select Monitor kit. <Ref. to EN(H6DO)(diag)-8, PREPARATION TOOL, General Description.>

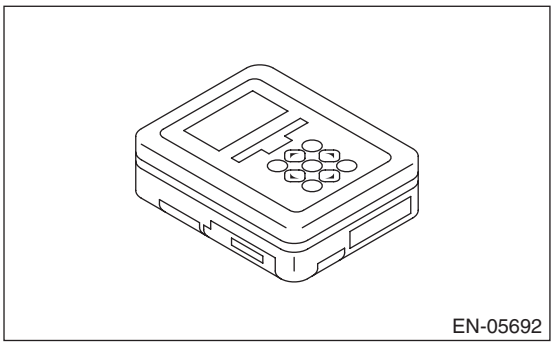

4) Prepare PC with Subaru Select Monitor installed.
5) Connect the USB cable to SDI (Subaru Diagnosis Interface) and USB port on the personal computer (dedicated port for the Subaru Select Monitor).

NOTE:
The dedicated port for the Subaru Select Monitor means the USB port which was used to install the Subaru Select Monitor.
6) Connect the diagnosis cable to SDI.
7) Install the delivery (test) mode fuse (A) of the main fuse box.

CAUTION:
Do not use any fuses that are installed on the vehicle.

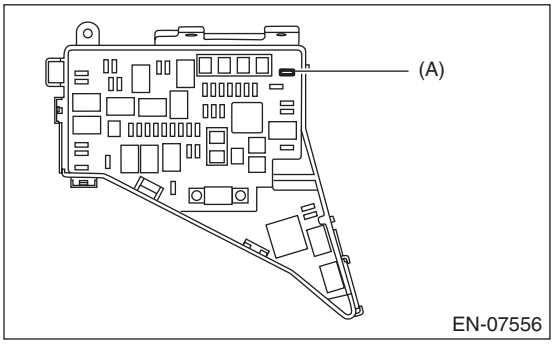

8) Connect SDI to data link connector located in the lower portion of the instrument panel (on the driver's side).

CAUTION:
Do not connect the scan tools except for Subaru Select Monitor and general scan tool.

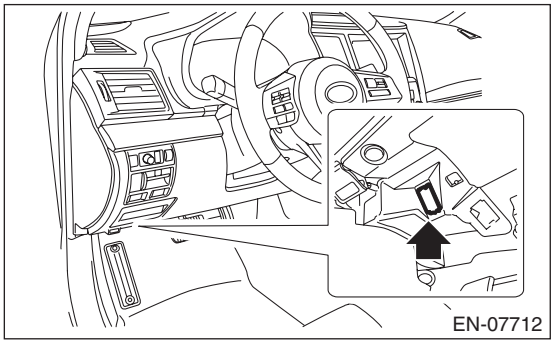

9) Start the PC.
10) Turn the ignition switch to ON (engine OFF) and run the "PC application for Subaru Select Monitor".
11) On «Main Menu» display, select {Each System Check}.
12) On «System Selection Menu» display, select {Engine Control System}.
13) Click the [OK] button after the information of engine type has been displayed.
14) On «Engine Diagnosis» display, select {Dealer Check Mode Procedure}.
15) When the "Perform Inspection (Dealer Check) Mode ?" is shown on the screen, click the [Next] button.
16) Perform subsequent procedures as instructed on the display screen.

- If trouble still remains in the memory, the corresponding DTC appears on the display screen.

NOTE:
- For detailed operation procedures, refer to "PC application help for Subaru Select Monitor".
- For details concerning DTC, refer to "List of Diagnostic Trouble Code (DTC)". <Ref. to EN(H6DO)(diag)-85, List of Diagnostic Trouble Code (DTC).>
- Release the parking brake.
- The speed difference between front and rear wheels may illuminate the ABS warning light, but this does not indicate a malfunction. When engine control system diagnosis is finished, perform the VDC memory clearance procedure of self-diagnosis function. <Ref. to VDC(diag)-25, Clear Memory Mode.>

3. GENERAL SCAN TOOL

1) Check that no DTC remains after clearing memory. <Ref. to EN(H6DO)(diag)-32, MODE $04 (CLEAR/RESET EMISSION-RELATED DIAGNOSTIC INFORMATION), OPERATION, General Scan Tool.>
2) Warm up the engine.
3) Install the delivery (test) mode fuse (A) of the main fuse box.

CAUTION:
Do not use any fuses that are installed on the vehicle.

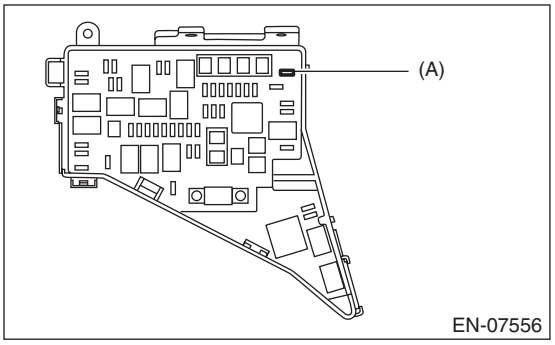

4) Connect the general scan tool to data link connector located in the lower portion of the instrument panel (on the driver's side).

CAUTION:
Do not connect the scan tools except for Subaru Select Monitor and general scan tool.

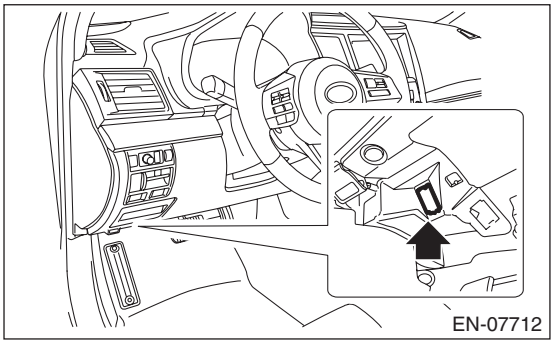

5) Start the engine.

NOTE:
Ensure the selector lever is placed in the "P" range before starting.
6) Turn the neutral position switch to ON using select lever.
7) Depress the brake pedal to turn the brake switch ON.
8) Keep the engine speed in 2,500 — 3,000 rpm range for 40 seconds.

9) Shift the select lever in the “D” range and drive the vehicle at 5 to 10 km/h (3 to 6 MPH).

NOTE:
• For AWD model, release the parking brake.
• The speed difference between front and rear wheels may illuminate the ABS warning light, but this does not indicate a malfunction. When engine control system diagnosis is finished, perform the VDC memory clearance procedure of self-diagnosis function. <Ref. to VDC(diag)-25, Clear Memory Mode.>

10) Using the general scan tool, check for DTC and record the result(s).

NOTE:
• For detailed operation procedures, refer to the general scan tool operation manual.
• For details concerning DTC, refer to “List of Diagnostic Trouble Code (DTC)”.
<Ref. to EN(H6DO)(diag)-85, List of Diagnostic Trouble Code (DTC).>

12.Drive Cycle

A: PROCEDURE

It is necessary to perform the drive cycle listed below if DTC is not found in the Inspection Mode. It is possible to complete diagnosis of the DTC by performing the indicated drive cycle. After the repair for the DTC, perform a necessary drive cycle and make sure the function recovers and the DTC is recorded.

1. PREPARATION FOR DRIVE CYCLE

1) Check that the battery voltage is 12 V or more and fuel remains approx. half [20 — 40 ℓ (5.3 — 10.6 US gal, 4.4 — 8.8 Imp gal)].
2) After performing the diagnostics and Clear Memory Mode, check that no DTC remains. <Ref. to EN(H6DO)(diag)-57, Clear Memory Mode.>
3) Check the delivery (test) mode fuse is removed.

NOTE:
• Perform the drive cycle after warming up the engine except when the engine coolant temperature at engine start is specified.
• Perform the drive cycle twice if the DTC in the list is marked with *. After completing the first drive cycle, stop the engine and perform second diagnosis in same condition.

2. DRIVE CYCLE A

DTC	Item	Condition
*P0125	Insufficient Coolant Temperature for Closed Loop Fuel Control	Engine coolant temperature at engine start is less than 20°C (68°F).
*P0126	Insufficient Engine Coolant Temperature for Stable Operation	—
*P0128	Coolant Thermostat (Engine Coolant Temperature Below Thermostat Regulating Temperature)	—
*P0141	O2 Sensor Heater Circuit (Bank1 Sensor2)	—
*P014C	O2 Sensor Slow Response - Rich to Lean (Bank 1 Sensor 1)	—
*P014D	O2 Sensor Slow Response - Lean to Rich (Bank 1 Sensor 1)	—
*P014E	O2 Sensor Slow Response - Rich to Lean (Bank 2 Sensor 1)	—
*P014F	O2 Sensor Slow Response - Lean to Rich (Bank 2 Sensor 1)	—
*P015A	O2 Sensor Delayed Response - Rich to Lean (Bank 1 Sensor 1)	—
*P015B	O2 Sensor Delayed Response - Lean to Rich (Bank 1 Sensor 1)	—
*P015C	O2 Sensor Delayed Response - Rich to Lean (Bank 2 Sensor 1)	—
*P015D	O2 Sensor Delayed Response - Lean to Rich (Bank 2 Sensor 1)	—
*P0161	O2 Sensor Heater Circuit (Bank2 Sensor2)	—
*P0171	System Too Lean (Bank 1)	Complete diagnosis with drive cycle B or C as well.
*P0172	System Too Rich (Bank 1)	Complete diagnosis with drive cycle B or C as well.
*P0174	System Too Lean (Bank 2)	Complete diagnosis with drive cycle B or C as well.
*P0175	System Too Rich (Bank 2)	Complete diagnosis with drive cycle B or C as well.
*P0196	Engine Oil Temperature Sensor Circuit Range/Performance	—
*P0301	Cylinder 1 Misfire Detected	Complete diagnosis with drive cycle B or C as well.
*P0302	Cylinder 2 Misfire Detected	Complete diagnosis with drive cycle B or C as well.
*P0303	Cylinder 3 Misfire Detected	Complete diagnosis with drive cycle B or C as well.
*P0304	Cylinder 4 Misfire Detected	Complete diagnosis with drive cycle B or C as well.

DTC	Item	Condition
*P0305	Cylinder 5 Misfire Detected	Complete diagnosis with drive cycle B or C as well.
*P0306	Cylinder 6 Misfire Detected	Complete diagnosis with drive cycle B or C as well.
*P0420	Catalyst System Efficiency Below Threshold (Bank 1)	—
*P0442	Evaporative Emission Control System Leak Detected (Small Leak)	Engine coolant temperature at engine start is less than 25°C (77°F).
*P0451	Evaporative Emission Control System Pressure Sensor	—
*P0456	Evaporative Emission Control System Leak Detected (Very Small Leak)	Engine coolant temperature at engine start is less than 25°C (77°F).
*P0457	Evaporative Emission Control System Leak Detected (Fuel Cap Loose/Off)	Engine coolant temperature at engine start is less than 25°C (77°F).
*P0459	Evaporative Emission System Purge Control Valve Circuit High	—
*P0464	Fuel Level Sensor Circuit Intermittent	—
P1443	Vent Control Solenoid Valve Function Problem	—
*P2096	Post Catalyst Fuel Trim System Too Lean (Bank 1)	Complete diagnosis with drive cycle B or C as well.
*P2097	Post Catalyst Fuel Trim System Too Rich (Bank 1)	Complete diagnosis with drive cycle B or C as well.
*P2098	Post Catalyst Fuel Trim System Too Lean Bank 2	Complete diagnosis with drive cycle B or C as well.
*P2099	Post Catalyst Fuel Trim System Too Rich Bank 2	Complete diagnosis with drive cycle B or C as well.

Diagnostic procedure:
1) Drive for 20 minutes or more at a constant speed of 80 km/h (50 MPH) or more.
2) Stop the vehicle and idle for one minute.

3. DRIVE CYCLE B

DTC	Item	Condition
*P0171	System Too Lean (Bank 1)	Complete diagnosis with drive cycle A or C as well.
*P0172	System Too Rich (Bank 1)	Complete diagnosis with drive cycle A or C as well.
*P0174	System Too Lean (Bank 2)	Complete diagnosis with drive cycle A or C as well.
*P0175	System Too Rich (Bank 2)	Complete diagnosis with drive cycle A or C as well.
*P0301	Cylinder 1 Misfire Detected	Complete diagnosis with drive cycle A or C as well.
*P0302	Cylinder 2 Misfire Detected	Complete diagnosis with drive cycle A or C as well.
*P0303	Cylinder 3 Misfire Detected	Complete diagnosis with drive cycle A or C as well.
*P0304	Cylinder 4 Misfire Detected	Complete diagnosis with drive cycle A or C as well.
*P0305	Cylinder 5 Misfire Detected	Complete diagnosis with drive cycle A or C as well.
*P0306	Cylinder 6 Misfire Detected	Complete diagnosis with drive cycle A or C as well.
*P0506	Idle Air Control System RPM Lower Than Expected	—
*P0507	Idle Air Control System RPM Higher Than Expected	—

DTC	Item	Condition
*P2096	Post Catalyst Fuel Trim System Too Lean (Bank 1)	Complete diagnosis with drive cycle A or C as well.
*P2097	Post Catalyst Fuel Trim System Too Rich (Bank 1)	Complete diagnosis with drive cycle A or C as well.
*P2098	Post Catalyst Fuel Trim System Too Lean Bank 2	Complete diagnosis with drive cycle A or C as well.
*P2099	Post Catalyst Fuel Trim System Too Rich Bank 2	Complete diagnosis with drive cycle A or C as well.
*P219A	Bank 1 Air-Fuel Ratio Imbalance	Complete diagnosis with drive cycle C as well.
*P219B	Bank 2 Air-Fuel Ratio Imbalance	Complete diagnosis with drive cycle C as well.

Diagnostic procedure:
1) Drive at 10 km/h (6 MPH) or more.
2) Stop the vehicle and idle for ten minutes.

4. DRIVE CYCLE C

DTC	Item	Condition
*P0030	HO2S Heater Control Circuit (Bank 1 Sensor 1)	—
*P0050	HO2S Heater Control Circuit (Bank 2 Sensor 1)	—
*P0068	MAP/MAF - Throttle Position Correlation	—
*P0101	Mass or Volume Air Flow Circuit Range/Performance	—
P0134	O2 Sensor Circuit No Activity Detected (Bank 1 Sensor 1)	—
*P013A	O2 Sensor Slow Response - Rich to Lean (Bank 1 Sensor 2)	—
*P013B	O2 Sensor Slow Response - Lean to Rich (Bank 1 Sensor 2)	—
*P013C	O2 Sensor Slow Response - Rich to Lean (Bank 2 Sensor 2)	—
*P013D	O2 Sensor Slow Response - Lean to Rich (Bank 2 Sensor 2)	—
*P013E	O2 Sensor Delayed Response - Rich to Lean (Bank 1 Sensor 2)	—
*P013F	O2 Sensor Delayed Response - Lean to Rich (Bank 1 Sensor 2)	—
*P014A	O2 Sensor Delayed Response - Rich to Lean (Bank 2 Sensor 2)	—
*P014B	O2 Sensor Delayed Response - Lean to Rich (Bank 2 Sensor 2)	—
P0154	O2 Sensor Circuit No Activity Detected (Bank 2 Sensor 1)	—
*P0171	System Too Lean (Bank 1)	Complete diagnosis with drive cycle A or B as well.
*P0172	System Too Rich (Bank 1)	Complete diagnosis with drive cycle A or B as well.
*P0174	System Too Lean (Bank 2)	Complete diagnosis with drive cycle A or B as well.
*P0175	System Too Rich (Bank 2)	Complete diagnosis with drive cycle A or B as well.
*P0301	Cylinder 1 Misfire Detected	Complete diagnosis with drive cycle A or B as well.
*P0302	Cylinder 2 Misfire Detected	Complete diagnosis with drive cycle A or B as well.
*P0303	Cylinder 3 Misfire Detected	Complete diagnosis with drive cycle A or B as well.
*P0304	Cylinder 4 Misfire Detected	Complete diagnosis with drive cycle A or B as well.
*P0305	Cylinder 5 Misfire Detected	Complete diagnosis with drive cycle A or B as well.
*P0306	Cylinder 6 Misfire Detected	Complete diagnosis with drive cycle A or B as well.
*P0400	Exhaust Gas Recirculation Flow	—

DTC	Item	Condition
P1492	EGR Solenoid Valve Signal #1 Circuit Malfunction (Low Input)	—
P1493	EGR Solenoid Valve Signal #1 Circuit Malfunction (High Input)	—
P1494	EGR Solenoid Valve Signal #2 Circuit Malfunction (Low Input)	—
P1495	EGR Solenoid Valve Signal #2 Circuit Malfunction (High Input)	—
P1496	EGR Solenoid Valve Signal #3 Circuit Malfunction (Low Input)	—
P1497	EGR Solenoid Valve Signal #3 Circuit Malfunction (High Input)	—
P1498	EGR Solenoid Valve Signal #4 Circuit Malfunction (Low Input)	—
P1499	EGR Solenoid Valve Signal #4 Circuit Malfunction (High Input)	—
*P2096	Post Catalyst Fuel Trim System Too Lean (Bank 1)	Complete diagnosis with drive cycle A or B as well.
*P2097	Post Catalyst Fuel Trim System Too Rich (Bank 1)	Complete diagnosis with drive cycle A or B as well.
*P2098	Post Catalyst Fuel Trim System Too Lean Bank 2	Complete diagnosis with drive cycle A or B as well.
*P2099	Post Catalyst Fuel Trim System Too Rich Bank 2	Complete diagnosis with drive cycle A or B as well.
*P219A	Bank 1 Air-Fuel Ratio Imbalance	Complete diagnosis with drive cycle B as well.
*P219B	Bank 2 Air-Fuel Ratio Imbalance	Complete diagnosis with drive cycle B as well.

Diagnostic procedure:
Drive according to the drive pattern described below.

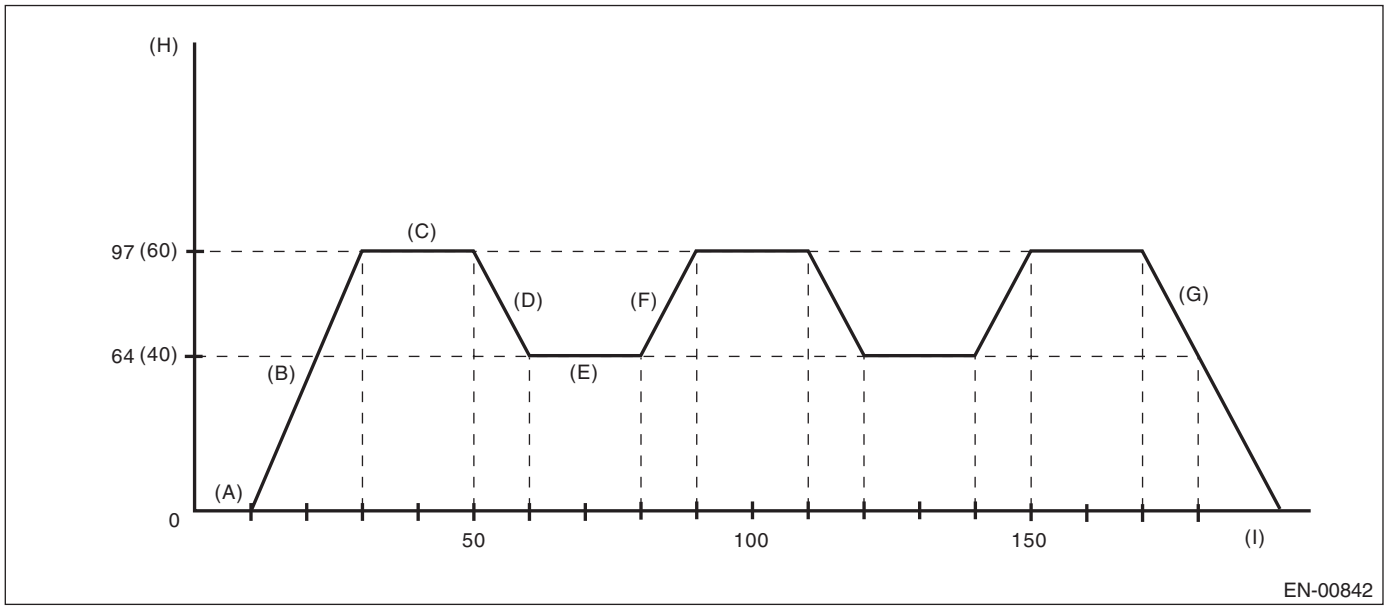

(A) Idle the engine for 10 seconds or more.
(B) Accelerate to 97 km/h (60 MPH) or more within 20 seconds.
(C) Drive for 20 seconds or more at 97 km/h (60 MPH) or more.
(D) Decelerate with fully closed throttle to 64 km/h (40 MPH) or less.
(E) Drive for 20 seconds or more at 64 km/h (40 MPH) or less.
(F) Accelerate to 97 km/h (60 MPH) or more within 10 seconds.
(G) Stop the vehicle with throttle fully closed.
(H) Vehicle speed km/h (MPH)
(I) Sec.

5. DRIVE CYCLE D

DTC	Item	Condition
*P0181	Fuel Temperature Sensor “A” Circuit Range/Performance	—

NOTE:
In drive cycle D, one drive cycle will be established when both the drift diagnosis and stuck diagnosis have completed.

Diagnostic procedure:

DRIFT DIAGNOSIS

1) Make sure of the items below before starting the engine.
- Engine coolant temperature is less than 30°C (86°F).
- Remaining fuel is 10 ℓ (2.6 US gal, 2.2 Imp gal) or more.
- Battery voltage is 10.9 V or more.

2) Idle the engine until engine coolant temperature is at least 10°C (18°F) higher than it was when engine started.
3) After the engine has reached the state of procedure 2), idle the engine for another 5 minutes or more.

STUCK DIAGNOSIS

1) Make sure that the battery voltage is 10.9 V or more.
2) Perform the Clear Memory Mode. <Ref. to EN(H6DO)(diag)-57, Clear Memory Mode.>
3) Drive the vehicle for the distance equal to the fuel of 50 ℓ (13.2 US gal, 11 Imp gal).

NOTE:
- It is acceptable to drive the vehicle intermittently.
- Do not disconnect the battery terminals during stuck diagnosis. (Data will be cleared by disconnecting the battery terminals.)

6. DRIVE CYCLE E

DTC	Item	Condition
*P0461	Fuel Level Sensor “A” Circuit Range/Performance	—

Diagnostic procedure:
1) Make sure that the battery voltage is 10.9 V or more.
2) Perform the Clear Memory Mode. <Ref. to EN(H6DO)(diag)-57, Clear Memory Mode.>
3) Drive the vehicle for the distance equal to the fuel of 30 ℓ (7.9 US gal, 6.6 Imp gal).

NOTE:
- It is acceptable to drive the vehicle intermittently.
- Do not disconnect the battery terminals while diagnosing. (Data will be cleared by disconnecting the battery terminals.)

7. DRIVE CYCLE F

DTC	Item	Condition
*P0111	Intake Air Temperature Sensor 1 Circuit Range/Performance	—

Diagnostic procedure:
1) Make sure that the engine coolant temperature is less than 30°C (86°F).

2) Drive according to the drive pattern described below.

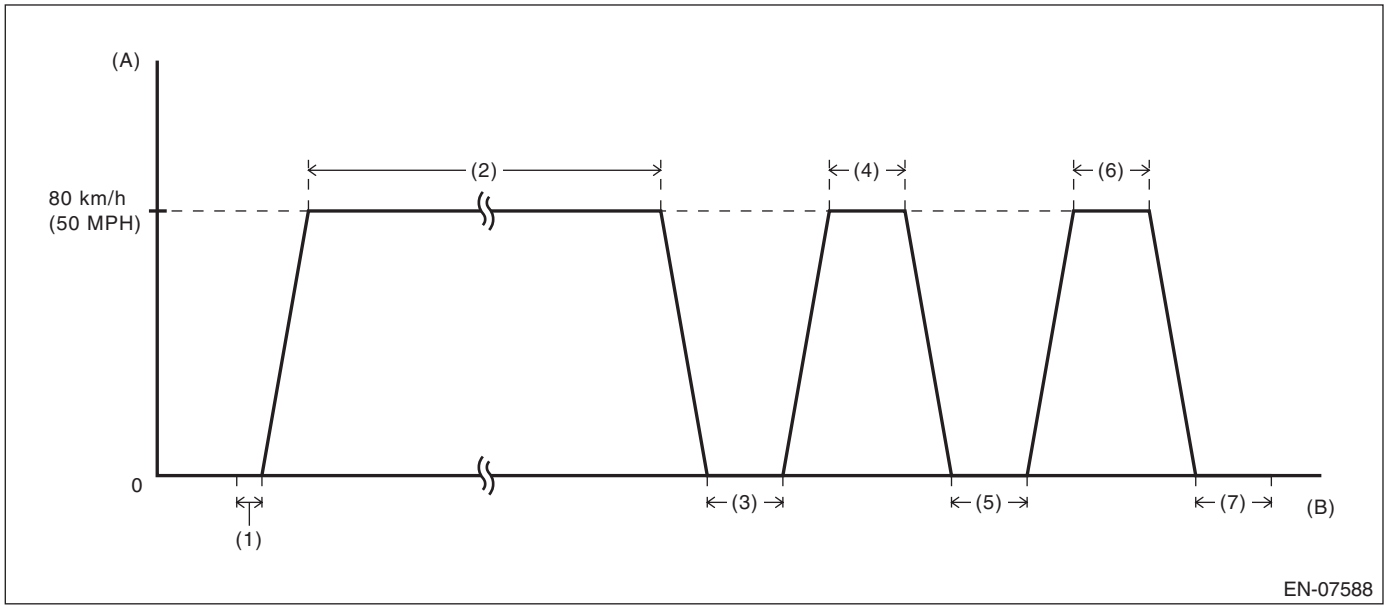

(A) Vehicle speed

(B) Elapsed time

(1) Idle the engine for 10 seconds or more after engine start.

(2) Drive for 8 minutes or more at a constant speed of 80 km/h (50 MPH) or more.

(3) Stop the vehicle and idle for 30 seconds or more.

(4) Drive for 30 seconds or more at a constant speed of 80 km/h (50 MPH) or more.

(5) Stop the vehicle and idle for 30 seconds or more.

(6) Drive for 30 seconds or more at a constant speed of 80 km/h (50 MPH) or more.

(7) Stop the vehicle and idle for 30 seconds.

NOTE:
- There is no given transition time between idling and cruising.
- Driving at constant speed only on a downhill causes smaller engine load and may result in failure to obtain a right diagnostic result.
- When the engine stops while performing drive cycle F, perform it again from the state of procedure 1).

8. DRIVE CYCLE H

DTC	Item	Condition
*P050A	Cold Start Idle Air Control System Performance	—
*P050B	Cold Start Ignition Timing Performance	—

Diagnostic procedure:
1) Perform the Clear Memory Mode. <Ref. to EN(H6DO)(diag)-57, Clear Memory Mode.>
2) With the ignition switch ON (engine OFF), read the engine coolant temperature, intake air temperature and fuel temperature. <Ref. to EN(H6DO)(diag)-35, READ CURRENT DATA FOR ENGINE (NORMAL MODE), OPERATION, Subaru Select Monitor.>
3) If the values from step 2) satisfy the following two conditions, idle the engine for one minute.

Condition:
|Engine coolant temperature — Intake air temperature| ≤ 5°C (9°F)
|Engine coolant temperature — Fuel temperature| ≤ 2°C (3.6°F)

NOTE:
- If the conditions are not satisfied, turn the ignition switch to OFF and wait until the parameters are satisfied.
- Hold the select lever in “P” range or “N” range at idling.

9. DRIVE CYCLE J

DTC	Item	Condition
P2610	ECM/PCM Internal Engine Off Timer Performance	—

1) Idle the engine for 15 minutes or more.
2) Turn the ignition switch to OFF.
3) After 6 hours passed from the start of step 2), read the temporary code using the Subaru Select Monitor.
<Ref. to EN(H6DO)(diag)-43, OPERATION, Read Diagnostic Trouble Code (DTC).>

13.Clear Memory Mode

A: OPERATION

1. SUBARU SELECT MONITOR

NOTE:
• Initial diagnosis of electronic throttle control is performed after memory clearance. Wait for 10 seconds or more after turning the ignition switch to ON, and then start the engine.
• For detailed operation procedures, refer to “PC application help for Subaru Select Monitor”.

2. GENERAL SCAN TOOL

For procedures clearing memory using the general scan tool, refer to the general scan tool operation manual.

NOTE:
Initial diagnosis of electronic throttle control is performed after memory clearance. For this reason, start the engine after 10 seconds or more have elapsed since the ignition switch was turned to ON.

14. System Operation Check Mode

A: OPERATION

CAUTION:
After executing the system operation check mode, execute the Clear Memory Mode. <Ref. to EN(H6DO)(diag)-57, OPERATION, Clear Memory Mode.>

NOTE:
For detailed operation procedures, refer to “PC application help for Subaru Select Monitor”.

15.Malfunction Indicator Light

A: PROCEDURE

1. Activation of malfunction indicator light. <Ref. to EN(H6DO)(diag)-60, ACTIVATION OF MALFUNCTION INDICATOR LIGHT, Malfunction Indicator Light.>
↓
2. Malfunction indicator light does not come on. <Ref. to EN(H6DO)(diag)-62, MALFUNCTION INDICATOR LIGHT DOES NOT COME ON, Malfunction Indicator Light.>
↓
3. Malfunction indicator light does not go off. <Ref. to EN(H6DO)(diag)-64, MALFUNCTION INDICATOR LIGHT DOES NOT GO OFF, Malfunction Indicator Light.>
↓
4. Malfunction indicator light does not blink. <Ref. to EN(H6DO)(diag)-66, MALFUNCTION INDICATOR LIGHT DOES NOT BLINK, Malfunction Indicator Light.>
↓
5. Malfunction indicator light remains blinking. <Ref. to EN(H6DO)(diag)-68, MALFUNCTION INDICATOR LIGHT REMAINS BLINKING, Malfunction Indicator Light.>

B: ACTIVATION OF MALFUNCTION INDICATOR LIGHT

1) When the ignition switch is turned to ON (engine OFF), the malfunction indicator light (A) in the combination meter illuminates.

NOTE:
If the malfunction indicator light does not illuminate, perform diagnostics of the malfunction indicator light circuit or the combination meter circuit. <Ref. to EN(H6DO)(diag)-62, MALFUNCTION INDICATOR LIGHT DOES NOT COME ON, Malfunction Indicator Light.>

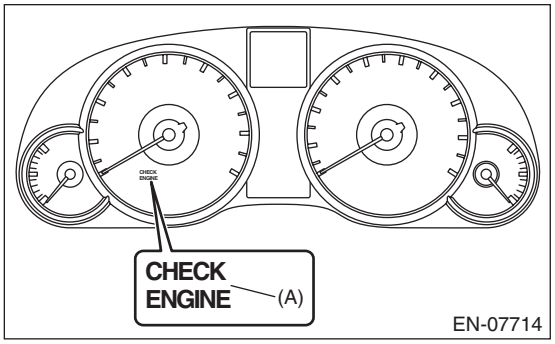

2) After starting the engine, the malfunction indicator light goes out. If it does not go off, any of the engine and emission control system has malfunction.

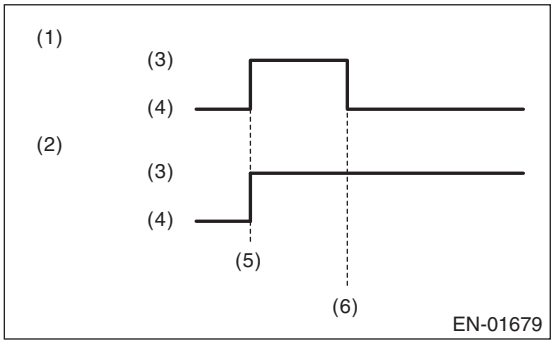

(1) No faulty
(2) Trouble occurs
(3) ON
(4) OFF
(5) Ignition switch ON
(6) Engine start

3) If the diagnostic system detects a misfire which could damage the catalyst, the malfunction indicator light will blink at a cycle of 1 Hz.

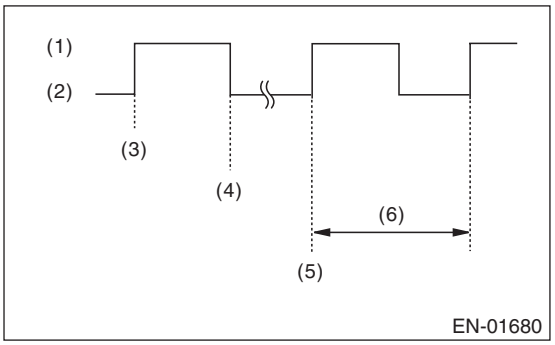

(1) ON
(2) OFF
(3) Ignition switch ON
(4) Engine start
(5) Misfire start
(6) 1 second

4) Install the delivery (test) mode fuse (A) with ignition switch to OFF.

CAUTION:
Do not use any fuses that are installed on the vehicle.

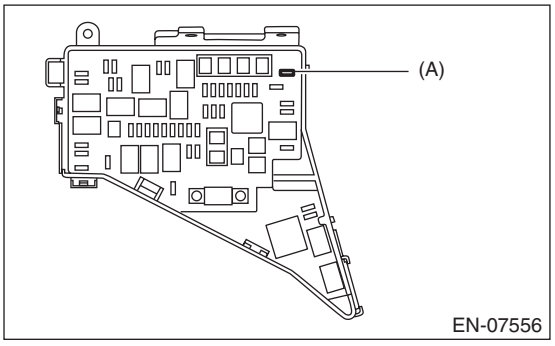

(1) When the ignition switch is turned to ON (engine OFF), the malfunction indicator light illuminates.
(2) After the engine starts, malfunction indicator light blinks in a cycle of 0.5 Hz. (During diagnosis)

(3) Malfunction indicator light blinks at a cycle of 3 Hz after diagnosis if there is no trouble. Malfunction indicator light illuminates if faulty.

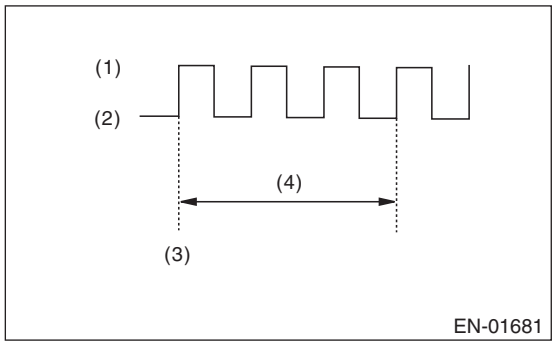

(1) ON
(2) OFF
(3) Ignition switch ON
(4) 1 second

C: MALFUNCTION INDICATOR LIGHT DOES NOT COME ON

TROUBLE SYMPTOM:
When the ignition switch is turned to ON (engine OFF), malfunction indicator light does not illuminate.
WIRING DIAGRAM:

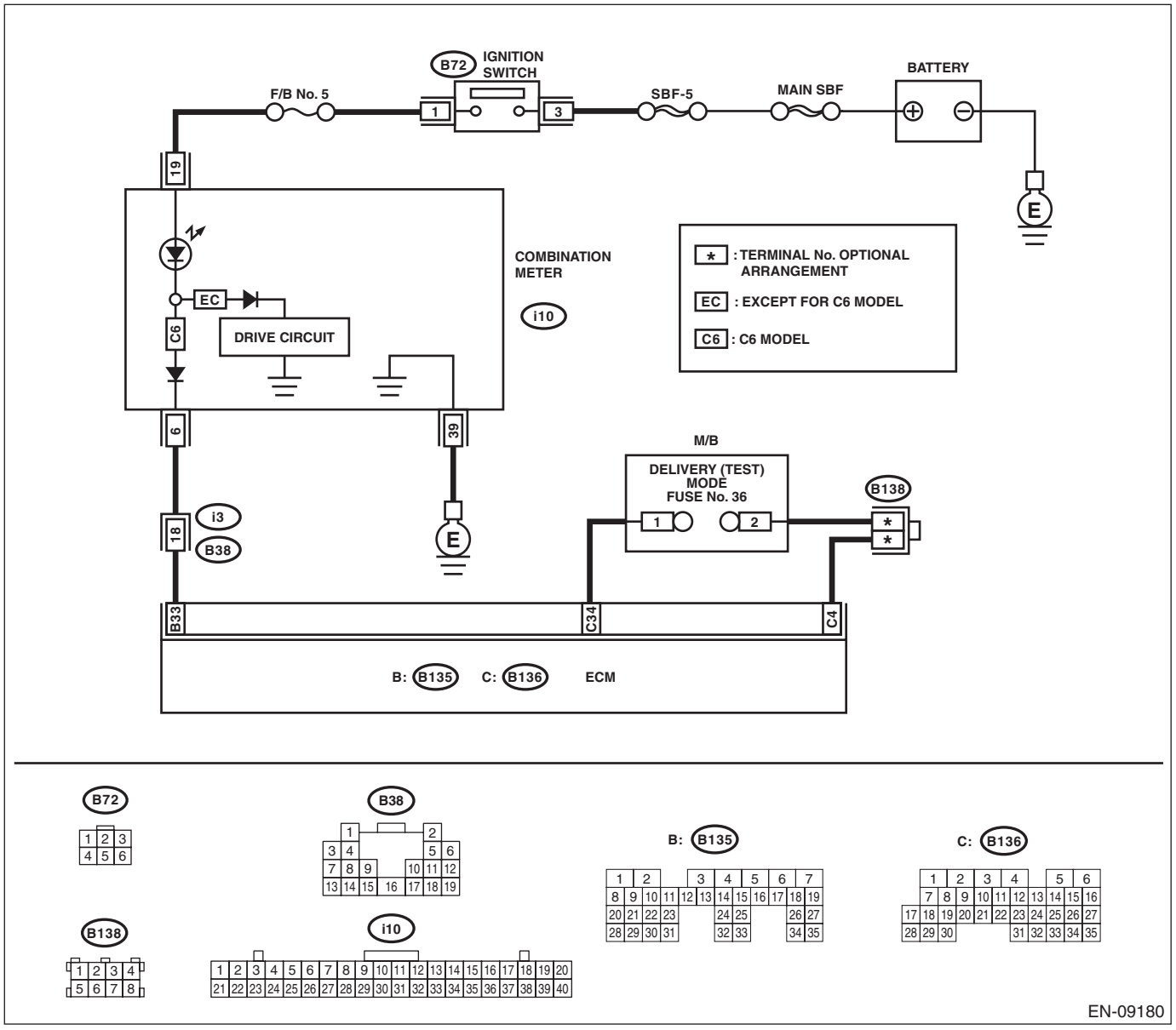

Step		Check	Yes	No
1	**CHECK VEHICLE SPECIFICATION.**	Is the vehicle except for C6 model?	Go to step **2**.	Go to step **3**.
2	**CHECK DTC.**	Is DTC of LAN system displayed? <Ref. to LAN(diag)-10, OPERATION, Read Diagnostic Trouble Code (DTC).>	Check the appropriate DTC using the "List of Diagnostic Trouble Code (DTC)". <Ref. to LAN(diag)-32, List of Diagnostic Trouble Code (DTC).>	Replace the meter case assembly of combination meter. <Ref. to IDI-21, Combination Meter.>

	Step	Check	Yes	No
3	**CHECK OUTPUT SIGNAL OF ECM.** 1) Turn the ignition switch to OFF. 2) Disconnect the connector from ECM. 3) Turn the ignition switch to ON. 4) Measure the voltage between ECM connector and chassis ground. ***Connector & terminal*** ***(B135) No. 33 (+) — Chassis ground (–):***	Is the voltage 10 V or more?	Go to step **7**.	Go to step **4**.
4	**CHECK HARNESS BETWEEN COMBINATION METER AND IGNITION SWITCH CONNECTOR.** 1) Turn the ignition switch to OFF. 2) Remove the combination meter. <Ref. to IDI-21, Combination Meter.> 3) Turn the ignition switch to ON. 4) Measure the voltage between combination meter connector and chassis ground. ***Connector & terminal*** ***(i10) No. 19 (+) — Chassis ground (–):***	Is the voltage 10 V or more?	Go to step **5**.	Check the following item and repair if necessary. NOTE: • Blown out of fuse • Open circuit or short circuit to ground in harness of power supply circuit
5	**CHECK HARNESS BETWEEN ECM AND COMBINATION METER CONNECTOR.** Measure the resistance of harness between ECM and combination meter connector. ***Connector & terminal*** ***(B135) No. 33 — (i10) No. 6:***	Is the resistance less than 1 Ω?	Go to step **6**.	Repair the harness and connector. NOTE: In this case, repair the following item: • Open circuit in harness between ECM and combination meter connector • Poor contact of coupling connector
6	**CHECK FOR POOR CONTACT.** Check for poor contact of combination meter connector.	Is there poor contact of combination meter connector?	Repair the poor contact of combination meter connector.	Replace the meter case assembly of combination meter. <Ref. to IDI-21, Combination Meter.>
7	**CHECK ECM CONNECTOR.** Check the connection of ECM connector.	Is the ECM connector correctly connected?	Go to step **8**.	Connect the ECM connector correctly.
8	**CHECK FOR POOR CONTACT.** Check for poor connection by shaking or pulling ECM connector and harness.	Does the malfunction indicator light illuminate?	Repair the poor contact of ECM connector.	Replace the ECM. <Ref. to FU(H6DO)-54, Engine Control Module (ECM).>

D: MALFUNCTION INDICATOR LIGHT DOES NOT GO OFF

TROUBLE SYMPTOM:

Although malfunction indicator light comes on when the engine runs, DTC is not shown on the Subaru Select Monitor or general scan tool display.

WIRING DIAGRAM:

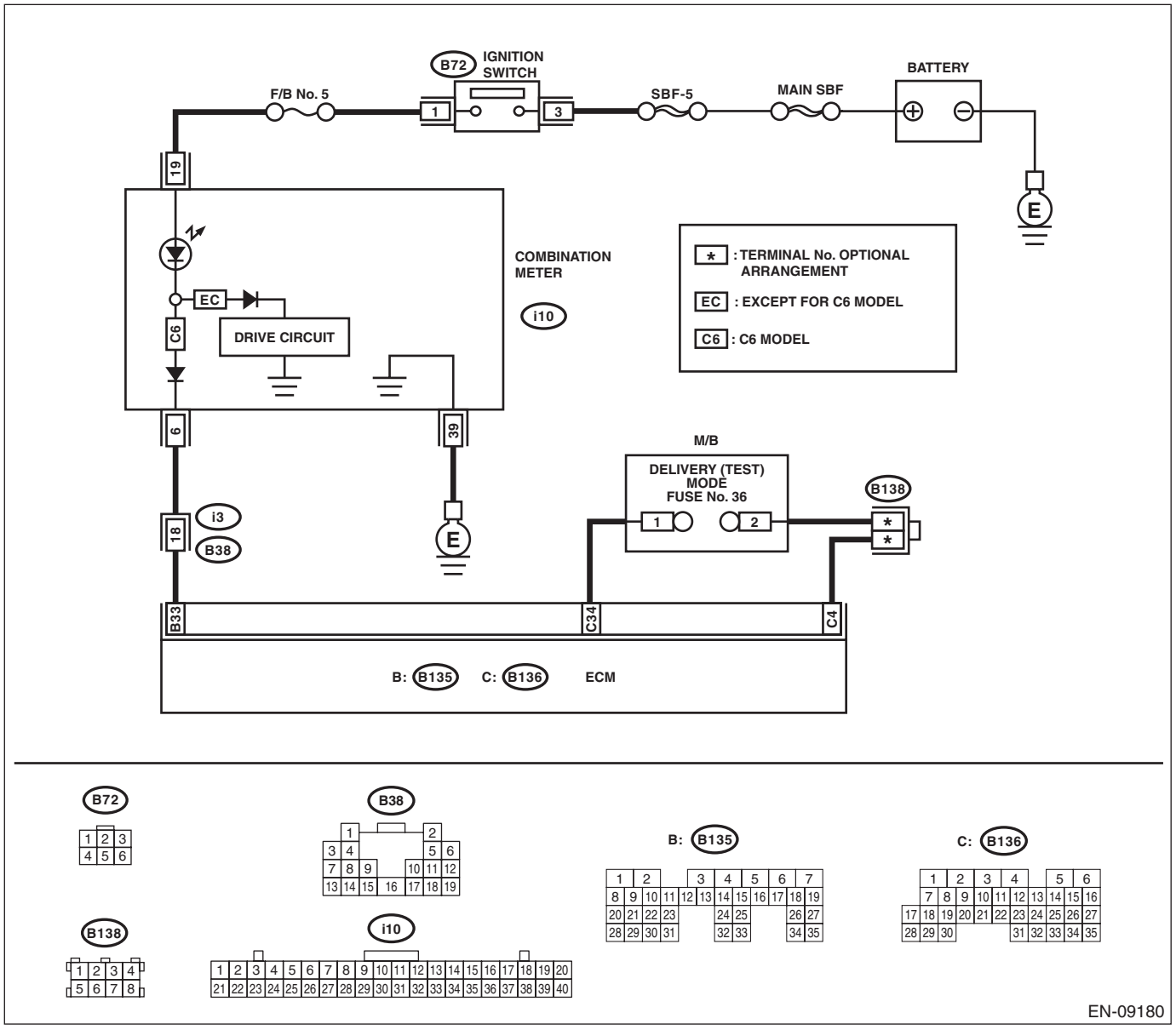

Step	Check	Yes	No
1 **CHECK DTC.**	Is DTC of engine or LAN system displayed? <Ref. to EN(H6DO)(diag)-43, OPERATION, Read Diagnostic Trouble Code (DTC).>	Check the appropriate DTC using the "List of Diagnostic Trouble Code (DTC)". <Ref. to EN(H6DO)(diag)-85, List of Diagnostic Trouble Code (DTC).> <Ref. to LAN(diag)-32, List of Diagnostic Trouble Code (DTC).>	Go to step **2**.

	Step	Check	Yes	No
2	**CHECK VEHICLE SPECIFICATION.**	Is the vehicle except for C6 model?	Go to step **3**.	Go to step **4**.
3	**CHECK COMBINATION METER.** Perform the self-diagnosis for combination meter system. <Ref. to IDI-6, SELF-DIAGNOSIS DISPLAY MODE, OPERATION, Combination Meter System.>	Does the malfunction indicator light illuminate and go off normally?	Replace the ECM. <Ref. to FU(H6DO)-54, Engine Control Module (ECM).>	Replace the meter case assembly of combination meter. <Ref. to IDI-21, Combination Meter.>
4	**CHECK HARNESS BETWEEN ECM AND COMBINATION METER CONNECTOR.** 1) Turn the ignition switch to OFF. 2) Disconnect the connector from ECM. 3) Turn the ignition switch to ON.	Does the malfunction indicator light illuminate?	Go to step **5**.	Replace the ECM. <Ref. to FU(H6DO)-54, Engine Control Module (ECM).>
5	**CHECK HARNESS BETWEEN ECM AND COMBINATION METER CONNECTOR.** 1) Turn the ignition switch to OFF. 2) Remove the combination meter. <Ref. to IDI-21, Combination Meter.> 3) Measure the resistance between ECM and chassis ground. ***Connector & terminal*** ***(B135) No. 33 — Chassis ground:***	Is the resistance 1 MΩ or more?	Replace the meter case assembly of combination meter. <Ref. to IDI-21, Combination Meter.>	Repair the ground short circuit of harness between ECM and combination meter connector.

E: MALFUNCTION INDICATOR LIGHT DOES NOT BLINK

DIAGNOSIS:

- The malfunction indicator light circuit is open or shorted.
- The delivery (test) mode fuse circuit is open.

TROUBLE SYMPTOM:

Malfunction indicator light does not blink during Inspection Mode.

WIRING DIAGRAM:

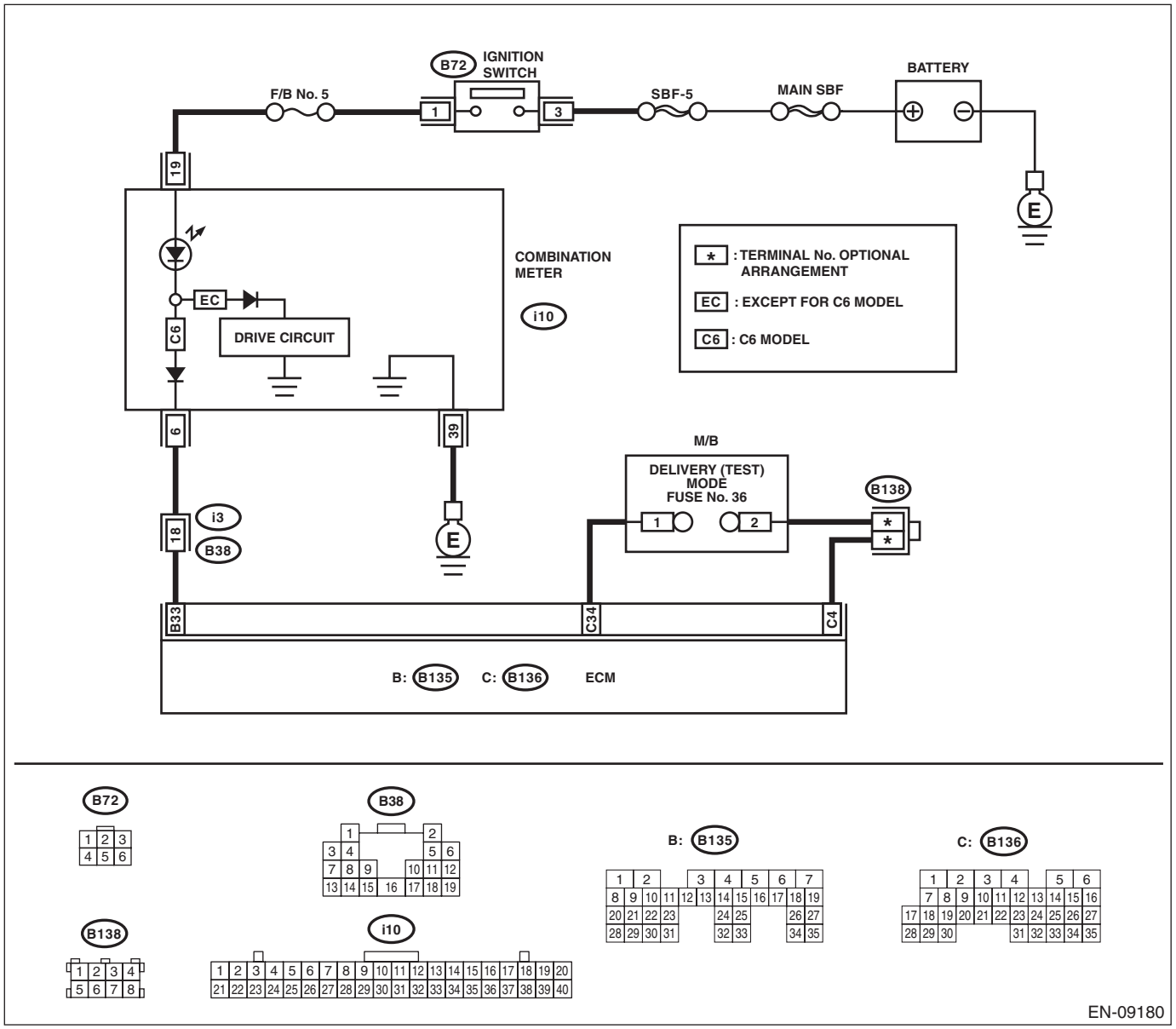

	Step	Check	Yes	No
1	**CHECK STATUS OF MALFUNCTION INDICATOR LIGHT.** 1) Turn the ignition switch to OFF. 2) Check the delivery (test) mode fuse is removed. 3) Turn the ignition switch to ON. (engine OFF)	Does the malfunction indicator light illuminate?	Go to step **2**.	Repair the malfunction indicator light circuit. <Ref. to EN(H6DO)(diag)-62, MALFUNCTION INDICATOR LIGHT DOES NOT COME ON, Malfunction Indicator Light.>
2	**CHECK VEHICLE SPECIFICATION.**	Is the vehicle except for C6 model?	Go to step **4**.	Go to step **3**.
3	**CHECK HARNESS BETWEEN ECM AND COMBINATION METER CONNECTOR.** 1) Turn the ignition switch to OFF. 2) Disconnect the connector from ECM. 3) Turn the ignition switch to ON.	Does the malfunction indicator light illuminate?	Repair the ground short circuit of harness between ECM and combination meter connector.	Go to step **4**.
4	**CHECK HARNESS BETWEEN ECM AND DELIVERY (TEST) MODE FUSE.** 1) Turn the ignition switch to OFF. 2) Disconnect the connector from ECM. 3) Install the delivery (test) mode fuse. **CAUTION:** **Do not use any fuses that are installed on the vehicle.** 4) Measure the resistance of harness between ECM connectors. ***Connector & terminal*** ***(B136) No. 34 — (B136) No. 4:***	Is the resistance less than 1 Ω?	Go to step **5**.	Repair the harness and connector. NOTE: In this case, repair the following item: • Open circuit of harness between ECM and delivery (test) mode fuse • Poor contact of joint connector
5	**CHECK FOR POOR CONTACT.** Check for poor contact of ECM connector.	Is there poor contact of ECM connector?	Repair the poor contact of ECM connector.	Replace the ECM. <Ref. to FU(H6DO)-54, Engine Control Module (ECM).>

F: MALFUNCTION INDICATOR LIGHT REMAINS BLINKING

DIAGNOSIS:
The delivery (test) mode fuse circuit is short-circuited to ground.
TROUBLE SYMPTOM:
Malfunction indicator light blinks when delivery (test) mode fuse is not connected.
WIRING DIAGRAM:

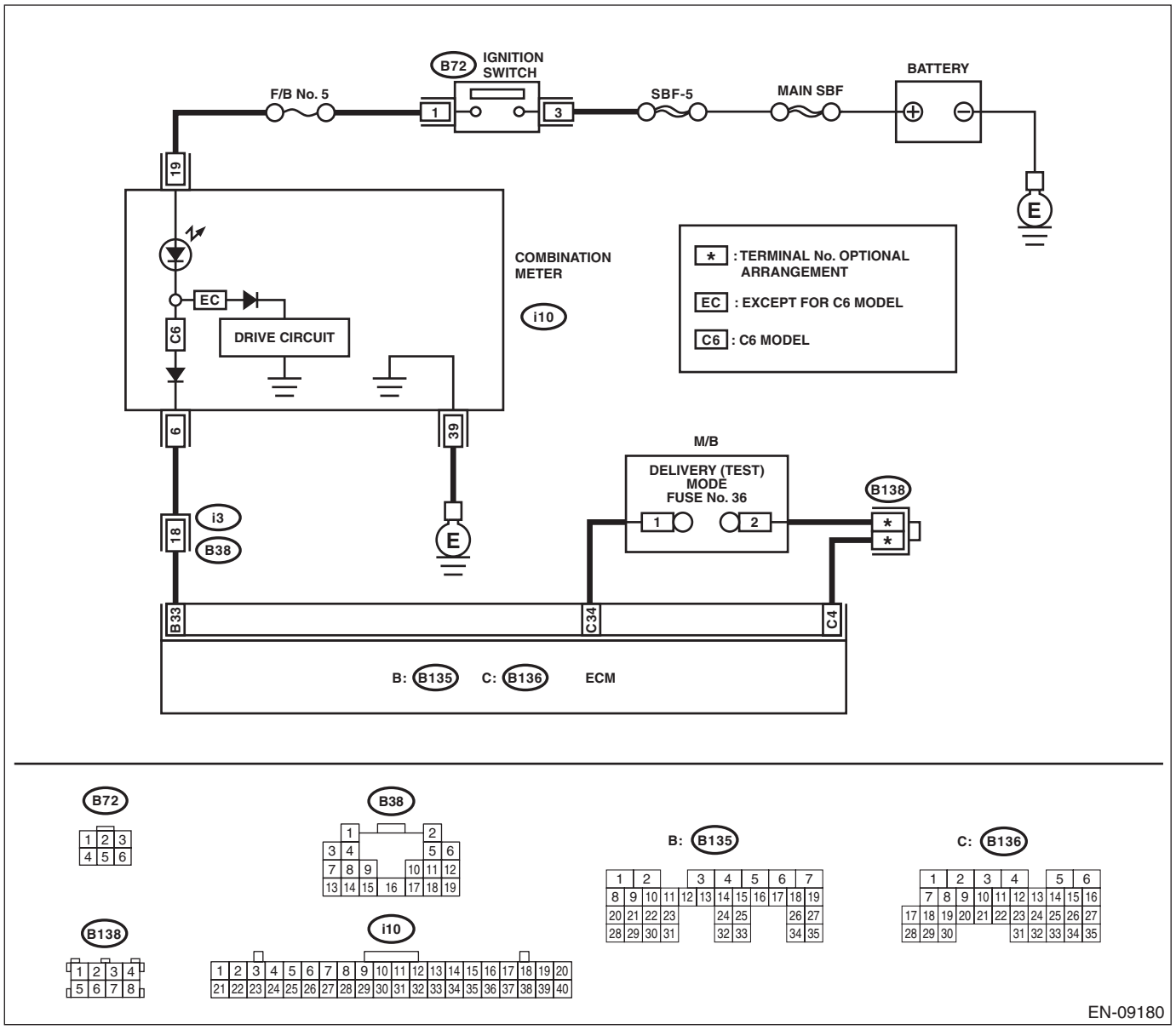

Step		Check	Yes	No
1	**CHECK DELIVERY (TEST) MODE FUSE.** 1) Check the delivery (test) mode fuse is removed. 2) Turn the ignition switch to ON.	Does the malfunction indicator light blink?	Go to step **2**.	System is normal. NOTE: Malfunction indicator light blinks at a cycle of 3 Hz when delivery (test) mode fuse is attached.

	Step	Check	Yes	No
2	**CHECK HARNESS BETWEEN ECM AND DELIVERY (TEST) MODE FUSE.** 1) Turn the ignition switch to OFF. 2) Disconnect the connector from ECM. 3) Measure the resistance between ECM and chassis ground. ***Connector & terminal*** ***(B136) No. 34 — Chassis ground:***	Is the resistance 1 MΩ or more?	Replace the ECM. <Ref. to FU(H6DO)-54, Engine Control Module (ECM).>	Repair the short circuit to ground in harness between ECM and delivery (test) mode fuse.

16.Diagnostics for Engine Starting Failure

A: PROCEDURE

1. Check of the fuel amount
↓
2. Inspection of starter motor circuit. <Ref. to EN(H6DO)(diag)-71, STARTER MOTOR CIRCUIT, Diagnostics for Engine Starting Failure.>
↓
3. Inspection of ECM power supply and ground line. <Ref. to EN(H6DO)(diag)-75, CHECK POWER SUPPLY AND GROUND LINE OF ENGINE CONTROL MODULE (ECM), Diagnostics for Engine Starting Failure.>
↓
4. Inspection of ignition control system. <Ref. to EN(H6DO)(diag)-77, IGNITION CONTROL SYSTEM, Diagnostics for Engine Starting Failure.>
↓
5. Inspection of fuel pump circuit. <Ref. to EN(H6DO)(diag)-80, FUEL PUMP CIRCUIT, Diagnostics for Engine Starting Failure.>
↓
6. Inspection of fuel injector circuit. <Ref. to EN(H6DO)(diag)-81, FUEL INJECTOR CIRCUIT, Diagnostics for Engine Starting Failure.>

B: STARTER MOTOR CIRCUIT

CAUTION:
After servicing or replacing faulty parts, perform Clear Memory Mode <Ref. to EN(H6DO)(diag)-57, OPERATION, Clear Memory Mode.>, and Inspection Mode <Ref. to EN(H6DO)(diag)-44, PROCEDURE, Inspection Mode.>.
WIRING DIAGRAM:

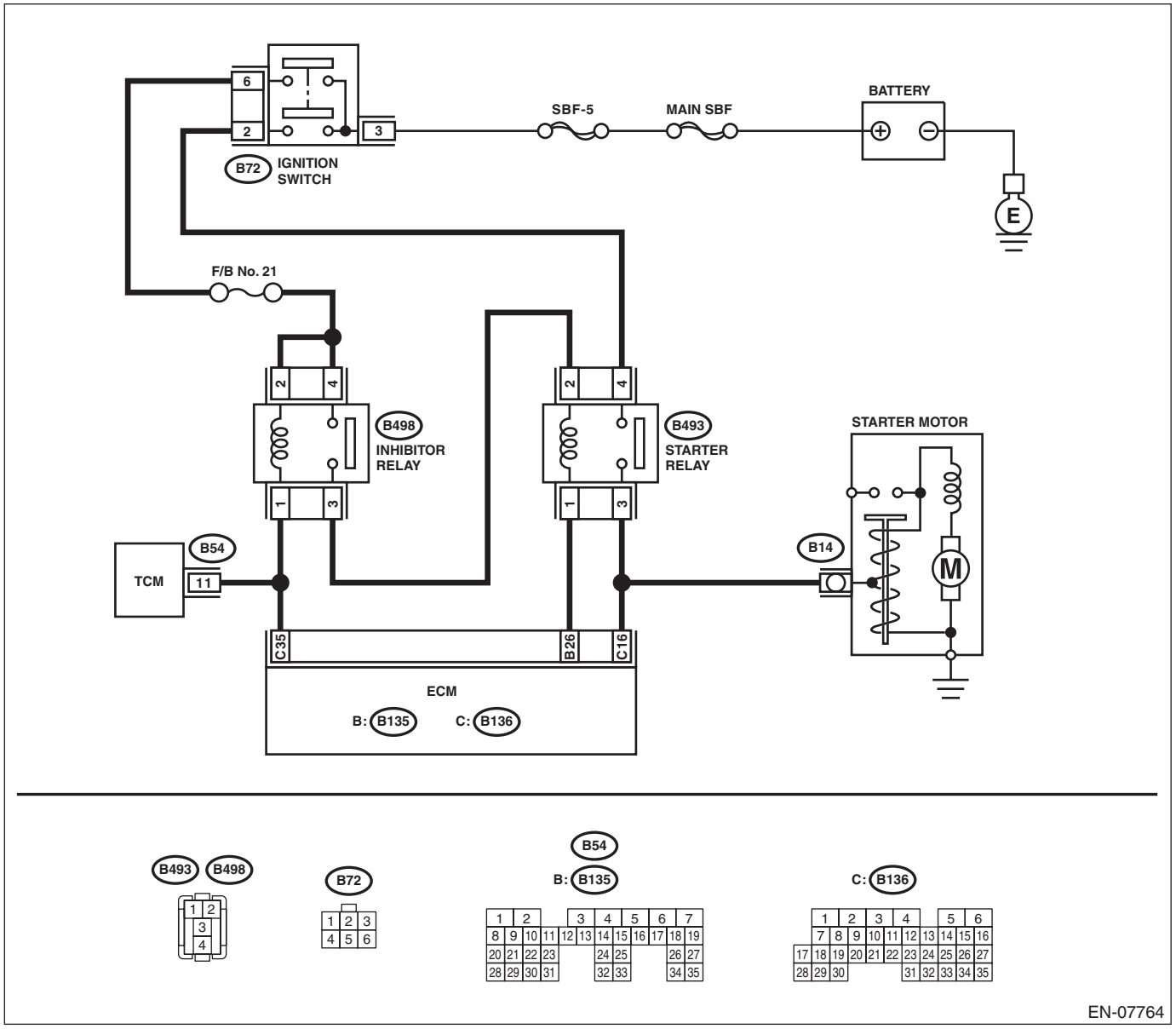

EN-07764

Step		Check	Yes	No
1	**CHECK BATTERY.** Check the battery voltage.	Is the voltage 12 V or more?	Go to step **2**.	Charge or replace the battery.
2	**CHECK OPERATION OF STARTER MOTOR.**	Does the starter motor operate?	Go to step **3**.	Go to step **4**.

	Step	Check	Yes	No
3	**CHECK DTC.**	Is DTC displayed? <Ref. to EN(H6DO)(diag)-43, OPERATION, Read Diagnostic Trouble Code (DTC).>	Check the appropriate DTC using the "List of Diagnostic Trouble Code (DTC)". <Ref. to EN(H6DO)(diag)-85, List of Diagnostic Trouble Code (DTC).>	The circuit has returned to a normal condition at this time. Reproduce the failure, and then perform the diagnosis again. NOTE: In this case, temporary poor contact of connector, temporary open or short circuit of harness may be the cause.
4	**CHECK INPUT SIGNAL FOR STARTER MOTOR.** 1) Turn the ignition switch to OFF. 2) Disconnect the connector from starter motor. 3) Place the select lever in "P" range or "N" range. 4) Turn the ignition switch to START. 5) Measure the voltage between the starter motor connector and the engine ground. ***Connector & terminal*** ***(B14) No. 1 (+) — Engine ground (–):***	Is the voltage 10 V or more?	Check the starter motor. <Ref. to SC(H4SO)-9, Starter.>	Go to step **5**.
5	**CHECK INPUT SIGNAL FOR STARTER MOTOR.** 1) Place the select lever in "P" range or "N" range. 2) Turn the ignition switch to START. 3) Measure the voltage between starter relay connector and chassis ground. ***Connector & terminal*** ***(B493) No. 3 (+) — Chassis ground (–):***	Is the voltage 10 V or more?	Repair the open circuit of the harness between starter relay connector and starter motor.	Go to step **6**.
6	**CHECK HARNESS BETWEEN BATTERY AND IGNITION SWITCH CONNECTOR.** 1) Turn the ignition switch to OFF. 2) Disconnect the connector from ignition switch. 3) Measure the voltage between ignition switch connector and chassis ground. ***Connector & terminal*** ***(B72) No. 3 (+) — Chassis ground (–):***	Is the voltage 10 V or more?	Go to step **7**.	Repair the power supply circuit.
7	**CHECK IGNITION SWITCH.** Measure the resistance between ignition switch terminals after turning the ignition switch to START position. ***Terminals*** ***No. 3 — No. 2:*** ***No. 3 — No. 6:***	Is the resistance less than 1 Ω?	Go to step **8**.	Replace the ignition switch. <Ref. to SL-58, REPLACEMENT, Ignition Key Lock.>

	Step	Check	Yes	No
8	**CHECK INPUT VOLTAGE OF STARTER RELAY.** 1) Remove the starter relay. 2) Connect the connector to ignition switch. 3) Turn the ignition switch to START. 4) Measure the voltage between starter relay connector and chassis ground. ***Connector & terminal*** ***(B493) No. 4 (+) — Chassis ground (–):***	Is the voltage 10 V or more?	Go to step **9**.	Repair the open circuit of harness between starter relay connector and ignition switch connector.
9	**CHECK STARTER RELAY.** 1) Connect the battery to starter relay terminals No. 1 and No. 2. 2) Measure the resistance between starter relay terminals. ***Terminals*** ***No. 3 — No. 4:***	Is the resistance less than 1 Ω?	Go to step **10**.	Replace the starter relay.
10	**CHECK HARNESS BETWEEN ECM AND STARTER RELAY CONNECTOR.** 1) Turn the ignition switch to OFF. 2) Disconnect the connector from ECM. 3) Measure the resistance of harness between ECM and starter relay connector. ***Connector & terminal*** ***(B135) No. 26 — (B493) No. 1:*** ***(B136) No. 16 — (B493) No. 3:***	Is the resistance less than 1 Ω?	Go to step **11**.	Repair the open circuit of harness between ECM and starter relay connector.
11	**CHECK INPUT VOLTAGE OF STARTER RELAY.** 1) Connect the connector to ECM. 2) Place the select lever in “P” range or “N” range. 3) Turn the ignition switch to START. 4) Measure the voltage between starter relay connector and chassis ground. ***Connector & terminal*** ***(B493) No. 2 (+) — Chassis ground (–):***	Is the voltage 10 V or more?	Go to step **12**.	Go to step **13**.
12	**CHECK HARNESS BETWEEN ECM AND INHIBITOR RELAY CONNECTOR.** 1) Turn the ignition switch to OFF. 2) Disconnect the inhibitor relay connector. 3) Measure the resistance of harness between ECM and inhibitor relay connector. ***Connector & terminal*** ***(B136) No. 35 — (B498) No. 1:***	Is the resistance less than 1 Ω?	Check the ECM power supply and ground line. <Ref. to EN(H6DO)(diag)-75, CHECK POWER SUPPLY AND GROUND LINE OF ENGINE CONTROL MODULE (ECM), Diagnostics for Engine Starting Failure.>	Repair the open circuit of harness between ECM and inhibitor relay connector.
13	**CHECK INPUT VOLTAGE OF INHIBITOR RELAY.** 1) Turn the ignition switch to OFF. 2) Disconnect the inhibitor relay connector. 3) Turn the ignition switch to START. 4) Measure the voltage between inhibitor relay connector and chassis ground. ***Connector & terminal*** ***(B498) No. 2 (+) — Chassis ground (–):*** ***(B498) No. 4 (+) — Chassis ground (–):***	Is the voltage 10 V or more?	Go to step **14**.	Check the following item and repair if necessary. • Blown out of fuse (F/B No. 21) • Open or ground short circuit of harness between ignition switch connector and inhibitor relay connector

	Step	Check	Yes	No
14	**CHECK INHIBITOR RELAY.** 1) Connect the battery to inhibitor relay terminals No. 1 and No. 2. 2) Measure the resistance between inhibitor relay terminals. ***Terminals*** ***No. 3 — No. 4:***	Is the resistance less than 1 Ω?	Go to step **15**.	Replace the inhibitor relay.
15	**CHECK HARNESS BETWEEN INHIBITOR RELAY CONNECTOR AND STARTER RELAY CONNECTOR.** 1) Turn the ignition switch to OFF. 2) Measure the resistance of harness between inhibitor relay connector and starter relay connector. ***Connector & terminal*** ***(B498) No. 3 — (B493) No. 2:***	Is the resistance less than 1 Ω?	Repair the open circuit of harness between TCM and inhibitor relay connector.	Repair the open circuit of harness between inhibitor relay connector and starter relay connector.

C: CHECK POWER SUPPLY AND GROUND LINE OF ENGINE CONTROL MODULE (ECM)

CAUTION:
After servicing or replacing faulty parts, perform Clear Memory Mode <Ref. to EN(H6DO)(diag)-57, OPERATION, Clear Memory Mode.>, and Inspection Mode <Ref. to EN(H6DO)(diag)-44, PROCEDURE, Inspection Mode.>.
WIRING DIAGRAM:

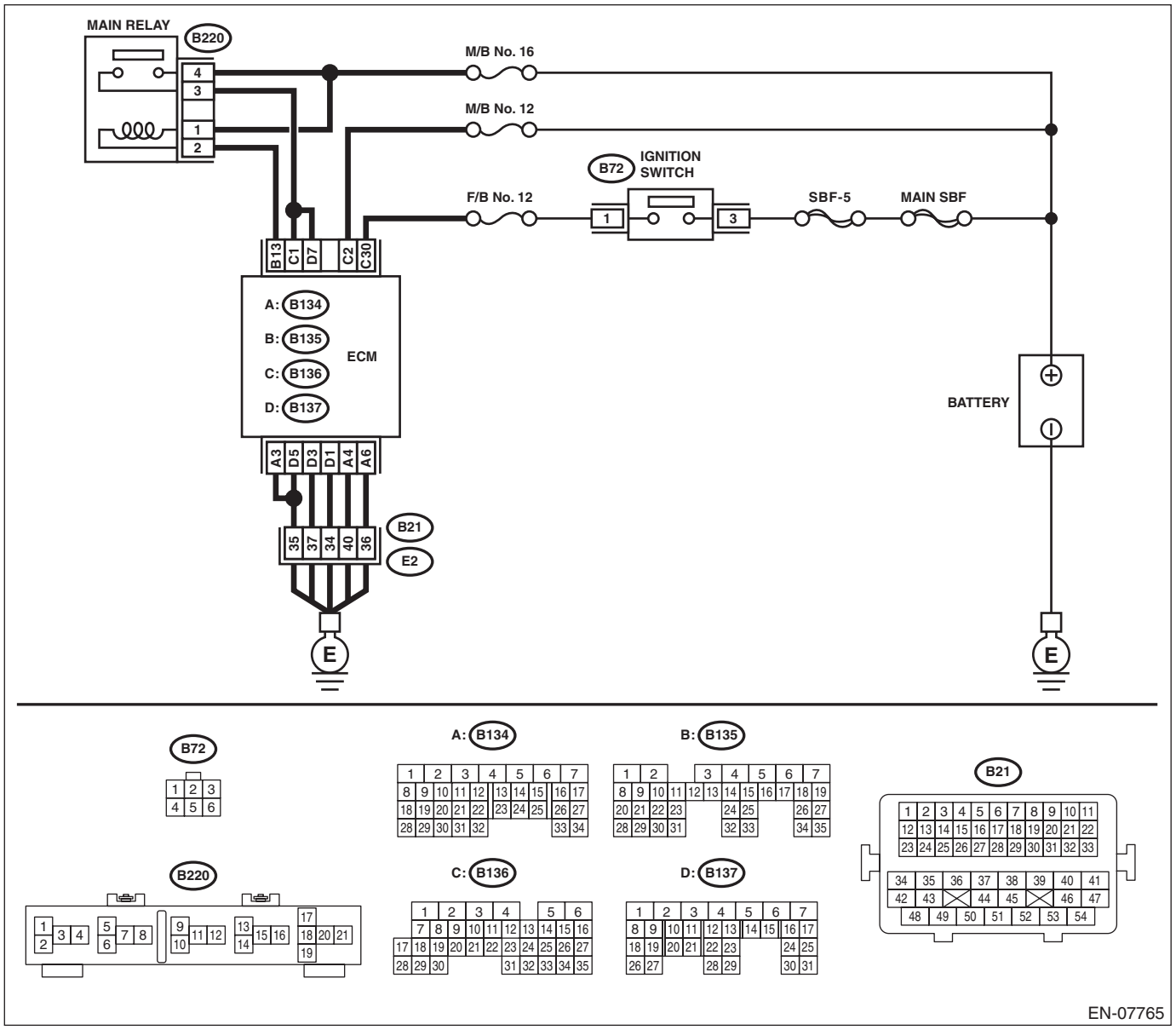

Step		Check	Yes	No
1	**CHECK MAIN RELAY.** 1) Turn the ignition switch to OFF. 2) Remove the main relay. 3) Connect the battery to main relay terminals No. 1 and No. 2. 4) Measure the resistance between main relay terminals. ***Terminals*** ***No. 3 — No. 4:***	Is the resistance less than 1 Ω?	Go to step **2**.	Replace the main relay. <Ref. to FU(H6DO)-55, Main Relay.>

	Step	Check	Yes	No
2	**CHECK GROUND CIRCUIT FOR ECM.** 1) Disconnect the connector from ECM. 2) Measure the resistance of harness between ECM connector and chassis ground. ***Connector & terminal*** ***(B134) No. 3 — Chassis ground:*** ***(B134) No. 4 — Chassis ground:*** ***(B134) No. 6 — Chassis ground:*** ***(B137) No. 1 — Chassis ground:*** ***(B137) No. 3 — Chassis ground:*** ***(B137) No. 5 — Chassis ground:***	Is the resistance less than 5 Ω?	Go to step **3**.	Repair the harness and connector. NOTE: In this case, repair the following item: • Open circuit of harness between ECM connector and engine ground terminal. • Poor contact of coupling connector
3	**CHECK INPUT VOLTAGE OF ECM.** 1) Turn the ignition switch to ON. 2) Measure the voltage between ECM connector and chassis ground. ***Connector & terminal*** ***(B136) No. 2 (+) — Chassis ground (–):*** ***(B136) No. 30 (+) — Chassis ground (–):***	Is the voltage 10 V or more?	Go to step **4**.	Repair the open or ground short circuit of harness of power supply circuit.
4	**CHECK INPUT VOLTAGE OF MAIN RELAY.** Measure the voltage between main relay connector and chassis ground. ***Connector & terminal*** ***(B220) No. 1 (+) — Chassis ground (–):*** ***(B220) No. 4 (+) — Chassis ground (–):***	Is the voltage 10 V or more?	Go to step **5**.	Repair the open or ground short circuit of harness of power supply circuit.
5	**CHECK INPUT VOLTAGE OF ECM.** 1) Turn the ignition switch to OFF. 2) Install the main relay. 3) Turn the ignition switch to ON. 4) Measure the voltage between ECM and chassis ground. ***Connector & terminal*** ***(B135) No. 13 (+) — Chassis ground (–):***	Is the voltage 10 V or more?	Go to step **6**.	Repair the open circuit of harness between ECM connector and main relay connector.
6	**CHECK INPUT VOLTAGE OF ECM.** 1) Turn the ignition switch to OFF. 2) Connect the connector to ECM. 3) Turn the ignition switch to ON. 4) Measure the voltage between ECM connector and chassis ground. ***Connector & terminal*** ***(B136) No. 1 (+) — Chassis ground (–):*** ***(B137) No. 7 (+) — Chassis ground (–):***	Is the voltage 10 V or more?	Check ignition control system. <Ref. to EN(H6DO)(diag)-77, IGNITION CONTROL SYSTEM, Diagnostics for Engine Starting Failure.>	Repair the harness and connector. NOTE: In this case, repair the following item: • Open circuit in harness between ECM connector and fuel injector connector • Poor contact of main relay connector • Poor contact of ECM connector

D: IGNITION CONTROL SYSTEM

CAUTION:
After servicing or replacing faulty parts, perform Clear Memory Mode <Ref. to EN(H6DO)(diag)-57, OPERATION, Clear Memory Mode.>, and Inspection Mode <Ref. to EN(H6DO)(diag)-44, PROCEDURE, Inspection Mode.>.
WIRING DIAGRAM:

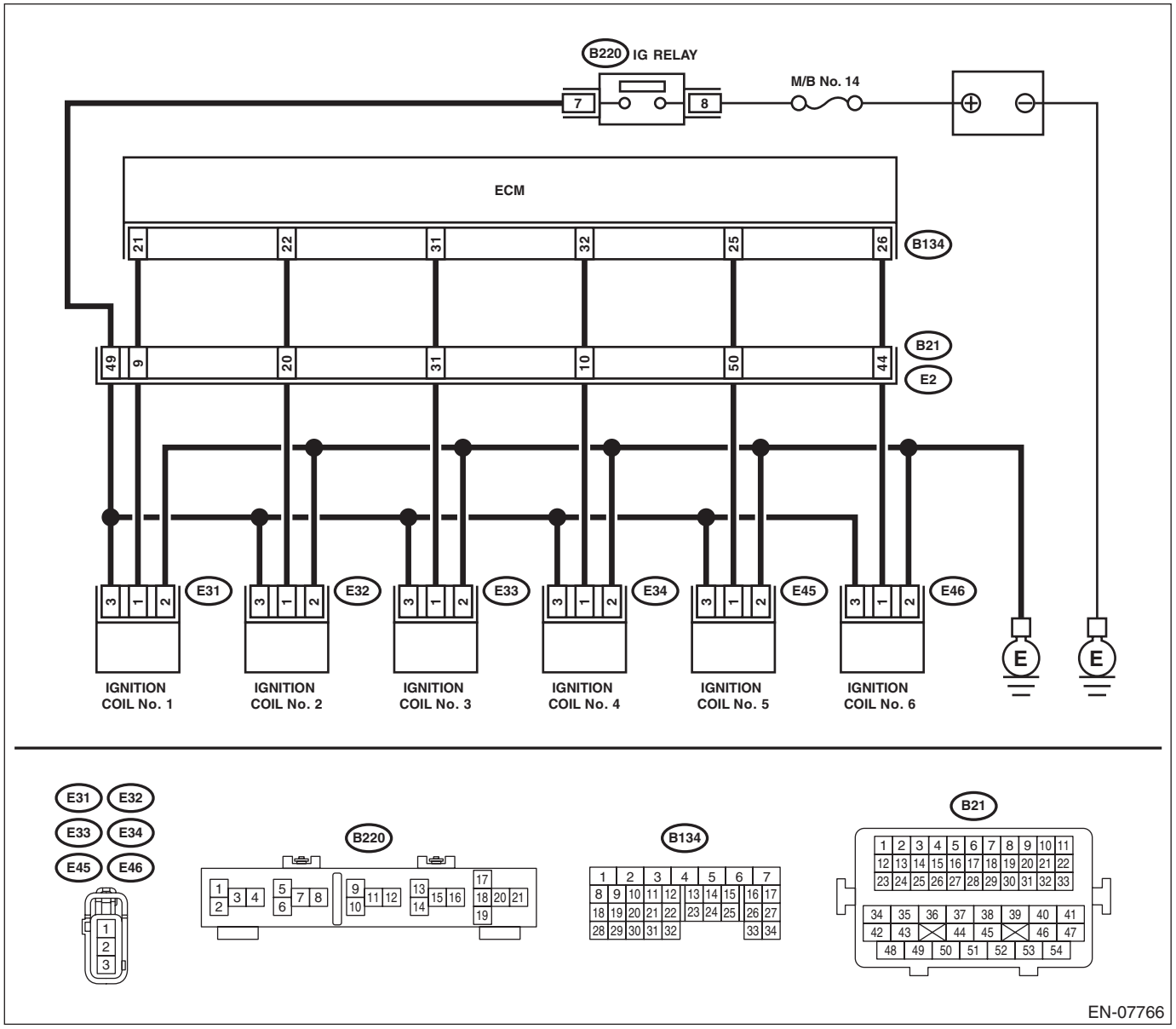

Step		Check	Yes	No
1	**CHECK SPARK PLUG CONDITION.** 1) Remove the spark plug. <Ref. to IG(H6DO)-4, REMOVAL, Spark Plug.> 2) Check the spark plug condition. <Ref. to IG(H6DO)-5, INSPECTION, Spark Plug.>	Is the spark plug condition normal?	Go to step **2**.	Replace the spark plug. <Ref. to IG(H6DO)-4, Spark Plug.>

	Step	Check	Yes	No
2	**CHECK IGNITION SYSTEM FOR SPARKS.** 1) Connect the spark plug to ignition coil. 2) Release the fuel pressure. <Ref. to FU(H6DO)-59, RELEASING OF FUEL PRESSURE, PROCEDURE, Fuel.> 3) Contact the spark plug thread portion to engine. 4) While opening the throttle valve fully, start the engine to check if spark occurs at each cylinder.	Does spark occur at each cylinder?	Check fuel pump system. <Ref. to EN(H6DO)(diag)-80, FUEL PUMP CIRCUIT, Diagnostics for Engine Starting Failure.>	Go to step **3**.
3	**CHECK IGNITION COIL POWER SUPPLY CIRCUIT.** 1) Turn the ignition switch to OFF. 2) Disconnect the connector from ignition coil. 3) Turn the ignition switch to ON. 4) Measure the voltage between ignition coil connector and engine ground. ***Connector & terminal*** ***(E31) No. 3 (+) — Engine ground (–):*** ***(E32) No. 3 (+) — Engine ground (–):*** ***(E33) No. 3 (+) — Engine ground (–):*** ***(E34) No. 3 (+) — Engine ground (–):*** ***(E45) No. 3 (+) — Engine ground (–):*** ***(E46) No. 3 (+) — Engine ground (–):***	Is the voltage 10 V or more?	Go to step **4**.	Repair the harness and connector. NOTE: In this case, repair the following item: • Open circuit or short circuit to ground in harness of power supply circuit • Blown out of fuse (M/B No. 14) • Poor contact of coupling connector
4	**CHECK HARNESS OF IGNITION COIL GROUND CIRCUIT.** 1) Turn the ignition switch to OFF. 2) Measure the resistance of harness between ignition coil connector and engine ground. ***Connector & terminal*** ***(E31) No. 2 — Engine ground:*** ***(E32) No. 2 — Engine ground:*** ***(E33) No. 2 — Engine ground:*** ***(E34) No. 2 — Engine ground:*** ***(E45) No. 2 — Engine ground:*** ***(E46) No. 2 — Engine ground***	Is the resistance less than 5 Ω?	Go to step **5**.	Repair the open circuit in harness between ignition coil connector and engine grounding terminal.
5	**CHECK HARNESS BETWEEN ECM AND IGNITION COIL CONNECTOR.** 1) Disconnect the connector from ECM. 2) Measure the resistance of harness between ECM and ignition coil connector. ***Connector & terminal*** ***(B134) No. 21 — (E31) No. 1:*** ***(B134) No. 22 — (E32) No. 1:*** ***(B134) No. 31 — (E33) No. 1:*** ***(B134) No. 32 — (E34) No. 1:*** ***(B134) No. 25 — (E45) No. 1:*** ***(B134) No. 26 — (E46) No. 1:***	Is the resistance less than 1 Ω?	Go to step **6**.	Repair the harness and connector. NOTE: In this case, repair the following item: • Open circuit of harness between ECM connector and the ignition coil connector • Poor contact of coupling connector
6	**CHECK HARNESS BETWEEN ECM AND IGNITION COIL CONNECTOR.** Measure the resistance of harness between ECM connector and chassis ground. ***Connector & terminal:*** ***(B134) No. 21 — Chassis ground:*** ***(B134) No. 22 — Chassis ground:*** ***(B134) No. 31 — Chassis ground:*** ***(B134) No. 32 — Chassis ground:*** ***(B134) No. 25 — Chassis ground:*** ***(B134) No. 26 — Chassis ground:***	Is the resistance 1 MΩ or more?	Go to step **7**.	Repair the ground short circuit of harness between ECM connector and ignition coil connector.

	Step	Check	Yes	No
7	**CHECK FOR POOR CONTACT.** Check for poor contact of ECM connector.	Is there poor contact of ECM connector?	Repair the poor contact of ECM connector.	Replace the ignition coil. <Ref. to IG(H6DO)-7, Ignition Coil.>

E: FUEL PUMP CIRCUIT

CAUTION:
After servicing or replacing faulty parts, perform Clear Memory Mode <Ref. to EN(H6DO)(diag)-57, OPERATION, Clear Memory Mode.>, and Inspection Mode <Ref. to EN(H6DO)(diag)-44, PROCEDURE, Inspection Mode.>.

	Step	Check	Yes	No
1	**CHECK OPERATING SOUND OF FUEL PUMP.** Make sure that the fuel pump operates for two seconds when turning the ignition switch to ON. NOTE: Fuel pump operation can be executed using the Subaru Select Monitor. For detailed procedures, refer to "System Operation Check". <Ref. to EN(H6DO)(diag)-58, System Operation Check Mode.>	Does the fuel pump emit operating sound?	Check the fuel injector circuit. <Ref. to EN(H6DO)(diag)-81, FUEL INJECTOR CIRCUIT, Diagnostics for Engine Starting Failure.>	Display the DTC. <Ref. to EN(H6DO)(diag)-43, OPERATION, Read Diagnostic Trouble Code (DTC).>

F: FUEL INJECTOR CIRCUIT

CAUTION:
- **Check or repair only faulty parts.**
- **After servicing or replacing faulty parts, perform Clear Memory Mode <Ref. to EN(H6DO)(diag)-57, OPERATION, Clear Memory Mode.>, and Inspection Mode <Ref. to EN(H6DO)(diag)-44, PROCEDURE, Inspection Mode.>.**

WIRING DIAGRAM:

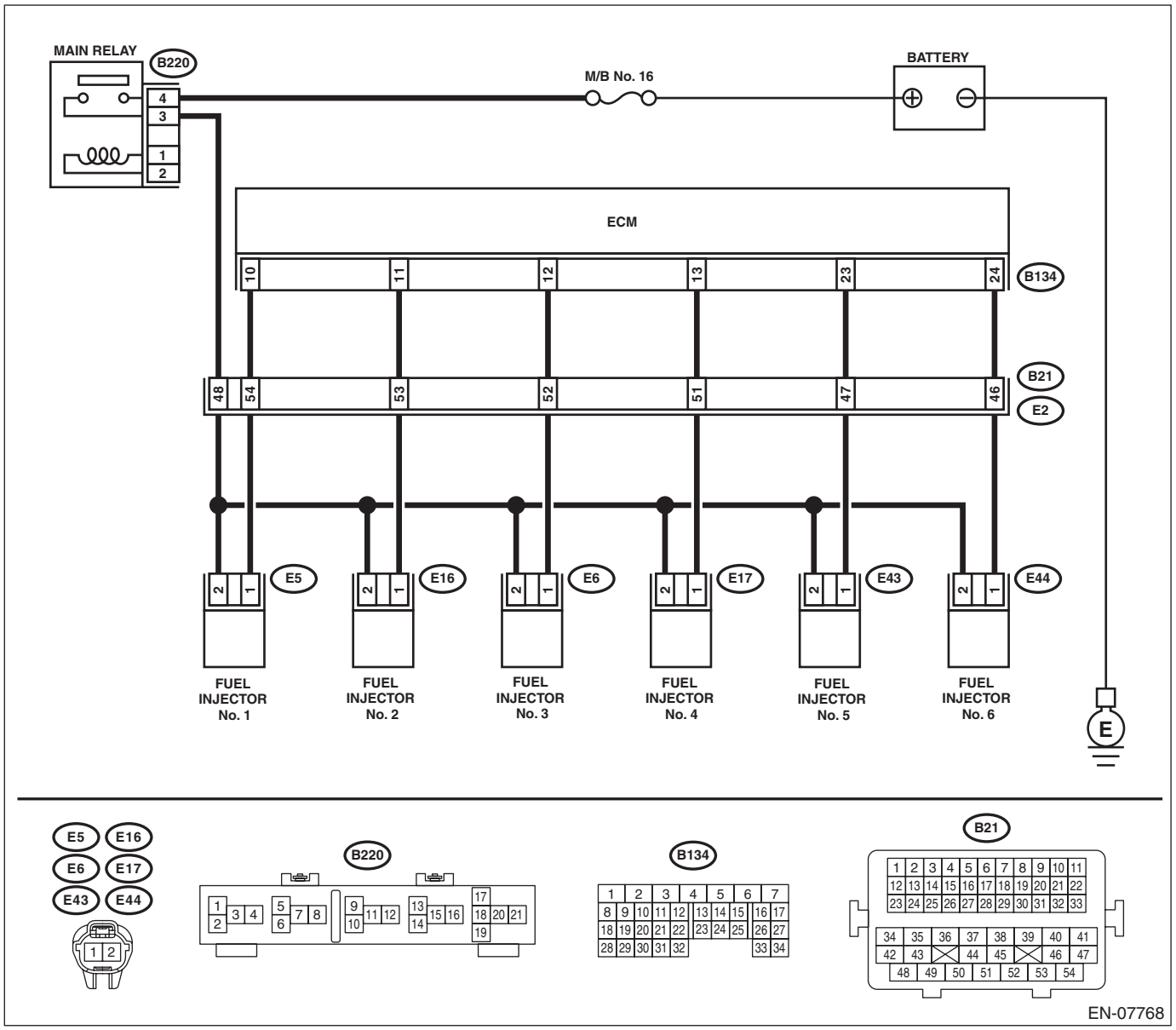

Step		Check	Yes	No
1	**CHECK OPERATION OF EACH FUEL INJECTOR.** While cranking the engine, check each fuel injector emits operating sound. Use a sound scope or listen by attaching a screwdriver to the injector for this check.	Does the fuel pump emit operating sound?	Check the fuel pressure. <Ref. to ME(H6DO)-31, INSPECTION, Fuel Pressure.>	Go to step **2**.

	Step	Check	Yes	No
2	**CHECK POWER SUPPLY TO EACH FUEL INJECTOR.** 1) Turn the ignition switch to OFF. 2) Disconnect the connector from fuel injector. 3) Turn the ignition switch to ON. 4) Measure the voltage between fuel injector connector and the engine ground. ***Connector & terminal*** ***#1 (E5) No. 2 (+) — Engine ground (–):*** ***#2 (E16) No. 2 (+) — Engine ground (–):*** ***#3 (E6) No. 2 (+) — Engine ground (–):*** ***#4 (E17) No. 2 (+) — Engine ground (–):*** ***#5 (E43) No. 2 (+) — Engine ground (–):*** ***#6 (E44) No. 2 (+) — Engine ground (–):***	Is the voltage 10 V or more?	Go to step **3**.	Repair the harness and connector. NOTE: In this case, repair the following item: • Open circuit in harness between main relay and fuel injector connector • Poor contact of main relay connector • Poor contact of coupling connector
3	**CHECK HARNESS BETWEEN ECM AND FUEL INJECTOR CONNECTOR.** 1) Turn the ignition switch to OFF. 2) Disconnect the connectors from ECM. 3) Measure the resistance of harness between ECM and fuel injector connector. ***Connector & terminal*** ***#1 (B134) No. 10 — (E5) No. 1:*** ***#2 (B134) No. 11 — (E16) No. 1:*** ***#3 (B134) No. 12 — (E6) No. 1:*** ***#4 (B134) No. 13 — (E17) No. 1:*** ***#5 (B134) No. 23 — (E43) No. 1:*** ***#6 (B134) No. 24 — (E44) No. 1:***	Is the resistance less than 1 Ω?	Go to step **4**.	Repair the harness and connector. NOTE: In this case, repair the following item: • Open circuit in harness between ECM and fuel injector connector • Poor contact of coupling connector
4	**CHECK HARNESS BETWEEN ECM AND FUEL INJECTOR CONNECTOR.** Measure the resistance between ECM and chassis ground. ***Connector & terminal*** ***#1 (B134) No. 10 — Chassis ground:*** ***#2 (B134) No. 11 — Chassis ground:*** ***#3 (B134) No. 12 — Chassis ground:*** ***#4 (B134) No. 13 — Chassis ground:*** ***#5 (B134) No. 23 — Chassis ground:*** ***#6 (B134) No. 24 — Chassis ground:***	Is the resistance 1 MΩ or more?	Go to step **5**.	Repair the short circuit to ground in harness between ECM and fuel injector connector.
5	**CHECK EACH FUEL INJECTOR.** Measure the resistance between each fuel injector terminals. ***Terminals*** ***No. 1 — No. 2:***	Is the resistance 5 — 20 Ω?	Go to step **6**.	Replace the faulty fuel injector. <Ref. to FU(H6DO)-44, Fuel Injector.>
6	**CHECK FOR POOR CONTACT.** Check for poor contact of ECM connector.	Is there poor contact of ECM connector?	Repair the poor contact of ECM connector.	Inspection using “General Diagnostic Table”. <Ref. to EN(H6DO)(diag)-381, INSPECTION, General Diagnostic Table.>

17.Diagnostic Procedure for Subaru Select Monitor Communication

A: COMMUNICATION FOR INITIALIZING IMPOSSIBLE

DIAGNOSIS:
Open or short circuit in data link connector
TROUBLE SYMPTOM:
Subaru Select Monitor communication failure
WIRING DIAGRAM:

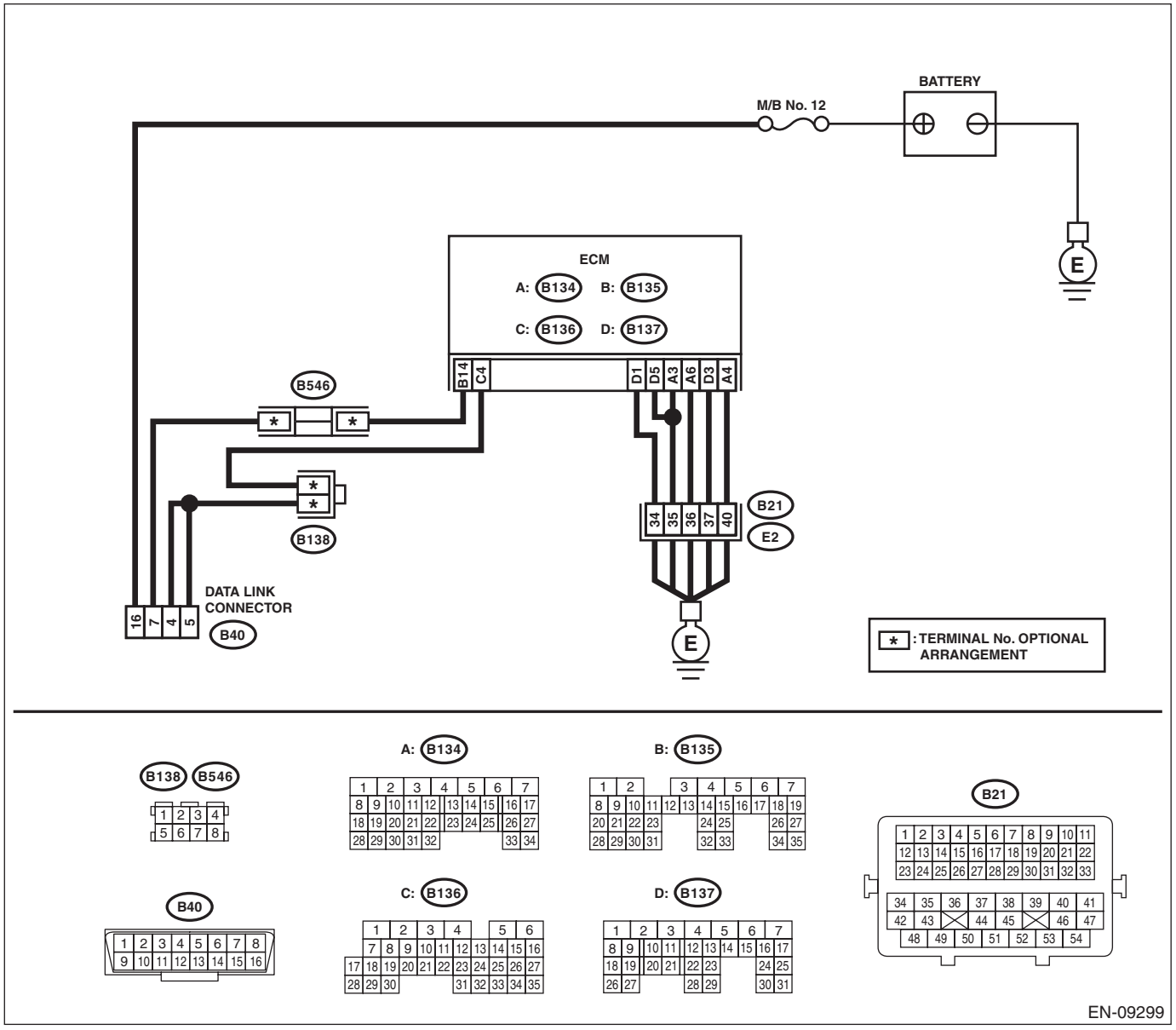

Step		Check	Yes	No
1	**CHECK POWER SUPPLY CIRCUIT.** Connect the SDI (Subaru Diagnosis Interface) or general scan tool to data link connector.	Does SDI or general scan tool turn ON?	Go to step **4**.	Go to step **2**.

	Step	Check	Yes	No
2	**CHECK POWER SUPPLY CIRCUIT.** Measure the voltage between data link connector and chassis ground. ***Connector & terminal*** ***(B40) No. 16 (+) — Chassis ground (–):***	Is the voltage 10 V or more?	Go to step **3**.	Repair the power supply circuit. NOTE: In this case, repair the following item: • Open or ground short circuit of harness between battery and data link connector • Blown out of fuse (M/B No. 12)
3	**CHECK HARNESS BETWEEN DATA LINK CONNECTOR AND CHASSIS GROUND.** 1) Turn the ignition switch to OFF. 2) Measure the resistance of harness between data link connector and chassis ground. ***Connector & terminal*** ***(B40) No. 4 — Chassis ground:*** ***(B40) No. 5 — Chassis ground:***	Is the resistance less than 5 Ω?	Repair the poor contact of data link connector.	Repair the harness and connector. NOTE: In this case, repair the following item: • Open circuit of harness between ECM and data link connector • Open circuit of harness between ECM and engine ground • Poor contact of ECM connector • Poor contact of coupling connector
4	**CHECK HARNESS BETWEEN ECM AND DATA LINK CONNECTOR.** 1) Turn the ignition switch to OFF. 2) Disconnect the connector from ECM, TCM, VDC CM, airbag CM and body integrated unit. **CAUTION:** **When disconnecting the connector from airbag CM, always follow the precautions on AB section. <Ref. to AB-9, CAUTION, General Description.>** 3) Measure the resistance of harness between ECM and data link connector. ***Connector & terminal*** ***(B135) No. 14 — (B40) No. 7:***	Is the resistance less than 1 Ω?	Go to step **5**.	Repair the harness and connector. NOTE: In this case, repair the following item: • Open circuit of harness between ECM and data link connector • Poor contact of coupling connector
5	**CHECK HARNESS BETWEEN ECM AND DATA LINK CONNECTOR.** Measure the resistance between data link connector and chassis ground. ***Connector & terminal*** ***(B40) No. 7 — Chassis ground:***	Is the resistance 1 MΩ or more?	Repair the poor contact of the ECM or data link connector.	Repair the ground short circuit of harness between ECM and data link connector.

18.List of Diagnostic Trouble Code (DTC)

A: LIST

DTC	Item	Note
P0011	Intake Camshaft Position - Timing Over-Advanced or System Performance (Bank 1)	<Ref. to EN(H6DO)(diag)-95, DTC P0011 INTAKE CAMSHAFT POSITION - TIMING OVER-ADVANCED OR SYSTEM PERFORMANCE (BANK 1), Diagnostic Procedure with Diagnostic Trouble Code (DTC).>
P0014	Exhaust AVCS System 1 (Range/ Performance)	<Ref. to EN(H6DO)(diag)-96, DTC P0014 EXHAUST AVCS SYSTEM 1 (RANGE/PERFORMANCE), Diagnostic Procedure with Diagnostic Trouble Code (DTC).>
P0016	Crankshaft Position - Camshaft Position Correlation (Bank1)	<Ref. to EN(H6DO)(diag)-97, DTC P0016 CRANKSHAFT POSITION - CAMSHAFT POSITION CORRELATION (BANK1), Diagnostic Procedure with Diagnostic Trouble Code (DTC).>
P0017	Crank and Cam Timing B System Failure (Bank 1)	<Ref. to EN(H6DO)(diag)-98, DTC P0017 CRANK AND CAM TIMING B SYSTEM FAILURE (BANK 1), Diagnostic Procedure with Diagnostic Trouble Code (DTC).>
P0018	Crankshaft Position - Camshaft Position Correlation (Bank2)	<Ref. to EN(H6DO)(diag)-99, DTC P0018 CRANKSHAFT POSITION - CAMSHAFT POSITION CORRELATION (BANK2), Diagnostic Procedure with Diagnostic Trouble Code (DTC).>
P0019	Crank and Cam Timing B System Failure (Bank 2)	<Ref. to EN(H6DO)(diag)-100, DTC P0019 CRANK AND CAM TIMING B SYSTEM FAILURE (BANK 2), Diagnostic Procedure with Diagnostic Trouble Code (DTC).>
P0021	Intake Camshaft Position - Timing Over-Advanced or System Performance (Bank 2)	<Ref. to EN(H6DO)(diag)-101, DTC P0021 INTAKE CAMSHAFT POSITION - TIMING OVER-ADVANCED OR SYSTEM PERFORMANCE (BANK 2), Diagnostic Procedure with Diagnostic Trouble Code (DTC).>
P0024	Exhaust AVCS System 2 (Range/ Performance)	<Ref. to EN(H6DO)(diag)-102, DTC P0024 EXHAUST AVCS SYSTEM 2 (RANGE/PERFORMANCE), Diagnostic Procedure with Diagnostic Trouble Code (DTC).>
P0030	HO2S Heater Control Circuit (Bank 1 Sensor 1)	<Ref. to EN(H6DO)(diag)-103, DTC P0030 HO2S HEATER CONTROL CIRCUIT (BANK 1 SENSOR 1), Diagnostic Procedure with Diagnostic Trouble Code (DTC).>
P0031	HO2S Heater Control Circuit Low (Bank 1 Sensor 1)	<Ref. to EN(H6DO)(diag)-105, DTC P0031 HO2S HEATER CONTROL CIRCUIT LOW (BANK 1 SENSOR 1), Diagnostic Procedure with Diagnostic Trouble Code (DTC).>
P0032	HO2S Heater Control Circuit High (Bank 1 Sensor 1)	<Ref. to EN(H6DO)(diag)-107, DTC P0032 HO2S HEATER CONTROL CIRCUIT HIGH (BANK 1 SENSOR 1), Diagnostic Procedure with Diagnostic Trouble Code (DTC).>
P0037	HO2S Heater Control Circuit Low (Bank 1 Sensor 2)	<Ref. to EN(H6DO)(diag)-109, DTC P0037 HO2S HEATER CONTROL CIRCUIT LOW (BANK 1 SENSOR 2), Diagnostic Procedure with Diagnostic Trouble Code (DTC).>
P0038	HO2S Heater Control Circuit High (Bank 1 Sensor 2)	<Ref. to EN(H6DO)(diag)-111, DTC P0038 HO2S HEATER CONTROL CIRCUIT HIGH (BANK 1 SENSOR 2), Diagnostic Procedure with Diagnostic Trouble Code (DTC).>
P0050	HO2S Heater Control Circuit (Bank 2 Sensor 1)	<Ref. to EN(H6DO)(diag)-113, DTC P0050 HO2S HEATER CONTROL CIRCUIT (BANK 2 SENSOR 1), Diagnostic Procedure with Diagnostic Trouble Code (DTC).>
P0051	HO2S Heater Control Circuit Low (Bank 2 Sensor 1)	<Ref. to EN(H6DO)(diag)-115, DTC P0051 HO2S HEATER CONTROL CIRCUIT LOW (BANK 2 SENSOR 1), Diagnostic Procedure with Diagnostic Trouble Code (DTC).>
P0052	HO2S Heater Control Circuit High (Bank 2 Sensor 1)	<Ref. to EN(H6DO)(diag)-117, DTC P0052 HO2S HEATER CONTROL CIRCUIT HIGH (BANK 2 SENSOR 1), Diagnostic Procedure with Diagnostic Trouble Code (DTC).>
P0057	HO2S Heater Control Circuit Low (Bank 2 Sensor 2)	<Ref. to EN(H6DO)(diag)-119, DTC P0057 HO2S HEATER CONTROL CIRCUIT LOW (BANK 2 SENSOR 2), Diagnostic Procedure with Diagnostic Trouble Code (DTC).>

List of Diagnostic Trouble Code (DTC)

DTC	Item	Note
P0058	HO2S Heater Control Circuit High (Bank 2 Sensor 2)	<Ref. to EN(H6DO)(diag)-121, DTC P0058 HO2S HEATER CONTROL CIRCUIT HIGH (BANK 2 SENSOR 2), Diagnostic Procedure with Diagnostic Trouble Code (DTC).>
P0068	MAP/MAF - Throttle Position Correlation	<Ref. to EN(H6DO)(diag)-123, DTC P0068 MAP/MAF - THROTTLE POSITION CORRELATION, Diagnostic Procedure with Diagnostic Trouble Code (DTC).>
P0101	Mass or Volume Air Flow Circuit Range/Performance	<Ref. to EN(H6DO)(diag)-124, DTC P0101 MASS OR VOLUME AIR FLOW CIRCUIT RANGE/PERFORMANCE, Diagnostic Procedure with Diagnostic Trouble Code (DTC).>
P0102	Mass or Volume Air Flow Circuit Low Input	<Ref. to EN(H6DO)(diag)-125, DTC P0102 MASS OR VOLUME AIR FLOW CIRCUIT LOW INPUT, Diagnostic Procedure with Diagnostic Trouble Code (DTC).>
P0103	Mass or Volume Air Flow Circuit High Input	<Ref. to EN(H6DO)(diag)-127, DTC P0103 MASS OR VOLUME AIR FLOW CIRCUIT HIGH INPUT, Diagnostic Procedure with Diagnostic Trouble Code (DTC).>
P0107	Manifold Absolute Pressure/Barometric Pressure Circuit Low Input	<Ref. to EN(H6DO)(diag)-129, DTC P0107 MANIFOLD ABSOLUTE PRESSURE/BAROMETRIC PRESSURE CIRCUIT LOW INPUT, Diagnostic Procedure with Diagnostic Trouble Code (DTC).>
P0108	Manifold Absolute Pressure/Barometric Pressure Circuit High Input	<Ref. to EN(H6DO)(diag)-131, DTC P0108 MANIFOLD ABSOLUTE PRESSURE/BAROMETRIC PRESSURE CIRCUIT HIGH INPUT, Diagnostic Procedure with Diagnostic Trouble Code (DTC).>
P0111	Intake Air Temperature Sensor 1 Circuit Range/Performance	<Ref. to EN(H6DO)(diag)-133, DTC P0111 INTAKE AIR TEMPERATURE SENSOR 1 CIRCUIT RANGE/PERFORMANCE, Diagnostic Procedure with Diagnostic Trouble Code (DTC).>
P0112	Intake Air Temperature Sensor 1 Circuit Low	<Ref. to EN(H6DO)(diag)-134, DTC P0112 INTAKE AIR TEMPERATURE SENSOR 1 CIRCUIT LOW, Diagnostic Procedure with Diagnostic Trouble Code (DTC).>
P0113	Intake Air Temperature Sensor 1 Circuit High	<Ref. to EN(H6DO)(diag)-136, DTC P0113 INTAKE AIR TEMPERATURE SENSOR 1 CIRCUIT HIGH, Diagnostic Procedure with Diagnostic Trouble Code (DTC).>
P0117	Engine Coolant Temperature Circuit Low	<Ref. to EN(H6DO)(diag)-138, DTC P0117 ENGINE COOLANT TEMPERATURE CIRCUIT LOW, Diagnostic Procedure with Diagnostic Trouble Code (DTC).>
P0118	Engine Coolant Temperature Circuit High	<Ref. to EN(H6DO)(diag)-140, DTC P0118 ENGINE COOLANT TEMPERATURE CIRCUIT HIGH, Diagnostic Procedure with Diagnostic Trouble Code (DTC).>
P0122	Throttle/Pedal Position Sensor/ Switch “A” Circuit Low	<Ref. to EN(H6DO)(diag)-142, DTC P0122 THROTTLE/PEDAL POSITION SENSOR/SWITCH “A” CIRCUIT LOW, Diagnostic Procedure with Diagnostic Trouble Code (DTC).>
P0123	Throttle/Pedal Position Sensor/ Switch “A” Circuit High	<Ref. to EN(H6DO)(diag)-144, DTC P0123 THROTTLE/PEDAL POSITION SENSOR/SWITCH “A” CIRCUIT HIGH, Diagnostic Procedure with Diagnostic Trouble Code (DTC).>
P0125	Insufficient Coolant Temperature for Closed Loop Fuel Control	<Ref. to EN(H6DO)(diag)-146, DTC P0125 INSUFFICIENT COOLANT TEMPERATURE FOR CLOSED LOOP FUEL CONTROL, Diagnostic Procedure with Diagnostic Trouble Code (DTC).>
P0126	Insufficient Engine Coolant Temperature for Stable Operation	<Ref. to EN(H6DO)(diag)-147, DTC P0126 INSUFFICIENT ENGINE COOLANT TEMPERATURE FOR STABLE OPERATION, Diagnostic Procedure with Diagnostic Trouble Code (DTC).>
P0128	Coolant Thermostat (Engine Coolant Temperature Below Thermostat Regulating Temperature)	<Ref. to EN(H6DO)(diag)-148, DTC P0128 COOLANT THERMOSTAT (ENGINE COOLANT TEMPERATURE BELOW THERMOSTAT REGULATING TEMPERATURE), Diagnostic Procedure with Diagnostic Trouble Code (DTC).>
P0131	O2 Sensor Circuit Low Voltage (Bank 1 Sensor 1)	<Ref. to EN(H6DO)(diag)-149, DTC P0131 O2 SENSOR CIRCUIT LOW VOLTAGE (BANK 1 SENSOR 1), Diagnostic Procedure with Diagnostic Trouble Code (DTC).>

DTC	Item	Note
P0132	O2 Sensor Circuit High Voltage (Bank 1 Sensor 1)	<Ref. to EN(H6DO)(diag)-151, DTC P0132 O2 SENSOR CIRCUIT HIGH VOLTAGE (BANK 1 SENSOR 1), Diagnostic Procedure with Diagnostic Trouble Code (DTC).>
P0134	O2 Sensor Circuit No Activity Detected (Bank 1 Sensor 1)	<Ref. to EN(H6DO)(diag)-153, DTC P0134 O2 SENSOR CIRCUIT NO ACTIVITY DETECTED (BANK 1 SENSOR 1), Diagnostic Procedure with Diagnostic Trouble Code (DTC).>
P0137	O2 Sensor Circuit Low Voltage (Bank 1 Sensor 2)	<Ref. to EN(H6DO)(diag)-155, DTC P0137 O2 SENSOR CIRCUIT LOW VOLTAGE (BANK 1 SENSOR 2), Diagnostic Procedure with Diagnostic Trouble Code (DTC).>
P0138	O2 Sensor Circuit High Voltage (Bank 1 Sensor 2)	<Ref. to EN(H6DO)(diag)-157, DTC P0138 O2 SENSOR CIRCUIT HIGH VOLTAGE (BANK 1 SENSOR 2), Diagnostic Procedure with Diagnostic Trouble Code (DTC).>
P013A	O2 Sensor Slow Response - Rich to Lean (Bank 1 Sensor 2)	<Ref. to EN(H6DO)(diag)-159, DTC P013A O2 SENSOR SLOW RESPONSE - RICH TO LEAN (BANK 1 SENSOR 2), Diagnostic Procedure with Diagnostic Trouble Code (DTC).>
P013B	O2 Sensor Slow Response - Lean to Rich (Bank 1 Sensor 2)	<Ref. to EN(H6DO)(diag)-160, DTC P013B O2 SENSOR SLOW RESPONSE - LEAN TO RICH (BANK 1 SENSOR 2), Diagnostic Procedure with Diagnostic Trouble Code (DTC).>
P013C	O2 Sensor Slow Response - Rich to Lean (Bank 2 Sensor 2)	<Ref. to EN(H6DO)(diag)-161, DTC P013C O2 SENSOR SLOW RESPONSE - RICH TO LEAN (BANK 2 SENSOR 2), Diagnostic Procedure with Diagnostic Trouble Code (DTC).>
P013D	O2 Sensor Slow Response - Lean to Rich (Bank 2 Sensor 2)	<Ref. to EN(H6DO)(diag)-162, DTC P013D O2 SENSOR SLOW RESPONSE - LEAN TO RICH (BANK 2 SENSOR 2), Diagnostic Procedure with Diagnostic Trouble Code (DTC).>
P013E	O2 Sensor Delayed Response - Rich to Lean (Bank 1 Sensor 2)	<Ref. to EN(H6DO)(diag)-162, DTC P013E O2 SENSOR DELAYED RESPONSE - RICH TO LEAN (BANK 1 SENSOR 2), Diagnostic Procedure with Diagnostic Trouble Code (DTC).>
P013F	O2 Sensor Delayed Response - Lean to Rich (Bank 1 Sensor 2)	<Ref. to EN(H6DO)(diag)-162, DTC P013F O2 SENSOR DELAYED RESPONSE - LEAN TO RICH (BANK 1 SENSOR 2), Diagnostic Procedure with Diagnostic Trouble Code (DTC).>
P0140	O2 Sensor Circuit No Activity Detected (Bank1 Sensor2)	<Ref. to EN(H6DO)(diag)-163, DTC P0140 O2 SENSOR CIRCUIT NO ACTIVITY DETECTED (BANK1 SENSOR2), Diagnostic Procedure with Diagnostic Trouble Code (DTC).>
P0141	O2 Sensor Heater Circuit (Bank1 Sensor2)	<Ref. to EN(H6DO)(diag)-165, DTC P0141 O2 SENSOR HEATER CIRCUIT (BANK1 SENSOR2), Diagnostic Procedure with Diagnostic Trouble Code (DTC).>
P014A	O2 Sensor Delayed Response - Rich to Lean (Bank 2 Sensor 2)	<Ref. to EN(H6DO)(diag)-165, DTC P014A O2 SENSOR DELAYED RESPONSE - RICH TO LEAN (BANK 2 SENSOR 2), Diagnostic Procedure with Diagnostic Trouble Code (DTC).>
P014B	O2 Sensor Delayed Response - Lean to Rich (Bank 2 Sensor 2)	<Ref. to EN(H6DO)(diag)-165, DTC P014B O2 SENSOR DELAYED RESPONSE - LEAN TO RICH (BANK 2 SENSOR 2), Diagnostic Procedure with Diagnostic Trouble Code (DTC).>
P014C	O2 Sensor Slow Response - Rich to Lean (Bank 1 Sensor 1)	<Ref. to EN(H6DO)(diag)-166, DTC P014C O2 SENSOR SLOW RESPONSE - RICH TO LEAN (BANK 1 SENSOR 1), Diagnostic Procedure with Diagnostic Trouble Code (DTC).>
P014D	O2 Sensor Slow Response - Lean to Rich (Bank 1 Sensor 1)	<Ref. to EN(H6DO)(diag)-166, DTC P014D O2 SENSOR SLOW RESPONSE - LEAN TO RICH (BANK 1 SENSOR 1), Diagnostic Procedure with Diagnostic Trouble Code (DTC).>
P014E	O2 Sensor Slow Response - Rich to Lean (Bank 2 Sensor 1)	<Ref. to EN(H6DO)(diag)-167, DTC P014E O2 SENSOR SLOW RESPONSE - RICH TO LEAN (BANK 2 SENSOR 1), Diagnostic Procedure with Diagnostic Trouble Code (DTC).>
P014F	O2 Sensor Slow Response - Lean to Rich (Bank 2 Sensor 1)	<Ref. to EN(H6DO)(diag)-167, DTC P014F O2 SENSOR SLOW RESPONSE - LEAN TO RICH (BANK 2 SENSOR 1), Diagnostic Procedure with Diagnostic Trouble Code (DTC).>
P0151	O2 Sensor Circuit Low Voltage (Bank 2 Sensor 1)	<Ref. to EN(H6DO)(diag)-168, DTC P0151 O2 SENSOR CIRCUIT LOW VOLTAGE (BANK 2 SENSOR 1), Diagnostic Procedure with Diagnostic Trouble Code (DTC).>

DTC	Item	Note
P0152	O2 Sensor Circuit High Voltage (Bank 2 Sensor 1)	<Ref. to EN(H6DO)(diag)-170, DTC P0152 O2 SENSOR CIRCUIT HIGH VOLTAGE (BANK 2 SENSOR 1), Diagnostic Procedure with Diagnostic Trouble Code (DTC).>
P0154	O2 Sensor Circuit No Activity Detected (Bank 2 Sensor 1)	<Ref. to EN(H6DO)(diag)-172, DTC P0154 O2 SENSOR CIRCUIT NO ACTIVITY DETECTED (BANK 2 SENSOR 1), Diagnostic Procedure with Diagnostic Trouble Code (DTC).>
P0157	O2 Sensor Circuit Low Voltage (Bank 2 Sensor 2)	<Ref. to EN(H6DO)(diag)-174, DTC P0157 O2 SENSOR CIRCUIT LOW VOLTAGE (BANK 2 SENSOR 2), Diagnostic Procedure with Diagnostic Trouble Code (DTC).>
P0158	O2 Sensor Circuit High Voltage (Bank 2 Sensor 2)	<Ref. to EN(H6DO)(diag)-176, DTC P0158 O2 SENSOR CIRCUIT HIGH VOLTAGE (BANK 2 SENSOR 2), Diagnostic Procedure with Diagnostic Trouble Code (DTC).>
P015A	O2 Sensor Delayed Response - Rich to Lean (Bank 1 Sensor 1)	<Ref. to EN(H6DO)(diag)-178, DTC P015A O2 SENSOR DELAYED RESPONSE - RICH TO LEAN (BANK 1 SENSOR 1), Diagnostic Procedure with Diagnostic Trouble Code (DTC).>
P015B	O2 Sensor Delayed Response - Lean to Rich (Bank 1 Sensor 1)	<Ref. to EN(H6DO)(diag)-178, DTC P015B O2 SENSOR DELAYED RESPONSE - LEAN TO RICH (BANK 1 SENSOR 1), Diagnostic Procedure with Diagnostic Trouble Code (DTC).>
P015C	O2 Sensor Delayed Response - Rich to Lean (Bank 2 Sensor 1)	<Ref. to EN(H6DO)(diag)-178, DTC P015C O2 SENSOR DELAYED RESPONSE - RICH TO LEAN (BANK 2 SENSOR 1), Diagnostic Procedure with Diagnostic Trouble Code (DTC).>
P015D	O2 Sensor Delayed Response - Lean to Rich (Bank 2 Sensor 1)	<Ref. to EN(H6DO)(diag)-178, DTC P015D O2 SENSOR DELAYED RESPONSE - LEAN TO RICH (BANK 2 SENSOR 1), Diagnostic Procedure with Diagnostic Trouble Code (DTC).>
P0160	O2 Sensor Circuit No Activity Detected (Bank2 Sensor2)	<Ref. to EN(H6DO)(diag)-179, DTC P0160 O2 SENSOR CIRCUIT NO ACTIVITY DETECTED (BANK2 SENSOR2), Diagnostic Procedure with Diagnostic Trouble Code (DTC).>
P0161	O2 Sensor Heater Circuit (Bank2 Sensor2)	<Ref. to EN(H6DO)(diag)-181, DTC P0161 O2 SENSOR HEATER CIRCUIT (BANK2 SENSOR2), Diagnostic Procedure with Diagnostic Trouble Code (DTC).>
P0171	System Too Lean (Bank 1)	<Ref. to EN(H6DO)(diag)-181, DTC P0171 SYSTEM TOO LEAN (BANK 1), Diagnostic Procedure with Diagnostic Trouble Code (DTC).>
P0172	System Too Rich (Bank 1)	<Ref. to EN(H6DO)(diag)-181, DTC P0172 SYSTEM TOO RICH (BANK 1), Diagnostic Procedure with Diagnostic Trouble Code (DTC).>
P0174	System Too Lean (Bank 2)	<Ref. to EN(H6DO)(diag)-181, DTC P0174 SYSTEM TOO LEAN (BANK 2), Diagnostic Procedure with Diagnostic Trouble Code (DTC).>
P0175	System Too Rich (Bank 2)	<Ref. to EN(H6DO)(diag)-182, DTC P0175 SYSTEM TOO RICH (BANK 2), Diagnostic Procedure with Diagnostic Trouble Code (DTC).>
P0181	Fuel Temperature Sensor “A” Circuit Range/Performance	<Ref. to EN(H6DO)(diag)-184, DTC P0181 FUEL TEMPERATURE SENSOR “A” CIRCUIT RANGE/PERFORMANCE, Diagnostic Procedure with Diagnostic Trouble Code (DTC).>
P0182	Fuel Temperature Sensor “A” Circuit Low Input	<Ref. to EN(H6DO)(diag)-185, DTC P0182 FUEL TEMPERATURE SENSOR “A” CIRCUIT LOW INPUT, Diagnostic Procedure with Diagnostic Trouble Code (DTC).>
P0183	Fuel Temperature Sensor “A” Circuit High Input	<Ref. to EN(H6DO)(diag)-187, DTC P0183 FUEL TEMPERATURE SENSOR “A” CIRCUIT HIGH INPUT, Diagnostic Procedure with Diagnostic Trouble Code (DTC).>
P0196	Engine Oil Temperature Sensor Circuit Range/Performance	<Ref. to EN(H6DO)(diag)-189, DTC P0196 ENGINE OIL TEMPERATURE SENSOR CIRCUIT RANGE/PERFORMANCE, Diagnostic Procedure with Diagnostic Trouble Code (DTC).>
P0197	Engine Oil Temperature Sensor Low	<Ref. to EN(H6DO)(diag)-190, DTC P0197 ENGINE OIL TEMPERATURE SENSOR LOW, Diagnostic Procedure with Diagnostic Trouble Code (DTC).>
P0198	Engine Oil Temperature Sensor High	<Ref. to EN(H6DO)(diag)-192, DTC P0198 ENGINE OIL TEMPERATURE SENSOR HIGH, Diagnostic Procedure with Diagnostic Trouble Code (DTC).>

DTC	Item	Note
P0201	Injector #1	<Ref. to EN(H6DO)(diag)-194, DTC P0201 INJECTOR #1, Diagnostic Procedure with Diagnostic Trouble Code (DTC).>
P0202	Injector #2	<Ref. to EN(H6DO)(diag)-196, DTC P0202 INJECTOR #2, Diagnostic Procedure with Diagnostic Trouble Code (DTC).>
P0203	Injector #3	<Ref. to EN(H6DO)(diag)-196, DTC P0203 INJECTOR #3, Diagnostic Procedure with Diagnostic Trouble Code (DTC).>
P0204	Injector #4	<Ref. to EN(H6DO)(diag)-196, DTC P0204 INJECTOR #4, Diagnostic Procedure with Diagnostic Trouble Code (DTC).>
P0205	Injector #5	<Ref. to EN(H6DO)(diag)-196, DTC P0205 INJECTOR #5, Diagnostic Procedure with Diagnostic Trouble Code (DTC).>
P0206	Injector #6	<Ref. to EN(H6DO)(diag)-196, DTC P0206 INJECTOR #6, Diagnostic Procedure with Diagnostic Trouble Code (DTC).>
P0222	Throttle/Pedal Position Sensor/ Switch “B” Circuit Low	<Ref. to EN(H6DO)(diag)-197, DTC P0222 THROTTLE/PEDAL POSITION SENSOR/SWITCH “B” CIRCUIT LOW, Diagnostic Procedure with Diagnostic Trouble Code (DTC).>
P0223	Throttle/Pedal Position Sensor/ Switch “B” Circuit High	<Ref. to EN(H6DO)(diag)-199, DTC P0223 THROTTLE/PEDAL POSITION SENSOR/SWITCH “B” CIRCUIT HIGH, Diagnostic Procedure with Diagnostic Trouble Code (DTC).>
P0230	Fuel Pump Primary Circuit	<Ref. to EN(H6DO)(diag)-201, DTC P0230 FUEL PUMP PRIMARY CIRCUIT, Diagnostic Procedure with Diagnostic Trouble Code (DTC).>
P0301	Cylinder 1 Misfire Detected	<Ref. to EN(H6DO)(diag)-204, DTC P0301 CYLINDER 1 MISFIRE DETECTED, Diagnostic Procedure with Diagnostic Trouble Code (DTC).>
P0302	Cylinder 2 Misfire Detected	<Ref. to EN(H6DO)(diag)-204, DTC P0302 CYLINDER 2 MISFIRE DETECTED, Diagnostic Procedure with Diagnostic Trouble Code (DTC).>
P0303	Cylinder 3 Misfire Detected	<Ref. to EN(H6DO)(diag)-204, DTC P0303 CYLINDER 3 MISFIRE DETECTED, Diagnostic Procedure with Diagnostic Trouble Code (DTC).>
P0304	Cylinder 4 Misfire Detected	<Ref. to EN(H6DO)(diag)-204, DTC P0304 CYLINDER 4 MISFIRE DETECTED, Diagnostic Procedure with Diagnostic Trouble Code (DTC).>
P0305	Cylinder 5 Misfire Detected	<Ref. to EN(H6DO)(diag)-204, DTC P0305 CYLINDER 5 MISFIRE DETECTED, Diagnostic Procedure with Diagnostic Trouble Code (DTC).>
P0306	Cylinder 6 Misfire Detected	<Ref. to EN(H6DO)(diag)-205, DTC P0306 CYLINDER 6 MISFIRE DETECTED, Diagnostic Procedure with Diagnostic Trouble Code (DTC).>
P0327	Knock Sensor 1 Circuit Low (Bank 1 or Single Sensor)	<Ref. to EN(H6DO)(diag)-210, DTC P0327 KNOCK SENSOR 1 CIRCUIT LOW (BANK 1 OR SINGLE SENSOR), Diagnostic Procedure with Diagnostic Trouble Code (DTC).>
P0328	Knock Sensor 1 Circuit High (Bank 1 or Single Sensor)	<Ref. to EN(H6DO)(diag)-212, DTC P0328 KNOCK SENSOR 1 CIRCUIT HIGH (BANK 1 OR SINGLE SENSOR), Diagnostic Procedure with Diagnostic Trouble Code (DTC).>
P0332	Knock Sensor 2 Circuit Low (Bank 2)	<Ref. to EN(H6DO)(diag)-214, DTC P0332 KNOCK SENSOR 2 CIRCUIT LOW (BANK 2), Diagnostic Procedure with Diagnostic Trouble Code (DTC).>
P0333	Knock Sensor 2 Circuit High (Bank 2)	<Ref. to EN(H6DO)(diag)-216, DTC P0333 KNOCK SENSOR 2 CIRCUIT HIGH (BANK 2), Diagnostic Procedure with Diagnostic Trouble Code (DTC).>
P0335	Crankshaft Position Sensor “A” Circuit	<Ref. to EN(H6DO)(diag)-218, DTC P0335 CRANKSHAFT POSITION SENSOR “A” CIRCUIT, Diagnostic Procedure with Diagnostic Trouble Code (DTC).>
P0336	Crankshaft Position Sensor “A” Circuit Range/Performance	<Ref. to EN(H6DO)(diag)-220, DTC P0336 CRANKSHAFT POSITION SENSOR “A” CIRCUIT RANGE/PERFORMANCE, Diagnostic Procedure with Diagnostic Trouble Code (DTC).>
P0340	Camshaft Position Sensor “A” Circuit (Bank 1 or Single Sensor)	<Ref. to EN(H6DO)(diag)-221, DTC P0340 CAMSHAFT POSITION SENSOR “A” CIRCUIT (BANK 1 OR SINGLE SENSOR), Diagnostic Procedure with Diagnostic Trouble Code (DTC).>
P0345	Camshaft Position Sensor “A” Circuit (Bank 2)	<Ref. to EN(H6DO)(diag)-223, DTC P0345 CAMSHAFT POSITION SENSOR “A” CIRCUIT (BANK 2), Diagnostic Procedure with Diagnostic Trouble Code (DTC).>

DTC	Item	Note
P0351	Ignition Coil A Primary/Secondary Circuit	<Ref. to EN(H6DO)(diag)-225, DTC P0351 IGNITION COIL A PRIMARY/ SECONDARY CIRCUIT, Diagnostic Procedure with Diagnostic Trouble Code (DTC).>
P0352	Ignition Coil B Primary/Secondary Circuit	<Ref. to EN(H6DO)(diag)-227, DTC P0352 IGNITION COIL B PRIMARY/ SECONDARY CIRCUIT, Diagnostic Procedure with Diagnostic Trouble Code (DTC).>
P0353	Ignition Coil C Primary/Secondary Circuit	<Ref. to EN(H6DO)(diag)-227, DTC P0353 IGNITION COIL C PRIMARY/ SECONDARY CIRCUIT, Diagnostic Procedure with Diagnostic Trouble Code (DTC).>
P0354	Ignition Coil D Primary/Secondary Circuit	<Ref. to EN(H6DO)(diag)-227, DTC P0354 IGNITION COIL D PRIMARY/ SECONDARY CIRCUIT, Diagnostic Procedure with Diagnostic Trouble Code (DTC).>
P0355	Ignition Coil E Primary/Secondary Circuit	<Ref. to EN(H6DO)(diag)-227, DTC P0355 IGNITION COIL E PRIMARY/ SECONDARY CIRCUIT, Diagnostic Procedure with Diagnostic Trouble Code (DTC).>
P0356	Ignition Coil F Primary/Secondary Circuit	<Ref. to EN(H6DO)(diag)-227, DTC P0356 IGNITION COIL F PRIMARY/ SECONDARY CIRCUIT, Diagnostic Procedure with Diagnostic Trouble Code (DTC).>
P0365	Camshaft Position Sensor “B” Circuit (Bank 1)	<Ref. to EN(H6DO)(diag)-228, DTC P0365 CAMSHAFT POSITION SENSOR “B” CIRCUIT (BANK 1), Diagnostic Procedure with Diagnostic Trouble Code (DTC).>
P0390	Camshaft Position Sensor “B” Circuit (Bank 2)	<Ref. to EN(H6DO)(diag)-230, DTC P0390 CAMSHAFT POSITION SENSOR “B” CIRCUIT (BANK 2), Diagnostic Procedure with Diagnostic Trouble Code (DTC).>
P0400	Exhaust Gas Recirculation Flow	<Ref. to EN(H6DO)(diag)-232, DTC P0400 EXHAUST GAS RECIRCULATION FLOW, Diagnostic Procedure with Diagnostic Trouble Code (DTC).>
P0420	Catalyst System Efficiency Below Threshold (Bank 1)	<Ref. to EN(H6DO)(diag)-233, DTC P0420 CATALYST SYSTEM EFFICIENCY BELOW THRESHOLD (BANK 1), Diagnostic Procedure with Diagnostic Trouble Code (DTC).>
P0442	Evaporative Emission Control System Leak Detected (Small Leak)	<Ref. to EN(H6DO)(diag)-237, DTC P0442 EVAPORATIVE EMISSION CONTROL SYSTEM LEAK DETECTED (SMALL LEAK), Diagnostic Procedure with Diagnostic Trouble Code (DTC).>
P0447	Evaporative Emission Control System Vent Control Circuit Open	<Ref. to EN(H6DO)(diag)-239, DTC P0447 EVAPORATIVE EMISSION CONTROL SYSTEM VENT CONTROL CIRCUIT OPEN, Diagnostic Procedure with Diagnostic Trouble Code (DTC).>
P0448	Evaporative Emission Control System Vent Control Circuit Shorted	<Ref. to EN(H6DO)(diag)-241, DTC P0448 EVAPORATIVE EMISSION CONTROL SYSTEM VENT CONTROL CIRCUIT SHORTED, Diagnostic Procedure with Diagnostic Trouble Code (DTC).>
P0451	Evaporative Emission Control System Pressure Sensor	<Ref. to EN(H6DO)(diag)-243, DTC P0451 EVAPORATIVE EMISSION CONTROL SYSTEM PRESSURE SENSOR, Diagnostic Procedure with Diagnostic Trouble Code (DTC).>
P0452	Evaporative Emission Control System Pressure Sensor Low Input	<Ref. to EN(H6DO)(diag)-244, DTC P0452 EVAPORATIVE EMISSION CONTROL SYSTEM PRESSURE SENSOR LOW INPUT, Diagnostic Procedure with Diagnostic Trouble Code (DTC).>
P0453	Evaporative Emission Control System Pressure Sensor High Input	<Ref. to EN(H6DO)(diag)-246, DTC P0453 EVAPORATIVE EMISSION CONTROL SYSTEM PRESSURE SENSOR HIGH INPUT, Diagnostic Procedure with Diagnostic Trouble Code (DTC).>
P0456	Evaporative Emission Control System Leak Detected (Very Small Leak)	<Ref. to EN(H6DO)(diag)-248, DTC P0456 EVAPORATIVE EMISSION CONTROL SYSTEM LEAK DETECTED (VERY SMALL LEAK), Diagnostic Procedure with Diagnostic Trouble Code (DTC).>
P0457	Evaporative Emission Control System Leak Detected (Fuel Cap Loose/ Off)	<Ref. to EN(H6DO)(diag)-250, DTC P0457 EVAPORATIVE EMISSION CONTROL SYSTEM LEAK DETECTED (FUEL CAP LOOSE/OFF), Diagnostic Procedure with Diagnostic Trouble Code (DTC).>
P0458	Evaporative Emission System Purge Control Valve Circuit Low	<Ref. to EN(H6DO)(diag)-252, DTC P0458 EVAPORATIVE EMISSION SYSTEM PURGE CONTROL VALVE CIRCUIT LOW, Diagnostic Procedure with Diagnostic Trouble Code (DTC).>

DTC	Item	Note
P0459	Evaporative Emission System Purge Control Valve Circuit High	<Ref. to EN(H6DO)(diag)-254, DTC P0459 EVAPORATIVE EMISSION SYSTEM PURGE CONTROL VALVE CIRCUIT HIGH, Diagnostic Procedure with Diagnostic Trouble Code (DTC).>
P0461	Fuel Level Sensor “A” Circuit Range/Performance	<Ref. to EN(H6DO)(diag)-256, DTC P0461 FUEL LEVEL SENSOR “A” CIRCUIT RANGE/PERFORMANCE, Diagnostic Procedure with Diagnostic Trouble Code (DTC).>
P0462	Fuel Level Sensor “A” Circuit Low	<Ref. to EN(H6DO)(diag)-256, DTC P0462 FUEL LEVEL SENSOR “A” CIRCUIT LOW, Diagnostic Procedure with Diagnostic Trouble Code (DTC).>
P0463	Fuel Level Sensor “A” Circuit High	<Ref. to EN(H6DO)(diag)-257, DTC P0463 FUEL LEVEL SENSOR “A” CIRCUIT HIGH, Diagnostic Procedure with Diagnostic Trouble Code (DTC).>
P0464	Fuel Level Sensor Circuit Intermittent	<Ref. to EN(H6DO)(diag)-258, DTC P0464 FUEL LEVEL SENSOR CIRCUIT INTERMITTENT, Diagnostic Procedure with Diagnostic Trouble Code (DTC).>
P0500	Vehicle Speed Sensor “A”	<Ref. to EN(H6DO)(diag)-259, DTC P0500 VEHICLE SPEED SENSOR “A”, Diagnostic Procedure with Diagnostic Trouble Code (DTC).>
P0506	Idle Air Control System RPM Lower Than Expected	<Ref. to EN(H6DO)(diag)-260, DTC P0506 IDLE AIR CONTROL SYSTEM RPM LOWER THAN EXPECTED, Diagnostic Procedure with Diagnostic Trouble Code (DTC).>
P0507	Idle Air Control System RPM Higher Than Expected	<Ref. to EN(H6DO)(diag)-261, DTC P0507 IDLE AIR CONTROL SYSTEM RPM HIGHER THAN EXPECTED, Diagnostic Procedure with Diagnostic Trouble Code (DTC).>
P050A	Cold Start Idle Air Control System Performance	<Ref. to EN(H6DO)(diag)-262, DTC P050A COLD START IDLE AIR CONTROL SYSTEM PERFORMANCE, Diagnostic Procedure with Diagnostic Trouble Code (DTC).>
P050B	Cold Start Ignition Timing Performance	<Ref. to EN(H6DO)(diag)-270, DTC P050B COLD START IGNITION TIMING PERFORMANCE, Diagnostic Procedure with Diagnostic Trouble Code (DTC).>
P0512	Starter Request Circuit	<Ref. to EN(H6DO)(diag)-271, DTC P0512 STARTER REQUEST CIRCUIT, Diagnostic Procedure with Diagnostic Trouble Code (DTC).>
P0513	Incorrect Immobilizer Key	<Ref. to IM(diag)-16, DTC P0513 INCORRECT IMMOBILIZER KEY, Diagnostic Procedure with Diagnostic Trouble Code (DTC).>
P0604	Internal Control Module Random Access Memory (RAM) Error	<Ref. to EN(H6DO)(diag)-273, DTC P0604 INTERNAL CONTROL MODULE RANDOM ACCESS MEMORY (RAM) ERROR, Diagnostic Procedure with Diagnostic Trouble Code (DTC).>
P0605	Internal Control Module Read Only Memory (ROM) Error	<Ref. to EN(H6DO)(diag)-273, DTC P0605 INTERNAL CONTROL MODULE READ ONLY MEMORY (ROM) ERROR, Diagnostic Procedure with Diagnostic Trouble Code (DTC).>
P0607	Throttle Control System Circuit Range/Performance	<Ref. to EN(H6DO)(diag)-274, DTC P0607 THROTTLE CONTROL SYSTEM CIRCUIT RANGE/PERFORMANCE, Diagnostic Procedure with Diagnostic Trouble Code (DTC).>
P0638	Throttle Actuator Control Range/Performance (Bank 1)	<Ref. to EN(H6DO)(diag)-275, DTC P0638 THROTTLE ACTUATOR CONTROL RANGE/PERFORMANCE (BANK 1), Diagnostic Procedure with Diagnostic Trouble Code (DTC).>
P0700	Transmission Control System (MIL Request)	<Ref. to EN(H6DO)(diag)-275, DTC P0700 TRANSMISSION CONTROL SYSTEM (MIL REQUEST), Diagnostic Procedure with Diagnostic Trouble Code (DTC).>
P1152	O2 Sensor Circuit Range/Performance (Low) (Bank1 Sensor1)	<Ref. to EN(H6DO)(diag)-276, DTC P1152 O2 SENSOR CIRCUIT RANGE/PERFORMANCE (LOW) (BANK1 SENSOR1), Diagnostic Procedure with Diagnostic Trouble Code (DTC).>
P1153	O2 Sensor Circuit Range/Performance (High) (Bank1 Sensor1)	<Ref. to EN(H6DO)(diag)-278, DTC P1153 O2 SENSOR CIRCUIT RANGE/PERFORMANCE (HIGH) (BANK1 SENSOR1), Diagnostic Procedure with Diagnostic Trouble Code (DTC).>
P1154	O2 Sensor Circuit Range/Performance (Low) (Bank 2 Sensor 1)	<Ref. to EN(H6DO)(diag)-280, DTC P1154 O2 SENSOR CIRCUIT RANGE/PERFORMANCE (LOW) (BANK 2 SENSOR 1), Diagnostic Procedure with Diagnostic Trouble Code (DTC).>

DTC	Item	Note
P1155	O2 Sensor Circuit Range/Performance (High) (Bank 2 Sensor 1)	<Ref. to EN(H6DO)(diag)-282, DTC P1155 O2 SENSOR CIRCUIT RANGE/PERFORMANCE (HIGH) (BANK 2 SENSOR 1), Diagnostic Procedure with Diagnostic Trouble Code (DTC).>
P1160	Return Spring Failure	<Ref. to EN(H6DO)(diag)-283, DTC P1160 RETURN SPRING FAILURE, Diagnostic Procedure with Diagnostic Trouble Code (DTC).>
P1443	Vent Control Solenoid Valve Function Problem	<Ref. to EN(H6DO)(diag)-284, DTC P1443 VENT CONTROL SOLENOID VALVE FUNCTION PROBLEM, Diagnostic Procedure with Diagnostic Trouble Code (DTC).>
P1492	EGR Solenoid Valve Signal #1 Circuit Malfunction (Low Input)	<Ref. to EN(H6DO)(diag)-284, DTC P1492 EGR SOLENOID VALVE SIGNAL #1 CIRCUIT MALFUNCTION (LOW INPUT), Diagnostic Procedure with Diagnostic Trouble Code (DTC).>
P1493	EGR Solenoid Valve Signal #1 Circuit Malfunction (High Input)	<Ref. to EN(H6DO)(diag)-284, DTC P1493 EGR SOLENOID VALVE SIGNAL #1 CIRCUIT MALFUNCTION (HIGH INPUT), Diagnostic Procedure with Diagnostic Trouble Code (DTC).>
P1494	EGR Solenoid Valve Signal #2 Circuit Malfunction (Low Input)	<Ref. to EN(H6DO)(diag)-285, DTC P1494 EGR SOLENOID VALVE SIGNAL #2 CIRCUIT MALFUNCTION (LOW INPUT), Diagnostic Procedure with Diagnostic Trouble Code (DTC).>
P1495	EGR Solenoid Valve Signal #2 Circuit Malfunction (High Input)	<Ref. to EN(H6DO)(diag)-285, DTC P1495 EGR SOLENOID VALVE SIGNAL #2 CIRCUIT MALFUNCTION (HIGH INPUT), Diagnostic Procedure with Diagnostic Trouble Code (DTC).>
P1496	EGR Solenoid Valve Signal #3 Circuit Malfunction (Low Input)	<Ref. to EN(H6DO)(diag)-285, DTC P1496 EGR SOLENOID VALVE SIGNAL #3 CIRCUIT MALFUNCTION (LOW INPUT), Diagnostic Procedure with Diagnostic Trouble Code (DTC).>
P1497	EGR Solenoid Valve Signal #3 Circuit Malfunction (High Input)	<Ref. to EN(H6DO)(diag)-285, DTC P1497 EGR SOLENOID VALVE SIGNAL #3 CIRCUIT MALFUNCTION (HIGH INPUT), Diagnostic Procedure with Diagnostic Trouble Code (DTC).>
P1498	EGR Solenoid Valve Signal #4 Circuit Malfunction (Low Input)	<Ref. to EN(H6DO)(diag)-286, DTC P1498 EGR SOLENOID VALVE SIGNAL #4 CIRCUIT MALFUNCTION (LOW INPUT), Diagnostic Procedure with Diagnostic Trouble Code (DTC).>
P1499	EGR Solenoid Valve Signal #4 Circuit Malfunction (High Input)	<Ref. to EN(H6DO)(diag)-289, DTC P1499 EGR SOLENOID VALVE SIGNAL #4 CIRCUIT MALFUNCTION (HIGH INPUT), Diagnostic Procedure with Diagnostic Trouble Code (DTC).>
P1518	Starter Switch Circuit Low Input	<Ref. to EN(H6DO)(diag)-292, DTC P1518 STARTER SWITCH CIRCUIT LOW INPUT, Diagnostic Procedure with Diagnostic Trouble Code (DTC).>
P1560	Back-Up Voltage Circuit Malfunction	<Ref. to EN(H6DO)(diag)-294, DTC P1560 BACK-UP VOLTAGE CIRCUIT MALFUNCTION, Diagnostic Procedure with Diagnostic Trouble Code (DTC).>
P1570	Antenna	<Ref. to IM(diag)-17, DTC P1570 ANTENNA, Diagnostic Procedure with Diagnostic Trouble Code (DTC).>
P1571	Reference Code Incompatibility	<Ref. to IM(diag)-19, DTC P1571 REFERENCE CODE INCOMPATIBILITY, Diagnostic Procedure with Diagnostic Trouble Code (DTC).>
P1572	IMM Circuit Failure (Except Antenna Circuit)	<Ref. to IM(diag)-20, DTC P1572 IMM CIRCUIT FAILURE (EXCEPT ANTENNA CIRCUIT), Diagnostic Procedure with Diagnostic Trouble Code (DTC).>
P1574	Key Communication Failure	<Ref. to IM(diag)-22, DTC P1574 KEY COMMUNICATION FAILURE, Diagnostic Procedure with Diagnostic Trouble Code (DTC).>
P1576	EGI Control Module EEPROM	<Ref. to IM(diag)-22, DTC P1576 EGI CONTROL MODULE EEPROM, Diagnostic Procedure with Diagnostic Trouble Code (DTC).>
P1577	IMM Control Module EEPROM	<Ref. to IM(diag)-23, DTC P1577 IMM CONTROL MODULE EEPROM, Diagnostic Procedure with Diagnostic Trouble Code (DTC).>
P1578	Meter Failure	<Ref. to IM(diag)-24, DTC P1578 METER FAILURE, Diagnostic Procedure with Diagnostic Trouble Code (DTC).>
P2088	Intake Camshaft Position Actuator Control Circuit Low (Bank 1)	<Ref. to EN(H6DO)(diag)-296, DTC P2088 INTAKE CAMSHAFT POSITION ACTUATOR CONTROL CIRCUIT LOW (BANK 1), Diagnostic Procedure with Diagnostic Trouble Code (DTC).>

DTC	Item	Note
P2089	Intake Camshaft Position Actuator Control Circuit High (Bank 1)	<Ref. to EN(H6DO)(diag)-298, DTC P2089 INTAKE CAMSHAFT POSITION ACTUATOR CONTROL CIRCUIT HIGH (BANK 1), Diagnostic Procedure with Diagnostic Trouble Code (DTC).>
P2090	Exhaust Camshaft Position Actuator Control Circuit Low (Bank 1)	<Ref. to EN(H6DO)(diag)-300, DTC P2090 EXHAUST CAMSHAFT POSITION ACTUATOR CONTROL CIRCUIT LOW (BANK 1), Diagnostic Procedure with Diagnostic Trouble Code (DTC).>
P2091	Exhaust Camshaft Position Actuator Control Circuit High (Bank 1)	<Ref. to EN(H6DO)(diag)-302, DTC P2091 EXHAUST CAMSHAFT POSITION ACTUATOR CONTROL CIRCUIT HIGH (BANK 1), Diagnostic Procedure with Diagnostic Trouble Code (DTC).>
P2092	Intake Camshaft Position Actuator Control Circuit Low (Bank 2)	<Ref. to EN(H6DO)(diag)-304, DTC P2092 INTAKE CAMSHAFT POSITION ACTUATOR CONTROL CIRCUIT LOW (BANK 2), Diagnostic Procedure with Diagnostic Trouble Code (DTC).>
P2093	Intake Camshaft Position Actuator Control Circuit High (Bank 2)	<Ref. to EN(H6DO)(diag)-306, DTC P2093 INTAKE CAMSHAFT POSITION ACTUATOR CONTROL CIRCUIT HIGH (BANK 2), Diagnostic Procedure with Diagnostic Trouble Code (DTC).>
P2094	Exhaust Camshaft Position Actuator Control Circuit Low (Bank 2)	<Ref. to EN(H6DO)(diag)-308, DTC P2094 EXHAUST CAMSHAFT POSITION ACTUATOR CONTROL CIRCUIT LOW (BANK 2), Diagnostic Procedure with Diagnostic Trouble Code (DTC).>
P2095	Exhaust Camshaft Position Actuator Control Circuit High (Bank 2)	<Ref. to EN(H6DO)(diag)-310, DTC P2095 EXHAUST CAMSHAFT POSITION ACTUATOR CONTROL CIRCUIT HIGH (BANK 2), Diagnostic Procedure with Diagnostic Trouble Code (DTC).>
P2096	Post Catalyst Fuel Trim System Too Lean (Bank 1)	<Ref. to EN(H6DO)(diag)-312, DTC P2096 POST CATALYST FUEL TRIM SYSTEM TOO LEAN (BANK 1), Diagnostic Procedure with Diagnostic Trouble Code (DTC).>
P2097	Post Catalyst Fuel Trim System Too Rich (Bank 1)	<Ref. to EN(H6DO)(diag)-318, DTC P2097 POST CATALYST FUEL TRIM SYSTEM TOO RICH (BANK 1), Diagnostic Procedure with Diagnostic Trouble Code (DTC).>
P2098	Post Catalyst Fuel Trim System Too Lean Bank 2	<Ref. to EN(H6DO)(diag)-324, DTC P2098 POST CATALYST FUEL TRIM SYSTEM TOO LEAN BANK 2, Diagnostic Procedure with Diagnostic Trouble Code (DTC).>
P2099	Post Catalyst Fuel Trim System Too Rich Bank 2	<Ref. to EN(H6DO)(diag)-330, DTC P2099 POST CATALYST FUEL TRIM SYSTEM TOO RICH BANK 2, Diagnostic Procedure with Diagnostic Trouble Code (DTC).>
P2101	Throttle Actuator Control Motor Circuit Range/Performance	<Ref. to EN(H6DO)(diag)-336, DTC P2101 THROTTLE ACTUATOR CONTROL MOTOR CIRCUIT RANGE/PERFORMANCE, Diagnostic Procedure with Diagnostic Trouble Code (DTC).>
P2102	Throttle Actuator Control Motor Circuit Low	<Ref. to EN(H6DO)(diag)-341, DTC P2102 THROTTLE ACTUATOR CONTROL MOTOR CIRCUIT LOW, Diagnostic Procedure with Diagnostic Trouble Code (DTC).>
P2103	Throttle Actuator Control Motor Circuit High	<Ref. to EN(H6DO)(diag)-343, DTC P2103 THROTTLE ACTUATOR CONTROL MOTOR CIRCUIT HIGH, Diagnostic Procedure with Diagnostic Trouble Code (DTC).>
P2109	Throttle/Pedal Position Sensor “A” Minimum Stop Performance	<Ref. to EN(H6DO)(diag)-344, DTC P2109 THROTTLE/PEDAL POSITION SENSOR “A” MINIMUM STOP PERFORMANCE, Diagnostic Procedure with Diagnostic Trouble Code (DTC).>
P2122	Throttle/Pedal Position Sensor/ Switch “D” Circuit Low Input	<Ref. to EN(H6DO)(diag)-345, DTC P2122 THROTTLE/PEDAL POSITION SENSOR/SWITCH “D” CIRCUIT LOW INPUT, Diagnostic Procedure with Diagnostic Trouble Code (DTC).>
P2123	Throttle/Pedal Position Sensor/ Switch “D” Circuit High Input	<Ref. to EN(H6DO)(diag)-347, DTC P2123 THROTTLE/PEDAL POSITION SENSOR/SWITCH “D” CIRCUIT HIGH INPUT, Diagnostic Procedure with Diagnostic Trouble Code (DTC).>
P2127	Throttle/Pedal Position Sensor/ Switch “E” Circuit Low Input	<Ref. to EN(H6DO)(diag)-349, DTC P2127 THROTTLE/PEDAL POSITION SENSOR/SWITCH “E” CIRCUIT LOW INPUT, Diagnostic Procedure with Diagnostic Trouble Code (DTC).>
P2128	Throttle/Pedal Position Sensor/ Switch “E” Circuit High Input	<Ref. to EN(H6DO)(diag)-351, DTC P2128 THROTTLE/PEDAL POSITION SENSOR/SWITCH “E” CIRCUIT HIGH INPUT, Diagnostic Procedure with Diagnostic Trouble Code (DTC).>

DTC	Item	Note
P2135	Throttle/Pedal Position Sensor/ Switch “A”/“B” Voltage Correlation	<Ref. to EN(H6DO)(diag)-353, DTC P2135 THROTTLE/PEDAL POSITION SENSOR/SWITCH “A”/“B” VOLTAGE CORRELATION, Diagnostic Procedure with Diagnostic Trouble Code (DTC).>
P2138	Throttle/Pedal Position Sensor/ Switch “D”/“E” Voltage Correlation	<Ref. to EN(H6DO)(diag)-356, DTC P2138 THROTTLE/PEDAL POSITION SENSOR/SWITCH “D”/“E” VOLTAGE CORRELATION, Diagnostic Procedure with Diagnostic Trouble Code (DTC).>
P219A	Bank 1 Air-Fuel Ratio Imbalance	<Ref. to EN(H6DO)(diag)-358, DTC P219A BANK 1 AIR-FUEL RATIO IMBALANCE, Diagnostic Procedure with Diagnostic Trouble Code (DTC).>
P219B	Bank 2 Air-Fuel Ratio Imbalance	<Ref. to EN(H6DO)(diag)-368, DTC P219B BANK 2 AIR-FUEL RATIO IMBALANCE, Diagnostic Procedure with Diagnostic Trouble Code (DTC).>
P2227	Barometric Pressure Circuit Range/ Performance	<Ref. to EN(H6DO)(diag)-378, DTC P2227 BAROMETRIC PRESSURE CIRCUIT RANGE/PERFORMANCE, Diagnostic Procedure with Diagnostic Trouble Code (DTC).>
P2228	Barometric Pressure Circuit Low	<Ref. to EN(H6DO)(diag)-378, DTC P2228 BAROMETRIC PRESSURE CIRCUIT LOW, Diagnostic Procedure with Diagnostic Trouble Code (DTC).>
P2229	Barometric Pressure Circuit High	<Ref. to EN(H6DO)(diag)-379, DTC P2229 BAROMETRIC PRESSURE CIRCUIT HIGH, Diagnostic Procedure with Diagnostic Trouble Code (DTC).>
P2610	ECM/PCM Internal Engine Off Timer Performance	<Ref. to EN(H6DO)(diag)-379, DTC P2610 ECM/PCM INTERNAL ENGINE OFF TIMER PERFORMANCE, Diagnostic Procedure with Diagnostic Trouble Code (DTC).>
U0073	CAN Failure, Bus ‘Off’ Detection	<Ref. to EN(H6DO)(diag)-379, DTC U0073 CAN FAILURE, BUS ‘OFF’ DETECTION, Diagnostic Procedure with Diagnostic Trouble Code (DTC).>
U0101	CAN (TCU) Data Not Loaded	<Ref. to EN(H6DO)(diag)-379, DTC U0101 CAN (TCU) DATA NOT LOADED, Diagnostic Procedure with Diagnostic Trouble Code (DTC).>
U0122	CAN (VDC) Data Not Loaded	<Ref. to EN(H6DO)(diag)-379, DTC U0122 CAN (VDC) DATA NOT LOADED, Diagnostic Procedure with Diagnostic Trouble Code (DTC).>
U0140	CAN (BCU) Data Not Loaded	<Ref. to EN(H6DO)(diag)-380, DTC U0140 CAN (BCU) DATA NOT LOADED, Diagnostic Procedure with Diagnostic Trouble Code (DTC).>
U0402	CAN (TCU) Data Abnormal	<Ref. to EN(H6DO)(diag)-380, DTC U0402 CAN (TCU) DATA ABNORMAL, Diagnostic Procedure with Diagnostic Trouble Code (DTC).>
U0416	CAN (VDC) Data Abnormal	<Ref. to EN(H6DO)(diag)-380, DTC U0416 CAN (VDC) DATA ABNORMAL, Diagnostic Procedure with Diagnostic Trouble Code (DTC).>
U0422	CAN (BCU) Data Abnormal	<Ref. to EN(H6DO)(diag)-380, DTC U0422 CAN (BCU) DATA ABNORMAL, Diagnostic Procedure with Diagnostic Trouble Code (DTC).>

19.Diagnostic Procedure with Diagnostic Trouble Code (DTC)

A: DTC P0011 INTAKE CAMSHAFT POSITION - TIMING OVER-ADVANCED OR SYSTEM PERFORMANCE (BANK 1)

DTC DETECTING CONDITION:

- Detected when two consecutive driving cycles with fault occur.
- GENERAL DESCRIPTION <Ref. to GD(H6DO)-11, DTC P0011 INTAKE CAMSHAFT POSITION - TIMING OVER-ADVANCED OR SYSTEM PERFORMANCE (BANK 1), Diagnostic Trouble Code (DTC) Detecting Criteria.>

TROUBLE SYMPTOM:

- Engine stalls.
- Improper idling

CAUTION:

After servicing or replacing faulty parts, perform Clear Memory Mode <Ref. to EN(H6DO)(diag)-57, OPERATION, Clear Memory Mode.>, and Inspection Mode <Ref. to EN(H6DO)(diag)-44, PROCEDURE, Inspection Mode.>.

	Step	Check	Yes	No
1	**CHECK CURRENT DATA.** 1) Start the engine and let it idle. 2) Read the value of «VVT Adv. Ang. Amount R» using the Subaru Select Monitor. NOTE: For detailed operation procedures, refer to “READ CURRENT DATA FOR ENGINE”. <Ref. to EN(H6DO)(diag)-35, Subaru Select Monitor.>	Is the value of «VVT Adv. Ang. Amount R» approx. 0 deg?	Go to step **2**.	Check the following item and repair or replace if necessary. • Oil pipe (clog) • Oil flow control solenoid valve (clog or dirt of oil routing, setting of spring) • Intake camshaft (dirt, damage of camshaft)
2	**CHECK CURRENT DATA.** 1) Drive with acceleration and deceleration at 80 km/h (50 MPH) or less. NOTE: Drive to an extent that the duty output of oil flow control solenoid valve increases. 2) Read the values of «OCV Duty R» and «VVT Adv. Ang. Amount R» using the Subaru Select Monitor. NOTE: For detailed operation procedures, refer to “READ CURRENT DATA FOR ENGINE”. <Ref. to EN(H6DO)(diag)-35, Subaru Select Monitor.>	When the value of «OCV Duty R» increases more than 10%, is the value of «VVT Adv. Ang. Amount R» approx. 0 deg?	Check the following item and repair or replace if necessary. • Oil pipe (clog) • Oil flow control solenoid valve (clog or dirt of oil routing, setting of spring) • Intake camshaft (dirt, damage of camshaft)	Perform the following procedures, and clean the oil routing. Replace the engine oil and idle the engine for 5 minutes, and then replace the oil filter and engine oil. <Ref. to LU(H6DO)-9, REPLACEMENT, Engine Oil.> <Ref. to LU(H6DO)-15, Engine Oil Filter.>

B: DTC P0014 EXHAUST AVCS SYSTEM 1 (RANGE/PERFORMANCE)

DTC DETECTING CONDITION:

- Detected when two consecutive driving cycles with fault occur.
- GENERAL DESCRIPTION <Ref. to GD(H6DO)-13, DTC P0014 EXHAUST AVCS SYSTEM 1 (RANGE/PERFORMANCE), Diagnostic Trouble Code (DTC) Detecting Criteria.>

TROUBLE SYMPTOM:

- Engine stalls.
- Improper idling

CAUTION:

After servicing or replacing faulty parts, perform Clear Memory Mode <Ref. to EN(H6DO)(diag)-57, OPERATION, Clear Memory Mode.>, and Inspection Mode <Ref. to EN(H6DO)(diag)-44, PROCEDURE, Inspection Mode.>.

	Step	Check	Yes	No
1	**CHECK CURRENT DATA.** 1) Start the engine and let it idle. 2) Read the value of «Exh. VVT Retard Ang. R» using the Subaru Select Monitor. NOTE: For detailed operation procedures, refer to “READ CURRENT DATA FOR ENGINE”. <Ref. to EN(H6DO)(diag)-35, Subaru Select Monitor.>	Is the value of «Exh. VVT Retard Ang. R» approx. 0 deg?	Go to step **2**.	Check the following item and repair or replace if necessary. • Oil pipe (clog) • Oil flow control solenoid valve (clog or dirt of oil routing, setting of spring) • Exhaust camshaft (dirt, damage of camshaft)
2	**CHECK CURRENT DATA.** 1) Drive with acceleration and deceleration at 80 km/h (50 MPH) or less. NOTE: Drive to an extent that the duty output of oil flow control solenoid valve increases. 2) Read the values of «Exh. OCV Duty R» and «Exh. VVT Retard Ang. R» using the Subaru Select Monitor. NOTE: For detailed operation procedures, refer to “READ CURRENT DATA FOR ENGINE”. <Ref. to EN(H6DO)(diag)-35, Subaru Select Monitor.>	When the value of «Exh. OCV Duty R» increases more than 10%, is the value of «Exh. VVT Retard Ang. R» approx. 0 deg?	Check the following item and repair or replace if necessary. • Oil pipe (clog) • Oil flow control solenoid valve (clog or dirt of oil routing, setting of spring) • Exhaust camshaft (dirt, damage of camshaft)	Perform the following procedures, and clean the oil routing. Replace the engine oil and idle the engine for 5 minutes, and then replace the oil filter and engine oil. <Ref. to LU(H6DO)-9, REPLACEMENT, Engine Oil.> <Ref. to LU(H6DO)-15, Engine Oil Filter.>

C: DTC P0016 CRANKSHAFT POSITION - CAMSHAFT POSITION CORRELATION (BANK1)

DTC DETECTING CONDITION:

- Detected when two consecutive driving cycles with fault occur.
- GENERAL DESCRIPTION <Ref. to GD(H6DO)-15, DTC P0016 CRANKSHAFT POSITION - CAMSHAFT POSITION CORRELATION (BANK1), Diagnostic Trouble Code (DTC) Detecting Criteria.>

TROUBLE SYMPTOM:

- Engine stalls.
- Improper idling

CAUTION:

After servicing or replacing faulty parts, perform Clear Memory Mode <Ref. to EN(H6DO)(diag)-57, OPERATION, Clear Memory Mode.>, and Inspection Mode <Ref. to EN(H6DO)(diag)-44, PROCEDURE, Inspection Mode.>.

	Step	Check	Yes	No
1	**CHECK CURRENT DATA.** 1) Start the engine and let it idle. 2) Read the values of «VVT Adv. Ang. Amount R» and «OCV Duty R» using the Subaru Select Monitor. NOTE: For detailed operation procedures, refer to “READ CURRENT DATA FOR ENGINE”. <Ref. to EN(H6DO)(diag)-35, Subaru Select Monitor.>	Is the value of «VVT Adv. Ang. Amount R» approx. 0 deg, and the value of «OCV Duty R» approx. 10%?	Perform the following procedures, and clean the oil routing. Replace the engine oil and idle the engine for 5 minutes, and then replace the oil filter and engine oil. <Ref. to LU(H6DO)-9, REPLACEMENT, Engine Oil.> <Ref. to LU(H6DO)-15, Engine Oil Filter.>	Check the following item and repair or replace if necessary. • Oil pipe (clog) • Oil flow control solenoid valve (clog or dirt of oil routing, setting of spring) • Intake camshaft (dirt, damage of camshaft) • Timing chain (matching of timing mark)

D: DTC P0017 CRANK AND CAM TIMING B SYSTEM FAILURE (BANK 1)

DTC DETECTING CONDITION:

- Detected when two consecutive driving cycles with fault occur.
- GENERAL DESCRIPTION <Ref. to GD(H6DO)-17, DTC P0017 CRANK AND CAM TIMING B SYSTEM FAILURE (BANK 1), Diagnostic Trouble Code (DTC) Detecting Criteria.>

TROUBLE SYMPTOM:

- Engine stalls.
- Improper idling

CAUTION:

After servicing or replacing faulty parts, perform Clear Memory Mode <Ref. to EN(H6DO)(diag)-57, OPERATION, Clear Memory Mode.>, and Inspection Mode <Ref. to EN(H6DO)(diag)-44, PROCEDURE, Inspection Mode.>.

	Step	Check	Yes	No
1	**CHECK CURRENT DATA.** 1) Start the engine and let it idle. 2) Read the values of «Exh. VVT Retard Ang. R» and «Exh. OCV Duty R» using the Subaru Select Monitor. NOTE: For detailed operation procedures, refer to “READ CURRENT DATA FOR ENGINE”. <Ref. to EN(H6DO)(diag)-35, Subaru Select Monitor.>	Is the value of «Exh. VVT Retard Ang. R» approx. 0 deg, and the value of «Exh. OCV Duty R» approx. 10%?	Perform the following procedures, and clean the oil routing. Replace the engine oil and idle the engine for 5 minutes, and then replace the oil filter and engine oil. <Ref. to LU(H6DO)-9, REPLACEMENT, Engine Oil.> <Ref. to LU(H6DO)-15, Engine Oil Filter.>	Check the following item and repair or replace if necessary. • Oil pipe (clog) • Oil flow control solenoid valve (clog or dirt of oil routing, setting of spring) • Exhaust camshaft (dirt, damage of camshaft) • Timing chain (matching of timing mark)

E: DTC P0018 CRANKSHAFT POSITION - CAMSHAFT POSITION CORRELATION (BANK2)

DTC DETECTING CONDITION:

- Detected when two consecutive driving cycles with fault occur.
- GENERAL DESCRIPTION <Ref. to GD(H6DO)-19, DTC P0018 CRANKSHAFT POSITION - CAMSHAFT POSITION CORRELATION (BANK2), Diagnostic Trouble Code (DTC) Detecting Criteria.>

TROUBLE SYMPTOM:

- Engine stalls.
- Improper idling

CAUTION:

After servicing or replacing faulty parts, perform Clear Memory Mode <Ref. to EN(H6DO)(diag)-57, OPERATION, Clear Memory Mode.>, and Inspection Mode <Ref. to EN(H6DO)(diag)-44, PROCEDURE, Inspection Mode.>.

	Step	Check	Yes	No
1	**CHECK CURRENT DATA.** 1) Start the engine and let it idle. 2) Read the values of «VVT Adv. Ang. Amount L» and «OCV Duty L» using the Subaru Select Monitor. NOTE: For detailed operation procedures, refer to “READ CURRENT DATA FOR ENGINE”. <Ref. to EN(H6DO)(diag)-35, Subaru Select Monitor.>	Is the value of «VVT Adv. Ang. Amount L» approx. 0 deg, and the value of «OCV Duty L» approx. 10%?	Perform the following procedures, and clean the oil routing. Replace the engine oil and idle the engine for 5 minutes, and then replace the oil filter and engine oil. <Ref. to LU(H6DO)-9, REPLACEMENT, Engine Oil.> <Ref. to LU(H6DO)-15, Engine Oil Filter.>	Check the following item and repair or replace if necessary. • Oil pipe (clog) • Oil flow control solenoid valve (clog or dirt of oil routing, setting of spring) • Intake camshaft (dirt, damage of camshaft) • Timing chain (matching of timing mark)

F: DTC P0019 CRANK AND CAM TIMING B SYSTEM FAILURE (BANK 2)

DTC DETECTING CONDITION:

- Detected when two consecutive driving cycles with fault occur.
- GENERAL DESCRIPTION <Ref. to GD(H6DO)-19, DTC P0019 CRANK AND CAM TIMING B SYSTEM FAILURE (BANK 2), Diagnostic Trouble Code (DTC) Detecting Criteria.>

TROUBLE SYMPTOM:

- Engine stalls.
- Improper idling

CAUTION:
After servicing or replacing faulty parts, perform Clear Memory Mode <Ref. to EN(H6DO)(diag)-57, OPERATION, Clear Memory Mode.>, and Inspection Mode <Ref. to EN(H6DO)(diag)-44, PROCEDURE, Inspection Mode.>.

	Step	Check	Yes	No
1	**CHECK CURRENT DATA.** 1) Start the engine and let it idle. 2) Read the values of «Exh. VVT Retard Ang. L» and «Exh. OCV Duty L» using the Subaru Select Monitor. NOTE: For detailed operation procedures, refer to “READ CURRENT DATA FOR ENGINE”. <Ref. to EN(H6DO)(diag)-35, Subaru Select Monitor.>	Is the value of «Exh. VVT Retard Ang. L» approx. 0 deg, and the value of «Exh. OCV Duty L» approx. 10%?	Perform the following procedures, and clean the oil routing. Replace the engine oil and idle the engine for 5 minutes, and then replace the oil filter and engine oil. <Ref. to LU(H6DO)-9, REPLACEMENT, Engine Oil.> <Ref. to LU(H6DO)-15, Engine Oil Filter.>	Check the following item and repair or replace if necessary. • Oil pipe (clog) • Oil flow control solenoid valve (clog or dirt of oil routing, setting of spring) • Exhaust camshaft (dirt, damage of camshaft) • Timing chain (matching of timing mark)

G: DTC P0021 INTAKE CAMSHAFT POSITION - TIMING OVER-ADVANCED OR SYSTEM PERFORMANCE (BANK 2)

DTC DETECTING CONDITION:

- Detected when two consecutive driving cycles with fault occur.
- GENERAL DESCRIPTION <Ref. to GD(H6DO)-19, DTC P0021 INTAKE CAMSHAFT POSITION - TIMING OVER-ADVANCED OR SYSTEM PERFORMANCE (BANK 2), Diagnostic Trouble Code (DTC) Detecting Criteria.>

TROUBLE SYMPTOM:

- Engine stalls.
- Improper idling

CAUTION:

After servicing or replacing faulty parts, perform Clear Memory Mode <Ref. to EN(H6DO)(diag)-57, OPERATION, Clear Memory Mode.>, and Inspection Mode <Ref. to EN(H6DO)(diag)-44, PROCEDURE, Inspection Mode.>.

	Step	Check	Yes	No
1	**CHECK CURRENT DATA.** 1) Start the engine and let it idle. 2) Read the value of «VVT Adv. Ang. Amount L» using the Subaru Select Monitor. NOTE: For detailed operation procedures, refer to “READ CURRENT DATA FOR ENGINE”. <Ref. to EN(H6DO)(diag)-35, Subaru Select Monitor.>	Is the value of «VVT Adv. Ang. Amount L» approx. 0 deg?	Go to step **2**.	Check the following item and repair or replace if necessary. • Oil pipe (clog) • Oil flow control solenoid valve (clog or dirt of oil routing, setting of spring) • Intake camshaft (dirt, damage of camshaft)
2	**CHECK CURRENT DATA.** 1) Drive with acceleration and deceleration at 80 km/h (50 MPH) or less. NOTE: Drive to an extent that the duty output of oil flow control solenoid valve increases. 2) Read the values of «OCV Duty L» and «VVT Adv. Ang. Amount L» using the Subaru Select Monitor. NOTE: For detailed operation procedures, refer to “READ CURRENT DATA FOR ENGINE”. <Ref. to EN(H6DO)(diag)-35, Subaru Select Monitor.>	When the value of «OCV Duty L» increases more than 10%, is the value of «VVT Adv. Ang. Amount L» approx. 0 deg?	Check the following item and repair or replace if necessary. • Oil pipe (clog) • Oil flow control solenoid valve (clog or dirt of oil routing, setting of spring) • Intake camshaft (dirt, damage of camshaft)	Perform the following procedures, and clean the oil routing. Replace the engine oil and idle the engine for 5 minutes, and then replace the oil filter and engine oil. <Ref. to LU(H6DO)-9, REPLACEMENT, Engine Oil.> <Ref. to LU(H6DO)-15, Engine Oil Filter.>

H: DTC P0024 EXHAUST AVCS SYSTEM 2 (RANGE/PERFORMANCE)

DTC DETECTING CONDITION:

- Detected when two consecutive driving cycles with fault occur.
- GENERAL DESCRIPTION <Ref. to GD(H6DO)-19, DTC P0024 EXHAUST AVCS SYSTEM 2 (RANGE/PERFORMANCE), Diagnostic Trouble Code (DTC) Detecting Criteria.>

TROUBLE SYMPTOM:

- Engine stalls.
- Improper idling

CAUTION:
After servicing or replacing faulty parts, perform Clear Memory Mode <Ref. to EN(H6DO)(diag)-57, OPERATION, Clear Memory Mode.>, and Inspection Mode <Ref. to EN(H6DO)(diag)-44, PROCEDURE, Inspection Mode.>.

	Step	Check	Yes	No
1	**CHECK CURRENT DATA.** 1) Start the engine and let it idle. 2) Read the value of «Exh. VVT Retard Ang. L» using the Subaru Select Monitor. NOTE: For detailed operation procedures, refer to “READ CURRENT DATA FOR ENGINE”. <Ref. to EN(H6DO)(diag)-35, Subaru Select Monitor.>	Is the value of «Exh. VVT Retard Ang. L» approx. 0 deg?	Go to step **2**.	Check the following item and repair or replace if necessary. • Oil pipe (clog) • Oil flow control solenoid valve (clog or dirt of oil routing, setting of spring) • Exhaust camshaft (dirt, damage of camshaft)
2	**CHECK CURRENT DATA.** 1) Drive with acceleration and deceleration at 80 km/h (50 MPH) or less. NOTE: Drive to an extent that the duty output of oil flow control solenoid valve increases. 2) Read the values of «Exh. OCV Duty L» and «Exh. VVT Retard Ang. L» using the Subaru Select Monitor. NOTE: For detailed operation procedures, refer to “READ CURRENT DATA FOR ENGINE”. <Ref. to EN(H6DO)(diag)-35, Subaru Select Monitor.>	When the value of «Exh. OCV Duty L» increases more than 10%, is the value of «Exh. VVT Retard Ang. L» approx. 0 deg?	Check the following item and repair or replace if necessary. • Oil pipe (clog) • Oil flow control solenoid valve (clog or dirt of oil routing, setting of spring) • Exhaust camshaft (dirt, damage of camshaft)	Perform the following procedures, and clean the oil routing. Replace the engine oil and idle the engine for 5 minutes, and then replace the oil filter and engine oil. <Ref. to LU(H6DO)-9, REPLACEMENT, Engine Oil.> <Ref. to LU(H6DO)-15, Engine Oil Filter.>

I: DTC P0030 HO2S HEATER CONTROL CIRCUIT (BANK 1 SENSOR 1)

DTC DETECTING CONDITION:

- Detected when two consecutive driving cycles with fault occur.
- GENERAL DESCRIPTION <Ref. to GD(H6DO)-20, DTC P0030 HO2S HEATER CONTROL CIRCUIT (BANK 1 SENSOR 1), Diagnostic Trouble Code (DTC) Detecting Criteria.>

CAUTION:

After servicing or replacing faulty parts, perform Clear Memory Mode <Ref. to EN(H6DO)(diag)-57, OPERATION, Clear Memory Mode.>, and Inspection Mode <Ref. to EN(H6DO)(diag)-44, PROCEDURE, Inspection Mode.>.

WIRING DIAGRAM:

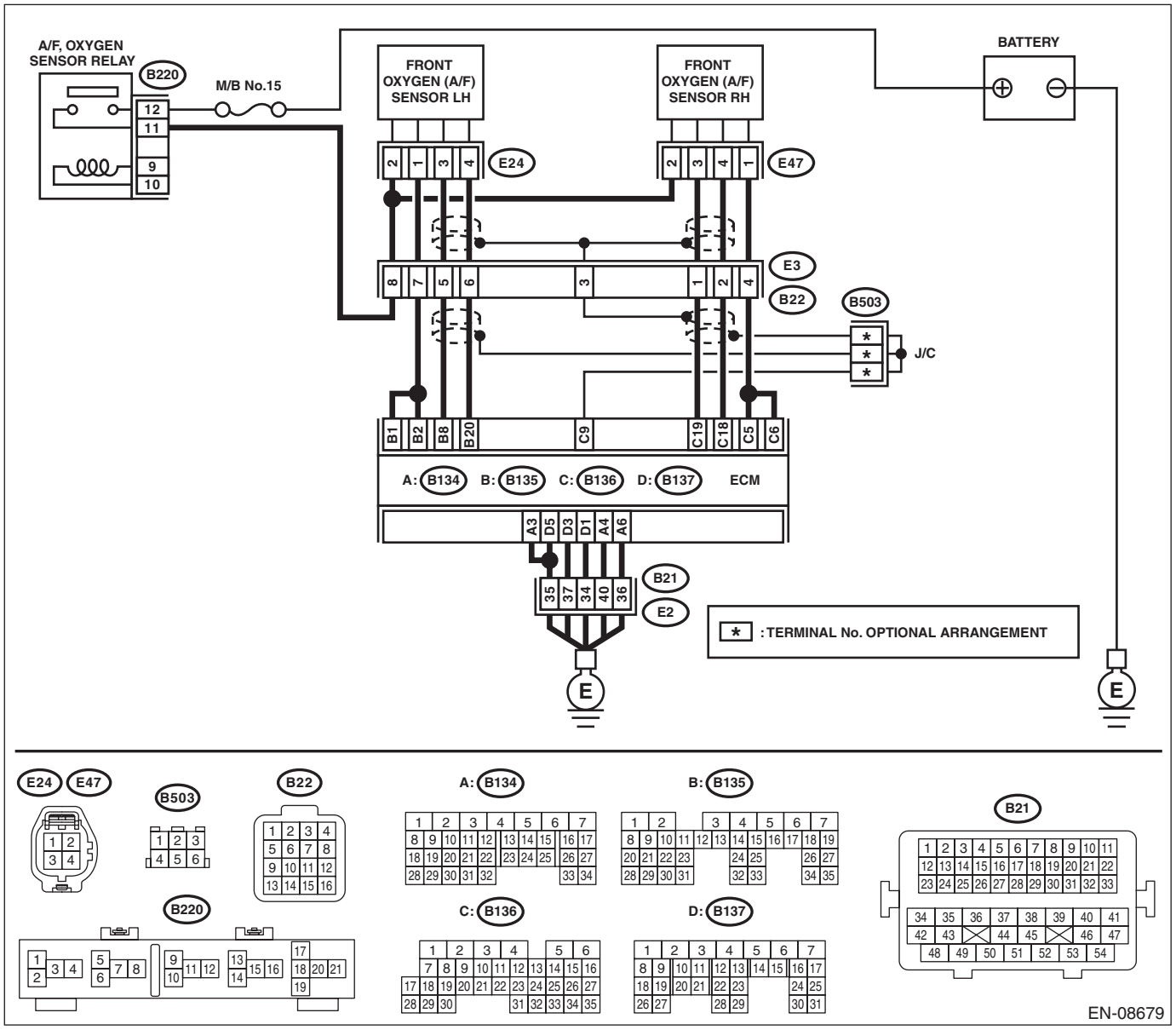

	Step	Check	Yes	No
1	**CHECK HARNESS BETWEEN ECM AND FRONT OXYGEN (A/F) SENSOR CONNECTOR.** 1) Start and warm up the engine. 2) Turn the ignition switch to OFF. 3) Disconnect the connectors from ECM and front oxygen (A/F) sensor. 4) Measure the resistance of harness between ECM and front oxygen (A/F) sensor connector. ***Connector & terminal*** ***(B136) No. 5 — (E47) No. 1:*** ***(B136) No. 6 — (E47) No. 1:*** ***(B136) No. 19 — (E47) No. 3:*** ***(B136) No. 18 — (E47) No. 4:***	Is the resistance less than 1 Ω?	Go to step **2**.	Repair the harness and connector. NOTE: In this case, repair the following item: • Open circuit in harness between ECM and front oxygen (A/F) sensor connector • Poor contact of coupling connector
2	**CHECK FRONT OXYGEN (A/F) SENSOR.** Measure the resistance between front oxygen (A/F) sensor connector terminals. ***Terminals*** ***No. 2 — No. 1:***	Is the resistance 2 — 3 Ω?	Go to step **3**.	Replace the front oxygen (A/F) sensor. <Ref. to FU(H6DO)-50, Front Oxygen (A/F) Sensor.>
3	**CHECK FOR POOR CONTACT.** Check for poor contact of ECM and front oxygen (A/F) sensor connector.	Is there poor contact of ECM or front oxygen (A/F) sensor connector?	Repair the poor contact of ECM or front oxygen (A/F) sensor connector.	Replace the front oxygen (A/F) sensor. <Ref. to FU(H6DO)-50, Front Oxygen (A/F) Sensor.>

J: DTC P0031 HO2S HEATER CONTROL CIRCUIT LOW (BANK 1 SENSOR 1)

DTC DETECTING CONDITION:

- Immediately at fault recognition
- GENERAL DESCRIPTION <Ref. to GD(H6DO)-22, DTC P0031 HO2S HEATER CONTROL CIRCUIT LOW (BANK 1 SENSOR 1), Diagnostic Trouble Code (DTC) Detecting Criteria.>

CAUTION:

After servicing or replacing faulty parts, perform Clear Memory Mode <Ref. to EN(H6DO)(diag)-57, OPERATION, Clear Memory Mode.>, and Inspection Mode <Ref. to EN(H6DO)(diag)-44, PROCEDURE, Inspection Mode.>.

WIRING DIAGRAM:

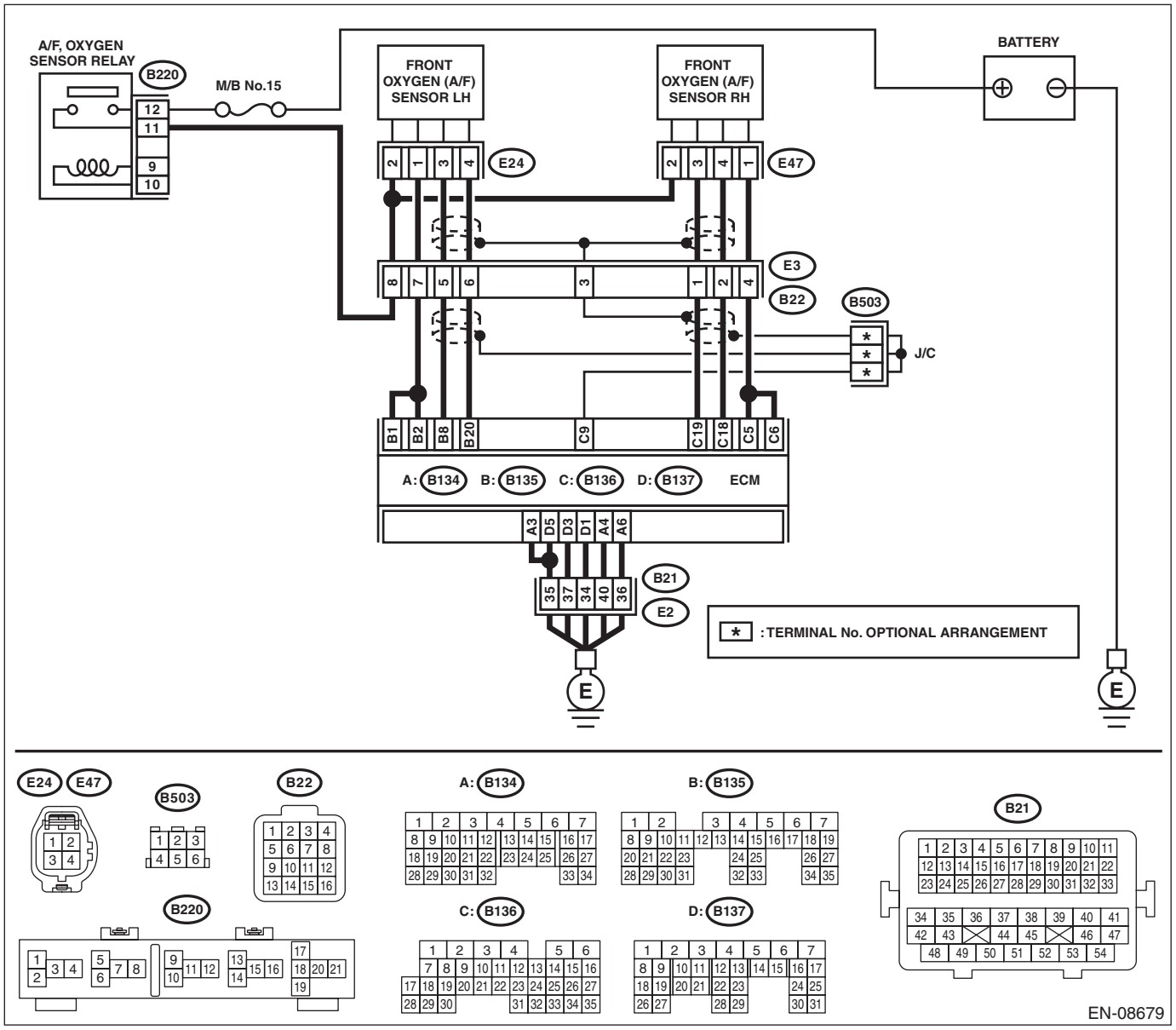

	Step	Check	Yes	No
1	**CHECK POWER SUPPLY TO FRONT OXYGEN (A/F) SENSOR.** 1) Turn the ignition switch to OFF. 2) Disconnect the connectors from front oxygen (A/F) sensor. 3) Turn the ignition switch to ON. 4) Measure the voltage between front oxygen (A/F) sensor connector and engine ground. ***Connector & terminal*** ***(E47) No. 2 (+) — Engine ground (–):***	Is the voltage 10 V or more?	Go to step **2**.	Repair the power supply line. NOTE: In this case, repair the following item: • Open circuit in harness between A/F, oxygen sensor relay and front oxygen (A/F) sensor connector • Poor contact of A/F, oxygen sensor relay connector • Poor contact of coupling connector • Malfunction of A/F, oxygen sensor relay
2	**CHECK HARNESS BETWEEN ECM AND FRONT OXYGEN (A/F) SENSOR CONNECTOR.** 1) Turn the ignition switch to OFF. 2) Disconnect the connectors from ECM. 3) Measure the resistance between ECM and front oxygen (A/F) sensor connector. ***Connector & terminal*** ***(B136) No. 5 — (E47) No. 1:*** ***(B136) No. 6 — (E47) No. 1:***	Is the resistance less than 1 Ω?	Go to step **3**.	Repair the harness and connector. NOTE: In this case, repair the following item: • Open circuit in harness between ECM and front oxygen (A/F) sensor connector • Poor contact of coupling connector
3	**CHECK GROUND CIRCUIT FOR ECM.** Measure the resistance of harness between ECM and chassis ground. ***Connector & terminal*** ***(B134) No. 3 — Chassis ground:*** ***(B134) No. 4 — Chassis ground:*** ***(B134) No. 6 — Chassis ground:*** ***(B137) No. 1 — Chassis ground:*** ***(B137) No. 3 — Chassis ground:*** ***(B137) No. 5 — Chassis ground:***	Is the resistance less than 5 Ω?	Go to step **4**.	Repair the harness and connector. NOTE: In this case, repair the following item: • Open circuit of harness between ECM and engine ground • Poor contact of coupling connector
4	**CHECK FRONT OXYGEN (A/F) SENSOR.** Measure the resistance between front oxygen (A/F) sensor connector terminals. ***Terminals*** ***No. 2 — No. 1:***	Is the resistance 2 — 3 Ω?	Repair the poor contact of ECM connector.	Replace the front oxygen (A/F) sensor. <Ref. to FU(H6DO)-50, Front Oxygen (A/F) Sensor.>

K: DTC P0032 HO2S HEATER CONTROL CIRCUIT HIGH (BANK 1 SENSOR 1)

DTC DETECTING CONDITION:

- Immediately at fault recognition
- GENERAL DESCRIPTION <Ref. to GD(H6DO)-24, DTC P0032 HO2S HEATER CONTROL CIRCUIT HIGH (BANK 1 SENSOR 1), Diagnostic Trouble Code (DTC) Detecting Criteria.>

CAUTION:

After servicing or replacing faulty parts, perform Clear Memory Mode <Ref. to EN(H6DO)(diag)-57, OPERATION, Clear Memory Mode.>, and Inspection Mode <Ref. to EN(H6DO)(diag)-44, PROCEDURE, Inspection Mode.>.

WIRING DIAGRAM:

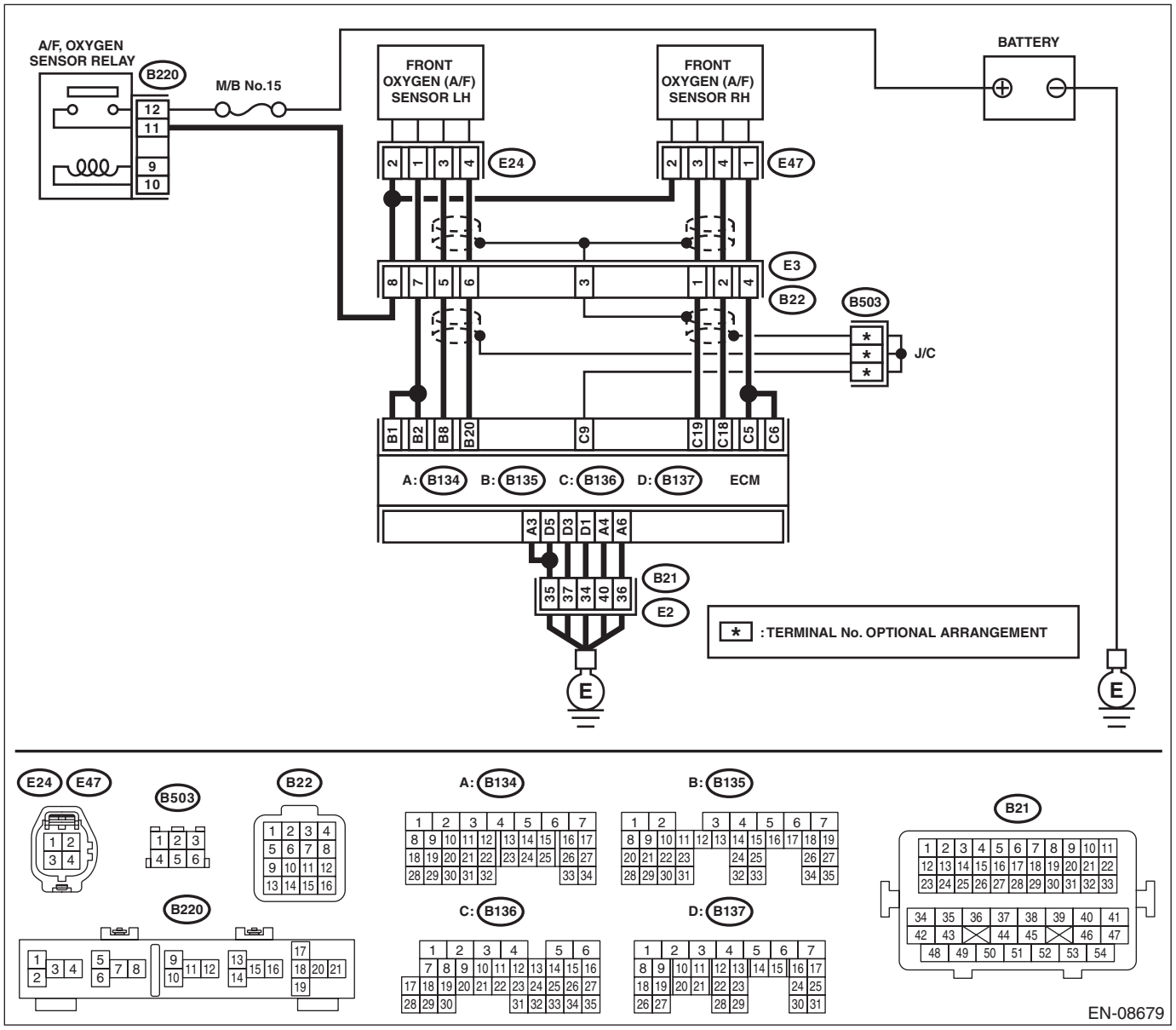

	Step	Check	Yes	No
1	**CHECK HARNESS BETWEEN ECM AND FRONT OXYGEN (A/F) SENSOR CONNECTOR.** 1) Turn the ignition switch to OFF. 2) Measure the voltage between ECM and chassis ground. ***Connector & terminal*** ***(B136) No. 5 (+) — Chassis ground (–):*** ***(B136) No. 6 (+) — Chassis ground (–):***	Is the voltage 10 V or more?	Repair the short circuit to power in the harness between ECM and front oxygen (A/F) sensor connector.	Go to step **2**.
2	**CHECK GROUND CIRCUIT FOR ECM.** 1) Disconnect the connectors from ECM. 2) Measure the resistance between ECM and chassis ground. ***Connector & terminal*** ***(B134) No. 3 — Chassis ground:*** ***(B134) No. 4 — Chassis ground:*** ***(B134) No. 6 — Chassis ground:*** ***(B137) No. 1 — Chassis ground:*** ***(B137) No. 3 — Chassis ground:*** ***(B137) No. 5 — Chassis ground:***	Is the resistance less than 5 Ω?	Repair the poor contact of ECM connector.	Repair the harness and connector. NOTE: In this case, repair the following item: • Open circuit of harness between ECM and engine ground • Poor contact of coupling connector

L: DTC P0037 HO2S HEATER CONTROL CIRCUIT LOW (BANK 1 SENSOR 2)

DTC DETECTING CONDITION:

- Detected when two consecutive driving cycles with fault occur.
- GENERAL DESCRIPTION <Ref. to GD(H6DO)-26, DTC P0037 HO2S HEATER CONTROL CIRCUIT LOW (BANK 1 SENSOR 2), Diagnostic Trouble Code (DTC) Detecting Criteria.>

CAUTION:

After servicing or replacing faulty parts, perform Clear Memory Mode <Ref. to EN(H6DO)(diag)-57, OPERATION, Clear Memory Mode.>, and Inspection Mode <Ref. to EN(H6DO)(diag)-44, PROCEDURE, Inspection Mode.>.

WIRING DIAGRAM:

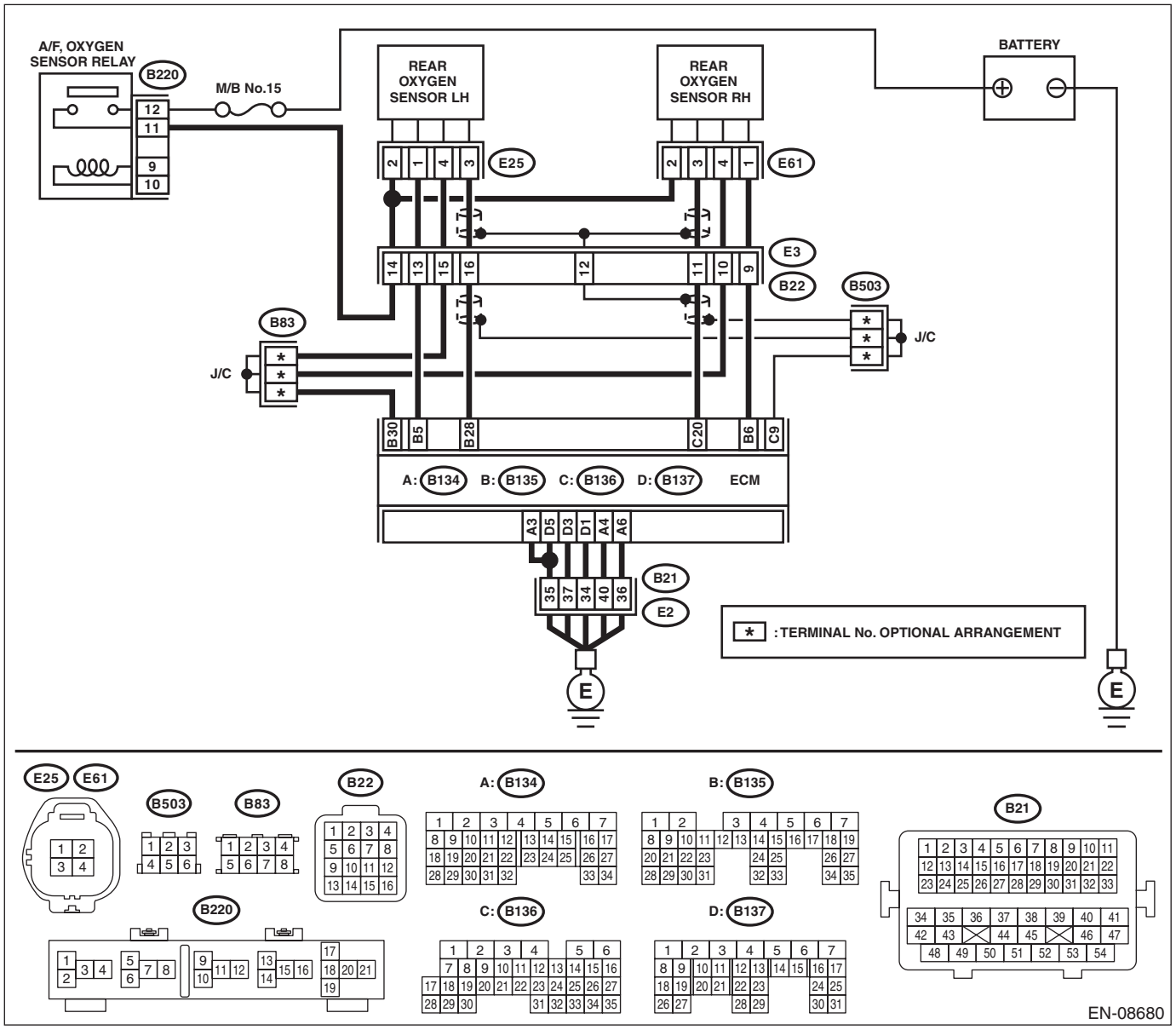

	Step	Check	Yes	No
1	**CHECK POWER SUPPLY TO REAR OXYGEN SENSOR.** 1) Turn the ignition switch to OFF. 2) Disconnect the connector from rear oxygen sensor. 3) Turn the ignition switch to ON. 4) Measure the voltage between rear oxygen sensor connector and engine ground. ***Connector & terminal*** ***(E61) No. 2 (+) — Engine ground (–):***	Is the voltage 10 V or more?	Go to step **2**.	Repair the power supply line. NOTE: In this case, repair the following item: • Open circuit in harness between A/F, oxygen sensor relay and rear oxygen sensor connector • Poor contact of A/F, oxygen sensor relay connector • Poor contact of coupling connector • Malfunction of A/F, oxygen sensor relay
2	**CHECK HARNESS BETWEEN ECM AND REAR OXYGEN SENSOR CONNECTOR.** 1) Turn the ignition switch to OFF. 2) Disconnect the connector from ECM. 3) Measure the resistance between ECM and oxygen sensor connector. ***Connector & terminal*** ***(B135) No. 6 — (E61) No. 1:***	Is the resistance less than 1 Ω?	Go to step **3**.	Repair the harness and connector. NOTE: In this case, repair the following item: • Open circuit in harness between ECM and rear oxygen sensor connector • Poor contact of coupling connector
3	**CHECK GROUND CIRCUIT FOR ECM.** Measure the resistance of harness between ECM and chassis ground. ***Connector & terminal*** ***(B134) No. 3 — Chassis ground:*** ***(B134) No. 4 — Chassis ground:*** ***(B134) No. 6 — Chassis ground:*** ***(B137) No. 1 — Chassis ground:*** ***(B137) No. 3 — Chassis ground:*** ***(B137) No. 5 — Chassis ground:***	Is the resistance less than 5 Ω?	Go to step **4**.	Repair the harness and connector. NOTE: In this case, repair the following item: • Open circuit of harness between ECM and engine ground • Poor contact of coupling connector
4	**CHECK REAR OXYGEN SENSOR.** Measure the resistance between rear oxygen sensor connector terminals. ***Terminals*** ***No. 2 — No. 1:***	Is the resistance 5 — 7 Ω?	Repair the poor contact of ECM connector.	Replace the rear oxygen sensor. <Ref. to FU(H6DO)-52, Rear Oxygen Sensor.>

M: DTC P0038 HO2S HEATER CONTROL CIRCUIT HIGH (BANK 1 SENSOR 2)

DTC DETECTING CONDITION:

- Detected when two consecutive driving cycles with fault occur.
- GENERAL DESCRIPTION <Ref. to GD(H6DO)-28, DTC P0038 HO2S HEATER CONTROL CIRCUIT HIGH (BANK 1 SENSOR 2), Diagnostic Trouble Code (DTC) Detecting Criteria.>

CAUTION:
After servicing or replacing faulty parts, perform Clear Memory Mode <Ref. to EN(H6DO)(diag)-57, OPERATION, Clear Memory Mode.>, and Inspection Mode <Ref. to EN(H6DO)(diag)-44, PROCEDURE, Inspection Mode.>.

WIRING DIAGRAM:

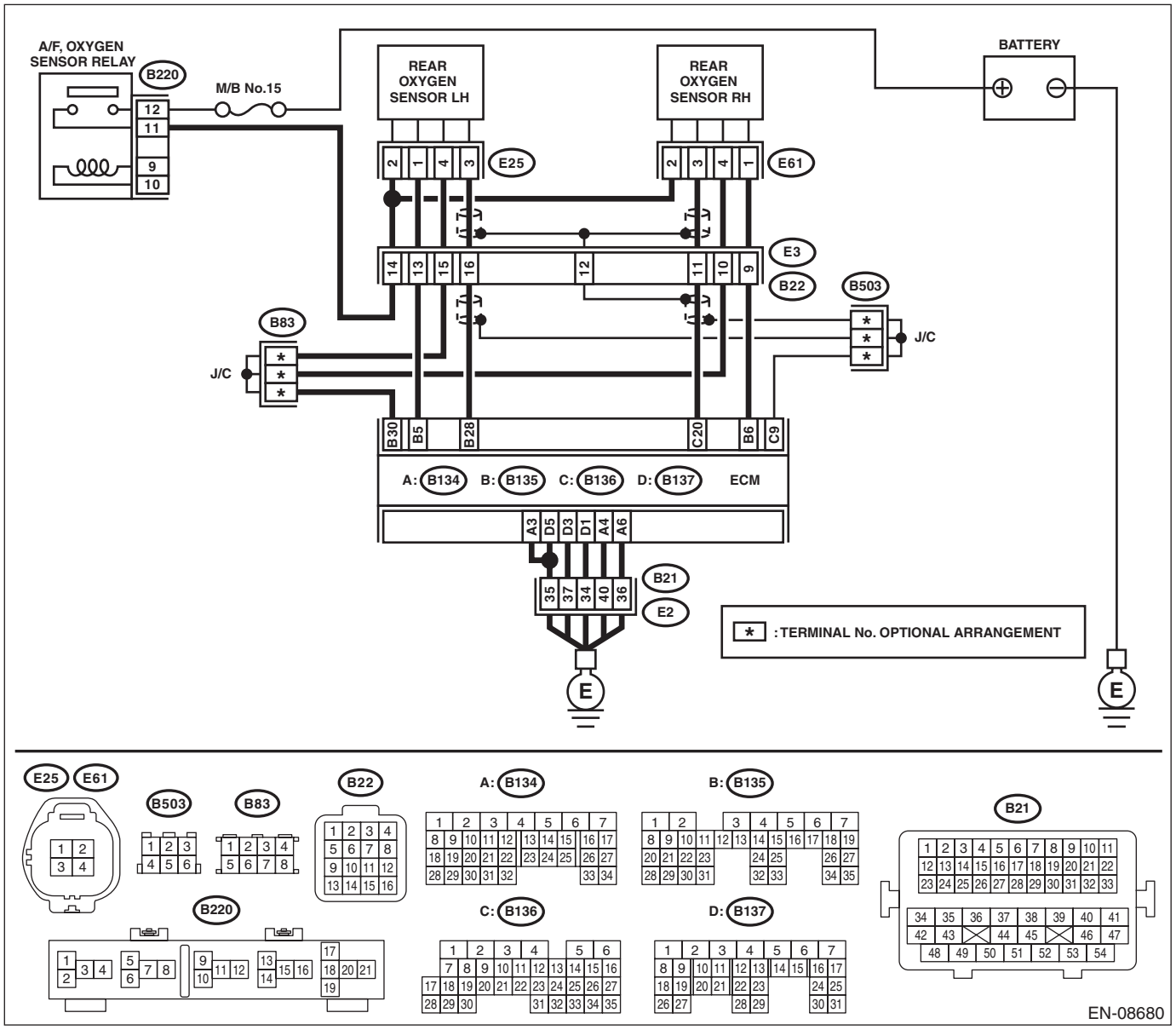

Step		Check	Yes	No
1	**CHECK HARNESS BETWEEN ECM AND REAR OXYGEN SENSOR CONNECTOR.** 1) Turn the ignition switch to OFF. 2) Measure the voltage between ECM and chassis ground. ***Connector & terminal*** ***(B135) No. 6 (+) — Chassis ground (–):***	Is the voltage 10 V or more?	Repair the short circuit to power in the harness between ECM and rear oxygen sensor connector.	Go to step **2**.

	Step	Check	Yes	No
2	**CHECK GROUND CIRCUIT FOR ECM.** 1) Disconnect the connector from ECM. 2) Measure the resistance between ECM and chassis ground. ***Connector & terminal*** ***(B134) No. 3 — Chassis ground:*** ***(B134) No. 4 — Chassis ground:*** ***(B134) No. 6 — Chassis ground:*** ***(B137) No. 1 — Chassis ground:*** ***(B137) No. 3 — Chassis ground:*** ***(B137) No. 5 — Chassis ground:***	Is the resistance less than 5 Ω?	Repair the poor contact of ECM connector.	Repair the harness and connector. NOTE: In this case, repair the following item: • Open circuit of harness between ECM and engine ground • Poor contact of coupling connector

N: DTC P0050 HO2S HEATER CONTROL CIRCUIT (BANK 2 SENSOR 1)

DTC DETECTING CONDITION:

- Detected when two consecutive driving cycles with fault occur.
- GENERAL DESCRIPTION <Ref. to GD(H6DO)-30, DTC P0050 HO2S HEATER CONTROL CIRCUIT (BANK 2 SENSOR 1), Diagnostic Trouble Code (DTC) Detecting Criteria.>

CAUTION:
After servicing or replacing faulty parts, perform Clear Memory Mode <Ref. to EN(H6DO)(diag)-57, OPERATION, Clear Memory Mode.>, and Inspection Mode <Ref. to EN(H6DO)(diag)-44, PROCEDURE, Inspection Mode.>.

WIRING DIAGRAM:

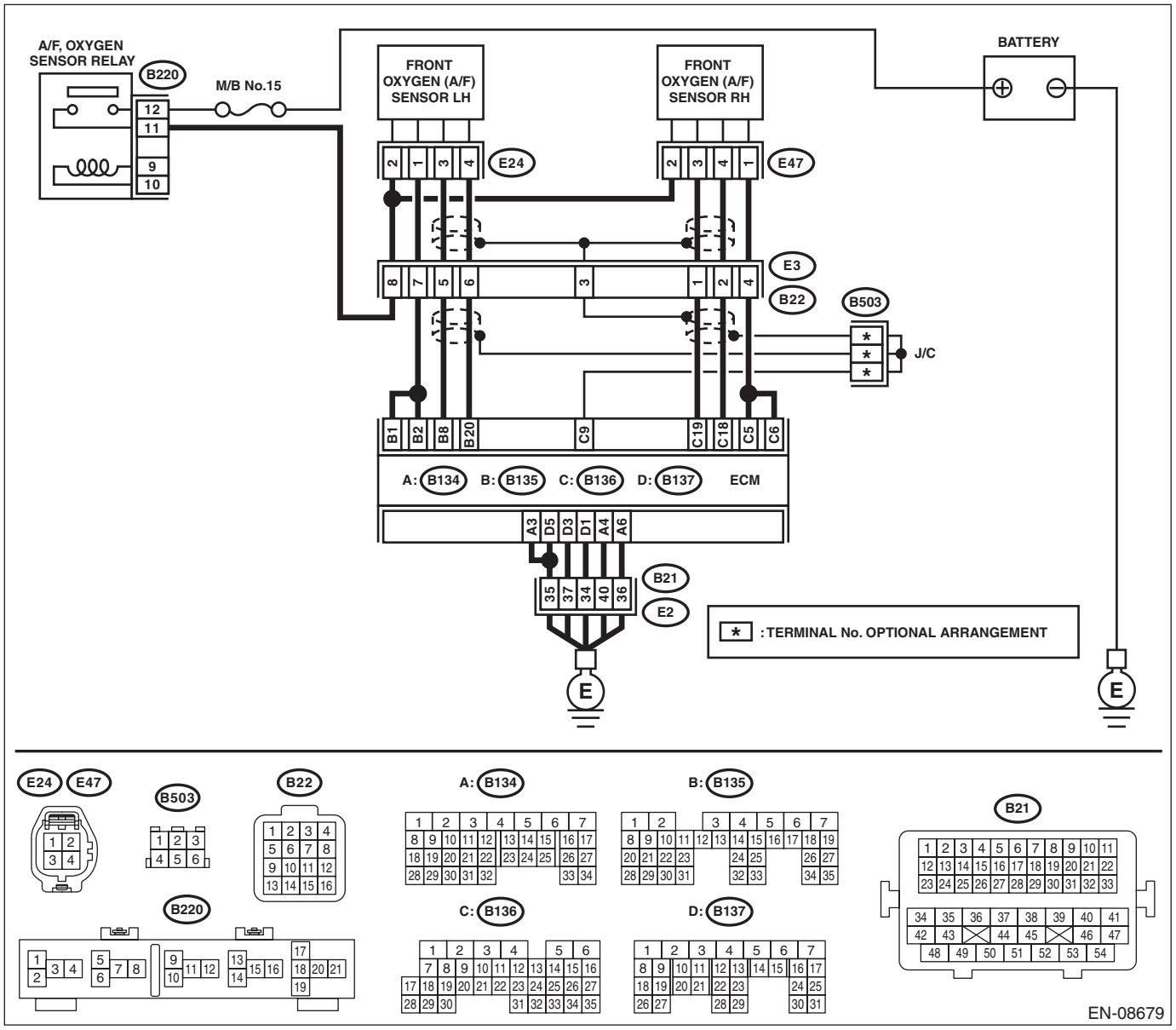

	Step	Check	Yes	No
1	**CHECK HARNESS BETWEEN ECM AND FRONT OXYGEN (A/F) SENSOR CONNECTOR.** 1) Start and warm up the engine. 2) Turn the ignition switch to OFF. 3) Disconnect the connectors from ECM and front oxygen (A/F) sensor. 4) Measure the resistance of harness between ECM and front oxygen (A/F) sensor connector. ***Connector & terminal*** ***(B135) No. 1 — (E24) No. 1:*** ***(B135) No. 2 — (E24) No. 1:*** ***(B135) No. 8 — (E24) No. 3:*** ***(B135) No. 20 — (E24) No. 4:***	Is the resistance less than 1 Ω?	Go to step **2**.	Repair the harness and connector. NOTE: In this case, repair the following item: • Open circuit in harness between ECM and front oxygen (A/F) sensor connector • Poor contact of coupling connector
2	**CHECK FRONT OXYGEN (A/F) SENSOR.** Measure the resistance between front oxygen (A/F) sensor connector terminals. ***Terminals*** ***No. 2 — No. 1:***	Is the resistance 2 — 3 Ω?	Go to step **3**.	Replace the front oxygen (A/F) sensor. <Ref. to FU(H6DO)-50, Front Oxygen (A/F) Sensor.>
3	**CHECK FOR POOR CONTACT.** Check for poor contact of ECM and front oxygen (A/F) sensor connector.	Is there poor contact of ECM or front oxygen (A/F) sensor connector?	Repair the poor contact of ECM or front oxygen (A/F) sensor connector.	Replace the front oxygen (A/F) sensor. <Ref. to FU(H6DO)-50, Front Oxygen (A/F) Sensor.>

O: DTC P0051 HO2S HEATER CONTROL CIRCUIT LOW (BANK 2 SENSOR 1)

DTC DETECTING CONDITION:

- Immediately at fault recognition
- GENERAL DESCRIPTION <Ref. to GD(H6DO)-30, DTC P0051 HO2S HEATER CONTROL CIRCUIT LOW (BANK 2 SENSOR 1), Diagnostic Trouble Code (DTC) Detecting Criteria.>

CAUTION:

After servicing or replacing faulty parts, perform Clear Memory Mode <Ref. to EN(H6DO)(diag)-57, OPERATION, Clear Memory Mode.>, and Inspection Mode <Ref. to EN(H6DO)(diag)-44, PROCEDURE, Inspection Mode.>.

WIRING DIAGRAM:

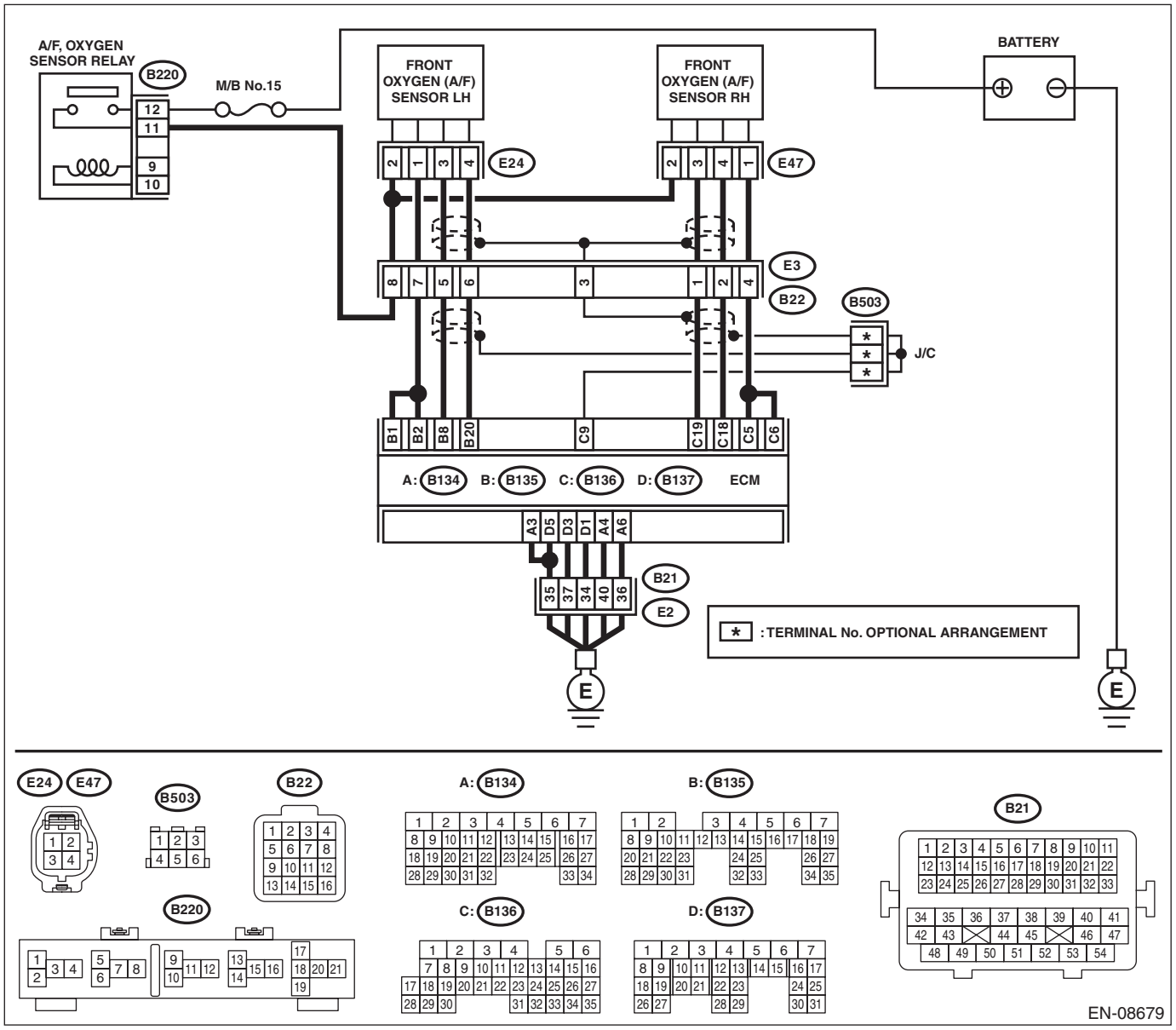

	Step	Check	Yes	No
1	**CHECK POWER SUPPLY TO FRONT OXYGEN (A/F) SENSOR.** 1) Turn the ignition switch to OFF. 2) Disconnect the connectors from front oxygen (A/F) sensor. 3) Turn the ignition switch to ON. 4) Measure the voltage between front oxygen (A/F) sensor connector and engine ground. ***Connector & terminal*** ***(E24) No. 2 (+) — Engine ground (–):***	Is the voltage 10 V or more?	Go to step **2**.	Repair the power supply line. NOTE: In this case, repair the following item: • Open circuit in harness between A/F, oxygen sensor relay and front oxygen (A/F) sensor connector • Poor contact of A/F, oxygen sensor relay connector • Poor contact of coupling connector • Malfunction of A/F, oxygen sensor relay
2	**CHECK HARNESS BETWEEN ECM AND FRONT OXYGEN (A/F) SENSOR CONNECTOR.** 1) Turn the ignition switch to OFF. 2) Disconnect the connectors from ECM. 3) Measure the resistance between ECM and front oxygen (A/F) sensor connector. ***Connector & terminal*** ***(B135) No. 1 — (E24) No. 1:*** ***(B135) No. 2 — (E24) No. 1:***	Is the resistance less than 1 Ω?	Go to step **3**.	Repair the harness and connector. NOTE: In this case, repair the following item: • Open circuit in harness between ECM and front oxygen (A/F) sensor connector • Poor contact of coupling connector
3	**CHECK GROUND CIRCUIT FOR ECM.** Measure the resistance of harness between ECM and chassis ground. ***Connector & terminal*** ***(B134) No. 3 — Chassis ground:*** ***(B134) No. 4 — Chassis ground:*** ***(B134) No. 6 — Chassis ground:*** ***(B137) No. 1 — Chassis ground:*** ***(B137) No. 3 — Chassis ground:*** ***(B137) No. 5 — Chassis ground:***	Is the resistance less than 5 Ω?	Go to step **4**.	Repair the harness and connector. NOTE: In this case, repair the following item: • Open circuit of harness between ECM and engine ground • Poor contact of coupling connector
4	**CHECK FRONT OXYGEN (A/F) SENSOR.** Measure the resistance between front oxygen (A/F) sensor connector terminals. ***Terminals*** ***No. 2 — No. 1:***	Is the resistance 2 — 3 Ω?	Repair the poor contact of ECM connector.	Replace the front oxygen (A/F) sensor. <Ref. to FU(H6DO)-50, Front Oxygen (A/F) Sensor.>

P: DTC P0052 HO2S HEATER CONTROL CIRCUIT HIGH (BANK 2 SENSOR 1)

DTC DETECTING CONDITION:

- Immediately at fault recognition
- GENERAL DESCRIPTION <Ref. to GD(H6DO)-30, DTC P0052 HO2S HEATER CONTROL CIRCUIT HIGH (BANK 2 SENSOR 1), Diagnostic Trouble Code (DTC) Detecting Criteria.>

CAUTION:

After servicing or replacing faulty parts, perform Clear Memory Mode <Ref. to EN(H6DO)(diag)-57, OPERATION, Clear Memory Mode.>, and Inspection Mode <Ref. to EN(H6DO)(diag)-44, PROCEDURE, Inspection Mode.>.

WIRING DIAGRAM:

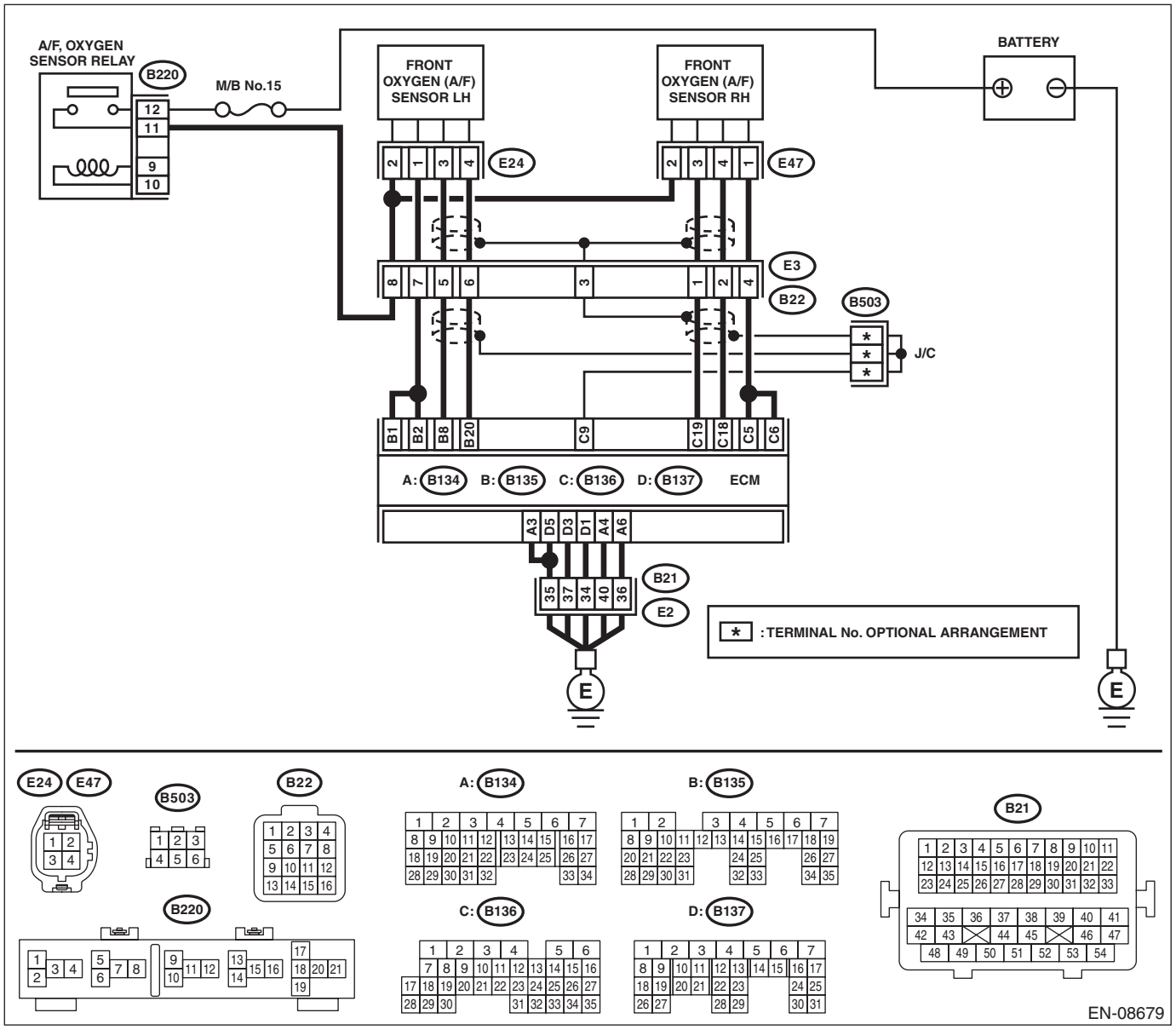

	Step	Check	Yes	No
1	**CHECK HARNESS BETWEEN ECM AND FRONT OXYGEN (A/F) SENSOR CONNECTOR.** 1) Turn the ignition switch to OFF. 2) Measure the voltage between ECM and chassis ground. ***Connector & terminal*** ***(B135) No. 1 (+) — Chassis ground (–):*** ***(B135) No. 2 (+) — Chassis ground (–):***	Is the voltage 10 V or more?	Repair the short circuit to power in the harness between ECM and front oxygen (A/F) sensor connector.	Go to step **2**.
2	**CHECK GROUND CIRCUIT FOR ECM.** 1) Disconnect the connectors from ECM. 2) Measure the resistance between ECM and chassis ground. ***Connector & terminal*** ***(B134) No. 3 — Chassis ground:*** ***(B134) No. 4 — Chassis ground:*** ***(B134) No. 6 — Chassis ground:*** ***(B137) No. 1 — Chassis ground:*** ***(B137) No. 3 — Chassis ground:*** ***(B137) No. 5 — Chassis ground:***	Is the resistance less than 5 Ω?	Repair the poor contact of ECM connector.	Repair the harness and connector. NOTE: In this case, repair the following item: • Open circuit of harness between ECM and engine ground • Poor contact of coupling connector

Q: DTC P0057 HO2S HEATER CONTROL CIRCUIT LOW (BANK 2 SENSOR 2)

DTC DETECTING CONDITION:

- Detected when two consecutive driving cycles with fault occur.
- GENERAL DESCRIPTION <Ref. to GD(H6DO)-30, DTC P0057 HO2S HEATER CONTROL CIRCUIT LOW (BANK 2 SENSOR 2), Diagnostic Trouble Code (DTC) Detecting Criteria.>

CAUTION:

After servicing or replacing faulty parts, perform Clear Memory Mode <Ref. to EN(H6DO)(diag)-57, OPERATION, Clear Memory Mode.>, and Inspection Mode <Ref. to EN(H6DO)(diag)-44, PROCEDURE, Inspection Mode.>.

WIRING DIAGRAM:

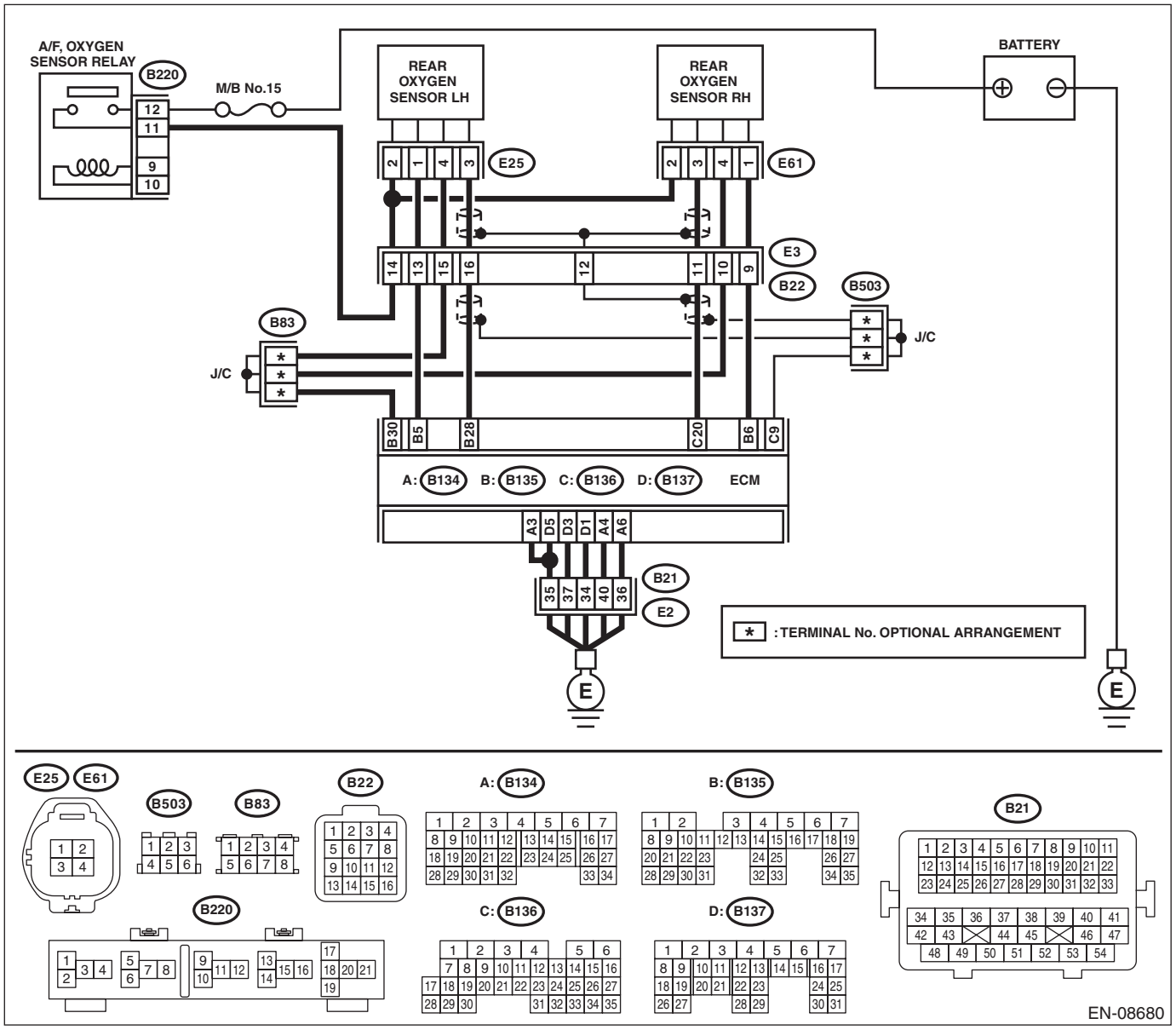

	Step	Check	Yes	No
1	**CHECK POWER SUPPLY TO REAR OXYGEN SENSOR.** 1) Turn the ignition switch to OFF. 2) Disconnect the connector from rear oxygen sensor. 3) Turn the ignition switch to ON. 4) Measure the voltage between rear oxygen sensor connector and engine ground. ***Connector & terminal*** ***(E25) No. 2 (+) — Engine ground (–):***	Is the voltage 10 V or more?	Go to step **2**.	Repair the power supply line. NOTE: In this case, repair the following item: • Open circuit in harness between A/F, oxygen sensor relay and rear oxygen sensor connector • Poor contact of A/F, oxygen sensor relay connector • Poor contact of coupling connector • Malfunction of A/F, oxygen sensor relay
2	**CHECK HARNESS BETWEEN ECM AND REAR OXYGEN SENSOR CONNECTOR.** 1) Turn the ignition switch to OFF. 2) Disconnect the connector from ECM. 3) Measure the resistance between ECM and oxygen sensor connector. ***Connector & terminal*** ***(B135) No. 5 — (E25) No. 1:***	Is the resistance less than 1 Ω?	Go to step **3**.	Repair the harness and connector. NOTE: In this case, repair the following item: • Open circuit in harness between ECM and rear oxygen sensor connector • Poor contact of coupling connector
3	**CHECK GROUND CIRCUIT FOR ECM.** Measure the resistance of harness between ECM and chassis ground. ***Connector & terminal*** ***(B134) No. 3 — Chassis ground:*** ***(B134) No. 4 — Chassis ground:*** ***(B134) No. 6 — Chassis ground:*** ***(B137) No. 1 — Chassis ground:*** ***(B137) No. 3 — Chassis ground:*** ***(B137) No. 5 — Chassis ground:***	Is the resistance less than 5 Ω?	Go to step **4**.	Repair the harness and connector. NOTE: In this case, repair the following item: • Open circuit of harness between ECM and engine ground • Poor contact of coupling connector
4	**CHECK REAR OXYGEN SENSOR.** Measure the resistance between rear oxygen sensor connector terminals. ***Terminals*** ***No. 2 — No. 1:***	Is the resistance 5 — 7 Ω?	Repair the poor contact of ECM connector.	Replace the rear oxygen sensor. <Ref. to FU(H6DO)-52, Rear Oxygen Sensor.>

R: DTC P0058 HO2S HEATER CONTROL CIRCUIT HIGH (BANK 2 SENSOR 2)

DTC DETECTING CONDITION:

- Detected when two consecutive driving cycles with fault occur.
- GENERAL DESCRIPTION <Ref. to GD(H6DO)-30, DTC P0058 HO2S HEATER CONTROL CIRCUIT HIGH (BANK 2 SENSOR 2), Diagnostic Trouble Code (DTC) Detecting Criteria.>

CAUTION:
After servicing or replacing faulty parts, perform Clear Memory Mode <Ref. to EN(H6DO)(diag)-57, OPERATION, Clear Memory Mode.>, and Inspection Mode <Ref. to EN(H6DO)(diag)-44, PROCEDURE, Inspection Mode.>.

WIRING DIAGRAM:

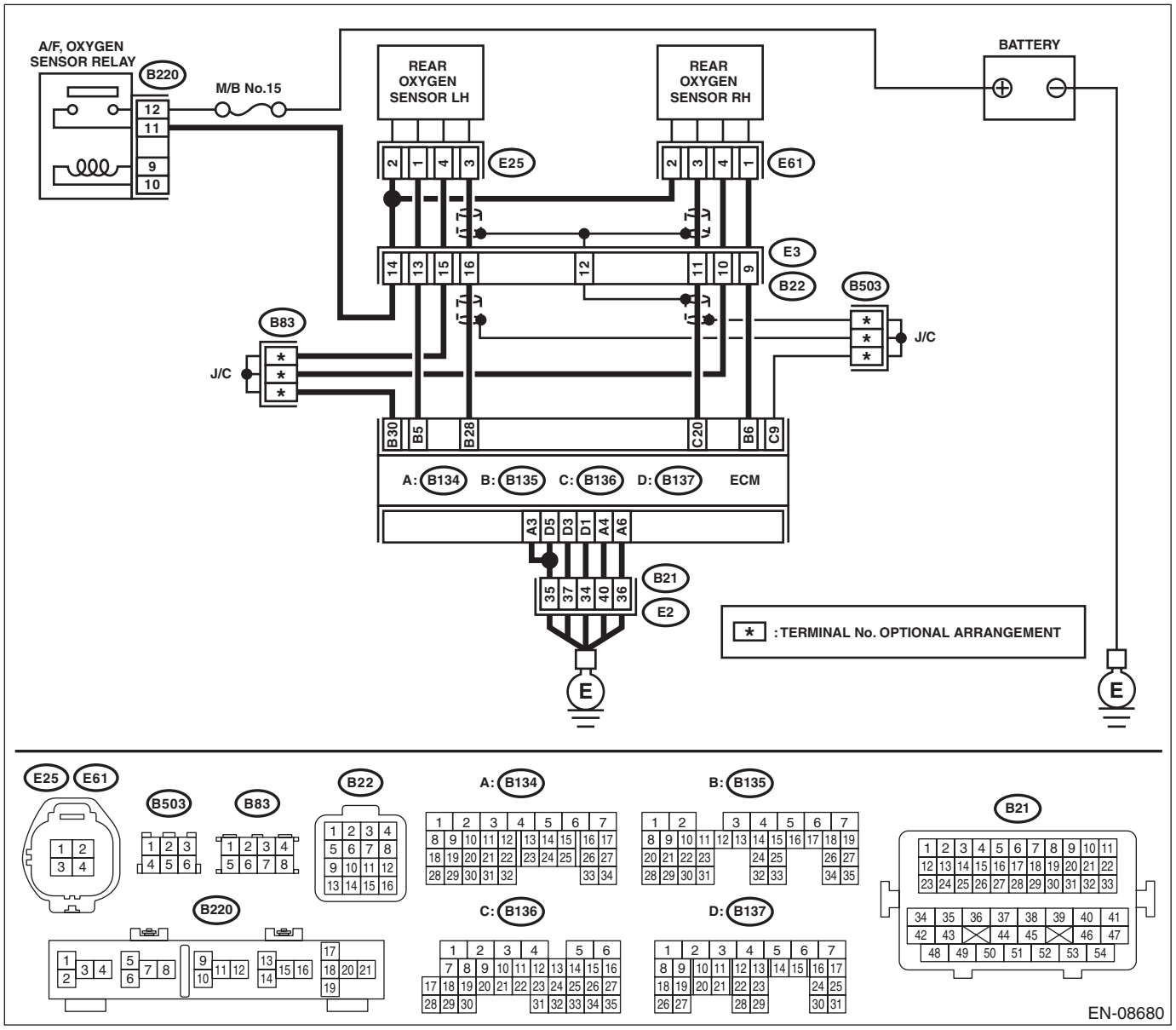

Step		Check	Yes	No
1	**CHECK HARNESS BETWEEN ECM AND REAR OXYGEN SENSOR CONNECTOR.** 1) Turn the ignition switch to OFF. 2) Measure the voltage between ECM and chassis ground. ***Connector & terminal*** ***(B135) No. 5 (+) — Chassis ground (–):***	Is the voltage 10 V or more?	Repair the short circuit to power in the harness between ECM and rear oxygen sensor connector.	Go to step **2**.

	Step	Check	Yes	No
2	**CHECK GROUND CIRCUIT FOR ECM.** 1) Disconnect the connector from ECM. 2) Measure the resistance between ECM and chassis ground. ***Connector & terminal*** ***(B134) No. 3 — Chassis ground:*** ***(B134) No. 4 — Chassis ground:*** ***(B134) No. 6 — Chassis ground:*** ***(B137) No. 1 — Chassis ground:*** ***(B137) No. 3 — Chassis ground:*** ***(B137) No. 5 — Chassis ground:***	Is the resistance less than 5 Ω?	Repair the poor contact of ECM connector.	Repair the harness and connector. NOTE: In this case, repair the following item: • Open circuit of harness between ECM and engine ground • Poor contact of coupling connector

S: DTC P0068 MAP/MAF - THROTTLE POSITION CORRELATION

DTC DETECTING CONDITION:

- Detected when two consecutive driving cycles with fault occur.
- GENERAL DESCRIPTION <Ref. to GD(H6DO)-31, DTC P0068 MAP/MAF - THROTTLE POSITION CORRELATION, Diagnostic Trouble Code (DTC) Detecting Criteria.>

CAUTION:
After servicing or replacing faulty parts, perform Clear Memory Mode <Ref. to EN(H6DO)(diag)-57, OPERATION, Clear Memory Mode.>, and Inspection Mode <Ref. to EN(H6DO)(diag)-44, PROCEDURE, Inspection Mode.>.

	Step	Check	Yes	No
1	**CHECK AIR INTAKE SYSTEM.**	Are there holes, loose bolts or disconnection of hose on air intake system?	Repair the air intake system.	Go to step **2**.
2	**CHECK MANIFOLD ABSOLUTE PRESSURE SENSOR.** 1) Start the engine and warm up engine until coolant temperature is higher than 75°C (167°F). 2) Place the select lever in “P” range or “N” range. 3) Turn the A/C switch to OFF. 4) Turn all the accessory switches to OFF. 5) Read the value of «Mani. Absolute Pressure» using the Subaru Select Monitor or a general scan tool. NOTE: • Subaru Select Monitor For detailed operation procedures, refer to “READ CURRENT DATA FOR ENGINE”. <Ref. to EN(H6DO)(diag)-35, Subaru Select Monitor.> • General scan tool For detailed operation procedures, refer to the “General Scan Tool Instruction Manual”.	Is the value in «Mani. Absolute Pressure» 73.3 — 106.6 kPa (550 — 800 mmHg, 21.65 — 31.50 inHg) when the ignition is turned ON, and 20.0 — 46.7 kPa (150 — 350 mmHg, 5.91 — 13.78 inHg) during idling?	Go to step **3**.	Replace the manifold absolute pressure sensor. <Ref. to FU(H6DO)-39, Manifold Absolute Pressure Sensor.>
3	**CHECK THROTTLE OPENING ANGLE.** Using the Subaru Select Monitor or a general scan tool, read the value in «Throttle Opening Angle». NOTE: • Subaru Select Monitor For detailed operation procedures, refer to “READ CURRENT DATA FOR ENGINE”. <Ref. to EN(H6DO)(diag)-35, Subaru Select Monitor.> • General scan tool For detailed operation procedures, refer to the “General Scan Tool Instruction Manual”.	Is the value in «Throttle Opening Angle» with the throttle fully closed less than 5%?	Go to step **4**.	Replace the electronic throttle control. <Ref. to FU(H6DO)-19, Throttle Body.>
4	**CHECK THROTTLE OPENING ANGLE.**	Is the value in «Throttle Opening Angle» with the throttle fully open 85% or more?	Replace the manifold absolute pressure sensor. <Ref. to FU(H6DO)-39, Manifold Absolute Pressure Sensor.>	Replace the electronic throttle control. <Ref. to FU(H6DO)-19, Throttle Body.>

T: DTC P0101 MASS OR VOLUME AIR FLOW CIRCUIT RANGE/PERFORMANCE

DTC DETECTING CONDITION:

- Detected when two consecutive driving cycles with fault occur.
- GENERAL DESCRIPTION <Ref. to GD(H6DO)-33, DTC P0101 MASS OR VOLUME AIR FLOW CIRCUIT RANGE/PERFORMANCE, Diagnostic Trouble Code (DTC) Detecting Criteria.>

TROUBLE SYMPTOM:

- Improper idling
- Engine stalls.
- Poor driving performance

CAUTION:
After servicing or replacing faulty parts, perform Clear Memory Mode <Ref. to EN(H6DO)(diag)-57, OPERATION, Clear Memory Mode.>, and Inspection Mode <Ref. to EN(H6DO)(diag)-44, PROCEDURE, Inspection Mode.>.

Step		Check	Yes	No
1	**CHECK FOR ANY OTHER DTC ON DISPLAY.**	Is any other DTC displayed?	Check the appropriate DTC using the “List of Diagnostic Trouble Code (DTC)”. <Ref. to EN(H6DO)(diag)-85, List of Diagnostic Trouble Code (DTC).>	Replace the mass air flow and intake air temperature sensor. <Ref. to FU(H6DO)-41, Mass Air Flow and Intake Air Temperature Sensor.>

U: DTC P0102 MASS OR VOLUME AIR FLOW CIRCUIT LOW INPUT

DTC DETECTING CONDITION:

- Immediately at fault recognition
- GENERAL DESCRIPTION <Ref. to GD(H6DO)-35, DTC P0102 MASS OR VOLUME AIR FLOW CIRCUIT LOW INPUT, Diagnostic Trouble Code (DTC) Detecting Criteria.>

TROUBLE SYMPTOM:

- Improper idling
- Engine stalls.
- Poor driving performance

CAUTION:
After servicing or replacing faulty parts, perform Clear Memory Mode <Ref. to EN(H6DO)(diag)-57, OPERATION, Clear Memory Mode.>, and Inspection Mode <Ref. to EN(H6DO)(diag)-44, PROCEDURE, Inspection Mode.>.

WIRING DIAGRAM:

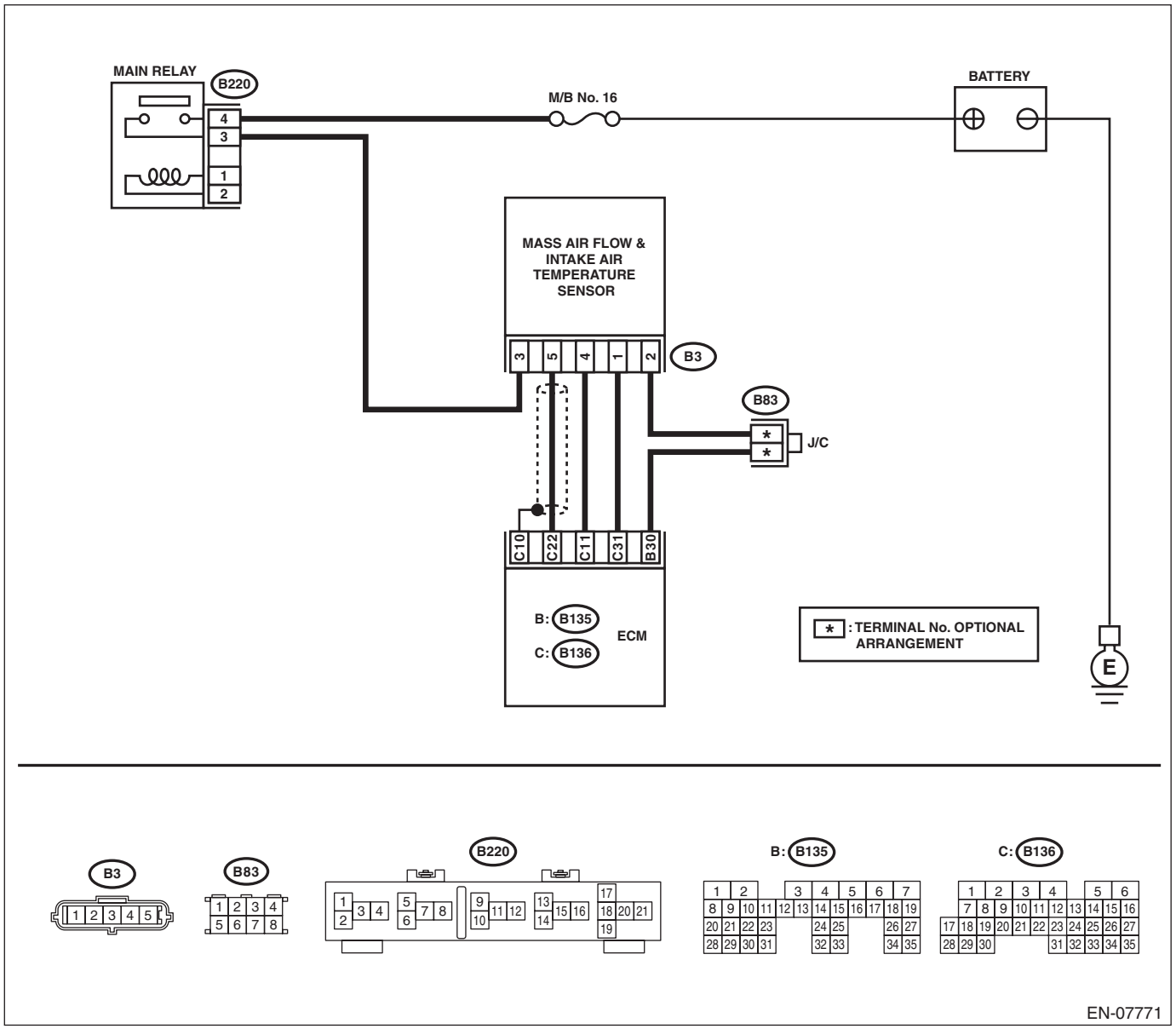

	Step	Check	Yes	No
1	**CHECK CURRENT DATA.** 1) Start the engine. 2) Read the value of «Air Flow Sensor Voltage» using Subaru Select Monitor. NOTE: For detailed operation procedures, refer to "READ CURRENT DATA FOR ENGINE". <Ref. to EN(H6DO)(diag)-35, Subaru Select Monitor.>	Is the value of «Air Flow Sensor Voltage» less than 0.2 V?	Go to step **2**.	Even if DTC is detected, the circuit has returned to a normal condition at this time. Reproduce the failure, and then perform the diagnosis again. NOTE: In this case, temporary poor contact of connector, temporary open or short circuit of harness may be the cause.
2	**CHECK POWER SUPPLY OF MASS AIR FLOW AND INTAKE AIR TEMPERATURE SENSOR.** 1) Turn the ignition switch to OFF. 2) Disconnect the connectors from the mass air flow and intake air temperature sensor. 3) Turn the ignition switch to ON. 4) Measure the voltage between mass air flow and intake air temperature sensor connector and engine ground. ***Connector & terminal*** ***(B3) No. 3 (+) — Engine ground (–):***	Is the voltage 10 V or more?	Go to step **3**.	Repair the harness and connector. NOTE: In this case, repair the following item: • Open circuit in harness between main relay and mass air flow and intake air temperature sensor connector • Poor contact of main relay connector
3	**CHECK HARNESS BETWEEN ECM AND MASS AIR FLOW AND INTAKE AIR TEMPERATURE SENSOR CONNECTOR.** 1) Turn the ignition switch to OFF. 2) Disconnect the connector from ECM. 3) Measure the resistance of harness between ECM and the mass air flow and intake air temperature sensor connector. ***Connector & terminal*** ***(B136) No. 22 — (B3) No. 5:***	Is the resistance less than 1 Ω?	Go to step **4**.	Repair the open circuit in harness between ECM and the mass air flow and intake air temperature sensor connector.
4	**CHECK HARNESS BETWEEN ECM AND MASS AIR FLOW AND INTAKE AIR TEMPERATURE SENSOR CONNECTOR.** Measure the resistance between ECM and chassis ground. ***Connector & terminal*** ***(B136) No. 22 — Chassis ground:***	Is the resistance 1 MΩ or more?	Go to step **5**.	Repair the short circuit to ground in harness between ECM and mass air flow and intake air temperature sensor connector.
5	**CHECK FOR POOR CONTACT.** Check for poor contact of ECM and mass air flow and intake air temperature sensor connector.	Is there poor contact of ECM or mass air flow and intake air temperature sensor connector?	Repair the poor contact of ECM or mass air flow and intake air temperature sensor connector.	Replace the mass air flow and intake air temperature sensor. <Ref. to FU(H6DO)-41, Mass Air Flow and Intake Air Temperature Sensor.>

V: DTC P0103 MASS OR VOLUME AIR FLOW CIRCUIT HIGH INPUT

DTC DETECTING CONDITION:

- Immediately at fault recognition
- GENERAL DESCRIPTION <Ref. to GD(H6DO)-37, DTC P0103 MASS OR VOLUME AIR FLOW CIRCUIT HIGH INPUT, Diagnostic Trouble Code (DTC) Detecting Criteria.>

TROUBLE SYMPTOM:

- Improper idling
- Engine stalls.
- Poor driving performance

CAUTION:
After servicing or replacing faulty parts, perform Clear Memory Mode <Ref. to EN(H6DO)(diag)-57, OPERATION, Clear Memory Mode.>, and Inspection Mode <Ref. to EN(H6DO)(diag)-44, PROCEDURE, Inspection Mode.>.

WIRING DIAGRAM:

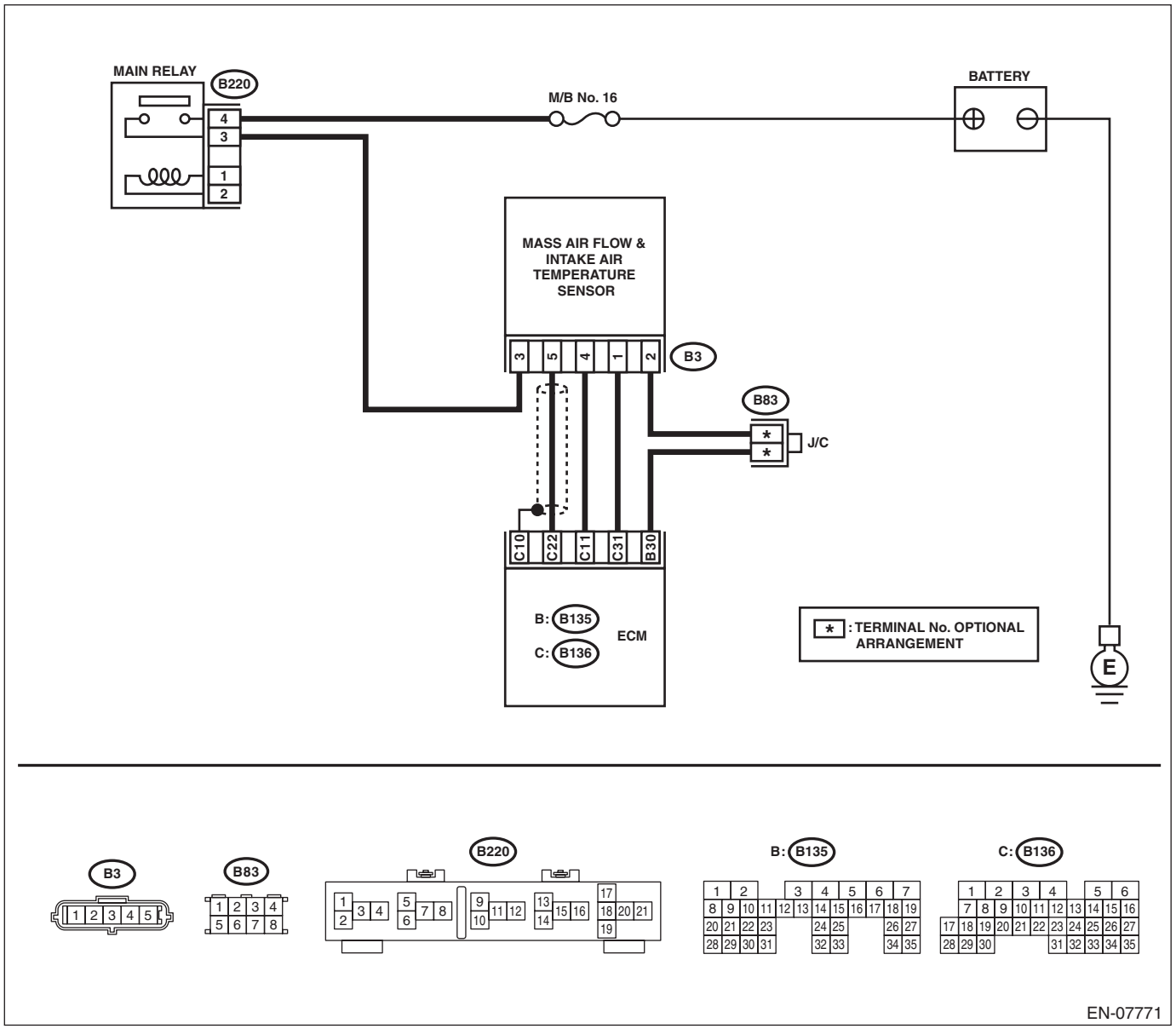

	Step	Check	Yes	No
1	**CHECK CURRENT DATA.** 1) Start the engine. 2) Read the value of «Air Flow Sensor Voltage» using Subaru Select Monitor. NOTE: For detailed operation procedures, refer to "READ CURRENT DATA FOR ENGINE". <Ref. to EN(H6DO)(diag)-35, Subaru Select Monitor.>	Is the value of «Air Flow Sensor Voltage» 5 V or more?	Go to step **2**.	Even if DTC is detected, the circuit has returned to a normal condition at this time. Reproduce the failure, and then perform the diagnosis again. NOTE: In this case, temporary poor contact of connector, temporary open or short circuit of harness may be the cause.
2	**CHECK HARNESS BETWEEN ECM AND MASS AIR FLOW AND INTAKE AIR TEMPERATURE SENSOR CONNECTOR.** 1) Turn the ignition switch to OFF. 2) Disconnect the connectors from the mass air flow and intake air temperature sensor. 3) Start the engine. 4) Read the value of «Air Flow Sensor Voltage» using Subaru Select Monitor. NOTE: For detailed operation procedures, refer to "READ CURRENT DATA FOR ENGINE". <Ref. to EN(H6DO)(diag)-35, Subaru Select Monitor.>	Is the value of «Air Flow Sensor Voltage» 5 V or more?	Repair the short circuit of harness to power supply between ECM and mass air flow and intake air temperature sensor connector.	Go to step **3**.
3	**CHECK HARNESS BETWEEN ECM AND MASS AIR FLOW AND INTAKE AIR TEMPERATURE SENSOR CONNECTOR.** 1) Turn the ignition switch to OFF. 2) Measure the resistance of harness between mass air flow and intake air temperature sensor connector and engine ground. ***Connector & terminal*** ***(B3) No. 4 — Engine ground:***	Is the resistance less than 5 Ω?	Go to step **4**.	Repair the harness and connector. NOTE: In this case, repair the following item: • Open circuit in harness between ECM and mass air flow and intake air temperature sensor connector • Poor contact of ECM connector
4	**CHECK FOR POOR CONTACT.** Check for poor contact of mass air flow and intake air temperature sensor connector.	Is there poor contact of mass air flow and intake air temperature sensor connector?	Repair the poor contact of mass air flow and intake air temperature sensor connector.	Replace the mass air flow and intake air temperature sensor. <Ref. to FU(H6DO)-41, Mass Air Flow and Intake Air Temperature Sensor.>

W: DTC P0107 MANIFOLD ABSOLUTE PRESSURE/BAROMETRIC PRESSURE CIRCUIT LOW INPUT

DTC DETECTING CONDITION:

- Immediately at fault recognition
- GENERAL DESCRIPTION <Ref. to GD(H6DO)-39, DTC P0107 MANIFOLD ABSOLUTE PRESSURE/ BAROMETRIC PRESSURE CIRCUIT LOW INPUT, Diagnostic Trouble Code (DTC) Detecting Criteria.>

CAUTION:
After servicing or replacing faulty parts, perform Clear Memory Mode <Ref. to EN(H6DO)(diag)-57, OPERATION, Clear Memory Mode.>, and Inspection Mode <Ref. to EN(H6DO)(diag)-44, PROCEDURE, Inspection Mode.>.
WIRING DIAGRAM:

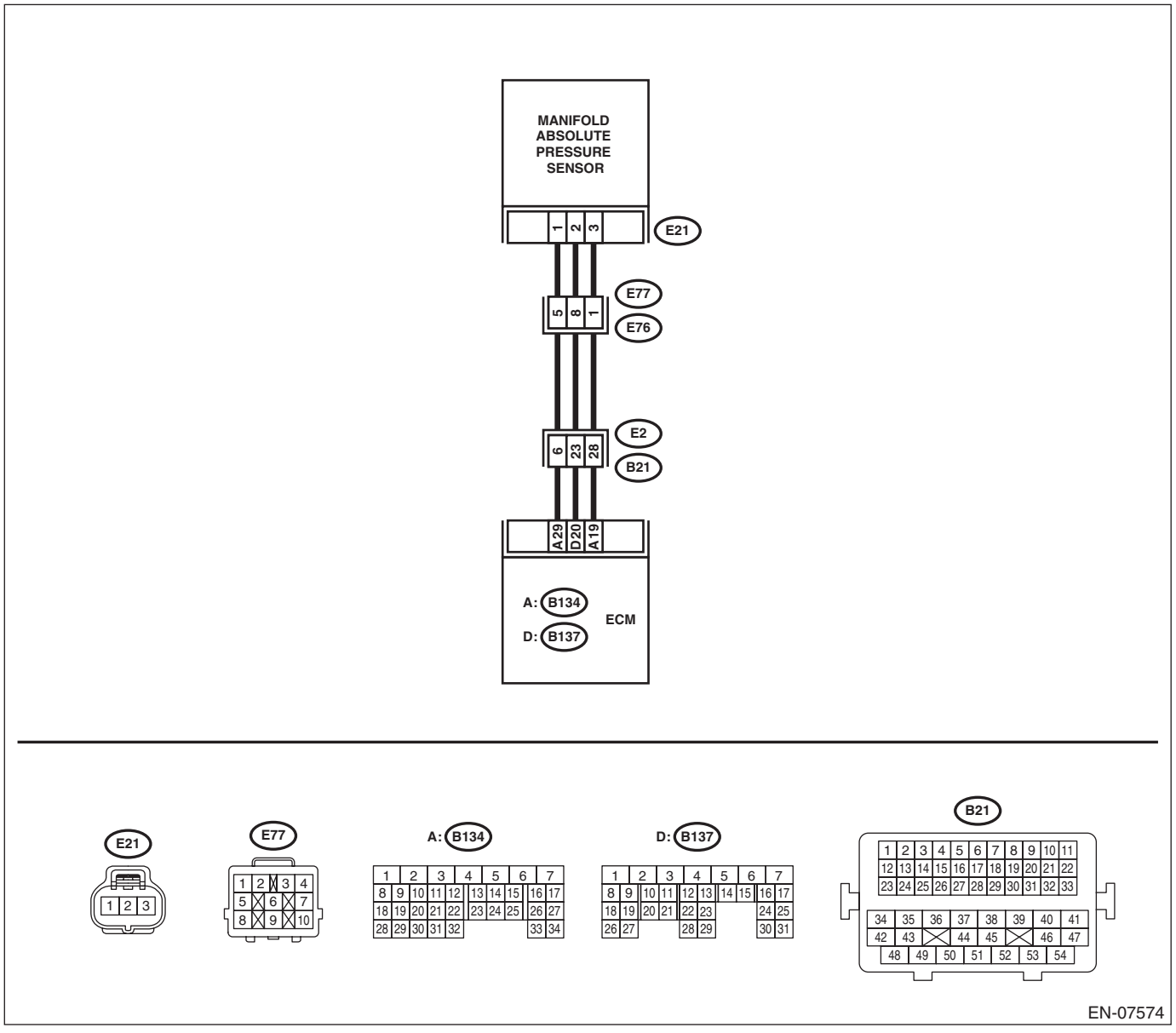

EN-07574

	Step	Check	Yes	No
1	**CHECK CURRENT DATA.** 1) Start the engine. 2) Using the Subaru Select Monitor, read the value in «Mani. Absolute Pressure». NOTE: • Subaru Select Monitor For detailed operation procedures, refer to "READ CURRENT DATA FOR ENGINE". <Ref. to EN(H6DO)(diag)-35, Subaru Select Monitor.> • General scan tool For detailed operation procedures, refer to the general scan tool operation manual.	Is the value of «Mani. Absolute Pressure» less than 13.3 kPa (100 mmHg, 3.94 inHg)?	Go to step **2**.	Even if DTC is detected, the circuit has returned to a normal condition at this time. Reproduce the failure, and then perform the diagnosis again. NOTE: In this case, temporary poor contact of connector, temporary open or short circuit of harness may be the cause.
2	**CHECK POWER SUPPLY OF MANIFOLD ABSOLUTE PRESSURE SENSOR.** 1) Turn the ignition switch to OFF. 2) Disconnect the connector from manifold absolute pressure sensor. 3) Turn the ignition switch to ON. 4) Measure the voltage between manifold absolute pressure sensor connector and engine ground. ***Connector & terminal*** ***(E21) No. 3 (+) — Engine ground (–):***	Is the voltage 4.5 V or more?	Go to step **3**.	Repair the harness and connector. NOTE: In this case, repair the following item: • Open circuit of harness between ECM and manifold absolute pressure sensor connector. • Poor contact of ECM connector • Poor contact of coupling connector
3	**CHECK HARNESS BETWEEN ECM AND MANIFOLD ABSOLUTE PRESSURE SENSOR CONNECTOR.** 1) Turn the ignition switch to OFF. 2) Disconnect the connector from ECM. 3) Measure the resistance of harness between ECM and manifold absolute pressure sensor connector. ***Connector & terminal*** ***(B137) No. 20 — (E21) No. 2:***	Is the resistance less than 1 Ω?	Go to step **4**.	Repair the harness and connector. NOTE: In this case, repair the following item: • Open circuit of harness between ECM and manifold absolute pressure sensor connector. • Poor contact of coupling connector
4	**CHECK HARNESS BETWEEN ECM AND MANIFOLD ABSOLUTE PRESSURE SENSOR CONNECTOR.** Measure the resistance between ECM and chassis ground. ***Connector & terminal*** ***(B137) No. 20 — Chassis ground:***	Is the resistance 1 MΩ or more?	Go to step **5**.	Repair ground short circuit of harness between ECM and manifold absolute pressure sensor connector.
5	**CHECK FOR POOR CONTACT.** Check for poor contact of ECM and manifold absolute pressure sensor connector.	Is there poor contact of ECM or manifold absolute pressure sensor connector?	Repair the poor contact of ECM or manifold absolute pressure sensor connector.	Replace the manifold absolute pressure sensor. <Ref. to FU(H6DO)-39, Manifold Absolute Pressure Sensor.>

X: DTC P0108 MANIFOLD ABSOLUTE PRESSURE/BAROMETRIC PRESSURE CIRCUIT HIGH INPUT

DTC DETECTING CONDITION:

- Immediately at fault recognition
- GENERAL DESCRIPTION <Ref. to GD(H6DO)-41, DTC P0108 MANIFOLD ABSOLUTE PRESSURE/ BAROMETRIC PRESSURE CIRCUIT HIGH INPUT, Diagnostic Trouble Code (DTC) Detecting Criteria.>

CAUTION:

After servicing or replacing faulty parts, perform Clear Memory Mode <Ref. to EN(H6DO)(diag)-57, OPERATION, Clear Memory Mode.>, and Inspection Mode <Ref. to EN(H6DO)(diag)-44, PROCEDURE, Inspection Mode.>.

WIRING DIAGRAM:

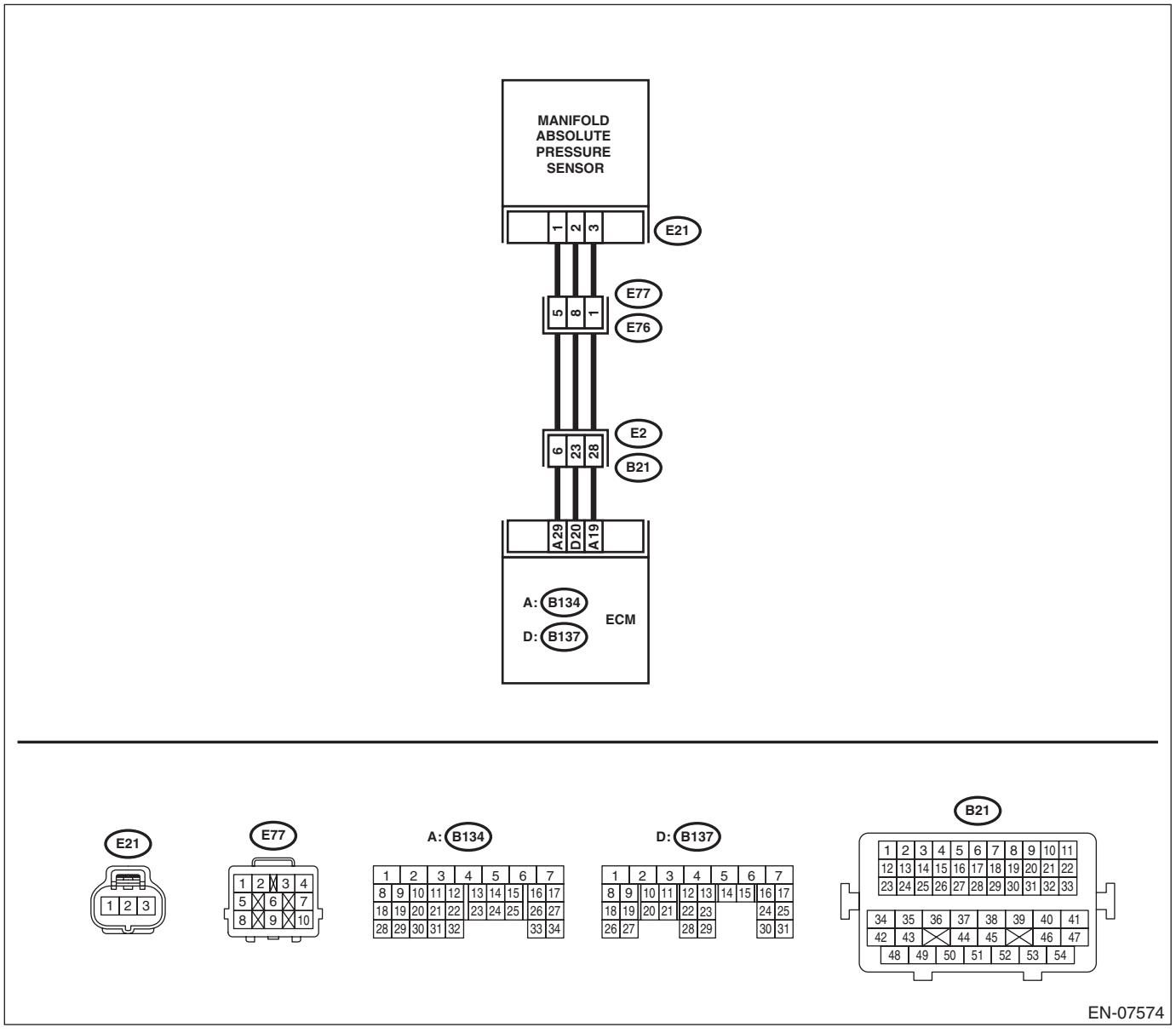

EN-07574

	Step	Check	Yes	No
1	**CHECK CURRENT DATA.** 1) Start the engine. 2) Read the value of «Mani. Absolute Pressure» using the Subaru Select Monitor or a general scan tool. NOTE: • Subaru Select Monitor For detailed operation procedures, refer to "READ CURRENT DATA FOR ENGINE". <Ref. to EN(H6DO)(diag)-35, Subaru Select Monitor.> • General scan tool For detailed operation procedures, refer to the general scan tool operation manual.	Is the value of «Mani. Absolute Pressure» 119.5 kPa (896.5 mmHg, 35.29 inHg) or more?	Go to step **2**.	Even if DTC is detected, the circuit has returned to a normal condition at this time. Reproduce the failure, and then perform the diagnosis again. NOTE: In this case, temporary poor contact of connector, temporary open or short circuit of harness may be the cause.
2	**CHECK HARNESS BETWEEN ECM AND MANIFOLD ABSOLUTE PRESSURE SENSOR CONNECTOR.** 1) Turn the ignition switch to OFF. 2) Disconnect the connector from manifold absolute pressure sensor. 3) Start the engine. 4) Read the value of «Mani. Absolute Pressure» using the Subaru Select Monitor or a general scan tool. NOTE: • Subaru Select Monitor For detailed operation procedures, refer to "READ CURRENT DATA FOR ENGINE". <Ref. to EN(H6DO)(diag)-35, Subaru Select Monitor.> • General scan tool For detailed operation procedures, refer to the general scan tool operation manual.	Is the value of «Mani. Absolute Pressure» 119.5 kPa (896.5 mmHg, 35.29 inHg) or more?	Repair the short circuit to power in harness between ECM and manifold absolute pressure sensor connector.	Go to step **3**.
3	**CHECK HARNESS BETWEEN ECM AND MANIFOLD ABSOLUTE PRESSURE SENSOR CONNECTOR.** 1) Turn the ignition switch to OFF. 2) Measure the resistance of harness between manifold absolute pressure sensor connector and engine ground. ***Connector & terminal*** ***(E21) No. 1 — Engine ground:***	Is the resistance less than 5 Ω?	Go to step **4**.	Repair the harness and connector. NOTE: In this case, repair the following item: • Open circuit of harness between ECM and manifold absolute pressure sensor connector. • Poor contact of ECM connector • Poor contact of coupling connector
4	**CHECK FOR POOR CONTACT.** Check for poor contact of manifold absolute pressure sensor connector.	Is there poor contact of manifold absolute pressure sensor connector?	Repair the poor contact of manifold absolute pressure sensor connector.	Replace the manifold absolute pressure sensor. <Ref. to FU(H6DO)-39, Manifold Absolute Pressure Sensor.>

Y: DTC P0111 INTAKE AIR TEMPERATURE SENSOR 1 CIRCUIT RANGE/PERFORMANCE

DTC DETECTING CONDITION:

- Detected when two consecutive driving cycles with fault occur.
- GENERAL DESCRIPTION <Ref. to GD(H6DO)-43, DTC P0111 INTAKE AIR TEMPERATURE SENSOR 1 CIRCUIT RANGE/PERFORMANCE, Diagnostic Trouble Code (DTC) Detecting Criteria.>

TROUBLE SYMPTOM:

- Improper idling
- Poor driving performance

CAUTION:
After servicing or replacing faulty parts, perform Clear Memory Mode <Ref. to EN(H6DO)(diag)-57, OPERATION, Clear Memory Mode.>, and Inspection Mode <Ref. to EN(H6DO)(diag)-44, PROCEDURE, Inspection Mode.>.

	Step	Check	Yes	No
1	**CHECK ENGINE COOLANT TEMPERATURE.** 1) Start the engine and warm up completely. 2) Read the value of «Coolant Temp.» using the Subaru Select Monitor or a general scan tool. NOTE: • Subaru Select Monitor For detailed operation procedures, refer to “READ CURRENT DATA FOR ENGINE”. <Ref. to EN(H6DO)(diag)-35, Subaru Select Monitor.> • General scan tool For detailed operation procedures, refer to the general scan tool operation manual.	Is the value of «Coolant Temp.» 75°C (167°F) or more?	Replace the mass air flow and intake air temperature sensor. <Ref. to FU(H6DO)-41, Mass Air Flow and Intake Air Temperature Sensor.>	Check for DTC P0125. <Ref. to EN(H6DO)(diag)-146, DTC P0125 INSUFFICIENT COOLANT TEMPERATURE FOR CLOSED LOOP FUEL CONTROL, Diagnostic Procedure with Diagnostic Trouble Code (DTC).>

Z: DTC P0112 INTAKE AIR TEMPERATURE SENSOR 1 CIRCUIT LOW

DTC DETECTING CONDITION:

- Immediately at fault recognition
- GENERAL DESCRIPTION <Ref. to GD(H6DO)-46, DTC P0112 INTAKE AIR TEMPERATURE SENSOR 1 CIRCUIT LOW, Diagnostic Trouble Code (DTC) Detecting Criteria.>

TROUBLE SYMPTOM:

- Improper idling
- Poor driving performance

CAUTION:

After servicing or replacing faulty parts, perform Clear Memory Mode <Ref. to EN(H6DO)(diag)-57, OPERATION, Clear Memory Mode.>, and Inspection Mode <Ref. to EN(H6DO)(diag)-44, PROCEDURE, Inspection Mode.>.

WIRING DIAGRAM:

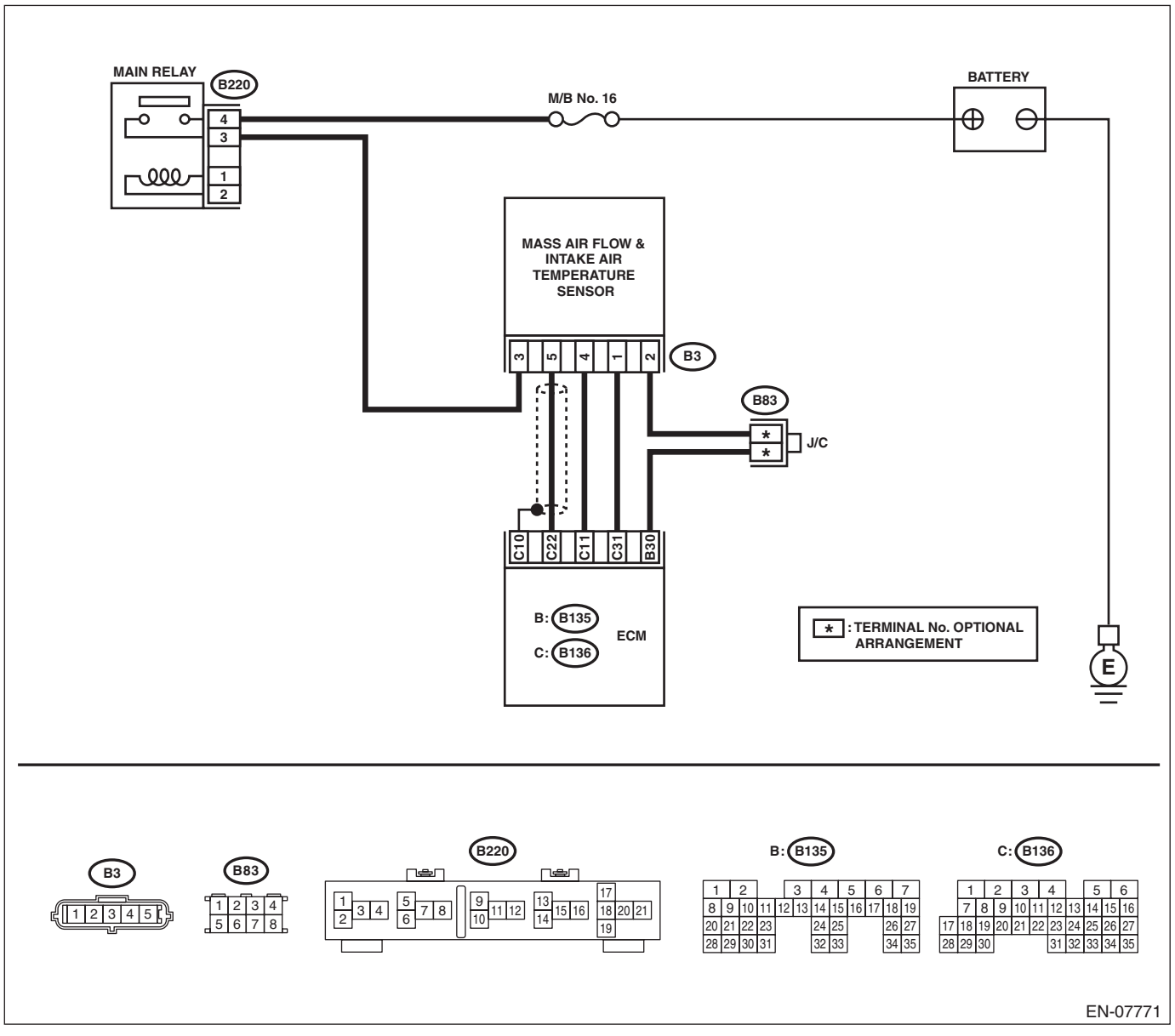

	Step	Check	Yes	No
1	**CHECK CURRENT DATA.** 1) Start the engine. 2) Read the value of «Intake Air Temp.» using the Subaru Select Monitor or a general scan tool. NOTE: • Subaru Select Monitor For detailed operation procedures, refer to "READ CURRENT DATA FOR ENGINE". <Ref. to EN(H6DO)(diag)-35, Subaru Select Monitor.> • General scan tool For detailed operation procedures, refer to the general scan tool operation manual.	Is the value of «Intake Air Temp.» 120°C (248°F) or more?	Go to step **2**.	Even if DTC is detected, the circuit has returned to a normal condition at this time. Reproduce the failure, and then perform the diagnosis again. NOTE: In this case, temporary poor contact of connector, temporary open or short circuit of harness may be the cause.
2	**CHECK HARNESS BETWEEN ECM AND MASS AIR FLOW AND INTAKE AIR TEMPERATURE SENSOR CONNECTOR.** 1) Turn the ignition switch to OFF. 2) Disconnect the connector from ECM and the mass air flow and intake air temperature sensor. 3) Measure the resistance between ECM and chassis ground. ***Connector & terminal*** ***(B136) No. 31 — Chassis ground:***	Is the resistance 1 MΩ or more?	Replace the mass air flow and intake air temperature sensor. <Ref. to FU(H6DO)-41, Mass Air Flow and Intake Air Temperature Sensor.>	Repair the short circuit to ground in harness between ECM and mass air flow and intake air temperature sensor connector.

AA:DTC P0113 INTAKE AIR TEMPERATURE SENSOR 1 CIRCUIT HIGH

DTC DETECTING CONDITION:

- Immediately at fault recognition
- GENERAL DESCRIPTION <Ref. to GD(H6DO)-48, DTC P0113 INTAKE AIR TEMPERATURE SENSOR 1 CIRCUIT HIGH, Diagnostic Trouble Code (DTC) Detecting Criteria.>

TROUBLE SYMPTOM:

- Improper idling
- Poor driving performance

CAUTION:

After servicing or replacing faulty parts, perform Clear Memory Mode <Ref. to EN(H6DO)(diag)-57, OPERATION, Clear Memory Mode.>, and Inspection Mode <Ref. to EN(H6DO)(diag)-44, PROCEDURE, Inspection Mode.>.

WIRING DIAGRAM:

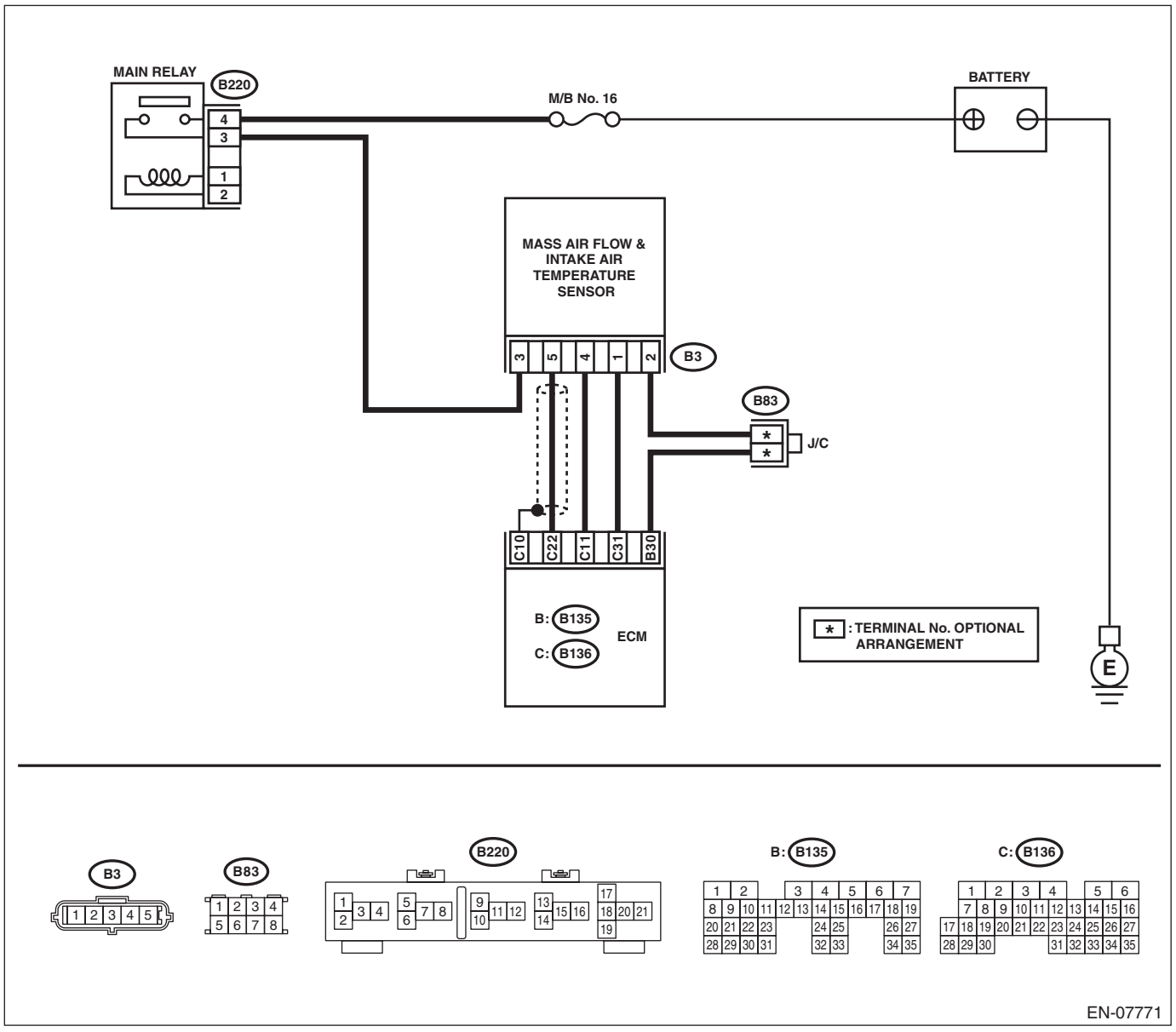

	Step	Check	Yes	No
1	**CHECK CURRENT DATA.** 1) Start the engine. 2) Read the value of «Intake Air Temp.» using the Subaru Select Monitor or a general scan tool. NOTE: • Subaru Select Monitor For detailed operation procedures, refer to "READ CURRENT DATA FOR ENGINE". <Ref. to EN(H6DO)(diag)-35, Subaru Select Monitor.> • General scan tool For detailed operation procedures, refer to the general scan tool operation manual.	Is the value of «Intake Air Temp.» less than –40°C (–40°F)?	Go to step **2**.	Even if DTC is detected, the circuit has returned to a normal condition at this time. Reproduce the failure, and then perform the diagnosis again. NOTE: In this case, temporary poor contact of connector, temporary open or short circuit of harness may be the cause.
2	**CHECK FOR POOR CONTACT.** Check for poor contact of ECM and mass air flow and intake air temperature sensor connector.	Is there poor contact of ECM or mass air flow and intake air temperature sensor connector?	Repair the poor contact of ECM or mass air flow and intake air temperature sensor connector.	Go to step **3**.
3	**CHECK HARNESS BETWEEN ECM AND MASS AIR FLOW AND INTAKE AIR TEMPERATURE SENSOR CONNECTOR.** 1) Turn the ignition switch to OFF. 2) Disconnect the connector from ECM and the mass air flow and intake air temperature sensor. 3) Measure the resistance of harness between ECM and the mass air flow and intake air temperature sensor connector. ***Connector & terminal*** ***(B136) No. 31 — (B3) No. 1:*** ***(B135) No. 30 — (B3) No. 2:***	Is the resistance less than 1 Ω?	Go to step **4**.	Repair the harness and connector. NOTE: In this case, repair the following item: • Open circuit in harness between ECM and mass air flow and intake air temperature sensor connector • Poor contact of joint connector
4	**CHECK HARNESS BETWEEN ECM AND MASS AIR FLOW AND INTAKE AIR TEMPERATURE SENSOR CONNECTOR.** 1) Connect all connectors. 2) Turn the ignition switch to ON. 3) Disconnect the connectors from the mass air flow and intake air temperature sensor. 4) Measure the voltage between ECM and chassis ground. ***Connector & terminal*** ***(B136) No. 31 (+) — Chassis ground (–):***	Is the voltage 5 V or more?	Repair the short circuit of harness to power supply between ECM and mass air flow and intake air temperature sensor connector.	Replace the mass air flow and intake air temperature sensor. <Ref. to FU(H6DO)-41, Mass Air Flow and Intake Air Temperature Sensor.>

AB:DTC P0117 ENGINE COOLANT TEMPERATURE CIRCUIT LOW

DTC DETECTING CONDITION:

- Immediately at fault recognition
- GENERAL DESCRIPTION <Ref. to GD(H6DO)-50, DTC P0117 ENGINE COOLANT TEMPERATURE CIRCUIT LOW, Diagnostic Trouble Code (DTC) Detecting Criteria.>

TROUBLE SYMPTOM:

- Hard to start
- Improper idling
- Poor driving performance

CAUTION:
After servicing or replacing faulty parts, perform Clear Memory Mode <Ref. to EN(H6DO)(diag)-57, OPERATION, Clear Memory Mode.>, and Inspection Mode <Ref. to EN(H6DO)(diag)-44, PROCEDURE, Inspection Mode.>.

WIRING DIAGRAM:

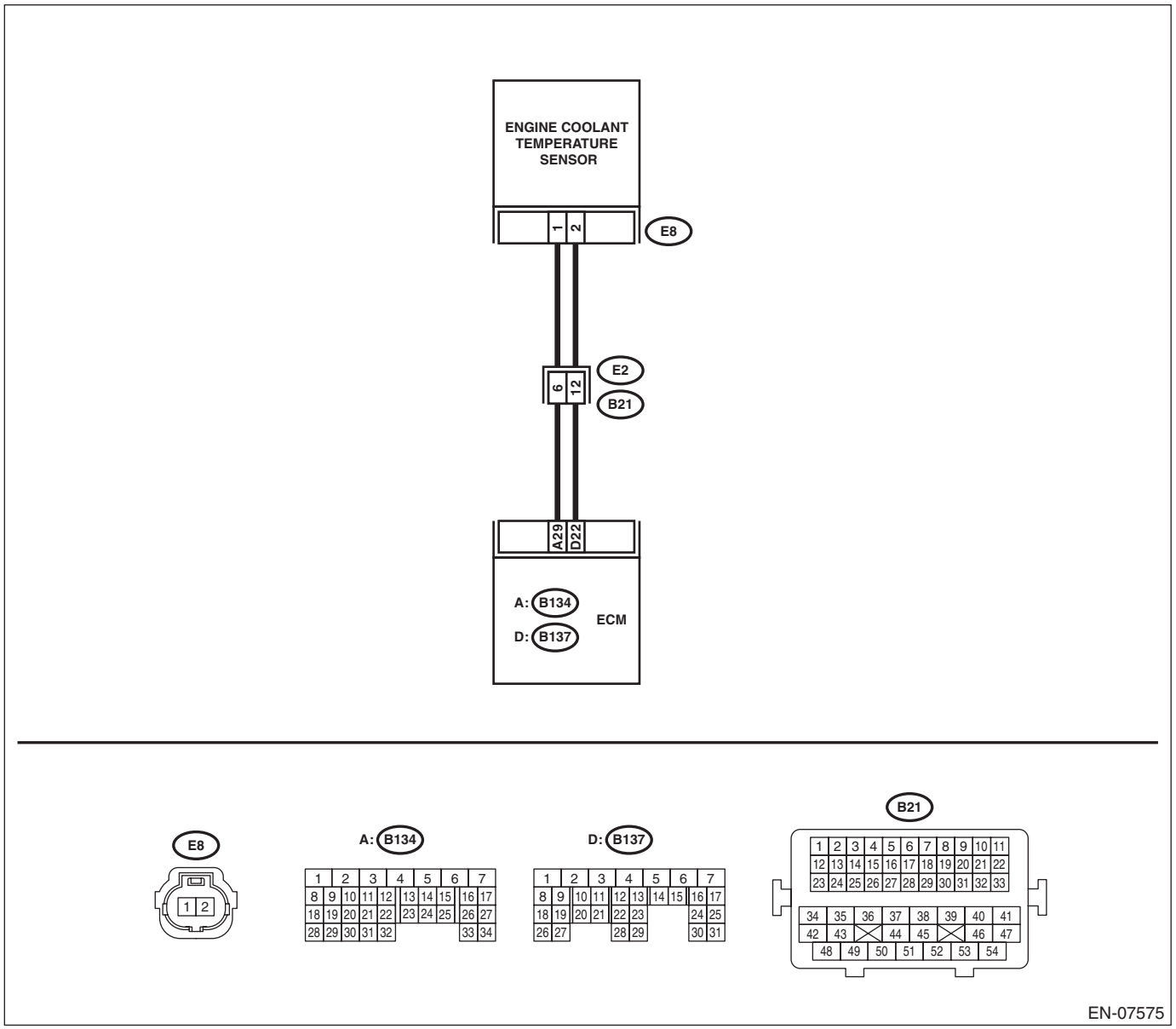

	Step	Check	Yes	No
1	**CHECK CURRENT DATA.** 1) Start the engine. 2) Read the value of «Coolant Temp.» using the Subaru Select Monitor or a general scan tool. NOTE: • Subaru Select Monitor For detailed operation procedures, refer to "READ CURRENT DATA FOR ENGINE". <Ref. to EN(H6DO)(diag)-35, Subaru Select Monitor.> • General scan tool For detailed operation procedures, refer to the general scan tool operation manual.	Is the value of «Coolant Temp.» 150°C (302°F) or more?	Go to step **2**.	Even if DTC is detected, the circuit has returned to a normal condition at this time. Reproduce the failure, and then perform the diagnosis again. NOTE: In this case, temporary poor contact of connector, temporary open or short circuit of harness may be the cause.
2	**CHECK HARNESS BETWEEN ECM AND ENGINE COOLANT TEMPERATURE SENSOR CONNECTOR.** 1) Turn the ignition switch to OFF. 2) Disconnect the connectors from ECM and engine coolant temperature sensor. 3) Measure the resistance between ECM and chassis ground. ***Connector & terminal*** ***(B137) No. 22 — Chassis ground:***	Is the resistance 1 MΩ or more?	Replace the engine coolant temperature sensor. <Ref. to FU(H6DO)-29, Engine Coolant Temperature Sensor.>	Repair short circuit in harness to ground between ECM and engine coolant temperature sensor connector.

AC:DTC P0118 ENGINE COOLANT TEMPERATURE CIRCUIT HIGH

DTC DETECTING CONDITION:

- Immediately at fault recognition
- GENERAL DESCRIPTION <Ref. to GD(H6DO)-52, DTC P0118 ENGINE COOLANT TEMPERATURE CIRCUIT HIGH, Diagnostic Trouble Code (DTC) Detecting Criteria.>

TROUBLE SYMPTOM:

- Hard to start
- Improper idling
- Poor driving performance

CAUTION:
After servicing or replacing faulty parts, perform Clear Memory Mode <Ref. to EN(H6DO)(diag)-57, OPERATION, Clear Memory Mode.>, and Inspection Mode <Ref. to EN(H6DO)(diag)-44, PROCEDURE, Inspection Mode.>.

WIRING DIAGRAM:

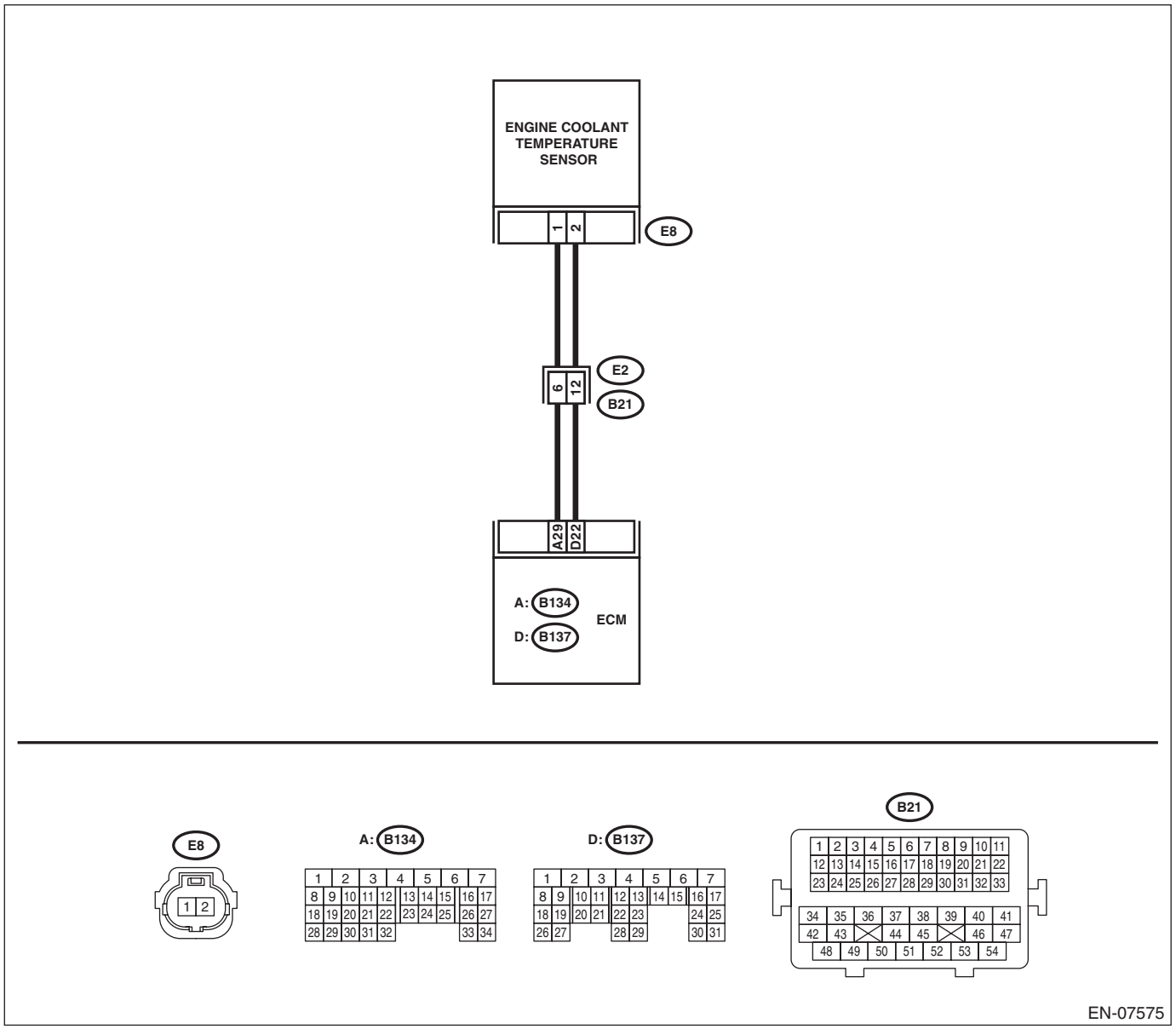

	Step	Check	Yes	No
1	**CHECK CURRENT DATA.** 1) Start the engine. 2) Read the value of «Coolant Temp.» using the Subaru Select Monitor or a general scan tool. NOTE: • Subaru Select Monitor For detailed operation procedures, refer to "READ CURRENT DATA FOR ENGINE". <Ref. to EN(H6DO)(diag)-35, Subaru Select Monitor.> • General scan tool For detailed operation procedures, refer to the general scan tool operation manual.	Is the value of «Coolant Temp.» less than –40°C (–40°F)?	Go to step **2**.	Even if DTC is detected, the circuit has returned to a normal condition at this time. Reproduce the failure, and then perform the diagnosis again. NOTE: In this case, temporary poor contact of connector, temporary open or short circuit of harness may be the cause.
2	**CHECK FOR POOR CONTACT.** Check for poor contact of ECM and engine coolant temperature sensor connector.	Is there poor contact of ECM or engine coolant temperature sensor connector?	Repair the poor contact of ECM or engine coolant temperature sensor connector.	Go to step **3**.
3	**CHECK HARNESS BETWEEN ECM AND ENGINE COOLANT TEMPERATURE SENSOR CONNECTOR.** 1) Turn the ignition switch to OFF. 2) Disconnect the connectors from ECM and engine coolant temperature sensor. 3) Measure the resistance of harness between ECM and engine coolant temperature sensor connector. ***Connector & terminal*** ***(B134) No. 29 — (E8) No. 1:*** ***(B137) No. 22 — (E8) No. 2:***	Is the resistance less than 1 Ω?	Go to step **4**.	Repair the harness and connector. NOTE: In this case, repair the following item: • Open circuit in harness between ECM and engine coolant temperature sensor connector • Poor contact of coupling connector
4	**CHECK HARNESS BETWEEN ECM AND ENGINE COOLANT TEMPERATURE SENSOR CONNECTOR.** 1) Connect all connectors. 2) Turn the ignition switch to ON. 3) Measure the voltage between ECM and chassis ground. ***Connector & terminal*** ***(B137) No. 22 (+) — Chassis ground (–):***	Is the voltage 5 V or more?	Repair the short circuit to power in harness between ECM and engine coolant temperature sensor connector.	Replace the engine coolant temperature sensor. <Ref. to FU(H6DO)-29, Engine Coolant Temperature Sensor.>

AD:DTC P0122 THROTTLE/PEDAL POSITION SENSOR/SWITCH "A" CIRCUIT LOW

DTC DETECTING CONDITION:

- Immediately at fault recognition
- GENERAL DESCRIPTION <Ref. to GD(H6DO)-54, DTC P0122 THROTTLE/PEDAL POSITION SENSOR/SWITCH "A" CIRCUIT LOW, Diagnostic Trouble Code (DTC) Detecting Criteria.>

TROUBLE SYMPTOM:

- Improper idling
- Engine stalls.
- Poor driving performance

CAUTION:

After servicing or replacing faulty parts, perform Clear Memory Mode <Ref. to EN(H6DO)(diag)-57, OPERATION, Clear Memory Mode.>, and Inspection Mode <Ref. to EN(H6DO)(diag)-44, PROCEDURE, Inspection Mode.>.

WIRING DIAGRAM:

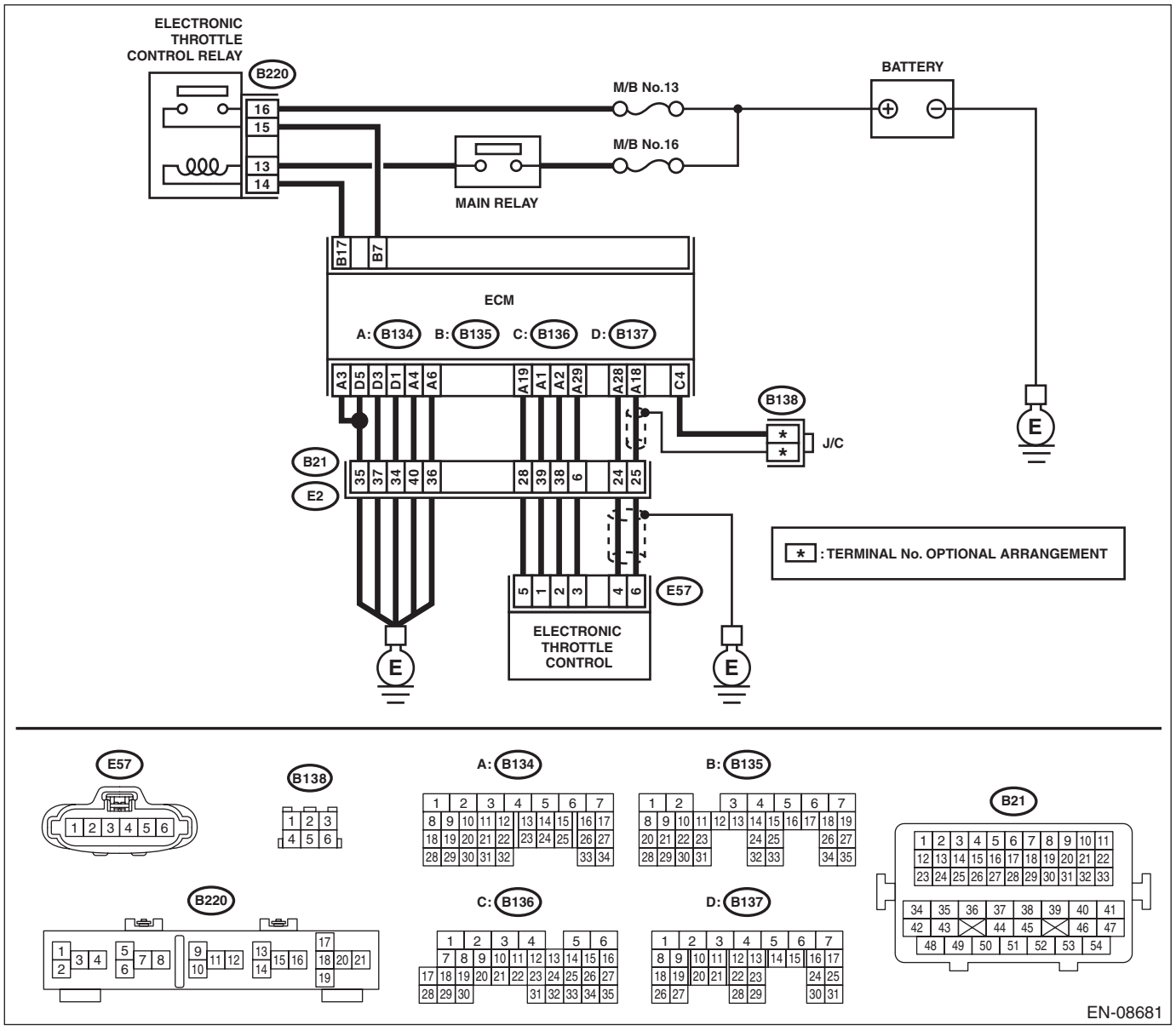

	Step	Check	Yes	No
1	**CHECK HARNESS BETWEEN ECM AND ELECTRONIC THROTTLE CONTROL.** 1) Turn the ignition switch to OFF. 2) Disconnect the connectors from ECM and electronic throttle control. 3) Measure the resistance between ECM and chassis ground. ***Connector & terminal*** ***(B134) No. 19 — Chassis ground:*** ***(B134) No. 18 — Chassis ground:*** ***(B134) No. 18 — (B136) No. 4:***	Is the resistance 1 MΩ or more?	Go to step **2**.	Repair the short circuit to ground in harness between ECM and electronic throttle control connector.
2	**CHECK SHORT CIRCUIT INSIDE THE ECM.** 1) Connect the connector to ECM. 2) Measure the resistance between electronic throttle control connector and engine ground. ***Connector & terminal*** ***(E57) No. 6 — Engine ground:***	Is the resistance 1 MΩ or more?	Replace the electronic throttle control. <Ref. to FU(H6DO)-19, Throttle Body.>	Repair the short circuit to ground in harness between ECM and electronic throttle control connector. Replace the ECM if defective. <Ref. to FU(H6DO)-54, Engine Control Module (ECM).>

AE:DTC P0123 THROTTLE/PEDAL POSITION SENSOR/SWITCH “A” CIRCUIT HIGH

DTC DETECTING CONDITION:

- Immediately at fault recognition
- GENERAL DESCRIPTION <Ref. to GD(H6DO)-56, DTC P0123 THROTTLE/PEDAL POSITION SENSOR/SWITCH “A” CIRCUIT HIGH, Diagnostic Trouble Code (DTC) Detecting Criteria.>

TROUBLE SYMPTOM:

- Improper idling
- Engine stalls.
- Poor driving performance

CAUTION:

After servicing or replacing faulty parts, perform Clear Memory Mode <Ref. to EN(H6DO)(diag)-57, OPERATION, Clear Memory Mode.>, and Inspection Mode <Ref. to EN(H6DO)(diag)-44, PROCEDURE, Inspection Mode.>.

WIRING DIAGRAM:

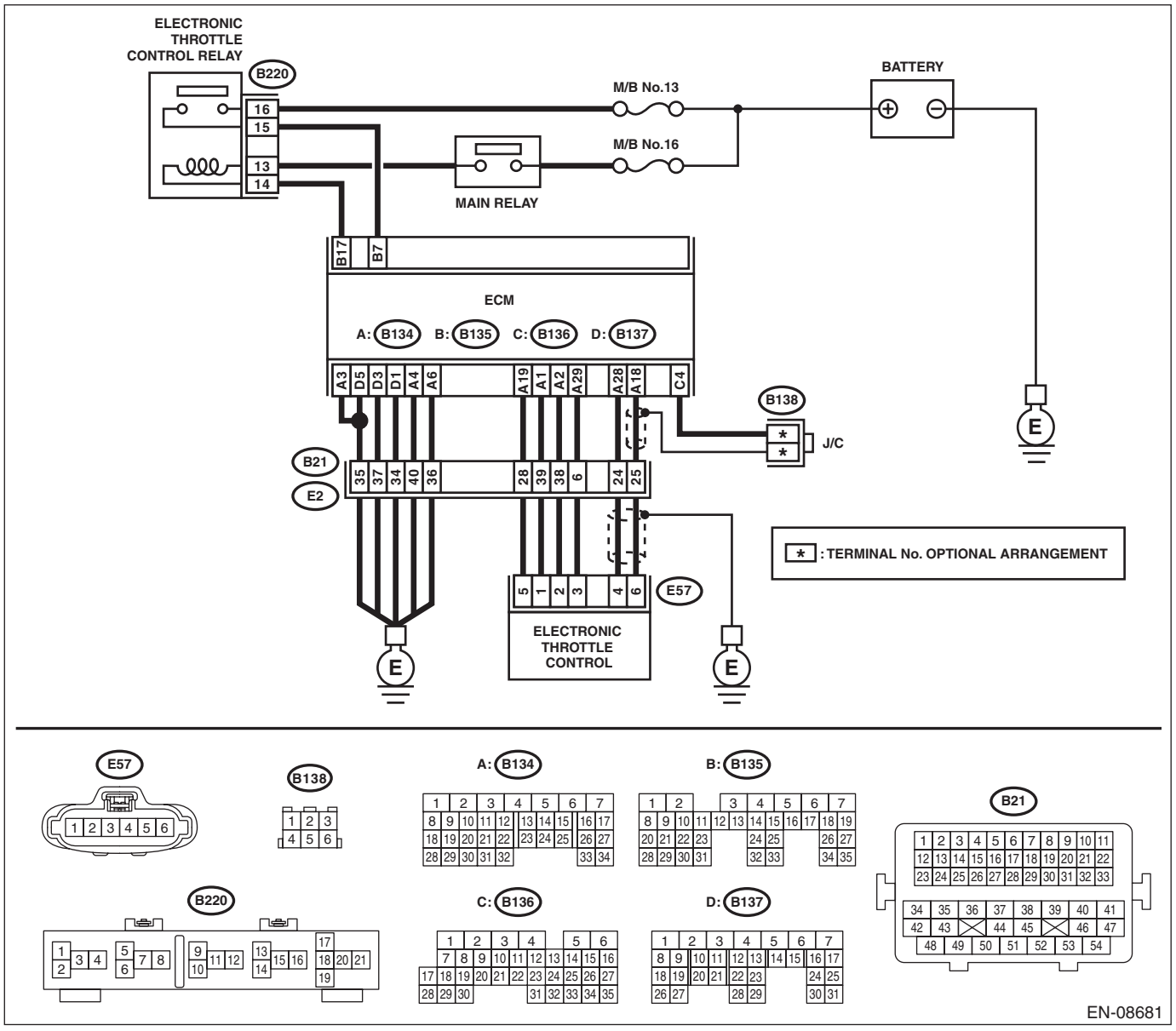

	Step	Check	Yes	No
1	**CHECK HARNESS BETWEEN ECM AND ELECTRONIC THROTTLE CONTROL.** 1) Turn the ignition switch to OFF. 2) Disconnect the connectors from ECM and electronic throttle control. 3) Measure the resistance of harness between ECM and electronic throttle control connector. ***Connector & terminal*** ***(B134) No. 18 — (E57) No. 6:*** ***(B134) No. 29 — (E57) No. 3:***	Is the resistance less than 1 Ω?	Go to step **2**.	Repair the harness and connector. NOTE: In this case, repair the following item: • Open circuit in harness between ECM and electronic throttle control connector • Poor contact of coupling connector
2	**CHECK HARNESS BETWEEN ECM AND ELECTRONIC THROTTLE CONTROL.** 1) Connect the connector to ECM. 2) Measure the resistance between electronic throttle control connector and engine ground. ***Connector & terminal*** ***(E57) No. 3 — Engine ground:***	Is the resistance less than 5 Ω?	Go to step **3**.	Repair the harness and connector. NOTE: In this case, repair the following item: • Open circuit of harness between ECM and engine ground • Poor contact of ECM connector • Poor contact of coupling connector
3	**CHECK HARNESS BETWEEN ECM AND ELECTRONIC THROTTLE CONTROL.** 1) Turn the ignition switch to ON. 2) Measure the voltage between electronic throttle control connector and engine ground. ***Connector & terminal*** ***(E57) No. 6 (+) — Engine ground (–):***	Is the voltage 5 V or more?	Repair the short circuit to power in harness between ECM and electronic throttle control connector.	Go to step **4**.
4	**CHECK HARNESS BETWEEN ECM AND ELECTRONIC THROTTLE CONTROL.** 1) Turn the ignition switch to OFF. 2) Disconnect the connectors from ECM. 3) Measure the resistance between ECM connectors. ***Connector & terminal*** ***(B134) No. 19 — (B134) No. 18:***	Is the resistance 1 MΩ or more?	Repair the poor contact of electronic throttle control connector. Replace the electronic throttle control if defective. <Ref. to FU(H6DO)-19, Throttle Body.>	Repair the short circuit to power in harness between ECM and electronic throttle control connector.

AF:DTC P0125 INSUFFICIENT COOLANT TEMPERATURE FOR CLOSED LOOP FUEL CONTROL

DTC DETECTING CONDITION:

- Detected when two consecutive driving cycles with fault occur.
- GENERAL DESCRIPTION <Ref. to GD(H6DO)-58, DTC P0125 INSUFFICIENT COOLANT TEMPERATURE FOR CLOSED LOOP FUEL CONTROL, Diagnostic Trouble Code (DTC) Detecting Criteria.>

TROUBLE SYMPTOM:

Engine does not return to idle.

CAUTION:

After servicing or replacing faulty parts, perform Clear Memory Mode <Ref. to EN(H6DO)(diag)-57, OPERATION, Clear Memory Mode.>, and Inspection Mode <Ref. to EN(H6DO)(diag)-44, PROCEDURE, Inspection Mode.>.

	Step	Check	Yes	No
1	**CHECK TIRE SIZE.**	Is the tire size as specified and the same size as three other wheels?	Go to step **2**.	Replace the tire.
2	**CHECK ENGINE COOLANT.** Check the following items: • Amount of engine coolant • Engine coolant freeze • Contamination of engine coolant	Is the engine coolant normal?	Go to step **3**.	Fill or replace the engine coolant. <Ref. to CO(H6DO)-12, Engine Coolant.>
3	**CHECK THERMOSTAT.**	Does the thermostat remain opened?	Replace the thermostat. <Ref. to CO(H6DO)-15, Thermostat.>	Replace the engine coolant temperature sensor. <Ref. to FU(H6DO)-29, Engine Coolant Temperature Sensor.>

AG:DTC P0126 INSUFFICIENT ENGINE COOLANT TEMPERATURE FOR STABLE OPERATION

DTC DETECTING CONDITION:

- Detected when two consecutive driving cycles with fault occur.
- GENERAL DESCRIPTION <Ref. to GD(H6DO)-60, DTC P0126 INSUFFICIENT ENGINE COOLANT TEMPERATURE FOR STABLE OPERATION, Diagnostic Trouble Code (DTC) Detecting Criteria.>

TROUBLE SYMPTOM:

- Hard to start
- Improper idling
- Poor driving performance

CAUTION:

After servicing or replacing faulty parts, perform Clear Memory Mode <Ref. to EN(H6DO)(diag)-57, OPERATION, Clear Memory Mode.>, and Inspection Mode <Ref. to EN(H6DO)(diag)-44, PROCEDURE, Inspection Mode.>.

	Step	Check	Yes	No
1	**CHECK ENGINE COOLANT TEMPERATURE SENSOR.** 1) Disconnect the connectors from the engine coolant temperature sensor. 2) Measure the resistance between engine coolant temperature sensor terminals when the engine coolant is cold and after warmed up. ***Terminals*** ***No. 1 — No. 2:***	Is the resistance of engine coolant temperature sensor different between when engine coolant is cold and after warmed up?	Repair the poor contact of ECM connector.	Replace the engine coolant temperature sensor. <Ref. to FU(H6DO)-29, Engine Coolant Temperature Sensor.>

AH:DTC P0128 COOLANT THERMOSTAT (ENGINE COOLANT TEMPERATURE BELOW THERMOSTAT REGULATING TEMPERATURE)

DTC DETECTING CONDITION:

- Detected when two consecutive driving cycles with fault occur.
- GENERAL DESCRIPTION <Ref. to GD(H6DO)-62, DTC P0128 COOLANT THERMOSTAT (ENGINE COOLANT TEMPERATURE BELOW THERMOSTAT REGULATING TEMPERATURE), Diagnostic Trouble Code (DTC) Detecting Criteria.>

TROUBLE SYMPTOM:

Thermostat remains open.

CAUTION:

After servicing or replacing faulty parts, perform Clear Memory Mode <Ref. to EN(H6DO)(diag)-57, OPERATION, Clear Memory Mode.>, and Inspection Mode <Ref. to EN(H6DO)(diag)-44, PROCEDURE, Inspection Mode.>.

	Step	Check	Yes	No
1	**CHECK ENGINE COOLANT.**	Is the engine coolant amount normal?	Go to step **2**.	Refill the engine coolant. <Ref. to CO(H6DO)-12, Engine Coolant.>
2	**CHECK RADIATOR FAN.** 1) Start the engine. 2) Check the radiator fan operation.	Does the radiator fan continuously rotate for 3 minutes or more during idling?	Repair radiator fan circuit. <Ref. to CO(H6DO)-21, Radiator Main Fan and Fan Motor.> and <Ref. to CO(H6DO)-24, Radiator Sub Fan and Fan Motor.>	Replace the thermostat. <Ref. to CO(H6DO)-15, Thermostat.>

AI: DTC P0131 O2 SENSOR CIRCUIT LOW VOLTAGE (BANK 1 SENSOR 1)

DTC DETECTING CONDITION:

- Immediately at fault recognition
- GENERAL DESCRIPTION <Ref. to GD(H6DO)-66, DTC P0131 O2 SENSOR CIRCUIT LOW VOLTAGE (BANK 1 SENSOR 1), Diagnostic Trouble Code (DTC) Detecting Criteria.>

CAUTION:

After servicing or replacing faulty parts, perform Clear Memory Mode <Ref. to EN(H6DO)(diag)-57, OPERATION, Clear Memory Mode.>, and Inspection Mode <Ref. to EN(H6DO)(diag)-44, PROCEDURE, Inspection Mode.>.

WIRING DIAGRAM:

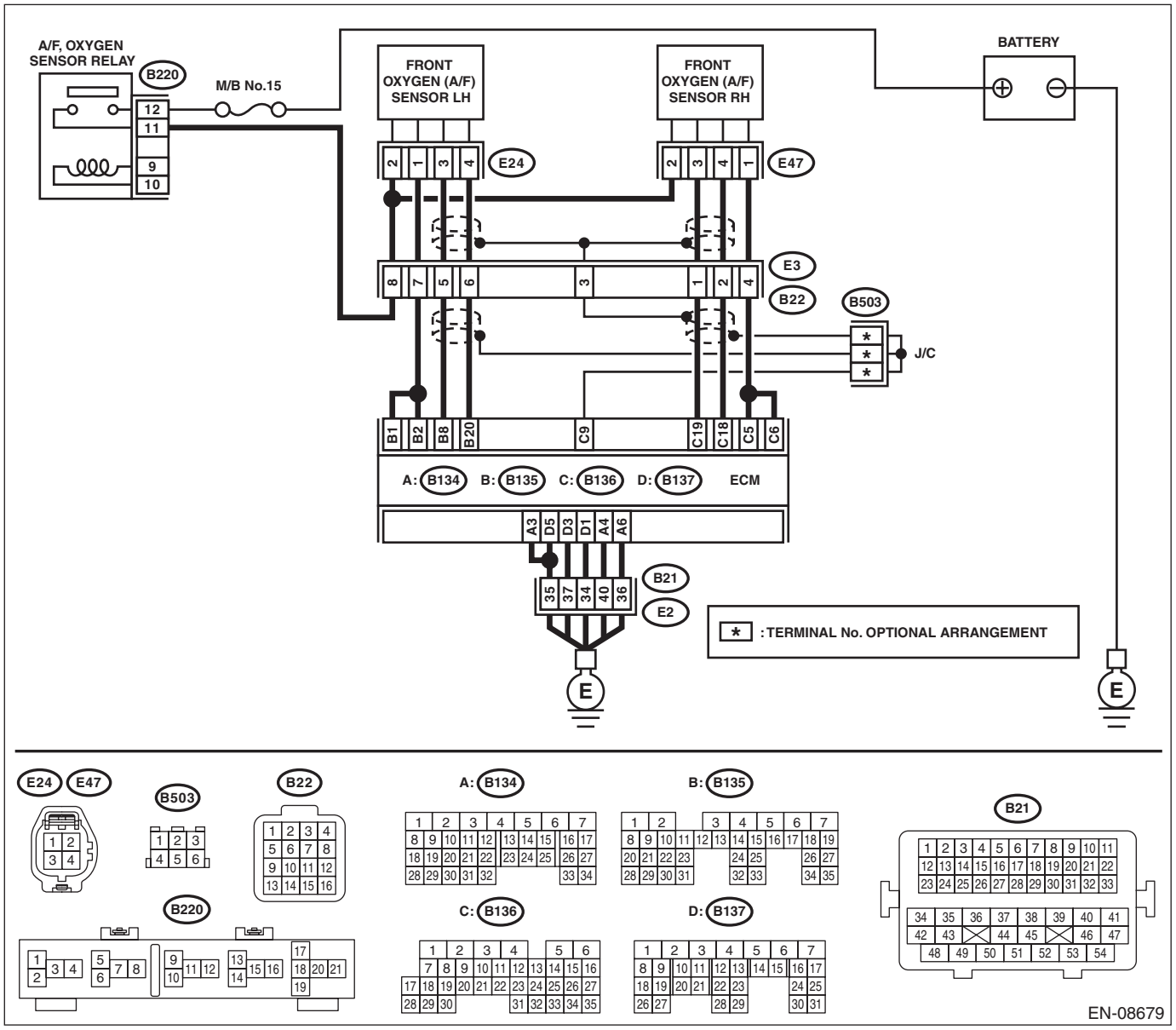

Step		Check	Yes	No
1	**CHECK FRONT OXYGEN (A/F) SENSOR CONNECTOR AND COUPLING CONNECTOR.**	Has water entered the connector?	Completely remove any water inside.	Go to step **2**.

	Step	Check	Yes	No
2	**CHECK HARNESS BETWEEN ECM AND FRONT OXYGEN (A/F) SENSOR CONNECTOR.** 1) Turn the ignition switch to OFF. 2) Disconnect the connectors from ECM and front oxygen (A/F) sensor connector. 3) Measure the resistance between ECM and chassis ground. ***Connector & terminal*** ***(B136) No. 18 — Chassis ground:*** ***(B136) No. 19 — Chassis ground:***	Is the resistance 1 MΩ or more?	Go to step **3**.	Repair the ground short circuit of harness between ECM and front oxygen (A/F) sensor connector.
3	**CHECK FOR POOR CONTACT.** Check for poor contact of the front oxygen (A/F) sensor connector.	Is there poor contact of front oxygen (A/F) sensor connector?	Repair the poor contact of front oxygen (A/F) sensor connector.	Replace the front oxygen (A/F) sensor. <Ref. to FU(H6DO)-50, Front Oxygen (A/F) Sensor.>

AJ:DTC P0132 O2 SENSOR CIRCUIT HIGH VOLTAGE (BANK 1 SENSOR 1)

DTC DETECTING CONDITION:

- Immediately at fault recognition
- GENERAL DESCRIPTION <Ref. to GD(H6DO)-68, DTC P0132 O2 SENSOR CIRCUIT HIGH VOLTAGE (BANK 1 SENSOR 1), Diagnostic Trouble Code (DTC) Detecting Criteria.>

CAUTION:

After servicing or replacing faulty parts, perform Clear Memory Mode <Ref. to EN(H6DO)(diag)-57, OPERATION, Clear Memory Mode.>, and Inspection Mode <Ref. to EN(H6DO)(diag)-44, PROCEDURE, Inspection Mode.>.

WIRING DIAGRAM:

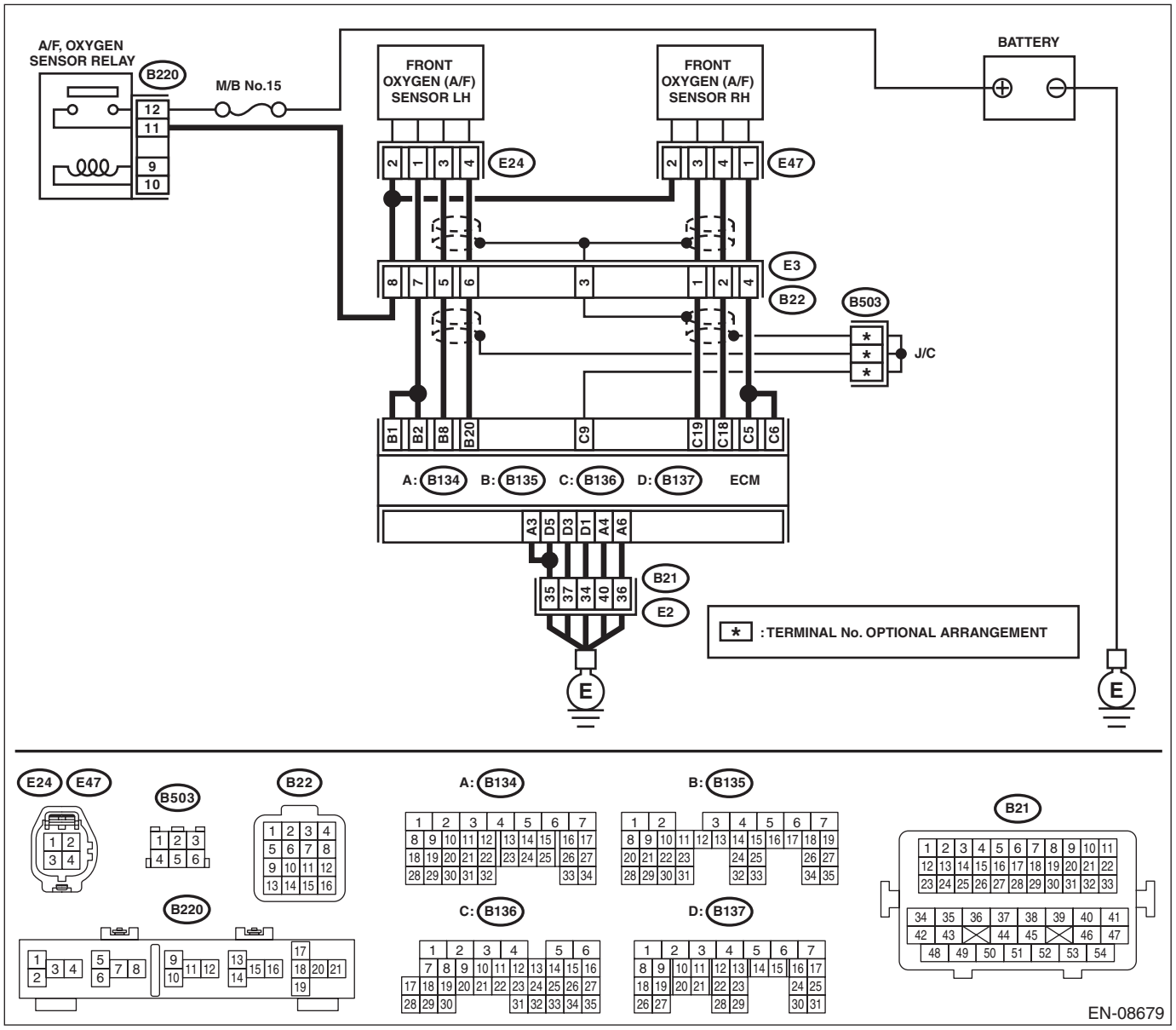

Step		Check	Yes	No
1	**CHECK FRONT OXYGEN (A/F) SENSOR CONNECTOR AND COUPLING CONNECTOR.**	Has water entered the connector?	Completely remove any water inside.	Go to step **2**.

	Step	Check	Yes	No
2	**CHECK HARNESS BETWEEN ECM AND FRONT OXYGEN (A/F) SENSOR CONNECTOR.** 1) Turn the ignition switch to OFF. 2) Disconnect the connectors from front oxygen (A/F) sensor. 3) Turn the ignition switch to ON. 4) Measure the voltage between ECM and chassis ground. ***Connector & terminal*** ***(B136) No. 18 (+) — Chassis ground (–):*** ***(B136) No. 19 (+) — Chassis ground (–):***	Is the voltage 8 V or more?	Repair the short circuit to power in the harness between ECM and front oxygen (A/F) sensor connector.	Replace the front oxygen (A/F) sensor. <Ref. to FU(H6DO)-50, Front Oxygen (A/F) Sensor.>

AK:DTC P0134 O2 SENSOR CIRCUIT NO ACTIVITY DETECTED (BANK 1 SENSOR 1)

DTC DETECTING CONDITION:

- Immediately at fault recognition
- GENERAL DESCRIPTION <Ref. to GD(H6DO)-70, DTC P0134 O2 SENSOR CIRCUIT NO ACTIVITY DETECTED (BANK 1 SENSOR 1), Diagnostic Trouble Code (DTC) Detecting Criteria.>

CAUTION:

After servicing or replacing faulty parts, perform Clear Memory Mode <Ref. to EN(H6DO)(diag)-57, OPERATION, Clear Memory Mode.>, and Inspection Mode <Ref. to EN(H6DO)(diag)-44, PROCEDURE, Inspection Mode.>.

WIRING DIAGRAM:

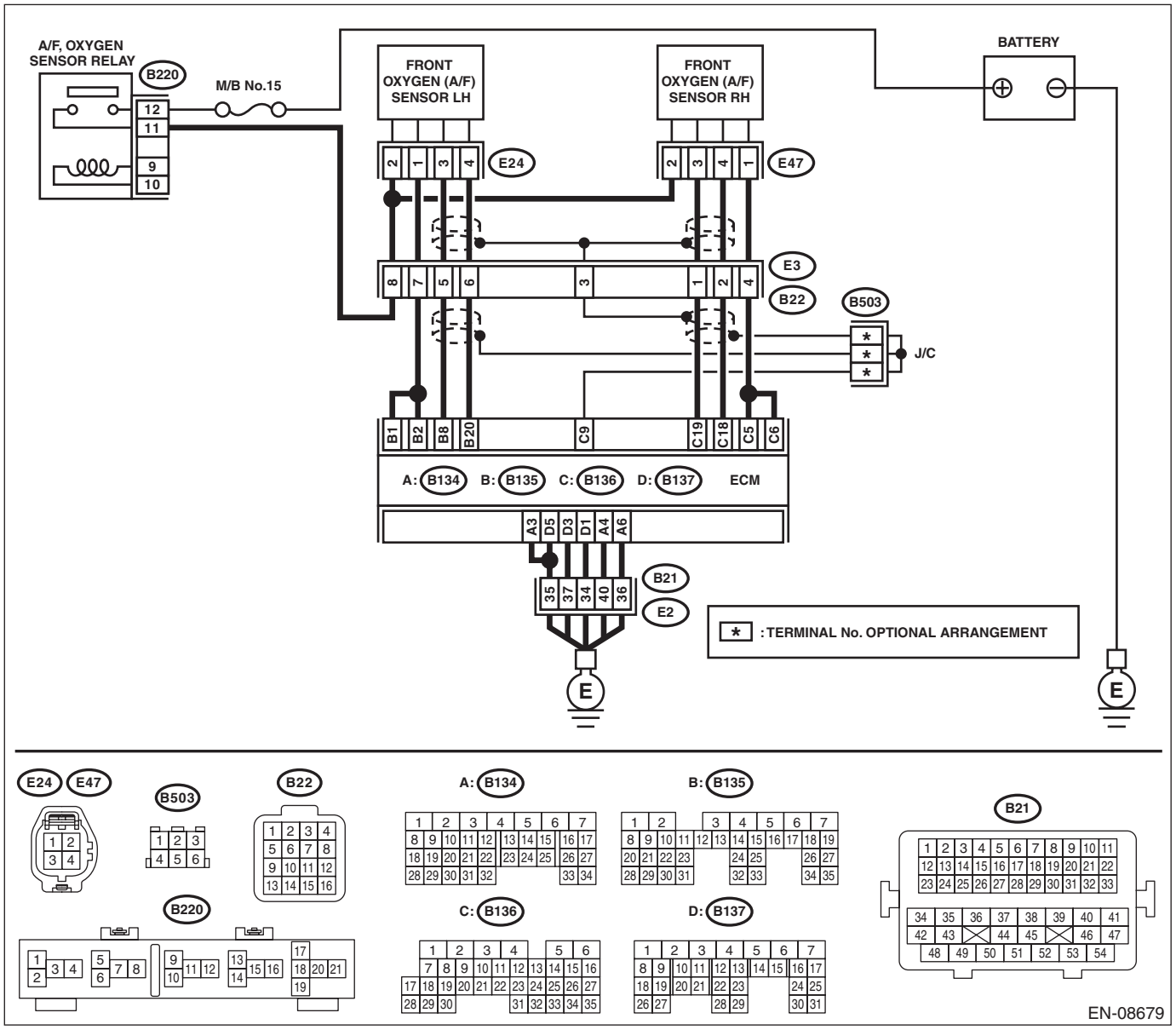

	Step	Check	Yes	No
1	**CHECK HARNESS BETWEEN ECM AND FRONT OXYGEN (A/F) SENSOR CONNECTOR.** 1) Turn the ignition switch to OFF. 2) Disconnect the connectors from ECM and front oxygen (A/F) sensor connector. 3) Measure the resistance of harness between ECM and front oxygen (A/F) sensor connector. ***Connector & terminal*** ***(B136) No. 19 — (E47) No. 3:*** ***(B136) No. 18 — (E47) No. 4:***	Is the resistance less than 1 Ω?	Go to step **2**.	Repair the harness and connector. NOTE: In this case, repair the following item: • Open circuit in harness between ECM and front oxygen (A/F) sensor connector • Poor contact of coupling connector
2	**CHECK FOR POOR CONTACT.** Check for poor contact of ECM and front oxygen (A/F) sensor connector.	Is there poor contact of ECM or front oxygen (A/F) sensor connector?	Repair the poor contact of ECM or front oxygen (A/F) sensor connector.	Replace the front oxygen (A/F) sensor. <Ref. to FU(H6DO)-50, Front Oxygen (A/F) Sensor.>

AL:DTC P0137 O2 SENSOR CIRCUIT LOW VOLTAGE (BANK 1 SENSOR 2)

DTC DETECTING CONDITION:

- Detected when two consecutive driving cycles with fault occur.
- GENERAL DESCRIPTION <Ref. to GD(H6DO)-72, DTC P0137 O2 SENSOR CIRCUIT LOW VOLTAGE (BANK 1 SENSOR 2), Diagnostic Trouble Code (DTC) Detecting Criteria.>

CAUTION:

After servicing or replacing faulty parts, perform Clear Memory Mode <Ref. to EN(H6DO)(diag)-57, OPERATION, Clear Memory Mode.>, and Inspection Mode <Ref. to EN(H6DO)(diag)-44, PROCEDURE, Inspection Mode.>.

WIRING DIAGRAM:

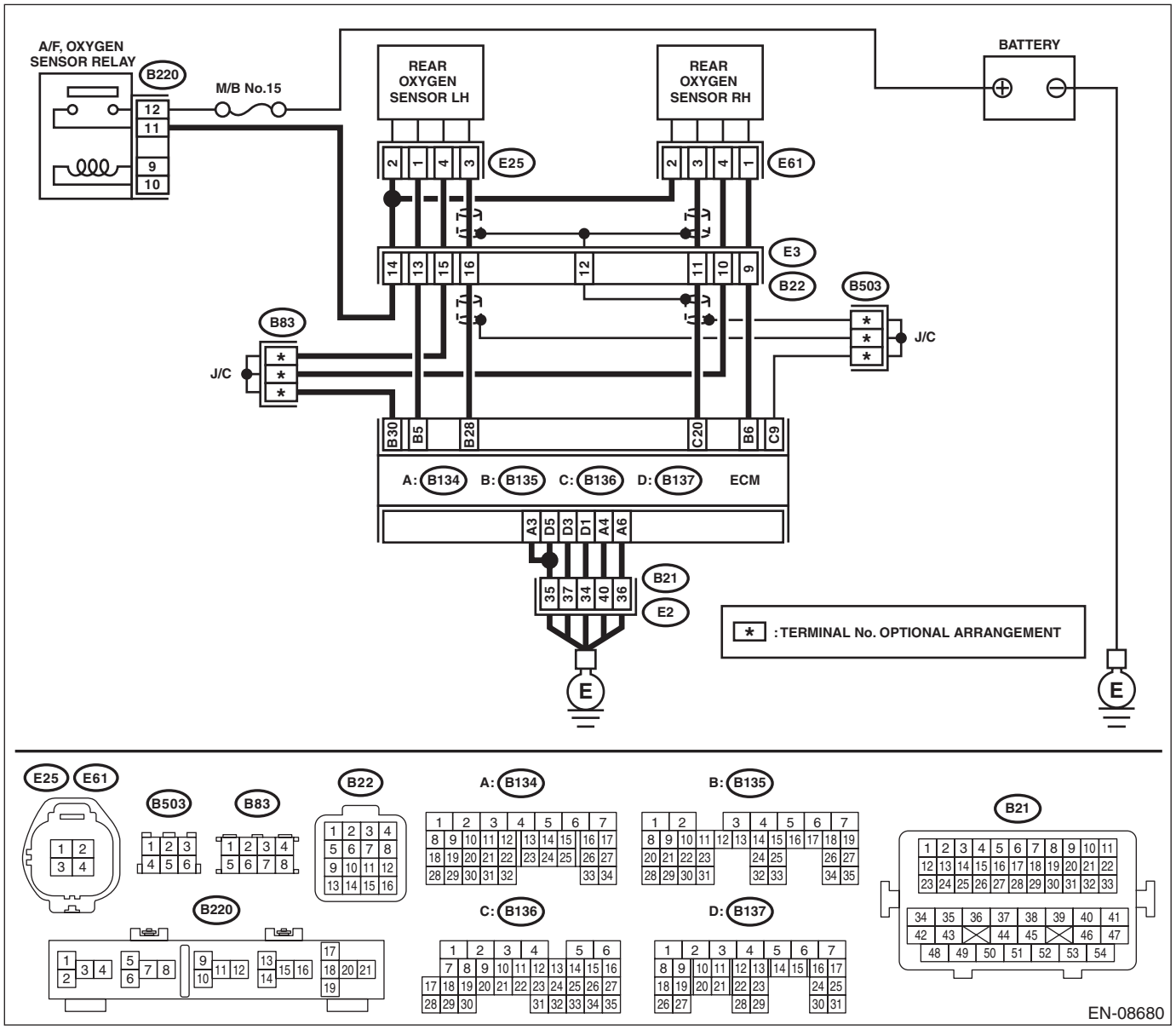

	Step	Check	Yes	No
1	**CHECK REAR OXYGEN SENSOR DATA.** 1) Warm up the engine until engine coolant temperature is higher than 75°C (167°F), and keep the engine speed at 3,000 rpm. (2 minutes maximum) 2) Read the value of «Front O2 Sensor #1» using the Subaru Select Monitor or a general scan tool. NOTE: • Subaru Select Monitor For detailed operation procedures, refer to "READ CURRENT DATA FOR ENGINE". <Ref. to EN(H6DO)(diag)-35, Subaru Select Monitor.> • General scan tool For detailed operation procedures, refer to the general scan tool operation manual.	Is the value of «Front O2 Sensor #1» 0.490 V or more?	Go to step **5**.	Go to step **2**.
2	**CHECK REAR OXYGEN SENSOR CONNECTOR AND COUPLING CONNECTOR.**	Has water entered the connector?	Completely remove any water inside.	Go to step **3**.
3	**CHECK HARNESS BETWEEN ECM AND REAR OXYGEN SENSOR CONNECTOR.** 1) Turn the ignition switch to OFF. 2) Disconnect the connector from ECM and rear oxygen sensor. 3) Measure the resistance of harness between ECM and rear oxygen sensor connector. ***Connector & terminal*** ***(B136) No. 20 — (E61) No. 3:*** ***(B135) No. 30 — (E61) No. 4:***	Is the resistance less than 1 Ω?	Go to step **4**.	Repair the harness and connector. NOTE: In this case, repair the following item: • Open circuit in harness between ECM and rear oxygen sensor connector • Poor contact of coupling connector
4	**CHECK HARNESS BETWEEN ECM AND REAR OXYGEN SENSOR CONNECTOR.** 1) Connect the connector to ECM. 2) Turn the ignition switch to ON. 3) Measure the voltage between rear oxygen sensor connector and chassis ground. ***Connector & terminal*** ***(E61) No. 3 (+) — Chassis ground (–):***	Is the voltage 0.2 — 0.5 V?	Replace the rear oxygen sensor. <Ref. to FU(H6DO)-52, Rear Oxygen Sensor.>	Repair the harness and connector. NOTE: In this case, repair the following item: • Open circuit in harness between ECM and rear oxygen sensor connector • Poor contact of ECM connector • Poor contact of coupling connector
5	**CHECK EXHAUST SYSTEM.** Check exhaust system parts. NOTE: Check the following items. • Looseness and improper fitting of exhaust system parts • Damage (crack, hole etc.) of parts • Loose part and improper installation between front oxygen (A/F) sensor and rear oxygen sensor	Is there any fault in exhaust system?	Repair or replace faulty parts.	Replace the rear oxygen sensor. <Ref. to FU(H6DO)-52, Rear Oxygen Sensor.>

AM:DTC P0138 O2 SENSOR CIRCUIT HIGH VOLTAGE (BANK 1 SENSOR 2)

DTC DETECTING CONDITION:

- Detected when two consecutive driving cycles with fault occur.
- GENERAL DESCRIPTION <Ref. to GD(H6DO)-75, DTC P0138 O2 SENSOR CIRCUIT HIGH VOLTAGE (BANK 1 SENSOR 2), Diagnostic Trouble Code (DTC) Detecting Criteria.>

CAUTION:

After servicing or replacing faulty parts, perform Clear Memory Mode <Ref. to EN(H6DO)(diag)-57, OPERATION, Clear Memory Mode.>, and Inspection Mode <Ref. to EN(H6DO)(diag)-44, PROCEDURE, Inspection Mode.>.

WIRING DIAGRAM:

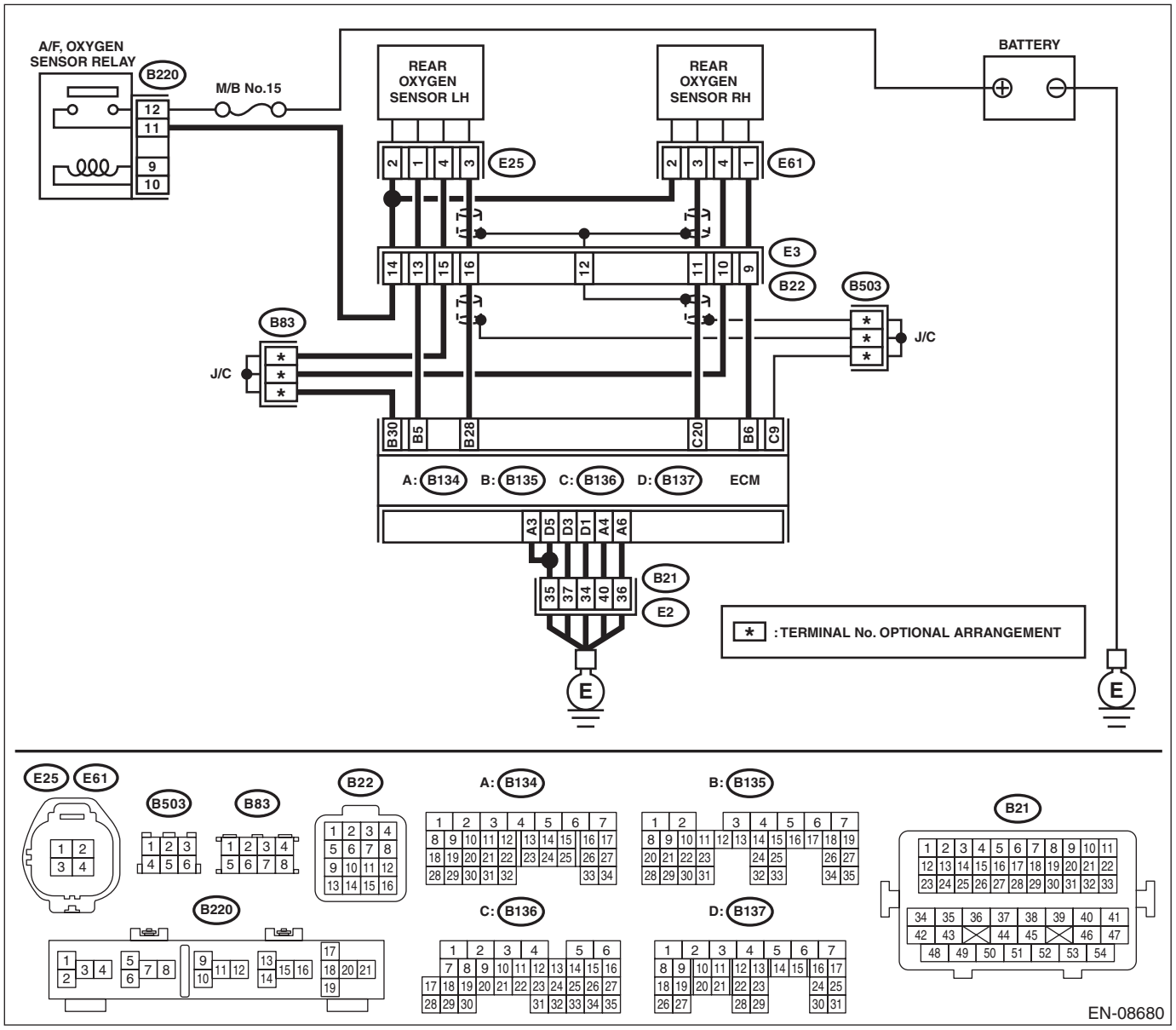

	Step	Check	Yes	No
1	**CHECK REAR OXYGEN SENSOR DATA.** 1) Warm up the engine until engine coolant temperature is higher than 75°C (167°F), and rapidly reduce the engine speed from 3,000 rpm. 2) Read the value of «Front O2 Sensor #1» using the Subaru Select Monitor or a general scan tool. NOTE: • Subaru Select Monitor For detailed operation procedures, refer to "READ CURRENT DATA FOR ENGINE". <Ref. to EN(H6DO)(diag)-35, Subaru Select Monitor.> • General scan tool For detailed operation procedures, refer to the general scan tool operation manual.	Is the value of «Front O2 Sensor #1» 0.250 V or less?	Go to step **5**.	Go to step **2**.
2	**CHECK REAR OXYGEN SENSOR CONNECTOR AND COUPLING CONNECTOR.**	Has water entered the connector?	Completely remove any water inside.	Go to step **3**.
3	**CHECK HARNESS BETWEEN ECM AND REAR OXYGEN SENSOR CONNECTOR.** 1) Turn the ignition switch to OFF. 2) Disconnect the connector from ECM and rear oxygen sensor. 3) Measure the resistance of harness between ECM and rear oxygen sensor connector. ***Connector & terminal*** ***(B136) No. 20 — (E61) No. 3:*** ***(B135) No. 30 — (E61) No. 4:***	Is the resistance less than 1 Ω?	Go to step **4**.	Repair the harness and connector. NOTE: In this case, repair the following item: • Open circuit in harness between ECM and rear oxygen sensor connector • Poor contact of coupling connector
4	**CHECK HARNESS BETWEEN ECM AND REAR OXYGEN SENSOR CONNECTOR.** 1) Connect the connector to ECM. 2) Turn the ignition switch to ON. 3) Measure the voltage between rear oxygen sensor connector and chassis ground. ***Connector & terminal*** ***(E61) No. 3 (+) — Chassis ground (–):***	Is the voltage 0.2 — 0.5 V?	Replace the rear oxygen sensor. <Ref. to FU(H6DO)-52, Rear Oxygen Sensor.>	Repair the harness and connector. NOTE: In this case, repair the following item: • Open circuit in harness between ECM and rear oxygen sensor connector • Poor contact of ECM connector • Poor contact of coupling connector
5	**CHECK EXHAUST SYSTEM.** Check exhaust system parts. NOTE: Check the following items. • Looseness and improper fitting of exhaust system parts • Damage (crack, hole etc.) of parts • Loose part and improper installation between front oxygen (A/F) sensor and rear oxygen sensor	Is there any fault in exhaust system?	Repair or replace faulty parts.	Replace the rear oxygen sensor. <Ref. to FU(H6DO)-52, Rear Oxygen Sensor.>

AN:DTC P013A O2 SENSOR SLOW RESPONSE - RICH TO LEAN (BANK 1 SENSOR 2)

DTC DETECTING CONDITION:

- Detected when two consecutive driving cycles with fault occur.
- GENERAL DESCRIPTION <Ref. to GD(H6DO)-76, DTC P013A O2 SENSOR SLOW RESPONSE - RICH TO LEAN (BANK 1 SENSOR 2), Diagnostic Trouble Code (DTC) Detecting Criteria.>

CAUTION:

After servicing or replacing faulty parts, perform Clear Memory Mode <Ref. to EN(H6DO)(diag)-57, OPERATION, Clear Memory Mode.>, and Inspection Mode <Ref. to EN(H6DO)(diag)-44, PROCEDURE, Inspection Mode.>.

WIRING DIAGRAM:

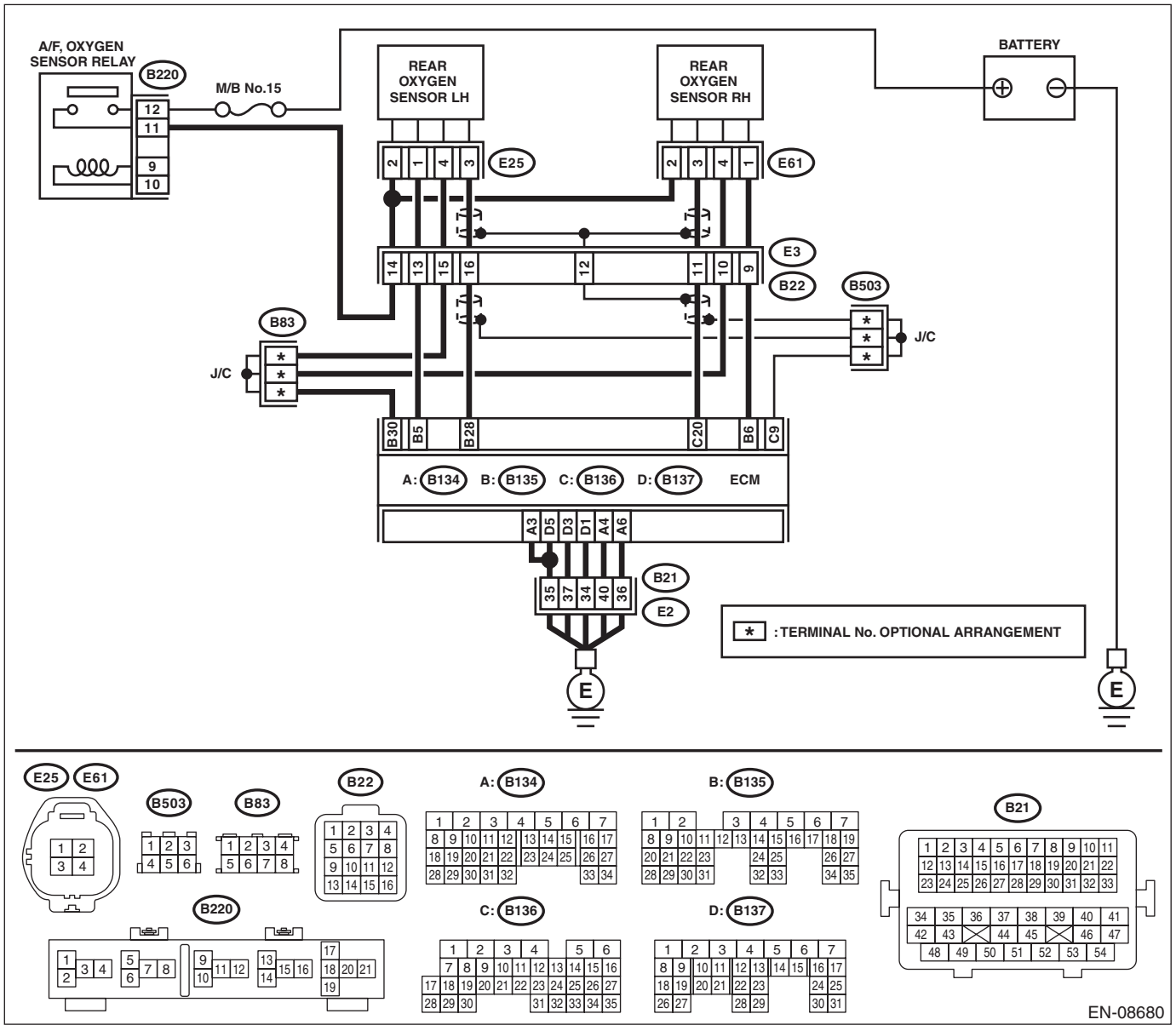

	Step	Check	Yes	No
1	**CHECK HARNESS BETWEEN ECM AND REAR OXYGEN SENSOR CONNECTOR.** 1) Turn the ignition switch to OFF. 2) Disconnect the connector from ECM and rear oxygen sensor. 3) Measure the resistance of harness between ECM and rear oxygen sensor connector. ***Connector & terminal*** ***(B136) No. 20 — (E61) No. 3:***	Is the resistance less than 1 Ω?	Go to step **2**.	Repair the harness and connector. NOTE: In this case, repair the following item: • Open circuit in harness between ECM and rear oxygen sensor connector • Poor contact of coupling connector
2	**CHECK HARNESS BETWEEN ECM AND REAR OXYGEN SENSOR CONNECTOR.** Measure the resistance between rear oxygen sensor connector and chassis ground. ***Connector & terminal*** ***(E61) No. 3 — Chassis ground:***	Is the resistance 1 MΩ or more?	Go to step **3**.	Repair the ground short circuit of harness between ECM and rear oxygen sensor connector.
3	**CHECK REAR OXYGEN SENSOR.** Measure the resistance between rear oxygen sensor terminals. ***Terminals*** ***No. 3 — No. 4***	Is the resistance less than 1 Ω?	Replace the rear oxygen sensor. <Ref. to FU(H6DO)-52, Rear Oxygen Sensor.>	Even if DTC is detected, the circuit has returned to a normal condition at this time. Reproduce the failure, and then perform the diagnosis again. NOTE: In this case, temporary poor contact of connector, temporary open or short circuit of harness may be the cause.

AO:DTC P013B O2 SENSOR SLOW RESPONSE - LEAN TO RICH (BANK 1 SENSOR 2)

NOTE:
For the diagnostic procedure, refer to DTC P013A. <Ref. to EN(H6DO)(diag)-159, DTC P013A O2 SENSOR SLOW RESPONSE - RICH TO LEAN (BANK 1 SENSOR 2), Diagnostic Procedure with Diagnostic Trouble Code (DTC).>

AP:DTC P013C O2 SENSOR SLOW RESPONSE - RICH TO LEAN (BANK 2 SENSOR 2)

DTC DETECTING CONDITION:

- Detected when two consecutive driving cycles with fault occur.
- GENERAL DESCRIPTION <Ref. to GD(H6DO)-80, DTC P013C O2 SENSOR SLOW RESPONSE - RICH TO LEAN (BANK 2 SENSOR 2), Diagnostic Trouble Code (DTC) Detecting Criteria.>

CAUTION:

After servicing or replacing faulty parts, perform Clear Memory Mode <Ref. to EN(H6DO)(diag)-57, OPERATION, Clear Memory Mode.>, and Inspection Mode <Ref. to EN(H6DO)(diag)-44, PROCEDURE, Inspection Mode.>.

WIRING DIAGRAM:

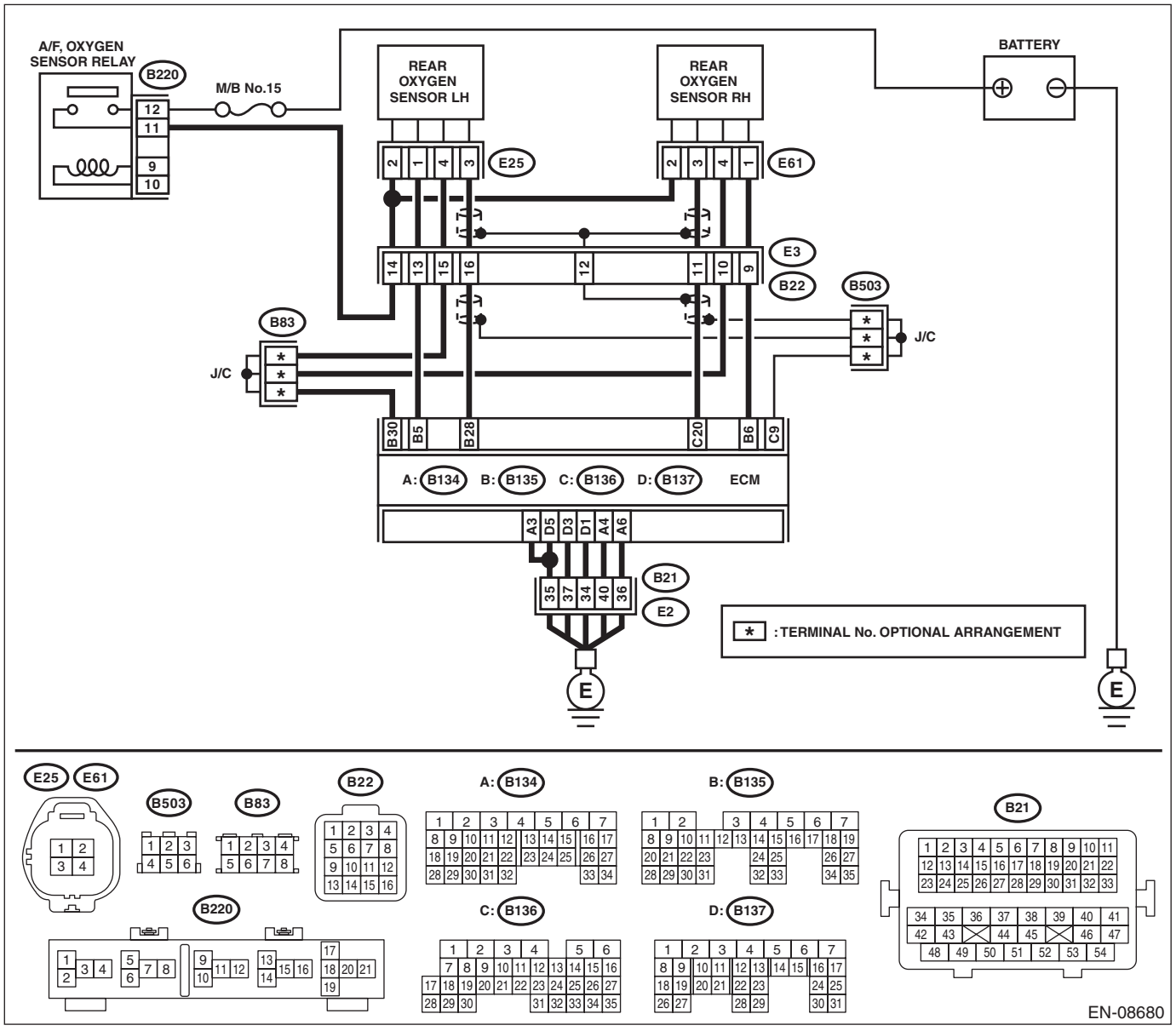

	Step	Check	Yes	No
1	**CHECK HARNESS BETWEEN ECM AND REAR OXYGEN SENSOR CONNECTOR.** 1) Turn the ignition switch to OFF. 2) Disconnect the connector from ECM and rear oxygen sensor. 3) Measure the resistance of harness between ECM and rear oxygen sensor connector. ***Connector & terminal*** ***(B135) No. 28 — (E25) No. 3:***	Is the resistance less than 1 Ω?	Go to step **2**.	Repair the harness and connector. NOTE: In this case, repair the following item: • Open circuit in harness between ECM and rear oxygen sensor connector • Poor contact of coupling connector
2	**CHECK HARNESS BETWEEN ECM AND REAR OXYGEN SENSOR CONNECTOR.** Measure the resistance between rear oxygen sensor connector and chassis ground. ***Connector & terminal*** ***(E25) No. 3 — Chassis ground:***	Is the resistance 1 MΩ or more?	Go to step **3**.	Repair the ground short circuit of harness between ECM and rear oxygen sensor connector.
3	**CHECK REAR OXYGEN SENSOR.** Measure the resistance between rear oxygen sensor terminals. ***Terminals*** ***No. 3 — No. 4***	Is the resistance less than 1 Ω?	Replace the rear oxygen sensor. <Ref. to FU(H6DO)-52, Rear Oxygen Sensor.>	Even if DTC is detected, the circuit has returned to a normal condition at this time. Reproduce the failure, and then perform the diagnosis again. NOTE: In this case, temporary poor contact of connector, temporary open or short circuit of harness may be the cause.

AQ:DTC P013D O2 SENSOR SLOW RESPONSE - LEAN TO RICH (BANK 2 SENSOR 2)

NOTE:
For the diagnostic procedure, refer to DTC P013C. <Ref. to EN(H6DO)(diag)-161, DTC P013C O2 SENSOR SLOW RESPONSE - RICH TO LEAN (BANK 2 SENSOR 2), Diagnostic Procedure with Diagnostic Trouble Code (DTC).>

AR:DTC P013E O2 SENSOR DELAYED RESPONSE - RICH TO LEAN (BANK 1 SENSOR 2)

NOTE:
For the diagnostic procedure, refer to DTC P013A. <Ref. to EN(H6DO)(diag)-159, DTC P013A O2 SENSOR SLOW RESPONSE - RICH TO LEAN (BANK 1 SENSOR 2), Diagnostic Procedure with Diagnostic Trouble Code (DTC).>

AS:DTC P013F O2 SENSOR DELAYED RESPONSE - LEAN TO RICH (BANK 1 SENSOR 2)

NOTE:
For the diagnostic procedure, refer to DTC P013A. <Ref. to EN(H6DO)(diag)-159, DTC P013A O2 SENSOR SLOW RESPONSE - RICH TO LEAN (BANK 1 SENSOR 2), Diagnostic Procedure with Diagnostic Trouble Code (DTC).>

AT:DTC P0140 O2 SENSOR CIRCUIT NO ACTIVITY DETECTED (BANK1 SENSOR2)

DTC DETECTING CONDITION:

- Detected when two consecutive driving cycles with fault occur.
- GENERAL DESCRIPTION <Ref. to GD(H6DO)-85, DTC P0140 O2 SENSOR CIRCUIT NO ACTIVITY DETECTED (BANK1 SENSOR2), Diagnostic Trouble Code (DTC) Detecting Criteria.>

CAUTION:

After servicing or replacing faulty parts, perform Clear Memory Mode <Ref. to EN(H6DO)(diag)-57, OPERATION, Clear Memory Mode.>, and Inspection Mode <Ref. to EN(H6DO)(diag)-44, PROCEDURE, Inspection Mode.>.

WIRING DIAGRAM:

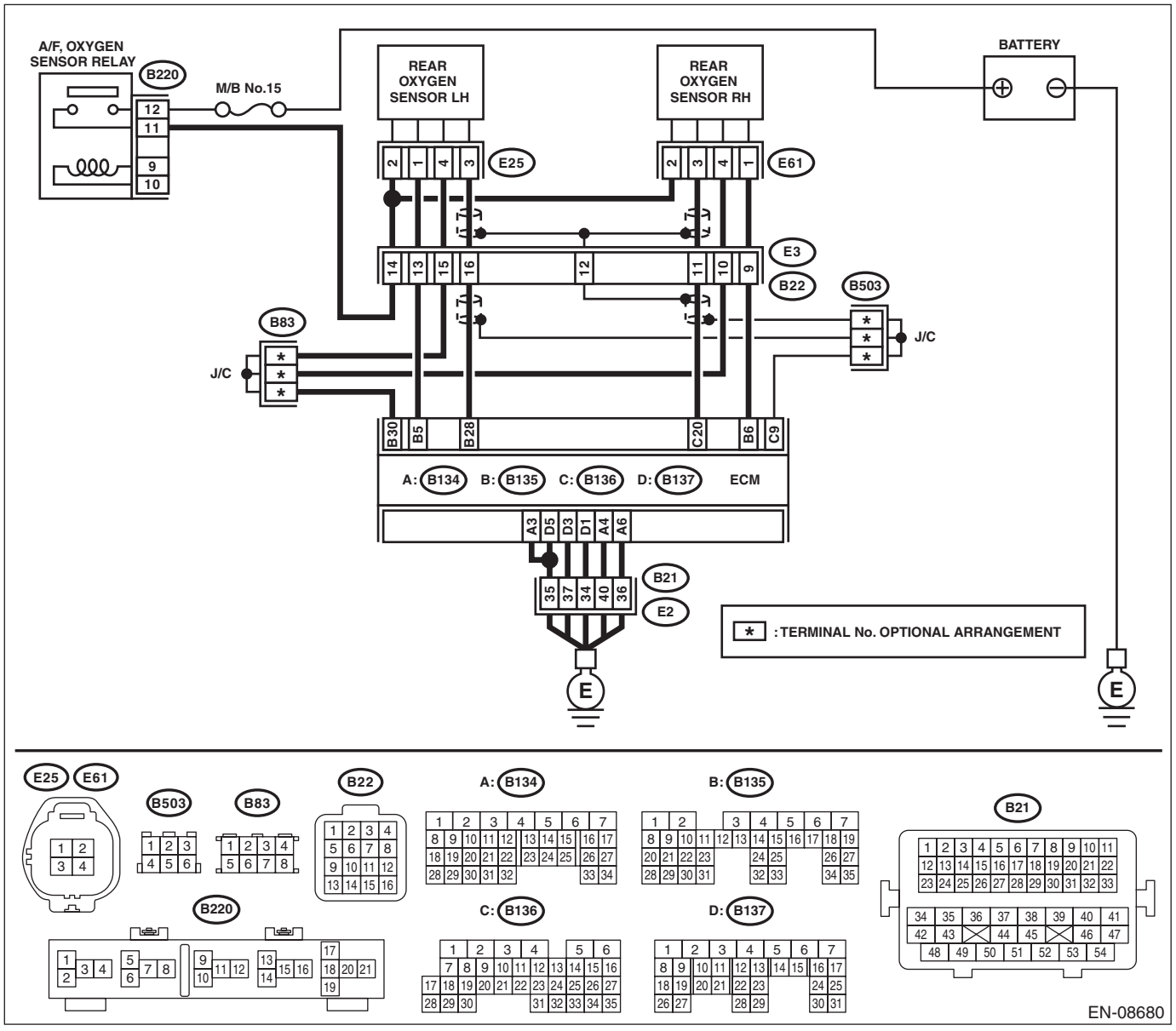

	Step	Check	Yes	No
1	**CHECK REAR OXYGEN SENSOR DATA.** 1) Warm up the engine until engine coolant temperature is higher than 75°C (167°F), and keep the engine speed at 3,000 rpm. (2 minutes maximum) 2) Read the value of «Front O2 Sensor #1» using the Subaru Select Monitor or a general scan tool. NOTE: • Subaru Select Monitor For detailed operation procedures, refer to "READ CURRENT DATA FOR ENGINE". <Ref. to EN(H6DO)(diag)-35, Subaru Select Monitor.> • General scan tool For detailed operation procedures, refer to the general scan tool operation manual.	Is the value of «Front O2 Sensor #1» 0.490 V or more?	Go to step **6**.	Go to step **2**.
2	**CHECK REAR OXYGEN SENSOR DATA.** 1) Warm up the engine until engine coolant temperature is higher than 75°C (167°F), and rapidly reduce the engine speed from 3,000 rpm. 2) Read the value of «Front O2 Sensor #1» using the Subaru Select Monitor or a general scan tool. NOTE: • Subaru Select Monitor For detailed operation procedures, refer to "READ CURRENT DATA FOR ENGINE". <Ref. to EN(H6DO)(diag)-35, Subaru Select Monitor.> • General scan tool For detailed operation procedures, refer to the general scan tool operation manual.	Is the value of «Front O2 Sensor #1» 0.250 V or less?	Go to step **6**.	Go to step **3**.
3	**CHECK REAR OXYGEN SENSOR CONNECTOR AND COUPLING CONNECTOR.**	Has water entered the connector?	Completely remove any water inside.	Go to step **4**.
4	**CHECK HARNESS BETWEEN ECM AND REAR OXYGEN SENSOR CONNECTOR.** 1) Turn the ignition switch to OFF. 2) Disconnect the connector from ECM and rear oxygen sensor. 3) Measure the resistance of harness between ECM and rear oxygen sensor connector. ***Connector & terminal*** ***(B136) No. 20 — (E61) No. 3:*** ***(B135) No. 30 — (E61) No. 4:***	Is the resistance less than 1 Ω?	Go to step **5**.	Repair the harness and connector. NOTE: In this case, repair the following item: • Open circuit in harness between ECM and rear oxygen sensor connector • Poor contact of coupling connector

	Step	Check	Yes	No
5	**CHECK HARNESS BETWEEN ECM AND REAR OXYGEN SENSOR CONNECTOR.** 1) Connect the connector to ECM. 2) Turn the ignition switch to ON. 3) Measure the voltage between rear oxygen sensor connector and chassis ground. ***Connector & terminal*** ***(E61) No. 3 (+) — Chassis ground (–):***	Is the voltage 0.2 — 0.5 V?	Replace the rear oxygen sensor. <Ref. to FU(H6DO)-52, Rear Oxygen Sensor.>	Repair the harness and connector. NOTE: In this case, repair the following item: • Open circuit in harness between ECM and rear oxygen sensor connector • Poor contact of ECM connector • Poor contact of coupling connector
6	**CHECK EXHAUST SYSTEM.** Check exhaust system parts. NOTE: Check the following items. • Looseness and improper fitting of exhaust system parts • Damage (crack, hole etc.) of parts • Loose part and improper installation between front oxygen (A/F) sensor and rear oxygen sensor	Is there any fault in exhaust system?	Repair or replace faulty parts.	Replace the rear oxygen sensor. <Ref. to FU(H6DO)-52, Rear Oxygen Sensor.>

AU:DTC P0141 O2 SENSOR HEATER CIRCUIT (BANK1 SENSOR2)

NOTE:
Refer to DTC P0037 for diagnostic procedure. <Ref. to EN(H6DO)(diag)-109, DTC P0037 HO2S HEATER CONTROL CIRCUIT LOW (BANK 1 SENSOR 2), Diagnostic Procedure with Diagnostic Trouble Code (DTC).>

AV:DTC P014A O2 SENSOR DELAYED RESPONSE - RICH TO LEAN (BANK 2 SENSOR 2)

NOTE:
For the diagnostic procedure, refer to DTC P013C. <Ref. to EN(H6DO)(diag)-161, DTC P013C O2 SENSOR SLOW RESPONSE - RICH TO LEAN (BANK 2 SENSOR 2), Diagnostic Procedure with Diagnostic Trouble Code (DTC).>

AW:DTC P014B O2 SENSOR DELAYED RESPONSE - LEAN TO RICH (BANK 2 SENSOR 2)

NOTE:
For the diagnostic procedure, refer to DTC P013C. <Ref. to EN(H6DO)(diag)-161, DTC P013C O2 SENSOR SLOW RESPONSE - RICH TO LEAN (BANK 2 SENSOR 2), Diagnostic Procedure with Diagnostic Trouble Code (DTC).>

AX:DTC P014C O2 SENSOR SLOW RESPONSE - RICH TO LEAN (BANK 1 SENSOR 1)

DTC DETECTING CONDITION:

- Detected when two consecutive driving cycles with fault occur.
- GENERAL DESCRIPTION <Ref. to GD(H6DO)-90, DTC P014C O2 SENSOR SLOW RESPONSE - RICH TO LEAN (BANK 1 SENSOR 1), Diagnostic Trouble Code (DTC) Detecting Criteria.>

CAUTION:
After servicing or replacing faulty parts, perform Clear Memory Mode <Ref. to EN(H6DO)(diag)-57, OPERATION, Clear Memory Mode.>, and Inspection Mode <Ref. to EN(H6DO)(diag)-44, PROCEDURE, Inspection Mode.>.

	Step	Check	Yes	No
1	**CHECK EXHAUST SYSTEM.** NOTE: Check the following items. • Loose installation of front portion of exhaust pipe onto cylinder heads • Loose connection between front exhaust pipe and front catalytic converter • Damage of exhaust pipe resulting in a hole	Is there any fault in exhaust system?	Repair the exhaust system.	Replace the front oxygen (A/F) sensor. <Ref. to FU(H6DO)-50, Front Oxygen (A/F) Sensor.>

AY:DTC P014D O2 SENSOR SLOW RESPONSE - LEAN TO RICH (BANK 1 SENSOR 1)

NOTE:
For the diagnostic procedure, refer to DTC P014C. <Ref. to EN(H6DO)(diag)-166, DTC P014C O2 SENSOR SLOW RESPONSE - RICH TO LEAN (BANK 1 SENSOR 1), Diagnostic Procedure with Diagnostic Trouble Code (DTC).>

AZ:DTC P014E O2 SENSOR SLOW RESPONSE - RICH TO LEAN (BANK 2 SENSOR 1)

DTC DETECTING CONDITION:

- Detected when two consecutive driving cycles with fault occur.
- GENERAL DESCRIPTION <Ref. to GD(H6DO)-93, DTC P014E O2 SENSOR SLOW RESPONSE - RICH TO LEAN (BANK 2 SENSOR 1), Diagnostic Trouble Code (DTC) Detecting Criteria.>

CAUTION:
After servicing or replacing faulty parts, perform Clear Memory Mode <Ref. to EN(H6DO)(diag)-57, OPERATION, Clear Memory Mode.>, and Inspection Mode <Ref. to EN(H6DO)(diag)-44, PROCEDURE, Inspection Mode.>.

	Step	Check	Yes	No
1	**CHECK EXHAUST SYSTEM.** NOTE: Check the following items. • Loose installation of front portion of exhaust pipe onto cylinder heads • Loose connection between front exhaust pipe and front catalytic converter • Damage of exhaust pipe resulting in a hole	Is there any fault in exhaust system?	Repair the exhaust system.	Replace the front oxygen (A/F) sensor. <Ref. to FU(H6DO)-50, Front Oxygen (A/F) Sensor.>

BA:DTC P014F O2 SENSOR SLOW RESPONSE - LEAN TO RICH (BANK 2 SENSOR 1)

NOTE:
For the diagnostic procedure, refer to DTC P014E. <Ref. to EN(H6DO)(diag)-167, DTC P014E O2 SENSOR SLOW RESPONSE - RICH TO LEAN (BANK 2 SENSOR 1), Diagnostic Procedure with Diagnostic Trouble Code (DTC).>

BB:DTC P0151 O2 SENSOR CIRCUIT LOW VOLTAGE (BANK 2 SENSOR 1)

DTC DETECTING CONDITION:

- Immediately at fault recognition
- GENERAL DESCRIPTION <Ref. to GD(H6DO)-93, DTC P0151 O2 SENSOR CIRCUIT LOW VOLTAGE (BANK 2 SENSOR 1), Diagnostic Trouble Code (DTC) Detecting Criteria.>

CAUTION:
After servicing or replacing faulty parts, perform Clear Memory Mode <Ref. to EN(H6DO)(diag)-57, OPERATION, Clear Memory Mode.>, and Inspection Mode <Ref. to EN(H6DO)(diag)-44, PROCEDURE, Inspection Mode.>.

WIRING DIAGRAM:

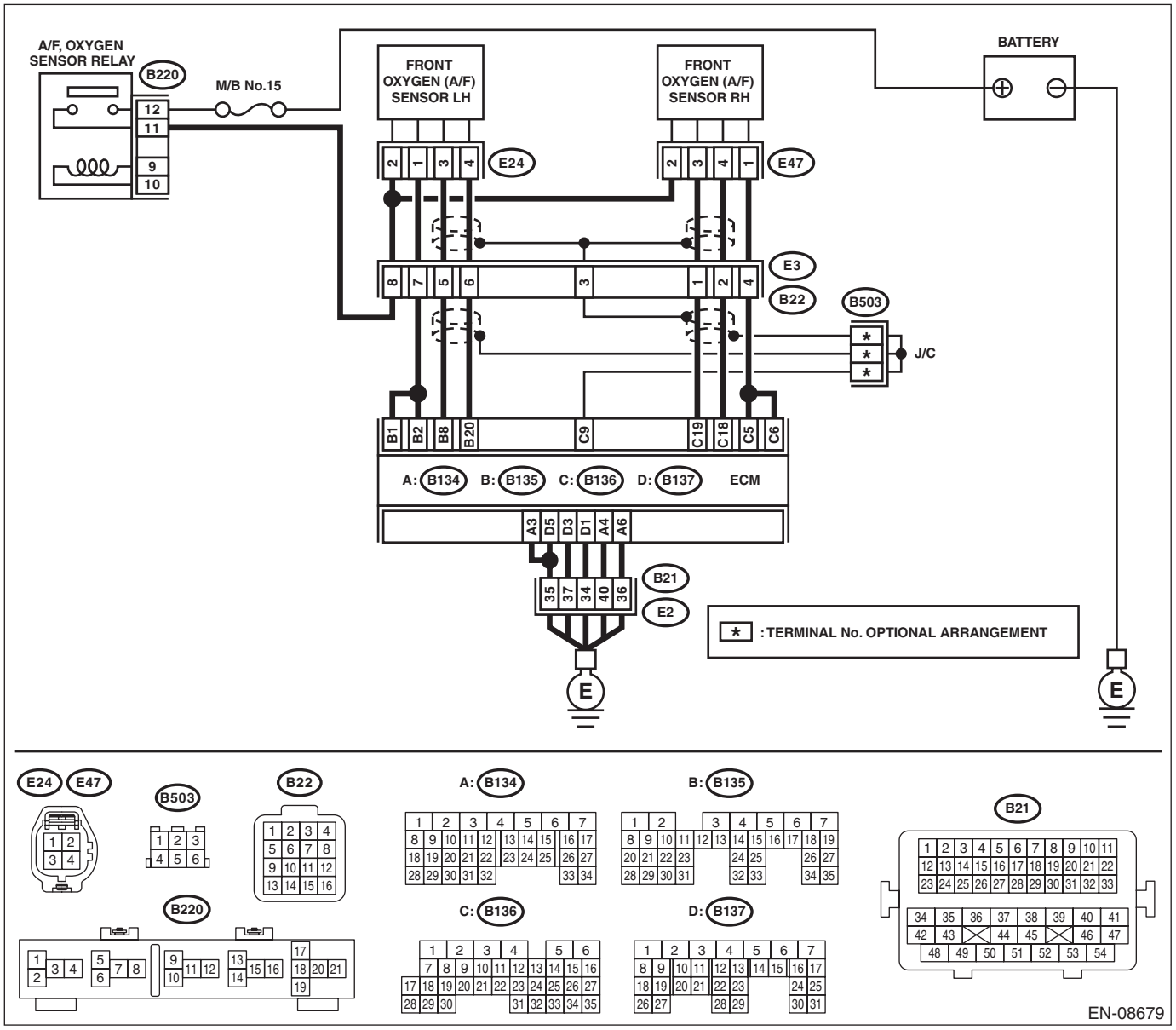

Step		Check	Yes	No
1	**CHECK FRONT OXYGEN (A/F) SENSOR CONNECTOR AND COUPLING CONNECTOR.**	Has water entered the connector?	Completely remove any water inside.	Go to step **2**.

	Step	Check	Yes	No
2	**CHECK HARNESS BETWEEN ECM AND FRONT OXYGEN (A/F) SENSOR CONNECTOR.** 1) Turn the ignition switch to OFF. 2) Disconnect the connectors from ECM and front oxygen (A/F) sensor connector. 3) Measure the resistance between ECM and chassis ground. ***Connector & terminal*** ***(B135) No. 8 — Chassis ground:*** ***(B135) No. 20 — Chassis ground:***	Is the resistance 1 MΩ or more?	Go to step **3**.	Repair the ground short circuit of harness between ECM and front oxygen (A/F) sensor connector.
3	**CHECK FOR POOR CONTACT.** Check for poor contact of the front oxygen (A/F) sensor connector.	Is there poor contact of front oxygen (A/F) sensor connector?	Repair the poor contact of front oxygen (A/F) sensor connector.	Replace the front oxygen (A/F) sensor. <Ref. to FU(H6DO)-50, Front Oxygen (A/F) Sensor.>

BC:DTC P0152 O2 SENSOR CIRCUIT HIGH VOLTAGE (BANK 2 SENSOR 1)

DTC DETECTING CONDITION:

- Immediately at fault recognition
- GENERAL DESCRIPTION <Ref. to GD(H6DO)-93, DTC P0152 O2 SENSOR CIRCUIT HIGH VOLTAGE (BANK 2 SENSOR 1), Diagnostic Trouble Code (DTC) Detecting Criteria.>

CAUTION:
After servicing or replacing faulty parts, perform Clear Memory Mode <Ref. to EN(H6DO)(diag)-57, OPERATION, Clear Memory Mode.>, and Inspection Mode <Ref. to EN(H6DO)(diag)-44, PROCEDURE, Inspection Mode.>.

WIRING DIAGRAM:

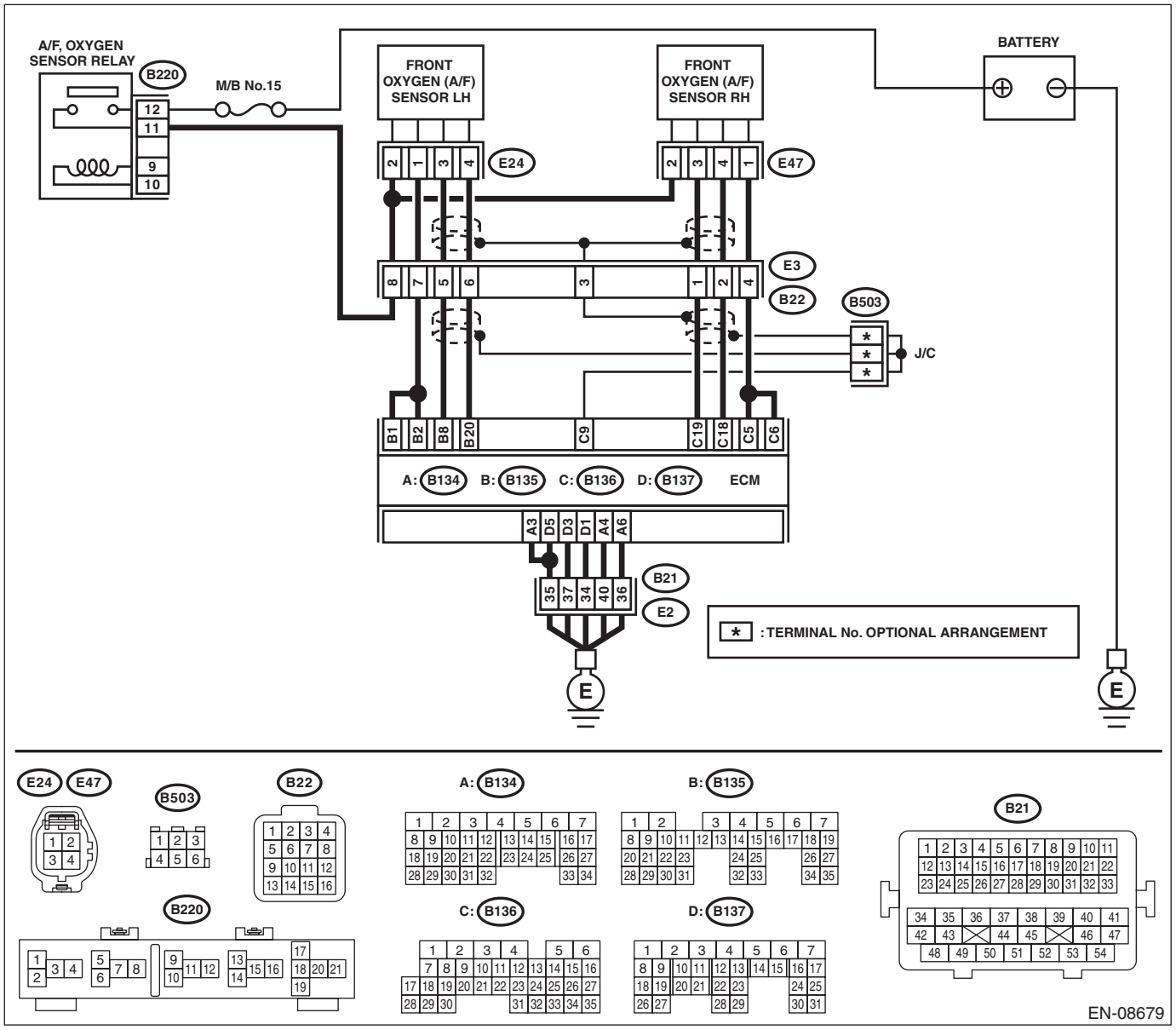

Step		Check	Yes	No
1	**CHECK FRONT OXYGEN (A/F) SENSOR CONNECTOR AND COUPLING CONNECTOR.**	Has water entered the connector?	Completely remove any water inside.	Go to step **2**.

	Step	Check	Yes	No
2	**CHECK HARNESS BETWEEN ECM AND FRONT OXYGEN (A/F) SENSOR CONNECTOR.** 1) Turn the ignition switch to OFF. 2) Disconnect the connectors from front oxygen (A/F) sensor. 3) Turn the ignition switch to ON. 4) Measure the voltage between ECM and chassis ground. ***Connector & terminal*** ***(B135) No. 8 (+) — Chassis ground (–):*** ***(B135) No. 20 (+) — Chassis ground (–):***	Is the voltage 8 V or more?	Repair the short circuit to power in the harness between ECM and front oxygen (A/F) sensor connector.	Replace the front oxygen (A/F) sensor. <Ref. to FU(H6DO)-50, Front Oxygen (A/F) Sensor.>

BD:DTC P0154 O2 SENSOR CIRCUIT NO ACTIVITY DETECTED (BANK 2 SENSOR 1)

DTC DETECTING CONDITION:

- Immediately at fault recognition
- GENERAL DESCRIPTION <Ref. to GD(H6DO)-93, DTC P0154 O2 SENSOR CIRCUIT NO ACTIVITY DETECTED (BANK 2 SENSOR 1), Diagnostic Trouble Code (DTC) Detecting Criteria.>

CAUTION:

After servicing or replacing faulty parts, perform Clear Memory Mode <Ref. to EN(H6DO)(diag)-57, OPERATION, Clear Memory Mode.>, and Inspection Mode <Ref. to EN(H6DO)(diag)-44, PROCEDURE, Inspection Mode.>.

WIRING DIAGRAM:

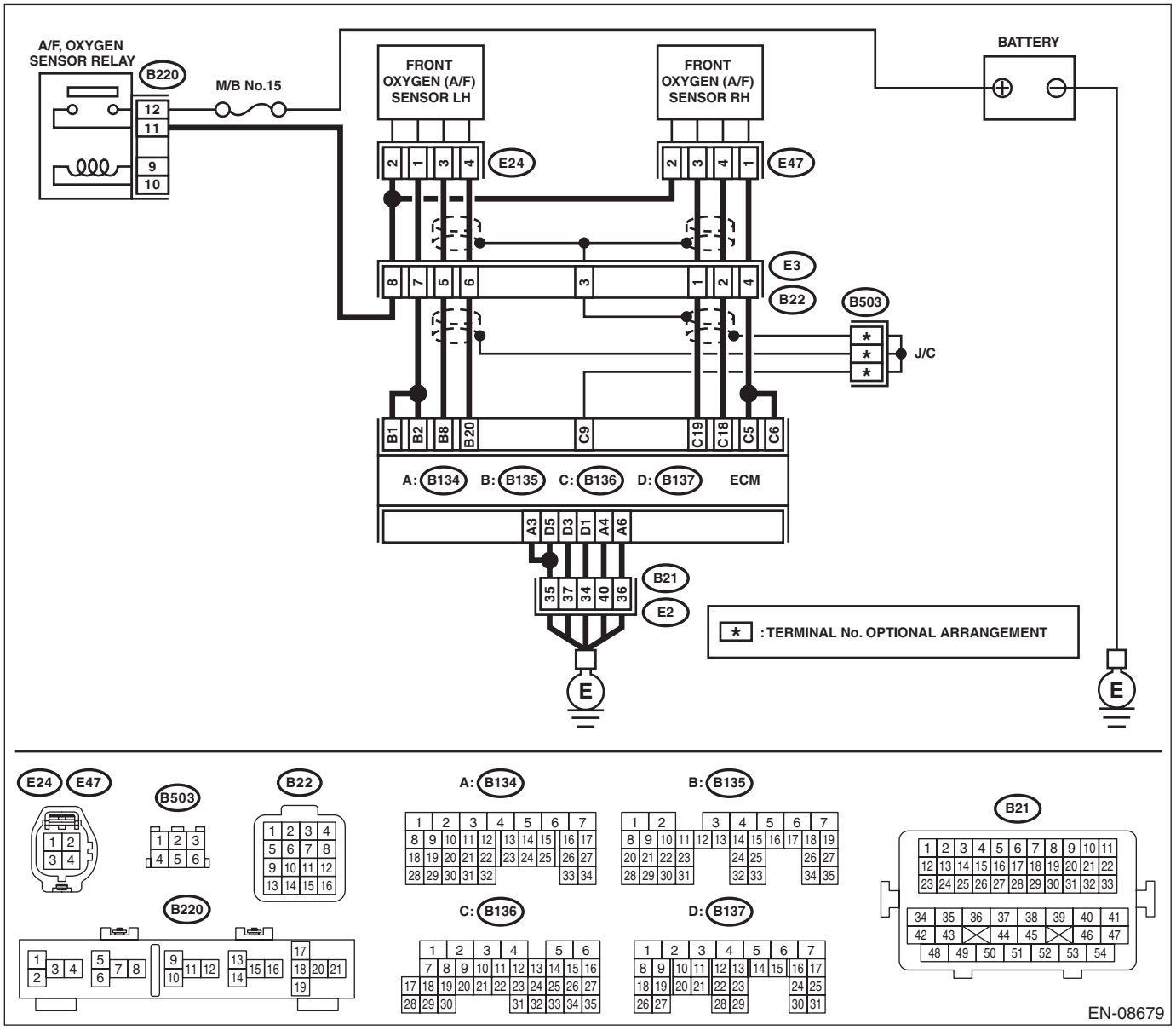

	Step	Check	Yes	No
1	**CHECK HARNESS BETWEEN ECM AND FRONT OXYGEN (A/F) SENSOR CONNECTOR.** 1) Turn the ignition switch to OFF. 2) Disconnect the connectors from ECM and front oxygen (A/F) sensor connector. 3) Measure the resistance of harness between ECM and front oxygen (A/F) sensor connector. ***Connector & terminal*** ***(B135) No. 8 — (E24) No. 3:*** ***(B135) No. 20 — (E24) No. 4:***	Is the resistance less than 1 Ω?	Go to step **2**.	Repair the harness and connector. NOTE: In this case, repair the following item: • Open circuit in harness between ECM and front oxygen (A/F) sensor connector • Poor contact of coupling connector
2	**CHECK FOR POOR CONTACT.** Check for poor contact of ECM and front oxygen (A/F) sensor connector.	Is there poor contact of ECM or front oxygen (A/F) sensor connector?	Repair the poor contact of ECM or front oxygen (A/F) sensor connector.	Replace the front oxygen (A/F) sensor. <Ref. to FU(H6DO)-50, Front Oxygen (A/F) Sensor.>

BE:DTC P0157 O2 SENSOR CIRCUIT LOW VOLTAGE (BANK 2 SENSOR 2)

DTC DETECTING CONDITION:

- Detected when two consecutive driving cycles with fault occur.
- GENERAL DESCRIPTION <Ref. to GD(H6DO)-93, DTC P0157 O2 SENSOR CIRCUIT LOW VOLTAGE (BANK 2 SENSOR 2), Diagnostic Trouble Code (DTC) Detecting Criteria.>

CAUTION:

After servicing or replacing faulty parts, perform Clear Memory Mode <Ref. to EN(H6DO)(diag)-57, OPERATION, Clear Memory Mode.>, and Inspection Mode <Ref. to EN(H6DO)(diag)-44, PROCEDURE, Inspection Mode.>.

WIRING DIAGRAM:

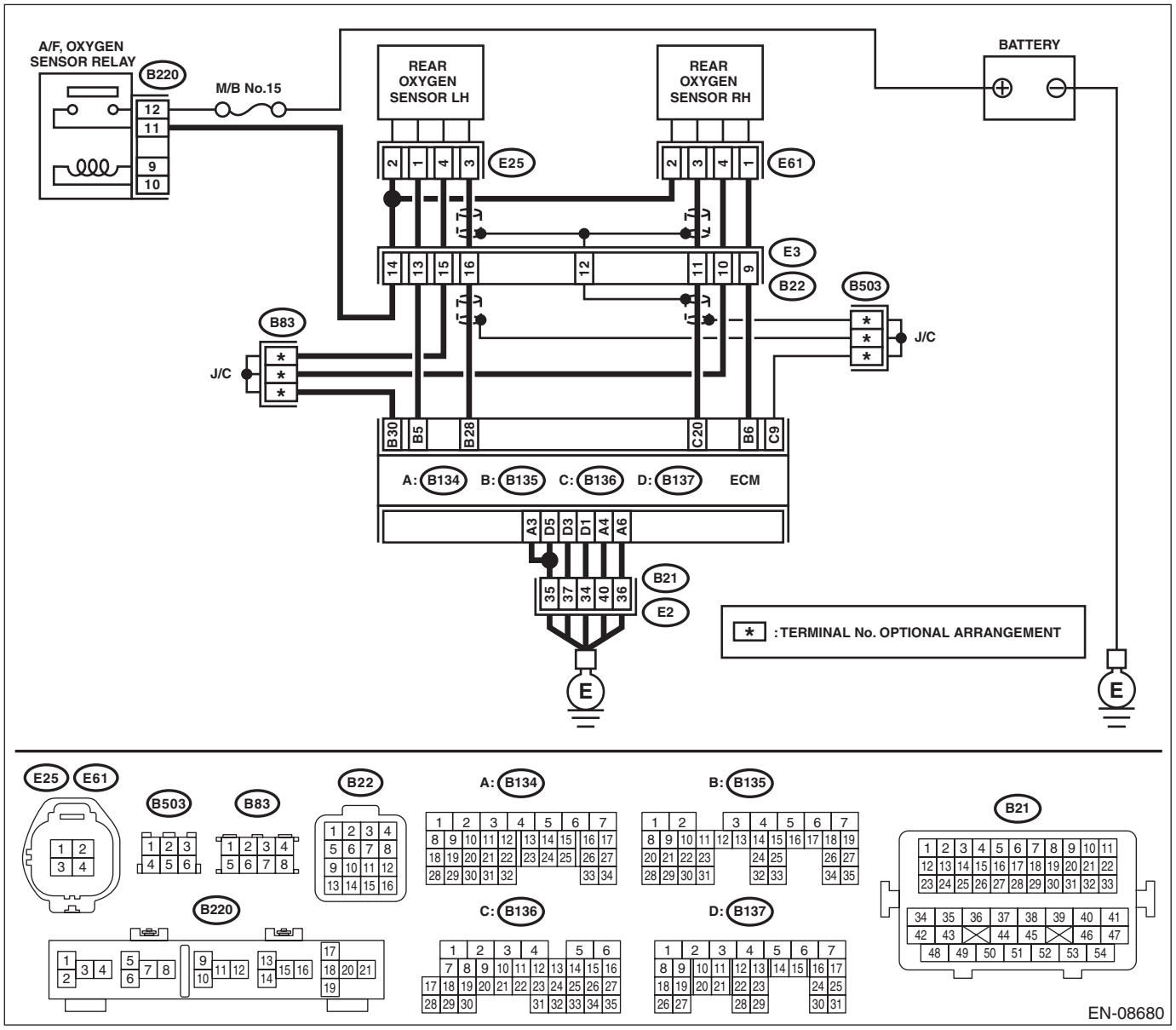

	Step	Check	Yes	No
1	**CHECK REAR OXYGEN SENSOR DATA.** 1) Warm up the engine until engine coolant temperature is higher than 75°C (167°F), and keep the engine speed at 3,000 rpm. (2 minutes maximum) 2) Read the value of «Front O2 Sensor #2» using the Subaru Select Monitor or a general scan tool. NOTE: • Subaru Select Monitor For detailed operation procedures, refer to "READ CURRENT DATA FOR ENGINE". <Ref. to EN(H6DO)(diag)-35, Subaru Select Monitor.> • General scan tool For detailed operation procedures, refer to the general scan tool operation manual.	Is the value of «Front O2 Sensor #2» 0.490 V or more?	Go to step **5**.	Go to step **2**.
2	**CHECK REAR OXYGEN SENSOR CONNECTOR AND COUPLING CONNECTOR.**	Has water entered the connector?	Completely remove any water inside.	Go to step **3**.
3	**CHECK HARNESS BETWEEN ECM AND REAR OXYGEN SENSOR CONNECTOR.** 1) Turn the ignition switch to OFF. 2) Disconnect the connector from ECM and rear oxygen sensor. 3) Measure the resistance of harness between ECM and rear oxygen sensor connector. ***Connector & terminal*** ***(B135) No. 28 — (E25) No. 3:*** ***(B135) No. 30 — (E25) No. 4:***	Is the resistance less than 1 Ω?	Go to step **4**.	Repair the harness and connector. NOTE: In this case, repair the following item: • Open circuit in harness between ECM and rear oxygen sensor connector • Poor contact of coupling connector
4	**CHECK HARNESS BETWEEN ECM AND REAR OXYGEN SENSOR CONNECTOR.** 1) Connect the connector to ECM. 2) Turn the ignition switch to ON. 3) Measure the voltage between rear oxygen sensor connector and chassis ground. ***Connector & terminal*** ***(E25) No. 3 (+) — Chassis ground (–):***	Is the voltage 0.2 — 0.5 V?	Replace the rear oxygen sensor. <Ref. to FU(H6DO)-52, Rear Oxygen Sensor.>	Repair the harness and connector. NOTE: In this case, repair the following item: • Open circuit in harness between ECM and rear oxygen sensor connector • Poor contact of ECM connector • Poor contact of coupling connector
5	**CHECK EXHAUST SYSTEM.** Check exhaust system parts. NOTE: Check the following items. • Looseness and improper fitting of exhaust system parts • Damage (crack, hole etc.) of parts • Loose part and improper installation between front oxygen (A/F) sensor and rear oxygen sensor	Is there any fault in exhaust system?	Repair or replace faulty parts.	Replace the rear oxygen sensor. <Ref. to FU(H6DO)-52, Rear Oxygen Sensor.>

BF:DTC P0158 O2 SENSOR CIRCUIT HIGH VOLTAGE (BANK 2 SENSOR 2)

DTC DETECTING CONDITION:

- Detected when two consecutive driving cycles with fault occur.
- GENERAL DESCRIPTION <Ref. to GD(H6DO)-94, DTC P0158 O2 SENSOR CIRCUIT HIGH VOLTAGE (BANK 2 SENSOR 2), Diagnostic Trouble Code (DTC) Detecting Criteria.>

CAUTION:
After servicing or replacing faulty parts, perform Clear Memory Mode <Ref. to EN(H6DO)(diag)-57, OPERATION, Clear Memory Mode.>, and Inspection Mode <Ref. to EN(H6DO)(diag)-44, PROCEDURE, Inspection Mode.>.

WIRING DIAGRAM:

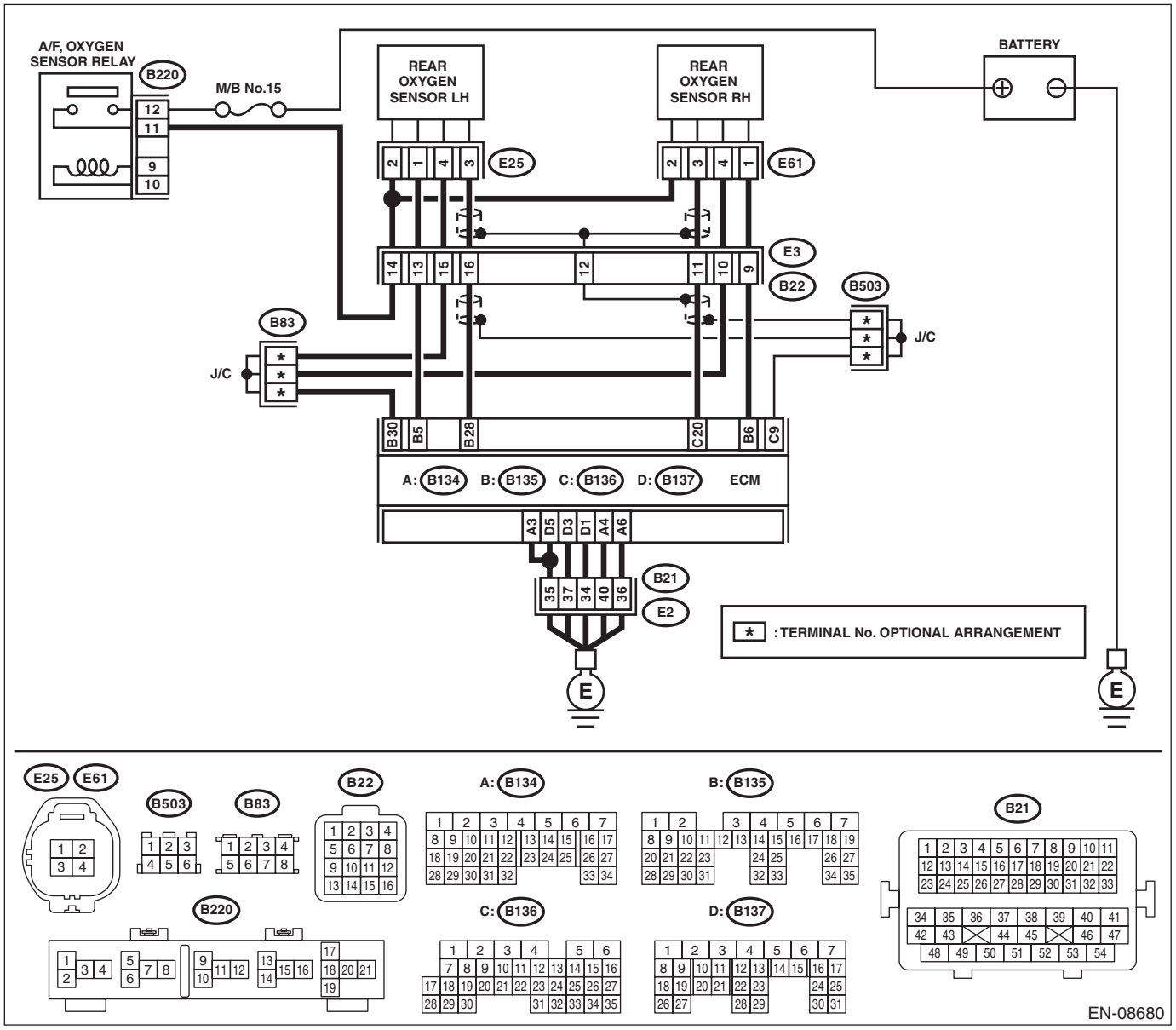

	Step	Check	Yes	No
1	**CHECK REAR OXYGEN SENSOR DATA.** 1) Warm up the engine until engine coolant temperature is higher than 75°C (167°F), and rapidly reduce the engine speed from 3,000 rpm. 2) Read the value of «Front O2 Sensor #2» using the Subaru Select Monitor or a general scan tool. NOTE: • Subaru Select Monitor For detailed operation procedures, refer to "READ CURRENT DATA FOR ENGINE". <Ref. to EN(H6DO)(diag)-35, Subaru Select Monitor.> • General scan tool For detailed operation procedures, refer to the general scan tool operation manual.	Is the value of «Front O2 Sensor #2» 0.250 V or less?	Go to step **5**.	Go to step **2**.
2	**CHECK REAR OXYGEN SENSOR CONNECTOR AND COUPLING CONNECTOR.**	Has water entered the connector?	Completely remove any water inside.	Go to step **3**.
3	**CHECK HARNESS BETWEEN ECM AND REAR OXYGEN SENSOR CONNECTOR.** 1) Turn the ignition switch to OFF. 2) Disconnect the connector from ECM and rear oxygen sensor. 3) Measure the resistance of harness between ECM and rear oxygen sensor connector. ***Connector & terminal*** ***(B135) No. 28 — (E25) No. 3:*** ***(B135) No. 30 — (E25) No. 4:***	Is the resistance less than 1 Ω?	Go to step **4**.	Repair the harness and connector. NOTE: In this case, repair the following item: • Open circuit in harness between ECM and rear oxygen sensor connector • Poor contact of coupling connector
4	**CHECK HARNESS BETWEEN ECM AND REAR OXYGEN SENSOR CONNECTOR.** 1) Connect the connector to ECM. 2) Turn the ignition switch to ON. 3) Measure the voltage between rear oxygen sensor connector and chassis ground. ***Connector & terminal*** ***(E25) No. 3 (+) — Chassis ground (–):***	Is the voltage 0.2 — 0.5 V?	Replace the rear oxygen sensor. <Ref. to FU(H6DO)-52, Rear Oxygen Sensor.>	Repair the harness and connector. NOTE: In this case, repair the following item: • Open circuit in harness between ECM and rear oxygen sensor connector • Poor contact of ECM connector • Poor contact of coupling connector
5	**CHECK EXHAUST SYSTEM.** Check exhaust system parts. NOTE: Check the following items. • Looseness and improper fitting of exhaust system parts • Damage (crack, hole etc.) of parts • Loose part and improper installation between front oxygen (A/F) sensor and rear oxygen sensor	Is there any fault in exhaust system?	Repair or replace faulty parts.	Replace the rear oxygen sensor. <Ref. to FU(H6DO)-52, Rear Oxygen Sensor.>

BG:DTC P015A O2 SENSOR DELAYED RESPONSE - RICH TO LEAN (BANK 1 SENSOR 1)

NOTE:
For the diagnostic procedure, refer to DTC P014C. <Ref. to EN(H6DO)(diag)-166, DTC P014C O2 SENSOR SLOW RESPONSE - RICH TO LEAN (BANK 1 SENSOR 1), Diagnostic Procedure with Diagnostic Trouble Code (DTC).>

BH:DTC P015B O2 SENSOR DELAYED RESPONSE - LEAN TO RICH (BANK 1 SENSOR 1)

NOTE:
For the diagnostic procedure, refer to DTC P014C. <Ref. to EN(H6DO)(diag)-166, DTC P014C O2 SENSOR SLOW RESPONSE - RICH TO LEAN (BANK 1 SENSOR 1), Diagnostic Procedure with Diagnostic Trouble Code (DTC).>

BI: DTC P015C O2 SENSOR DELAYED RESPONSE - RICH TO LEAN (BANK 2 SENSOR 1)

NOTE:
For the diagnostic procedure, refer to DTC P014E. <Ref. to EN(H6DO)(diag)-167, DTC P014E O2 SENSOR SLOW RESPONSE - RICH TO LEAN (BANK 2 SENSOR 1), Diagnostic Procedure with Diagnostic Trouble Code (DTC).>

BJ:DTC P015D O2 SENSOR DELAYED RESPONSE - LEAN TO RICH (BANK 2 SENSOR 1)

NOTE:
For the diagnostic procedure, refer to DTC P014E. <Ref. to EN(H6DO)(diag)-167, DTC P014E O2 SENSOR SLOW RESPONSE - RICH TO LEAN (BANK 2 SENSOR 1), Diagnostic Procedure with Diagnostic Trouble Code (DTC).>

BK:DTC P0160 O2 SENSOR CIRCUIT NO ACTIVITY DETECTED (BANK2 SENSOR2)

DTC DETECTING CONDITION:

- Detected when two consecutive driving cycles with fault occur.
- GENERAL DESCRIPTION <Ref. to GD(H6DO)-99, DTC P0160 O2 SENSOR CIRCUIT NO ACTIVITY DETECTED (BANK2 SENSOR2), Diagnostic Trouble Code (DTC) Detecting Criteria.>

CAUTION:

After servicing or replacing faulty parts, perform Clear Memory Mode <Ref. to EN(H6DO)(diag)-57, OPERATION, Clear Memory Mode.>, and Inspection Mode <Ref. to EN(H6DO)(diag)-44, PROCEDURE, Inspection Mode.>.

WIRING DIAGRAM:

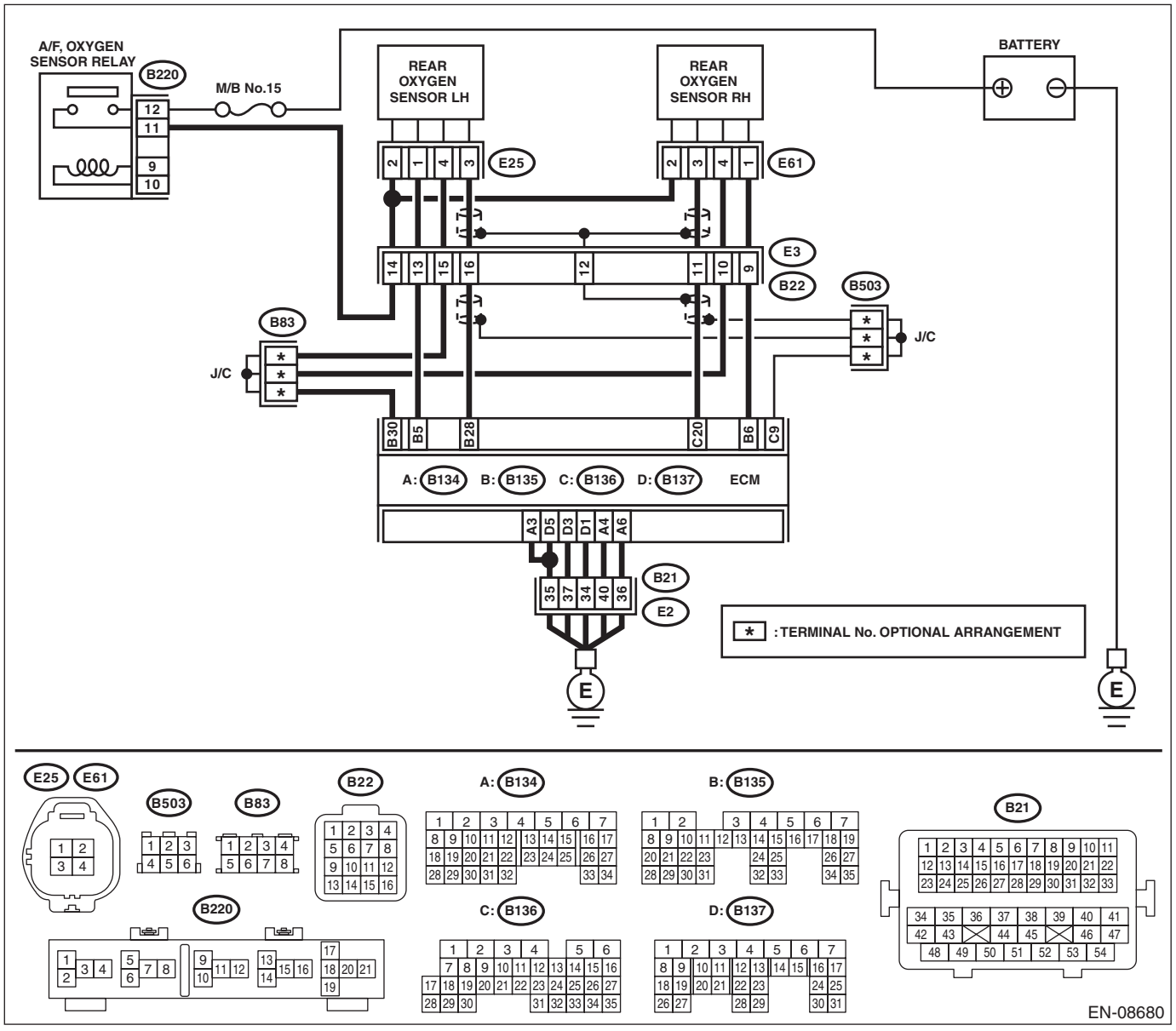

	Step	Check	Yes	No
1	**CHECK REAR OXYGEN SENSOR DATA.** 1) Warm up the engine until engine coolant temperature is higher than 75°C (167°F), and keep the engine speed at 3,000 rpm. (2 minutes maximum) 2) Read the value of «Front O2 Sensor #2» using the Subaru Select Monitor or a general scan tool. NOTE: • Subaru Select Monitor For detailed operation procedures, refer to "READ CURRENT DATA FOR ENGINE". <Ref. to EN(H6DO)(diag)-35, Subaru Select Monitor.> • General scan tool For detailed operation procedures, refer to the general scan tool operation manual.	Is the value of «Front O2 Sensor #2» 0.490 V or more?	Go to step **6**.	Go to step **2**.
2	**CHECK REAR OXYGEN SENSOR DATA.** 1) Warm up the engine until engine coolant temperature is higher than 75°C (167°F), and rapidly reduce the engine speed from 3,000 rpm. 2) Read the value of «Front O2 Sensor #2» using the Subaru Select Monitor or a general scan tool. NOTE: • Subaru Select Monitor For detailed operation procedures, refer to "READ CURRENT DATA FOR ENGINE". <Ref. to EN(H6DO)(diag)-35, Subaru Select Monitor.> • General scan tool For detailed operation procedures, refer to the general scan tool operation manual.	Is the value of «Front O2 Sensor #2» 0.250 V or less?	Go to step **6**.	Go to step **3**.
3	**CHECK REAR OXYGEN SENSOR CONNECTOR AND COUPLING CONNECTOR.**	Has water entered the connector?	Completely remove any water inside.	Go to step **4**.
4	**CHECK HARNESS BETWEEN ECM AND REAR OXYGEN SENSOR CONNECTOR.** 1) Turn the ignition switch to OFF. 2) Disconnect the connector from ECM and rear oxygen sensor. 3) Measure the resistance of harness between ECM and rear oxygen sensor connector. ***Connector & terminal*** ***(B135) No. 28 — (E25) No. 3:*** ***(B135) No. 30 — (E25) No. 4:***	Is the resistance less than 1 Ω?	Go to step **5**.	Repair the harness and connector. NOTE: In this case, repair the following item: • Open circuit in harness between ECM and rear oxygen sensor connector • Poor contact of coupling connector

	Step	Check	Yes	No
5	**CHECK HARNESS BETWEEN ECM AND REAR OXYGEN SENSOR CONNECTOR.** 1) Connect the connector to ECM. 2) Turn the ignition switch to ON. 3) Measure the voltage between rear oxygen sensor connector and chassis ground. ***Connector & terminal*** ***(E25) No. 3 (+) — Chassis ground (–):***	Is the voltage 0.2 — 0.5 V?	Replace the rear oxygen sensor. <Ref. to FU(H6DO)-52, Rear Oxygen Sensor.>	Repair the harness and connector. NOTE: In this case, repair the following item: • Open circuit in harness between ECM and rear oxygen sensor connector • Poor contact of ECM connector • Poor contact of coupling connector
6	**CHECK EXHAUST SYSTEM.** Check exhaust system parts. NOTE: Check the following items. • Looseness and improper fitting of exhaust system parts • Damage (crack, hole etc.) of parts • Loose part and improper installation between front oxygen (A/F) sensor and rear oxygen sensor	Is there any fault in exhaust system?	Repair or replace faulty parts.	Replace the rear oxygen sensor. <Ref. to FU(H6DO)-52, Rear Oxygen Sensor.>

BL:DTC P0161 O2 SENSOR HEATER CIRCUIT (BANK2 SENSOR2)

NOTE:
Refer to DTC P0057 for diagnostic procedure. <Ref. to EN(H6DO)(diag)-119, DTC P0057 HO2S HEATER CONTROL CIRCUIT LOW (BANK 2 SENSOR 2), Diagnostic Procedure with Diagnostic Trouble Code (DTC).>

BM:DTC P0171 SYSTEM TOO LEAN (BANK 1)

NOTE:
Refer to DTC P0175 for diagnostic procedure. <Ref. to EN(H6DO)(diag)-182, DTC P0175 SYSTEM TOO RICH (BANK 2), Diagnostic Procedure with Diagnostic Trouble Code (DTC).>

BN:DTC P0172 SYSTEM TOO RICH (BANK 1)

NOTE:
Refer to DTC P0175 for diagnostic procedure. <Ref. to EN(H6DO)(diag)-182, DTC P0175 SYSTEM TOO RICH (BANK 2), Diagnostic Procedure with Diagnostic Trouble Code (DTC).>

BO:DTC P0174 SYSTEM TOO LEAN (BANK 2)

NOTE:
Refer to DTC P0175 for diagnostic procedure. <Ref. to EN(H6DO)(diag)-182, DTC P0175 SYSTEM TOO RICH (BANK 2), Diagnostic Procedure with Diagnostic Trouble Code (DTC).>

BP:DTC P0175 SYSTEM TOO RICH (BANK 2)

DTC DETECTING CONDITION:

- Detected when two consecutive driving cycles with fault occur.
- GENERAL DESCRIPTION <Ref. to GD(H6DO)-103, DTC P0175 SYSTEM TOO RICH (BANK 2), Diagnostic Trouble Code (DTC) Detecting Criteria.>

TROUBLE SYMPTOM:

- Improper idling
- Engine stalls.
- Poor driving performance

CAUTION:
After servicing or replacing faulty parts, perform Clear Memory Mode <Ref. to EN(H6DO)(diag)-57, OPERATION, Clear Memory Mode.>, and Inspection Mode <Ref. to EN(H6DO)(diag)-44, PROCEDURE, Inspection Mode.>.

	Step	Check	Yes	No
1	**CHECK EXHAUST SYSTEM.**	Are there holes or loose bolts on exhaust system?	Repair the exhaust system.	Go to step **2**.
2	**CHECK AIR INTAKE SYSTEM.**	Are there holes, loose bolts or disconnection of hose on air intake system?	Repair the air intake system.	Go to step **3**.
3	**CHECK FUEL PRESSURE.** **WARNING:** **Place "NO OPEN FLAMES" signs near the working area.** **CAUTION:** **Be careful not to spill fuel.** Measure the fuel pressure. <Ref. to ME(H6DO)-31, INSPECTION, Fuel Pressure.> **CAUTION:** **Release fuel pressure before removing the fuel pressure gauge.**	Is the measured value 340 — 400 kPa (3.5 — 4.1 kgf/cm^2, 49 — 58 psi)?	Go to step **4**.	Repair the following item. Fuel pressure is too high: • Clogged fuel line or bent hose Fuel pressure is too low: • Improper fuel pump discharge • Clogged fuel line
4	**CHECK ENGINE COOLANT TEMPERATURE SENSOR.** 1) Start the engine and warm up completely. 2) Read the value of «Coolant Temp.» using the Subaru Select Monitor or a general scan tool. NOTE: • Subaru Select Monitor For detailed operation procedures, refer to "READ CURRENT DATA FOR ENGINE". <Ref. to EN(H6DO)(diag)-35, Subaru Select Monitor.> • General scan tool For detailed operation procedures, refer to the general scan tool operation manual.	Is the value of «Coolant Temp.» 75°C (167°F) or more?	Go to step **5**.	Replace the engine coolant temperature sensor. <Ref. to FU(H6DO)-29, Engine Coolant Temperature Sensor.>

	Step	Check	Yes	No
5	**CHECK MASS AIR FLOW AND INTAKE AIR TEMPERATURE SENSOR SIGNAL.** 1) Start the engine and warm up engine until coolant temperature is higher than 75°C (167°F). 2) Place the select lever in “P” range or “N” range. 3) Turn the A/C switch to OFF. 4) Turn all the accessory switches to OFF. 5) Read the value of «Mass Air Flow» using the Subaru Select Monitor or a general scan tool. NOTE: • Subaru Select Monitor For detailed operation procedures, refer to “READ CURRENT DATA FOR ENGINE”. <Ref. to EN(H6DO)(diag)-35, Subaru Select Monitor.> • General scan tool For detailed operation procedures, refer to the general scan tool operation manual.	Is the value of «Mass Air Flow» 2.0 — 5.0 g/s (0.26 — 0.66 lb/m)?	Go to step **6**.	Replace the mass air flow and intake air temperature sensor. <Ref. to FU(H6DO)-41, Mass Air Flow and Intake Air Temperature Sensor.>
6	**CHECK MASS AIR FLOW AND INTAKE AIR TEMPERATURE SENSOR.** 1) Start the engine and warm up engine until coolant temperature is higher than 75°C (167°F). 2) Place the select lever in “P” range or “N” range. 3) Turn the A/C switch to OFF. 4) Turn all the accessory switches to OFF. 5) Open the front hood. 6) Measure the ambient temperature. 7) Read the value of «Intake Air Temp.» using the Subaru Select Monitor or a general scan tool. NOTE: • Subaru Select Monitor For detailed operation procedures, refer to “READ CURRENT DATA FOR ENGINE”. <Ref. to EN(H6DO)(diag)-35, Subaru Select Monitor.> • General scan tool For detailed operation procedures, refer to the general scan tool operation manual.	Subtract ambient temperature from «Intake Air Temp.». Is the obtained value –10 — 50°C (–18 — 90°F)?	Repair the poor contact of ECM connector.	Check the mass air flow and intake air temperature sensor. <Ref. to FU(H6DO)-41, Mass Air Flow and Intake Air Temperature Sensor.>

BQ:DTC P0181 FUEL TEMPERATURE SENSOR “A” CIRCUIT RANGE/PERFORMANCE

DTC DETECTING CONDITION:

- Detected when two consecutive driving cycles with fault occur.
- GENERAL DESCRIPTION <Ref. to GD(H6DO)-104, DTC P0181 FUEL TEMPERATURE SENSOR “A” CIRCUIT RANGE/PERFORMANCE, Diagnostic Trouble Code (DTC) Detecting Criteria.>

CAUTION:
After servicing or replacing faulty parts, perform Clear Memory Mode <Ref. to EN(H6DO)(diag)-57, OPERATION, Clear Memory Mode.>, and Inspection Mode <Ref. to EN(H6DO)(diag)-44, PROCEDURE, Inspection Mode.>.

Step		Check	Yes	No
1	**CHECK FOR ANY OTHER DTC ON DISPLAY.**	Is any other DTC displayed?	Check the appropriate DTC using the “List of Diagnostic Trouble Code (DTC)”. <Ref. to EN(H6DO)(diag)-85, List of Diagnostic Trouble Code (DTC).>	Replace the fuel temperature sensor. <Ref. to EC(H6DO)-13, Fuel Temperature Sensor.>

BR:DTC P0182 FUEL TEMPERATURE SENSOR “A” CIRCUIT LOW INPUT

DTC DETECTING CONDITION:

- Immediately at fault recognition
- GENERAL DESCRIPTION <Ref. to GD(H6DO)-107, DTC P0182 FUEL TEMPERATURE SENSOR “A” CIRCUIT LOW INPUT, Diagnostic Trouble Code (DTC) Detecting Criteria.>

CAUTION:
After servicing or replacing faulty parts, perform Clear Memory Mode <Ref. to EN(H6DO)(diag)-57, OPERATION, Clear Memory Mode.>, and Inspection Mode <Ref. to EN(H6DO)(diag)-44, PROCEDURE, Inspection Mode.>.

WIRING DIAGRAM:

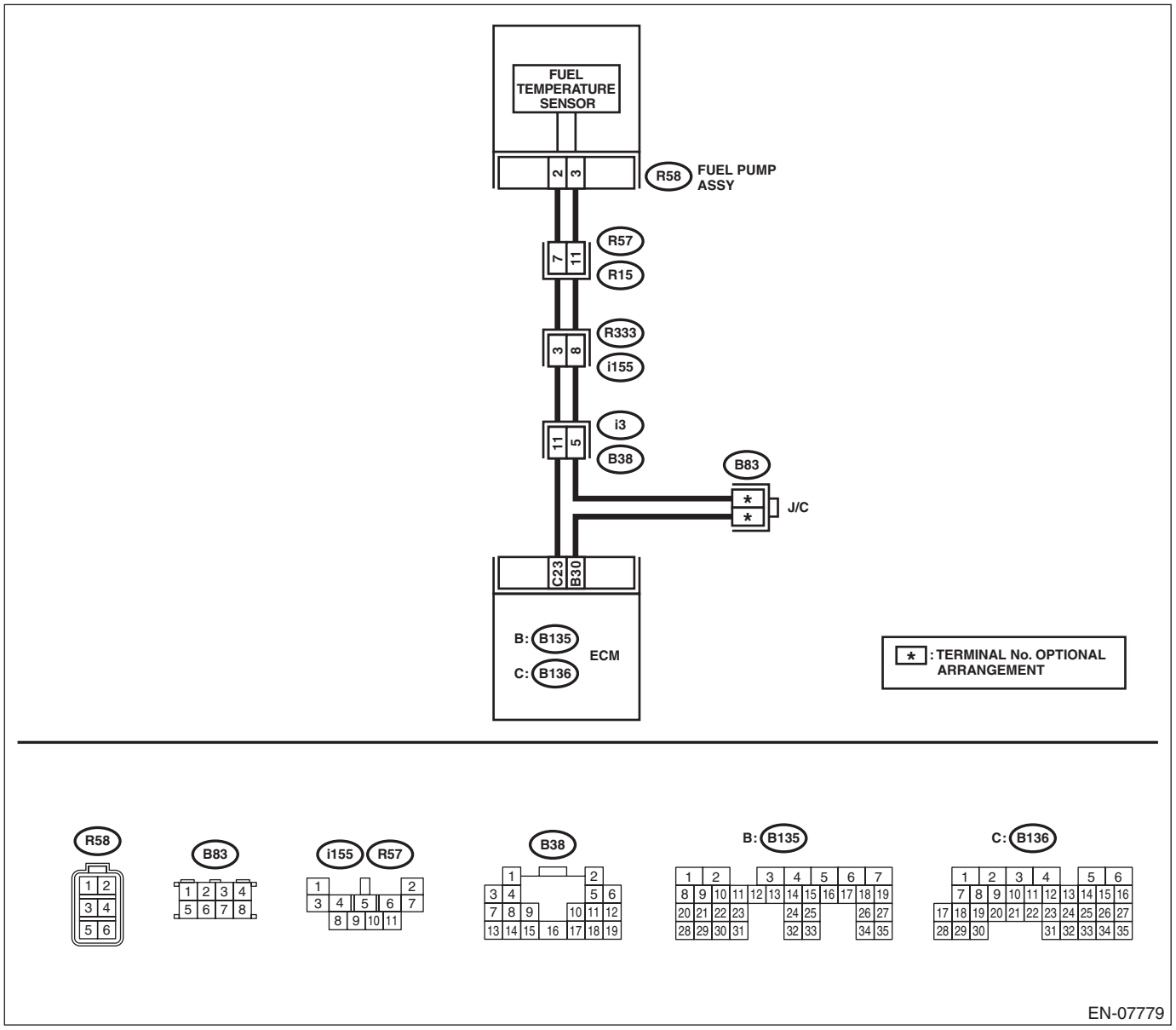

	Step	Check	Yes	No
1	**CHECK CURRENT DATA.** 1) Start the engine. 2) Using the Subaru Select Monitor, read the value in «Fuel Temp.». NOTE: For detailed operation procedures, refer to "READ CURRENT DATA FOR ENGINE". <Ref. to EN(H6DO)(diag)-35, Subaru Select Monitor.>	Is the value in «Fuel Temp.» 120°C (248°F) or more?	Go to step **2**.	Even if DTC is detected, the circuit has returned to a normal condition at this time. Reproduce the failure, and then perform the diagnosis again. NOTE: In this case, temporary poor contact of connector, temporary open or short circuit of harness may be the cause.
2	**CHECK HARNESS BETWEEN ECM AND FUEL TEMPERATURE SENSOR CONNECTOR.** 1) Turn the ignition switch to OFF. 2) Disconnect the connectors from ECM and fuel temperature sensor. 3) Measure the resistance between ECM and chassis ground. ***Connector & terminal*** ***(B136) No. 23 — Chassis ground:***	Is the resistance 1 MΩ or more?	Replace the fuel temperature sensor. <Ref. to EC(H6DO)-13, Fuel Temperature Sensor.>	Repair the ground short circuit of harness between ECM and fuel pump.

BS:DTC P0183 FUEL TEMPERATURE SENSOR “A” CIRCUIT HIGH INPUT

DTC DETECTING CONDITION:

- Immediately at fault recognition
- GENERAL DESCRIPTION <Ref. to GD(H6DO)-109, DTC P0183 FUEL TEMPERATURE SENSOR “A” CIRCUIT HIGH INPUT, Diagnostic Trouble Code (DTC) Detecting Criteria.>

CAUTION:
After servicing or replacing faulty parts, perform Clear Memory Mode <Ref. to EN(H6DO)(diag)-57, OPERATION, Clear Memory Mode.>, and Inspection Mode <Ref. to EN(H6DO)(diag)-44, PROCEDURE, Inspection Mode.>.

WIRING DIAGRAM:

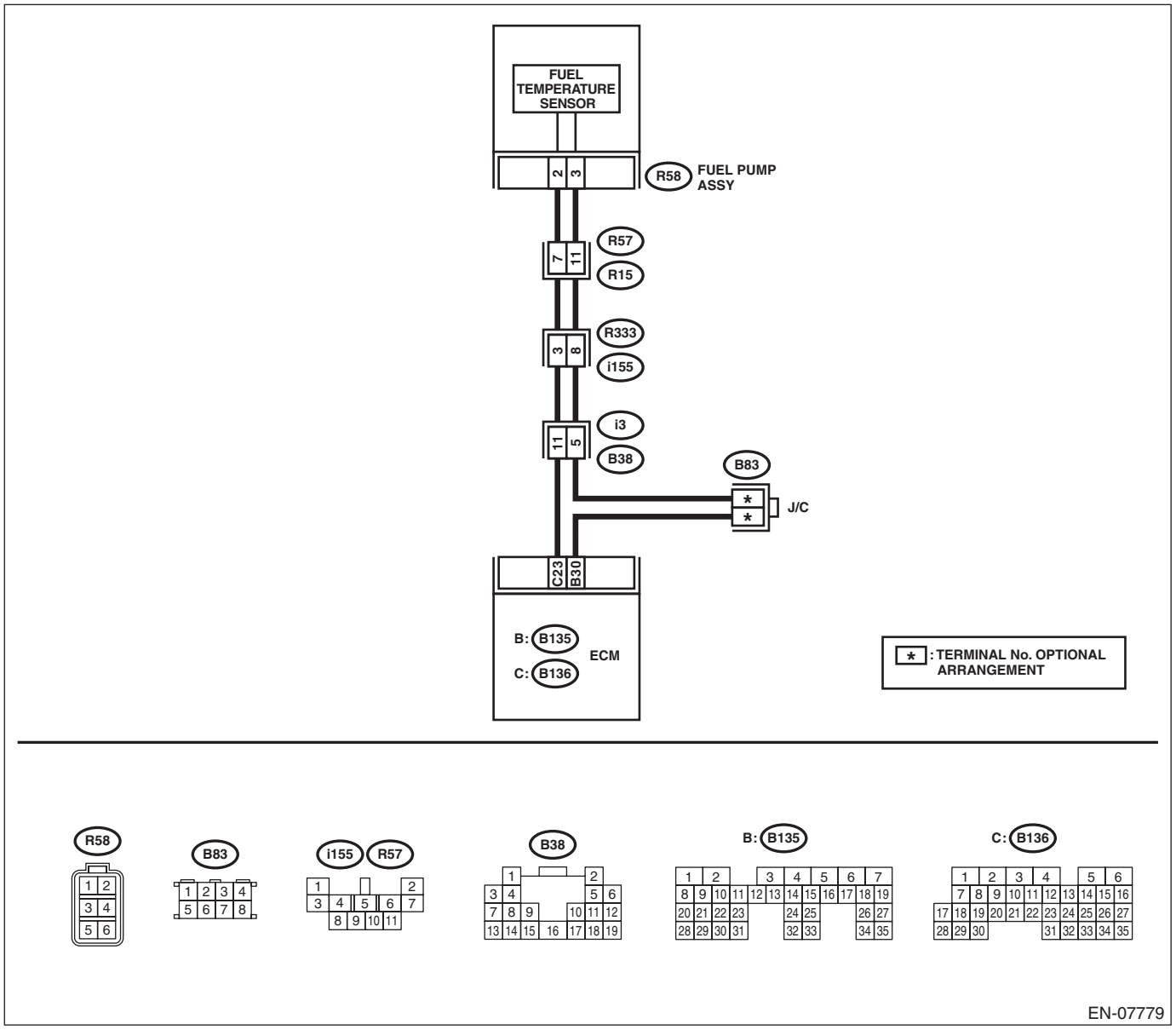

	Step	Check	Yes	No
1	**CHECK CURRENT DATA.** 1) Start the engine. 2) Using the Subaru Select Monitor, read the value in «Fuel Temp.». NOTE: For detailed operation procedures, refer to "READ CURRENT DATA FOR ENGINE". <Ref. to EN(H6DO)(diag)-35, Subaru Select Monitor.>	Is the value in «Fuel Temp.» less than –40°C (–40°F)?	Go to step **2**.	Even if DTC is detected, the circuit has returned to a normal condition at this time. Reproduce the failure, and then perform the diagnosis again. NOTE: In this case, temporary poor contact of connector, temporary open or short circuit of harness may be the cause.
2	**CHECK FOR POOR CONTACT.** Check any poor contact of the ECM and fuel temperature sensor connectors.	Is there poor contact of the ECM or fuel temperature sensor connectors?	Repair any poor contact of the ECM or fuel temperature sensor connectors.	Go to step **3**.
3	**CHECK HARNESS BETWEEN ECM AND FUEL TEMPERATURE SENSOR CONNECTOR.** 1) Turn the ignition switch to OFF. 2) Disconnect the connectors from ECM and fuel temperature sensor. 3) Measure the resistance of the harness between the ECM and fuel temperature sensor connector. ***Connector & terminal*** ***(B136) No. 23 — (R58) No. 2:*** ***(B135) No. 30 — (R58) No. 3:***	Is the resistance less than 1 Ω?	Go to step **4**.	Repair the harness and connector. NOTE: In this case, repair the following item: • Open circuit in harness between ECM and fuel temperature sensor connector • Poor contact of coupling connector
4	**CHECK HARNESS BETWEEN ECM AND FUEL TEMPERATURE SENSOR CONNECTOR.** 1) Connect all connectors. 2) Turn the ignition switch to ON. 3) Measure the voltage between ECM and chassis ground. ***Connector & terminal*** ***(B136) No. 23 (+) — Chassis ground (–):***	Is the voltage 5 V or more?	Repair the short circuit to power in the harness between the ECM and fuel temperature sensor connector.	Replace the fuel temperature sensor. <Ref. to EC(H6DO)-13, Fuel Temperature Sensor.>

BT:DTC P0196 ENGINE OIL TEMPERATURE SENSOR CIRCUIT RANGE/PERFORMANCE

DTC DETECTING CONDITION:

- Detected when two consecutive driving cycles with fault occur.
- GENERAL DESCRIPTION <Ref. to GD(H6DO)-111, DTC P0196 ENGINE OIL TEMPERATURE SENSOR CIRCUIT RANGE/PERFORMANCE, Diagnostic Trouble Code (DTC) Detecting Criteria.>

TROUBLE SYMPTOM:

- Hard to start
- Improper idling
- Poor driving performance

CAUTION:

After servicing or replacing faulty parts, perform Clear Memory Mode <Ref. to EN(H6DO)(diag)-57, OPERATION, Clear Memory Mode.>, and Inspection Mode <Ref. to EN(H6DO)(diag)-44, PROCEDURE, Inspection Mode.>.

Step		Check	Yes	No
1	**CHECK FOR ANY OTHER DTC ON DISPLAY.**	Is any other DTC displayed?	Check the appropriate DTC using the “List of Diagnostic Trouble Code (DTC)”. <Ref. to EN(H6DO)(diag)-85, List of Diagnostic Trouble Code (DTC).>	Replace the engine oil temperature sensor. <Ref. to FU(H6DO)-49, Oil Temperature Sensor.>

BU:DTC P0197 ENGINE OIL TEMPERATURE SENSOR LOW

DTC DETECTING CONDITION:

- Immediately at fault recognition
- GENERAL DESCRIPTION <Ref. to GD(H6DO)-113, DTC P0197 ENGINE OIL TEMPERATURE SENSOR LOW, Diagnostic Trouble Code (DTC) Detecting Criteria.>

TROUBLE SYMPTOM:

- Hard to start
- Improper idling
- Poor driving performance

CAUTION:
After servicing or replacing faulty parts, perform Clear Memory Mode <Ref. to EN(H6DO)(diag)-57, OPERATION, Clear Memory Mode.>, and Inspection Mode <Ref. to EN(H6DO)(diag)-44, PROCEDURE, Inspection Mode.>.

WIRING DIAGRAM:

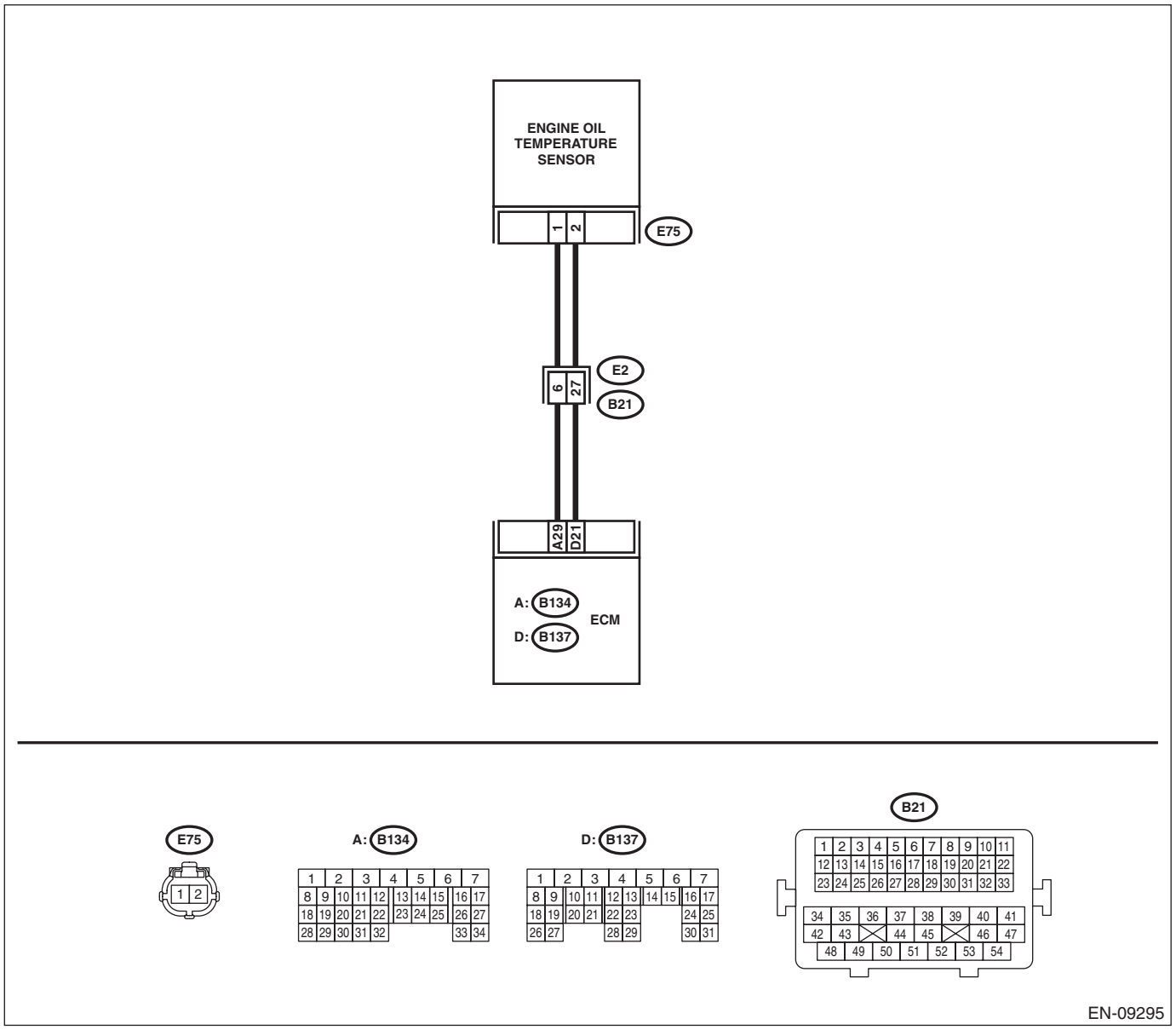

	Step	Check	Yes	No
1	**CHECK CURRENT DATA.** 1) Start the engine. 2) Read the value of «Oil Temperature» using Subaru Select Monitor. NOTE: For detailed operation procedures, refer to "READ CURRENT DATA FOR ENGINE". <Ref. to EN(H6DO)(diag)-35, Subaru Select Monitor.>	Is the value of «Oil Temperature» 215°C (419°F) or more?	Go to step **2**.	Even if DTC is detected, the circuit has returned to a normal condition at this time. Reproduce the failure, and then perform the diagnosis again. NOTE: In this case, temporary poor contact of connector, temporary open or short circuit of harness may be the cause.
2	**CHECK HARNESS BETWEEN ECM AND ENGINE OIL TEMPERATURE SENSOR CONNECTOR.** 1) Turn the ignition switch to OFF. 2) Disconnect the connectors from the ECM and engine oil temperature sensor. 3) Measure the resistance between ECM and chassis ground. ***Connector & terminal*** ***(B137) No. 21 — Chassis ground:***	Is the resistance 1 MΩ or more?	Replace the engine oil temperature sensor. <Ref. to FU(H6DO)-49, Oil Temperature Sensor.>	Repair the short circuit to ground in the harness between the ECM and engine oil temperature sensor connector.

BV:DTC P0198 ENGINE OIL TEMPERATURE SENSOR HIGH

DTC DETECTING CONDITION:

- Immediately at fault recognition
- GENERAL DESCRIPTION <Ref. to GD(H6DO)-114, DTC P0198 ENGINE OIL TEMPERATURE SENSOR HIGH, Diagnostic Trouble Code (DTC) Detecting Criteria.>

TROUBLE SYMPTOM:

- Hard to start
- Improper idling
- Poor driving performance

CAUTION:
After servicing or replacing faulty parts, perform Clear Memory Mode <Ref. to EN(H6DO)(diag)-57, OPERATION, Clear Memory Mode.>, and Inspection Mode <Ref. to EN(H6DO)(diag)-44, PROCEDURE, Inspection Mode.>.

WIRING DIAGRAM:

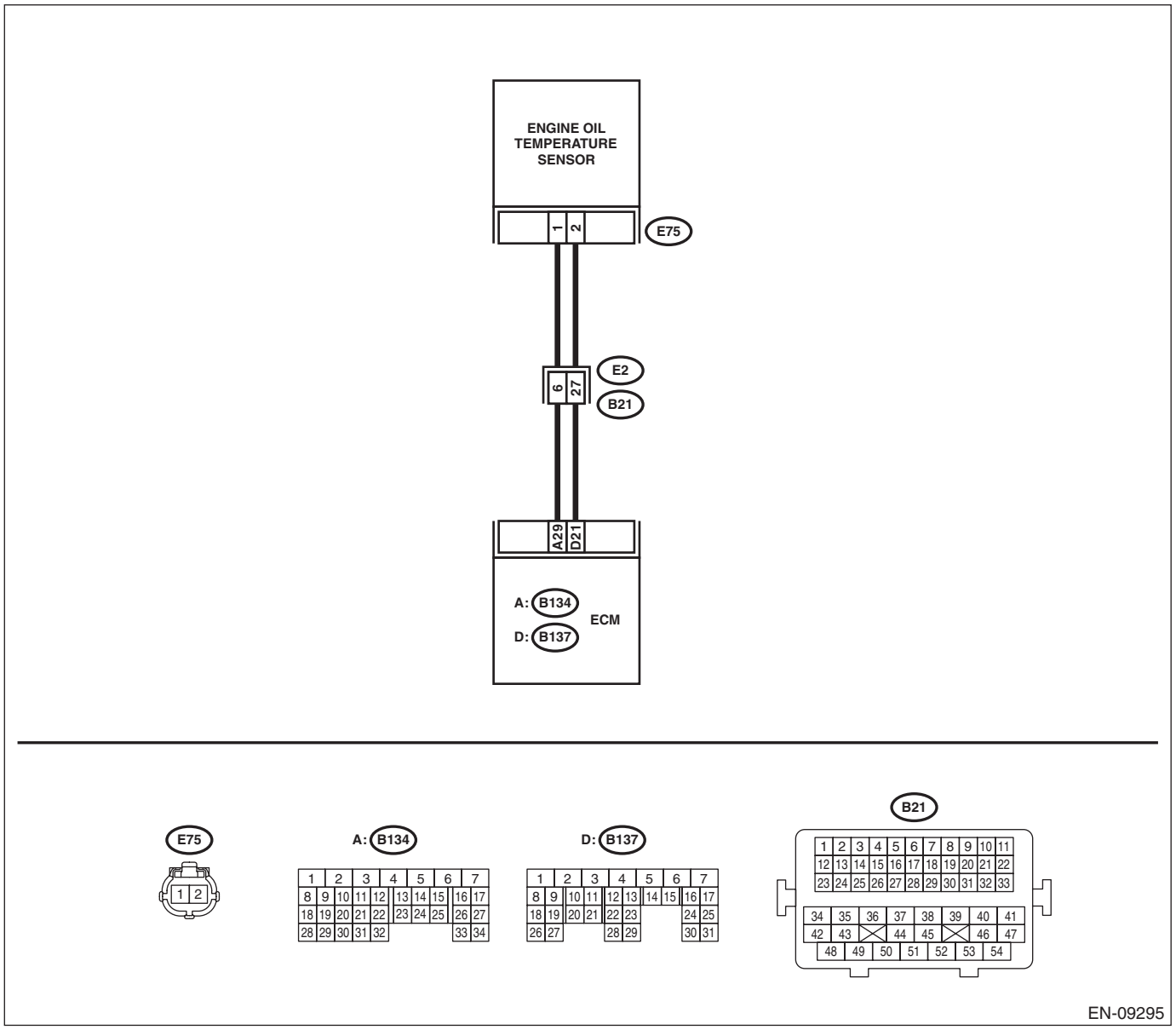

	Step	Check	Yes	No
1	**CHECK CURRENT DATA.** 1) Start the engine. 2) Read the value of «Oil Temperature» using Subaru Select Monitor. NOTE: For detailed operation procedures, refer to "READ CURRENT DATA FOR ENGINE". <Ref. to EN(H6DO)(diag)-35, Subaru Select Monitor.>	Is the value of «Oil Temperature» less than –40°C (–40°F)?	Go to step **2**.	Even if DTC is detected, the circuit has returned to a normal condition at this time. Reproduce the failure, and then perform the diagnosis again. NOTE: In this case, temporary poor contact of connector, temporary open or short circuit of harness may be the cause.
2	**CHECK FOR POOR CONTACT.** Check for poor contact between the ECM and engine oil temperature sensor connectors.	Is there poor contact of the ECM or engine oil temperature sensor connectors?	Repair the poor contact of ECM or engine oil temperature sensor connector.	Go to step **3**.
3	**CHECK HARNESS BETWEEN ECM AND ENGINE OIL TEMPERATURE SENSOR CONNECTOR.** 1) Turn the ignition switch to OFF. 2) Disconnect the connectors from the ECM and engine oil temperature sensor. 3) Measure the resistance of the harness between the ECM and engine oil temperature sensor connector. ***Connector & terminal*** ***(B134) No. 29 — (E75) No. 1:*** ***(B137) No. 21 — (E75) No. 2:***	Is the resistance less than 1 Ω?	Go to step **4**.	Repair the harness and connector. NOTE: In this case, repair the following item: • Open circuit in harness between ECM and engine oil temperature sensor connector • Poor contact of coupling connector
4	**CHECK HARNESS BETWEEN ECM AND ENGINE OIL TEMPERATURE SENSOR CONNECTOR.** 1) Connect all connectors. 2) Turn the ignition switch to ON. 3) Measure the voltage between ECM and chassis ground. ***Connector & terminal*** ***(B137) No. 21 (+) — Chassis ground (–):***	Is the voltage 5 V or more?	Repair the short circuit to power in harness between ECM and engine oil temperature sensor connector.	Replace the engine oil temperature sensor. <Ref. to FU(H6DO)-49, Oil Temperature Sensor.>

BW:DTC P0201 INJECTOR #1

DTC DETECTING CONDITION:

- Immediately at fault recognition
- GENERAL DESCRIPTION <Ref. to GD(H6DO)-115, DTC P0201 INJECTOR #1, Diagnostic Trouble Code (DTC) Detecting Criteria.>

TROUBLE SYMPTOM:

- Improper idling
- Poor driving performance

CAUTION:

After servicing or replacing faulty parts, perform Clear Memory Mode <Ref. to EN(H6DO)(diag)-57, OPERATION, Clear Memory Mode.>, and Inspection Mode <Ref. to EN(H6DO)(diag)-44, PROCEDURE, Inspection Mode.>.

WIRING DIAGRAM:

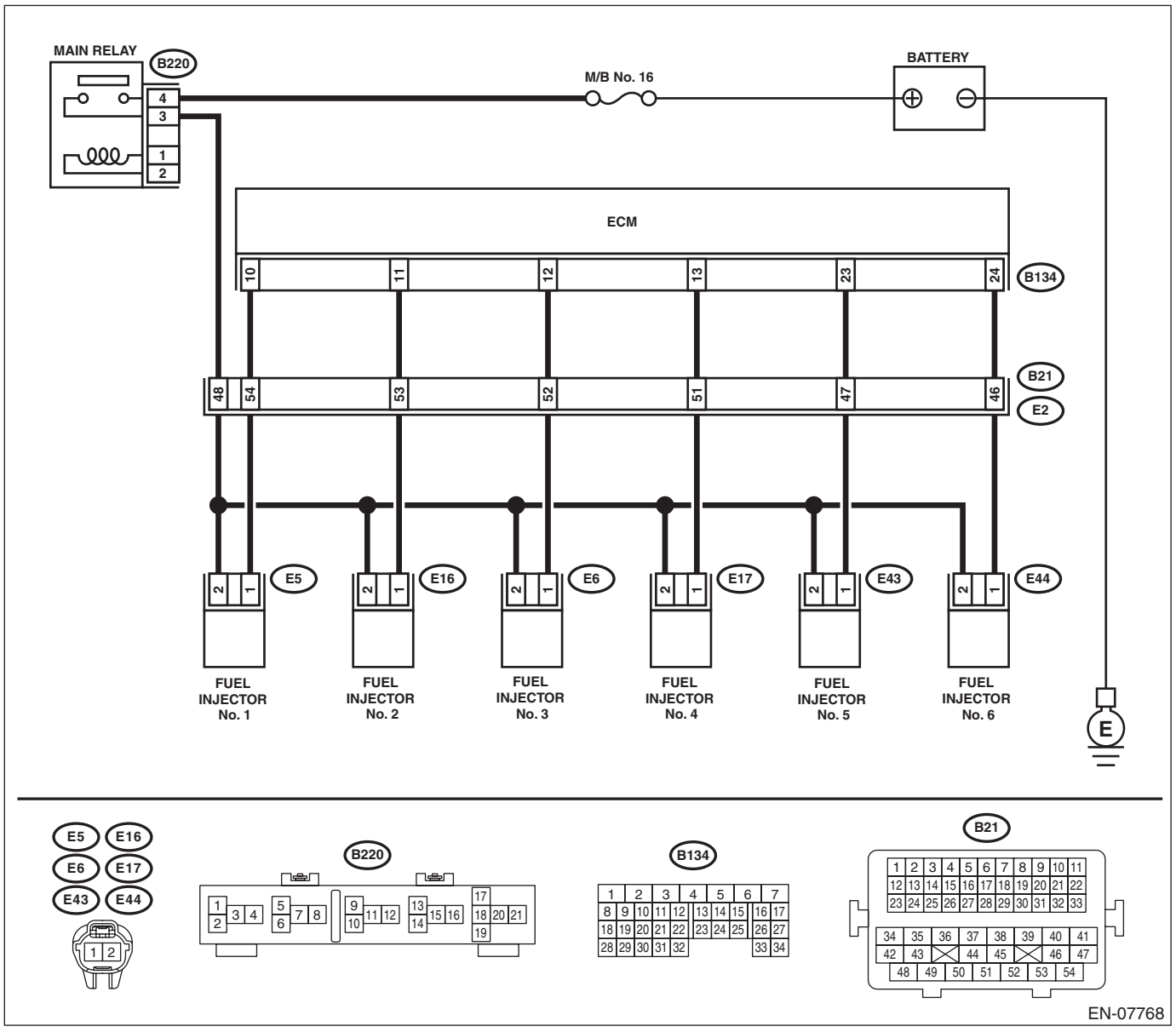

	Step	Check	Yes	No
1	**CHECK POWER SUPPLY TO FUEL INJECTOR.** 1) Turn the ignition switch to OFF. 2) Disconnect the connector from fuel injector. 3) Turn the ignition switch to ON. 4) Measure the voltage between fuel injector connector and the engine ground. ***Connector & terminal*** ***DTC P0201; (E5) No. 2 (+) — Engine ground (–):*** ***DTC P0202; (E16) No. 2 (+) — Engine ground (–):*** ***DTC P0203; (E6) No. 2 (+) — Engine ground (–):*** ***DTC P0204; (E17) No. 2 (+) — Engine ground (–):*** ***DTC P0205; (E43) No. 2 (+) — Engine ground (–):*** ***DTC P0206; (E44) No. 2 (+) — Engine ground (–):***	Is the voltage 10 V or more?	Go to step **2**.	Repair the harness and connector. NOTE: In this case, repair the following item: • Open circuit in harness between main relay and fuel injector connector • Poor contact of main relay connector • Poor contact of coupling connector
2	**CHECK HARNESS BETWEEN ECM AND FUEL INJECTOR CONNECTOR.** 1) Turn the ignition switch to OFF. 2) Disconnect the connector from ECM. 3) Measure the resistance between fuel injector connector and engine ground. ***Connector & terminal*** ***DTC P0201; (E5) No. 1 — Engine ground:*** ***DTC P0202; (E16) No. 1 — Engine ground:*** ***DTC P0203; (E6) No. 1 — Engine ground:*** ***DTC P0204; (E17) No. 1 — Engine ground:*** ***DTC P0205; (E43) No. 1 — Engine ground:*** ***DTC P0206; (E44) No. 1 — Engine ground:***	Is the resistance 1 MΩ or more?	Go to step **3**.	Repair the short circuit to ground in harness between ECM connector and fuel injector connector.
3	**CHECK HARNESS BETWEEN ECM AND FUEL INJECTOR CONNECTOR.** Measure the resistance of harness between ECM connector and fuel injector connector. ***Connector & terminal*** ***DTC P0201; (B134) No. 10 — (E5) No. 1:*** ***DTC P0202; (B134) No. 11 — (E16) No. 1:*** ***DTC P0203; (B134) No. 12 — (E6) No. 1:*** ***DTC P0204; (B134) No. 13 — (E17) No. 1:*** ***DTC P0205; (B134) No. 23 — (E43) No. 1:*** ***DTC P0206; (B134) No. 24 — (E44) No. 1:***	Is the resistance less than 1 Ω?	Go to step **4**.	Repair the harness and connector. NOTE: In this case, repair the following item: • Open circuit in harness between ECM connector and fuel injector connector • Poor contact of coupling connector
4	**CHECK FUEL INJECTOR.** Measure the resistance between fuel injector terminals on the corresponding cylinder. ***Terminals*** ***No. 1 — No. 2:***	Is the resistance 5 — 20 Ω?	Go to step **5**.	Replace the fuel injector. <Ref. to FU(H6DO)-44, Fuel Injector.>
5	**CHECK FOR POOR CONTACT.** Check for poor contact of ECM connector.	Is there poor contact of ECM connector?	Repair the poor contact of ECM connector.	Go to step **6**.

	Step	Check	Yes	No
6	**CHECK FUEL INJECTOR OPERATION.** 1) Connect all connectors. 2) Start the engine. 3) Check if the corresponding fuel injector emits operating sound. NOTE: Use a sound scope to check the operating sound.	Does the fuel injector emit operating sound?	Even if DTC is detected, the circuit has returned to a normal condition at this time. Reproduce the failure, and then perform the diagnosis again. NOTE: In this case, temporary poor contact of connector, temporary open or short circuit of harness may be the cause.	Repair the poor contact of fuel injector connector.

BX:DTC P0202 INJECTOR #2

NOTE:
For the diagnostic procedure, refer to DTC P0201. <Ref. to EN(H6DO)(diag)-194, DTC P0201 INJECTOR #1, Diagnostic Procedure with Diagnostic Trouble Code (DTC).>

BY:DTC P0203 INJECTOR #3

NOTE:
For the diagnostic procedure, refer to DTC P0201. <Ref. to EN(H6DO)(diag)-194, DTC P0201 INJECTOR #1, Diagnostic Procedure with Diagnostic Trouble Code (DTC).>

BZ:DTC P0204 INJECTOR #4

NOTE:
For the diagnostic procedure, refer to DTC P0201. <Ref. to EN(H6DO)(diag)-194, DTC P0201 INJECTOR #1, Diagnostic Procedure with Diagnostic Trouble Code (DTC).>

CA:DTC P0205 INJECTOR #5

NOTE:
For the diagnostic procedure, refer to DTC P0201. <Ref. to EN(H6DO)(diag)-194, DTC P0201 INJECTOR #1, Diagnostic Procedure with Diagnostic Trouble Code (DTC).>

CB:DTC P0206 INJECTOR #6

NOTE:
For the diagnostic procedure, refer to DTC P0201. <Ref. to EN(H6DO)(diag)-194, DTC P0201 INJECTOR #1, Diagnostic Procedure with Diagnostic Trouble Code (DTC).>

CC:DTC P0222 THROTTLE/PEDAL POSITION SENSOR/SWITCH “B” CIRCUIT LOW

DTC DETECTING CONDITION:

- Immediately at fault recognition
- GENERAL DESCRIPTION <Ref. to GD(H6DO)-117, DTC P0222 THROTTLE/PEDAL POSITION SENSOR/SWITCH “B” CIRCUIT LOW, Diagnostic Trouble Code (DTC) Detecting Criteria.>

TROUBLE SYMPTOM:

- Improper idling
- Poor driving performance
- Engine stalls.

CAUTION:

After servicing or replacing faulty parts, perform Clear Memory Mode <Ref. to EN(H6DO)(diag)-57, OPERATION, Clear Memory Mode.>, and Inspection Mode <Ref. to EN(H6DO)(diag)-44, PROCEDURE, Inspection Mode.>.

WIRING DIAGRAM:

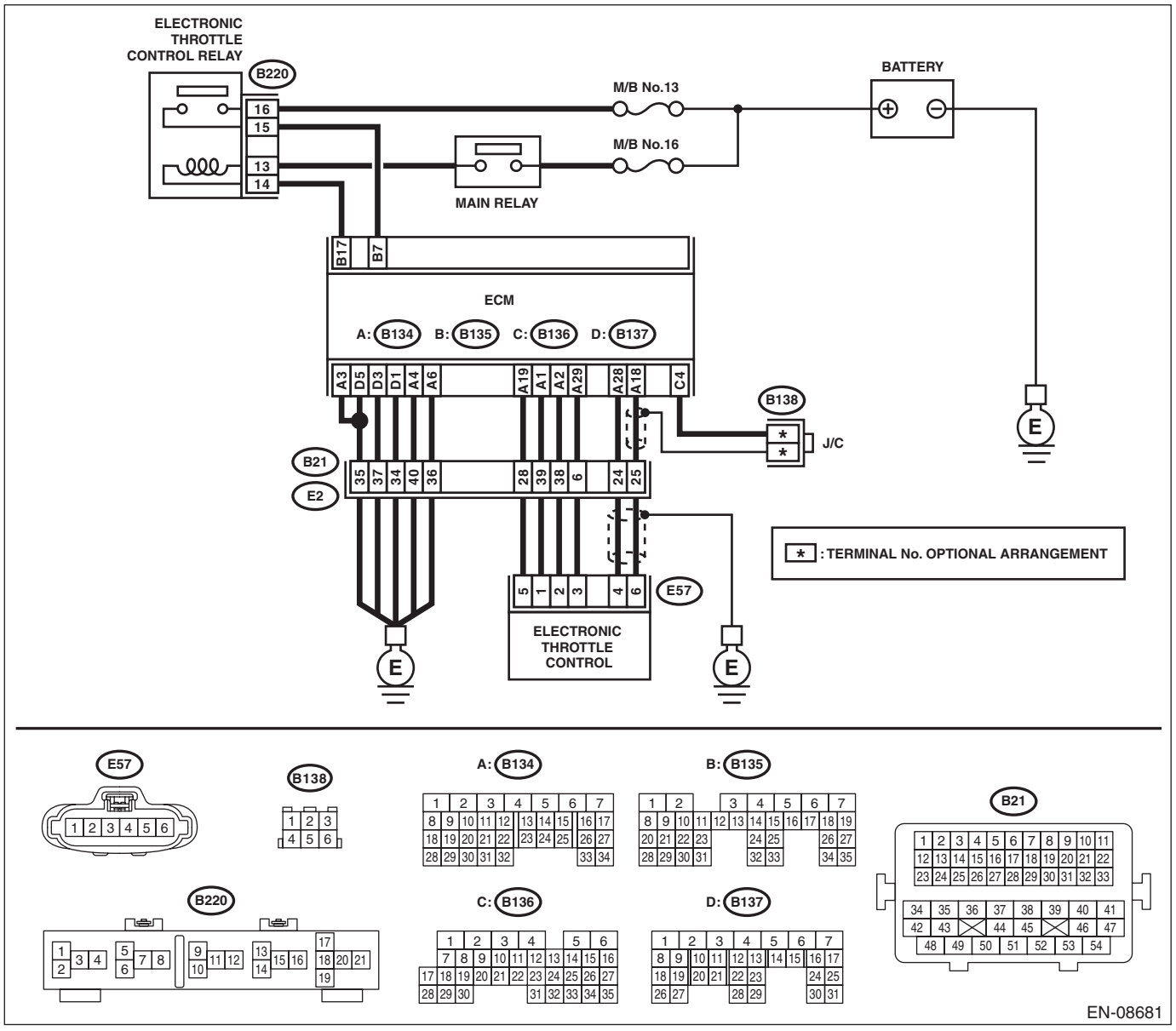

	Step	Check	Yes	No
1	**CHECK HARNESS BETWEEN ECM AND ELECTRONIC THROTTLE CONTROL.** 1) Turn the ignition switch to OFF. 2) Disconnect the connectors from ECM and electronic throttle control. 3) Measure the resistance between ECM and chassis ground. ***Connector & terminal*** ***(B134) No. 19 — Chassis ground:*** ***(B134) No. 28 — Chassis ground:***	Is the resistance 1 MΩ or more?	Go to step **2**.	Repair the short circuit to ground in harness between ECM and electronic throttle control connector.
2	**CHECK SHORT CIRCUIT INSIDE THE ECM.** 1) Connect the connector to ECM. 2) Measure the resistance between electronic throttle control connector and engine ground. ***Connector & terminal*** ***(E57) No. 4 — Engine ground:***	Is the resistance 1 MΩ or more?	Replace the electronic throttle control. <Ref. to FU(H6DO)-19, Throttle Body.>	Repair the short circuit to ground in harness between ECM and electronic throttle control connector. Replace the ECM if defective. <Ref. to FU(H6DO)-54, Engine Control Module (ECM).>

CD:DTC P0223 THROTTLE/PEDAL POSITION SENSOR/SWITCH “B” CIRCUIT HIGH

DTC DETECTING CONDITION:

- Immediately at fault recognition
- GENERAL DESCRIPTION <Ref. to GD(H6DO)-119, DTC P0223 THROTTLE/PEDAL POSITION SENSOR/SWITCH “B” CIRCUIT HIGH, Diagnostic Trouble Code (DTC) Detecting Criteria.>

TROUBLE SYMPTOM:

- Improper idling
- Poor driving performance
- Engine stalls.

CAUTION:

After servicing or replacing faulty parts, perform Clear Memory Mode <Ref. to EN(H6DO)(diag)-57, OPERATION, Clear Memory Mode.>, and Inspection Mode <Ref. to EN(H6DO)(diag)-44, PROCEDURE, Inspection Mode.>.

WIRING DIAGRAM:

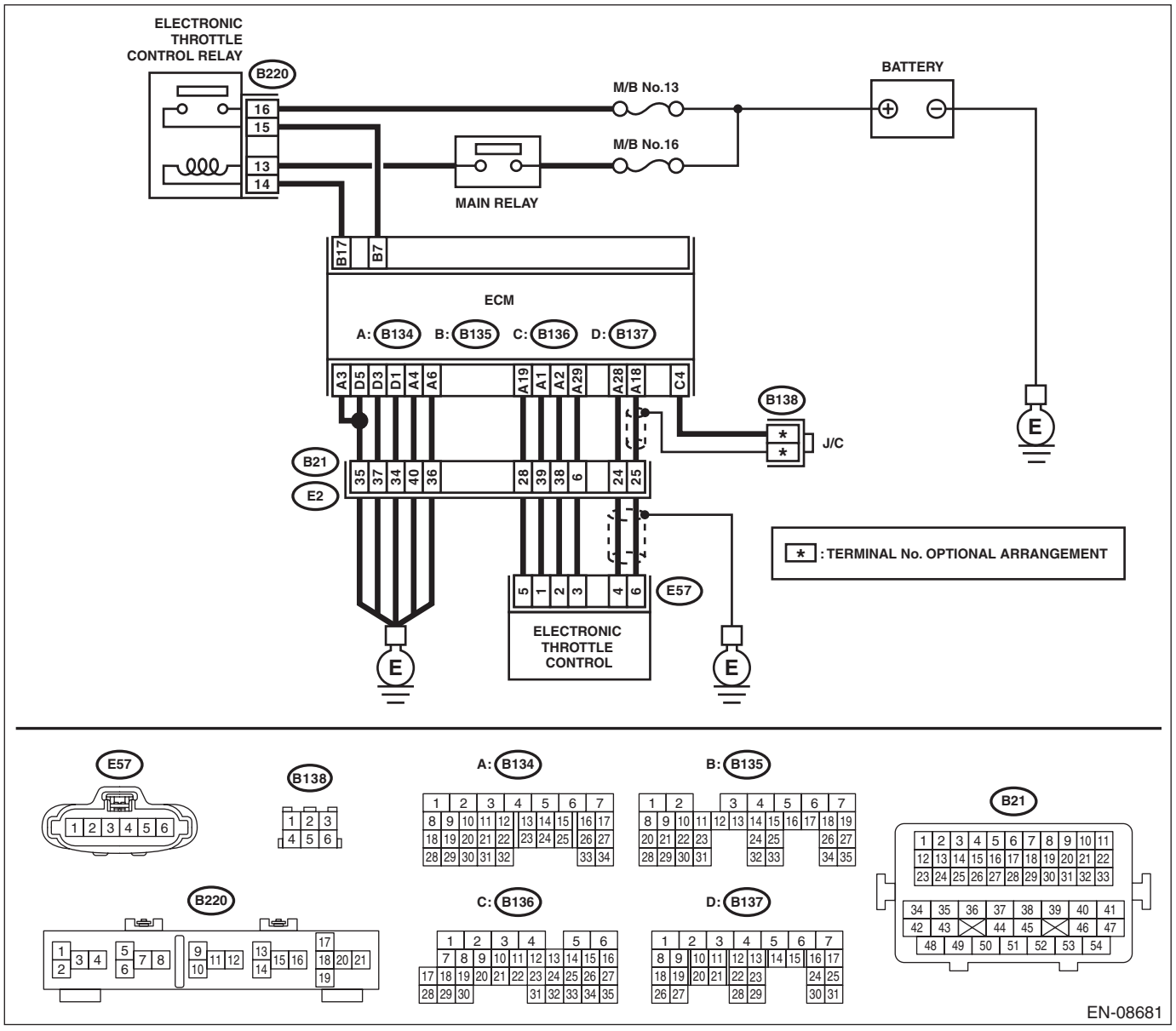

	Step	Check	Yes	No
1	**CHECK HARNESS BETWEEN ECM AND ELECTRONIC THROTTLE CONTROL.** 1) Turn the ignition switch to OFF. 2) Disconnect the connectors from ECM and electronic throttle control. 3) Measure the resistance of harness between ECM and electronic throttle control connector. ***Connector & terminal*** ***(B134) No. 28 — (E57) No. 4:*** ***(B134) No. 29 — (E57) No. 3:***	Is the resistance less than 1 Ω?	Go to step **2**.	Repair the harness and connector. NOTE: In this case, repair the following item: • Open circuit in harness between ECM and electronic throttle control connector • Poor contact of coupling connector
2	**CHECK HARNESS BETWEEN ECM AND ELECTRONIC THROTTLE CONTROL.** 1) Connect the connector to ECM. 2) Measure the resistance between electronic throttle control connector and engine ground. ***Connector & terminal*** ***(E57) No. 3 — Engine ground:***	Is the resistance less than 5 Ω?	Go to step **3**.	Repair the harness and connector. NOTE: In this case, repair the following item: • Open circuit of harness between ECM and engine ground • Poor contact of ECM connector • Poor contact of coupling connector
3	**CHECK HARNESS BETWEEN ECM AND ELECTRONIC THROTTLE CONTROL.** 1) Turn the ignition switch to ON. 2) Measure the voltage between electronic throttle control connector and engine ground. ***Connector & terminal*** ***(E57) No. 4 (+) — Engine ground (–):***	Is the voltage 5 V or more?	Repair the short circuit to power in harness between ECM and electronic throttle control connector.	Go to step **4**.
4	**CHECK HARNESS BETWEEN ECM AND ELECTRONIC THROTTLE CONTROL.** 1) Turn the ignition switch to OFF. 2) Disconnect the connectors from ECM. 3) Measure the resistance between ECM connectors. ***Connector & terminal*** ***(B134) No. 19 — (B134) No. 28:***	Is the resistance 1 MΩ or more?	Repair the poor contact of electronic throttle control connector. Replace the electronic throttle control if defective. <Ref. to FU(H6DO)-19, Throttle Body.>	Repair the short circuit to power in harness between ECM and electronic throttle control connector.

CE:DTC P0230 FUEL PUMP PRIMARY CIRCUIT

DTC DETECTING CONDITION:

- Detected when two consecutive driving cycles with fault occur.
- GENERAL DESCRIPTION <Ref. to GD(H6DO)-121, DTC P0230 FUEL PUMP PRIMARY CIRCUIT, Diagnostic Trouble Code (DTC) Detecting Criteria.>

CAUTION:

After servicing or replacing faulty parts, perform Clear Memory Mode <Ref. to EN(H6DO)(diag)-57, OPERATION, Clear Memory Mode.>, and Inspection Mode <Ref. to EN(H6DO)(diag)-44, PROCEDURE, Inspection Mode.>.

WIRING DIAGRAM:

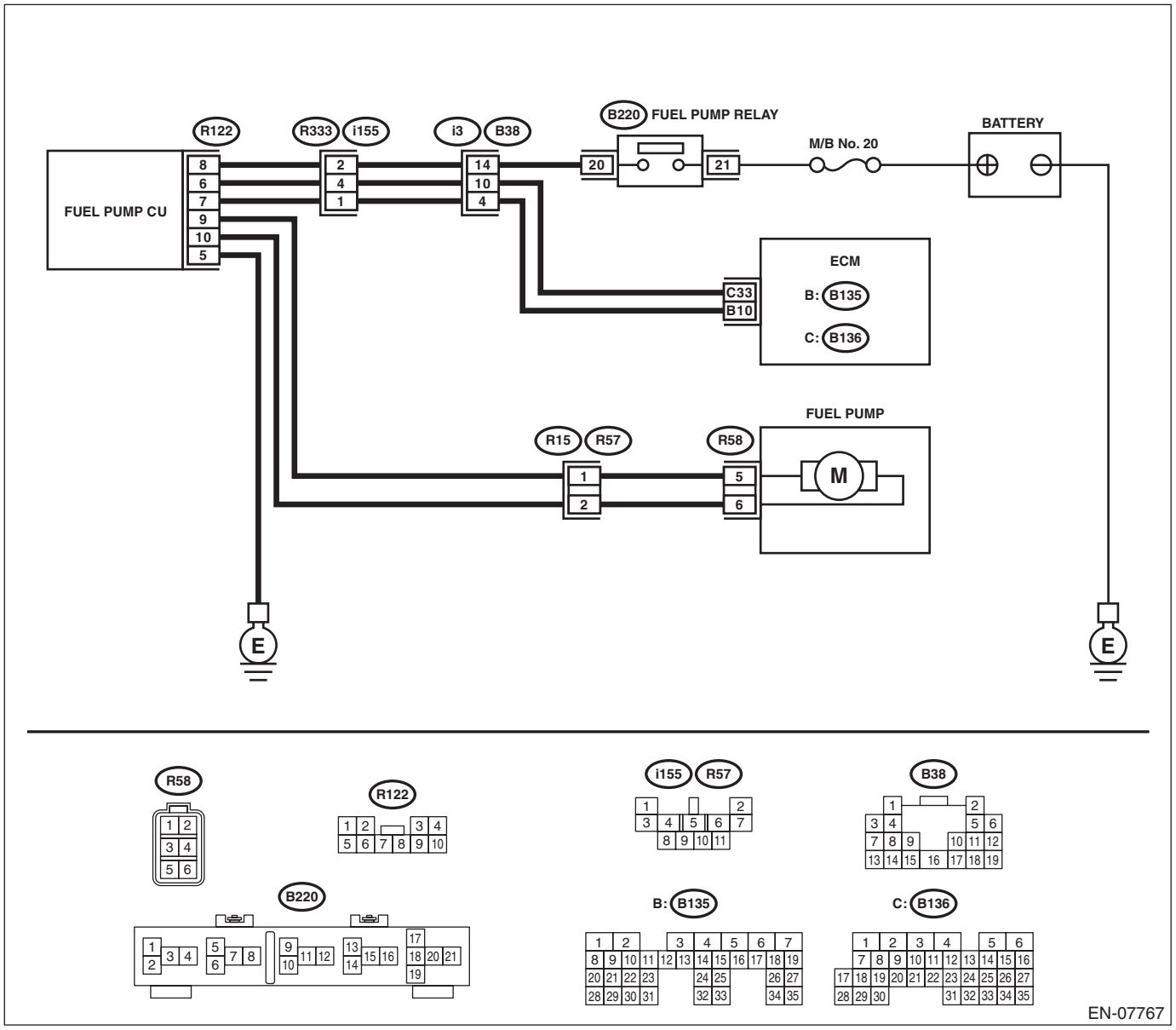

	Step	Check	Yes	No
1	**CHECK POWER SUPPLY CIRCUIT TO FUEL PUMP CONTROL UNIT.** 1) Turn the ignition switch to OFF. 2) Disconnect the connector from fuel pump control unit. 3) Turn the ignition switch to ON. 4) Measure the voltage between fuel pump control unit and chassis ground. ***Connector & terminal*** ***(R122) No. 8 (+) — Chassis ground (–):***	Is the voltage 10 V or more?	Go to step **2**.	Repair the power supply circuit. NOTE: In this case, repair the following item: • Open circuit or short circuit to ground in harness between fuel pump relay connector and fuel pump control unit connector • Poor contact of fuel pump relay connector • Poor contact of coupling connector
2	**CHECK GROUND CIRCUIT OF FUEL PUMP CONTROL UNIT.** 1) Turn the ignition switch to OFF. 2) Measure the resistance of harness between fuel pump control unit and chassis ground. ***Connector & terminal*** ***(R122) No. 5 — Chassis ground:***	Is the resistance less than 5 Ω?	Go to step **3**.	Repair the open circuit in harness between fuel pump control unit connector and chassis ground.
3	**CHECK HARNESS BETWEEN FUEL PUMP CONTROL UNIT AND FUEL PUMP CONNECTOR.** 1) Disconnect the connector from fuel pump. 2) Measure the resistance of harness between fuel pump control unit and fuel pump connector. ***Connector & terminal*** ***(R122) No. 9 — (R58) No. 5:*** ***(R122) No. 10 — (R58) No. 6:***	Is the resistance less than 1 Ω?	Go to step **4**.	Repair the harness and connector. NOTE: In this case, repair the following item: • Open circuit in harness between fuel pump control unit connector and fuel pump connector • Poor contact of coupling connector
4	**CHECK HARNESS BETWEEN FUEL PUMP CONTROL UNIT AND FUEL PUMP CONNECTOR.** Measure the resistance between fuel pump control unit and chassis ground. ***Connector & terminal*** ***(R122) No. 9 — Chassis ground:*** ***(R122) No. 10 — Chassis ground:***	Is the resistance 1 MΩ or more?	Go to step **5**.	Repair the short circuit to ground in harness between fuel pump control unit connector and fuel pump connector.
5	**CHECK HARNESS BETWEEN ECM AND FUEL PUMP CONTROL UNIT.** 1) Disconnect the connector from ECM. 2) Measure the resistance of the harness between the ECM and fuel pump control unit. ***Connector & terminal*** ***(B136) No. 33 — (R122) No. 6:*** ***(B135) No. 10 — (R122) No. 7:***	Is the resistance less than 1 Ω?	Go to step **6**.	Repair the harness and connector. NOTE: In this case, repair the following item: • Open circuit in harness between ECM and fuel pump control unit connector • Poor contact of coupling connector

	Step	Check	Yes	No
6	**CHECK HARNESS BETWEEN ECM AND FUEL PUMP CONTROL UNIT.** Measure the resistance between fuel pump control unit and chassis ground. ***Connector & terminal*** ***(R122) No. 6 — Chassis ground:*** ***(R122) No. 7 — Chassis ground:***	Is the resistance 1 MΩ or more?	Go to step **7**.	Repair the short circuit to ground in harness between ECM and fuel pump control unit connector.
7	**CHECK FOR POOR CONTACT.** Check for poor contact of ECM and fuel pump control unit connector.	Is there poor contact of ECM or fuel pump control unit connector?	Repair the poor contact of ECM or fuel pump control unit connector.	Go to step **8**.
8	**CHECK EXPERIENCE OF RUNNING OUT OF FUEL.**	Has the vehicle experienced running out of fuel?	Finish the diagnosis. NOTE: DTC may be recorded as a result of fuel pump idling while running out of fuel.	Replace the fuel pump control unit. <Ref. to FU(H6DO)-58, Fuel Pump Control Unit.>

CF:DTC P0301 CYLINDER 1 MISFIRE DETECTED

NOTE:
For the diagnostic procedure, refer to DTC P0306. <Ref. to EN(H6DO)(diag)-205, DTC P0306 CYLINDER 6 MISFIRE DETECTED, Diagnostic Procedure with Diagnostic Trouble Code (DTC).>

CG:DTC P0302 CYLINDER 2 MISFIRE DETECTED

NOTE:
For the diagnostic procedure, refer to DTC P0306. <Ref. to EN(H6DO)(diag)-205, DTC P0306 CYLINDER 6 MISFIRE DETECTED, Diagnostic Procedure with Diagnostic Trouble Code (DTC).>

CH:DTC P0303 CYLINDER 3 MISFIRE DETECTED

NOTE:
For the diagnostic procedure, refer to DTC P0306. <Ref. to EN(H6DO)(diag)-205, DTC P0306 CYLINDER 6 MISFIRE DETECTED, Diagnostic Procedure with Diagnostic Trouble Code (DTC).>

CI: DTC P0304 CYLINDER 4 MISFIRE DETECTED

NOTE:
For the diagnostic procedure, refer to DTC P0306. <Ref. to EN(H6DO)(diag)-205, DTC P0306 CYLINDER 6 MISFIRE DETECTED, Diagnostic Procedure with Diagnostic Trouble Code (DTC).>

CJ:DTC P0305 CYLINDER 5 MISFIRE DETECTED

NOTE:
For the diagnostic procedure, refer to DTC P0306. <Ref. to EN(H6DO)(diag)-205, DTC P0306 CYLINDER 6 MISFIRE DETECTED, Diagnostic Procedure with Diagnostic Trouble Code (DTC).>

CK:DTC P0306 CYLINDER 6 MISFIRE DETECTED

DTC DETECTING CONDITION:

- Detected when two consecutive driving cycles with fault occur.
- Immediately at fault recognition (A misfire which could damage catalyst occurs.)
- GENERAL DESCRIPTION <Ref. to GD(H6DO)-129, DTC P0306 CYLINDER 6 MISFIRE DETECTED, Diagnostic Trouble Code (DTC) Detecting Criteria.>

TROUBLE SYMPTOM:

- Engine stalls.
- Improper idling
- Rough driving

CAUTION:

After servicing or replacing faulty parts, perform Clear Memory Mode <Ref. to EN(H6DO)(diag)-57, OPERATION, Clear Memory Mode.>, and Inspection Mode <Ref. to EN(H6DO)(diag)-44, PROCEDURE, Inspection Mode.>.

WIRING DIAGRAM:

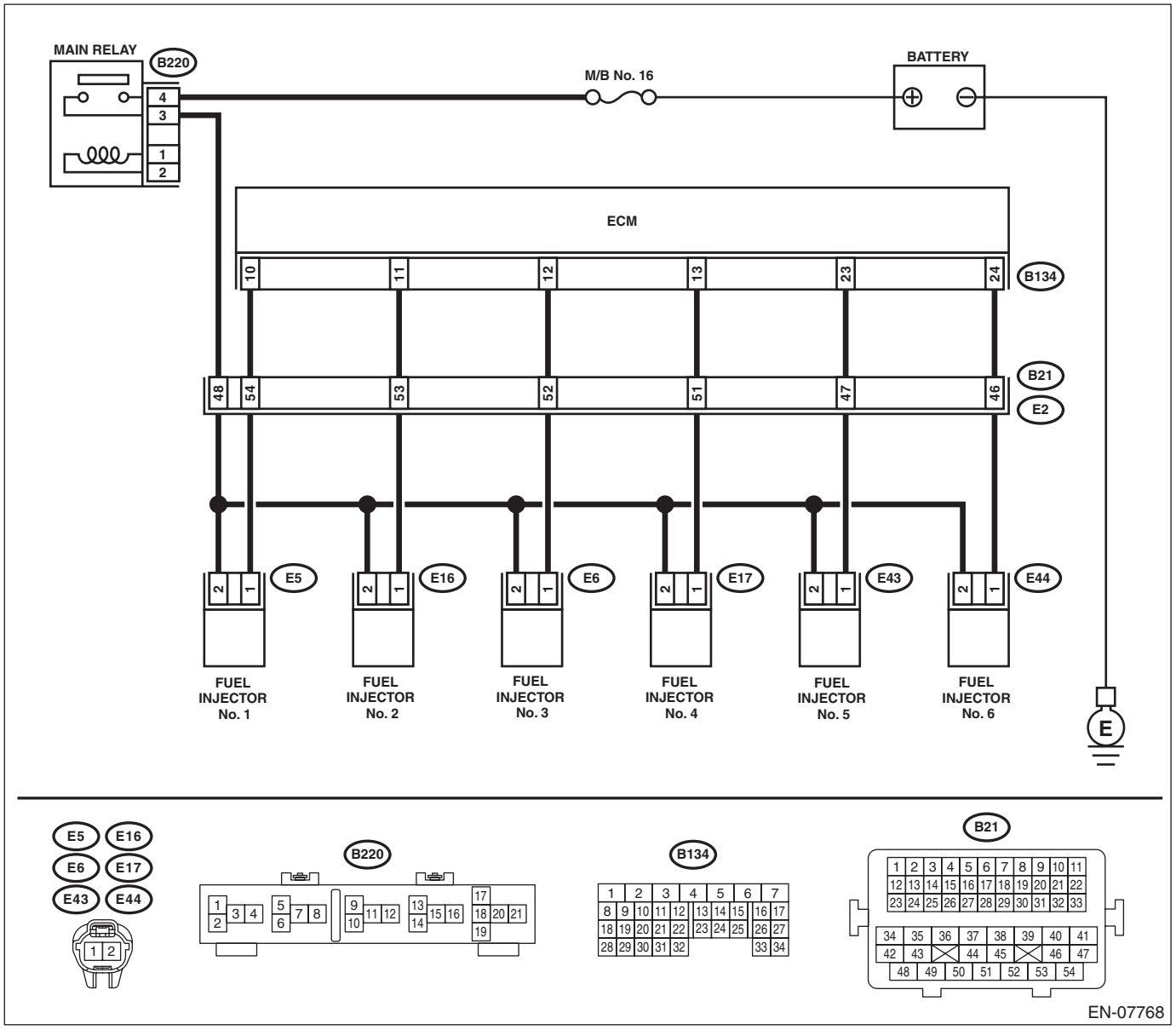

	Step	Check	Yes	No
1	**CHECK OUTPUT SIGNAL OF ECM.** 1) Turn the ignition switch to ON. 2) Measure the voltage between ECM and chassis ground on faulty cylinders. ***Connector & terminal*** ***#1 (B134) No. 10 (+) — Chassis ground (–):*** ***#2 (B134) No. 11 (+) — Chassis ground (–):*** ***#3 (B134) No. 12 (+) — Chassis ground (–):*** ***#4 (B134) No. 13 (+) — Chassis ground (–):*** ***#5 (B134) No. 23 (+) — Chassis ground (–):*** ***#6 (B134) No. 24 (+) — Chassis ground (–):***	Is the voltage 10 V or more?	Go to step **6**.	Go to step **2**.
2	**CHECK HARNESS BETWEEN ECM AND FUEL INJECTOR.** 1) Turn the ignition switch to OFF. 2) Disconnect the connector from fuel injector on faulty cylinders. 3) Measure the resistance between fuel injector connector and engine ground on faulty cylinders. ***Connector & terminal*** ***#1 (E5) No. 1 — Engine ground:*** ***#2 (E16) No. 1 — Engine ground:*** ***#3 (E6) No. 1 — Engine ground:*** ***#4 (E17) No. 1 — Engine ground:*** ***#5 (E43) No. 1 — Engine ground:*** ***#6 (E44) No. 1 — Engine ground:***	Is the resistance 1 MΩ or more?	Go to step **3**.	Repair the short circuit to ground in harness between ECM and fuel injector connector.
3	**CHECK HARNESS BETWEEN ECM AND FUEL INJECTOR.** Measure the resistance of harness between ECM and fuel injector connector on faulty cylinders. ***Connector & terminal*** ***#1 (B134) No. 10 — (E5) No. 1:*** ***#2 (B134) No. 11 — (E16) No. 1:*** ***#3 (B134) No. 12 — (E6) No. 1:*** ***#4 (B134) No. 13 — (E17) No. 1:*** ***#5 (B134) No. 23 — (E43) No. 1:*** ***#6 (B134) No. 24 — (E44) No. 1:***	Is the resistance less than 1 Ω?	Go to step **4**.	Repair the harness and connector. NOTE: In this case, repair the following item: • Open circuit in harness between ECM and fuel injector connector • Poor contact of coupling connector
4	**CHECK FUEL INJECTOR.** Measure the resistance between fuel injector terminals on faulty cylinder. ***Terminals*** ***No. 1 — No. 2:***	Is the resistance 5 — 20 Ω?	Go to step **5**.	Replace the faulty fuel injector. <Ref. to FU(H6DO)-44, Fuel Injector.>
5	**CHECK POWER SUPPLY LINE.** 1) Turn the ignition switch to ON. 2) Measure the voltage between fuel injector connector of faulty cylinders and engine ground. ***Connector & terminal*** ***#1 (E5) No. 2 (+) — Engine ground (–):*** ***#2 (E16) No. 2 (+) — Engine ground (–):*** ***#3 (E6) No. 2 (+) — Engine ground (–):*** ***#4 (E17) No. 2 (+) — Engine ground (–):*** ***#5 (E43) No. 2 (+) — Engine ground (–):*** ***#6 (E44) No. 2 (+) — Engine ground (–):***	Is the voltage 10 V or more?	Repair the poor contact of all connectors in fuel injector circuit.	Repair the harness and connector. NOTE: In this case, repair the following item: • Open circuit in harness between the main relay and fuel injector connector on faulty cylinders • Poor contact of coupling connector • Poor contact of main relay connector

	Step	Check	Yes	No
6	**CHECK HARNESS BETWEEN ECM AND FUEL INJECTOR.** 1) Turn the ignition switch to OFF. 2) Disconnect the connector from fuel injector on faulty cylinders. 3) Turn the ignition switch to ON. 4) Measure the voltage between ECM and chassis ground on faulty cylinders. ***Connector & terminal*** ***#1 (B134) No. 10 (+) — Chassis ground (–):*** ***#2 (B134) No. 11 (+) — Chassis ground (–):*** ***#3 (B134) No. 12 (+) — Chassis ground (–):*** ***#4 (B134) No. 13 (+) — Chassis ground (–):*** ***#5 (B134) No. 23 (+) — Chassis ground (–):*** ***#6 (B134) No. 24 (+) — Chassis ground (–):***	Is the voltage 10 V or more?	Repair the short circuit to power in harness between ECM and fuel injector connector.	Go to step **7**.
7	**CHECK FUEL INJECTOR.** 1) Turn the ignition switch to OFF. 2) Measure the resistance between fuel injector terminals on faulty cylinder. ***Terminals*** ***No. 1 — No. 2:***	Is the resistance 5 — 20 Ω?	Go to step **8**.	Replace the faulty fuel injector. <Ref. to FU(H6DO)-44, Fuel Injector.>
8	**CHECK INSTALLATION OF CAMSHAFT POSITION SENSOR/CRANKSHAFT POSITION SENSOR.**	Is the camshaft position sensor or crankshaft position sensor loosely installed?	Tighten the camshaft position sensor or crankshaft position sensor.	Go to step **9**.
9	**CHECK CRANK PLATE.**	Is the crank sprocket rusted or the teeth of crank plate broken?	Replace the crank plate. <Ref. to ME(H6DO)-104, Cylinder Block.>	Go to step **10**.
10	**CHECK INSTALLATION CONDITION OF TIMING CHAIN.** Turn the crankshaft using ST, and align the alignment mark on crank sprocket with alignment mark on cylinder block. ST 18252AA000 CRANKSHAFT SOCKET	Is the timing chain dislocated from its proper position?	Correct the installation condition of timing chain. <Ref. to ME(H6DO)-62, Timing Chain Assembly.>	Go to step **11**.
11	**CHECK FUEL LEVEL.**	Is the fuel meter indication lower than the “Lower” level?	Refill the fuel so that the fuel meter indication is higher than the “Lower” level, and proceed to the next step. Go to step **13**.	Go to step **12**.
12	**CHECK STATUS OF MALFUNCTION INDICATOR LIGHT.** 1) Clear the memory using the Subaru Select Monitor or general scan tool. <Ref. to EN(H6DO)(diag)-57, Clear Memory Mode.> 2) Start the engine, and drive the vehicle 10 minutes or more.	Does the malfunction indicator light illuminate or blink?	Go to step **14**.	Go to step **13**.

	Step	Check	Yes	No
13	**CHECK CAUSE OF MISFIRE.**	Was the cause of misfire identified when the engine is running?	Finish diagnostics operation, if the engine has no abnormality.	Repair the poor contact of connector. NOTE: In this case, repair the following item: • Poor contact of ignition coil connector • Poor contact of fuel injector connector on faulty cylinders • Poor contact of ECM connector • Poor contact of coupling connector
14	**CHECK AIR INTAKE SYSTEM.**	Is there any fault in air intake system?	Repair the air intake system. NOTE: Check the following items. • Are there air leaks or air suction caused by loose or dislocated nuts and bolts? • Are there cracks or any disconnection of hoses?	Go to step **15**.
15	**CHECK MISFIRE SYMPTOM.** 1) Turn the ignition switch to ON. 2) Check for DTC. <Ref. to EN(H6DO)(diag)-43, Read Diagnostic Trouble Code (DTC).>	Does the Subaru Select Monitor or general scan tool indicate only one DTC?	Go to step **18**.	Go to step **16**.
16	**CHECK DTC ON DISPLAY.**	Is DTC P0301, P0303 and P0305 displayed?	Go to step **19**.	Go to step **17**.
17	**CHECK DTC ON DISPLAY.**	Is DTC P0302, P0304 and P0306 displayed?	Go to step **20**.	Go to step **21**.
18	**ONLY ONE CYLINDER.**	Is there any fault in the cylinder?	Repair or replace faulty parts. NOTE: Check the following items. • Spark plug • Ignition coil • Fuel injector • Compression ratio	Check DTC P0171, P0172, P0174 or P0175 using “List of Diagnostic Trouble Code (DTC)”. <Ref. to EN(H6DO)(diag)-85, List of Diagnostic Trouble Code (DTC).>

Step		Check	Yes	No
19	**GROUP OF #1, #3 AND #5 CYLINDERS.**	Is there any fault in #1, #3 and #5 cylinders?	Repair or replace faulty parts. NOTE: Check the following items. • Spark plug • Ignition coil • Fuel injector • Compression ratio • Skipping timing chain teeth	Check DTC P0171, P0172, P0174 or P0175 using “List of Diagnostic Trouble Code (DTC)”. <Ref. to EN(H6DO)(diag)-85, List of Diagnostic Trouble Code (DTC).>
20	**GROUP OF #2, #4 AND #6 CYLINDERS.**	Is there any fault in #2, #4 and #6 cylinders?	Repair or replace faulty parts. NOTE: Check the following items. • Spark plug • Ignition coil • Fuel injector • Compression ratio • Skipping timing chain teeth	Check DTC P0171, P0172, P0174 or P0175 using “List of Diagnostic Trouble Code (DTC)”. <Ref. to EN(H6DO)(diag)-85, List of Diagnostic Trouble Code (DTC).>
21	**CYLINDER AT RANDOM.**	Is the engine idle rough?	Check DTC P0171, P0172, P0174 or P0175 using “List of Diagnostic Trouble Code (DTC)”. <Ref. to EN(H6DO)(diag)-85, List of Diagnostic Trouble Code (DTC).>	Repair or replace faulty parts. NOTE: Check the following items. • Spark plug • Ignition coil • Fuel injector • Compression ratio

CL:DTC P0327 KNOCK SENSOR 1 CIRCUIT LOW (BANK 1 OR SINGLE SENSOR)

DTC DETECTING CONDITION:

- Immediately at fault recognition
- GENERAL DESCRIPTION <Ref. to GD(H6DO)-130, DTC P0327 KNOCK SENSOR 1 CIRCUIT LOW (BANK 1 OR SINGLE SENSOR), Diagnostic Trouble Code (DTC) Detecting Criteria.>

TROUBLE SYMPTOM:

- Poor driving performance
- Knocking occurs.

CAUTION:

After servicing or replacing faulty parts, perform Clear Memory Mode <Ref. to EN(H6DO)(diag)-57, OPERATION, Clear Memory Mode.>, and Inspection Mode <Ref. to EN(H6DO)(diag)-44, PROCEDURE, Inspection Mode.>.

WIRING DIAGRAM:

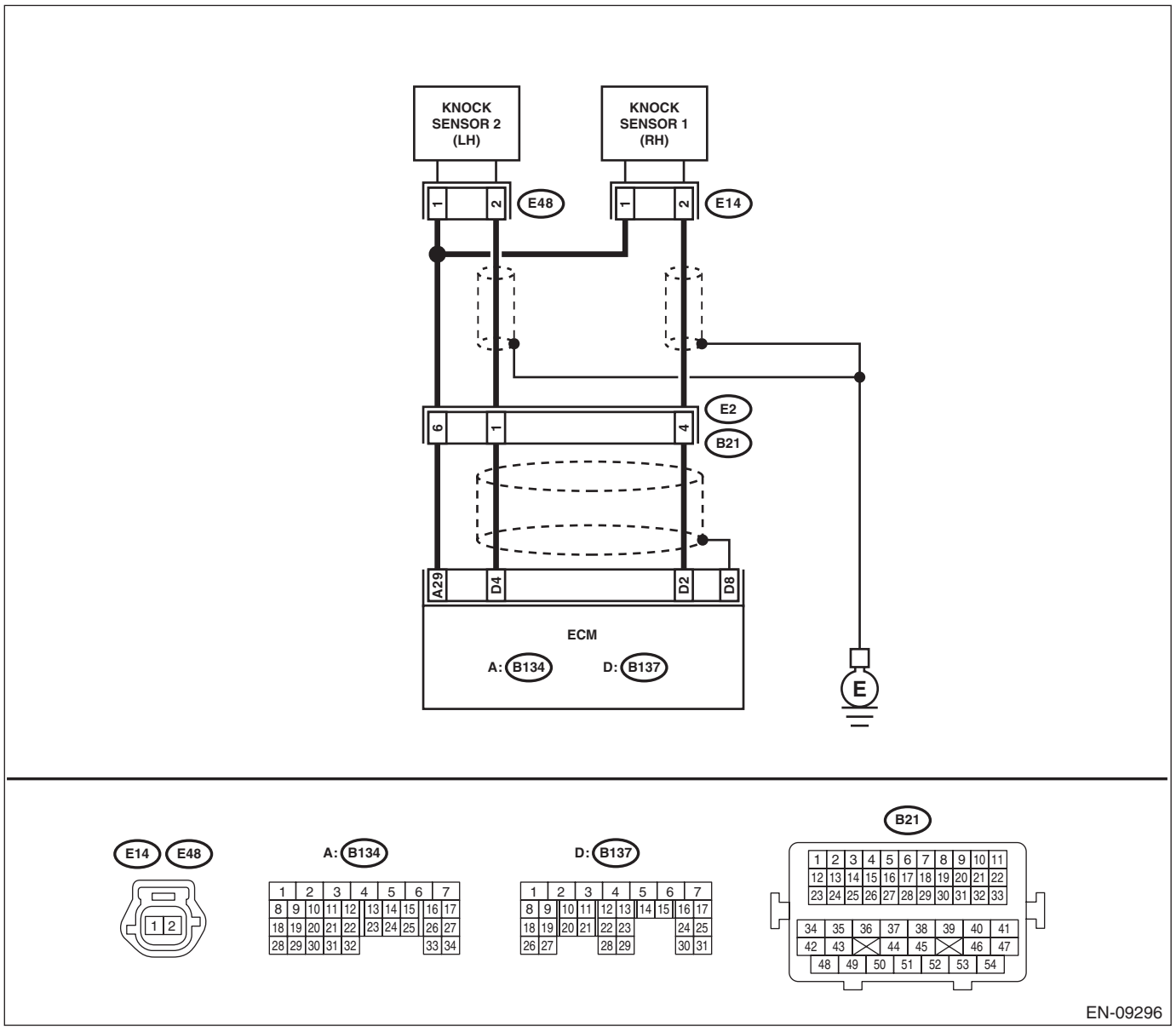

	Step	Check	Yes	No
1	**CHECK HARNESS BETWEEN ECM AND KNOCK SENSOR CONNECTOR.** 1) Turn the ignition switch to OFF. 2) Disconnect the connector from ECM. 3) Measure the resistance between ECM connectors. ***Connector & terminal*** ***(B137) No. 2 — (B134) No. 29:***	Is the resistance 600 kΩ or more?	Go to step **2**.	Repair the poor contact of ECM connector.
2	**CHECK KNOCK SENSOR.** 1) Disconnect the connector from the knock sensor. 2) Measure the resistance between knock sensor terminals. ***Terminals*** ***No. 1 — No. 2:***	Is the resistance 600 kΩ or more?	Replace the knock sensor. <Ref. to FU(H6DO)-37, Knock Sensor.>	Repair the harness and connector. NOTE: In this case, repair the following item: • Open circuit in harness between ECM and knock sensor connector • Poor contact of knock sensor connector • Poor contact of coupling connector

CM:DTC P0328 KNOCK SENSOR 1 CIRCUIT HIGH (BANK 1 OR SINGLE SENSOR)

DTC DETECTING CONDITION:

- Immediately at fault recognition
- GENERAL DESCRIPTION <Ref. to GD(H6DO)-132, DTC P0328 KNOCK SENSOR 1 CIRCUIT HIGH (BANK 1 OR SINGLE SENSOR), Diagnostic Trouble Code (DTC) Detecting Criteria.>

TROUBLE SYMPTOM:

- Poor driving performance
- Knocking occurs.

CAUTION:

After servicing or replacing faulty parts, perform Clear Memory Mode <Ref. to EN(H6DO)(diag)-57, OPERATION, Clear Memory Mode.>, and Inspection Mode <Ref. to EN(H6DO)(diag)-44, PROCEDURE, Inspection Mode.>.

WIRING DIAGRAM:

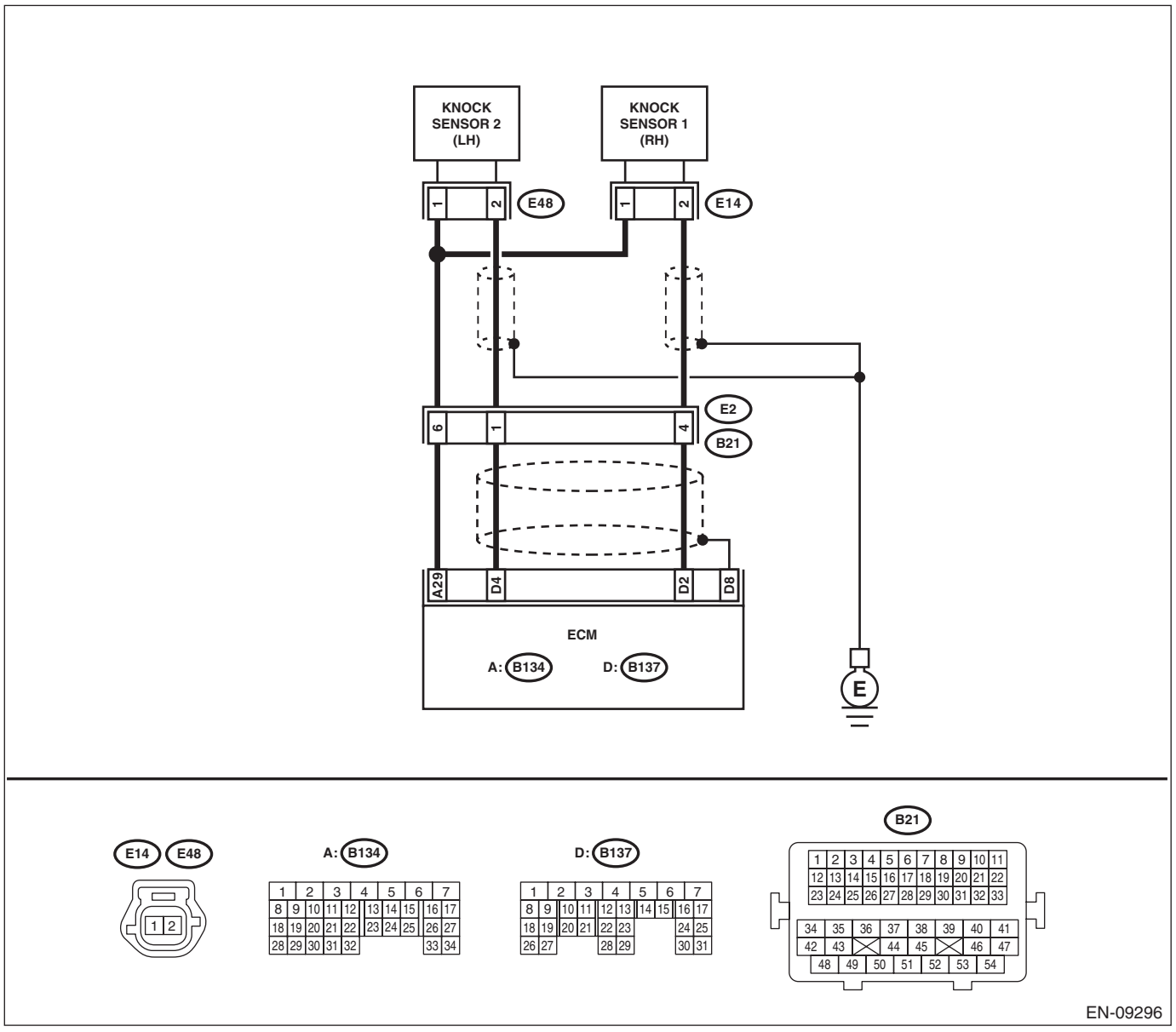

	Step	Check	Yes	No
1	**CHECK HARNESS BETWEEN ECM AND KNOCK SENSOR CONNECTOR.** 1) Turn the ignition switch to OFF. 2) Disconnect the connector from ECM. 3) Measure the resistance between ECM connectors. ***Connector & terminal*** ***(B137) No. 2 — (B134) No. 29:***	Is the resistance less than 500 kΩ?	Go to step **2**.	Go to step **3**.
2	**CHECK KNOCK SENSOR.** 1) Disconnect the connector from the knock sensor. 2) Measure the resistance between knock sensor connectors. ***Terminals*** ***No. 1 — No. 2:***	Is the resistance less than 500 kΩ?	Replace the knock sensor. <Ref. to FU(H6DO)-37, Knock Sensor.>	Repair the short circuit to ground in harness between ECM and knock sensor connector. NOTE: The harness between both connectors are shielded. Remove the shield and repair the short circuit of harness.
3	**CHECK INPUT SIGNAL OF ECM.** 1) Connect the connector to ECM. 2) Turn the ignition switch to ON. 3) Measure the voltage between ECM and chassis ground. ***Connector & terminal*** ***(B137) No. 2 (+) — Chassis ground (–):***	Is the voltage 2 V or more?	Even if DTC is detected, the circuit has returned to a normal condition at this time. Reproduce the failure, and then perform the diagnosis again. NOTE: In this case, temporary poor contact of connector, temporary open or short circuit of harness may be the cause.	Repair the poor contact of ECM connector.

CN:DTC P0332 KNOCK SENSOR 2 CIRCUIT LOW (BANK 2)

DTC DETECTING CONDITION:

- Immediately at fault recognition
- GENERAL DESCRIPTION <Ref. to GD(H6DO)-133, DTC P0332 KNOCK SENSOR 2 CIRCUIT LOW (BANK 2), Diagnostic Trouble Code (DTC) Detecting Criteria.>

TROUBLE SYMPTOM:

- Driving performance problem
- Knocking is occurred.

CAUTION:

After servicing or replacing faulty parts, perform Clear Memory Mode <Ref. to EN(H6DO)(diag)-57, OPERATION, Clear Memory Mode.>, and Inspection Mode <Ref. to EN(H6DO)(diag)-44, PROCEDURE, Inspection Mode.>.

WIRING DIAGRAM:

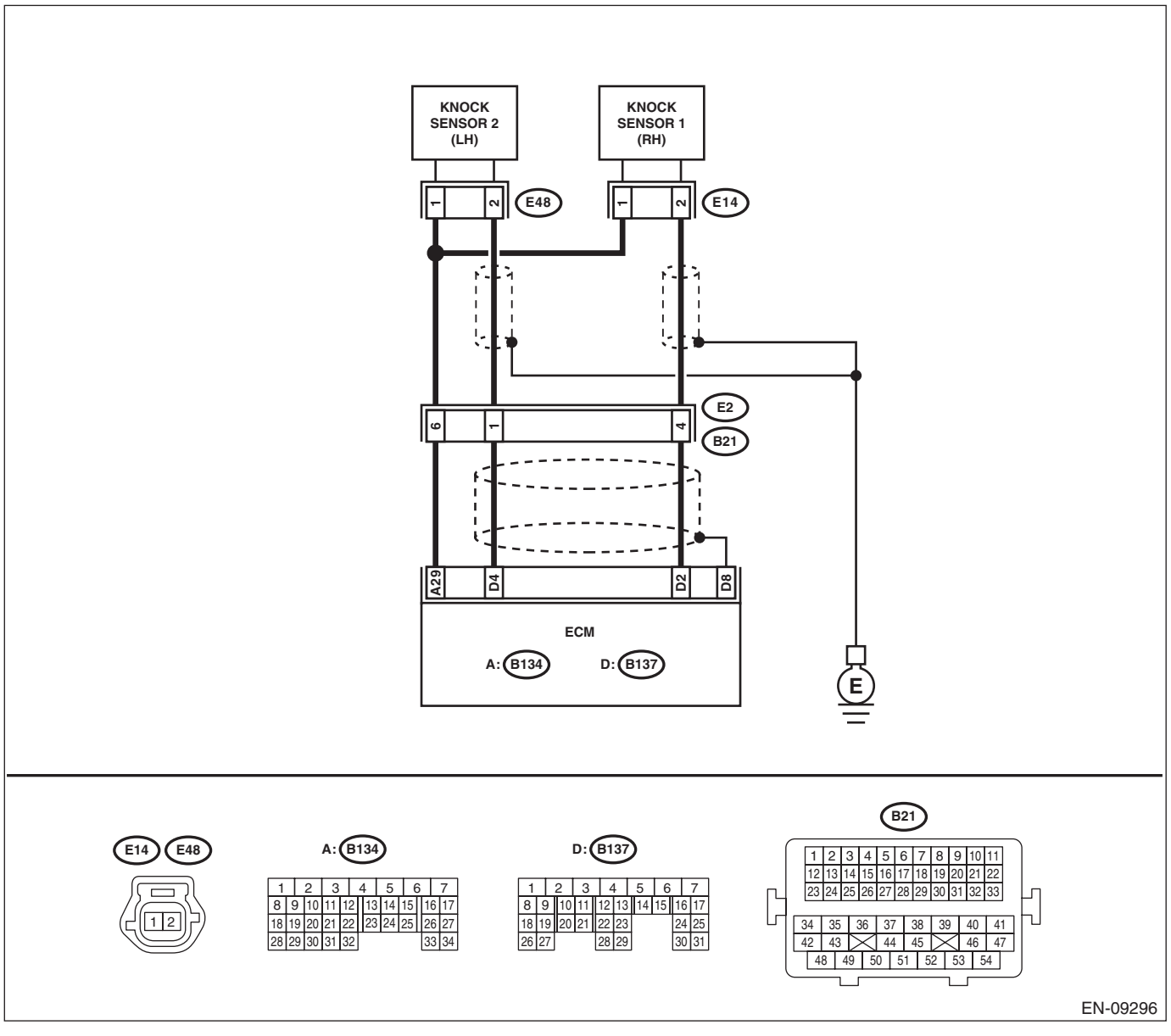

	Step	Check	Yes	No
1	**CHECK HARNESS BETWEEN ECM AND KNOCK SENSOR CONNECTOR.** 1) Turn the ignition switch to OFF. 2) Disconnect the connector from ECM. 3) Measure the resistance between ECM connectors. ***Connector & terminal*** ***(B137) No. 4 — (B134) No. 29:***	Is the resistance 600 kΩ or more?	Go to step **2**.	Repair the poor contact of ECM connector.
2	**CHECK KNOCK SENSOR.** 1) Disconnect the connector from the knock sensor. 2) Measure the resistance between knock sensor terminals. ***Terminals*** ***No. 1 — No. 2:***	Is the resistance 600 kΩ or more?	Replace the knock sensor. <Ref. to FU(H6DO)-37, Knock Sensor.>	Repair the harness and connector. NOTE: In this case, repair the following item: • Open circuit in harness between ECM and knock sensor connector • Poor contact of knock sensor connector • Poor contact of coupling connector

CO:DTC P0333 KNOCK SENSOR 2 CIRCUIT HIGH (BANK 2)

DTC DETECTING CONDITION:

- Immediately at fault recognition
- GENERAL DESCRIPTION <Ref. to GD(H6DO)-133, DTC P0333 KNOCK SENSOR 2 CIRCUIT HIGH (BANK 2), Diagnostic Trouble Code (DTC) Detecting Criteria.>

TROUBLE SYMPTOM:

- Driving performance problem
- Knocking occurs.

CAUTION:

After servicing or replacing faulty parts, perform Clear Memory Mode <Ref. to EN(H6DO)(diag)-57, OPERATION, Clear Memory Mode.>, and Inspection Mode <Ref. to EN(H6DO)(diag)-44, PROCEDURE, Inspection Mode.>.

WIRING DIAGRAM:

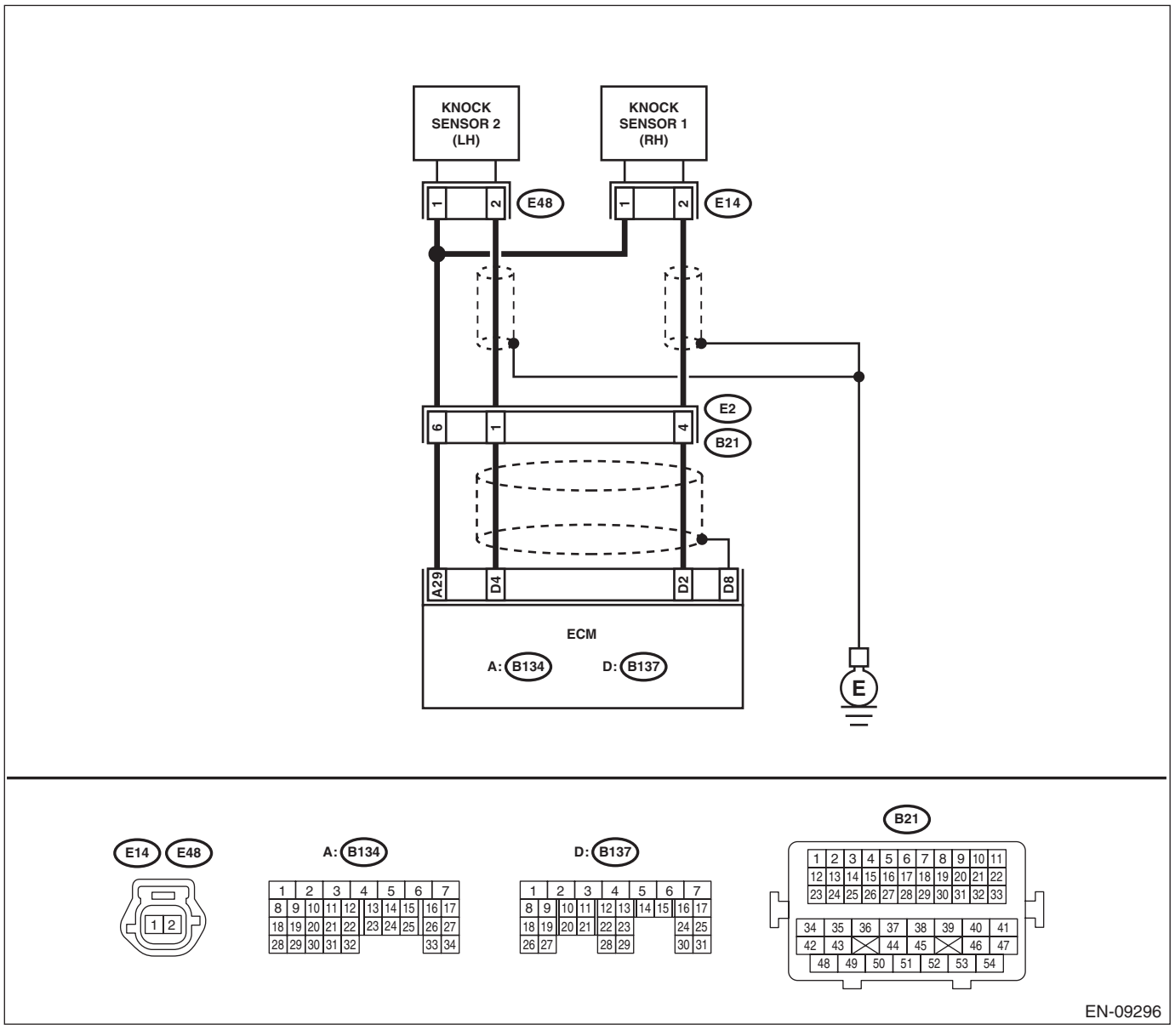

	Step	Check	Yes	No
1	**CHECK HARNESS BETWEEN ECM AND KNOCK SENSOR CONNECTOR.** 1) Turn the ignition switch to OFF. 2) Disconnect the connector from ECM. 3) Measure the resistance between ECM connectors. ***Connector & terminal*** ***(B137) No. 4 — (B134) No. 29:***	Is the resistance less than 500 kΩ?	Go to step **2**.	Go to step **3**.
2	**CHECK KNOCK SENSOR.** 1) Disconnect the connector from the knock sensor. 2) Measure the resistance between knock sensor connectors. ***Terminals*** ***No. 1 — No. 2:***	Is the resistance less than 500 kΩ?	Replace the knock sensor. <Ref. to FU(H6DO)-37, Knock Sensor.>	Repair the short circuit to ground in harness between ECM and knock sensor connector. NOTE: The harness between both connectors are shielded. Remove the shield and repair the short circuit of harness.
3	**CHECK INPUT SIGNAL OF ECM.** 1) Connect the connector to ECM. 2) Turn the ignition switch to ON. 3) Measure the voltage between ECM and chassis ground. ***Connector & terminal*** ***(B137) No. 4 (+) — Chassis ground (–):***	Is the voltage 2 V or more?	Even if DTC is detected, the circuit has returned to a normal condition at this time. Reproduce the failure, and then perform the diagnosis again. NOTE: In this case, temporary poor contact of connector, temporary open or short circuit of harness may be the cause.	Repair the poor contact of ECM connector.

CP:DTC P0335 CRANKSHAFT POSITION SENSOR “A” CIRCUIT

DTC DETECTING CONDITION:

- Immediately at fault recognition
- GENERAL DESCRIPTION <Ref. to GD(H6DO)-134, DTC P0335 CRANKSHAFT POSITION SENSOR “A” CIRCUIT, Diagnostic Trouble Code (DTC) Detecting Criteria.>

TROUBLE SYMPTOM:

- Engine stalls.
- Failure of engine to start

CAUTION:

After servicing or replacing faulty parts, perform Clear Memory Mode <Ref. to EN(H6DO)(diag)-57, OPERATION, Clear Memory Mode.>, and Inspection Mode <Ref. to EN(H6DO)(diag)-44, PROCEDURE, Inspection Mode.>.

WIRING DIAGRAM:

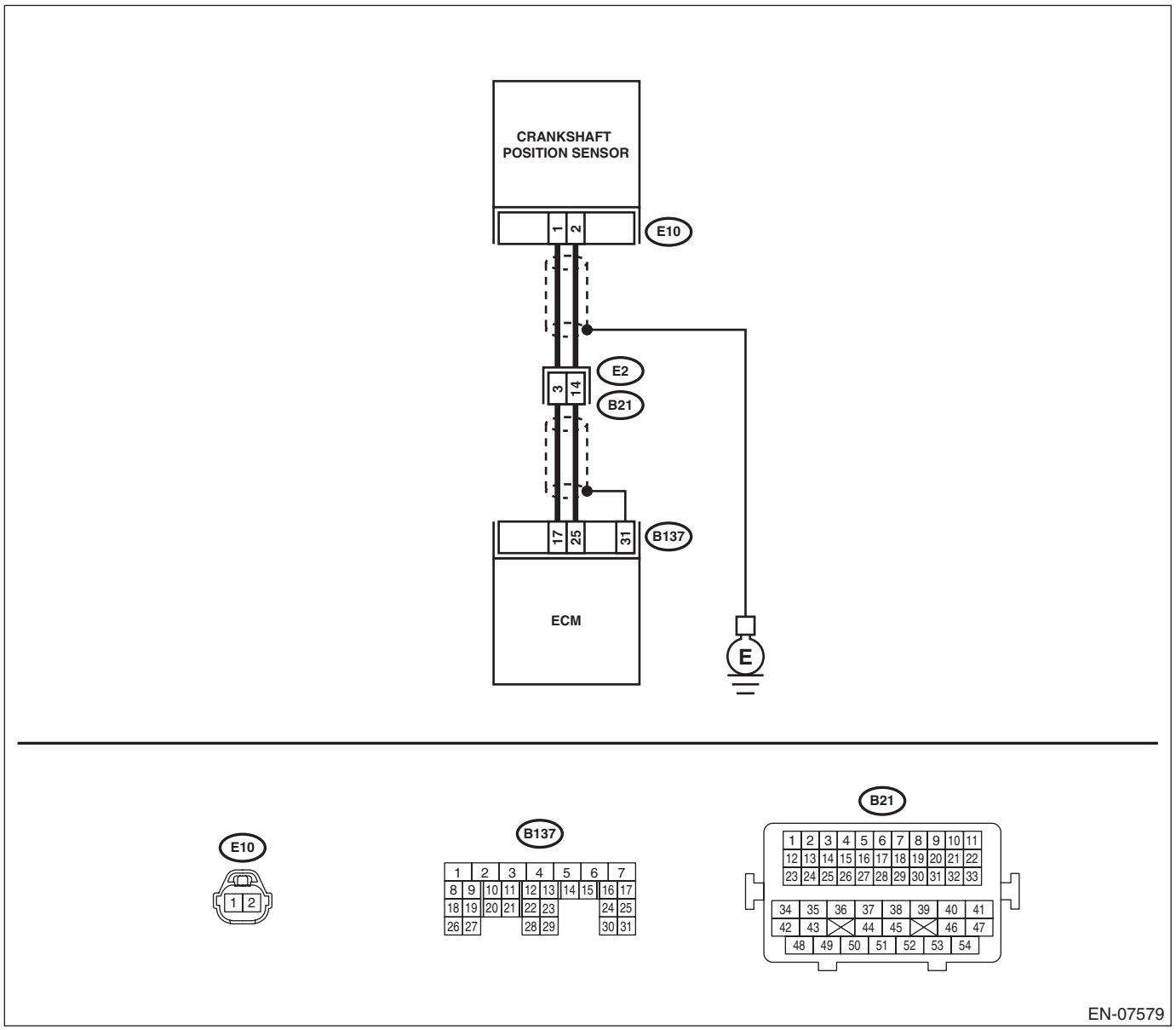

	Step	Check	Yes	No
1	**CHECK CONDITION OF CRANKSHAFT POSITION SENSOR.**	Is the crankshaft position sensor installation bolt tightened securely?	Go to step **2**.	Tighten the crankshaft position sensor installation bolt securely.
2	**CHECK CRANKSHAFT POSITION SENSOR.** 1) Turn the ignition switch to OFF. 2) Remove the crankshaft position sensor. 3) Measure the resistance between terminals of crankshaft position sensor connector. ***Terminals*** ***No. 1 — No. 2:***	Is the resistance between 1 and 4 kΩ?	Go to step **3**.	Replace the crankshaft position sensor. <Ref. to FU(H6DO)-31, Crankshaft Position Sensor.>
3	**CHECK HARNESS BETWEEN ECM AND CRANKSHAFT POSITION SENSOR CONNECTOR.** 1) Disconnect the connector from ECM. 2) Measure the resistance of harness between ECM and crankshaft position sensor connector. ***Connector & terminal*** ***(B137) No. 17 — (E10) No. 1:*** ***(B137) No. 25 — (E10) No. 2:***	Is the resistance less than 1 Ω?	Repair the poor contact of ECM and crankshaft position sensor connector.	Repair the harness and connector. NOTE: In this case, repair the following item: • Open circuit in harness between ECM and crankshaft position sensor connector • Poor contact of coupling connector

CQ:DTC P0336 CRANKSHAFT POSITION SENSOR “A” CIRCUIT RANGE/PERFORMANCE

DTC DETECTING CONDITION:

- Detected when two consecutive driving cycles with fault occur.
- GENERAL DESCRIPTION <Ref. to GD(H6DO)-136, DTC P0336 CRANKSHAFT POSITION SENSOR “A” CIRCUIT RANGE/PERFORMANCE, Diagnostic Trouble Code (DTC) Detecting Criteria.>

TROUBLE SYMPTOM:

- Engine stalls.
- Failure of engine to start

CAUTION:
After servicing or replacing faulty parts, perform Clear Memory Mode <Ref. to EN(H6DO)(diag)-57, OPERATION, Clear Memory Mode.>, and Inspection Mode <Ref. to EN(H6DO)(diag)-44, PROCEDURE, Inspection Mode.>.

	Step	Check	Yes	No
1	**CHECK CONDITION OF CRANKSHAFT POSITION SENSOR.** Turn the ignition switch to OFF.	Is the crankshaft position sensor installation bolt tightened securely?	Go to step **2**.	Tighten the crankshaft position sensor installation bolt securely.
2	**CHECK CRANKSHAFT PLATE.**	Is there crack or damage in the crankshaft plate teeth?	Replace the crankshaft plate.	Go to step **3**.
3	**CHECK INSTALLATION CONDITION OF TIMING CHAIN.** Turn the crankshaft, and align alignment mark on crank sprocket with alignment mark on cylinder block. ST 18252AA000 CRANKSHAFT SOCKET	Is the timing chain dislocated from its proper position?	Correct the installation condition of timing chain. <Ref. to ME(H6DO)-62, Timing Chain Assembly.>	Replace the crankshaft position sensor. <Ref. to FU(H6DO)-31, Crankshaft Position Sensor.>

CR:DTC P0340 CAMSHAFT POSITION SENSOR “A” CIRCUIT (BANK 1 OR SINGLE SENSOR)

DTC DETECTING CONDITION:

- Immediately at fault recognition
- GENERAL DESCRIPTION <Ref. to GD(H6DO)-138, DTC P0340 CAMSHAFT POSITION SENSOR “A” CIRCUIT (BANK 1 OR SINGLE SENSOR), Diagnostic Trouble Code (DTC) Detecting Criteria.>

TROUBLE SYMPTOM:

- Engine stalls.
- Failure of engine to start

CAUTION:

After servicing or replacing faulty parts, perform Clear Memory Mode <Ref. to EN(H6DO)(diag)-57, OPERATION, Clear Memory Mode.>, and Inspection Mode <Ref. to EN(H6DO)(diag)-44, PROCEDURE, Inspection Mode.>.

WIRING DIAGRAM:

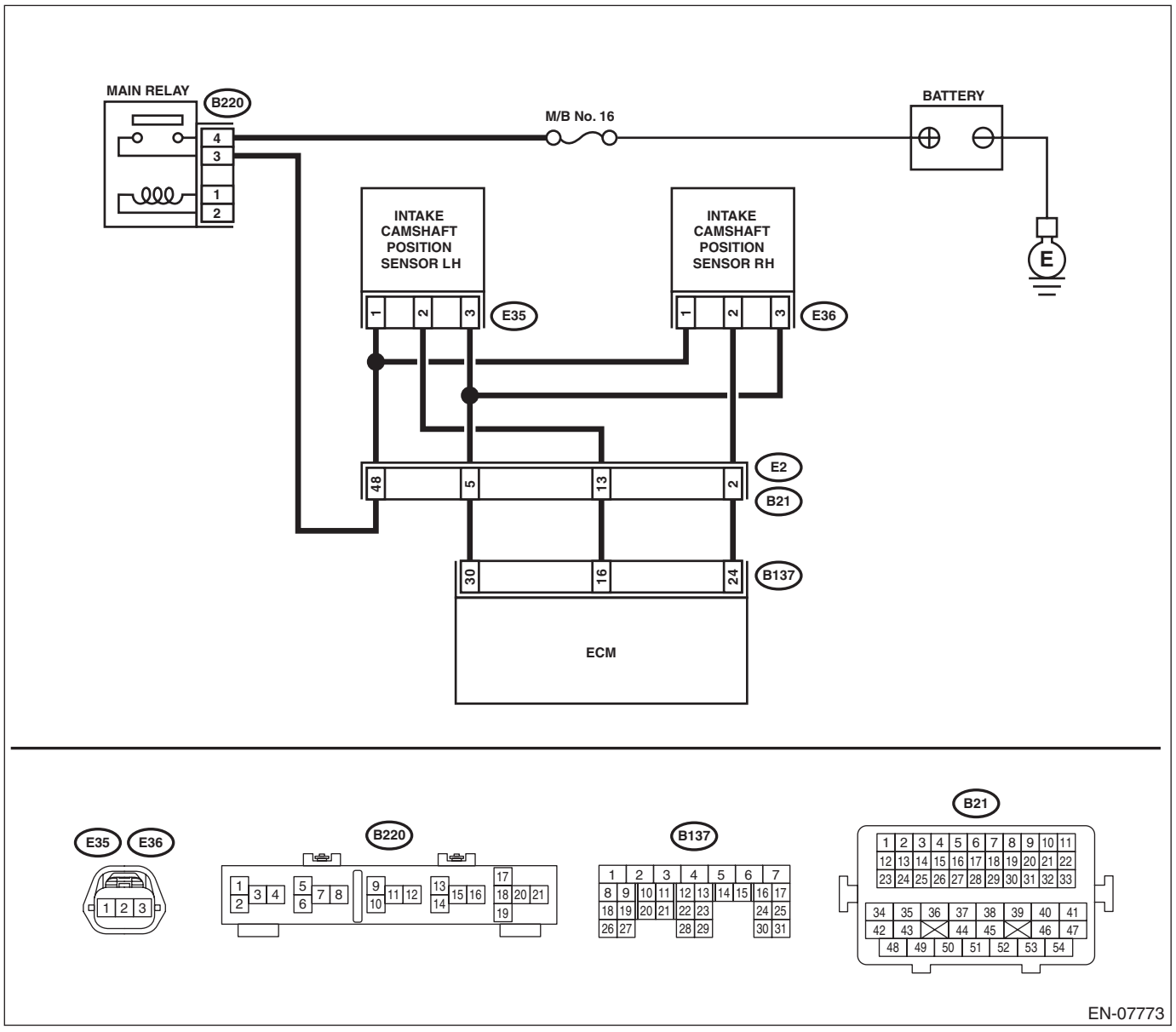

	Step	Check	Yes	No
1	**CHECK POWER SUPPLY OF CAMSHAFT POSITION SENSOR.** 1) Turn the ignition switch to OFF. 2) Disconnect the connector from camshaft position sensor. 3) Turn the ignition switch to ON. 4) Measure the voltage between camshaft position sensor connector and engine ground. ***Connector & terminal*** ***(E36) No. 1 (+) — Engine ground (–):***	Is the voltage 10 V or more?	Go to step **2**.	Repair the harness and connector. NOTE: In this case, repair the following item: • Open circuit or short circuit to ground in harness between main relay connector and camshaft position sensor connector • Poor contact of coupling connector
2	**CHECK HARNESS BETWEEN ECM AND CAMSHAFT POSITION SENSOR CONNECTOR.** 1) Turn the ignition switch to OFF. 2) Disconnect the connector from ECM. 3) Measure the resistance between ECM and camshaft position sensor connector. ***Connector & terminal*** ***(B137) No. 24 — (E36) No. 2:*** ***(B137) No. 30 — (E36) No. 3:***	Is the resistance less than 1 Ω?	Go to step **3**.	Repair the harness and connector. NOTE: In this case, repair the following item: • Open circuit in harness between ECM and camshaft position sensor connector • Poor contact of coupling connector
3	**CHECK HARNESS BETWEEN ECM AND CAMSHAFT POSITION SENSOR CONNECTOR.** Measure the resistance between camshaft position sensor connector and engine ground. ***Connector & terminal*** ***(E36) No. 2 — Engine ground:***	Is the resistance 1 MΩ or more?	Go to step **4**.	Repair short circuit to ground in harness between ECM and camshaft position sensor connector.
4	**CHECK HARNESS BETWEEN ECM AND CAMSHAFT POSITION SENSOR CONNECTOR.** Measure the voltage between camshaft position sensor connector and engine ground. ***Connector & terminal*** ***(E36) No. 2 (+) — Engine ground (–):***	Is the voltage 5 V or more?	Repair the short circuit to power in the harness between ECM and camshaft position sensor connector.	Go to step **5**.
5	**CHECK CONDITION OF CAMSHAFT POSITION SENSOR.**	Is the camshaft position sensor installation bolt tightened securely?	Go to step **6**.	Tighten the camshaft position sensor installation bolt securely.
6	**CHECK CAMSHAFT POSITION SENSOR.** Check the waveform of the camshaft position sensor. <Ref. to EN(H6DO)(diag)-18, Engine Control Module (ECM) I/O Signal.>	Is there any abnormality in waveform?	Replace the camshaft position sensor. <Ref. to FU(H6DO)-34, Camshaft Position Sensor.>	Repair the following item. • Poor contact of ECM connector • Poor contact of camshaft position sensor connector • Poor contact of coupling connector

CS:DTC P0345 CAMSHAFT POSITION SENSOR “A” CIRCUIT (BANK 2)

DTC DETECTING CONDITION:

- Immediately at fault recognition
- GENERAL DESCRIPTION <Ref. to GD(H6DO)-140, DTC P0345 CAMSHAFT POSITION SENSOR “A” CIRCUIT (BANK 2), Diagnostic Trouble Code (DTC) Detecting Criteria.>

TROUBLE SYMPTOM:

- Engine stalls.
- Failure of engine to start

CAUTION:

After servicing or replacing faulty parts, perform Clear Memory Mode <Ref. to EN(H6DO)(diag)-57, OPERATION, Clear Memory Mode.>, and Inspection Mode <Ref. to EN(H6DO)(diag)-44, PROCEDURE, Inspection Mode.>.

WIRING DIAGRAM:

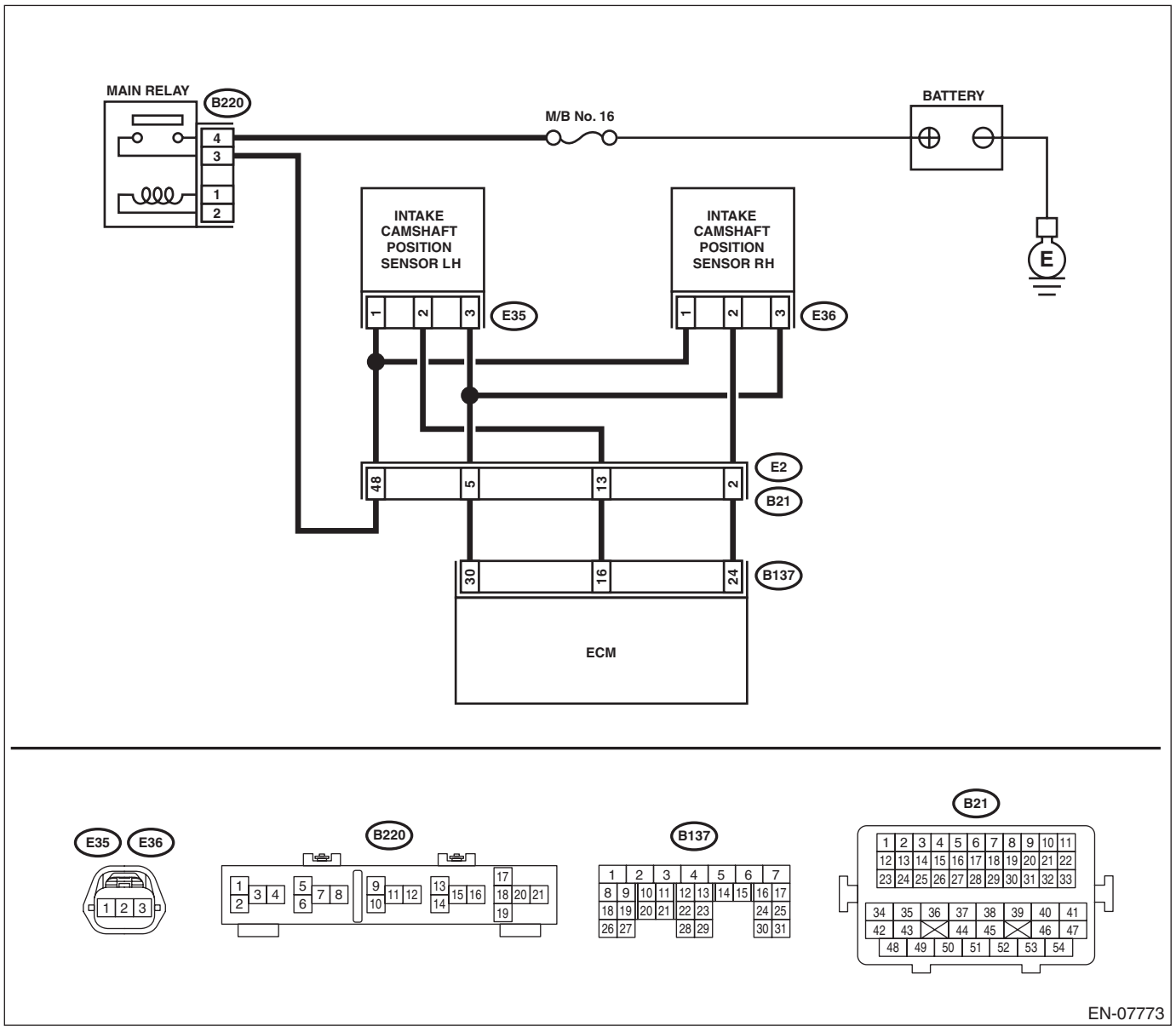

	Step	Check	Yes	No
1	**CHECK POWER SUPPLY OF CAMSHAFT POSITION SENSOR.** 1) Turn the ignition switch to OFF. 2) Disconnect the connector from camshaft position sensor. 3) Turn the ignition switch to ON. 4) Measure the voltage between camshaft position sensor connector and engine ground. ***Connector & terminal*** ***(E35) No. 1 (+) — Engine ground (–):***	Is the voltage 10 V or more?	Go to step **2**.	Repair the harness and connector. NOTE: In this case, repair the following item: • Open circuit or short circuit to ground in harness between main relay connector and camshaft position sensor connector • Poor contact of coupling connector
2	**CHECK HARNESS BETWEEN ECM AND CAMSHAFT POSITION SENSOR CONNECTOR.** 1) Turn the ignition switch to OFF. 2) Disconnect the connector from ECM. 3) Measure the resistance between ECM and camshaft position sensor connector. ***Connector & terminal*** ***(B137) No. 16 — (E35) No. 2:*** ***(B137) No. 30 — (E35) No. 3:***	Is the resistance less than 1 Ω?	Go to step **3**.	Repair the harness and connector. NOTE: In this case, repair the following item: • Open circuit in harness between ECM and camshaft position sensor connector • Poor contact of coupling connector
3	**CHECK HARNESS BETWEEN ECM AND CAMSHAFT POSITION SENSOR CONNECTOR.** Measure the resistance between camshaft position sensor connector and engine ground. ***Connector & terminal*** ***(E35) No. 2 — Engine ground:***	Is the resistance 1 MΩ or more?	Go to step **4**.	Repair short circuit to ground in harness between ECM and camshaft position sensor connector.
4	**CHECK HARNESS BETWEEN ECM AND CAMSHAFT POSITION SENSOR CONNECTOR.** Measure the voltage between camshaft position sensor connector and engine ground. ***Connector & terminal*** ***(E35) No. 2 (+) — Engine ground (–):***	Is the voltage 5 V or more?	Repair the short circuit to power in the harness between ECM and camshaft position sensor connector.	Go to step **5**.
5	**CHECK CONDITION OF CAMSHAFT POSITION SENSOR.**	Is the camshaft position sensor installation bolt tightened securely?	Go to step **6**.	Tighten the camshaft position sensor installation bolt securely.
6	**CHECK CAMSHAFT POSITION SENSOR.** Check the waveform of the camshaft position sensor. <Ref. to EN(H6DO)(diag)-18, Engine Control Module (ECM) I/O Signal.>	Is there any abnormality in waveform?	Replace the camshaft position sensor. <Ref. to FU(H6DO)-34, Camshaft Position Sensor.>	Repair the following item. • Poor contact of ECM connector • Poor contact of camshaft position sensor connector • Poor contact of coupling connector

CT:DTC P0351 IGNITION COIL A PRIMARY/SECONDARY CIRCUIT

DTC DETECTING CONDITION:

- Immediately at fault recognition
- GENERAL DESCRIPTION <Ref. to GD(H6DO)-141, DTC P0351 IGNITION COIL A PRIMARY/SECONDARY CIRCUIT, Diagnostic Trouble Code (DTC) Detecting Criteria.>

TROUBLE SYMPTOM:

- Improper idling
- Poor driving performance

CAUTION:

After servicing or replacing faulty parts, perform Clear Memory Mode <Ref. to EN(H6DO)(diag)-57, OPERATION, Clear Memory Mode.>, and Inspection Mode <Ref. to EN(H6DO)(diag)-44, PROCEDURE, Inspection Mode.>.

WIRING DIAGRAM:

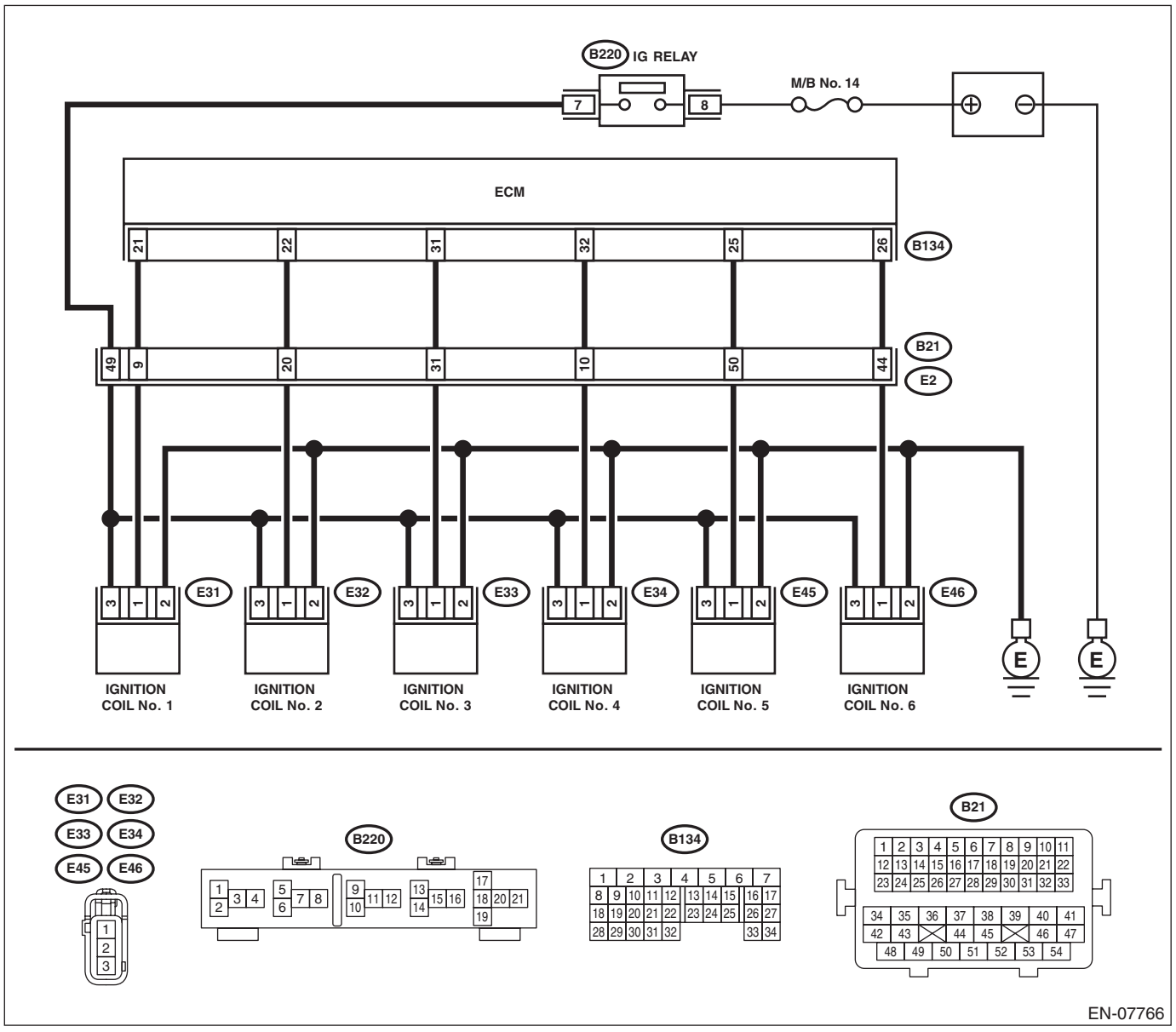

	Step	Check	Yes	No
1	**CHECK IGNITION COIL POWER SUPPLY CIRCUIT.** 1) Turn the ignition switch to OFF. 2) Disconnect the connector from ignition coil. 3) Turn the ignition switch to ON. 4) Measure the voltage between ignition coil connector and engine ground. ***Connector & terminal*** ***DTC P0351; (E31) No. 3 (+) — Engine ground (–):*** ***DTC P0352; (E32) No. 3 (+) — Engine ground (–):*** ***DTC P0353; (E33) No. 3 (+) — Engine ground (–):*** ***DTC P0354; (E34) No. 3 (+) — Engine ground (–):*** ***DTC P0355; (E45) No. 3 (+) — Engine ground (–):*** ***DTC P0356; (E46) No. 3 (+) — Engine ground (–):***	Is the voltage 10 V or more?	Go to step **2**.	Repair the harness and connector. NOTE: In this case, repair the following item: • Open circuit or short circuit to ground in harness of power supply circuit • Blown out of fuse (M/B No. 14) • Poor contact of IG relay connector • Poor contact of coupling connector • Faulty IG relay
2	**CHECK HARNESS OF IGNITION COIL GROUND CIRCUIT.** 1) Turn the ignition switch to OFF. 2) Measure the resistance of harness between ignition coil connector and engine ground. ***Connector & terminal*** ***DTC P0351; (E31) No. 2 — Engine ground:*** ***DTC P0352; (E32) No. 2 — Engine ground:*** ***DTC P0353; (E33) No. 2 — Engine ground:*** ***DTC P0354; (E34) No. 2 — Engine ground:*** ***DTC P0355; (E45) No. 2 — Engine ground:*** ***DTC P0356; (E46) No. 2 — Engine ground:***	Is the resistance less than 5 Ω?	Go to step **3**.	Repair the open circuit in harness between ignition coil connector and engine grounding terminal.
3	**CHECK HARNESS BETWEEN ECM AND IGNITION COIL CONNECTOR.** 1) Disconnect the connector from ECM. 2) Measure the resistance between ignition coil connector and engine ground. ***Connector & terminal*** ***DTC P0351; (E31) No. 1 — Engine ground:*** ***DTC P0352; (E32) No. 1 — Engine ground:*** ***DTC P0353; (E33) No. 1 — Engine ground:*** ***DTC P0354; (E34) No. 1 — Engine ground:*** ***DTC P0355; (E45) No. 1 — Engine ground:*** ***DTC P0356; (E46) No. 1 — Engine ground:***	Is the resistance 1 MΩ or more?	Go to step **4**.	Repair the ground short circuit of harness between ECM connector and ignition coil connector.
4	**CHECK HARNESS BETWEEN ECM AND IGNITION COIL CONNECTOR.** Measure the resistance of harness between ECM connector and ignition coil connector. ***Connector & terminal*** ***DTC P0351; (B134) No. 21 — (E31) No. 1:*** ***DTC P0352; (B134) No. 22 — (E32) No. 1:*** ***DTC P0353; (B134) No. 31 — (E33) No. 1:*** ***DTC P0354; (B134) No. 32 — (E34) No. 1:*** ***DTC P0355; (B134) No. 25 — (E45) No. 1:*** ***DTC P0356; (B134) No. 26 — (E46) No. 1:***	Is the resistance less than 1 Ω?	Go to step **5**.	Repair the harness and connector. NOTE: In this case, repair the following item: • Open circuit of harness between ECM connector and the ignition coil connector • Poor contact of coupling connector
5	**CHECK FOR POOR CONTACT.** Check for poor contact of ECM connector.	Is there poor contact of ECM connector?	Repair the poor contact of ECM connector.	Go to step **6**.

	Step	Check	Yes	No
6	**CHECK SPARK PLUG CONDITION.** 1) Remove the spark plug of the corresponding cylinder. <Ref. to IG(H6DO)-4, REMOVAL, Spark Plug.> 2) Check the spark plug condition. <Ref. to IG(H6DO)-5, INSPECTION, Spark Plug.>	Is the spark plug condition normal?	Replace the ignition coil. <Ref. to IG(H6DO)-7, Ignition Coil.>	Replace the spark plug. <Ref. to IG(H6DO)-4, Spark Plug.>

CU:DTC P0352 IGNITION COIL B PRIMARY/SECONDARY CIRCUIT

NOTE:
For the diagnostic procedure, refer to DTC P0351. <Ref. to EN(H6DO)(diag)-225, DTC P0351 IGNITION COIL A PRIMARY/SECONDARY CIRCUIT, Diagnostic Procedure with Diagnostic Trouble Code (DTC).>

CV:DTC P0353 IGNITION COIL C PRIMARY/SECONDARY CIRCUIT

NOTE:
For the diagnostic procedure, refer to DTC P0351. <Ref. to EN(H6DO)(diag)-225, DTC P0351 IGNITION COIL A PRIMARY/SECONDARY CIRCUIT, Diagnostic Procedure with Diagnostic Trouble Code (DTC).>

CW:DTC P0354 IGNITION COIL D PRIMARY/SECONDARY CIRCUIT

NOTE:
For the diagnostic procedure, refer to DTC P0351. <Ref. to EN(H6DO)(diag)-225, DTC P0351 IGNITION COIL A PRIMARY/SECONDARY CIRCUIT, Diagnostic Procedure with Diagnostic Trouble Code (DTC).>

CX:DTC P0355 IGNITION COIL E PRIMARY/SECONDARY CIRCUIT

NOTE:
For the diagnostic procedure, refer to DTC P0351. <Ref. to EN(H6DO)(diag)-225, DTC P0351 IGNITION COIL A PRIMARY/SECONDARY CIRCUIT, Diagnostic Procedure with Diagnostic Trouble Code (DTC).>

CY:DTC P0356 IGNITION COIL F PRIMARY/SECONDARY CIRCUIT

NOTE:
For the diagnostic procedure, refer to DTC P0351. <Ref. to EN(H6DO)(diag)-225, DTC P0351 IGNITION COIL A PRIMARY/SECONDARY CIRCUIT, Diagnostic Procedure with Diagnostic Trouble Code (DTC).>

CZ:DTC P0365 CAMSHAFT POSITION SENSOR “B” CIRCUIT (BANK 1)

DTC DETECTING CONDITION:

- Immediately at fault recognition
- GENERAL DESCRIPTION <Ref. to GD(H6DO)-143, DTC P0365 CAMSHAFT POSITION SENSOR “B” CIRCUIT (BANK 1), Diagnostic Trouble Code (DTC) Detecting Criteria.>

TROUBLE SYMPTOM:

- Engine stalls.
- Failure of engine to start

CAUTION:

After repair or replacement of faulty parts, perform Clear Memory Mode <Ref. to EN(H6DO)(diag)-57, OPERATION, Clear Memory Mode.>, and Inspection Mode <Ref. to EN(H6DO)(diag)-44, PROCEDURE, Inspection Mode.>.

WIRING DIAGRAM:

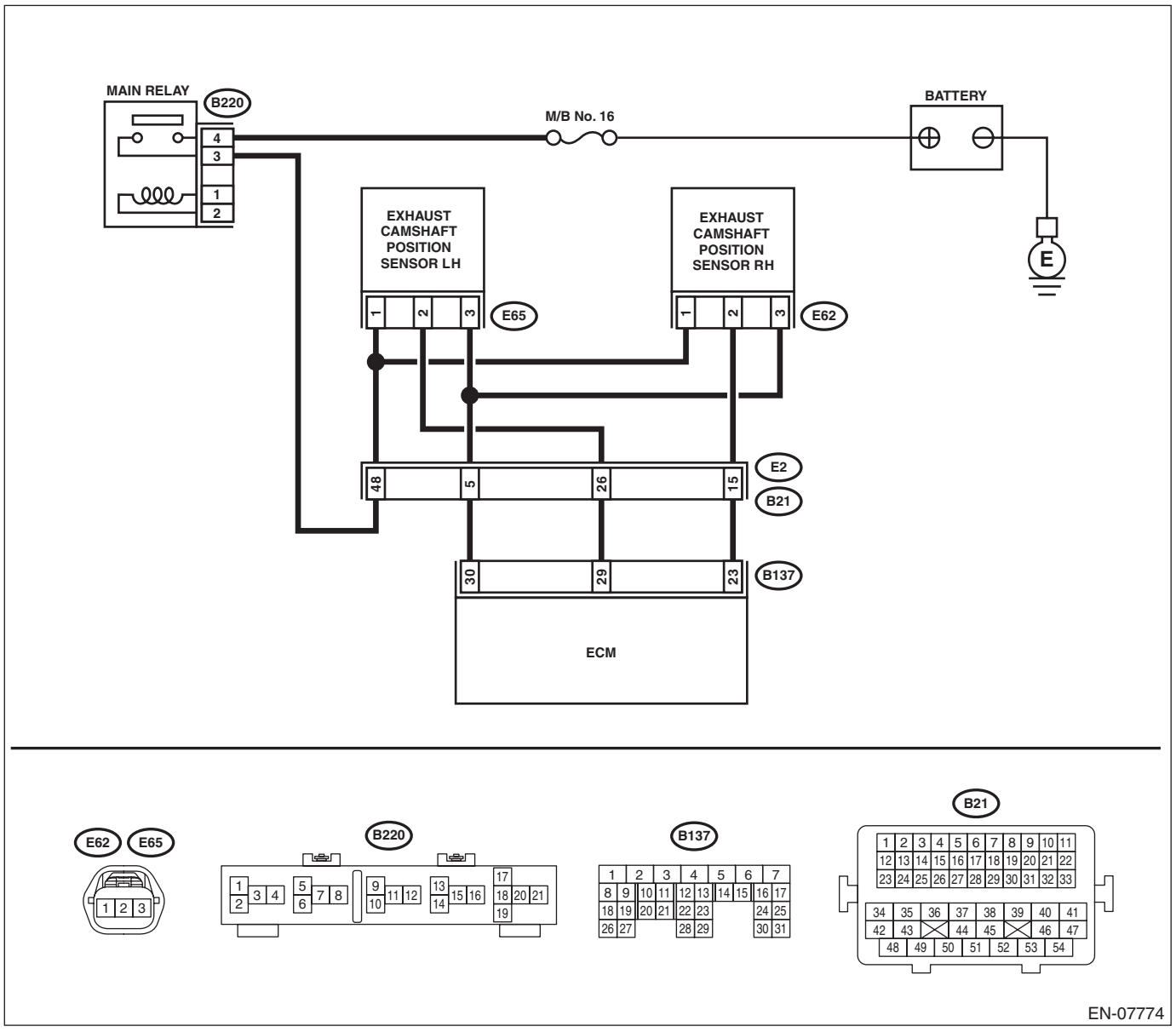

	Step	Check	Yes	No
1	**CHECK POWER SUPPLY OF CAMSHAFT POSITION SENSOR.** 1) Turn the ignition switch to OFF. 2) Disconnect the connector from camshaft position sensor. 3) Turn the ignition switch to ON. 4) Measure the voltage between camshaft position sensor connector and engine ground. ***Connector & terminal*** ***(E62) No. 1 (+) — Engine ground (–):***	Is the voltage 10 V or more?	Go to step **2**.	Repair the harness and connector. NOTE: In this case, repair the following item: • Open circuit or short circuit to ground in harness between main relay connector and camshaft position sensor connector • Poor contact of coupling connector
2	**CHECK HARNESS BETWEEN ECM AND CAMSHAFT POSITION SENSOR CONNECTOR.** 1) Turn the ignition switch to OFF. 2) Disconnect the connector from ECM. 3) Measure the resistance between ECM and camshaft position sensor connector. ***Connector & terminal*** ***(B137) No. 23 — (E62) No. 2:*** ***(B137) No. 30 — (E62) No. 3:***	Is the resistance less than 1 Ω?	Go to step **3**.	Repair the harness and connector. NOTE: In this case, repair the following item: • Open circuit in harness between ECM and camshaft position sensor connector • Poor contact of coupling connector
3	**CHECK HARNESS BETWEEN ECM AND CAMSHAFT POSITION SENSOR CONNECTOR.** Measure the resistance between camshaft position sensor connector and engine ground. ***Connector & terminal*** ***(E62) No. 2 — Engine ground:***	Is the resistance 1 MΩ or more?	Go to step **4**.	Repair short circuit to ground in harness between ECM and camshaft position sensor connector.
4	**CHECK HARNESS BETWEEN ECM AND CAMSHAFT POSITION SENSOR CONNECTOR.** Measure the voltage between camshaft position sensor connector and engine ground. ***Connector & terminal*** ***(E62) No. 2 (+) — Engine ground (–):***	Is the voltage 5 V or more?	Repair the short circuit to power in the harness between ECM and camshaft position sensor connector.	Go to step **5**.
5	**CHECK CONDITION OF CAMSHAFT POSITION SENSOR.**	Is the camshaft position sensor installation bolt tightened securely?	Go to step **6**.	Tighten the camshaft position sensor installation bolt securely.
6	**CHECK CAMSHAFT POSITION SENSOR.** Check the waveform of the camshaft position sensor. <Ref. to EN(H6DO)(diag)-18, Engine Control Module (ECM) I/O Signal.>	Is there any abnormality in waveform?	Replace the camshaft position sensor. <Ref. to FU(H6DO)-34, Camshaft Position Sensor.>	Repair the following item. • Poor contact of ECM connector • Poor contact of camshaft position sensor connector • Poor contact of coupling connector

DA:DTC P0390 CAMSHAFT POSITION SENSOR “B” CIRCUIT (BANK 2)

DTC DETECTING CONDITION:

- Immediately at fault recognition
- GENERAL DESCRIPTION <Ref. to GD(H6DO)-145, DTC P0390 CAMSHAFT POSITION SENSOR “B” CIRCUIT (BANK 2), Diagnostic Trouble Code (DTC) Detecting Criteria.>

TROUBLE SYMPTOM:

- Engine stalls.
- Failure of engine to start

CAUTION:

After repair or replacement of faulty parts, perform Clear Memory Mode <Ref. to EN(H6DO)(diag)-57, OPERATION, Clear Memory Mode.>, and Inspection Mode <Ref. to EN(H6DO)(diag)-44, PROCEDURE, Inspection Mode.>.

WIRING DIAGRAM:

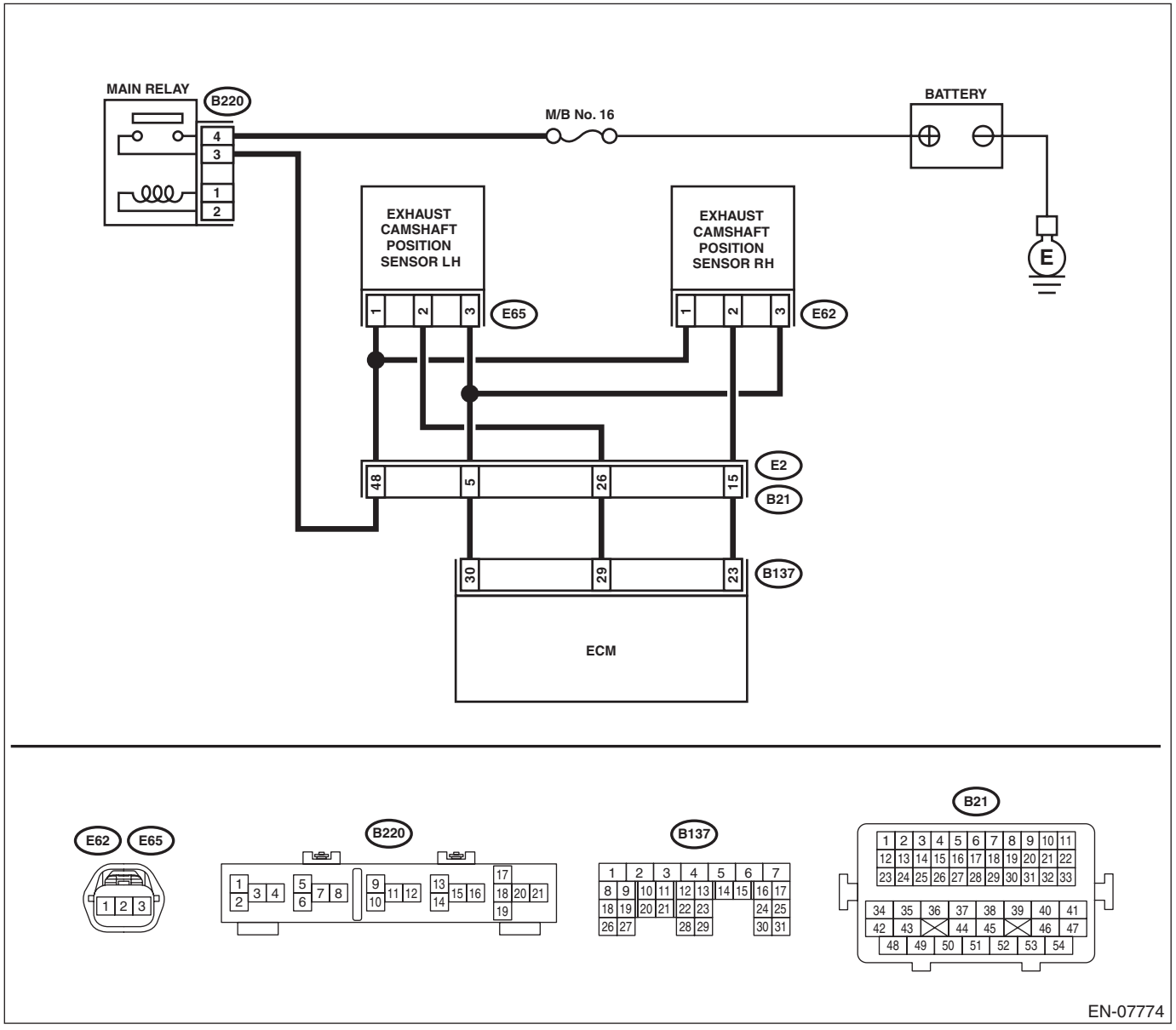

EN-07774

	Step	Check	Yes	No
1	**CHECK POWER SUPPLY OF CAMSHAFT POSITION SENSOR.** 1) Turn the ignition switch to OFF. 2) Disconnect the connector from camshaft position sensor. 3) Turn the ignition switch to ON. 4) Measure the voltage between camshaft position sensor connector and engine ground. ***Connector & terminal*** ***(E65) No. 1 (+) — Engine ground (–):***	Is the voltage 10 V or more?	Go to step **2**.	Repair the harness and connector. NOTE: In this case, repair the following item: • Open circuit or short circuit to ground in harness between main relay connector and camshaft position sensor connector • Poor contact of coupling connector
2	**CHECK HARNESS BETWEEN ECM AND CAMSHAFT POSITION SENSOR CONNECTOR.** 1) Turn the ignition switch to OFF. 2) Disconnect the connector from ECM. 3) Measure the resistance between ECM and camshaft position sensor connector. ***Connector & terminal*** ***(B137) No. 29 — (E65) No. 2:*** ***(B137) No. 30 — (E65) No. 3:***	Is the resistance less than 1 Ω?	Go to step **3**.	Repair the harness and connector. NOTE: In this case, repair the following item: • Open circuit in harness between ECM and camshaft position sensor connector • Poor contact of coupling connector
3	**CHECK HARNESS BETWEEN ECM AND CAMSHAFT POSITION SENSOR CONNECTOR.** Measure the resistance between camshaft position sensor connector and engine ground. ***Connector & terminal*** ***(E65) No. 2 — Engine ground:***	Is the resistance 1 MΩ or more?	Go to step **4**.	Repair short circuit to ground in harness between ECM and camshaft position sensor connector.
4	**CHECK HARNESS BETWEEN ECM AND CAMSHAFT POSITION SENSOR CONNECTOR.** Measure the voltage between camshaft position sensor connector and engine ground. ***Connector & terminal*** ***(E65) No. 2 (+) — Engine ground (–):***	Is the voltage 5 V or more?	Repair the short circuit to power in the harness between ECM and camshaft position sensor connector.	Go to step **5**.
5	**CHECK CONDITION OF CAMSHAFT POSITION SENSOR.**	Is the camshaft position sensor installation bolt tightened securely?	Go to step **6**.	Tighten the camshaft position sensor installation bolt securely.
6	**CHECK CAMSHAFT POSITION SENSOR.** Check the waveform of the camshaft position sensor. <Ref. to EN(H6DO)(diag)-18, Engine Control Module (ECM) I/O Signal.>	Is there any abnormality in waveform?	Replace the camshaft position sensor. <Ref. to FU(H6DO)-34, Camshaft Position Sensor.>	Repair the following item. • Poor contact of ECM connector • Poor contact of camshaft position sensor connector • Poor contact of coupling connector

DB:DTC P0400 EXHAUST GAS RECIRCULATION FLOW

DTC DETECTING CONDITION:

- Detected when two consecutive driving cycles with fault occur.
- GENERAL DESCRIPTION <Ref. to GD(H6DO)-146, DTC P0400 EXHAUST GAS RECIRCULATION FLOW, Diagnostic Trouble Code (DTC) Detecting Criteria.>

TROUBLE SYMPTOM:

- Movement performance problem when engine is low speed.
- Improper idling
- Movement performance problem

CAUTION:
After servicing or replacing faulty parts, perform Clear Memory Mode <Ref. to EN(H6DO)(diag)-57, OPERATION, Clear Memory Mode.>, and Inspection Mode <Ref. to EN(H6DO)(diag)-44, PROCEDURE, Inspection Mode.>.

	Step	Check	Yes	No
1	**CHECK CURRENT DATA.** 1) Start the engine. 2) Read the value of «Mani. Absolute Pressure» using the Subaru Select Monitor or a general scan tool. NOTE: • Subaru Select Monitor For detailed operation procedures, refer to “READ CURRENT DATA FOR ENGINE”. <Ref. to EN(H6DO)(diag)-35, Subaru Select Monitor.> • General scan tool For detailed operation procedures, refer to the general scan tool operation manual.	Is the value of «Mani. Absolute Pressure» 53.3 kPa (400 mmHg, 15.75 inHg) or more?	Make sure that the EGR control valve, manifold absolute pressure sensor and throttle body are installed securely.	Go to step **2**.
2	**CHECK EGR CONTROL VALVE.** Remove the EGR control valve.	Are there any holes, clogged lines or foreign matters in the EGR system?	Repair the EGR system.	Replace EGR control valve. <Ref. to FU(H6DO)-42, EGR Valve.>

DC:DTC P0420 CATALYST SYSTEM EFFICIENCY BELOW THRESHOLD (BANK 1)

DTC DETECTING CONDITION:

- Detected when two consecutive driving cycles with fault occur.
- GENERAL DESCRIPTION <Ref. to GD(H6DO)-149, DTC P0420 CATALYST SYSTEM EFFICIENCY BELOW THRESHOLD (BANK 1), Diagnostic Trouble Code (DTC) Detecting Criteria.>

TROUBLE SYMPTOM:

- Engine stalls.
- Idle mixture is out of specifications.

CAUTION:

After servicing or replacing faulty parts, perform Clear Memory Mode <Ref. to EN(H6DO)(diag)-57, OPERATION, Clear Memory Mode.>, and Inspection Mode <Ref. to EN(H6DO)(diag)-44, PROCEDURE, Inspection Mode.>.

WIRING DIAGRAM:

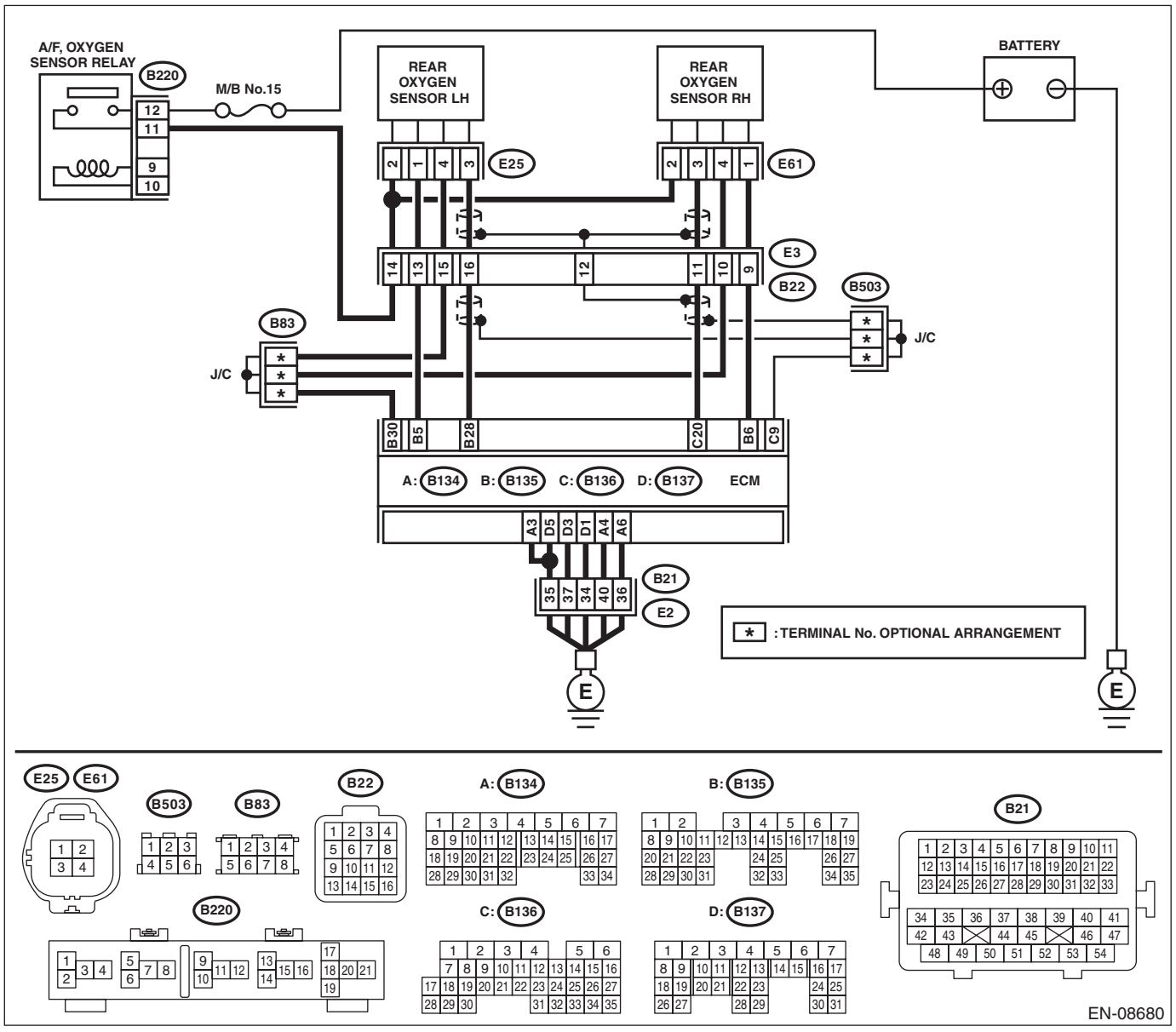

	Step	Check	Yes	No
1	**CHECK EXHAUST SYSTEM.** Check for gas leaks or air suction caused by loose or dislocated nuts and bolts, and open hole at exhaust pipes. NOTE: Check the following positions. • Between cylinder head and front exhaust pipe • Between front exhaust pipe and front catalytic converter • Between front catalytic converter and rear catalytic converter • Loose or improperly attached front oxygen (A/F) sensor or rear oxygen sensor	Is there any fault in exhaust system?	Repair or replace the exhaust system. <Ref. to EX(H6DO)-2, General Description.>	Go to step **2**.
2	**CHECK WAVEFORM DATA ON THE SUBARU SELECT MONITOR (WHILE DRIVING).** 1) Drive at a constant speed between 80 — 112 km/h (50 — 70 MPH). 2) After 5 minutes have elapsed in the condition of step 1), use the Subaru Select Monitor while still driving to read the waveform data. • At normal condition 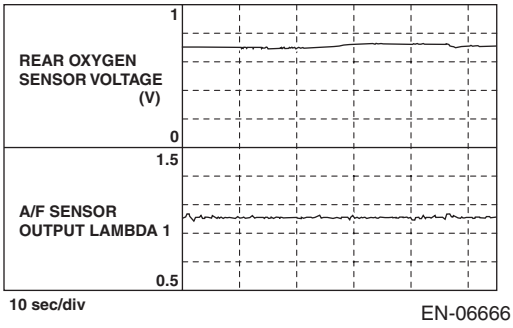 EN-06666 • At abnormal condition (numerous inversion) 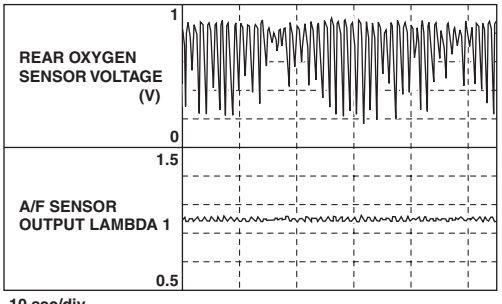 EN-06667	Is a normal waveform displayed?	Even if DTC is detected, the circuit has returned to a normal condition at this time. Reproduce the failure, and then perform the diagnosis again. NOTE: In this case, temporary poor contact of connector, temporary open or short circuit of harness may be the cause.	Go to step **3**.

	Step	Check	Yes	No
3	**CHECK WAVEFORM DATA ON THE SUBARU SELECT MONITOR (WHILE IDLING).** 1) Run the engine at idle. 2) In the condition of step 1), use the Subaru Select Monitor to read the waveform data. • At normal condition 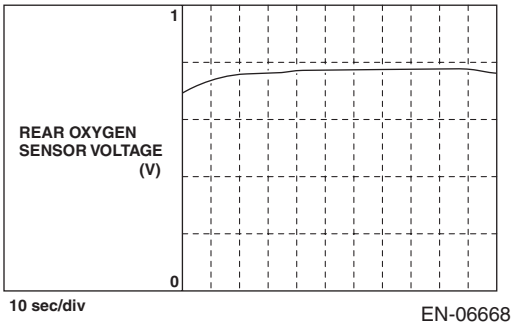 EN-06668 • At abnormal condition 1 (numerous inversion) 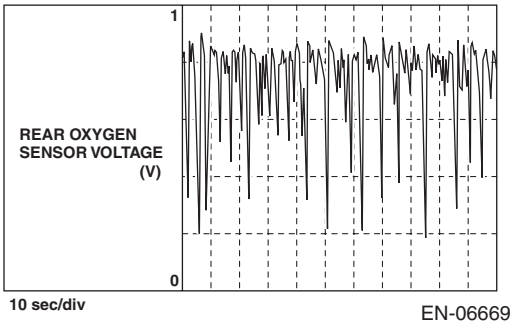 EN-06669 • At abnormal condition 2 (noise input) 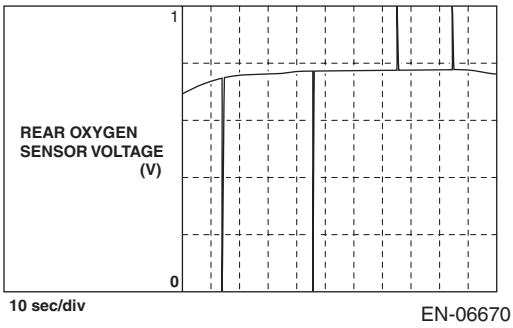 EN-06670	Is a normal waveform displayed?	Go to step **4**.	• The waveform is displayed at abnormal condition 1: Go to step **4**. • The waveform is displayed at abnormal condition 2: Go to step **5**.
4	**CHECK CATALYTIC CONVERTER.**	Is the catalytic converter damaged?	Replace the catalytic converter. <Ref. to EC(H6DO)-3, Front Catalytic Converter.>	Go to step **5**.
5	**CHECK REAR OXYGEN SENSOR CONNECTOR AND COUPLING CONNECTOR.**	Has water entered the connector?	Completely remove any water inside.	Go to step **6**.

	Step	Check	Yes	No
6	**CHECK HARNESS BETWEEN ECM AND REAR OXYGEN SENSOR CONNECTOR.** 1) Turn the ignition switch to OFF. 2) Disconnect the connector from ECM and rear oxygen sensor. 3) Measure the resistance of harness between ECM and rear oxygen sensor connector. ***Connector & terminal*** ***(B136) No. 20 — (E61) No. 3:*** ***(B135) No. 30 — (E61) No. 4:*** ***(B135) No. 28 — (E25) No. 3:*** ***(B135) No. 30 — (E25) No. 4:***	Is the resistance less than 1 Ω?	Go to step **7**.	Repair the harness and connector. NOTE: In this case, repair the following item: • Open circuit in harness between ECM and rear oxygen sensor connector • Poor contact of coupling connector
7	**CHECK HARNESS BETWEEN ECM AND REAR OXYGEN SENSOR CONNECTOR.** 1) Connect the connector to ECM. 2) Turn the ignition switch to ON. 3) Measure the voltage between rear oxygen sensor connector and chassis ground. ***Connector & terminal*** ***(E61) No. 3 (+) — Chassis ground (–):*** ***(E25) No. 3 (+) — Chassis ground (–):***	Is the voltage 0.2 — 0.5 V?	Go to step **8**.	Repair the harness and connector. NOTE: Repair the following locations. • Open circuit in harness between ECM and rear oxygen sensor connector • Poor contact of ECM connector • Poor contact of coupling connector
8	**CHECK REAR OXYGEN SENSOR SHIELD.** 1) Turn the ignition switch to OFF. 2) Expose the rear oxygen sensor connector body side harness sensor shield. 3) Measure the resistance between sensor shield and chassis ground.	Is the resistance less than 1 Ω?	Replace the rear oxygen sensor. <Ref. to FU(H6DO)-52, Rear Oxygen Sensor.>	Repair the open circuit of rear oxygen sensor harness.

DD:DTC P0442 EVAPORATIVE EMISSION CONTROL SYSTEM LEAK DETECTED (SMALL LEAK)

DTC DETECTING CONDITION:

- Detected when two consecutive driving cycles with fault occur.
- GENERAL DESCRIPTION <Ref. to GD(H6DO)-151, DTC P0442 EVAPORATIVE EMISSION CONTROL SYSTEM LEAK DETECTED (SMALL LEAK), Diagnostic Trouble Code (DTC) Detecting Criteria.>

TROUBLE SYMPTOM:

- Fuel odor
- There is a hole of more than 1.0 mm (0.04 in) dia. in evaporation system or fuel tank.

CAUTION:
After servicing or replacing faulty parts, perform Clear Memory Mode <Ref. to EN(H6DO)(diag)-57, OPERATION, Clear Memory Mode.>, and Inspection Mode <Ref. to EN(H6DO)(diag)-44, PROCEDURE, Inspection Mode.>.

	Step	Check	Yes	No
1	**CHECK FUEL FILLER CAP.** 1) Turn the ignition switch to OFF. 2) Check the fuel filler cap. NOTE: The DTC is stored in memory if fuel filler cap is or was loose or if the cap chain has caught while tightening.	Is the fuel filler cap tightened securely?	Go to step **2**.	Tighten fuel filler cap securely.
2	**CHECK FUEL FILLER CAP.**	Is the fuel filler cap genuine?	Go to step **3**.	Replace with a genuine fuel filler cap.
3	**CHECK FUEL FILLER PIPE GASKET.**	Is there any damage to the seal between fuel filler cap and fuel filler pipe?	Repair or replace the fuel filler cap and fuel filler pipe. <Ref. to FU(H6DO)-68, Fuel Filler Pipe.>	Go to step **4**.
4	**CHECK DRAIN VALVE.** 1) Install the delivery (test) mode fuse. **CAUTION:** **Do not use any fuses that are installed on the vehicle.** 2) Turn the ignition switch to ON. 3) Operate the drain valve using the Subaru Select Monitor. NOTE: The drain valve can be operated using Subaru Select Monitor. For detailed procedures, refer to “SYSTEM OPERATION CHECK MODE”. <Ref. to EN(H6DO)(diag)-58, System Operation Check Mode.>	Does the drain valve operate?	Go to step **5**.	Replace the drain valve. <Ref. to EC(H6DO)-18, Drain Valve.>
5	**CHECK PURGE CONTROL SOLENOID VALVE.** Operate the purge control solenoid valve using the Subaru Select Monitor. NOTE: Purge control solenoid valve operation can be executed using Subaru Select Monitor. For detailed procedures, refer to “SYSTEM OPERATION CHECK MODE”. <Ref. to EN(H6DO)(diag)-58, System Operation Check Mode.>	Does the purge control solenoid valve operate?	Go to step **6**.	Replace the purge control solenoid valve. <Ref. to EC(H6DO)-10, Purge Control Solenoid Valve.>

	Step	Check	Yes	No
6	**CHECK EVAPORATIVE EMISSION CONTROL SYSTEM LINE.** 1) Turn the ignition switch to OFF. 2) Remove the delivery (test) mode fuse.	Is there any hole of more than 1.0 mm (0.04 in) dia. on evaporation line?	Repair or replace the evaporation line. <Ref. to FU(H6DO)-80, Fuel Delivery and Evaporation Lines.>	Go to step **7**.
7	**CHECK CANISTER.**	Is the canister damaged or is there a hole of more than 1.0 mm (0.04 in) dia. in it?	Repair or replace the canister. <Ref. to EC(H6DO)-6, Canister.>	Go to step **8**.
8	**CHECK FUEL TANK.** Remove the fuel tank. <Ref. to FU(H6DO)-61, Fuel Tank.>	Is the fuel tank damaged or is there any hole of more than 1.0 mm (0.04 in) dia. in it?	Repair or replace the fuel tank. <Ref. to FU(H6DO)-61, Fuel Tank.>	Go to step **9**.
9	**CHECK ANY OTHER MECHANICAL TROUBLE IN EVAPORATIVE EMISSION CONTROL SYSTEM.**	Is there any hole of more than 1.0 mm (0.04 in) dia., crack, clogging, or disconnection, bend, misconnection of hoses or pipes in evaporative emission control system?	Repair or replace the hoses or pipes.	Repair the poor contact of ECM connector.

DE:DTC P0447 EVAPORATIVE EMISSION CONTROL SYSTEM VENT CONTROL CIRCUIT OPEN

DTC DETECTING CONDITION:

- Immediately at fault recognition
- GENERAL DESCRIPTION <Ref. to GD(H6DO)-165, DTC P0447 EVAPORATIVE EMISSION CONTROL SYSTEM VENT CONTROL CIRCUIT OPEN, Diagnostic Trouble Code (DTC) Detecting Criteria.>

CAUTION:

After servicing or replacing faulty parts, perform Clear Memory Mode <Ref. to EN(H6DO)(diag)-57, OPERATION, Clear Memory Mode.>, and Inspection Mode <Ref. to EN(H6DO)(diag)-44, PROCEDURE, Inspection Mode.>.

WIRING DIAGRAM:

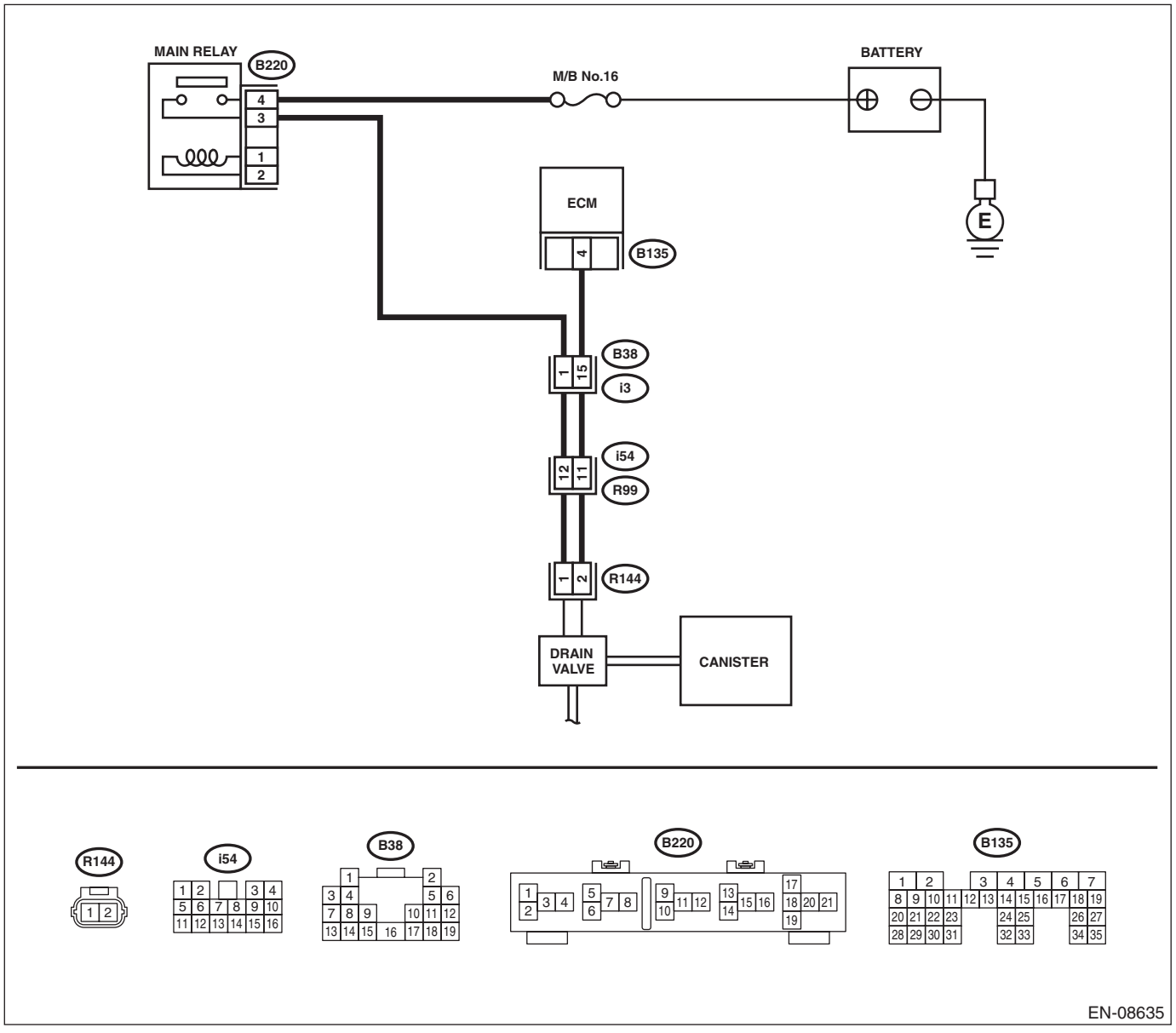

	Step	Check	Yes	No
1	**CHECK OUTPUT SIGNAL OF ECM.** 1) Turn the ignition switch to ON. 2) Measure the voltage between ECM and chassis ground. ***Connector & terminal*** ***(B135) No. 4 (+) — Chassis ground (–):***	Is the voltage 10 V or more?	Go to step **2**.	Go to step **3**.
2	**CHECK FOR POOR CONTACT.** Check for poor contact of ECM connector.	Is there poor contact of ECM connector?	Repair the poor contact of ECM connector.	Even if DTC is detected, the circuit has returned to a normal condition at this time. Reproduce the failure, and then perform the diagnosis again. NOTE: In this case, temporary open or short circuit of harness or temporary poor contact of connector may be the cause.
3	**CHECK POWER SUPPLY TO DRAIN VALVE.** Measure the voltage between drain valve and chassis ground. ***Connector & terminal*** ***(R144) No. 1 (+) — Chassis ground (–):***	Is the voltage 10 V or more?	Go to step **4**.	Repair the power supply circuit.
4	**CHECK HARNESS BETWEEN ECM AND DRAIN VALVE CONNECTOR.** 1) Turn the ignition switch to OFF. 2) Disconnect the connectors from the ECM and drain valve. 3) Measure the resistance between the drain valve connector and chassis ground. ***Connector & terminal*** ***(R144) No. 2 — Chassis ground:***	Is the resistance 1 MΩ or more?	Go to step **5**.	Repair the ground short circuit of harness between ECM and drain valve connector.
5	**CHECK HARNESS BETWEEN ECM AND DRAIN VALVE CONNECTOR.** Measure the resistance of harness between ECM and drain valve connector. ***Connector & terminal*** ***(B135) No. 4 — (R144) No. 2:***	Is the resistance less than 1 Ω?	Go to step **6**.	Repair the harness and connector. NOTE: In this case, repair the following item: • Open circuit of harness between ECM and drain valve connector • Poor contact of coupling connector
6	**CHECK DRAIN VALVE.** Measure the resistance between drain valve terminals. ***Terminals*** ***No. 1 — No. 2:***	Is the resistance 10 — 100 Ω?	Repair the poor contact of drain valve connector.	Replace the drain valve. <Ref. to EC(H6DO)-18, Drain Valve.>

DF:DTC P0448 EVAPORATIVE EMISSION CONTROL SYSTEM VENT CONTROL CIRCUIT SHORTED

DTC DETECTING CONDITION:

- Immediately at fault recognition
- GENERAL DESCRIPTION <Ref. to GD(H6DO)-167, DTC P0448 EVAPORATIVE EMISSION CONTROL SYSTEM VENT CONTROL CIRCUIT SHORTED, Diagnostic Trouble Code (DTC) Detecting Criteria.>

CAUTION:

After servicing or replacing faulty parts, perform Clear Memory Mode <Ref. to EN(H6DO)(diag)-57, OPERATION, Clear Memory Mode.>, and Inspection Mode <Ref. to EN(H6DO)(diag)-44, PROCEDURE, Inspection Mode.>.

WIRING DIAGRAM:

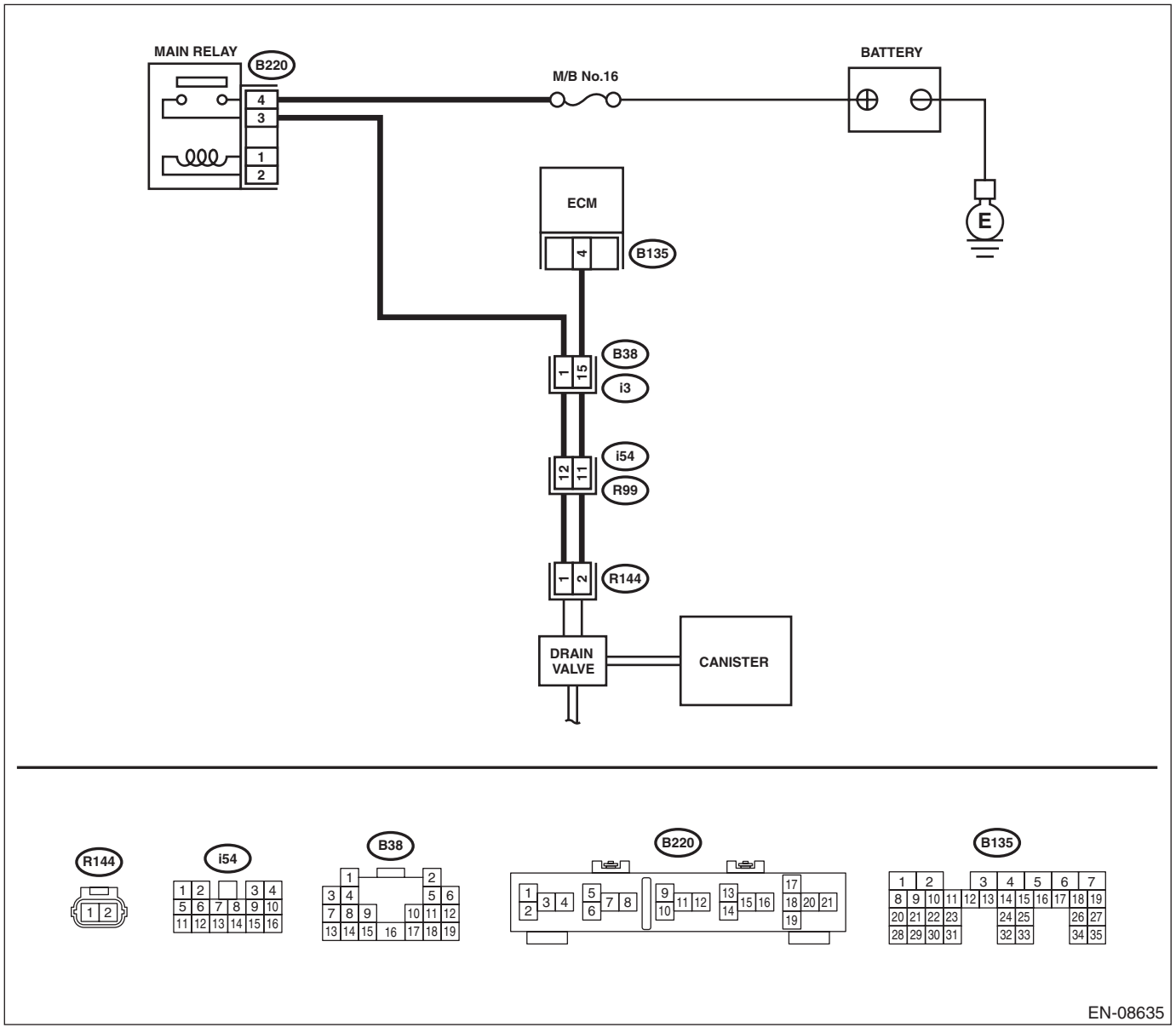

	Step	Check	Yes	No
1	**CHECK HARNESS BETWEEN ECM AND DRAIN VALVE.** 1) Turn the ignition switch to OFF. 2) Disconnect the connectors from the ECM and drain valve. 3) Turn the ignition switch to ON. 4) Measure the voltage between ECM and chassis ground. ***Connector & terminal*** ***(B135) No. 4 (+) — Chassis ground (–):***	Is the voltage 10 V or more?	Repair the short circuit to power in the harness between ECM and drain valve connector.	Go to step **2**.
2	**CHECK DRAIN VALVE.** 1) Turn the ignition switch to OFF. 2) Measure the resistance between drain valve terminals. ***Terminals*** ***No. 1 — No. 2:***	Is the resistance less than 1 Ω?	Replace the drain valve. <Ref. to EC(H6DO)-18, Drain Valve.>	Repair the poor contact of ECM connector.

DG:DTC P0451 EVAPORATIVE EMISSION CONTROL SYSTEM PRESSURE SENSOR

DTC DETECTING CONDITION:

- Detected when two consecutive driving cycles with fault occur.
- GENERAL DESCRIPTION <Ref. to GD(H6DO)-169, DTC P0451 EVAPORATIVE EMISSION CONTROL SYSTEM PRESSURE SENSOR, Diagnostic Trouble Code (DTC) Detecting Criteria.>

CAUTION:
After servicing or replacing faulty parts, perform Clear Memory Mode <Ref. to EN(H6DO)(diag)-57, OPERATION, Clear Memory Mode.>, and Inspection Mode <Ref. to EN(H6DO)(diag)-44, PROCEDURE, Inspection Mode.>.

	Step	Check	Yes	No
1	**CHECK FUEL FILLER CAP.** 1) Turn the ignition switch to OFF. 2) Open the fuel flap.	Is the fuel filler cap tightened securely?	Go to step **2**.	Tighten fuel filler cap securely.
2	**CHECK PRESSURE VACUUM LINE.** NOTE: Check the following items. • Disconnection, leakage and clogging of the vacuum hoses and pipes between fuel tank pressure sensor and fuel tank • Disconnection, leakage and clogging of air ventilation hoses and pipes between fuel filler pipe and fuel tank	Is there any fault in pressure/ vacuum line?	Repair or replace the hoses and pipes.	Replace the fuel tank pressure sensor. <Ref. to EC(H6DO)-15, Fuel Tank Pressure Sensor.>

DH:DTC P0452 EVAPORATIVE EMISSION CONTROL SYSTEM PRESSURE SENSOR LOW INPUT

DTC DETECTING CONDITION:

- Immediately at fault recognition
- GENERAL DESCRIPTION <Ref. to GD(H6DO)-173, DTC P0452 EVAPORATIVE EMISSION CONTROL SYSTEM PRESSURE SENSOR LOW INPUT, Diagnostic Trouble Code (DTC) Detecting Criteria.>

CAUTION:
After servicing or replacing faulty parts, perform Clear Memory Mode <Ref. to EN(H6DO)(diag)-57, OPERATION, Clear Memory Mode.>, and Inspection Mode <Ref. to EN(H6DO)(diag)-44, PROCEDURE, Inspection Mode.>.

WIRING DIAGRAM:

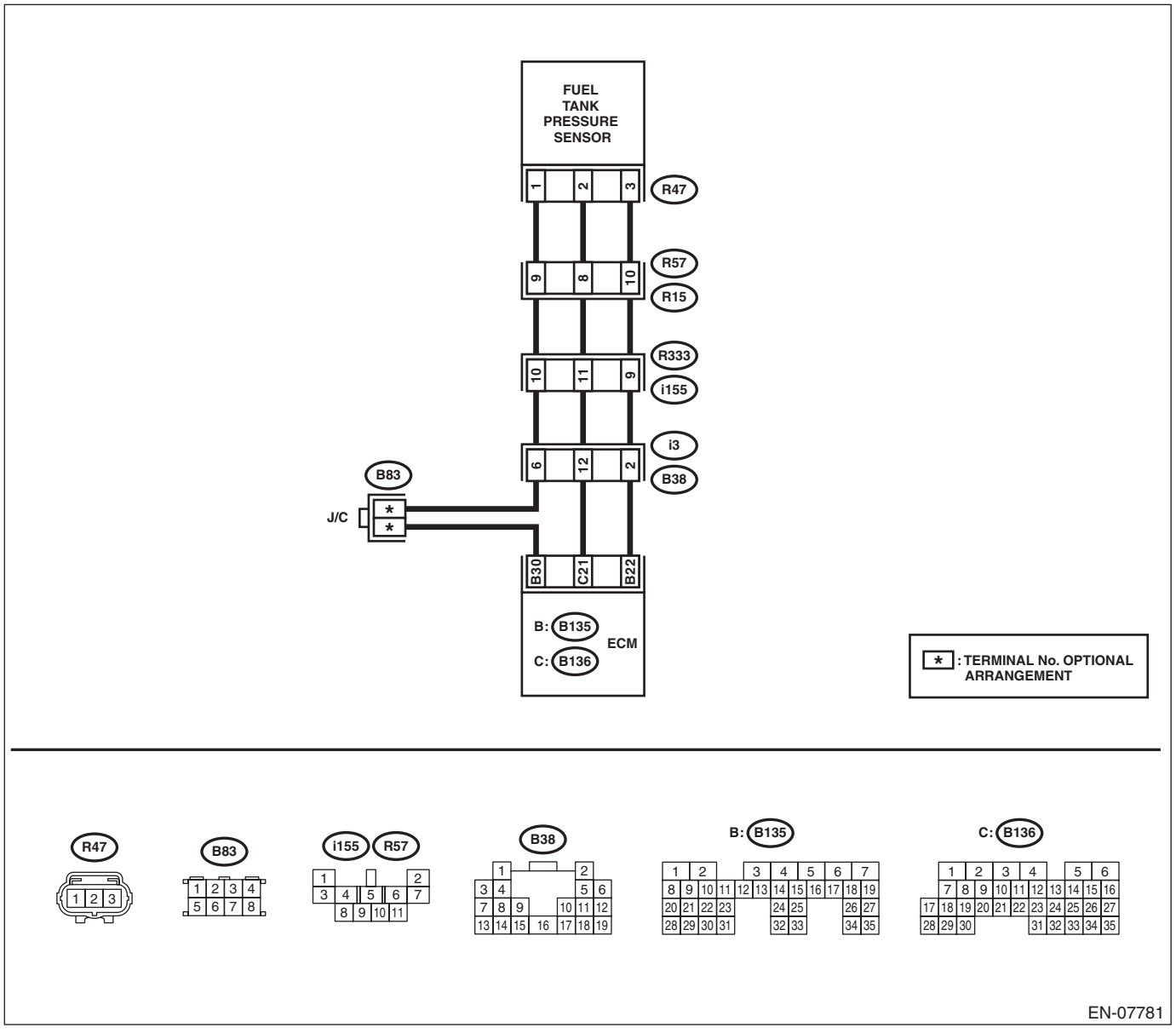

	Step	Check	Yes	No
1	**CHECK CURRENT DATA.** 1) Turn the ignition switch to ON. 2) Using the Subaru Select Monitor or a general scan tool, read the value in «Fuel Tank Pressure». NOTE: • Subaru Select Monitor For detailed operation procedures, refer to "READ CURRENT DATA FOR ENGINE". <Ref. to EN(H6DO)(diag)-35, Subaru Select Monitor.> • General scan tool For detailed operation procedures, refer to the general scan tool operation manual.	Is the value in «Fuel Tank Pressure» less than –7.45 kPa (–55.85 mmHg, –2.2003 inHg)?	Go to step **2**.	Even if DTC is detected, the circuit has returned to a normal condition at this time. Reproduce the failure, and then perform the diagnosis again. NOTE: In this case, temporary poor contact of connector, temporary open or short circuit of harness may be the cause.
2	**CHECK FUEL TANK PRESSURE SENSOR POWER SUPPLY.** 1) Turn the ignition switch to OFF. 2) Disconnect the connector from the fuel tank pressure sensor. 3) Turn the ignition switch to ON. 4) Measure the voltage between the fuel tank pressure sensor connector and chassis ground. ***Connector & terminal*** ***(R47) No. 3 (+) — Chassis ground (–):***	Is the voltage 4.5 V or more?	Go to step **3**.	Repair the harness and connector. NOTE: In this case, repair the following item: • Open circuit of harness between ECM and fuel tank pressure sensor connector • Poor contact of ECM connector • Poor contact of coupling connector
3	**CHECK HARNESS BETWEEN ECM AND FUEL TANK PRESSURE SENSOR CONNECTOR.** 1) Turn the ignition switch to OFF. 2) Disconnect the connector from ECM. 3) Measure the resistance of harness between the ECM and fuel tank pressure sensor connector. ***Connector & terminal*** ***(B136) No. 21 — (R47) No. 2:***	Is the resistance less than 1 Ω?	Go to step **4**.	Repair the harness and connector. NOTE: In this case, repair the following item: • Open circuit of harness between ECM and fuel tank pressure sensor connector • Poor contact of coupling connector
4	**CHECK HARNESS BETWEEN ECM AND FUEL TANK PRESSURE SENSOR CONNECTOR.** Measure the resistance between ECM and chassis ground. ***Connector & terminal*** ***(B136) No. 21 — Chassis ground:***	Is the resistance 1 MΩ or more?	Go to step **5**.	Repair the ground short circuit of harness between ECM and fuel tank pressure sensor connector.
5	**CHECK FOR POOR CONTACT.** Check for poor contact between the ECM and fuel tank pressure sensor connector.	Is there poor contact of the ECM or fuel tank pressure sensor connector?	Repair the poor contact of the ECM or fuel tank pressure sensor connector.	Replace the fuel tank pressure sensor. <Ref. to EC(H6DO)-15, Fuel Tank Pressure Sensor.>

DI: DTC P0453 EVAPORATIVE EMISSION CONTROL SYSTEM PRESSURE SENSOR HIGH INPUT

DTC DETECTING CONDITION:

- Immediately at fault recognition
- GENERAL DESCRIPTION <Ref. to GD(H6DO)-175, DTC P0453 EVAPORATIVE EMISSION CONTROL SYSTEM PRESSURE SENSOR HIGH INPUT, Diagnostic Trouble Code (DTC) Detecting Criteria.>

CAUTION:
After servicing or replacing faulty parts, perform Clear Memory Mode <Ref. to EN(H6DO)(diag)-57, OPERATION, Clear Memory Mode.>, and Inspection Mode <Ref. to EN(H6DO)(diag)-44, PROCEDURE, Inspection Mode.>.

WIRING DIAGRAM:

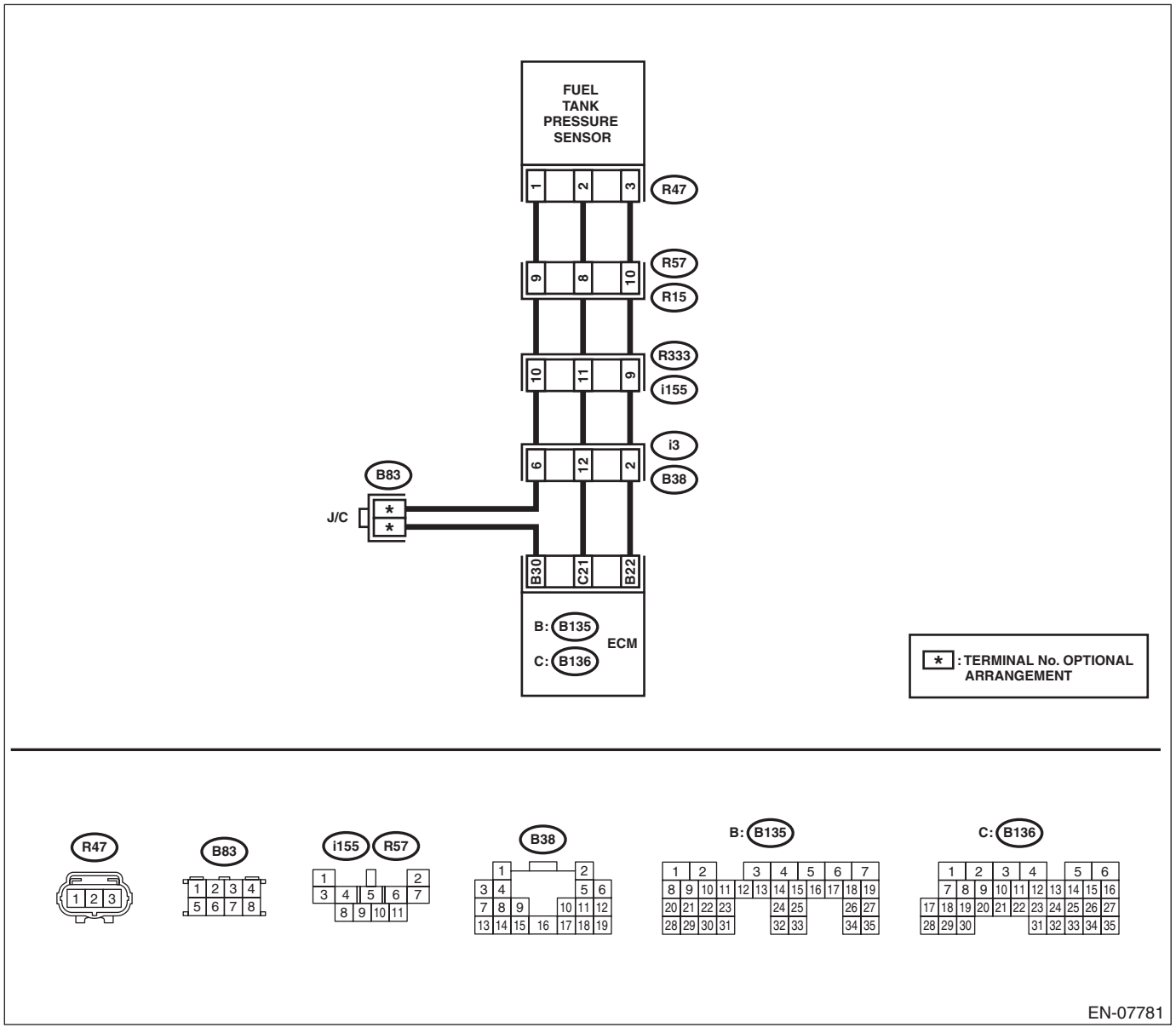

	Step	Check	Yes	No
1	**CHECK CURRENT DATA.** 1) Turn the ignition switch to ON. 2) Using the Subaru Select Monitor or a general scan tool, read the value in «Fuel Tank Pressure». NOTE: • Subaru Select Monitor For detailed operation procedures, refer to "READ CURRENT DATA FOR ENGINE". <Ref. to EN(H6DO)(diag)-35, Subaru Select Monitor.> • General scan tool For detailed operation procedures, refer to the general scan tool operation manual.	Is the value in «Fuel Tank Pressure» 7.98 kPa (59.85 mmHg, 2.357 inHg) or more?	Go to step **2**.	Even if DTC is detected, the circuit has returned to a normal condition at this time. Reproduce the failure, and then perform the diagnosis again. NOTE: In this case, temporary poor contact of connector, temporary open or short circuit of harness may be the cause.
2	**CHECK HARNESS BETWEEN ECM AND FUEL TANK PRESSURE SENSOR CONNECTOR.** 1) Turn the ignition switch to OFF. 2) Disconnect the connector from the fuel tank pressure sensor. 3) Turn the ignition switch to ON. 4) Using the Subaru Select Monitor or a general scan tool, read the value in «Fuel Tank Pressure». NOTE: • Subaru Select Monitor For detailed operation procedures, refer to "READ CURRENT DATA FOR ENGINE". <Ref. to EN(H6DO)(diag)-35, Subaru Select Monitor.> • General scan tool For detailed operation procedures, refer to the general scan tool operation manual.	Is the value in «Fuel Tank Pressure» 7.98 kPa (59.85 mmHg, 2.357 inHg) or more?	Repair the short circuit to power in the harness between ECM and fuel tank pressure sensor connector.	Go to step **3**.
3	**CHECK HARNESS BETWEEN ECM AND FUEL TANK PRESSURE SENSOR CONNECTOR.** 1) Turn the ignition switch to OFF. 2) Measure the resistance of harness between fuel tank pressure sensor connector and engine ground. ***Connector & terminal*** ***(R47) No. 1 — Engine ground:***	Is the resistance less than 5 Ω?	Go to step **4**.	Repair the harness and connector. NOTE: In this case, repair the following item: • Open circuit of harness between ECM and fuel tank pressure sensor connector • Poor contact of ECM connector • Poor contact of coupling connector
4	**CHECK FOR POOR CONTACT.** Check for poor contact of the fuel tank pressure sensor connector.	Is there poor contact of fuel tank pressure sensor connector?	Repair the poor contact of fuel tank pressure sensor connector.	Replace the fuel tank pressure sensor. <Ref. to EC(H6DO)-15, Fuel Tank Pressure Sensor.>

DJ:DTC P0456 EVAPORATIVE EMISSION CONTROL SYSTEM LEAK DETECTED (VERY SMALL LEAK)

DTC DETECTING CONDITION:

- Detected when two consecutive driving cycles with fault occur.
- GENERAL DESCRIPTION <Ref. to GD(H6DO)-177, DTC P0456 EVAPORATIVE EMISSION CONTROL SYSTEM LEAK DETECTED (VERY SMALL LEAK), Diagnostic Trouble Code (DTC) Detecting Criteria.>

TROUBLE SYMPTOM:

- Fuel odor
- There is a hole of more than 0.5 mm (0.020 in) dia. in evaporation system or fuel tank.

CAUTION:
After servicing or replacing faulty parts, perform Clear Memory Mode <Ref. to EN(H6DO)(diag)-57, OPERATION, Clear Memory Mode.>, and Inspection Mode <Ref. to EN(H6DO)(diag)-44, PROCEDURE, Inspection Mode.>.

	Step	Check	Yes	No
1	**CHECK FUEL FILLER CAP.** 1) Turn the ignition switch to OFF. 2) Check the fuel filler cap. NOTE: The DTC is stored in memory if fuel filler cap is or was loose or if the cap chain has caught while tightening.	Is the fuel filler cap tightened securely?	Go to step **2**.	Tighten fuel filler cap securely.
2	**CHECK FUEL FILLER CAP.**	Is the fuel filler cap genuine?	Go to step **3**.	Replace with a genuine fuel filler cap.
3	**CHECK FUEL FILLER PIPE GASKET.**	Is there any damage to the seal between fuel filler cap and fuel filler pipe?	Repair or replace the fuel filler cap and fuel filler pipe. <Ref. to FU(H6DO)-68, Fuel Filler Pipe.>	Go to step **4**.
4	**CHECK DRAIN VALVE.** 1) Install the delivery (test) mode fuse. **CAUTION:** **Do not use any fuses that are installed on the vehicle.** 2) Turn the ignition switch to ON. 3) Operate the drain valve using the Subaru Select Monitor. NOTE: Drain valve can be operated using the Subaru Select Monitor. For detailed procedures, refer to “SYSTEM OPERATION CHECK MODE”. <Ref. to EN(H6DO)(diag)-58, System Operation Check Mode.>	Does the drain valve operate?	Go to step **5**.	Replace the drain valve. <Ref. to EC(H6DO)-18, Drain Valve.>
5	**CHECK PURGE CONTROL SOLENOID VALVE.** Operate the purge control solenoid valve using the Subaru Select Monitor. NOTE: Purge control solenoid valve operation can be executed using Subaru Select Monitor. For detailed procedures, refer to “SYSTEM OPERATION CHECK MODE”. <Ref. to EN(H6DO)(diag)-58, System Operation Check Mode.>	Does the purge control solenoid valve operate?	Go to step **6**.	Replace the purge control solenoid valve. <Ref. to EC(H6DO)-10, Purge Control Solenoid Valve.>

	Step	Check	Yes	No
6	**CHECK EVAPORATIVE EMISSION CONTROL SYSTEM LINE.** 1) Turn the ignition switch to OFF. 2) Remove the delivery (test) mode fuse.	Is there any hole of more than 0.5 mm (0.020 in) dia. on evaporation line?	Repair or replace the evaporation line. <Ref. to FU(H6DO)-80, Fuel Delivery and Evaporation Lines.>	Go to step **7**.
7	**CHECK CANISTER.**	Is the canister damaged or is there a hole of more than 0.5 mm (0.020 in) dia. in it?	Repair or replace the canister. <Ref. to EC(H6DO)-6, Canister.>	Go to step **8**.
8	**CHECK FUEL TANK.** Remove the fuel tank. <Ref. to FU(H6DO)-61, Fuel Tank.>	Is the fuel tank damaged or is there any hole of more than 0.5 mm (0.020 in) dia. in it?	Repair or replace the fuel tank. <Ref. to FU(H6DO)-61, Fuel Tank.>	Go to step **9**.
9	**CHECK ANY OTHER MECHANICAL TROUBLE IN EVAPORATIVE EMISSION CONTROL SYSTEM.**	Is there any hole of more than 0.5 mm (0.020 in) dia., crack, clogging, or disconnection, bend, misconnection of hoses or pipes in evaporative emission control system?	Repair or replace the hoses or pipes.	Repair the poor contact of ECM connector.

DK:DTC P0457 EVAPORATIVE EMISSION CONTROL SYSTEM LEAK DETECTED (FUEL CAP LOOSE/OFF)

DTC DETECTING CONDITION:

- Detected when two consecutive driving cycles with fault occur.
- GENERAL DESCRIPTION <Ref. to GD(H6DO)-177, DTC P0457 EVAPORATIVE EMISSION CONTROL SYSTEM LEAK DETECTED (FUEL CAP LOOSE/OFF), Diagnostic Trouble Code (DTC) Detecting Criteria.>

TROUBLE SYMPTOM:

- Fuel odor
- Fuel filler cap loose or lost

CAUTION:
After servicing or replacing faulty parts, perform Clear Memory Mode <Ref. to EN(H6DO)(diag)-57, OPERATION, Clear Memory Mode.>, and Inspection Mode <Ref. to EN(H6DO)(diag)-44, PROCEDURE, Inspection Mode.>.

	Step	Check	Yes	No
1	**CHECK FUEL FILLER CAP.** 1) Turn the ignition switch to OFF. 2) Check the fuel filler cap. NOTE: The DTC is stored in memory if fuel filler cap is or was loose or if the cap chain has caught while tightening.	Is the fuel filler cap tightened securely?	Go to step **2**.	Tighten fuel filler cap securely.
2	**CHECK FUEL FILLER CAP.**	Is the fuel filler cap genuine?	Go to step **3**.	Replace with a genuine fuel filler cap.
3	**CHECK FUEL FILLER PIPE GASKET.**	Is there any damage to the seal between fuel filler cap and fuel filler pipe?	Repair or replace the fuel filler cap and fuel filler pipe. <Ref. to FU(H6DO)-68, Fuel Filler Pipe.>	Go to step **4**.
4	**CHECK DRAIN VALVE.** 1) Install the delivery (test) mode fuse. **CAUTION:** **Do not use any fuses that are installed on the vehicle.** 2) Turn the ignition switch to ON. 3) Operate the drain valve using the Subaru Select Monitor. NOTE: Drain valve can be operated using the Subaru Select Monitor. For detailed procedures, refer to “SYSTEM OPERATION CHECK MODE”. <Ref. to EN(H6DO)(diag)-58, System Operation Check Mode.>	Does the drain valve operate?	Go to step **5**.	Replace the drain valve. <Ref. to EC(H6DO)-18, Drain Valve.>
5	**CHECK PURGE CONTROL SOLENOID VALVE.** Operate the purge control solenoid valve using the Subaru Select Monitor. NOTE: Purge control solenoid valve operation can be executed using Subaru Select Monitor. For detailed procedures, refer to “SYSTEM OPERATION CHECK MODE”. <Ref. to EN(H6DO)(diag)-58, System Operation Check Mode.>	Does the purge control solenoid valve operate?	Go to step **6**.	Replace the purge control solenoid valve. <Ref. to EC(H6DO)-10, Purge Control Solenoid Valve.>

	Step	Check	Yes	No
6	**CHECK EVAPORATIVE EMISSION CONTROL SYSTEM LINE.** 1) Turn the ignition switch to OFF. 2) Remove the delivery (test) mode fuse.	Is there any disconnection, damage or clogging on the evaporation line?	Repair or replace the evaporation line. <Ref. to FU(H6DO)-80, Fuel Delivery and Evaporation Lines.>	Go to step **7**.
7	**CHECK CANISTER.**	Is the canister damaged?	Repair or replace the canister. <Ref. to EC(H6DO)-6, Canister.>	Go to step **8**.
8	**CHECK FUEL TANK.** Remove the fuel tank. <Ref. to FU(H6DO)-61, Fuel Tank.>	Is the fuel tank damaged?	Repair or replace the fuel tank. <Ref. to FU(H6DO)-61, Fuel Tank.>	Go to step **9**.
9	**CHECK ANY OTHER MECHANICAL TROUBLE IN EVAPORATIVE EMISSION CONTROL SYSTEM.**	Are there holes, cracks, clogging, or disconnection, misconnection of hoses or pipes in evaporative emission control system?	Repair or replace the hoses or pipes.	Repair the poor contact of ECM connector.

DL:DTC P0458 EVAPORATIVE EMISSION SYSTEM PURGE CONTROL VALVE CIRCUIT LOW

DTC DETECTING CONDITION:

- Detected when two consecutive driving cycles with fault occur.
- GENERAL DESCRIPTION <Ref. to GD(H6DO)-178, DTC P0458 EVAPORATIVE EMISSION SYSTEM PURGE CONTROL VALVE CIRCUIT LOW, Diagnostic Trouble Code (DTC) Detecting Criteria.>

TROUBLE SYMPTOM:

Improper idling

CAUTION:

After servicing or replacing faulty parts, perform Clear Memory Mode <Ref. to EN(H6DO)(diag)-57, OPERATION, Clear Memory Mode.>, and Inspection Mode <Ref. to EN(H6DO)(diag)-44, PROCEDURE, Inspection Mode.>.

WIRING DIAGRAM:

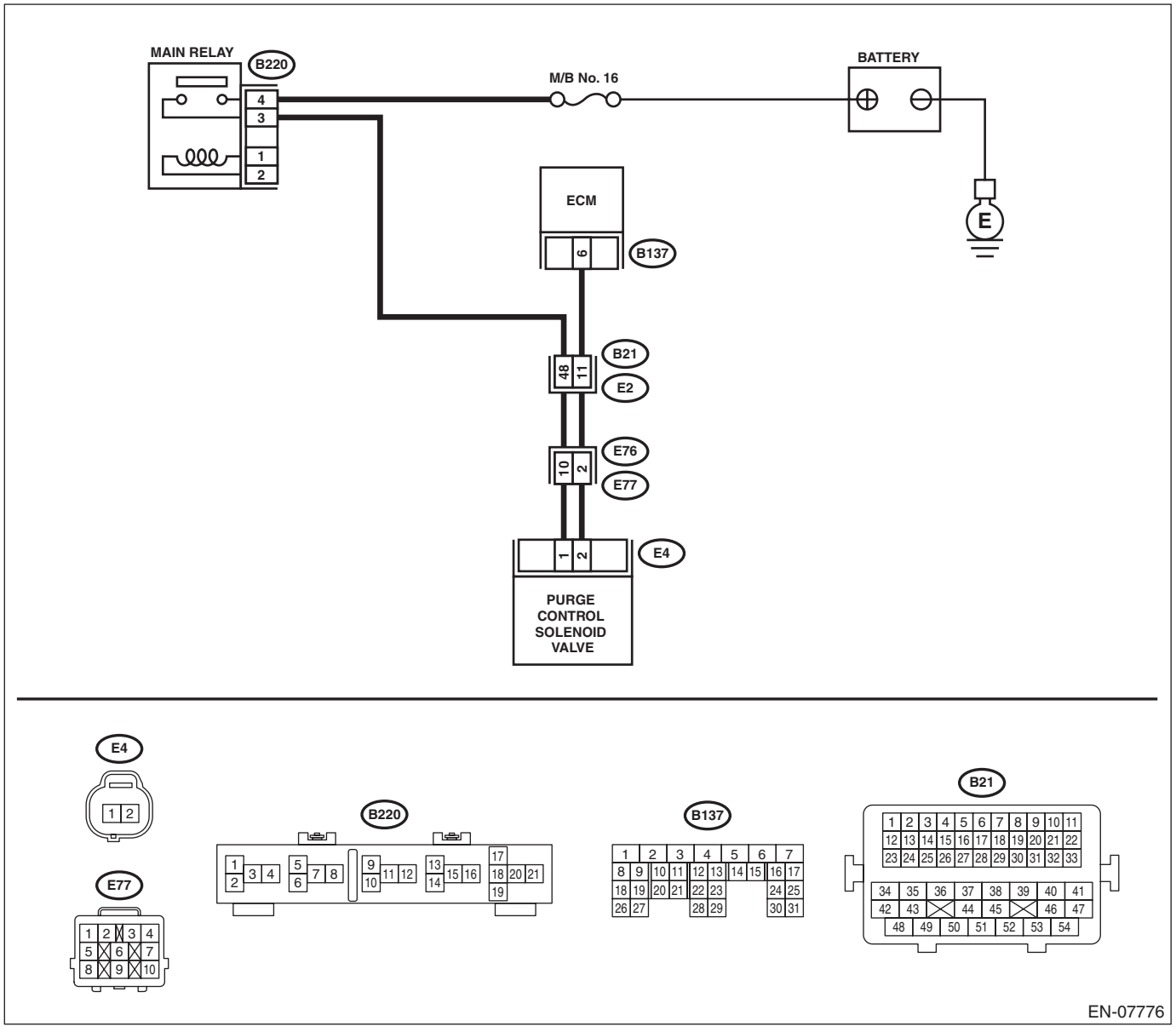

	Step	Check	Yes	No
1	**CHECK OUTPUT SIGNAL OF ECM.** 1) Turn the ignition switch to ON. 2) Measure the voltage between ECM and chassis ground. ***Connector & terminal*** ***(B137) No. 6 (+) — Chassis ground (–):***	Is the voltage 10 V or more?	Go to step **2**.	Go to step **3**.
2	**CHECK FOR POOR CONTACT.** Check for poor contact of ECM connector.	Is there poor contact of ECM connector?	Repair the poor contact of ECM connector.	Even if DTC is detected, the circuit has returned to a normal condition at this time. Reproduce the failure, and then perform the diagnosis again. NOTE: In this case, temporary open or short circuit of harness or temporary poor contact of connector may be the cause.
3	**CHECK POWER SUPPLY TO PURGE CONTROL SOLENOID VALVE.** Measure the voltage between purge control solenoid valve and engine ground. ***Connector & terminal*** ***(E4) No. 1 (+) — Engine ground (–):***	Is the voltage 10 V or more?	Go to step **4**.	Repair the power supply circuit.
4	**CHECK HARNESS BETWEEN ECM AND PURGE CONTROL SOLENOID VALVE CONNECTOR.** 1) Turn the ignition switch to OFF. 2) Disconnect the connectors from ECM and purge control solenoid valve. 3) Measure the resistance between the purge control solenoid valve connector and engine ground. ***Connector & terminal*** ***(E4) No. 2 — Engine ground:***	Is the resistance 1 MΩ or more?	Go to step **5**.	Repair the ground short circuit of harness between ECM and purge control solenoid valve connector.
5	**CHECK HARNESS BETWEEN ECM AND PURGE CONTROL SOLENOID VALVE CONNECTOR.** Measure the resistance of harness between ECM and purge control solenoid valve. ***Connector & terminal*** ***(B137) No. 6 — (E4) No. 2:***	Is the resistance less than 1 Ω?	Go to step **6**.	Repair the harness and connector. NOTE: In this case, repair the following item: • Open circuit in harness between ECM and purge control solenoid valve connector • Poor contact of coupling connector
6	**CHECK PURGE CONTROL SOLENOID VALVE.** 1) Remove the purge control solenoid valve. 2) Measure the resistance between purge control solenoid valve terminals. ***Terminals*** ***No. 1 — No. 2:***	Is the resistance 10 — 100 Ω?	Repair the poor contact of purge control solenoid valve connector.	Replace the purge control solenoid valve. <Ref. to EC(H6DO)-10, Purge Control Solenoid Valve.>

DM:DTC P0459 EVAPORATIVE EMISSION SYSTEM PURGE CONTROL VALVE CIRCUIT HIGH

DTC DETECTING CONDITION:

- Detected when two consecutive driving cycles with fault occur.
- GENERAL DESCRIPTION <Ref. to GD(H6DO)-180, DTC P0459 EVAPORATIVE EMISSION SYSTEM PURGE CONTROL VALVE CIRCUIT HIGH, Diagnostic Trouble Code (DTC) Detecting Criteria.>

TROUBLE SYMPTOM:

Improper idling

CAUTION:

After servicing or replacing faulty parts, perform Clear Memory Mode <Ref. to EN(H6DO)(diag)-57, OPERATION, Clear Memory Mode.>, and Inspection Mode <Ref. to EN(H6DO)(diag)-44, PROCEDURE, Inspection Mode.>.

WIRING DIAGRAM:

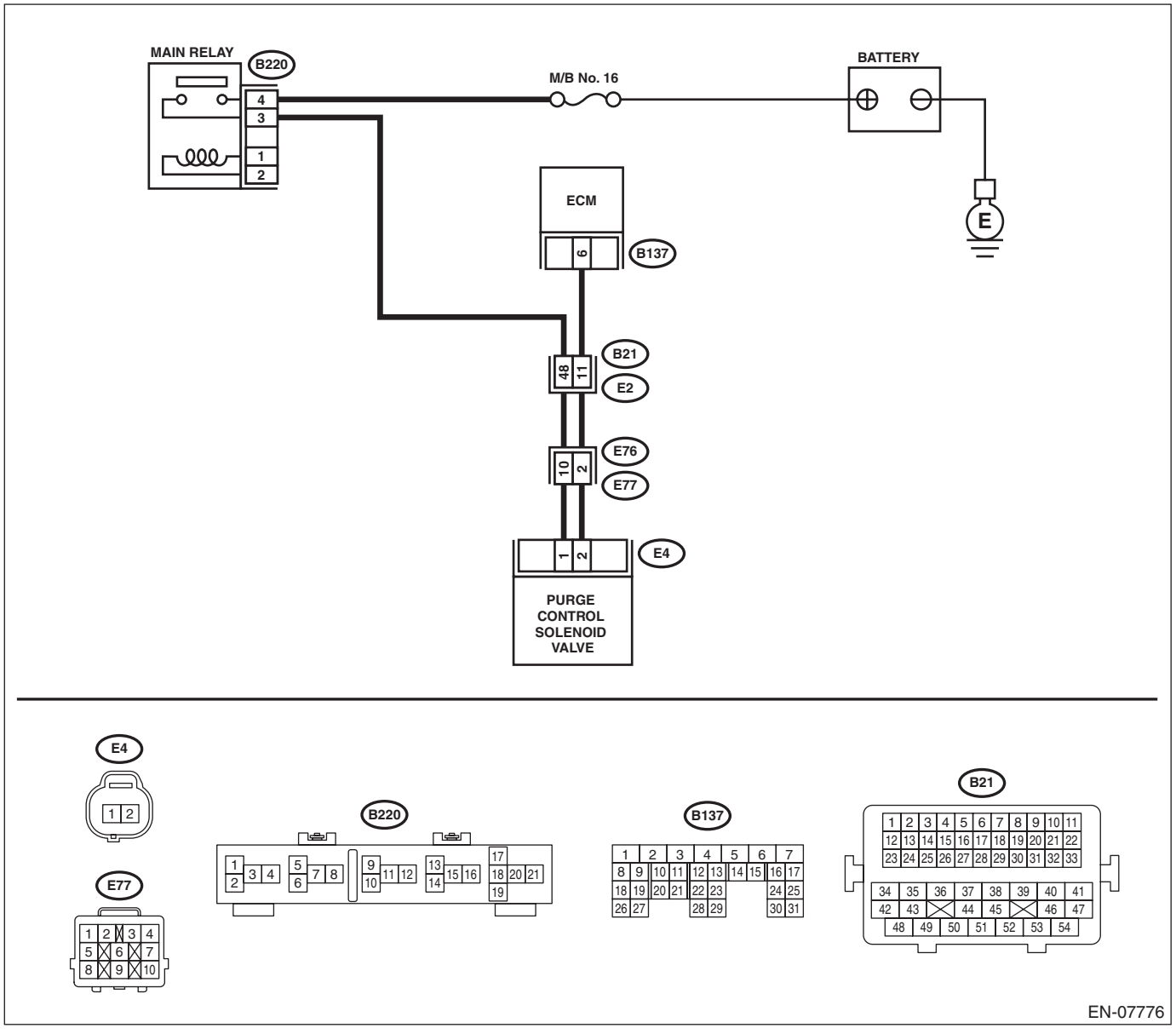

EN-07776

	Step	Check	Yes	No
1	**CHECK HARNESS BETWEEN ECM AND PURGE CONTROL SOLENOID VALVE.** 1) Turn the ignition switch to OFF. 2) Disconnect the connectors from ECM and purge control solenoid valve. 3) Turn the ignition switch to ON. 4) Measure the voltage between ECM and chassis ground. ***Connector & terminal*** ***(B137) No. 6 (+) — Chassis ground (–):***	Is the voltage 10 V or more?	Repair the short circuit to power in the harness between ECM and purge control solenoid valve connector.	Go to step **2**.
2	**CHECK PURGE CONTROL SOLENOID VALVE.** 1) Turn the ignition switch to OFF. 2) Measure the resistance between purge control solenoid valve terminals. ***Terminals*** ***No. 1 — No. 2:***	Is the resistance less than 1 Ω?	Replace the purge control solenoid valve. <Ref. to EC(H6DO)-10, Purge Control Solenoid Valve.>	Repair the poor contact of ECM connector.

DN:DTC P0461 FUEL LEVEL SENSOR “A” CIRCUIT RANGE/PERFORMANCE

DTC DETECTING CONDITION:

- Detected when two consecutive driving cycles with fault occur.
- GENERAL DESCRIPTION <Ref. to GD(H6DO)-182, DTC P0461 FUEL LEVEL SENSOR “A” CIRCUIT RANGE/PERFORMANCE, Diagnostic Trouble Code (DTC) Detecting Criteria.>

CAUTION:
After servicing or replacing faulty parts, perform Clear Memory Mode <Ref. to EN(H6DO)(diag)-57, OPERATION, Clear Memory Mode.>, and Inspection Mode <Ref. to EN(H6DO)(diag)-44, PROCEDURE, Inspection Mode.>.

Step		Check	Yes	No
1	**CHECK FOR ANY OTHER DTC ON DISPLAY.**	Is any other DTC displayed?	Check the appropriate DTC using the “List of Diagnostic Trouble Code (DTC)”. <Ref. to EN(H6DO)(diag)-85, List of Diagnostic Trouble Code (DTC).>	Replace the fuel level sensor and fuel sub level sensor. <Ref. to FU(H6DO)-73, Fuel Level Sensor.> <Ref. to FU(H6DO)-75, Fuel Sub Level Sensor.>

DO:DTC P0462 FUEL LEVEL SENSOR “A” CIRCUIT LOW

NOTE:
For the diagnostic procedure, refer to DTC P0463. <Ref. to EN(H6DO)(diag)-257, DTC P0463 FUEL LEVEL SENSOR “A” CIRCUIT HIGH, Diagnostic Procedure with Diagnostic Trouble Code (DTC).>

DP:DTC P0463 FUEL LEVEL SENSOR “A” CIRCUIT HIGH

DTC DETECTING CONDITION:

- Detected when two consecutive driving cycles with fault occur.
- GENERAL DESCRIPTION <Ref. to GD(H6DO)-186, DTC P0463 FUEL LEVEL SENSOR “A” CIRCUIT HIGH, Diagnostic Trouble Code (DTC) Detecting Criteria.>

CAUTION:
After servicing or replacing faulty parts, perform Clear Memory Mode <Ref. to EN(H6DO)(diag)-57, OPERATION, Clear Memory Mode.>, and Inspection Mode <Ref. to EN(H6DO)(diag)-44, PROCEDURE, Inspection Mode.>.

Step	Check	Yes	No
1 **CHECK FOR ANY OTHER DTC ON DISPLAY.**	Is DTC P0462 or P0463 displayed on the Subaru Select Monitor?	Check the combination meter. <Ref. to IDI-11, INSPECTION, Combination Meter System.>	Even if DTC is detected, the circuit has returned to a normal condition at this time. Reproduce the failure, and then perform the diagnosis again. NOTE: In this case, temporary poor contact of connector, temporary open or short circuit of harness may be the cause.

DQ:DTC P0464 FUEL LEVEL SENSOR CIRCUIT INTERMITTENT

DTC DETECTING CONDITION:

- Detected when two consecutive driving cycles with fault occur.
- GENERAL DESCRIPTION <Ref. to GD(H6DO)-188, DTC P0464 FUEL LEVEL SENSOR CIRCUIT INTERMITTENT, Diagnostic Trouble Code (DTC) Detecting Criteria.>

CAUTION:
After servicing or replacing faulty parts, perform Clear Memory Mode <Ref. to EN(H6DO)(diag)-57, OPERATION, Clear Memory Mode.>, and Inspection Mode <Ref. to EN(H6DO)(diag)-44, PROCEDURE, Inspection Mode.>.

Step	Check	Yes	No
1 **CHECK FOR ANY OTHER DTC ON DISPLAY.**	Is DTC P0464 displayed on the display?	Check the combination meter. <Ref. to IDI-11, INSPECTION, Combination Meter System.>	Even if DTC is detected, the circuit has returned to a normal condition at this time. Reproduce the failure, and then perform the diagnosis again. NOTE: In this case, temporary poor contact of connector, temporary open or short circuit of harness may be the cause.

DR:DTC P0500 VEHICLE SPEED SENSOR “A”

DTC DETECTING CONDITION:

- Immediately at fault recognition
- GENERAL DESCRIPTION <Ref. to GD(H6DO)-191, DTC P0500 VEHICLE SPEED SENSOR “A”, Diagnostic Trouble Code (DTC) Detecting Criteria.>

CAUTION:
After servicing or replacing faulty parts, perform Clear Memory Mode <Ref. to EN(H6DO)(diag)-57, OPERATION, Clear Memory Mode.>, and Inspection Mode <Ref. to EN(H6DO)(diag)-44, PROCEDURE, Inspection Mode.>.

Step		Check	Yes	No
1	**CHECK DTC OF VDC.** Check DTC of VDC.	Is DTC of VDC displayed?	Perform the diagnosis according to DTC. <Ref. to VDC(diag)-35, List of Diagnostic Trouble Code (DTC).>	Repair the poor contact of ECM connector.

DS:DTC P0506 IDLE AIR CONTROL SYSTEM RPM LOWER THAN EXPECTED

DTC DETECTING CONDITION:

- Detected when two consecutive driving cycles with fault occur.
- GENERAL DESCRIPTION <Ref. to GD(H6DO)-192, DTC P0506 IDLE AIR CONTROL SYSTEM RPM LOWER THAN EXPECTED, Diagnostic Trouble Code (DTC) Detecting Criteria.>

TROUBLE SYMPTOM:

- Hard to start the engine.
- Engine does not start.
- Improper idling
- Engine stalls.

CAUTION:

After servicing or replacing faulty parts, perform Clear Memory Mode <Ref. to EN(H6DO)(diag)-57, OPERATION, Clear Memory Mode.>, and Inspection Mode <Ref. to EN(H6DO)(diag)-44, PROCEDURE, Inspection Mode.>.

	Step	Check	Yes	No
1	**CHECK FOR ANY OTHER DTC ON DISPLAY.**	Is any other DTC displayed?	Check the appropriate DTC using the "List of Diagnostic Trouble Code (DTC)". <Ref. to EN(H6DO)(diag)-85, List of Diagnostic Trouble Code (DTC).>	Go to step **2**.
2	**CHECK AIR CLEANER ELEMENT.** 1) Turn the ignition switch to OFF. 2) Check the air cleaner element.	Is there excessive clogging on air cleaner element?	Replace the air cleaner element. <Ref. to IN(H6DO)-4, Air Cleaner Element.>	Go to step **3**.
3	**CHECK ELECTRONIC THROTTLE CONTROL.** 1) Remove the electronic throttle control. 2) Check the electronic throttle control.	Are foreign matter found inside electronic throttle control?	Remove foreign matter from electronic throttle control.	Perform the diagnosis of DTC P2101. <Ref. to EN(H6DO)(diag)-336, DTC P2101 THROTTLE ACTUATOR CONTROL MOTOR CIRCUIT RANGE/PERFORMANCE, Diagnostic Procedure with Diagnostic Trouble Code (DTC).>

DT:DTC P0507 IDLE AIR CONTROL SYSTEM RPM HIGHER THAN EXPECTED

DTC DETECTING CONDITION:

- Detected when two consecutive driving cycles with fault occur.
- GENERAL DESCRIPTION <Ref. to GD(H6DO)-193, DTC P0507 IDLE AIR CONTROL SYSTEM RPM HIGHER THAN EXPECTED, Diagnostic Trouble Code (DTC) Detecting Criteria.>

TROUBLE SYMPTOM:

Engine keeps running at higher speed than specified idle speed.

CAUTION:

After servicing or replacing faulty parts, perform Clear Memory Mode <Ref. to EN(H6DO)(diag)-57, OPERATION, Clear Memory Mode.>, and Inspection Mode <Ref. to EN(H6DO)(diag)-44, PROCEDURE, Inspection Mode.>.

	Step	Check	Yes	No
1	**CHECK FOR ANY OTHER DTC ON DISPLAY.**	Is any other DTC displayed?	Check the appropriate DTC using the “List of Diagnostic Trouble Code (DTC)”. <Ref. to EN(H6DO)(diag)-85, List of Diagnostic Trouble Code (DTC).>	Go to step **2**.
2	**CHECK AIR INTAKE SYSTEM.** 1) Start and idle the engine. 2) Check the following items. • Loose installation of intake manifold and throttle body • Cracks of intake manifold gasket and throttle body gasket • Disconnection of vacuum hoses	Is there any fault in air intake system?	Repair air suction and leaks.	Go to step **3**.
3	**CHECK ELECTRONIC THROTTLE CONTROL.** 1) Turn the ignition switch to OFF. 2) Remove the electronic throttle control. 3) Check the electronic throttle control.	Are foreign matter found inside electronic throttle control?	Remove foreign matter from electronic throttle control.	Perform the diagnosis of DTC P2101. <Ref. to EN(H6DO)(diag)-336, DTC P2101 THROTTLE ACTUATOR CONTROL MOTOR CIRCUIT RANGE/PERFORMANCE, Diagnostic Procedure with Diagnostic Trouble Code (DTC).>

DU:DTC P050A COLD START IDLE AIR CONTROL SYSTEM PERFORMANCE

DTC DETECTING CONDITION:

- Detected when two consecutive driving cycles with fault occur.
- GENERAL DESCRIPTION <Ref. to GD(H6DO)-194, DTC P050A COLD START IDLE AIR CONTROL SYSTEM PERFORMANCE, Diagnostic Trouble Code (DTC) Detecting Criteria.>

TROUBLE SYMPTOM:

- Engine keeps running at higher speed than specified idle speed.
- Engine keeps running at a lower speed than the specified idle speed.
- Engine stalls.

CAUTION:
After servicing or replacing faulty parts, perform Clear Memory Mode <Ref. to EN(H6DO)(diag)-57, OPERATION, Clear Memory Mode.>, and Inspection Mode <Ref. to EN(H6DO)(diag)-44, PROCEDURE, Inspection Mode.>.

WIRING DIAGRAM:

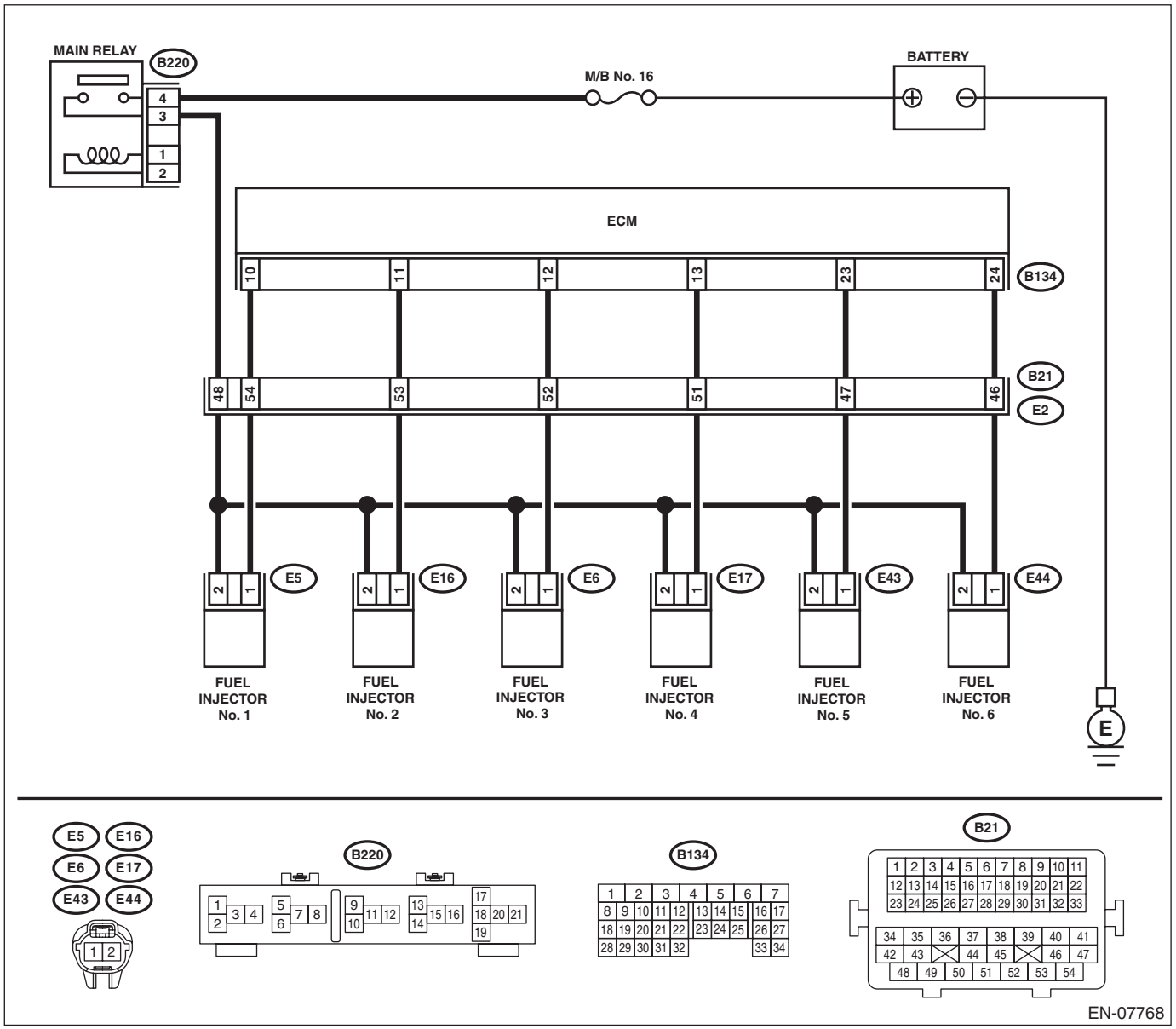

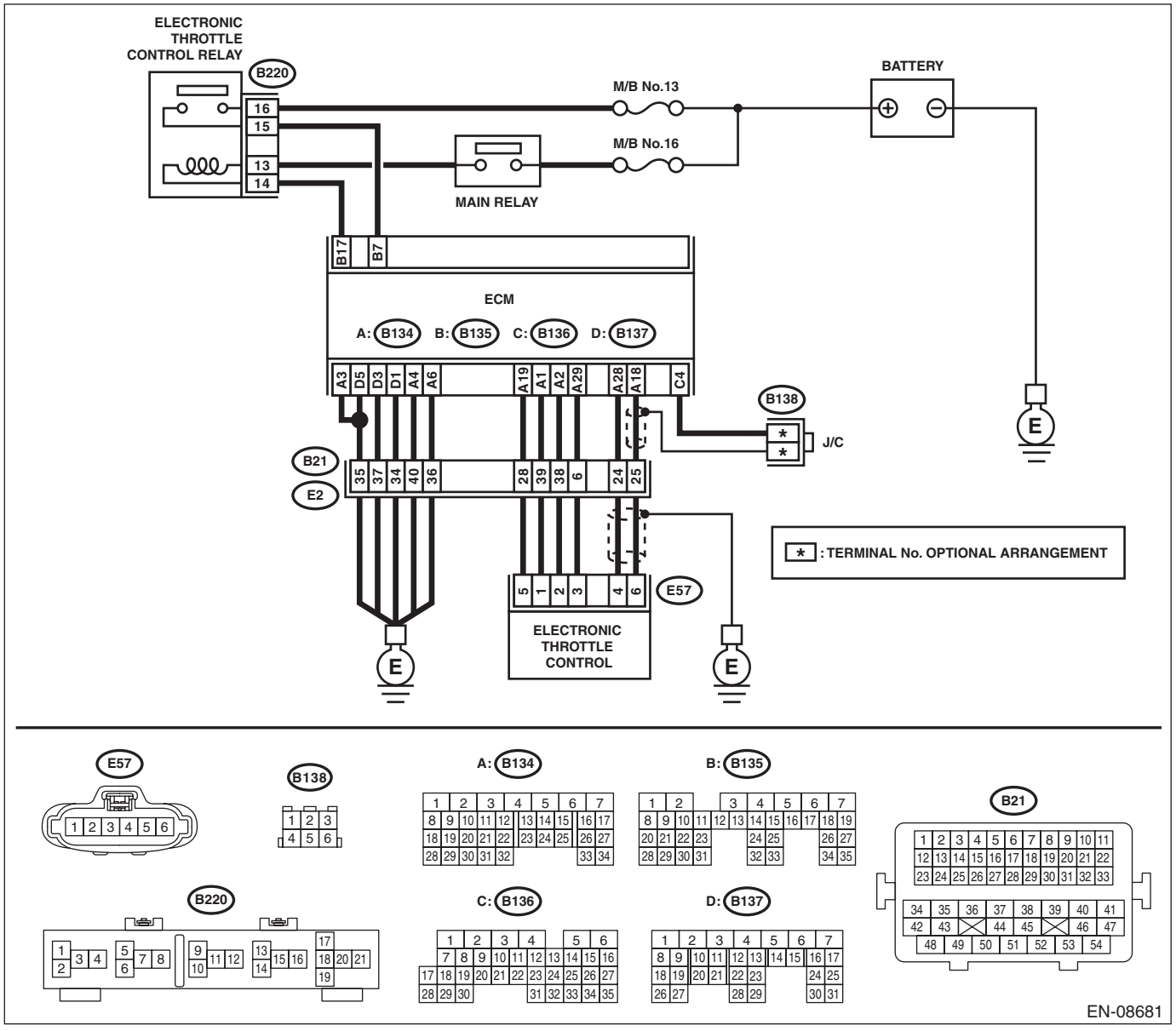

Step		Check	Yes	No
1	**CHECK FOR ANY OTHER DTC ON DISPLAY.**	Is any other DTC displayed?	Check the appropriate DTC using the "List of Diagnostic Trouble Code (DTC)". <Ref. to EN(H6DO)(diag)-85, List of Diagnostic Trouble Code (DTC).>	Go to step **2**.
2	**CHECK ENGINE OIL.**	Is there a proper amount of engine oil?	Go to step **3**.	Replace engine oil. <Ref. to LU(H6DO)-9, REPLACEMENT, Engine Oil.>
3	**CHECK EXHAUST SYSTEM.**	Are there holes or loose bolts on exhaust system?	Repair the exhaust system.	Go to step **4**.

	Step	Check	Yes	No
4	**CHECK AIR INTAKE SYSTEM.**	Are there holes, loose bolts or disconnection of hose on air intake system?	Repair the air intake system.	Go to step **5**.
5	**CHECK FUEL PRESSURE.** **WARNING:** **Place "NO OPEN FLAMES" signs near the working area.** **CAUTION:** **Be careful not to spill fuel.** Measure the fuel pressure. <Ref. to ME(H6DO)-31, INSPECTION, Fuel Pressure.> **CAUTION:** **Release fuel pressure before removing the fuel pressure gauge.**	Is the measured value 340 — 400 kPa (3.5 — 4.1 kgf/cm^2, 49 — 58 psi)?	Go to step **6**.	Repair the following item. Fuel pressure is too high: • Clogged fuel line or bent hose Fuel pressure is too low: • Improper fuel pump discharge • Clogged fuel line
6	**CHECK ENGINE COOLANT TEMPERATURE SENSOR.** 1) Start the engine and warm up completely. 2) Read the value of «Coolant Temp.» using the Subaru Select Monitor or a general scan tool. NOTE: • Subaru Select Monitor For detailed operation procedures, refer to "READ CURRENT DATA FOR ENGINE". <Ref. to EN(H6DO)(diag)-35, Subaru Select Monitor.> • General scan tool For detailed operation procedures, refer to the general scan tool operation manual.	Is the value of «Coolant Temp.» 75°C (167°F) or more?	Go to step **7**.	Replace the engine coolant temperature sensor. <Ref. to FU(H6DO)-29, Engine Coolant Temperature Sensor.>
7	**CHECK MASS AIR FLOW AND INTAKE AIR TEMPERATURE SENSOR.** 1) Start the engine and warm up engine until coolant temperature is higher than 75°C (167°F). 2) Place the select lever in "P" range or "N" range. 3) Turn the A/C switch to OFF. 4) Turn all the accessory switches to OFF. 5) Read the value of «Mass Air Flow» using the Subaru Select Monitor or a general scan tool. NOTE: • Subaru Select Monitor For detailed operation procedures, refer to "READ CURRENT DATA FOR ENGINE". <Ref. to EN(H6DO)(diag)-35, Subaru Select Monitor.> • General scan tool For detailed operation procedures, refer to the general scan tool operation manual.	Is the value of «Mass Air Flow» 2.0 — 5.0 g/s (0.26 — 0.66 lb/m)?	Go to step **8**.	Replace the mass air flow and intake air temperature sensor. <Ref. to FU(H6DO)-41, Mass Air Flow and Intake Air Temperature Sensor.>

	Step	Check	Yes	No
8	**CHECK MASS AIR FLOW AND INTAKE AIR TEMPERATURE SENSOR.** 1) Start the engine and warm up engine until coolant temperature is higher than 75°C (167°F). 2) Place the select lever in “P” range or “N” range. 3) Turn the A/C switch to OFF. 4) Turn all the accessory switches to OFF. 5) Open the front hood. 6) Measure the ambient temperature. 7) Read the value of «Intake Air Temp.» using the Subaru Select Monitor or a general scan tool. NOTE: • Subaru Select Monitor For detailed operation procedures, refer to “READ CURRENT DATA FOR ENGINE”. <Ref. to EN(H6DO)(diag)-35, Subaru Select Monitor.> • General scan tool For detailed operation procedures, refer to the general scan tool operation manual.	Subtract ambient temperature from «Intake Air Temp.». Is the obtained value –10 — 50°C (–18 — 90°F)?	Go to step **9**.	Check the mass air flow and intake air temperature sensor. <Ref. to FU(H6DO)-41, Mass Air Flow and Intake Air Temperature Sensor.>
9	**CHECK OUTPUT SIGNAL OF ECM.** 1) Turn the ignition switch to ON. 2) Measure the voltage between ECM and chassis ground on faulty cylinders. ***Connector & terminal*** ***#1 (B134) No. 10 (+) — Chassis ground (–):*** ***#2 (B134) No. 11 (+) — Chassis ground (–):*** ***#3 (B134) No. 12 (+) — Chassis ground (–):*** ***#4 (B134) No. 13 (+) — Chassis ground (–):*** ***#5 (B134) No. 23 (+) — Chassis ground (–):*** ***#6 (B134) No. 24 (+) — Chassis ground (–):***	Is the voltage 10 V or more?	Go to step **14**.	Go to step **10**.
10	**CHECK HARNESS BETWEEN ECM AND FUEL INJECTOR.** 1) Turn the ignition switch to OFF. 2) Disconnect the connector from fuel injector on faulty cylinders. 3) Measure the resistance between fuel injector connector and engine ground on faulty cylinders. ***Connector & terminal*** ***#1 (E5) No. 1 — Engine ground:*** ***#2 (E16) No. 1 — Engine ground:*** ***#3 (E6) No. 1 — Engine ground:*** ***#4 (E17) No. 1 — Engine ground:*** ***#5 (E43) No. 1 — Engine ground:*** ***#6 (E44) No. 1 — Engine ground:***	Is the resistance 1 MΩ or more?	Go to step **11**.	Repair the ground short circuit of harness between ECM and fuel injector.
11	**CHECK HARNESS BETWEEN ECM AND FUEL INJECTOR.** Measure the resistance of harness between ECM and fuel injector on faulty cylinders. ***Connector & terminal*** ***#1 (B134) No. 10 — (E5) No. 1:*** ***#2 (B134) No. 11 — (E16) No. 1:*** ***#3 (B134) No. 12 — (E6) No. 1:*** ***#4 (B134) No. 13 — (E17) No. 1:*** ***#5 (B134) No. 23 — (E43) No. 1:*** ***#6 (B134) No. 24 — (E44) No. 1:***	Is the resistance less than 1 Ω?	Go to step **12**.	Repair the harness and connector. NOTE: In this case, repair the following item: • Open circuit in harness between ECM and fuel injector connector • Poor contact of coupling connector

	Step	Check	Yes	No
12	**CHECK FUEL INJECTOR.** Measure the resistance between fuel injector terminals on faulty cylinder. ***Terminals*** ***No. 1 — No. 2:***	Is the resistance 5 — 20 Ω?	Go to step **13**.	Replace the faulty fuel injector. <Ref. to FU(H6DO)-44, Fuel Injector.>
13	**CHECK POWER SUPPLY LINE.** 1) Turn the ignition switch to ON. 2) Measure the voltage between fuel injector and engine ground on faulty cylinders. ***Connector & terminal*** ***#1 (E5) No. 2 (+) — Engine ground (–):*** ***#2 (E16) No. 2 (+) — Engine ground (–):*** ***#3 (E6) No. 2 (+) — Engine ground (–):*** ***#4 (E17) No. 2 (+) — Engine ground (–):*** ***#5 (E43) No. 2 (+) — Engine ground (–):*** ***#6 (E44) No. 2 (+) — Engine ground (–):***	Is the voltage 10 V or more?	Repair the poor contact of all connectors in fuel injector circuit.	Repair the harness and connector. NOTE: In this case, repair the following item: • Open circuit in harness between the main relay and fuel injector on faulty cylinders • Poor contact of coupling connector • Poor contact of main relay connector
14	**CHECK HARNESS BETWEEN ECM AND FUEL INJECTOR.** 1) Turn the ignition switch to OFF. 2) Disconnect the connector from fuel injector on faulty cylinders. 3) Turn the ignition switch to ON. 4) Measure the voltage between ECM and chassis ground on faulty cylinders. ***Connector & terminal*** ***#1 (B134) No. 10 (+) — Chassis ground (–):*** ***#2 (B134) No. 11 (+) — Chassis ground (–):*** ***#3 (B134) No. 12 (+) — Chassis ground (–):*** ***#4 (B134) No. 13 (+) — Chassis ground (–):*** ***#5 (B134) No. 23 (+) — Chassis ground (–):*** ***#6 (B134) No. 24 (+) — Chassis ground (–):***	Is the voltage 10 V or more?	Repair the short circuit to power in the harness between the ECM and fuel injector.	Go to step **15**.
15	**CHECK FUEL INJECTOR.** 1) Turn the ignition switch to OFF. 2) Measure the resistance between fuel injector terminals on faulty cylinder. ***Terminals*** ***No. 1 — No. 2:***	Is the resistance 5 — 20 Ω?	Go to step **16**.	Replace the faulty fuel injector. <Ref. to FU(H6DO)-44, Fuel Injector.>
16	**CHECK INSTALLATION OF CAMSHAFT POSITION SENSOR/CRANKSHAFT POSITION SENSOR.**	Is the camshaft position sensor or crankshaft position sensor loosely installed?	Tighten the camshaft position sensor or crankshaft position sensor.	Go to step **17**.
17	**CHECK CRANK PLATE.**	Is the crank sprocket rusted or the teeth of crank plate broken?	Replace the crank plate. <Ref. to ME(H6DO)-104, Cylinder Block.>	Go to step **18**.
18	**CHECK INSTALLATION CONDITION OF TIMING CHAIN.** Turn the crankshaft using ST, and align the alignment mark on crank sprocket with alignment mark on cylinder block. ST 18252AA000 CRANKSHAFT SOCKET	Is the timing chain dislocated from its proper position?	Correct the installation condition of timing chain. <Ref. to ME(H6DO)-62, Timing Chain Assembly.>	Go to step **19**.

	Step	Check	Yes	No
19	**CHECK ELECTRONIC THROTTLE CONTROL RELAY.** 1) Turn the ignition switch to OFF. 2) Remove the electronic throttle control relay. 3) Connect the battery to terminals No. 13 and No. 14 of electronic throttle control relay. 4) Measure the resistance between electronic throttle control relay terminals. ***Terminals*** ***No. 15 — No. 16:***	Is the resistance less than 1 Ω?	Go to step **20**.	Replace the electronic throttle control relay. <Ref. to EN(H6DO)(diag)-9, Electrical Component Location.>
20	**CHECK POWER SUPPLY OF ELECTRONIC THROTTLE CONTROL RELAY.** Measure the voltage between electronic throttle control relay connector and chassis ground. ***Connector & terminal*** ***(B220) No. 16 (+) — Chassis ground (–):***	Is the voltage 10 V or more?	Go to step **21**.	Repair the open or ground short circuit of power supply circuit.
21	**CHECK HARNESS BETWEEN ECM AND ELECTRONIC THROTTLE CONTROL RELAY.** 1) Disconnect the connector from ECM. 2) Turn the ignition switch to ON. 3) Measure the voltage between electronic throttle control relay connector and chassis ground. ***Connector & terminal*** ***(B220) No. 14 (+) — Chassis ground (–):***	Is the voltage 10 V or more?	Repair the short circuit to power in harness between ECM and electronic throttle control relay.	Go to step **22**.
22	**CHECK HARNESS BETWEEN ECM AND ELECTRONIC THROTTLE CONTROL RELAY.** 1) Turn the ignition switch to OFF. 2) Measure the resistance between electronic throttle control relay connector and chassis ground. ***Connector & terminal*** ***(B220) No. 14 — Chassis ground:*** ***(B220) No. 15 — Chassis ground:***	Is the resistance 1 MΩ or more?	Go to step **23**.	Repair the ground short circuit of harness between ECM and electronic throttle control relay.
23	**CHECK HARNESS BETWEEN ECM AND ELECTRONIC THROTTLE CONTROL RELAY.** Measure the resistance between ECM and electronic throttle control relay connector. ***Connector & terminal*** ***(B135) No. 17 — (B220) No. 14:*** ***(B135) No. 7 — (B220) No. 15:***	Is the resistance less than 1 Ω?	Go to step **24**.	Repair the open circuit of harness between ECM and electronic throttle control relay.
24	**CHECK HARNESS BETWEEN ECM AND ELECTRONIC THROTTLE CONTROL.** 1) Turn the ignition switch to OFF. 2) Disconnect the connectors from ECM and electronic throttle control. 3) Measure the resistance between ECM and chassis ground. ***Connector & terminal*** ***(B134) No. 19 — Chassis ground:*** ***(B134) No. 18 — Chassis ground:*** ***(B134) No. 18 — (B136) No. 4:*** ***(B134) No. 28 — Chassis ground:***	Is the resistance 1 MΩ or more?	Go to step **25**.	Repair the short circuit to ground in harness between ECM and electronic throttle control connector.

	Step	Check	Yes	No
25	**CHECK SHORT CIRCUIT INSIDE THE ECM.** 1) Connect the connector to ECM. 2) Measure the resistance between electronic throttle control connector and engine ground. ***Connector & terminal*** ***(E57) No. 6 — Engine ground:*** ***(E57) No. 4 — Engine ground:***	Is the resistance 1 MΩ or more?	Go to step **26**.	Repair the short circuit to ground in harness between ECM and electronic throttle control connector. Replace the ECM if defective. <Ref. to FU(H6DO)-54, Engine Control Module (ECM).>
26	**CHECK HARNESS BETWEEN ECM AND ELECTRONIC THROTTLE CONTROL.** 1) Disconnect the connector from ECM. 2) Measure the resistance of harness between ECM and electronic throttle control connector. ***Connector & terminal*** ***(B134) No. 18 — (E57) No. 6:*** ***(B134) No. 28 — (E57) No. 4:*** ***(B134) No. 29 — (E57) No. 3:***	Is the resistance less than 1 Ω?	Go to step **27**.	Repair the harness and connector. NOTE: In this case, repair the following item: • Open circuit in harness between ECM and electronic throttle control connector • Poor contact of coupling connector
27	**CHECK HARNESS BETWEEN ECM AND ELECTRONIC THROTTLE CONTROL.** 1) Connect the connector to ECM. 2) Measure the resistance between electronic throttle control connector and engine ground. ***Connector & terminal*** ***(E57) No. 3 — Engine ground:***	Is the resistance less than 5 Ω?	Go to step **28**.	Repair the harness and connector. NOTE: In this case, repair the following item: • Open circuit of harness between ECM and engine ground • Poor contact of ECM connector • Poor contact of coupling connector
28	**CHECK HARNESS BETWEEN ECM AND ELECTRONIC THROTTLE CONTROL.** 1) Turn the ignition switch to ON. 2) Measure the voltage between electronic throttle control connector and engine ground. ***Connector & terminal*** ***(E57) No. 6 (+) — Engine ground (–):*** ***(E57) No. 4 (+) — Engine ground (–):***	Is the voltage 5 V or more?	Repair the short circuit to power in harness between ECM and electronic throttle control connector.	Go to step **29**.
29	**CHECK HARNESS BETWEEN ECM AND ELECTRONIC THROTTLE CONTROL.** 1) Turn the ignition switch to OFF. 2) Disconnect the connector from ECM. 3) Measure the resistance between ECM connectors. ***Connector & terminal*** ***(B134) No. 19 — (B134) No. 18:*** ***(B134) No. 19 — (B134) No. 28:***	Is the resistance 1 MΩ or more?	Go to step **30**.	Repair the short circuit to power in harness between ECM and electronic throttle control connector.

	Step	Check	Yes	No
30	**CHECK SENSOR OUTPUT.** 1) Connect all connectors. 2) Turn the ignition switch to ON. 3) Read the value of «Main-Throttle Sensor» using Subaru Select Monitor. NOTE: For detailed operation procedures, refer to "READ CURRENT DATA FOR ENGINE". <Ref. to EN(H6DO)(diag)-35, Subaru Select Monitor.>	Is the value of «Main-Throttle Sensor» 0.81 — 0.87 V?	Go to step **31**.	Repair the poor contact of electronic throttle control connector. Replace the electronic throttle control if defective. <Ref. to FU(H6DO)-19, Throttle Body.>
31	**CHECK SENSOR OUTPUT.** Read the value of «Sub-Throttle Sensor» using Subaru Select Monitor. NOTE: For detailed operation procedures, refer to "READ CURRENT DATA FOR ENGINE". <Ref. to EN(H6DO)(diag)-35, Subaru Select Monitor.>	Is the value of «Sub-Throttle Sensor» 1.64 — 1.70 V?	Go to step **32**.	Repair the poor contact of electronic throttle control connector. Replace the electronic throttle control if defective. <Ref. to FU(H6DO)-19, Throttle Body.>
32	**CHECK HARNESS BETWEEN ECM AND ELECTRONIC THROTTLE CONTROL MOTOR.** 1) Turn the ignition switch to OFF. 2) Disconnect the connectors from ECM and electronic throttle control. 3) Measure the resistance between ECM and electronic throttle control connector. ***Connector & terminal*** ***(B134) No. 1 — (E57) No. 1:*** ***(B134) No. 2 — (E57) No. 2:***	Is the resistance less than 1 Ω?	Go to step **33**.	Repair the harness and connector. NOTE: In this case, repair the following item: • Open circuit in harness between ECM and electronic throttle control • Poor contact of coupling connector
33	**CHECK HARNESS BETWEEN ECM AND ELECTRONIC THROTTLE CONTROL MOTOR.** 1) Connect the connector to ECM. 2) Turn the ignition switch to ON. 3) Measure the voltage between electronic throttle control connector and engine ground. ***Connector & terminal*** ***(E57) No. 2 (+) — Engine ground (–):*** ***(E57) No. 1 (+) — Engine ground (–):***	Is the voltage 5 V or more?	Repair the short circuit to power in the harness between ECM and electronic throttle control.	Go to step **34**.
34	**CHECK HARNESS BETWEEN ECM AND ELECTRONIC THROTTLE CONTROL MOTOR.** 1) Turn the ignition switch to OFF. 2) Disconnect the connector from ECM. 3) Measure the resistance between electronic throttle control connector and engine ground. ***Connector & terminal*** ***(E57) No. 2 — Engine ground:*** ***(E57) No. 1 — Engine ground:***	Is the resistance 1 MΩ or more?	Go to step **35**.	Repair the short circuit to ground in harness between ECM and electronic throttle control.
35	**CHECK ELECTRONIC THROTTLE CONTROL MOTOR HARNESS.** Measure the resistance between electronic throttle control connectors. ***Connector & terminal*** ***(E57) No. 2 — (E57) No. 1:***	Is the resistance 1 MΩ or more?	Go to step **36**.	Repair the short circuit of harness between ECM and electronic throttle control.

	Step	Check	Yes	No
36	**CHECK ELECTRONIC THROTTLE CONTROL GROUND CIRCUIT.** Measure the resistance between ECM and chassis ground. ***Connector & terminal*** ***(B134) No. 3 — Chassis ground:*** ***(B134) No. 4 — Chassis ground:*** ***(B134) No. 6 — Chassis ground:*** ***(B137) No. 1 — Chassis ground:*** ***(B137) No. 3 — Chassis ground:*** ***(B137) No. 5 — Chassis ground:***	Is the resistance less than 5 Ω?	Go to step **37**.	Repair the harness and connector. NOTE: In this case, repair the following item: • Open circuit of harness between ECM and engine ground • Poor contact of coupling connector
37	**CHECK ELECTRONIC THROTTLE CONTROL.** Measure the resistance between electronic throttle control terminals. ***Terminals*** ***No. 2 — No. 1:***	Is the resistance 50 Ω or less?	Go to step **38**.	Replace the electronic throttle control. <Ref. to FU(H6DO)-19, Throttle Body.>
38	**CHECK ELECTRONIC THROTTLE CONTROL.** Move the throttle valve to the fully open and fully closed positions with fingers. Check that the valve returns to the specified position when releasing fingers.	Does the valve return to the specified position? Standard value: 3 mm (0.12 in) from fully closed position	Repair the poor contact of ECM connector.	Replace the electronic throttle control. <Ref. to FU(H6DO)-19, Throttle Body.>

DV:DTC P050B COLD START IGNITION TIMING PERFORMANCE

NOTE:
For the diagnostic procedure, refer to DTC P050A. <Ref. to EN(H6DO)(diag)-262, DTC P050A COLD START IDLE AIR CONTROL SYSTEM PERFORMANCE, Diagnostic Procedure with Diagnostic Trouble Code (DTC).>

DW:DTC P0512 STARTER REQUEST CIRCUIT

DTC DETECTING CONDITION:

- Immediately at fault recognition
- GENERAL DESCRIPTION <Ref. to GD(H6DO)-199, DTC P0512 STARTER REQUEST CIRCUIT, Diagnostic Trouble Code (DTC) Detecting Criteria.>

TROUBLE SYMPTOM:

Failure of engine to start

CAUTION:

After servicing or replacing faulty parts, perform Clear Memory Mode <Ref. to EN(H6DO)(diag)-57, OPERATION, Clear Memory Mode.>, and Inspection Mode <Ref. to EN(H6DO)(diag)-44, PROCEDURE, Inspection Mode.>.

WIRING DIAGRAM:

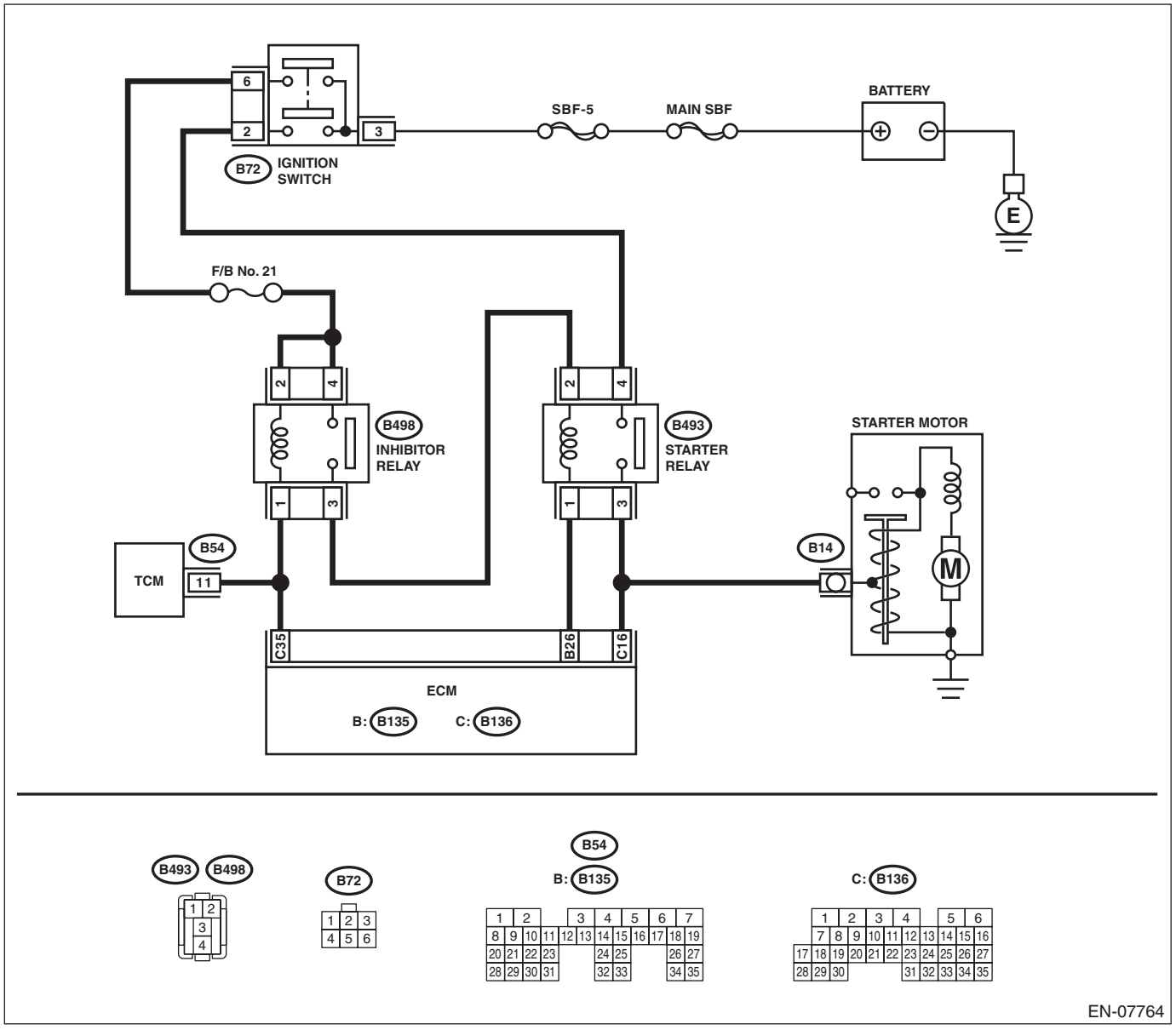

EN-07764

	Step	Check	Yes	No
1	**CHECK FOR ANY OTHER DTC ON DISPLAY.**	Is any other DTC displayed?	Check the appropriate DTC using the “List of Diagnostic Trouble Code (DTC)”. <Ref. to EN(H6DO)(diag)-85, List of Diagnostic Trouble Code (DTC).>	Go to step **2**.
2	**CHECK HARNESS BETWEEN ECM AND STARTER RELAY CONNECTOR.** 1) Turn the ignition switch to OFF. 2) Disconnect the connector from ECM. 3) Turn the ignition switch to ON. 4) Measure the voltage between ECM and chassis ground. ***Connector & terminal*** ***(B136) No. 16 (+) — Chassis ground (–):***	Is the voltage 10 V or more?	Repair the short circuit to power supply in harness between ECM and starter relay connector.	Repair the poor contact of ECM connector.

DX:DTC P0604 INTERNAL CONTROL MODULE RANDOM ACCESS MEMORY (RAM) ERROR

DTC DETECTING CONDITION:

- Immediately at fault recognition
- GENERAL DESCRIPTION <Ref. to GD(H6DO)-201, DTC P0604 INTERNAL CONTROL MODULE RANDOM ACCESS MEMORY (RAM) ERROR, Diagnostic Trouble Code (DTC) Detecting Criteria.>

TROUBLE SYMPTOM:

- Engine does not start.
- Engine stalls.

CAUTION:
After servicing or replacing faulty parts, perform Clear Memory Mode <Ref. to EN(H6DO)(diag)-57, OPERATION, Clear Memory Mode.>, and Inspection Mode <Ref. to EN(H6DO)(diag)-44, PROCEDURE, Inspection Mode.>.

Step	Check	Yes	No
1 **CHECK FOR ANY OTHER DTC ON DISPLAY.**	Is any other DTC displayed?	Check the appropriate DTC using the "List of Diagnostic Trouble Code (DTC)". <Ref. to EN(H6DO)(diag)-85, List of Diagnostic Trouble Code (DTC).>	Even if DTC is detected, the circuit has returned to a normal condition at this time. Reproduce the failure, and then perform the diagnosis again. NOTE: In this case, temporary poor contact of connector, temporary open or short circuit of harness may be the cause.

DY:DTC P0605 INTERNAL CONTROL MODULE READ ONLY MEMORY (ROM) ERROR

NOTE:
For the diagnostic procedure, refer to DTC P0607. <Ref. to EN(H6DO)(diag)-274, DTC P0607 THROTTLE CONTROL SYSTEM CIRCUIT RANGE/PERFORMANCE, Diagnostic Procedure with Diagnostic Trouble Code (DTC).>

DZ:DTC P0607 THROTTLE CONTROL SYSTEM CIRCUIT RANGE/PERFORMANCE

DTC DETECTING CONDITION:

- Immediately at fault recognition
- GENERAL DESCRIPTION <Ref. to GD(H6DO)-203, DTC P0607 THROTTLE CONTROL SYSTEM CIRCUIT RANGE/PERFORMANCE, Diagnostic Trouble Code (DTC) Detecting Criteria.>

TROUBLE SYMPTOM:

- Improper idling
- Poor driving performance

CAUTION:

After servicing or replacing faulty parts, perform Clear Memory Mode <Ref. to EN(H6DO)(diag)-57, OPERATION, Clear Memory Mode.>, and Inspection Mode <Ref. to EN(H6DO)(diag)-44, PROCEDURE, Inspection Mode.>.

WIRING DIAGRAM:

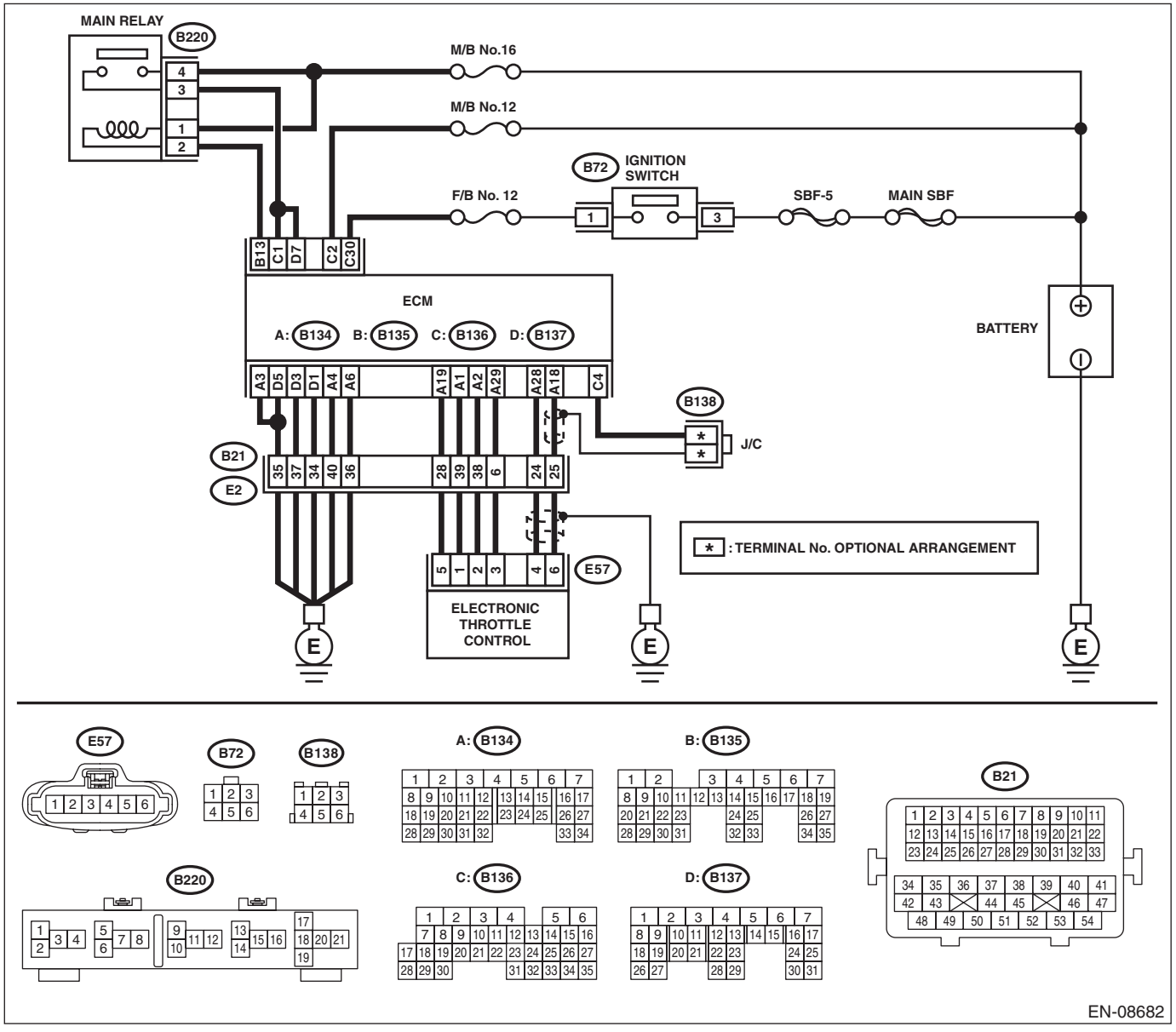

	Step	Check	Yes	No
1	**CHECK INPUT VOLTAGE OF ECM.** 1) Turn the ignition switch to ON. 2) Measure the voltage between ECM and chassis ground. ***Connector & terminal*** ***(B136) No. 1 (+) — Chassis ground (–):*** ***(B137) No. 7 (+) — Chassis ground (–):***	Is the voltage 10 — 13 V?	Go to step **2**.	Repair the open or ground short circuit of power supply circuit.
2	**CHECK INPUT VOLTAGE OF ECM.** 1) Start the engine. 2) Measure the voltage between ECM and chassis ground. ***Connector & terminal*** ***(B136) No. 1 (+) — Chassis ground (–):*** ***(B137) No. 7 (+) — Chassis ground (–):***	Is the voltage 13 — 15 V?	Go to step **3**.	Repair the open or ground short circuit of power supply circuit.
3	**CHECK HARNESS BETWEEN ECM AND ELECTRONIC THROTTLE CONTROL.** 1) Turn the ignition switch to OFF. 2) Disconnect the connectors from ECM and electronic throttle control. 3) Measure the resistance of harness between ECM and electronic throttle control connector. ***Connector & terminal*** ***(B134) No. 19 — (E57) No. 5:*** ***(B134) No. 29 — (E57) No. 3:***	Is the resistance less than 1 Ω?	Go to step **4**.	Repair the harness and connector. NOTE: In this case, repair the following item: • Open circuit in harness between ECM and electronic throttle control connector • Poor contact of coupling connector
4	**CHECK ECM GROUND HARNESS.** 1) Connect all connectors. 2) Turn the ignition switch to ON. 3) Measure the voltage between ECM and chassis ground. ***Connector & terminal*** ***(B134) No. 3 (+) — Chassis ground (–):*** ***(B134) No. 4 (+) — Chassis ground (–):*** ***(B134) No. 6 (+) — Chassis ground (–):*** ***(B137) No. 1 (+) — Chassis ground (–):*** ***(B137) No. 3 (+) — Chassis ground (–):*** ***(B137) No. 5 (+) — Chassis ground (–):***	Is the voltage less than 1 V?	Repair the poor contact of ECM connector.	Repair the harness and connector. NOTE: In this case, repair the following item: • Open circuit in ground circuit • Further tightening of the engine ground terminal • Poor contact of coupling connector

EA:DTC P0638 THROTTLE ACTUATOR CONTROL RANGE/PERFORMANCE (BANK 1)

NOTE:
For the diagnostic procedure, refer to DTC P2101. <Ref. to EN(H6DO)(diag)-336, DTC P2101 THROTTLE ACTUATOR CONTROL MOTOR CIRCUIT RANGE/PERFORMANCE, Diagnostic Procedure with Diagnostic Trouble Code (DTC).>

EB:DTC P0700 TRANSMISSION CONTROL SYSTEM (MIL REQUEST)

NOTE:
For the diagnostic procedure, refer to AT section. <Ref. to 5AT(diag)-2, Basic Diagnostic Procedure.>

EC:DTC P1152 O2 SENSOR CIRCUIT RANGE/PERFORMANCE (LOW) (BANK1 SENSOR1)

DTC DETECTING CONDITION:

- Detected when two consecutive driving cycles with fault occur.
- GENERAL DESCRIPTION <Ref. to GD(H6DO)-208, DTC P1152 O2 SENSOR CIRCUIT RANGE/PERFORMANCE (LOW) (BANK1 SENSOR1), Diagnostic Trouble Code (DTC) Detecting Criteria.>

CAUTION:

After servicing or replacing faulty parts, perform Clear Memory Mode <Ref. to EN(H6DO)(diag)-57, OPERATION, Clear Memory Mode.>, and Inspection Mode <Ref. to EN(H6DO)(diag)-44, PROCEDURE, Inspection Mode.>.

WIRING DIAGRAM:

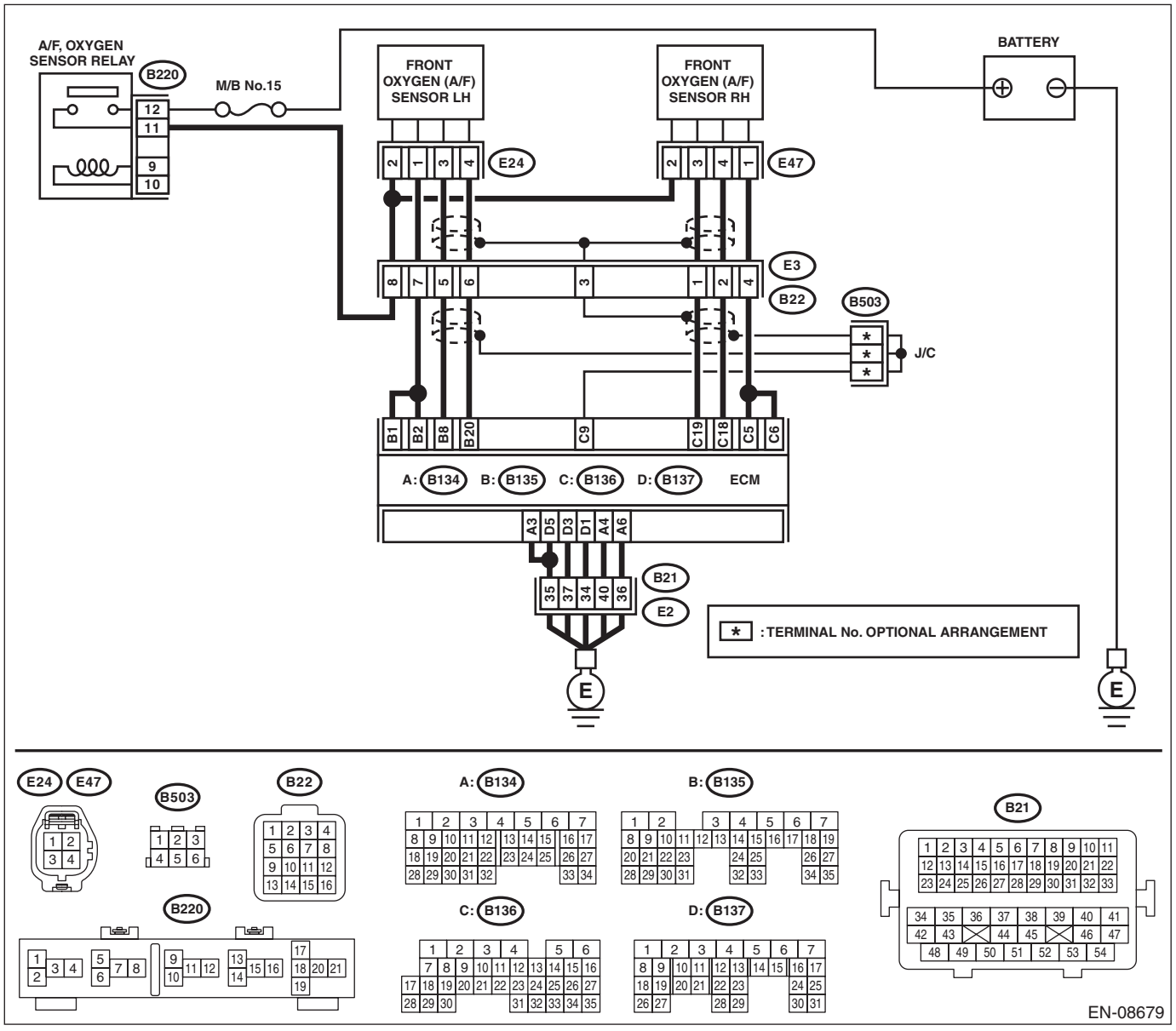

Step		Check	Yes	No
1	**CHECK FRONT OXYGEN (A/F) SENSOR CONNECTOR AND COUPLING CONNECTOR.**	Has water entered the connector?	Completely remove any water inside.	Go to step **2**.

	Step	Check	Yes	No
2	**CHECK HARNESS BETWEEN ECM AND FRONT OXYGEN (A/F) SENSOR CONNECTOR.** 1) Turn the ignition switch to OFF. 2) Disconnect the connectors from ECM and front oxygen (A/F) sensor. 3) Measure the resistance of harness between ECM and front oxygen (A/F) sensor connector. ***Connector & terminal*** ***(B136) No. 19 — (E47) No. 3:*** ***(B136) No. 18 — (E47) No. 4:***	Is the resistance less than 1 Ω?	Go to step **3**.	Repair the harness and connector. NOTE: In this case, repair the following item: • Open circuit in harness between ECM and front oxygen (A/F) sensor connector • Poor contact of coupling connector
3	**CHECK FOR POOR CONTACT.** Check for poor contact of the front oxygen (A/F) sensor connector.	Is there poor contact of front oxygen (A/F) sensor connector?	Repair the poor contact of front oxygen (A/F) sensor connector.	Replace the front oxygen (A/F) sensor. <Ref. to FU(H6DO)-50, Front Oxygen (A/F) Sensor.>

ED:DTC P1153 O2 SENSOR CIRCUIT RANGE/PERFORMANCE (HIGH) (BANK1 SENSOR1)

DTC DETECTING CONDITION:

- Detected when two consecutive driving cycles with fault occur.
- GENERAL DESCRIPTION <Ref. to GD(H6DO)-210, DTC P1153 O2 SENSOR CIRCUIT RANGE/PERFORMANCE (HIGH) (BANK1 SENSOR1), Diagnostic Trouble Code (DTC) Detecting Criteria.>

CAUTION:

After servicing or replacing faulty parts, perform Clear Memory Mode <Ref. to EN(H6DO)(diag)-57, OPERATION, Clear Memory Mode.>, and Inspection Mode <Ref. to EN(H6DO)(diag)-44, PROCEDURE, Inspection Mode.>.

WIRING DIAGRAM:

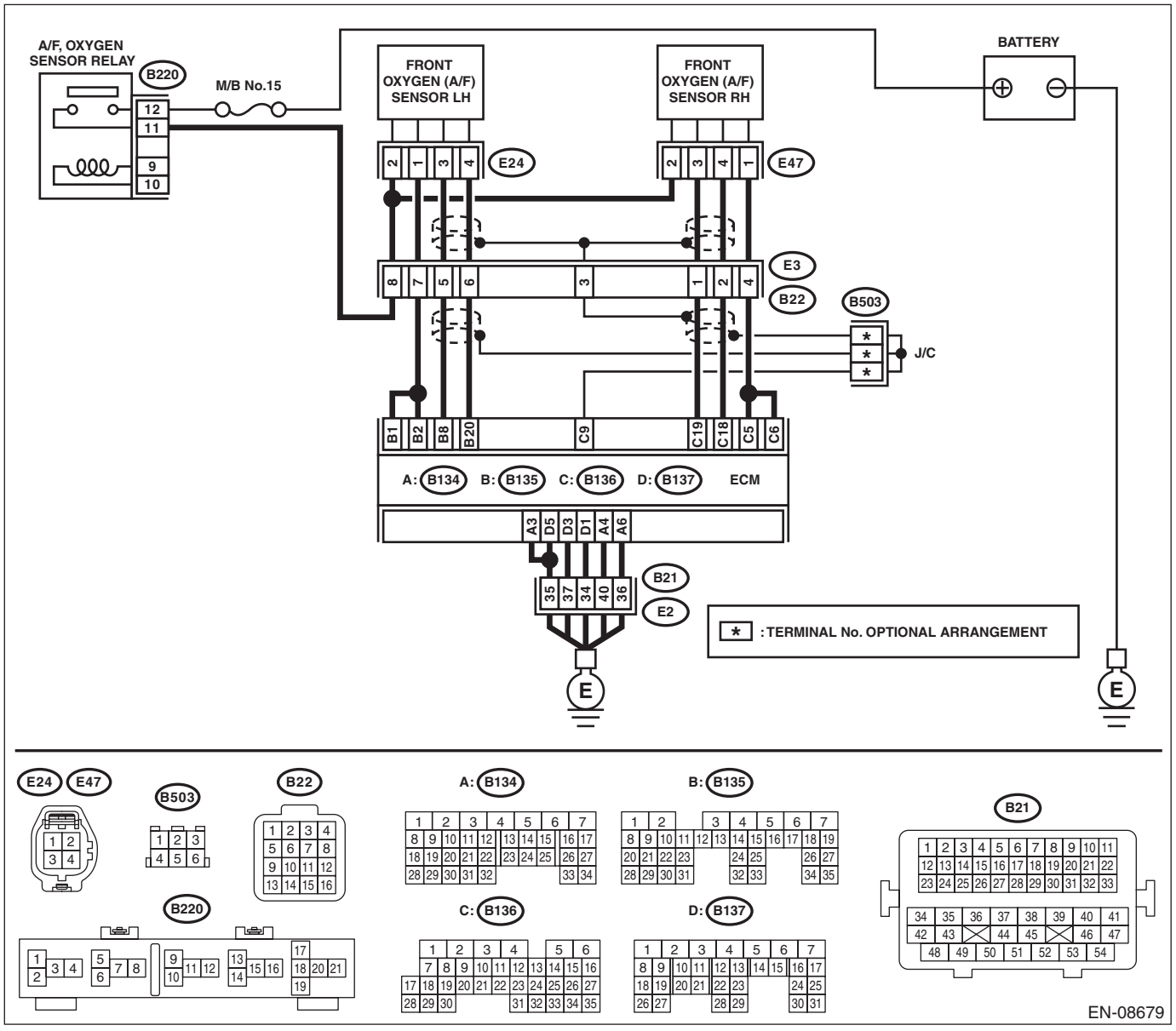

Step		Check	Yes	No
1	**CHECK FRONT OXYGEN (A/F) SENSOR CONNECTOR AND COUPLING CONNECTOR.**	Has water entered the connector?	Completely remove any water inside.	Go to step **2**.

	Step	Check	Yes	No
2	**CHECK HARNESS BETWEEN ECM AND FRONT OXYGEN (A/F) SENSOR CONNECTOR.** 1) Turn the ignition switch to OFF. 2) Disconnect the connector from ECM. 3) Measure the resistance between ECM and chassis ground. ***Connector & terminal*** ***(B136) No. 19 — Chassis ground:*** ***(B136) No. 18 — Chassis ground:***	Is the resistance 1 MΩ or more?	Go to step **3**.	Repair the ground short circuit of harness between ECM and front oxygen (A/F) sensor connector.
3	**CHECK OUTPUT SIGNAL FOR ECM.** 1) Connect the connector to ECM. 2) Turn the ignition switch to ON. 3) Measure the voltage between ECM and chassis ground. ***Connector & terminal*** ***(B136) No. 19 (+) — Chassis ground (–):***	Is the voltage 4.5 V or more?	Go to step **5**.	Go to step **4**.
4	**CHECK OUTPUT SIGNAL FOR ECM.** Measure the voltage between ECM and chassis ground. ***Connector & terminal*** ***(B136) No. 18 (+) — Chassis ground (–):***	Is the voltage 4.95 V or more?	Go to step **5**.	Replace the front oxygen (A/F) sensor. <Ref. to FU(H6DO)-50, Front Oxygen (A/F) Sensor.>
5	**CHECK OUTPUT SIGNAL FOR ECM.** Measure the voltage between ECM and chassis ground. ***Connector & terminal*** ***(B136) No. 19 (+) — Chassis ground (–):*** ***(B136) No. 18 (+) — Chassis ground (–):***	Is the voltage 8 V or more?	Repair the short circuit to power in the harness between ECM and front oxygen (A/F) sensor connector. After repair, replace the ECM. <Ref. to FU(H6DO)-54, Engine Control Module (ECM).>	Repair the poor contact of ECM connector.

EE:DTC P1154 O2 SENSOR CIRCUIT RANGE/PERFORMANCE (LOW) (BANK 2 SENSOR 1)

DTC DETECTING CONDITION:

- Detected when two consecutive driving cycles with fault occur.
- GENERAL DESCRIPTION <Ref. to GD(H6DO)-212, DTC P1154 O2 SENSOR CIRCUIT RANGE/PERFORMANCE (LOW) (BANK 2 SENSOR 1), Diagnostic Trouble Code (DTC) Detecting Criteria.>

CAUTION:

After servicing or replacing faulty parts, perform Clear Memory Mode <Ref. to EN(H6DO)(diag)-57, OPERATION, Clear Memory Mode.>, and Inspection Mode <Ref. to EN(H6DO)(diag)-44, PROCEDURE, Inspection Mode.>.

WIRING DIAGRAM:

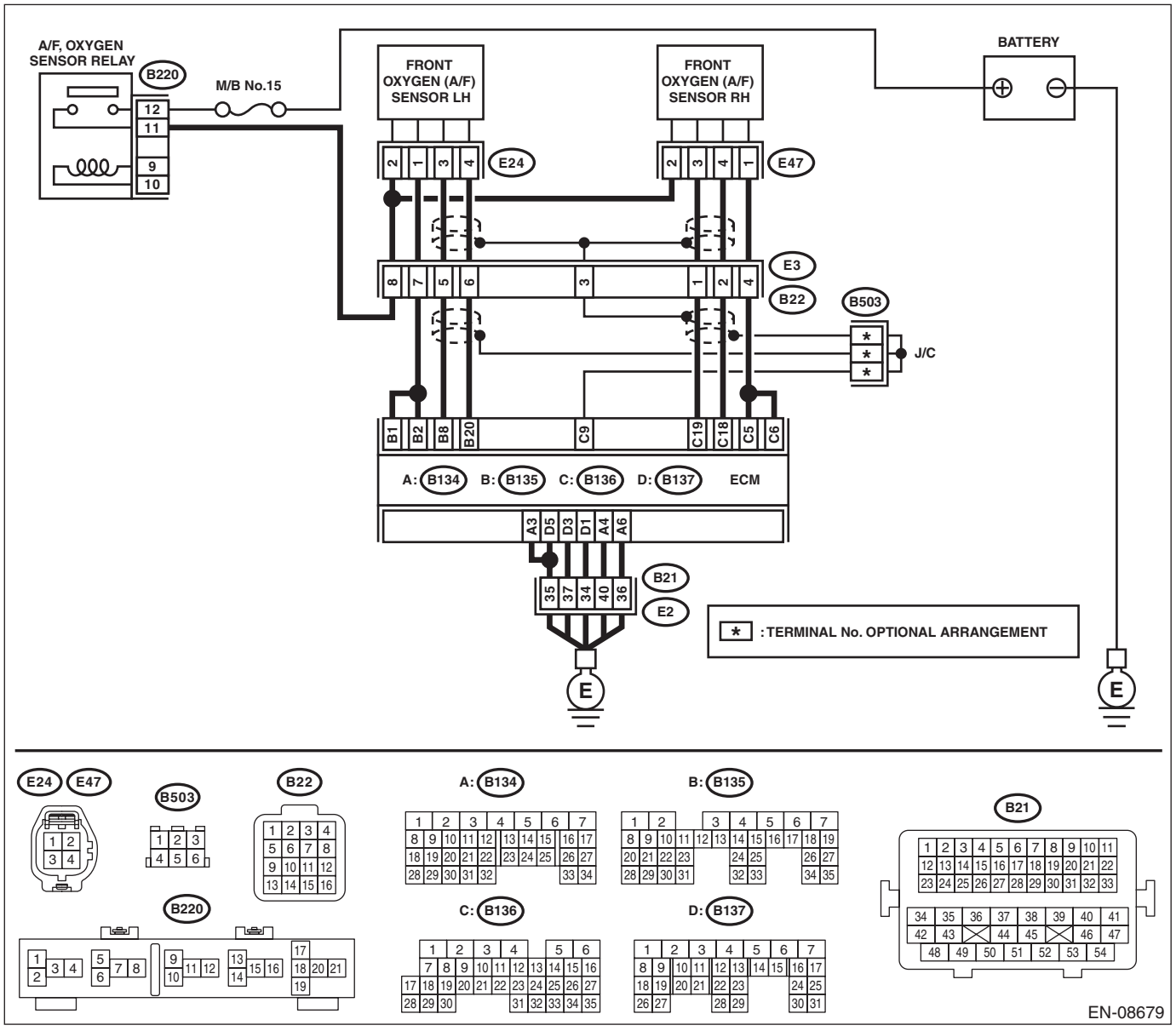

Step		Check	Yes	No
1	**CHECK FRONT OXYGEN (A/F) SENSOR CONNECTOR AND COUPLING CONNECTOR.**	Has water entered the connector?	Completely remove any water inside.	Go to step **2**.

	Step	Check	Yes	No
2	**CHECK HARNESS BETWEEN ECM AND FRONT OXYGEN (A/F) SENSOR CONNECTOR.** 1) Turn the ignition switch to OFF. 2) Disconnect the connectors from ECM and front oxygen (A/F) sensor. 3) Measure the resistance of harness between ECM and front oxygen (A/F) sensor connector. ***Connector & terminal*** ***(B135) No. 8 — (E24) No. 3:*** ***(B135) No. 20 — (E24) No. 4:***	Is the resistance less than 1 Ω?	Go to step **3**.	Repair the harness and connector. NOTE: In this case, repair the following item: • Open circuit in harness between ECM and front oxygen (A/F) sensor connector • Poor contact of coupling connector
3	**CHECK FOR POOR CONTACT.** Check for poor contact of the front oxygen (A/F) sensor connector.	Is there poor contact of front oxygen (A/F) sensor connector?	Repair the poor contact of front oxygen (A/F) sensor connector.	Replace the front oxygen (A/F) sensor. <Ref. to FU(H6DO)-50, Front Oxygen (A/F) Sensor.>

EF:DTC P1155 O2 SENSOR CIRCUIT RANGE/PERFORMANCE (HIGH) (BANK 2 SENSOR 1)

DTC DETECTING CONDITION:

- Detected when two consecutive driving cycles with fault occur.
- GENERAL DESCRIPTION <Ref. to GD(H6DO)-212, DTC P1155 O2 SENSOR CIRCUIT RANGE/PERFORMANCE (HIGH) (BANK 2 SENSOR 1), Diagnostic Trouble Code (DTC) Detecting Criteria.>

CAUTION:
After servicing or replacing faulty parts, perform Clear Memory Mode <Ref. to EN(H6DO)(diag)-57, OPERATION, Clear Memory Mode.>, and Inspection Mode <Ref. to EN(H6DO)(diag)-44, PROCEDURE, Inspection Mode.>.

WIRING DIAGRAM:

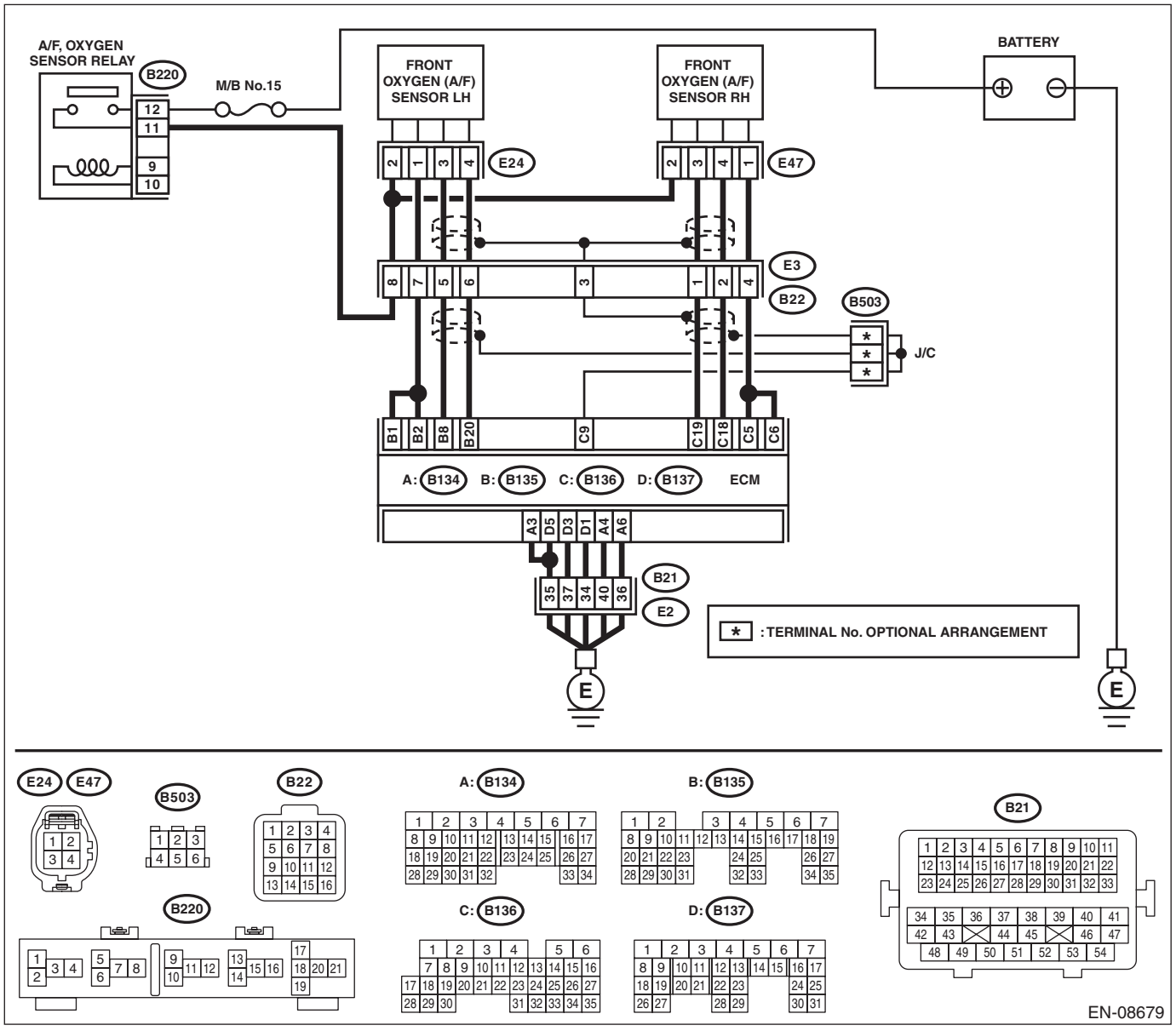

Step		Check	Yes	No
1	**CHECK FRONT OXYGEN (A/F) SENSOR CONNECTOR AND COUPLING CONNECTOR.**	Has water entered the connector?	Completely remove any water inside.	Go to step **2**.

	Step	Check	Yes	No
2	**CHECK HARNESS BETWEEN ECM AND FRONT OXYGEN (A/F) SENSOR CONNECTOR.** 1) Turn the ignition switch to OFF. 2) Disconnect the connector from ECM. 3) Measure the resistance between ECM and chassis ground. ***Connector & terminal*** ***(B135) No. 8 — Chassis ground:*** ***(B135) No. 20 — Chassis ground:***	Is the resistance 1 MΩ or more?	Go to step **3**.	Repair the ground short circuit of harness between ECM and front oxygen (A/F) sensor connector.
3	**CHECK OUTPUT SIGNAL FOR ECM.** 1) Connect the connector to ECM. 2) Turn the ignition switch to ON. 3) Measure the voltage between ECM and chassis ground. ***Connector & terminal*** ***(B135) No. 8 (+) — Chassis ground (–):***	Is the voltage 4.5 V or more?	Go to step **5**.	Go to step **4**.
4	**CHECK OUTPUT SIGNAL FOR ECM.** Measure the voltage between ECM and chassis ground. ***Connector & terminal*** ***(B135) No. 20 (+) — Chassis ground (–):***	Is the voltage 4.95 V or more?	Go to step **5**.	Replace the front oxygen (A/F) sensor. <Ref. to FU(H6DO)-50, Front Oxygen (A/F) Sensor.>
5	**CHECK OUTPUT SIGNAL FOR ECM.** Measure the voltage between ECM and chassis ground. ***Connector & terminal*** ***(B135) No. 8 (+) — Chassis ground (–):*** ***(B135) No. 20 (+) — Chassis ground (–):***	Is the voltage 8 V or more?	Repair the short circuit to power in the harness between ECM and front oxygen (A/F) sensor connector. After repair, replace the ECM. <Ref. to FU(H6DO)-54, Engine Control Module (ECM).>	Repair the poor contact of ECM connector.

EG:DTC P1160 RETURN SPRING FAILURE

NOTE:
For the diagnostic procedure, refer to DTC P2101. <Ref. to EN(H6DO)(diag)-336, DTC P2101 THROTTLE ACTUATOR CONTROL MOTOR CIRCUIT RANGE/PERFORMANCE, Diagnostic Procedure with Diagnostic Trouble Code (DTC).>

EH:DTC P1443 VENT CONTROL SOLENOID VALVE FUNCTION PROBLEM

DTC DETECTING CONDITION:

- Immediately at fault recognition
- GENERAL DESCRIPTION <Ref. to GD(H6DO)-215, DTC P1443 VENT CONTROL SOLENOID VALVE FUNCTION PROBLEM, Diagnostic Trouble Code (DTC) Detecting Criteria.>

TROUBLE SYMPTOM:

Improper fuel supply

CAUTION:

After servicing or replacing faulty parts, perform Clear Memory Mode <Ref. to EN(H6DO)(diag)-57, OPERATION, Clear Memory Mode.>, and Inspection Mode <Ref. to EN(H6DO)(diag)-44, PROCEDURE, Inspection Mode.>.

	Step	Check	Yes	No
1	**CHECK FOR ANY OTHER DTC ON DISPLAY.**	Is any other DTC displayed?	Check the appropriate DTC using the "List of Diagnostic Trouble Code (DTC)". <Ref. to EN(H6DO)(diag)-85, List of Diagnostic Trouble Code (DTC).>	Go to step **2**.
2	**CHECK DRAIN HOSE.** Check the drain hose for clogging.	Is there clogging in the drain hose?	Replace the drain hose.	Go to step **3**.
3	**CHECK DRAIN VALVE OPERATION.** 1) Turn the ignition switch to OFF. 2) Install the delivery (test) mode fuse. **CAUTION:** **Do not use any fuses that are installed on the vehicle.** 3) Turn the ignition switch to ON. 4) Operate the drain valve. NOTE: Drain valve can be operated using the Subaru Select Monitor. For detailed procedures, refer to "SYSTEM OPERATION CHECK MODE". <Ref. to EN(H6DO)(diag)-58, System Operation Check Mode.>	Does the drain valve operate?	Repair the poor contact of ECM connector.	Replace the drain valve. <Ref. to EC(H6DO)-18, Drain Valve.>

EI: DTC P1492 EGR SOLENOID VALVE SIGNAL #1 CIRCUIT MALFUNCTION (LOW INPUT)

NOTE:

For the diagnostic procedure, refer to DTC P1498. <Ref. to EN(H6DO)(diag)-286, DTC P1498 EGR SOLENOID VALVE SIGNAL #4 CIRCUIT MALFUNCTION (LOW INPUT), Diagnostic Procedure with Diagnostic Trouble Code (DTC).>

EJ: DTC P1493 EGR SOLENOID VALVE SIGNAL #1 CIRCUIT MALFUNCTION (HIGH INPUT)

NOTE:

For the diagnostic procedure, refer to DTC P1499. <Ref. to EN(H6DO)(diag)-289, DTC P1499 EGR SOLENOID VALVE SIGNAL #4 CIRCUIT MALFUNCTION (HIGH INPUT), Diagnostic Procedure with Diagnostic Trouble Code (DTC).>

EK:DTC P1494 EGR SOLENOID VALVE SIGNAL #2 CIRCUIT MALFUNCTION (LOW INPUT)

NOTE:
For the diagnostic procedure, refer to DTC P1498. <Ref. to EN(H6DO)(diag)-286, DTC P1498 EGR SOLENOID VALVE SIGNAL #4 CIRCUIT MALFUNCTION (LOW INPUT), Diagnostic Procedure with Diagnostic Trouble Code (DTC).>

EL:DTC P1495 EGR SOLENOID VALVE SIGNAL #2 CIRCUIT MALFUNCTION (HIGH INPUT)

NOTE:
For the diagnostic procedure, refer to DTC P1499. <Ref. to EN(H6DO)(diag)-289, DTC P1499 EGR SOLENOID VALVE SIGNAL #4 CIRCUIT MALFUNCTION (HIGH INPUT), Diagnostic Procedure with Diagnostic Trouble Code (DTC).>

EM:DTC P1496 EGR SOLENOID VALVE SIGNAL #3 CIRCUIT MALFUNCTION (LOW INPUT)

NOTE:
For the diagnostic procedure, refer to DTC P1498. <Ref. to EN(H6DO)(diag)-286, DTC P1498 EGR SOLENOID VALVE SIGNAL #4 CIRCUIT MALFUNCTION (LOW INPUT), Diagnostic Procedure with Diagnostic Trouble Code (DTC).>

EN:DTC P1497 EGR SOLENOID VALVE SIGNAL #3 CIRCUIT MALFUNCTION (HIGH INPUT)

NOTE:
For the diagnostic procedure, refer to DTC P1499. <Ref. to EN(H6DO)(diag)-289, DTC P1499 EGR SOLENOID VALVE SIGNAL #4 CIRCUIT MALFUNCTION (HIGH INPUT), Diagnostic Procedure with Diagnostic Trouble Code (DTC).>

EO:DTC P1498 EGR SOLENOID VALVE SIGNAL #4 CIRCUIT MALFUNCTION (LOW INPUT)

DTC DETECTING CONDITION:

- Immediately at fault recognition
- GENERAL DESCRIPTION <Ref. to GD(H6DO)-217, DTC P1492 EGR SOLENOID VALVE SIGNAL #1 CIRCUIT MALFUNCTION (LOW INPUT), Diagnostic Trouble Code (DTC) Detecting Criteria.> <Ref. to GD(H6DO)-221, DTC P1494 EGR SOLENOID VALVE SIGNAL #2 CIRCUIT MALFUNCTION (LOW INPUT), Diagnostic Trouble Code (DTC) Detecting Criteria.> <Ref. to GD(H6DO)-221, DTC P1496 EGR SOLENOID VALVE SIGNAL #3 CIRCUIT MALFUNCTION (LOW INPUT), Diagnostic Trouble Code (DTC) Detecting Criteria.> <Ref. to GD(H6DO)-221, DTC P1498 EGR SOLENOID VALVE SIGNAL #4 CIRCUIT MALFUNCTION (LOW INPUT), Diagnostic Trouble Code (DTC) Detecting Criteria.>

TROUBLE SYMPTOM:

- Improper idling
- Poor driving performance
- Engine breathing

CAUTION:

After servicing or replacing faulty parts, perform Clear Memory Mode <Ref. to EN(H6DO)(diag)-57, OPERATION, Clear Memory Mode.>, and Inspection Mode <Ref. to EN(H6DO)(diag)-44, PROCEDURE, Inspection Mode.>.

WIRING DIAGRAM:

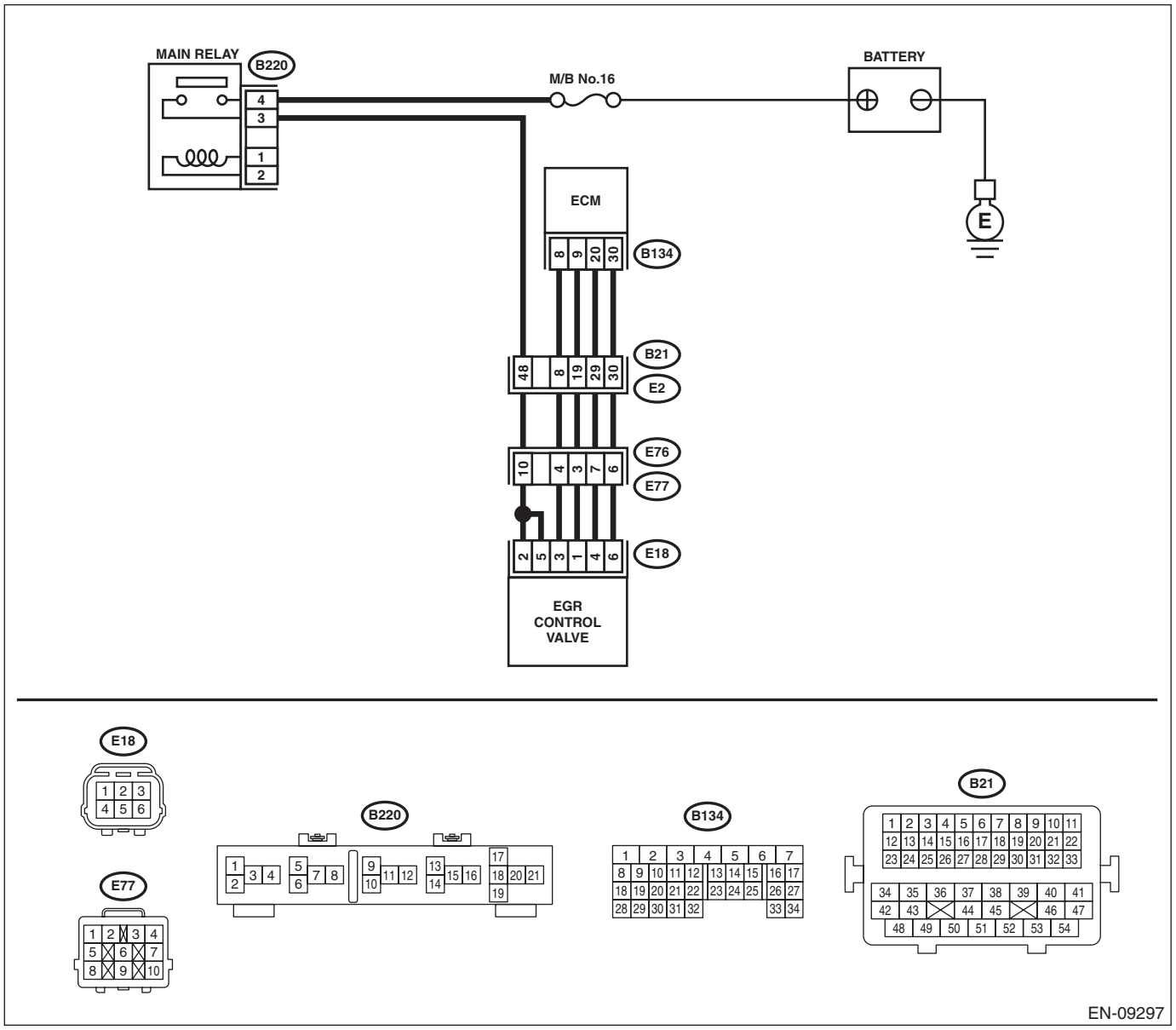

Step		Check	Yes	No
1	**CHECK POWER SUPPLY TO EGR CONTROL VALVE.** 1) Turn the ignition switch to OFF. 2) Disconnect the connector from the EGR control valve. 3) Turn the ignition switch to ON. 4) Measure the voltage between EGR control valve connector and engine ground. ***Connector & terminal*** ***(E18) No. 2 (+) — Engine ground (–):*** ***(E18) No. 5 (+) — Engine ground (–):***	Is the voltage 10 V or more?	Go to step **2**.	Repair the harness and connector. NOTE: In this case, repair the following item: • Open circuit in harness between EGR control valve connector and main relay connector • Poor contact of coupling connector

	Step	Check	Yes	No
2	**CHECK HARNESS BETWEEN ECM AND EGR CONTROL VALVE CONNECTOR.** 1) Turn the ignition switch to OFF. 2) Disconnect the connector from ECM. 3) Measure the resistance of harness between ECM and EGR control valve connector. ***Connector & terminal*** ***DTC P1492; (B134) No. 8 — (E18) No. 3:*** ***DTC P1494; (B134) No. 9 — (E18) No. 1:*** ***DTC P1496; (B134) No. 20 — (E18) No. 4:*** ***DTC P1498; (B134) No. 30 — (E18) No. 6:***	Is the resistance less than 1 Ω?	Go to step **3**.	Repair the harness and connector. NOTE: In this case, repair the following item: • Open circuit of harness between ECM and EGR control valve connector • Poor contact of coupling connector
3	**CHECK HARNESS BETWEEN ECM AND EGR CONTROL VALVE CONNECTOR.** 1) Disconnect the connector from ECM. 2) Measure the resistance between ECM and chassis ground. ***Connector & terminal*** ***DTC P1492; (B134) No. 8 — Chassis ground:*** ***DTC P1494; (B134) No. 9 — Chassis ground:*** ***DTC P1496; (B134) No. 20 — Chassis ground:*** ***DTC P1498; (B134) No. 30 — Chassis ground:***	Is the resistance 1 MΩ or more?	Go to step **4**.	Repair the ground short in harness between ECM and EGR control valve connector.
4	**CHECK FOR POOR CONTACT.** Check poor contact of ECM and EGR control valve connectors.	Is there poor contact in ECM or EGR control valve connector?	Repair the poor contact of ECM or EGR control valve connector.	Replace EGR control valve. <Ref. to FU(H6DO)-42, EGR Valve.>

EP:DTC P1499 EGR SOLENOID VALVE SIGNAL #4 CIRCUIT MALFUNCTION (HIGH INPUT)

DTC DETECTING CONDITION:

- Immediately at fault recognition
- GENERAL DESCRIPTION <Ref. to GD(H6DO)-219, DTC P1493 EGR SOLENOID VALVE SIGNAL #1 CIRCUIT MALFUNCTION (HIGH INPUT), Diagnostic Trouble Code (DTC) Detecting Criteria.> <Ref. to GD(H6DO)-221, DTC P1495 EGR SOLENOID VALVE SIGNAL #2 CIRCUIT MALFUNCTION (HIGH INPUT), Diagnostic Trouble Code (DTC) Detecting Criteria.> <Ref. to GD(H6DO)-221, DTC P1497 EGR SOLENOID VALVE SIGNAL #3 CIRCUIT MALFUNCTION (HIGH INPUT), Diagnostic Trouble Code (DTC) Detecting Criteria.> <Ref. to GD(H6DO)-221, DTC P1499 EGR SOLENOID VALVE SIGNAL #4 CIRCUIT MALFUNCTION (HIGH INPUT), Diagnostic Trouble Code (DTC) Detecting Criteria.>

TROUBLE SYMPTOM:

- Improper idling
- Poor driving performance
- Engine breathing

CAUTION:

After servicing or replacing faulty parts, perform Clear Memory Mode <Ref. to EN(H6DO)(diag)-57, OPERATION, Clear Memory Mode.>, and Inspection Mode <Ref. to EN(H6DO)(diag)-44, PROCEDURE, Inspection Mode.>.

WIRING DIAGRAM:

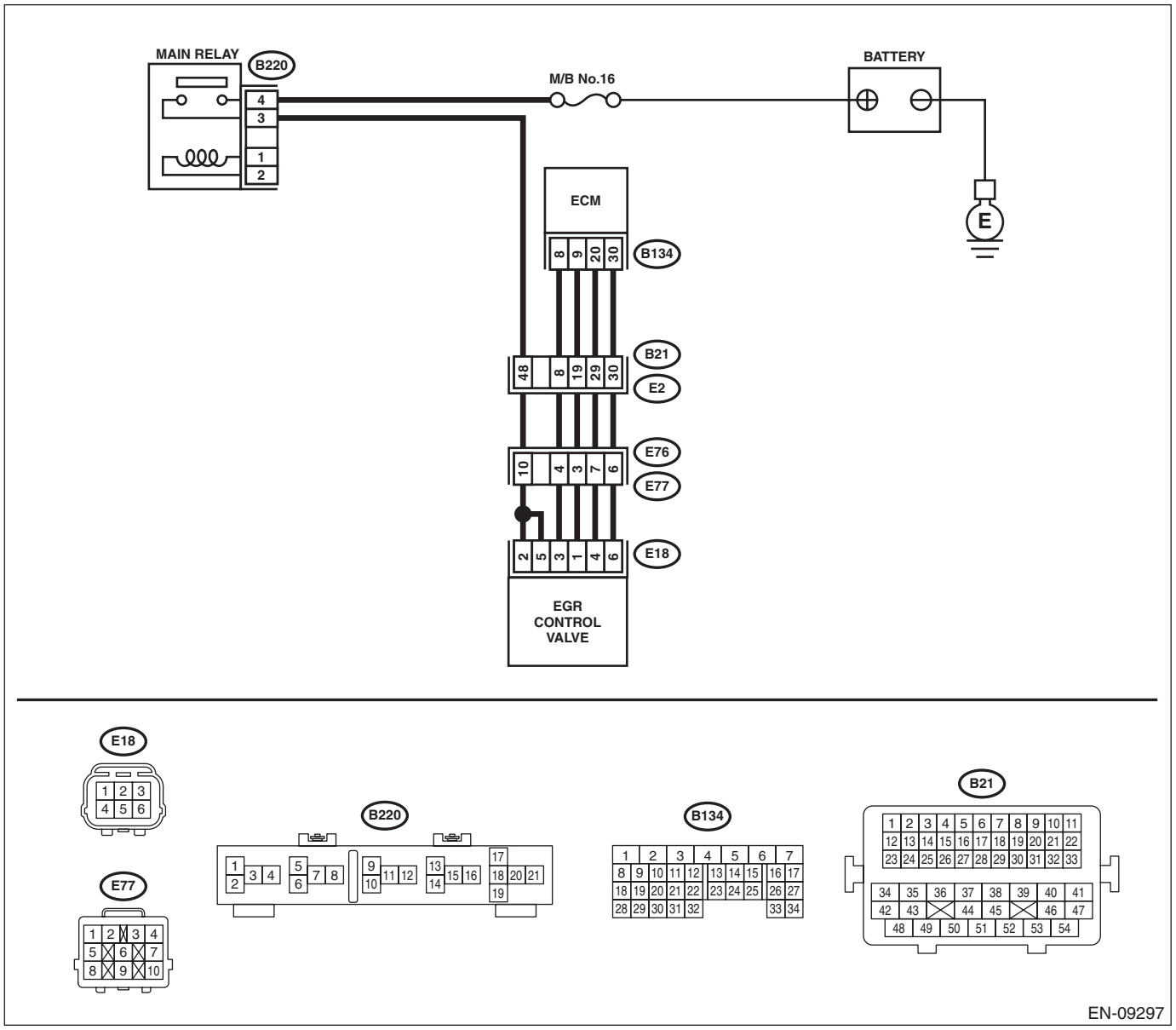

Step		Check	Yes	No
1	**CHECK HARNESS BETWEEN ECM AND EGR CONTROL VALVE CONNECTOR.** 1) Turn the ignition switch to OFF. 2) Disconnect the connector from ECM and EGR control valve. 3) Turn the ignition switch to ON. 4) Measure the voltage between ECM and chassis ground. ***Connector & terminal*** ***DTC P1493; (B134) No. 8 (+) — Chassis ground (–):*** ***DTC P1495; (B134) No. 9 (+) — Chassis ground (–):*** ***DTC P1497; (B134) No. 20 (+) — Chassis ground (–):*** ***DTC P1499; (B134) No. 30 (+) — Chassis ground (–):***	Is the voltage 10 V or more?	Repair the short circuit to power in the harness between the ECM and EGR control valve connector.	Go to step **2**.

	Step	Check	Yes	No
2	**CHECK EGR CONTROL VALVE.** Measure the resistance between EGR control valve terminals. ***Terminals*** ***DTC P1493; No. 2 — No. 3:*** ***DTC P1495; No. 2 — No. 1:*** ***DTC P1497; No. 5 — No. 4:*** ***DTC P1499; No. 5 — No. 6:***	Is the resistance 20 Ω or more?	Repair the poor contact of ECM connector.	Replace EGR control valve. <Ref. to FU(H6DO)-42, EGR Valve.>

EQ:DTC P1518 STARTER SWITCH CIRCUIT LOW INPUT

DTC DETECTING CONDITION:

- Immediately at fault recognition
- GENERAL DESCRIPTION <Ref. to GD(H6DO)-222, DTC P1518 STARTER SWITCH CIRCUIT LOW INPUT, Diagnostic Trouble Code (DTC) Detecting Criteria.>

TROUBLE SYMPTOM:

Failure of engine to start

CAUTION:

After servicing or replacing faulty parts, perform Clear Memory Mode <Ref. to EN(H6DO)(diag)-57, OPERATION, Clear Memory Mode.>, and Inspection Mode <Ref. to EN(H6DO)(diag)-44, PROCEDURE, Inspection Mode.>.

WIRING DIAGRAM:

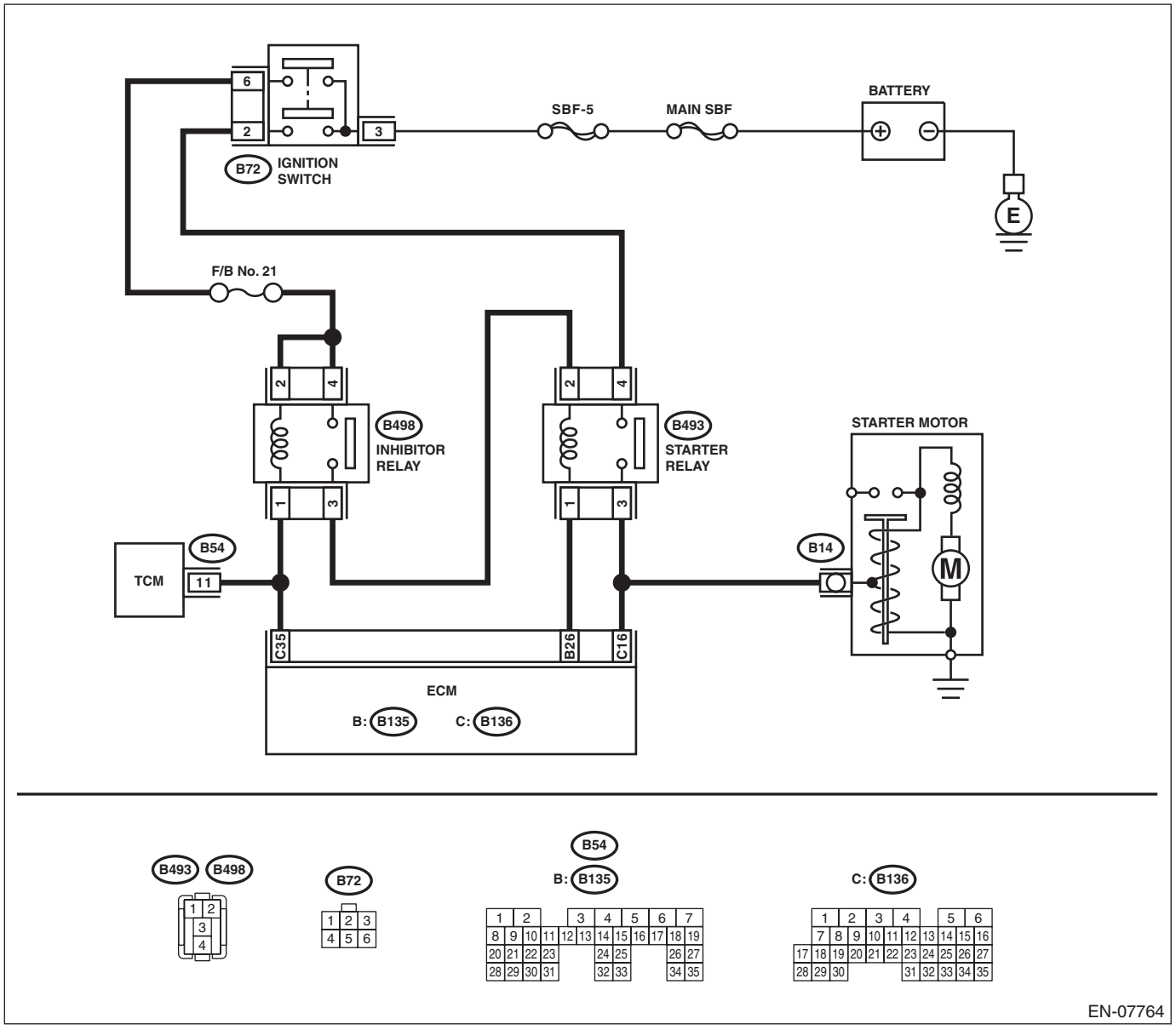

EN-07764

	Step	Check	Yes	No
1	**CHECK FOR ANY OTHER DTC ON DISPLAY.**	Is any other DTC displayed?	Check DTC using "List of Diagnostic Trouble Code (DTC)". <Ref. to EN(H6DO)(diag)-85, List of Diagnostic Trouble Code (DTC).>	Go to step **2**.
2	**CHECK HARNESS BETWEEN ECM AND STARTER RELAY CONNECTOR.** 1) Turn the ignition switch to OFF. 2) Remove the starter relay. 3) Disconnect the connectors from ECM and starter motor. 4) Measure the resistance of harness between ECM and starter relay connector. ***Connector & terminal*** ***(B136) No. 16 — (B493) No. 3:***	Is the resistance less than 1 Ω?	Go to step **3**.	Repair the open circuit of harness between ECM and starter relay connector.
3	**CHECK HARNESS BETWEEN ECM AND STARTER RELAY CONNECTOR.** Measure the resistance between ECM and chassis ground. ***Connector & terminal*** ***(B136) No. 16 — Chassis ground:***	Is the resistance 1 MΩ or more?	Repair the poor contact of ECM connector.	Repair the short circuit to ground in harness between ECM and starter relay connector.

ER:DTC P1560 BACK-UP VOLTAGE CIRCUIT MALFUNCTION

DTC DETECTING CONDITION:

- Immediately at fault recognition
- GENERAL DESCRIPTION <Ref. to GD(H6DO)-223, DTC P1560 BACK-UP VOLTAGE CIRCUIT MALFUNCTION, Diagnostic Trouble Code (DTC) Detecting Criteria.>

CAUTION:

After servicing or replacing faulty parts, perform Clear Memory Mode <Ref. to EN(H6DO)(diag)-57, OPERATION, Clear Memory Mode.>, and Inspection Mode <Ref. to EN(H6DO)(diag)-44, PROCEDURE, Inspection Mode.>.

WIRING DIAGRAM:

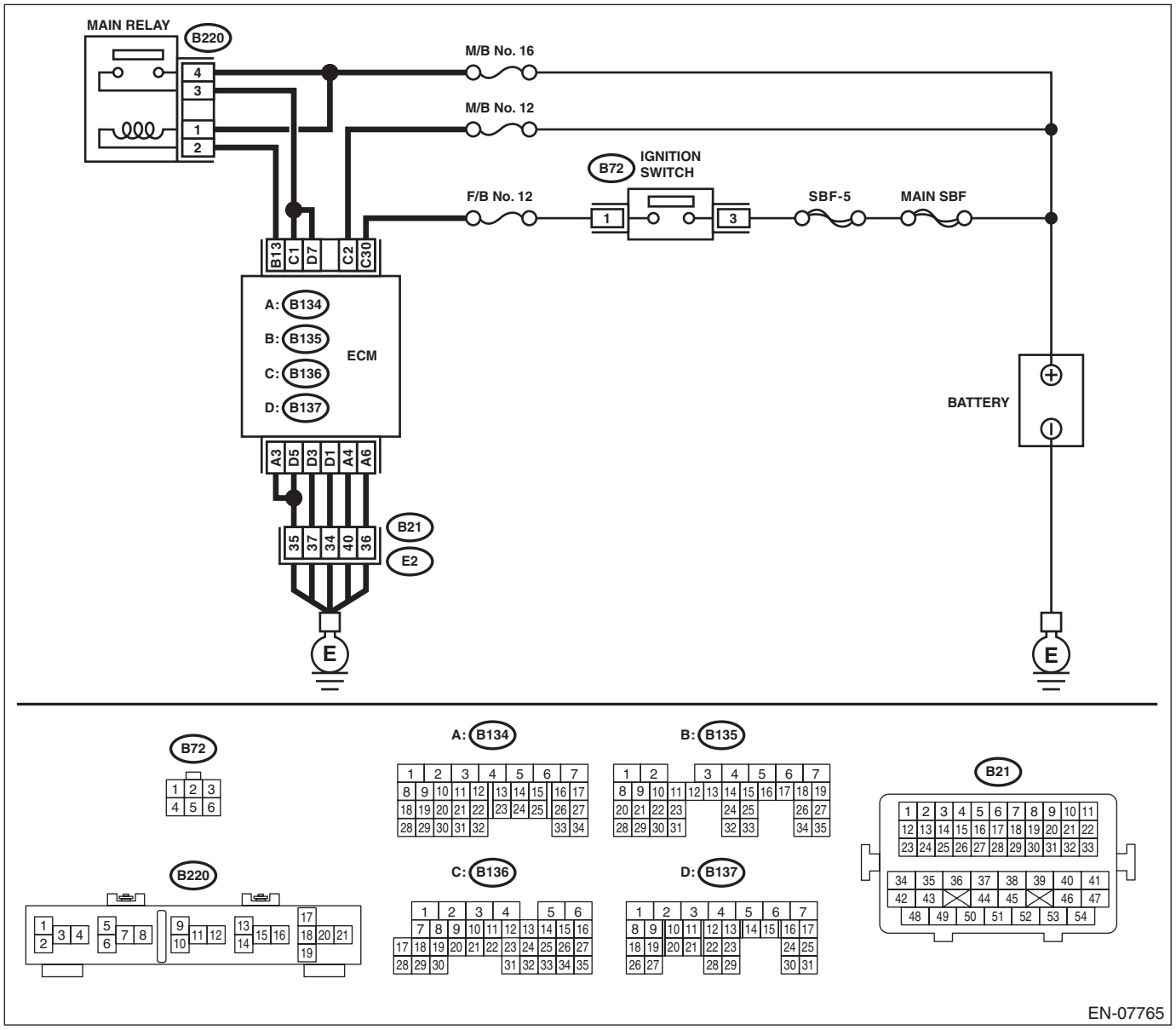

Step		Check	Yes	No
1	**CHECK INPUT SIGNAL OF ECM.** 1) Turn the ignition switch to OFF. 2) Measure the voltage between ECM and chassis ground. ***Connector & terminal*** ***(B136) No. 2 (+) — Chassis ground (–):***	Is the voltage 10 V or more?	Repair the poor contact of ECM connector.	Go to step **2**.

	Step	Check	Yes	No
2	**CHECK HARNESS BETWEEN ECM AND MAIN FUSE BOX CONNECTOR.** 1) Disconnect the connector from ECM. 2) Measure the resistance between ECM and chassis ground. ***Connector & terminal*** ***(B136) No. 2 — Chassis ground:***	Is the resistance 1 MΩ or more?	Go to step **3**.	Repair the ground short circuit of harness between ECM and battery terminal.
3	**CHECK M/B FUSE NO. 12.**	Is the fuse blown out?	Replace the fuse.	Repair the harness and connector. NOTE: In this case, repair the following item: • Open circuit in harness between ECM and battery • Poor contact of ECM connector • Poor contact of battery terminal

ES:DTC P2088 INTAKE CAMSHAFT POSITION ACTUATOR CONTROL CIRCUIT LOW (BANK 1)

DTC DETECTING CONDITION:

- Immediately at fault recognition
- GENERAL DESCRIPTION <Ref. to GD(H6DO)-225, DTC P2088 INTAKE CAMSHAFT POSITION ACTUATOR CONTROL CIRCUIT LOW (BANK 1), Diagnostic Trouble Code (DTC) Detecting Criteria.>

TROUBLE SYMPTOM:

Improper idling

CAUTION:

After servicing or replacing faulty parts, perform Clear Memory Mode <Ref. to EN(H6DO)(diag)-57, OPERATION, Clear Memory Mode.>, and Inspection Mode <Ref. to EN(H6DO)(diag)-44, PROCEDURE, Inspection Mode.>.

WIRING DIAGRAM:

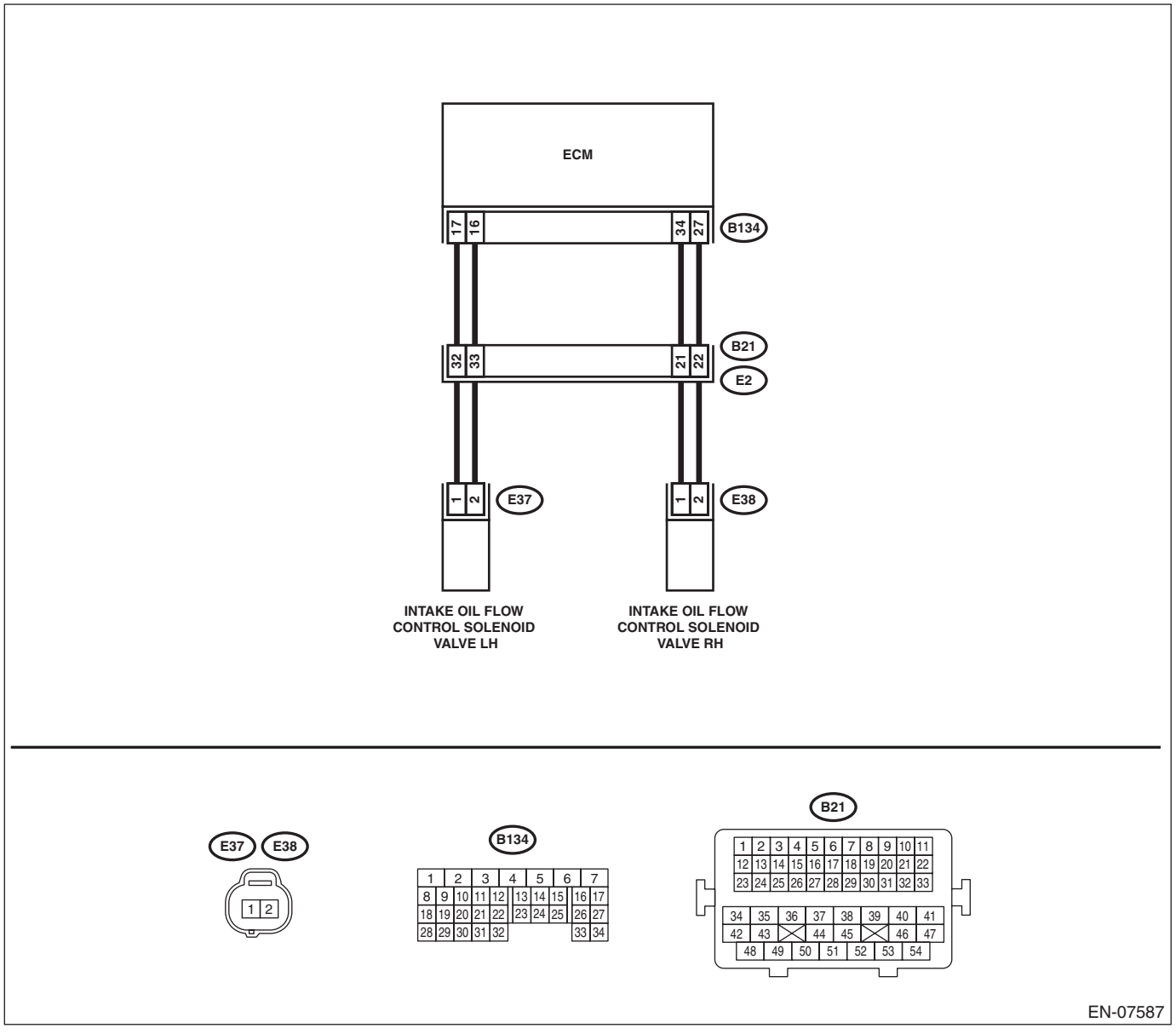

	Step	Check	Yes	No
1	**CHECK HARNESS BETWEEN ECM AND OIL FLOW CONTROL SOLENOID VALVE RH CONNECTOR.** 1) Turn the ignition switch to OFF. 2) Disconnect the connectors from ECM and oil flow control solenoid valve RH. 3) Measure the resistance of harness between ECM and oil flow control solenoid valve RH connector. ***Connector & terminal*** ***(B134) No. 34 — (E38) No. 1:*** ***(B134) No. 27 — (E38) No. 2:***	Is the resistance less than 1 Ω?	Go to step **2**.	Repair the harness and connector. NOTE: In this case, repair the following item: • Open circuit in harness between ECM and oil flow control solenoid valve RH connector • Poor contact of coupling connector
2	**CHECK HARNESS BETWEEN ECM AND OIL FLOW CONTROL SOLENOID VALVE RH CONNECTOR.** Measure the resistance between ECM and chassis ground. ***Connector & terminal*** ***(B134) No. 34 — Chassis ground:*** ***(B134) No. 27 — Chassis ground:***	Is the resistance 1 MΩ or more?	Go to step **3**.	Repair the short circuit to ground in harness between ECM and oil flow control solenoid valve RH connector.
3	**CHECK OIL FLOW CONTROL SOLENOID VALVE.** Measure the resistance between oil flow control solenoid valve terminals. ***Terminals*** ***No. 1 — No. 2:***	Is the resistance 6 — 12 Ω?	Repair the poor contact of ECM and oil flow control solenoid valve RH connector RH.	Replace the oil flow control solenoid valve RH. <Ref. to FU(H6DO)-47, Oil Flow Control Solenoid Valve.>

ET:DTC P2089 INTAKE CAMSHAFT POSITION ACTUATOR CONTROL CIRCUIT HIGH (BANK 1)

DTC DETECTING CONDITION:

- Immediately at fault recognition
- GENERAL DESCRIPTION <Ref. to GD(H6DO)-226, DTC P2089 INTAKE CAMSHAFT POSITION ACTUATOR CONTROL CIRCUIT HIGH (BANK 1), Diagnostic Trouble Code (DTC) Detecting Criteria.>

TROUBLE SYMPTOM:

Improper idling

CAUTION:

After servicing or replacing faulty parts, perform Clear Memory Mode <Ref. to EN(H6DO)(diag)-57, OPERATION, Clear Memory Mode.>, and Inspection Mode <Ref. to EN(H6DO)(diag)-44, PROCEDURE, Inspection Mode.>.

WIRING DIAGRAM:

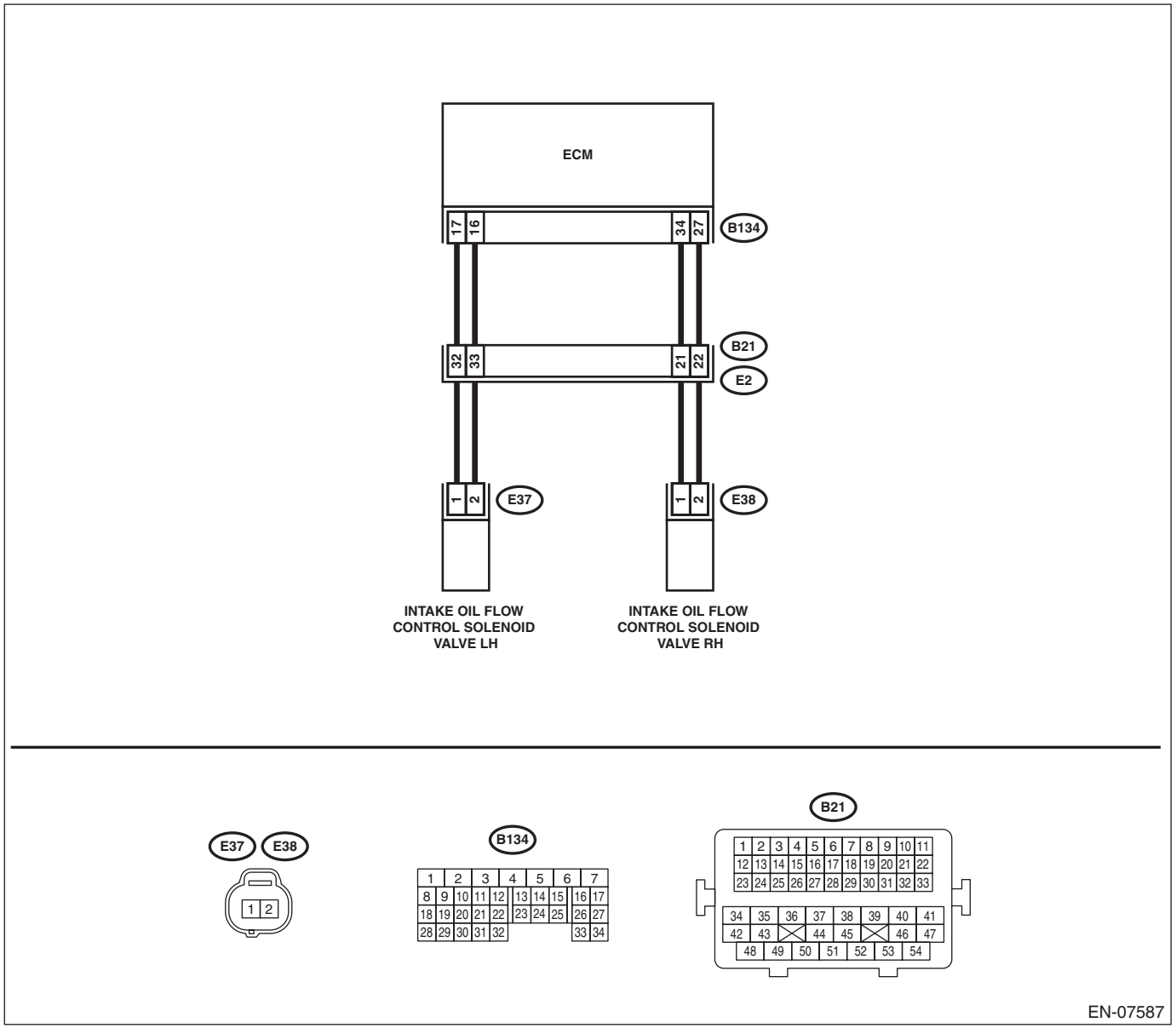

	Step	Check	Yes	No
1	**CHECK HARNESS BETWEEN ECM AND OIL FLOW CONTROL SOLENOID VALVE RH CONNECTOR.** 1) Turn the ignition switch to OFF. 2) Disconnect the connectors from ECM and oil flow control solenoid valve RH. 3) Measure the voltage between ECM and chassis ground. ***Connector & terminal*** ***(B134) No. 34 (+) — Chassis ground (–):*** ***(B134) No. 27 (+) — Chassis ground (–):***	Is the voltage less than 1 V?	Go to step **2**.	Repair the short circuit to power supply in harness between ECM and oil flow control solenoid valve RH connector.
2	**CHECK HARNESS BETWEEN ECM AND OIL FLOW CONTROL SOLENOID VALVE RH CONNECTOR.** Measure the resistance of harness between ECM and oil flow control solenoid valve RH connector. ***Connector & terminal*** ***(B134) No. 34 — (E38) No. 1:*** ***(B134) No. 27 — (E38) No. 2:***	Is the resistance less than 1 Ω?	Go to step **3**.	Repair the harness and connector. NOTE: In this case, repair the following item: • Open circuit in harness between ECM and oil flow control solenoid valve RH connector • Poor contact of coupling connector
3	**CHECK OIL FLOW CONTROL SOLENOID VALVE.** Measure the resistance between oil flow control solenoid valve terminals. ***Terminals*** ***No. 1 — No. 2:***	Is the resistance 6 — 12 Ω?	Repair the poor contact of ECM and oil flow control solenoid valve RH connector RH.	Replace the oil flow control solenoid valve RH. <Ref. to FU(H6DO)-47, Oil Flow Control Solenoid Valve.>

EU:DTC P2090 EXHAUST CAMSHAFT POSITION ACTUATOR CONTROL CIRCUIT LOW (BANK 1)

DTC DETECTING CONDITION:

- Immediately at fault recognition
- GENERAL DESCRIPTION <Ref. to GD(H6DO)-227, DTC P2090 EXHAUST CAMSHAFT POSITION ACTUATOR CONTROL CIRCUIT LOW (BANK 1), Diagnostic Trouble Code (DTC) Detecting Criteria.>

TROUBLE SYMPTOM:

Improper idling

CAUTION:

After repair or replacement of faulty parts, perform Clear Memory Mode <Ref. to EN(H6DO)(diag)-57, OPERATION, Clear Memory Mode.>, and Inspection Mode <Ref. to EN(H6DO)(diag)-44, PROCEDURE, Inspection Mode.>.

WIRING DIAGRAM:

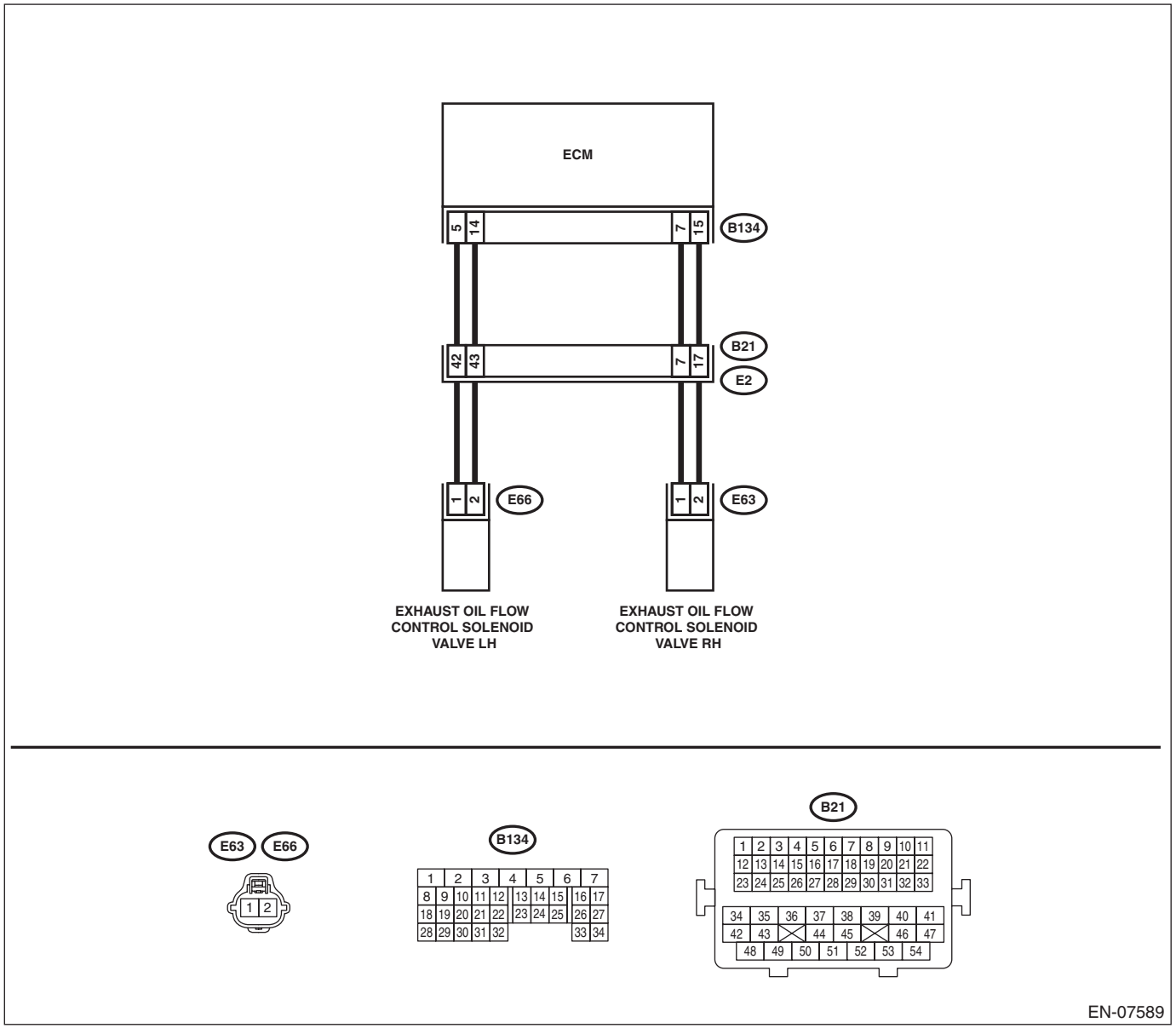

	Step	Check	Yes	No
1	**CHECK HARNESS BETWEEN ECM AND OIL FLOW CONTROL SOLENOID VALVE RH CONNECTOR.** 1) Turn the ignition switch to OFF. 2) Disconnect the connectors from ECM and oil flow control solenoid valve RH. 3) Measure the resistance of harness between ECM and oil flow control solenoid valve RH connector. ***Connector & terminal*** ***(B134) No. 7 — (E63) No. 1:*** ***(B134) No. 15 — (E63) No. 2:***	Is the resistance less than 1 Ω?	Go to step **2**.	Repair the harness and connector. NOTE: In this case, repair the following item: • Open circuit in harness between ECM and oil flow control solenoid valve RH connector • Poor contact of coupling connector
2	**CHECK HARNESS BETWEEN ECM AND OIL FLOW CONTROL SOLENOID VALVE RH CONNECTOR.** Measure the resistance between ECM and chassis ground. ***Connector & terminal*** ***(B134) No. 7 — Chassis ground:*** ***(B134) No. 15 — Chassis ground:***	Is the resistance 1 MΩ or more?	Go to step **3**.	Repair the short circuit to ground in harness between ECM and oil flow control solenoid valve RH connector.
3	**CHECK OIL FLOW CONTROL SOLENOID VALVE.** Measure the resistance between oil flow control solenoid valve terminals. ***Terminals*** ***No. 1 — No. 2:***	Is the resistance 6 — 12 Ω?	Repair the poor contact of ECM and oil flow control solenoid valve RH connector RH.	Replace the oil flow control solenoid valve RH. <Ref. to FU(H6DO)-47, Oil Flow Control Solenoid Valve.>

EV:DTC P2091 EXHAUST CAMSHAFT POSITION ACTUATOR CONTROL CIRCUIT HIGH (BANK 1)

DTC DETECTING CONDITION:

- Immediately at fault recognition
- GENERAL DESCRIPTION <Ref. to GD(H6DO)-228, DTC P2091 EXHAUST CAMSHAFT POSITION ACTUATOR CONTROL CIRCUIT HIGH (BANK 1), Diagnostic Trouble Code (DTC) Detecting Criteria.>

TROUBLE SYMPTOM:

Improper idling

CAUTION:

After repair or replacement of faulty parts, perform Clear Memory Mode <Ref. to EN(H6DO)(diag)-57, OPERATION, Clear Memory Mode.>, and Inspection Mode <Ref. to EN(H6DO)(diag)-44, PROCEDURE, Inspection Mode.>.

WIRING DIAGRAM:

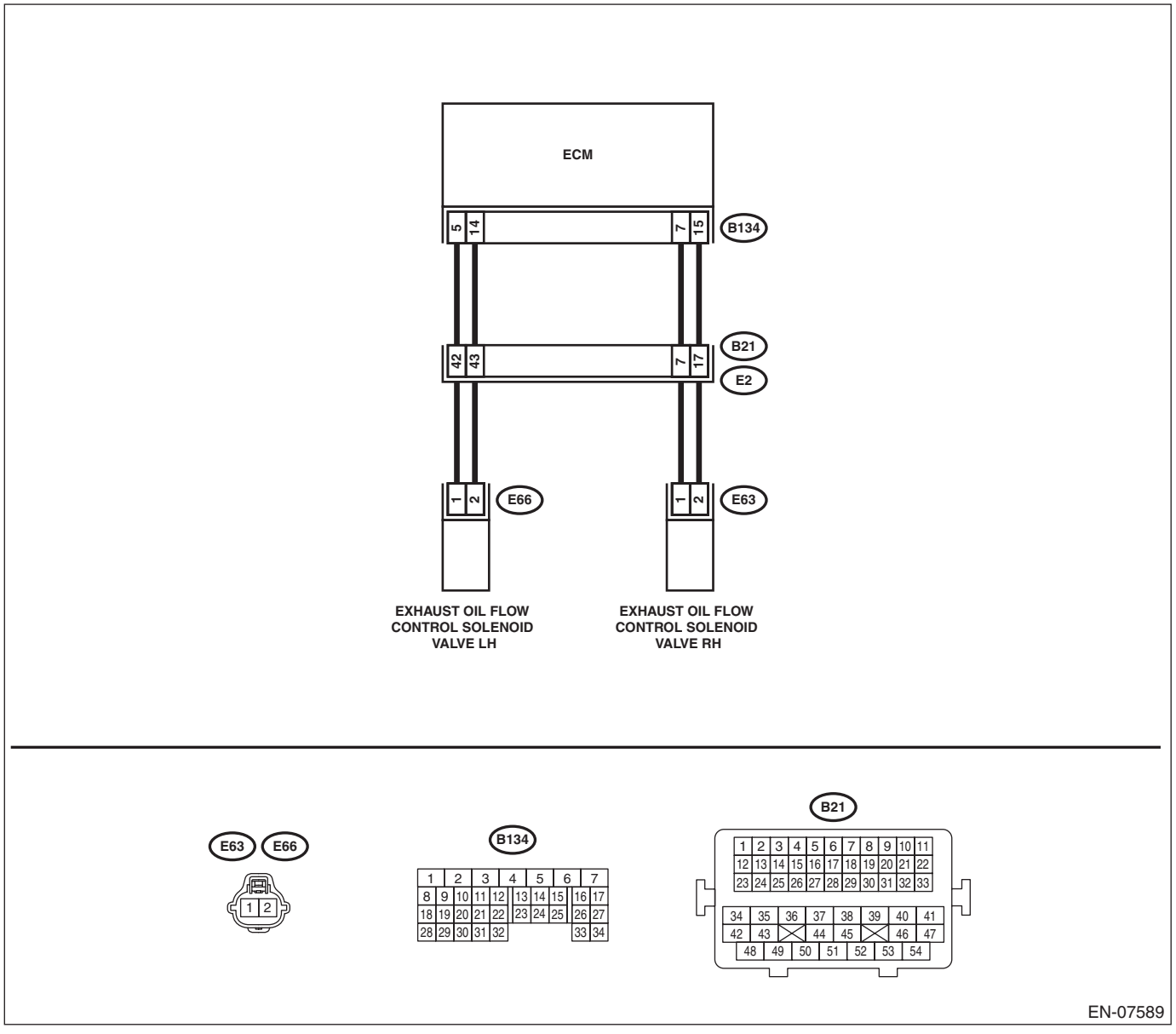

	Step	Check	Yes	No
1	**CHECK HARNESS BETWEEN ECM AND OIL FLOW CONTROL SOLENOID VALVE RH CONNECTOR.** 1) Turn the ignition switch to OFF. 2) Disconnect the connectors from ECM and oil flow control solenoid valve RH. 3) Measure the voltage between ECM and chassis ground. ***Connector & terminal*** ***(B134) No. 7 (+) — Chassis ground (–):*** ***(B134) No. 15 (+) — Chassis ground (–):***	Is the voltage less than 1 V?	Go to step **2**.	Repair the short circuit to power supply in harness between ECM and oil flow control solenoid valve RH connector.
2	**CHECK HARNESS BETWEEN ECM AND OIL FLOW CONTROL SOLENOID VALVE RH CONNECTOR.** Measure the resistance of harness between ECM and oil flow control solenoid valve RH connector. ***Connector & terminal*** ***(B134) No. 7 — (E63) No. 1:*** ***(B134) No. 15 — (E63) No. 2:***	Is the resistance less than 1 Ω?	Go to step **3**.	Repair the harness and connector. NOTE: In this case, repair the following item: • Open circuit in harness between ECM and oil flow control solenoid valve RH connector • Poor contact of coupling connector
3	**CHECK OIL FLOW CONTROL SOLENOID VALVE.** Measure the resistance between oil flow control solenoid valve terminals. ***Terminals*** ***No. 1 — No. 2:***	Is the resistance 6 — 12 Ω?	Repair the poor contact of ECM and oil flow control solenoid valve RH connector RH.	Replace the oil flow control solenoid valve RH. <Ref. to FU(H6DO)-47, Oil Flow Control Solenoid Valve.>

EW:DTC P2092 INTAKE CAMSHAFT POSITION ACTUATOR CONTROL CIRCUIT LOW (BANK 2)

DTC DETECTING CONDITION:

- Immediately at fault recognition
- GENERAL DESCRIPTION <Ref. to GD(H6DO)-229, DTC P2092 INTAKE CAMSHAFT POSITION ACTUATOR CONTROL CIRCUIT LOW (BANK 2), Diagnostic Trouble Code (DTC) Detecting Criteria.>

TROUBLE SYMPTOM:

Improper idling

CAUTION:

After servicing or replacing faulty parts, perform Clear Memory Mode <Ref. to EN(H6DO)(diag)-57, OPERATION, Clear Memory Mode.>, and Inspection Mode <Ref. to EN(H6DO)(diag)-44, PROCEDURE, Inspection Mode.>.

WIRING DIAGRAM:

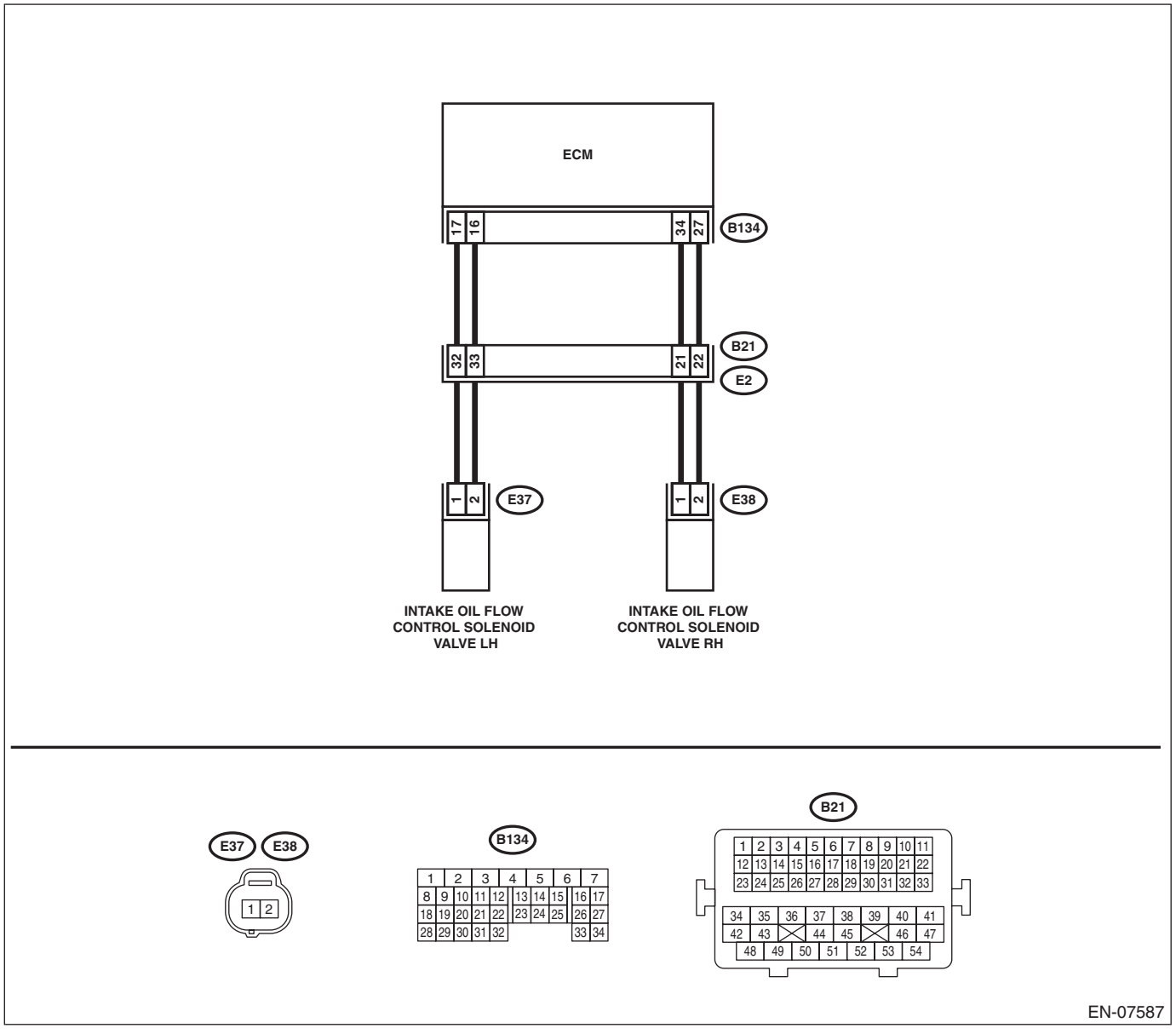

	Step	Check	Yes	No
1	**CHECK HARNESS BETWEEN ECM AND OIL FLOW CONTROL SOLENOID VALVE LH CONNECTOR.** 1) Turn the ignition switch to OFF. 2) Disconnect the connectors from ECM and oil flow control solenoid valve LH. 3) Measure the resistance of harness between ECM and oil flow control solenoid valve LH connector. ***Connector & terminal*** ***(B134) No. 17 — (E37) No. 1:*** ***(B134) No. 16 — (E37) No. 2:***	Is the resistance less than 1 Ω?	Go to step **2**.	Repair the harness and connector. NOTE: In this case, repair the following item: • Open circuit in harness between ECM and oil flow control solenoid valve RH connector • Poor contact of coupling connector
2	**CHECK HARNESS BETWEEN ECM AND OIL FLOW CONTROL SOLENOID VALVE LH CONNECTOR.** Measure the resistance between ECM and chassis ground. ***Connector & terminal*** ***(B134) No. 17 — Chassis ground:*** ***(B134) No. 16 — Chassis ground:***	Is the resistance 1 MΩ or more?	Go to step **3**.	Repair the short circuit to ground in harness between ECM and oil flow control solenoid valve LH connector.
3	**CHECK OIL FLOW CONTROL SOLENOID VALVE.** Measure the resistance between oil flow control solenoid valve terminals. ***Terminals*** ***No. 1 — No. 2:***	Is the resistance 6 — 12 Ω?	Repair the poor contact of ECM and oil flow control solenoid valve LH connector.	Replace the oil flow control solenoid valve LH. <Ref. to FU(H6DO)-47, Oil Flow Control Solenoid Valve.>

EX:DTC P2093 INTAKE CAMSHAFT POSITION ACTUATOR CONTROL CIRCUIT HIGH (BANK 2)

DTC DETECTING CONDITION:

- Immediately at fault recognition
- GENERAL DESCRIPTION <Ref. to GD(H6DO)-229, DTC P2093 INTAKE CAMSHAFT POSITION ACTUATOR CONTROL CIRCUIT HIGH (BANK 2), Diagnostic Trouble Code (DTC) Detecting Criteria.>

TROUBLE SYMPTOM:

Improper idling

CAUTION:

After servicing or replacing faulty parts, perform Clear Memory Mode <Ref. to EN(H6DO)(diag)-57, OPERATION, Clear Memory Mode.>, and Inspection Mode <Ref. to EN(H6DO)(diag)-44, PROCEDURE, Inspection Mode.>.

WIRING DIAGRAM:

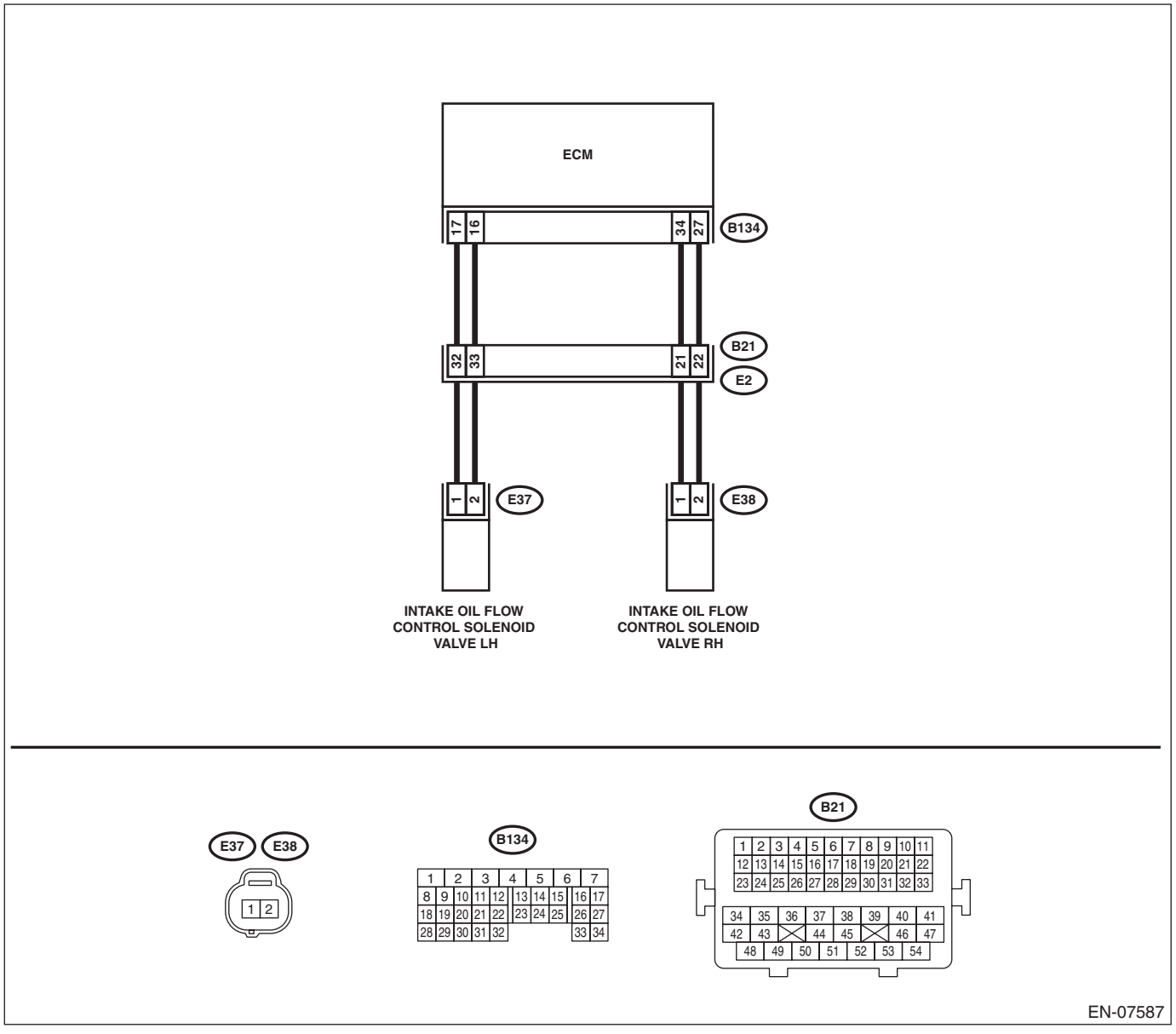

	Step	Check	Yes	No
1	**CHECK HARNESS BETWEEN ECM AND OIL FLOW CONTROL SOLENOID VALVE LH CONNECTOR.** 1) Turn the ignition switch to OFF. 2) Disconnect the connectors from ECM and oil flow control solenoid valve LH. 3) Measure the voltage between ECM and chassis ground. ***Connector & terminal*** ***(B134) No. 17 (+) — Chassis ground (–):*** ***(B134) No. 16 (+) — Chassis ground (–):***	Is the voltage less than 1 V?	Go to step **2**.	Repair the short circuit to power supply in harness between ECM and oil flow control solenoid valve LH connector.
2	**CHECK HARNESS BETWEEN ECM AND OIL FLOW CONTROL SOLENOID VALVE LH CONNECTOR.** Measure the resistance of harness between ECM and oil flow control solenoid valve LH connector. ***Connector & terminal*** ***(B134) No. 17 — (E37) No. 1:*** ***(B134) No. 16 — (E37) No. 2:***	Is the resistance less than 1 Ω?	Go to step **3**.	Repair the harness and connector. NOTE: In this case, repair the following item: • Open circuit in harness between ECM and oil flow control solenoid valve RH connector • Poor contact of coupling connector
3	**CHECK OIL FLOW CONTROL SOLENOID VALVE.** Measure the resistance between oil flow control solenoid valve terminals. ***Terminals*** ***No. 1 — No. 2:***	Is the resistance 6 — 12 Ω?	Repair the poor contact of ECM and oil flow control solenoid valve LH connector.	Replace the oil flow control solenoid valve LH. <Ref. to FU(H6DO)-47, Oil Flow Control Solenoid Valve.>

EY:DTC P2094 EXHAUST CAMSHAFT POSITION ACTUATOR CONTROL CIRCUIT LOW (BANK 2)

DTC DETECTING CONDITION:

- Immediately at fault recognition
- GENERAL DESCRIPTION <Ref. to GD(H6DO)-229, DTC P2094 EXHAUST CAMSHAFT POSITION ACTUATOR CONTROL CIRCUIT LOW (BANK 2), Diagnostic Trouble Code (DTC) Detecting Criteria.>

TROUBLE SYMPTOM:

Improper idling

CAUTION:

After repair or replacement of faulty parts, perform Clear Memory Mode <Ref. to EN(H6DO)(diag)-57, OPERATION, Clear Memory Mode.>, and Inspection Mode <Ref. to EN(H6DO)(diag)-44, PROCEDURE, Inspection Mode.>.

WIRING DIAGRAM:

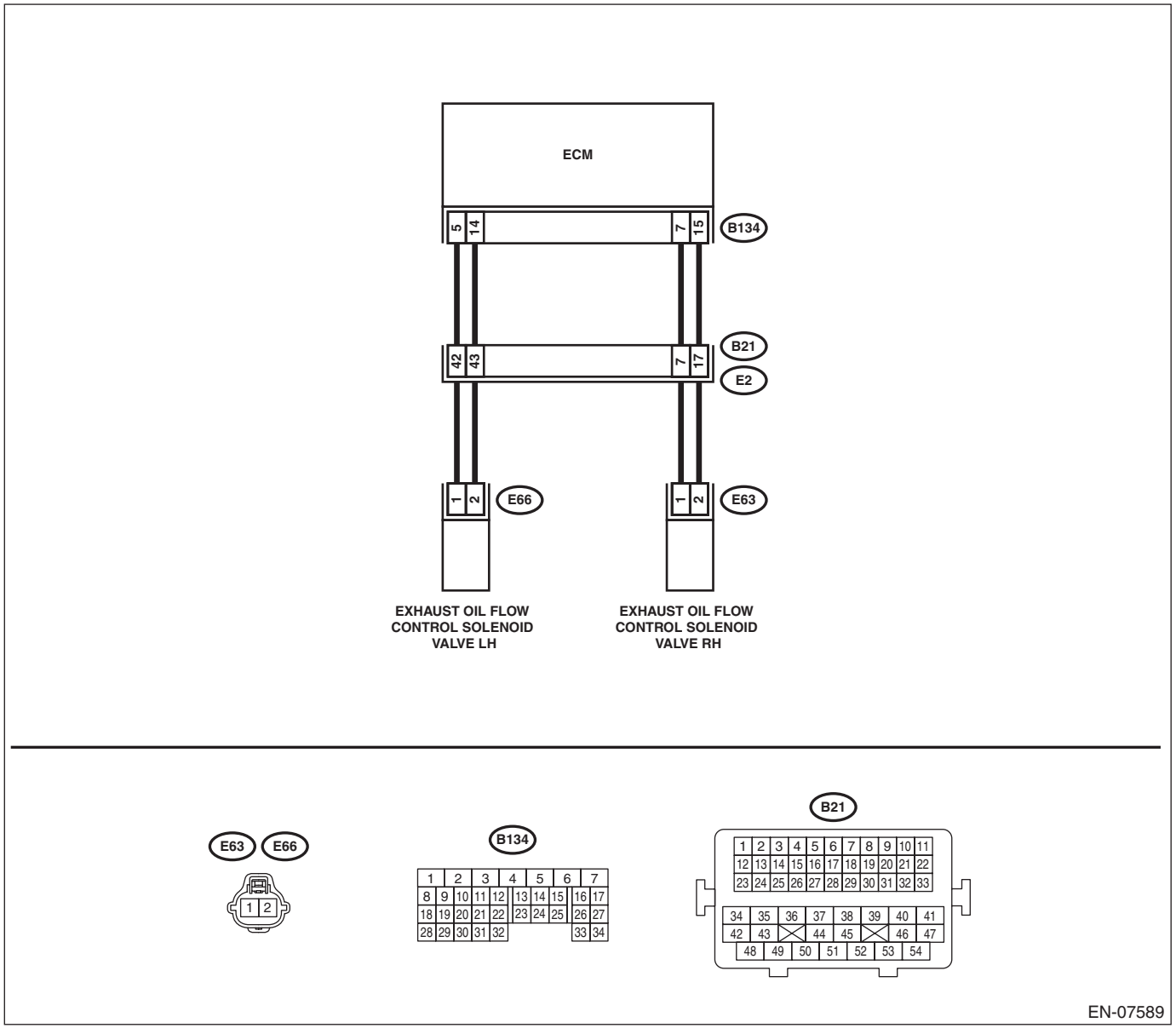

	Step	Check	Yes	No
1	**CHECK HARNESS BETWEEN ECM AND OIL FLOW CONTROL SOLENOID VALVE LH CONNECTOR.** 1) Turn the ignition switch to OFF. 2) Disconnect the connectors from ECM and oil flow control solenoid valve LH. 3) Measure the resistance of harness between ECM and oil flow control solenoid valve LH connector. ***Connector & terminal*** ***(B134) No. 5 — (E66) No. 1:*** ***(B134) No. 14 — (E66) No. 2:***	Is the resistance less than 1 Ω?	Go to step **2**.	Repair the harness and connector. NOTE: In this case, repair the following item: • Open circuit in harness between ECM and oil flow control solenoid valve RH connector • Poor contact of coupling connector
2	**CHECK HARNESS BETWEEN ECM AND OIL FLOW CONTROL SOLENOID VALVE LH CONNECTOR.** Measure the resistance between ECM and chassis ground. ***Connector & terminal*** ***(B134) No. 5 — Chassis ground:*** ***(B134) No. 14 — Chassis ground:***	Is the resistance 1 MΩ or more?	Go to step **3**.	Repair the short circuit to ground in harness between ECM and oil flow control solenoid valve LH connector.
3	**CHECK OIL FLOW CONTROL SOLENOID VALVE.** Measure the resistance between oil flow control solenoid valve terminals. ***Terminals*** ***No. 1 — No. 2:***	Is the resistance 6 — 12 Ω?	Repair the poor contact of ECM and oil flow control solenoid valve LH connector.	Replace the oil flow control solenoid valve LH. <Ref. to FU(H6DO)-47, Oil Flow Control Solenoid Valve.>

EZ:DTC P2095 EXHAUST CAMSHAFT POSITION ACTUATOR CONTROL CIRCUIT HIGH (BANK 2)

DTC DETECTING CONDITION:

- Immediately at fault recognition
- GENERAL DESCRIPTION <Ref. to GD(H6DO)-229, DTC P2095 EXHAUST CAMSHAFT POSITION ACTUATOR CONTROL CIRCUIT HIGH (BANK 2), Diagnostic Trouble Code (DTC) Detecting Criteria.>

TROUBLE SYMPTOM:

Improper idling

CAUTION:

After repair or replacement of faulty parts, perform Clear Memory Mode <Ref. to EN(H6DO)(diag)-57, OPERATION, Clear Memory Mode.>, and Inspection Mode <Ref. to EN(H6DO)(diag)-44, PROCEDURE, Inspection Mode.>.

WIRING DIAGRAM:

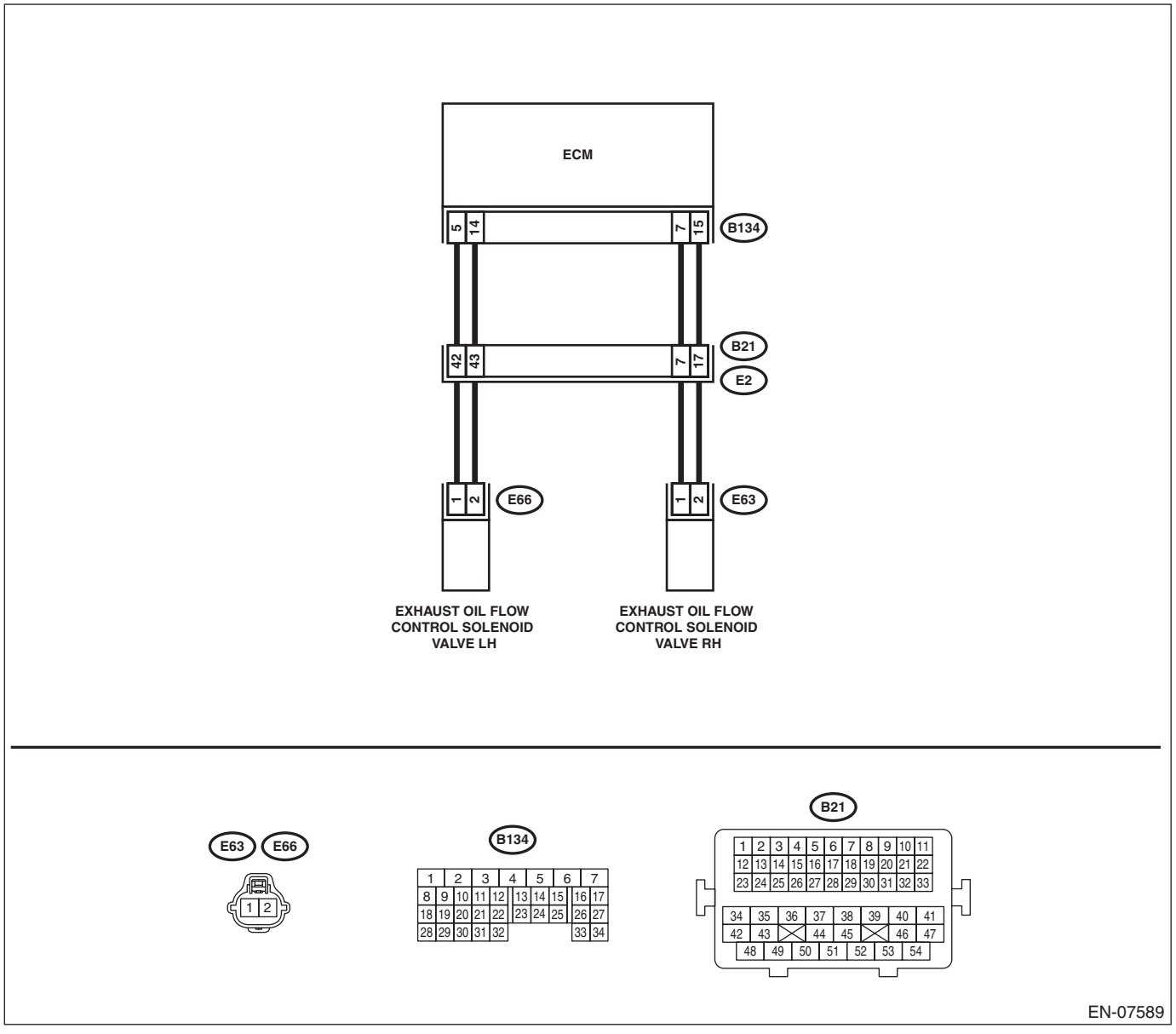

	Step	Check	Yes	No
1	**CHECK HARNESS BETWEEN ECM AND OIL FLOW CONTROL SOLENOID VALVE LH CONNECTOR.** 1) Turn the ignition switch to OFF. 2) Disconnect the connectors from ECM and oil flow control solenoid valve LH. 3) Measure the voltage between ECM and chassis ground. ***Connector & terminal*** ***(B134) No. 5 (+) — Chassis ground (–):*** ***(B134) No. 14 (+) — Chassis ground (–):***	Is the voltage less than 1 V?	Go to step **2**.	Repair the short circuit to power supply in harness between ECM and oil flow control solenoid valve LH connector.
2	**CHECK HARNESS BETWEEN ECM AND OIL FLOW CONTROL SOLENOID VALVE LH CONNECTOR.** Measure the resistance of harness between ECM and oil flow control solenoid valve LH connector. ***Connector & terminal*** ***(B134) No. 5 — (E66) No. 1:*** ***(B134) No. 14 — (E66) No. 2:***	Is the resistance less than 1 Ω?	Go to step **3**.	Repair the harness and connector. NOTE: In this case, repair the following item: • Open circuit in harness between ECM and oil flow control solenoid valve RH connector • Poor contact of coupling connector
3	**CHECK OIL FLOW CONTROL SOLENOID VALVE.** Measure the resistance between oil flow control solenoid valve terminals. ***Terminals*** ***No. 1 — No. 2:***	Is the resistance 6 — 12 Ω?	Repair the poor contact of ECM and oil flow control solenoid valve LH connector.	Replace the oil flow control solenoid valve LH. <Ref. to FU(H6DO)-47, Oil Flow Control Solenoid Valve.>

FA:DTC P2096 POST CATALYST FUEL TRIM SYSTEM TOO LEAN (BANK 1)

DTC DETECTING CONDITION:

- Detected when two consecutive driving cycles with fault occur.
- GENERAL DESCRIPTION <Ref. to GD(H6DO)-230, DTC P2096 POST CATALYST FUEL TRIM SYSTEM TOO LEAN (BANK 1), Diagnostic Trouble Code (DTC) Detecting Criteria.>

CAUTION:
After servicing or replacing faulty parts, perform Clear Memory Mode <Ref. to EN(H6DO)(diag)-57, OPERATION, Clear Memory Mode.>, and Inspection Mode <Ref. to EN(H6DO)(diag)-44, PROCEDURE, Inspection Mode.>.

WIRING DIAGRAM:

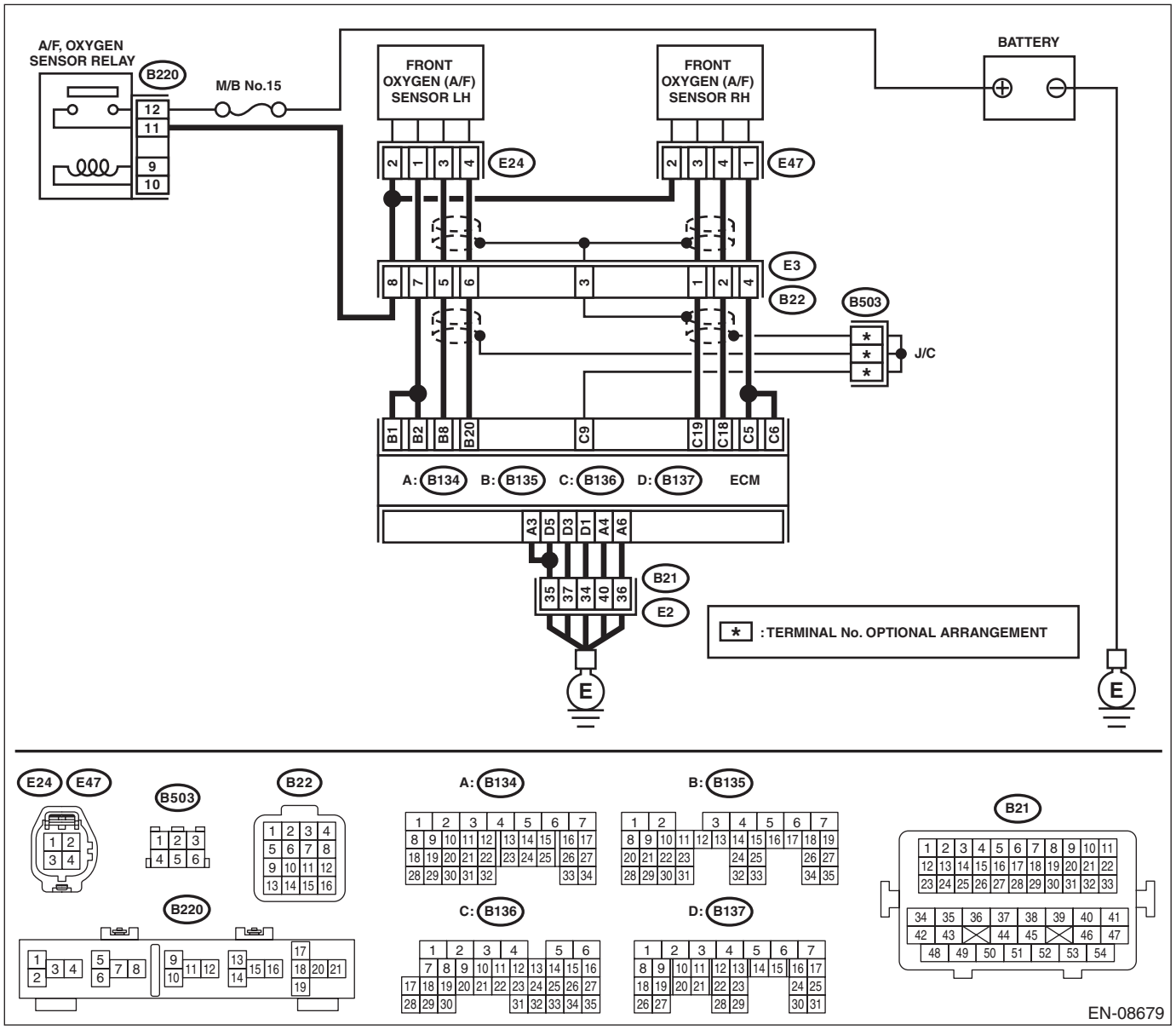

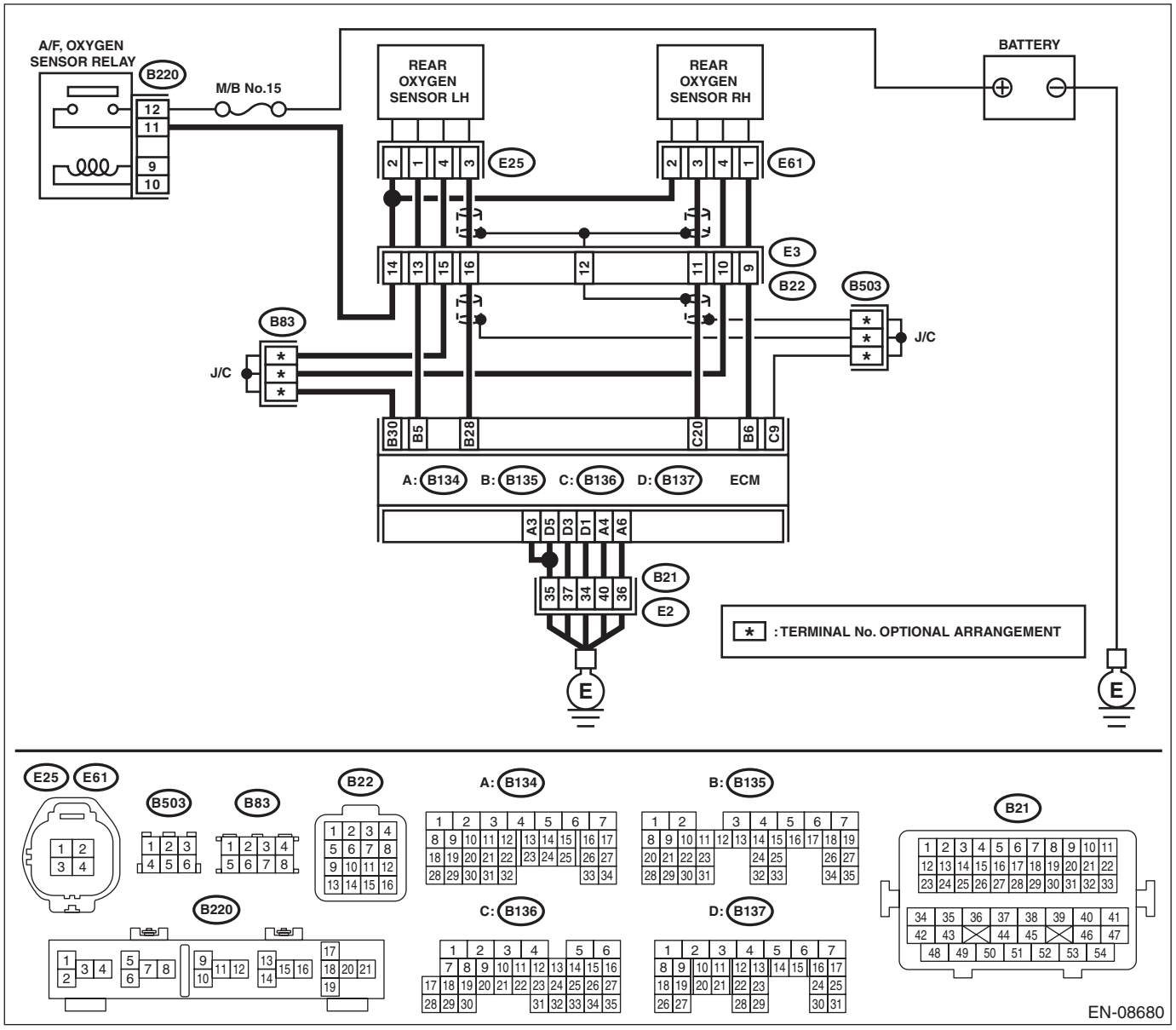

Step		Check	Yes	No
1	**CHECK FOR ANY OTHER DTC ON DISPLAY.**	Is any other DTC displayed?	Check DTC using "List of Diagnostic Trouble Code (DTC)". <Ref. to EN(H6DO)(diag)-85, List of Diagnostic Trouble Code (DTC).>	Go to step **2**.
2	**CHECK FRONT OXYGEN (A/F) SENSOR CONNECTOR AND COUPLING CONNECTOR.**	Has water entered the connector?	Completely remove any water inside.	Go to step **3**.

	Step	Check	Yes	No
3	**CHECK HARNESS BETWEEN ECM AND FRONT OXYGEN (A/F) SENSOR CONNECTOR.** 1) Turn the ignition switch to OFF. 2) Disconnect the connectors from ECM and front oxygen (A/F) sensor. 3) Measure the resistance of harness between ECM and front oxygen (A/F) sensor connector. ***Connector & terminal*** ***(B136) No. 19 — (E47) No. 3:*** ***(B136) No. 18 — (E47) No. 4:***	Is the resistance less than 1 Ω?	Go to step **4**.	Repair the harness and connector. NOTE: In this case, repair the following item: • Open circuit in harness between ECM and front oxygen (A/F) sensor connector • Poor contact of coupling connector
4	**CHECK HARNESS BETWEEN ECM AND FRONT OXYGEN (A/F) SENSOR CONNECTOR.** Measure the resistance between ECM and chassis ground. ***Connector & terminal*** ***(B136) No. 19 — Chassis ground:*** ***(B136) No. 18 — Chassis ground:***	Is the resistance 1 MΩ or more?	Go to step **5**.	Repair the ground short circuit of harness between ECM and front oxygen (A/F) sensor connector.
5	**CHECK OUTPUT SIGNAL FOR ECM.** 1) Connect the connector to ECM. 2) Turn the ignition switch to ON. 3) Measure the voltage between front oxygen (A/F) sensor connector and chassis ground. ***Connector & terminal*** ***(E47) No. 3 (+) — Chassis ground (–):***	Is the voltage 4.5 V or more?	Go to step **7**.	Go to step **6**.
6	**CHECK OUTPUT SIGNAL FOR ECM.** Measure the voltage between front oxygen (A/F) sensor connector and chassis ground. ***Connector & terminal*** ***(E47) No. 4 (+) — Chassis ground (–):***	Is the voltage 4.95 V or more?	Go to step **7**.	Go to step **8**.
7	**CHECK OUTPUT SIGNAL FOR ECM.** Measure the voltage between front oxygen (A/F) sensor connector and chassis ground. ***Connector & terminal*** ***(E47) No. 3 (+) — Chassis ground (–):*** ***(E47) No. 4 (+) — Chassis ground (–):***	Is the voltage 8 V or more?	Repair the short circuit to power in the harness between ECM and front oxygen (A/F) sensor connector. After repair, replace the ECM. <Ref. to FU(H6DO)-54, Engine Control Module (ECM).>	Repair the poor contact of ECM connector.
8	**CHECK EXHAUST SYSTEM.**	Are there holes or loose bolts on exhaust system?	Repair the exhaust system.	Go to step **9**.
9	**CHECK AIR INTAKE SYSTEM.**	Are there holes, loose bolts or disconnection of hose on air intake system?	Repair the air intake system.	Go to step **10**.

	Step	Check	Yes	No
10	**CHECK FUEL PRESSURE.** **WARNING:** **Place "NO OPEN FLAMES" signs near the working area.** **CAUTION:** **Be careful not to spill fuel.** 1) Connect the front oxygen (A/F) sensor connector. 2) Measure the fuel pressure. <Ref. to ME(H6DO)-31, INSPECTION, Fuel Pressure.> **CAUTION:** **Release fuel pressure before removing the fuel pressure gauge.**	Is the measured value 340 — 400 kPa (3.5 — 4.1 kgf/cm^2, 49 — 58 psi)?	Go to step **11**.	Repair the following item. Fuel pressure is too high: • Clogged fuel line or bent hose Fuel pressure is too low: • Improper fuel pump discharge • Clogged fuel line
11	**CHECK ENGINE COOLANT TEMPERATURE SENSOR.** 1) Start the engine and warm up completely. 2) Read the value of «Coolant Temp.» using the Subaru Select Monitor or a general scan tool. NOTE: • Subaru Select Monitor For detailed operation procedures, refer to "READ CURRENT DATA FOR ENGINE". <Ref. to EN(H6DO)(diag)-35, Subaru Select Monitor.> • General scan tool For detailed operation procedures, refer to the general scan tool operation manual.	Is the value of «Coolant Temp.» 75°C (167°F) or more?	Go to step **12**.	Replace the engine coolant temperature sensor. <Ref. to FU(H6DO)-29, Engine Coolant Temperature Sensor.>
12	**CHECK MASS AIR FLOW AND INTAKE AIR TEMPERATURE SENSOR.** 1) Start the engine and warm up engine until coolant temperature is higher than 75°C (167°F). 2) Place the select lever in "P" range or "N" range. 3) Turn the A/C switch to OFF. 4) Turn all the accessory switches to OFF. 5) Read the value of «Mass Air Flow» using the Subaru Select Monitor or a general scan tool. NOTE: • Subaru Select Monitor For detailed operation procedures, refer to "READ CURRENT DATA FOR ENGINE". <Ref. to EN(H6DO)(diag)-35, Subaru Select Monitor.> • General scan tool For detailed operation procedures, refer to the general scan tool operation manual.	Is the value of «Mass Air Flow» 2.0 — 5.0 g/s (0.26 — 0.66 lb/m)?	Go to step **13**.	Replace the mass air flow and intake air temperature sensor. <Ref. to FU(H6DO)-41, Mass Air Flow and Intake Air Temperature Sensor.>

	Step	Check	Yes	No
13	**CHECK MASS AIR FLOW AND INTAKE AIR TEMPERATURE SENSOR.** 1) Start the engine and warm up engine until coolant temperature is higher than 75°C (167°F). 2) Place the select lever in "P" range or "N" range. 3) Turn the A/C switch to OFF. 4) Turn all the accessory switches to OFF. 5) Open the front hood. 6) Measure the ambient temperature. 7) Read the value of «Intake Air Temp.» using the Subaru Select Monitor or a general scan tool. NOTE: • Subaru Select Monitor For detailed operation procedures, refer to "READ CURRENT DATA FOR ENGINE". <Ref. to EN(H6DO)(diag)-35, Subaru Select Monitor.> • General scan tool For detailed operation procedures, refer to the general scan tool operation manual.	Subtract ambient temperature from «Intake Air Temp.». Is the obtained value –10 — 50°C (–18 — 90°F)?	Go to step **14**.	Check the mass air flow and intake air temperature sensor. <Ref. to FU(H6DO)-41, Mass Air Flow and Intake Air Temperature Sensor.>
14	**CHECK REAR OXYGEN SENSOR DATA.** 1) Warm up the engine until engine coolant temperature is higher than 75°C (167°F), and keep the engine speed at 3,000 rpm. (2 minutes maximum) 2) Read the value of «Front O2 Sensor #1» using the Subaru Select Monitor or a general scan tool. NOTE: • Subaru Select Monitor For detailed operation procedures, refer to "READ CURRENT DATA FOR ENGINE". <Ref. to EN(H6DO)(diag)-35, Subaru Select Monitor.> • General scan tool For detailed operation procedures, refer to the general scan tool operation manual.	Is the value of «Front O2 Sensor #1» 0.490 V or more?	Go to step **15**.	Go to step **16**.
15	**CHECK REAR OXYGEN SENSOR DATA.** 1) Warm up the engine until engine coolant temperature is higher than 75°C (167°F), and rapidly reduce the engine speed from 3,000 rpm. 2) Read the value of «Front O2 Sensor #1» using the Subaru Select Monitor or a general scan tool. NOTE: • Subaru Select Monitor For detailed operation procedures, refer to "READ CURRENT DATA FOR ENGINE". <Ref. to EN(H6DO)(diag)-35, Subaru Select Monitor.> • General scan tool For detailed operation procedures, refer to the general scan tool operation manual.	Is the value of «Front O2 Sensor #1» 0.250 V or less?	Go to step **17**.	Go to step **16**.
16	**CHECK REAR OXYGEN SENSOR CONNECTOR AND COUPLING CONNECTOR.**	Has water entered the connector?	Completely remove any water inside.	Go to step **18**.

	Step	Check	Yes	No
17	**CHECK FRONT OXYGEN (A/F) SENSOR USING REAR OXYGEN SENSOR SIGNAL.** 1) Warm up the engine until engine coolant temperature is higher than 75°C (167°F), then keep the engine idling for 5 minutes or more. 2) Read the value of «Front O2 Sensor #1» using the Subaru Select Monitor or a general scan tool. NOTE: • Subaru Select Monitor For detailed operation procedures, refer to "READ CURRENT DATA FOR ENGINE". <Ref. to EN(H6DO)(diag)-35, Subaru Select Monitor.> • General scan tool For detailed operation procedures, refer to the general scan tool operation manual.	Is the value in «Front O2 Sensor #1» kept at 0.250 V or less for 5 minutes or more?	Replace the front oxygen (A/F) sensor. <Ref. to FU(H6DO)-50, Front Oxygen (A/F) Sensor.>	Go to step **18**.
18	**CHECK HARNESS BETWEEN ECM AND REAR OXYGEN SENSOR CONNECTOR.** 1) Turn the ignition switch to OFF. 2) Disconnect the connector from ECM and rear oxygen sensor. 3) Measure the resistance of harness between ECM and rear oxygen sensor connector. ***Connector & terminal*** ***(B136) No. 20 — (E61) No. 3:*** ***(B135) No. 30 — (E61) No. 4:***	Is the resistance less than 1 Ω?	Go to step **19**.	Repair the harness and connector. NOTE: In this case, repair the following item: • Open circuit in harness between ECM and rear oxygen sensor connector • Poor contact of coupling connector
19	**CHECK HARNESS BETWEEN ECM AND REAR OXYGEN SENSOR CONNECTOR.** 1) Connect the connector to ECM. 2) Turn the ignition switch to ON. 3) Measure the voltage between rear oxygen sensor connector and chassis ground. ***Connector & terminal*** ***(E61) No. 3 (+) — Chassis ground (–):***	Is the voltage 0.2 — 0.5 V?	Replace the rear oxygen sensor. <Ref. to FU(H6DO)-52, Rear Oxygen Sensor.>	Repair the harness and connector. NOTE: In this case, repair the following item: • Open circuit in harness between ECM and rear oxygen sensor connector • Poor contact of ECM connector • Poor contact of coupling connector

FB:DTC P2097 POST CATALYST FUEL TRIM SYSTEM TOO RICH (BANK 1)

DTC DETECTING CONDITION:

- Detected when two consecutive driving cycles with fault occur.
- GENERAL DESCRIPTION <Ref. to GD(H6DO)-232, DTC P2097 POST CATALYST FUEL TRIM SYSTEM TOO RICH (BANK 1), Diagnostic Trouble Code (DTC) Detecting Criteria.>

CAUTION:
After servicing or replacing faulty parts, perform Clear Memory Mode <Ref. to EN(H6DO)(diag)-57, OPERATION, Clear Memory Mode.>, and Inspection Mode <Ref. to EN(H6DO)(diag)-44, PROCEDURE, Inspection Mode.>.

WIRING DIAGRAM:

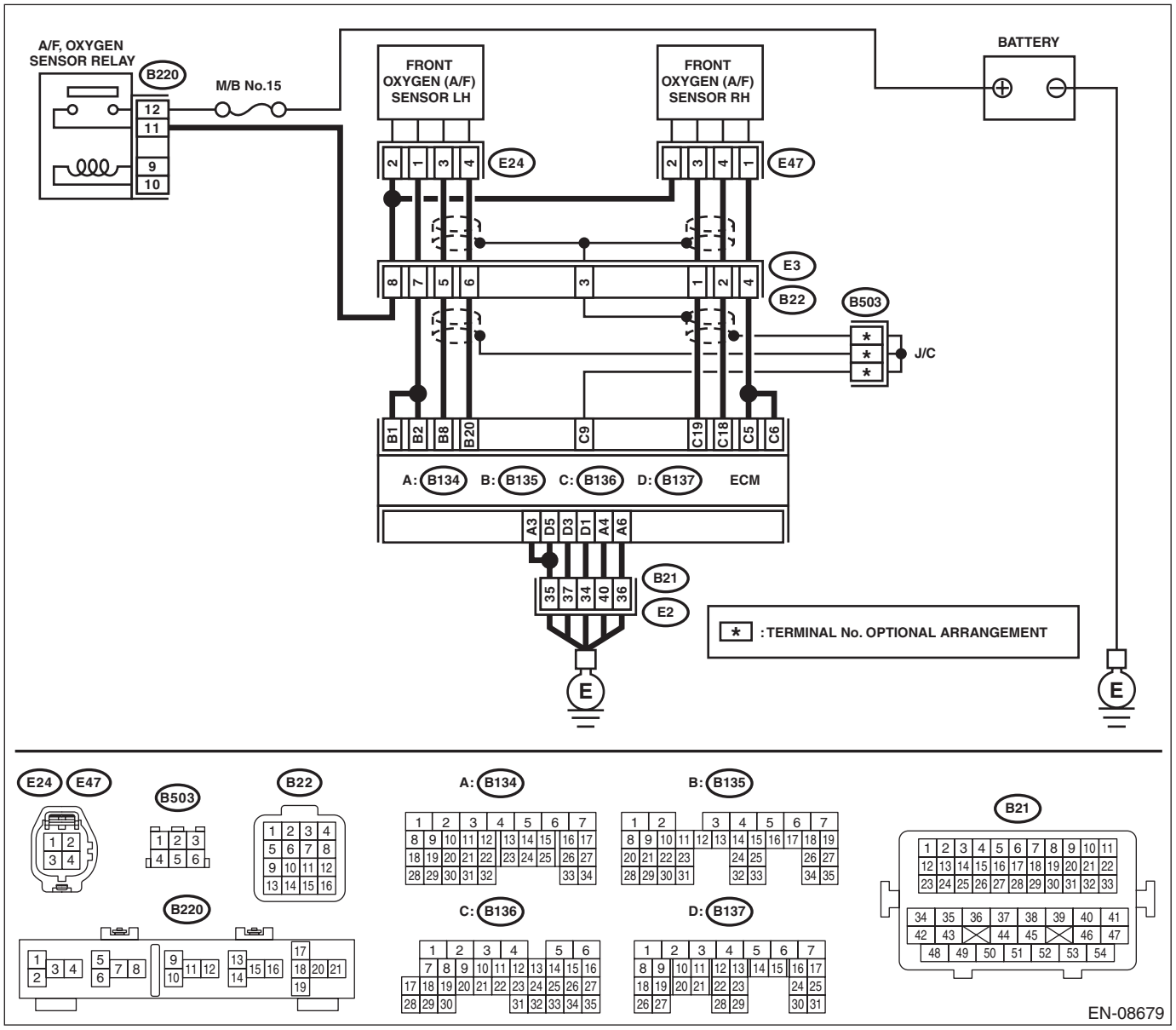

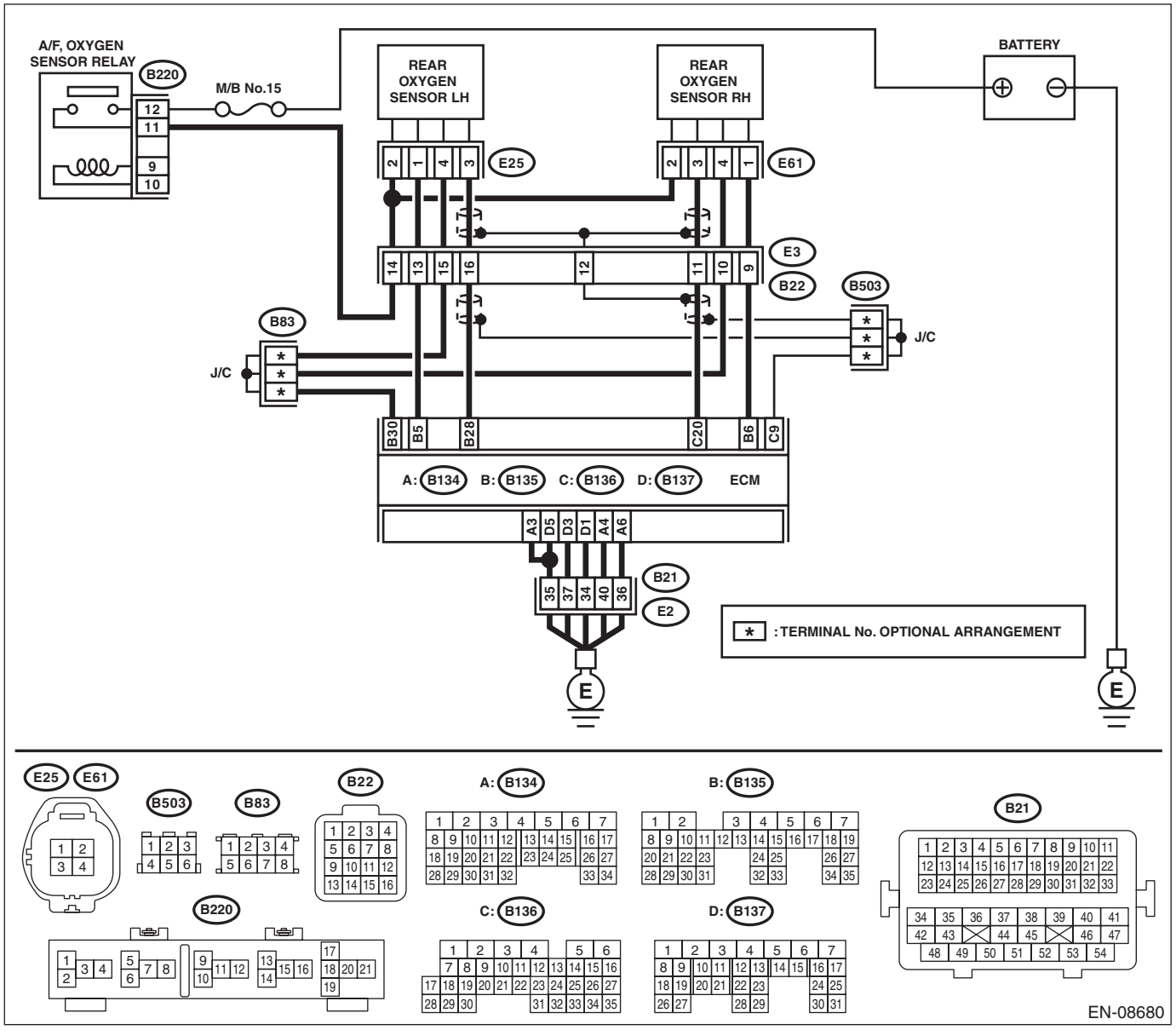

Step		Check	Yes	No
1	**CHECK FOR ANY OTHER DTC ON DISPLAY.**	Is any other DTC displayed?	Check DTC using "List of Diagnostic Trouble Code (DTC)". <Ref. to EN(H6DO)(diag)-85, List of Diagnostic Trouble Code (DTC).>	Go to step **2**.
2	**CHECK FRONT OXYGEN (A/F) SENSOR CONNECTOR AND COUPLING CONNECTOR.**	Has water entered the connector?	Completely remove any water inside.	Go to step **3**.

	Step	Check	Yes	No
3	**CHECK HARNESS BETWEEN ECM AND FRONT OXYGEN (A/F) SENSOR CONNECTOR.** 1) Turn the ignition switch to OFF. 2) Disconnect the connectors from ECM and front oxygen (A/F) sensor. 3) Measure the resistance of harness between ECM and front oxygen (A/F) sensor connector. ***Connector & terminal*** ***(B136) No. 19 — (E47) No. 3:*** ***(B136) No. 18 — (E47) No. 4:***	Is the resistance less than 1 Ω?	Go to step **4**.	Repair the harness and connector. NOTE: In this case, repair the following item: • Open circuit in harness between ECM and front oxygen (A/F) sensor connector • Poor contact of coupling connector
4	**CHECK HARNESS BETWEEN ECM AND FRONT OXYGEN (A/F) SENSOR CONNECTOR.** Measure the resistance between ECM and chassis ground. ***Connector & terminal*** ***(B136) No. 19 — Chassis ground:*** ***(B136) No. 18 — Chassis ground:***	Is the resistance 1 MΩ or more?	Go to step **5**.	Repair the ground short circuit of harness between ECM and front oxygen (A/F) sensor connector.
5	**CHECK OUTPUT SIGNAL FOR ECM.** 1) Connect the connector to ECM. 2) Turn the ignition switch to ON. 3) Measure the voltage between front oxygen (A/F) sensor connector and chassis ground. ***Connector & terminal*** ***(E47) No. 3 (+) — Chassis ground (–):***	Is the voltage 4.5 V or more?	Go to step **7**.	Go to step **6**.
6	**CHECK OUTPUT SIGNAL FOR ECM.** Measure the voltage between front oxygen (A/F) sensor connector and chassis ground. ***Connector & terminal*** ***(E47) No. 4 (+) — Chassis ground (–):***	Is the voltage 4.95 V or more?	Go to step **7**.	Go to step **8**.
7	**CHECK OUTPUT SIGNAL FOR ECM.** Measure the voltage between front oxygen (A/F) sensor connector and chassis ground. ***Connector & terminal*** ***(E47) No. 3 (+) — Chassis ground (–):*** ***(E47) No. 4 (+) — Chassis ground (–):***	Is the voltage 8 V or more?	Repair the short circuit to power in the harness between ECM and front oxygen (A/F) sensor connector. After repair, replace the ECM. <Ref. to FU(H6DO)-54, Engine Control Module (ECM).>	Repair the poor contact of ECM connector.
8	**CHECK EXHAUST SYSTEM.**	Are there holes or loose bolts on exhaust system?	Repair the exhaust system.	Go to step **9**.
9	**CHECK AIR INTAKE SYSTEM.**	Are there holes, loose bolts or disconnection of hose on air intake system?	Repair the air intake system.	Go to step **10**.

	Step	Check	Yes	No
10	**CHECK FUEL PRESSURE.** **WARNING:** **Place "NO OPEN FLAMES" signs near the working area.** **CAUTION:** **Be careful not to spill fuel.** 1) Connect the front oxygen (A/F) sensor connector. 2) Measure the fuel pressure. <Ref. to ME(H6DO)-31, INSPECTION, Fuel Pressure.> **CAUTION:** **Release fuel pressure before removing the fuel pressure gauge.**	Is the measured value 340 — 400 kPa (3.5 — 4.1 kgf/cm^2, 49 — 58 psi)?	Go to step **11**.	Repair the following item. Fuel pressure is too high: • Clogged fuel line or bent hose Fuel pressure is too low: • Improper fuel pump discharge • Clogged fuel line
11	**CHECK ENGINE COOLANT TEMPERATURE SENSOR.** 1) Start the engine and warm up completely. 2) Read the value of «Coolant Temp.» using the Subaru Select Monitor or a general scan tool. NOTE: • Subaru Select Monitor For detailed operation procedures, refer to "READ CURRENT DATA FOR ENGINE". <Ref. to EN(H6DO)(diag)-35, Subaru Select Monitor.> • General scan tool For detailed operation procedures, refer to the general scan tool operation manual.	Is the value of «Coolant Temp.» 75°C (167°F) or more?	Go to step **12**.	Replace the engine coolant temperature sensor. <Ref. to FU(H6DO)-29, Engine Coolant Temperature Sensor.>
12	**CHECK MASS AIR FLOW AND INTAKE AIR TEMPERATURE SENSOR.** 1) Start the engine and warm up engine until coolant temperature is higher than 75°C (167°F). 2) Place the select lever in "P" range or "N" range. 3) Turn the A/C switch to OFF. 4) Turn all the accessory switches to OFF. 5) Read the value of «Mass Air Flow» using the Subaru Select Monitor or a general scan tool. NOTE: • Subaru Select Monitor For detailed operation procedures, refer to "READ CURRENT DATA FOR ENGINE". <Ref. to EN(H6DO)(diag)-35, Subaru Select Monitor.> • General scan tool For detailed operation procedures, refer to the general scan tool operation manual.	Is the value of «Mass Air Flow» 2.0 — 5.0 g/s (0.26 — 0.66 lb/m)?	Go to step **13**.	Replace the mass air flow and intake air temperature sensor. <Ref. to FU(H6DO)-41, Mass Air Flow and Intake Air Temperature Sensor.>

	Step	Check	Yes	No
13	**CHECK MASS AIR FLOW AND INTAKE AIR TEMPERATURE SENSOR.** 1) Start the engine and warm up engine until coolant temperature is higher than 75°C (167°F). 2) Place the select lever in "P" range or "N" range. 3) Turn the A/C switch to OFF. 4) Turn all the accessory switches to OFF. 5) Open the front hood. 6) Measure the ambient temperature. 7) Read the value of «Intake Air Temp.» using the Subaru Select Monitor or a general scan tool. NOTE: • Subaru Select Monitor For detailed operation procedures, refer to "READ CURRENT DATA FOR ENGINE". <Ref. to EN(H6DO)(diag)-35, Subaru Select Monitor.> • General scan tool For detailed operation procedures, refer to the general scan tool operation manual.	Subtract ambient temperature from «Intake Air Temp.». Is the obtained value –10 — 50°C (–18 — 90°F)?	Go to step **14**.	Check the mass air flow and intake air temperature sensor. <Ref. to FU(H6DO)-41, Mass Air Flow and Intake Air Temperature Sensor.>
14	**CHECK REAR OXYGEN SENSOR DATA.** 1) Warm up the engine until engine coolant temperature is higher than 75°C (167°F), and keep the engine speed at 3,000 rpm. (2 minutes maximum) 2) Read the value of «Front O2 Sensor #1» using the Subaru Select Monitor or a general scan tool. NOTE: • Subaru Select Monitor For detailed operation procedures, refer to "READ CURRENT DATA FOR ENGINE". <Ref. to EN(H6DO)(diag)-35, Subaru Select Monitor.> • General scan tool For detailed operation procedures, refer to the general scan tool operation manual.	Is the value of «Front O2 Sensor #1» 0.490 V or more?	Go to step **15**.	Go to step **16**.
15	**CHECK REAR OXYGEN SENSOR DATA.** 1) Warm up the engine until engine coolant temperature is higher than 75°C (167°F), and rapidly reduce the engine speed from 3,000 rpm. 2) Read the value of «Front O2 Sensor #1» using the Subaru Select Monitor or a general scan tool. NOTE: • Subaru Select Monitor For detailed operation procedures, refer to "READ CURRENT DATA FOR ENGINE". <Ref. to EN(H6DO)(diag)-35, Subaru Select Monitor.> • General scan tool For detailed operation procedures, refer to the general scan tool operation manual.	Is the value of «Front O2 Sensor #1» 0.250 V or less?	Go to step **17**.	Go to step **16**.
16	**CHECK REAR OXYGEN SENSOR CONNECTOR AND COUPLING CONNECTOR.**	Has water entered the connector?	Completely remove any water inside.	Go to step **18**.

	Step	Check	Yes	No
17	**CHECK FRONT OXYGEN (A/F) SENSOR USING REAR OXYGEN SENSOR SIGNAL.** 1) Warm up the engine until engine coolant temperature is higher than 75°C (167°F), then keep the engine idling for 5 minutes or more. 2) Read the value of «Front O2 Sensor #1» using the Subaru Select Monitor or a general scan tool. NOTE: • Subaru Select Monitor For detailed operation procedures, refer to "READ CURRENT DATA FOR ENGINE". <Ref. to EN(H6DO)(diag)-35, Subaru Select Monitor.> • General scan tool For detailed operation procedures, refer to the general scan tool operation manual.	Is the value in «Front O2 Sensor #1» kept at 0.8 V or more for 5 minutes or more?	Replace the front oxygen (A/F) sensor. <Ref. to FU(H6DO)-50, Front Oxygen (A/F) Sensor.>	Go to step **18**.
18	**CHECK HARNESS BETWEEN ECM AND REAR OXYGEN SENSOR CONNECTOR.** 1) Turn the ignition switch to OFF. 2) Disconnect the connector from ECM and rear oxygen sensor. 3) Measure the resistance of harness between ECM and rear oxygen sensor connector. ***Connector & terminal*** ***(B136) No. 20 — (E61) No. 3:*** ***(B135) No. 30 — (E61) No. 4:***	Is the resistance less than 1 Ω?	Go to step **19**.	Repair the harness and connector. NOTE: In this case, repair the following item: • Open circuit in harness between ECM and rear oxygen sensor connector • Poor contact of coupling connector
19	**CHECK HARNESS BETWEEN ECM AND REAR OXYGEN SENSOR CONNECTOR.** 1) Connect the connector to ECM. 2) Turn the ignition switch to ON. 3) Measure the voltage between rear oxygen sensor connector and chassis ground. ***Connector & terminal*** ***(E61) No. 3 (+) — Chassis ground (–):***	Is the voltage 0.2 — 0.5 V?	Replace the rear oxygen sensor. <Ref. to FU(H6DO)-52, Rear Oxygen Sensor.>	Repair the harness and connector. NOTE: In this case, repair the following item: • Open circuit in harness between ECM and rear oxygen sensor connector • Poor contact of ECM connector • Poor contact of coupling connector

FC:DTC P2098 POST CATALYST FUEL TRIM SYSTEM TOO LEAN BANK 2

DTC DETECTING CONDITION:

- Detected when two consecutive driving cycles with fault occur.
- GENERAL DESCRIPTION <Ref. to GD(H6DO)-233, DTC P2098 POST CATALYST FUEL TRIM SYSTEM TOO LEAN BANK 2, Diagnostic Trouble Code (DTC) Detecting Criteria.>

CAUTION:
After servicing or replacing faulty parts, perform Clear Memory Mode <Ref. to EN(H6DO)(diag)-57, OPERATION, Clear Memory Mode.>, and Inspection Mode <Ref. to EN(H6DO)(diag)-44, PROCEDURE, Inspection Mode.>.

WIRING DIAGRAM:

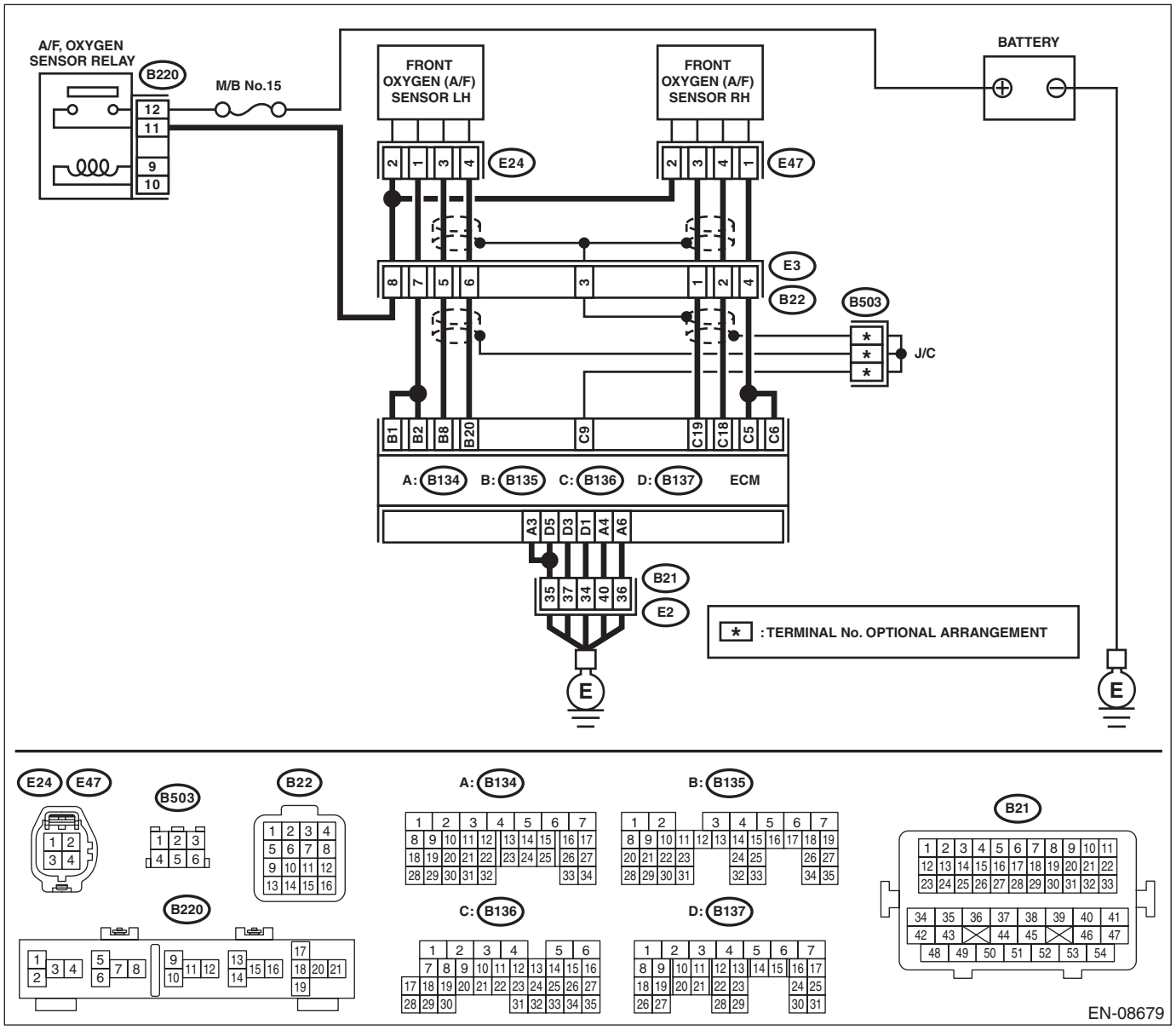

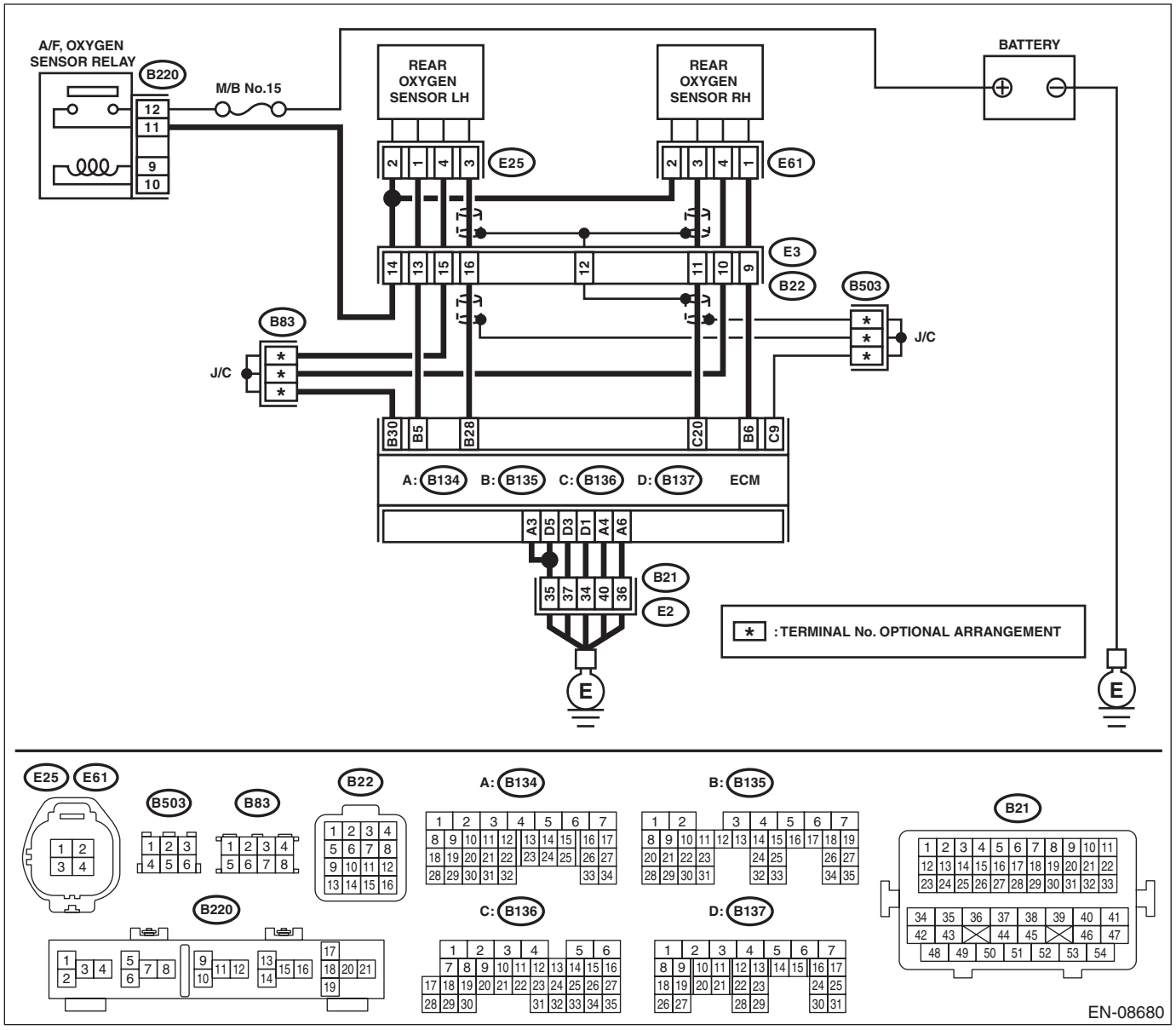

Step		Check	Yes	No
1	**CHECK FOR ANY OTHER DTC ON DISPLAY.**	Is any other DTC displayed?	Check DTC using "List of Diagnostic Trouble Code (DTC)". <Ref. to EN(H6DO)(diag)-85, List of Diagnostic Trouble Code (DTC).>	Go to step **2**.
2	**CHECK FRONT OXYGEN (A/F) SENSOR CONNECTOR AND COUPLING CONNECTOR.**	Has water entered the connector?	Completely remove any water inside.	Go to step **3**.

	Step	Check	Yes	No
3	**CHECK HARNESS BETWEEN ECM AND FRONT OXYGEN (A/F) SENSOR CONNECTOR.** 1) Turn the ignition switch to OFF. 2) Disconnect the connectors from ECM and front oxygen (A/F) sensor. 3) Measure the resistance of harness between ECM and front oxygen (A/F) sensor connector. ***Connector & terminal*** ***(B135) No. 8 — (E24) No. 3:*** ***(B135) No. 20 — (E24) No. 4:***	Is the resistance less than 1 Ω?	Go to step **4**.	Repair the harness and connector. NOTE: In this case, repair the following item: • Open circuit in harness between ECM and front oxygen (A/F) sensor connector • Poor contact of coupling connector
4	**CHECK HARNESS BETWEEN ECM AND FRONT OXYGEN (A/F) SENSOR CONNECTOR.** Measure the resistance between ECM and chassis ground. ***Connector & terminal*** ***(B135) No. 8 — Chassis ground:*** ***(B135) No. 20 — Chassis ground:***	Is the resistance 1 MΩ or more?	Go to step **5**.	Repair the ground short circuit of harness between ECM and front oxygen (A/F) sensor connector.
5	**CHECK OUTPUT SIGNAL FOR ECM.** 1) Connect the connector to ECM. 2) Turn the ignition switch to ON. 3) Measure the voltage between front oxygen (A/F) sensor connector and chassis ground. ***Connector & terminal*** ***(E24) No. 3 (+) — Chassis ground (–):***	Is the voltage 4.5 V or more?	Go to step **7**.	Go to step **6**.
6	**CHECK OUTPUT SIGNAL FOR ECM.** Measure the voltage between front oxygen (A/F) sensor connector and chassis ground. ***Connector & terminal*** ***(E24) No. 4 (+) — Chassis ground (–):***	Is the voltage 4.95 V or more?	Go to step **7**.	Go to step **8**.
7	**CHECK OUTPUT SIGNAL FOR ECM.** Measure the voltage between front oxygen (A/F) sensor connector and chassis ground. ***Connector & terminal*** ***(E24) No. 3 (+) — Chassis ground (–):*** ***(E24) No. 4 (+) — Chassis ground (–):***	Is the voltage 8 V or more?	Repair the short circuit to power in the harness between ECM and front oxygen (A/F) sensor connector. After repair, replace the ECM. <Ref. to FU(H6DO)-54, Engine Control Module (ECM).>	Repair the poor contact of ECM connector.
8	**CHECK EXHAUST SYSTEM.**	Are there holes or loose bolts on exhaust system?	Repair the exhaust system.	Go to step **9**.
9	**CHECK AIR INTAKE SYSTEM.**	Are there holes, loose bolts or disconnection of hose on air intake system?	Repair the air intake system.	Go to step **10**.

	Step	Check	Yes	No
10	**CHECK FUEL PRESSURE.** **WARNING:** **Place "NO OPEN FLAMES" signs near the working area.** **CAUTION:** **Be careful not to spill fuel.** 1) Connect the front oxygen (A/F) sensor connector. 2) Measure the fuel pressure. <Ref. to ME(H6DO)-31, INSPECTION, Fuel Pressure.> **CAUTION:** **Release fuel pressure before removing the fuel pressure gauge.**	Is the measured value 340 — 400 kPa (3.5 — 4.1 kgf/cm^2, 49 — 58 psi)?	Go to step **11**.	Repair the following item. Fuel pressure is too high: • Clogged fuel line or bent hose Fuel pressure is too low: • Improper fuel pump discharge • Clogged fuel line
11	**CHECK ENGINE COOLANT TEMPERATURE SENSOR.** 1) Start the engine and warm up completely. 2) Read the value of «Coolant Temp.» using the Subaru Select Monitor or a general scan tool. NOTE: • Subaru Select Monitor For detailed operation procedures, refer to "READ CURRENT DATA FOR ENGINE". <Ref. to EN(H6DO)(diag)-35, Subaru Select Monitor.> • General scan tool For detailed operation procedures, refer to the general scan tool operation manual.	Is the value of «Coolant Temp.» 75°C (167°F) or more?	Go to step **12**.	Replace the engine coolant temperature sensor. <Ref. to FU(H6DO)-29, Engine Coolant Temperature Sensor.>
12	**CHECK MASS AIR FLOW AND INTAKE AIR TEMPERATURE SENSOR.** 1) Start the engine and warm up engine until coolant temperature is higher than 75°C (167°F). 2) Place the select lever in "P" range or "N" range. 3) Turn the A/C switch to OFF. 4) Turn all the accessory switches to OFF. 5) Read the value of «Mass Air Flow» using the Subaru Select Monitor or a general scan tool. NOTE: • Subaru Select Monitor For detailed operation procedures, refer to "READ CURRENT DATA FOR ENGINE". <Ref. to EN(H6DO)(diag)-35, Subaru Select Monitor.> • General scan tool For detailed operation procedures, refer to the general scan tool operation manual.	Is the value of «Mass Air Flow» 2.0 — 5.0 g/s (0.26 — 0.66 lb/m)?	Go to step **13**.	Replace the mass air flow and intake air temperature sensor. <Ref. to FU(H6DO)-41, Mass Air Flow and Intake Air Temperature Sensor.>

	Step	Check	Yes	No
13	**CHECK MASS AIR FLOW AND INTAKE AIR TEMPERATURE SENSOR.** 1) Start the engine and warm up engine until coolant temperature is higher than 75°C (167°F). 2) Place the select lever in "P" range or "N" range. 3) Turn the A/C switch to OFF. 4) Turn all the accessory switches to OFF. 5) Open the front hood. 6) Measure the ambient temperature. 7) Read the value of «Intake Air Temp.» using the Subaru Select Monitor or a general scan tool. NOTE: • Subaru Select Monitor For detailed operation procedures, refer to "READ CURRENT DATA FOR ENGINE". <Ref. to EN(H6DO)(diag)-35, Subaru Select Monitor.> • General scan tool For detailed operation procedures, refer to the general scan tool operation manual.	Subtract ambient temperature from «Intake Air Temp.». Is the obtained value –10 — 50°C (–18 — 90°F)?	Go to step **14**.	Check the mass air flow and intake air temperature sensor. <Ref. to FU(H6DO)-41, Mass Air Flow and Intake Air Temperature Sensor.>
14	**CHECK REAR OXYGEN SENSOR DATA.** 1) Warm up the engine until engine coolant temperature is higher than 75°C (167°F), and keep the engine speed at 3,000 rpm. (2 minutes maximum) 2) Read the value of «Front O2 Sensor #2» using the Subaru Select Monitor or a general scan tool. NOTE: • Subaru Select Monitor For detailed operation procedures, refer to "READ CURRENT DATA FOR ENGINE". <Ref. to EN(H6DO)(diag)-35, Subaru Select Monitor.> • General scan tool For detailed operation procedures, refer to the general scan tool operation manual.	Is the value of «Front O2 Sensor #2» 0.490 V or more?	Go to step **15**.	Go to step **16**.
15	**CHECK REAR OXYGEN SENSOR DATA.** 1) Warm up the engine until engine coolant temperature is higher than 75°C (167°F), and rapidly reduce the engine speed from 3,000 rpm. 2) Read the value of «Front O2 Sensor #2» using the Subaru Select Monitor or a general scan tool. NOTE: • Subaru Select Monitor For detailed operation procedures, refer to "READ CURRENT DATA FOR ENGINE". <Ref. to EN(H6DO)(diag)-35, Subaru Select Monitor.> • General scan tool For detailed operation procedures, refer to the general scan tool operation manual.	Is the value of «Front O2 Sensor #2» 0.250 V or less?	Go to step **17**.	Go to step **16**.
16	**CHECK REAR OXYGEN SENSOR CONNECTOR AND COUPLING CONNECTOR.**	Has water entered the connector?	Completely remove any water inside.	Go to step **18**.

	Step	Check	Yes	No
17	**CHECK FRONT OXYGEN (A/F) SENSOR USING REAR OXYGEN SENSOR SIGNAL.** 1) Warm up the engine until engine coolant temperature is higher than 75°C (167°F), then keep the engine idling for 5 minutes or more. 2) Read the value of «Front O2 Sensor #2» using the Subaru Select Monitor or a general scan tool. NOTE: • Subaru Select Monitor For detailed operation procedures, refer to "READ CURRENT DATA FOR ENGINE". <Ref. to EN(H6DO)(diag)-35, Subaru Select Monitor.> • General scan tool For detailed operation procedures, refer to the general scan tool operation manual.	Is the value in «Front O2 Sensor #2» kept at 0.250 V or less for 5 minutes or more?	Replace the front oxygen (A/F) sensor. <Ref. to FU(H6DO)-50, Front Oxygen (A/F) Sensor.>	Go to step **18**.
18	**CHECK HARNESS BETWEEN ECM AND REAR OXYGEN SENSOR CONNECTOR.** 1) Turn the ignition switch to OFF. 2) Disconnect the connector from ECM and rear oxygen sensor. 3) Measure the resistance of harness between ECM and rear oxygen sensor connector. ***Connector & terminal*** ***(B135) No. 28 — (E25) No. 3:*** ***(B135) No. 30 — (E25) No. 4:***	Is the resistance less than 1 Ω?	Go to step **19**.	Repair the harness and connector. NOTE: In this case, repair the following item: • Open circuit in harness between ECM and rear oxygen sensor connector • Poor contact of coupling connector
19	**CHECK HARNESS BETWEEN ECM AND REAR OXYGEN SENSOR CONNECTOR.** 1) Connect the connector to ECM. 2) Turn the ignition switch to ON. 3) Measure the voltage between rear oxygen sensor connector and chassis ground. ***Connector & terminal*** ***(E25) No. 3 (+) — Chassis ground (–):***	Is the voltage 0.2 — 0.5 V?	Replace the rear oxygen sensor. <Ref. to FU(H6DO)-52, Rear Oxygen Sensor.>	Repair the harness and connector. NOTE: In this case, repair the following item: • Open circuit in harness between ECM and rear oxygen sensor connector • Poor contact of ECM connector • Poor contact of coupling connector

FD:DTC P2099 POST CATALYST FUEL TRIM SYSTEM TOO RICH BANK 2

DTC DETECTING CONDITION:

- Detected when two consecutive driving cycles with fault occur.
- GENERAL DESCRIPTION <Ref. to GD(H6DO)-233, DTC P2099 POST CATALYST FUEL TRIM SYSTEM TOO RICH BANK 2, Diagnostic Trouble Code (DTC) Detecting Criteria.>

CAUTION:
After servicing or replacing faulty parts, perform Clear Memory Mode <Ref. to EN(H6DO)(diag)-57, OPERATION, Clear Memory Mode.>, and Inspection Mode <Ref. to EN(H6DO)(diag)-44, PROCEDURE, Inspection Mode.>.

WIRING DIAGRAM:

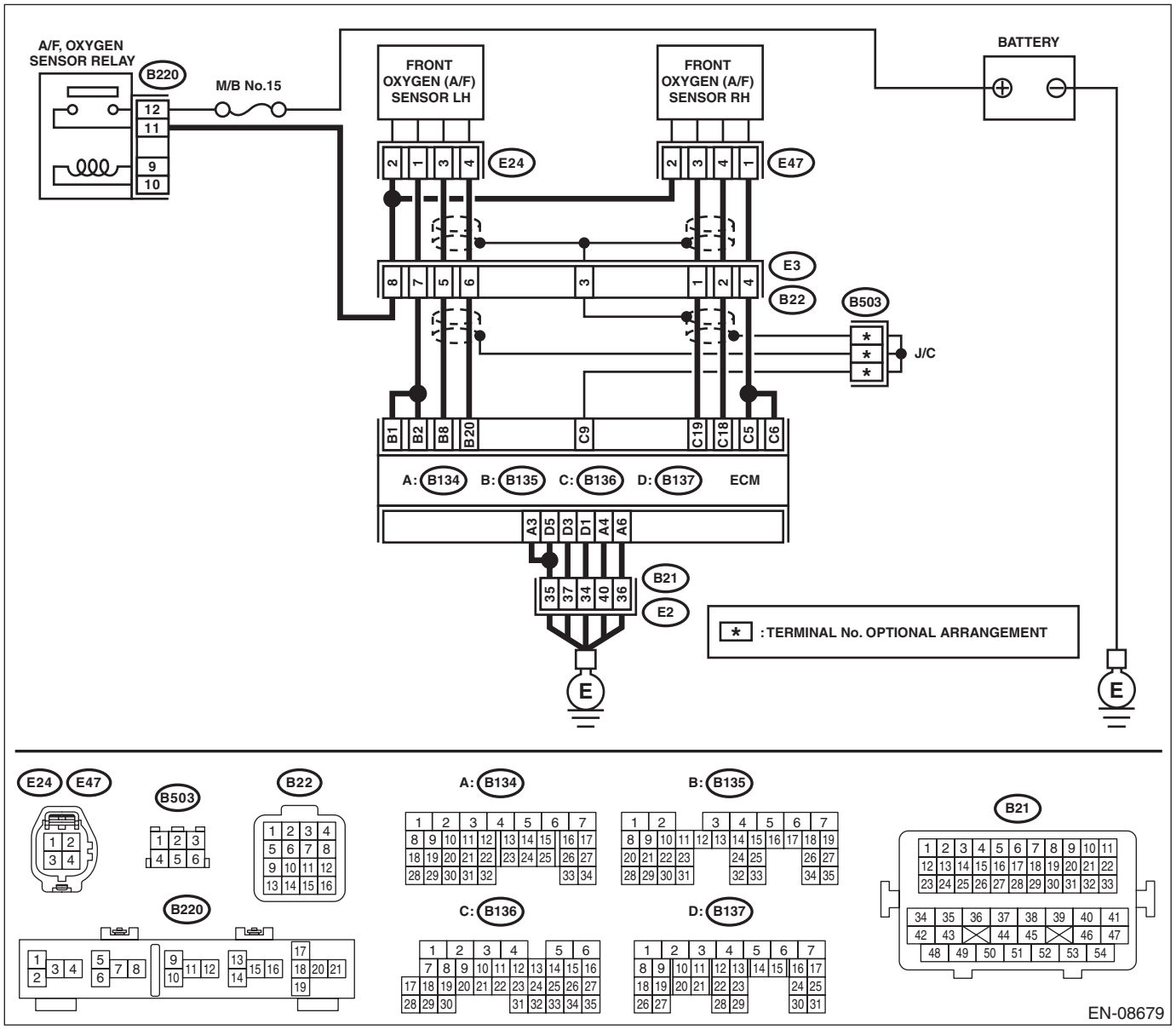

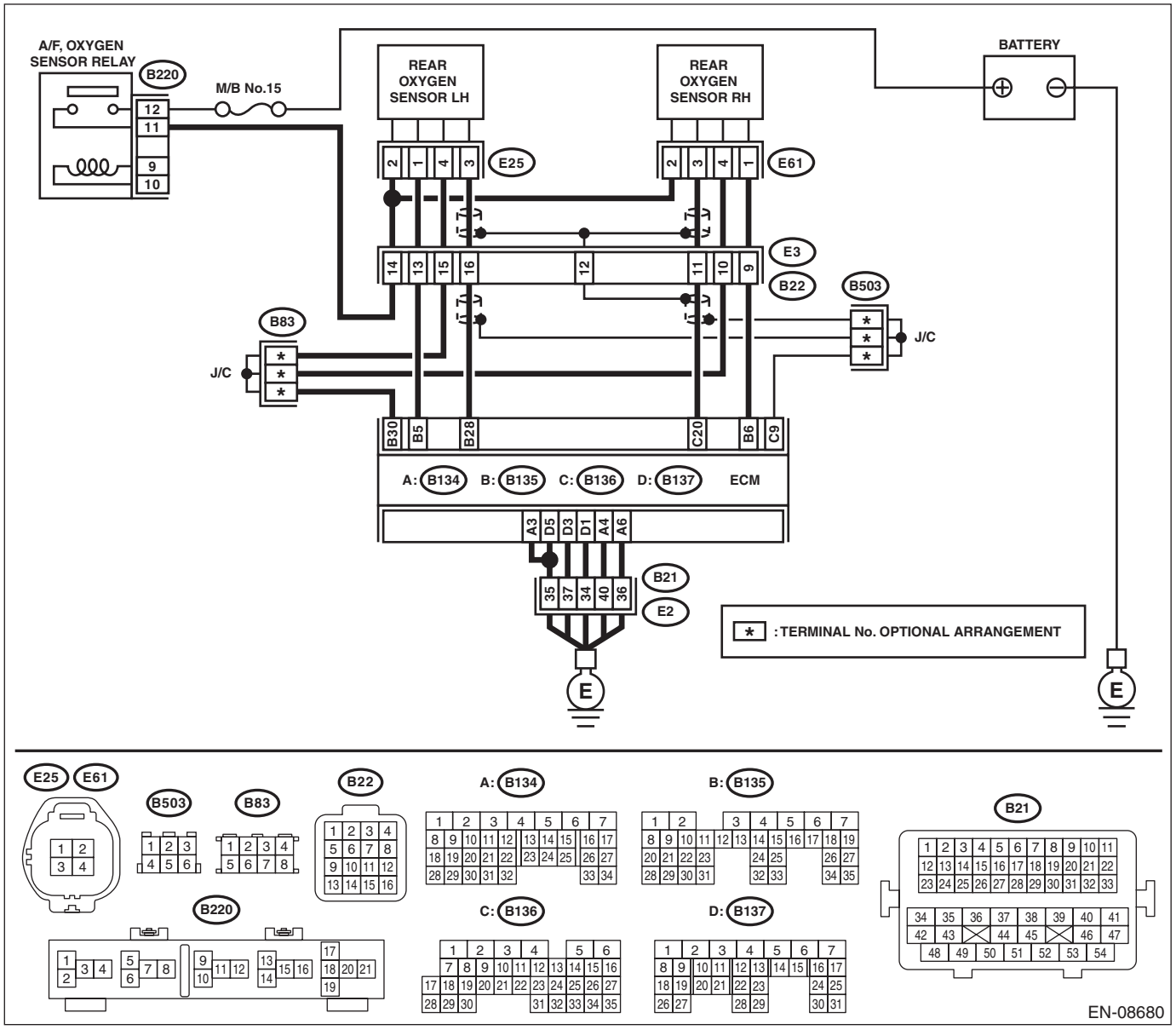

Step		Check	Yes	No
1	**CHECK FOR ANY OTHER DTC ON DISPLAY.**	Is any other DTC displayed?	Check DTC using "List of Diagnostic Trouble Code (DTC)". <Ref. to EN(H6DO)(diag)-85, List of Diagnostic Trouble Code (DTC).>	Go to step **2**.
2	**CHECK FRONT OXYGEN (A/F) SENSOR CONNECTOR AND COUPLING CONNECTOR.**	Has water entered the connector?	Completely remove any water inside.	Go to step **3**.

	Step	Check	Yes	No
3	**CHECK HARNESS BETWEEN ECM AND FRONT OXYGEN (A/F) SENSOR CONNECTOR.** 1) Turn the ignition switch to OFF. 2) Disconnect the connectors from ECM and front oxygen (A/F) sensor. 3) Measure the resistance of harness between ECM and front oxygen (A/F) sensor connector. ***Connector & terminal*** ***(B135) No. 8 — (E24) No. 3:*** ***(B135) No. 20 — (E24) No. 4:***	Is the resistance less than 1 Ω?	Go to step **4**.	Repair the harness and connector. NOTE: In this case, repair the following item: • Open circuit in harness between ECM and front oxygen (A/F) sensor connector • Poor contact of coupling connector
4	**CHECK HARNESS BETWEEN ECM AND FRONT OXYGEN (A/F) SENSOR CONNECTOR.** Measure the resistance between ECM and chassis ground. ***Connector & terminal*** ***(B135) No. 8 — Chassis ground:*** ***(B135) No. 20 — Chassis ground:***	Is the resistance 1 MΩ or more?	Go to step **5**.	Repair the ground short circuit of harness between ECM and front oxygen (A/F) sensor connector.
5	**CHECK OUTPUT SIGNAL FOR ECM.** 1) Connect the connector to ECM. 2) Turn the ignition switch to ON. 3) Measure the voltage between front oxygen (A/F) sensor connector and chassis ground. ***Connector & terminal*** ***(E24) No. 3 (+) — Chassis ground (–):***	Is the voltage 4.5 V or more?	Go to step **7**.	Go to step **6**.
6	**CHECK OUTPUT SIGNAL FOR ECM.** Measure the voltage between front oxygen (A/F) sensor connector and chassis ground. ***Connector & terminal*** ***(E24) No. 4 (+) — Chassis ground (–):***	Is the voltage 4.95 V or more?	Go to step **7**.	Go to step **8**.
7	**CHECK OUTPUT SIGNAL FOR ECM.** Measure the voltage between front oxygen (A/F) sensor connector and chassis ground. ***Connector & terminal*** ***(E24) No. 3 (+) — Chassis ground (–):*** ***(E24) No. 4 (+) — Chassis ground (–):***	Is the voltage 8 V or more?	Repair the short circuit to power in the harness between ECM and front oxygen (A/F) sensor connector. After repair, replace the ECM. <Ref. to FU(H6DO)-54, Engine Control Module (ECM).>	Repair the poor contact of ECM connector.
8	**CHECK EXHAUST SYSTEM.**	Are there holes or loose bolts on exhaust system?	Repair the exhaust system.	Go to step **9**.
9	**CHECK AIR INTAKE SYSTEM.**	Are there holes, loose bolts or disconnection of hose on air intake system?	Repair the air intake system.	Go to step **10**.

	Step	Check	Yes	No
10	**CHECK FUEL PRESSURE.** **WARNING:** **Place "NO OPEN FLAMES" signs near the working area.** **CAUTION:** **Be careful not to spill fuel.** 1) Connect the front oxygen (A/F) sensor connector. 2) Measure the fuel pressure. <Ref. to ME(H6DO)-31, INSPECTION, Fuel Pressure.> **CAUTION:** **Release fuel pressure before removing the fuel pressure gauge.**	Is the measured value 340 — 400 kPa (3.5 — 4.1 kgf/cm^2, 49 — 58 psi)?	Go to step **11**.	Repair the following item. Fuel pressure is too high: • Clogged fuel line or bent hose Fuel pressure is too low: • Improper fuel pump discharge • Clogged fuel line
11	**CHECK ENGINE COOLANT TEMPERATURE SENSOR.** 1) Start the engine and warm up completely. 2) Read the value of «Coolant Temp.» using the Subaru Select Monitor or a general scan tool. NOTE: • Subaru Select Monitor For detailed operation procedures, refer to "READ CURRENT DATA FOR ENGINE". <Ref. to EN(H6DO)(diag)-35, Subaru Select Monitor.> • General scan tool For detailed operation procedures, refer to the general scan tool operation manual.	Is the value of «Coolant Temp.» 75°C (167°F) or more?	Go to step **12**.	Replace the engine coolant temperature sensor. <Ref. to FU(H6DO)-29, Engine Coolant Temperature Sensor.>
12	**CHECK MASS AIR FLOW AND INTAKE AIR TEMPERATURE SENSOR.** 1) Start the engine and warm up engine until coolant temperature is higher than 75°C (167°F). 2) Place the select lever in "P" range or "N" range. 3) Turn the A/C switch to OFF. 4) Turn all the accessory switches to OFF. 5) Read the value of «Mass Air Flow» using the Subaru Select Monitor or a general scan tool. NOTE: • Subaru Select Monitor For detailed operation procedures, refer to "READ CURRENT DATA FOR ENGINE". <Ref. to EN(H6DO)(diag)-35, Subaru Select Monitor.> • General scan tool For detailed operation procedures, refer to the general scan tool operation manual.	Is the value of «Mass Air Flow» 2.0 — 5.0 g/s (0.26 — 0.66 lb/m)?	Go to step **13**.	Replace the mass air flow and intake air temperature sensor. <Ref. to FU(H6DO)-41, Mass Air Flow and Intake Air Temperature Sensor.>

	Step	Check	Yes	No
13	**CHECK MASS AIR FLOW AND INTAKE AIR TEMPERATURE SENSOR.** 1) Start the engine and warm up engine until coolant temperature is higher than 75°C (167°F). 2) Place the select lever in “P” range or “N” range. 3) Turn the A/C switch to OFF. 4) Turn all the accessory switches to OFF. 5) Open the front hood. 6) Measure the ambient temperature. 7) Read the value of «Intake Air Temp.» using the Subaru Select Monitor or a general scan tool. NOTE: • Subaru Select Monitor For detailed operation procedures, refer to “READ CURRENT DATA FOR ENGINE”. <Ref. to EN(H6DO)(diag)-35, Subaru Select Monitor.> • General scan tool For detailed operation procedures, refer to the general scan tool operation manual.	Subtract ambient temperature from «Intake Air Temp.». Is the obtained value –10 — 50°C (–18 — 90°F)?	Go to step **14**.	Check the mass air flow and intake air temperature sensor. <Ref. to FU(H6DO)-41, Mass Air Flow and Intake Air Temperature Sensor.>
14	**CHECK REAR OXYGEN SENSOR DATA.** 1) Warm up the engine until engine coolant temperature is higher than 75°C (167°F), and keep the engine speed at 3,000 rpm. (2 minutes maximum) 2) Read the value of «Front O2 Sensor #2» using the Subaru Select Monitor or a general scan tool. NOTE: • Subaru Select Monitor For detailed operation procedures, refer to “READ CURRENT DATA FOR ENGINE”. <Ref. to EN(H6DO)(diag)-35, Subaru Select Monitor.> • General scan tool For detailed operation procedures, refer to the general scan tool operation manual.	Is the value of «Front O2 Sensor #2» 0.490 V or more?	Go to step **15**.	Go to step **16**.
15	**CHECK REAR OXYGEN SENSOR DATA.** 1) Warm up the engine until engine coolant temperature is higher than 75°C (167°F), and rapidly reduce the engine speed from 3,000 rpm. 2) Read the value of «Front O2 Sensor #2» using the Subaru Select Monitor or a general scan tool. NOTE: • Subaru Select Monitor For detailed operation procedures, refer to “READ CURRENT DATA FOR ENGINE”. <Ref. to EN(H6DO)(diag)-35, Subaru Select Monitor.> • General scan tool For detailed operation procedures, refer to the general scan tool operation manual.	Is the value of «Front O2 Sensor #2» 0.250 V or less?	Go to step **17**.	Go to step **16**.
16	**CHECK REAR OXYGEN SENSOR CONNECTOR AND COUPLING CONNECTOR.**	Has water entered the connector?	Completely remove any water inside.	Go to step **18**.

	Step	Check	Yes	No
17	**CHECK FRONT OXYGEN (A/F) SENSOR USING REAR OXYGEN SENSOR SIGNAL.** 1) Warm up the engine until engine coolant temperature is higher than 75°C (167°F), then keep the engine idling for 5 minutes or more. 2) Read the value of «Front O2 Sensor #2» using the Subaru Select Monitor or a general scan tool. NOTE: • Subaru Select Monitor For detailed operation procedures, refer to "READ CURRENT DATA FOR ENGINE". <Ref. to EN(H6DO)(diag)-35, Subaru Select Monitor.> • General scan tool For detailed operation procedures, refer to the general scan tool operation manual.	Is the value in «Front O2 Sensor #2» kept at 0.8 V or more for 5 minutes or more?	Replace the front oxygen (A/F) sensor. <Ref. to FU(H6DO)-50, Front Oxygen (A/F) Sensor.>	Go to step **18**.
18	**CHECK HARNESS BETWEEN ECM AND REAR OXYGEN SENSOR CONNECTOR.** 1) Turn the ignition switch to OFF. 2) Disconnect the connector from ECM and rear oxygen sensor. 3) Measure the resistance of harness between ECM and rear oxygen sensor connector. ***Connector & terminal*** ***(B135) No. 28 — (E25) No. 3:*** ***(B135) No. 30 — (E25) No. 4:***	Is the resistance less than 1 Ω?	Go to step **19**.	Repair the harness and connector. NOTE: In this case, repair the following item: • Open circuit in harness between ECM and rear oxygen sensor connector • Poor contact of coupling connector
19	**CHECK HARNESS BETWEEN ECM AND REAR OXYGEN SENSOR CONNECTOR.** 1) Connect the connector to ECM. 2) Turn the ignition switch to ON. 3) Measure the voltage between rear oxygen sensor connector and chassis ground. ***Connector & terminal*** ***(E25) No. 3 (+) — Chassis ground (–):***	Is the voltage 0.2 — 0.5 V?	Replace the rear oxygen sensor. <Ref. to FU(H6DO)-52, Rear Oxygen Sensor.>	Repair the harness and connector. NOTE: In this case, repair the following item: • Open circuit in harness between ECM and rear oxygen sensor connector • Poor contact of ECM connector • Poor contact of coupling connector

FE:DTC P2101 THROTTLE ACTUATOR CONTROL MOTOR CIRCUIT RANGE/ PERFORMANCE

DTC DETECTING CONDITION:

- Immediately at fault recognition
- GENERAL DESCRIPTION <Ref. to GD(H6DO)-234, DTC P2101 THROTTLE ACTUATOR CONTROL MOTOR CIRCUIT RANGE/PERFORMANCE, Diagnostic Trouble Code (DTC) Detecting Criteria.>

TROUBLE SYMPTOM:

- Improper idling
- Poor driving performance
- Engine stalls.

CAUTION:

After servicing or replacing faulty parts, perform Clear Memory Mode <Ref. to EN(H6DO)(diag)-57, OPERATION, Clear Memory Mode.>, and Inspection Mode <Ref. to EN(H6DO)(diag)-44, PROCEDURE, Inspection Mode.>.

WIRING DIAGRAM:

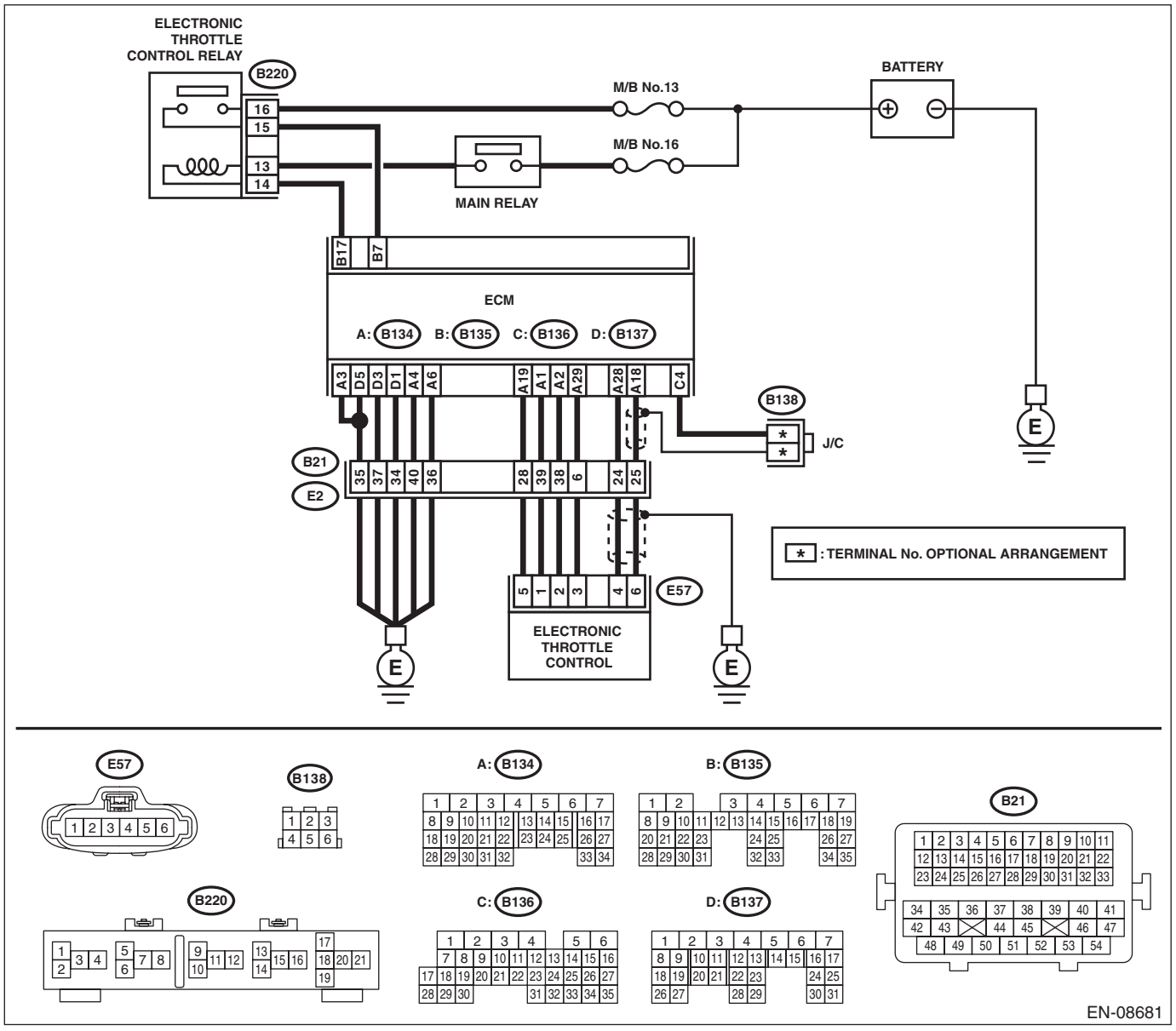

	Step	Check	Yes	No
1	**CHECK ELECTRONIC THROTTLE CONTROL RELAY.** 1) Turn the ignition switch to OFF. 2) Remove the electronic throttle control relay. 3) Connect the battery to terminals No. 13 and No. 14 of electronic throttle control relay. 4) Measure the resistance between electronic throttle control relay terminals. ***Terminals*** ***No. 15 — No. 16:***	Is the resistance less than 1 Ω?	Go to step **2**.	Replace the electronic throttle control relay. <Ref. to EN(H6DO)(diag)-9, Electrical Component Location.>
2	**CHECK POWER SUPPLY OF ELECTRONIC THROTTLE CONTROL RELAY.** Measure the voltage between electronic throttle control relay connector and chassis ground. ***Connector & terminal*** ***(B220) No. 16 (+) — Chassis ground (–):***	Is the voltage 10 V or more?	Go to step **3**.	Repair the open or ground short circuit of power supply circuit.
3	**CHECK HARNESS BETWEEN ECM AND ELECTRONIC THROTTLE CONTROL RELAY.** 1) Disconnect the connector from ECM. 2) Turn the ignition switch to ON. 3) Measure the voltage between electronic throttle control relay connector and chassis ground. ***Connector & terminal*** ***(B220) No. 14 (+) — Chassis ground (–):***	Is the voltage 10 V or more?	Repair the short circuit to power in harness between ECM and electronic throttle control relay.	Go to step **4**.
4	**CHECK HARNESS BETWEEN ECM AND ELECTRONIC THROTTLE CONTROL RELAY.** 1) Turn the ignition switch to OFF. 2) Measure the resistance between electronic throttle control relay connector and chassis ground. ***Connector & terminal*** ***(B220) No. 14 — Chassis ground:*** ***(B220) No. 15 — Chassis ground:***	Is the resistance 1 MΩ or more?	Go to step **5**.	Repair the ground short circuit of harness between ECM and electronic throttle control relay.
5	**CHECK HARNESS BETWEEN ECM AND ELECTRONIC THROTTLE CONTROL RELAY.** Measure the resistance between ECM and electronic throttle control relay connector. ***Connector & terminal*** ***(B135) No. 7 — (B220) No. 15:*** ***(B135) No. 17 — (B220) No. 14:***	Is the resistance less than 1 Ω?	Go to step **6**.	Repair the open circuit of harness between ECM and electronic throttle control relay.
6	**CHECK HARNESS BETWEEN ECM AND ELECTRONIC THROTTLE CONTROL.** 1) Turn the ignition switch to OFF. 2) Disconnect the connectors from electronic throttle control. 3) Measure the resistance between ECM and chassis ground. ***Connector & terminal*** ***(B134) No. 19 — Chassis ground:*** ***(B134) No. 18 — Chassis ground:*** ***(B134) No. 18 — (B136) No. 4:*** ***(B134) No. 28 — Chassis ground:***	Is the resistance 1 MΩ or more?	Go to step **7**.	Repair the short circuit to ground in harness between ECM and electronic throttle control connector.

	Step	Check	Yes	No
7	**CHECK SHORT CIRCUIT INSIDE THE ECM.** 1) Connect the connector to ECM. 2) Measure the resistance between electronic throttle control connector and engine ground. ***Connector & terminal*** ***(E57) No. 6 — Engine ground:*** ***(E57) No. 4 — Engine ground:***	Is the resistance 1 MΩ or more?	Go to step **8**.	Repair the short circuit to ground in harness between ECM and electronic throttle control connector. Replace the ECM if defective. <Ref. to FU(H6DO)-54, Engine Control Module (ECM).>
8	**CHECK HARNESS BETWEEN ECM AND ELECTRONIC THROTTLE CONTROL.** 1) Disconnect the connector from ECM. 2) Measure the resistance of harness between ECM and electronic throttle control connector. ***Connector & terminal*** ***(B134) No. 18 — (E57) No. 6:*** ***(B134) No. 28 — (E57) No. 4:*** ***(B134) No. 29 — (E57) No. 3:***	Is the resistance less than 1 Ω?	Go to step **9**.	Repair the harness and connector. NOTE: In this case, repair the following item: • Open circuit in harness between ECM and electronic throttle control connector • Poor contact of coupling connector
9	**CHECK HARNESS BETWEEN ECM AND ELECTRONIC THROTTLE CONTROL.** 1) Connect the connector to ECM. 2) Measure the resistance between electronic throttle control connector and engine ground. ***Connector & terminal*** ***(E57) No. 3 — Engine ground:***	Is the resistance less than 5 Ω?	Go to step **10**.	Repair the harness and connector. NOTE: In this case, repair the following item: • Open circuit of harness between ECM and engine ground • Poor contact of ECM connector • Poor contact of coupling connector
10	**CHECK HARNESS BETWEEN ECM AND ELECTRONIC THROTTLE CONTROL.** 1) Turn the ignition switch to ON. 2) Measure the voltage between electronic throttle control connector and engine ground. ***Connector & terminal*** ***(E57) No. 6 (+) — Engine ground (–):*** ***(E57) No. 4 (+) — Engine ground (–):***	Is the voltage 5 V or more?	Repair the short circuit to power in harness between ECM and electronic throttle control connector.	Go to step **11**.
11	**CHECK HARNESS BETWEEN ECM AND ELECTRONIC THROTTLE CONTROL.** 1) Turn the ignition switch to OFF. 2) Disconnect the connector from ECM. 3) Measure the resistance between ECM connectors. ***Connector & terminal*** ***(B134) No. 19 — (B134) No. 18:*** ***(B134) No. 19 — (B134) No. 28:***	Is the resistance 1 MΩ or more?	Go to step **12**.	Repair the short circuit to power in harness between ECM and electronic throttle control connector.

	Step	Check	Yes	No
12	**CHECK SENSOR OUTPUT.** 1) Connect all connectors. 2) Turn the ignition switch to ON. 3) Read the value of «Main-Throttle Sensor» using Subaru Select Monitor. NOTE: For detailed operation procedures, refer to "READ CURRENT DATA FOR ENGINE". <Ref. to EN(H6DO)(diag)-35, Subaru Select Monitor.>	Is the value of «Main-Throttle Sensor» 0.81 — 0.87 V?	Go to step **13**.	Repair the poor contact of electronic throttle control connector. Replace the electronic throttle control if defective. <Ref. to FU(H6DO)-19, Throttle Body.>
13	**CHECK SENSOR OUTPUT.** Read the value of «Sub-Throttle Sensor» using Subaru Select Monitor. NOTE: For detailed operation procedures, refer to "READ CURRENT DATA FOR ENGINE". <Ref. to EN(H6DO)(diag)-35, Subaru Select Monitor.>	Is the value of «Sub-Throttle Sensor» 1.64 — 1.70 V?	Go to step **14**.	Repair the poor contact of electronic throttle control connector. Replace the electronic throttle control if defective. <Ref. to FU(H6DO)-19, Throttle Body.>
14	**CHECK HARNESS BETWEEN ECM AND ELECTRONIC THROTTLE CONTROL MOTOR.** 1) Turn the ignition switch to OFF. 2) Disconnect the connectors from ECM and electronic throttle control. 3) Measure the resistance between ECM and electronic throttle control connector. ***Connector & terminal*** ***(B134) No. 1 — (E57) No. 1:*** ***(B134) No. 2 — (E57) No. 2:***	Is the resistance less than 1 Ω?	Go to step **15**.	Repair the harness and connector. NOTE: In this case, repair the following item: • Open circuit in harness between ECM and electronic throttle control • Poor contact of coupling connector
15	**CHECK HARNESS BETWEEN ECM AND ELECTRONIC THROTTLE CONTROL MOTOR.** 1) Connect the connector to ECM. 2) Turn the ignition switch to ON. 3) Measure the voltage between electronic throttle control connector and engine ground. ***Connector & terminal*** ***(E57) No. 2 (+) — Engine ground (–):*** ***(E57) No. 1 (+) — Engine ground (–):***	Is the voltage 5 V or more?	Repair the short circuit to power in the harness between ECM and electronic throttle control.	Go to step **16**.
16	**CHECK HARNESS BETWEEN ECM AND ELECTRONIC THROTTLE CONTROL MOTOR.** 1) Turn the ignition switch to OFF. 2) Disconnect the connector from ECM. 3) Measure the resistance between electronic throttle control connector and engine ground. ***Connector & terminal*** ***(E57) No. 2 — Engine ground:*** ***(E57) No. 1 — Engine ground:***	Is the resistance 1 MΩ or more?	Go to step **17**.	Repair the short circuit to ground in harness between ECM and electronic throttle control.
17	**CHECK ELECTRONIC THROTTLE CONTROL MOTOR HARNESS.** Measure the resistance between electronic throttle control connectors. ***Connector & terminal*** ***(E57) No. 2 — (E57) No. 1:***	Is the resistance 1 MΩ or more?	Go to step **18**.	Repair the short circuit of harness between ECM and electronic throttle control.

	Step	Check	Yes	No
18	**CHECK ELECTRONIC THROTTLE CONTROL GROUND CIRCUIT.** Measure the resistance between ECM and chassis ground. ***Connector & terminal*** ***(B134) No. 3 — Chassis ground:*** ***(B134) No. 4 — Chassis ground:*** ***(B134) No. 6 — Chassis ground:*** ***(B137) No. 1 — Chassis ground:*** ***(B137) No. 3 — Chassis ground:*** ***(B137) No. 5 — Chassis ground:***	Is the resistance less than 5 Ω?	Go to step **19**.	Repair the harness and connector. NOTE: In this case, repair the following item: • Open circuit of harness between ECM and engine ground • Poor contact of coupling connector
19	**CHECK ELECTRONIC THROTTLE CONTROL.** Measure the resistance between electronic throttle control terminals. ***Terminals*** ***No. 2 — No. 1:***	Is the resistance 50 Ω or less?	Go to step **20**.	Replace the electronic throttle control. <Ref. to FU(H6DO)-19, Throttle Body.>
20	**CHECK ELECTRONIC THROTTLE CONTROL.** Move the throttle valve to the fully open and fully closed positions with fingers. Check that the valve returns to the specified position when releasing fingers.	Does the valve return to the specified position? Standard value: 3 mm (0.12 in) from fully closed position	Repair the poor contact of ECM connector.	Replace the electronic throttle control. <Ref. to FU(H6DO)-19, Throttle Body.>

FF: DTC P2102 THROTTLE ACTUATOR CONTROL MOTOR CIRCUIT LOW

DTC DETECTING CONDITION:

- Immediately at fault recognition
- GENERAL DESCRIPTION <Ref. to GD(H6DO)-236, DTC P2102 THROTTLE ACTUATOR CONTROL MOTOR CIRCUIT LOW, Diagnostic Trouble Code (DTC) Detecting Criteria.>

TROUBLE SYMPTOM:

- Improper idling
- Poor driving performance
- Engine stalls.

CAUTION:

After servicing or replacing faulty parts, perform Clear Memory Mode <Ref. to EN(H6DO)(diag)-57, OPERATION, Clear Memory Mode.>, and Inspection Mode <Ref. to EN(H6DO)(diag)-44, PROCEDURE, Inspection Mode.>.

WIRING DIAGRAM:

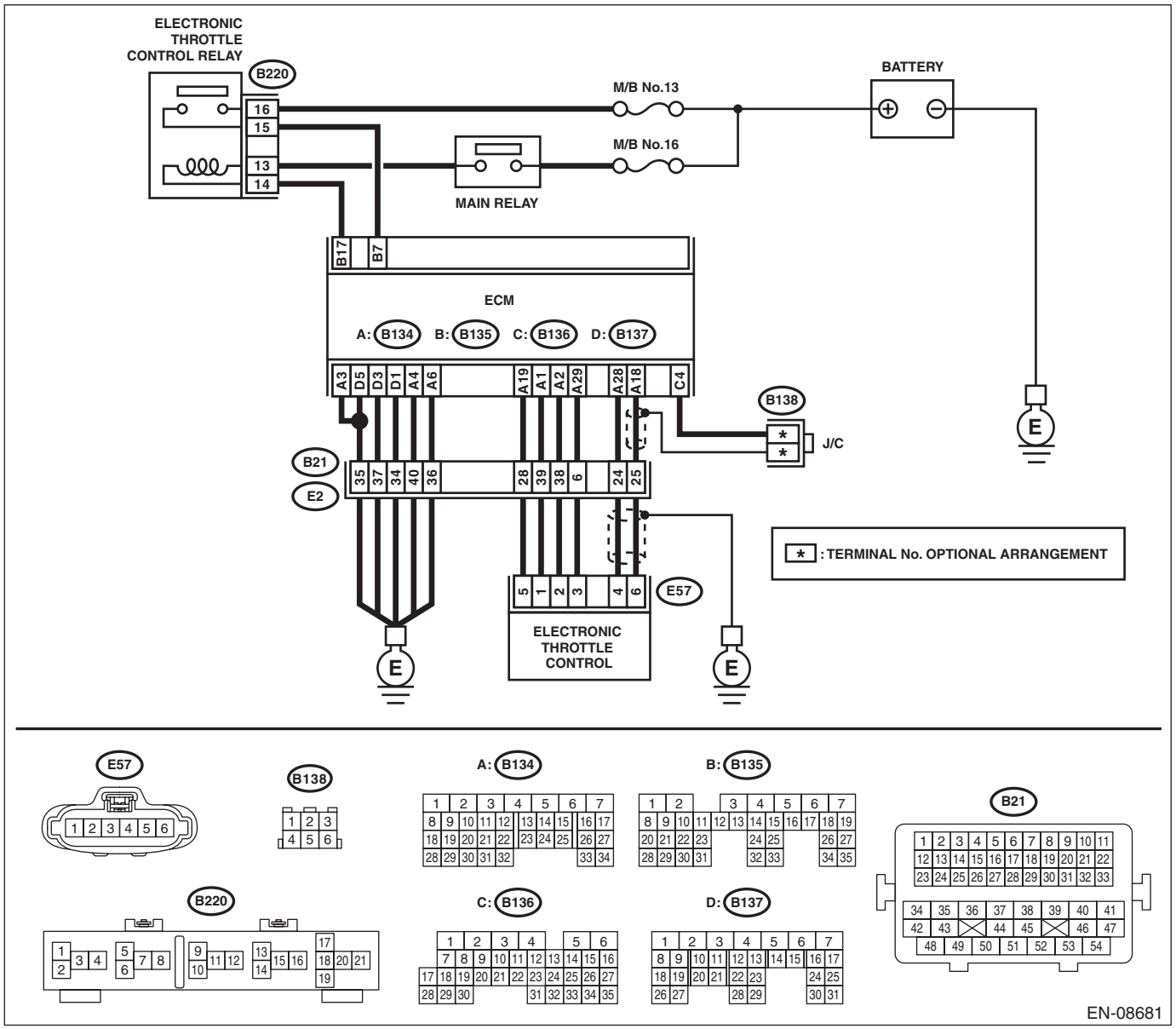

	Step	Check	Yes	No
1	**CHECK ELECTRONIC THROTTLE CONTROL RELAY.** 1) Turn the ignition switch to OFF. 2) Remove the electronic throttle control relay. 3) Connect the battery to terminals No. 13 and No. 14 of electronic throttle control relay. 4) Measure the resistance between electronic throttle control relay terminals. ***Terminals*** ***No. 15 — No. 16:***	Is the resistance less than 1 Ω?	Go to step **2**.	Replace the electronic throttle control relay. <Ref. to EN(H6DO)(diag)-9, Electrical Component Location.>
2	**CHECK POWER SUPPLY OF ELECTRONIC THROTTLE CONTROL RELAY.** Measure the voltage between electronic throttle control relay connector and chassis ground. ***Connector & terminal*** ***(B220) No. 16 (+) — Chassis ground (–):***	Is the voltage 10 V or more?	Go to step **3**.	Repair the open or ground short circuit of power supply circuit.
3	**CHECK HARNESS BETWEEN ECM AND ELECTRONIC THROTTLE CONTROL RELAY.** 1) Disconnect the connectors from ECM. 2) Turn the ignition switch to ON. 3) Measure the voltage between electronic throttle control relay connector and chassis ground. ***Connector & terminal*** ***(B220) No. 14 (+) — Chassis ground (–):***	Is the voltage 10 V or more?	Repair the short circuit to power in harness between ECM and electronic throttle control relay.	Go to step **4**.
4	**CHECK HARNESS BETWEEN ECM AND ELECTRONIC THROTTLE CONTROL RELAY.** 1) Turn the ignition switch to OFF. 2) Measure the resistance between electronic throttle control relay connector and chassis ground. ***Connector & terminal*** ***(B220) No. 14 — Chassis ground:*** ***(B220) No. 15 — Chassis ground:***	Is the resistance 1 MΩ or more?	Go to step **5**.	Repair the ground short circuit of harness between ECM and electronic throttle control relay.
5	**CHECK HARNESS BETWEEN ECM AND ELECTRONIC THROTTLE CONTROL RELAY.** Measure the resistance between ECM and electronic throttle control relay connector. ***Connector & terminal*** ***(B135) No. 7 — (B220) No. 15:*** ***(B135) No. 17 — (B220) No. 14:***	Is the resistance less than 1 Ω?	Repair the poor contact of ECM connector.	Repair the open circuit of harness between ECM and electronic throttle control relay.

FG:DTC P2103 THROTTLE ACTUATOR CONTROL MOTOR CIRCUIT HIGH

DTC DETECTING CONDITION:

- Immediately at fault recognition
- GENERAL DESCRIPTION <Ref. to GD(H6DO)-238, DTC P2103 THROTTLE ACTUATOR CONTROL MOTOR CIRCUIT HIGH, Diagnostic Trouble Code (DTC) Detecting Criteria.>

CAUTION:

After servicing or replacing faulty parts, perform Clear Memory Mode <Ref. to EN(H6DO)(diag)-57, OPERATION, Clear Memory Mode.>, and Inspection Mode <Ref. to EN(H6DO)(diag)-44, PROCEDURE, Inspection Mode.>.

WIRING DIAGRAM:

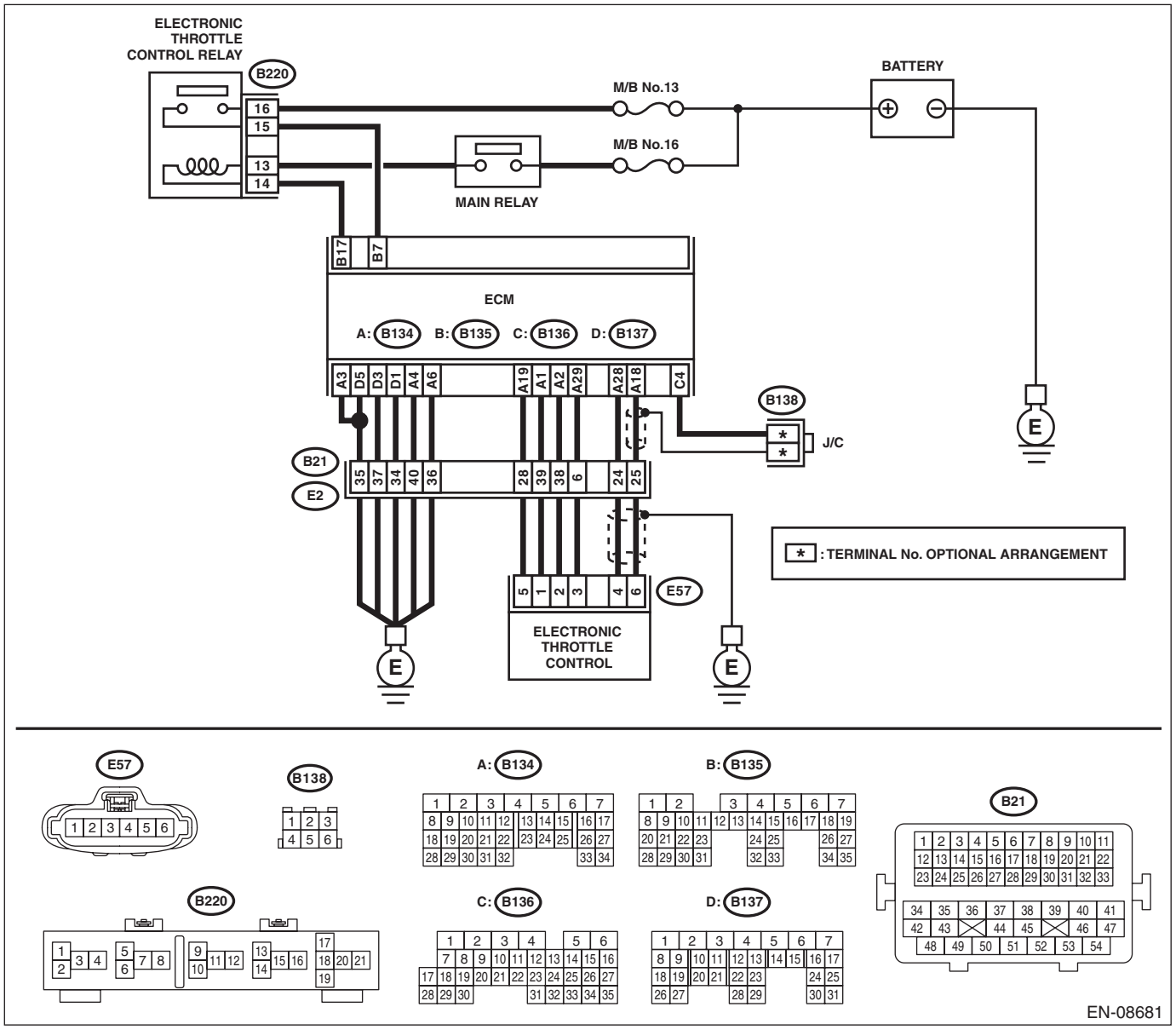

	Step	Check	Yes	No
1	**CHECK ELECTRONIC THROTTLE CONTROL RELAY.** 1) Turn the ignition switch to OFF. 2) Remove the electronic throttle control relay. 3) Measure the resistance between electronic throttle control relay terminals. ***Terminals*** ***No. 15 — No. 16:***	Is the resistance 1 MΩ or more?	Go to step **2**.	Replace the electronic throttle control relay. <Ref. to EN(H6DO)(diag)-9, Electrical Component Location.>
2	**CHECK SHORT CIRCUIT OF ELECTRONIC THROTTLE CONTROL RELAY POWER SUPPLY.** 1) Turn the ignition switch to ON. 2) Measure the voltage between electronic throttle control relay connector and chassis ground. ***Connector & terminal*** ***(B220) No. 15 (+) — Chassis ground (–):***	Is the voltage 10 V or more?	Repair the short circuit to power in harness between ECM and electronic throttle control relay.	Go to step **3**.
3	**CHECK HARNESS BETWEEN ECM AND ELECTRONIC THROTTLE CONTROL RELAY.** 1) Turn the ignition switch to OFF. 2) Disconnect the connectors from ECM. 3) Measure the resistance between ECM and chassis ground. ***Connector & terminal*** ***(B135) No. 17 — Chassis ground:***	Is the resistance 1 MΩ or more?	Repair the poor contact of ECM connector.	Repair the ground short circuit of harness between ECM and electronic throttle control relay.

FH:DTC P2109 THROTTLE/PEDAL POSITION SENSOR “A” MINIMUM STOP PERFORMANCE

NOTE:
For the diagnostic procedure, refer to DTC P2101. <Ref. to EN(H6DO)(diag)-336, DTC P2101 THROTTLE ACTUATOR CONTROL MOTOR CIRCUIT RANGE/PERFORMANCE, Diagnostic Procedure with Diagnostic Trouble Code (DTC).>

FI: DTC P2122 THROTTLE/PEDAL POSITION SENSOR/SWITCH “D” CIRCUIT LOW INPUT

DTC DETECTING CONDITION:

- Immediately at fault recognition
- GENERAL DESCRIPTION <Ref. to GD(H6DO)-242, DTC P2122 THROTTLE/PEDAL POSITION SENSOR/SWITCH “D” CIRCUIT LOW INPUT, Diagnostic Trouble Code (DTC) Detecting Criteria.>

TROUBLE SYMPTOM:

- Improper idling
- Poor driving performance

CAUTION:

After servicing or replacing faulty parts, perform Clear Memory Mode <Ref. to EN(H6DO)(diag)-57, OPERATION, Clear Memory Mode.>, and Inspection Mode <Ref. to EN(H6DO)(diag)-44, PROCEDURE, Inspection Mode.>.

WIRING DIAGRAM:

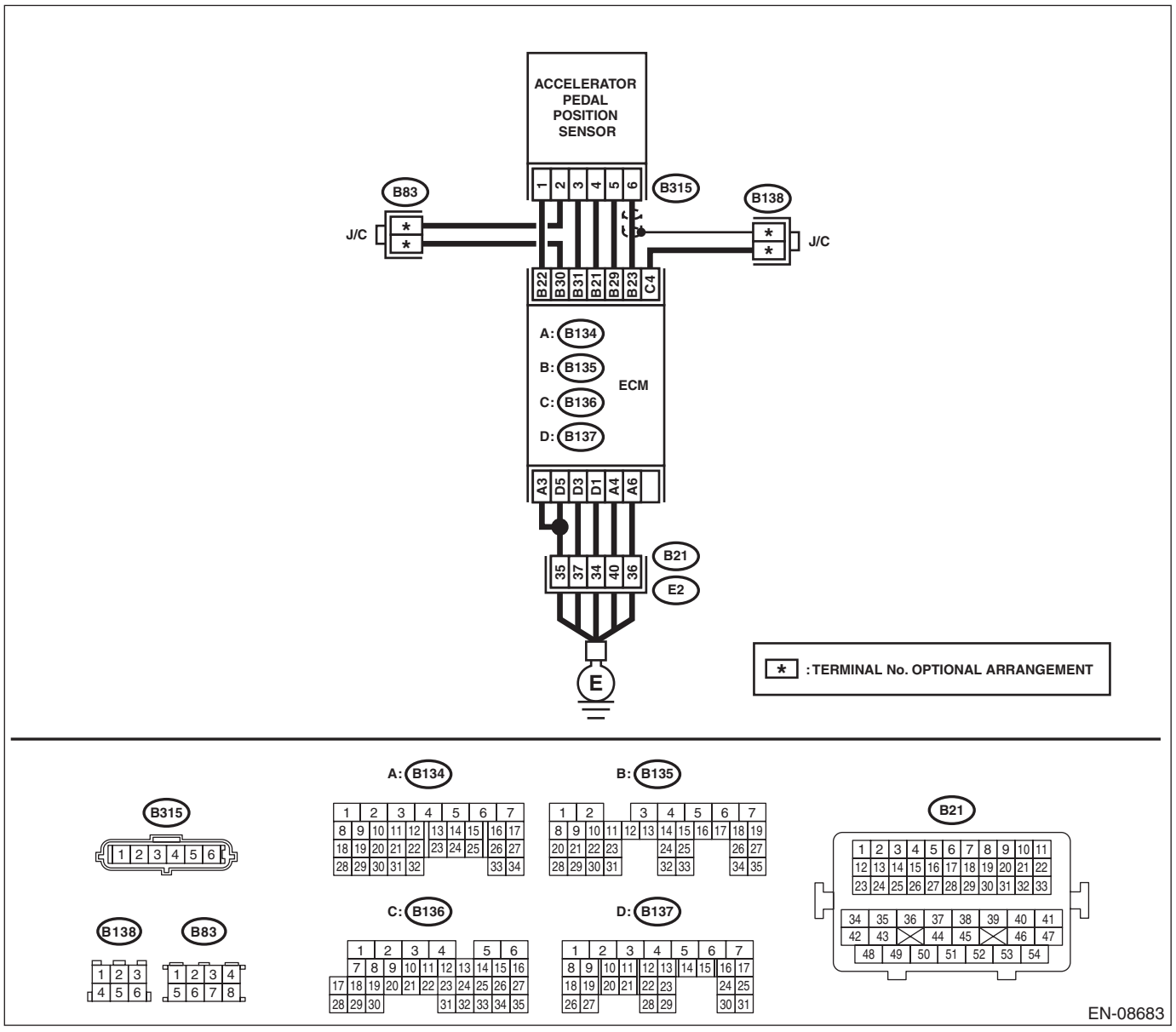

	Step	Check	Yes	No
1	**CHECK HARNESS BETWEEN ECM AND ACCELERATOR PEDAL POSITION SENSOR CONNECTOR.** 1) Turn the ignition switch to OFF. 2) Disconnect the connectors from ECM and accelerator pedal position sensor. 3) Measure the resistance between ECM and chassis ground. ***Connector & terminal*** ***(B135) No. 21 — Chassis ground:*** ***(B135) No. 23 — Chassis ground:*** ***(B135) No. 23 — (B136) No. 4:***	Is the resistance 1 MΩ or more?	Go to step **2**.	Repair the short circuit to ground in harness between ECM and accelerator pedal position sensor connector.
2	**CHECK SHORT CIRCUIT INSIDE THE ECM.** 1) Connect the connector to ECM. 2) Measure the resistance between accelerator pedal position sensor connector and chassis ground. ***Connector & terminal*** ***(B315) No. 6 — Chassis ground:***	Is the resistance 1 MΩ or more?	Replace the accelerator pedal. <Ref. to SP(H4SO)-4, Accelerator Pedal.>	Repair the short circuit to ground in harness between ECM and accelerator pedal position sensor connector. Replace the ECM if defective. <Ref. to FU(H6DO)-54, Engine Control Module (ECM).>

FJ: DTC P2123 THROTTLE/PEDAL POSITION SENSOR/SWITCH "D" CIRCUIT HIGH INPUT

DTC DETECTING CONDITION:

- Immediately at fault recognition
- GENERAL DESCRIPTION <Ref. to GD(H6DO)-244, DTC P2123 THROTTLE/PEDAL POSITION SENSOR/SWITCH "D" CIRCUIT HIGH INPUT, Diagnostic Trouble Code (DTC) Detecting Criteria.>

TROUBLE SYMPTOM:

- Improper idling
- Poor driving performance

CAUTION:

After servicing or replacing faulty parts, perform Clear Memory Mode <Ref. to EN(H6DO)(diag)-57, OPERATION, Clear Memory Mode.>, and Inspection Mode <Ref. to EN(H6DO)(diag)-44, PROCEDURE, Inspection Mode.>.

WIRING DIAGRAM:

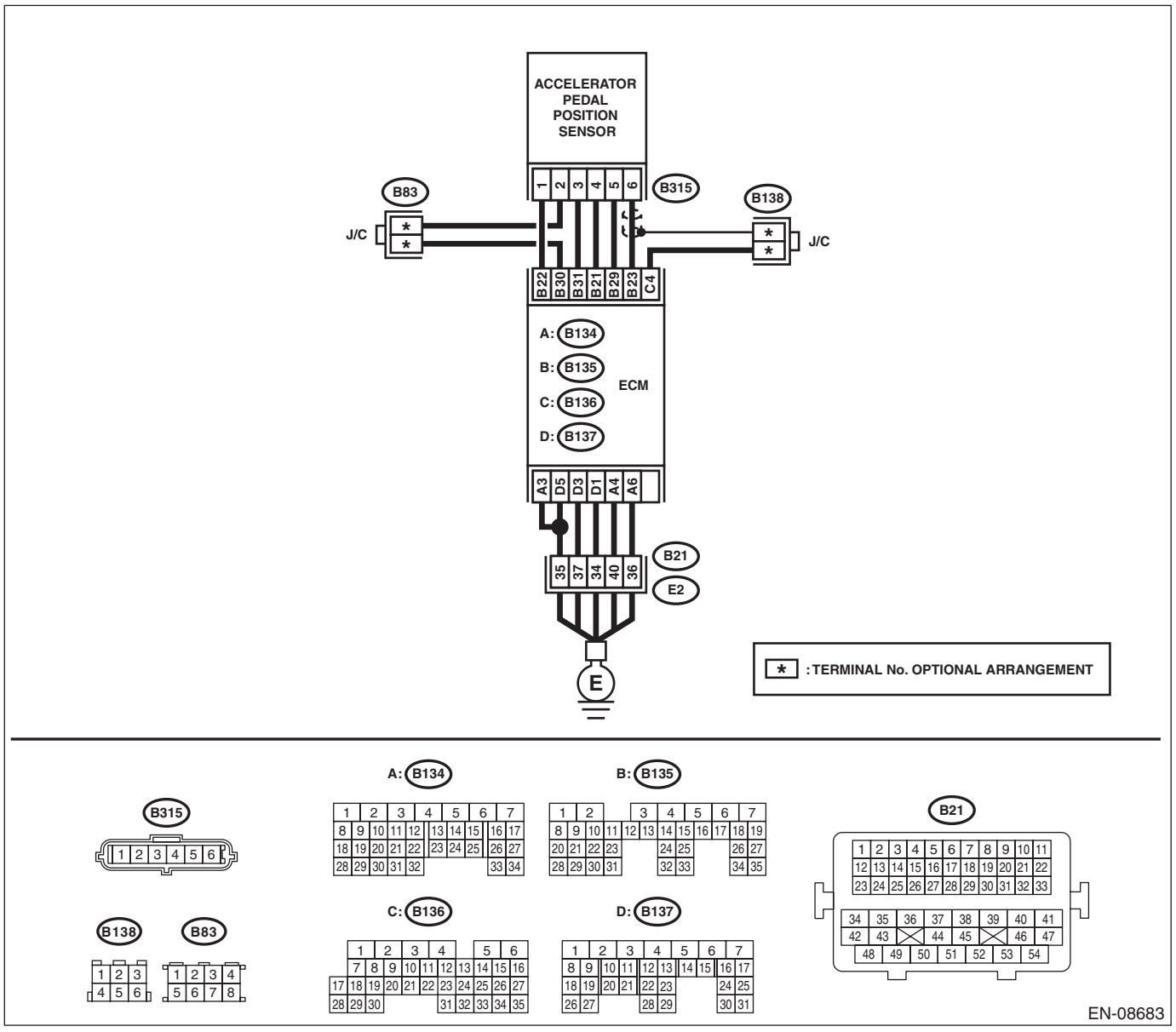

	Step	Check	Yes	No
1	**CHECK HARNESS BETWEEN ECM AND ACCELERATOR PEDAL POSITION SENSOR CONNECTOR.** 1) Turn the ignition switch to OFF. 2) Disconnect the connectors from ECM and accelerator pedal position sensor. 3) Measure the resistance of harness between ECM and accelerator pedal position sensor connector. ***Connector & terminal*** ***(B135) No. 23 — (B315) No. 6:*** ***(B135) No. 29 — (B315) No. 5:***	Is the resistance less than 1 Ω?	Go to step **2**.	Repair the open circuit in harness between ECM and accelerator pedal position sensor connector.
2	**CHECK HARNESS BETWEEN ECM AND ACCELERATOR PEDAL POSITION SENSOR CONNECTOR.** 1) Connect the connector to ECM. 2) Measure the resistance between accelerator pedal position sensor connector and chassis ground. ***Connector & terminal*** ***(B315) No. 5 — Chassis ground:***	Is the resistance less than 5 Ω?	Go to step **3**.	Repair the harness and connector. NOTE: In this case, repair the following item: • Open circuit of harness between ECM and engine ground • Poor contact of ECM connector • Poor contact of coupling connector
3	**CHECK HARNESS BETWEEN ECM AND ACCELERATOR PEDAL POSITION SENSOR CONNECTOR.** 1) Turn the ignition switch to ON. 2) Measure the voltage between accelerator pedal position sensor connector and chassis ground. ***Connector & terminal*** ***(B315) No. 6 (+) — Chassis ground (–):***	Is the voltage 5 V or more?	Repair the short circuit to power supply in the harness between the ECM and accelerator pedal position sensor connector.	Go to step **4**.
4	**CHECK HARNESS BETWEEN ECM AND ACCELERATOR PEDAL POSITION SENSOR CONNECTOR.** 1) Turn the ignition switch to OFF. 2) Disconnect the connectors from ECM. 3) Measure the resistance between ECM connectors. ***Connector & terminal*** ***(B135) No. 21 — (B135) No. 23:***	Is the resistance 1 MΩ or more?	Repair the poor contact of accelerator pedal position sensor connector. Replace the accelerator pedal if defective. <Ref. to SP(H4SO)-4, Accelerator Pedal.>	Repair the short circuit to power supply in the harness between the ECM and accelerator pedal position sensor connector.

FK:DTC P2127 THROTTLE/PEDAL POSITION SENSOR/SWITCH “E” CIRCUIT LOW INPUT

DTC DETECTING CONDITION:

- Immediately at fault recognition
- GENERAL DESCRIPTION <Ref. to GD(H6DO)-246, DTC P2127 THROTTLE/PEDAL POSITION SENSOR/SWITCH “E” CIRCUIT LOW INPUT, Diagnostic Trouble Code (DTC) Detecting Criteria.>

TROUBLE SYMPTOM:

- Improper idling
- Poor driving performance

CAUTION:

After servicing or replacing faulty parts, perform Clear Memory Mode <Ref. to EN(H6DO)(diag)-57, OPERATION, Clear Memory Mode.>, and Inspection Mode <Ref. to EN(H6DO)(diag)-44, PROCEDURE, Inspection Mode.>.

WIRING DIAGRAM:

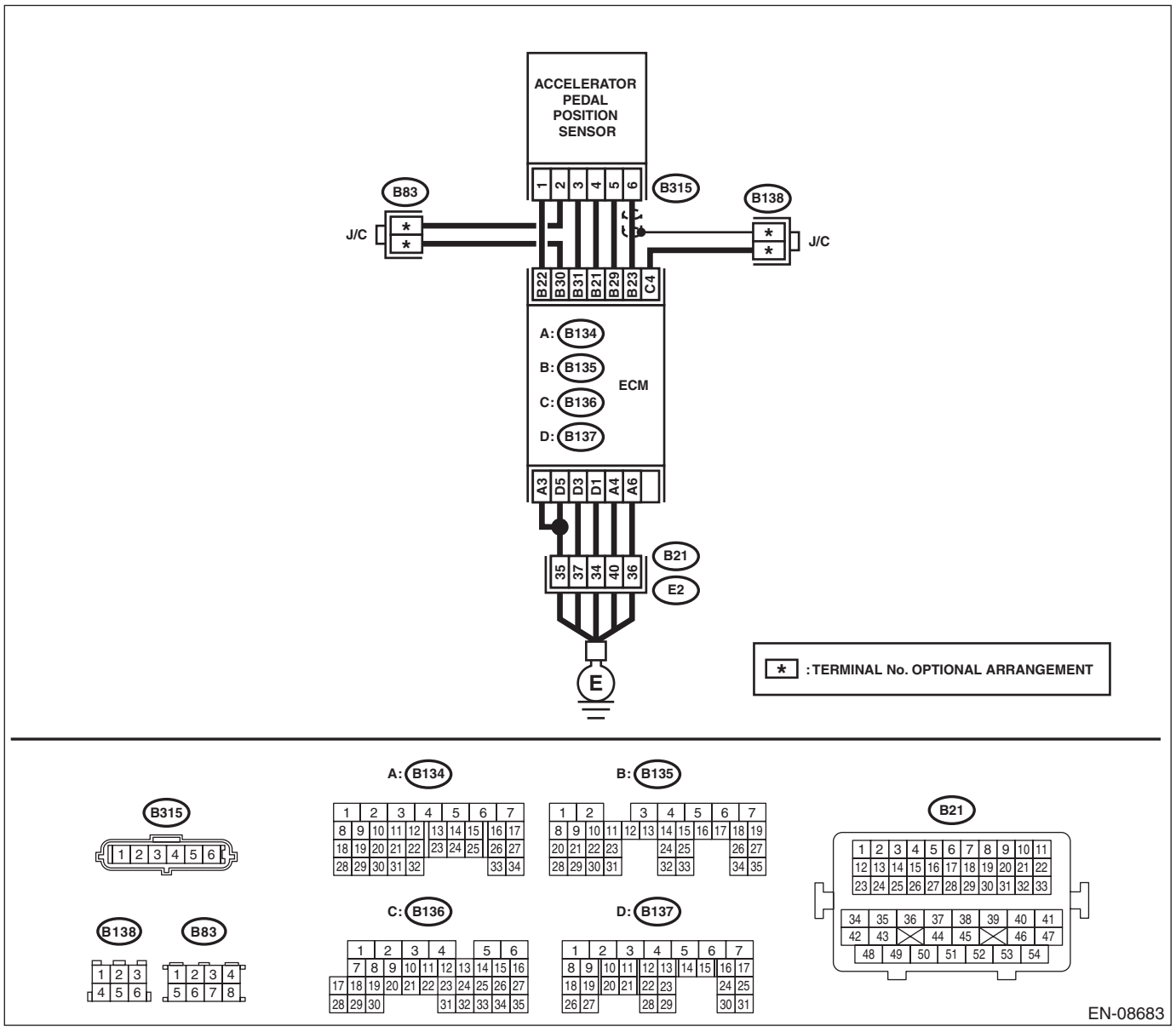

	Step	Check	Yes	No
1	**CHECK HARNESS BETWEEN ECM AND ACCELERATOR PEDAL POSITION SENSOR CONNECTOR.** 1) Turn the ignition switch to OFF. 2) Disconnect the connectors from ECM and accelerator pedal position sensor. 3) Measure the resistance between ECM and chassis ground. ***Connector & terminal*** ***(B135) No. 22 — Chassis ground:*** ***(B135) No. 31 — Chassis ground:***	Is the resistance 1 MΩ or more?	Go to step **2**.	Repair the short circuit to ground in harness between ECM and accelerator pedal position sensor connector.
2	**CHECK SHORT CIRCUIT INSIDE THE ECM.** 1) Connect the connector to ECM. 2) Measure the resistance between accelerator pedal position sensor connector and chassis ground. ***Connector & terminal*** ***(B315) No. 3 — Chassis ground:***	Is the resistance 1 MΩ or more?	Replace the accelerator pedal. <Ref. to SP(H4SO)-4, Accelerator Pedal.>	Repair the short circuit to ground in harness between ECM and accelerator pedal position sensor connector. Replace the ECM if defective. <Ref. to FU(H6DO)-54, Engine Control Module (ECM).>

FL: DTC P2128 THROTTLE/PEDAL POSITION SENSOR/SWITCH "E" CIRCUIT HIGH INPUT

DTC DETECTING CONDITION:

- Immediately at fault recognition
- GENERAL DESCRIPTION <Ref. to GD(H6DO)-248, DTC P2128 THROTTLE/PEDAL POSITION SENSOR/SWITCH "E" CIRCUIT HIGH INPUT, Diagnostic Trouble Code (DTC) Detecting Criteria.>

TROUBLE SYMPTOM:

- Improper idling
- Poor driving performance

CAUTION:

After servicing or replacing faulty parts, perform Clear Memory Mode <Ref. to EN(H6DO)(diag)-57, OPERATION, Clear Memory Mode.>, and Inspection Mode <Ref. to EN(H6DO)(diag)-44, PROCEDURE, Inspection Mode.>.

WIRING DIAGRAM:

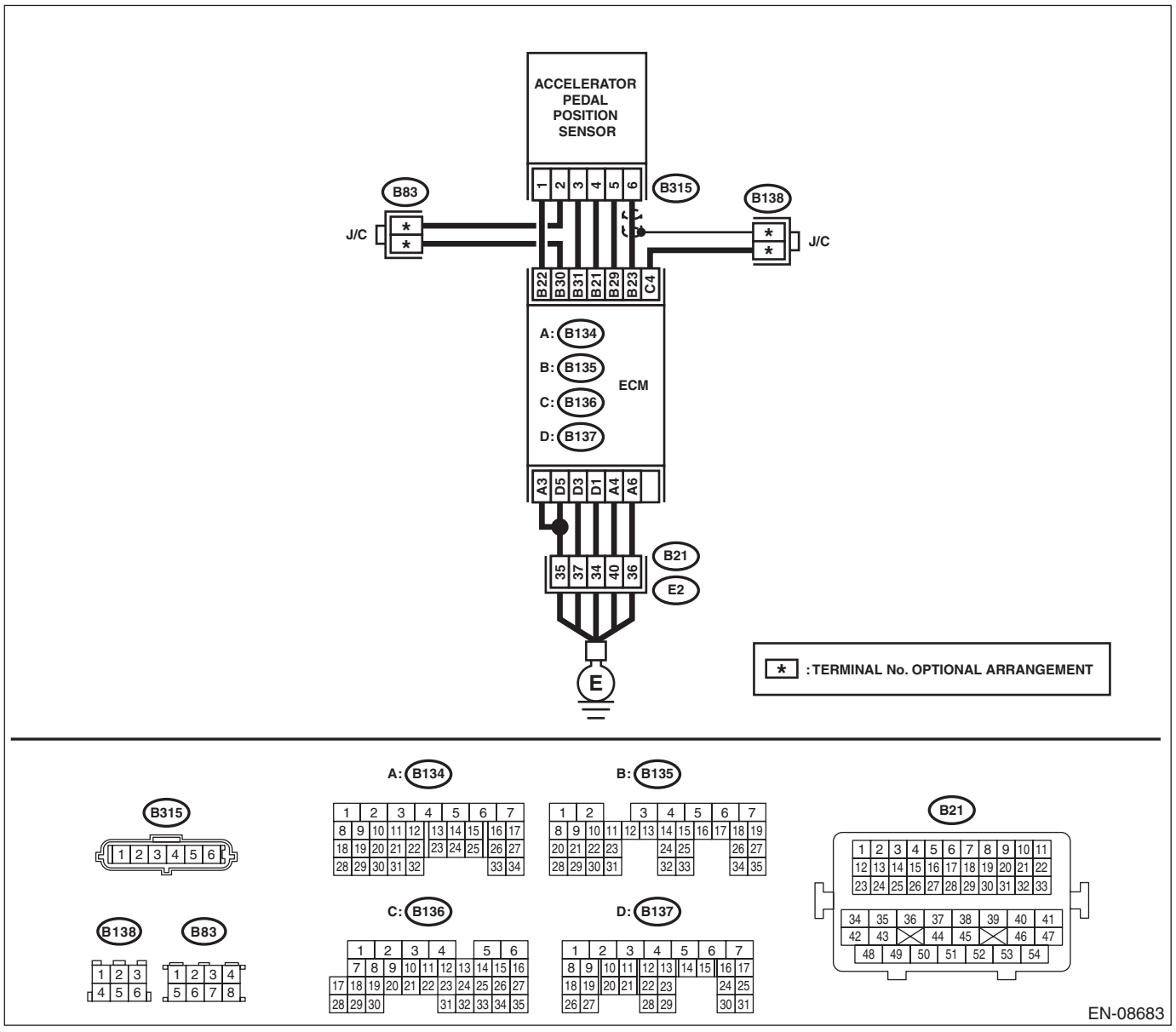

	Step	Check	Yes	No
1	**CHECK HARNESS BETWEEN ECM AND ACCELERATOR PEDAL POSITION SENSOR CONNECTOR.** 1) Turn the ignition switch to OFF. 2) Disconnect the connectors from ECM and accelerator pedal position sensor. 3) Measure the resistance of harness between ECM and accelerator pedal position sensor connector. ***Connector & terminal*** ***(B135) No. 31 — (B315) No. 3:*** ***(B135) No. 30 — (B315) No. 2:***	Is the resistance less than 1 Ω?	Go to step **2**.	Repair the open circuit in harness between ECM and accelerator pedal position sensor connector.
2	**CHECK HARNESS BETWEEN ECM AND ACCELERATOR PEDAL POSITION SENSOR CONNECTOR.** 1) Connect the connector to ECM. 2) Measure the resistance between accelerator pedal position sensor connector and chassis ground. ***Connector & terminal*** ***(B315) No. 2 — Chassis ground:***	Is the resistance less than 5 Ω?	Go to step **3**.	Repair the harness and connector. NOTE: In this case, repair the following item: • Open circuit of harness between ECM and engine ground • Poor contact of ECM connector • Poor contact of coupling connector
3	**CHECK HARNESS BETWEEN ECM AND ACCELERATOR PEDAL POSITION SENSOR CONNECTOR.** 1) Turn the ignition switch to ON. 2) Measure the voltage between accelerator pedal position sensor connector and chassis ground. ***Connector & terminal*** ***(B315) No. 3 (+) — Chassis ground (–):***	Is the voltage 5 V or more?	Repair the short circuit to power supply in the harness between the ECM and accelerator pedal position sensor connector.	Go to step **4**.
4	**CHECK HARNESS BETWEEN ECM AND ACCELERATOR PEDAL POSITION SENSOR CONNECTOR.** 1) Turn the ignition switch to OFF. 2) Disconnect the connectors from ECM. 3) Measure the resistance between ECM connectors. ***Connector & terminal*** ***(B135) No. 22 — (B135) No. 31:***	Is the resistance 1 MΩ or more?	Repair the poor contact of accelerator pedal position sensor connector. Replace the accelerator pedal if defective. <Ref. to SP(H4SO)-4, Accelerator Pedal.>	Repair the short circuit to power supply in the harness between the ECM and accelerator pedal position sensor connector.

FM:DTC P2135 THROTTLE/PEDAL POSITION SENSOR/SWITCH “A”/“B” VOLTAGE CORRELATION

DTC DETECTING CONDITION:

- Immediately at fault recognition
- GENERAL DESCRIPTION <Ref. to GD(H6DO)-250, DTC P2135 THROTTLE/PEDAL POSITION SENSOR/SWITCH “A”/“B” VOLTAGE CORRELATION, Diagnostic Trouble Code (DTC) Detecting Criteria.>

TROUBLE SYMPTOM:

- Improper idling
- Poor driving performance

CAUTION:

After servicing or replacing faulty parts, perform Clear Memory Mode <Ref. to EN(H6DO)(diag)-57, OPERATION, Clear Memory Mode.>, and Inspection Mode <Ref. to EN(H6DO)(diag)-44, PROCEDURE, Inspection Mode.>.

WIRING DIAGRAM:

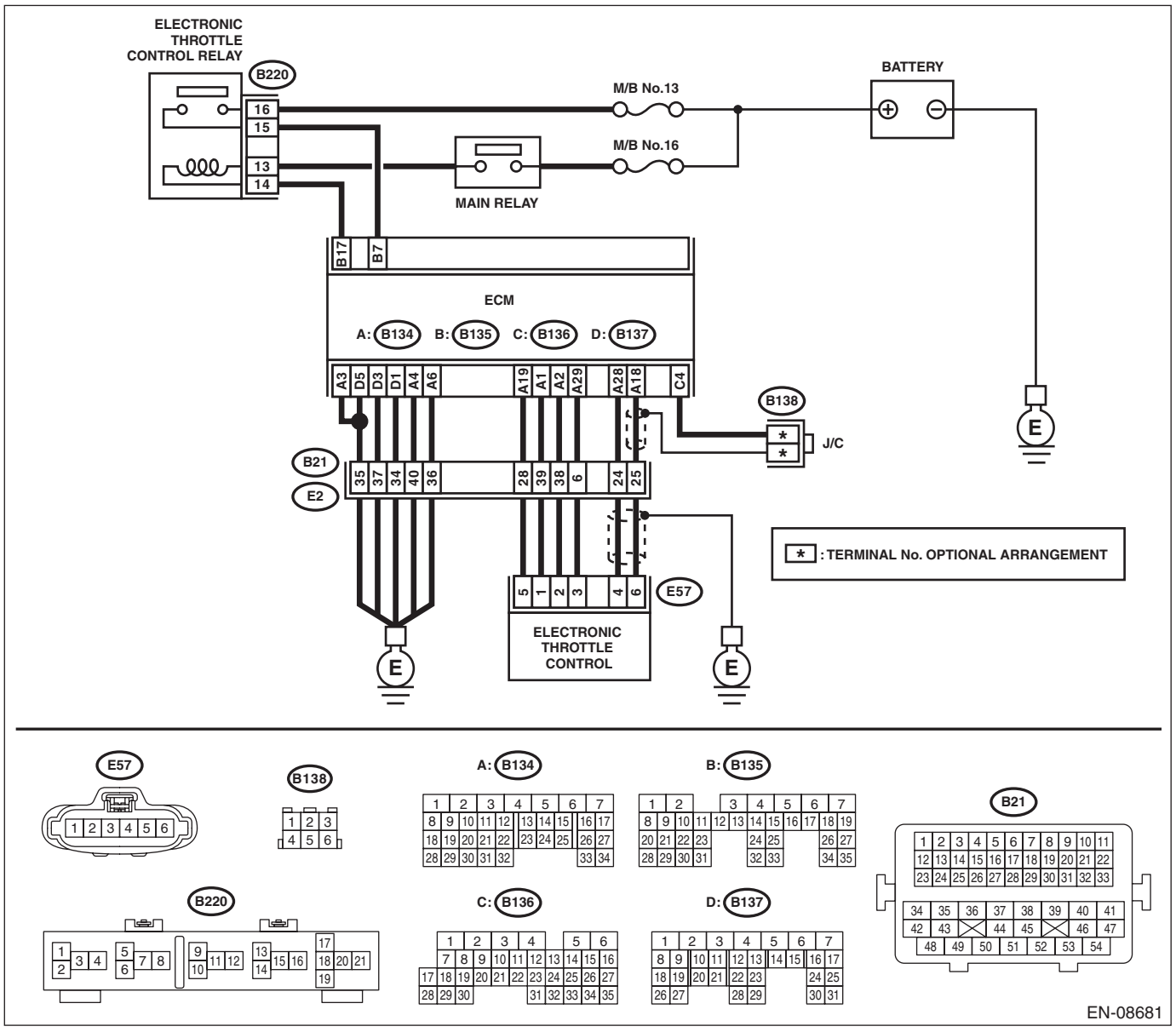

	Step	Check	Yes	No
1	**CHECK HARNESS BETWEEN ECM AND ELECTRONIC THROTTLE CONTROL.** 1) Turn the ignition switch to OFF. 2) Disconnect the connectors from ECM and electronic throttle control. 3) Measure the resistance between ECM and chassis ground. ***Connector & terminal*** ***(B134) No. 19 — Chassis ground:*** ***(B134) No. 18 — Chassis ground:*** ***(B134) No. 18 — (B136) No. 4:*** ***(B134) No. 28 — Chassis ground:***	Is the resistance 1 MΩ or more?	Go to step **2**.	Repair the short circuit to ground in harness between ECM and electronic throttle control connector.
2	**CHECK SHORT CIRCUIT INSIDE THE ECM.** 1) Connect the connector to ECM. 2) Measure the resistance between electronic throttle control connector and engine ground. ***Connector & terminal*** ***(E57) No. 6 — Engine ground:*** ***(E57) No. 4 — Engine ground:***	Is the resistance 1 MΩ or more?	Go to step **3**.	Repair the short circuit to ground in harness between ECM and electronic throttle control connector. Replace the ECM if defective. <Ref. to FU(H6DO)-54, Engine Control Module (ECM).>
3	**CHECK HARNESS BETWEEN ECM AND ELECTRONIC THROTTLE CONTROL.** 1) Disconnect the connectors from ECM. 2) Measure the resistance of harness between ECM and electronic throttle control connector. ***Connector & terminal*** ***(B134) No. 18 — (E57) No. 6:*** ***(B134) No. 28 — (E57) No. 4:*** ***(B134) No. 29 — (E57) No. 3:***	Is the resistance less than 1 Ω?	Go to step **4**.	Repair the harness and connector. NOTE: In this case, repair the following item: • Open circuit in harness between ECM and electronic throttle control connector • Poor contact of coupling connector
4	**CHECK HARNESS BETWEEN ECM AND ELECTRONIC THROTTLE CONTROL.** 1) Connect the connector to ECM. 2) Measure the resistance between electronic throttle control connector and engine ground. ***Connector & terminal*** ***(E57) No. 3 — Engine ground:***	Is the resistance less than 5 Ω?	Go to step **5**.	Repair the harness and connector. NOTE: In this case, repair the following item: • Open circuit of harness between ECM and engine ground • Poor contact of ECM connector • Poor contact of coupling connector
5	**CHECK HARNESS BETWEEN ECM AND ELECTRONIC THROTTLE CONTROL.** 1) Turn the ignition switch to ON. 2) Measure the voltage between electronic throttle control connector and engine ground. ***Connector & terminal*** ***(E57) No. 6 (+) — Engine ground (–):*** ***(E57) No. 4 (+) — Engine ground (–):***	Is the voltage 5 V or more?	Repair the short circuit to power in harness between ECM and electronic throttle control connector.	Go to step **6**.

	Step	Check	Yes	No
6	**CHECK HARNESS BETWEEN ECM AND ELECTRONIC THROTTLE CONTROL.** 1) Turn the ignition switch to OFF. 2) Disconnect the connectors from ECM. 3) Measure the resistance between ECM connectors. ***Connector & terminal*** ***(B134) No. 19 — (B134) No. 18:*** ***(B134) No. 19 — (B134) No. 28:***	Is the resistance 1 MΩ or more?	Repair the poor contact of electronic throttle control connector. Replace the electronic throttle control if defective. <Ref. to FU(H6DO)-19, Throttle Body.>	Repair the short circuit to power in harness between ECM and electronic throttle control connector.

FN:DTC P2138 THROTTLE/PEDAL POSITION SENSOR/SWITCH “D”/“E” VOLTAGE CORRELATION

DTC DETECTING CONDITION:

- Immediately at fault recognition
- GENERAL DESCRIPTION <Ref. to GD(H6DO)-252, DTC P2138 THROTTLE/PEDAL POSITION SENSOR/SWITCH “D”/“E” VOLTAGE CORRELATION, Diagnostic Trouble Code (DTC) Detecting Criteria.>

CAUTION:

After servicing or replacing faulty parts, perform Clear Memory Mode <Ref. to EN(H6DO)(diag)-57, OPERATION, Clear Memory Mode.>, and Inspection Mode <Ref. to EN(H6DO)(diag)-44, PROCEDURE, Inspection Mode.>.

TROUBLE SYMPTOM:

- Improper idling
- Poor driving performance

WIRING DIAGRAM:

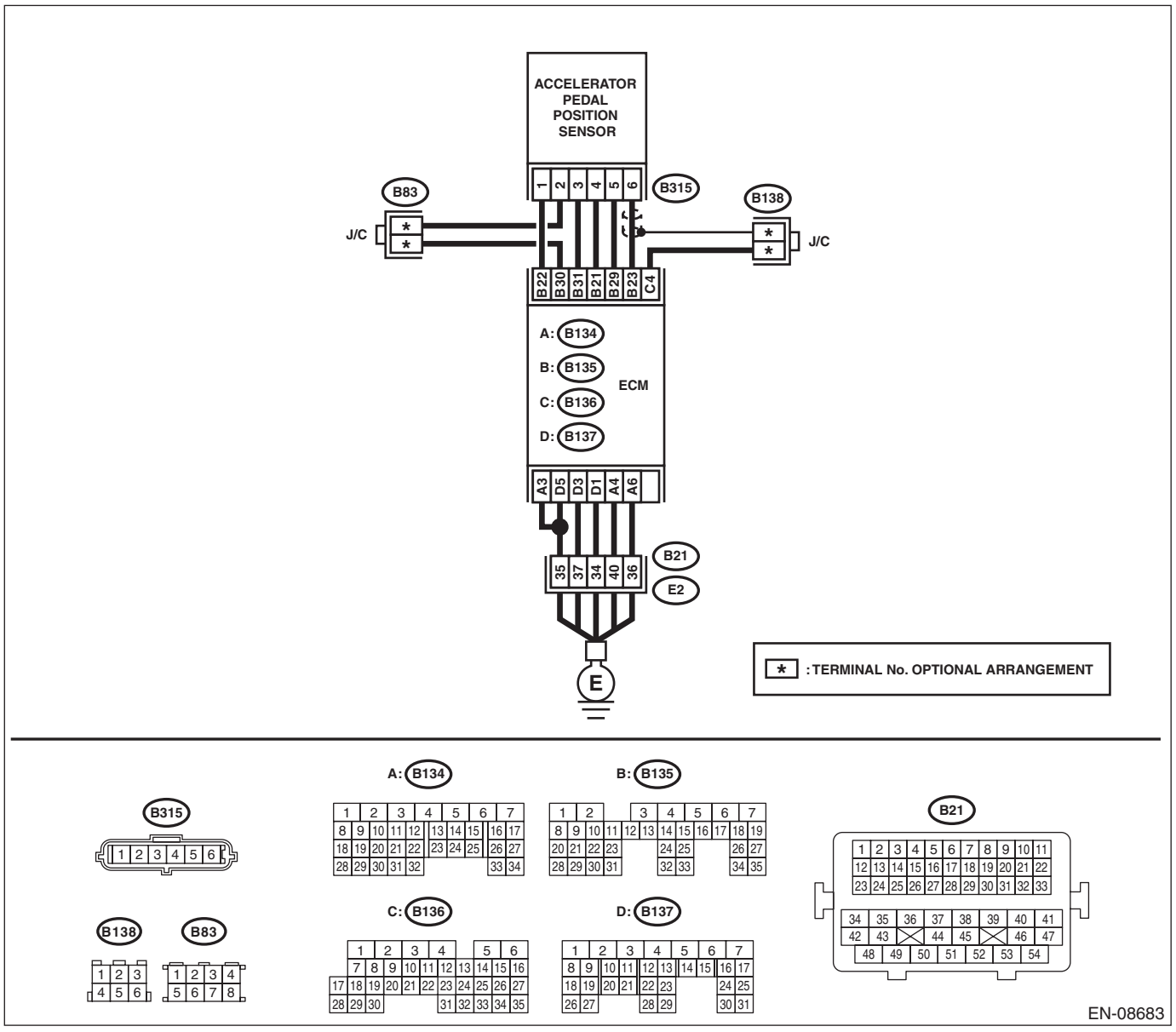

	Step	Check	Yes	No
1	**CHECK ACCELERATOR PEDAL POSITION SENSOR OUTPUT.** 1) Turn the ignition switch to ON. 2) Measure the voltage between ECM and chassis ground. ***Connector & terminal*** ***Main accelerator pedal position sensor signal*** ***(B135) No. 23 (+) — Chassis ground (–):*** ***Sub accelerator pedal position sensor signal*** ***(B135) No. 31 (+) — Chassis ground (–):***	Is the difference in measured values for the main accelerator pedal position sensor signal and the sub accelerator pedal position sensor signal 0 V?	Go to step **3**.	Go to step **2**.
2	**CHECK ACCELERATOR PEDAL POSITION SENSOR OUTPUT.** 1) Measure the voltage between accelerator pedal position sensor connector and chassis ground. ***Connector & terminal*** ***(B315) No. 6 (+) — Chassis ground (–):*** ***(B315) No. 3 (+) — Chassis ground (–):***	Is the difference in measured values for the main accelerator pedal position sensor signal and the sub accelerator pedal position sensor signal 0 V?	Replace the accelerator pedal. <Ref. to SP(H4SO)-4, Accelerator Pedal.>	Repair the harness and connector. NOTE: In this case, repair the following item: • Open circuit in harness between ECM and accelerator pedal position sensor connector • Short circuit to ground in harness between ECM and accelerator pedal position sensor connector • Poor contact of coupling connector
3	**CHECK HARNESS BETWEEN ECM AND ACCELERATOR PEDAL POSITION SENSOR CONNECTOR.** Measure the resistance of harness between the accelerator pedal position sensor connector and chassis ground. ***Connector & terminal*** ***(B315) No. 5 — Chassis ground:*** ***(B315) No. 2 — Chassis ground:***	Is the resistance less than 5 Ω?	Repair the poor contact of ECM connector.	Repair the harness and connector. NOTE: In this case, repair the following item: • Open circuit in harness between ECM and accelerator pedal position sensor connector • Open circuit of harness between ECM and engine ground • Poor contact of ECM connector • Poor contact of coupling connector

FO:DTC P219A BANK 1 AIR-FUEL RATIO IMBALANCE

DTC DETECTING CONDITION:

- Detected when two consecutive driving cycles with fault occur.
- GENERAL DESCRIPTION <Ref. to GD(H6DO)-254, DTC P219A BANK 1 AIR-FUEL RATIO IMBALANCE, Diagnostic Trouble Code (DTC) Detecting Criteria.>

TROUBLE SYMPTOM:

- Engine stalls.
- Improper idling

CAUTION:

After servicing or replacing faulty parts, perform Clear Memory Mode <Ref. to EN(H6DO)(diag)-57, OPERATION, Clear Memory Mode.>, and Inspection Mode <Ref. to EN(H6DO)(diag)-44, PROCEDURE, Inspection Mode.>.

WIRING DIAGRAM:

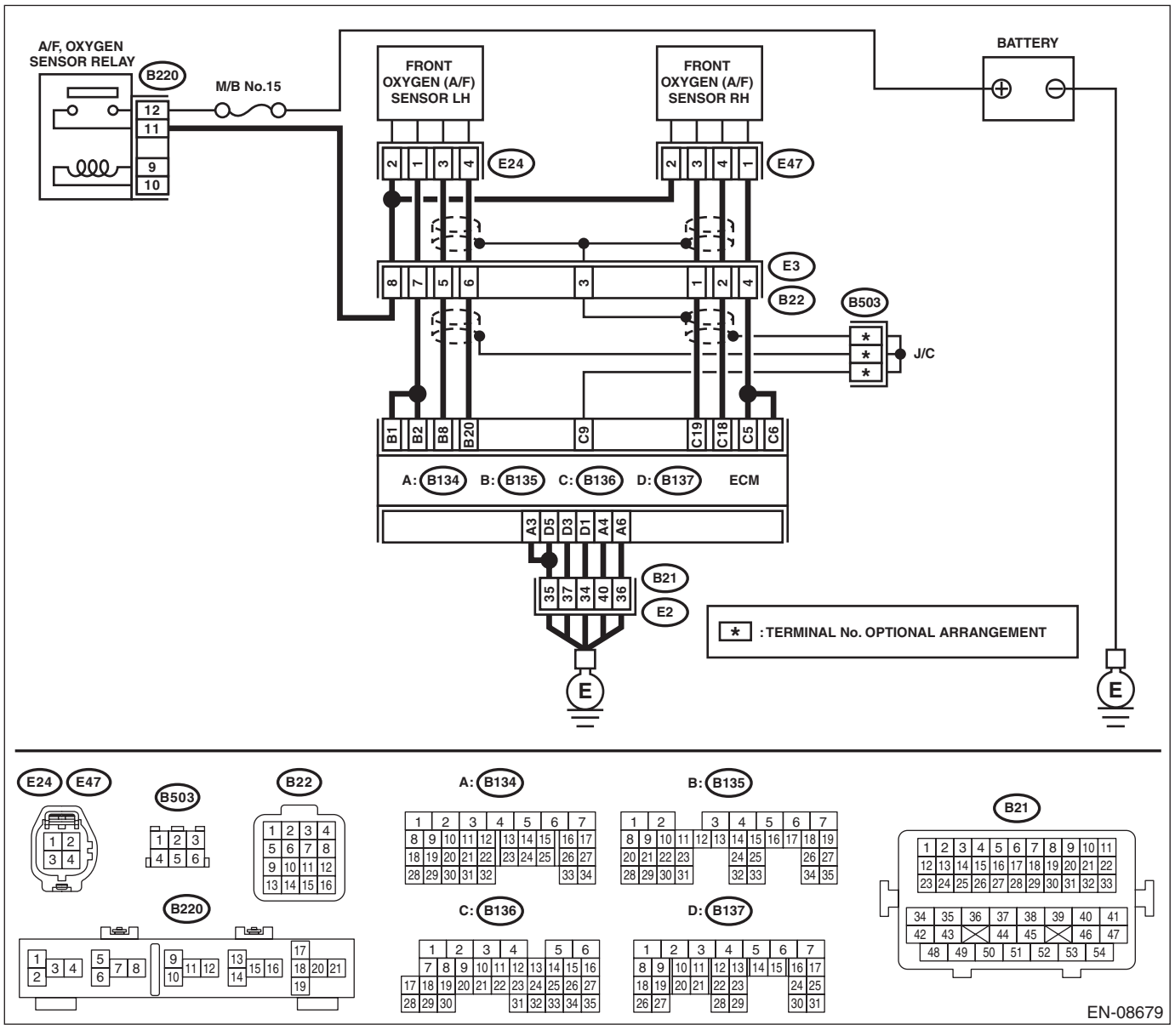

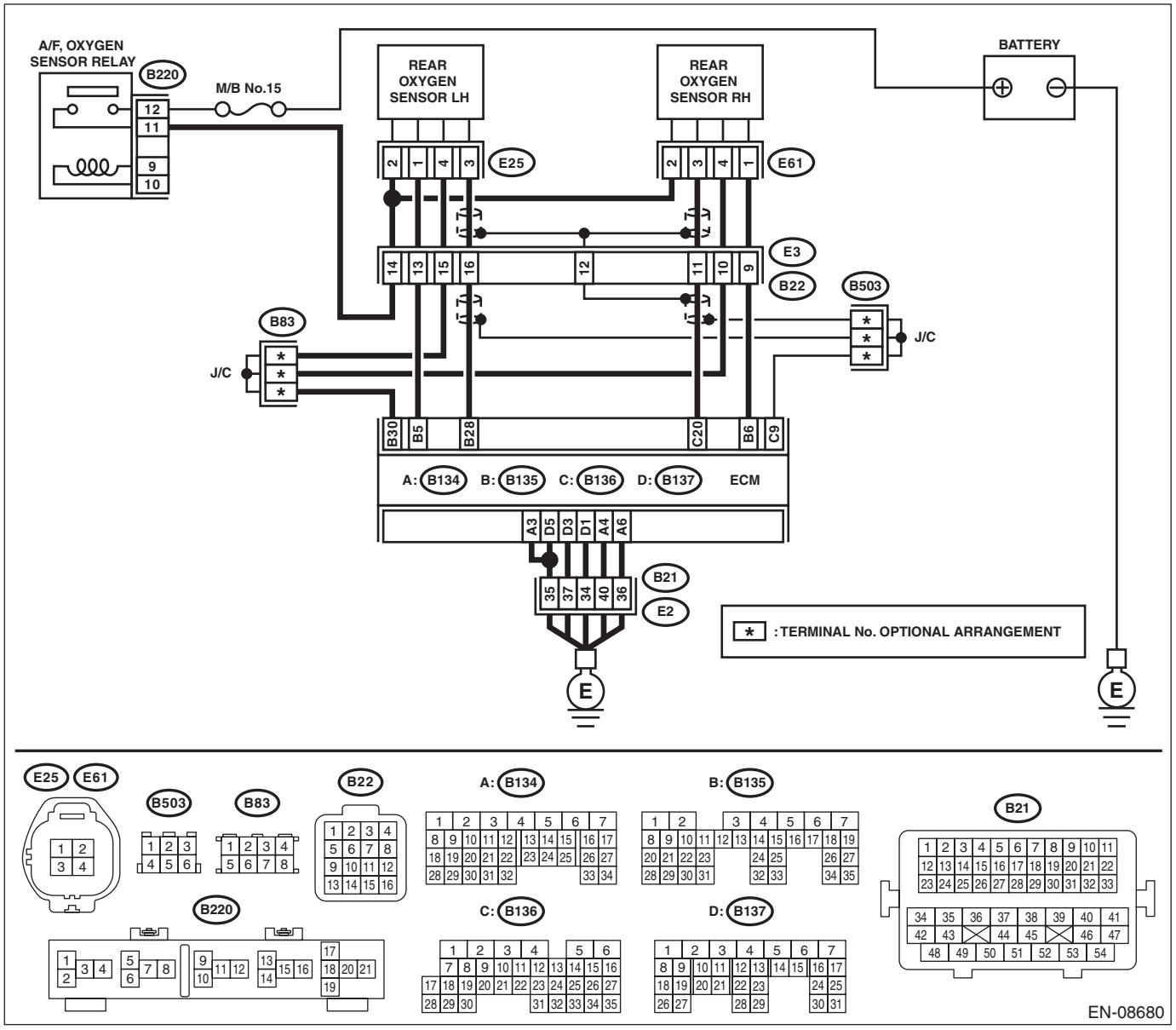
A/F, OXYGEN SENSOR RELAY
B220
M/B No.15
REAR OXYGEN SENSOR LH
REAR OXYGEN SENSOR RH
BATTERY
E25
E61
E3
B22
B503
B83
J/C
B30
B5
B28
C20
B6
C9
A: B134 B: B135 C: B136 D: B137 ECM
A3
D5
D3
D1
A4
A6
B21
35
37
34
40
36
E2
E
: TERMINAL No. OPTIONAL ARRANGEMENT
B220
EN-08680

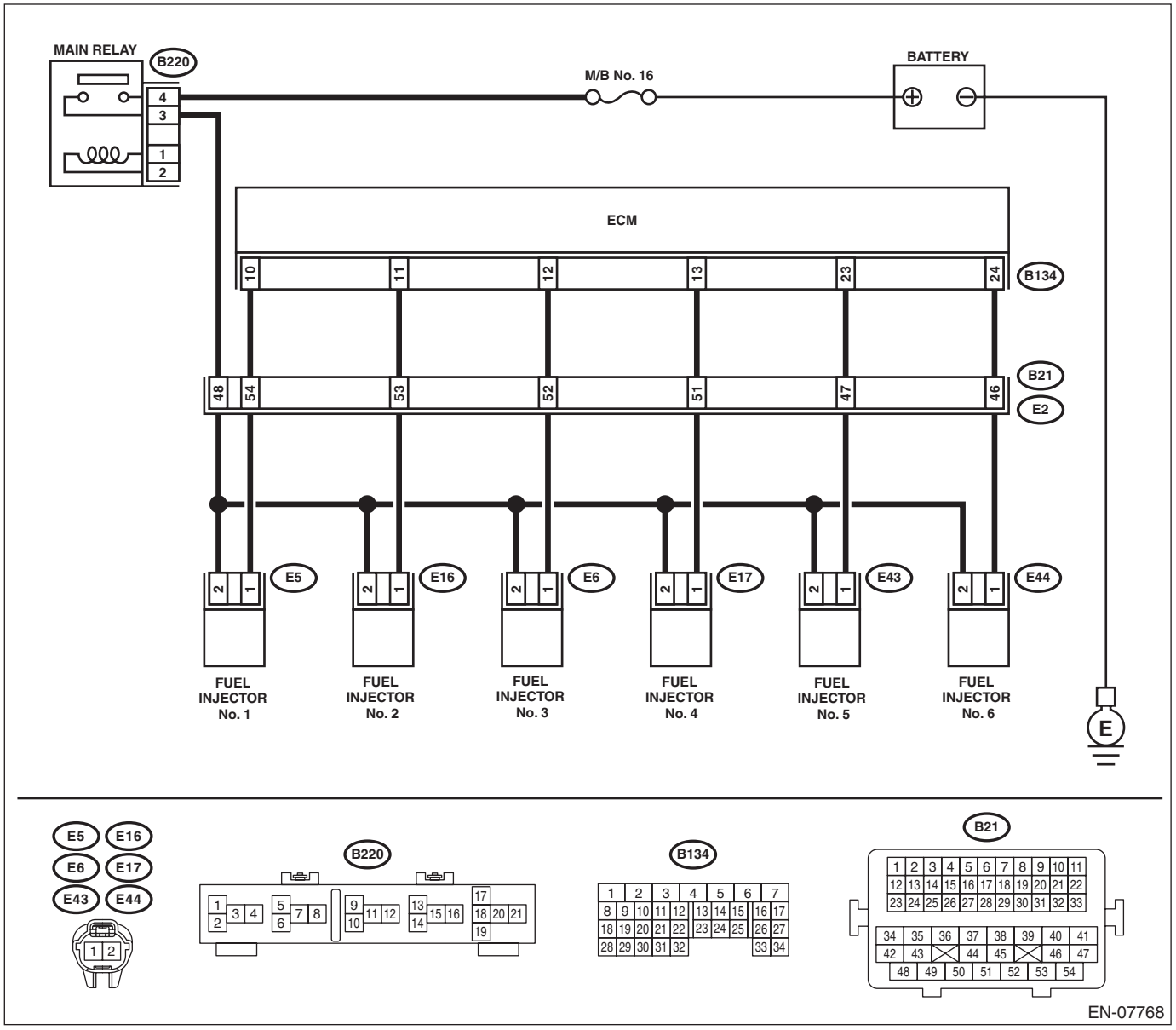

Step		Check	Yes	No
1	**CHECK FRONT OXYGEN (A/F) SENSOR CONNECTOR AND COUPLING CONNECTOR.**	Has water entered the connector?	Completely remove any water inside.	Go to step **2**.
2	**CHECK HARNESS BETWEEN ECM AND FRONT OXYGEN (A/F) SENSOR CONNECTOR.** 1) Turn the ignition switch to OFF. 2) Disconnect the connectors from ECM and front oxygen (A/F) sensor. 3) Measure the resistance of harness between ECM and front oxygen (A/F) sensor connector. ***Connector & terminal*** ***(B136) No. 19 — (E47) No. 3:*** ***(B136) No. 18 — (E47) No. 4:***	Is the resistance less than 1 Ω?	Go to step **3**.	Repair the harness and connector. NOTE: In this case, repair the following item: • Open circuit in harness between ECM and front oxygen (A/F) sensor connector • Poor contact of coupling connector

	Step	Check	Yes	No
3	**CHECK HARNESS BETWEEN ECM AND FRONT OXYGEN (A/F) SENSOR CONNECTOR.** Measure the resistance between ECM and chassis ground. ***Connector & terminal*** ***(B136) No. 19 — Chassis ground:*** ***(B136) No. 18 — Chassis ground:***	Is the resistance 1 MΩ or more?	Go to step **4**.	Repair the ground short circuit of harness between ECM and front oxygen (A/F) sensor connector.
4	**CHECK OUTPUT SIGNAL FOR ECM.** 1) Connect the connector to ECM. 2) Turn the ignition switch to ON. 3) Measure the voltage between front oxygen (A/F) sensor connector and chassis ground. ***Connector & terminal*** ***(E47) No. 3 (+) — Chassis ground (–):***	Is the voltage 4.5 V or more?	Go to step **6**.	Go to step **5**.
5	**CHECK OUTPUT SIGNAL FOR ECM.** Measure the voltage between front oxygen (A/F) sensor connector and chassis ground. ***Connector & terminal*** ***(E47) No. 4 (+) — Chassis ground (–):***	Is the voltage 4.95 V or more?	Go to step **6**.	Go to step **7**.
6	**CHECK OUTPUT SIGNAL FOR ECM.** Measure the voltage between front oxygen (A/F) sensor connector and chassis ground. ***Connector & terminal*** ***(E47) No. 3 (+) — Chassis ground (–):*** ***(E47) No. 4 (+) — Chassis ground (–):***	Is the voltage 8 V or more?	Repair the short circuit to power in the harness between ECM and front oxygen (A/F) sensor connector. After repair, replace the ECM. <Ref. to FU(H6DO)-54, Engine Control Module (ECM).>	Repair the poor contact of ECM connector.
7	**CHECK EXHAUST SYSTEM.**	Are there holes or loose bolts on exhaust system?	Repair the exhaust system.	Go to step **8**.
8	**CHECK AIR INTAKE SYSTEM.**	Are there holes, loose bolts or disconnection of hose on air intake system?	Repair the air intake system.	Go to step **9**.
9	**CHECK FUEL PRESSURE.** **WARNING:** **Place "NO OPEN FLAMES" signs near the working area.** **CAUTION:** **Be careful not to spill fuel.** 1) Connect the front oxygen (A/F) sensor connector. 2) Measure the fuel pressure. <Ref. to ME(H6DO)-31, INSPECTION, Fuel Pressure.> **CAUTION:** **Release fuel pressure before removing the fuel pressure gauge.**	Is the measured value 340 — 400 kPa (3.5 — 4.1 kgf/cm^2, 49 — 58 psi)?	Go to step **10**.	Repair the following item. Fuel pressure is too high: • Clogged fuel line or bent hose Fuel pressure is too low: • Improper fuel pump discharge • Clogged fuel line

	Step	Check	Yes	No
10	**CHECK ENGINE COOLANT TEMPERATURE SENSOR.** 1) Start the engine and warm up completely. 2) Read the value of «Coolant Temp.» using the Subaru Select Monitor or a general scan tool. NOTE: • Subaru Select Monitor For detailed operation procedures, refer to "READ CURRENT DATA FOR ENGINE". <Ref. to EN(H6DO)(diag)-35, Subaru Select Monitor.> • General scan tool For detailed operation procedures, refer to the general scan tool operation manual.	Is the value of «Coolant Temp.» 75°C (167°F) or more?	Go to step **11**.	Replace the engine coolant temperature sensor. <Ref. to FU(H6DO)-29, Engine Coolant Temperature Sensor.>
11	**CHECK MASS AIR FLOW AND INTAKE AIR TEMPERATURE SENSOR.** 1) Start the engine and warm up engine until coolant temperature is higher than 75°C (167°F). 2) Place the select lever in "P" range or "N" range. 3) Turn the A/C switch to OFF. 4) Turn all the accessory switches to OFF. 5) Read the value of «Mass Air Flow» using the Subaru Select Monitor or a general scan tool. NOTE: • Subaru Select Monitor For detailed operation procedures, refer to "READ CURRENT DATA FOR ENGINE". <Ref. to EN(H6DO)(diag)-35, Subaru Select Monitor.> • General scan tool For detailed operation procedures, refer to the general scan tool operation manual.	Is the value of «Mass Air Flow» 2.0 — 5.0 g/s (0.26 — 0.66 lb/m)?	Go to step **12**.	Replace the mass air flow and intake air temperature sensor. <Ref. to FU(H6DO)-41, Mass Air Flow and Intake Air Temperature Sensor.>
12	**CHECK MASS AIR FLOW AND INTAKE AIR TEMPERATURE SENSOR.** 1) Start the engine and warm up engine until coolant temperature is higher than 75°C (167°F). 2) Place the select lever in "P" range or "N" range. 3) Turn the A/C switch to OFF. 4) Turn all the accessory switches to OFF. 5) Open the front hood. 6) Measure the ambient temperature. 7) Read the value of «Intake Air Temp.» using the Subaru Select Monitor or a general scan tool. NOTE: • Subaru Select Monitor For detailed operation procedures, refer to "READ CURRENT DATA FOR ENGINE". <Ref. to EN(H6DO)(diag)-35, Subaru Select Monitor.> • General scan tool For detailed operation procedures, refer to the general scan tool operation manual.	Subtract ambient temperature from «Intake Air Temp.». Is the obtained value –10 — 50°C (–18 — 90°F)?	Go to step **13**.	Check the mass air flow and intake air temperature sensor. <Ref. to FU(H6DO)-41, Mass Air Flow and Intake Air Temperature Sensor.>

	Step	Check	Yes	No
13	**CHECK REAR OXYGEN SENSOR DATA.** 1) Warm up the engine until engine coolant temperature is higher than 75°C (167°F), and keep the engine speed at 3,000 rpm. (2 minutes maximum) 2) Read the value of «Front O2 Sensor #1» using the Subaru Select Monitor or a general scan tool. NOTE: • Subaru Select Monitor For detailed operation procedures, refer to "READ CURRENT DATA FOR ENGINE". <Ref. to EN(H6DO)(diag)-35, Subaru Select Monitor.> • General scan tool For detailed operation procedures, refer to the general scan tool operation manual.	Is the value of «Front O2 Sensor #1» 0.490 V or more?	Go to step **14**.	Go to step **15**.
14	**CHECK REAR OXYGEN SENSOR DATA.** 1) Warm up the engine until engine coolant temperature is higher than 75°C (167°F), and rapidly reduce the engine speed from 3,000 rpm. 2) Read the value of «Front O2 Sensor #1» using the Subaru Select Monitor or a general scan tool. NOTE: • Subaru Select Monitor For detailed operation procedures, refer to "READ CURRENT DATA FOR ENGINE". <Ref. to EN(H6DO)(diag)-35, Subaru Select Monitor.> • General scan tool For detailed operation procedures, refer to the general scan tool operation manual.	Is the value of «Front O2 Sensor #1» 0.250 V or less?	Go to step **16**.	Go to step **15**.
15	**CHECK REAR OXYGEN SENSOR CONNECTOR AND COUPLING CONNECTOR.**	Has water entered the connector?	Completely remove any water inside.	Go to step **17**.
16	**CHECK FRONT OXYGEN (A/F) SENSOR USING REAR OXYGEN SENSOR SIGNAL.** 1) Warm up the engine until engine coolant temperature is higher than 75°C (167°F), then keep the engine idling for 5 minutes or more. 2) Read the value of «Front O2 Sensor #1» using the Subaru Select Monitor or a general scan tool. NOTE: • Subaru Select Monitor For detailed operation procedures, refer to "READ CURRENT DATA FOR ENGINE". <Ref. to EN(H6DO)(diag)-35, Subaru Select Monitor.> • General scan tool For detailed operation procedures, refer to the general scan tool operation manual.	Is the value in «Front O2 Sensor #1» kept at 0.250 V or less for 5 minutes or more?	Replace the front oxygen (A/F) sensor. <Ref. to FU(H6DO)-50, Front Oxygen (A/F) Sensor.>	Go to step **17**.

	Step	Check	Yes	No
17	**CHECK HARNESS BETWEEN ECM AND REAR OXYGEN SENSOR CONNECTOR.** 1) Turn the ignition switch to OFF. 2) Disconnect the connector from ECM and rear oxygen sensor. 3) Measure the resistance of harness between ECM and rear oxygen sensor connector. ***Connector & terminal*** ***(B136) No. 20 — (E61) No. 3:*** ***(B135) No. 30 — (E61) No. 4:***	Is the resistance less than 1 Ω?	Go to step **18**.	Repair the harness and connector. NOTE: In this case, repair the following item: • Open circuit in harness between ECM and rear oxygen sensor connector • Poor contact of coupling connector
18	**CHECK HARNESS BETWEEN ECM AND REAR OXYGEN SENSOR CONNECTOR.** 1) Connect the connector to ECM. 2) Turn the ignition switch to ON. 3) Measure the voltage between rear oxygen sensor connector and chassis ground. ***Connector & terminal*** ***(E61) No. 3 (+) — Chassis ground (–):***	Is the voltage 0.2 — 0.5 V?	Replace the rear oxygen sensor. <Ref. to FU(H6DO)-52, Rear Oxygen Sensor.>	Go to step **19**.
19	**CHECK OUTPUT SIGNAL OF ECM.** 1) Turn the ignition switch to ON. 2) Measure the voltage between ECM and chassis ground on faulty cylinders. ***Connector & terminal*** ***#1 (B134) No. 10 (+) — Chassis ground (–):*** ***#2 (B134) No. 11 (+) — Chassis ground (–):*** ***#3 (B134) No. 12 (+) — Chassis ground (–):*** ***#4 (B134) No. 13 (+) — Chassis ground (–):*** ***#5 (B134) No. 23 (+) — Chassis ground (–):*** ***#6 (B134) No. 24 (+) — Chassis ground (–):***	Is the voltage 10 V or more?	Go to step **24**.	Go to step **20**.
20	**CHECK HARNESS BETWEEN ECM AND FUEL INJECTOR.** 1) Turn the ignition switch to OFF. 2) Disconnect the connector from fuel injector on faulty cylinders. 3) Measure the resistance between fuel injector connector and engine ground on faulty cylinders. ***Connector & terminal*** ***#1 (E5) No. 1 — Engine ground:*** ***#2 (E16) No. 1 — Engine ground:*** ***#3 (E6) No. 1 — Engine ground:*** ***#4 (E17) No. 1 — Engine ground:*** ***#5 (E43) No. 1 — Engine ground:*** ***#6 (E44) No. 1 — Engine ground:***	Is the resistance 1 MΩ or more?	Go to step **21**.	Repair the short circuit to ground in harness between ECM and fuel injector connector.
21	**CHECK HARNESS BETWEEN ECM AND FUEL INJECTOR.** Measure the resistance of harness between ECM and fuel injector connector on faulty cylinders. ***Connector & terminal*** ***#1 (B134) No. 10 — (E5) No. 1:*** ***#2 (B134) No. 11 — (E16) No. 1:*** ***#3 (B134) No. 12 — (E6) No. 1:*** ***#4 (B134) No. 13 — (E17) No. 1:*** ***#5 (B134) No. 23 — (E43) No. 1:*** ***#6 (B134) No. 24 — (E44) No. 1:***	Is the resistance less than 1 Ω?	Go to step **22**.	Repair the harness and connector. NOTE: In this case, repair the following item: • Open circuit in harness between ECM and fuel injector connector • Poor contact of coupling connector

	Step	Check	Yes	No
22	**CHECK FUEL INJECTOR.** Measure the resistance between fuel injector terminals on faulty cylinder. ***Terminals*** ***No. 1 — No. 2:***	Is the resistance 5 — 20 Ω?	Go to step **23**.	Replace the faulty fuel injector. <Ref. to FU(H6DO)-44, Fuel Injector.>
23	**CHECK POWER SUPPLY LINE.** 1) Turn the ignition switch to ON. 2) Measure the voltage between fuel injector connector of faulty cylinders and engine ground. ***Connector & terminal*** ***#1 (E5) No. 2 (+) — Engine ground (–):*** ***#2 (E16) No. 2 (+) — Engine ground (–):*** ***#3 (E6) No. 2 (+) — Engine ground (–):*** ***#4 (E17) No. 2 (+) — Engine ground (–):*** ***#5 (E43) No. 2 (+) — Engine ground (–):*** ***#6 (E44) No. 2 (+) — Engine ground (–):***	Is the voltage 10 V or more?	Repair the poor contact of all connectors in fuel injector circuit.	Repair the harness and connector. NOTE: In this case, repair the following item: • Open circuit in harness between the main relay and fuel injector connector on faulty cylinders • Poor contact of coupling connector • Poor contact of main relay connector
24	**CHECK HARNESS BETWEEN ECM AND FUEL INJECTOR.** 1) Turn the ignition switch to OFF. 2) Disconnect the connector from fuel injector on faulty cylinders. 3) Turn the ignition switch to ON. 4) Measure the voltage between ECM and chassis ground on faulty cylinders. ***Connector & terminal*** ***#1 (B134) No. 10 (+) — Chassis ground (–):*** ***#2 (B134) No. 11 (+) — Chassis ground (–):*** ***#3 (B134) No. 12 (+) — Chassis ground (–):*** ***#4 (B134) No. 13 (+) — Chassis ground (–):*** ***#5 (B134) No. 23 (+) — Chassis ground (–):*** ***#6 (B134) No. 24 (+) — Chassis ground (–):***	Is the voltage 10 V or more?	Repair the short circuit to power in harness between ECM and fuel injector connector.	Go to step **25**.
25	**CHECK FUEL INJECTOR.** 1) Turn the ignition switch to OFF. 2) Measure the resistance between fuel injector terminals on faulty cylinder. ***Terminals*** ***No. 1 — No. 2:***	Is the resistance 5 — 20 Ω?	Go to step **26**.	Replace the faulty fuel injector. <Ref. to FU(H6DO)-44, Fuel Injector.>
26	**CHECK INSTALLATION OF CAMSHAFT POSITION SENSOR/CRANKSHAFT POSITION SENSOR.**	Is the camshaft position sensor or crankshaft position sensor loosely installed?	Tighten the camshaft position sensor or crankshaft position sensor.	Go to step **27**.
27	**CHECK CRANK PLATE.**	Is the crank sprocket rusted or the teeth of crank plate broken?	Replace the crank plate. <Ref. to ME(H6DO)-104, Cylinder Block.>	Go to step **28**.
28	**CHECK INSTALLATION CONDITION OF TIMING CHAIN.** Turn the crankshaft using ST, and align the alignment mark on crank sprocket with alignment mark on cylinder block. ST 18252AA000 CRANKSHAFT SOCKET	Is the timing chain dislocated from its proper position?	Correct the installation condition of timing chain. <Ref. to ME(H6DO)-62, Timing Chain Assembly.>	Go to step **29**.

Step		Check	Yes	No
29	**CHECK FUEL LEVEL.**	Is the fuel meter indication lower than the “Lower” level?	Refill the fuel so that the fuel meter indication is higher than the “Lower” level, and proceed to the next step. Go to step **30**.	Go to step **30**.
30	**CHECK STATUS OF MALFUNCTION INDICATOR LIGHT.** 1) Clear the memory using the Subaru Select Monitor or general scan tool. <Ref. to EN(H6DO)(diag)-57, Clear Memory Mode.> 2) Start the engine, and drive the vehicle 10 minutes or more.	Does the malfunction indicator light illuminate or blink?	Go to step **32**.	Go to step **31**.
31	**CHECK CAUSE OF MISFIRE.**	Was the cause of misfire identified when the engine is running?	Finish diagnostics operation, if the engine has no abnormality.	Repair the poor contact of connector. NOTE: In this case, repair the following item: • Poor contact of ignition coil connector • Poor contact of fuel injector connector on faulty cylinders • Poor contact of ECM connector • Poor contact of coupling connector
32	**CHECK AIR INTAKE SYSTEM.**	Is there any fault in air intake system?	Repair the air intake system. NOTE: Check the following items. • Are there air leaks or air suction caused by loose or dislocated nuts and bolts? • Are there cracks or any disconnection of hoses?	Go to step **33**.
33	**CHECK MISFIRE SYMPTOM.** 1) Turn the ignition switch to ON. 2) Check for DTC. <Ref. to EN(H6DO)(diag)-43, Read Diagnostic Trouble Code (DTC).>	Does the Subaru Select Monitor or general scan tool indicate only one DTC?	Go to step **36**.	Go to step **34**.
34	**CHECK DTC ON DISPLAY.**	Is DTC P0301, P0303 and P0305 displayed?	Go to step **37**.	Go to step **35**.
35	**CHECK DTC ON DISPLAY.**	Is DTC P0302, P0304 and P0306 displayed?	Go to step **38**.	Go to step **39**.

Step		Check	Yes	No
36	ONLY ONE CYLINDER.	Is there any fault in the cylinder?	Repair or replace faulty parts. NOTE: Check the following items. • Spark plug • Ignition coil • Fuel injector • Compression ratio	Check DTC P0171, P0172, P0174 or P0175 using “List of Diagnostic Trouble Code (DTC)”. <Ref. to EN(H6DO)(diag)-85, List of Diagnostic Trouble Code (DTC).>
37	GROUP OF #1, #3 AND #5 CYLINDERS.	Is there any fault in #1, #3 and #5 cylinders?	Repair or replace faulty parts. NOTE: Check the following items. • Spark plug • Ignition coil • Fuel injector • Compression ratio • Skipping timing chain teeth	Check DTC P0171, P0172, P0174 or P0175 using “List of Diagnostic Trouble Code (DTC)”. <Ref. to EN(H6DO)(diag)-85, List of Diagnostic Trouble Code (DTC).>
38	GROUP OF #2, #4 AND #6 CYLINDERS.	Is there any fault in #2, #4 and #6 cylinders?	Repair or replace faulty parts. NOTE: Check the following items. • Spark plug • Ignition coil • Fuel injector • Compression ratio • Skipping timing chain teeth	Check DTC P0171, P0172, P0174 or P0175 using “List of Diagnostic Trouble Code (DTC)”. <Ref. to EN(H6DO)(diag)-85, List of Diagnostic Trouble Code (DTC).>
39	CYLINDER AT RANDOM.	Is the engine idle rough?	Check DTC P0171, P0172, P0174 or P0175 using “List of Diagnostic Trouble Code (DTC)”. <Ref. to EN(H6DO)(diag)-85, List of Diagnostic Trouble Code (DTC).>	Repair or replace faulty parts. NOTE: Check the following items. • Spark plug • Ignition coil • Fuel injector • Compression ratio

FP:DTC P219B BANK 2 AIR-FUEL RATIO IMBALANCE

DTC DETECTING CONDITION:

- Detected when two consecutive driving cycles with fault occur.
- GENERAL DESCRIPTION <Ref. to GD(H6DO)-257, DTC P219B BANK 2 AIR-FUEL RATIO IMBALANCE, Diagnostic Trouble Code (DTC) Detecting Criteria.>

TROUBLE SYMPTOM:

- Engine stalls.
- Improper idling

CAUTION:

After servicing or replacing faulty parts, perform Clear Memory Mode <Ref. to EN(H6DO)(diag)-57, OPERATION, Clear Memory Mode.>, and Inspection Mode <Ref. to EN(H6DO)(diag)-44, PROCEDURE, Inspection Mode.>.

WIRING DIAGRAM:

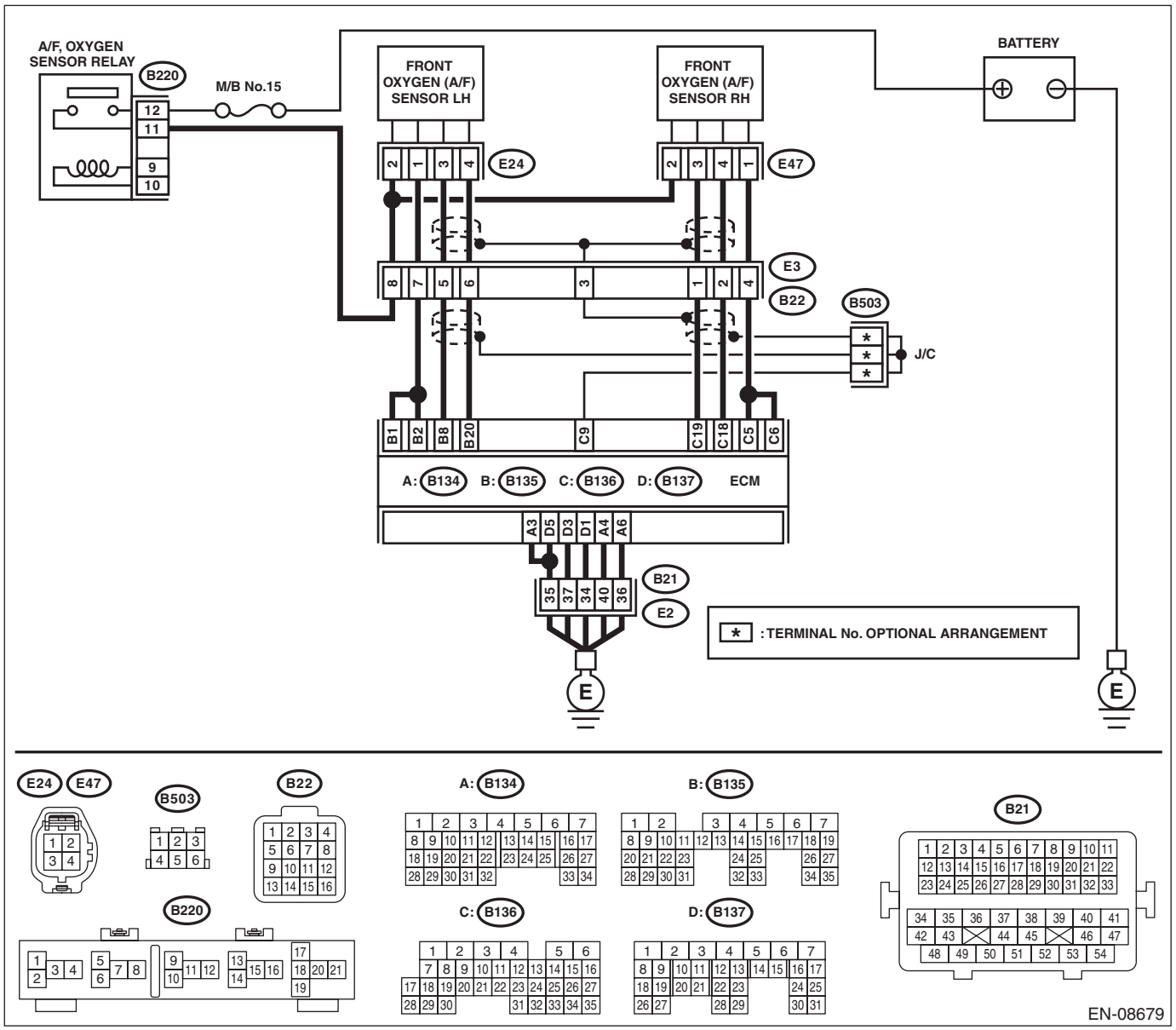

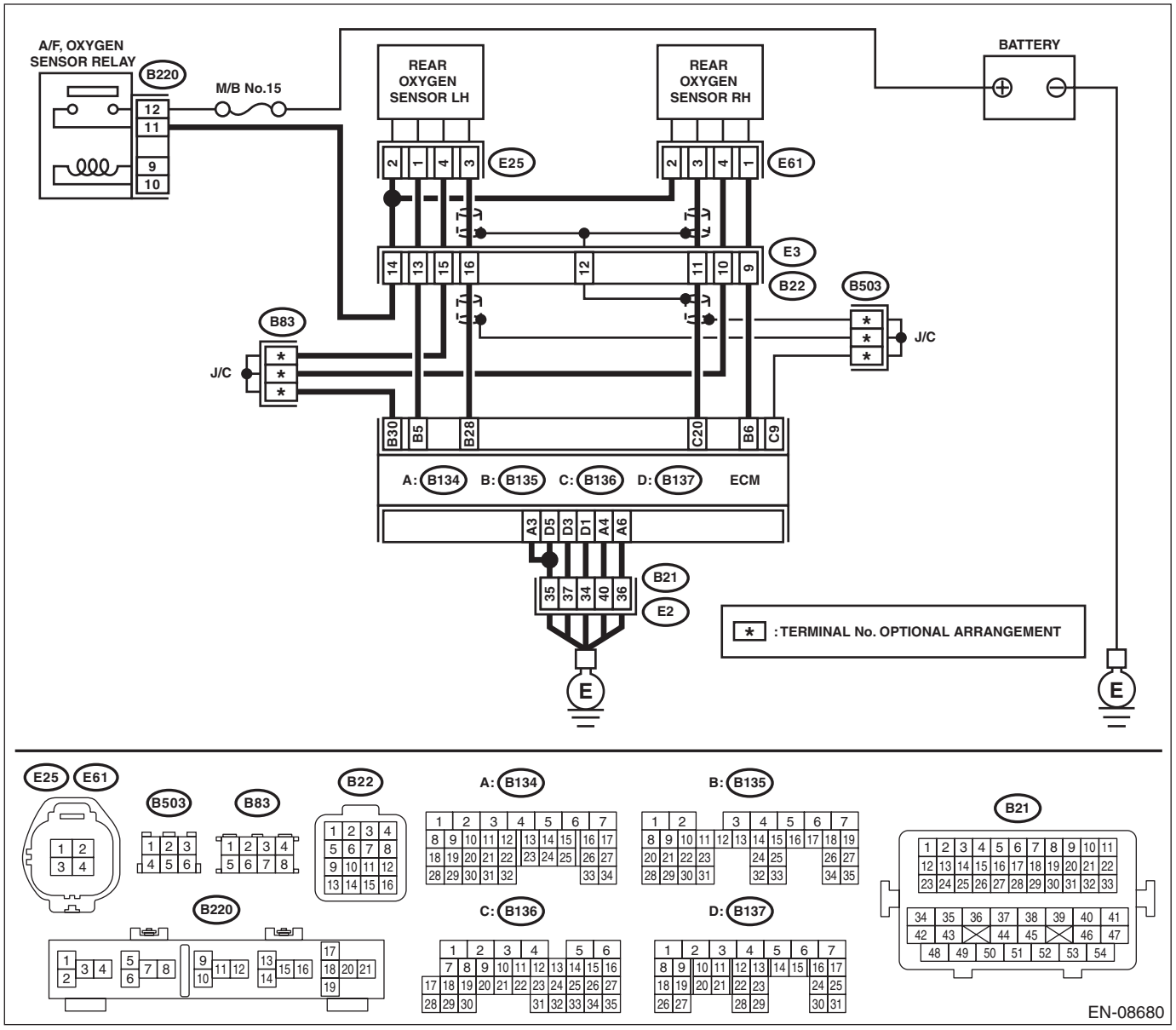
A/F, OXYGEN SENSOR RELAY
B220
M/B No.15
REAR OXYGEN SENSOR LH
REAR OXYGEN SENSOR RH
BATTERY
E25
E61
E3
B22
B503
B83
J/C
B30
B5
B28
C20
B6
C9
A: B134 B: B135 C: B136 D: B137 ECM
B21
E2
: TERMINAL No. OPTIONAL ARRANGEMENT
E
EN-08680

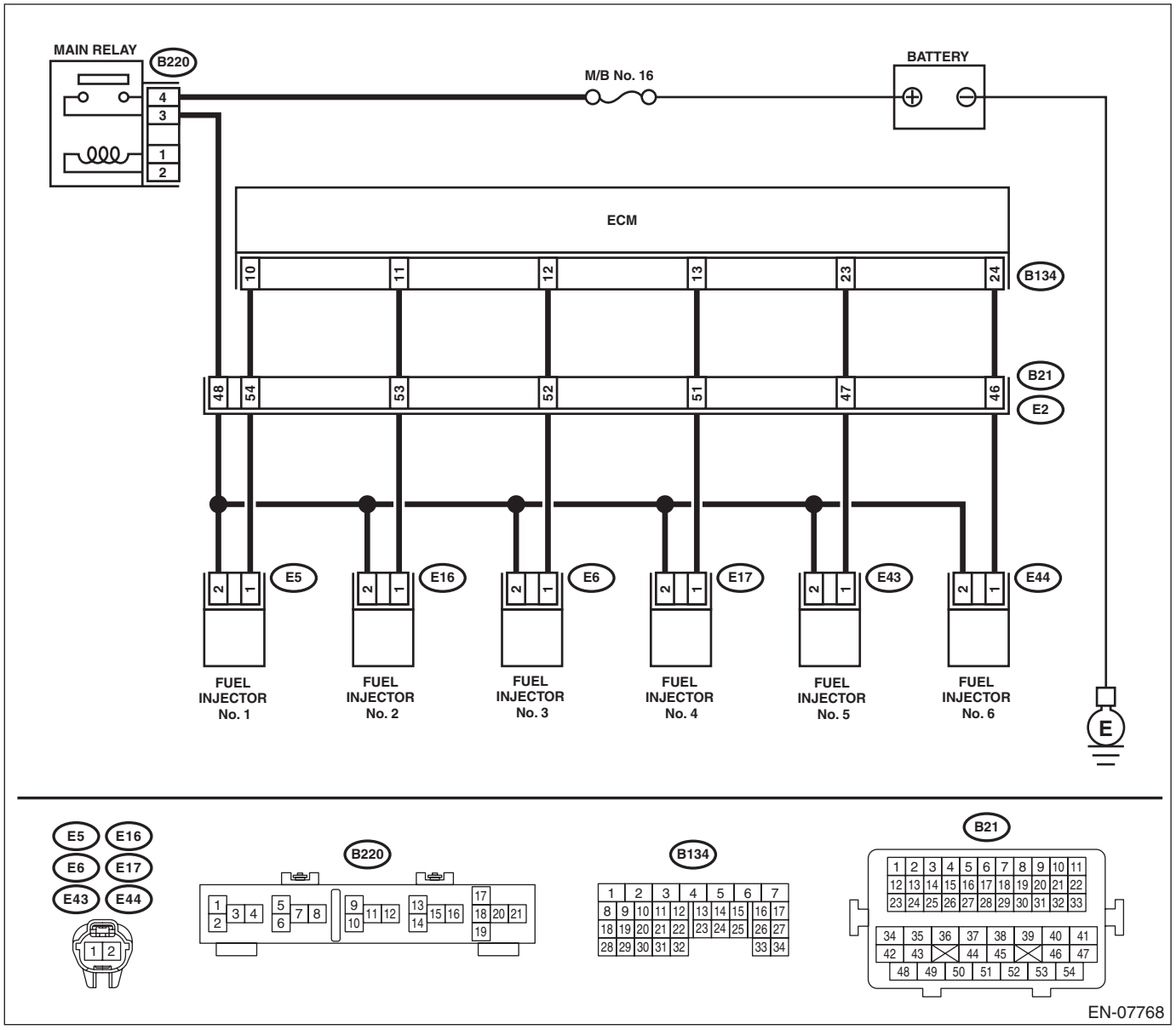

Step		Check	Yes	No
1	**CHECK FRONT OXYGEN (A/F) SENSOR CONNECTOR AND COUPLING CONNECTOR.**	Has water entered the connector?	Completely remove any water inside.	Go to step **2**.
2	**CHECK HARNESS BETWEEN ECM AND FRONT OXYGEN (A/F) SENSOR CONNECTOR.** 1) Turn the ignition switch to OFF. 2) Disconnect the connectors from ECM and front oxygen (A/F) sensor. 3) Measure the resistance of harness between ECM and front oxygen (A/F) sensor connector. ***Connector & terminal*** ***(B135) No. 8 — (E24) No. 3:*** ***(B135) No. 20 — (E24) No. 4:***	Is the resistance less than 1 Ω?	Go to step **3**.	Repair the harness and connector. NOTE: In this case, repair the following item: • Open circuit in harness between ECM and front oxygen (A/F) sensor connector • Poor contact of coupling connector

	Step	Check	Yes	No
3	**CHECK HARNESS BETWEEN ECM AND FRONT OXYGEN (A/F) SENSOR CONNECTOR.** Measure the resistance between ECM and chassis ground. ***Connector & terminal*** ***(B135) No. 8 — Chassis ground:*** ***(B135) No. 20 — Chassis ground:***	Is the resistance 1 MΩ or more?	Go to step **4**.	Repair the ground short circuit of harness between ECM and front oxygen (A/F) sensor connector.
4	**CHECK OUTPUT SIGNAL FOR ECM.** 1) Connect the connector to ECM. 2) Turn the ignition switch to ON. 3) Measure the voltage between front oxygen (A/F) sensor connector and chassis ground. ***Connector & terminal*** ***(E24) No. 3 (+) — Chassis ground (–):***	Is the voltage 4.5 V or more?	Go to step **6**.	Go to step **5**.
5	**CHECK OUTPUT SIGNAL FOR ECM.** Measure the voltage between front oxygen (A/F) sensor connector and chassis ground. ***Connector & terminal*** ***(E24) No. 4 (+) — Chassis ground (–):***	Is the voltage 4.95 V or more?	Go to step **6**.	Go to step **7**.
6	**CHECK OUTPUT SIGNAL FOR ECM.** Measure the voltage between front oxygen (A/F) sensor connector and chassis ground. ***Connector & terminal*** ***(E24) No. 3 (+) — Chassis ground (–):*** ***(E24) No. 4 (+) — Chassis ground (–):***	Is the voltage 8 V or more?	Repair the short circuit to power in the harness between ECM and front oxygen (A/F) sensor connector. After repair, replace the ECM. <Ref. to FU(H6DO)-54, Engine Control Module (ECM).>	Repair the poor contact of ECM connector.
7	**CHECK EXHAUST SYSTEM.**	Are there holes or loose bolts on exhaust system?	Repair the exhaust system.	Go to step **8**.
8	**CHECK AIR INTAKE SYSTEM.**	Are there holes, loose bolts or disconnection of hose on air intake system?	Repair the air intake system.	Go to step **9**.
9	**CHECK FUEL PRESSURE.** **WARNING:** **Place "NO OPEN FLAMES" signs near the working area.** **CAUTION:** **Be careful not to spill fuel.** 1) Connect the front oxygen (A/F) sensor connector. 2) Measure the fuel pressure. <Ref. to ME(H6DO)-31, INSPECTION, Fuel Pressure.> **CAUTION:** **Release fuel pressure before removing the fuel pressure gauge.**	Is the measured value 340 — 400 kPa (3.5 — 4.1 kgf/cm^2, 49 — 58 psi)?	Go to step **10**.	Repair the following item. Fuel pressure is too high: • Clogged fuel line or bent hose Fuel pressure is too low: • Improper fuel pump discharge • Clogged fuel line

	Step	Check	Yes	No
10	**CHECK ENGINE COOLANT TEMPERATURE SENSOR.** 1) Start the engine and warm up completely. 2) Read the value of «Coolant Temp.» using the Subaru Select Monitor or a general scan tool. NOTE: • Subaru Select Monitor For detailed operation procedures, refer to "READ CURRENT DATA FOR ENGINE". <Ref. to EN(H6DO)(diag)-35, Subaru Select Monitor.> • General scan tool For detailed operation procedures, refer to the general scan tool operation manual.	Is the value of «Coolant Temp.» 75°C (167°F) or more?	Go to step **11**.	Replace the engine coolant temperature sensor. <Ref. to FU(H6DO)-29, Engine Coolant Temperature Sensor.>
11	**CHECK MASS AIR FLOW AND INTAKE AIR TEMPERATURE SENSOR.** 1) Start the engine and warm up engine until coolant temperature is higher than 75°C (167°F). 2) Place the select lever in "P" range or "N" range. 3) Turn the A/C switch to OFF. 4) Turn all the accessory switches to OFF. 5) Read the value of «Mass Air Flow» using the Subaru Select Monitor or a general scan tool. NOTE: • Subaru Select Monitor For detailed operation procedures, refer to "READ CURRENT DATA FOR ENGINE". <Ref. to EN(H6DO)(diag)-35, Subaru Select Monitor.> • General scan tool For detailed operation procedures, refer to the general scan tool operation manual.	Is the value of «Mass Air Flow» 2.0 — 5.0 g/s (0.26 — 0.66 lb/m)?	Go to step **12**.	Replace the mass air flow and intake air temperature sensor. <Ref. to FU(H6DO)-41, Mass Air Flow and Intake Air Temperature Sensor.>
12	**CHECK MASS AIR FLOW AND INTAKE AIR TEMPERATURE SENSOR.** 1) Start the engine and warm up engine until coolant temperature is higher than 75°C (167°F). 2) Place the select lever in "P" range or "N" range. 3) Turn the A/C switch to OFF. 4) Turn all the accessory switches to OFF. 5) Open the front hood. 6) Measure the ambient temperature. 7) Read the value of «Intake Air Temp.» using the Subaru Select Monitor or a general scan tool. NOTE: • Subaru Select Monitor For detailed operation procedures, refer to "READ CURRENT DATA FOR ENGINE". <Ref. to EN(H6DO)(diag)-35, Subaru Select Monitor.> • General scan tool For detailed operation procedures, refer to the general scan tool operation manual.	Subtract ambient temperature from «Intake Air Temp.». Is the obtained value –10 — 50°C (–18 — 90°F)?	Go to step **13**.	Check the mass air flow and intake air temperature sensor. <Ref. to FU(H6DO)-41, Mass Air Flow and Intake Air Temperature Sensor.>

	Step	Check	Yes	No
13	**CHECK REAR OXYGEN SENSOR DATA.** 1) Warm up the engine until engine coolant temperature is higher than 75°C (167°F), and keep the engine speed at 3,000 rpm. (2 minutes maximum) 2) Read the value of «Front O2 Sensor #2» using the Subaru Select Monitor or a general scan tool. NOTE: • Subaru Select Monitor For detailed operation procedures, refer to "READ CURRENT DATA FOR ENGINE". <Ref. to EN(H6DO)(diag)-35, Subaru Select Monitor.> • General scan tool For detailed operation procedures, refer to the general scan tool operation manual.	Is the value of «Front O2 Sensor #2» 0.490 V or more?	Go to step **14**.	Go to step **15**.
14	**CHECK REAR OXYGEN SENSOR DATA.** 1) Warm up the engine until engine coolant temperature is higher than 75°C (167°F), and rapidly reduce the engine speed from 3,000 rpm. 2) Read the value of «Front O2 Sensor #2» using the Subaru Select Monitor or a general scan tool. NOTE: • Subaru Select Monitor For detailed operation procedures, refer to "READ CURRENT DATA FOR ENGINE". <Ref. to EN(H6DO)(diag)-35, Subaru Select Monitor.> • General scan tool For detailed operation procedures, refer to the general scan tool operation manual.	Is the value of «Front O2 Sensor #2» 0.250 V or less?	Go to step **16**.	Go to step **15**.
15	**CHECK REAR OXYGEN SENSOR CONNECTOR AND COUPLING CONNECTOR.**	Has water entered the connector?	Completely remove any water inside.	Go to step **17**.
16	**CHECK FRONT OXYGEN (A/F) SENSOR USING REAR OXYGEN SENSOR SIGNAL.** 1) Warm up the engine until engine coolant temperature is higher than 75°C (167°F), then keep the engine idling for 5 minutes or more. 2) Read the value of «Front O2 Sensor #2» using the Subaru Select Monitor or a general scan tool. NOTE: • Subaru Select Monitor For detailed operation procedures, refer to "READ CURRENT DATA FOR ENGINE". <Ref. to EN(H6DO)(diag)-35, Subaru Select Monitor.> • General scan tool For detailed operation procedures, refer to the general scan tool operation manual.	Is the value in «Front O2 Sensor #2» kept at 0.250 V or less for 5 minutes or more?	Replace the front oxygen (A/F) sensor. <Ref. to FU(H6DO)-50, Front Oxygen (A/F) Sensor.>	Go to step **17**.

	Step	Check	Yes	No
17	**CHECK HARNESS BETWEEN ECM AND REAR OXYGEN SENSOR CONNECTOR.** 1) Turn the ignition switch to OFF. 2) Disconnect the connector from ECM and rear oxygen sensor. 3) Measure the resistance of harness between ECM and rear oxygen sensor connector. ***Connector & terminal*** ***(B135) No. 28 — (E25) No. 3:*** ***(B135) No. 30 — (E25) No. 4:***	Is the resistance less than 1 Ω?	Go to step **18**.	Repair the harness and connector. NOTE: In this case, repair the following item: • Open circuit in harness between ECM and rear oxygen sensor connector • Poor contact of coupling connector
18	**CHECK HARNESS BETWEEN ECM AND REAR OXYGEN SENSOR CONNECTOR.** 1) Connect the connector to ECM. 2) Turn the ignition switch to ON. 3) Measure the voltage between rear oxygen sensor connector and chassis ground. ***Connector & terminal*** ***(E25) No. 3 (+) — Chassis ground (–):***	Is the voltage 0.2 — 0.5 V?	Replace the rear oxygen sensor. <Ref. to FU(H6DO)-52, Rear Oxygen Sensor.>	Go to step **19**.
19	**CHECK OUTPUT SIGNAL OF ECM.** 1) Turn the ignition switch to ON. 2) Measure the voltage between ECM and chassis ground on faulty cylinders. ***Connector & terminal*** ***#1 (B134) No. 10 (+) — Chassis ground (–):*** ***#2 (B134) No. 11 (+) — Chassis ground (–):*** ***#3 (B134) No. 12 (+) — Chassis ground (–):*** ***#4 (B134) No. 13 (+) — Chassis ground (–):*** ***#5 (B134) No. 23 (+) — Chassis ground (–):*** ***#6 (B134) No. 24 (+) — Chassis ground (–):***	Is the voltage 10 V or more?	Go to step **24**.	Go to step **20**.
20	**CHECK HARNESS BETWEEN ECM AND FUEL INJECTOR.** 1) Turn the ignition switch to OFF. 2) Disconnect the connector from fuel injector on faulty cylinders. 3) Measure the resistance between fuel injector connector and engine ground on faulty cylinders. ***Connector & terminal*** ***#1 (E5) No. 1 — Engine ground:*** ***#2 (E16) No. 1 — Engine ground:*** ***#3 (E6) No. 1 — Engine ground:*** ***#4 (E17) No. 1 — Engine ground:*** ***#5 (E43) No. 1 — Engine ground:*** ***#6 (E44) No. 1 — Engine ground:***	Is the resistance 1 MΩ or more?	Go to step **21**.	Repair the short circuit to ground in harness between ECM and fuel injector connector.
21	**CHECK HARNESS BETWEEN ECM AND FUEL INJECTOR.** Measure the resistance of harness between ECM and fuel injector connector on faulty cylinders. ***Connector & terminal*** ***#1 (B134) No. 10 — (E5) No. 1:*** ***#2 (B134) No. 11 — (E16) No. 1:*** ***#3 (B134) No. 12 — (E6) No. 1:*** ***#4 (B134) No. 13 — (E17) No. 1:*** ***#5 (B134) No. 23 — (E43) No. 1:*** ***#6 (B134) No. 24 — (E44) No. 1:***	Is the resistance less than 1 Ω?	Go to step **22**.	Repair the harness and connector. NOTE: In this case, repair the following item: • Open circuit in harness between ECM and fuel injector connector • Poor contact of coupling connector

	Step	Check	Yes	No
22	**CHECK FUEL INJECTOR.** Measure the resistance between fuel injector terminals on faulty cylinder. ***Terminals*** ***No. 1 — No. 2:***	Is the resistance 5 — 20 Ω?	Go to step **23**.	Replace the faulty fuel injector. <Ref. to FU(H6DO)-44, Fuel Injector.>
23	**CHECK POWER SUPPLY LINE.** 1) Turn the ignition switch to ON. 2) Measure the voltage between fuel injector connector of faulty cylinders and engine ground. ***Connector & terminal*** ***#1 (E5) No. 2 (+) — Engine ground (–):*** ***#2 (E16) No. 2 (+) — Engine ground (–):*** ***#3 (E6) No. 2 (+) — Engine ground (–):*** ***#4 (E17) No. 2 (+) — Engine ground (–):*** ***#5 (E43) No. 2 (+) — Engine ground (–):*** ***#6 (E44) No. 2 (+) — Engine ground (–):***	Is the voltage 10 V or more?	Repair the poor contact of all connectors in fuel injector circuit.	Repair the harness and connector. NOTE: In this case, repair the following item: • Open circuit in harness between the main relay and fuel injector connector on faulty cylinders • Poor contact of coupling connector • Poor contact of main relay connector
24	**CHECK HARNESS BETWEEN ECM AND FUEL INJECTOR.** 1) Turn the ignition switch to OFF. 2) Disconnect the connector from fuel injector on faulty cylinders. 3) Turn the ignition switch to ON. 4) Measure the voltage between ECM and chassis ground on faulty cylinders. ***Connector & terminal*** ***#1 (B134) No. 10 (+) — Chassis ground (–):*** ***#2 (B134) No. 11 (+) — Chassis ground (–):*** ***#3 (B134) No. 12 (+) — Chassis ground (–):*** ***#4 (B134) No. 13 (+) — Chassis ground (–):*** ***#5 (B134) No. 23 (+) — Chassis ground (–):*** ***#6 (B134) No. 24 (+) — Chassis ground (–):***	Is the voltage 10 V or more?	Repair the short circuit to power in harness between ECM and fuel injector connector.	Go to step **25**.
25	**CHECK FUEL INJECTOR.** 1) Turn the ignition switch to OFF. 2) Measure the resistance between fuel injector terminals on faulty cylinder. ***Terminals*** ***No. 1 — No. 2:***	Is the resistance 5 — 20 Ω?	Go to step **26**.	Replace the faulty fuel injector. <Ref. to FU(H6DO)-44, Fuel Injector.>
26	**CHECK INSTALLATION OF CAMSHAFT POSITION SENSOR/CRANKSHAFT POSITION SENSOR.**	Is the camshaft position sensor or crankshaft position sensor loosely installed?	Tighten the camshaft position sensor or crankshaft position sensor.	Go to step **27**.
27	**CHECK CRANK PLATE.**	Is the crank sprocket rusted or the teeth of crank plate broken?	Replace the crank plate. <Ref. to ME(H6DO)-104, Cylinder Block.>	Go to step **28**.
28	**CHECK INSTALLATION CONDITION OF TIMING CHAIN.** Turn the crankshaft using ST, and align the alignment mark on crank sprocket with alignment mark on cylinder block. ST 18252AA000 CRANKSHAFT SOCKET	Is the timing chain dislocated from its proper position?	Correct the installation condition of timing chain. <Ref. to ME(H6DO)-62, Timing Chain Assembly.>	Go to step **29**.

Step		Check	Yes	No
29	**CHECK FUEL LEVEL.**	Is the fuel meter indication lower than the “Lower” level?	Refill the fuel so that the fuel meter indication is higher than the “Lower” level, and proceed to the next step. Go to step **30**.	Go to step **30**.
30	**CHECK STATUS OF MALFUNCTION INDICATOR LIGHT.** 1) Clear the memory using the Subaru Select Monitor or general scan tool. <Ref. to EN(H6DO)(diag)-57, Clear Memory Mode.> 2) Start the engine, and drive the vehicle 10 minutes or more.	Does the malfunction indicator light illuminate or blink?	Go to step **32**.	Go to step **31**.
31	**CHECK CAUSE OF MISFIRE.**	Was the cause of misfire identified when the engine is running?	Finish diagnostics operation, if the engine has no abnormality.	Repair the poor contact of connector. NOTE: In this case, repair the following item: • Poor contact of ignition coil connector • Poor contact of fuel injector connector on faulty cylinders • Poor contact of ECM connector • Poor contact of coupling connector
32	**CHECK AIR INTAKE SYSTEM.**	Is there any fault in air intake system?	Repair the air intake system. NOTE: Check the following items. • Are there air leaks or air suction caused by loose or dislocated nuts and bolts? • Are there cracks or any disconnection of hoses?	Go to step **33**.
33	**CHECK MISFIRE SYMPTOM.** 1) Turn the ignition switch to ON. 2) Check for DTC. <Ref. to EN(H6DO)(diag)-43, Read Diagnostic Trouble Code (DTC).>	Does the Subaru Select Monitor or general scan tool indicate only one DTC?	Go to step **36**.	Go to step **34**.
34	**CHECK DTC ON DISPLAY.**	Is DTC P0301, P0303 and P0305 displayed?	Go to step **37**.	Go to step **35**.
35	**CHECK DTC ON DISPLAY.**	Is DTC P0302, P0304 and P0306 displayed?	Go to step **38**.	Go to step **39**.

Step		Check	Yes	No
36	ONLY ONE CYLINDER.	Is there any fault in the cylinder?	Repair or replace faulty parts. NOTE: Check the following items. • Spark plug • Ignition coil • Fuel injector • Compression ratio	Check DTC P0171, P0172, P0174 or P0175 using “List of Diagnostic Trouble Code (DTC)”. <Ref. to EN(H6DO)(diag)-85, List of Diagnostic Trouble Code (DTC).>
37	GROUP OF #1, #3 AND #5 CYLINDERS.	Is there any fault in #1, #3 and #5 cylinders?	Repair or replace faulty parts. NOTE: Check the following items. • Spark plug • Ignition coil • Fuel injector • Compression ratio • Skipping timing chain teeth	Check DTC P0171, P0172, P0174 or P0175 using “List of Diagnostic Trouble Code (DTC)”. <Ref. to EN(H6DO)(diag)-85, List of Diagnostic Trouble Code (DTC).>
38	GROUP OF #2, #4 AND #6 CYLINDERS.	Is there any fault in #2, #4 and #6 cylinders?	Repair or replace faulty parts. NOTE: Check the following items. • Spark plug • Ignition coil • Fuel injector • Compression ratio • Skipping timing chain teeth	Check DTC P0171, P0172, P0174 or P0175 using “List of Diagnostic Trouble Code (DTC)”. <Ref. to EN(H6DO)(diag)-85, List of Diagnostic Trouble Code (DTC).>
39	CYLINDER AT RANDOM.	Is the engine idle rough?	Check DTC P0171, P0172, P0174 or P0175 using “List of Diagnostic Trouble Code (DTC)”. <Ref. to EN(H6DO)(diag)-85, List of Diagnostic Trouble Code (DTC).>	Repair or replace faulty parts. NOTE: Check the following items. • Spark plug • Ignition coil • Fuel injector • Compression ratio

FQ:DTC P2227 BAROMETRIC PRESSURE CIRCUIT RANGE/PERFORMANCE

DTC DETECTING CONDITION:

- Detected when two consecutive driving cycles with fault occur.
- GENERAL DESCRIPTION <Ref. to GD(H6DO)-258, DTC P2227 BAROMETRIC PRESSURE CIRCUIT RANGE/PERFORMANCE, Diagnostic Trouble Code (DTC) Detecting Criteria.>

CAUTION:
After servicing or replacing faulty parts, perform Clear Memory Mode <Ref. to EN(H6DO)(diag)-57, OPERATION, Clear Memory Mode.>, and Inspection Mode <Ref. to EN(H6DO)(diag)-44, PROCEDURE, Inspection Mode.>.

Step		Check	Yes	No
1	**CHECK FOR ANY OTHER DTC ON DISPLAY.**	Is any other DTC displayed?	Check DTC using "List of Diagnostic Trouble Code (DTC)". <Ref. to EN(H6DO)(diag)-85, List of Diagnostic Trouble Code (DTC).>	Replace the ECM. <Ref. to FU(H6DO)-54, Engine Control Module (ECM).> NOTE: The barometric pressure sensor is built into the ECM.

FR:DTC P2228 BAROMETRIC PRESSURE CIRCUIT LOW

DTC DETECTING CONDITION:

- Immediately at fault recognition
- GENERAL DESCRIPTION <Ref. to GD(H6DO)-259, DTC P2228 BAROMETRIC PRESSURE CIRCUIT LOW, Diagnostic Trouble Code (DTC) Detecting Criteria.>

CAUTION:
After servicing or replacing faulty parts, perform Clear Memory Mode <Ref. to EN(H6DO)(diag)-57, OPERATION, Clear Memory Mode.>, and Inspection Mode <Ref. to EN(H6DO)(diag)-44, PROCEDURE, Inspection Mode.>.

Step		Check	Yes	No
1	**CHECK FOR ANY OTHER DTC ON DISPLAY.**	Is any other DTC displayed?	Check DTC using "List of Diagnostic Trouble Code (DTC)". <Ref. to EN(H6DO)(diag)-85, List of Diagnostic Trouble Code (DTC).>	Replace the ECM. <Ref. to FU(H6DO)-54, Engine Control Module (ECM).> NOTE: The barometric pressure sensor is built into the ECM.

FS:DTC P2229 BAROMETRIC PRESSURE CIRCUIT HIGH

DTC DETECTING CONDITION:

- Immediately at fault recognition
- GENERAL DESCRIPTION <Ref. to GD(H6DO)-260, DTC P2229 BAROMETRIC PRESSURE CIRCUIT HIGH, Diagnostic Trouble Code (DTC) Detecting Criteria.>

CAUTION:
After servicing or replacing faulty parts, perform Clear Memory Mode <Ref. to EN(H6DO)(diag)-57, OPERATION, Clear Memory Mode.>, and Inspection Mode <Ref. to EN(H6DO)(diag)-44, PROCEDURE, Inspection Mode.>.

Step	Check	Yes	No
1 **CHECK FOR ANY OTHER DTC ON DISPLAY.**	Is any other DTC displayed?	Check DTC using "List of Diagnostic Trouble Code (DTC)". <Ref. to EN(H6DO)(diag)-85, List of Diagnostic Trouble Code (DTC).>	Replace the ECM. <Ref. to FU(H6DO)-54, Engine Control Module (ECM).> NOTE: The barometric pressure sensor is built into the ECM.

FT:DTC P2610 ECM/PCM INTERNAL ENGINE OFF TIMER PERFORMANCE

DTC DETECTING CONDITION:

- Detected when two consecutive driving cycles with fault occur.
- GENERAL DESCRIPTION <Ref. to GD(H6DO)-261, DTC P2610 ECM/PCM INTERNAL ENGINE OFF TIMER PERFORMANCE, Diagnostic Trouble Code (DTC) Detecting Criteria.>

CAUTION:
After servicing or replacing faulty parts, perform Clear Memory Mode <Ref. to EN(H6DO)(diag)-57, OPERATION, Clear Memory Mode.>, and Inspection Mode <Ref. to EN(H6DO)(diag)-44, PROCEDURE, Inspection Mode.>.

Step	Check	Yes	No
1 **CHECK FOR ANY OTHER DTC ON DISPLAY.**	Is any other DTC displayed?	Check DTC using "List of Diagnostic Trouble Code (DTC)". <Ref. to EN(H6DO)(diag)-85, List of Diagnostic Trouble Code (DTC).>	Replace the ECM. <Ref. to FU(H6DO)-54, Engine Control Module (ECM).> NOTE: The soak timer IC is built into the ECM.

FU:DTC U0073 CAN FAILURE, BUS 'OFF' DETECTION

NOTE:
For the diagnostic procedure, refer to LAN section. <Ref. to LAN(diag)-2, Basic Diagnostic Procedure.>

FV:DTC U0101 CAN (TCU) DATA NOT LOADED

NOTE:
For the diagnostic procedure, refer to LAN section. <Ref. to LAN(diag)-2, Basic Diagnostic Procedure.>

FW:DTC U0122 CAN (VDC) DATA NOT LOADED

NOTE:
For the diagnostic procedure, refer to LAN section. <Ref. to LAN(diag)-2, Basic Diagnostic Procedure.>

FX:DTC U0140 CAN (BCU) DATA NOT LOADED

NOTE:
For the diagnostic procedure, refer to LAN section. <Ref. to LAN(diag)-2, Basic Diagnostic Procedure.>

FY:DTC U0402 CAN (TCU) DATA ABNORMAL

NOTE:
For the diagnostic procedure, refer to LAN section. <Ref. to LAN(diag)-2, Basic Diagnostic Procedure.>

FZ:DTC U0416 CAN (VDC) DATA ABNORMAL

NOTE:
For the diagnostic procedure, refer to LAN section. <Ref. to LAN(diag)-2, Basic Diagnostic Procedure.>

GA:DTC U0422 CAN (BCU) DATA ABNORMAL

NOTE:
For the diagnostic procedure, refer to LAN section. <Ref. to LAN(diag)-2, Basic Diagnostic Procedure.>

20.General Diagnostic Table

A: INSPECTION

NOTE:
Malfunction of parts other than those listed is also possible. <Ref. to ME(H6DO)-132, Engine Trouble in General.>

Symptoms	Faulty parts
1. Engine stalls during idling.	1) Manifold absolute pressure sensor 2) Mass air flow and intake air temperature sensor 3) Ignition parts (*1) 4) Engine coolant temperature sensor (*2) 5) Crankshaft position sensor (*3) 6) Camshaft position sensor (*3) 7) Fuel injection parts (*4) 8) Electronic throttle control
2. Rough idling	1) Manifold absolute pressure sensor 2) Mass air flow and intake air temperature sensor 3) Engine coolant temperature sensor (*2) 4) Ignition parts (*1) 5) Air intake system (*5) 6) Fuel injection parts (*4) 7) Electronic throttle control 8) Crankshaft position sensor (*3) 9) Camshaft position sensor (*3) 10) Oxygen sensor 11) Fuel pump and fuel pump relay 12) EGR control valve
3. Engine does not return to idle.	1) Engine coolant temperature sensor 2) Electronic throttle control 3) Manifold absolute pressure sensor 4) Mass air flow and intake air temperature sensor 5) Accelerator pedal position sensor 6) Engine oil temperature sensor 7) EGR control valve
4. Poor acceleration	1) Manifold absolute pressure sensor 2) Mass air flow and intake air temperature sensor 3) Electronic throttle control 4) Fuel injection parts (*4) 5) Fuel pump and fuel pump relay 6) Engine coolant temperature sensor (*2) 7) Crankshaft position sensor (*3) 8) Camshaft position sensor (*3) 9) EGR control valve 10) Engine torque control signal circuit 11) Ignition parts (*1) 12) Accelerator pedal position sensor 13) Engine oil temperature sensor
5. Engine stalls, hesitates, or sputters at acceleration.	1) Manifold absolute pressure sensor 2) Mass air flow and intake air temperature sensor 3) Engine coolant temperature sensor (*2) 4) Crankshaft position sensor (*3) 5) Camshaft position sensor (*3) 6) Purge control solenoid valve 7) Fuel injection parts (*4) 8) Electronic throttle control 9) Fuel pump and fuel pump relay 10) EGR control valve

General Diagnostic Table

Symptoms	Faulty parts
6. Surging	1) Mass air flow and intake air temperature sensor 2) Manifold absolute pressure sensor 3) Engine coolant temperature sensor (*2) 4) Crankshaft position sensor (*3) 5) Camshaft position sensor (*3) 6) Fuel injection parts (*4) 7) Electronic throttle control 8) Fuel pump and fuel pump relay 9) EGR control valve
7. Spark knock	1) Mass air flow and intake air temperature sensor 2) Manifold absolute pressure sensor 3) Engine coolant temperature sensor 4) Knock sensor 5) Fuel injection parts (*4) 6) Fuel pump and fuel pump relay 7) EGR control valve
8. After burning in exhaust system	1) Mass air flow and intake air temperature sensor 2) Manifold absolute pressure sensor 3) Engine coolant temperature sensor (*2) 4) Fuel injection parts (*4) 5) Fuel pump and fuel pump relay

*1: Check ignition coil and spark plug.
*2: Indicate the symptom occurring only in cold temperatures.
*3: Ensure secure installation.
*4: Check the fuel injector and fuel pressure regulator.
*5: Inspect for air leak in air intake system.

GENERAL DESCRIPTION

GD(H6DO)

Page

1. List of Diagnostic Trouble Code (DTC) 2
2. Diagnostic Trouble Code (DTC) Detecting Criteria 11

1. List of Diagnostic Trouble Code (DTC)

A: LIST

DTC	Item	Index
P0011	Intake Camshaft Position - Timing Over-Advanced or System Performance (Bank 1)	<Ref. to GD(H6DO)-11, DTC P0011 INTAKE CAMSHAFT POSITION - TIMING OVER-ADVANCED OR SYSTEM PERFORMANCE (BANK 1), Diagnostic Trouble Code (DTC) Detecting Criteria.>
P0014	Exhaust AVCS System 1 (Range/Performance)	<Ref. to GD(H6DO)-13, DTC P0014 EXHAUST AVCS SYSTEM 1 (RANGE/PERFORMANCE), Diagnostic Trouble Code (DTC) Detecting Criteria.>
P0016	Crankshaft Position - Camshaft Position Correlation (Bank1)	<Ref. to GD(H6DO)-15, DTC P0016 CRANKSHAFT POSITION - CAMSHAFT POSITION CORRELATION (BANK1), Diagnostic Trouble Code (DTC) Detecting Criteria.>
P0017	Crank and Cam Timing B System Failure (Bank 1)	<Ref. to GD(H6DO)-17, DTC P0017 CRANK AND CAM TIMING B SYSTEM FAILURE (BANK 1), Diagnostic Trouble Code (DTC) Detecting Criteria.>
P0018	Crankshaft Position - Camshaft Position Correlation (Bank2)	<Ref. to GD(H6DO)-19, DTC P0018 CRANKSHAFT POSITION - CAMSHAFT POSITION CORRELATION (BANK2), Diagnostic Trouble Code (DTC) Detecting Criteria.>
P0019	Crank and Cam Timing B System Failure (Bank 2)	<Ref. to GD(H6DO)-19, DTC P0019 CRANK AND CAM TIMING B SYSTEM FAILURE (BANK 2), Diagnostic Trouble Code (DTC) Detecting Criteria.>
P0021	Intake Camshaft Position - Timing Over-Advanced or System Performance (Bank 2)	<Ref. to GD(H6DO)-19, DTC P0021 INTAKE CAMSHAFT POSITION - TIMING OVER-ADVANCED OR SYSTEM PERFORMANCE (BANK 2), Diagnostic Trouble Code (DTC) Detecting Criteria.>
P0024	Exhaust AVCS System 2 (Range/Performance)	<Ref. to GD(H6DO)-19, DTC P0024 EXHAUST AVCS SYSTEM 2 (RANGE/PERFORMANCE), Diagnostic Trouble Code (DTC) Detecting Criteria.>
P0030	HO2S Heater Control Circuit (Bank 1 Sensor 1)	<Ref. to GD(H6DO)-20, DTC P0030 HO2S HEATER CONTROL CIRCUIT (BANK 1 SENSOR 1), Diagnostic Trouble Code (DTC) Detecting Criteria.>
P0031	HO2S Heater Control Circuit Low (Bank 1 Sensor 1)	<Ref. to GD(H6DO)-22, DTC P0031 HO2S HEATER CONTROL CIRCUIT LOW (BANK 1 SENSOR 1), Diagnostic Trouble Code (DTC) Detecting Criteria.>
P0032	HO2S Heater Control Circuit High (Bank 1 Sensor 1)	<Ref. to GD(H6DO)-24, DTC P0032 HO2S HEATER CONTROL CIRCUIT HIGH (BANK 1 SENSOR 1), Diagnostic Trouble Code (DTC) Detecting Criteria.>
P0037	HO2S Heater Control Circuit Low (Bank 1 Sensor 2)	<Ref. to GD(H6DO)-26, DTC P0037 HO2S HEATER CONTROL CIRCUIT LOW (BANK 1 SENSOR 2), Diagnostic Trouble Code (DTC) Detecting Criteria.>
P0038	HO2S Heater Control Circuit High (Bank 1 Sensor 2)	<Ref. to GD(H6DO)-28, DTC P0038 HO2S HEATER CONTROL CIRCUIT HIGH (BANK 1 SENSOR 2), Diagnostic Trouble Code (DTC) Detecting Criteria.>
P0050	HO2S Heater Control Circuit (Bank 2 Sensor 1)	<Ref. to GD(H6DO)-30, DTC P0050 HO2S HEATER CONTROL CIRCUIT (BANK 2 SENSOR 1), Diagnostic Trouble Code (DTC) Detecting Criteria.>
P0051	HO2S Heater Control Circuit Low (Bank 2 Sensor 1)	<Ref. to GD(H6DO)-30, DTC P0051 HO2S HEATER CONTROL CIRCUIT LOW (BANK 2 SENSOR 1), Diagnostic Trouble Code (DTC) Detecting Criteria.>
P0052	HO2S Heater Control Circuit High (Bank 2 Sensor 1)	<Ref. to GD(H6DO)-30, DTC P0052 HO2S HEATER CONTROL CIRCUIT HIGH (BANK 2 SENSOR 1), Diagnostic Trouble Code (DTC) Detecting Criteria.>
P0057	HO2S Heater Control Circuit Low (Bank 2 Sensor 2)	<Ref. to GD(H6DO)-30, DTC P0057 HO2S HEATER CONTROL CIRCUIT LOW (BANK 2 SENSOR 2), Diagnostic Trouble Code (DTC) Detecting Criteria.>
P0058	HO2S Heater Control Circuit High (Bank 2 Sensor 2)	<Ref. to GD(H6DO)-30, DTC P0058 HO2S HEATER CONTROL CIRCUIT HIGH (BANK 2 SENSOR 2), Diagnostic Trouble Code (DTC) Detecting Criteria.>
P0068	MAP/MAF - Throttle Position Correlation	<Ref. to GD(H6DO)-31, DTC P0068 MAP/MAF - THROTTLE POSITION CORRELATION, Diagnostic Trouble Code (DTC) Detecting Criteria.>
P0101	Mass or Volume Air Flow Circuit Range/Performance	<Ref. to GD(H6DO)-33, DTC P0101 MASS OR VOLUME AIR FLOW CIRCUIT RANGE/PERFORMANCE, Diagnostic Trouble Code (DTC) Detecting Criteria.>

DTC	Item	Index
P0102	Mass or Volume Air Flow Circuit Low Input	<Ref. to GD(H6DO)-35, DTC P0102 MASS OR VOLUME AIR FLOW CIRCUIT LOW INPUT, Diagnostic Trouble Code (DTC) Detecting Criteria.>
P0103	Mass or Volume Air Flow Circuit High Input	<Ref. to GD(H6DO)-37, DTC P0103 MASS OR VOLUME AIR FLOW CIRCUIT HIGH INPUT, Diagnostic Trouble Code (DTC) Detecting Criteria.>
P0107	Manifold Absolute Pressure/Barometric Pressure Circuit Low Input	<Ref. to GD(H6DO)-39, DTC P0107 MANIFOLD ABSOLUTE PRESSURE/BAROMETRIC PRESSURE CIRCUIT LOW INPUT, Diagnostic Trouble Code (DTC) Detecting Criteria.>
P0108	Manifold Absolute Pressure/Barometric Pressure Circuit High Input	<Ref. to GD(H6DO)-41, DTC P0108 MANIFOLD ABSOLUTE PRESSURE/BAROMETRIC PRESSURE CIRCUIT HIGH INPUT, Diagnostic Trouble Code (DTC) Detecting Criteria.>
P0111	Intake Air Temperature Sensor 1 Circuit Range/Performance	<Ref. to GD(H6DO)-43, DTC P0111 INTAKE AIR TEMPERATURE SENSOR 1 CIRCUIT RANGE/PERFORMANCE, Diagnostic Trouble Code (DTC) Detecting Criteria.>
P0112	Intake Air Temperature Sensor 1 Circuit Low	<Ref. to GD(H6DO)-46, DTC P0112 INTAKE AIR TEMPERATURE SENSOR 1 CIRCUIT LOW, Diagnostic Trouble Code (DTC) Detecting Criteria.>
P0113	Intake Air Temperature Sensor 1 Circuit High	<Ref. to GD(H6DO)-48, DTC P0113 INTAKE AIR TEMPERATURE SENSOR 1 CIRCUIT HIGH, Diagnostic Trouble Code (DTC) Detecting Criteria.>
P0117	Engine Coolant Temperature Circuit Low	<Ref. to GD(H6DO)-50, DTC P0117 ENGINE COOLANT TEMPERATURE CIRCUIT LOW, Diagnostic Trouble Code (DTC) Detecting Criteria.>
P0118	Engine Coolant Temperature Circuit High	<Ref. to GD(H6DO)-52, DTC P0118 ENGINE COOLANT TEMPERATURE CIRCUIT HIGH, Diagnostic Trouble Code (DTC) Detecting Criteria.>
P0122	Throttle/Pedal Position Sensor/Switch “A” Circuit Low	<Ref. to GD(H6DO)-54, DTC P0122 THROTTLE/PEDAL POSITION SENSOR/SWITCH “A” CIRCUIT LOW, Diagnostic Trouble Code (DTC) Detecting Criteria.>
P0123	Throttle/Pedal Position Sensor/Switch “A” Circuit High	<Ref. to GD(H6DO)-56, DTC P0123 THROTTLE/PEDAL POSITION SENSOR/SWITCH “A” CIRCUIT HIGH, Diagnostic Trouble Code (DTC) Detecting Criteria.>
P0125	Insufficient Coolant Temperature for Closed Loop Fuel Control	<Ref. to GD(H6DO)-58, DTC P0125 INSUFFICIENT COOLANT TEMPERATURE FOR CLOSED LOOP FUEL CONTROL, Diagnostic Trouble Code (DTC) Detecting Criteria.>
P0126	Insufficient Engine Coolant Temperature for Stable Operation	<Ref. to GD(H6DO)-60, DTC P0126 INSUFFICIENT ENGINE COOLANT TEMPERATURE FOR STABLE OPERATION, Diagnostic Trouble Code (DTC) Detecting Criteria.>
P0128	Coolant Thermostat (Engine Coolant Temperature Below Thermostat Regulating Temperature)	<Ref. to GD(H6DO)-62, DTC P0128 COOLANT THERMOSTAT (ENGINE COOLANT TEMPERATURE BELOW THERMOSTAT REGULATING TEMPERATURE), Diagnostic Trouble Code (DTC) Detecting Criteria.>
P0131	O2 Sensor Circuit Low Voltage (Bank 1 Sensor 1)	<Ref. to GD(H6DO)-66, DTC P0131 O2 SENSOR CIRCUIT LOW VOLTAGE (BANK 1 SENSOR 1), Diagnostic Trouble Code (DTC) Detecting Criteria.>
P0132	O2 Sensor Circuit High Voltage (Bank 1 Sensor 1)	<Ref. to GD(H6DO)-68, DTC P0132 O2 SENSOR CIRCUIT HIGH VOLTAGE (BANK 1 SENSOR 1), Diagnostic Trouble Code (DTC) Detecting Criteria.>
P0134	O2 Sensor Circuit No Activity Detected (Bank 1 Sensor 1)	<Ref. to GD(H6DO)-70, DTC P0134 O2 SENSOR CIRCUIT NO ACTIVITY DETECTED (BANK 1 SENSOR 1), Diagnostic Trouble Code (DTC) Detecting Criteria.>
P0137	O2 Sensor Circuit Low Voltage (Bank 1 Sensor 2)	<Ref. to GD(H6DO)-72, DTC P0137 O2 SENSOR CIRCUIT LOW VOLTAGE (BANK 1 SENSOR 2), Diagnostic Trouble Code (DTC) Detecting Criteria.>
P0138	O2 Sensor Circuit High Voltage (Bank 1 Sensor 2)	<Ref. to GD(H6DO)-75, DTC P0138 O2 SENSOR CIRCUIT HIGH VOLTAGE (BANK 1 SENSOR 2), Diagnostic Trouble Code (DTC) Detecting Criteria.>
P013A	O2 Sensor Slow Response - Rich to Lean (Bank 1 Sensor 2)	<Ref. to GD(H6DO)-76, DTC P013A O2 SENSOR SLOW RESPONSE - RICH TO LEAN (BANK 1 SENSOR 2), Diagnostic Trouble Code (DTC) Detecting Criteria.>
P013B	O2 Sensor Slow Response - Lean to Rich (Bank 1 Sensor 2)	<Ref. to GD(H6DO)-78, DTC P013B O2 SENSOR SLOW RESPONSE - LEAN TO RICH (BANK 1 SENSOR 2), Diagnostic Trouble Code (DTC) Detecting Criteria.>
P013C	O2 Sensor Slow Response - Rich to Lean (Bank 2 Sensor 2)	<Ref. to GD(H6DO)-80, DTC P013C O2 SENSOR SLOW RESPONSE - RICH TO LEAN (BANK 2 SENSOR 2), Diagnostic Trouble Code (DTC) Detecting Criteria.>

DTC	Item	Index
P013D	O2 Sensor Slow Response - Lean to Rich (Bank 2 Sensor 2)	<Ref. to GD(H6DO)-80, DTC P013D O2 SENSOR SLOW RESPONSE - LEAN TO RICH (BANK 2 SENSOR 2), Diagnostic Trouble Code (DTC) Detecting Criteria.>
P013E	O2 Sensor Delayed Response - Rich to Lean (Bank 1 Sensor 2)	<Ref. to GD(H6DO)-81, DTC P013E O2 SENSOR DELAYED RESPONSE - RICH TO LEAN (BANK 1 SENSOR 2), Diagnostic Trouble Code (DTC) Detecting Criteria.>
P013F	O2 Sensor Delayed Response - Lean to Rich (Bank 1 Sensor 2)	<Ref. to GD(H6DO)-83, DTC P013F O2 SENSOR DELAYED RESPONSE - LEAN TO RICH (BANK 1 SENSOR 2), Diagnostic Trouble Code (DTC) Detecting Criteria.>
P0140	O2 Sensor Circuit No Activity Detected (Bank1 Sensor2)	<Ref. to GD(H6DO)-85, DTC P0140 O2 SENSOR CIRCUIT NO ACTIVITY DETECTED (BANK1 SENSOR2), Diagnostic Trouble Code (DTC) Detecting Criteria.>
P0141	O2 Sensor Heater Circuit (Bank1 Sensor2)	<Ref. to GD(H6DO)-87, DTC P0141 O2 SENSOR HEATER CIRCUIT (BANK1 SENSOR2), Diagnostic Trouble Code (DTC) Detecting Criteria.>
P014A	O2 Sensor Delayed Response - Rich to Lean (Bank 2 Sensor 2)	<Ref. to GD(H6DO)-89, DTC P014A O2 SENSOR DELAYED RESPONSE - RICH TO LEAN (BANK 2 SENSOR 2), Diagnostic Trouble Code (DTC) Detecting Criteria.>
P014B	O2 Sensor Delayed Response - Lean to Rich (Bank 2 Sensor 2)	<Ref. to GD(H6DO)-89, DTC P014B O2 SENSOR DELAYED RESPONSE - LEAN TO RICH (BANK 2 SENSOR 2), Diagnostic Trouble Code (DTC) Detecting Criteria.>
P014C	O2 Sensor Slow Response - Rich to Lean (Bank 1 Sensor 1)	<Ref. to GD(H6DO)-90, DTC P014C O2 SENSOR SLOW RESPONSE - RICH TO LEAN (BANK 1 SENSOR 1), Diagnostic Trouble Code (DTC) Detecting Criteria.>
P014D	O2 Sensor Slow Response - Lean to Rich (Bank 1 Sensor 1)	<Ref. to GD(H6DO)-93, DTC P014D O2 SENSOR SLOW RESPONSE - LEAN TO RICH (BANK 1 SENSOR 1), Diagnostic Trouble Code (DTC) Detecting Criteria.>
P014E	O2 Sensor Slow Response - Rich to Lean (Bank 2 Sensor 1)	<Ref. to GD(H6DO)-93, DTC P014E O2 SENSOR SLOW RESPONSE - RICH TO LEAN (BANK 2 SENSOR 1), Diagnostic Trouble Code (DTC) Detecting Criteria.>
P014F	O2 Sensor Slow Response - Lean to Rich (Bank 2 Sensor 1)	<Ref. to GD(H6DO)-93, DTC P014F O2 SENSOR SLOW RESPONSE - LEAN TO RICH (BANK 2 SENSOR 1), Diagnostic Trouble Code (DTC) Detecting Criteria.>
P0151	O2 Sensor Circuit Low Voltage (Bank 2 Sensor 1)	<Ref. to GD(H6DO)-93, DTC P0151 O2 SENSOR CIRCUIT LOW VOLTAGE (BANK 2 SENSOR 1), Diagnostic Trouble Code (DTC) Detecting Criteria.>
P0152	O2 Sensor Circuit High Voltage (Bank 2 Sensor 1)	<Ref. to GD(H6DO)-93, DTC P0152 O2 SENSOR CIRCUIT HIGH VOLTAGE (BANK 2 SENSOR 1), Diagnostic Trouble Code (DTC) Detecting Criteria.>
P0154	O2 Sensor Circuit No Activity Detected (Bank 2 Sensor 1)	<Ref. to GD(H6DO)-93, DTC P0154 O2 SENSOR CIRCUIT NO ACTIVITY DETECTED (BANK 2 SENSOR 1), Diagnostic Trouble Code (DTC) Detecting Criteria.>
P0157	O2 Sensor Circuit Low Voltage (Bank 2 Sensor 2)	<Ref. to GD(H6DO)-93, DTC P0157 O2 SENSOR CIRCUIT LOW VOLTAGE (BANK 2 SENSOR 2), Diagnostic Trouble Code (DTC) Detecting Criteria.>
P0158	O2 Sensor Circuit High Voltage (Bank 2 Sensor 2)	<Ref. to GD(H6DO)-94, DTC P0158 O2 SENSOR CIRCUIT HIGH VOLTAGE (BANK 2 SENSOR 2), Diagnostic Trouble Code (DTC) Detecting Criteria.>
P015A	O2 Sensor Delayed Response - Rich to Lean (Bank 1 Sensor 1)	<Ref. to GD(H6DO)-95, DTC P015A O2 SENSOR DELAYED RESPONSE - RICH TO LEAN (BANK 1 SENSOR 1), Diagnostic Trouble Code (DTC) Detecting Criteria.>
P015B	O2 Sensor Delayed Response - Lean to Rich (Bank 1 Sensor 1)	<Ref. to GD(H6DO)-99, DTC P015B O2 SENSOR DELAYED RESPONSE - LEAN TO RICH (BANK 1 SENSOR 1), Diagnostic Trouble Code (DTC) Detecting Criteria.>
P015C	O2 Sensor Delayed Response - Rich to Lean (Bank 2 Sensor 1)	<Ref. to GD(H6DO)-99, DTC P015C O2 SENSOR DELAYED RESPONSE - RICH TO LEAN (BANK 2 SENSOR 1), Diagnostic Trouble Code (DTC) Detecting Criteria.>
P015D	O2 Sensor Delayed Response - Lean to Rich (Bank 2 Sensor 1)	<Ref. to GD(H6DO)-99, DTC P015D O2 SENSOR DELAYED RESPONSE - LEAN TO RICH (BANK 2 SENSOR 1), Diagnostic Trouble Code (DTC) Detecting Criteria.>

DTC	Item	Index
P0160	O2 Sensor Circuit No Activity Detected (Bank2 Sensor2)	<Ref. to GD(H6DO)-99, DTC P0160 O2 SENSOR CIRCUIT NO ACTIVITY DETECTED (BANK2 SENSOR2), Diagnostic Trouble Code (DTC) Detecting Criteria.>
P0161	O2 Sensor Heater Circuit (Bank2 Sensor2)	<Ref. to GD(H6DO)-99, DTC P0161 O2 SENSOR HEATER CIRCUIT (BANK2 SENSOR2), Diagnostic Trouble Code (DTC) Detecting Criteria.>
P0171	System Too Lean (Bank 1)	<Ref. to GD(H6DO)-100, DTC P0171 SYSTEM TOO LEAN (BANK 1), Diagnostic Trouble Code (DTC) Detecting Criteria.>
P0172	System Too Rich (Bank 1)	<Ref. to GD(H6DO)-101, DTC P0172 SYSTEM TOO RICH (BANK 1), Diagnostic Trouble Code (DTC) Detecting Criteria.>
P0174	System Too Lean (Bank 2)	<Ref. to GD(H6DO)-103, DTC P0174 SYSTEM TOO LEAN (BANK 2), Diagnostic Trouble Code (DTC) Detecting Criteria.>
P0175	System Too Rich (Bank 2)	<Ref. to GD(H6DO)-103, DTC P0175 SYSTEM TOO RICH (BANK 2), Diagnostic Trouble Code (DTC) Detecting Criteria.>
P0181	Fuel Temperature Sensor “A” Circuit Range/Performance	<Ref. to GD(H6DO)-104, DTC P0181 FUEL TEMPERATURE SENSOR “A” CIRCUIT RANGE/PERFORMANCE, Diagnostic Trouble Code (DTC) Detecting Criteria.>
P0182	Fuel Temperature Sensor “A” Circuit Low Input	<Ref. to GD(H6DO)-107, DTC P0182 FUEL TEMPERATURE SENSOR “A” CIRCUIT LOW INPUT, Diagnostic Trouble Code (DTC) Detecting Criteria.>
P0183	Fuel Temperature Sensor “A” Circuit High Input	<Ref. to GD(H6DO)-109, DTC P0183 FUEL TEMPERATURE SENSOR “A” CIRCUIT HIGH INPUT, Diagnostic Trouble Code (DTC) Detecting Criteria.>
P0196	Engine Oil Temperature Sensor Circuit Range/Performance	<Ref. to GD(H6DO)-111, DTC P0196 ENGINE OIL TEMPERATURE SENSOR CIRCUIT RANGE/PERFORMANCE, Diagnostic Trouble Code (DTC) Detecting Criteria.>
P0197	Engine Oil Temperature Sensor Low	<Ref. to GD(H6DO)-113, DTC P0197 ENGINE OIL TEMPERATURE SENSOR LOW, Diagnostic Trouble Code (DTC) Detecting Criteria.>
P0198	Engine Oil Temperature Sensor High	<Ref. to GD(H6DO)-114, DTC P0198 ENGINE OIL TEMPERATURE SENSOR HIGH, Diagnostic Trouble Code (DTC) Detecting Criteria.>
P0201	Injector #1	<Ref. to GD(H6DO)-115, DTC P0201 INJECTOR #1, Diagnostic Trouble Code (DTC) Detecting Criteria.>
P0202	Injector #2	<Ref. to GD(H6DO)-116, DTC P0202 INJECTOR #2, Diagnostic Trouble Code (DTC) Detecting Criteria.>
P0203	Injector #3	<Ref. to GD(H6DO)-116, DTC P0203 INJECTOR #3, Diagnostic Trouble Code (DTC) Detecting Criteria.>
P0204	Injector #4	<Ref. to GD(H6DO)-116, DTC P0204 INJECTOR #4, Diagnostic Trouble Code (DTC) Detecting Criteria.>
P0205	Injector #5	<Ref. to GD(H6DO)-116, DTC P0205 INJECTOR #5, Diagnostic Trouble Code (DTC) Detecting Criteria.>
P0206	Injector #6	<Ref. to GD(H6DO)-116, DTC P0206 INJECTOR #6, Diagnostic Trouble Code (DTC) Detecting Criteria.>
P0222	Throttle/Pedal Position Sensor/ Switch “B” Circuit Low	<Ref. to GD(H6DO)-117, DTC P0222 THROTTLE/PEDAL POSITION SENSOR/SWITCH “B” CIRCUIT LOW, Diagnostic Trouble Code (DTC) Detecting Criteria.>
P0223	Throttle/Pedal Position Sensor/ Switch “B” Circuit High	<Ref. to GD(H6DO)-119, DTC P0223 THROTTLE/PEDAL POSITION SENSOR/SWITCH “B” CIRCUIT HIGH, Diagnostic Trouble Code (DTC) Detecting Criteria.>
P0230	Fuel Pump Primary Circuit	<Ref. to GD(H6DO)-121, DTC P0230 FUEL PUMP PRIMARY CIRCUIT, Diagnostic Trouble Code (DTC) Detecting Criteria.>
P0301	Cylinder 1 Misfire Detected	<Ref. to GD(H6DO)-123, DTC P0301 CYLINDER 1 MISFIRE DETECTED, Diagnostic Trouble Code (DTC) Detecting Criteria.>
P0302	Cylinder 2 Misfire Detected	<Ref. to GD(H6DO)-129, DTC P0302 CYLINDER 2 MISFIRE DETECTED, Diagnostic Trouble Code (DTC) Detecting Criteria.>
P0303	Cylinder 3 Misfire Detected	<Ref. to GD(H6DO)-129, DTC P0303 CYLINDER 3 MISFIRE DETECTED, Diagnostic Trouble Code (DTC) Detecting Criteria.>
P0304	Cylinder 4 Misfire Detected	<Ref. to GD(H6DO)-129, DTC P0304 CYLINDER 4 MISFIRE DETECTED, Diagnostic Trouble Code (DTC) Detecting Criteria.>

DTC	Item	Index
P0305	Cylinder 5 Misfire Detected	<Ref. to GD(H6DO)-129, DTC P0305 CYLINDER 5 MISFIRE DETECTED, Diagnostic Trouble Code (DTC) Detecting Criteria.>
P0306	Cylinder 6 Misfire Detected	<Ref. to GD(H6DO)-129, DTC P0306 CYLINDER 6 MISFIRE DETECTED, Diagnostic Trouble Code (DTC) Detecting Criteria.>
P0327	Knock Sensor 1 Circuit Low (Bank 1 or Single Sensor)	<Ref. to GD(H6DO)-130, DTC P0327 KNOCK SENSOR 1 CIRCUIT LOW (BANK 1 OR SINGLE SENSOR), Diagnostic Trouble Code (DTC) Detecting Criteria.>
P0328	Knock Sensor 1 Circuit High (Bank 1 or Single Sensor)	<Ref. to GD(H6DO)-132, DTC P0328 KNOCK SENSOR 1 CIRCUIT HIGH (BANK 1 OR SINGLE SENSOR), Diagnostic Trouble Code (DTC) Detecting Criteria.>
P0332	Knock Sensor 2 Circuit Low (Bank 2)	<Ref. to GD(H6DO)-133, DTC P0332 KNOCK SENSOR 2 CIRCUIT LOW (BANK 2), Diagnostic Trouble Code (DTC) Detecting Criteria.>
P0333	Knock Sensor 2 Circuit High (Bank 2)	<Ref. to GD(H6DO)-133, DTC P0333 KNOCK SENSOR 2 CIRCUIT HIGH (BANK 2), Diagnostic Trouble Code (DTC) Detecting Criteria.>
P0335	Crankshaft Position Sensor “A” Circuit	<Ref. to GD(H6DO)-134, DTC P0335 CRANKSHAFT POSITION SENSOR “A” CIRCUIT, Diagnostic Trouble Code (DTC) Detecting Criteria.>
P0336	Crankshaft Position Sensor “A” Circuit Range/Performance	<Ref. to GD(H6DO)-136, DTC P0336 CRANKSHAFT POSITION SENSOR “A” CIRCUIT RANGE/PERFORMANCE, Diagnostic Trouble Code (DTC) Detecting Criteria.>
P0340	Camshaft Position Sensor “A” Circuit (Bank 1 or Single Sensor)	<Ref. to GD(H6DO)-138, DTC P0340 CAMSHAFT POSITION SENSOR “A” CIRCUIT (BANK 1 OR SINGLE SENSOR), Diagnostic Trouble Code (DTC) Detecting Criteria.>
P0345	Camshaft Position Sensor “A” Circuit (Bank 2)	<Ref. to GD(H6DO)-140, DTC P0345 CAMSHAFT POSITION SENSOR “A” CIRCUIT (BANK 2), Diagnostic Trouble Code (DTC) Detecting Criteria.>
P0351	Ignition Coil A Primary/Secondary Circuit	<Ref. to GD(H6DO)-141, DTC P0351 IGNITION COIL A PRIMARY/SECONDARY CIRCUIT, Diagnostic Trouble Code (DTC) Detecting Criteria.>
P0352	Ignition Coil B Primary/Secondary Circuit	<Ref. to GD(H6DO)-142, DTC P0352 IGNITION COIL B PRIMARY/SECONDARY CIRCUIT, Diagnostic Trouble Code (DTC) Detecting Criteria.>
P0353	Ignition Coil C Primary/Secondary Circuit	<Ref. to GD(H6DO)-142, DTC P0353 IGNITION COIL C PRIMARY/SECONDARY CIRCUIT, Diagnostic Trouble Code (DTC) Detecting Criteria.>
P0354	Ignition Coil D Primary/Secondary Circuit	<Ref. to GD(H6DO)-142, DTC P0354 IGNITION COIL D PRIMARY/SECONDARY CIRCUIT, Diagnostic Trouble Code (DTC) Detecting Criteria.>
P0355	Ignition Coil E Primary/Secondary Circuit	<Ref. to GD(H6DO)-142, DTC P0355 IGNITION COIL E PRIMARY/SECONDARY CIRCUIT, Diagnostic Trouble Code (DTC) Detecting Criteria.>
P0356	Ignition Coil F Primary/Secondary Circuit	<Ref. to GD(H6DO)-142, DTC P0356 IGNITION COIL F PRIMARY/SECONDARY CIRCUIT, Diagnostic Trouble Code (DTC) Detecting Criteria.>
P0365	Camshaft Position Sensor “B” Circuit (Bank 1)	<Ref. to GD(H6DO)-143, DTC P0365 CAMSHAFT POSITION SENSOR “B” CIRCUIT (BANK 1), Diagnostic Trouble Code (DTC) Detecting Criteria.>
P0390	Camshaft Position Sensor “B” Circuit (Bank 2)	<Ref. to GD(H6DO)-145, DTC P0390 CAMSHAFT POSITION SENSOR “B” CIRCUIT (BANK 2), Diagnostic Trouble Code (DTC) Detecting Criteria.>
P0400	Exhaust Gas Recirculation Flow	<Ref. to GD(H6DO)-146, DTC P0400 EXHAUST GAS RECIRCULATION FLOW, Diagnostic Trouble Code (DTC) Detecting Criteria.>
P0420	Catalyst System Efficiency Below Threshold (Bank 1)	<Ref. to GD(H6DO)-149, DTC P0420 CATALYST SYSTEM EFFICIENCY BELOW THRESHOLD (BANK 1), Diagnostic Trouble Code (DTC) Detecting Criteria.>
P0442	Evaporative Emission Control System Leak Detected (Small Leak)	<Ref. to GD(H6DO)-151, DTC P0442 EVAPORATIVE EMISSION CONTROL SYSTEM LEAK DETECTED (SMALL LEAK), Diagnostic Trouble Code (DTC) Detecting Criteria.>
P0447	Evaporative Emission Control System Vent Control Circuit Open	<Ref. to GD(H6DO)-165, DTC P0447 EVAPORATIVE EMISSION CONTROL SYSTEM VENT CONTROL CIRCUIT OPEN, Diagnostic Trouble Code (DTC) Detecting Criteria.>
P0448	Evaporative Emission Control System Vent Control Circuit Shorted	<Ref. to GD(H6DO)-167, DTC P0448 EVAPORATIVE EMISSION CONTROL SYSTEM VENT CONTROL CIRCUIT SHORTED, Diagnostic Trouble Code (DTC) Detecting Criteria.>

DTC	Item	Index
P0451	Evaporative Emission Control System Pressure Sensor	<Ref. to GD(H6DO)-169, DTC P0451 EVAPORATIVE EMISSION CONTROL SYSTEM PRESSURE SENSOR, Diagnostic Trouble Code (DTC) Detecting Criteria.>
P0452	Evaporative Emission Control System Pressure Sensor Low Input	<Ref. to GD(H6DO)-173, DTC P0452 EVAPORATIVE EMISSION CONTROL SYSTEM PRESSURE SENSOR LOW INPUT, Diagnostic Trouble Code (DTC) Detecting Criteria.>
P0453	Evaporative Emission Control System Pressure Sensor High Input	<Ref. to GD(H6DO)-175, DTC P0453 EVAPORATIVE EMISSION CONTROL SYSTEM PRESSURE SENSOR HIGH INPUT, Diagnostic Trouble Code (DTC) Detecting Criteria.>
P0456	Evaporative Emission Control System Leak Detected (Very Small Leak)	<Ref. to GD(H6DO)-177, DTC P0456 EVAPORATIVE EMISSION CONTROL SYSTEM LEAK DETECTED (VERY SMALL LEAK), Diagnostic Trouble Code (DTC) Detecting Criteria.>
P0457	Evaporative Emission Control System Leak Detected (Fuel Cap Loose/Off)	<Ref. to GD(H6DO)-177, DTC P0457 EVAPORATIVE EMISSION CONTROL SYSTEM LEAK DETECTED (FUEL CAP LOOSE/OFF), Diagnostic Trouble Code (DTC) Detecting Criteria.>
P0458	Evaporative Emission System Purge Control Valve Circuit Low	<Ref. to GD(H6DO)-178, DTC P0458 EVAPORATIVE EMISSION SYSTEM PURGE CONTROL VALVE CIRCUIT LOW, Diagnostic Trouble Code (DTC) Detecting Criteria.>
P0459	Evaporative Emission System Purge Control Valve Circuit High	<Ref. to GD(H6DO)-180, DTC P0459 EVAPORATIVE EMISSION SYSTEM PURGE CONTROL VALVE CIRCUIT HIGH, Diagnostic Trouble Code (DTC) Detecting Criteria.>
P0461	Fuel Level Sensor “A” Circuit Range/Performance	<Ref. to GD(H6DO)-182, DTC P0461 FUEL LEVEL SENSOR “A” CIRCUIT RANGE/PERFORMANCE, Diagnostic Trouble Code (DTC) Detecting Criteria.>
P0462	Fuel Level Sensor “A” Circuit Low	<Ref. to GD(H6DO)-184, DTC P0462 FUEL LEVEL SENSOR “A” CIRCUIT LOW, Diagnostic Trouble Code (DTC) Detecting Criteria.>
P0463	Fuel Level Sensor “A” Circuit High	<Ref. to GD(H6DO)-186, DTC P0463 FUEL LEVEL SENSOR “A” CIRCUIT HIGH, Diagnostic Trouble Code (DTC) Detecting Criteria.>
P0464	Fuel Level Sensor Circuit Intermittent	<Ref. to GD(H6DO)-188, DTC P0464 FUEL LEVEL SENSOR CIRCUIT INTERMITTENT, Diagnostic Trouble Code (DTC) Detecting Criteria.>
P0500	Vehicle Speed Sensor “A”	<Ref. to GD(H6DO)-191, DTC P0500 VEHICLE SPEED SENSOR “A”, Diagnostic Trouble Code (DTC) Detecting Criteria.>
P0506	Idle Air Control System RPM Lower Than Expected	<Ref. to GD(H6DO)-192, DTC P0506 IDLE AIR CONTROL SYSTEM RPM LOWER THAN EXPECTED, Diagnostic Trouble Code (DTC) Detecting Criteria.>
P0507	Idle Air Control System RPM Higher Than Expected	<Ref. to GD(H6DO)-193, DTC P0507 IDLE AIR CONTROL SYSTEM RPM HIGHER THAN EXPECTED, Diagnostic Trouble Code (DTC) Detecting Criteria.>
P050A	Cold Start Idle Air Control System Performance	<Ref. to GD(H6DO)-194, DTC P050A COLD START IDLE AIR CONTROL SYSTEM PERFORMANCE, Diagnostic Trouble Code (DTC) Detecting Criteria.>
P050B	Cold Start Ignition Timing Performance	<Ref. to GD(H6DO)-198, DTC P050B COLD START IGNITION TIMING PERFORMANCE, Diagnostic Trouble Code (DTC) Detecting Criteria.>
P0512	Starter Request Circuit	<Ref. to GD(H6DO)-199, DTC P0512 STARTER REQUEST CIRCUIT, Diagnostic Trouble Code (DTC) Detecting Criteria.>
P0513	Incorrect Immobilizer Key	<Ref. to GD(H6DO)-200, DTC P0513 INCORRECT IMMOBILIZER KEY, Diagnostic Trouble Code (DTC) Detecting Criteria.>
P0604	Internal Control Module Random Access Memory (RAM) Error	<Ref. to GD(H6DO)-201, DTC P0604 INTERNAL CONTROL MODULE RANDOM ACCESS MEMORY (RAM) ERROR, Diagnostic Trouble Code (DTC) Detecting Criteria.>
P0605	Internal Control Module Read Only Memory (ROM) Error	<Ref. to GD(H6DO)-202, DTC P0605 INTERNAL CONTROL MODULE READ ONLY MEMORY (ROM) ERROR, Diagnostic Trouble Code (DTC) Detecting Criteria.>
P0607	Throttle Control System Circuit Range/Performance	<Ref. to GD(H6DO)-203, DTC P0607 THROTTLE CONTROL SYSTEM CIRCUIT RANGE/PERFORMANCE, Diagnostic Trouble Code (DTC) Detecting Criteria.>

DTC	Item	Index
P0638	Throttle Actuator Control Range/Performance (Bank 1)	<Ref. to GD(H6DO)-205, DTC P0638 THROTTLE ACTUATOR CONTROL RANGE/PERFORMANCE (BANK 1), Diagnostic Trouble Code (DTC) Detecting Criteria.>
P0700	Transmission Control System (MIL Request)	<Ref. to GD(H6DO)-207, DTC P0700 TRANSMISSION CONTROL SYSTEM (MIL REQUEST), Diagnostic Trouble Code (DTC) Detecting Criteria.>
P1152	O2 Sensor Circuit Range/Performance (Low) (Bank1 Sensor1)	<Ref. to GD(H6DO)-208, DTC P1152 O2 SENSOR CIRCUIT RANGE/PERFORMANCE (LOW) (BANK1 SENSOR1), Diagnostic Trouble Code (DTC) Detecting Criteria.>
P1153	O2 Sensor Circuit Range/Performance (High) (Bank1 Sensor1)	<Ref. to GD(H6DO)-210, DTC P1153 O2 SENSOR CIRCUIT RANGE/PERFORMANCE (HIGH) (BANK1 SENSOR1), Diagnostic Trouble Code (DTC) Detecting Criteria.>
P1154	O2 Sensor Circuit Range/Performance (Low) (Bank 2 Sensor 1)	<Ref. to GD(H6DO)-212, DTC P1154 O2 SENSOR CIRCUIT RANGE/PERFORMANCE (LOW) (BANK 2 SENSOR 1), Diagnostic Trouble Code (DTC) Detecting Criteria.>
P1155	O2 Sensor Circuit Range/Performance (High) (Bank 2 Sensor 1)	<Ref. to GD(H6DO)-212, DTC P1155 O2 SENSOR CIRCUIT RANGE/PERFORMANCE (HIGH) (BANK 2 SENSOR 1), Diagnostic Trouble Code (DTC) Detecting Criteria.>
P1160	Return Spring Failure	<Ref. to GD(H6DO)-213, DTC P1160 RETURN SPRING FAILURE, Diagnostic Trouble Code (DTC) Detecting Criteria.>
P1443	Vent Control Solenoid Valve Function Problem	<Ref. to GD(H6DO)-215, DTC P1443 VENT CONTROL SOLENOID VALVE FUNCTION PROBLEM, Diagnostic Trouble Code (DTC) Detecting Criteria.>
P1492	EGR Solenoid Valve Signal #1 Circuit Malfunction (Low Input)	<Ref. to GD(H6DO)-217, DTC P1492 EGR SOLENOID VALVE SIGNAL #1 CIRCUIT MALFUNCTION (LOW INPUT), Diagnostic Trouble Code (DTC) Detecting Criteria.>
P1493	EGR Solenoid Valve Signal #1 Circuit Malfunction (High Input)	<Ref. to GD(H6DO)-219, DTC P1493 EGR SOLENOID VALVE SIGNAL #1 CIRCUIT MALFUNCTION (HIGH INPUT), Diagnostic Trouble Code (DTC) Detecting Criteria.>
P1494	EGR Solenoid Valve Signal #2 Circuit Malfunction (Low Input)	<Ref. to GD(H6DO)-221, DTC P1494 EGR SOLENOID VALVE SIGNAL #2 CIRCUIT MALFUNCTION (LOW INPUT), Diagnostic Trouble Code (DTC) Detecting Criteria.>
P1495	EGR Solenoid Valve Signal #2 Circuit Malfunction (High Input)	<Ref. to GD(H6DO)-221, DTC P1495 EGR SOLENOID VALVE SIGNAL #2 CIRCUIT MALFUNCTION (HIGH INPUT), Diagnostic Trouble Code (DTC) Detecting Criteria.>
P1496	EGR Solenoid Valve Signal #3 Circuit Malfunction (Low Input)	<Ref. to GD(H6DO)-221, DTC P1496 EGR SOLENOID VALVE SIGNAL #3 CIRCUIT MALFUNCTION (LOW INPUT), Diagnostic Trouble Code (DTC) Detecting Criteria.>
P1497	EGR Solenoid Valve Signal #3 Circuit Malfunction (High Input)	<Ref. to GD(H6DO)-221, DTC P1497 EGR SOLENOID VALVE SIGNAL #3 CIRCUIT MALFUNCTION (HIGH INPUT), Diagnostic Trouble Code (DTC) Detecting Criteria.>
P1498	EGR Solenoid Valve Signal #4 Circuit Malfunction (Low Input)	<Ref. to GD(H6DO)-221, DTC P1498 EGR SOLENOID VALVE SIGNAL #4 CIRCUIT MALFUNCTION (LOW INPUT), Diagnostic Trouble Code (DTC) Detecting Criteria.>
P1499	EGR Solenoid Valve Signal #4 Circuit Malfunction (High Input)	<Ref. to GD(H6DO)-221, DTC P1499 EGR SOLENOID VALVE SIGNAL #4 CIRCUIT MALFUNCTION (HIGH INPUT), Diagnostic Trouble Code (DTC) Detecting Criteria.>
P1518	Starter Switch Circuit Low Input	<Ref. to GD(H6DO)-222, DTC P1518 STARTER SWITCH CIRCUIT LOW INPUT, Diagnostic Trouble Code (DTC) Detecting Criteria.>
P1560	Back-Up Voltage Circuit Malfunction	<Ref. to GD(H6DO)-223, DTC P1560 BACK-UP VOLTAGE CIRCUIT MALFUNCTION, Diagnostic Trouble Code (DTC) Detecting Criteria.>
P1570	Antenna	<Ref. to GD(H6DO)-224, DTC P1570 ANTENNA, Diagnostic Trouble Code (DTC) Detecting Criteria.>
P1571	Reference Code Incompatibility	<Ref. to GD(H6DO)-224, DTC P1571 REFERENCE CODE INCOMPATIBILITY, Diagnostic Trouble Code (DTC) Detecting Criteria.>
P1572	IMM Circuit Failure (Except Antenna Circuit)	<Ref. to GD(H6DO)-224, DTC P1572 IMM CIRCUIT FAILURE (EXCEPT ANTENNA CIRCUIT), Diagnostic Trouble Code (DTC) Detecting Criteria.>

DTC	Item	Index
P1574	Key Communication Failure	<Ref. to GD(H6DO)-224, DTC P1574 KEY COMMUNICATION FAILURE, Diagnostic Trouble Code (DTC) Detecting Criteria.>
P1576	EGI Control Module EEPROM	<Ref. to GD(H6DO)-224, DTC P1576 EGI CONTROL MODULE EEPROM, Diagnostic Trouble Code (DTC) Detecting Criteria.>
P1577	IMM Control Module EEPROM	<Ref. to GD(H6DO)-224, DTC P1577 IMM CONTROL MODULE EEPROM, Diagnostic Trouble Code (DTC) Detecting Criteria.>
P1578	Meter Failure	<Ref. to GD(H6DO)-224, DTC P1578 METER FAILURE, Diagnostic Trouble Code (DTC) Detecting Criteria.>
P2088	Intake Camshaft Position Actuator Control Circuit Low (Bank 1)	<Ref. to GD(H6DO)-225, DTC P2088 INTAKE CAMSHAFT POSITION ACTUATOR CONTROL CIRCUIT LOW (BANK 1), Diagnostic Trouble Code (DTC) Detecting Criteria.>
P2089	Intake Camshaft Position Actuator Control Circuit High (Bank 1)	<Ref. to GD(H6DO)-226, DTC P2089 INTAKE CAMSHAFT POSITION ACTUATOR CONTROL CIRCUIT HIGH (BANK 1), Diagnostic Trouble Code (DTC) Detecting Criteria.>
P2090	Exhaust Camshaft Position Actuator Control Circuit Low (Bank 1)	<Ref. to GD(H6DO)-227, DTC P2090 EXHAUST CAMSHAFT POSITION ACTUATOR CONTROL CIRCUIT LOW (BANK 1), Diagnostic Trouble Code (DTC) Detecting Criteria.>
P2091	Exhaust Camshaft Position Actuator Control Circuit High (Bank 1)	<Ref. to GD(H6DO)-228, DTC P2091 EXHAUST CAMSHAFT POSITION ACTUATOR CONTROL CIRCUIT HIGH (BANK 1), Diagnostic Trouble Code (DTC) Detecting Criteria.>
P2092	Intake Camshaft Position Actuator Control Circuit Low (Bank 2)	<Ref. to GD(H6DO)-229, DTC P2092 INTAKE CAMSHAFT POSITION ACTUATOR CONTROL CIRCUIT LOW (BANK 2), Diagnostic Trouble Code (DTC) Detecting Criteria.>
P2093	Intake Camshaft Position Actuator Control Circuit High (Bank 2)	<Ref. to GD(H6DO)-229, DTC P2093 INTAKE CAMSHAFT POSITION ACTUATOR CONTROL CIRCUIT HIGH (BANK 2), Diagnostic Trouble Code (DTC) Detecting Criteria.>
P2094	Exhaust Camshaft Position Actuator Control Circuit Low (Bank 2)	<Ref. to GD(H6DO)-229, DTC P2094 EXHAUST CAMSHAFT POSITION ACTUATOR CONTROL CIRCUIT LOW (BANK 2), Diagnostic Trouble Code (DTC) Detecting Criteria.>
P2095	Exhaust Camshaft Position Actuator Control Circuit High (Bank 2)	<Ref. to GD(H6DO)-229, DTC P2095 EXHAUST CAMSHAFT POSITION ACTUATOR CONTROL CIRCUIT HIGH (BANK 2), Diagnostic Trouble Code (DTC) Detecting Criteria.>
P2096	Post Catalyst Fuel Trim System Too Lean (Bank 1)	<Ref. to GD(H6DO)-230, DTC P2096 POST CATALYST FUEL TRIM SYSTEM TOO LEAN (BANK 1), Diagnostic Trouble Code (DTC) Detecting Criteria.>
P2097	Post Catalyst Fuel Trim System Too Rich (Bank 1)	<Ref. to GD(H6DO)-232, DTC P2097 POST CATALYST FUEL TRIM SYSTEM TOO RICH (BANK 1), Diagnostic Trouble Code (DTC) Detecting Criteria.>
P2098	Post Catalyst Fuel Trim System Too Lean Bank 2	<Ref. to GD(H6DO)-233, DTC P2098 POST CATALYST FUEL TRIM SYSTEM TOO LEAN BANK 2, Diagnostic Trouble Code (DTC) Detecting Criteria.>
P2099	Post Catalyst Fuel Trim System Too Rich Bank 2	<Ref. to GD(H6DO)-233, DTC P2099 POST CATALYST FUEL TRIM SYSTEM TOO RICH BANK 2, Diagnostic Trouble Code (DTC) Detecting Criteria.>
P2101	Throttle Actuator Control Motor Circuit Range/Performance	<Ref. to GD(H6DO)-234, DTC P2101 THROTTLE ACTUATOR CONTROL MOTOR CIRCUIT RANGE/PERFORMANCE, Diagnostic Trouble Code (DTC) Detecting Criteria.>
P2102	Throttle Actuator Control Motor Circuit Low	<Ref. to GD(H6DO)-236, DTC P2102 THROTTLE ACTUATOR CONTROL MOTOR CIRCUIT LOW, Diagnostic Trouble Code (DTC) Detecting Criteria.>
P2103	Throttle Actuator Control Motor Circuit High	<Ref. to GD(H6DO)-238, DTC P2103 THROTTLE ACTUATOR CONTROL MOTOR CIRCUIT HIGH, Diagnostic Trouble Code (DTC) Detecting Criteria.>
P2109	Throttle/Pedal Position Sensor “A” Minimum Stop Performance	<Ref. to GD(H6DO)-240, DTC P2109 THROTTLE/PEDAL POSITION SENSOR “A” MINIMUM STOP PERFORMANCE, Diagnostic Trouble Code (DTC) Detecting Criteria.>

DTC	Item	Index
P2122	Throttle/Pedal Position Sensor/ Switch “D” Circuit Low Input	<Ref. to GD(H6DO)-242, DTC P2122 THROTTLE/PEDAL POSITION SENSOR/SWITCH “D” CIRCUIT LOW INPUT, Diagnostic Trouble Code (DTC) Detecting Criteria.>
P2123	Throttle/Pedal Position Sensor/ Switch “D” Circuit High Input	<Ref. to GD(H6DO)-244, DTC P2123 THROTTLE/PEDAL POSITION SENSOR/SWITCH “D” CIRCUIT HIGH INPUT, Diagnostic Trouble Code (DTC) Detecting Criteria.>
P2127	Throttle/Pedal Position Sensor/ Switch “E” Circuit Low Input	<Ref. to GD(H6DO)-246, DTC P2127 THROTTLE/PEDAL POSITION SENSOR/SWITCH “E” CIRCUIT LOW INPUT, Diagnostic Trouble Code (DTC) Detecting Criteria.>
P2128	Throttle/Pedal Position Sensor/ Switch “E” Circuit High Input	<Ref. to GD(H6DO)-248, DTC P2128 THROTTLE/PEDAL POSITION SENSOR/SWITCH “E” CIRCUIT HIGH INPUT, Diagnostic Trouble Code (DTC) Detecting Criteria.>
P2135	Throttle/Pedal Position Sensor/ Switch “A”/“B” Voltage Correlation	<Ref. to GD(H6DO)-250, DTC P2135 THROTTLE/PEDAL POSITION SENSOR/SWITCH “A”/“B” VOLTAGE CORRELATION, Diagnostic Trouble Code (DTC) Detecting Criteria.>
P2138	Throttle/Pedal Position Sensor/ Switch “D”/“E” Voltage Correlation	<Ref. to GD(H6DO)-252, DTC P2138 THROTTLE/PEDAL POSITION SENSOR/SWITCH “D”/“E” VOLTAGE CORRELATION, Diagnostic Trouble Code (DTC) Detecting Criteria.>
P219A	Bank 1 Air-Fuel Ratio Imbalance	<Ref. to GD(H6DO)-254, DTC P219A BANK 1 AIR-FUEL RATIO IMBALANCE, Diagnostic Trouble Code (DTC) Detecting Criteria.>
P219B	Bank 2 Air-Fuel Ratio Imbalance	<Ref. to GD(H6DO)-257, DTC P219B BANK 2 AIR-FUEL RATIO IMBALANCE, Diagnostic Trouble Code (DTC) Detecting Criteria.>
P2227	Barometric Pressure Circuit Range/ Performance	<Ref. to GD(H6DO)-258, DTC P2227 BAROMETRIC PRESSURE CIRCUIT RANGE/PERFORMANCE, Diagnostic Trouble Code (DTC) Detecting Criteria.>
P2228	Barometric Pressure Circuit Low	<Ref. to GD(H6DO)-259, DTC P2228 BAROMETRIC PRESSURE CIRCUIT LOW, Diagnostic Trouble Code (DTC) Detecting Criteria.>
P2229	Barometric Pressure Circuit High	<Ref. to GD(H6DO)-260, DTC P2229 BAROMETRIC PRESSURE CIRCUIT HIGH, Diagnostic Trouble Code (DTC) Detecting Criteria.>
P2610	ECM/PCM Internal Engine Off Timer Performance	<Ref. to GD(H6DO)-261, DTC P2610 ECM/PCM INTERNAL ENGINE OFF TIMER PERFORMANCE, Diagnostic Trouble Code (DTC) Detecting Criteria.>
U0073	CAN Failure, Bus ‘Off’ Detection	<Ref. to GD(H6DO)-269, DTC U0073 CAN FAILURE, BUS ‘OFF’ DETECTION, Diagnostic Trouble Code (DTC) Detecting Criteria.>
U0101	CAN (TCU) Data Not Loaded	<Ref. to GD(H6DO)-270, DTC U0101 CAN (TCU) DATA NOT LOADED, Diagnostic Trouble Code (DTC) Detecting Criteria.>
U0122	CAN (VDC) Data Not Loaded	<Ref. to GD(H6DO)-271, DTC U0122 CAN (VDC) DATA NOT LOADED, Diagnostic Trouble Code (DTC) Detecting Criteria.>
U0140	CAN (BCU) Data Not Loaded	<Ref. to GD(H6DO)-271, DTC U0140 CAN (BCU) DATA NOT LOADED, Diagnostic Trouble Code (DTC) Detecting Criteria.>
U0402	CAN (TCU) Data Abnormal	<Ref. to GD(H6DO)-272, DTC U0402 CAN (TCU) DATA ABNORMAL, Diagnostic Trouble Code (DTC) Detecting Criteria.>
U0416	CAN (VDC) Data Abnormal	<Ref. to GD(H6DO)-273, DTC U0416 CAN (VDC) DATA ABNORMAL, Diagnostic Trouble Code (DTC) Detecting Criteria.>
U0422	CAN (BCU) Data Abnormal	<Ref. to GD(H6DO)-273, DTC U0422 CAN (BCU) DATA ABNORMAL, Diagnostic Trouble Code (DTC) Detecting Criteria.>

2. Diagnostic Trouble Code (DTC) Detecting Criteria

A: DTC P0011 INTAKE CAMSHAFT POSITION - TIMING OVER-ADVANCED OR SYSTEM PERFORMANCE (BANK 1)

1. OUTLINE OF DIAGNOSIS

Detect the AVCS system malfunction.
Judge NG when the amount of AVCS actual timing advance does not approach to the amount of AVCS target timing advance.

2. COMPONENT DESCRIPTION

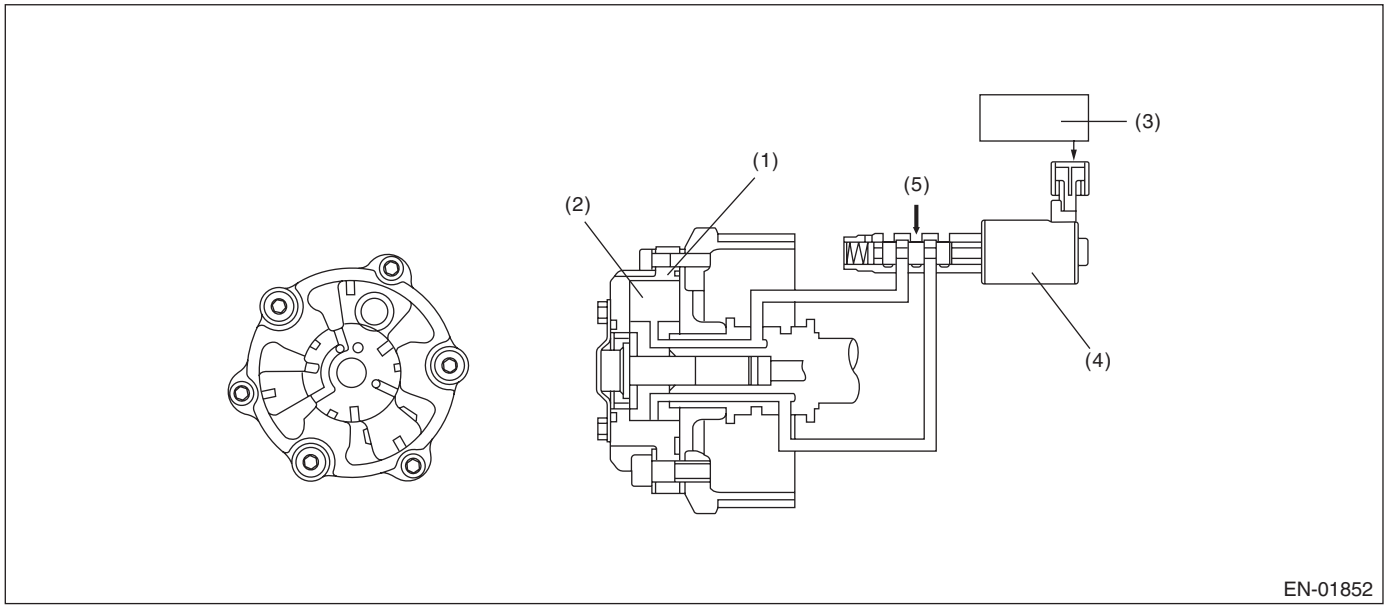

(1) AVCS timing controller
(2) Vane
(3) Engine control module (ECM)
(4) Oil flow control solenoid valve
(5) Oil pressure

3. ENABLE CONDITION

Secondary Parameters	Enable Conditions
Time of establishing all secondary parameter conditions	≥ 2000 ms
Battery voltage	≥ 10.9 V
Engine speed	≥ 1500 rpm
Engine coolant temperature	≥ 50 °C (122 °F)
AVCS control	Operation
Target timing advance change amount (per 64 ms)	< 1.07 °CA

4. GENERAL DRIVING CYCLE

Perform the diagnosis continuously after warming up when the engine speed increases and AVCS operates.

5. DIAGNOSTIC METHOD

1) When the conditions during which the differences of AVCS target timing advance amount and AVCS actual timing advance amount is large continues for certain amount of time.
2) When the differences of target timing advance amount and actual timing advance amount is calculated during AVCS control, and the difference per predetermined time is the specified value or larger.

- **Abnormality Judgment**

Judge as NG when the following conditions are established within the predetermined time.

Judgment Value

Malfunction Criteria	Threshold Value
Σ(Target position – Actual position)	> 15000 °CA (Bank 1) > 15000 °CA (Bank 2)
or	
Σ(Target position – Actual position)	< –4800 °CA (Bank 1) < –4800 °CA (Bank 2)

Time Needed for Diagnosis: 60000 ms
Malfunction Indicator Light Illumination: Illuminates when malfunction occurs in 2 continuous driving cycles.

- **Normality Judgment**

Judge as OK and clear the NG if the following conditions are established within the predetermined time.

Judgment Value

Malfunction Criteria	Threshold Value
Σ(Target position – Actual position)	≤ 15000 °CA (Bank 1) ≤ 15000 °CA (Bank 2) and ≥ –4800 °CA (Bank 1) ≥ –4800 °CA (Bank 2)

Time Needed for Diagnosis: 60000 ms

B: DTC P0014 EXHAUST AVCS SYSTEM 1 (RANGE/PERFORMANCE)

1. OUTLINE OF DIAGNOSIS

Detect the exhaust AVCS system malfunction.
Judge as NG when actual exhaust AVCS advance angle amount does not approach the target exhaust AVCS advance angle amount.

2. COMPONENT DESCRIPTION

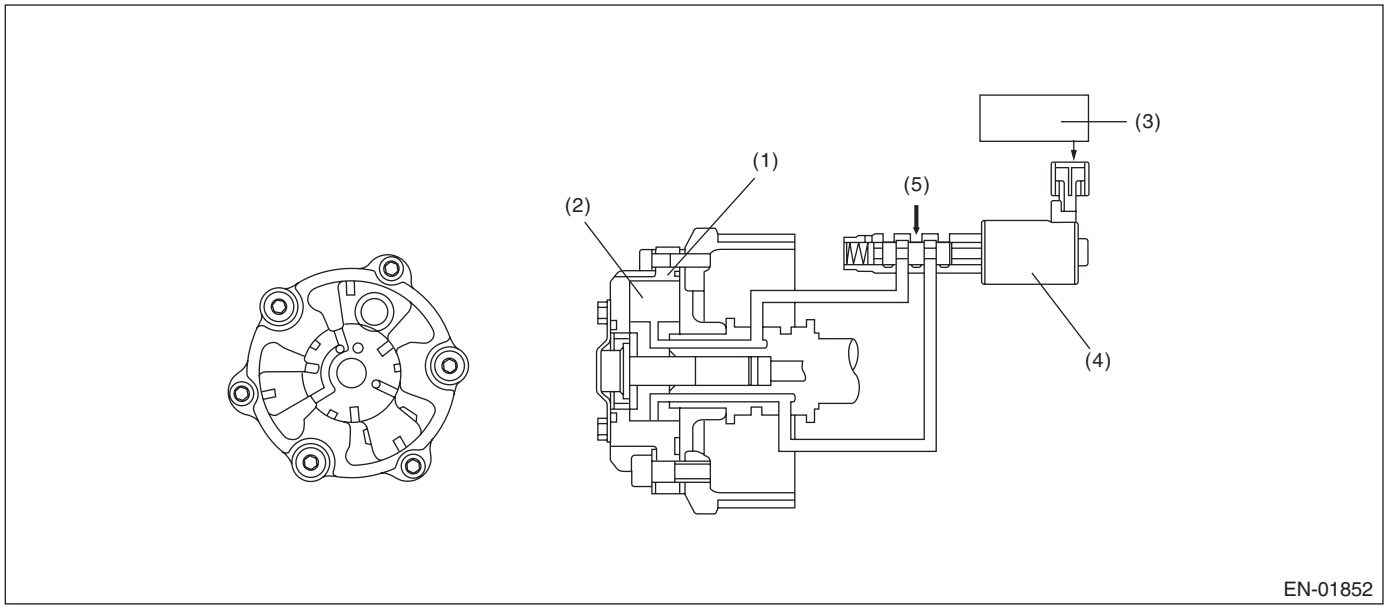

(1) Exhaust AVCS timing controller
(2) Vane
(3) Engine control module (ECM)
(4) Oil flow control solenoid valve
(5) Oil pressure

3. ENABLE CONDITIONS

Secondary Parameters	Enable Conditions
Time of establishing all secondary parameter conditions	≥ 2000 ms
Battery voltage	≥ 10.9 V
Engine speed	≥ 1500 rpm
Engine coolant temperature	≥ 50 °C (122 °F)
Exhaust AVCS control	Operation
Target timing advance change amount (per 64 ms)	< 1.07 °CA

4. GENERAL DRIVING CYCLE

Perform the diagnosis continuously when the exhaust AVCS is operating with high engine speed after warming up.

5. DIAGNOSTIC METHOD

1) When the conditions during which the differences of exhaust AVCS target timing advance amount and exhaust AVCS actual timing advance amount is large continues for certain amount of time.
2) When the differences of target timing advance amount and actual timing advance amount is calculated during exhaust AVCS control, and the difference per predetermined time is the specified value or larger.

- **Abnormality Judgment**

Judge as NG when the following conditions are established within the predetermined time.

Judgment Value

Malfunction Criteria	Threshold Value
Σ(Target position – Actual position)	> 8000 °CA (bank 1) > 8000 °CA (bank 2)
or	
Σ(Target position – Actual position)	< –4800 °CA (Bank 1) < –4800 °CA (Bank 2)

Time Needed for Diagnosis:
60000 ms
Malfunction Indicator Light Illumination: Illuminates when malfunction occurs in 2 continuous driving cycles.

- **Normality Judgment**

Judge as OK and clear the NG if the following conditions are established within the predetermined time.

Judgment Value

Malfunction Criteria	Threshold Value
Σ(Target position – Actual position)	≤ 8000 °CA (bank 1) ≤ 8000 °CA (bank 2) and ≥ –4800 °CA (Bank 1) ≥ –4800 °CA (Bank 2)

Time Needed for Diagnosis: 60000 ms

C: DTC P0016 CRANKSHAFT POSITION - CAMSHAFT POSITION CORRELATION (BANK1)

1. OUTLINE OF DIAGNOSIS

Detect the AVCS system malfunction.
Judge as NG when standard timing advance amount is far from learning angle.

2. COMPONENT DESCRIPTION

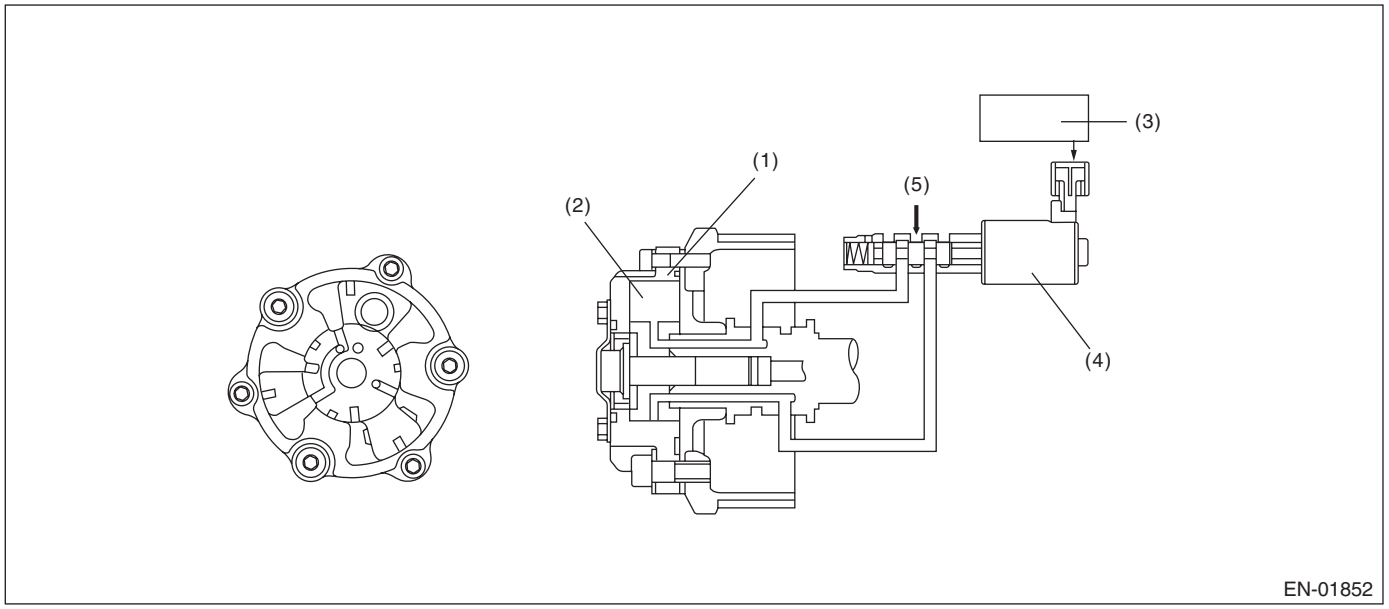

(1) AVCS timing controller
(2) Vane
(3) Engine control module (ECM)
(4) Oil flow control solenoid valve
(5) Oil pressure

3. ENABLE CONDITION

Secondary Parameters	Enable Conditions
Battery voltage	≥ 10.9 V
Engine speed	≥ 525 rpm and < 800 rpm
Engine coolant temperature	≥ 75 °C (167 °F)
AVCS control	Not in operation
Target timing advance	0°CA

4. GENERAL DRIVING CYCLE

Perform the diagnosis continuously after starting engine and while AVCS is not operating.

5. DIAGNOSTIC METHOD

Judge as NG when the absolute value of the difference between cam signal input position and learning value is out of specification.

- **Abnormality Judgment**

If the duration of time while the following conditions are met is longer than the time indicated, judge as NG.

Judgment Value

Malfunction Criteria	Threshold Value
|Crankshaft position when camshaft position sensor signal is input – Learning value|	> 12 °CA

Time Needed for Diagnosis: 20000 ms
Malfunction Indicator Light Illumination: Illuminates when malfunction occurs in 2 continuous driving cycles.

NOTE:
Initial standard learning value is the value of crank angle initially input at the production plant. And then it will be updated every time normal judgment has been completed. Learning value will not be updated if NG judgment occurs because timing belt or chain derails suddenly in process or because wrong assembly occurs during servicing.

- **Normality Judgment**

Judge as OK and clear the NG if the continuous time while the following conditions are established is more than the predetermined time.

Judgment Value

Malfunction Criteria	Threshold Value
|Crankshaft position when camshaft position sensor signal is input – Learning value|	≤ 12 °CA

Time Needed for Diagnosis: Less than 1 second

D: DTC P0017 CRANK AND CAM TIMING B SYSTEM FAILURE (BANK 1)

1. OUTLINE OF DIAGNOSIS

Detect the exhaust AVCS system malfunction.
Judge as NG when standard timing advance amount is far from learning angle.

2. COMPONENT DESCRIPTION

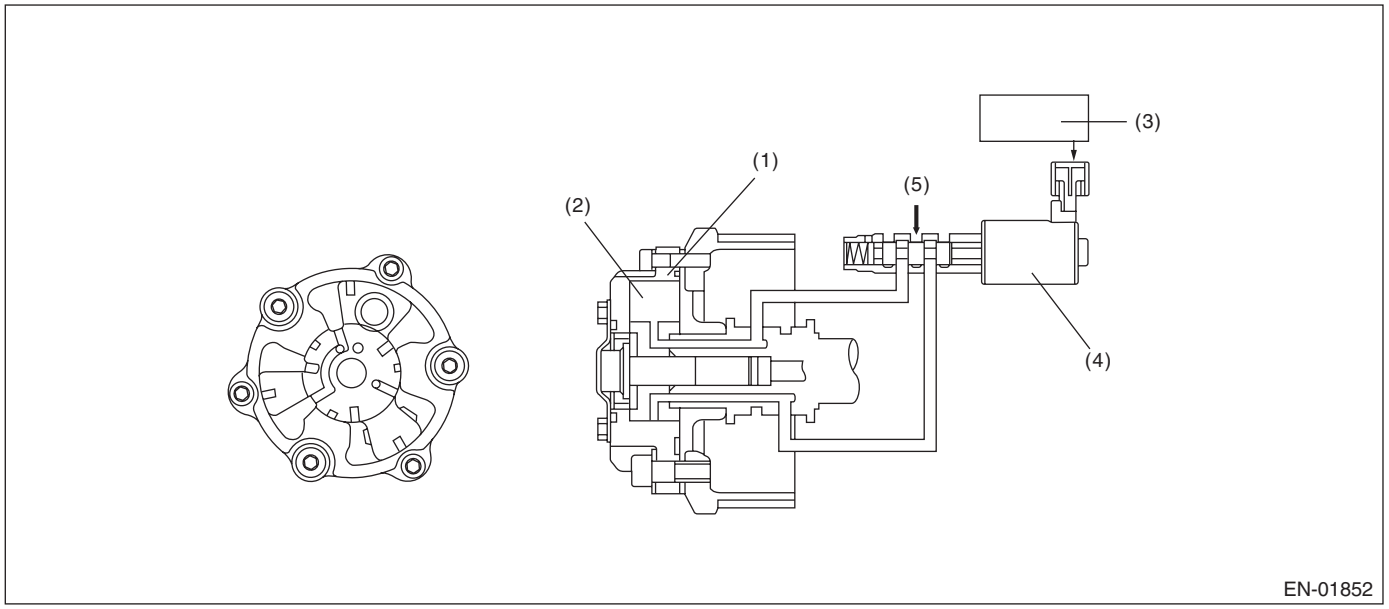

(1) Exhaust AVCS timing controller
(2) Vane
(3) Engine control module (ECM)
(4) Oil flow control solenoid valve
(5) Oil pressure

3. ENABLE CONDITIONS

Secondary Parameters	Enable Conditions
Battery voltage	≥ 10.9 V
Engine speed	≥ 525 rpm and < 800 rpm
Engine coolant temperature	≥ 75 °C (167 °F)
Exhaust AVCS control	Not in operation
Target timing advance	0°CA

4. GENERAL DRIVING CYCLE

Perform the diagnosis continuously while the exhaust AVCS is not operating after warming up.

5. DIAGNOSTIC METHOD

Judge as NG when the absolute value of the difference between cam signal input position and learning value is out of specification.

- **Abnormality Judgment**

If the duration of time while the following conditions are met is longer than the time indicated, judge as NG.

Judgment Value

Malfunction Criteria	Threshold Value
|Crankshaft position when camshaft position sensor signal is input – Learning value|	> 12 °CA

Time Needed for Diagnosis: 20000 ms
Malfunction Indicator Light Illumination: Illuminates when malfunction occurs in 2 continuous driving cycles.

NOTE:
Initial standard learning value is the value of crank angle initially input at the production plant. And then it will be updated every time normal judgment has been completed. Learning value will not be updated if NG judgment occurs because timing belt or chain derails suddenly in process or because wrong assembly occurs during servicing.

- **Normality Judgment**

Judge as OK and clear the NG if the continuous time while the following conditions are established is more than the predetermined time.

Judgment Value

Malfunction Criteria	Threshold Value
|Crankshaft position when camshaft position sensor signal is input – Learning value|	≤ 12 °CA

Time Needed for Diagnosis: Less than 1 second

E: DTC P0018 CRANKSHAFT POSITION - CAMSHAFT POSITION CORRELATION (BANK2)

1. OUTLINE OF DIAGNOSIS

NOTE:
For the detection standard, refer to DTC P0016. <Ref. to GD(H6DO)-15, DTC P0016 CRANKSHAFT POSITION - CAMSHAFT POSITION CORRELATION (BANK1), Diagnostic Trouble Code (DTC) Detecting Criteria.>

F: DTC P0019 CRANK AND CAM TIMING B SYSTEM FAILURE (BANK 2)

1. OUTLINE OF DIAGNOSIS

NOTE:
For the detection standard, refer to DTC P0017. <Ref. to GD(H6DO)-17, DTC P0017 CRANK AND CAM TIMING B SYSTEM FAILURE (BANK 1), Diagnostic Trouble Code (DTC) Detecting Criteria.>

G: DTC P0021 INTAKE CAMSHAFT POSITION - TIMING OVER-ADVANCED OR SYSTEM PERFORMANCE (BANK 2)

1. OUTLINE OF DIAGNOSIS

NOTE:
For the detection standard, refer to DTC P0011. <Ref. to GD(H6DO)-11, DTC P0011 INTAKE CAMSHAFT POSITION - TIMING OVER-ADVANCED OR SYSTEM PERFORMANCE (BANK 1), Diagnostic Trouble Code (DTC) Detecting Criteria.>

H: DTC P0024 EXHAUST AVCS SYSTEM 2 (RANGE/PERFORMANCE)

1. OUTLINE OF DIAGNOSIS

NOTE:
For the detection standard, refer to DTC P0014. <Ref. to GD(H6DO)-13, DTC P0014 EXHAUST AVCS SYSTEM 1 (RANGE/PERFORMANCE), Diagnostic Trouble Code (DTC) Detecting Criteria.>

I: DTC P0030 HO2S HEATER CONTROL CIRCUIT (BANK 1 SENSOR 1)

1. OUTLINE OF DIAGNOSIS

Detect functional errors of the front oxygen (A/F) sensor heater.
Judge as NG when it is determined that the front oxygen (A/F) sensor impedance is large when looking at engine status such as deceleration fuel cut.

2. COMPONENT DESCRIPTION

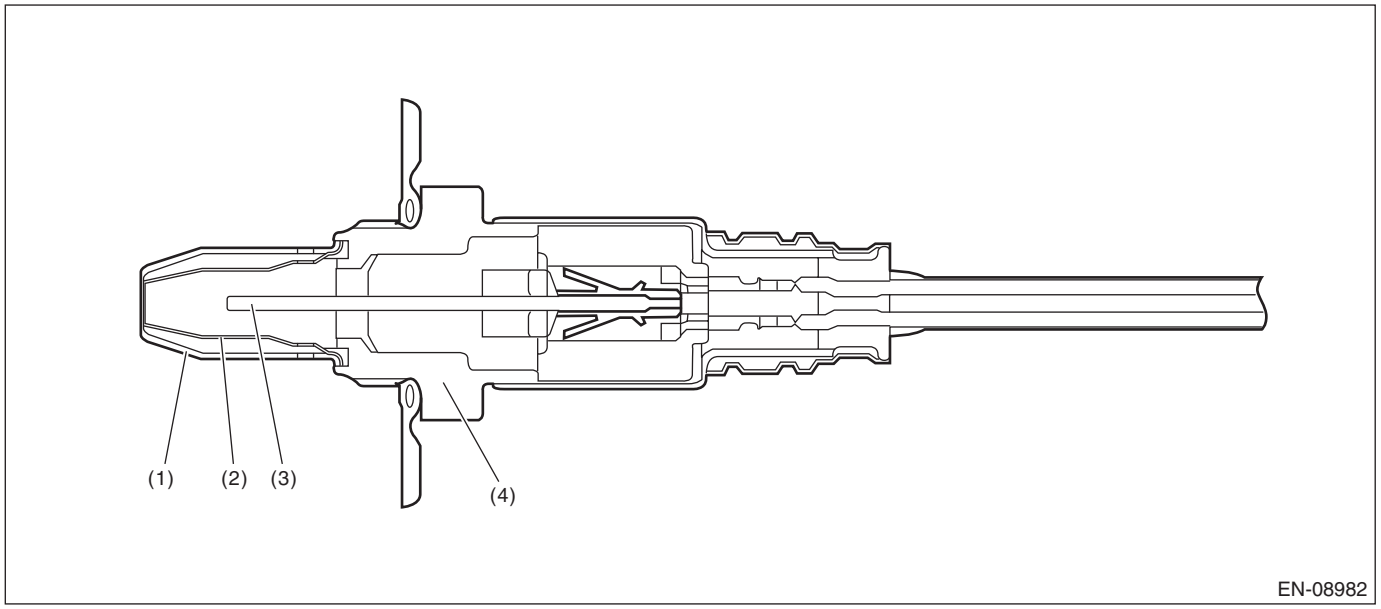

(1) Element cover (outer)
(2) Element cover (inner)
(3) Sensor element
(4) Sensor housing

3. ENABLE CONDITION

Secondary Parameters	Enable Conditions
Condition established time	≥ 30000 ms
Battery voltage	≥ 10.9 V
Heater current	Permitted
A/F sensor heater final control	Main energization status
After fuel cut	≥ 20000 ms

4. GENERAL DRIVING CYCLE

Perform the diagnosis continuously after 30000 ms or more have passed since the engine started.

5. DIAGNOSTIC METHOD

• Abnormality Judgment

If the duration of time while the following conditions are met is longer than the time indicated, judge as NG.

Judgment Value

Malfunction Criteria	Threshold Value
Front oxygen (A/F) sensor impedance	> 50 Ω

Time Needed for Diagnosis: 10000 ms
Malfunction Indicator Light Illumination: Illuminates when malfunction occurs in 2 continuous driving cycles.

• Normality Judgment

Judge as OK and clear the NG if the continuous time while the following conditions are established is more than the predetermined time.

Judgment Value

Malfunction Criteria	Threshold Value
Front oxygen (A/F) sensor impedance	≤ 50 Ω

Time Needed for Diagnosis: 10000 ms

J: DTC P0031 HO2S HEATER CONTROL CIRCUIT LOW (BANK 1 SENSOR 1)

1. OUTLINE OF DIAGNOSIS

Detect front oxygen (A/F) sensor heater open or short circuit.
The front oxygen (A/F) sensor heater performs duty control, and the output terminal voltage at ON is 0 V, and the output terminal voltage at OFF is the battery voltage.
Judge as NG when the terminal voltage remains Low.

2. COMPONENT DESCRIPTION

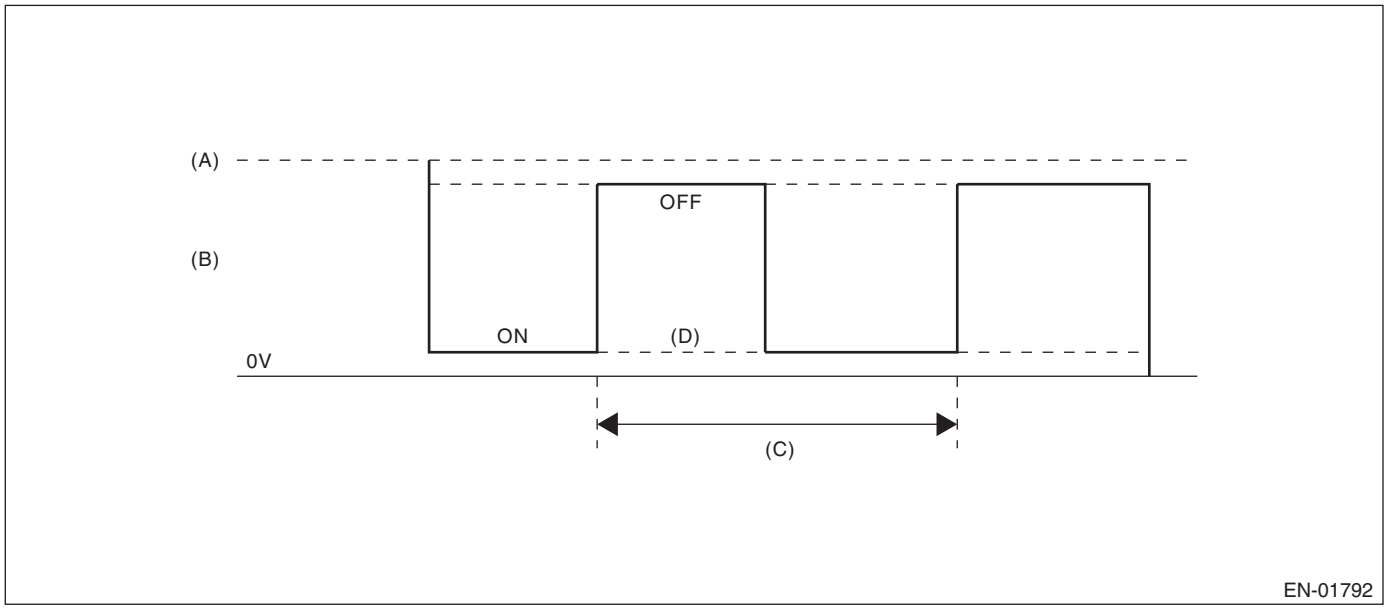

(A) Battery voltage
(B) Front oxygen (A/F) sensor heater output voltage
(C) 128 ms
(D) Low error

3. ENABLE CONDITION

Secondary Parameters	Enable Conditions
Battery voltage	≥ 10.9 V

4. GENERAL DRIVING CYCLE

Always perform the diagnosis continuously.

5. DIAGNOSTIC METHOD

- **Abnormality Judgment**

If the duration of time while the following conditions are met is longer than the time indicated, judge as NG.

Judgment Value

Malfunction Criteria	Threshold Value
Output voltage level Front oxygen (A/F) sensor heater control duty	Low < 87.5 %

Time Needed for Diagnosis: 4 ms × 250 time(s)
Malfunction Indicator Light Illumination: Illuminates as soon as a malfunction occurs.

- **Normality Judgment**

Judge as OK and clear the NG if the continuous time while the following conditions are established is more than the predetermined time.

Judgment Value

Malfunction Criteria	Threshold Value
Output voltage level	High

Time Needed for Diagnosis: Less than 1 second

K: DTC P0032 HO2S HEATER CONTROL CIRCUIT HIGH (BANK 1 SENSOR 1)

1. OUTLINE OF DIAGNOSIS

Detect front oxygen (A/F) sensor heater open or short circuit.
The front oxygen (A/F) sensor heater performs duty control, and the output terminal voltage at ON is 0 V, and the output terminal voltage at OFF is the battery voltage.
Judge as NG when the terminal voltage remains High.

2. COMPONENT DESCRIPTION

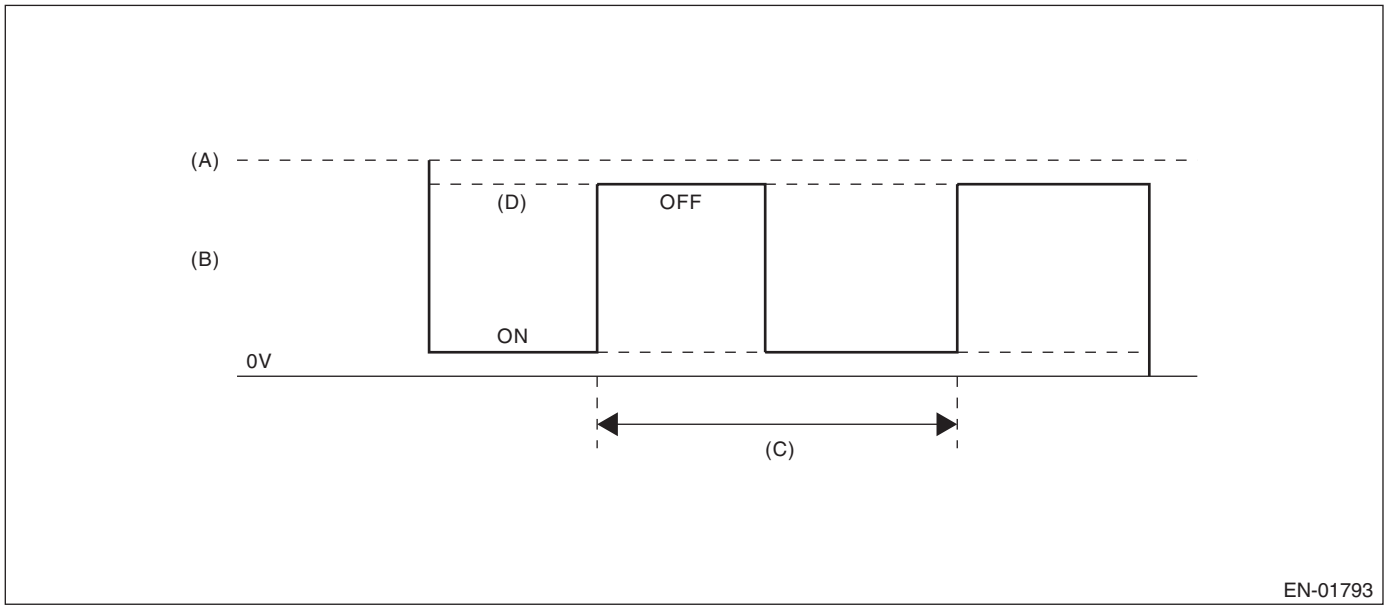

(A) Battery voltage
(B) Front oxygen (A/F) sensor heater output voltage
(C) 128 ms
(D) High error

3. ENABLE CONDITION

Secondary Parameters	Enable Conditions
Battery voltage	≥ 10.9 V

4. GENERAL DRIVING CYCLE

Always perform the diagnosis continuously.

5. DIAGNOSTIC METHOD

- **Abnormality Judgment**

If the duration of time while the following conditions are met is longer than the time indicated, judge as NG.

Judgment Value

Malfunction Criteria	Threshold Value
Output voltage level Front oxygen (A/F) sensor heater control duty	High ≥ 12.5 %

Time Needed for Diagnosis: 4 ms × 250 time(s)
Malfunction Indicator Light Illumination: Illuminates as soon as a malfunction occurs.

- **Normality Judgment**

Judge as OK and clear the NG if the continuous time while the following conditions are established is more than the predetermined time.

Judgment Value

Malfunction Criteria	Threshold Value
Output voltage level	Low

Time Needed for Diagnosis: Less than 1 second

L: DTC P0037 HO2S HEATER CONTROL CIRCUIT LOW (BANK 1 SENSOR 2)

1. OUTLINE OF DIAGNOSIS

Detect the rear oxygen sensor heater open or short circuit.
The rear oxygen sensor heater performs duty control, and the output terminal voltage at ON is 0 V, and the output terminal voltage at OFF is the battery voltage.
Judge as NG when the terminal voltage remains Low.

2. COMPONENT DESCRIPTION

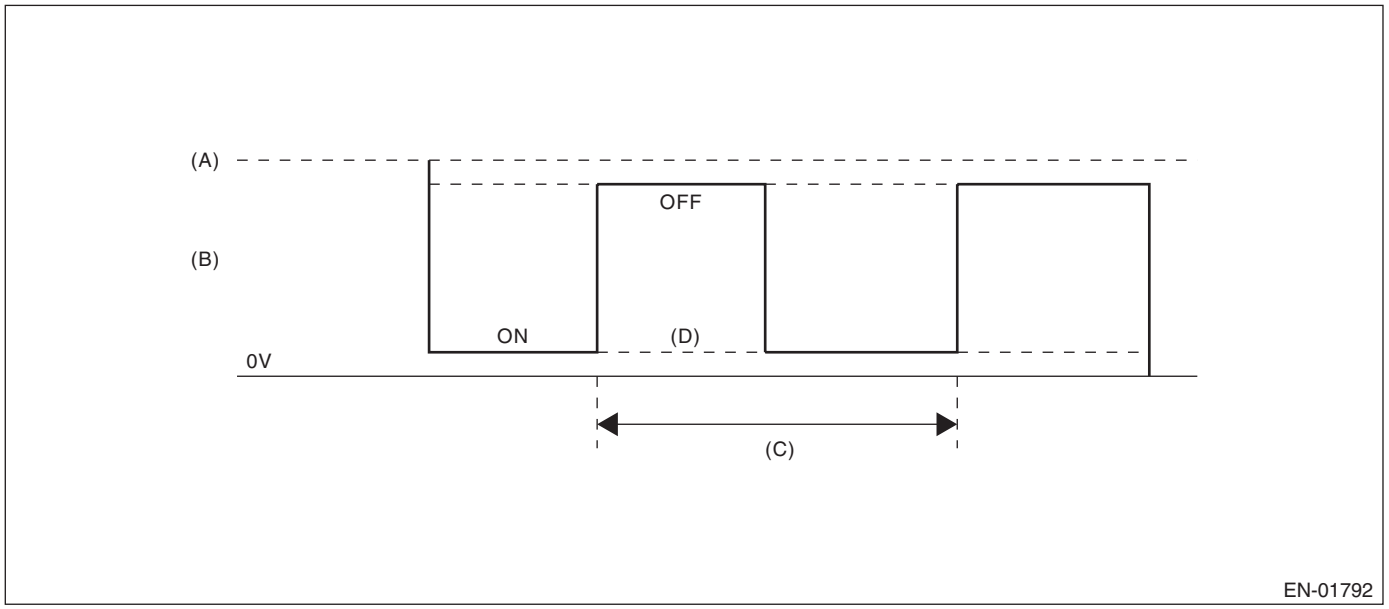

(A) Battery voltage
(B) Output voltage of the rear oxygen sensor heater
(C) 256 ms (cycle)
(D) Low error

3. ENABLE CONDITION

Secondary Parameters	Enable Conditions
Battery voltage	≥ 10.9 V
Elapsed time after starting the engine	≥ 1 second
Engine speed	< 4500 rpm

4. GENERAL DRIVING CYCLE

After starting the engine, perform the diagnosis continuously when engine is low speed.

5. DIAGNOSTIC METHOD

- **Abnormality Judgment**

If the duration of time while the following conditions are met is longer than the time indicated, judge as NG.

Judgment Value

Malfunction Criteria	Threshold Value
Output voltage level	Low
Rear oxygen sensor heater control duty	< 75 %

Time Needed for Diagnosis: 8 ms × 1250 time(s)
Malfunction Indicator Light Illumination: Illuminates when malfunction occurs in 2 continuous driving cycles.

- **Normality Judgment**

Judge as OK and clear the NG if the continuous time while the following conditions are established is more than the predetermined time.

Judgment Value

Malfunction Criteria	Threshold Value
Output voltage level	High

Time Needed for Diagnosis: Less than 1 second

M: DTC P0038 HO2S HEATER CONTROL CIRCUIT HIGH (BANK 1 SENSOR 2)

1. OUTLINE OF DIAGNOSIS

Detect the rear oxygen sensor heater open or short circuit.
The rear oxygen sensor heater performs duty control, and the output terminal voltage at ON is 0 V, and the output terminal voltage at OFF is the battery voltage.
Judge as NG when the terminal voltage remains High.

2. COMPONENT DESCRIPTION

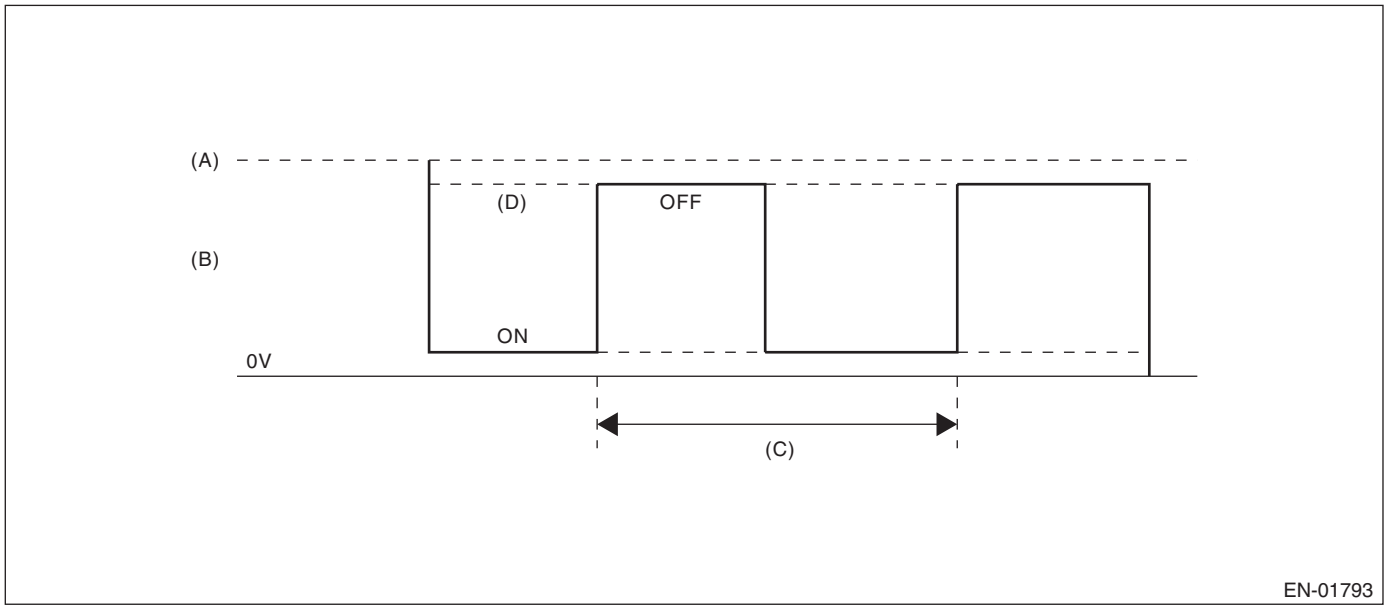

(A) Battery voltage
(B) Output voltage of the rear oxygen sensor heater
(C) 256 ms (cycle)
(D) High error

3. ENABLE CONDITION

Secondary Parameters	Enable Conditions
Battery voltage	≥ 10.9 V
Elapsed time after starting the engine	≥ 1 second
Engine speed	< 4500 rpm

4. GENERAL DRIVING CYCLE

After starting the engine, perform the diagnosis continuously when engine is low speed.

5. DIAGNOSTIC METHOD

- **Abnormality Judgment**

If the duration of time while the following conditions are met is longer than the time indicated, judge as NG.

Judgment Value

Malfunction Criteria	Threshold Value
Output voltage level	High
Rear oxygen sensor heater control duty	≥ 15 %

Time Needed for Diagnosis: 8 ms × 1250 time(s)
Malfunction Indicator Light Illumination: Illuminates when malfunction occurs in 2 continuous driving cycles.

- **Normality Judgment**

Judge as OK and clear the NG if the continuous time while the following conditions are established is more than the predetermined time.

Judgment Value

Malfunction Criteria	Threshold Value
Output voltage level	Low

Time Needed for Diagnosis: Less than 1 second

N: DTC P0050 HO2S HEATER CONTROL CIRCUIT (BANK 2 SENSOR 1)

1. OUTLINE OF DIAGNOSIS

NOTE:
For the detection standard, refer to DTC P0030. <Ref. to GD(H6DO)-20, DTC P0030 HO2S HEATER CONTROL CIRCUIT (BANK 1 SENSOR 1), Diagnostic Trouble Code (DTC) Detecting Criteria.>

O: DTC P0051 HO2S HEATER CONTROL CIRCUIT LOW (BANK 2 SENSOR 1)

1. OUTLINE OF DIAGNOSIS

NOTE:
For the detection standard, refer to DTC P0031. <Ref. to GD(H6DO)-22, DTC P0031 HO2S HEATER CONTROL CIRCUIT LOW (BANK 1 SENSOR 1), Diagnostic Trouble Code (DTC) Detecting Criteria.>

P: DTC P0052 HO2S HEATER CONTROL CIRCUIT HIGH (BANK 2 SENSOR 1)

1. OUTLINE OF DIAGNOSIS

NOTE:
For the detection standard, refer to DTC P0032. <Ref. to GD(H6DO)-24, DTC P0032 HO2S HEATER CONTROL CIRCUIT HIGH (BANK 1 SENSOR 1), Diagnostic Trouble Code (DTC) Detecting Criteria.>

Q: DTC P0057 HO2S HEATER CONTROL CIRCUIT LOW (BANK 2 SENSOR 2)

1. OUTLINE OF DIAGNOSIS

NOTE:
For the detection standard, refer to DTC P0037. <Ref. to GD(H6DO)-26, DTC P0037 HO2S HEATER CONTROL CIRCUIT LOW (BANK 1 SENSOR 2), Diagnostic Trouble Code (DTC) Detecting Criteria.>

R: DTC P0058 HO2S HEATER CONTROL CIRCUIT HIGH (BANK 2 SENSOR 2)

1. OUTLINE OF DIAGNOSIS

NOTE:
For the detection standard, refer to DTC P0038. <Ref. to GD(H6DO)-28, DTC P0038 HO2S HEATER CONTROL CIRCUIT HIGH (BANK 1 SENSOR 2), Diagnostic Trouble Code (DTC) Detecting Criteria.>

S: DTC P0068 MAP/MAF - THROTTLE POSITION CORRELATION

1. OUTLINE OF DIAGNOSIS

Detect problems in the intake manifold pressure sensor output properties.
Judge as NG when the intake air pressure AD value is Low whereas it seemed to be High from the viewpoint of engine condition, or when it is High whereas it seemed to be Low from the engine condition.

2. COMPONENT DESCRIPTION

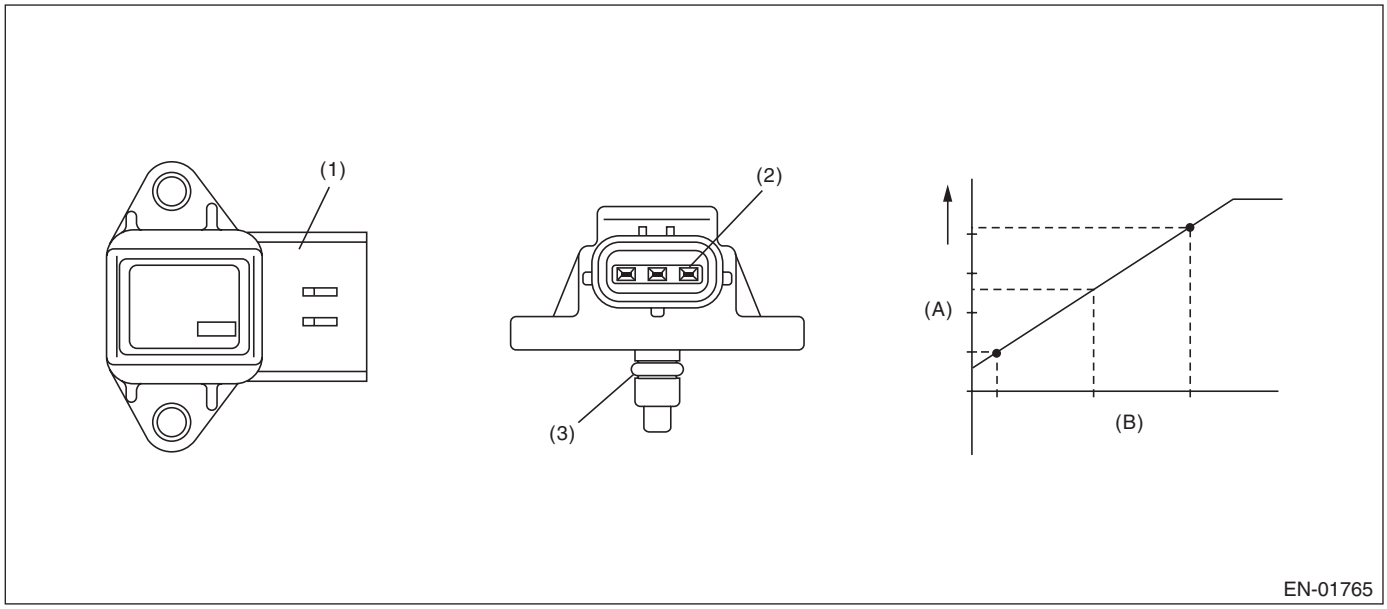

(A) Output voltage
(B) Absolute pressure
(1) Connector
(2) Terminals
(3) O-ring

3. ENABLE CONDITION

Secondary Parameters	Enable Conditions
Engine coolant temperature	≥ 75 °C (167 °F)

4. GENERAL DRIVING CYCLE

Perform the diagnosis continuously after idling.

5. DIAGNOSTIC METHOD

• Abnormality Judgment

Judge as NG when Low side or High side becomes NG.
If the duration of time while the following conditions are met is longer than the time indicated, judge as NG.

Judgment Value

Malfunction Criteria	Threshold Value
Low	
Engine speed	< 2700 rpm
Throttle position	≥ 15 °
Output voltage	< 1.8 V
Engine load	> 1 g/rev (0.04 oz/rev)
High	
Engine speed	525 rpm — 850 rpm
Throttle position	< 4.3 °
Output voltage	≥ 2.78 V
Engine load	< 0.6 g/rev (0.02 oz/rev)

Time Needed for Diagnosis:
Low side: 3000 ms
High side: 3000 ms
Malfunction Indicator Light Illumination: Illuminates when malfunction occurs in 2 continuous driving cycles.

• Normality Judgment

Judge as OK and clear the NG when both Low side and High side become OK.
If the duration of time while the following conditions are met is longer than the time indicated, judge as OK.

Judgment Value

Malfunction Criteria	Threshold Value
Low	
Engine speed	< 2700 rpm
Throttle position	≥ 15 °
Output voltage	≥ 1.8 V
Engine load	> 1 g/rev (0.04 oz/rev)
High	
Engine speed	525 rpm — 850 rpm
Throttle position	< 4.3 °
Output voltage	< 2.78 V
Engine load	< 0.6 g/rev (0.02 oz/rev)

Time Needed for Diagnosis:
Low side: Less than 1 second
High side: Less than 1 second

T: DTC P0101 MASS OR VOLUME AIR FLOW CIRCUIT RANGE/PERFORMANCE

1. OUTLINE OF DIAGNOSIS

Detect the malfunction of air flow sensor output properties.
Judge as a low side NG when the air flow voltage indicates a small value regardless of running in a state where the air flow voltage increases. Judge as a high side NG when the air flow voltage indicates a large value regardless of running in a state where the air flow voltage decreases. Judge air flow sensor property NG when the Low side or High side becomes NG.

2. COMPONENT DESCRIPTION

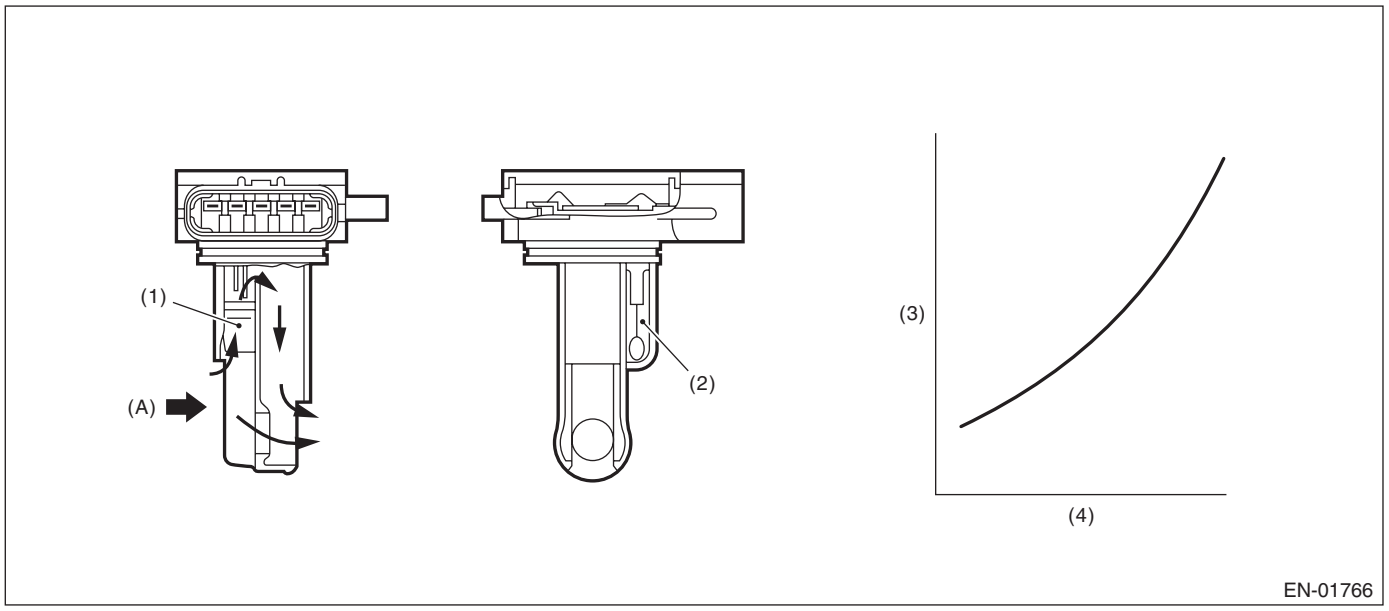

(A) Air

(1) Air flow sensor
(2) Intake air temperature sensor
(3) Voltage (V)
(4) Amount of intake air (kg (lb)/s)

3. ENABLE CONDITION

Secondary Parameters	Enable Conditions
Engine coolant temperature	≥ 75 °C (167 °F)

4. GENERAL DRIVING CYCLE

Perform the diagnosis continuously after idling.

5. DIAGNOSTIC METHOD

• Abnormality Judgment

Judge as NG when Low side or High side becomes NG.
If the duration of time while the following conditions are met is longer than the time indicated, judge as NG.

Judgment Value

Malfunction Criteria	Threshold Value
Low	
Output voltage	< 1.67 V
Engine speed	≥ 2000 rpm
Throttle opening angle	≥ 15 °
Intake manifold pressure	≥ 73.3 kPa (550 mmHg, 21.7 inHg)
High (1)	
Output voltage	≥ 1.83 V
Engine speed	525 rpm — 850 rpm
Throttle opening angle	< 4.5 °
Intake manifold pressure	≥ 46.7 kPa (350 mmHg, 13.8 inHg)
High (2)	
Output voltage	≥ 1.67 V
Engine speed	525 rpm — 850 rpm
Throttle opening angle	< 4.5 °
Intake manifold pressure	≥ 46.7 kPa (350 mmHg, 13.8 inHg)
Fuel system diagnosis	Rich side malfunction

Time Needed for Diagnosis:
Low: 5000 ms
High: 5000 ms
Malfunction Indicator Light Illumination: Illuminates when malfunction occurs in 2 continuous driving cycles.

• Normality Judgment

Judge as OK and clear the NG when both Low side and High side become OK.
Judge as OK and clear the NG if the continuous time while the following conditions are established is more than the predetermined time.

Judgment Value

Malfunction Criteria	Threshold Value
Low	
Output voltage	≥ 1.67 V
Engine speed	≥ 2000 rpm
Throttle opening angle	≥ 15 °
Intake manifold pressure	≥ 73.3 kPa (550 mmHg, 21.7 inHg)
High	
Output voltage	< 1.83 V
Engine speed	525 rpm — 850 rpm
Throttle opening angle	< 4.5 °
Intake manifold pressure	< 46.7 kPa (350 mmHg, 13.8 inHg)
Fuel system diagnosis	Rich side normal

Time Needed for Diagnosis:
Low: Less than 1 second
High: Less than 1 second

U: DTC P0102 MASS OR VOLUME AIR FLOW CIRCUIT LOW INPUT

1. OUTLINE OF DIAGNOSIS

Detect open or short circuits of the air flow sensor.
Judge as NG if out of specification.

2. COMPONENT DESCRIPTION

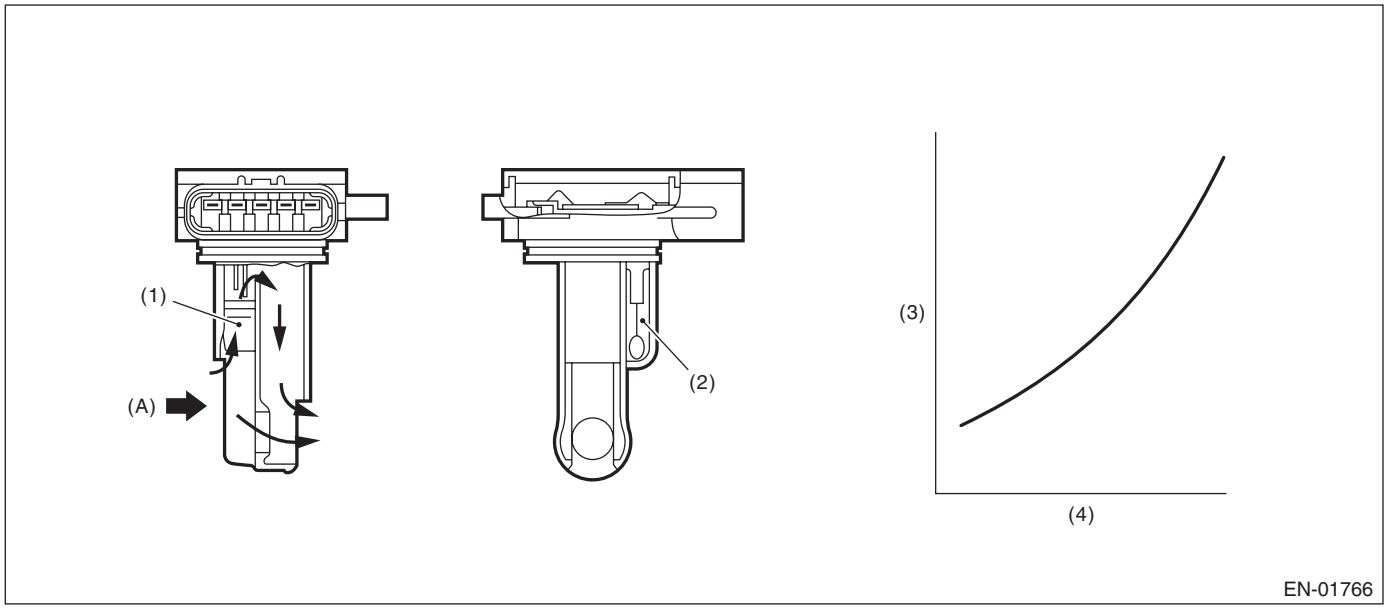

(A) Air

(1) Air flow sensor
(2) Intake air temperature sensor
(3) Voltage (V)
(4) Amount of intake air (kg (lb)/s)

3. ENABLE CONDITION

Secondary Parameters	Enable Conditions
None	

4. GENERAL DRIVING CYCLE

Always perform the diagnosis continuously.

5. DIAGNOSTIC METHOD

- **Abnormality Judgment**

If the duration of time while the following conditions are met is longer than the time indicated, judge as NG.

Judgment Value

Malfunction Criteria	Threshold Value
Output voltage	≤ 0.22 V

Time Needed for Diagnosis: 500 ms
Malfunction Indicator Light Illumination: Illuminates as soon as a malfunction occurs.

- **Normality Judgment**

Judge as OK and clear the NG if the continuous time while the following conditions are established is more than the predetermined time.

Judgment Value

Malfunction Criteria	Threshold Value
Output voltage	> 0.22 V

Time Needed for Diagnosis: Less than 1 second

V: DTC P0103 MASS OR VOLUME AIR FLOW CIRCUIT HIGH INPUT

1. OUTLINE OF DIAGNOSIS

Detect open or short circuits of the air flow sensor.
Judge as NG if out of specification.

2. COMPONENT DESCRIPTION

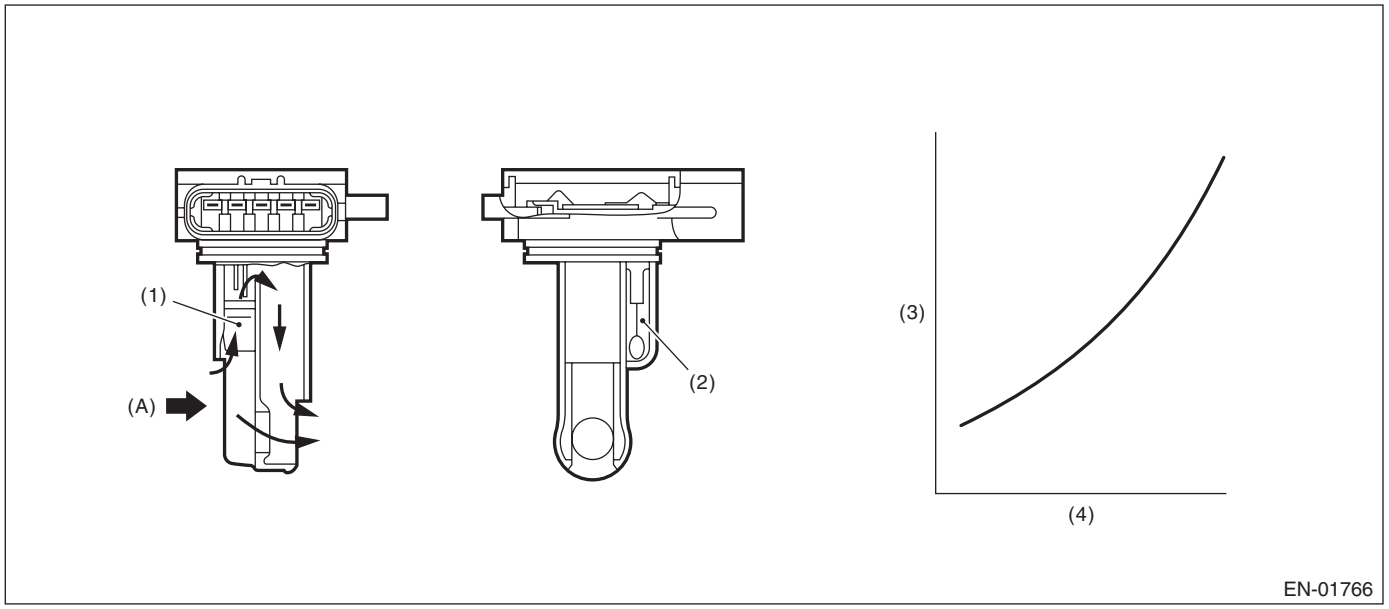

(A) Air

(1) Air flow sensor
(2) Intake air temperature sensor
(3) Voltage (V)
(4) Amount of intake air (kg (lb)/s)

3. ENABLE CONDITION

Secondary Parameters	Enable Conditions
None	

4. GENERAL DRIVING CYCLE

Always perform the diagnosis continuously.

5. DIAGNOSTIC METHOD

- **Abnormality Judgment**

If the duration of time while the following conditions are met is longer than the time indicated, judge as NG.

Judgment Value

Malfunction Criteria	Threshold Value
Output voltage	≥ 4.69 V

Time Needed for Diagnosis: 500 ms
Malfunction Indicator Light Illumination: Illuminates as soon as a malfunction occurs.

- **Normality Judgment**

Judge as OK and clear the NG if the continuous time while the following conditions are established is more than the predetermined time.

Judgment Value

Malfunction Criteria	Threshold Value
Output voltage	< 4.69 V

Time Needed for Diagnosis: Less than 1 second

W: DTC P0107 MANIFOLD ABSOLUTE PRESSURE/BAROMETRIC PRESSURE CIRCUIT LOW INPUT

1. OUTLINE OF DIAGNOSIS

Detect the open or short circuit of intake manifold pressure sensor.
Judge as NG if out of specification.

2. COMPONENT DESCRIPTION

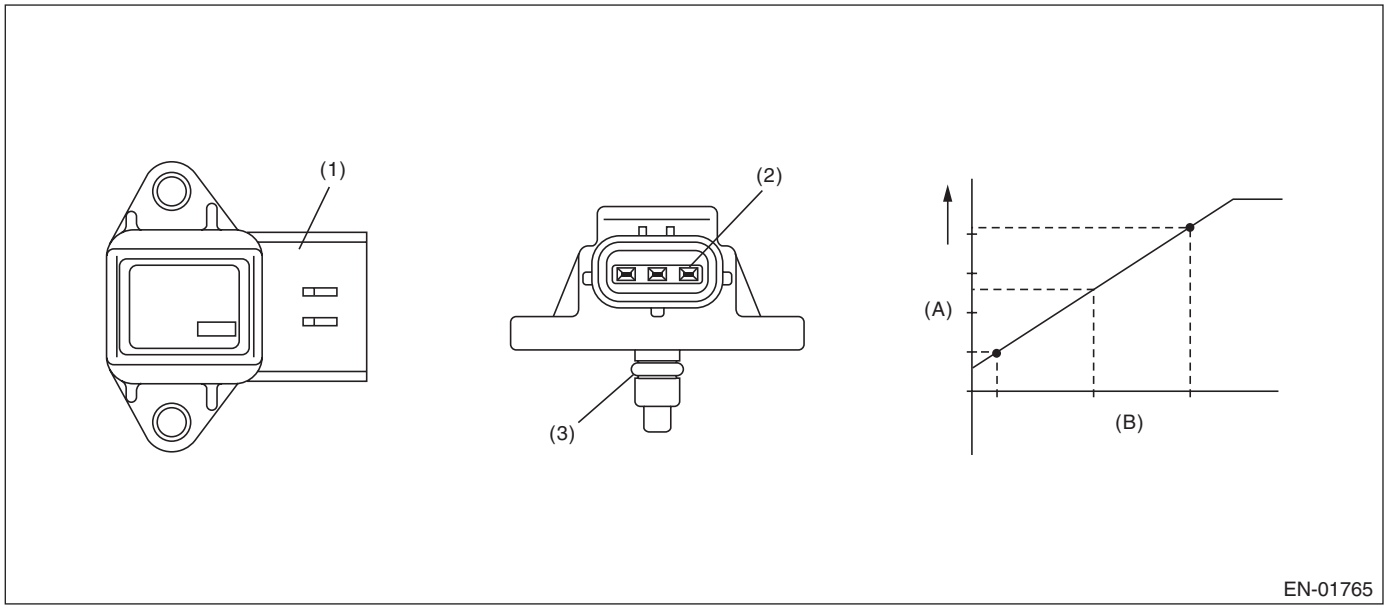

(A) Output voltage
(B) Absolute pressure
(1) Connector
(2) Terminals
(3) O-ring

3. ENABLE CONDITION

Secondary Parameters	Enable Conditions
None	

4. GENERAL DRIVING CYCLE

Always perform the diagnosis continuously.

5. DIAGNOSTIC METHOD

- **Abnormality Judgment**

If the duration of time while the following conditions are met is longer than the time indicated, judge as NG.

Judgment Value

Malfunction Criteria	Threshold Value
Output voltage	≤ 0.606 V

Time Needed for Diagnosis: 500 ms
Malfunction Indicator Light Illumination: Illuminates as soon as a malfunction occurs.

- **Normality Judgment**

Judge as OK and clear the NG if the continuous time while the following conditions are established is more than the predetermined time.

Judgment Value

Malfunction Criteria	Threshold Value
Output voltage	> 0.606 V

Time Needed for Diagnosis: Less than 1 second

X: DTC P0108 MANIFOLD ABSOLUTE PRESSURE/BAROMETRIC PRESSURE CIRCUIT HIGH INPUT

1. OUTLINE OF DIAGNOSIS

Detect the open or short circuit of intake manifold pressure sensor.
Judge as NG if out of specification.

2. COMPONENT DESCRIPTION

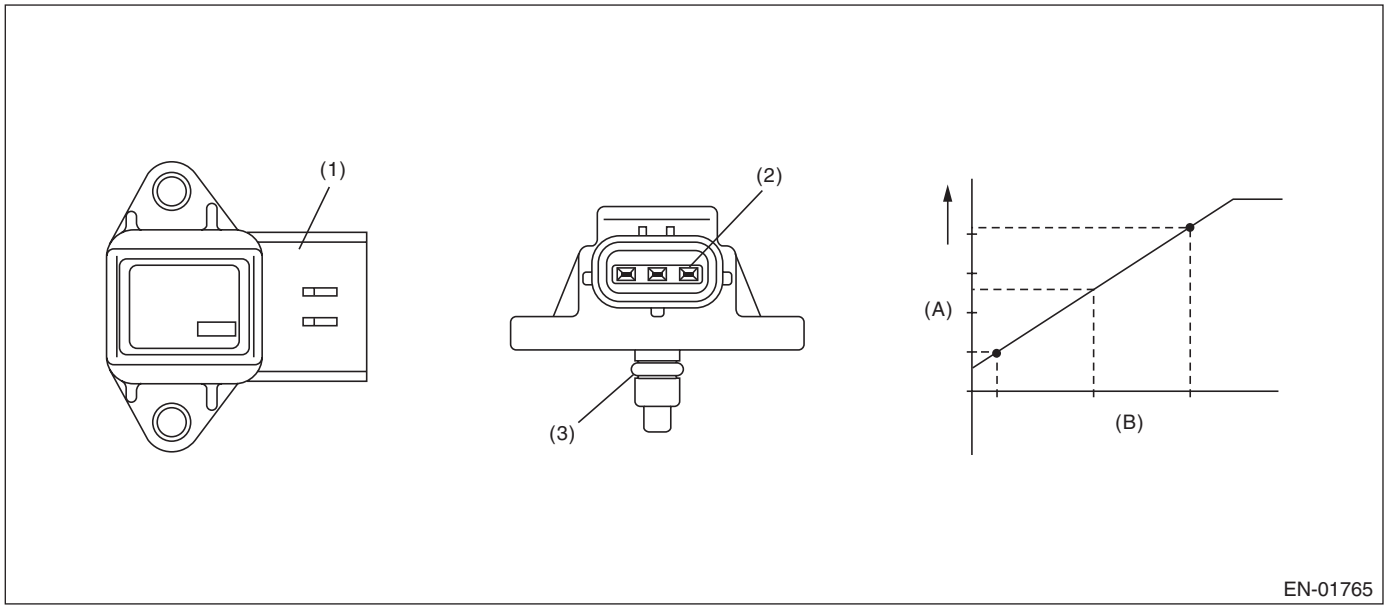

(A) Output voltage
(B) Absolute pressure
(1) Connector
(2) Terminals
(3) O-ring

3. ENABLE CONDITION

Secondary Parameters	Enable Conditions
None	

4. GENERAL DRIVING CYCLE

Always perform the diagnosis continuously.

5. DIAGNOSTIC METHOD

- **Abnormality Judgment**

If the duration of time while the following conditions are met is longer than the time indicated, judge as NG.

Judgment Value

Malfunction Criteria	Threshold Value
Output voltage	≥ 3.906 V

Time Needed for Diagnosis: 500 ms
Malfunction Indicator Light Illumination: Illuminates as soon as a malfunction occurs.

- **Normality Judgment**

Judge as OK and clear the NG if the continuous time while the following conditions are established is more than the predetermined time.

Judgment Value

Malfunction Criteria	Threshold Value
Output voltage	< 3.906 V

Time Needed for Diagnosis: Less than 1 second

Y: DTC P0111 INTAKE AIR TEMPERATURE SENSOR 1 CIRCUIT RANGE/PERFORMANCE

1. OUTLINE OF DIAGNOSIS

Detect the malfunction of intake air temperature sensor output property.
Judge as NG when the intake air temperature is not varied whereas it seemed to be varied from the viewpoint of engine condition.

2. COMPONENT DESCRIPTION

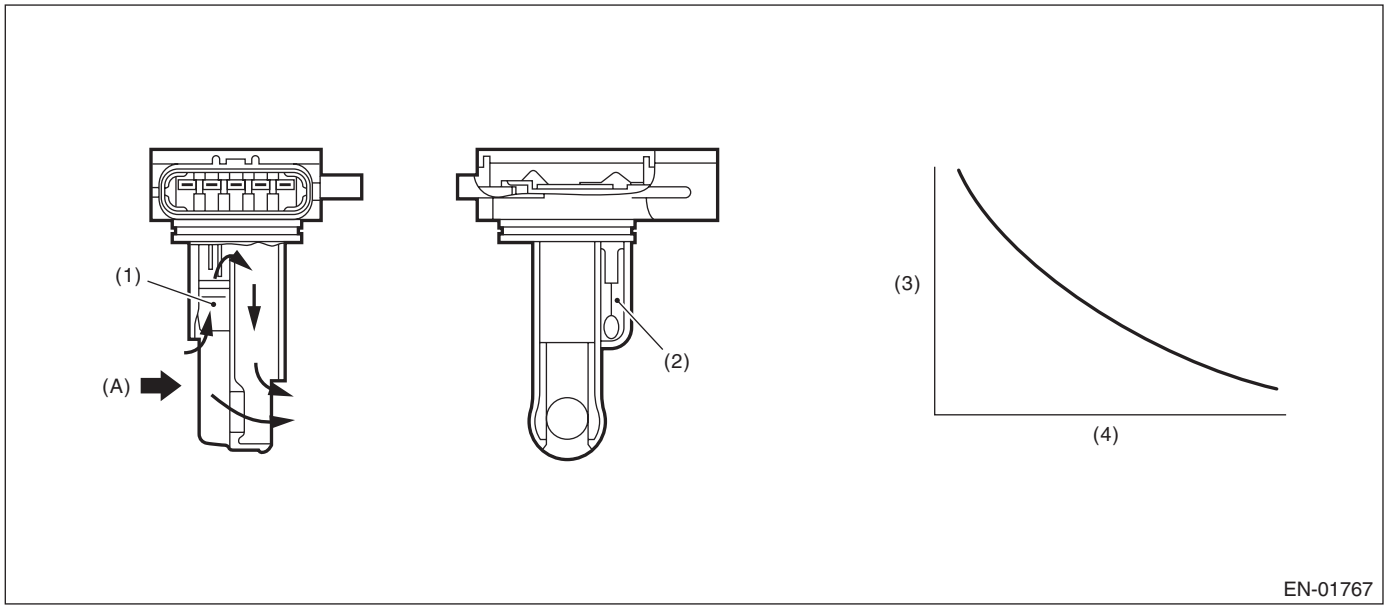

(A) Air

(1) Air flow sensor
(2) Intake air temperature sensor
(3) Resistance value (Ω)
(4) Intake air temperature °C (°F)

3. ENABLE CONDITION

Secondary Parameters	Enable Conditions
Engine coolant temperature at engine starting	< 35 °C (95 °F)
Battery voltage	≥ 10.9 V
Continuous time when the vehicle speed is less than 140 km/h (87 MPH	≥ 600 s
Engine coolant temperature	≥ 75 °C (167 °F)
Intake air amount sum value	≥ Value of Map 1
Number of experiences under conditions below	≥ 3 time(s)
• Continuous time when vehicle speed is less than 4 km/h (2.5 MPH)	≥ Value from Map 2
• Continuous time when vehicle speed is 40 km/h (24.9 MPH) or more	≥ 15 s
and	
Establishing time of 1, 2	≥ 15 s
1. Intake air amount	≥ 10 g/s (0.35 oz/s)
2. Vehicle speed	≥ 4 km/h (2.5 MPH)

Map 1

Engine coolant temperature °C (°F)	–20 (–4)	–10 (14)	0 (32)	10 (50)	20 (68)
Intake air amount sum value (g (oz))	50000 (1763.5)	7400 (261)	6600 (232.78)	5800 (204.57)	5000 (176.35)

Map 2

Engine coolant temperature °C (°F)	–30 (–22)	0 (32)	10 (50)	20 (68)
Continuous time (s) when vehicle speed is less than 4 km/h (2.5 MPH)	250	40	32	24

4. GENERAL DRIVING CYCLE

Perform the diagnosis when the vehicle speed condition is met after warming up from a cold condition.

5. DIAGNOSTIC METHOD

• Abnormality Judgment

Judge as NG when the following conditions are established.

Judgment Value

Malfunction Criteria	Threshold Value
Output voltage difference between Max. and Min.	< 0.02 V(Equivalent to approximately 0.5°C (0.9°F) near 25°C)

Time Needed for Diagnosis: Less than 1 second
Malfunction Indicator Light Illumination: Illuminates when malfunction occurs in 2 continuous driving cycles.

• Normality Judgment

Judge as OK and clear the NG if the following conditions are established.

Judgment Value

Malfunction Criteria	Threshold Value
Output voltage difference between Max. and Min.	≥ 0.02 V

Time Needed for Diagnosis: Less than 1 second

Z: DTC P0112 INTAKE AIR TEMPERATURE SENSOR 1 CIRCUIT LOW

1. OUTLINE OF DIAGNOSIS

Detect open or short circuit of the intake air temperature sensor.
Judge as NG if out of specification.

2. COMPONENT DESCRIPTION

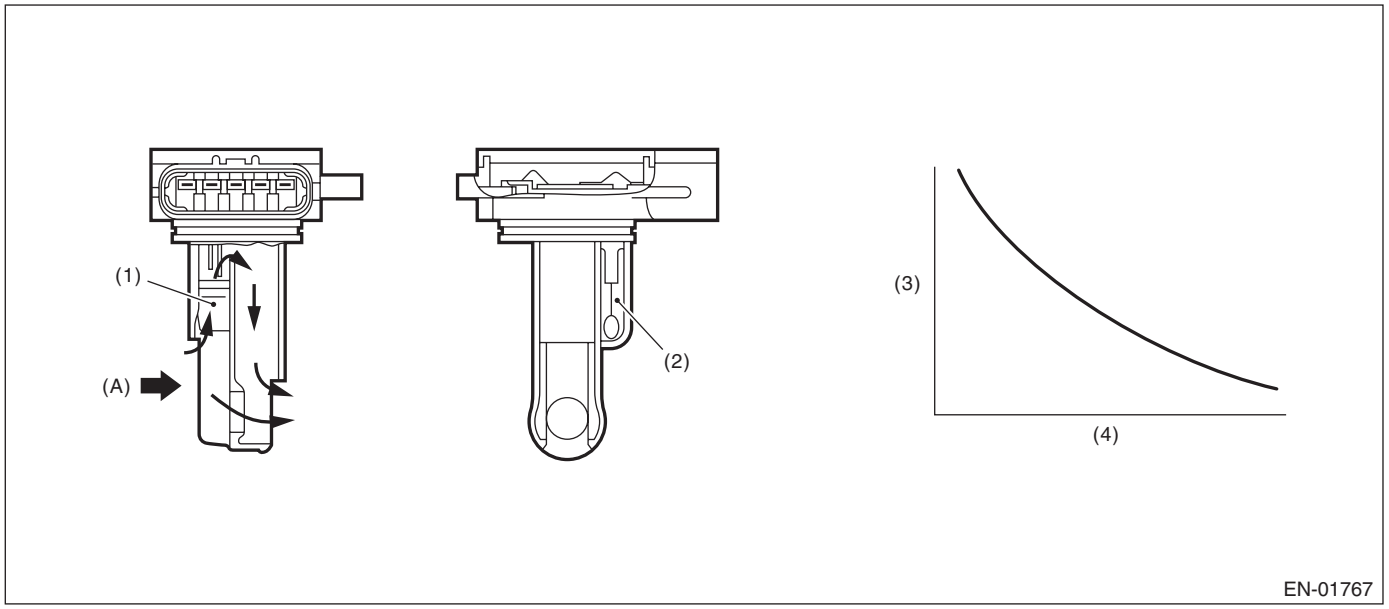

(A) Air

(1) Air flow sensor
(2) Intake air temperature sensor
(3) Resistance value (Ω)
(4) Intake air temperature °C (°F)

3. ENABLE CONDITION

Secondary Parameters	Enable Conditions
None	

4. GENERAL DRIVING CYCLE

Always perform the diagnosis continuously.

5. DIAGNOSTIC METHOD

- **Abnormality Judgment**

If the duration of time while the following conditions are met is longer than the time indicated, judge as NG.

Judgment Value

Malfunction Criteria	Threshold Value
Output voltage	< 0.395 V

Time Needed for Diagnosis: 500 ms
Malfunction Indicator Light Illumination: Illuminates as soon as a malfunction occurs.

- **Normality Judgment**

Judge as OK and clear the NG if the continuous time while the following conditions are established is more than the predetermined time.

Judgment Value

Malfunction Criteria	Threshold Value
Output voltage	≥ 0.395 V

Time Needed for Diagnosis: Less than 1 second

AA:DTC P0113 INTAKE AIR TEMPERATURE SENSOR 1 CIRCUIT HIGH

1. OUTLINE OF DIAGNOSIS

Detect open or short circuit of the intake air temperature sensor.
Judge as NG if out of specification.

2. COMPONENT DESCRIPTION

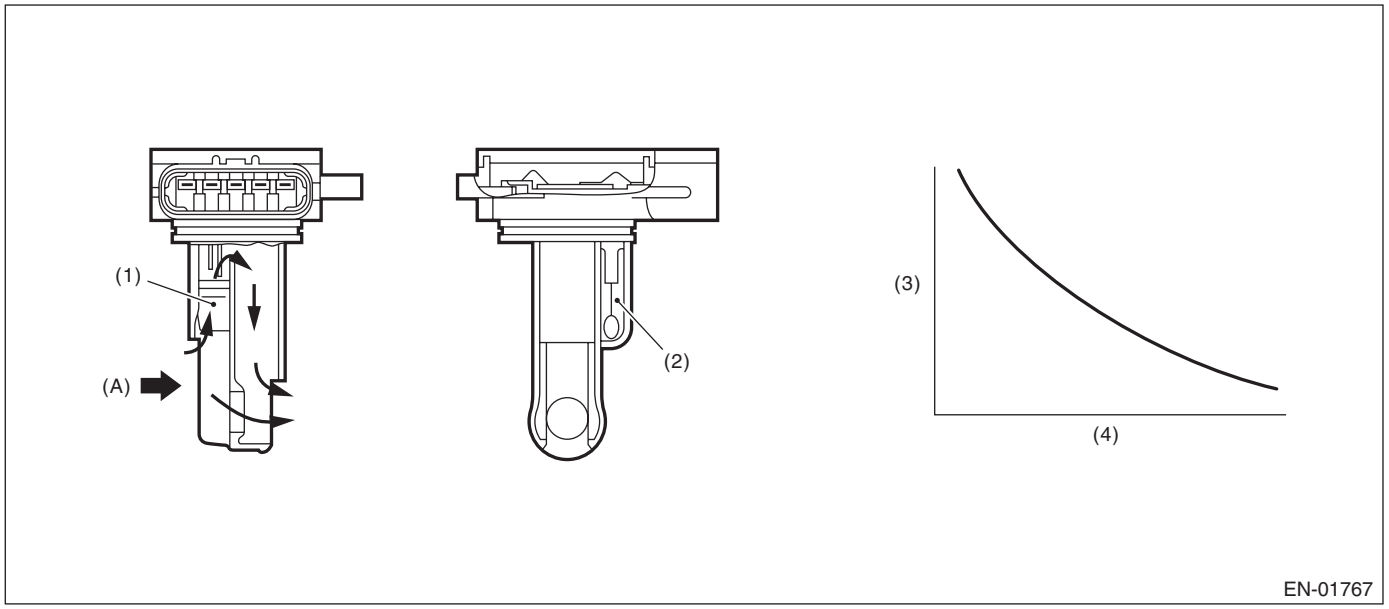

(A) Air

(1) Air flow sensor
(2) Intake air temperature sensor
(3) Resistance value (Ω)
(4) Intake air temperature °C (°F)

3. ENABLE CONDITION

Secondary Parameters	Enable Conditions
None	

4. GENERAL DRIVING CYCLE

Always perform the diagnosis continuously.

5. DIAGNOSTIC METHOD

- **Abnormality Judgment**

If the duration of time while the following conditions are met is longer than the time indicated, judge as NG.

Judgment Value

Malfunction Criteria	Threshold Value
Output voltage	≥ 4.712 V

Time Needed for Diagnosis: 500 ms
Malfunction Indicator Light Illumination: Illuminates as soon as a malfunction occurs.

- **Normality Judgment**

Judge as OK and clear the NG if the continuous time while the following conditions are established is more than the predetermined time.

Judgment Value

Malfunction Criteria	Threshold Value
Output voltage	< 4.712 V

Time Needed for Diagnosis: Less than 1 second

AB:DTC P0117 ENGINE COOLANT TEMPERATURE CIRCUIT LOW

1. OUTLINE OF DIAGNOSIS

Detect the open or short circuit of the engine coolant temperature sensor.
Judge as NG if out of specification.

2. COMPONENT DESCRIPTION

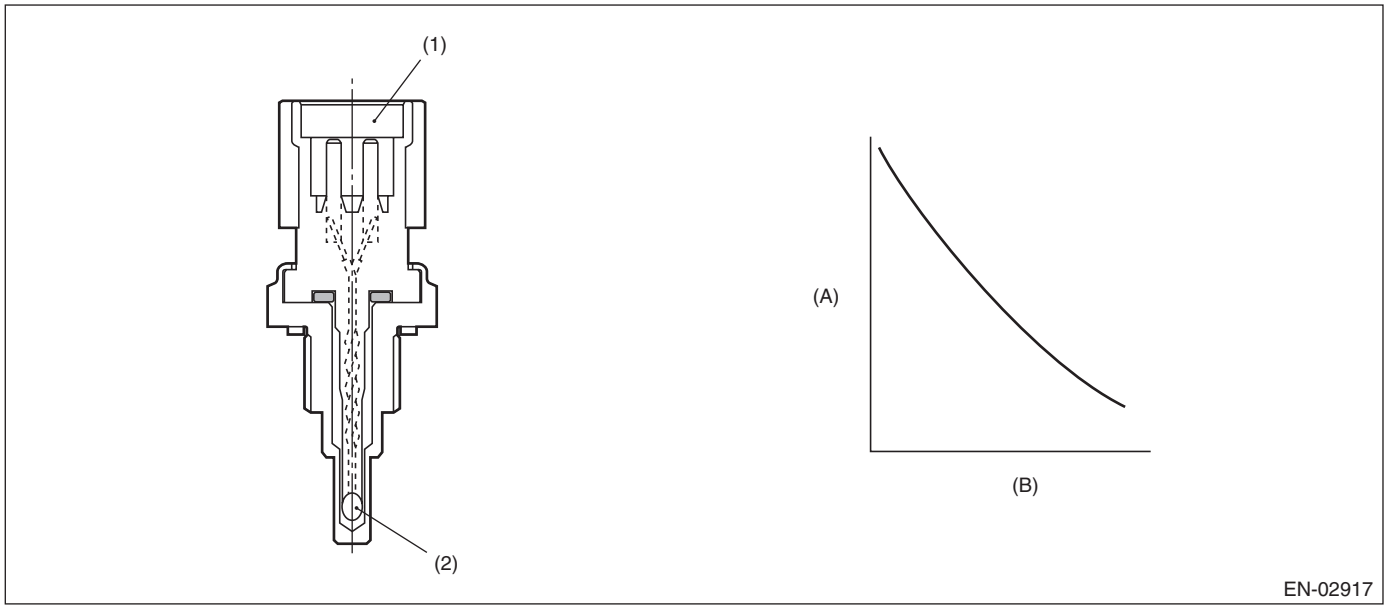

(A) Resistance value (kΩ)
(B) Temperature °C (°F)
(1) Connector
(2) Thermistor element

3. ENABLE CONDITION

Secondary Parameters	Enable Conditions
None	

4. GENERAL DRIVING CYCLE

Always perform the diagnosis continuously.

5. DIAGNOSTIC METHOD

- **Abnormality Judgment**

If the duration of time while the following conditions are met is longer than the time indicated, judge as NG.

Judgment Value

Malfunction Criteria	Threshold Value
Output voltage	< 0.464 V

Time Needed for Diagnosis: 500 ms
Malfunction Indicator Light Illumination: Illuminates as soon as a malfunction occurs.

- **Normality Judgment**

Judge as OK and clear the NG if the continuous time while the following conditions are established is more than the predetermined time.

Judgment Value

Malfunction Criteria	Threshold Value
Output voltage	≥ 0.464 V

Time Needed for Diagnosis: Less than 1 second

AC:DTC P0118 ENGINE COOLANT TEMPERATURE CIRCUIT HIGH

1. OUTLINE OF DIAGNOSIS

Detect the open or short circuit of the engine coolant temperature sensor.
Judge as NG if out of specification.

2. COMPONENT DESCRIPTION

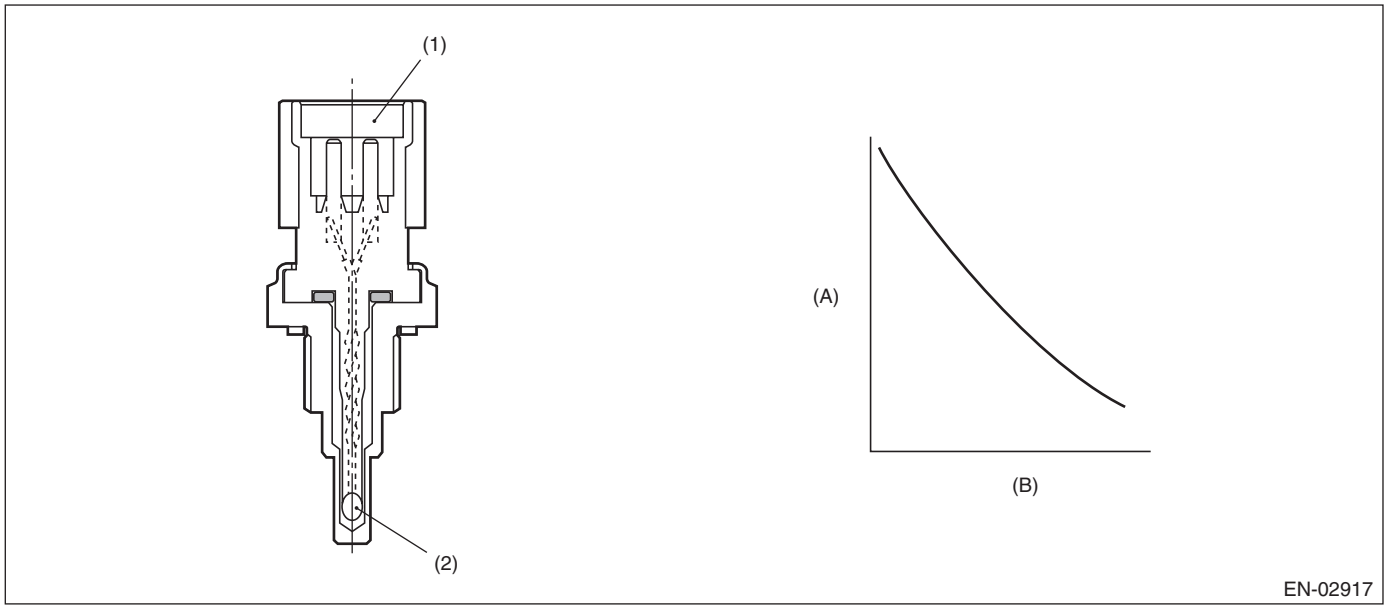

(A) Resistance value (kΩ)
(B) Temperature °C (°F)
(1) Connector
(2) Thermistor element

3. ENABLE CONDITION

Secondary Parameters	Enable Conditions
None	

4. GENERAL DRIVING CYCLE

Always perform the diagnosis continuously.

5. DIAGNOSTIC METHOD

- **Abnormality Judgment**

If the duration of time while the following conditions are met is longer than the time indicated, judge as NG.

Judgment Value

Malfunction Criteria	Threshold Value
Output voltage	≥ 4.702 V

Time Needed for Diagnosis: 500 ms
Malfunction Indicator Light Illumination: Illuminates as soon as a malfunction occurs.

- **Normality Judgment**

Judge as OK and clear the NG if the continuous time while the following conditions are established is more than the predetermined time.

Judgment Value

Malfunction Criteria	Threshold Value
Output voltage	< 4.702 V

Time Needed for Diagnosis: Less than 1 second

AD:DTC P0122 THROTTLE/PEDAL POSITION SENSOR/SWITCH “A” CIRCUIT LOW

1. OUTLINE OF DIAGNOSIS

Detect the open or short circuit of throttle position sensor 1.
Judge as NG if out of specification.

2. COMPONENT DESCRIPTION

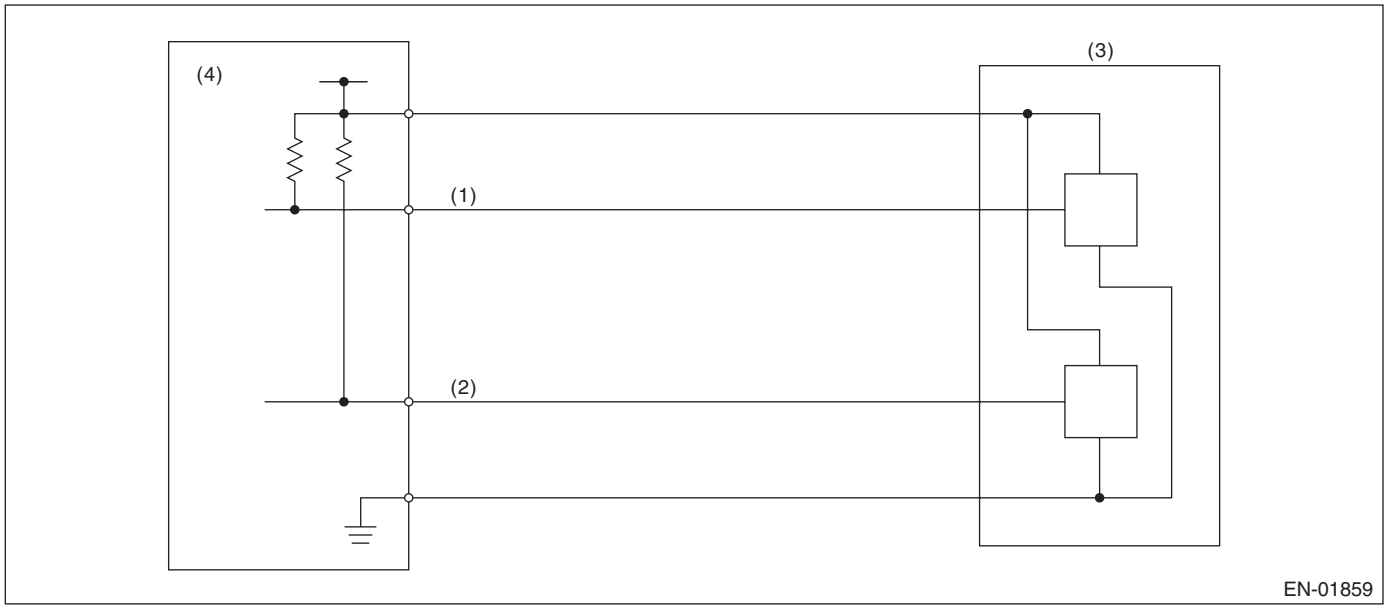

(1) Throttle position sensor 1 signal
(2) Throttle position sensor 2 signal
(3) Throttle position sensor
(4) Engine control module (ECM)

3. ENABLE CONDITION

Secondary Parameters	Enable Conditions
Ignition switch	ON
Battery voltage	≥ 6 V

4. GENERAL DRIVING CYCLE

Always perform the diagnosis continuously.

5. DIAGNOSTIC METHOD

- **Abnormality Judgment**

If the duration of time while the following conditions are met is longer than the time indicated, judge as NG.

Judgment Value

Malfunction criteria	Threshold value
Sensor 1 input voltage	≤ 0.23 V

Time Needed for Diagnosis: 24 ms
Malfunction Indicator Light Illumination: Illuminates as soon as a malfunction occurs.

- **Normality Judgment**

Judge as OK and clear the NG if the continuous time while the following conditions are established is more than the predetermined time.

Judgment Value

Malfunction criteria	Threshold value
Sensor 1 input voltage	> 0.23 V

Time Needed for Diagnosis: 24 ms

AE:DTC P0123 THROTTLE/PEDAL POSITION SENSOR/SWITCH “A” CIRCUIT HIGH

1. OUTLINE OF DIAGNOSIS

Detect the open or short circuit of throttle position sensor 1.
Judge as NG if out of specification.

2. COMPONENT DESCRIPTION

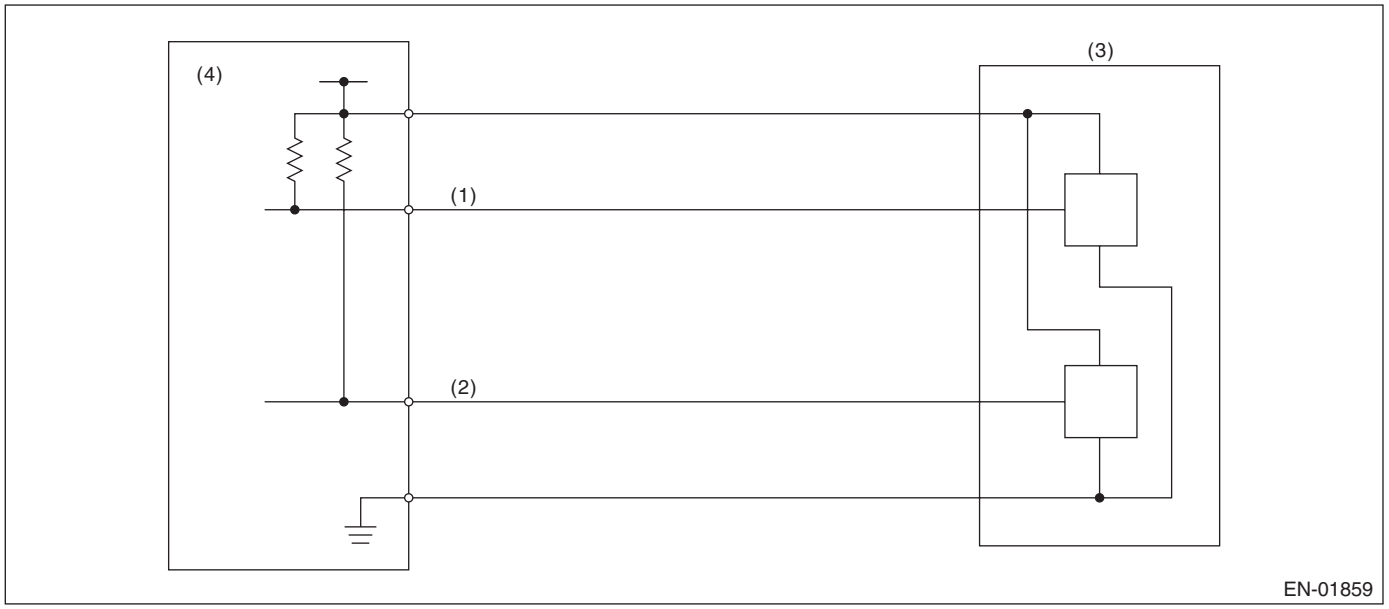

(1) Throttle position sensor 1 signal
(2) Throttle position sensor 2 signal
(3) Throttle position sensor
(4) Engine control module (ECM)

3. ENABLE CONDITION

Secondary Parameters	Enable Conditions
Ignition switch	ON
Battery voltage	≥ 6 V

4. GENERAL DRIVING CYCLE

Always perform the diagnosis continuously.

5. DIAGNOSTIC METHOD

- **Abnormality Judgment**

If the duration of time while the following conditions are met is longer than the time indicated, judge as NG.

Judgment Value

Malfunction criteria	Threshold value
Sensor 1 input voltage	≥ 4.858 V

Time Needed for Diagnosis: 24 ms
Malfunction Indicator Light Illumination: Illuminates as soon as a malfunction occurs.

- **Normality Judgment**

Judge as OK and clear the NG if the continuous time while the following conditions are established is more than the predetermined time.

Judgment Value

Malfunction criteria	Threshold value
Sensor 1 input voltage	< 4.858 V

Time Needed for Diagnosis: 24 ms

AF:DTC P0125 INSUFFICIENT COOLANT TEMPERATURE FOR CLOSED LOOP FUEL CONTROL

1. OUTLINE OF DIAGNOSIS

Detect the malfunction of engine coolant temperature output property.
Judge as NG when the engine coolant temperature does not rise in driving conditions where it should.

2. COMPONENT DESCRIPTION

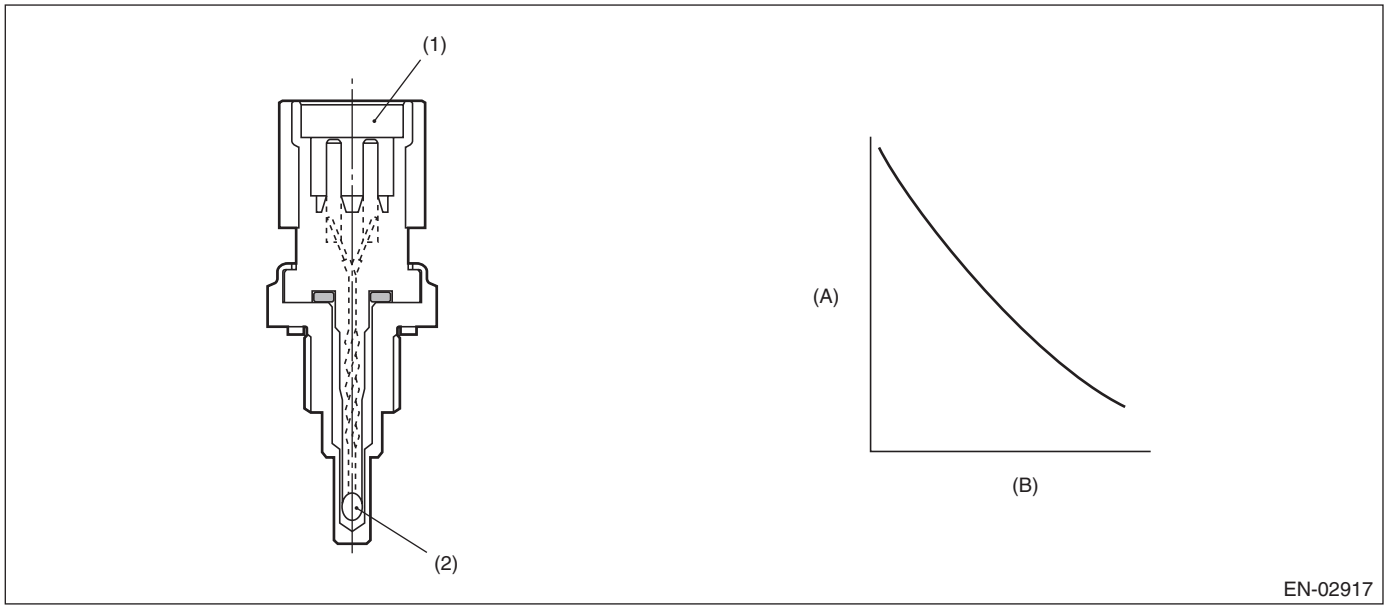

(A) Resistance value (kΩ)
(B) Temperature °C (°F)
(1) Connector
(2) Thermistor element

3. ENABLE CONDITION

Secondary Parameters	Enable Conditions
Engine speed	≥ Value from Map
Battery voltage	≥ 10.9 V

Map

Engine coolant temperature °C (°F)	–40 (–40)	–30 (–22)	–20 (–4)	–10 (14)	0 (32)	10 (50)	20 (68)	30 (86)
Engine speed rpm	500	500	500	500	500	500	500	500

Engine coolant temperature °C (°F)	40 (104)	50 (122)	60 (140)	70 (158)	80 (176)	90 (194)	100 (212)	110 (230)
Engine speed rpm	500	500	500	500	500	500	500	500

4. GENERAL DRIVING CYCLE

Perform the diagnosis only once after engine start.

5. DIAGNOSTIC METHOD

• Abnormality Judgment

Judge as NG if the criteria below are met.

Judgment Value

Malfunction Criteria	Threshold Value
Engine coolant temperature	< 20 °C (68 °F)
Timer for diagnosis after engine start	≥ Judgment value of timer after engine start

Timer for diagnosis after engine start
a. Timer stop at fuel cut
b. During the driving conditions except a) above, timer counts up as follows.
64 ms + TWCNT ms (when at 64 ms)
TWCNT is defined as follows,
TWCNT = 0 at idle switch ON,
TWCNT show on the following table at idle switch OFF.

		Vehicle speed km/h (MPH)							
		0 (0)	8 (5)	16 (9.9)	24 (14.9)	32 (19.9)	40 (24.9)	48 (29.8)	56 (34.8)
Temperature °C (°F)	–20 (–4)	0 ms	37.136 ms	74.272 ms	111.41 ms	126.66 ms	141.91 ms	163.59 ms	185.26 ms
	–10 (14)	0 ms	27.391 ms	54.782 ms	82.173 ms	99.65 ms	117.13 ms	135.96 ms	154.8 ms
	0 (32)	0 ms	17.646 ms	35.292 ms	52.938 ms	72.64 ms	92.341 ms	108.34 ms	124.33 ms
	10 (50)	0 ms	35 ms	40 ms	50 ms	65 ms	65 ms	65 ms	65 ms
	20 (68)	0 ms	35 ms	40 ms	50 ms	65 ms	65 ms	65 ms	65 ms

Judgment value of timer after engine starting
$t = 429523 \text{ ms} - 28605 \text{ ms} \times Ti$
Ti : The lowest coolant temperature after engine start
Time Needed for Diagnosis: Less than 1 second
Malfunction Indicator Light Illumination: Illuminates when malfunction occurs in 2 continuous driving cycles.

• Normality Judgment

Judge as OK and clear the NG when the malfunction criteria below are met.

Judgment Value

Malfunction Criteria	Threshold Value
Engine coolant temperature	≥ 20 °C (68 °F)

Time Needed for Diagnosis: Less than 1 second

AG:DTC P0126 INSUFFICIENT ENGINE COOLANT TEMPERATURE FOR STABLE OPERATION

1. OUTLINE OF DIAGNOSIS

Detect the malfunction of the engine coolant temperature sensor characteristics.
When the ignition is ON after the specified period of soaking time has elapsed, compare the engine coolant temperature with intake air temperature. Judge as NG if the difference between two temperatures is larger than the predetermined value and the engine coolant temperature becomes the specified value or more.

2. COMPONENT DESCRIPTION

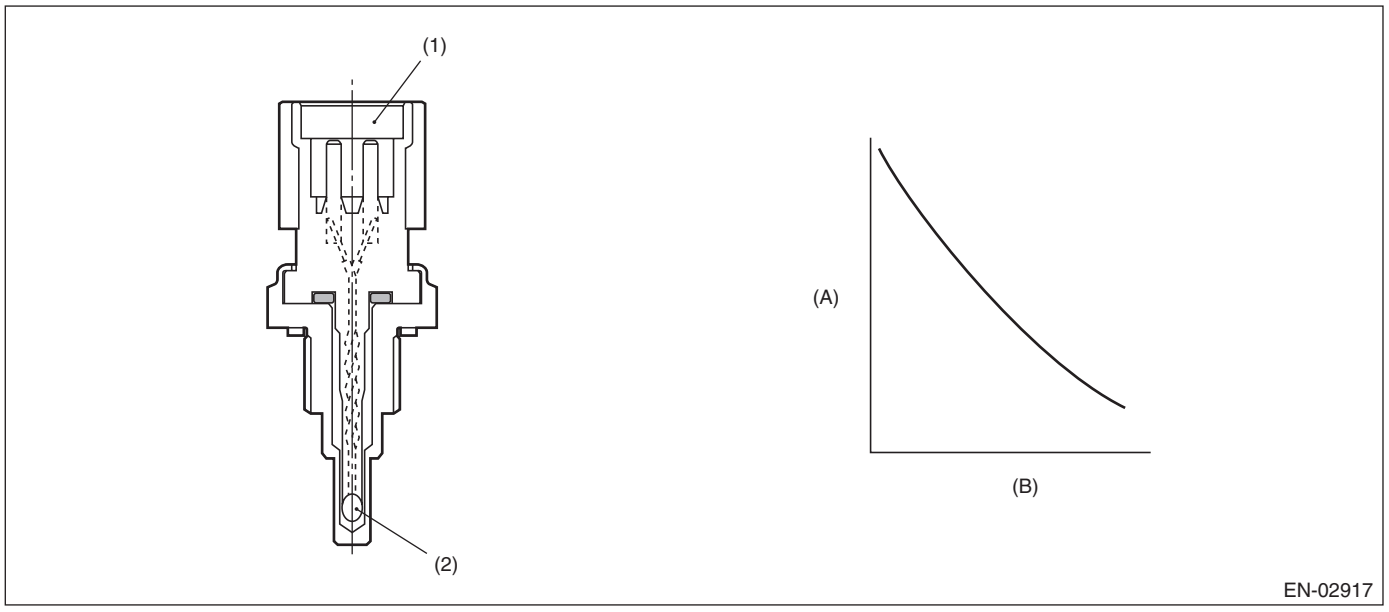

(A) Resistance value (kΩ)
(B) Temperature °C (°F)
(1) Connector
(2) Thermistor element

3. ENABLE CONDITION

Secondary Parameters	Enable Conditions
Battery voltage	≥ 10.9 V
Soaking time	≥ 21600 s
Engine coolant temperature at the last engine stop	≥ Value from Map

Map

Estimate ambient temperature °C (°F)	–7 (19.4)	8 (46.4)	10 (50)	25 (77)
Engine coolant temperature at the last engine stop °C (°F)	83.1 (181.6)	83.1 (181.6)	83.1 (181.6)	83.1 (181.6)

4. GENERAL DRIVING CYCLE

Perform the diagnosis only once after starting the engine.

5. DIAGNOSTIC METHOD

- **Abnormality Judgment**

If the duration of time while the following conditions are met is longer than the time indicated, judge as NG.

Judgment Value

Malfunction Criteria	Threshold Value
All of the following conditions are established.	
Engine coolant temperature – intake air temperature	> 15°C (27°F)
Engine coolant temperature	> 40 °C (104 °F)

Time Needed for Diagnosis: 512 ms
Malfunction Indicator Light Illumination: Illuminates when malfunction occurs in 2 continuous driving cycles.

- **Normality Judgment**

Judge as OK and clear the NG if the continuous time while the following conditions are established is more than the predetermined time.

Judgment Value

Malfunction Criteria	Threshold Value
When any one of the followings is established.	
Engine coolant temperature – intake air temperature	≤ 15°C (27°F)
Engine coolant temperature	≤ 40 °C (104 °F)

Time Needed for Diagnosis: Less than 1 second

AH:DTC P0128 COOLANT THERMOSTAT (ENGINE COOLANT TEMPERATURE BELOW THERMOSTAT REGULATING TEMPERATURE)

1. OUTLINE OF DIAGNOSIS

Detect malfunctions of the thermostat function.
Judge as NG when any one of the following conditions is established.

- When the actual engine coolant temperature does not reach the maximum temperature necessary to perform other OBDII diagnosis and Σ (Estimated engine coolant temperature – actual engine coolant temperature) exceeded the predetermined value. (Judgment 1)
- When the actual engine coolant temperature does not reach the range within –11°C (–19.8°F) from the regulated temperature and Σ (Estimated engine coolant temperature – actual engine coolant temperature) exceeded the predetermined value. (Judgment 2)
- When the difference between the estimated coolant temperature and the actual engine coolant temperature exceeds the predetermined value, and Σ (Estimated engine coolant temperature – actual engine coolant temperature) exceeded the predetermined value. (Judgment 3)

2. COMPONENT DESCRIPTION

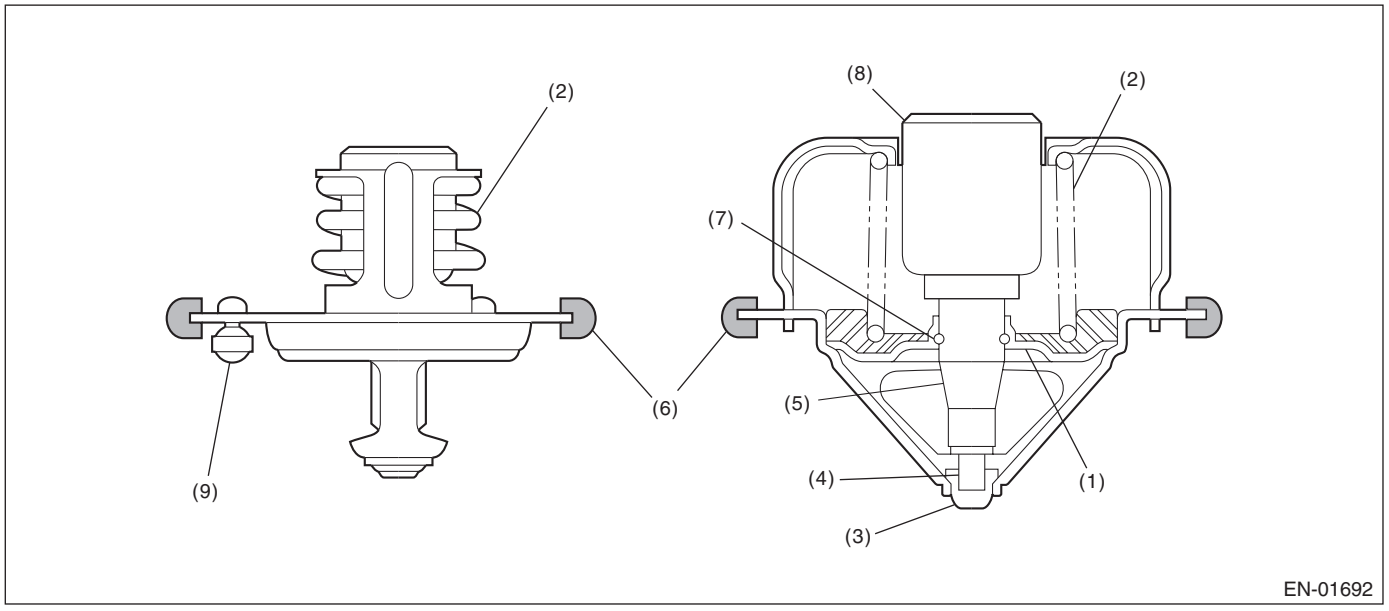

(1) Valve
(2) Spring
(3) Stopper
(4) Piston
(5) Guide
(6) Rubber seal
(7) Stop ring
(8) Wax element
(9) Jiggle valve

3. ENABLE CONDITION

Secondary Parameters	Enable Conditions
<Judgment 1>	
Battery voltage	≥ 10.9 V
Estimate ambient temperature	≥ –7 °C (19.4 °F)
Vehicle speed	≥ 30 km/h (18.6 MPH)
Estimated coolant temperature	≥ Value of Map 1
<Judgment 2>	
Battery voltage	≥ 10.9 V
Estimate ambient temperature	≥ –7 °C (19.4 °F)
Vehicle speed	≥ 30 km/h (18.6 MPH)
Estimated coolant temperature	≥ Value from Map 2
<Judgment 3>	
Battery voltage	≥ 10.9 V
Estimate ambient temperature	≥ –7 °C (19.4 °F)
Vehicle speed	≥ 30 km/h (18.6 MPH)
Estimated coolant temperature	≥ Value from Map 3

Map 1

Engine coolant temperature at engine starting °C (°F)	–7 (19.4)	8 (46.4)	10 (50)	25 (77)
Estimated coolant temperature °C (°F)	75 (167)	75 (167)	75 (167)	75 (167)

Map 2

Engine coolant temperature at engine starting °C (°F)	–7 (19.4)	8 (46.4)	10 (50)	25 (77)
Estimated coolant temperature °C (°F)	83.1 (181.6)	83.1 (181.6)	83.1 (181.6)	83.1 (181.6)

Map 3

Engine coolant temperature at engine starting °C (°F)	–7 (19.4)	10 (50)	25 (77)	44 (111.2)
Estimated coolant temperature °C (°F)	59.9 (139.8)	67.6 (153.7)	74.5 (166.1)	83.1 (181.6)

4. GENERAL DRIVING CYCLE

Perform the diagnosis only once after starting the engine.

5. DIAGNOSTIC METHOD

• Abnormality Judgment

If the duration of time while the following conditions are met is longer than the time indicated, judge as NG.

Judgment Value

Malfunction Criteria	Threshold Value
When any one of the followings is established.	
<Judgment 1>	
Actual engine coolant temperature and Σ (Estimated engine coolant temperature – actual engine coolant temperature)	< Value of Map 4 > Value of Map 5
<Judgment 2>	
Actual engine coolant temperature and Σ (Estimated engine coolant temperature – actual engine coolant temperature)	< Regulated temperature – Value of Map 6 > Value of Map 7
<Judgment 3>	
Estimated engine coolant temperature – actual engine coolant temperature and Σ (Estimated engine coolant temperature – actual engine coolant temperature)	> Value of Map 8 > Value of Map 9

Map 4

Estimate ambient temperature °C (°F)	–7 (19.4)	8 (46.4)	10 (50)	25 (77)
Threshold Value °C (°F)	75 (167)	75 (167)	75 (167)	75 (167)

Map 5

Engine coolant temperature at engine starting °C (°F)	–7 (19.4)	0 (32)	8 (46.4)	10 (50)	25 (77)	30 (86)	35 (95)
Threshold Value °C (°F)	1731.6 (3116.9)	1731.6 (3116.9)	1731.6 (3116.9)	1731.6 (3116.9)	1731.6 (3116.9)	1731.6 (3116.9)	1200 (2160)

Map 6

Estimate ambient temperature °C (°F)	–7 (19.4)	8 (46.4)	10 (50)	25 (77)
Threshold Value °C (°F)	11.1 (20)	11.1 (20)	11.1 (20)	11.1 (20)

Map 7

Engine coolant temperature at engine starting °C (°F)	–7 (19.4)	0 (32)	8 (46.4)	10 (50)	25 (77)	35 (95)	45 (113)
Threshold Value °C (°F)	1731.6 (3116.9)	1731.6 (3116.9)	1731.6 (3116.9)	1731.6 (3116.9)	1731.6 (3116.9)	1731.6 (3116.9)	1200 (2160)

Map 8

Estimate ambient temperature °C (°F)	–7 (19.4)	8 (46.4)	10 (50)	25 (77)
Threshold Value °C (°F)	11.1 (20)	11.1 (20)	11.1 (20)	11.1 (20)

Map 9

Engine coolant temperature at engine starting °C (°F)	–7 (19.4)	8 (46.4)	10 (50)	25 (77)
Threshold Value °C (°F)	1731.6 (3116.9)	1731.6 (3116.9)	1731.6 (3116.9)	1731.6 (3116.9)

Time Needed for Diagnosis: 300 — 700 seconds
Malfunction Indicator Light Illumination: Illuminates when malfunction occurs in 2 continuous driving cycles.

- **Normality Judgment**

Judge as OK and clear the NG if the continuous time while the following conditions are established is more than the predetermined time.

Judgment Value

Malfunction Criteria	Threshold Value
All of the following conditions are established.	
<Judgment 1>	
Actual engine coolant temperature and Σ (Estimated engine coolant temperature – actual engine coolant temperature)	≥ Value of Map 4 ≤ Value of Map 5
<Judgment 2>	
Actual engine coolant temperature and Σ (Estimated engine coolant temperature – actual engine coolant temperature)	≥ Regulated temperature – Value of Map 6 ≤ Value of Map 7
<Judgment 3>	
Estimated engine coolant temperature – actual engine coolant temperature and Σ (Estimated engine coolant temperature – actual engine coolant temperature) and Actual engine coolant temperature	≤ Value of Map 8 ≤ Value of Map 9 ≥ Regulated temperature – Value of Map 10

Map 10

Estimate ambient temperature °C (°F)	–7 (19.4)	8 (46.4)	10 (50)	25 (77)
Threshold Value °C (°F)	11.1 (20)	11.1 (20)	11.1 (20)	11.1 (20)

Time Needed for Diagnosis: 300 — 700 seconds

AI: DTC P0131 O2 SENSOR CIRCUIT LOW VOLTAGE (BANK 1 SENSOR 1)

1. OUTLINE OF DIAGNOSIS

Detect the open or short circuit of sensor.
Judge as NG, when the element voltage is out of the specified range.

2. COMPONENT DESCRIPTION

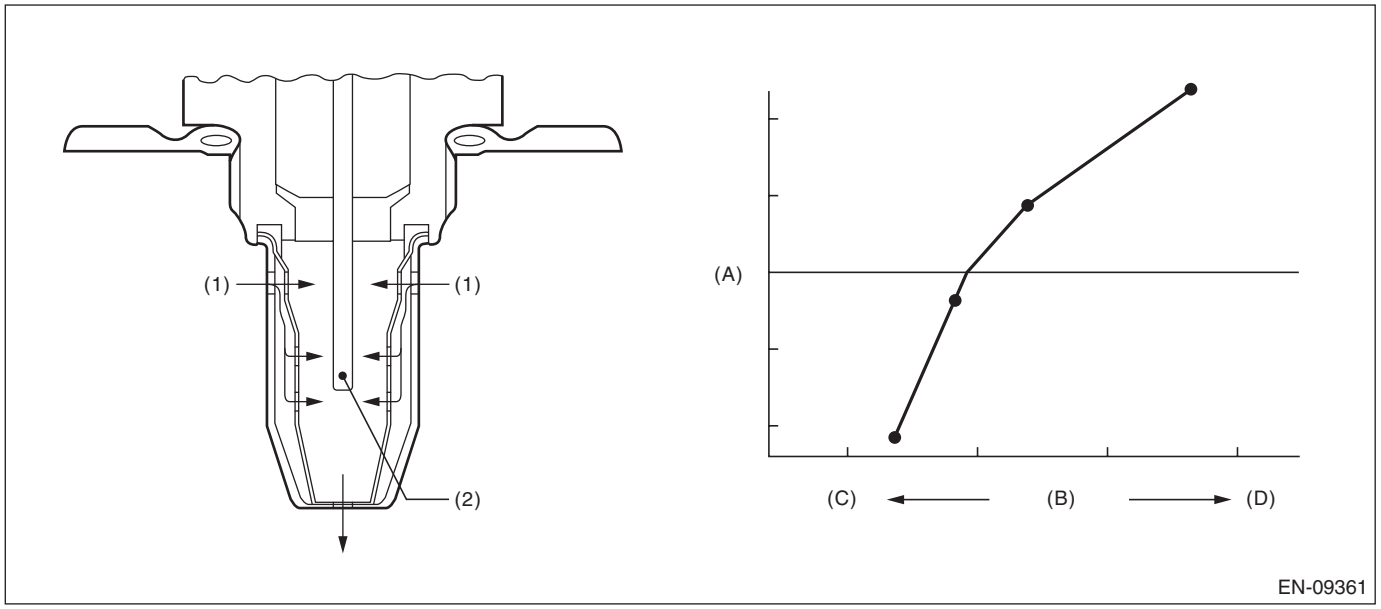

(A) Electromotive force (B) Air fuel ratio (C) Lean
(D) Rich

(1) Exhaust gas (2) ZrO_2

3. ENABLE CONDITION

Secondary Parameters	Enable Conditions
Battery voltage	≥ 10.9 V

4. GENERAL DRIVING CYCLE

Always perform the diagnosis continuously.

5. DIAGNOSTIC METHOD

- **Abnormality Judgment**

If the duration of time while the following conditions are met is longer than the time indicated, judge as NG.

Judgment Value

Malfunction Criteria	Threshold Value
Input voltage (+)	< 1.128 V
or	
Input voltage (–)	< 0.23 V
or	
|Input voltage (+) – Input voltage (–)|	< 0.644 V

Time Needed for Diagnosis:
Input voltage (+): 1000 ms
Input voltage (–): 1000 ms
|Input voltage (+) – Input voltage (–)|: 1000 ms
Malfunction Indicator Light Illumination: Illuminates as soon as a malfunction occurs.

- **Normality Judgment**

Judge as OK and clear the NG if the continuous time while the following conditions are established is more than the predetermined time.

Judgment Value

Malfunction Criteria	Threshold Value
Input voltage (+)	≥ 1.128 V
Input voltage (–)	≥ 0.23 V
|Input voltage (+) – Input voltage (–)|	≥ 0.644 V

Time Needed for Diagnosis: Less than 1 second

AJ:DTC P0132 O2 SENSOR CIRCUIT HIGH VOLTAGE (BANK 1 SENSOR 1)

1. OUTLINE OF DIAGNOSIS

Detect the open or short circuit of sensor.
Judge as NG, when the element voltage is out of the specified range.

2. COMPONENT DESCRIPTION

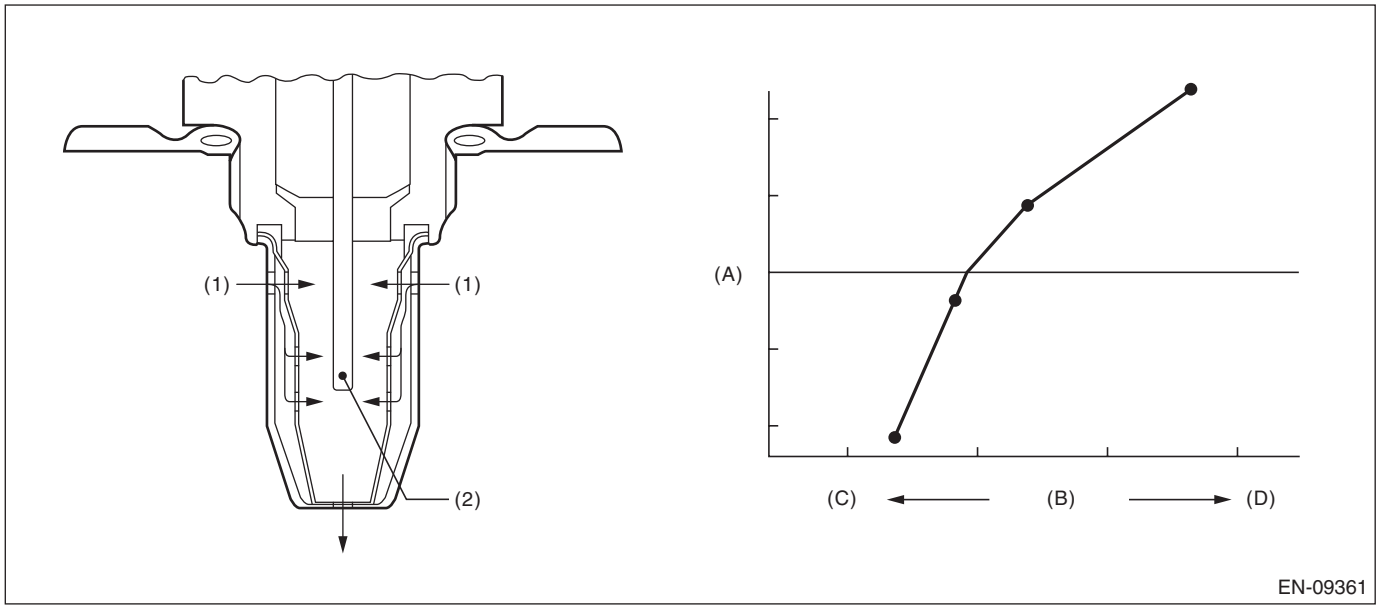

(A) Electromotive force (B) Air fuel ratio (C) Lean
(D) Rich

(1) Exhaust gas (2) ZrO_2

3. ENABLE CONDITION

Secondary Parameters	Enable Conditions
Battery voltage	≥ 10.9 V

4. GENERAL DRIVING CYCLE

Always perform the diagnosis continuously.

5. DIAGNOSTIC METHOD

- **Abnormality Judgment**

If the duration of time while the following conditions are met is longer than the time indicated, judge as NG.

Judgment Value

Malfunction Criteria	Threshold Value
Input voltage (+)	> 3.589 V
or	
Input voltage (–)	> 3.541 V

Time Needed for Diagnosis:
Input voltage (+): 1000 ms
Input voltage (–): 1000 ms
Malfunction Indicator Light Illumination: Illuminates as soon as a malfunction occurs.

- **Normality Judgment**

Judge as OK and clear the NG if the continuous time while the following conditions are established is more than the predetermined time.

Judgment Value

Malfunction Criteria	Threshold Value
Input voltage (+)	≤ 3.589 V
Input voltage (–)	≤ 3.541 V

Time Needed for Diagnosis: Less than 1 second

AK:DTC P0134 O2 SENSOR CIRCUIT NO ACTIVITY DETECTED (BANK 1 SENSOR 1)

1. OUTLINE OF DIAGNOSIS

Detect open circuits of the sensor.
Judge as NG when the impedance of the element is large.

2. COMPONENT DESCRIPTION

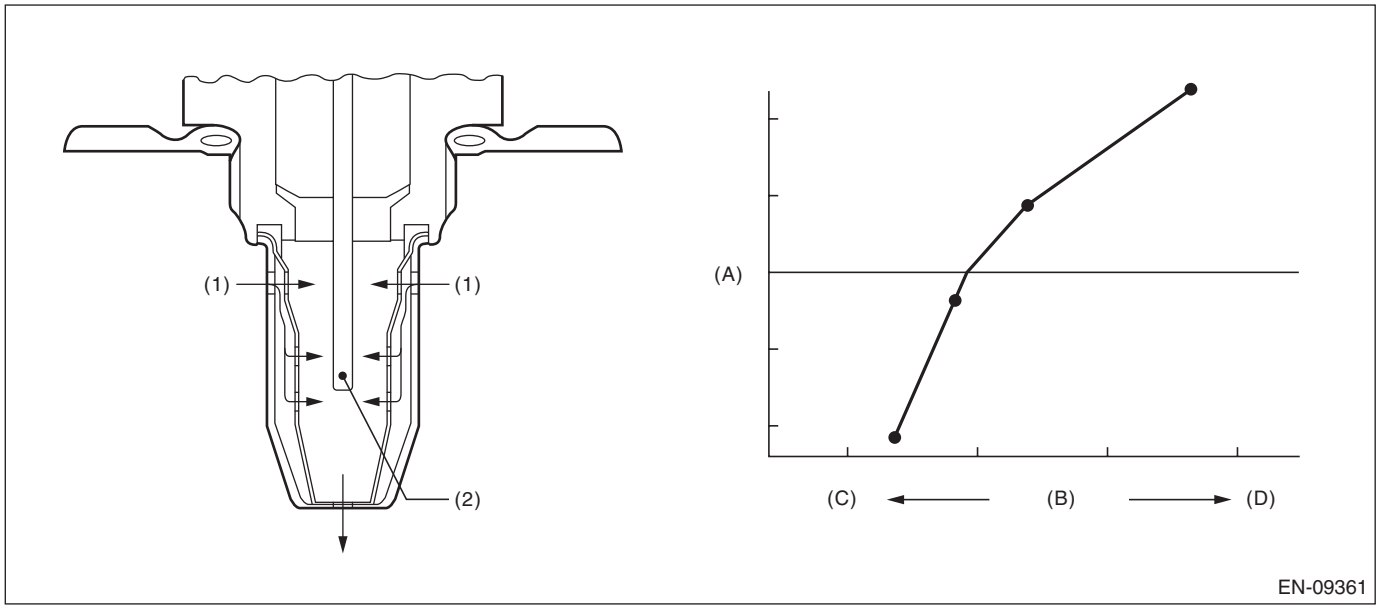

(A) Electromotive force (B) Air fuel ratio (C) Lean
(D) Rich

(1) Exhaust gas (2) ZrO_2

3. ENABLE CONDITION

Secondary Parameters	Enable Conditions
None	

4. GENERAL DRIVING CYCLE

Always perform the diagnosis continuously.

5. DIAGNOSTIC METHOD

• Abnormality Judgment

If the duration of time while the following conditions are met is longer than the time indicated, judge as NG.

Judgment Value

Malfunction Criteria	Threshold Value
Battery voltage	≥ 10.9 V
Time of heater control duty at 70 % or more	≥ 30000 ms
Front oxygen (A/F) sensor impedance.	> 500 Ω

Time Needed for Diagnosis: 5000 ms
Malfunction Indicator Light Illumination: Illuminates as soon as a malfunction occurs.

• Normality Judgment

Judge as OK and clear the NG if the continuous time while the following conditions are established is more than the predetermined time.

Judgment Value

Malfunction Criteria	Threshold Value
Battery voltage	≥ 10.9 V
Front oxygen (A/F) sensor impedance.	≤ 500 Ω

Time Needed for Diagnosis: Less than 1 second

AL:DTC P0137 O2 SENSOR CIRCUIT LOW VOLTAGE (BANK 1 SENSOR 2)

1. OUTLINE OF DIAGNOSIS

Detect continuity NG of the oxygen sensor. If the oxygen sensor voltage reading is not within the probable range considering the operating conditions, judge as NG.

2. COMPONENT DESCRIPTION

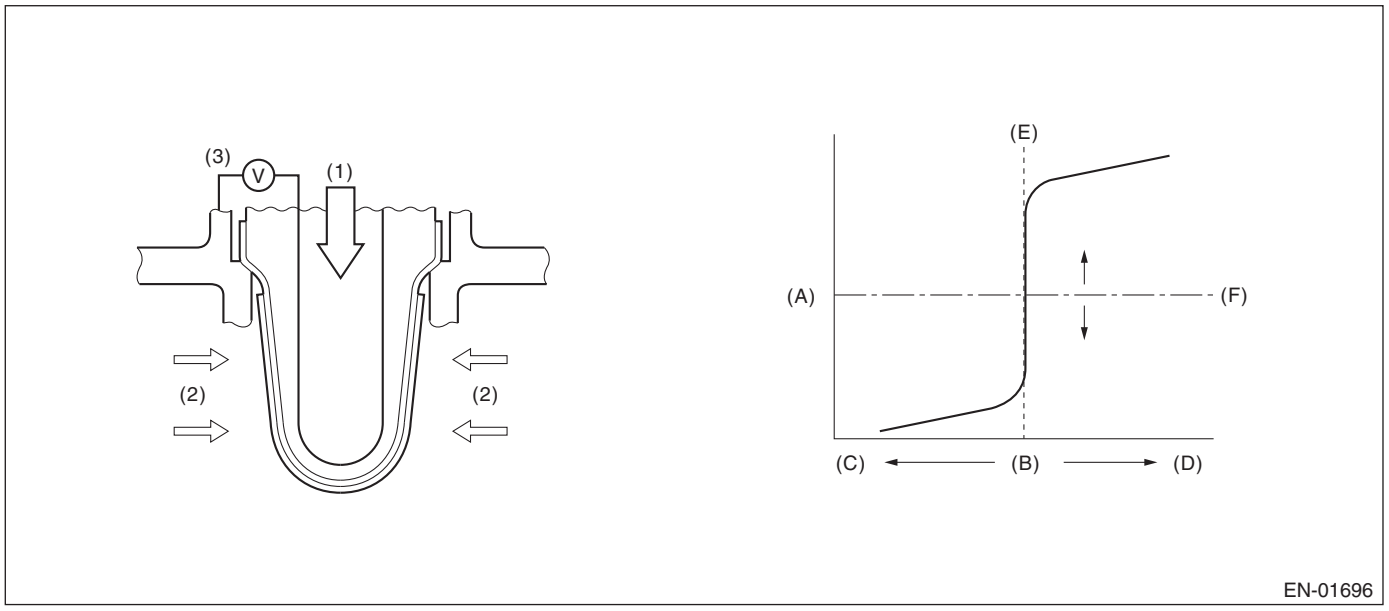

(A)	Electromotive force	(B)	Air fuel ratio	(C)	Rich
(D)	Lean	(E)	Theoretical air fuel ratio	(F)	Comparative voltage
(1)	Atmosphere	(2)	Exhaust gas	(3)	Electromotive force

3. ENABLE CONDITION

Used for abnormality judgment

Secondary Parameters	Enable Conditions
High	
Secondary air system	Not in operation
Closed loop control at the oxygen sensor	In operation
Misfire detection every 200 rotations	< 65535 time(s)
Front oxygen (A/F) sensor compensation coefficient	Not in limit value
Battery voltage	≥ 10.9 V
Engine coolant temperature	≥ 75 °C (167 °F)
Low (1)	
Secondary air system	Not in operation
Closed loop control at the oxygen sensor	In operation
Misfire detection every 200 rotations	< 65535 time(s)
Front oxygen (A/F) sensor compensation coefficient	Not in limit value
Battery voltage	≥ 10.9 V
Engine coolant temperature	≥ 75 °C (167 °F)
Amount of intake air	≥ 10 g/s (0.35 oz/s)
Low (2)	
Secondary air system	Not in operation
Closed loop control at the oxygen sensor	In operation
Misfire detection every 200 rotations	< 65535 time(s)
Front oxygen (A/F) sensor compensation coefficient	Not in limit value
Battery voltage	≥ 10.9 V
Engine coolant temperature	≥ 75 °C (167 °F)
Amount of intake air	< 10 g/s (0.35 oz/s)
Current continuation time of the rear oxygen sensor heater	≥ 25000 ms
Low (3)	
Secondary air system	Not in operation
Closed loop control at the oxygen sensor	In operation
Misfire detection every 200 rotations	< 65535 time(s)
Front oxygen (A/F) sensor compensation coefficient	Not in limit value
Battery voltage	≥ 10.9 V
Engine coolant temperature	≥ 75 °C (167 °F)
Amount of intake air	< 10 g/s (0.35 oz/s)
Current continuation time of the rear oxygen sensor heater	≥ 25000 ms
Fuel cut	Experienced

Used for normality judgment

Secondary Parameters	Enable Conditions
Secondary air system	Not in operation
Closed loop control at the oxygen sensor	In operation
Misfire detection every 200 rotations	< 65535 time(s)
Front oxygen (A/F) sensor compensation coefficient	Not in limit value
Battery voltage	≥ 10.9 V
Engine coolant temperature	≥ 75 °C (167 °F)

4. GENERAL DRIVING CYCLE

After starting the engine, continuously perform the diagnosis with the same engine condition.

5. DIAGNOSTIC METHOD

• Abnormality Judgment

If the duration of time while the following conditions are met is longer than the time indicated, judge as NG.

Judgment Value

Malfunction Criteria	Threshold Value	DTC
High		P0138
Sensor output voltage	> 1.2 V	P0158
Low		P0137
Sensor output voltage	< 0.03 V	P0157

Time Needed for Diagnosis:

High: 2500 ms
Low (1): 20000 ms
Low (2): 40000 ms
Low (3): Value from Map

Map

Fuel cut time (s)	0	2000	10000
Time Needed for Diagnosis (s)	40000	40000	60000

Malfunction Indicator Light Illumination: Illuminates when malfunction occurs in 2 continuous driving cycles.

• Normality Judgment

Judge as OK and clear the NG if the continuous time while the following conditions are established is more than the predetermined time.

Judgment Value

Malfunction Criteria	Threshold Value	DTC
High		P0138
Sensor output voltage	≤ 1.2 V	P0158
Low		P0137
Sensor output voltage	≥ 0.03 V	P0157

Time Needed for Diagnosis:

High: Less than 1 second
Low (1): Less than 1 second
Low (2): Less than 1 second
Low (3): Less than 1 second

AM:DTC P0138 O2 SENSOR CIRCUIT HIGH VOLTAGE (BANK 1 SENSOR 2)

1. OUTLINE OF DIAGNOSIS

NOTE:
For the detection standard, refer to DTC P0137. <Ref. to GD(H6DO)-72, DTC P0137 O2 SENSOR CIRCUIT LOW VOLTAGE (BANK 1 SENSOR 2), Diagnostic Trouble Code (DTC) Detecting Criteria.>

AN:DTC P013A O2 SENSOR SLOW RESPONSE - RICH TO LEAN (BANK 1 SENSOR 2)

1. OUTLINE OF DIAGNOSIS

Detect the slow response of rich → lean for rear oxygen sensor output.
When the deceleration fuel cut has occurred, detect the trouble by calculating the time when the rear oxygen sensor output passes through the predetermined range of voltages.
Judge as NG when the response time is larger than the threshold value.

2. COMPONENT DESCRIPTION

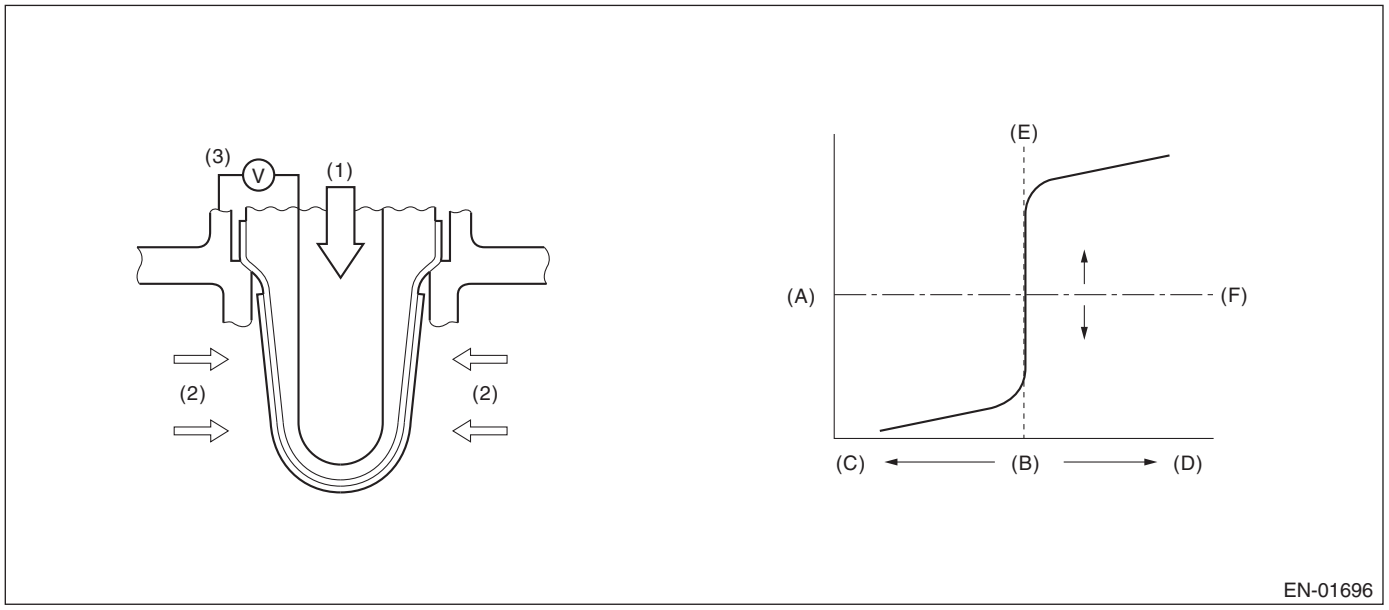

(A)	Electromotive force	(B)	Air fuel ratio	(C)	Rich
(D)	Lean	(E)	Theoretical air fuel ratio	(F)	Comparative voltage
(1)	Atmosphere	(2)	Exhaust gas	(3)	Electromotive force

3. ENABLE CONDITIONS

Secondary Parameters	Enable Conditions
Battery voltage	> 10.9 V
Rear oxygen sensor closed loop control	Operation
Current calculation time of the rear oxygen sensor heater after starting	≥ 180000 ms
Engine speed when fuel cut starts	≥ 1400 rpm
Rear oxygen sensor voltage when fuel cut starts	≥ 0.55 V
Fuel cut time	≥ 5000 ms
Engine coolant temperature when fuel cut starts	≥ 75 °C (167 °F)
Estimated temperature of rear oxygen sensor element when fuel cut starts	≥ 480 °C (896 °F)

4. GENERAL DRIVING CYCLE

Perform diagnosis once during deceleration fuel cut from a constant and high speed driving, when rear oxygen sensor is warmed up sufficiently.

5. DIAGNOSTIC METHOD

Detect the trouble by calculating the response time of the rear oxygen sensor during fuel cut.

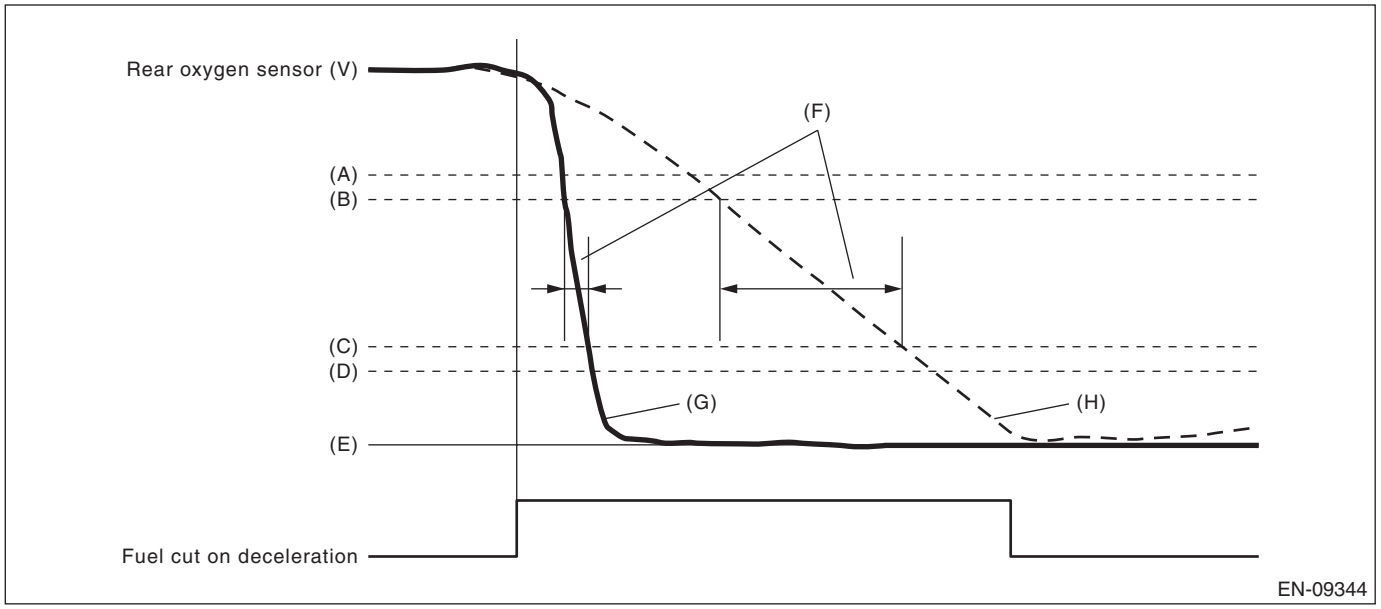

(A) 0.55 V
(B) 0.50 V
(C) 0.20 V
(D) 0.15 V
(E) 0 V
(F) Diagnostic parameter
(G) Normal
(H) Malfunction

- **Abnormality Judgment**

Judge as NG when the following conditions are established.

Judgment Value

Malfunction Criteria	Threshold Value
Time when rear oxygen sensor voltage changed from 0.5 V to 0.2 V.	> 491 ms

Time Needed for Diagnosis: 10 seconds
Malfunction Indicator Light Illumination: Illuminates when malfunction occurs in 2 continuous driving cycles.

- **Normality Judgment**

Judge as OK and clear the NG if the following conditions are established.

Judgment Value

Malfunction Criteria	Threshold Value
Time when rear oxygen sensor voltage changed from 0.5 V to 0.2 V.	≤ 491 ms

Time Needed for Diagnosis: 10 seconds

AO:DTC P013B O2 SENSOR SLOW RESPONSE - LEAN TO RICH (BANK 1 SENSOR 2)

1. OUTLINE OF DIAGNOSIS

Detect the slow response of lean → rich for rear oxygen sensor output.
After the deceleration fuel cut has occurred, detect the trouble by calculating the time when the rear oxygen sensor output passes through the predetermined range of voltages.
Judge as NG when the response time is larger than the threshold value.

2. COMPONENT DESCRIPTION

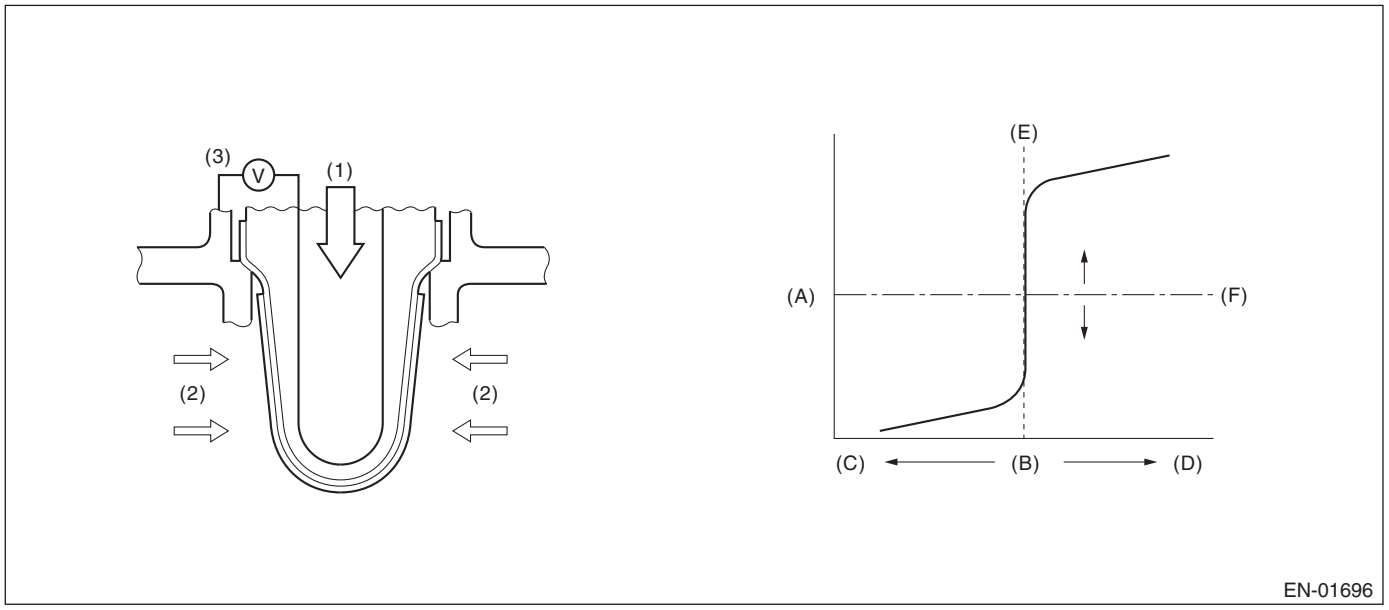

(A)	Electromotive force	(B)	Air fuel ratio	(C)	Rich
(D)	Lean	(E)	Theoretical air fuel ratio	(F)	Comparative voltage
(1)	Atmosphere	(2)	Exhaust gas	(3)	Electromotive force

3. ENABLE CONDITIONS

Secondary Parameters	Enable Conditions
Battery voltage	> 10.9 V
Rear oxygen sensor closed loop control	Operation
Fuel cut time	≥ 5000 ms

4. GENERAL DRIVING CYCLE

Perform diagnosis only once after recovering from a deceleration fuel cut continued for more than predetermined time.

5. DIAGNOSTIC METHOD

Detect the trouble by calculating the response time of the rear oxygen sensor after fuel cut.

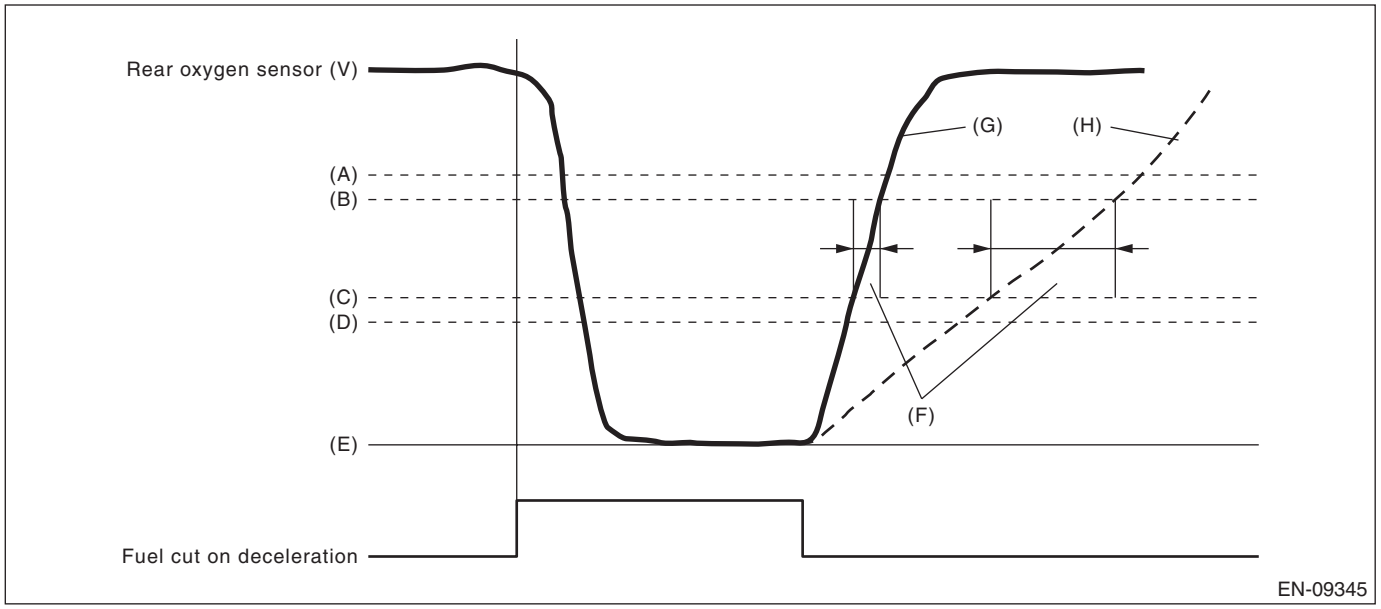

(A) 0.55 V
(B) 0.50 V
(C) 0.30 V
(D) 0.25 V
(E) 0 V
(F) Diagnostic parameter
(G) Normal
(H) Malfunction

- **Abnormality Judgment**

Judge as NG when the following conditions are established.

Judgment Value

Malfunction Criteria	Threshold Value
Time when rear oxygen sensor voltage changed from 0.3 V to 0.5 V.	> 4000 ms

Time Needed for Diagnosis: 10 seconds
Malfunction Indicator Light Illumination: Illuminates when malfunction occurs in 2 continuous driving cycles.

- **Normality Judgment**

Judge as OK and clear the NG if the following conditions are established.

Judgment Value

Malfunction Criteria	Threshold Value
Time when rear oxygen sensor voltage changed from 0.3 V to 0.5 V.	≤ 4000 ms

Time Needed for Diagnosis: 10 seconds

AP:DTC P013C O2 SENSOR SLOW RESPONSE - RICH TO LEAN (BANK 2 SENSOR 2)

1. OUTLINE OF DIAGNOSIS

NOTE:
For the detection standard, refer to DTC P013A. <Ref. to GD(H6DO)-76, DTC P013A O2 SENSOR SLOW RESPONSE - RICH TO LEAN (BANK 1 SENSOR 2), Diagnostic Trouble Code (DTC) Detecting Criteria.>

AQ:DTC P013D O2 SENSOR SLOW RESPONSE - LEAN TO RICH (BANK 2 SENSOR 2)

1. OUTLINE OF DIAGNOSIS

NOTE:
For the detection standard, refer to DTC P013B. <Ref. to GD(H6DO)-78, DTC P013B O2 SENSOR SLOW RESPONSE - LEAN TO RICH (BANK 1 SENSOR 2), Diagnostic Trouble Code (DTC) Detecting Criteria.>

AR:DTC P013E O2 SENSOR DELAYED RESPONSE - RICH TO LEAN (BANK 1 SENSOR 2)

1. OUTLINE OF DIAGNOSIS

Detect the delayed response of rear oxygen sensor output for rich → lean.
After the deceleration fuel cut has started, detect the trouble by calculating the time when the rear oxygen sensor output decreases to the predetermined voltages.
Judge as NG when the response time is larger than the threshold value.

2. COMPONENT DESCRIPTION

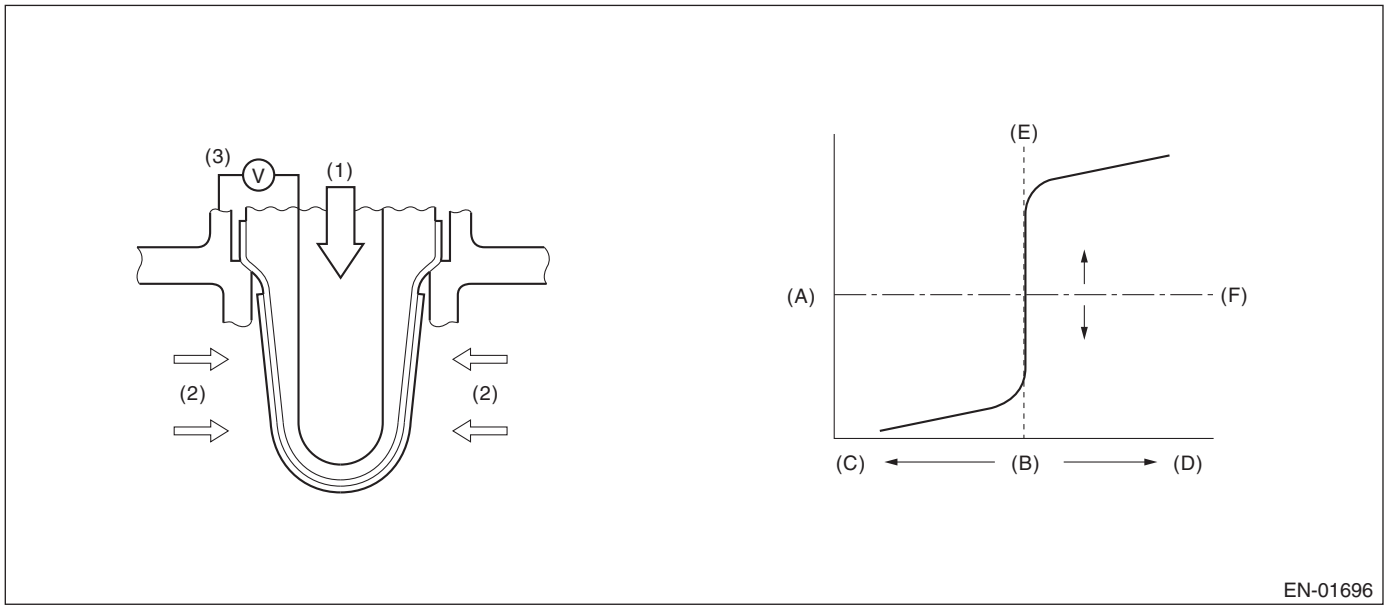

(A)	Electromotive force	(B)	Air fuel ratio	(C)	Rich
(D)	Lean	(E)	Theoretical air fuel ratio	(F)	Comparative voltage
(1)	Atmosphere	(2)	Exhaust gas	(3)	Electromotive force

3. ENABLE CONDITIONS

Secondary Parameters	Enable Conditions
Battery voltage	> 10.9 V
Rear oxygen sensor closed loop control	Operation
Engine speed when fuel cut starts	≥ 1400 rpm
Rear oxygen sensor voltage when fuel cut starts	≥ 0.55 V
Fuel cut time	≥ 5000 ms
Engine coolant temperature when fuel cut starts	≥ 75 °C (167 °F)
Estimated temperature of rear oxygen sensor element when fuel cut starts	≥ 480 °C (896 °F)

4. GENERAL DRIVING CYCLE

Perform diagnosis once during deceleration fuel cut from a constant and high speed driving, when rear oxygen sensor is warmed up sufficiently.

5. DIAGNOSTIC METHOD

Detect the trouble by calculating the time from the beginning of the fuel cut to the beginning of the rear oxygen sensor voltage starting to drop.

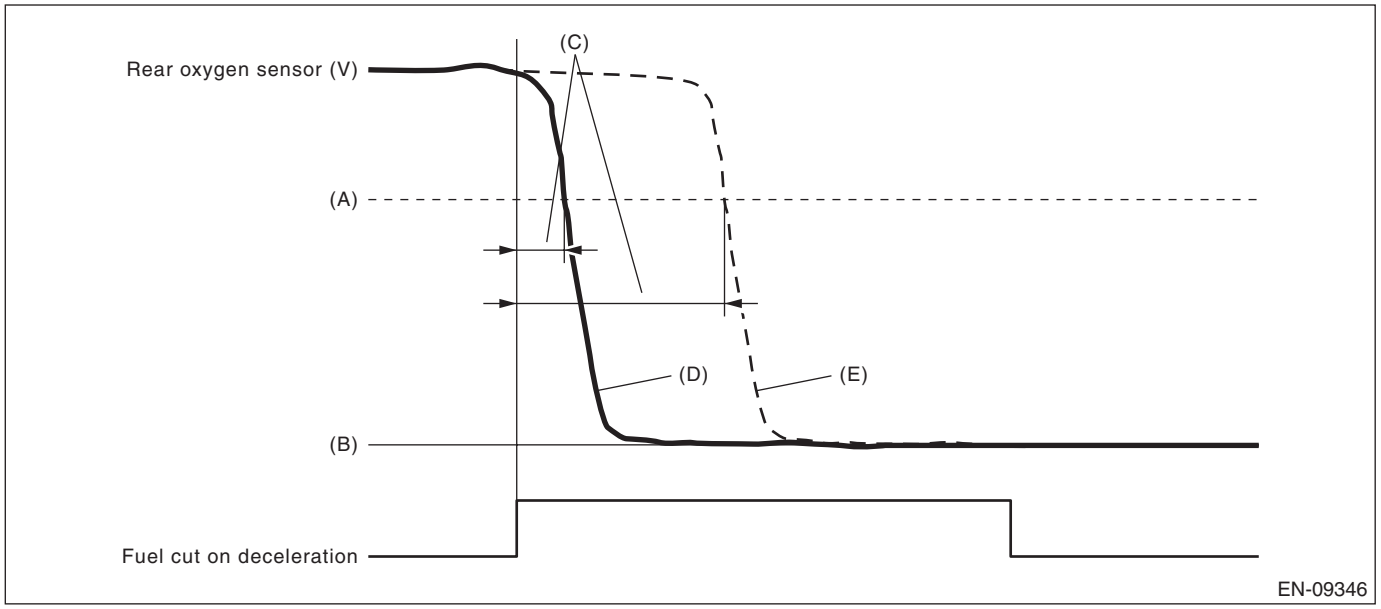

(A) 0.5 V
(B) 0 V
(C) Diagnostic parameter
(D) Normal
(E) Malfunction

• Abnormality Judgment

Judge as NG when the following conditions are established.

Judgment Value

Malfunction Criteria	Threshold Value
Time when rear oxygen sensor voltage changed to 0.5 V after the fuel cut started.	> 4000 ms

Time Needed for Diagnosis: 10 seconds
Malfunction Indicator Light Illumination: Illuminates when malfunction occurs in 2 continuous driving cycles.

• Normality Judgment

Judge as OK and clear the NG if the following conditions are established.

Judgment Value

Malfunction Criteria	Threshold Value
Time when rear oxygen sensor voltage changed to 0.5 V after the fuel cut started.	≤ 4000 ms

Time Needed for Diagnosis: 10 seconds

AS:DTC P013F O2 SENSOR DELAYED RESPONSE - LEAN TO RICH (BANK 1 SENSOR 2)

1. OUTLINE OF DIAGNOSIS

Detect the delayed response of rear oxygen sensor output for lean → rich.
After the deceleration fuel cut has completed, detect the trouble by calculating the time when the rear oxygen sensor output increases to the predetermined voltages.
Judge as NG when the response time is larger than the threshold value.

2. COMPONENT DESCRIPTION

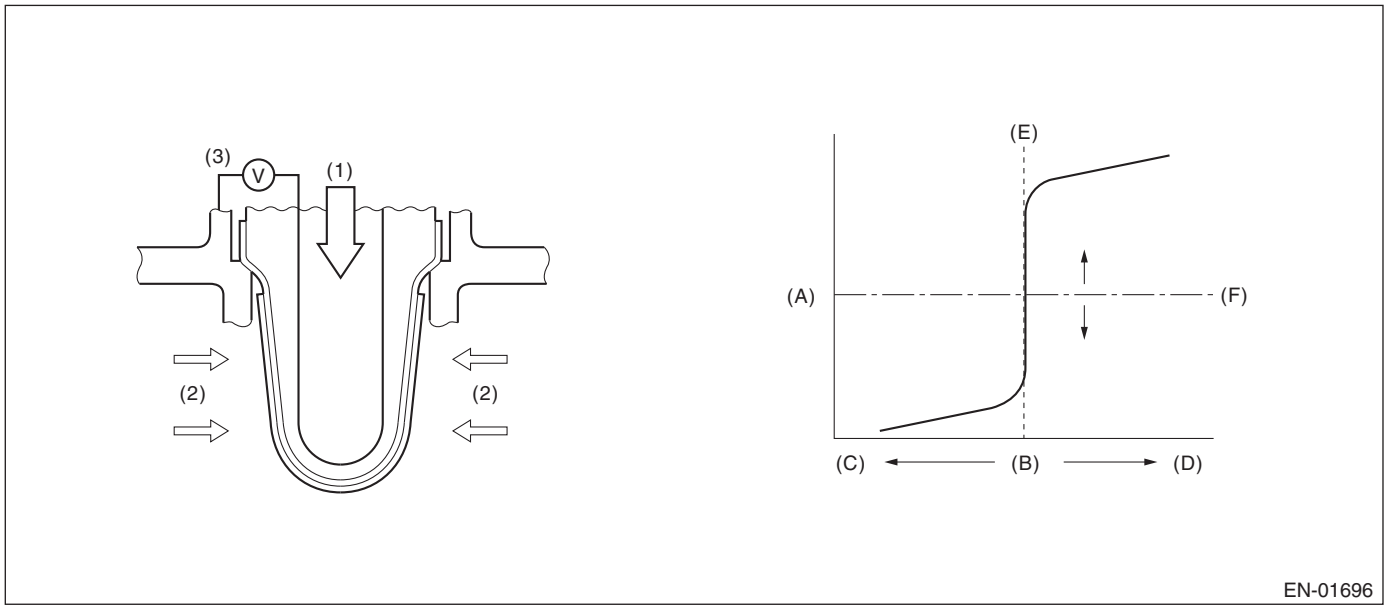

(A)	Electromotive force	(B)	Air fuel ratio	(C)	Rich
(D)	Lean	(E)	Theoretical air fuel ratio	(F)	Comparative voltage
(1)	Atmosphere	(2)	Exhaust gas	(3)	Electromotive force

3. ENABLE CONDITIONS

Secondary Parameters	Enable Conditions
Battery voltage	> 10.9 V
Rear oxygen sensor closed loop control	Operation
Engine speed	≥ 500 rpm
Rear oxygen sensor voltage when fuel cut has completed	< 0.15 V
Fuel cut time	≥ 5000 ms
Engine coolant temperature when fuel cut has completed	≥ 75 °C (167 °F)
Estimated element temperature of rear oxygen sensor when fuel cut has completed	≥ 480 °C (896 °F)

4. GENERAL DRIVING CYCLE

Perform diagnosis only once when recovering from the deceleration fuel cut continued for more than predetermined time with the rear oxygen sensor warmed up sufficiently.

5. DIAGNOSTIC METHOD

Detect the trouble by calculating the time from the completion of the fuel cut to the beginning of the rear oxygen sensor voltage starting to rise.

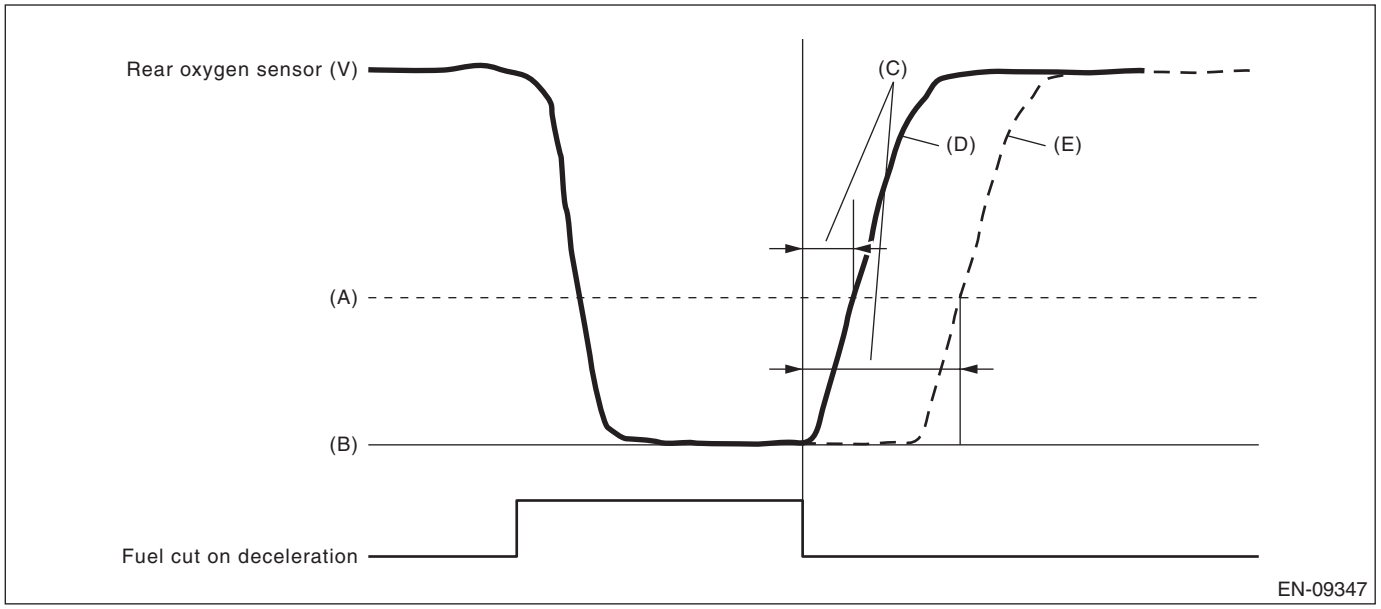

(A) 0.3 V
(B) 0 V
(C) Diagnostic parameter
(D) Normal
(E) Malfunction

• Abnormality Judgment

Judge as NG when the following conditions are established.

Judgment Value

Malfunction Criteria	Threshold Value
The number of times that the rear oxygen sensor voltage changed to 0.3 V after the fuel cut has completed (time counter)	> 3750 time(s)

Time Needed for Diagnosis: 10 seconds
Malfunction Indicator Light Illumination: Illuminates when malfunction occurs in 2 continuous driving cycles.

• Normality Judgment

Judge as OK and clear the NG if the following conditions are established.

Judgment Value

Malfunction Criteria	Threshold Value
The number of times that the rear oxygen sensor voltage changed to 0.3 V after the fuel cut has completed (time counter)	≤ 3750 time(s)

Time Needed for Diagnosis: 10 seconds

AT:DTC P0140 O2 SENSOR CIRCUIT NO ACTIVITY DETECTED (BANK1 SENSOR2)

1. OUTLINE OF DIAGNOSIS

Detect the rear oxygen sensor open or short circuit. Judge as NG when the rear oxygen sensor voltage can be determined to be abnormal considering conditions such as intake air amount, engine coolant temperature, main feedback control and deceleration fuel cut.

2. COMPONENT DESCRIPTION

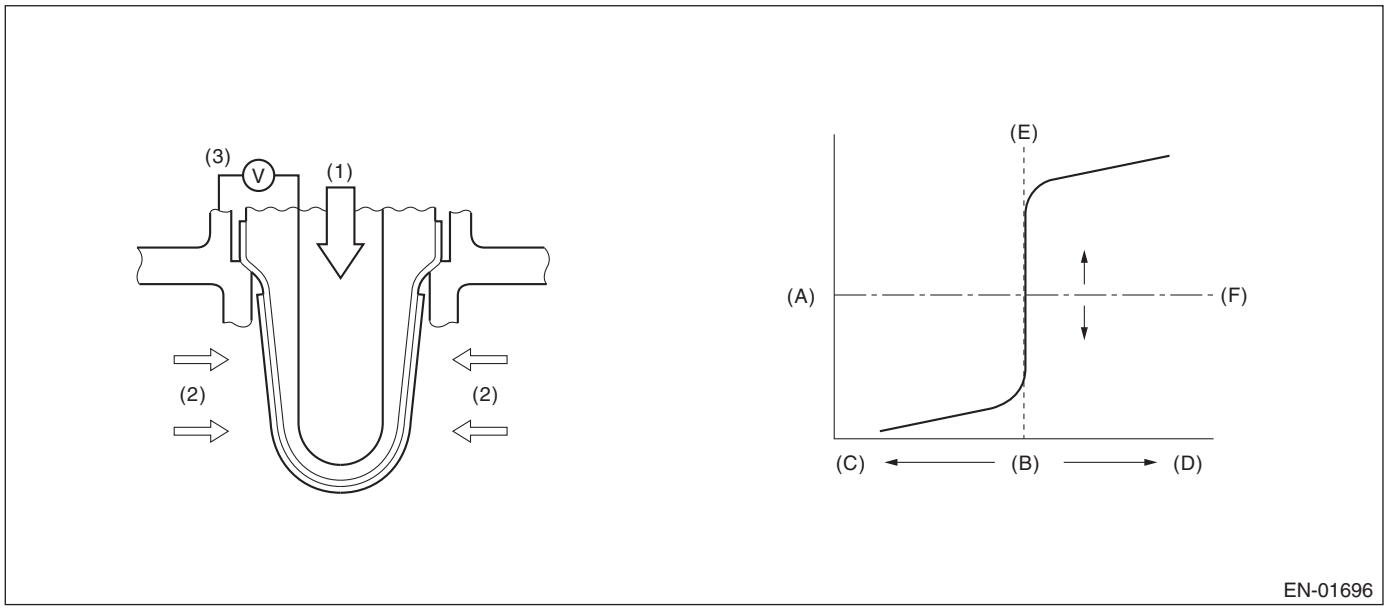

(A)	Electromotive force	(B)	Air fuel ratio	(C)	Rich
(D)	Lean	(E)	Theoretical air fuel ratio	(F)	Comparative voltage
(1)	Atmosphere	(2)	Exhaust gas	(3)	Electromotive force

3. ENABLE CONDITION (USED ONLY FOR MALFUNCTION JUDGMENT)

Secondary Parameters	Enable Conditions
Closed loop control at the rear oxygen sensor	In operation
Target output voltage of rear oxygen sensor	≥ 0.55 V + 0.05 V
Amount of intake air	≥ 10 g/s (0.35 oz/s)
Engine coolant temperature	≥ 75 °C (167 °F)
Misfire detection every 200 rotations	< 65535 time(s)
Front oxygen (A/F) sensor compensation coefficient	Not in limit value
Battery voltage	≥ 10.9 V
Deceleration fuel cut of 5000 ms or more.	Experienced

4. GENERAL DRIVING CYCLE

Perform the diagnosis once after starting the engine.

5. DIAGNOSTIC METHOD

• Abnormality Judgment

If the duration of time while the following conditions are met is longer than the time indicated, judge as NG.

Judgment Value

Malfunction Criteria	Threshold Value
Minimum output voltage	> 0.15 V
or	
Maximum output voltage	< 0.55 V

Time Needed for Diagnosis: 200000 ms
Malfunction Indicator Light Illumination: Illuminates when malfunction occurs in 2 continuous driving cycles.

• Normality Judgment

Judge as OK and clear the NG if the following conditions are established.

Judgment Value

Malfunction Criteria	Threshold Value
Diagnosis of the rear oxygen sensor voltage low side	Incomplete
Minimum output voltage	≤ 0.15 V
Maximum output voltage	≥ 0.55 V

AU:DTC P0141 O2 SENSOR HEATER CIRCUIT (BANK1 SENSOR2)

1. OUTLINE OF DIAGNOSIS

Detect the malfunction of rear oxygen sensor heater.
While observing the engine condition, judge as NG if the rear oxygen sensor impedance is great.

2. COMPONENT DESCRIPTION

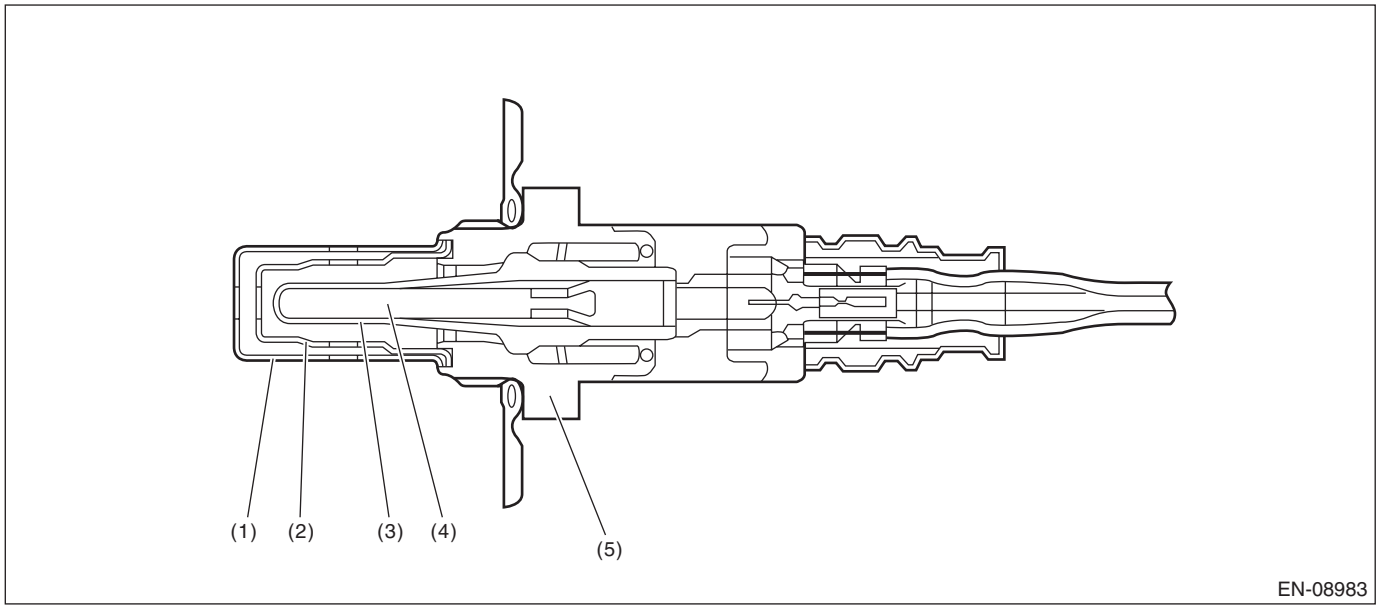

(1) Element cover (outer)
(2) Element cover (inner)
(3) Sensor element
(4) Ceramic heater
(5) Sensor housing

3. ENABLE CONDITIONS

Secondary Parameters	Enable Conditions
Battery voltage	≥ 10.9 V
Elapsed time after starting the engine	≥ 1000 ms
Engine coolant temperature	≥ 75 °C (167 °F)
A/F sensor element impedance	≤ 50 Ω
A/F sensor heater control duty	≤ 75 %
Rear oxygen sensor heater control duty	< 70 %

4. GENERAL DRIVING CYCLE

Perform the diagnosis continuously 1000 ms or more after starting the engine.

5. DIAGNOSTIC METHOD

• Abnormality Judgment

If the duration of time while the following conditions are met is longer than the time indicated, judge as NG.

Judgment Value

Malfunction Criteria	Threshold Value
Output terminal for heater characteristics failure detection	Low

Time Needed for Diagnosis: 4 ms × 2500 time(s)
Malfunction Indicator Light Illumination: Illuminates when malfunction occurs in 2 continuous driving cycles.

• Normality Judgment

Judge as OK and clear the NG if the continuous time while the following conditions are established is more than the predetermined time.

Judgment Value

Malfunction Criteria	Threshold Value
Output terminal for heater characteristics failure detection	High

Time Needed for Diagnosis: 4 ms × 2500 time(s)

AV:DTC P014A O2 SENSOR DELAYED RESPONSE - RICH TO LEAN (BANK 2 SENSOR 2)

1. OUTLINE OF DIAGNOSIS

NOTE:
For the detection standard, refer to DTC P013E. <Ref. to GD(H6DO)-81, DTC P013E O2 SENSOR DELAYED RESPONSE - RICH TO LEAN (BANK 1 SENSOR 2), Diagnostic Trouble Code (DTC) Detecting Criteria.>

AW:DTC P014B O2 SENSOR DELAYED RESPONSE - LEAN TO RICH (BANK 2 SENSOR 2)

1. OUTLINE OF DIAGNOSIS

NOTE:
For the detection standard, refer to DTC P013F. <Ref. to GD(H6DO)-83, DTC P013F O2 SENSOR DELAYED RESPONSE - LEAN TO RICH (BANK 1 SENSOR 2), Diagnostic Trouble Code (DTC) Detecting Criteria.>

AX:DTC P014C O2 SENSOR SLOW RESPONSE - RICH TO LEAN (BANK 1 SENSOR 1)

1. OUTLINE OF DIAGNOSIS

Detect the slow response of front oxygen (A/F) sensor.
For diagnosis, detect the trouble by processing the λ waveform in normal driving without forcibly changing the target air fuel ratio.

2. COMPONENT DESCRIPTION

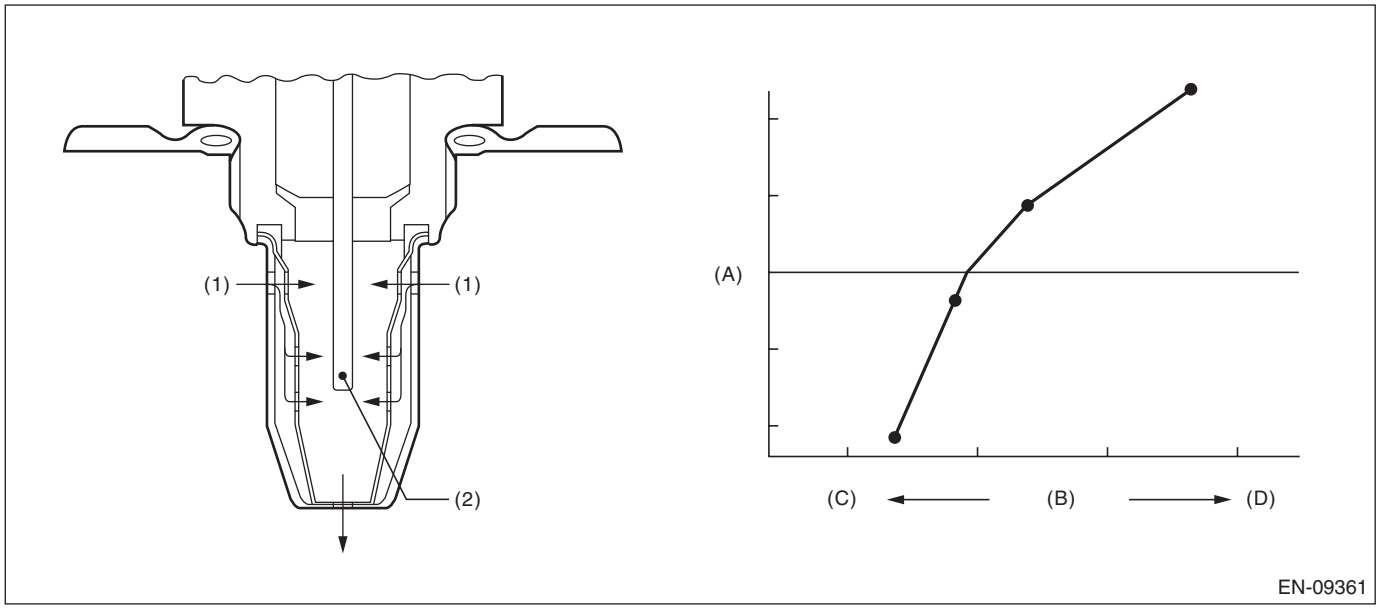

(A) Electromotive force
(B) Air fuel ratio
(C) Lean
(D) Rich

(1) Exhaust gas
(2) ZrO_2

3. ENABLE CONDITIONS

Secondary Parameters	Enable Conditions
Battery voltage	> 10.9 V
Closed loop control with main feedback	Operation
Front oxygen (A/F) sensor impedance	≥ 0 Ω and < 50 Ω
Elapsed time after starting the engine	≥ 40000 ms
Engine coolant temperature	≥ 0 °C (32 °F)
Engine speed	≥ 1000 rpm
Amount of intake air	≥ 10 g/s (0.35 oz/s)
After fuel cut	≥ 3000 ms
Learning value of EVAP conc. during purge	< 0.2
Total time of operating canister purge	≥ 20 s
Engine load change	< 0.02 g/rev (0 oz/rev)
Idle switch	OFF

4. GENERAL DRIVING CYCLE

Perform diagnosis only once in a city driving including normal acceleration and deceleration.

5. DIAGNOSTIC METHOD 1

Detect the malfunction by checking “Cumulative value of time when λ changes from lean → rich” in comparison to “Time during which diagnosis is in progress”.

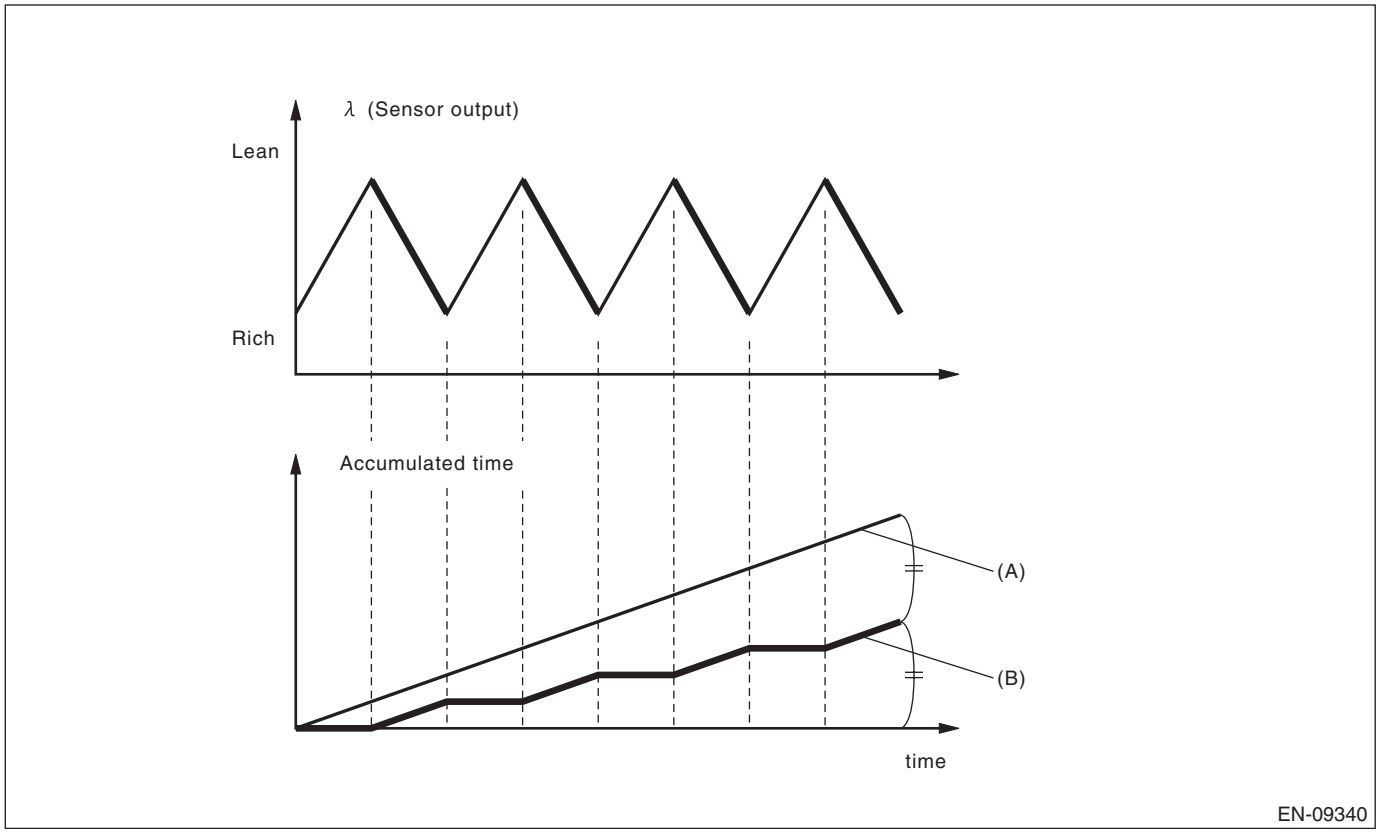

(A) Time during which diagnosis is in progress

(B) Cumulative value of time when λ changes from lean → rich

• Abnormality Judgment

Judge as NG when the following conditions are established.

Judgment Value

Malfunction Criteria	Threshold Value	DTC
(Cumulative value of time when λ changes from lean → rich) / (Time during which diagnosis is in progress)	< 0.4 (Bin5 model) < 0.38 (ULEV model)	P014C P014E
	> 0.68 (Bin5 model) > 0.7 (ULEV model)	P014D P014F

Time Needed for Diagnosis: 90 seconds

Malfunction Indicator Light Illumination: Illuminates when malfunction occurs in 2 continuous driving cycles.

• Normality Judgment

Judge as OK and clear the NG if the following conditions are established.

Judgment Value

Malfunction Criteria	Threshold Value	DTC
(Cumulative value of time when λ changes from lean → rich) / (Time during which diagnosis is in progress)	≥ 0.4 (Bin5 model) ≥ 0.38 (ULEV model)	P014C P014E
	≤ 0.68 (Bin5 model) ≤ 0.7 (ULEV model)	P014D P014F

Time Needed for Diagnosis: 90 seconds

6. DIAGNOSTIC METHOD 2

Detect the malfunction by the cumulative value obtained from the amount of variation in λ change.

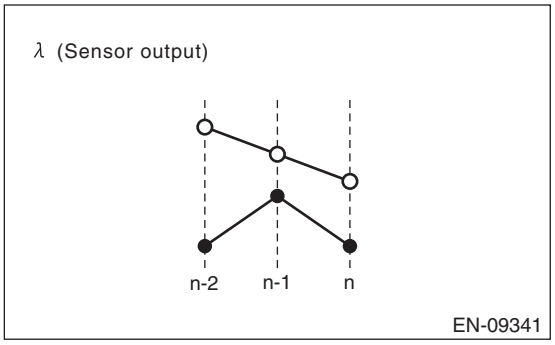

- **Abnormality Judgment**

Judge as NG when the following conditions are established.

Judgment Value

Malfunction Criteria	Threshold Value	DTC
Cumulative value obtained from the amount of variation in λ change Σ |(lambda(n) – lambda(n-1)) – (lambda(n-1) – lambda(n-2))|	< Value from Map	P014C, P014D, P014E and P014F

Map (Bin5 model)

Cumulative value obtained from the amount of variation in λ Σ |lambda(n) – lambda(n-1)|	0.30	2.00
Cumulative value obtained from the amount of variation in λ change	0.80	1.50

Map (ULEV model)

Cumulative value obtained from the amount of variation in λ Σ |lambda(n) – lambda(n-1)|	0.30	1.20
Cumulative value obtained from the amount of variation in λ change	0.80	1.00

Time Needed for Diagnosis: 90 seconds
Malfunction Indicator Light Illumination: Illuminates when malfunction occurs in 2 continuous driving cycles.

- **Normality Judgment**

Judge as OK and clear the NG if the following conditions are established.

Judgment Value

Malfunction Criteria	Threshold Value	DTC
Cumulative value obtained from the amount of variation in λ change Σ |(lambda(n) – lambda(n-1)) – (lambda(n-1) – lambda(n-2))|	≥ Value from Map	P014C, P014D, P014E and P014F

Time Needed for Diagnosis: 90 seconds

AY:DTC P014D O2 SENSOR SLOW RESPONSE - LEAN TO RICH (BANK 1 SENSOR 1)

1. OUTLINE OF DIAGNOSIS

NOTE:
For the detection standard, refer to DTC P014C. <Ref. to GD(H6DO)-90, DTC P014C O2 SENSOR SLOW RESPONSE - RICH TO LEAN (BANK 1 SENSOR 1), Diagnostic Trouble Code (DTC) Detecting Criteria.>

AZ:DTC P014E O2 SENSOR SLOW RESPONSE - RICH TO LEAN (BANK 2 SENSOR 1)

1. OUTLINE OF DIAGNOSIS

NOTE:
For the detection standard, refer to DTC P014C. <Ref. to GD(H6DO)-90, DTC P014C O2 SENSOR SLOW RESPONSE - RICH TO LEAN (BANK 1 SENSOR 1), Diagnostic Trouble Code (DTC) Detecting Criteria.>

BA:DTC P014F O2 SENSOR SLOW RESPONSE - LEAN TO RICH (BANK 2 SENSOR 1)

1. OUTLINE OF DIAGNOSIS

NOTE:
For the detection standard, refer to DTC P014C. <Ref. to GD(H6DO)-90, DTC P014C O2 SENSOR SLOW RESPONSE - RICH TO LEAN (BANK 1 SENSOR 1), Diagnostic Trouble Code (DTC) Detecting Criteria.>

BB:DTC P0151 O2 SENSOR CIRCUIT LOW VOLTAGE (BANK 2 SENSOR 1)

1. OUTLINE OF DIAGNOSIS

NOTE:
For the detection standard, refer to DTC P0131. <Ref. to GD(H6DO)-66, DTC P0131 O2 SENSOR CIRCUIT LOW VOLTAGE (BANK 1 SENSOR 1), Diagnostic Trouble Code (DTC) Detecting Criteria.>

BC:DTC P0152 O2 SENSOR CIRCUIT HIGH VOLTAGE (BANK 2 SENSOR 1)

1. OUTLINE OF DIAGNOSIS

NOTE:
For the detection standard, refer to DTC P0132. <Ref. to GD(H6DO)-68, DTC P0132 O2 SENSOR CIRCUIT HIGH VOLTAGE (BANK 1 SENSOR 1), Diagnostic Trouble Code (DTC) Detecting Criteria.>

BD:DTC P0154 O2 SENSOR CIRCUIT NO ACTIVITY DETECTED (BANK 2 SENSOR 1)

1. OUTLINE OF DIAGNOSIS

NOTE:
For the detection standard, refer to DTC P0134. <Ref. to GD(H6DO)-70, DTC P0134 O2 SENSOR CIRCUIT NO ACTIVITY DETECTED (BANK 1 SENSOR 1), Diagnostic Trouble Code (DTC) Detecting Criteria.>

BE:DTC P0157 O2 SENSOR CIRCUIT LOW VOLTAGE (BANK 2 SENSOR 2)

1. OUTLINE OF DIAGNOSIS

NOTE:
For the detection standard, refer to DTC P0137. <Ref. to GD(H6DO)-72, DTC P0137 O2 SENSOR CIRCUIT LOW VOLTAGE (BANK 1 SENSOR 2), Diagnostic Trouble Code (DTC) Detecting Criteria.>

BF:DTC P0158 O2 SENSOR CIRCUIT HIGH VOLTAGE (BANK 2 SENSOR 2)

1. OUTLINE OF DIAGNOSIS

NOTE:
For the detection standard, refer to DTC P0137. <Ref. to GD(H6DO)-72, DTC P0137 O2 SENSOR CIRCUIT LOW VOLTAGE (BANK 1 SENSOR 2), Diagnostic Trouble Code (DTC) Detecting Criteria.>

BG:DTC P015A O2 SENSOR DELAYED RESPONSE - RICH TO LEAN (BANK 1 SENSOR 1)

1. OUTLINE OF DIAGNOSIS

Detect the slow response of front oxygen (A/F) sensor.
For diagnosis, detect the trouble by processing the λ waveform in normal driving without forcibly changing the target air fuel ratio.

2. COMPONENT DESCRIPTION

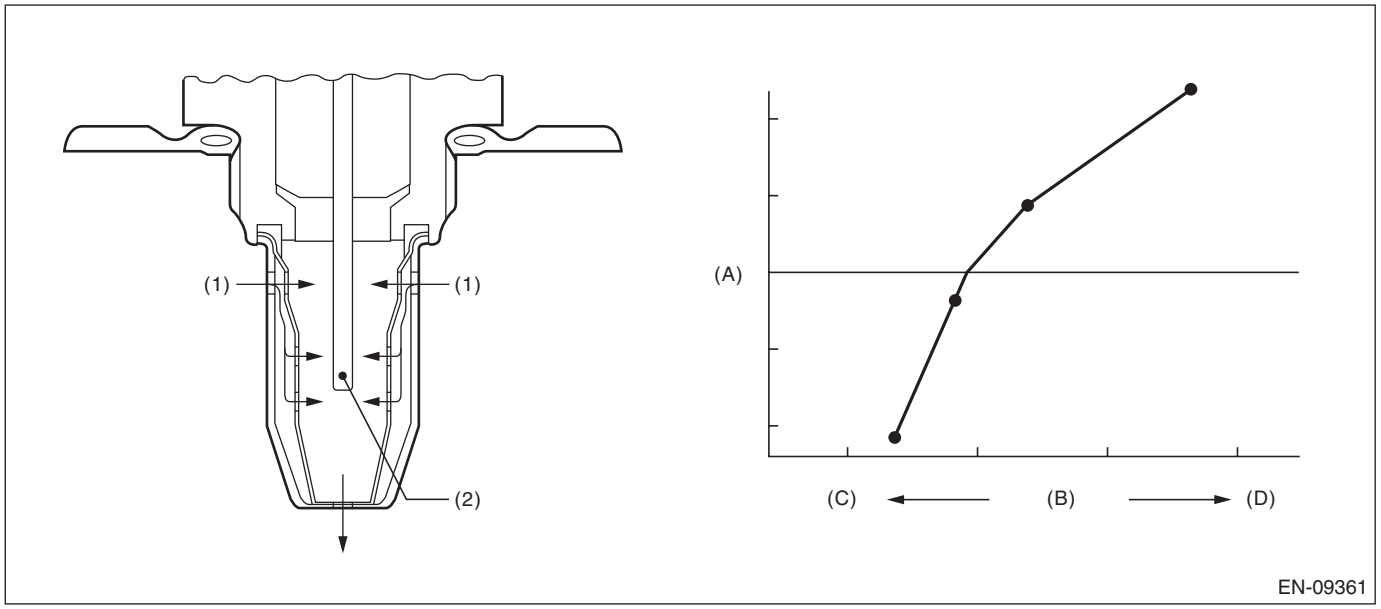

(A) Electromotive force (B) Air fuel ratio (C) Lean
(D) Rich

(1) Exhaust gas (2) ZrO_2

3. ENABLE CONDITIONS

Secondary Parameters	Enable Conditions
Battery voltage	> 10.9 V
Closed loop control with main feedback	Operation
Front oxygen (A/F) sensor impedance	≥ 0 Ω and < 50 Ω
Elapsed time after starting the engine	≥ 40000 ms
Engine coolant temperature	≥ 0 °C (32 °F)
Engine speed	≥ 1000 rpm
Amount of intake air	≥ 10 g/s (0.35 oz/s)
After fuel cut	≥ 3000 ms
Learning value of EVAP conc. during purge	< 0.2
Total time of operating canister purge	≥ 20 s
Engine load change	< 0.02 g/rev (0 oz/rev)
Idle switch	OFF

4. GENERAL DRIVING CYCLE

Perform diagnosis only once in a city driving including normal acceleration and deceleration.

5. DIAGNOSTIC METHOD 1

Detect the malfunction depending on the average value of time necessary for λ to inverse the air fuel ratio from “Lean → Rich → Lean” to “Rich → Lean → Rich”.

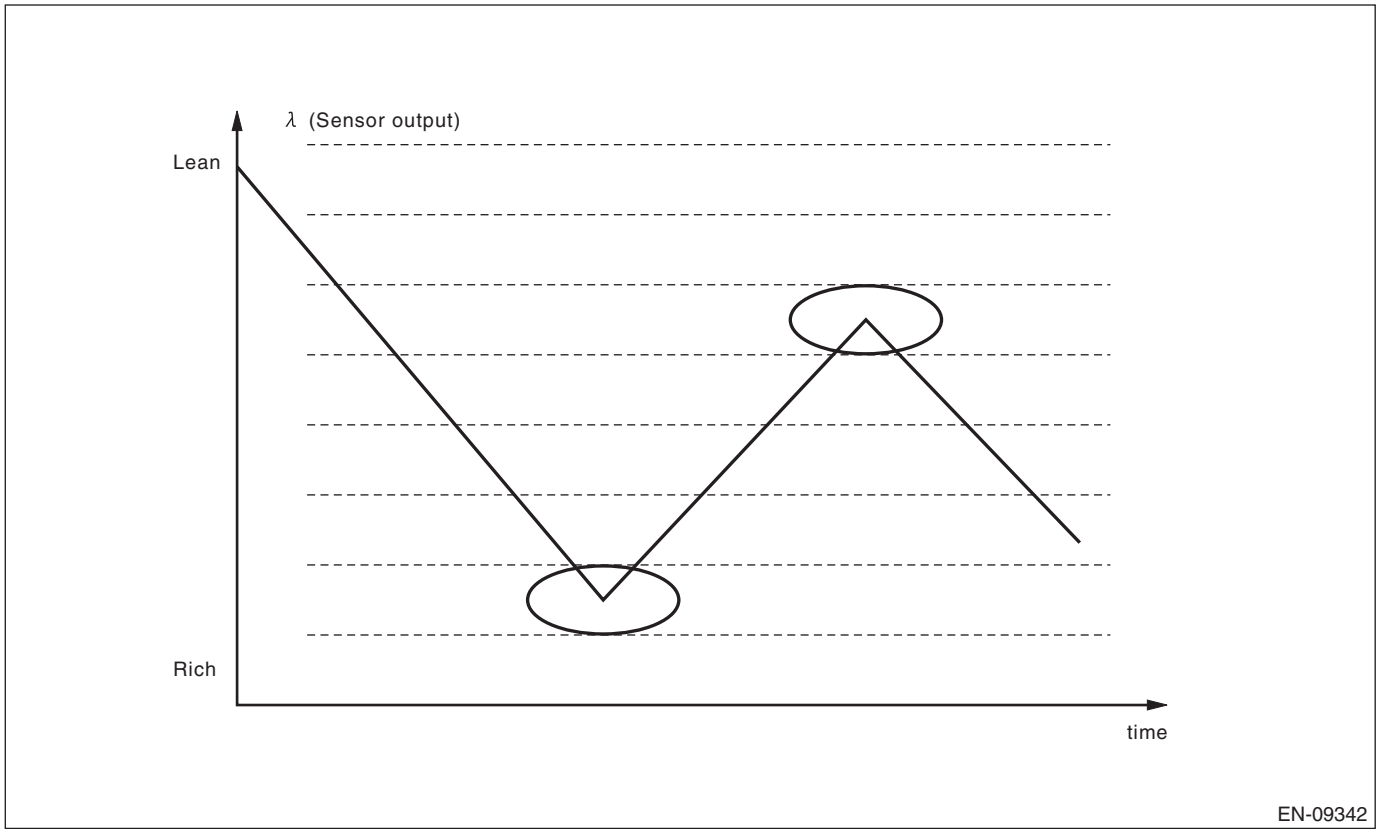

- **Abnormality Judgment**

Judge as NG when the following conditions are established.

Judgment Value

Malfunction Criteria	Threshold Value	DTC
Average value of time necessary for λ to inverse the air fuel ratio to Lean → Rich → Lean.	> 190 ms (Bin5 model) > 450 ms (ULEV model)	P015A P015C
Average value of time necessary for λ to inverse the air fuel ratio to Rich → Lean → Rich.	> 900 ms	P015B P015D

Time Needed for Diagnosis: 50 times of inversion
Malfunction Indicator Light Illumination: Illuminates when malfunction occurs in 2 continuous driving cycles.

- **Normality Judgment**

Judge as OK and clear the NG if the following conditions are established.

Judgment Value

Malfunction Criteria	Threshold Value	DTC
Average value of time necessary for λ to inverse the air fuel ratio to Lean → Rich → Lean.	≤ 190 ms (Bin5 model) ≤ 450 ms (ULEV model)	P015A P015C
Average value of time necessary for λ to inverse the air fuel ratio to Rich → Lean → Rich.	≤ 900 ms	P015B P015D

Time Needed for Diagnosis: 50 times of inversion

6. DIAGNOSTIC METHOD 2

Detect the malfunction by calculating the average amplitude of λ.

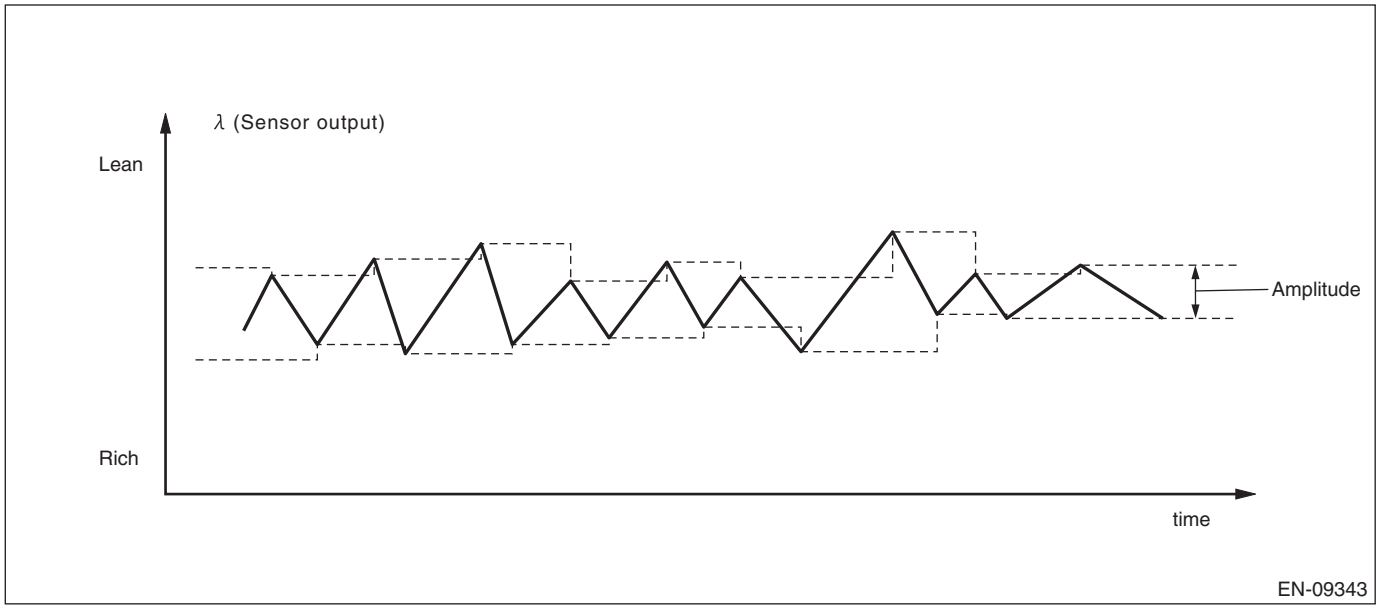

- **Abnormality Judgment**

Judge as NG when the following conditions are established.

Judgment Value

Malfunction Criteria	Threshold Value	DTC
Average value for λ amplitude	> 0.06 (Bin5 model) > 0.07 (ULEV model)	P015A, P015B, P015C and P015D

Time Needed for Diagnosis: 60 seconds
Malfunction Indicator Light Illumination: Illuminates when malfunction occurs in 2 continuous driving cycles.

- **Normality Judgment**

Judge as OK and clear the NG if the following conditions are established.

Judgment Value

Malfunction Criteria	Threshold Value	DTC
Average value for λ amplitude	≤ 0.06 (Bin5 model) ≤ 0.07 (ULEV model)	P015A, P015B, P015C and P015D

Time Needed for Diagnosis: 60 seconds

BH:DTC P015B O2 SENSOR DELAYED RESPONSE - LEAN TO RICH (BANK 1 SENSOR 1)

1. OUTLINE OF DIAGNOSIS

NOTE:
For the detection standard, refer to DTC P015A. <Ref. to GD(H6DO)-95, DTC P015A O2 SENSOR DELAYED RESPONSE - RICH TO LEAN (BANK 1 SENSOR 1), Diagnostic Trouble Code (DTC) Detecting Criteria.>

BI: DTC P015C O2 SENSOR DELAYED RESPONSE - RICH TO LEAN (BANK 2 SENSOR 1)

1. OUTLINE OF DIAGNOSIS

NOTE:
For the detection standard, refer to DTC P015A. <Ref. to GD(H6DO)-95, DTC P015A O2 SENSOR DELAYED RESPONSE - RICH TO LEAN (BANK 1 SENSOR 1), Diagnostic Trouble Code (DTC) Detecting Criteria.>

BJ:DTC P015D O2 SENSOR DELAYED RESPONSE - LEAN TO RICH (BANK 2 SENSOR 1)

1. OUTLINE OF DIAGNOSIS

NOTE:
For the detection standard, refer to DTC P015A. <Ref. to GD(H6DO)-95, DTC P015A O2 SENSOR DELAYED RESPONSE - RICH TO LEAN (BANK 1 SENSOR 1), Diagnostic Trouble Code (DTC) Detecting Criteria.>

BK:DTC P0160 O2 SENSOR CIRCUIT NO ACTIVITY DETECTED (BANK2 SENSOR2)

1. OUTLINE OF DIAGNOSIS

NOTE:
For the detection standard, refer to DTC P0140. <Ref. to GD(H6DO)-85, DTC P0140 O2 SENSOR CIRCUIT NO ACTIVITY DETECTED (BANK1 SENSOR2), Diagnostic Trouble Code (DTC) Detecting Criteria.>

BL:DTC P0161 O2 SENSOR HEATER CIRCUIT (BANK2 SENSOR2)

1. OUTLINE OF DIAGNOSIS

NOTE:
For the detection standard, refer to DTC P0141. <Ref. to GD(H6DO)-87, DTC P0141 O2 SENSOR HEATER CIRCUIT (BANK1 SENSOR2), Diagnostic Trouble Code (DTC) Detecting Criteria.>

BM:DTC P0171 SYSTEM TOO LEAN (BANK 1)

1. OUTLINE OF DIAGNOSIS

Detect fuel system malfunction by the amount of main feedback control.

Diagnostic method

Fuel system is diagnosed by comparing the target air fuel ratio calculated by ECM with the actual air fuel ratio measured by sensor.

2. ENABLE CONDITION

Secondary Parameters	Enable Conditions
A/F main learning system	In operation
Engine coolant temperature	≥ 75 °C (167 °F)
Engine load change	< 0.02 g/rev (0 oz/rev)
Engine load	≥ Value of Map 1

Map 1

Engine speed (rpm)	Idling	700	1000	1500	2000	2500	3000	3500	4000	4500	5000
Measured value (g (oz)/ rev)	na	0.357 (0.01)	0.25 (0.01)	0.25 (0.01)	0.317 (0.01)	0.326 (0.01)	0.337 (0.01)	0.397 (0.01)	0.439 (0.02)	0.454 (0.02)	0.454 (0.02)

3. GENERAL DRIVING CYCLE

Perform the diagnosis continuously at idling or at a constant speed after warming up the engine.

4. DIAGNOSTIC METHOD

• Abnormality Judgment

Compare the diagnostic value (fsobd) with the threshold value, and if a condition meeting the malfunction criteria below continues for 10 s × 10 time(s) or more, judge that there is a fault in the fuel system.

Judgment Value

Malfunction Criteria	Threshold Value
fsobd = (sglmd – tglmda) + faf + flaf In this case: sglmd = measured lambda tglmda = target lambda faf = main feedback compensation coefficient (every 64 milliseconds) flaf = main feedback learning compensation coefficient	≥ Value from Map 2

Map 2

Amount of air (g (oz)/s)	0 (0)	3.2 (0.11)	6.4 (0.23)	9.6 (0.34)	12.8 (0.45)	16 (0.56)	19.2 (0.68)
fsobdL1 (%)	1.4	1.4	1.332	1.265	1.265	1.265	1.265

Time Needed for Diagnosis: 10 s × 10 time(s)
Malfunction Indicator Light Illumination: Illuminates when malfunction occurs in 2 continuous driving cycles.

• Normality Judgment

Judge as OK and clear the NG if the continuous time while the following conditions are established is more than the predetermined time.

Judgment Value

Malfunction Criteria	Threshold Value
fsobd = (sglmd – tglmda) + faf + flaf	< 1.15

Time Needed for Diagnosis: 10 s

BN:DTC P0172 SYSTEM TOO RICH (BANK 1)

1. OUTLINE OF DIAGNOSIS

Detect fuel system malfunction by the amount of main feedback control.

Diagnostic method

Fuel system is diagnosed by comparing the target air fuel ratio calculated by ECM with the actual air fuel ratio measured by sensor.

2. ENABLE CONDITION

Secondary Parameters	Enable Conditions
A/F main learning system	In operation
Engine coolant temperature	≥ 75 °C (167 °F)
Engine load change	≤ 0.02 g/rev (0 oz/rev)
Learning value of EVAP conc.	< 0.2
Cumulative time of canister purge after engine start	≥ 20 s
Continuous period after canister purge starting	≥ 5000 ms
Engine load	≥ Value of Map 1

Map 1

Engine speed (rpm)	Idling	700	1000	1500	2000	2500	3000	3500	4000	4500	5000
Measured value (g (oz)/ rev)	na	0.357 (0.01)	0.25 (0.01)	0.25 (0.01)	0.317 (0.01)	0.326 (0.01)	0.337 (0.01)	0.397 (0.01)	0.439 (0.02)	0.454 (0.02)	0.454 (0.02)

3. GENERAL DRIVING CYCLE

Perform the diagnosis continuously at idling or at a constant speed after warming up the engine.

4. DIAGNOSTIC METHOD

• Abnormality Judgment

Compare the diagnostic value (fsobd) with the threshold value, and if a condition meeting the malfunction criteria below continues for 10 s × 10 time(s) or more, judge that there is a fault in the fuel system.

Judgment Value

Malfunction Criteria	Threshold Value
fsobd = (sglmd – tglmda) + faf + flaf In this case: sglmd = measured lambda tglmda = target lambda faf = main feedback compensation coefficient (every 64 milliseconds) flaf = main feedback learning compensation coefficient	< Value of Map 2

Map 2

Amount of air (g (oz)/s)	0 (0)	3.2 (0.11)	6.4 (0.23)	9.6 (0.34)	12.8 (0.45)	16 (0.56)	19.2 (0.68)
fsobdL1 (%)	0.595	0.595	0.688	0.715	0.725	0.735	0.735

Time Needed for Diagnosis: 10 s × 10 time(s)
Malfunction Indicator Light Illumination: Illuminates when malfunction occurs in 2 continuous driving cycles.

• Normality Judgment

Judge as OK if the status that the criteria below are met continues for 10 seconds.

Judgment Value

Malfunction Criteria	Threshold Value
fsobd = (sglmd – tglmda) + faf + flaf	≥ 0.85

Time Needed for Diagnosis: 10 s

BO:DTC P0174 SYSTEM TOO LEAN (BANK 2)

1. OUTLINE OF DIAGNOSIS

NOTE:
For the detection standard, refer to DTC P0171. <Ref. to GD(H6DO)-100, DTC P0171 SYSTEM TOO LEAN (BANK 1), Diagnostic Trouble Code (DTC) Detecting Criteria.>

BP:DTC P0175 SYSTEM TOO RICH (BANK 2)

1. OUTLINE OF DIAGNOSIS

NOTE:
For the detection standard, refer to DTC P0172. <Ref. to GD(H6DO)-101, DTC P0172 SYSTEM TOO RICH (BANK 1), Diagnostic Trouble Code (DTC) Detecting Criteria.>

BQ:DTC P0181 FUEL TEMPERATURE SENSOR “A” CIRCUIT RANGE/PERFORMANCE

1. OUTLINE OF DIAGNOSIS

Detect faults in the fuel temperature sensor output properties.
Diagnosis is performed in two methods (drift diagnosis and stuck diagnosis). If either is NG, judge as NG. If both are OK, Judge as OK and clear the NG.

Drift Diagnosis

Normally fuel temperature is lower than engine coolant temperature. When the fuel temperature becomes higher than the engine coolant temperature, the range is considered to be shifted, and judged as NG.

Stuck Diagnosis

As the engine warms up (cumulative amount of intake air after starting is large), if the fuel temperature which should rise does not, determine as being stuck and NG.

2. COMPONENT DESCRIPTION

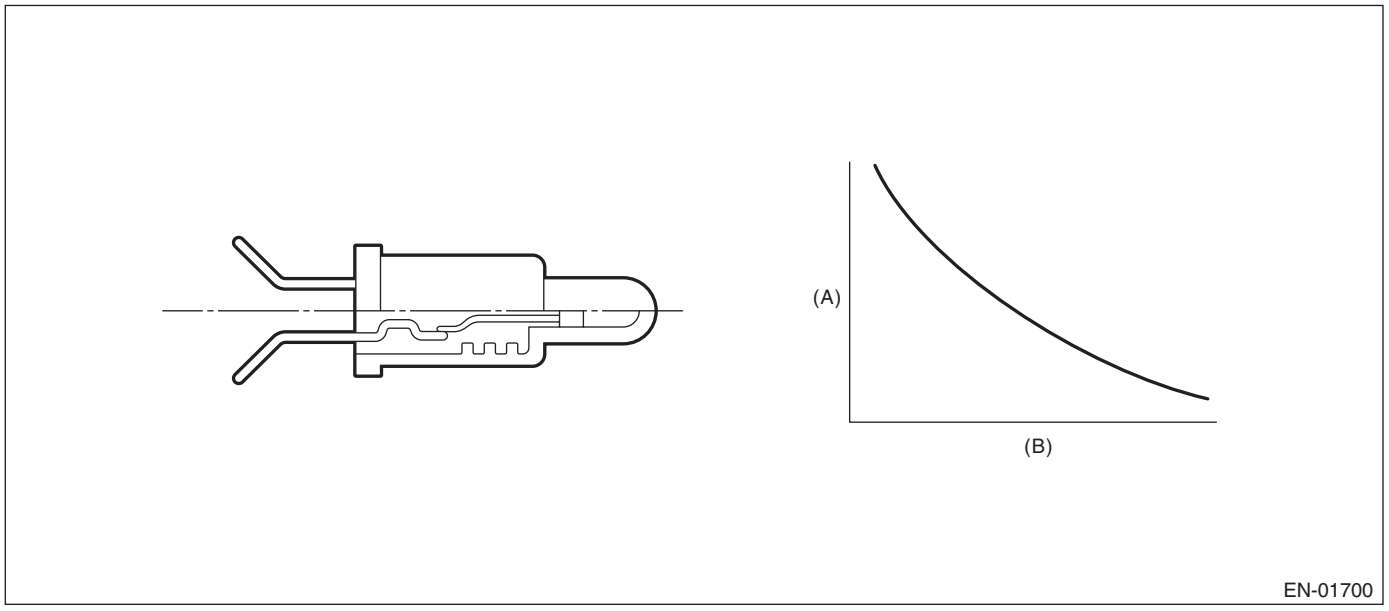

(A) Resistance value (Ω) (B) Fuel temperature °C (°F)

3. ENABLE CONDITION

DRIFT DIAGNOSIS

Secondary Parameters	Enable Conditions
None	

4. GENERAL DRIVING CYCLE

Always perform the diagnosis continuously.

5. DIAGNOSTIC METHOD

• Abnormality Judgment

If the duration of time while the following conditions are met is longer than the time indicated, judge as NG.

Judgment Value

Malfunction Criteria	Threshold Value
Fuel level	≥ 10.5 ℓ (2.77 US gal, 2.31 Imp gal)
Elapsed time after starting the engine	≥ 20 s
Engine coolant temperature – Engine coolant temperature at engine start	> 10 °C (18°F)
Fuel temperature – Engine coolant temperature	≥ 10 °C (18°F)
Battery voltage	≥ 10.9 V

Time Needed for Diagnosis: 120 s
Malfunction Indicator Light Illumination: Illuminates when malfunction occurs in 2 continuous driving cycles.

• Normality Judgment

Judge as OK and clear the NG if the continuous time while the following conditions are established is more than the predetermined time.

Judgment Value

Malfunction Criteria	Threshold Value
Fuel level	≥ 10.5 ℓ (2.77 US gal, 2.31 Imp gal)
Elapsed time after starting the engine	≥ 20 s
Engine coolant temperature – Engine coolant temperature at engine start	> 10 °C (18°F)
Fuel temperature – Engine coolant temperature	< 10 °C (18°F)
Battery voltage	≥ 10.9 V
Engine coolant temperature	< 75 °C (167 °F)

Time Needed for Diagnosis: Less than 1 second

6. ENABLE CONDITION

Stuck Diagnosis

Secondary Parameters	Enable Conditions
Elapsed time after starting the engine	≥ 20000 ms
Battery voltage	≥ 10.9 V

7. GENERAL DRIVING CYCLE

Perform the diagnosis continuously 20 seconds after starting engine.

8. DIAGNOSTIC METHOD

• Abnormality Judgment

Judge as NG when the following conditions are established.

Judgment Value

Malfunction Criteria	Threshold Value
Accumulated amount of intake air	≥ 551043 g (19435.29 oz)
Fuel temperature difference between Max. and Min.	< 2 °C (3.6°F)

Time Needed for Diagnosis: Less than 1 second
Malfunction Indicator Light Illumination: Illuminates when malfunction occurs in 2 continuous driving cycles.

• Normality Judgment

Judge as OK and clear the NG if the following conditions are established.

Judgment Value

Malfunction Criteria	Threshold Value
Fuel temperature difference between Max. and Min.	≥ 2 °C (3.6°F)

Time Needed for Diagnosis: Less than 1 second

BR:DTC P0182 FUEL TEMPERATURE SENSOR “A” CIRCUIT LOW INPUT

1. OUTLINE OF DIAGNOSIS

Detect the open or short circuit of fuel temperature sensor.
Judge as NG if out of specification.

2. COMPONENT DESCRIPTION

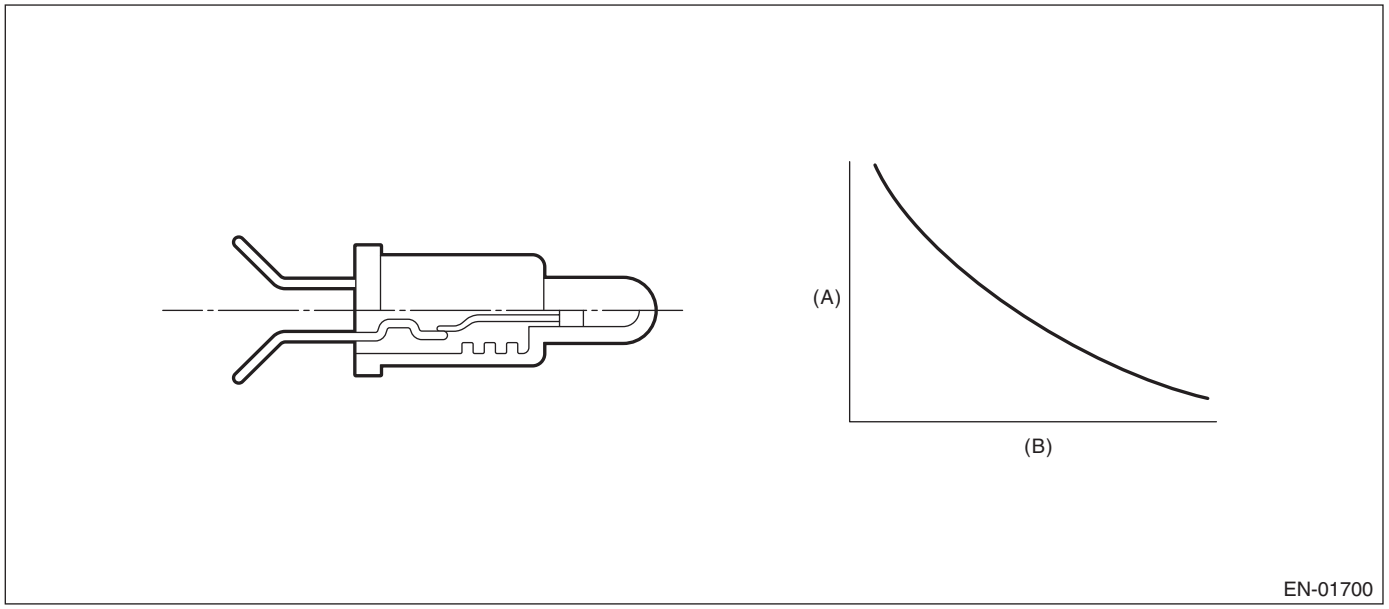

(A) Resistance value (Ω) (B) Fuel temperature °C (°F)

3. ENABLE CONDITION

Secondary Parameters	Enable Conditions
None	

4. GENERAL DRIVING CYCLE

Always perform the diagnosis continuously.

5. DIAGNOSTIC METHOD

- **Abnormality Judgment**

If the duration of time while the following conditions are met is longer than the time indicated, judge as NG.

Judgment Value

Malfunction Criteria	Threshold Value
Output voltage	< 0.748 V
Battery voltage	≥ 10.9 V

Time Needed for Diagnosis: 2500 ms
Malfunction Indicator Light Illumination: Illuminates as soon as a malfunction occurs.

- **Normality Judgment**

Judge as OK and clear the NG if the continuous time while the following conditions are established is more than the predetermined time.

Judgment Value

Malfunction Criteria	Threshold Value
Output voltage	≥ 0.748 V
Battery voltage	≥ 10.9 V

Time Needed for Diagnosis: Less than 1 second

BS:DTC P0183 FUEL TEMPERATURE SENSOR “A” CIRCUIT HIGH INPUT

1. OUTLINE OF DIAGNOSIS

Detect the open or short circuit of fuel temperature sensor.
Judge as NG if out of specification.

2. COMPONENT DESCRIPTION

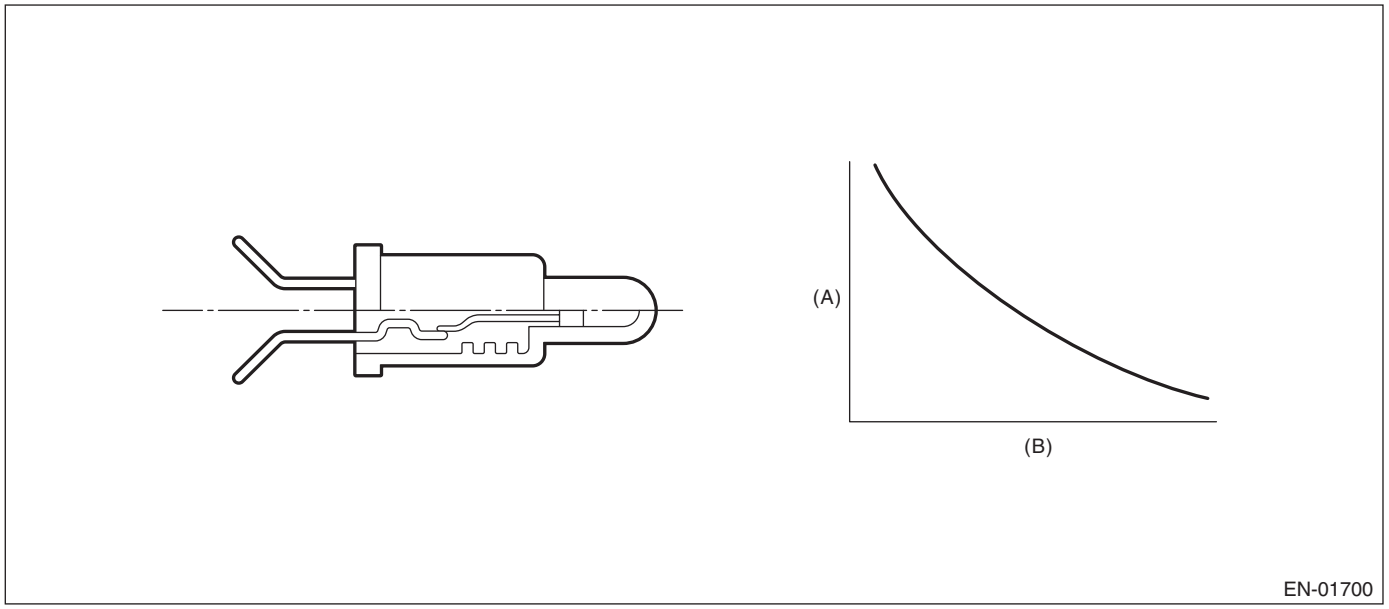

(A) Resistance value (Ω) (B) Fuel temperature °C (°F)

3. ENABLE CONDITION

Secondary Parameters	Enable Conditions
None	

4. GENERAL DRIVING CYCLE

Always perform the diagnosis continuously.

5. DIAGNOSTIC METHOD

- **Abnormality Judgment**

If the duration of time while the following conditions are met is longer than the time indicated, judge as NG.

Judgment Value

Malfunction Criteria	Threshold Value
Output voltage	≥ 4.694 V
Battery voltage	≥ 10.9 V

Time Needed for Diagnosis: 2500 ms
Malfunction Indicator Light Illumination: Illuminates as soon as a malfunction occurs.

- **Normality Judgment**

Judge as OK and clear the NG if the continuous time while the following conditions are established is more than the predetermined time.

Judgment Value

Malfunction Criteria	Threshold Value
Output voltage	< 4.694 V
Battery voltage	≥ 10.9 V

Time Needed for Diagnosis: Less than 1 second

BT:DTC P0196 ENGINE OIL TEMPERATURE SENSOR CIRCUIT RANGE/PERFORMANCE

1. OUTLINE OF DIAGNOSIS

Detect for abnormal values in the oil temperature sensor output properties.
Judge as NG when the oil temperature does not rise even though the engine is running under a condition where it should rise.

2. ENABLE CONDITION

Secondary Parameters	Enable Conditions
Battery voltage	≥ 10.9 V
Engine speed	≥ Value from Map

Map

Engine coolant temperature °C (°F)	–40 (–40)	–30 (–22)	–20 (–4)	–10 (14)	0 (32)	10 (50)	20 (68)	30 (86)
Engine speed rpm	500	500	500	500	500	500	500	500

Engine coolant temperature °C (°F)	40 (104)	50 (122)	60 (140)	70 (158)	80 (176)	90 (194)	100 (212)	110 (230)
Engine speed rpm	500	500	500	500	500	500	500	500

3. GENERAL DRIVING CYCLE

Perform the diagnosis continuously after starting the engine.

4. DIAGNOSTIC METHOD

• Abnormality Judgment

Judge as NG when the following conditions are established.

Judgment Value

Malfunction Criteria	Threshold Value
Engine oil temperature After engine start oil temperature sensor characteristic diagnosis timer.	< 50 °C (122 °F) ≥ Judgment value for after engine start oil temperature sensor characteristic diagnosis timer

After engine start oil temperature sensor characteristic diagnosis timer (timer for diagnosis).
a. Timer stop at fuel cut
b. During the driving conditions except a) above, timer counts up as follows.
64 ms + TOILCNT ms (when at 64 ms)
Where, TOILCNT is determined as follows,
TOILCNT = 0 at idle switch ON
For TOILCNT at Idle switch off, refer to the following table.

		Vehicle speed km/h (MPH)							
		0 (0)	8 (5)	16 (9.9)	24 (14.9)	32 (19.9)	40 (24.9)	48 (29.8)	56 (34.8)
Temperature °C (°F)	–40 (–40)	0 ms	32 ms	76 ms	130 ms	149 ms	171 ms	176 ms	181 ms
	–30 (–22)	0 ms	93 ms	121 ms	157 ms	170 ms	184 ms	193 ms	203 ms
	–20 (–4)	0 ms	123 ms	148 ms	184 ms	193 ms	204 ms	214 ms	226 ms
	–10 (14)	0 ms	166 ms	187 ms	208 ms	223 ms	239 ms	242 ms	245 ms
	0 (32)	0 ms	187 ms	212 ms	243 ms	252 ms	262 ms	266 ms	270 ms

After engine start oil temperature characteristic diagnosis timer judgment value (t).
$t = 3600000 \text{ ms} - 60000 \text{ ms} \times Ti$ ($t \geq 2400000$)
Ti = The lowest coolant temperature after starting the engine.
Time Needed for Diagnosis: Less than 1 second
Malfunction Indicator Light Illumination: Illuminates when malfunction occurs in 2 continuous driving cycles.

• Normality Judgment

Judge as OK and clear the NG if the following conditions are established.

Judgment Value

Malfunction Criteria	Threshold Value
Engine oil temperature	≥ 50 °C (122 °F)

Time Needed for Diagnosis: Less than 1 second

BU:DTC P0197 ENGINE OIL TEMPERATURE SENSOR LOW

1. OUTLINE OF DIAGNOSIS

Detect the open or short circuit of the oil temperature sensor.
Judge as NG when outside of the judgment value.

2. ENABLE CONDITION

Secondary Parameters	Enable Conditions
None	

3. GENERAL DRIVING CYCLE

Always perform the diagnosis continuously.

4. DIAGNOSTIC METHOD

- **Abnormality Judgment**

If the duration of time while the following conditions are met is longer than the time indicated, judge as NG.

Judgment Value

Malfunction Criteria	Threshold Value
Output voltage	< 0.197 V

Time Needed for Diagnosis: 500 ms
Malfunction Indicator Light Illumination: Illuminates as soon as a malfunction occurs.

- **Normality Judgment**

Judge as OK and clear the NG if the continuous time while the following conditions are established is more than the predetermined time.

Judgment Value

Malfunction Criteria	Threshold Value
Output voltage	≥ 0.197 V

Time Needed for Diagnosis: Less than 1 second

BV:DTC P0198 ENGINE OIL TEMPERATURE SENSOR HIGH

1. OUTLINE OF DIAGNOSIS

Detect the open or short circuit of the oil temperature sensor.
Judge as NG when outside of the judgment value.

2. ENABLE CONDITION

Secondary Parameters	Enable Conditions
None	

3. GENERAL DRIVING CYCLE

Always perform the diagnosis continuously.

4. DIAGNOSTIC METHOD

- **Abnormality Judgment**

If the duration of time while the following conditions are met is longer than the time indicated, judge as NG.

Judgment Value

Malfunction Criteria	Threshold Value
Output voltage	≥ 4.694 V

Time Needed for Diagnosis: 500 ms
Malfunction Indicator Light Illumination: Illuminates as soon as a malfunction occurs.

- **Normality Judgment**

Judge as OK and clear the NG if the continuous time while the following conditions are established is more than the predetermined time.

Judgment Value

Malfunction Criteria	Threshold Value
Output voltage	< 4.694 V

Time Needed for Diagnosis: Less than 1 second

BW:DTC P0201 INJECTOR #1

1. OUTLINE OF DIAGNOSIS

Based on the self-diagnostic result of the injector driving IC, judge the injector driving circuit as normal or abnormal.
Injector driving IC detects the status of “fuel remains injected” or “fuel is not injected” as a malfunction.

2. ENABLE CONDITIONS

Secondary Parameters	Enable Conditions
Battery voltage	≥ 10.9 V
Elapsed time after starting the engine	> 1 s
Engine speed	> 500 rpm
Injection time	≥ 1000 μs and < 120000000/engine speed – 1000 μs
Injection status	Not during fuel cut and Not during asynchronous injection controlled by crankshaft position sensor

3. GENERAL DRIVING CYCLE

Always perform the diagnosis continuously.

4. DIAGNOSTIC METHOD

- **Abnormality Judgment**

Judge as NG when the following conditions are established.

Judgment Value

Malfunction Criteria	Threshold Value
Injector driving IC information	Malfunction

Time Needed for Diagnosis: 2500 ms
Malfunction Indicator Light Illumination: Illuminates as soon as a malfunction occurs.

- **Normality Judgment**

Judge as OK and clear the NG if the following conditions are established.

Judgment Value

Malfunction Criteria	Threshold Value
Injector driving IC information	Normal

Time Needed for Diagnosis: Less than 1 second

BX:DTC P0202 INJECTOR #2

1. OUTLINE OF DIAGNOSIS

NOTE:
For the detection standard, refer to DTC P0201. <Ref. to GD(H6DO)-115, DTC P0201 INJECTOR #1, Diagnostic Trouble Code (DTC) Detecting Criteria.>

BY:DTC P0203 INJECTOR #3

1. OUTLINE OF DIAGNOSIS

NOTE:
For the detection standard, refer to DTC P0201. <Ref. to GD(H6DO)-115, DTC P0201 INJECTOR #1, Diagnostic Trouble Code (DTC) Detecting Criteria.>

BZ:DTC P0204 INJECTOR #4

1. OUTLINE OF DIAGNOSIS

NOTE:
For the detection standard, refer to DTC P0201. <Ref. to GD(H6DO)-115, DTC P0201 INJECTOR #1, Diagnostic Trouble Code (DTC) Detecting Criteria.>

CA:DTC P0205 INJECTOR #5

1. OUTLINE OF DIAGNOSIS

NOTE:
For the detection standard, refer to DTC P0201. <Ref. to GD(H6DO)-115, DTC P0201 INJECTOR #1, Diagnostic Trouble Code (DTC) Detecting Criteria.>

CB:DTC P0206 INJECTOR #6

1. OUTLINE OF DIAGNOSIS

NOTE:
For the detection standard, refer to DTC P0201. <Ref. to GD(H6DO)-115, DTC P0201 INJECTOR #1, Diagnostic Trouble Code (DTC) Detecting Criteria.>

CC:DTC P0222 THROTTLE/PEDAL POSITION SENSOR/SWITCH “B” CIRCUIT LOW

1. OUTLINE OF DIAGNOSIS

Detect the open or short circuit of throttle position sensor 2.
Judge as NG if out of specification.

2. COMPONENT DESCRIPTION

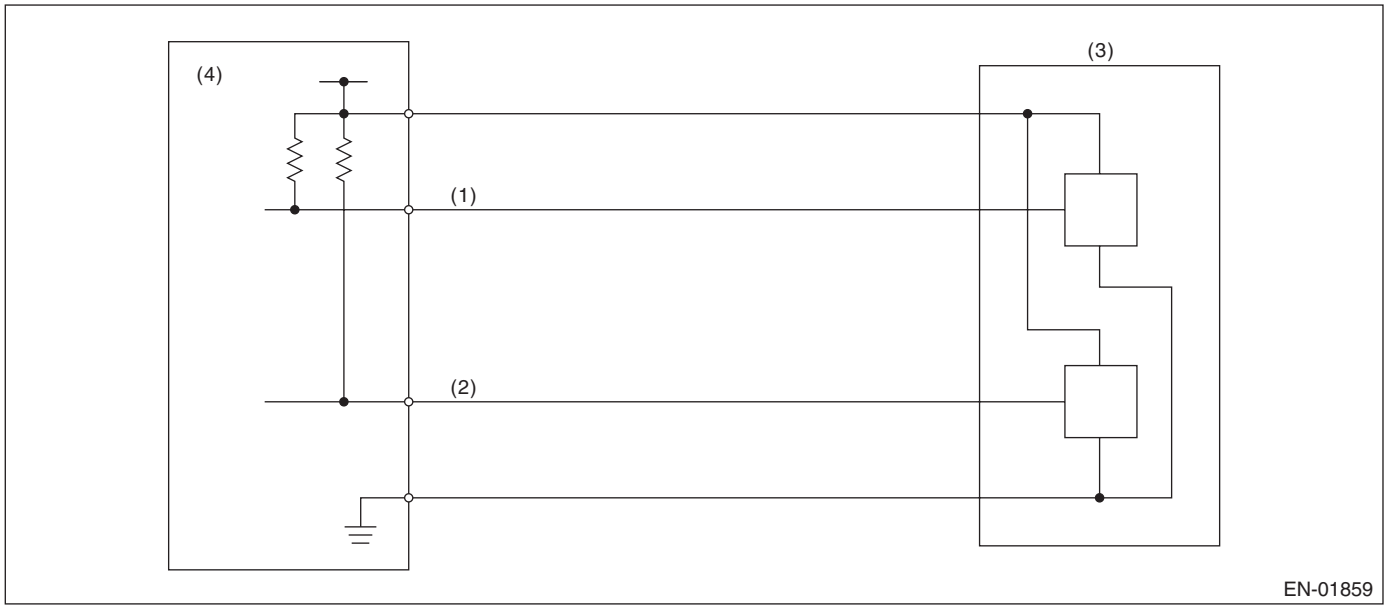

(1) Throttle position sensor 1 signal
(2) Throttle position sensor 2 signal
(3) Throttle position sensor
(4) Engine control module (ECM)

3. ENABLE CONDITION

Secondary Parameters	Enable Conditions
Ignition switch	ON
Battery voltage	≥ 6 V

4. GENERAL DRIVING CYCLE

Always perform the diagnosis continuously.

5. DIAGNOSTIC METHOD

- **Abnormality Judgment**

If the duration of time while the following conditions are met is longer than the time indicated, judge as NG.

Judgment Value

Malfunction criteria	Threshold value
Sensor 2 input voltage	≤ 1.07 V

Time Needed for Diagnosis: 24 ms
Malfunction Indicator Light Illumination: Illuminates as soon as a malfunction occurs.

- **Normality Judgment**

Judge as OK and clear the NG if the continuous time while the following conditions are established is more than the predetermined time.

Judgment Value

Malfunction criteria	Threshold value
Sensor 2 input voltage	> 1.07 V

Time Needed for Diagnosis: 24 ms

CD:DTC P0223 THROTTLE/PEDAL POSITION SENSOR/SWITCH “B” CIRCUIT HIGH

1. OUTLINE OF DIAGNOSIS

Detect the open or short circuit of throttle position sensor 2.
Judge as NG if out of specification.

2. COMPONENT DESCRIPTION

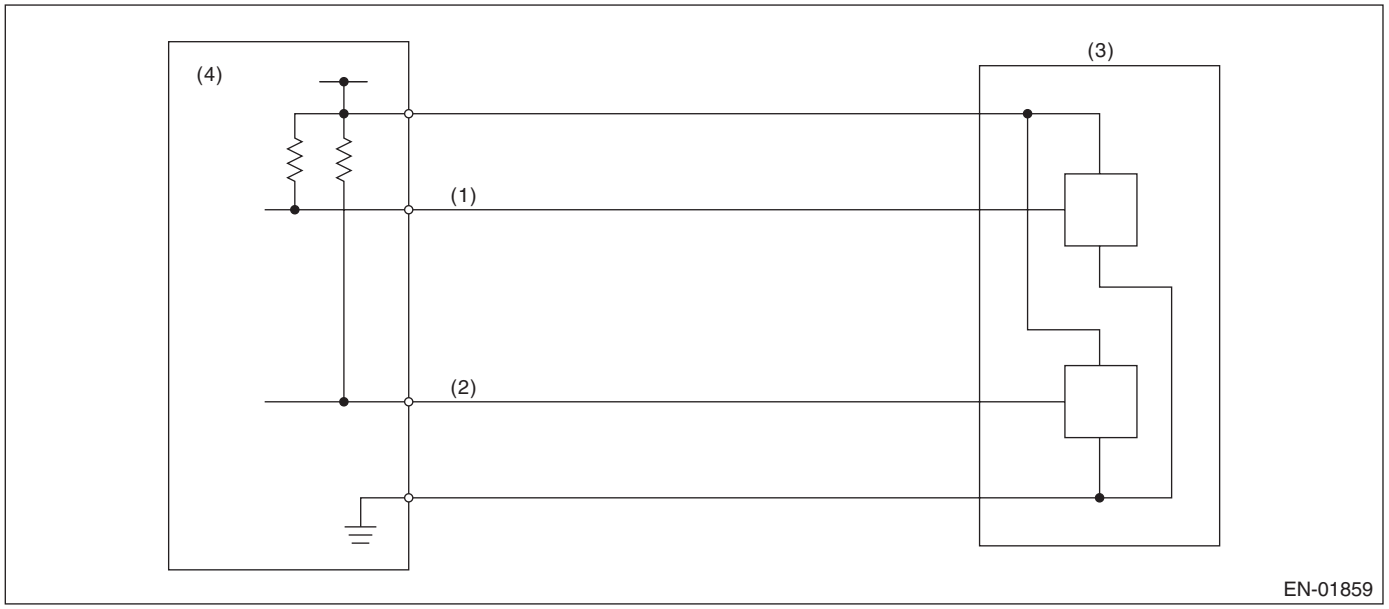

(1) Throttle position sensor 1 signal
(2) Throttle position sensor 2 signal
(3) Throttle position sensor
(4) Engine control module (ECM)

3. ENABLE CONDITION

Secondary Parameters	Enable Conditions
Ignition switch	ON
Battery voltage	≥ 6 V

4. GENERAL DRIVING CYCLE

Always perform the diagnosis continuously.

5. DIAGNOSTIC METHOD

- **Abnormality Judgment**

If the duration of time while the following conditions are met is longer than the time indicated, judge as NG.

Judgment Value

Malfunction criteria	Threshold value
Sensor 2 input voltage	≥ 4.858 V

Time Needed for Diagnosis: 24 ms
Malfunction Indicator Light Illumination: Illuminates as soon as a malfunction occurs.

- **Normality Judgment**

Judge as OK and clear the NG if the continuous time while the following conditions are established is more than the predetermined time.

Judgment Value

Malfunction criteria	Threshold value
Sensor 2 input voltage	< 4.858 V

Time Needed for Diagnosis: 24 ms

CE:DTC P0230 FUEL PUMP PRIMARY CIRCUIT

1. OUTLINE OF DIAGNOSIS

Detect the malfunction of fuel pump control unit.
Judge as NG when the NG signal is sent through a diagnostic line coming from the fuel pump control unit.
Fuel pump control unit detects the open or short circuit malfunction for each line, and then sends NG signals if one of them is found NG.

2. COMPONENT DESCRIPTION

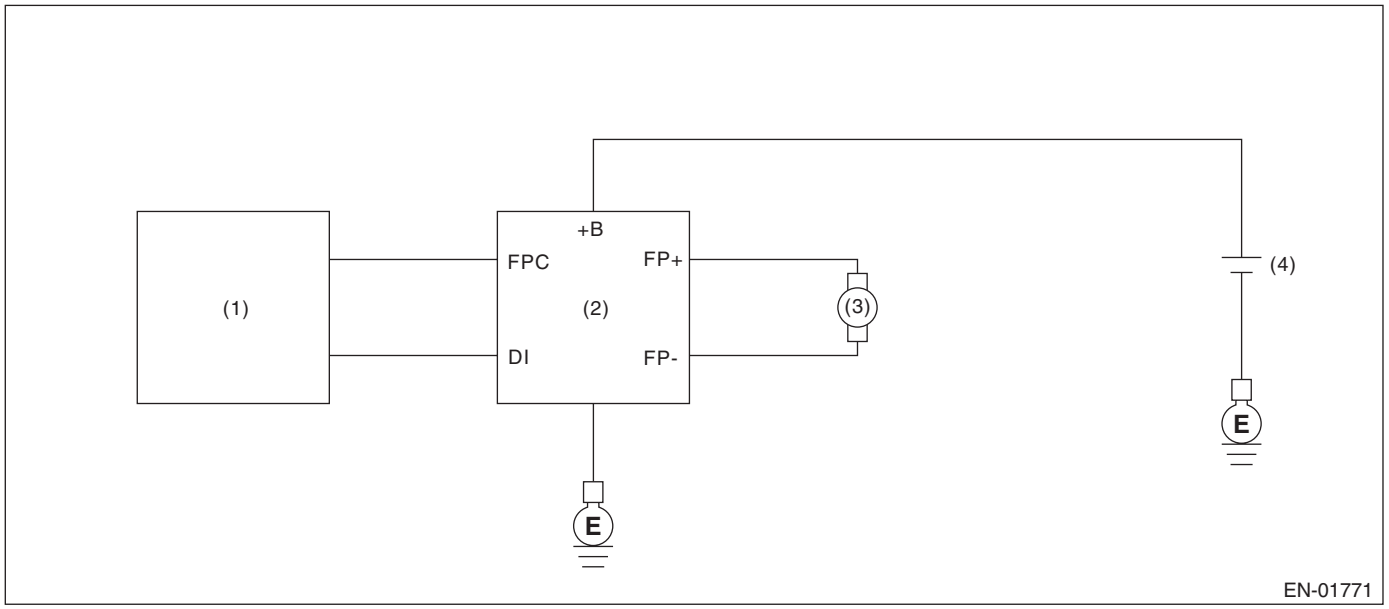

(1) Engine control module (ECM)
(2) Fuel pump control unit
(3) Fuel pump
(4) Battery

3. ENABLE CONDITION

Secondary Parameters	Enable Conditions
None	

4. GENERAL DRIVING CYCLE

Always perform the diagnosis continuously.

5. DIAGNOSTIC METHOD

• Abnormality Judgment

If the duration of time while the following conditions are met is longer than the time indicated, judge as NG.

Judgment Value

Malfunction Criteria	Threshold Value
Battery voltage	≥ 8 V
Elapsed time after starting the engine	≥ 180000 ms
Fuel pump control	ON
Fuel pump control unit output diagnosis signal	Low
Fuel level	≥ 10.5 ℓ (2.77 US gal, 2.31 Imp gal)

Time Needed for Diagnosis: 2500 ms
Malfunction Indicator Light Illumination: Illuminates when malfunction occurs in 2 continuous driving cycles.

• Normality Judgment

Judge as OK and clear the NG if the continuous time while the following conditions are established is more than the predetermined time.

Judgment Value

Malfunction Criteria	Threshold Value
Battery voltage	≥ 8 V
Elapsed time after starting the engine	≥ 180000 ms
Fuel pump control	ON
Fuel pump control unit output diagnosis signal	High
Fuel level	≥ 10.5 ℓ (2.77 US gal, 2.31 Imp gal)

Time Needed for Diagnosis: Less than 1 second

CF:DTC P0301 CYLINDER 1 MISFIRE DETECTED

1. OUTLINE OF DIAGNOSIS

Detect the presence of misfire occurrence. (Revolution fluctuation method)
Monitoring Misfire which influences exhaust deterioration (1.5 times of FTP) and catalyst damage is made obligatory by the law. Misfire affecting these two has two patterns below. :

- Intermittent misfire (The same cylinder misfires in random, or different cylinders misfire in random.): FTP 1.5 times misfire
- Every time misfire (The same cylinder misfires every time.): FTP 1.5 times misfire, Catalyst damage misfire

The following detecting methods are adopted for these detection.
1) Intermittent misfire: FTP 1.5 times misfire

- 120° Interval Difference Method
- 360° Interval Difference Method (whole range)
- 720° Interval Difference Method (3,000 rpm or more)

2) Misfire every time: FTP 1.5 times misfire, Catalyst damage misfire

- 360° Interval Difference Method

2. ENABLE CONDITION

Secondary Parameters	Enable Conditions
All secondary parameters enable conditions	≥ 1024 ms
Intake manifold pressure change at 120°CA	< Value of Map 1
Throttle position change during 16 milliseconds	< 20 °
Fuel shut-off function	Not in operation
Fuel level	≥ 10.5 ℓ (2.77 US gal, 2.31 Imp gal)
Vehicle dynamic control or AT torque control	Not in operation
Evaporative system leak check	Not in operation
Engine speed	450 rpm — 6500 rpm
Intake manifold pressure	≥ Value from Map 2
Battery voltage	≥ 8 V
Fuel parameter determination	Not extremely low volatility
Elapsed time after starting the engine	≥ 0 ms
Engine speed change during 32 milliseconds	< 500 rpm

Map 1

rpm	700	1000	1500	2000	2500	3000	3500	4000
kPa (mmHg, inHg)	20 (150, 5.9)	20 (150, 5.9)	20 (150, 5.9)	20 (150, 5.9)	20 (150, 5.9)	20 (150, 5.9)	20 (150, 5.9)	20 (150, 5.9)

rpm	4500	5000	5500	6000	6500	7000
kPa (mmHg, inHg)	20 (150, 5.9)	20 (150, 5.9)	20 (150, 5.9)	20 (150, 5.9)	20 (150, 5.9)	20 (150, 5.9)

Map 2

- Normal ignition

		Barometric pressure (kPa (mmHg, inHg))						
		60 (450.0 , 17.7)	66.7 (500.0 , 19.7)	72.2 (542.0 , 21.3)	85.2 (639.0 , 25.2)	86.2 (647.0 , 25.5)	92 (690.0 , 27.2)	100.5 (754.0 , 29.7)
Engine speed (rpm)	700	22.4 (168.4 , 6.6)	22.4 (168.4 , 6.6)	22.4 (168.4 , 6.6)	23.3 (174.5 , 6.9)	23.6 (176.7 , 7)	24.4 (183.4 , 7.2)	26.5 (198.7 , 7.8)
	1000	21.3 (159.7 , 6.3)	21.3 (159.7 , 6.3)	21.3 (159.7 , 6.3)	22.4 (168.2 , 6.6)	22.8 (170.8 , 6.7)	23.4 (175.4 , 6.9)	25.3 (189.8 , 7.5)
	1500	20.8 (156.1 , 6.1)	20.8 (156.1 , 6.1)	20.8 (156.1 , 6.1)	22 (165.2 , 6.5)	22.2 (166.7 , 6.6)	22.9 (172.2 , 6.8)	24.6 (184.3 , 7.3)
	2000	22.3 (167.4 , 6.6)	22.3 (167.4 , 6.6)	22.3 (167.4 , 6.6)	23.9 (179.2 , 7.1)	24.2 (181.8 , 7.2)	25 (187.6 , 7.4)	26.9 (201.7 , 7.9)
	2500	20.7 (155.0 , 6.1)	20.7 (155.0 , 6.1)	20.7 (155.0 , 6.1)	21.8 (163.9 , 6.5)	21.9 (164.4 , 6.5)	22.8 (171.0 , 6.7)	24.3 (182.1 , 7.2)
	3000	22.3 (167.1 , 6.6)	22.3 (167.1 , 6.6)	22.3 (167.1 , 6.6)	23.6 (177.0 , 7)	23.9 (179.5 , 7.1)	24.8 (185.7 , 7.3)	26.4 (197.9 , 7.8)
	3500	25.3 (189.9 , 7.5)	25.3 (189.9 , 7.5)	25.3 (189.9 , 7.5)	26.6 (199.3 , 7.8)	26.2 (196.9 , 7.8)	27.4 (205.7 , 8.1)	28.5 (214.1 , 8.4)
	4000	25 (187.4 , 7.4)	25 (187.4 , 7.4)	25 (187.4 , 7.4)	26.6 (199.9 , 7.9)	25.9 (194.6 , 7.7)	27.1 (203.0 , 8)	28 (210.3 , 8.3)
	4500	26.5 (199.1 , 7.8)	26.5 (199.1 , 7.8)	26.5 (199.1 , 7.8)	27.6 (206.9 , 8.1)	26.7 (200.2 , 7.9)	28 (209.8 , 8.3)	28.7 (215.3 , 8.5)
	5000	28.5 (213.8 , 8.4)	28.5 (213.8 , 8.4)	28.5 (213.8 , 8.4)	29.5 (221.6 , 8.7)	28.6 (214.9 , 8.5)	29.9 (224.5 , 8.8)	30.7 (230.0 , 9.1)
	5500	30.5 (228.5 , 9)	30.5 (228.5 , 9)	30.5 (228.5 , 9)	31.5 (236.3 , 9.3)	30.6 (229.6 , 9)	31.9 (239.2 , 9.4)	32.6 (244.8 , 9.6)
	6000	32.4 (243.2 , 9.6)	32.4 (243.2 , 9.6)	32.4 (243.2 , 9.6)	33.5 (251.0 , 9.9)	32.6 (244.3 , 9.6)	33.8 (253.9 , 10)	34.6 (259.5 , 10.2)
	6400	34 (255.0 , 10)	34 (255.0 , 10)	34 (255.0 , 10)	35 (262.8 , 10.3)	34.1 (256.1 , 10.1)	35.4 (265.7 , 10.5)	36.2 (271.2 , 10.7)
kPa (mmHg, inHg)								

• Idling ignition

		Barometric pressure (kPa (mmHg, inHg))						
		60 (450.0 , 17.7)	66.7 (500.0 , 19.7)	72.2 (542.0 , 21.3)	85.2 (639.0 , 25.2)	86.2 (647.0 , 25.5)	92 (690.0 , 27.2)	100.5 (754.0 , 29.7)
Engine speed (rpm)	700	22.4 (168.4 , 6.6)	22.4 (168.4 , 6.6)	22.4 (168.4 , 6.6)	23.3 (174.5 , 6.9)	23.6 (176.7 , 7)	24.4 (183.4 , 7.2)	26.5 (198.7 , 7.8)
	1000	21.4 (160.4 , 6.3)	21.4 (160.4 , 6.3)	21.4 (160.4 , 6.3)	22.5 (168.9 , 6.6)	24.2 (181.3 , 7.1)	26.3 (197.7 , 7.8)	23.9 (179.3 , 7.1)
	1500	21.8 (163.4 , 6.4)	21.8 (163.4 , 6.4)	21.8 (163.4 , 6.4)	23 (172.5 , 6.8)	24.8 (185.8 , 7.3)	25.8 (193.3 , 7.6)	24.5 (183.5 , 7.2)
	2000	26.9 (202.1 , 8)	26.9 (202.1 , 8)	26.9 (202.1 , 8)	28.5 (213.9 , 8.4)	28.6 (214.5 , 8.4)	29.9 (224.6 , 8.8)	31.7 (237.6 , 9.4)
	2500	27 (202.7 , 8)	27 (202.7 , 8)	27 (202.7 , 8)	28.2 (211.5 , 8.3)	28.4 (212.7 , 8.4)	29.1 (218.5 , 8.6)	30.7 (230.2 , 9.1)
	3000	29 (217.3 , 8.6)	29 (217.3 , 8.6)	29 (217.3 , 8.6)	30.3 (227.2 , 8.9)	30.5 (228.6 , 9)	32.2 (241.4 , 9.5)	33.2 (249.1 , 9.8)
	3500	32 (240.1 , 9.5)	32 (240.1 , 9.5)	32 (240.1 , 9.5)	33.3 (249.5 , 9.8)	33.9 (254.6 , 10)	34.5 (259.0 , 10.2)	36 (270.1 , 10.6)
	4000	32 (240.1 , 9.5)	32 (240.1 , 9.5)	32 (240.1 , 9.5)	33.7 (252.6 , 9.9)	33.3 (250.0 , 9.8)	34.3 (257.6 , 10.1)	36 (270.0 , 10.6)
	4500	34.1 (255.7 , 10.1)	34.1 (255.7 , 10.1)	34.1 (255.7 , 10.1)	35.1 (263.5 , 10.4)	33.7 (252.8 , 10)	35.6 (266.8 , 10.5)	36.4 (273.4 , 10.8)
	5000	36 (270.4 , 10.6)	36 (270.4 , 10.6)	36 (270.4 , 10.6)	37.1 (278.2 , 11)	35.7 (267.5 , 10.5)	37.5 (281.5 , 11.1)	38.4 (288.1 , 11.3)
	5500	38 (285.1 , 11.2)	38 (285.1 , 11.2)	38 (285.1 , 11.2)	39 (292.9 , 11.5)	37.6 (282.2 , 11.1)	39.5 (296.2 , 11.7)	40.4 (302.8 , 11.9)
	6000	40 (299.9 , 11.8)	40 (299.9 , 11.8)	40 (299.9 , 11.8)	41 (307.6 , 12.1)	39.6 (297.0 , 11.7)	41.4 (310.9 , 12.2)	42.3 (317.5 , 12.5)
	6400	41.5 (311.6 , 12.3)	41.5 (311.6 , 12.3)	41.5 (311.6 , 12.3)	42.6 (319.4 , 12.6)	41.2 (308.7 , 12.2)	43 (322.7 , 12.7)	43.9 (329.2 , 13)
kPa (mmHg, inHg)								

3. GENERAL DRIVING CYCLE

• If conditions are met, it is possible to detect the misfires from idling to high engine speed. However, to avoid excessive load or harm to the engine, perform diagnosis at idle.
• Perform the diagnosis continuously.

4. DIAGNOSTIC METHOD

When a misfire occurs, the engine speed will decrease and the crankshaft position speed will change. Calculate the interval difference value (diagnostic value) from crankshaft position speed by the following formula, and judge whether a misfire is occurring or not comparing the calculated result with judgment value. Count the number of misfires, if the misfire ratio is higher during 1000 revs. or 200 revs., judge corresponding cylinders as NG.

Diagnostic value calculation (Calculate from angle speed) →	Misfire detection every single ignition (Compare diagnostic value with judgment value) →	NG judgment (Misfire occurrence judgment required by the law) (Compare number of misfire with judgment value)
	• 120° Interval Difference Method • 360° Interval Difference Method • 720° Interval Difference Method	• FTP 1.5 times misfire NG judgment • Catalyst damage misfire NG judgment

As shown in the following figure, pick a cylinder as the standard and name it omg 0. And the former crankshaft position speed is named omg 1, the second former crankshaft position speed is named omg 2, the third is named omg 3, etc.

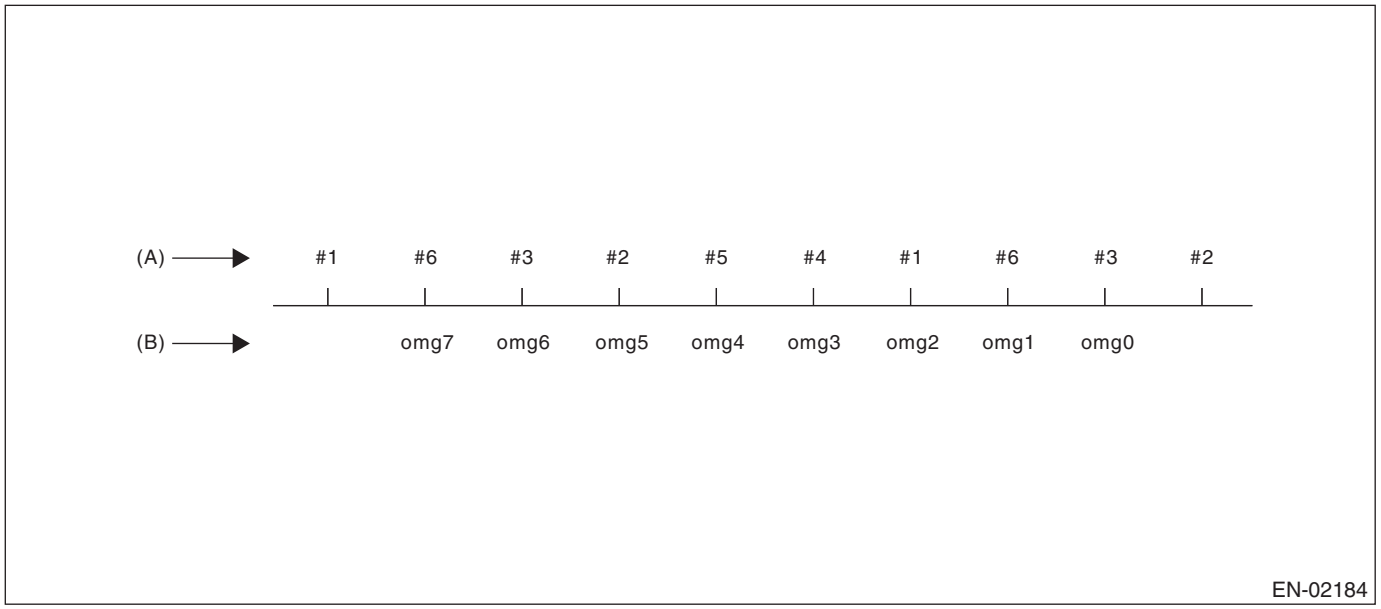

(A) Ignition order (B) Crankshaft position speed

120° Interval Difference Method

Diagnostic value	domg 120 = (omg 1 – omg 0) – (omg 7 – omg 1)/6
Judge as a misfire in the following cases. • domg 120 > judgment value of positive side • domg 121 ≤ judgment value of negative side (Diagnostic value before 120° CA)	

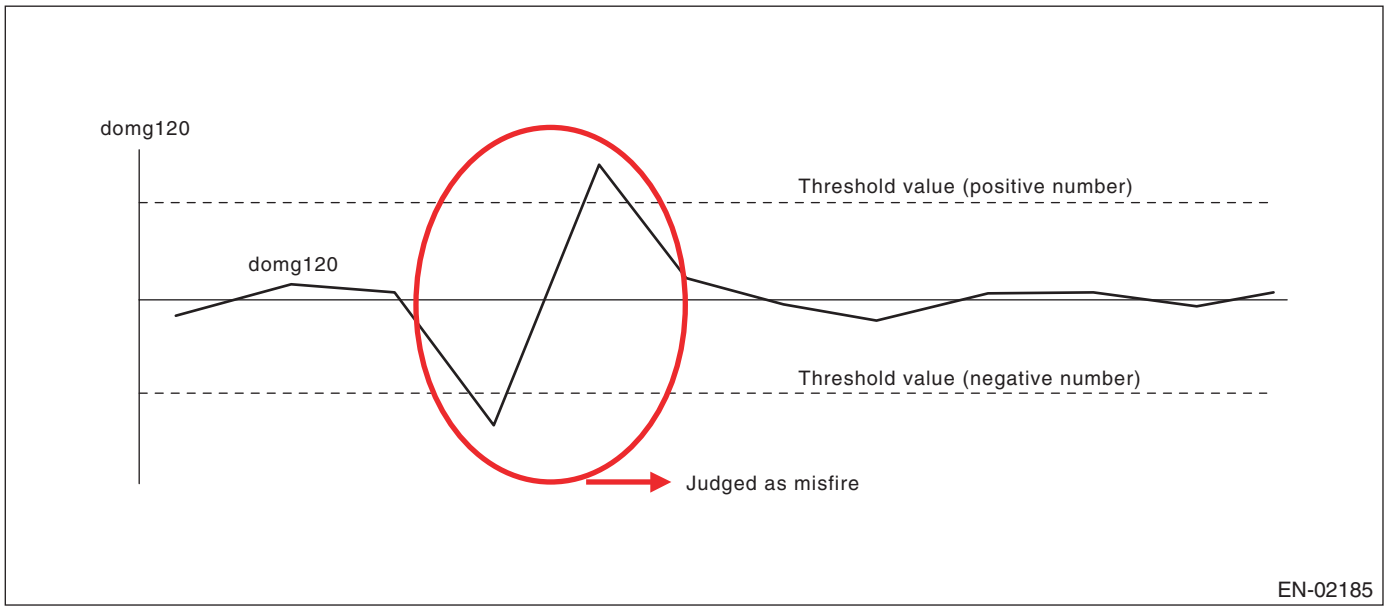

360° Interval Difference Method

Diagnostic value	domg 360 = (omg 1 – omg 0) – (omg 4 – omg 3)
Misfire judgment	domg 360 > Judgment value → Judge as misfire

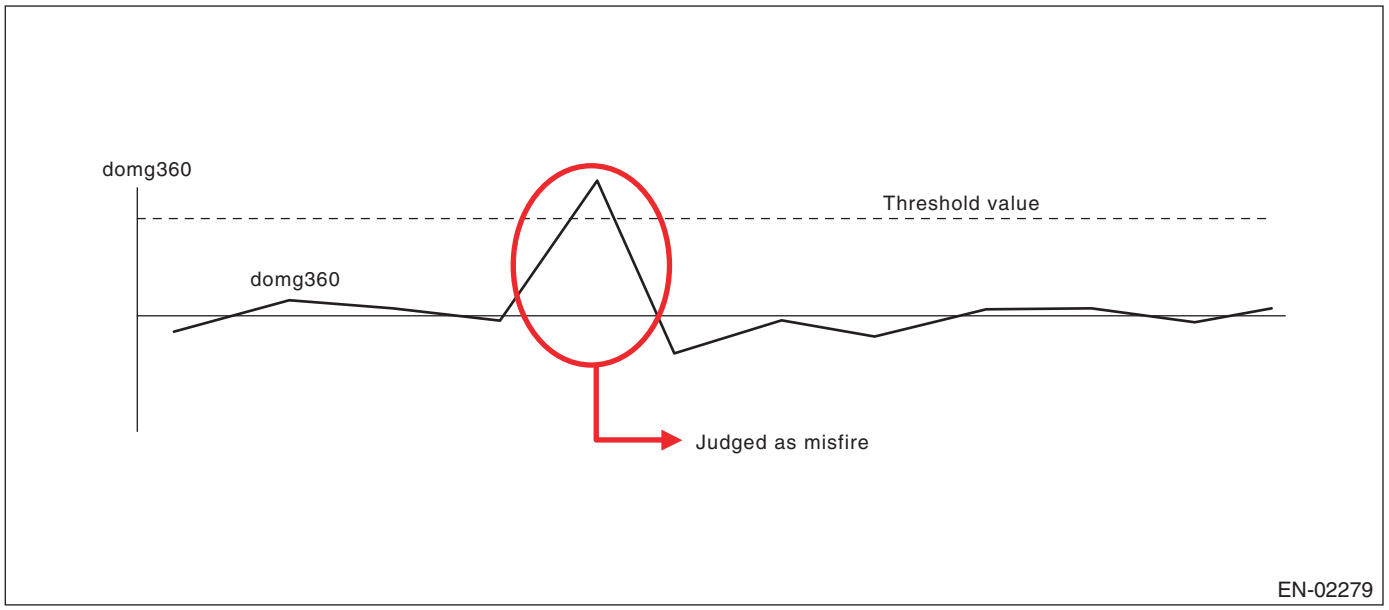

720° Interval Difference Method

Diagnostic value	domg 720 = (omg 1 – omg 0) – (omg 7 – omg 6)
Misfire judgment	domg 720 > Judgment value → Judge as misfire

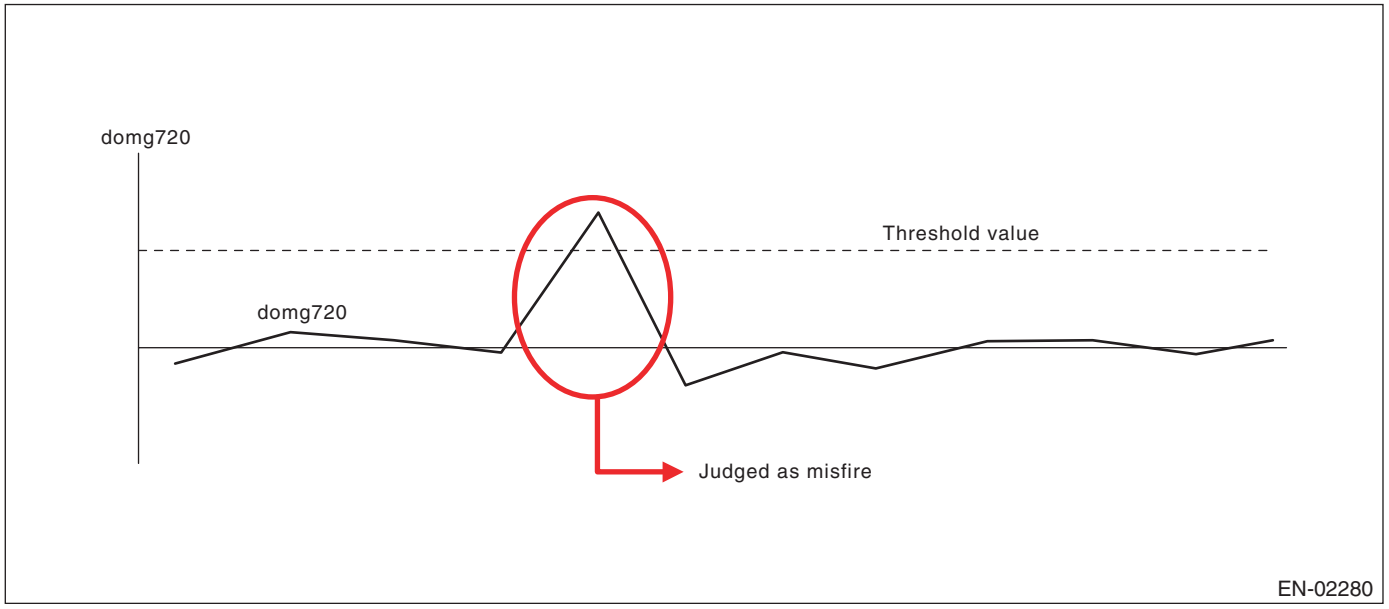

- **FTP 1.5 times misfire (Misfire occurrence level which influences exhaust gas)**
- **Abnormality Judgment**

Judgment Value (Judge that malfunction occurs when the misfire ratio is high in 1000 engine revs.)

Malfunction Criteria	Threshold Value
FTP emission diagnostic value	≥ 40 × 100/3000% in 1000 revs.

Time Needed for Diagnosis: 1000 engine revs.
Malfunction Indicator Light Illumination: Illuminates when malfunction occurs in 2 continuous driving cycles.

- **Normality Judgment**

Judgment Value

Malfunction Criteria	Threshold Value
FTP emission diagnostic value	< 40 × 100/3000% in 1000 revs.

Time Needed for Diagnosis: 1000 engine revs.

- **Catalyst damage misfire (Misfire occurrence level damaging catalyst)**
- **Abnormality Judgment**

Judgment Value

Malfunction Criteria	Threshold Value
Catalyst damage misfire diagnostic value	≥ Value from Map 3

Map 3

		Intake air (g(oz)/rev)									
		0.16 (0.01)	0.28 (0.01)	0.4 (0.01)	0.52 (0.02)	0.64 (0.02)	0.76 (0.03)	0.92 (0.03)	1.1 (0.04)	1.5 (0.05)	2 (0.07)
Engine speed (rpm)	650	150	150	150	150	150	120	96	72	72	72
	1000	150	150	150	120	120	120	78	36	36	36
	1500	150	150	120	120	120	85.5	54.6	40.2	40.2	40.2
	2000	120	120	120	120	120	66.6	40.2	40.2	40.2	40.2
	2500	102.75	102.75	102.9	87.3	87.3	53.4	40.2	40.2	40.2	40.2
	3000	85.8	85.8	85.8	54.6	54.6	40.2	40.2	40.2	40.2	40.2
	3500	70.02	70.02	63	45	42	30	30	30	30	30
	4000	54.6	54.6	40.2	30	30	30	30	30	30	30
	4500	42.3	42.3	30	30	30	30	30	30	30	30
	5000	30	30	30	30	30	30	30	30	30	30
	5500	30	30	30	30	30	30	30	30	30	30
	6000	30	30	30	30	30	30	30	30	30	30
	6400	30	30	30	30	30	30	30	30	30	30
	7000	30	30	30	30	30	30	30	30	30	30

Time Needed for Diagnosis: 200 engine revs.
Malfunction Indicator Light Illumination: Illuminates as soon as a malfunction occurs.

- **Normality Judgment**

Judgment Value

Malfunction Criteria	Threshold Value
Catalyst damage misfire diagnostic value	< Value of Map 3

Time Needed for Diagnosis: 200 engine revs.

CG:DTC P0302 CYLINDER 2 MISFIRE DETECTED

1. OUTLINE OF DIAGNOSIS

NOTE:
For the detection standard, refer to DTC P0301. <Ref. to GD(H6DO)-123, DTC P0301 CYLINDER 1 MISFIRE DETECTED, Diagnostic Trouble Code (DTC) Detecting Criteria.>

CH:DTC P0303 CYLINDER 3 MISFIRE DETECTED

1. OUTLINE OF DIAGNOSIS

NOTE:
For the detection standard, refer to DTC P0301. <Ref. to GD(H6DO)-123, DTC P0301 CYLINDER 1 MISFIRE DETECTED, Diagnostic Trouble Code (DTC) Detecting Criteria.>

CI: DTC P0304 CYLINDER 4 MISFIRE DETECTED

1. OUTLINE OF DIAGNOSIS

NOTE:
For the detection standard, refer to DTC P0301. <Ref. to GD(H6DO)-123, DTC P0301 CYLINDER 1 MISFIRE DETECTED, Diagnostic Trouble Code (DTC) Detecting Criteria.>

CJ:DTC P0305 CYLINDER 5 MISFIRE DETECTED

1. OUTLINE OF DIAGNOSIS

NOTE:
For the detection standard, refer to DTC P0301. <Ref. to GD(H6DO)-123, DTC P0301 CYLINDER 1 MISFIRE DETECTED, Diagnostic Trouble Code (DTC) Detecting Criteria.>

CK:DTC P0306 CYLINDER 6 MISFIRE DETECTED

1. OUTLINE OF DIAGNOSIS

NOTE:
For the detection standard, refer to DTC P0301. <Ref. to GD(H6DO)-123, DTC P0301 CYLINDER 1 MISFIRE DETECTED, Diagnostic Trouble Code (DTC) Detecting Criteria.>

CL:DTC P0327 KNOCK SENSOR 1 CIRCUIT LOW (BANK 1 OR SINGLE SENSOR)

1. OUTLINE OF DIAGNOSIS

Detect the open or short circuit of knock sensor.
Judge as NG if out of specification.

2. COMPONENT DESCRIPTION

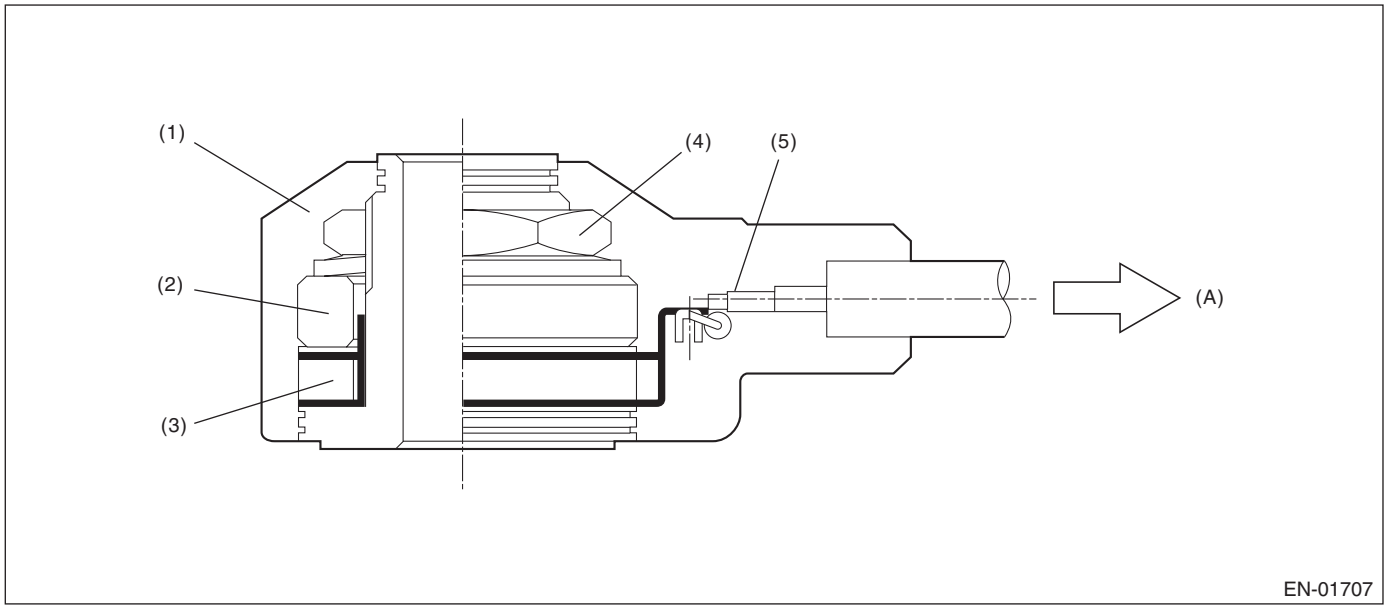

(A) To knock sensor harness

(1) Case
(2) Weight
(3) Piezoelectric element
(4) Nut
(5) Resistance

3. ENABLE CONDITION

Secondary Parameters	Enable Conditions
None	

4. GENERAL DRIVING CYCLE

Always perform the diagnosis continuously.

5. DIAGNOSTIC METHOD

• Abnormality Judgment

If the duration of time while the following conditions are met is longer than the time indicated, judge as NG.

Judgment Value

Malfunction Criteria	Threshold Value
Output voltage	< 0.243 V

Time Needed for Diagnosis: 1000 ms
Malfunction Indicator Light Illumination: Illuminates as soon as a malfunction occurs.

• Normality Judgment

Judge as OK and clear the NG if the continuous time while the following conditions are established is more than the predetermined time.

Judgment Value

Malfunction Criteria	Threshold Value
Output voltage	≥ 0.243 V

Time Needed for Diagnosis: Less than 1 second

CM:DTC P0328 KNOCK SENSOR 1 CIRCUIT HIGH (BANK 1 OR SINGLE SENSOR)

1. OUTLINE OF DIAGNOSIS

Detect the open or short circuit of knock sensor.
Judge as NG if out of specification.

2. COMPONENT DESCRIPTION

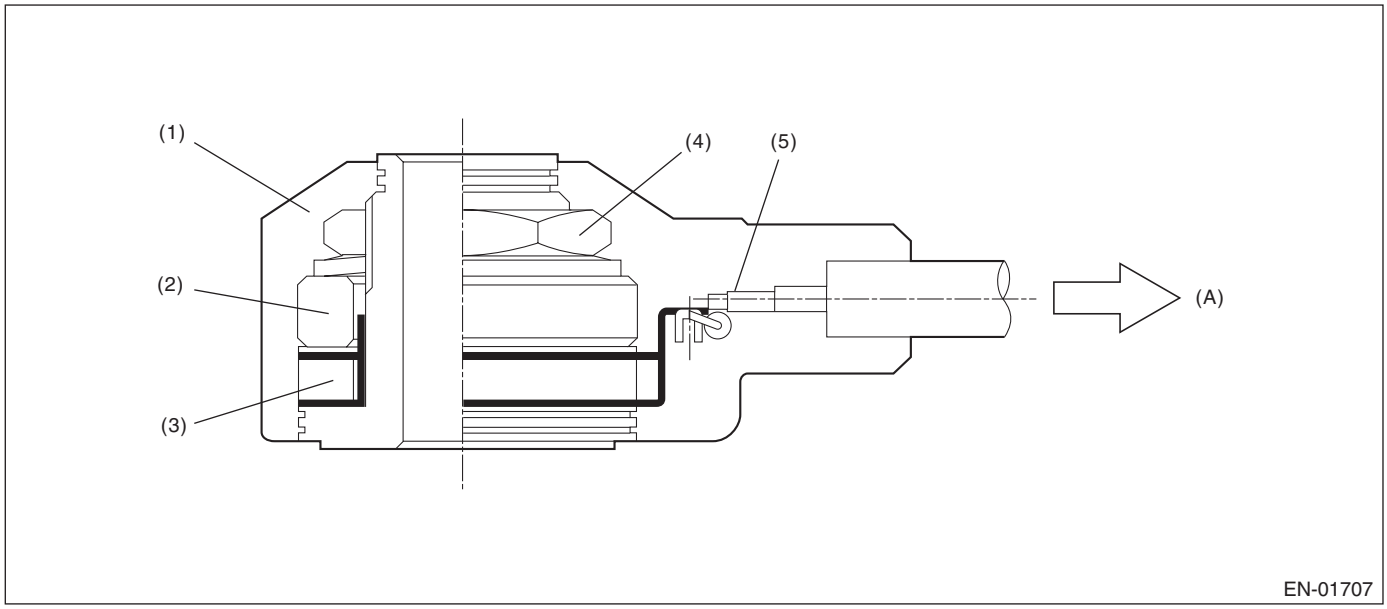

(A) To knock sensor harness

(1) Case
(2) Weight
(3) Piezoelectric element
(4) Nut
(5) Resistance

3. ENABLE CONDITION

Secondary Parameters	Enable Conditions
None	

4. GENERAL DRIVING CYCLE

Always perform the diagnosis continuously.

5. DIAGNOSTIC METHOD

• Abnormality Judgment

If the duration of time while the following conditions are met is longer than the time indicated, judge as NG.

Judgment Value

Malfunction Criteria	Threshold Value
Output voltage	≥ 4.709 V

Time Needed for Diagnosis: 1000 ms
Malfunction Indicator Light Illumination: Illuminates as soon as a malfunction occurs.

• Normality Judgment

Judge as OK and clear the NG if the continuous time while the following conditions are established is more than the predetermined time.

Judgment Value

Malfunction Criteria	Threshold Value
Output voltage	< 4.709 V

Time Needed for Diagnosis: Less than 1 second

CN:DTC P0332 KNOCK SENSOR 2 CIRCUIT LOW (BANK 2)

1. OUTLINE OF DIAGNOSIS

NOTE:
For the detection standard, refer to DTC P0327. <Ref. to GD(H6DO)-130, DTC P0327 KNOCK SENSOR 1 CIRCUIT LOW (BANK 1 OR SINGLE SENSOR), Diagnostic Trouble Code (DTC) Detecting Criteria.>

CO:DTC P0333 KNOCK SENSOR 2 CIRCUIT HIGH (BANK 2)

1. OUTLINE OF DIAGNOSIS

NOTE:
For the detection standard, refer to DTC P0328. <Ref. to GD(H6DO)-132, DTC P0328 KNOCK SENSOR 1 CIRCUIT HIGH (BANK 1 OR SINGLE SENSOR), Diagnostic Trouble Code (DTC) Detecting Criteria.>

CP:DTC P0335 CRANKSHAFT POSITION SENSOR “A” CIRCUIT

1. OUTLINE OF DIAGNOSIS

Detect the open or short circuit of the crankshaft position sensor.
Judge as NG when the crank signal is not input even though the starter was rotated.

2. COMPONENT DESCRIPTION

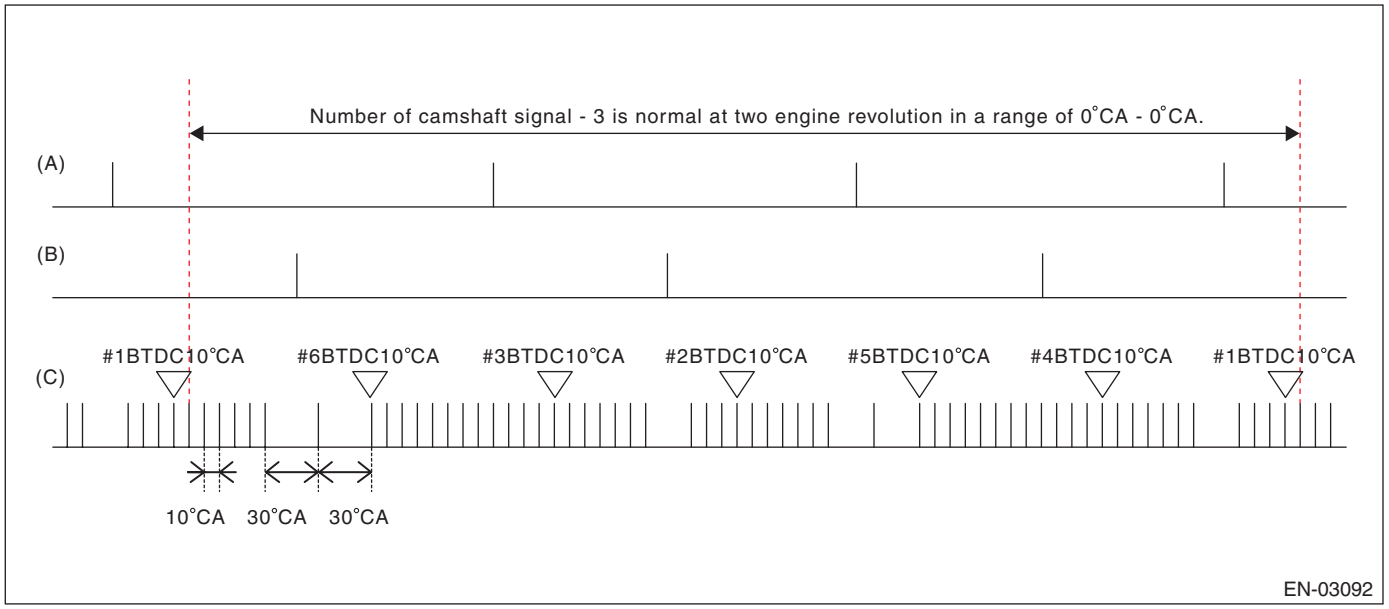

(A) Camshaft signal (RH) (B) Camshaft signal (LH) (C) Crankshaft signal

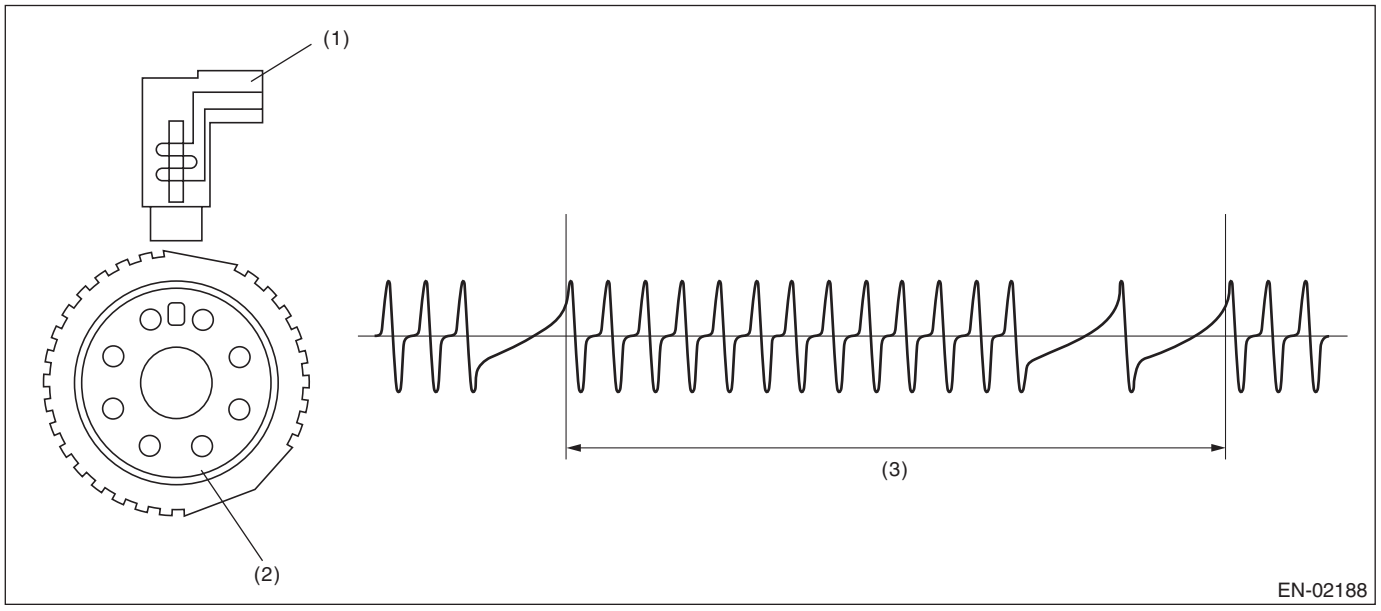

(1) Crankshaft position sensor (2) Crank sprocket (3) Crankshaft half-turn

3. ENABLE CONDITION

Secondary Parameters	Enable Conditions
None	

4. GENERAL DRIVING CYCLE

Always perform the diagnosis continuously.

5. DIAGNOSTIC METHOD

• Abnormality Judgment

If the duration of time while the following conditions are met is longer than the time indicated, judge as NG.

Judgment Value

Malfunction Criteria	Threshold Value
Starter switch	ON
Crankshaft position sensor signal	Not detected
Battery voltage	≥ 8 V

Time Needed for Diagnosis: 3000 ms
Malfunction Indicator Light Illumination: Illuminates as soon as a malfunction occurs.

• Normality Judgment

Judge as OK and clear the NG if the continuous time while the following conditions are established is more than the predetermined time.

Judgment Value

Malfunction Criteria	Threshold Value
Crankshaft position sensor signal	Input exists
Battery voltage	≥ 8 V

Time Needed for Diagnosis: Less than 1 second

CQ:DTC P0336 CRANKSHAFT POSITION SENSOR “A” CIRCUIT RANGE/PERFORMANCE

1. OUTLINE OF DIAGNOSIS

Detect for faults in crankshaft position sensor output properties.
Judge as NG when there is a problem in the number of crankshaft signals for every revolution of crankshaft.

2. COMPONENT DESCRIPTION

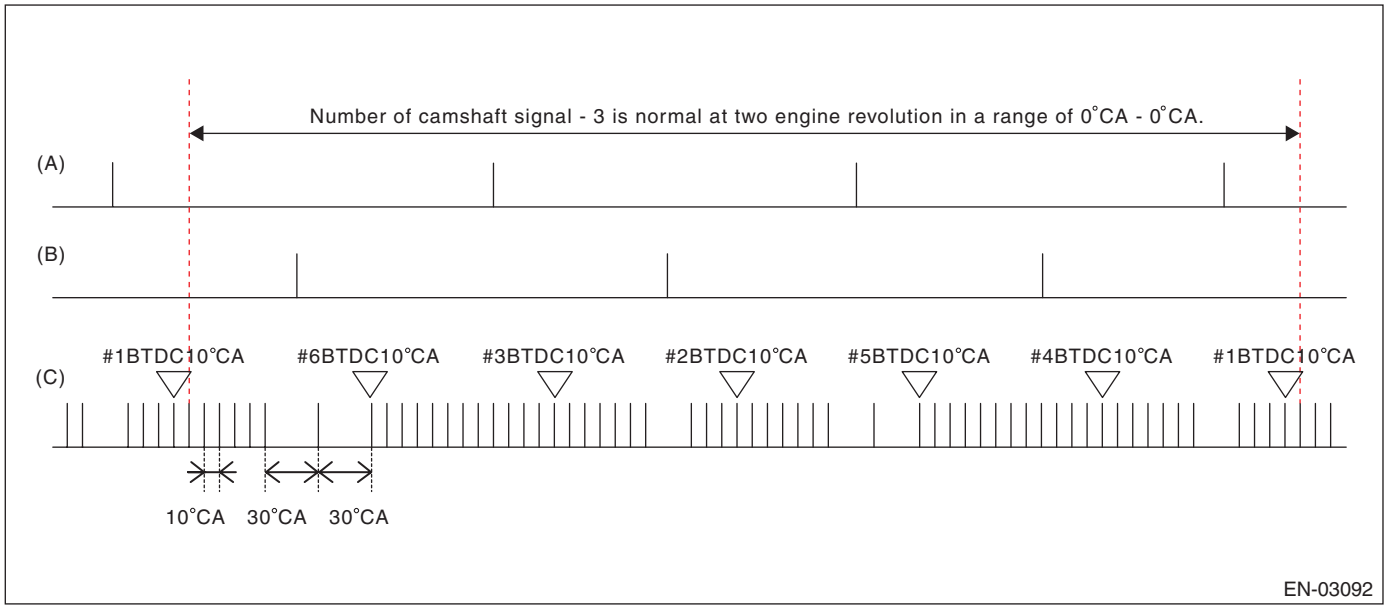

(A) Camshaft signal (RH) (B) Camshaft signal (LH) (C) Crankshaft signal

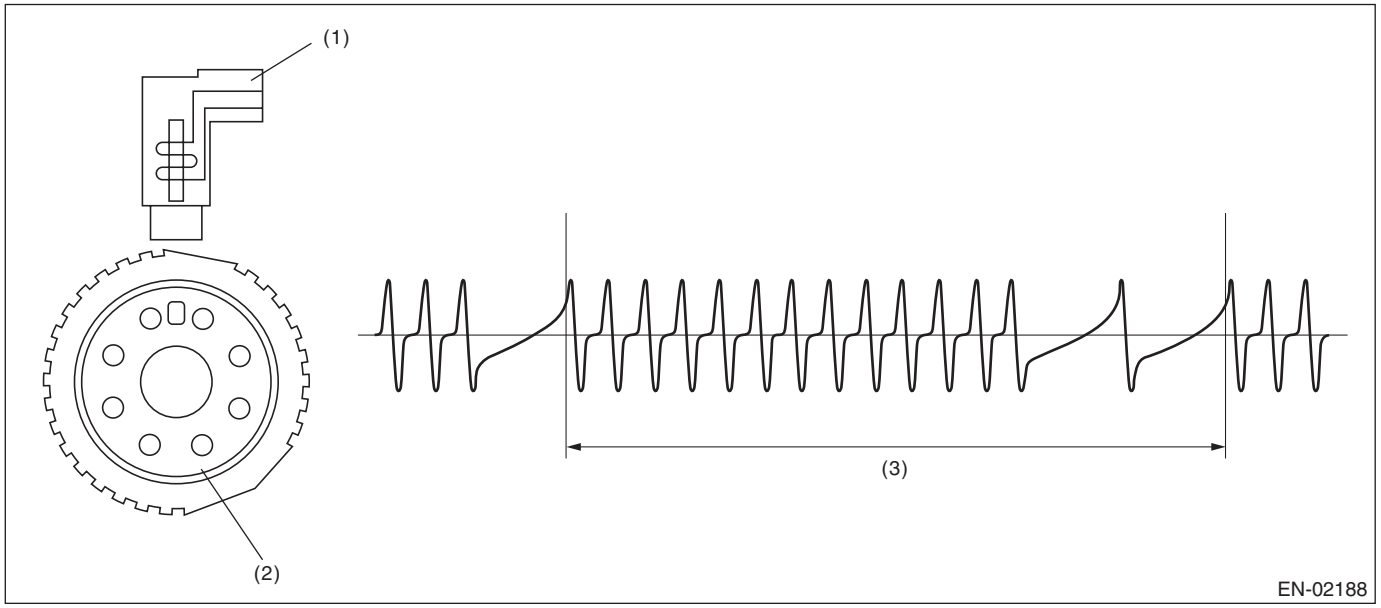

(1) Crankshaft position sensor (2) Crank sprocket (3) Crankshaft half-turn

3. ENABLE CONDITION

Secondary Parameters	Enable Conditions
Battery voltage	≥ 8 V
Engine speed	< 3000 rpm

4. GENERAL DRIVING CYCLE

Perform the diagnosis continuously under 3000 rpm engine speed.

5. DIAGNOSTIC METHOD

- **Abnormality Judgment**

Judge as NG when the following conditions are established.

Judgment Value

Malfunction Criteria	Threshold Value
Cylinder number identification	Completed
Amount of crank sensor signal during 1 rev of crankshaft.	Not = 30

Time Needed for Diagnosis: 10 engine revs. engine revs.
Malfunction Indicator Light Illumination: Illuminates when malfunction occurs in 2 continuous driving cycles.

- **Normality Judgment**

Judge as OK and clear the NG if the continuous time while the following conditions are established is more than the predetermined time.

Judgment Value

Malfunction Criteria	Threshold Value
Cylinder number identification	Completed
Amount of crank sensor signal during 1 rev of crankshaft.	= 30

Time Needed for Diagnosis: Less than 1 second

CR:DTC P0340 CAMSHAFT POSITION SENSOR “A” CIRCUIT (BANK 1 OR SINGLE SENSOR)

1. OUTLINE OF DIAGNOSIS

Detect the open or short circuit of the camshaft position sensor.
Judge as NG when the number of camshaft signals remains abnormal.

2. COMPONENT DESCRIPTION

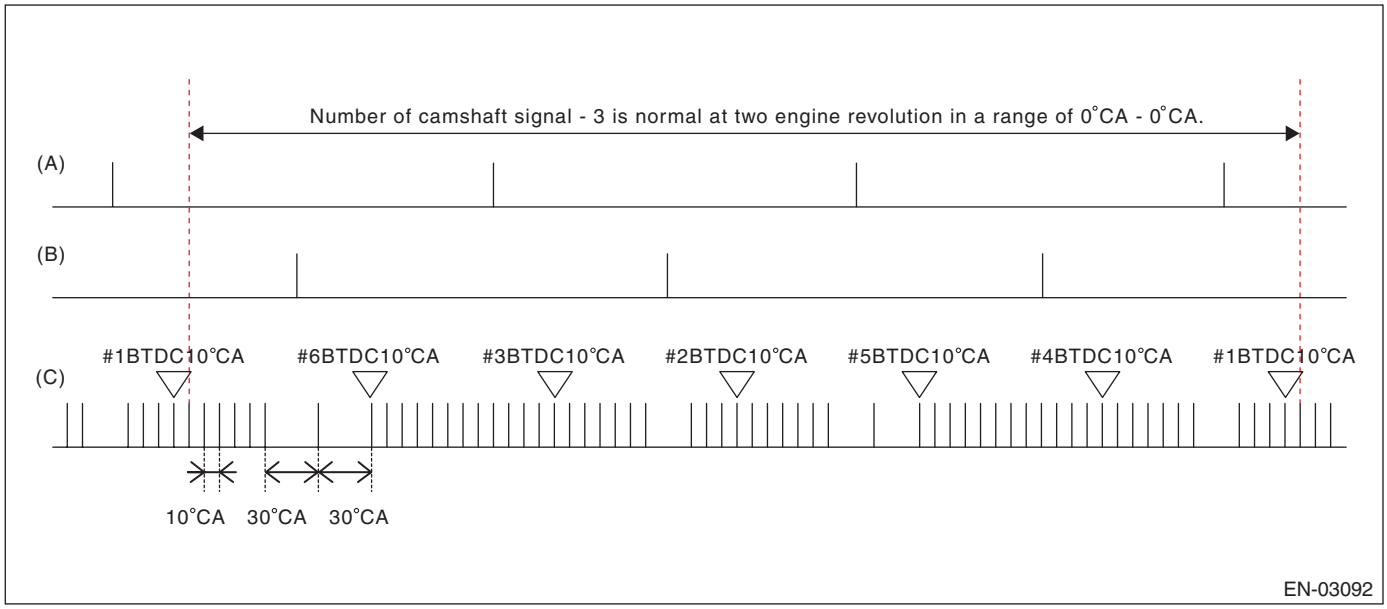

(A) Camshaft signal (RH)
(B) Camshaft signal (LH)
(C) Crankshaft signal

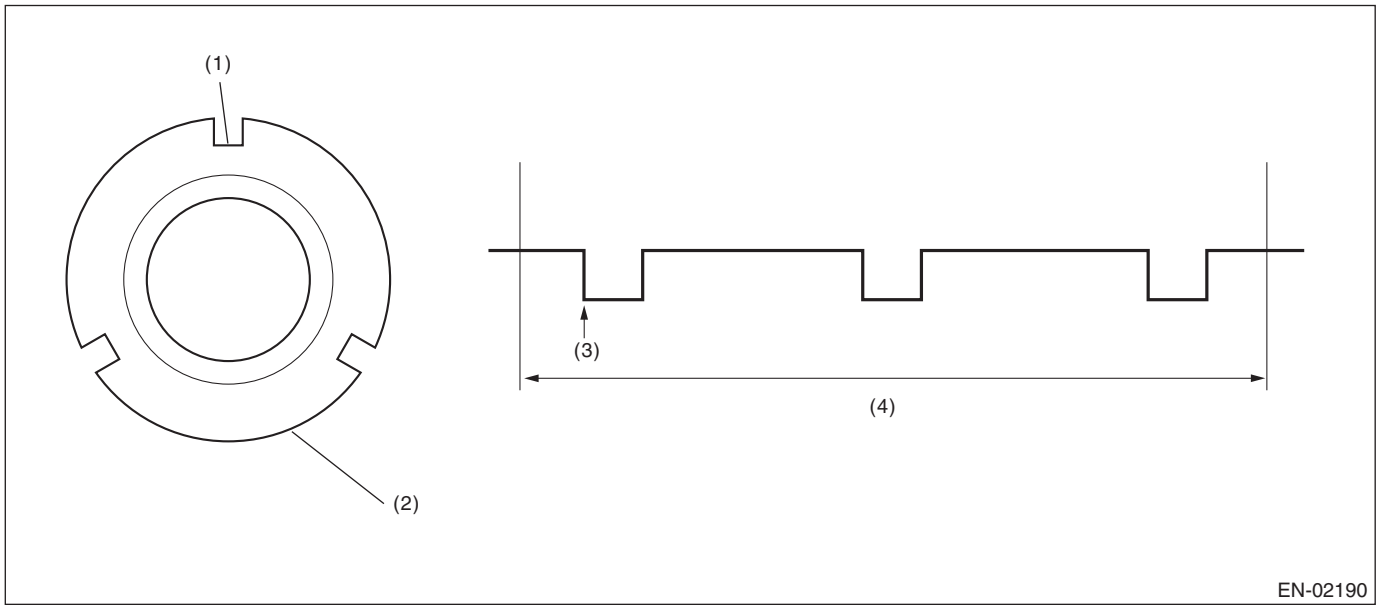

(1) Throttle
(2) Camshaft plate
(3) Detecting point
(4) Camshaft one revolution (crankshaft two revolutions)

3. ENABLE CONDITION

Secondary Parameters	Enable Conditions
Battery voltage	≥ 8 V

4. GENERAL DRIVING CYCLE

Always perform the diagnosis continuously.

5. DIAGNOSTIC METHOD

- **Abnormality Judgment 1**

Judge as NG when the condition where the number of camshaft position sensor signals are less than 3 times during 2 engine revs continues.

Judgment Value

Malfunction Criteria	Threshold Value
Amount of camshaft sensor signal during 2 revs.	< 3 time(s)

Time Needed for Diagnosis: Engine two revolutions × 4 time(s)
Malfunction Indicator Light Illumination: Illuminates as soon as a malfunction occurs.

- **Normality Judgment 1**

Judge as OK and clear the NG when the malfunction criteria below are met.

Judgment Value

Malfunction Criteria	Threshold Value
Camshaft position sensor signal	≥ 3 time(s)

Time Needed for Diagnosis: Two engine revolutions

- **Abnormality Judgment 2**

If the duration of time while the following conditions are met is longer than the time indicated, judge as NG.

Judgment Value

Malfunction Criteria	Threshold Value
Starter	ON
Camshaft position sensor signal	No input

Time Needed for Diagnosis: 3000 ms

- **Normality Judgment 2**

Judge as OK and clear the NG if the continuous time while the following conditions are established is more than the predetermined time.

Judgment Value

Malfunction Criteria	Threshold Value
Camshaft position sensor signal	Input exists

Time Needed for Diagnosis: Less than 1 second

CS:DTC P0345 CAMSHAFT POSITION SENSOR “A” CIRCUIT (BANK 2)

1. OUTLINE OF DIAGNOSIS

NOTE:
For the detection standard, refer to DTC P0340. <Ref. to GD(H6DO)-138, DTC P0340 CAMSHAFT POSITION SENSOR “A” CIRCUIT (BANK 1 OR SINGLE SENSOR), Diagnostic Trouble Code (DTC) Detecting Criteria.>

CT:DTC P0351 IGNITION COIL A PRIMARY/SECONDARY CIRCUIT

1. OUTLINE OF DIAGNOSIS

Based on the self-diagnostic result of the ignition coil driving IC, judge the ignition coil driving circuit as normal or abnormal.
The ignition coil driving IC detects “no ignition” status as a malfunction.

2. ENABLE CONDITIONS

Secondary Parameters	Enable Conditions
Battery voltage	≥ 10.9 V
Elapsed time after starting the engine	> 1 s
Engine speed	> 500 rpm
Ignition energization time	> 2000 μs
Ignition status	Not during ignition cut

3. GENERAL DRIVING CYCLE

Always perform the diagnosis continuously.

4. DIAGNOSTIC METHOD

- **Abnormality Judgment**

Judge as NG when the following conditions are established.

Judgment Value

Malfunction Criteria	Threshold Value
Ignition driving IC information	Malfunction

Time Needed for Diagnosis: 2500 ms
Malfunction Indicator Light Illumination: Illuminates as soon as a malfunction occurs.

- **Normality Judgment**

Judge as OK and clear the NG if the following conditions are established.

Judgment Value

Malfunction Criteria	Threshold Value
Ignition driving IC information	Normal

Time Needed for Diagnosis: Less than 1 second

CU:DTC P0352 IGNITION COIL B PRIMARY/SECONDARY CIRCUIT

1. OUTLINE OF DIAGNOSIS

NOTE:
For the detection standard, refer to DTC P0351. <Ref. to GD(H6DO)-141, DTC P0351 IGNITION COIL A PRIMARY/SECONDARY CIRCUIT, Diagnostic Trouble Code (DTC) Detecting Criteria.>

CV:DTC P0353 IGNITION COIL C PRIMARY/SECONDARY CIRCUIT

1. OUTLINE OF DIAGNOSIS

NOTE:
For the detection standard, refer to DTC P0351. <Ref. to GD(H6DO)-141, DTC P0351 IGNITION COIL A PRIMARY/SECONDARY CIRCUIT, Diagnostic Trouble Code (DTC) Detecting Criteria.>

CW:DTC P0354 IGNITION COIL D PRIMARY/SECONDARY CIRCUIT

1. OUTLINE OF DIAGNOSIS

NOTE:
For the detection standard, refer to DTC P0351. <Ref. to GD(H6DO)-141, DTC P0351 IGNITION COIL A PRIMARY/SECONDARY CIRCUIT, Diagnostic Trouble Code (DTC) Detecting Criteria.>

CX:DTC P0355 IGNITION COIL E PRIMARY/SECONDARY CIRCUIT

1. OUTLINE OF DIAGNOSIS

NOTE:
For the detection standard, refer to DTC P0351. <Ref. to GD(H6DO)-141, DTC P0351 IGNITION COIL A PRIMARY/SECONDARY CIRCUIT, Diagnostic Trouble Code (DTC) Detecting Criteria.>

CY:DTC P0356 IGNITION COIL F PRIMARY/SECONDARY CIRCUIT

1. OUTLINE OF DIAGNOSIS

NOTE:
For the detection standard, refer to DTC P0351. <Ref. to GD(H6DO)-141, DTC P0351 IGNITION COIL A PRIMARY/SECONDARY CIRCUIT, Diagnostic Trouble Code (DTC) Detecting Criteria.>

CZ:DTC P0365 CAMSHAFT POSITION SENSOR “B” CIRCUIT (BANK 1)

1. OUTLINE OF DIAGNOSIS

Detect the open or short circuit of the camshaft position sensor.
Judge as NG when the number of camshaft signals remains abnormal.

2. COMPONENT DESCRIPTION

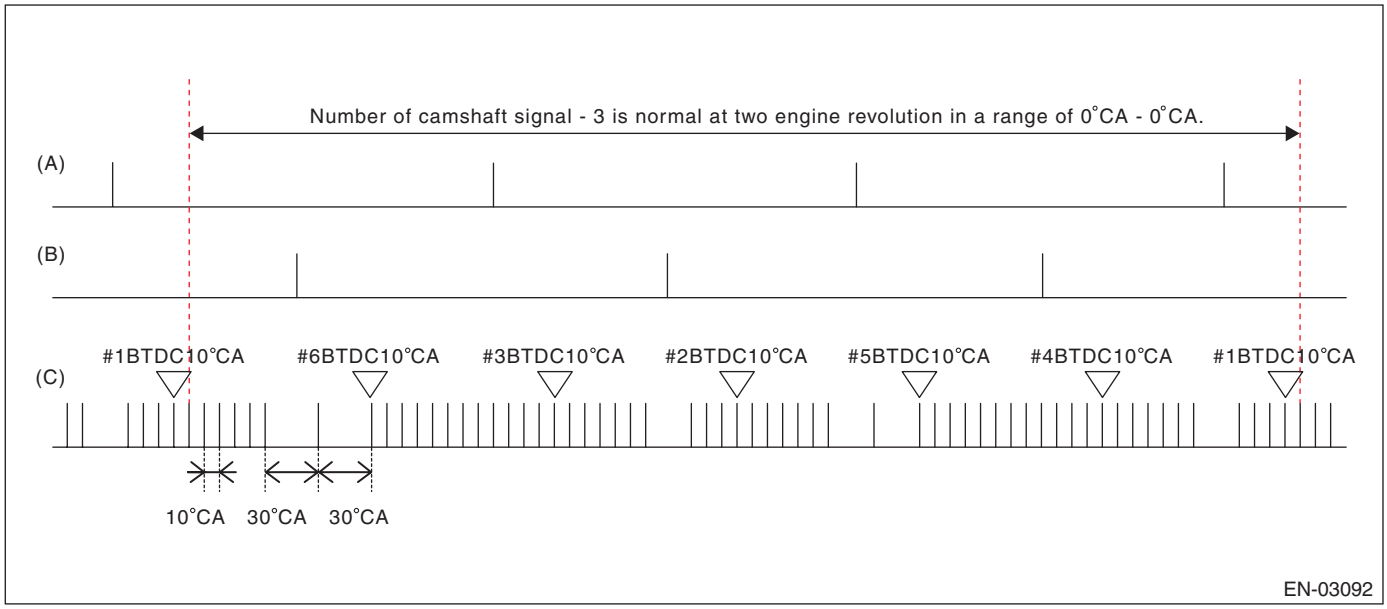

(A) Cam signal (RH)
(B) Cam signal (LH)
(C) Crankshaft signal

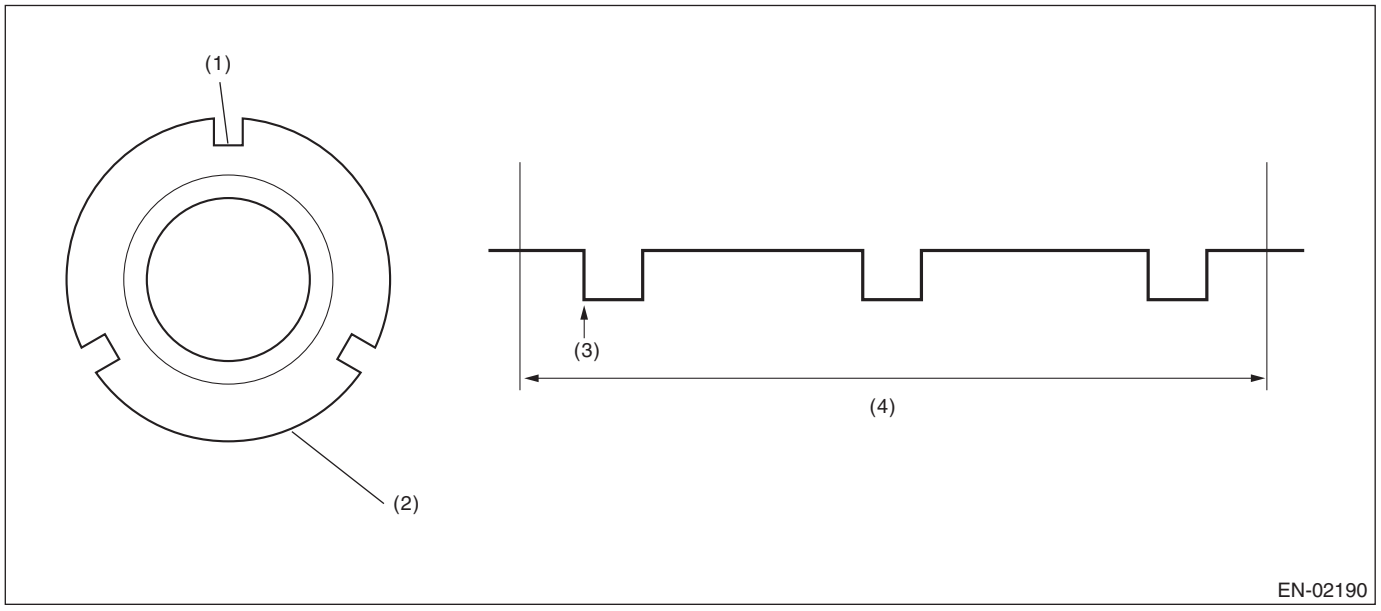

(1) Throttle
(2) Camshaft plate
(3) Detecting point
(4) Camshaft one revolution (crankshaft two revolutions)

3. ENABLE CONDITIONS

Secondary Parameters	Enable Conditions
Battery voltage	≥ 8 V

4. GENERAL DRIVING CYCLE

Always perform the diagnosis continuously.

5. DIAGNOSTIC METHOD

- **Abnormality Judgment**

Judge as NG when the status where the number of camshaft position sensor signal in two engine revolutions is less than 3 time(s).

Judgment Value

Malfunction Criteria	Threshold Value
Amount of camshaft sensor signal during 2 revs.	< 3 time(s)

Time Needed for Diagnosis: 2 engine revs. × 4 time(s)
Malfunction Indicator Light Illumination: Illuminates as soon as a malfunction occurs.

- **Normality Judgment**

Judge as OK and clear the NG when the malfunction criteria below are met.

Judgment Value

Malfunction Criteria	Threshold Value
Camshaft position sensor signal	≥ 3 time(s)

Time Needed for Diagnosis: Two engine revolutions

DA:DTC P0390 CAMSHAFT POSITION SENSOR “B” CIRCUIT (BANK 2)

1. OUTLINE OF DIAGNOSIS

NOTE:
For the detection standard, refer to DTC P0365. <Ref. to GD(H6DO)-143, DTC P0365 CAMSHAFT POSITION SENSOR “B” CIRCUIT (BANK 1), Diagnostic Trouble Code (DTC) Detecting Criteria.>

DB:DTC P0400 EXHAUST GAS RECIRCULATION FLOW

1. OUTLINE OF DIAGNOSIS

Detect EGR system malfunction.
Intake manifold pressure (negative pressure) is constant because the throttle valve is fully closed during deceleration fuel cut. At this time, when the EGR valve is opened/closed, the intake manifold pressure will change. EGR System OK/NG is judged by the range of this change.

2. COMPONENT DESCRIPTION

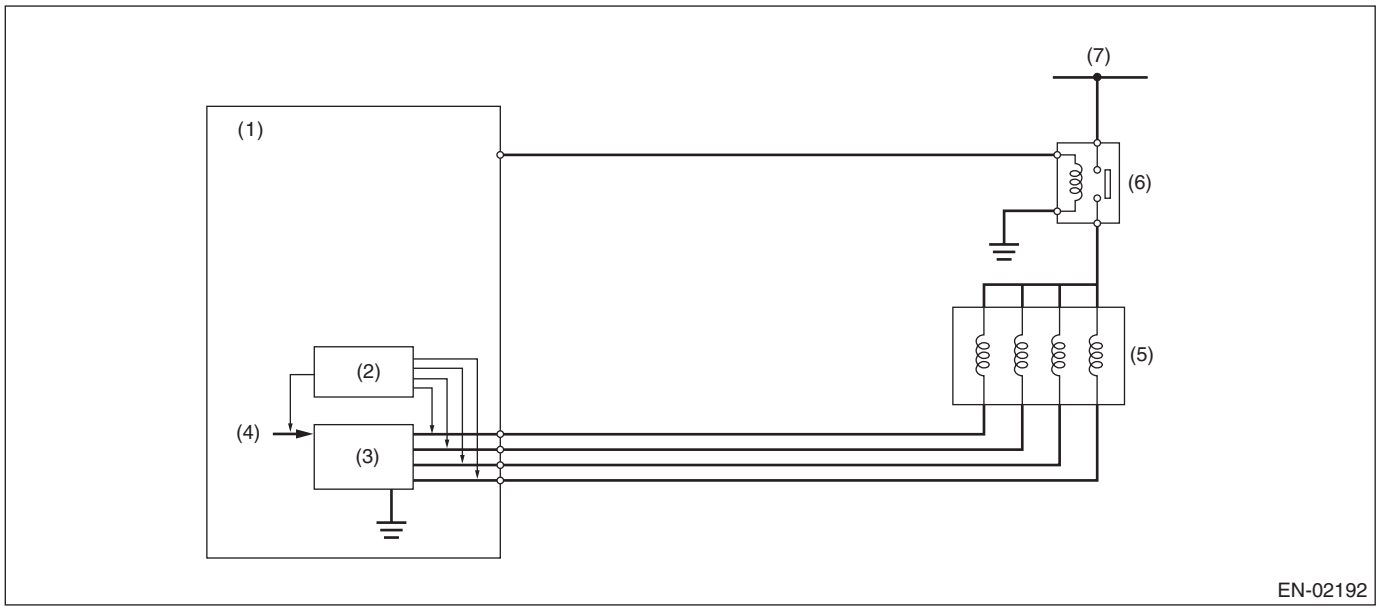

(1) ECM
(2) Detecting circuit
(3) Switching circuit
(4) CPU
(5) EGR valve
(6) Main relay
(7) Battery power supply

3. ENABLE CONDITION

Secondary Parameters	Enable Conditions
Elapsed time after starting the engine	≥ 40 s
Engine coolant temperature	≥ 75 °C(167 °F)
Engine speed	1200 rpm — 3250 rpm
Intake manifold pressure (absolute pressure)	< 46.7 kPa (350 mmHg, 13.8 inHg)
Ambient air temperature	≥ 5 °C(41 °F)
Throttle position	< 0.25 °
Battery voltage	≥ 10.9 V
Atmospheric pressure	≥ 75 kPa (563 mmHg, 22.2 inHg)
Vehicle speed	≥53 km/h (32.9 MPH)
Fuel shut-off function	In operation
Neutral switch	OFF
After neutral switch ON/OFF change	≥ Value from Map
No load change (A/C, power steering, lighting, rear defogger, heater fan and radiator fan)	≥ 5000 ms

Map

Engine coolant temperature °C (°F)	–40 (–40)	–30 (–22)	–20 (–4)	–10 (14)	0 (32)	10 (50)	20 (68)	30 (86)
After neutral switch change msec	0	0	0	0	0	0	0	0

Engine coolant temperature °C (°F)	40 (104)	50 (122)	60 (140)	70 (158)	80 (176)	90 (194)	100 (212)	110 (230)
After neutral switch change msec	0	0	0	0	0	0	0	0

4. GENERAL DRIVING CYCLE

During deceleration fuel cut from 53 km/h (approx. 33 MPH) or more, perform diagnosis once.
Be careful of vehicle speed and engine speed. (Diagnosis will not be completed if the vehicle speed and engine speed conditions become out of specification due to deceleration.)

5. DIAGNOSTIC METHOD

Measure the pressure values when the enable conditions are established, and perform diagnosis by calculating those results.
1. Label the intake manifold pressure value as PMOF1, which is observed when enable conditions are established, and set the EGR target step to 50 steps (nearly full open).
2. Label the intake manifold pressure value as PMON, which is observed after one second has passed since EGR target step was set to 50 steps (when the enable conditions were established), and set the EGR target step to 0.
3. Label the intake manifold pressure as PMOF2, which is observed after one second has passed since EGR target step was set to 0 (after two seconds have passed since the enable conditions were established).

- **Abnormality Judgment**

Judge as NG when the following conditions are established.

Judgment Value

Malfunction Criteria	Threshold Value
PMON – (PMOF1 + PMOF2)/2	< 1.6 kPa (11.8 mmHg, 0.5 inHg)

Time Needed for Diagnosis: 1 time

Malfunction Indicator Light Illumination: Illuminates when malfunction occurs in 2 continuous driving cycles.

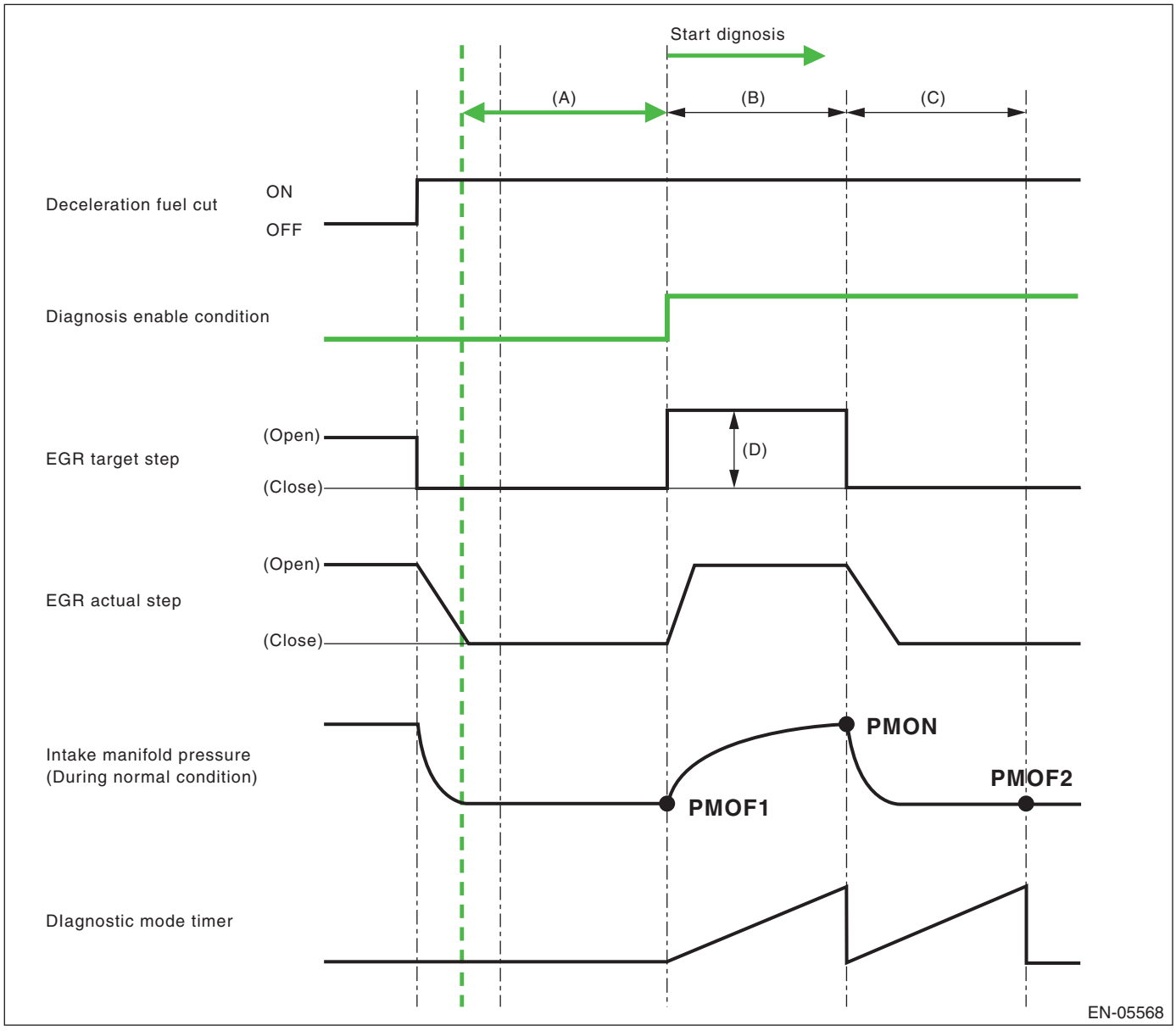

(A) 2000 ms (B) 1500 ms (C) 1500 ms
(D) 50 step(s)

- **Normality Judgment**

Judge as OK and clear the NG if the following conditions are established.

Judgment Value

Malfunction Criteria	Threshold Value
PMON – (PMOF1 + PMOF2)/2	≥ 1.6 kPa (11.8 mmHg, 0.5 inHg)

Time Needed for Diagnosis: 1 time

DC:DTC P0420 CATALYST SYSTEM EFFICIENCY BELOW THRESHOLD (BANK 1)

1. OUTLINE OF DIAGNOSIS

Detect the deterioration of the catalyst function.
Though the front oxygen sensor output would change slowly with a new catalyst, the sensor output with a deteriorated catalyst becomes high and the inversion time is shortened.
For this reason, the catalyst diagnosis is carried out by monitoring the front oxygen sensor output and comparing it with the front oxygen (A/F) sensor output.

2. COMPONENT DESCRIPTION

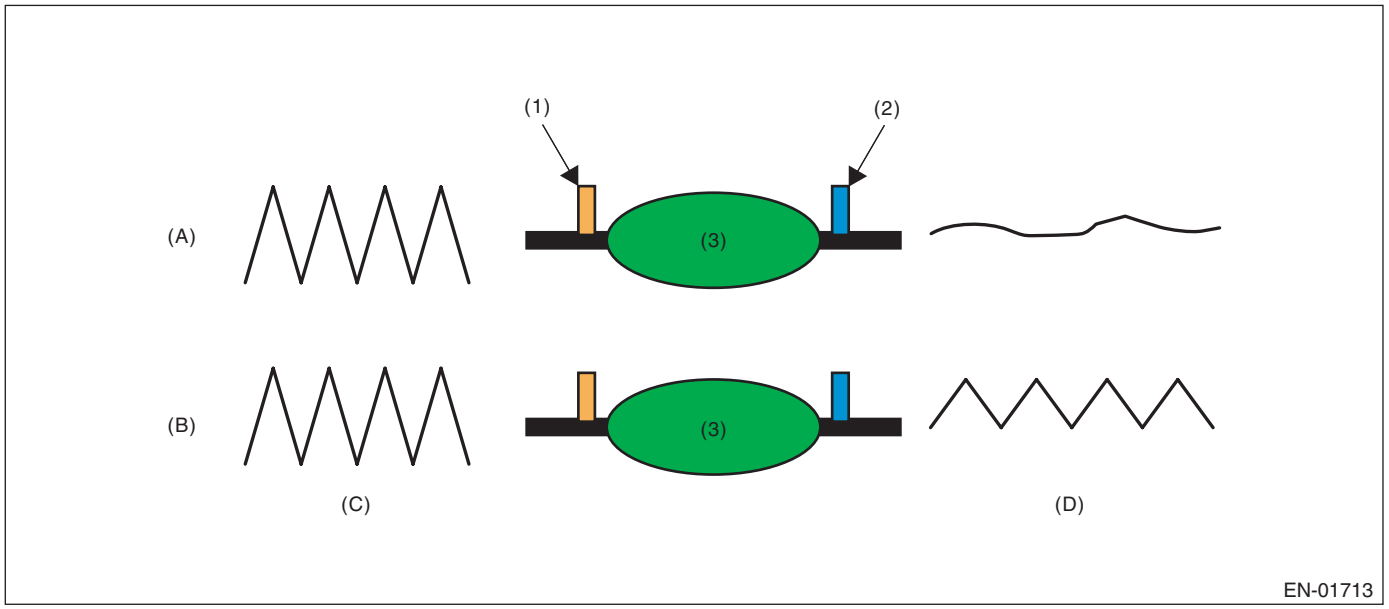

(A) Normal
(B) Deterioration
(C) Output waveform from the front oxygen (A/F) sensor
(D) Output waveform from the front oxygen sensor
(1) Front oxygen (A/F) sensor
(2) Front oxygen sensor
(3) Catalytic converter

3. ENABLE CONDITION

Secondary Parameters	Enable Conditions
Battery voltage	≥ 10.9 V
Atmospheric pressure	≥ 75 kPa (563 mmHg, 22.2 inHg)
Engine coolant temperature	≥ 75 °C (167 °F)
Estimated catalyst temperature	≥ 540 °C (1004 °F)
Misfire detection every 200 rotations	< 65535 time(s)
Learning value of evaporation gas density	< 0.2
Sub feedback	In operation
Evaporative system diagnosis	Not in operation
Time of difference (< 0.10) between actual lambda and target lambda	≥ 1000 ms
Vehicle speed	> 60 km/h (37.3 MPH)
Amount of intake air	≥ 10 g/s (0.35 oz/s) and < 50 g/s (1.76 oz/s)
Engine load change every 0.5 engine revs.	< 0.02 g/rev (0 oz/rev)
Rear oxygen output change from 660 mV or less to 660 mV or more	Experienced after fuel cut
Elapsed time after starting the engine	≥ 220 s
Purge execution calculated time	≥ 5 s

4. GENERAL DRIVING CYCLE

Perform the diagnosis only once at a constant 60 km/h (37.3 MPH) or higher.

5. DIAGNOSTIC METHOD

After establishing the execution conditions, calculate the front oxygen (A/F) sensor lambda deviation cumulative value per 32 milliseconds × 4 (Σ |(sglmd$_n$ – sglmd$_{n-1}$)|) and rear oxygen sensor output voltage deviation cumulative value (Σ |(ro2sad$_n$ – ro2sad$_{n-1}$)|), and when the front oxygen (A/F) sensor lambda deviation cumulative value (Σ |(sglmd$_n$ – sglmd$_{n-1}$)|) becomes the predetermined value or more, calculate the diagnostic value.

- **Abnormality Judgment**

If the duration of time while the following conditions are met is within the time indicated, judge as NG.

Judgment Value

Malfunction Criteria	Threshold Value
Σ |(ro2sad$_n$ – ro2sad$_{n-1}$)| / Σ |(sglmd$_n$ – sglmd$_{n-1}$)|	> 18 (Bin5 model) > 16 (ULEV model)

Time Needed for Diagnosis: 30 — 55 seconds
Malfunction Indicator Light Illumination: Illuminates when malfunction occurs in 2 continuous driving cycles.

- **Normality Judgment**

Judge as OK and clear the NG if the continuous time while the following conditions are established is within the predetermined time.

Judgment Value

Malfunction Criteria	Threshold Value
Σ |(ro2sad$_n$ – ro2sad$_{n-1}$)| / Σ |(sglmd$_n$ – sglmd$_{n-1}$)|	≤ 18 (Bin5 model) ≤ 16 (ULEV model)

Time Needed for Diagnosis: 30 — 55 seconds

DD:DTC P0442 EVAPORATIVE EMISSION CONTROL SYSTEM LEAK DETECTED (SMALL LEAK)

1. OUTLINE OF DIAGNOSIS

The evaporative system monitor detects leak up to 0.020 inch in the fuel tank and evaporative emissions system. If the fuel cap is not present or has not been correctly tightened after a refueling event, a malfunction is also detected. These malfunctions are detected by monitoring the fuel tank and system pressure during an intrusive pull-down pressure test. Pull down is accomplished via the purge valve while the engine is running. Monitors run during the first idle after engine start and while driving.
The diagnostic is classified into two monitors. The first monitor detects a 0.040 inch leak, fuel cap loose/off, and canister purge valve stuck open/close whilst the other monitor detects a 0.020 inch leak when the vehicle is moving or during the first idle. Failures, DTCs and monitor methods are as follows.

P0457	Fuel cap loose/off or CPC valve stuck open/close	Monitor 1
P0442	0.040 inch leak	Monitor 1
P0456	0.020 inch leak	Monitor 2

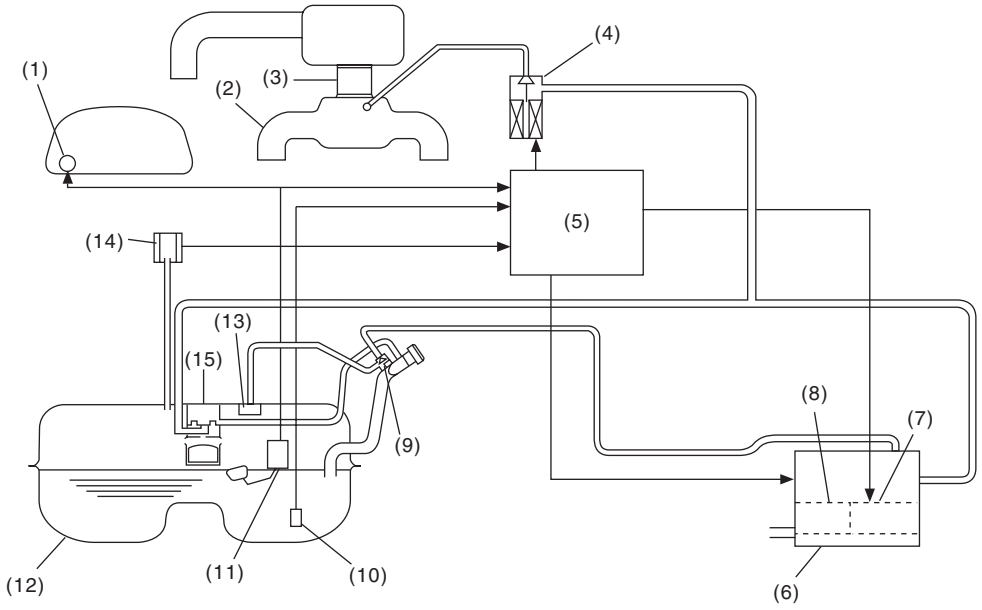

EN-07995

(1) Fuel gauge
(2) Intake manifold
(3) Throttle body
(4) Purge control solenoid valve (CPC valve)
(5) Engine control module (ECM)
(6) Canister
(7) Drain valve (CCV)
(8) Drain filter
(9) Shut-off valve
(10) Fuel temperature sensor
(11) Fuel level sensor
(12) Fuel tank
(13) Fuel cut valve
(14) Fuel tank pressure sensor
(15) Vent valve

Monitor 1

- **P0457 Fuel cap loose/off or CPC valve stuck open/close**
- **P0442 0.040 inch leak check**

This monitor detects CPC valve stuck open/close, fuel cap loose/off, and 0.040 inch leak in the evaporative emission system by monitoring the fuel tank system pressure an intrusive pull-down pressure test. The monitor consists of Modes Z, A, B, C and D. There are three judgment times for these malfunctions. CPC valve stuck open is performed in Mode Z, CPC valve stuck closed or fuel cap loose/off is in Mode B, 0.040 inch leak is in Mode D.

Mode	Description of each mode	Required time for each mode
Mode Z (Monitoring of CPC stuck open)	CPC valve: Closed CCV: Closed The system requires 3000 ms to measure the pressure difference. (1) Pressure difference < 0.9 kPa (6.5 mmHg, 0.3 inHg) → Judged as “Fail of CPC stuck open” **[P0457]** (2) Pressure difference ≥ 0.4 kPa (3 mmHg, 0.1 inHg) → Move to Mode A	3000 ms
Mode A (Estimation of Evap. Generation)	The system requires 10000 ms to measure the pressure increase (evpp1), and then move to Mode B.	10000 ms
Mode B (Negative Pressure Introduction/ Monitoring of Fuel cap off or CPC stuck close)	CPC valve: Open Negative pressure is introduced to the fuel tank. (1) Elapsed time in Mode B ≥ 10000 ms and (Minimum tank pressure) – (Initial tank pressure) > –0.5 kPa (–4 mmHg, –0.2 inHg) → Judged as “Fail of Fuel cap off or CPC stuck close” **[P0457]** (2) Elapsed time in Mode B ≥ 10000 ms + 25000 ms → Judged as “Fail of Fuel cap off or CPC stuck close” **[P0457]** (3) Fuel tank pressure ≤ –1.4 kPa (–10.5 mmHg, –0.4 inHg) → Move to Mode C	Average: 7 s (Depends on the tank condition)
Mode C (Keeping Negative Pressure / Pass in Mode C)	CPC valve: Closed When the tank pressure comes up to the target pressure (–1.3 kPa (–9.75 mmHg, –0.4 inHg)), the monitor moves to Mode D. If the fuel tank pressure does not exceed the –1.3 kPa (–9.75 mmHg, –0.4 inHg) after 14013 ms, the system judges as “Pass in Mode C” and moves to “Final Judgment”.	Average: 7 s (Depends on the tank condition)
Mode D (Pressure Measurement / Pass Fail in Mode D)	The monitor requires 10000 ms to measure the pressure change (evpp2) and calculates the monitor value (evpp2 – 1.5 × evpp1), where Mode A (evpp1) is the generated vapor pressure. The calculated value (evpp2 – 1.5 × evpp1) is then compared to a calibrated threshold table as a function of fuel temperature and fuel level. The system judges as a “Pass/Fail in Mode D” and then moves to “Final Judgment”. (1) evpp2 – 1.5 × evpp1 > Fail Threshold (Map 1) → “Fail in Mode D” (2) evpp2 – 1.5 × evpp1 ≤ Pass Threshold (Map 1) → “Pass in Mode D”	10000 ms
Final Judgment (Pass / Fail)	The monitor is completed in the following order (1) Judged as “Fail in Mode D” → “Fail of 0.040 inch leak” **[P0442]** (2) Judged as “Pass in Mode C / Mode D” → “Pass of 0.040 inch leak”	0.128 s

Map 1 (Threshold value for 0.040 inch leak)

		Fuel temperature (°C (°F))			
		15 (59)	25 (77)	35 (95)	45 (113)
Fuel Level ℓ (US gal, Imp gal)	10.5 (2.77, 2.31)	0.3 (2.1, 0.1)	0.3 (2.1, 0.1)	0.3 (2.3, 0.1)	0.3 (2.4, 0.1)
	27 (7.13, 5.94)	0.3 (2.32, 0.1)	0.3 (2.5, 0.1)	0.4 (2.73, 0.1)	0.4 (2.88, 0.1)
	43 (11.36, 9.46)	0.4 (2.88, 0.1)	0.4 (2.97, 0.1)	0.4 (3.23, 0.1)	0.5 (3.43, 0.1)
	59.5 (15.72, 13.09)	0.5 (3.5, 0.1)	0.5 (3.5, 0.1)	0.5 (3.5, 0.1)	0.5 (3.7, 0.1)
kPa (mmHg, inHg)					

Monitor 2

P0456 0.020 inch leak check

This monitor detects a very small leak (0.020 inch) in the evaporative emissions system by monitoring the fuel tank and system pressure during an intrusive pull-down pressure test. Pull down is accomplished via the purge valve while the engine is running. The monitor runs during the first idle after engine start and also while the vehicle is running.

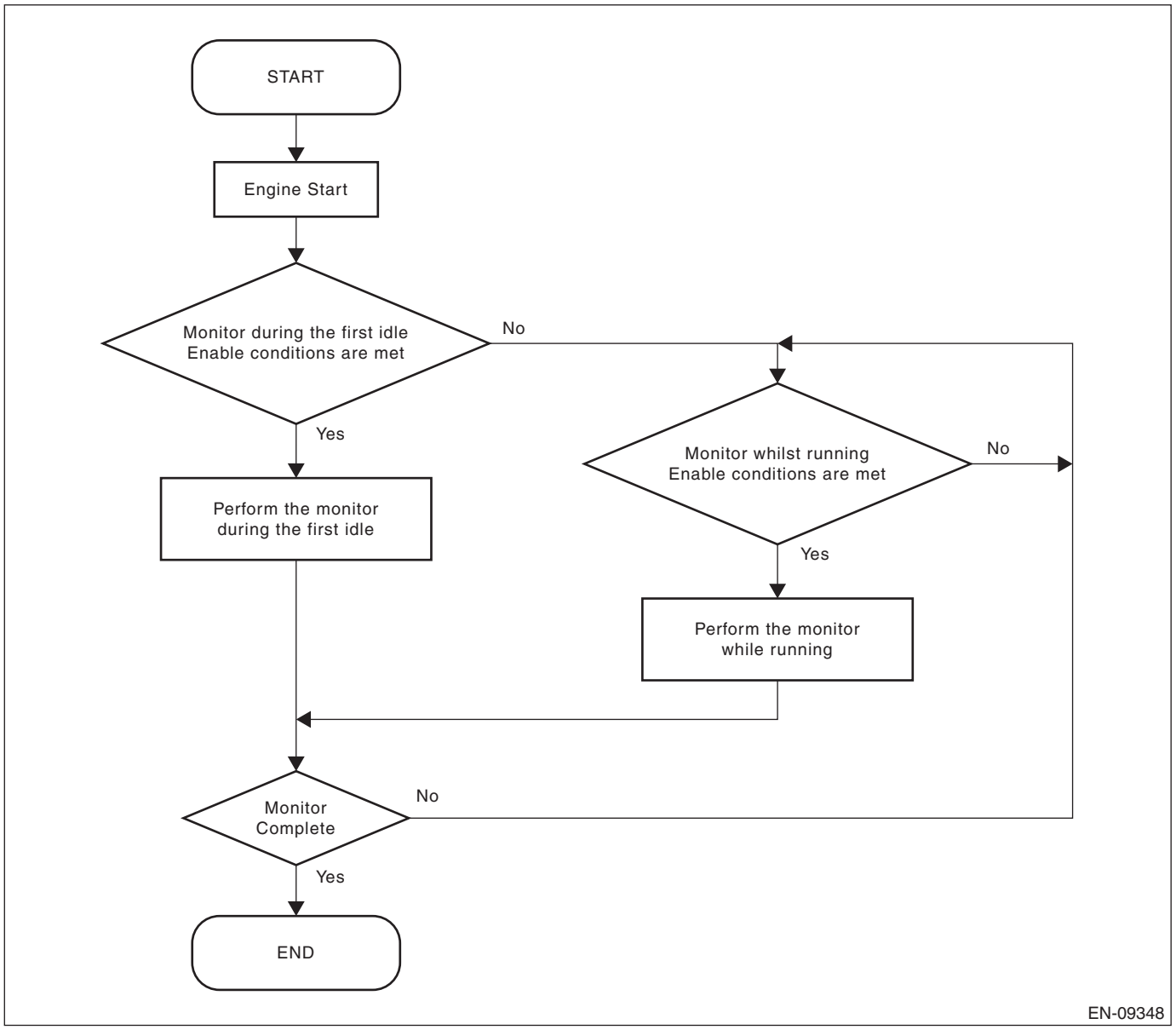

Monitor 2 (first idle condition)

Mode	Description of each mode	Required time for each mode
Mode A (Estimation of Evap. Generation)	CPC valve: Closed CCV: Closed Low vapor flag At the beginning of the monitor test when; → Fuel temperature is lower than Map 2 listed value → Intake air temperature is lower than Map 3 listed value The system sets “Low vapor flag = ON”. Low vapor flag is used in Mode A, Mode C, and Mode D. The system measures the generated vapor pressure increase (△ P1) in the specific time period (*1), and then moves to Mode B. (*1) Low vapor flag OFF: 10000 ms, Low vapor flag ON: 128 ms	Low vapor flag OFF 10000 ms Low vapor flag ON 128 ms
Mode B (Negative Pressure Introduction)	CPC valve: Open Negative pressure is introduced to the fuel tank via engine manifold vacuum. When the fuel tank pressure reaches the target pressure (–1.3 kPa (–10 mmHg, –0.4 inHg)), the monitor moves to Mode C.	Average: 13 s (Depends on the tank condition)
Mode C (Keeping Negative Pressure / Pass in Mode C)	CPC valve: Closed After a calibrated time period (*2) has elapsed since the tank pressure comes up to the target pressure (–1.3 kPa (–10 mmHg, –0.4 inHg)), move to Mode D. If the fuel tank pressure does not exceed the target pressure (–1.3 kPa (–10 mmHg, –0.4 inHg)) after Map 4 (ms), the system is judged as “Pass in Mode C” and moves to “Final Judgment”. (*2) Low vapor flag OFF: 10000 ms, Low vapor flag ON: 2000 ms	Low vapor flag OFF Average: 21 s Low vapor flag ON Average: 10 s (Depends on the tank condition)
Mode D (Pressure Measurement / Fail or Pass in Mode D)	The monitor requires 10000 ms to measure the pressure change (△ P2) and calculates the monitor value (△ P2- △ P1), where Mode A (△ P1) is the generated vapor pressure. The calculated value (△ P2- △ P1) is then compared to a calibrated threshold table as a function of fuel temperature and fuel level. The system judges as a “Pass/Fail in Mode D” and then moves to “Final Judgment”. (1) △ P2 – △ P1 > Fail Threshold (*3) → “Fail in Mode D” (2) △ P2 – △ P1 ≤ Pass Threshold (*4) → “Pass in Mode D” (*3) Low vapor flag OFF: Map 5, Low vapor flag ON: Map 7 (*4) Low vapor flag OFF: Map 6, Low vapor flag ON: Map 8	10000 ms
Final Judgment (Pass / Fail)	The monitor is completed in the following order (1) Judged as “Fail in Mode D” → “Fail of 0.020 inch leak” **[P0456]** (2) Judged as “Pass in Mode C / Mode D” → “Pass of 0.020 inch leak”	0.128 s

Map 2 (Fuel temperature threshold for “Low vapor flag”)

Fuel Level ℓ (US gal, Imp gal)	10.5 (2.77, 2.31)	35 (9.25, 7.7)	59.5 (15.72, 13.09)
Fuel temperature threshold °C (°F)	5 (41)	10 (50)	15 (59)

Map 3 (intake air temperature threshold for “Low Vapor Flag”)

Fuel Level ℓ (US gal, Imp gal)	10.5 (2.77, 2.31)	35 (9.25, 7.7)	59.5 (15.72, 13.09)
Intake air temperature threshold °C (°F)	5 (41)	10 (50)	15 (59)

Map 4 (Period for judgment of Pass in Mode C)

Fuel Level ℓ (US gal, Imp gal)	10.5 (2.77, 2.31)	35 (9.25, 7.7)	50 (13.21, 11)	59.5 (15.72, 13.09)
Period for Pass in Mode C (ms)	23000	16000	12000	9500

Map 5 (Threshold value for 0.020 inch leak in Mode D under normal condition)

		Fuel temperature (°C (°F))									
		0 (32)	10 (50)	15 (59)	20 (68)	25 (77)	30 (86)	35 (95)	40 (104)	45 (113)	50 (122)
Fuel Level ℓ (US gal, Imp gal)	10.5 (2.77, 2.31)	0.1 (0.70, 0)	0.1 (0.70, 0)	0.1 (0.70, 0)	0.1 (0.70, 0)	0.1 (0.90, 0)	0.1 (1.10, 0)	0.1 (1.10, 0)	0.1 (1.10, 0)	0.1 (1.10, 0)	0.1 (1.10, 0)
	35 (9.25, 7.7)	0.1 (0.80, 0)	0.1 (0.80, 0)	0.1 (0.80, 0)	0.1 (0.80, 0)	0.1 (1.00, 0)	0.2 (1.20, 0)	0.2 (1.20, 0)	0.2 (1.20, 0)	0.2 (1.20, 0)	0.2 (1.20, 0)
	59.5 (15.72, 13.09)	0.1 (0.90, 0)	0.1 (0.90, 0)	0.1 (0.90, 0)	0.1 (0.90, 0)	0.1 (1.10, 0)	0.2 (1.30, 0.1)	0.2 (1.30, 0.1)	0.2 (1.30, 0.1)	0.2 (1.30, 0.1)	0.2 (1.30, 0.1)
kPa (mmHg, inHg)											

Map 6 (Threshold value for Pass in Mode D under normal conditions)

		Fuel temperature (°C (°F))									
		0 (32)	10 (50)	15 (59)	20 (68)	25 (77)	30 (86)	35 (95)	40 (104)	45 (113)	50 (122)
Fuel Level ℓ (US gal, Imp gal)	10.5 (2.77, 2.31)	0.1 (0.60, 0)	0.1 (0.60, 0)	0.1 (0.60, 0)	0.1 (0.60, 0)	0.1 (0.60, 0)	0.1 (0.60, 0)	0.1 (0.60, 0)	0.1 (0.60, 0)	0.1 (0.60, 0)	0.1 (0.60, 0)
	35 (9.25, 7.7)	0.1 (0.60, 0)	0.1 (0.60, 0)	0.1 (0.60, 0)	0.1 (0.60, 0)	0.1 (0.60, 0)	0.1 (0.60, 0)	0.1 (0.60, 0)	0.1 (0.60, 0)	0.1 (0.60, 0)	0.1 (0.60, 0)
	59.5 (15.72, 13.09)	0.1 (0.80, 0)	0.1 (0.80, 0)	0.1 (0.80, 0)	0.1 (0.80, 0)	0.1 (0.80, 0)	0.1 (0.80, 0)	0.1 (0.80, 0)	0.1 (0.80, 0)	0.1 (0.80, 0)	0.1 (0.80, 0)
kPa (mmHg, inHg)											

Map 7 (Threshold value for 0.020 inch leak in Mode D with under low vapor conditions)

		Fuel temperature (°C (°F))			
		0 (32)	10 (50)	15 (59)	20 (68)
Fuel Level ℓ (US gal, Imp gal)	10.5 (2.77, 2.31)	0.1 (0.80, 0)	0.1 (0.80, 0)	0.1 (0.80, 0)	0.1 (0.80, 0)
	35 (9.25, 7.7)	0.1 (0.90, 0)	0.1 (0.90, 0)	0.1 (0.90, 0)	0.1 (0.90, 0)
	59.5 (15.72, 13.09)	0.1 (1, 0)	0.1 (1, 0)	0.1 (1, 0)	0.1 (1, 0)
kPa (mmHg, inHg)					

Map 8 (Threshold value for Pass in Mode D with under low vapor conditions)

		Fuel temperature (°C (°F))			
		0 (32)	10 (50)	15 (59)	20 (68)
Fuel Level ℓ (US gal, Imp gal)	10.5 (2.77, 2.31)	0.1 (0.60, 0)	0.1 (0.60, 0)	0.1 (0.60, 0)	0.1 (0.60, 0)
	35 (9.25, 7.7)	0.1 (0.7, 0)	0.1 (0.7, 0)	0.1 (0.7, 0)	0.1 (0.7, 0)
	59.5 (15.72, 13.09)	0.1 (0.80, 0)	0.1 (0.80, 0)	0.1 (0.80, 0)	0.1 (0.80, 0)
kPa (mmHg, inHg)					

Monitor 2 (vehicle running condition)

Mode	Description of each mode	Required time for each mode
Mode A-1 (Zero adjust)	CPC valve: Closed Fuel tank pressure is adjusted to zero. If the fuel tank pressure is close to the ambient pressure, the system waits 5000 ms for stabilization of the tank pressure prior to moving to Mode A-2.	Average: 7 s (Depends on the tank condition)
Mode A-2 (Estimation of Evap. Generation)	CCV: Closed The system requires 30000 ms to measure the pressure increase (P1), and then move to Mode B.	30000 ms
Mode B (Negative Pressure Introduction)	CPC valve: Open Negative pressure is introduced to the fuel tank via engine manifold vacuum. When the fuel tank pressure reaches the target pressure (–2 kPa (–15 mmHg, –0.6 inHg)), the monitor moves to Mode C.	Average: 22 s (Depends on the tank condition)
Mode C (Keeping Negative Pressure)	CPC valve: Closed When the tank pressure comes up to target pressure (–2 kPa (–15 mmHg, –0.6 inHg)) or the calibrated period (Map 9) has passed, move to Mode D.	Average: 5 s (Depends on the tank condition)
Mode D (Pressure Measurement / Pass Fail in Mode D)	The system calculates the integrated pressure change (ptepap1sum) which is compensated by “P1” (the generated vapor pressure), ptepap1sum (n) = ptepap1sum (n–1) + ptepap1 – (–2 kPa (–15 mmHg, –0.6 inHg)) ptepap1 = (Fuel tank pressure) – (“P1”) / (Mode A-2 time) × (Elapsed time in Mode D) When the calibrated period (Map 10) has passed or the tank pressure reaches the Ambient pressure (0 kPa (0 mmHg, 0 inHg)), the system compares the monitor value (ptepap1sum) to a calibrated threshold table as a function of elapsed time in Mode D and fuel level. The system judges as “Pass/Fail in Mode D” and then moves to “Final Judgment”. (1) ptepap1sum > Fail Threshold (Map 11) → “Fail in Mode D” (2) ptepap1sum ≤ Pass Threshold (Map 12) → “Pass in Mode D”	Average: 134 s (Depends on the tank condition)
Final Judgment (Pass / Fail)	The monitor is completed in the following order (1) Judged as “Fail in Mode D” → Fail of 0.020 inch leak **[P0456]** (2) Judged as “Pass in Mode D” → Pass of 0.020 inch leak	0.128 s

Map 9 (Maximum time of Mode C)

Fuel Level ℓ (US gal, Imp gal)	10.5 (2.77, 2.31)	27 (7.13, 5.94)	43 (11.36, 9.46)	59.5 (15.72, 13.09)
Maximum time of Mode C (ms)	21208	19288	9742	8057

Map 10 (Maximum time of Mode D)

Fuel Level ℓ (US gal, Imp gal)	10.5 (2.77, 2.31)	35 (9.25, 7.7)	60 (15.85, 13.2)
Maximum time of Mode D (ms)	210000	153000	92000

Map 11 (Threshold value for 0.020 inch leak in Mode D)

		Elapsed time in Mode D (ms)							
		15104	30080	45056	60032	75008	89984	104960	119936
Fuel Level ℓ (US gal, Imp gal)	10.5 (2.77, 2.31)	12.9 (97 , 3.8)	46.2 (347 , 13.6)	95.8 (719 , 28.3)	160.2 (1202 , 47.3)	238.2 (1787 , 70.3)	328.5 (2464 , 97)	430.3 (3228 , 127.1)	542.9 (4073 , 160.4)
	35 (9.25, 7.7)	17.6 (132 , 5.2)	62.3 (467 , 18.4)	128.8 (966 , 38)	213.7 (1603 , 63.1)	314.8 (2361 , 93)	430.4 (3229 , 127.1)	559.3 (4196 , 165.2)	700.2 (5252 , 206.8)
	60 (15.85, 13.2)	23.9 (179 , 7.1)	85.8 (644 , 25.4)	178.4 (1338 , 52.7)	296.5 (2225 , 87.6)	436.5 (3274 , 128.9)	594.8 (4462 , 175.7)	768.5 (5766 , 227)	954.5 (7161 , 281.9)
kPa (mmHg, inHg)									

		Elapsed time in Mode D (ms)						
		135040	150016	164992	179968	194944	209920	225024
Fuel Level ℓ (US gal, Imp gal)	10.5 (2.77, 2.31)	667.3 (5006 , 197.1)	799.9 (6000.557386, 236.2)	941.4 (7062.512067, 278.1)	1091.6 (8188.783117, 322.4)	1248.9 (9368.900911, 368.9)	1413.1 (10601.09904, 417.4)	1585.2 (11891.64027, 468.2)
	35 (9.25, 7.7)	852.9 (6399 , 251.9)	1014.1 (7607.513887, 299.5)	1183.7 (8880.01467, 349.6)	1360.8 (10208.32601, 401.9)	1544.8 (11588.8928, 456.3)	1734.4 (13010.99648, 512.2)	1930.4 (14481.68432, 570.1)
	60 (15.85, 13.2)	1151.6 (8639 , 340.1)	1353.7 (10155.06483, 399.8)	1560 (11702.76626, 460.7)	1768.6 (13267.6991, 522.3)	1978.5 (14842.44065, 584.3)	2186.7 (16404.00719, 645.8)	2394.6 (17963.98126, 707.2)
kPa (mmHg, inHg)								

Map 12 (Threshold value for Pass in Mode D)

		Elapsed time in Mode D (ms)							
		15104	30080	45056	60032	75008	89984	104960	119936
Fuel Level ℓ (US gal, Imp gal)	10.5 (2.77, 2.31)	11.1 (83 , 3.3)	39.9 (300 , 11.8)	82.8 (621 , 24.5)	138.5 (1039 , 40.9)	205.8 (1544 , 60.8)	283.9 (2130 , 83.8)	371.8 (2789 , 109.8)	469.2 (3520 , 138.6)
	35 (9.25, 7.7)	15.2 (114 , 4.5)	53.8 (404 , 15.9)	111.3 (835 , 32.9)	184.7 (1385 , 54.5)	272 (2041 , 80.3)	372 (2790 , 109.9)	483.4 (3626 , 142.8)	605.1 (4539 , 178.7)
	60 (15.85, 13.2)	20.7 (155 , 6.1)	74.2 (557 , 21.9)	154.1 (1156 , 45.5)	256.3 (1922 , 75.7)	377.2 (2830 , 111.4)	514.1 (3856 , 151.8)	664.2 (4983 , 196.2)	824.9 (6188 , 243.6)
kPa (mmHg, inHg)									

		Elapsed time in Mode D (ms)						
		135040	150016	164992	179968	194944	209920	225024
Fuel Level ℓ (US gal, Imp gal)	10.5 (2.77, 2.31)	576.7 (4326 , 170.3)	691.2 (5186 , 204.2)	813.6 (6103 , 240.3)	943.3 (7077 , 278.6)	1079.3 (8097 , 318.8)	1221.2 (9161 , 360.7)	1369.9 (10277 , 404.6)
	35 (9.25, 7.7)	737.1 (5530 , 217.7)	876.4 (6574 , 258.8)	1023 (7674 , 302.1)	1176 (8822 , 347.3)	1335 (10015 , 394.3)	1498.8 (11244 , 442.7)	1668.3 (12515 , 492.7)
	60 (15.85, 13.2)	995.2 (7466 , 293.9)	1169.8 (8776 , 345.5)	1348.1 (10114 , 398.2)	1528.4 (11466 , 451.4)	1709.8 (12827 , 505)	1889.7 (14176 , 558.1)	2069.4 (15524 , 611.2)
kPa (mmHg, inHg)								

2. ENABLE CONDITION

Monitor 1

Secondary Parameters	Enable Conditions
Battery voltage	≥ 10.9 V
Ambient pressure	≥ 75 kPa (563 mmHg, 22.2 inHg)
Fuel tank pressure	≥ –4 kPa (–30 mmHg, –1.2 inHg) and < 2.7 kPa (20 mmHg, 0.8 inHg)
Elapsed time after previous EVAP monitor was finished/canceled	≥ 230000 ms
Total time of canister purge operation	≥ 120000 ms
Learning value of EVAP concentration	< 0.08
Engine speed	≥ 1050 rpm and < 4000 rpm
Intake manifold vacuum (= ambient pressure – intake manifold pressure)	≥ 13.3 kPa (100 mmHg, 3.9 inHg)
Vehicle speed	≥ 32 km/h (19.9 MPH)
Closed loop air fuel ratio control	Active
Fuel temperature	< 45 °C (113 °F)
Intake air temperature	≥ –10 °C (14 °F)
Fuel level	≥ 10.5 ℓ (2.77 US gal, 2.31 Imp gal) and < 59.5 ℓ (15.72 US gal, 13.09 Imp gal)

Monitor 2 (first idle condition)

Secondary Parameters	Enable Conditions
Battery voltage	≥ 10.9 V
Ambient pressure	≥ 75 kPa (563 mmHg, 22.2 inHg)
Soak time	≥ 18000 s
Accumulated intake air mass after engine start	≥ Map 13
Closed loop air fuel ratio control	Active
Fuel level	≥ 10.5 ℓ (2.77 US gal, 2.31 Imp gal) and < 59.5 ℓ (15.72 US gal, 13.09 Imp gal)
Fuel temperature	< 35 °C (95 °F)
Fuel tank pressure	≥ –0.7 kPa (–5.106 mmHg, –0.2 inHg) and < 0.7 kPa (5.106 mmHg, 0.2 inHg)
Adapted fuel tank pressure	≥ –0.3 kPa (–2.507 mmHg, –0.1 inHg) and < 0.3 kPa (2.507 mmHg, 0.1 inHg)
Engine speed	≥ 1000 rpm and < 2000 rpm
Intake manifold vacuum (= ambient pressure – intake manifold pressure)	≥ 13.3 kPa (100 mmHg, 3.9 inHg)
Vehicle speed	< 2 km/h (1.2 MPH)
Idle switch	ON
Intake air temperature	≥ –10 °C (14 °F)

Monitor 2 (vehicle running condition)

Secondary Parameters	Enable Conditions
Battery voltage	≥ 10.9 V
Ambient pressure	≥ 75 kPa (563 mmHg, 22.2 inHg)
Elapsed time after previous EVAP monitor was finished/canceled	≥ 60000 ms
Total time of canister purge operation	≥ 120000 ms
Fuel temperature	< 55 °C (131 °F)
Fuel level	≥ 10.5 ℓ (2.77 US gal, 2.31 Imp gal) and < 59.5 ℓ (15.72 US gal, 13.09 Imp gal)
Intake air temperature	≥ –10 °C (14 °F)
Vehicle speed	≥ 30 km/h (18.6 MPH)
All conditions below are satisfied	≥ 5000 ms
• Fuel tank pressure	≥ –0.7 kPa (–5 mmHg, –0.2 inHg) and < 0.4 kPa (2.9 mmHg, 0.1 inHg)
• Engine speed	≥ 1050 rpm and < 4000 rpm
• Intake manifold vacuum (= ambient pressure – intake manifold pressure)	≥ 8 kPa (60 mmHg, 2.4 inHg)
• Closed loop air fuel ratio control	Active
• Short term fuel trim	> 0.9
• Fuel level with large smoothing coefficient – Fuel level with small smoothing coefficient	< Map 14
• Learning value of EVAP density	< 0.08

Map 13 (Accumulated intake air mass after engine start)

Engine coolant temperature at start °C (°F)	–10 (14)	0 (32)	10 (50)	20 (68)	30 (86)	40 (104)	50 (122)	60 (140)	70 (158)
Accumulated intake air mass after engine start g (oz)	420 (14.81)	420 (14.81)	420 (14.81)	400 (14.11)	350 (12.34)	260 (9.17)	200 (7.05)	180 (6.35)	180 (6.35)

Map 14 (Threshold value the fuel slosh detection)

Fuel Level ℓ (US gal, Imp gal)	10 (2.64, 2.2)	20 (5.28, 4.4)	25 (6.61, 5.5)	30 (7.93, 6.6)	43 (11.36, 9.46)	45 (11.89, 9.9)	50 (13.21, 11)	60 (15.85, 13.2)
Fuel level change for detection of fuel slosh ℓ (US gal, Imp gal)	5 (1.32, 1.1)	5 (1.32, 1.1)	5 (1.32, 1.1)	5 (1.32, 1.1)	5 (1.32, 1.1)	5 (1.32, 1.1)	6 (1.59, 1.32)	8 (2.11, 1.76)

3. GENERAL DRIVING CYCLE

Monitor 1

Perform the diagnosis when the cumulative time of canister purge after engine start becomes 120 seconds or more, at a vehicle speed of 32 km/h (20 MPH) or more.
If judgment cannot be made, repeat the diagnosis after a predetermined interval has passed.

Monitor 2 (first idle condition)

Perform the diagnosis only once at the fast idle (the idling before starting to move) after soaking of 5 hours or more, in conditions that A/F feedback has been executed and catalytic converter has been warmed up (approx. 25 seconds after engine start).
If judgment cannot be made, or the diagnosis cannot be performed at fast idle, do not repeat the diagnosis in this driving cycle.

Monitor 2 (vehicle running condition)

Perform this procedure only when the diagnosis cannot be completed at fast idle.
Perform the diagnosis when the cumulative time of canister purge after engine start becomes 120 seconds or more, at a vehicle speed of 30 km/h (18.6 MPH) or more.
If judgment cannot be made, repeat the diagnosis after a predetermined interval has passed.

4. DIAGNOSTIC METHOD

- **Monitor 1**

• CPC valve stuck open

At the beginning of the Monitor 1, system performs CPC valve stuck open monitor in Mode Z. CPC valve and CCV are closed and the fuel tank pressure is monitored. The pressure transition over a calibrated time is then used to determine if the CPC valve is stuck open.

CPC valve stuck open test at Mode Z of Monitor 1

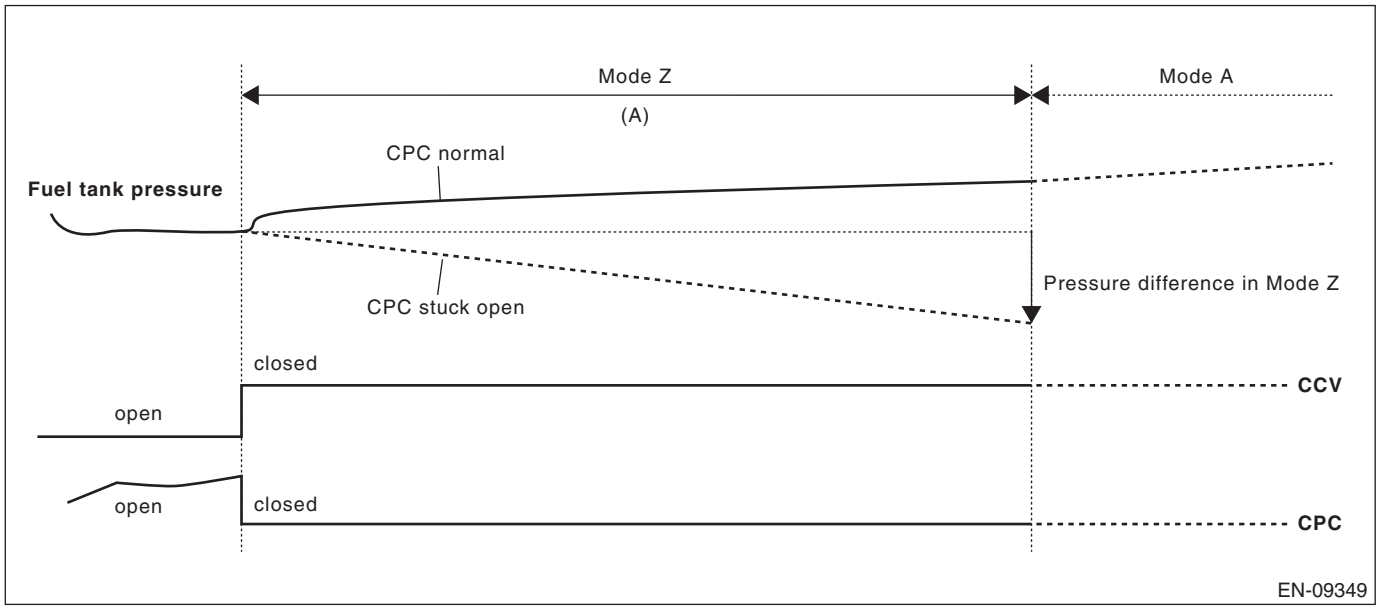

(A) 3000 ms

Judgment

- Pressure difference in Mode Z < 0.9 kPa (6.5 mmHg, 0.3 inHg) → Fail [CPC valve stuck open]: **P0457**
- Pressure difference in Mode Z ≥ 0.4 kPa (3 mmHg, 0.1 inHg) → Pass → move to **Mode A**

• Fuel cap loose/off and CPC valve stuck close

Fuel cap loose/off and CPC valve stuck close monitor is performed in Mode B of Monitor 1. The engine lowers the fuel tank pressure using intake manifold vacuum via the operation of the CPC valve. The pressure transition over a calibrated time is then used to determine if the Fuel cap loose/off or CPC valve stuck closed.

Fuel cap off or CPC stuck close at Mode B of Monitor 1

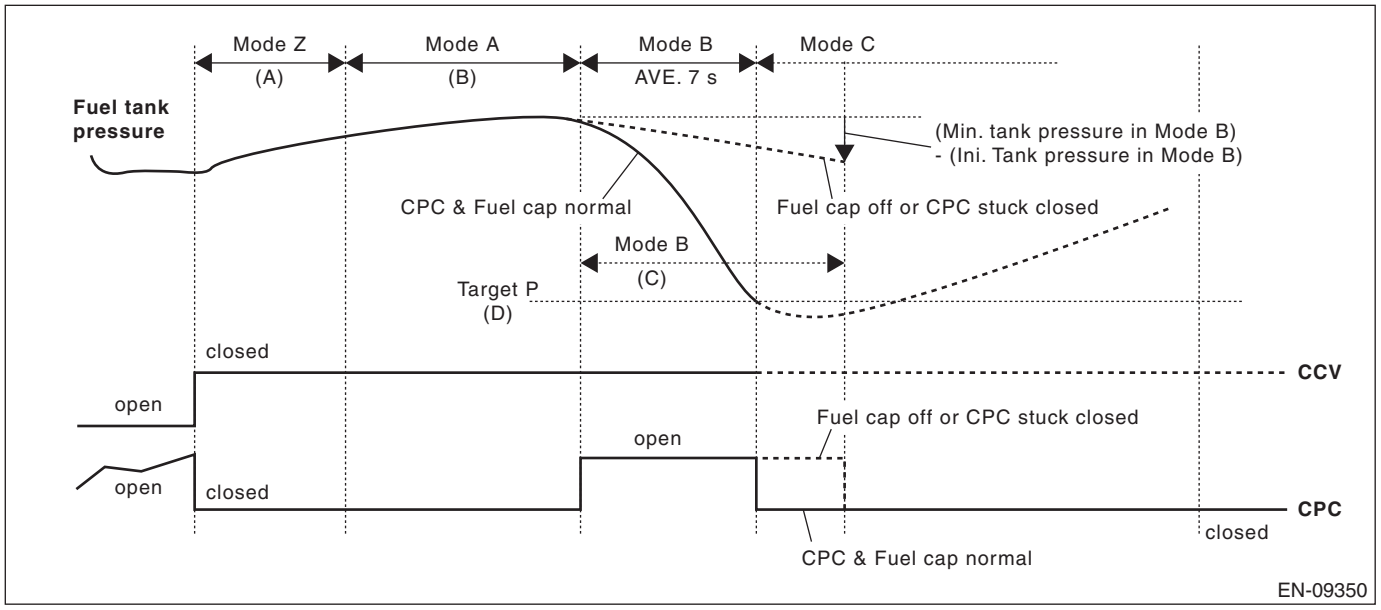

(A) 3000 ms (B) 10000 ms (C) 10000 ms

(D) –1.4 kPa (–10.5 mmHg, –0.4 inHg)

Judgment

- Elapsed time in Mode B ≥ 10000 ms and (Minimum tank pressure in Mode B) – (Initial tank pressure in Mode B) > –0.5 kPa (–4 mmHg, –0.2 inHg) → Fail [Fuel cap off or CPC valve stuck close]: **P0457**
- Fuel tank pressure ≤ –1.4 kPa (–10.5 mmHg, –0.4 inHg) → Pass → move to **Mode C**

Fuel cap loose at Mode B of Monitor 1

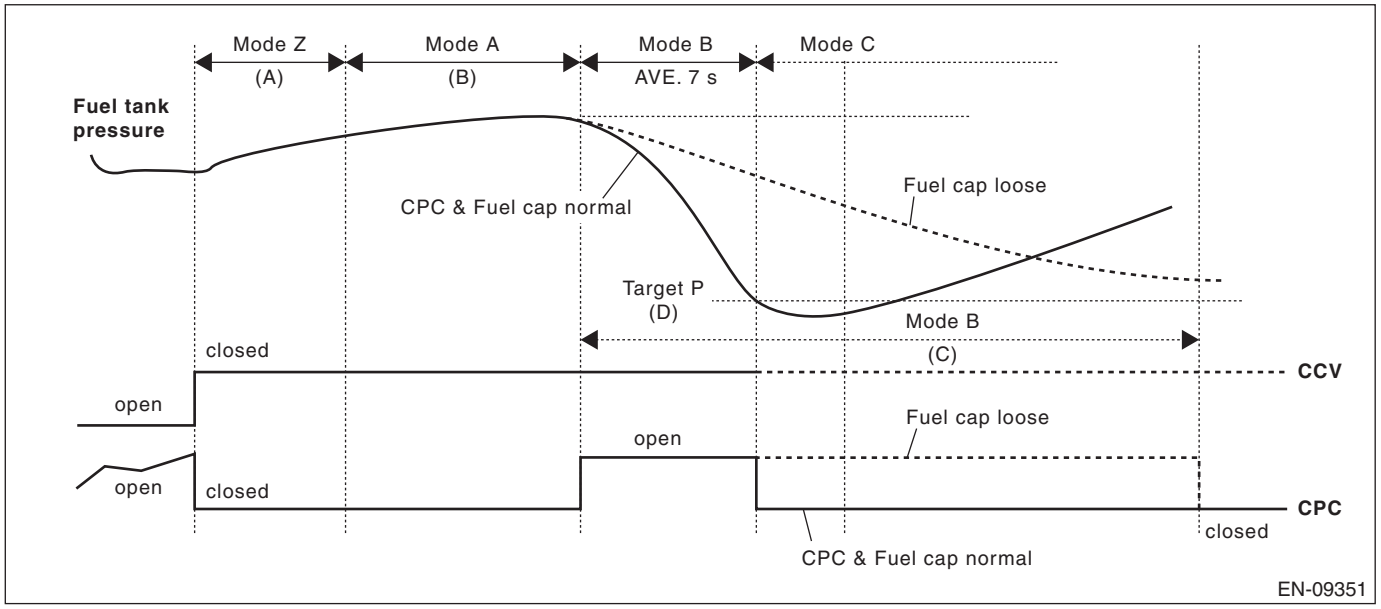

(A) 3000 ms (B) 10000 ms (C) 10000 ms + 25000 ms

(D) –1.4 kPa (–10.5 mmHg, –0.4 inHg)

Judgment
- Elapsed time in Mode B ≥ 10000 ms + 25000 ms → Fail [Fuel cap loose]: **P0457**
- Fuel tank pressure ≤ –1.4 kPa (–10.5 mmHg, –0.4 inHg) → Pass → move to **Mode C**

• 0.040 inch leak check

0.040 inch evaporative leak monitor is executed through Mode A to Mode D of Monitor 1. The engine lowers the fuel tank pressure using intake manifold vacuum via the canister purge operation during engine running. Once the tank pressure reaches a calibrated target (below atmospheric pressure) the purge valve is closed and the fuel tank pressure is monitored. The pressure transition over a calibrated time period is then used to determine if the fuel tank system has a leak.

0.040 inch EVAP monitor test

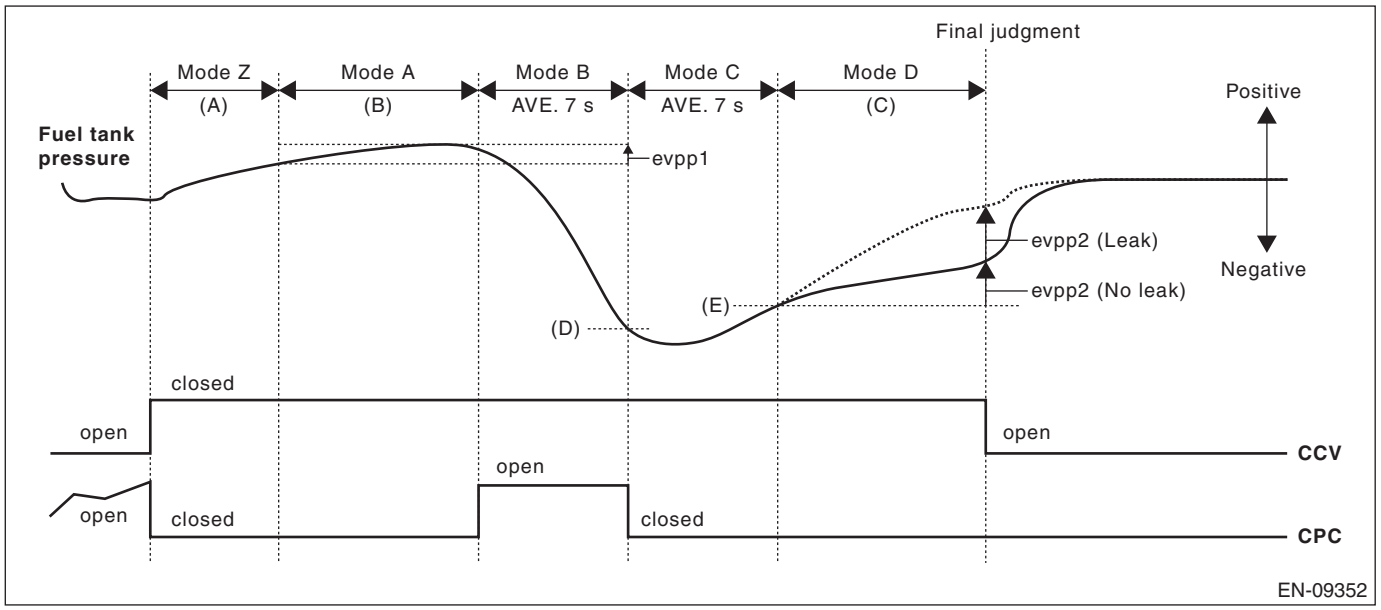

(A) 3000 ms
(B) 10000 ms
(C) 10000 ms
(D) –1.4 kPa (–10.5 mmHg, –0.4 inHg)
(E) –1.3 kPa (–9.75 mmHg, –0.4 inHg)

Judgment
- evpp2 – 1.5 × evpp1 > Map 1 → Fail [0.040 inch Leak]: **P0442**
- evpp2 – 1.5 × evpp1 ≤ Map 1 → Pass [No Leak]

- **Monitor 2 (first idle condition)**

0.020 inch leak check at first idle condition

An intrusive evaporative leak monitor test is run following the first engine start after a calibrated engine off soak period. The engine lowers the fuel tank pressure using intake manifold vacuum via the purge valve operation during engine idle. Once the tank pressure reaches a calibrated target (below atmospheric pressure) the purge valve is closed and the fuel tank pressure is monitored. The pressure transition over a calibrated time period is then used to determine if the fuel tank system has a leak.

Intrusive EVAP Monitor test at first Idle

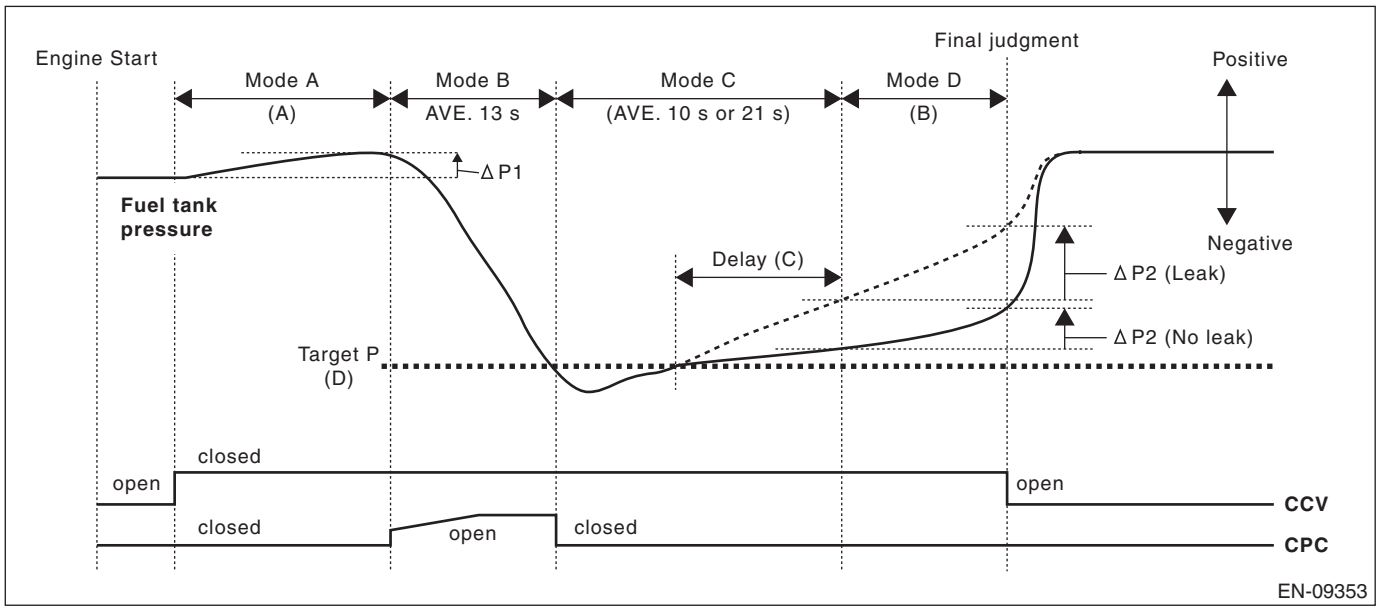

(A) 128 ms or 10000 ms (B) 10000 ms (C) 2000 ms or 10000 ms

(D) –1.3 kPa (–10 mmHg, –0.4 inHg)

Judgment

- $\triangle$P2 – $\triangle$P1 > Map 5 or Map 7 → Fail [0.020 inch Leak]: **P0456**
- $\triangle$P2 – $\triangle$P1 ≤ Map 6 or Map 8 → Pass [No Leak]

- **Monitor 2 (vehicle running condition)**

0.020 inch Monitor during Vehicle Running (moving) Conditions

While the vehicle is vehicle running, the diagnostic intrusively pulls-down the fuel tank pressure using manifold vacuum via the purge valve. Once the tank pressure reaches a calibrated target (below atmospheric pressure) the purge valve is closed and the fuel tank pressure is monitored. The pressure transition over a calibrated time period is then used to determine if the fuel tank system has a leak.

Intrusive EVAP Monitor Test (Vehicle Running)

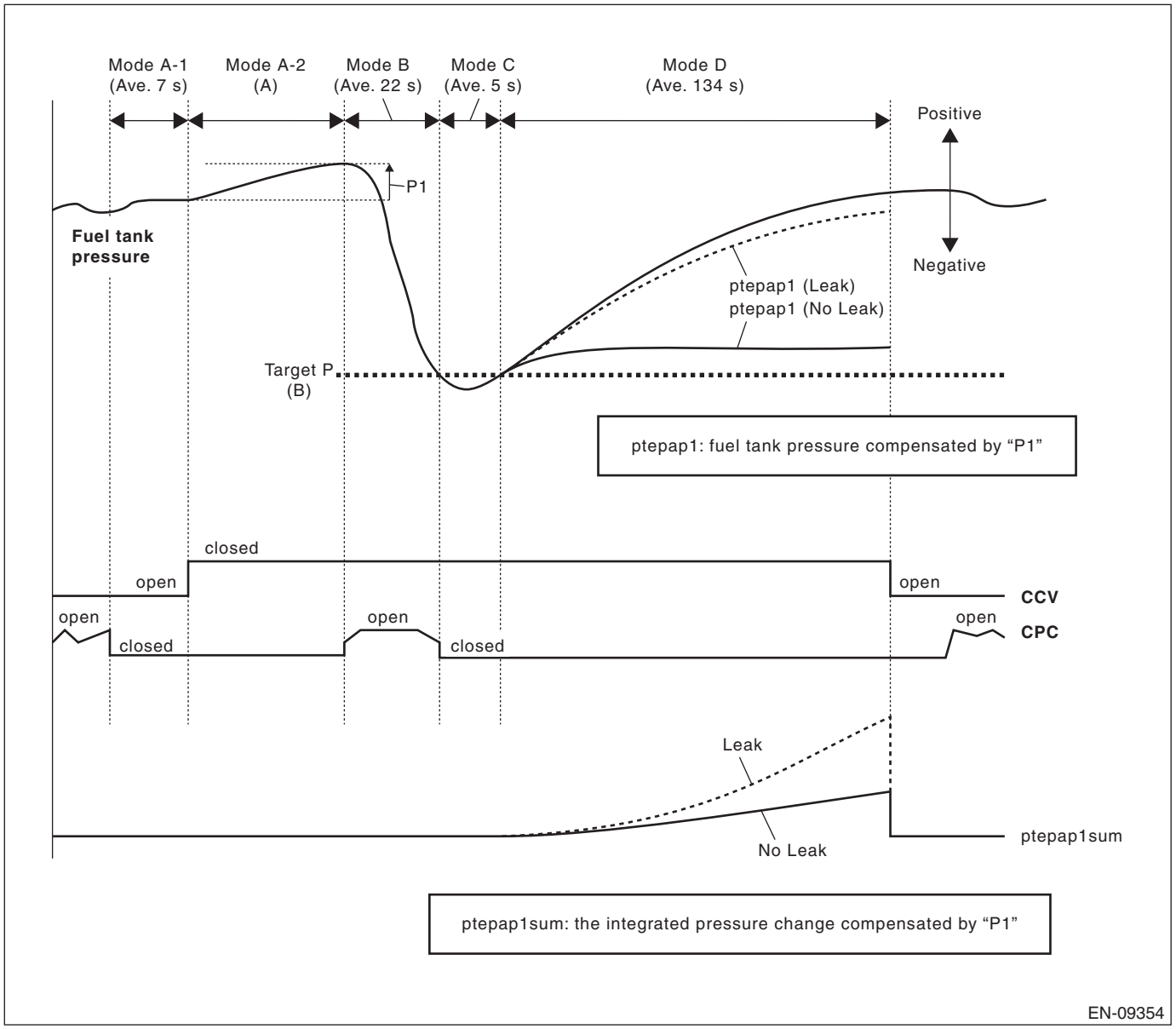

(A) 30000 ms (B) –2 kPa (–15 mmHg, –0.6 inHg)

Judgment

- ptepap1sum > Map 11 → Fail [0.020 inch Leak]: **P0456**
- ptepap1sum ≤ Map 12 → Pass [No Leak]

DE:DTC P0447 EVAPORATIVE EMISSION CONTROL SYSTEM VENT CONTROL CIRCUIT OPEN

1. OUTLINE OF DIAGNOSIS

Detect open or short circuit of the drain valve.
Judge as NG when the ECM output level differs from the actual terminal level.

2. COMPONENT DESCRIPTION

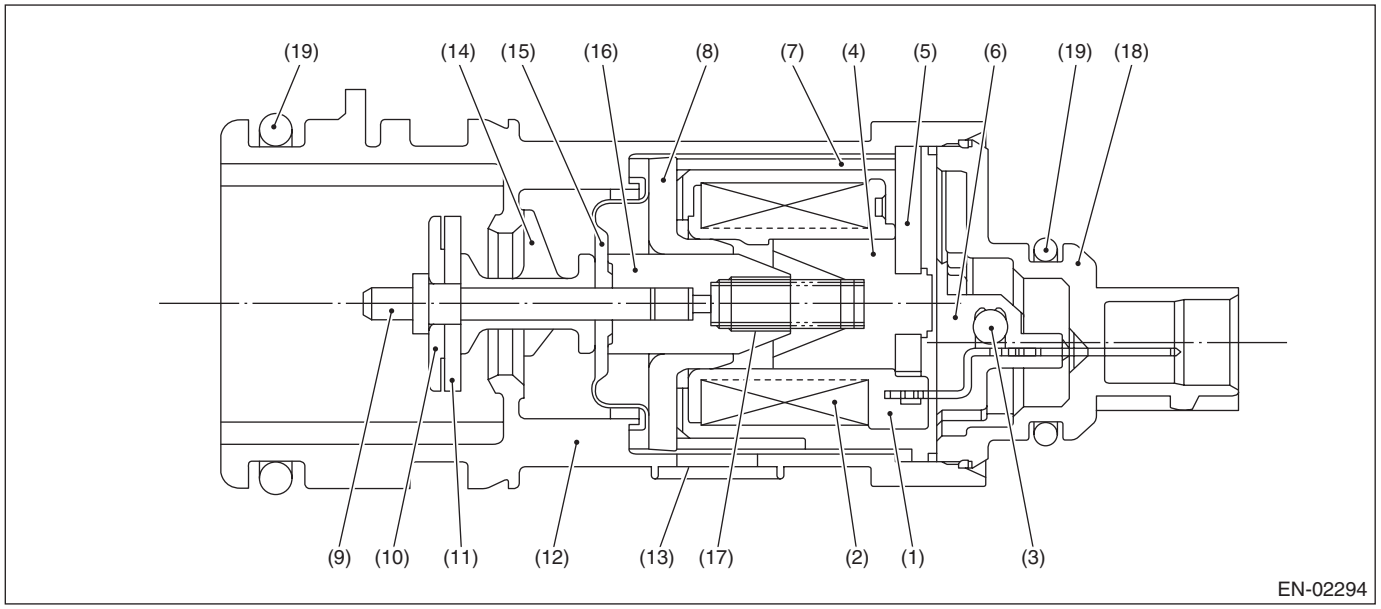

(1) Bobbin
(2) Coil
(3) Diode
(4) Stator core
(5) End plate
(6) Body
(7) Yoke
(8) Magnetic plate
(9) Shaft
(10) Plate
(11) Valve
(12) Housing
(13) Filter
(14) Retainer
(15) Diaphragm
(16) Movable core
(17) Spring
(18) Cover
(19) O-ring

3. ENABLE CONDITION

Secondary Parameters	Enable Conditions
None	

4. GENERAL DRIVING CYCLE

Always perform the diagnosis continuously.

5. DIAGNOSTIC METHOD

• Abnormality Judgment

If the duration of time while the following conditions are met is longer than the time indicated, judge as NG.

Judgment Value

Malfunction Criteria	Threshold Value
Battery voltage	≥ 10.9 V
Elapsed time after starting the engine	≥ 1 s
Terminal output voltage when ECM outputs OFF signal	Low

Time Needed for Diagnosis: 2500 ms
Malfunction Indicator Light Illumination: Illuminates as soon as a malfunction occurs.

• Normality Judgment

Judge as OK and clear the NG if the continuous time while the following conditions are established is more than the predetermined time.

Judgment Value

Malfunction Criteria	Threshold Value
Battery voltage	≥ 10.9 V
Elapsed time after starting the engine	≥ 1 s
Terminal output voltage when ECM outputs OFF signal	High

Time Needed for Diagnosis: Less than 1 second

DF:DTC P0448 EVAPORATIVE EMISSION CONTROL SYSTEM VENT CONTROL CIRCUIT SHORTED

1. OUTLINE OF DIAGNOSIS

Detect open or short circuit of the drain valve.
Judge as NG when the ECM output level differs from the actual terminal level.

2. COMPONENT DESCRIPTION

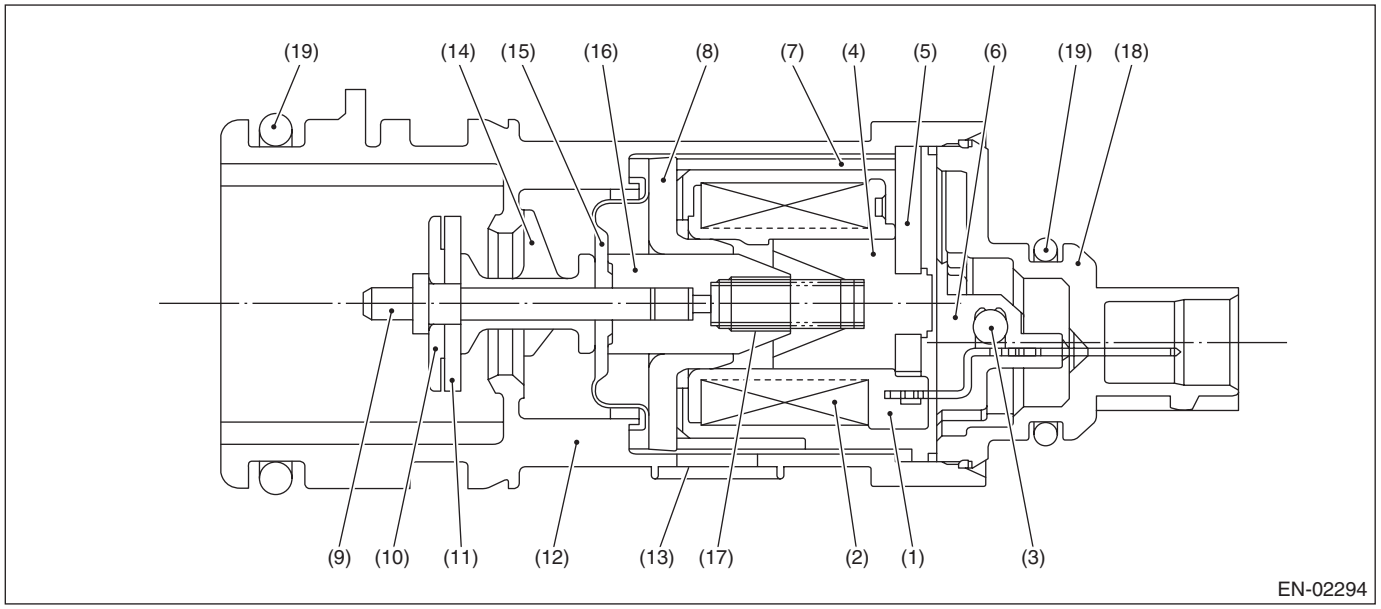

(1) Bobbin
(2) Coil
(3) Diode
(4) Stator core
(5) End plate
(6) Body
(7) Yoke
(8) Magnetic plate
(9) Shaft
(10) Plate
(11) Valve
(12) Housing
(13) Filter
(14) Retainer
(15) Diaphragm
(16) Movable core
(17) Spring
(18) Cover
(19) O-ring

3. ENABLE CONDITION

Secondary Parameters	Enable Conditions
None	

4. GENERAL DRIVING CYCLE

Always perform the diagnosis continuously.

5. DIAGNOSTIC METHOD

• Abnormality Judgment

If the duration of time while the following conditions are met is longer than the time indicated, judge as NG.

Judgment Value

Malfunction Criteria	Threshold Value
Battery voltage	≥ 10.9 V
Elapsed time after starting the engine	≥ 1 s
Terminal output voltage when ECM outputs ON signal	High

Time Needed for Diagnosis: 2500 ms
Malfunction Indicator Light Illumination: Illuminates as soon as a malfunction occurs.

• Normality Judgment

Judge as OK and clear the NG if the continuous time while the following conditions are established is more than the predetermined time.

Judgment Value

Malfunction Criteria	Threshold Value
Battery voltage	≥ 10.9 V
Elapsed time after starting the engine	≥ 1 s
Terminal output voltage when ECM outputs ON signal	Low

Time Needed for Diagnosis: Less than 1 second

DG:DTC P0451 EVAPORATIVE EMISSION CONTROL SYSTEM PRESSURE SENSOR

1. OUTLINE OF DIAGNOSIS

Detect malfunctions of tank pressure sensor output property by the following two diagnoses.

- **DRIFT DIAGNOSIS**

To detect drift malfunction and offset malfunction of tank pressure sensor, activate ECM in the predetermined soaking time after turning the ignition switch OFF, and check that the tank pressure sensor input value is equivalent to the barometric pressure.

For vehicles equipped with pressure control valve, be sure to open the pressure control valve when performing the diagnosis, because the pressure inside the tank increases if the ambient temperature rises during soaking.

- **Stuck Diagnosis**

When there is no pressure variation, which should have occurred in the tank considering the operation status, judge as NG.

2. COMPONENT DESCRIPTION

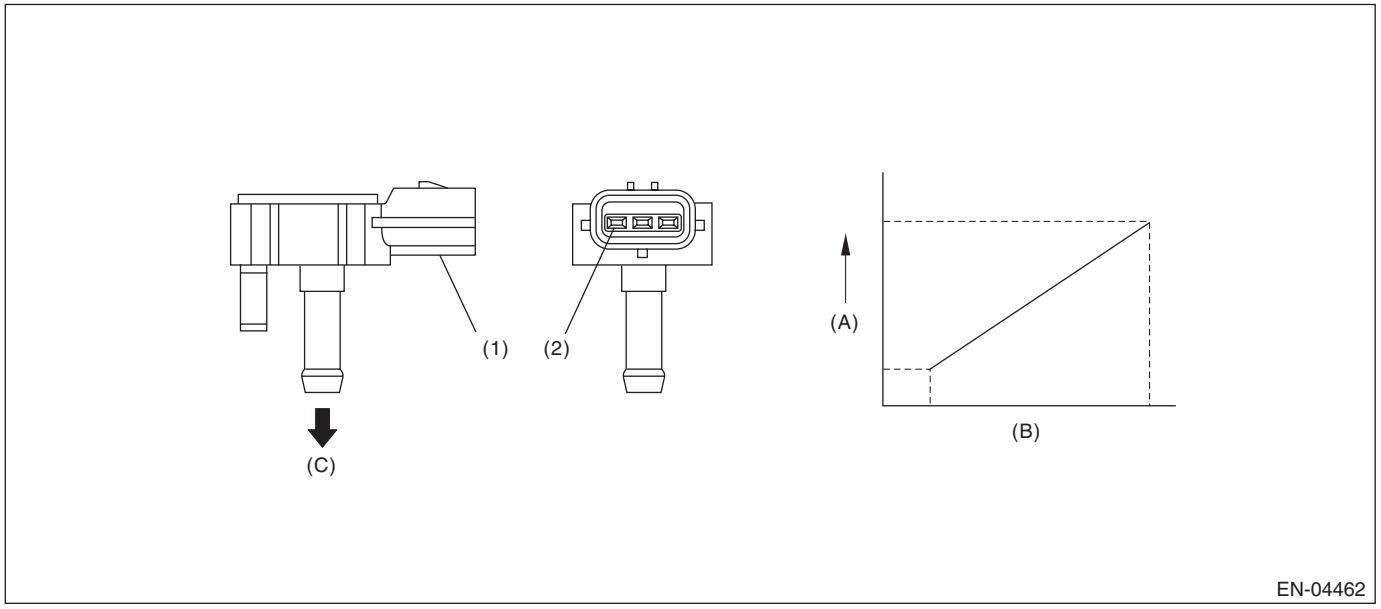

(A) Output voltage
(B) Input voltage
(C) To fuel tank
(1) Connector
(2) Terminals

3. ENABLE CONDITION

<DRIFT DIAGNOSIS>

Secondary Parameters	Enable Conditions
Soaking time	≥ 3600 s × 2 time(s)
Ignition switch	OFF
Battery voltage	≥ 10.9 V
Atmospheric pressure	≥ 75 kPa (563 mmHg, 22.2 inHg)
Fuel temperature	< 55 °C (131 °F)
Intake air temperature	> –10 °C (14 °F) and < 55 °C (131 °F)
Cumulative amount of purge during previous driving cycle	≥ Value from Map
Fuel level when the ignition switch is OFF	≥ 10.5 ℓ (2.77 US gal, 2.31 Imp gal) and < 59.5 ℓ (15.72 US gal, 13.09 Imp gal)

Map

Ambient air temperature °C (°F)	25 (77)	35 (95)	40 (104)	45 (113)
Cumulative amount of purge during previous driving cycle g (oz)	0 (0)	0 (0)	0 (0)	0 (0)

<Stuck Diagnosis>

Secondary Parameters	Enable Conditions
Elapsed time after starting the engine	≥ 60 s
Fuel level	≥ 10.5 ℓ (2.77 US gal, 2.31 Imp gal)
Fuel temperature	< 55 °C (131 °F)
Battery voltage	≥ 10.9 V
Atmospheric pressure	≥ 75 kPa (563 mmHg, 22.2 inHg)

4. GENERAL DRIVING CYCLE

<DRIFT DIAGNOSIS>

Perform the diagnosis only once when 3600 s × 2 time(s) has passed after the ignition switch is OFF.

<Stuck Diagnosis>

- Perform the diagnosis continuously after 60 s have passed since the engine started.
- Pay attention to the fuel level and temperature.

5. DIAGNOSTIC METHOD

<DRIFT DIAGNOSIS>

Abnormality Judgment

Judge as NG when one of the following conditions is established.

Judgment Value

Malfunction Criteria	Threshold Value
Tank pressure sensor learning value	≥ 0.7 kPa (5.106 mmHg, 0.2 inHg) or < –0.7 kPa (–5.106 mmHg, –0.2 inHg)
Tank pressure sensor measured value – Tank pressure sensor learning value	≥ 0.3 kPa (2.507 mmHg, 0.1 inHg) or < –0.3 kPa (–2.507 mmHg, –0.1 inHg)

Time Needed for Diagnosis: 10 seconds

Malfunction Indicator Light Illumination: Illuminates when malfunction occurs in 2 continuous driving cycles.

Normality Judgment

Judge as OK and clear the NG if the following conditions are established.

Judgment Value

Malfunction Criteria	Threshold Value
Tank pressure sensor learning value	< 0.7 kPa (5.106 mmHg, 0.2 inHg) and ≥ –0.7 kPa (–5.106 mmHg, –0.2 inHg)
Tank pressure sensor measured value – Tank pressure sensor learning value	< 0.3 kPa (2.507 mmHg, 0.1 inHg) and ≥ –0.3 kPa (–2.507 mmHg, –0.1 inHg)

Time Needed for Diagnosis: 10 seconds

<Stuck Diagnosis>

Abnormality Judgment

If the duration of time while the following conditions are met is longer than the time indicated, judge as NG.

Judgment Value

Malfunction Criteria	Threshold Value
Number of times that the difference between the Max. fuel level every 60 s and Min. fuel level every 60 s is 2 ℓ (0.53 US gal, 0.44 Imp gal) or more (with enable condition established)	≥ 16 time(s)
Maximum – Minimum tank pressure (with enable condition completed)	< 0 kPa (0.375 mmHg, 0 inHg)
Maximum – Minimum fuel temperature (with enable condition completed)	≥ 7 °C (12.6°F)

If the difference between the Max. fuel level every 60 s and Min. fuel level every 60 s is less than 2 ℓ (0.53 US gal, 0.44 Imp gal), extend 60 s and make judgment with the Max. and Min. values for the fuel level in 60 s × 2. If there is no difference after the extension of 60 s, continue further to 60 s × 3, 60 s × 4, 60 s × 5. If the difference between the Max. fuel level every 60 s and Min. fuel level every 60 s is 2 ℓ (0.53 US gal, 0.44 Imp gal) or more, the diagnosis counter counts up.

Time Needed for Diagnosis: 60 s × 16 time(s) or more

Malfunction Indicator Light Illumination: Illuminates when malfunction occurs in 2 continuous driving cycles.

Normality Judgment

Judge as OK and clear the NG if the continuous time while the following conditions are established is more than the predetermined time.

Judgment Value

Malfunction Criteria	Threshold Value
Maximum – Minimum tank pressure	≥ 0 kPa (0.375 mmHg, 0 inHg)

Time Needed for Diagnosis: Less than 1 second

DH:DTC P0452 EVAPORATIVE EMISSION CONTROL SYSTEM PRESSURE SENSOR LOW INPUT

1. OUTLINE OF DIAGNOSIS

Detect the open or short circuit of the fuel tank pressure sensor.
Judge as NG if out of specification.

2. COMPONENT DESCRIPTION

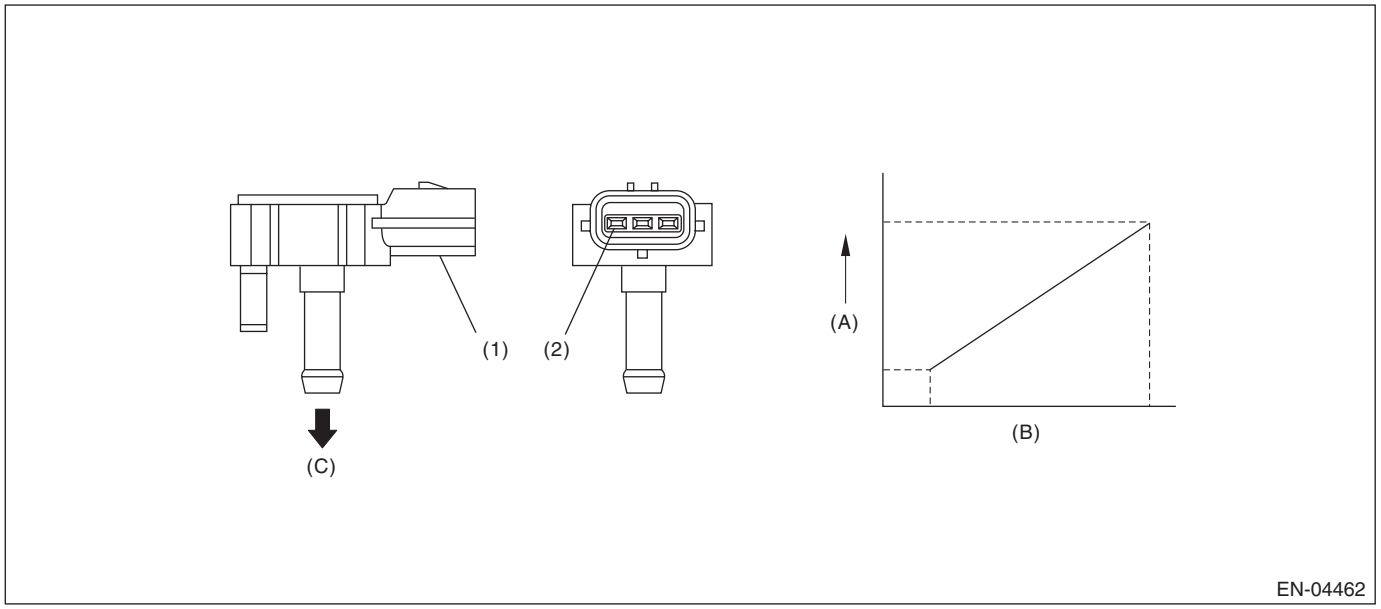

(A) Output voltage
(B) Input voltage
(C) To fuel tank
(1) Connector
(2) Terminals

3. ENABLE CONDITION

Secondary Parameters	Enable Conditions
None	

4. GENERAL DRIVING CYCLE

Always perform the diagnosis continuously.

5. DIAGNOSTIC METHOD

- **Abnormality Judgment**

If the duration of time while the following conditions are met is longer than the time indicated, judge as NG.

Judgment Value

Malfunction Criteria	Threshold Value
Fuel tank pressure	< –7.4 kPa (–55.6 mmHg, –2.2 inHg)
Battery voltage	≥ 10.9 V

Time Needed for Diagnosis: 15000 ms
Malfunction Indicator Light Illumination: Illuminates as soon as a malfunction occurs.

- **Normality Judgment**

Judge as OK and clear the NG if the continuous time while the following conditions are established is more than the predetermined time.

Judgment Value

Malfunction Criteria	Threshold Value
Fuel tank pressure	≥ –7.4 kPa (–55.6 mmHg, –2.2 inHg)
Battery voltage	≥ 10.9 V

Time Needed for Diagnosis: Less than 1 second

DI: DTC P0453 EVAPORATIVE EMISSION CONTROL SYSTEM PRESSURE SENSOR HIGH INPUT

1. OUTLINE OF DIAGNOSIS

Detect the open or short circuit of the fuel tank pressure sensor.
Judge as NG if out of specification.

2. COMPONENT DESCRIPTION

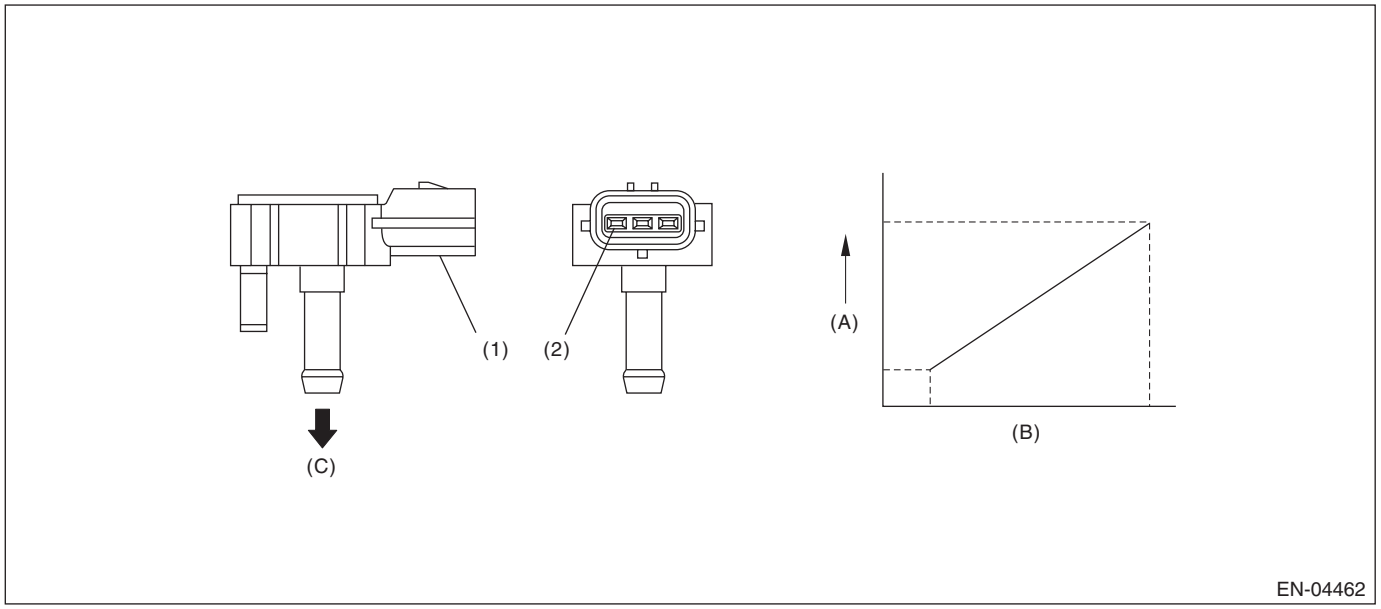

(A) Output voltage
(B) Input voltage
(C) To fuel tank
(1) Connector
(2) Terminals

3. ENABLE CONDITION

Secondary Parameters	Enable Conditions
Time needed for all secondary parameters to be in enable conditions	≥ 5000 ms
Vehicle speed	≥ 2 km/h (1.2 MPH)
All conditions of EVAP canister purge	Completed
Learning value of evaporation gas concentration (left and right)	< 0.08
Main feedback compensation coefficient (left and right)	≥ 0.9
Battery voltage	≥ 10.9 V

4. GENERAL DRIVING CYCLE

Perform the diagnosis when purging enable conditions are met without idling.

5. DIAGNOSTIC METHOD

- **Abnormality Judgment**

If the duration of time while the following conditions are met is longer than the time indicated, judge as NG.

Judgment Value

Malfunction Criteria	Threshold Value
Fuel tank pressure	≥ 7.9 kPa (59.6 mmHg, 2.3 inHg)
Fuel temperature	< 55 °C (131 °F)
Atmospheric pressure	≥ 75 kPa (563 mmHg, 22.2 inHg)

Time Needed for Diagnosis: 15000 ms
Malfunction Indicator Light Illumination: Illuminates as soon as a malfunction occurs.

- **Normality Judgment**

Judge as OK and clear the NG if the continuous time while the following conditions are established is more than the predetermined time.

Judgment Value

Malfunction Criteria	Threshold Value
Fuel tank pressure	< 7.9 kPa (59.6 mmHg, 2.3 inHg)

Time Needed for Diagnosis: Less than 1 second

DJ:DTC P0456 EVAPORATIVE EMISSION CONTROL SYSTEM LEAK DETECTED (VERY SMALL LEAK)

1. OUTLINE OF DIAGNOSIS

NOTE:
For the detection standard, refer to DTC P0442. <Ref. to GD(H6DO)-151, DTC P0442 EVAPORATIVE EMISSION CONTROL SYSTEM LEAK DETECTED (SMALL LEAK), Diagnostic Trouble Code (DTC) Detecting Criteria.>

DK:DTC P0457 EVAPORATIVE EMISSION CONTROL SYSTEM LEAK DETECTED (FUEL CAP LOOSE/OFF)

1. OUTLINE OF DIAGNOSIS

For the detection standard, refer to DTC P0442. <Ref. to GD(H6DO)-151, DTC P0442 EVAPORATIVE EMISSION CONTROL SYSTEM LEAK DETECTED (SMALL LEAK), Diagnostic Trouble Code (DTC) Detecting Criteria.>

DL:DTC P0458 EVAPORATIVE EMISSION SYSTEM PURGE CONTROL VALVE CIRCUIT LOW

1. OUTLINE OF DIAGNOSIS

Detect open or short circuit of the purge control solenoid valve.
Judge as NG when the ECM output level differs from the actual terminal level.

2. COMPONENT DESCRIPTION

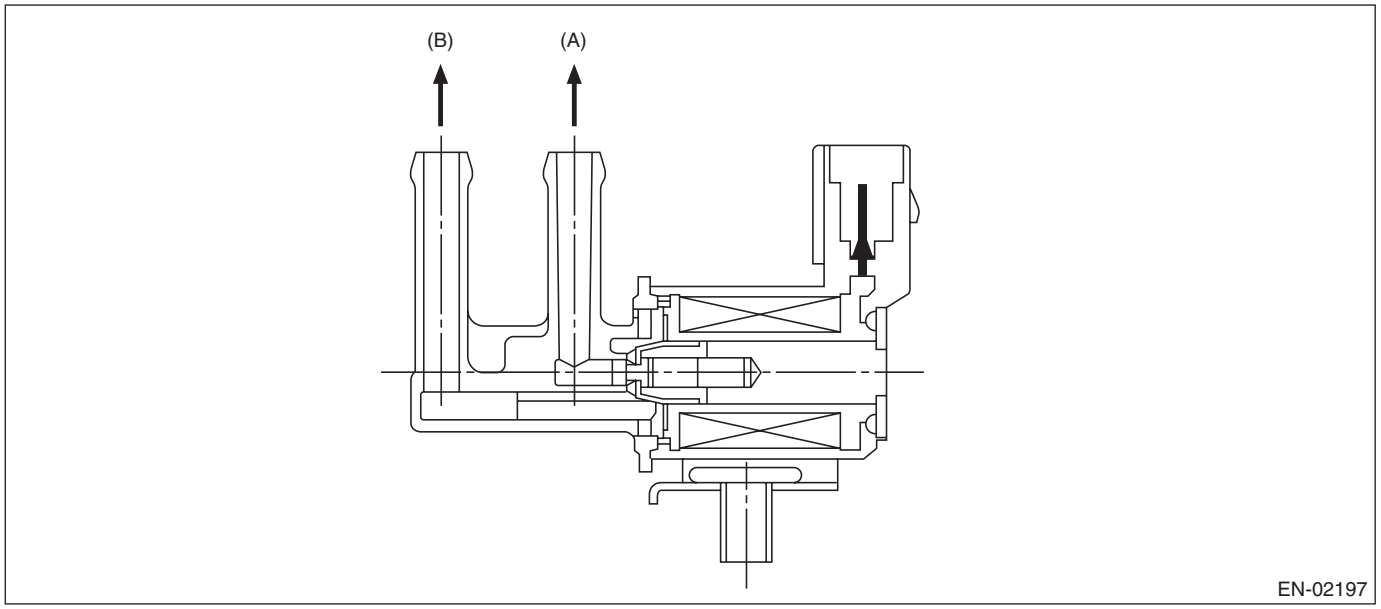

(A) To canister
(B) To intake manifold

3. ENABLE CONDITION

Secondary Parameters	Enable Conditions
Battery voltage	≥ 10.9 V
Elapsed time after starting the engine	≥ 1 s

4. GENERAL DRIVING CYCLE

Always perform the diagnosis after starting the engine.

5. DIAGNOSTIC METHOD

- **Abnormality Judgment**

If the duration of time while the following conditions are met is longer than the time indicated, judge as NG.

Judgment Value

Malfunction Criteria	Threshold Value
Duty ratio of “ON”	< 0.75
Terminal output voltage	Low

Time Needed for Diagnosis: 2500 ms
Malfunction Indicator Light Illumination: Illuminates when malfunction occurs in 2 continuous driving cycles.

- **Normality Judgment**

Judge as OK and clear the NG if the continuous time while the following conditions are established is more than the predetermined time.

Judgment Value

Malfunction Criteria	Threshold Value
Terminal output voltage	High

Time Needed for Diagnosis: Less than 1 second

DM:DTC P0459 EVAPORATIVE EMISSION SYSTEM PURGE CONTROL VALVE CIRCUIT HIGH

1. OUTLINE OF DIAGNOSIS

Detect open or short circuit of the purge control solenoid valve.
Judge as NG when the ECM output level differs from the actual terminal level.

2. COMPONENT DESCRIPTION

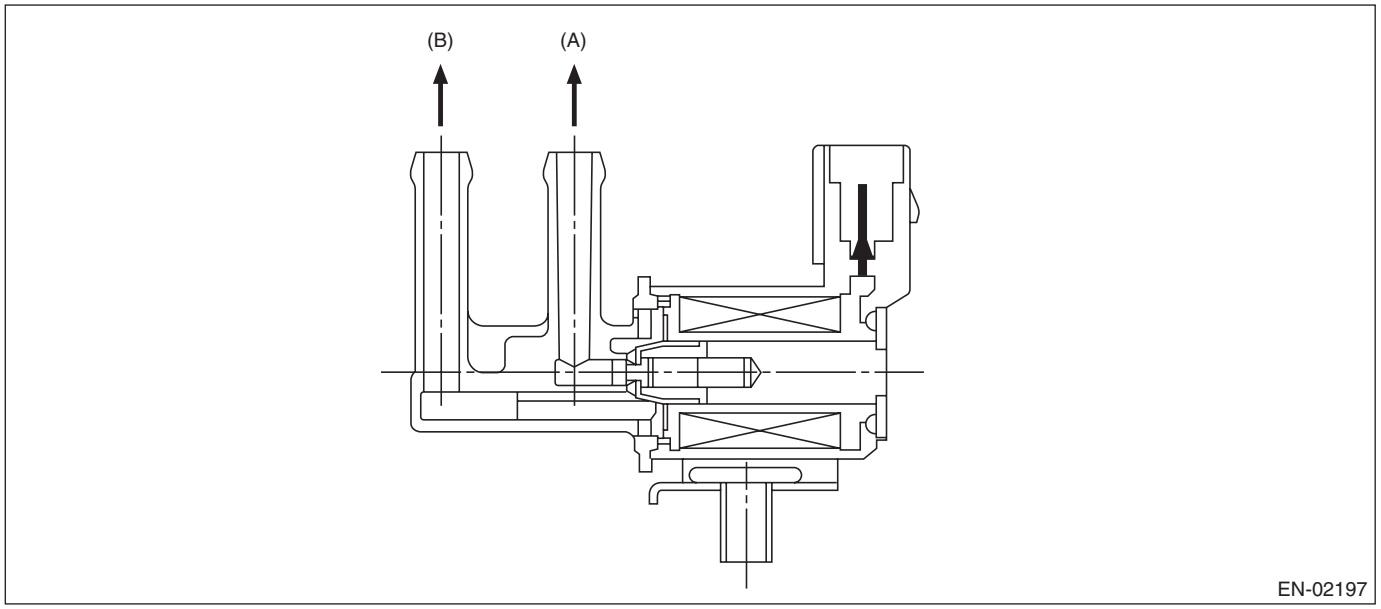

(A) To canister
(B) To intake manifold

3. ENABLE CONDITION

Secondary Parameters	Enable Conditions
Battery voltage	≥ 10.9 V
Elapsed time after starting the engine	≥ 1 s

4. GENERAL DRIVING CYCLE

Always perform the diagnosis after starting the engine.

5. DIAGNOSTIC METHOD

- **Abnormality Judgment**

If the duration of time while the following conditions are met is longer than the time indicated, judge as NG.

Judgment Value

Malfunction Criteria	Threshold Value
Duty ratio of "ON"	≥ 0.25
Terminal output voltage	High

Time Needed for Diagnosis: 2500 ms
Malfunction Indicator Light Illumination: Illuminates when malfunction occurs in 2 continuous driving cycles.

- **Normality Judgment**

Judge as OK and clear the NG if the continuous time while the following conditions are established is more than the predetermined time.

Judgment Value

Malfunction Criteria	Threshold Value
Terminal output voltage	Low

Time Needed for Diagnosis: Less than 1 second

DN:DTC P0461 FUEL LEVEL SENSOR “A” CIRCUIT RANGE/PERFORMANCE

1. OUTLINE OF DIAGNOSIS

Detect malfunctions of the fuel level sensor output property.
If the fuel level does not vary in a particular driving condition / engine condition where it should, judge as NG.

2. COMPONENT DESCRIPTION

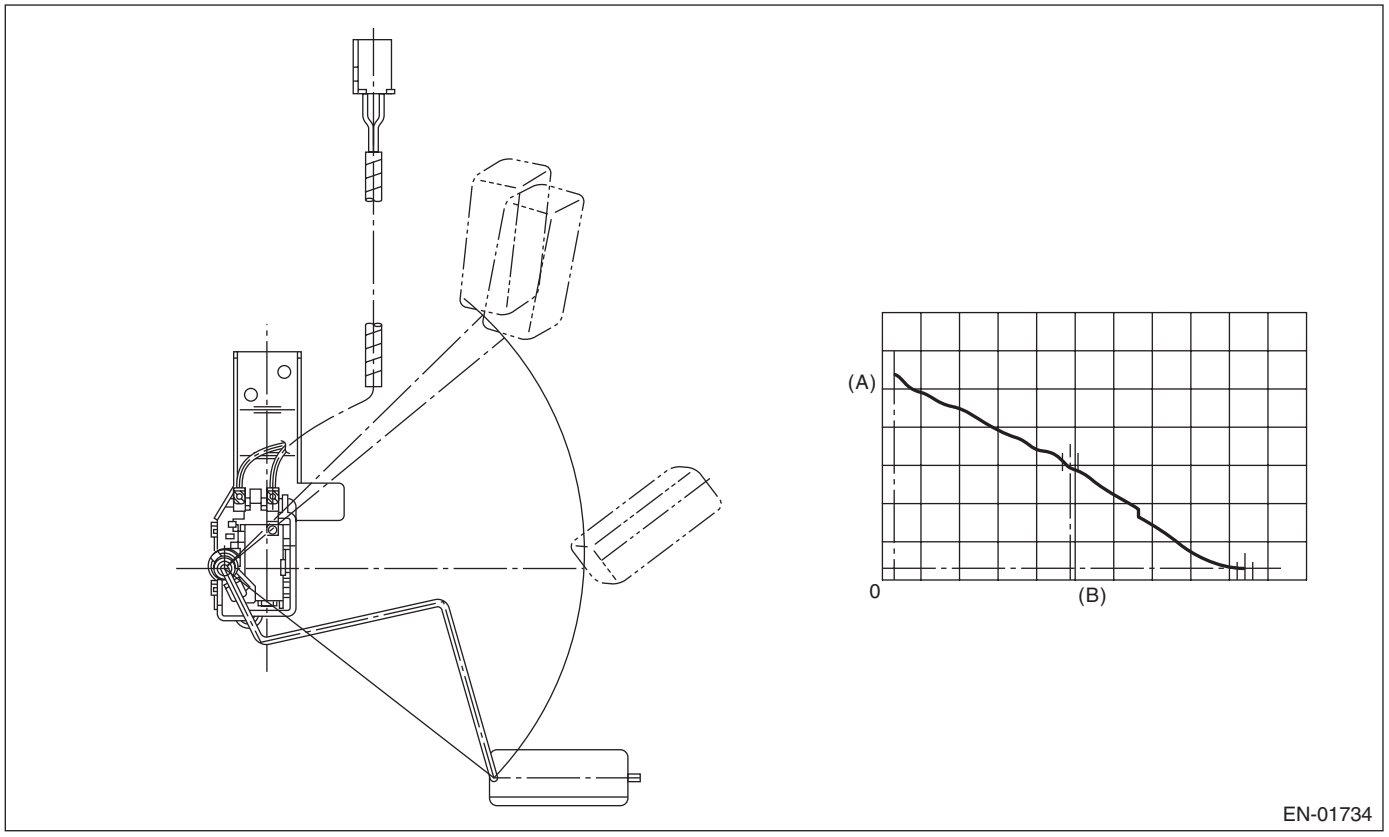

(A) Fuel level (B) Resistance

3. ENABLE CONDITION

Secondary Parameters	Enable Conditions
None	

4. GENERAL DRIVING CYCLE

Always perform the diagnosis continuously.

5. DIAGNOSTIC METHOD

• Abnormality Judgment

Judge as NG when the following conditions are established.

Judgment Value

Malfunction Criteria	Threshold Value
Accumulated amount of intake air	≥ 165375 g (5832.78 oz)
Max. – min. values of fuel level output	< 2.6 ℓ (0.69 US gal, 0.57 Imp gal)
Battery voltage	≥ 10.9 V
Engine speed	< 4000 rpm
Elapsed time after starting the engine	≥ 5000 ms

Time Needed for Diagnosis: Less than 1 second
Malfunction Indicator Light Illumination: Illuminates when malfunction occurs in 2 continuous driving cycles.

• Normality Judgment

Judge as OK and clear the NG if the following conditions are established.

Judgment Value

Malfunction Criteria	Threshold Value
Accumulated amount of intake air	≥ 165375 g (5832.78 oz)
Max. – min. values of fuel level output	≥ 2.6 ℓ (0.69 US gal, 0.57 Imp gal)
Battery voltage	≥ 10.9 V
Engine speed	< 4000 rpm
Elapsed time after starting the engine	≥ 5000 ms

Time Needed for Diagnosis: Less than 1 second

DO:DTC P0462 FUEL LEVEL SENSOR “A” CIRCUIT LOW

1. OUTLINE OF DIAGNOSIS

Detect the open or short circuit of fuel level sensor. Judge as NG if out of specification.

2. COMPONENT DESCRIPTION

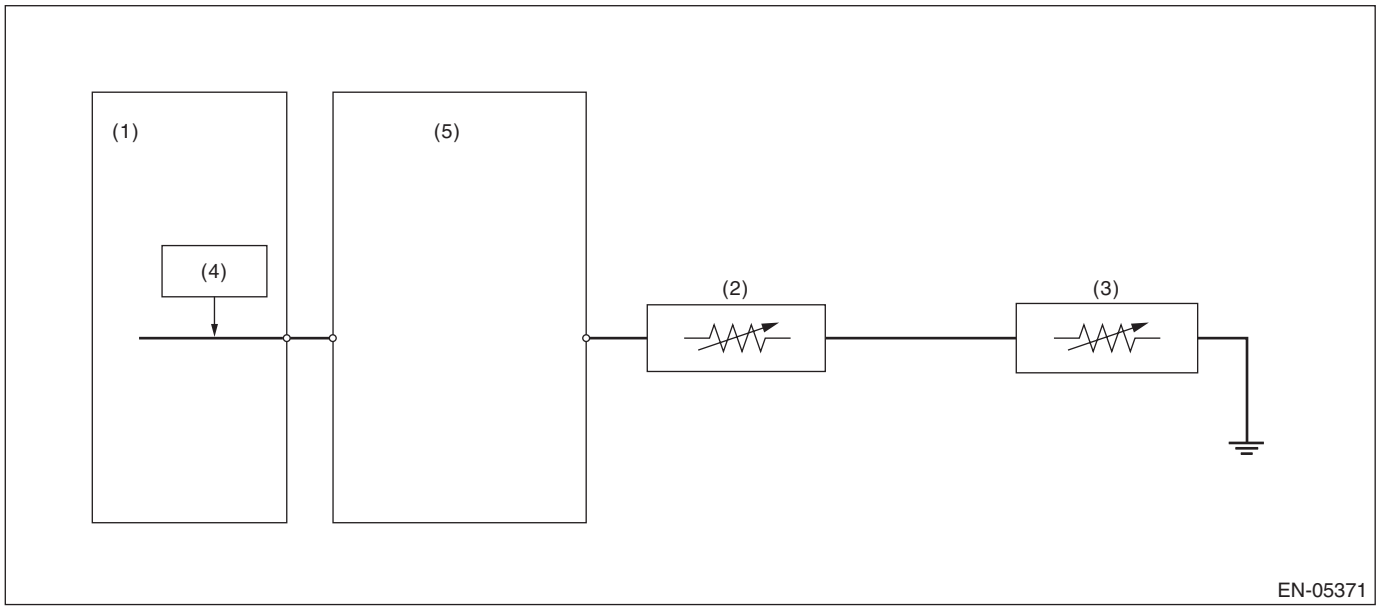

(1) Engine control module (ECM)
(2) Fuel level sensor
(3) Fuel sub level sensor
(4) Detecting circuit
(5) Body integrated unit

3. ENABLE CONDITION

Secondary Parameters	Enable Conditions
None	

4. GENERAL DRIVING CYCLE

Always perform the diagnosis continuously.

5. DIAGNOSTIC METHOD

• Abnormality Judgment

If the duration of time while the following conditions are met is longer than the time indicated, judge as NG.

Judgment Value

Malfunction Criteria	Threshold Value
Battery voltage	≥ 10.9 V
Elapsed time after starting the engine	≥ 3000 ms
Output voltage	< 0.173 V

Time Needed for Diagnosis: 2500 ms
Malfunction Indicator Light Illumination: Illuminates when malfunction occurs in 2 continuous driving cycles.

• Normality Judgment

Judge as OK and clear the NG if the continuous time while the following conditions are established is more than the predetermined time.

Judgment Value

Malfunction Criteria	Threshold Value
Battery voltage	≥ 10.9 V
Elapsed time after starting the engine	≥ 3000 ms
Output voltage	≥ 0.173 V

Time Needed for Diagnosis: Less than 1 second

DP:DTC P0463 FUEL LEVEL SENSOR “A” CIRCUIT HIGH

1. OUTLINE OF DIAGNOSIS

Detect the open or short circuit of fuel level sensor. Judge as NG if out of specification.

2. COMPONENT DESCRIPTION

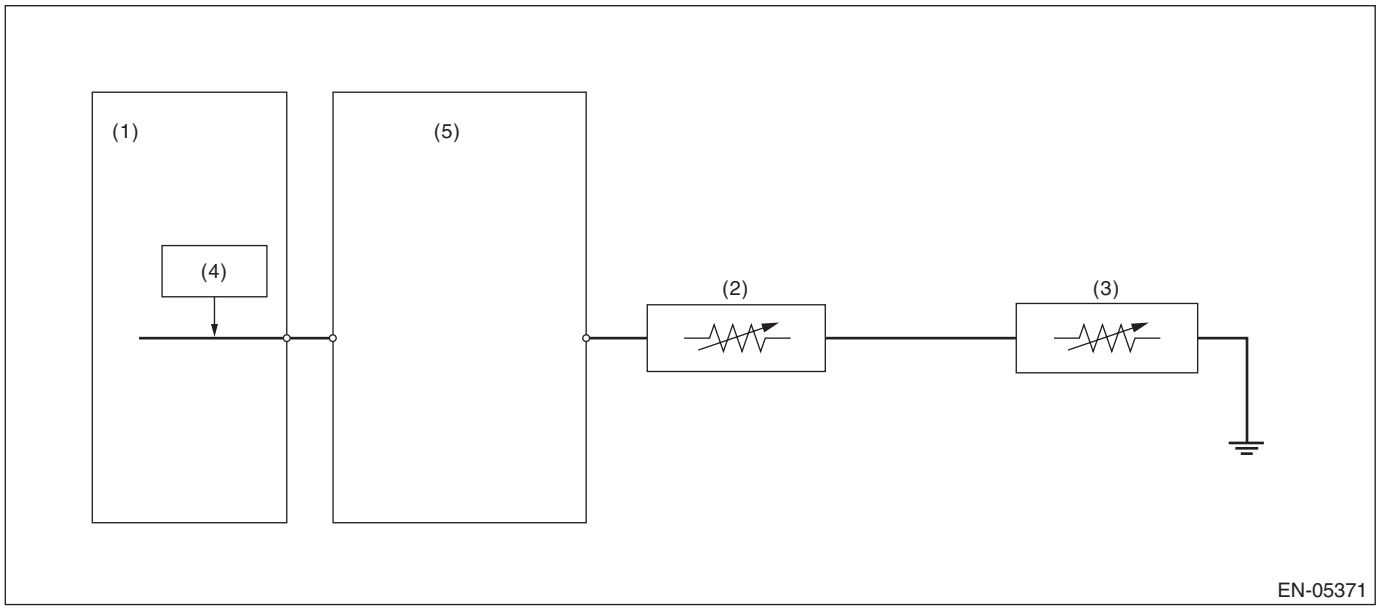

(1) Engine control module (ECM)
(2) Fuel level sensor
(3) Fuel sub level sensor
(4) Detecting circuit
(5) Body integrated unit

3. ENABLE CONDITION

Secondary Parameters	Enable Conditions
None	

4. GENERAL DRIVING CYCLE

Always perform the diagnosis continuously.

5. DIAGNOSTIC METHOD

• Abnormality Judgment

If the duration of time while the following conditions are met is longer than the time indicated, judge as NG.

Judgment Value

Malfunction Criteria	Threshold Value
Battery voltage	≥ 10.9 V
Elapsed time after starting the engine	≥ 3000 ms
Output voltage	≥ 7.212 V

Time Needed for Diagnosis: 1000 ms
Malfunction Indicator Light Illumination: Illuminates when malfunction occurs in 2 continuous driving cycles.

• Normality Judgment

Judge as OK and clear the NG if the continuous time while the following conditions are established is more than the predetermined time.

Judgment Value

Malfunction Criteria	Threshold Value
Battery voltage	≥ 10.9 V
Elapsed time after starting the engine	≥ 3000 ms
Output voltage	< 7.212 V

Time Needed for Diagnosis: Less than 1 second

DQ:DTC P0464 FUEL LEVEL SENSOR CIRCUIT INTERMITTENT

1. OUTLINE OF DIAGNOSIS

Detect the unstable output faults from the fuel level sensor caused by noise. Judge as NG when the max. value and cumulative value of output voltage variation of the fuel level sensor is larger than the threshold value.

2. ENABLE CONDITION

Malfunction Criteria	Threshold Value
Engine speed	≥ 500 rpm
Elapsed time after starting the engine	≥ 1 s
Battery voltage	≥ 10.9 V
Idle switch	ON
Fuel level	≥ 10.5 ℓ (2.77 US gal, 2.31 Imp gal) and < 59.5 ℓ (15.72 US gal, 13.09 Imp gal)
Vehicle speed = 0 km/h (0 MPH)	≥ 10000 ms

3. GENERAL DRIVING CYCLE

- Always perform the diagnosis continuously at idle speed.
- Pay attention to the fuel level.

4. DIAGNOSTIC METHOD

Calculate the Max. value (DELFLMAX) and cumulative value (SUMFL) of output voltage variation of fuel level sensor during 12.2 seconds. Judge it normal when both max. and cumulative values are not over the threshold value. Otherwise, when either of them is over the threshold value, the diagnosis counter counts up. Judge as NG if the counter indicated 4 time(s).

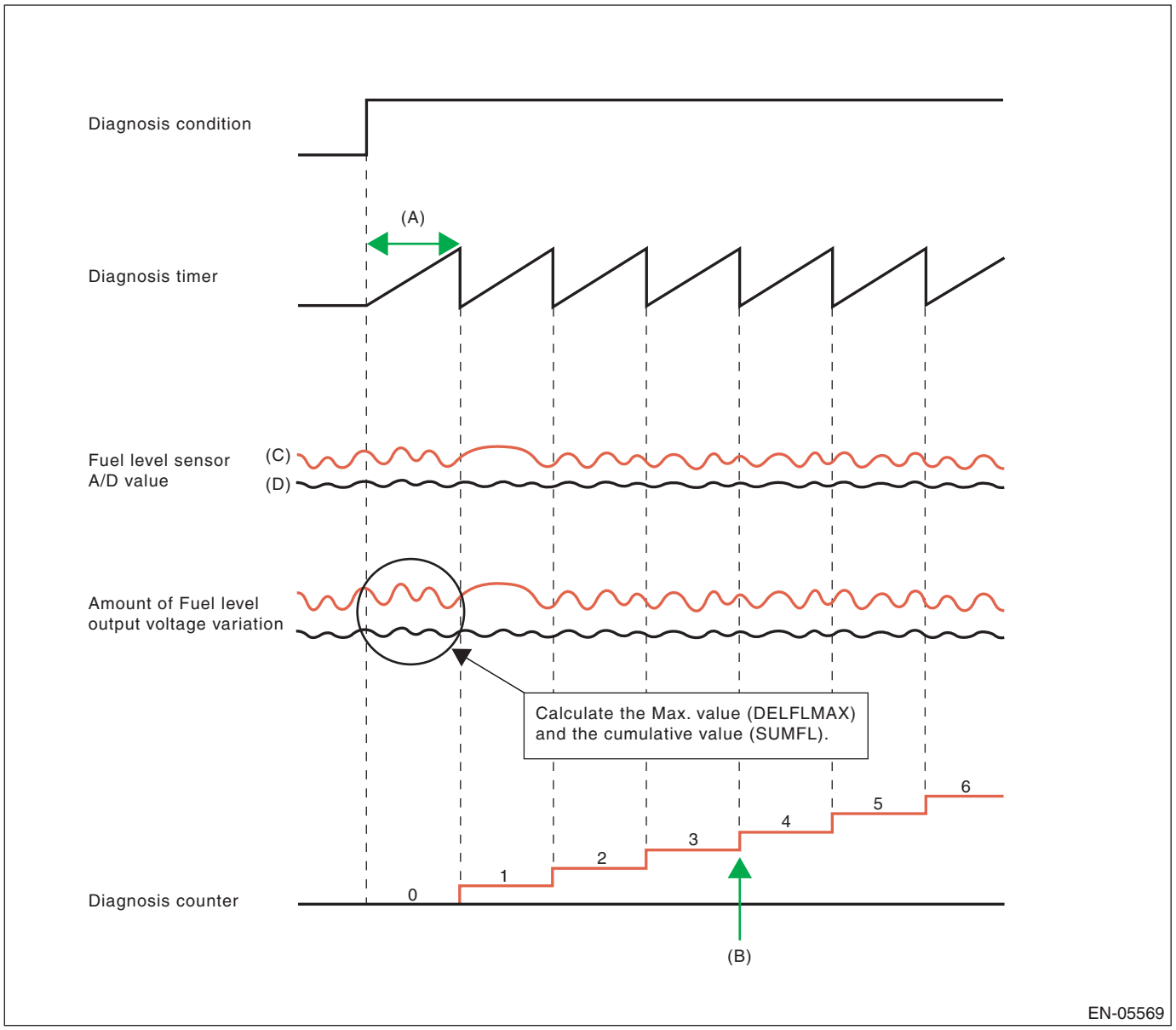

(A) 12288 ms (B) NG at 4 time(s) counts (C) Malfunction
(D) Normal

• Abnormality Judgment

If the duration of time while the following conditions are met is longer than the time indicated, judge as NG.

Judgment Value

Malfunction Criteria	Threshold Value
Integrated times of the condition reaching follows,	≥ 4 time(s)
DELFLMAX	≥ Value from Map
or	
SUMFL	≥ 23.8 V
At this time,	
DELFLMAX: Maximum difference of sensor output for 12288 ms	
SUMFL: Integrated value of the sensor output deviation for 12288 ms	

Map

Fuel level (ℓ , US gal, Imp gal)	10, 2.64, 2.2	20, 5.28, 4.4	25, 6.61, 5.5	30, 7.93, 6.6	43, 11.36, 9.46	45, 11.89, 9.9	50, 13.21, 11	60, 15.85, 13.2
Measured voltage (V)	0.248	0.519	0.796	0.6	1.025	1.069	1.402	2.186

The diagnosis counter does not count up when the following conditions are completed within 12288 ms.

Maximum value – minimum value of change of tank pressure during 12288 ms	≥ 0 kPa (0.375031 mmHg, 0 inHg)
Maximum value – minimum value of battery voltage during 12288 ms	≥ 1.2 V

Time Needed for Diagnosis: 12288 ms × 4 time(s)
Malfunction Indicator Light Illumination: Illuminates when malfunction occurs in 2 continuous driving cycles.

• Normality Judgment

Judge as OK and clear the NG if the continuous time while the following conditions are established is more than the predetermined time.

Judgment Value

Malfunction Criteria	Threshold Value
DELFLMAX	< Value from Map
SUMFL	< 23.8 V
At this time,	
DELFLMAX: Maximum difference of sensor output for 12288 ms	
SUMFL: Integrated value of the sensor output deviation for 12288 ms	

Time Needed for Diagnosis: 12288 ms

DR:DTC P0500 VEHICLE SPEED SENSOR “A”

1. OUTLINE OF DIAGNOSIS

Judge as NG when outside of the judgment value.
Judge NG when the received data from VDCCM&H/U is abnormal vehicle speed, and the vehicle speed data is impossible.

2. COMPONENT DESCRIPTION

Vehicle speed signals are taken in to the VDC control module and hydraulic control unit, and normal/erroneous data of the ABS wheel speed sensor is received by CAN communication from the VDC control module and hydraulic control unit.

3. ENABLE CONDITION

Secondary Parameters	Enable Conditions
Battery voltage	≥ 10.9 V
Elapsed time after starting the engine	≥ 2000 ms

4. GENERAL DRIVING CYCLE

Always perform diagnosis more than 2000 ms after starting the engine.

5. DIAGNOSTIC METHOD

- **Abnormality Judgment**

If the duration of time while the following conditions are met is longer than the time indicated, judge as NG.

Judgment Value

Malfunction Criteria	Threshold Value
Front ABS wheel speed sensor status	Malfunction
Either of the following is established	
Front left wheel speed	≥ 300 km/h (186.4 MPH)
Front right wheel speed	≥ 300 km/h (186.4 MPH)

Time Needed for Diagnosis: 2500 ms
Malfunction Indicator Light Illumination: Illuminates as soon as a malfunction occurs.

- **Normality Judgment**

Judge as OK and clear the NG if the continuous time while the following conditions are established is more than the predetermined time.

Judgment Value

Malfunction Criteria	Threshold Value
Front left wheel speed	> 0 km/h (0 MPH) and < 300 km/h (186.4 MPH)
Front right wheel speed	> 0 km/h (0 MPH) and < 300 km/h (186.4 MPH)

Time Needed for Diagnosis: 2500 ms

DS:DTC P0506 IDLE AIR CONTROL SYSTEM RPM LOWER THAN EXPECTED

1. OUTLINE OF DIAGNOSIS

Detect the malfunction that actual engine speed is not close to target engine speed during idling. Judge as NG when actual engine speed is not close to target engine speed during idling.

2. ENABLE CONDITION

Secondary Parameters	Enable Conditions
Engine coolant temperature	≥ 75 °C (167 °F)
Battery voltage	≥ 10.9 V
Atmospheric pressure	≥ 75 kPa (563 mmHg, 22.2 inHg)
Fuel level	≥ 10.5 ℓ (2.77 US gal, 2.31 Imp gal)
Elapsed time after starting the engine	≥ 10.49 s
Feedback of ISC	In operation
Lambda value (left and right)	≥ 0.9 and < 1.1
After switching air conditioner to ON/OFF	≥ 5.1 s
After intake manifold pressure changes by 4 kPa (30 mmHg, 1.2 inHg) or more.	> 5.1 s
Elapsed time after switching neutral position switch to ON/OFF	> 5.1 s
Vehicle speed	0 km/h (0 MPH)

3. GENERAL DRIVING CYCLE

Perform the diagnosis continuously at idling after warming up engine.

4. DIAGNOSTIC METHOD

- **Abnormality Judgment**

If the duration of time while the following conditions are met is longer than the time indicated, judge as NG.

Judgment Value

Malfunction Criteria	Threshold Value
Actual engine speed – Targeted engine speed	< –100 rpm
Feedback compensation for ISC	Max.

Time Needed for Diagnosis: 10 s × 3 time(s)
Malfunction Indicator Light Illumination: Illuminates when malfunction occurs in 2 continuous driving cycles.

- **Normality Judgment**

Judge as OK and clear the NG if the continuous time while the following conditions are established is more than the predetermined time.

Judgment Value

Malfunction Criteria	Threshold Value
Actual engine speed – Targeted engine speed	≥ –100 rpm

Time Needed for Diagnosis: 10 s

DT:DTC P0507 IDLE AIR CONTROL SYSTEM RPM HIGHER THAN EXPECTED

1. OUTLINE OF DIAGNOSIS

Detect the malfunction that actual engine speed is not close to target engine speed during idling. Judge as NG when actual engine speed is not close to target engine speed during idling.

2. ENABLE CONDITION

Secondary Parameters	Enable Conditions
Engine coolant temperature	≥ 75 °C (167 °F)
Battery voltage	≥ 10.9 V
Atmospheric pressure	≥ 75 kPa (563 mmHg, 22.2 inHg)
Fuel level	≥ 10.5 ℓ (2.77 US gal, 2.31 Imp gal)
Elapsed time after starting the engine	≥ 10.49 s
Feedback of ISC	In operation
Lambda value (left and right)	≥ 0.9 and < 1.1
After switching air conditioner to ON/OFF	≥ 5.1 s
After intake manifold pressure changes by 4 kPa (30 mmHg, 1.2 inHg) or more.	> 5.1 s
Elapsed time after switching neutral position switch to ON/OFF	> 5.1 s
Vehicle speed	0 km/h (0 MPH)

3. GENERAL DRIVING CYCLE

Perform the diagnosis continuously at idling after warming up engine.

4. DIAGNOSTIC METHOD

- **Abnormality Judgment**

If the duration of time while the following conditions are met is longer than the time indicated, judge as NG.

Judgment Value

Malfunction Criteria	Threshold Value
Actual – Target engine speed	≥ 200 rpm
Feedback compensation for ISC	Min.

Time Needed for Diagnosis: 10 s × 3 time(s)
Malfunction Indicator Light Illumination: Illuminates when malfunction occurs in 2 continuous driving cycles.

- **Normality Judgment**

Judge as OK and clear the NG if the continuous time while the following conditions are established is more than the predetermined time.

Judgment Value

Malfunction Criteria	Threshold Value
Actual – Target engine speed	< 200 rpm

Time Needed for Diagnosis: 10 s

DU:DTC P050A COLD START IDLE AIR CONTROL SYSTEM PERFORMANCE

1. OUTLINE OF DIAGNOSIS

• When cold, the abnormality in the control of target engine speed increase is detected. (P050A)

Judge as NG if the exhaust gas temperature diagnosis or idle speed diagnosis is NG.

• Exhaust gas temperature diagnosis

Judge as NG when the estimated exhausted gas temperature in 14 seconds after the cold start is below the specified value.

• Idle speed diagnosis

Judge as NG when actual engine speed is not close to target engine speed at cold start.

• Detect malfunctions of the catalyst advanced idling retard angle control. (P050B)

Judge as NG when ECM is not controlling the angle properly during catalyst advanced idling retard angle control.

• Final ignition timing diagnosis

Judge as NG when actual retard amount is under the specified value at cold start.

2. ENABLE CONDITIONS

Secondary Parameters	Enable Conditions
<Exhaust gas temperature diagnosis>	
Atmospheric pressure	≥ 75 kPa (563 mmHg, 22.2 inHg)
Battery voltage	> 10.9 V
Engine condition	In operation
Vehicle speed	≤ 2 km/h (1.2 MPH)
Elapsed time after gear position change (P ←→ D or N ←→ D)	≥ 3000 ms
ISC feedback	In operation
Throttle opening angle	< 0.37 °
Fuel property	Not extremely low volatility
Target retard amount	≥ 6 °CA
<Idle speed diagnosis>	
Atmospheric pressure	≥ 75 kPa (563 mmHg, 22.2 inHg)
Battery voltage	> 10.9 V
Engine condition	In operation
Vehicle speed	≤ 2 km/h (1.2 MPH)
Engine coolant temperature	≤ 60 °C (140 °F)
Intake air amount sum value	≤ Value of Map 1
Elapsed time after gear position change (P ←→ D or N ←→ D)	≥ 3000 ms
Throttle opening angle	< 0.37 °
Fuel property	Not extremely low volatility
Elapsed time after starting the engine	≥ 2000 ms
<Final ignition timing diagnosis>	
Atmospheric pressure	≥ 75 kPa (563 mmHg, 22.2 inHg)
Battery voltage	> 10.9 V
Engine condition	In operation
Vehicle speed	≤ 2 km/h (1.2 MPH)
Engine coolant temperature	≤ 60 °C (140 °F)
Intake air amount sum value	≤ Value of Map 2
Elapsed time after gear position change (P ←→ D or N ←→ D)	≥ 3000 ms
Throttle opening angle	< 0.37 °
Fuel property	Not extremely low volatility
Target retard amount	≥ Value from Map 3

Map 1

Engine coolant temperature at engine starting °C (°F)	–40 (–40)	–30 (–22)	–20 (–4)	–10 (14)	0 (32)	10 (50)	20 (68)	30 (86)
Intake air amount sum value g (oz)	2300 (81.12)	2170 (76.54)	2040 (71.95)	1490 (52.55)	1070 (37.74)	780 (27.51)	630 (22.22)	560 (19.75)

Engine coolant temperature at engine starting °C (°F)	40 (104)	50 (122)	60 (140)	70 (158)	80 (176)	90 (194)	100 (212)	110 (230)
Intake air amount sum value g (oz)	520 (18.34)	460 (16.22)	360 (12.7)	360 (12.7)	360 (12.7)	360 (12.7)	360 (12.7)	360 (12.7)

Map 2

Engine coolant temperature at engine starting °C (°F)	–40 (–40)	–30 (–22)	–20 (–4)	–10 (14)	0 (32)	10 (50)	20 (68)	30 (86)
Intake air amount sum value g (oz)	2300 (81.12)	2170 (76.54)	2040 (71.95)	1490 (52.55)	1070 (37.74)	780 (27.51)	630 (22.22)	560 (19.75)

Engine coolant temperature at engine starting °C (°F)	40 (104)	50 (122)	60 (140)	70 (158)	80 (176)	90 (194)	100 (212)	110 (230)
Intake air amount sum value g (oz)	520 (18.34)	460 (16.22)	360 (12.7)	360 (12.7)	360 (12.7)	360 (12.7)	360 (12.7)	360 (12.7)

Map 3

Engine coolant temperature	–40 °C (–40 °F)	–30 °C (–22 °F)	–20 °C (–4 °F)	–10 °C (14 °F)	0 °C (32 °F)	10 °C (50 °F)	20 °C (68 °F)	30 °C (86 °F)	40 °C (104 °F)	50 °C (122 °F)	60 °C (140 °F)
Target retard amount	5 °CA	5 °CA	5 °CA	5 °CA	5 °CA	5 °CA	5 °CA	5 °CA	5 °CA	5 °CA	5 °CA

3. GENERAL DRIVING CYCLE

Perform the diagnosis at cold start.

4. DIAGNOSTIC METHOD

- **Exhaust gas temperature diagnosis**

Abnormality Judgment

Calculate the estimated exhaust gas temperature when the diagnostic enable condition is established. Judge as NG when the following conditions are established.

Judgment Value

Malfunction Criteria	Threshold Value
Estimated exhaust gas temperature	< Value of Map 4

Map 4

Engine coolant temperature at engine starting	–30 °C (–22 °F)	–20 °C (–4 °F)	–10 °C (14 °F)	0 °C (32 °F)	10 °C (50 °F)	20 °C (68 °F)	30 °C (86 °F)	40 °C (104 °F)	50 °C (122 °F)	60 °C (140 °F)
Threshold Value	200 °C (392 °F)	200 °C (392 °F)	200 °C (392 °F)	225 °C (437 °F)	225 °C (437 °F)	220 °C (428 °F)	210 °C (410 °F)	200 °C (392 °F)	190 °C (374 °F)	190 °C (374 °F)

Time Needed for Diagnosis: 14 seconds

Malfunction Indicator Light Illumination: Illuminates when malfunction occurs in 2 continuous driving cycles.

Normality Judgment

Judge as OK and clear the NG if the following conditions are established.

Judgment Value

Malfunction Criteria	Threshold Value
Estimated exhaust gas temperature	≥ Value of Map 4

Time Needed for Diagnosis: Less than 1 second

• Idle speed diagnosis

Abnormality Judgment
Judge as NG when the following conditions are established.

Judgment Value

Malfunction Criteria	Threshold Value
Actual engine speed – Target engine speed	< – 125 rpm

Time Needed for Diagnosis: 5000 ms
Malfunction Indicator Light Illumination: Illuminates when malfunction occurs in 2 continuous driving cycles.

Normality Judgment
Judge as OK and clear the NG if the following conditions are established.

Judgment Value

Malfunction Criteria	Threshold Value
Actual engine speed – Target engine speed	≥ – 125 rpm

Time Needed for Diagnosis: 5000 ms

• Final ignition timing diagnosis

Abnormality Judgment
Judge as NG when the following conditions are established.

Judgment Value

Malfunction Criteria	Threshold Value
Final ignition timing – ignition timing during CSERS* *: Ignition timing during CSERS (Cold Start Emission Reduction Strategy) = Base ignition timing – retard amount	> Value of Map 5

Map 5

Engine coolant temperature	–40 °C (–40 °F)	–30 °C (–22 °F)	–20 °C (–4 °F)	–10 °C (14 °F)	0 °C (32 °F)	10 °C (50 °F)	20 °C (68 °F)	30 °C (86 °F)	40 °C (104 °F)	50 °C (122 °F)	60 °C (140 °F)
Threshold Value	5 °CA	5 °CA	5 °CA	5 °CA	5 °CA	5 °CA	5 °CA	5 °CA	5 °CA	5 °CA	5 °CA

Time Needed for Diagnosis: 5000 ms
Malfunction Indicator Light Illumination: Illuminates when malfunction occurs in 2 continuous driving cycles.

Normality Judgment
Judge as OK and clear the NG if the following conditions are established.

Judgment Value

Malfunction Criteria	Threshold Value
Final ignition timing – ignition timing during CSERS* *: Ignition timing during CSERS (Cold Start Emission Reduction Strategy) = Base ignition timing – retard amount	≤ Value of Map 5

Time Needed for Diagnosis: 5000 ms

DV:DTC P050B COLD START IGNITION TIMING PERFORMANCE

1. OUTLINE OF DIAGNOSIS

NOTE:
For the detection standard, refer to DTC P050A. <Ref. to GD(H6DO)-194, DTC P050A COLD START IDLE AIR CONTROL SYSTEM PERFORMANCE, Diagnostic Trouble Code (DTC) Detecting Criteria.>

DW:DTC P0512 STARTER REQUEST CIRCUIT

1. OUTLINE OF DIAGNOSIS

Detect the open or short circuit of starter SW.
Judge as ON NG when the starter SW signal remains ON.

2. ENABLE CONDITION

Secondary Parameters	Enable Conditions
None	

3. GENERAL DRIVING CYCLE

Always perform the diagnosis continuously.

4. DIAGNOSTIC METHOD

- **Abnormality Judgment**

If the duration of time while the following conditions are met is longer than the time indicated, judge as NG.

Judgment Value

Malfunction Criteria	Threshold Value
Engine condition	After engine starting
Starter OFF signal	Not detected
Battery voltage	≥ 8 V

Time Needed for Diagnosis: 30000 ms
Malfunction Indicator Light Illumination: Illuminates when malfunction occurs in 2 continuous driving cycles.

- **Normality Judgment**

Judge as OK and clear the NG if the continuous time while the following conditions are established is more than the predetermined time.

Judgment Value

Malfunction Criteria	Threshold Value
Starter OFF signal	Detected
Battery voltage	≥ 8 V

Time Needed for Diagnosis: Less than 1 second

DX:DTC P0513 INCORRECT IMMOBILIZER KEY

1. OUTLINE OF DIAGNOSIS

DTC	Item	Outline of diagnosis
P0513	Incorrect Immobilizer Key	Incorrect immobilizer key (Use of unregistered key in body integrated unit)
P1570	Antenna	Faulty antenna
P1571	Reference Code Incompatibility	Reference code incompatibility between body integrated unit and ECM
P1572	IMM Circuit Failure (Except Antenna Circuit)	Communication failure between body integrated unit and ECM
P1574	Key Communication Failure	Failure of body integrated unit to verify key (transponder) ID code or transponder failure
P1576	EGI Control Module EEPROM	ECM malfunctioning
P1577	IMM Control Module EEPROM	Body integrated unit malfunctioning
P1578	Meter Failure	Reference code incompatibility between body integrated unit and combination meter

2. ENABLE CONDITION

When starting the engine.

3. GENERAL DRIVING CYCLE

Perform the diagnosis only after starting the engine.

4. DIAGNOSTIC METHOD

Judge as NG when the conditions for the outline of the diagnosis of the top are established.

DY:DTC P0604 INTERNAL CONTROL MODULE RANDOM ACCESS MEMORY (RAM) ERROR

1. OUTLINE OF DIAGNOSIS

Detect the malfunction of microcomputer (RAM).
When there is a problem in the CPU normal RAM, judge as NG.
If it is possible to write data to the whole area of RAM in the initial routine, and is possible to read the same data, it is judged as OK, and if not, NG.

2. ENABLE CONDITION

Secondary Parameters	Enable Conditions
None	

Diagnosis with the initial routine.

3. GENERAL DRIVING CYCLE

Perform the diagnosis as soon as the ignition switch is turned to ON.

4. DIAGNOSTIC METHOD

- **Abnormality Judgment**

Judge as NG when the following conditions are established.

Judgment Value

Malfunction Criteria	Threshold Value
Write the specified value to RAM and then read.	The written value cannot be read.

Time Needed for Diagnosis: Less than 1 second
Malfunction Indicator Light Illumination: Illuminates as soon as a malfunction occurs.

- **Normality Judgment**

Judge as OK and clear the NG if the following conditions are established.

Judgment Value

Malfunction Criteria	Threshold Value
Write the specified value to RAM and then read.	The written value can be read.

Time Needed for Diagnosis: Less than 1 second

DZ:DTC P0605 INTERNAL CONTROL MODULE READ ONLY MEMORY (ROM) ERROR

1. OUTLINE OF DIAGNOSIS

Judge as NG when SUM value of ROM is outside the standard value.

2. ENABLE CONDITION

Secondary Parameters	Enable Conditions
Ignition switch	ON

3. GENERAL DRIVING CYCLE

Always perform the diagnosis continuously.

4. DIAGNOSTIC METHOD

Abnormality Judgment

Judge as NG if the criteria below are met.

Judgment Value

Malfunction Criteria	Threshold Value
SUM value of ROM	Standard

Time Needed for Diagnosis: Undetermined
Malfunction Indicator Light Illumination: Illuminates as soon as a malfunction occurs.

EA:DTC P0607 THROTTLE CONTROL SYSTEM CIRCUIT RANGE/PERFORMANCE

1. OUTLINE OF DIAGNOSIS

Judge as NG when any one of the followings is established.
(1) Monitoring IC operates abnormally. (Monitoring IC malfunction)
(2) Input amplifier circuit of throttle position sensor 1 operates abnormally. (fourfold amplifier malfunction)
(3) CPU operates abnormally. (Instruction/flow check)
(4) A/D converter operates abnormally. (ADC malfunction)
(5) EEPROM operates abnormally. (EEPROM malfunction)
(6) Output IC operates abnormally. (Output driver malfunction)

2. COMPONENT DESCRIPTION

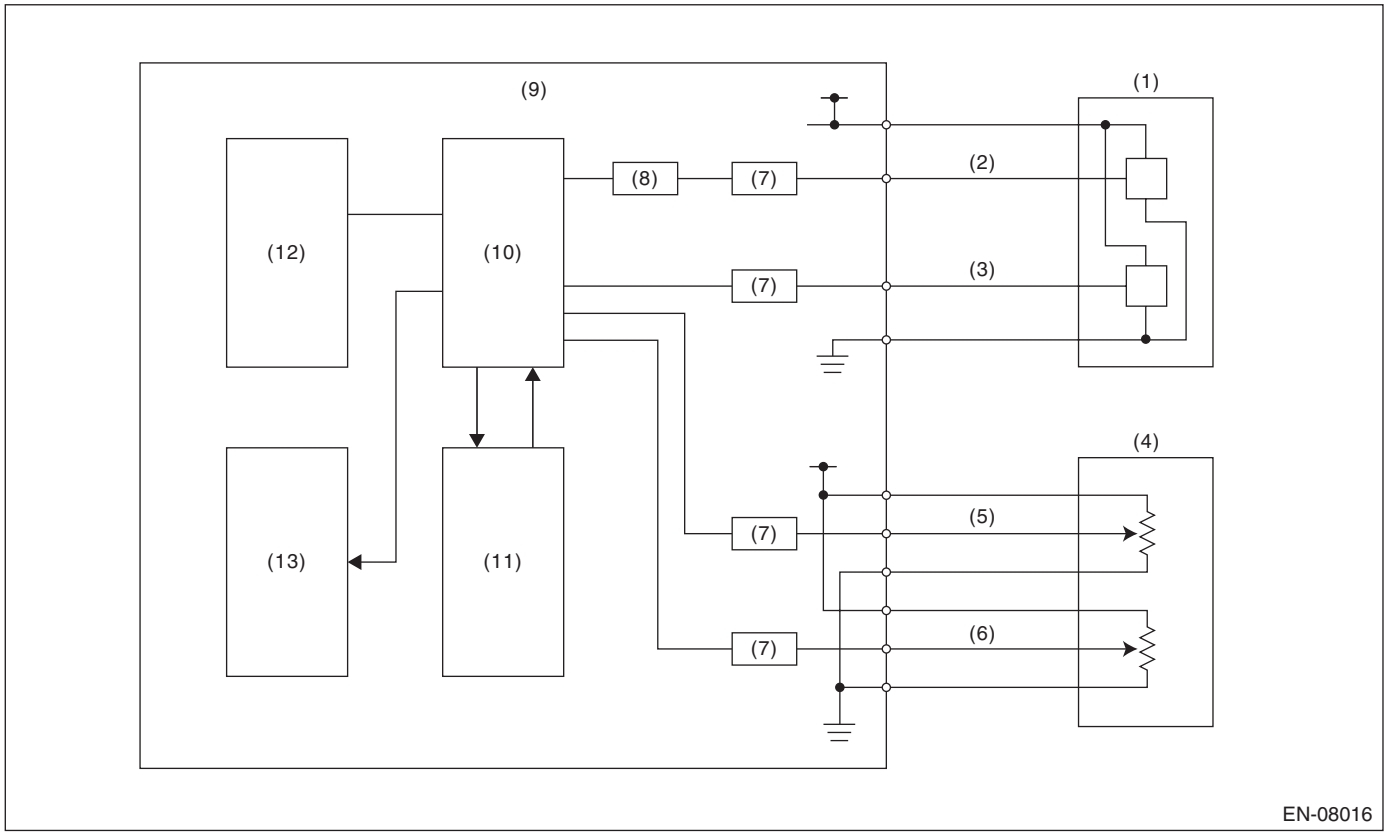

(1)	Throttle position sensor	(6)	Accelerator pedal position sensor 2	(10)	CPU
(2)	Throttle position sensor 1	(7)	I/F circuit	(11)	Monitoring IC
(3)	Throttle position sensor 2	(8)	Amplifier circuit	(12)	EEPROM
(4)	Accelerator pedal position sensor	(9)	Engine control module (ECM)	(13)	Output IC
(5)	Accelerator pedal position sensor 1				

3. ENABLE CONDITION

Secondary Parameters	Enable Conditions
(1) Battery voltage	≥ 6 V
(2) Ignition switch	ON
(2) Battery voltage	≥ 6 V
(3) Ignition switch	ON
(3) ETC control	Permitted
(4) Ignition switch	ON
(4) Battery voltage	≥ 6 V
(5) Starter switch	OFF
(5) Battery voltage	> 6 V
(6) Ignition switch	ON
(6) Battery voltage	≥ 10.9 V

4. GENERAL DRIVING CYCLE

Always perform the diagnosis continuously.

5. DIAGNOSTIC METHOD

Judge as OK and clear the NG when the malfunction criteria below are met.

Judgment Value

Malfunction Criteria	Threshold Value
(1) Monitoring IC operation	The result and estimated value match.
(2) | Throttle position sensor 1 opening angle – (Throttle position sensor 1 opening angle after passing amplifier)/4 |	< 3 °
(3) Main CPU calculation result	The result and estimated value match.
(4) | Standard voltage – Voltage reading |	< 0.078125 V
(5) EEPROM writing	Writing completed
(6) Communication with output IC	Possible to communicate

Time Needed for Diagnosis:
(1): 200 ms
(2): 24 ms
(3): 192 ms
(4): 200 ms
(5): 48 ms
(6): 2500 ms
Malfunction Indicator Light Illumination: Illuminates as soon as a malfunction occurs.

EB:DTC P0638 THROTTLE ACTUATOR CONTROL RANGE/PERFORMANCE (BANK 1)

1. OUTLINE OF DIAGNOSIS

Judge as NG when the target opening angle and actual opening angle is mismatched or the current to motor is the specified duty or more for specified time continuously.

2. COMPONENT DESCRIPTION

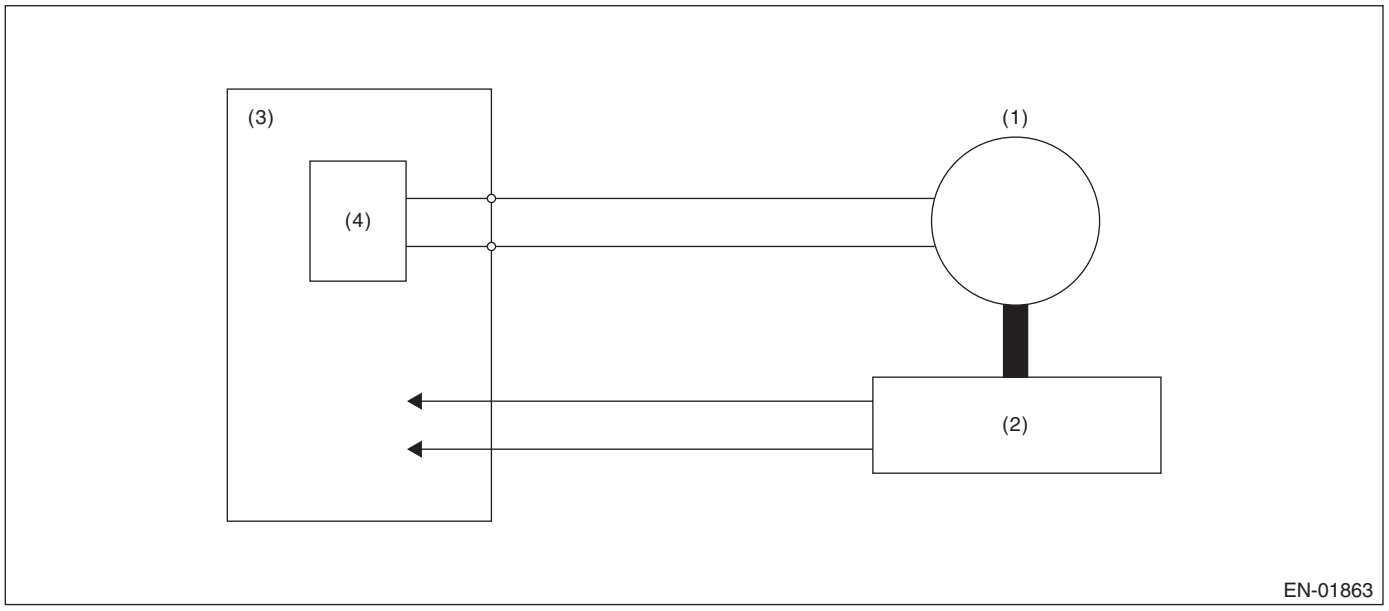

(1) Motor
(2) Throttle position sensor
(3) Engine control module (ECM)
(4) Drive circuit

3. ENABLE CONDITION

Secondary Parameters	Enable Conditions
Ignition switch	ON
Normal operation of electronic throttle control	ON

4. GENERAL DRIVING CYCLE

Always perform the diagnosis continuously when the electronic throttle control is operating.

5. DIAGNOSTIC METHOD

Judge as OK and clear the NG when the malfunction criteria below are met.

Judgment Value

Malfunction Criteria	Threshold Value
Difference between target opening angle and actual opening angle	Within the OK range of **judgment value detail**
Output duty to drive circuit	< 95 %

Time Needed for Diagnosis:

- Difference between target opening angle and actual opening angle:
  - NG judgment: Refer to the **judgment time detail**.
  - OK judgment: 2000 ms
- Output duty to drive circuit: 2000 ms

Details of Judgment Value

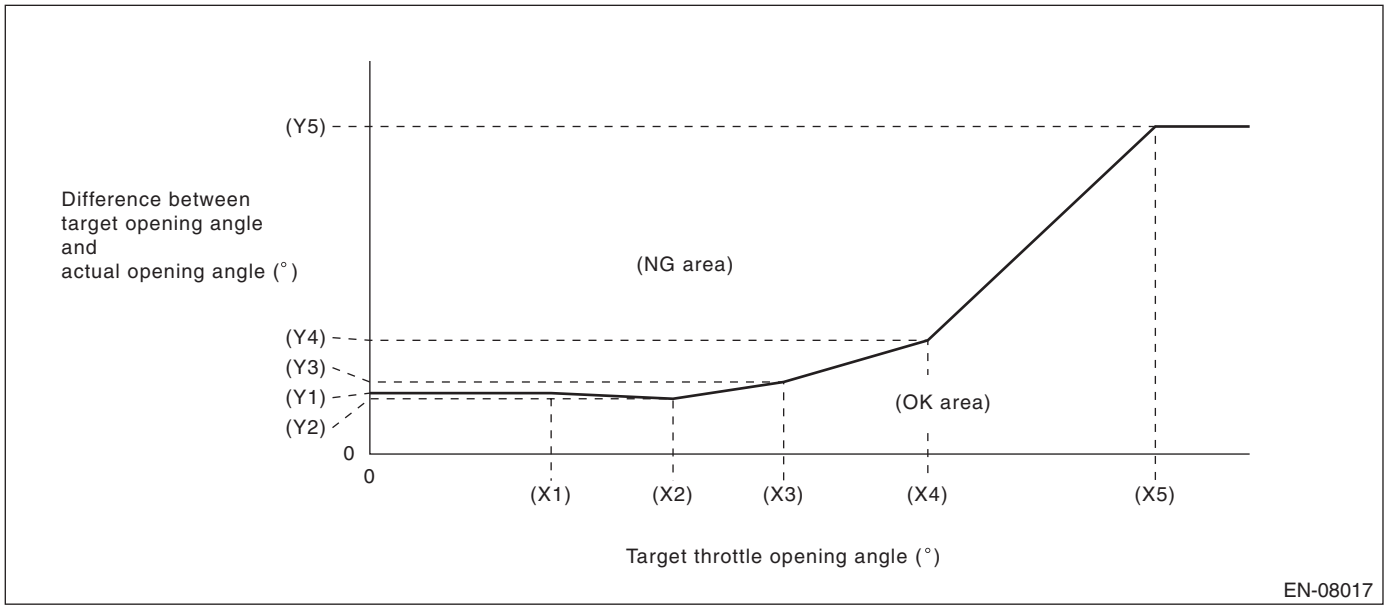

(X1) 6.915 °
(X2) 11.565 °
(X3) 15.785 °
(X4) 21.285 °
(X5) 29.965 °

(Y1) 4.65 °
(Y2) 4.22 °
(Y3) 5.5 °
(Y4) 8.68 °
(Y5) 25 °

Judgment time detail

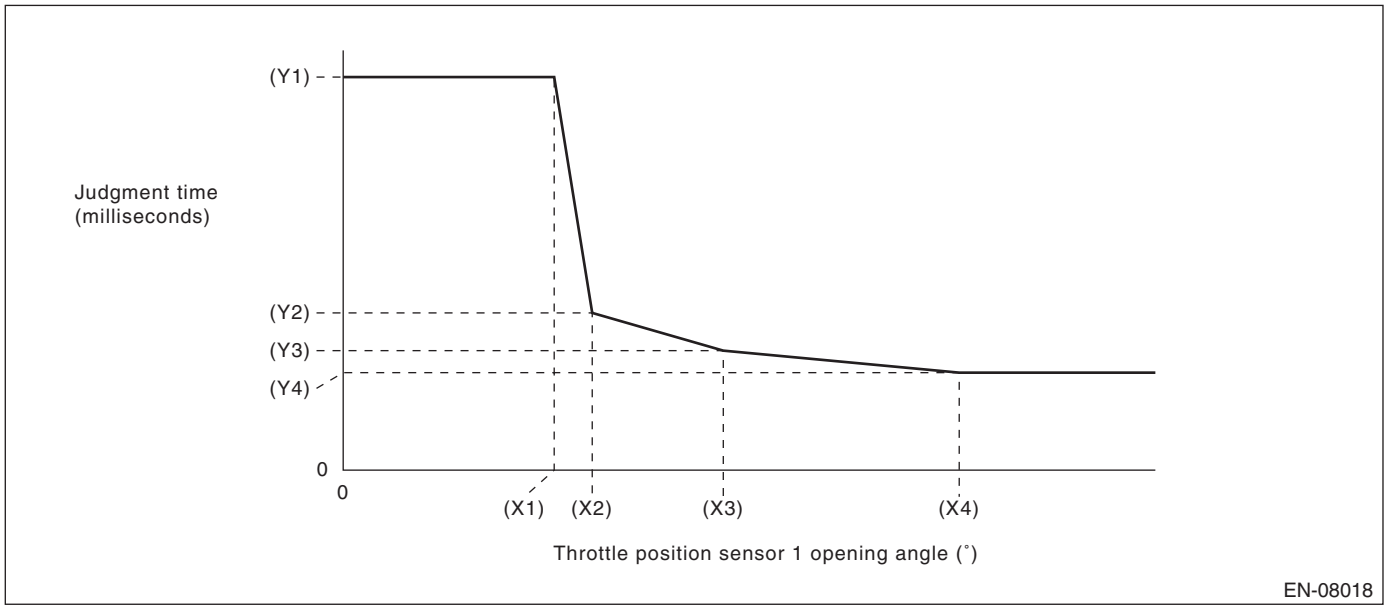

(X1) 8.049999237 °
(X2) 9.5 °
(X3) 14.5 °
(X4) 23.5 °

(Y1) 1000 ms
(Y2) 400 ms
(Y3) 304 ms
(Y4) 248 ms

NOTE:
Judgment time is constantly 1000 ms with Actual opening angle ≤ Target opening angle.
Malfunction Indicator Light Illumination: Illuminates as soon as a malfunction occurs.

EC:DTC P0700 TRANSMISSION CONTROL SYSTEM (MIL REQUEST)

1. OUTLINE OF DIAGNOSIS

Judge as NG when there is CAN communication with the TCM and there is a MIL lighting request.

2. ENABLE CONDITION

Secondary Parameters	Enable Conditions
None	

3. GENERAL DRIVING CYCLE

Always perform the diagnosis continuously.

4. DIAGNOSTIC METHOD

- **Abnormality Judgment**

If the duration of time while the following conditions are met is longer than the time indicated, judge as NG.

Judgment Value

Malfunction Criteria	Threshold Value
Battery voltage	≥ 10.9 V
MIL lighting request from TCM	Yes

Time Needed for Diagnosis: 2500 ms
Malfunction Indicator Light Illumination: Illuminates as soon as a malfunction occurs.

- **Normality Judgment**

If the duration of time while the following conditions are met is longer than the time indicated, judge as NG.

Judgment Value

Malfunction Criteria	Threshold Value
Battery voltage	≥ 10.9 V
MIL lighting request from TCM	None

Time Needed for Diagnosis: Less than 1 second

ED:DTC P1152 O2 SENSOR CIRCUIT RANGE/PERFORMANCE (LOW) (BANK1 SENSOR1)

1. OUTLINE OF DIAGNOSIS

Detect that λ value remains low.
Judge as NG when lambda value is abnormal in accordance with λ value of front oxygen (A/F) sensor and running conditions such as vehicle speed, amount of intake air, engine coolant temperature, sub feedback control, etc.

λ value = Actual air fuel ratio/Theoretical air fuel ratio
λ > 1: Lean
λ < 1: Rich

2. COMPONENT DESCRIPTION

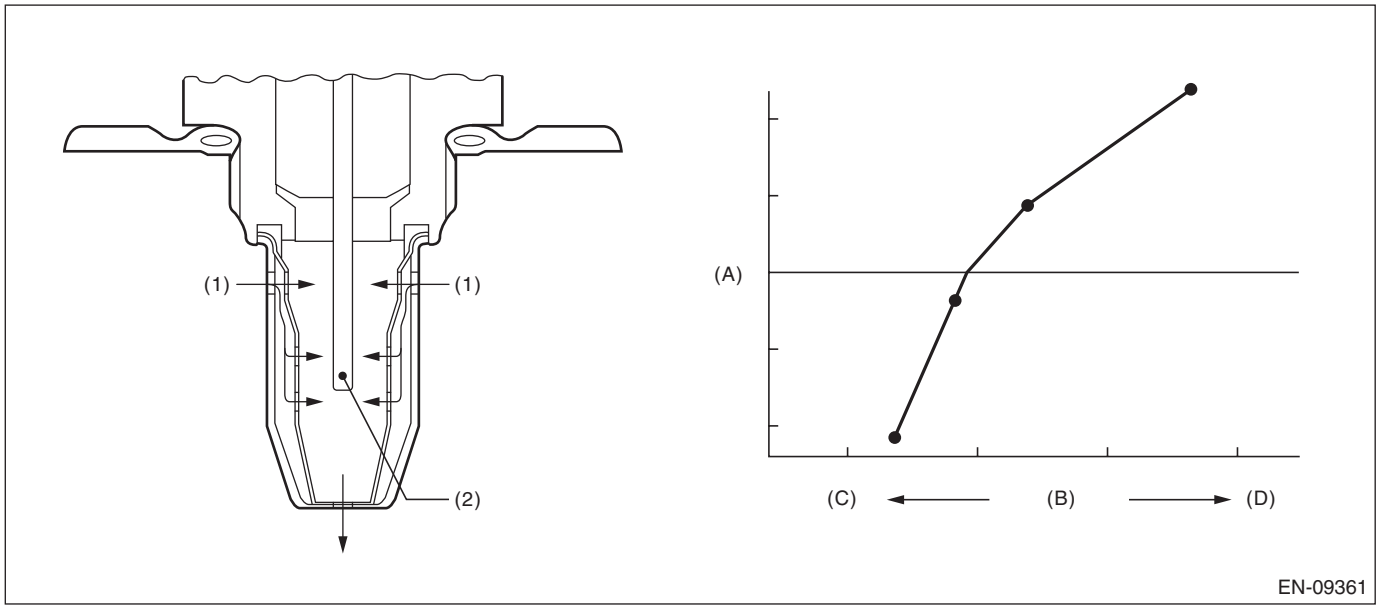

(A) Electromotive force (B) Air fuel ratio (C) Lean
(D) Rich

(1) Exhaust gas (2) ZrO_2

3. ENABLE CONDITION

Secondary Parameters	Enable Conditions
Time needed for all secondary parameters to be in enable conditions	≥ 4096 ms
Battery voltage	≥ 10.9 V
Atmospheric pressure	≥ 75 kPa (563 mmHg, 22.2 inHg)
Rear oxygen sensor sub feedback	Execution
Rear oxygen sensor output voltage – Feedback target voltage	– 0.2 V — 0.1 V
or	
Rear oxygen sensor sub feedback compensation coefficient	On Min.
or	
Rear oxygen sensor sub feedback compensation coefficient	On Max.
Elapsed time after starting the engine	≥ 60000 ms
Engine coolant temperature	≥ 75 °C (167 °F)
Vehicle speed	≥ 20 km/h (12.4 MPH)
Amount of intake air	≥ 8 g/s (0.28 oz/s)
Load change at 120°CA	< 0.02 g/rev (0 oz/rev)
Front oxygen (A/F) sensor impedance	0 Ω — 50 Ω
Learning value of evaporation gas density	< 0.2
Total time of operating canister purge	≥ 19.9 s
Targeted lambda value load compensation coefficient	–0.05 — 0.050

4. GENERAL DRIVING CYCLE

Perform diagnosis continuously at a constant speed of 20 km/h (12.4 MPH) or more after 60000 ms have passed since the engine started.

5. DIAGNOSTIC METHOD

- **Abnormality Judgment**

If the duration of time while the following conditions are met is longer than the time indicated, judge as NG.

Judgment Value

Malfunction Criteria	Threshold Value
λ value	< 0.85

Time Needed for Diagnosis: 10000 ms
Malfunction Indicator Light Illumination: Illuminates when malfunction occurs in 2 continuous driving cycles.

- **Normality Judgment**

Judge as OK and clear the NG if the continuous time while the following conditions are established is more than the predetermined time.

Judgment Value

Malfunction Criteria	Threshold Value
λ value	≥ 0.85

Time Needed for Diagnosis: Less than 1 second

EE:DTC P1153 O2 SENSOR CIRCUIT RANGE/PERFORMANCE (HIGH) (BANK1 SENSOR1)

1. OUTLINE OF DIAGNOSIS

Detect that λ value remains high.
Judge as NG when lambda value is abnormal in accordance with λ value of front oxygen (A/F) sensor and running conditions such as vehicle speed, amount of intake air, engine coolant temperature, sub feedback control, etc.

λ value = Actual air fuel ratio/Theoretical air fuel ratio
λ > 1: Lean
λ < 1: Rich

2. COMPONENT DESCRIPTION

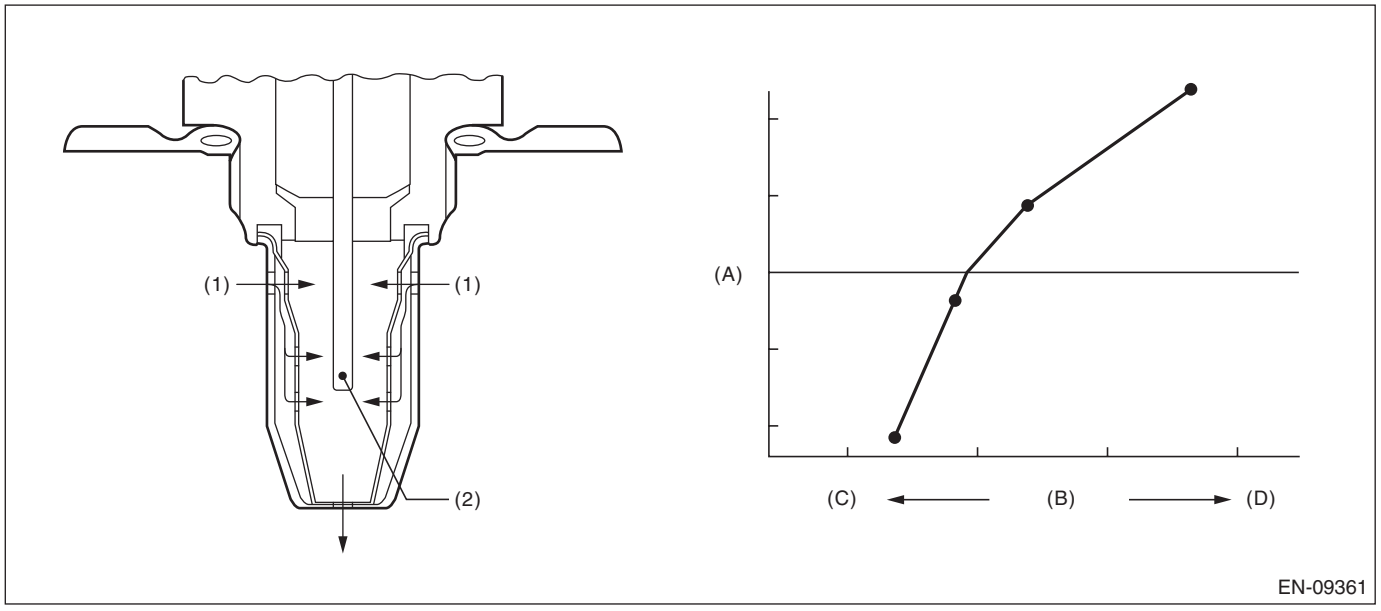

(A) Electromotive force (B) Air fuel ratio (C) Lean
(D) Rich

(1) Exhaust gas (2) ZrO_2

3. ENABLE CONDITION

Secondary Parameters	Enable Conditions
Time needed for all secondary parameters to be in enable conditions	≥ 4096 ms
Battery voltage	≥ 10.9 V
Atmospheric pressure	≥ 75 kPa (563 mmHg, 22.2 inHg)
Rear oxygen sensor sub feedback	Execution
Rear oxygen sensor output voltage – Feedback target voltage	– 0.2 V — 0.1 V
or	
Rear oxygen sensor sub feedback compensation coefficient	On Min.
or	
Rear oxygen sensor sub feedback compensation coefficient	On Max.
Elapsed time after starting the engine	≥ 60000 ms
Engine coolant temperature	≥ 75 °C (167 °F)
Vehicle speed	≥ 20 km/h (12.4 MPH)
Amount of intake air	≥ 8 g/s (0.28 oz/s)
Load change at 120°CA	< 0.02 g/rev (0 oz/rev)
Front oxygen (A/F) sensor impedance	0 Ω — 50 Ω
Learning value of evaporation gas density	< 0.2
Total time of operating canister purge	≥ 19.9 s
Targeted lambda value load compensation coefficient	–0.05 — 0.050

4. GENERAL DRIVING CYCLE

Perform diagnosis continuously at a constant speed of 20 km/h (12.4 MPH) or more after 60000 ms have passed since the engine started.

5. DIAGNOSTIC METHOD

- **Abnormality Judgment**

If the duration of time while the following conditions are met is longer than the time indicated, judge as NG.

Judgment Value

Malfunction Criteria	Threshold Value
λ value	> 1.15

Time Needed for Diagnosis: 10000 ms
Malfunction Indicator Light Illumination: Illuminates when malfunction occurs in 2 continuous driving cycles.

- **Normality Judgment**

Judge as OK and clear the NG if the continuous time while the following conditions are established is more than the predetermined time.

Judgment Value

Malfunction Criteria	Threshold Value
λ value	≤ 1.15

Time Needed for Diagnosis: Less than 1 second

EF:DTC P1154 O2 SENSOR CIRCUIT RANGE/PERFORMANCE (LOW) (BANK 2 SENSOR 1)

1. OUTLINE OF DIAGNOSIS

NOTE:
For the detection standard, refer to DTC P1152. <Ref. to GD(H6DO)-208, DTC P1152 O2 SENSOR CIRCUIT RANGE/PERFORMANCE (LOW) (BANK1 SENSOR1), Diagnostic Trouble Code (DTC) Detecting Criteria.>

EG:DTC P1155 O2 SENSOR CIRCUIT RANGE/PERFORMANCE (HIGH) (BANK 2 SENSOR 1)

1. OUTLINE OF DIAGNOSIS

NOTE:
For the detection standard, refer to DTC P1153. <Ref. to GD(H6DO)-210, DTC P1153 O2 SENSOR CIRCUIT RANGE/PERFORMANCE (HIGH) (BANK1 SENSOR1), Diagnostic Trouble Code (DTC) Detecting Criteria.>

EH:DTC P1160 RETURN SPRING FAILURE

1. OUTLINE OF DIAGNOSIS

Judge as NG when the valve is opened more than the default opening angle, but does not move to the close direction with the motor power stopped.

2. COMPONENT DESCRIPTION

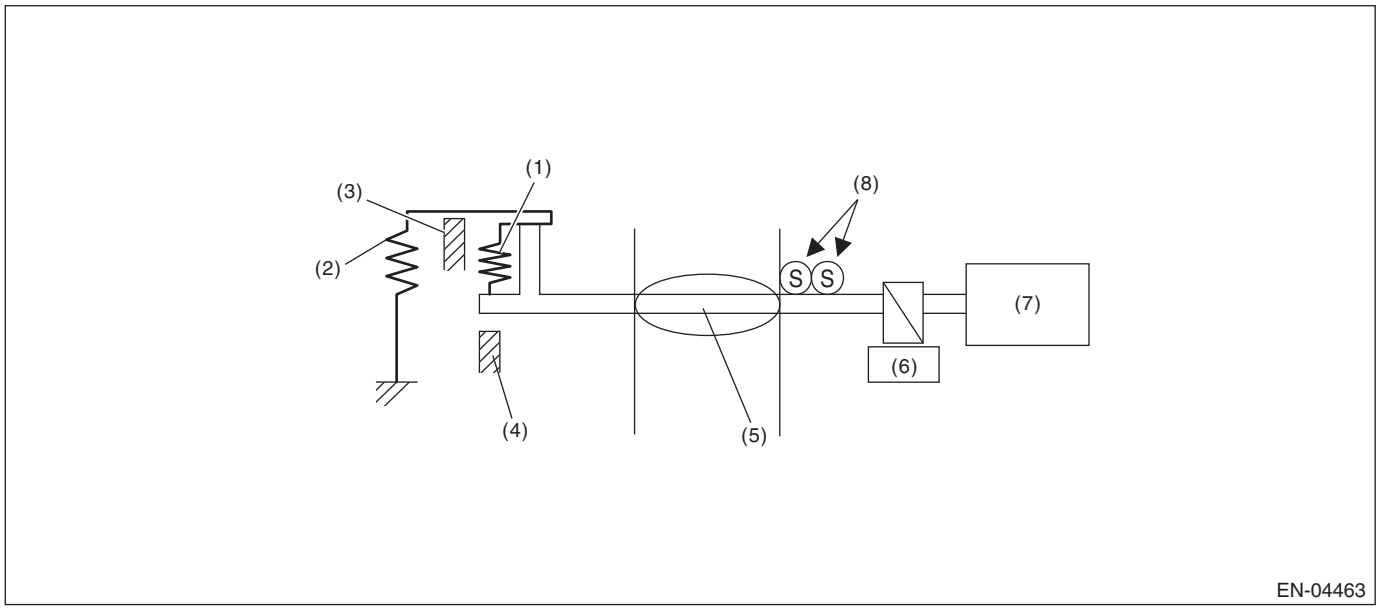

(1) Opener spring
(2) Return spring
(3) Intermediate stopper
(4) Full closed stopper
(5) Throttle valve
(6) Gear
(7) DC motor
(8) Main and sub throttle position sensor

3. ENABLE CONDITION

Secondary Parameters	Enable Conditions
Battery voltage	≥ 6 V
Throttle position sensor	Normal

4. GENERAL DRIVING CYCLE

- Ignition switch ON → OFF
- Ignition switch OFF → ON (Only after clearing memory)

5. DIAGNOSTIC METHOD

- **Abnormality Judgment**

Judge as NG when the following conditions are established.

Judgment Value

Malfunction criteria	Threshold value
Opening variation after continuity is set to OFF	< 2 °

Time Needed for Diagnosis: 24 ms
Malfunction Indicator Light Illumination: Illuminates as soon as a malfunction occurs.

- **Normality Judgment**

Judge as OK and clear the NG if the following conditions are established.

Judgment Value

Malfunction criteria	Threshold value
Opening variation after continuity is set to OFF	≥ 2 °

Time Needed for Diagnosis: 3400 ms

EI: DTC P1443 VENT CONTROL SOLENOID VALVE FUNCTION PROBLEM

1. OUTLINE OF DIAGNOSIS

Detect the abnormal function (stuck closed) of the drain valve.
Judge as NG when fuel tank pressure is low.

2. COMPONENT DESCRIPTION

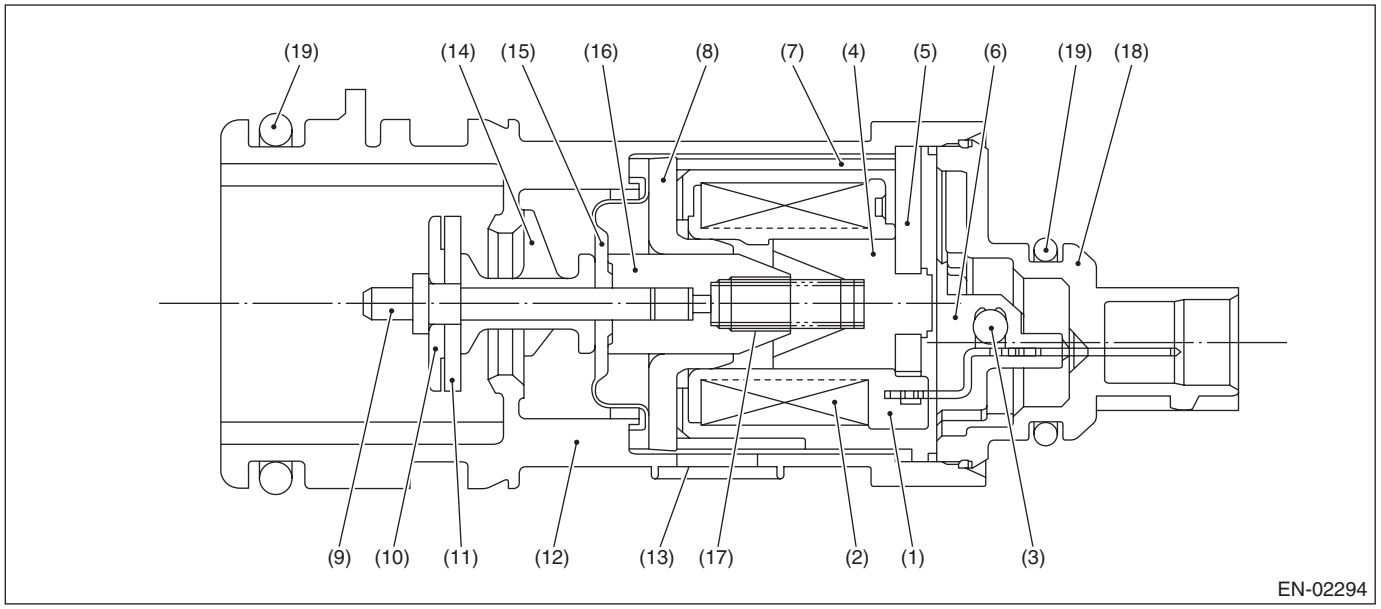

(1) Bobbin
(2) Coil
(3) Diode
(4) Stator core
(5) End plate
(6) Body
(7) Yoke
(8) Magnetic plate
(9) Shaft
(10) Plate
(11) Valve
(12) Housing
(13) Filter
(14) Retainer
(15) Diaphragm
(16) Movable core
(17) Spring
(18) Cover
(19) O-ring

3. ENABLE CONDITION

Secondary Parameters	Enable Conditions
Drain valve	Open
Battery voltage	≥ 10.9 V
Atmospheric pressure	≥ 75 kPa (563 mmHg, 22.2 inHg)
Tank pressure when starter is OFF → ON	–0.7 kPa (–5 mmHg, –0.2 inHg) and 0.4 kPa (2.9 mmHg, 0.1 inHg)

4. GENERAL DRIVING CYCLE

Always perform the diagnosis continuously.

5. DIAGNOSTIC METHOD

- **Abnormality Judgment**

If the duration of time while the following conditions are met is longer than the time indicated, judge as NG.

Judgment Value

Malfunction Criteria	Threshold Value
Fuel tank pressure	≤ –4 kPa (–30 mmHg, –1.2 inHg)

Time Needed for Diagnosis: 3000 ms
Malfunction Indicator Light Illumination: Illuminates as soon as a malfunction occurs.

- **Normality Judgment**

Judge as OK and clear the NG if the continuous time while the following conditions are established is more than the predetermined time.

Judgment Value

Malfunction Criteria	Threshold Value
Fuel tank pressure	> –4 kPa (–30 mmHg, –1.2 inHg)
Cumulative time when all the malfunction criteria below are met.	≥ 30000 ms
Purge control solenoid valve duty	Not = 0
Fuel temperature	–10 °C (14 °F) — 70 °C (158 °F)
Intake manifold relative pressure	≥ – 26.7 kPa (– 200 mmHg, – 7.9 inHg)

Time Needed for Diagnosis: Less than 1 second

EJ: DTC P1492 EGR SOLENOID VALVE SIGNAL #1 CIRCUIT MALFUNCTION (LOW INPUT)

1. OUTLINE OF DIAGNOSIS

- Detects open or short circuit of EGR.
- Judge as NG when the ECM output level differs from the actual terminal level.

2. COMPONENT DESCRIPTION

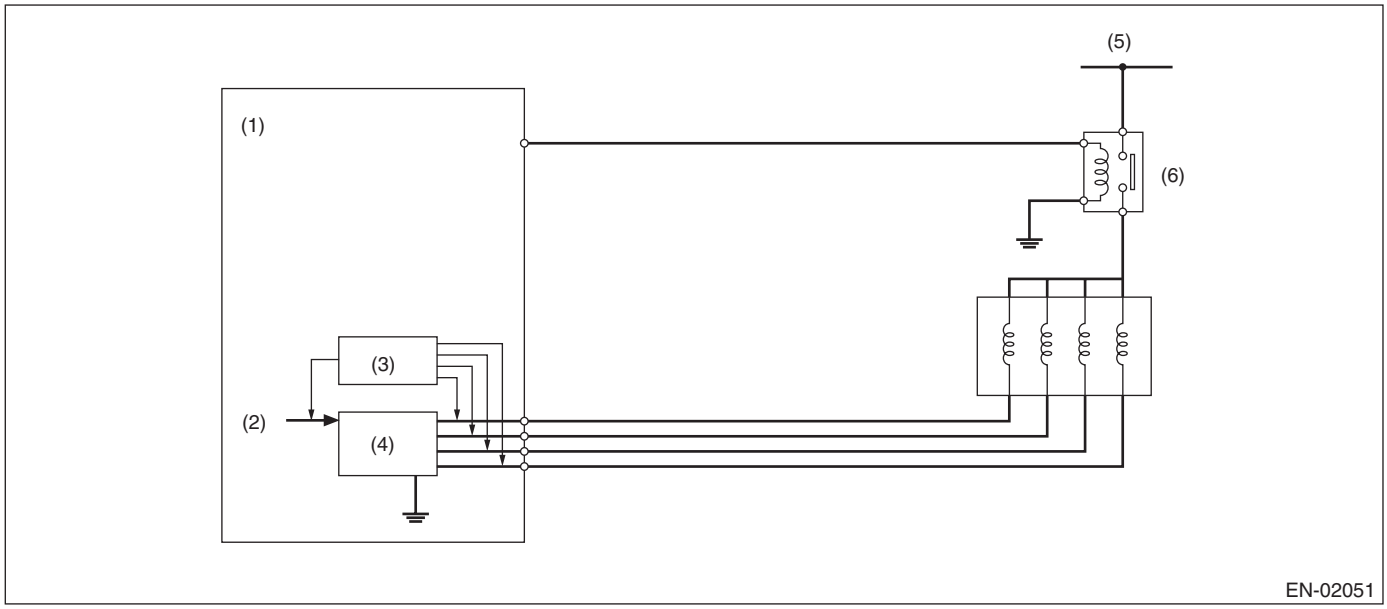

(1) Engine control module (ECM)
(2) Computer unit (CPU)
(3) Detecting circuit
(4) Switch circuit
(5) Battery voltage
(6) Main relay

3. ENABLE CONDITION

Secondary Parameters	Enable Conditions
Elapsed time after starting the engine	≥ 1 s
EGR valve target position	> 0 step
Battery voltage	≥ 10.9 V

4. GENERAL DRIVING CYCLE

Perform diagnosis continuously during EGR operation.

5. DIAGNOSTIC METHOD

- **Abnormality Judgment**

If the duration of time while the following conditions are met is longer than the time indicated, judge as NG.

Judgment Value

Malfunction Criteria	Threshold Value
Terminal voltage level when ECM outputs OFF signal or Terminal voltage level when EGR operates	Low level Low level

Time Needed for Diagnosis: 2500 ms
Malfunction Indicator Light Illumination: Illuminates as soon as a malfunction occurs.

- **Normality Judgment**

Judge as OK and clear the NG if the continuous time while the following conditions are established is more than the predetermined time.

Judgment Value

Malfunction Criteria	Threshold Value
Terminal voltage level when ECM outputs OFF signal	High level
Terminal voltage level when EGR operates	High level

Time Needed for Diagnosis: 256 ms

EK:DTC P1493 EGR SOLENOID VALVE SIGNAL #1 CIRCUIT MALFUNCTION (HIGH INPUT)

1. OUTLINE OF DIAGNOSIS

- Detects open or short circuit of EGR.
- Judge as NG when the ECM output level differs from the actual terminal level.

2. COMPONENT DESCRIPTION

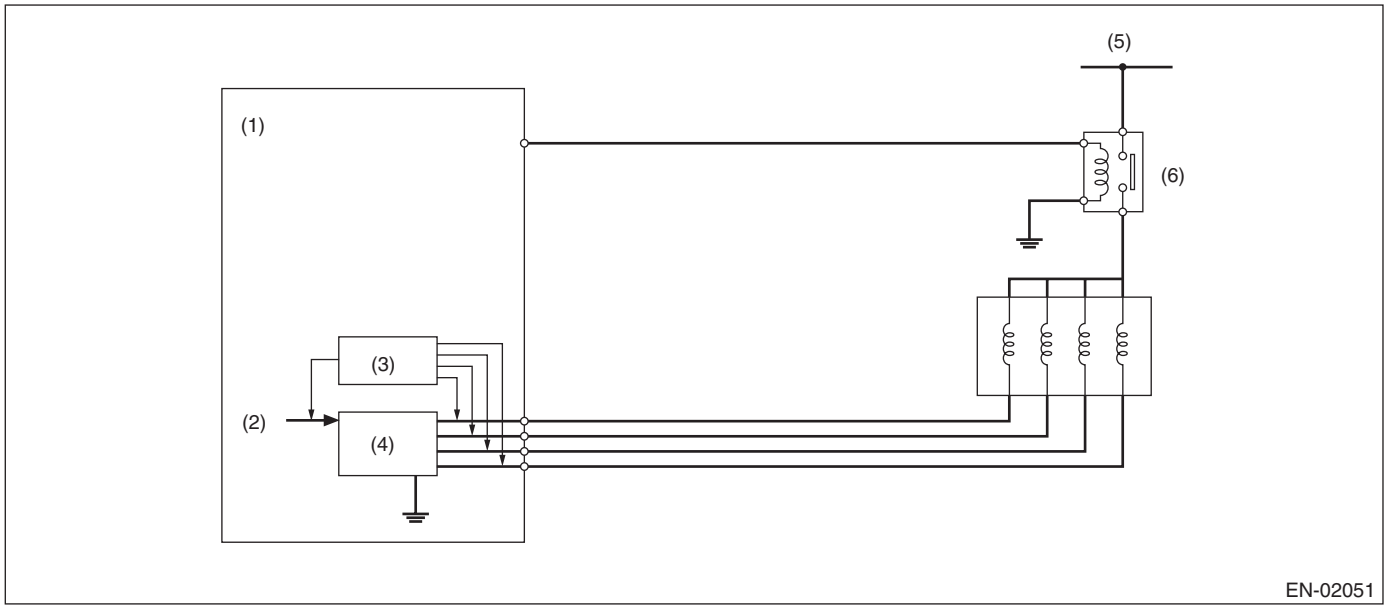

(1) Engine control module (ECM)
(2) Computer unit (CPU)
(3) Detecting circuit
(4) Switch circuit
(5) Battery voltage
(6) Main relay

3. ENABLE CONDITION

Secondary Parameters	Enable Conditions
Elapsed time after starting the engine	≥ 1 s
EGR valve target position	> 0 step
Battery voltage	≥ 10.9 V

4. GENERAL DRIVING CYCLE

Always perform the diagnosis continuously.

5. DIAGNOSTIC METHOD

• Abnormality Judgment

If the duration of time while the following conditions are met is longer than the time indicated, judge as NG.

Judgment Value

Malfunction Criteria	Threshold Value
Terminal voltage level when ECM outputs ON signal or Terminal voltage level when EGR operates	High level High level

Time Needed for Diagnosis: 2500 ms
Malfunction Indicator Light Illumination: Illuminates as soon as a malfunction occurs.

• Normality Judgment

Judge as OK and clear the NG if the continuous time while the following conditions are established is more than the predetermined time.

Judgment Value

Malfunction Criteria	Threshold Value
Terminal voltage level when ECM outputs ON signal Terminal voltage level when EGR operates	Low level Low level

Time Needed for Diagnosis: 256 ms

EL:DTC P1494 EGR SOLENOID VALVE SIGNAL #2 CIRCUIT MALFUNCTION (LOW INPUT)

1. OUTLINE OF DIAGNOSIS

NOTE:
For the detection standard, refer to DTC P1492. <Ref. to GD(H6DO)-217, DTC P1492 EGR SOLENOID VALVE SIGNAL #1 CIRCUIT MALFUNCTION (LOW INPUT), Diagnostic Trouble Code (DTC) Detecting Criteria.>

EM:DTC P1495 EGR SOLENOID VALVE SIGNAL #2 CIRCUIT MALFUNCTION (HIGH INPUT)

1. OUTLINE OF DIAGNOSIS

NOTE:
For the detection standard, refer to DTC P1493. <Ref. to GD(H6DO)-219, DTC P1493 EGR SOLENOID VALVE SIGNAL #1 CIRCUIT MALFUNCTION (HIGH INPUT), Diagnostic Trouble Code (DTC) Detecting Criteria.>

EN:DTC P1496 EGR SOLENOID VALVE SIGNAL #3 CIRCUIT MALFUNCTION (LOW INPUT)

1. OUTLINE OF DIAGNOSIS

NOTE:
For the detection standard, refer to DTC P1492. <Ref. to GD(H6DO)-217, DTC P1492 EGR SOLENOID VALVE SIGNAL #1 CIRCUIT MALFUNCTION (LOW INPUT), Diagnostic Trouble Code (DTC) Detecting Criteria.>

EO:DTC P1497 EGR SOLENOID VALVE SIGNAL #3 CIRCUIT MALFUNCTION (HIGH INPUT)

1. OUTLINE OF DIAGNOSIS

NOTE:
For the detection standard, refer to DTC P1493. <Ref. to GD(H6DO)-219, DTC P1493 EGR SOLENOID VALVE SIGNAL #1 CIRCUIT MALFUNCTION (HIGH INPUT), Diagnostic Trouble Code (DTC) Detecting Criteria.>

EP:DTC P1498 EGR SOLENOID VALVE SIGNAL #4 CIRCUIT MALFUNCTION (LOW INPUT)

1. OUTLINE OF DIAGNOSIS

NOTE:
For the detection standard, refer to DTC P1492. <Ref. to GD(H6DO)-217, DTC P1492 EGR SOLENOID VALVE SIGNAL #1 CIRCUIT MALFUNCTION (LOW INPUT), Diagnostic Trouble Code (DTC) Detecting Criteria.>

EQ:DTC P1499 EGR SOLENOID VALVE SIGNAL #4 CIRCUIT MALFUNCTION (HIGH INPUT)

1. OUTLINE OF DIAGNOSIS

NOTE:
For the detection standard, refer to DTC P1493. <Ref. to GD(H6DO)-219, DTC P1493 EGR SOLENOID VALVE SIGNAL #1 CIRCUIT MALFUNCTION (HIGH INPUT), Diagnostic Trouble Code (DTC) Detecting Criteria.>

ER:DTC P1518 STARTER SWITCH CIRCUIT LOW INPUT

1. OUTLINE OF DIAGNOSIS

Detect the open or short circuit of starter SW.
Judge as OFF NG when it becomes after engine start despite no starter ON experience.

2. ENABLE CONDITIONS

Secondary Parameters	Enable Conditions
None	

3. GENERAL DRIVING CYCLE

Always perform the diagnosis continuously.

4. DIAGNOSTIC METHOD

- **Abnormality Judgment**

Judge as OFF NG when the following conditions are established.

Judgment Value

Malfunction Criteria	Threshold Value
Vehicle speed	< 1 km/h (0.6 MPH)
Starter ON signal	Not detected
Engine condition	Change from pre-start to post-start
Battery voltage	≥ 8 V

Time Needed for Diagnosis: Less than 1 second
Malfunction Indicator Light Illumination: Illuminates when malfunction occurs in 2 continuous driving cycles.

- **Normality Judgment**

Judge as OFF OK and clear the NG if the following conditions are established.

Judgment Value

Malfunction Criteria	Threshold Value
Starter ON	Experienced
Starter ON diagnosis	No diagnosis experience
Battery voltage	≥ 8 V

Time Needed for Diagnosis: Less than 1 second

ES:DTC P1560 BACK-UP VOLTAGE CIRCUIT MALFUNCTION

1. OUTLINE OF DIAGNOSIS

Detect the open/short circuit of back-up power supply circuit.
Judge as NG when the backup power voltage is low.

2. ENABLE CONDITION

Secondary Parameters	Enable Conditions
None	

3. GENERAL DRIVING CYCLE

Always perform the diagnosis continuously.

4. DIAGNOSTIC METHOD

- **Abnormality Judgment**

If the duration of time while the following conditions are met is longer than the time indicated, judge as NG.

Judgment Value

Malfunction Criteria	Threshold Value
Voltage of back-up power supply	Low
Battery voltage	≥ 10.9 V
Engine condition	After engine starting

Time Needed for Diagnosis: 2500 ms
Malfunction Indicator Light Illumination: Illuminates as soon as a malfunction occurs.

- **Normality Judgment**

Judge as OK and clear the NG if the continuous time while the following conditions are established is more than the predetermined time.

Judgment Value

Malfunction Criteria	Threshold Value
Voltage of back-up power supply	High
Battery voltage	≥ 10.9 V
Engine condition	After engine starting

Time Needed for Diagnosis: Less than 1 second

ET:DTC P1570 ANTENNA

1. OUTLINE OF DIAGNOSIS

NOTE:
For the detection standard, refer to DTC P0513. <Ref. to GD(H6DO)-200, DTC P0513 INCORRECT IMMOBILIZER KEY, Diagnostic Trouble Code (DTC) Detecting Criteria.>

EU:DTC P1571 REFERENCE CODE INCOMPATIBILITY

1. OUTLINE OF DIAGNOSIS

NOTE:
For the detection standard, refer to DTC P0513. <Ref. to GD(H6DO)-200, DTC P0513 INCORRECT IMMOBILIZER KEY, Diagnostic Trouble Code (DTC) Detecting Criteria.>

EV:DTC P1572 IMM CIRCUIT FAILURE (EXCEPT ANTENNA CIRCUIT)

1. OUTLINE OF DIAGNOSIS

NOTE:
For the detection standard, refer to DTC P0513. <Ref. to GD(H6DO)-200, DTC P0513 INCORRECT IMMOBILIZER KEY, Diagnostic Trouble Code (DTC) Detecting Criteria.>

EW:DTC P1574 KEY COMMUNICATION FAILURE

1. OUTLINE OF DIAGNOSIS

NOTE:
For the detection standard, refer to DTC P0513. <Ref. to GD(H6DO)-200, DTC P0513 INCORRECT IMMOBILIZER KEY, Diagnostic Trouble Code (DTC) Detecting Criteria.>

EX:DTC P1576 EGI CONTROL MODULE EEPROM

1. OUTLINE OF DIAGNOSIS

NOTE:
For the detection standard, refer to DTC P0513. <Ref. to GD(H6DO)-200, DTC P0513 INCORRECT IMMOBILIZER KEY, Diagnostic Trouble Code (DTC) Detecting Criteria.>

EY:DTC P1577 IMM CONTROL MODULE EEPROM

1. OUTLINE OF DIAGNOSIS

NOTE:
For the detection standard, refer to DTC P0513. <Ref. to GD(H6DO)-200, DTC P0513 INCORRECT IMMOBILIZER KEY, Diagnostic Trouble Code (DTC) Detecting Criteria.>

EZ:DTC P1578 METER FAILURE

1. OUTLINE OF DIAGNOSIS

NOTE:
For the detection standard, refer to DTC P0513. <Ref. to GD(H6DO)-200, DTC P0513 INCORRECT IMMOBILIZER KEY, Diagnostic Trouble Code (DTC) Detecting Criteria.>

FA:DTC P2088 INTAKE CAMSHAFT POSITION ACTUATOR CONTROL CIRCUIT LOW (BANK 1)

1. OUTLINE OF DIAGNOSIS

Detect open or short circuit of the oil flow control solenoid valve.
Judge as NG when the current is small even though the duty signal is large.

2. ENABLE CONDITION

Secondary Parameters	Enable Conditions
None	

3. GENERAL DRIVING CYCLE

Always perform the diagnosis continuously.

4. DIAGNOSTIC METHOD

- **Abnormality Judgment**

If the duration of time while the following conditions are met is longer than the time indicated, judge as NG.

Judgment Value

Malfunction criteria	Threshold value
Battery voltage	≥ 10.9 V
Oil flow control solenoid valve control duty	≥ 99.61 %
Oil control solenoid valve control present current	< 0.306 A

Time Needed for Diagnosis: 2000 ms
Malfunction Indicator Light Illumination: Illuminates as soon as a malfunction occurs.

- **Normality Judgment**

Judge as OK and clear the NG if the continuous time while the following conditions are established is more than the predetermined time.

Judgment Value

Malfunction criteria	Threshold value
Battery voltage	≥ 10.9 V
Target current value of the oil flow control solenoid valve	≥ 0.14 A
|Target current value of the oil flow control solenoid valve – Oil flow control solenoid valve control current value|	< 0.08 A

Time Needed for Diagnosis: 2000 ms

FB:DTC P2089 INTAKE CAMSHAFT POSITION ACTUATOR CONTROL CIRCUIT HIGH (BANK 1)

1. OUTLINE OF DIAGNOSIS

Detect open or short circuit of oil flow control solenoid valve.
Judge as NG when the current is large even though the duty signal is small.

2. ENABLE CONDITION

Secondary Parameters	Enable Conditions
None	

3. GENERAL DRIVING CYCLE

Always perform the diagnosis continuously.

4. DIAGNOSTIC METHOD

- **Abnormality Judgment**

If the duration of time while the following conditions are met is longer than the time indicated, judge as NG.

Judgment Value

Malfunction criteria	Threshold value
Battery voltage	≥ 10.9 V
Oil flow control solenoid valve control duty	< 0.39 %
Oil control solenoid valve control present current	≥ 0.306 A

Time Needed for Diagnosis: 2000 ms
Malfunction Indicator Light Illumination: Illuminates as soon as a malfunction occurs.

- **Normality Judgment**

Judge as OK and clear the NG if the continuous time while the following conditions are established is more than the predetermined time.

Judgment Value

Malfunction criteria	Threshold value
Battery voltage	≥ 10.9 V
|Target current value of the oil flow control solenoid valve – Oil flow control solenoid valve control current value|	< 0.08 A

Time Needed for Diagnosis: 2000 ms

FC:DTC P2090 EXHAUST CAMSHAFT POSITION ACTUATOR CONTROL CIRCUIT LOW (BANK 1)

1. OUTLINE OF DIAGNOSIS

Detect open or short circuit of the oil flow control solenoid valve.
Judge as NG when the current is small even though the duty signal is large.

2. ENABLE CONDITIONS

Secondary Parameters	Enable Conditions
None	

3. GENERAL DRIVING CYCLE

Always perform the diagnosis continuously.

4. DIAGNOSTIC METHOD

- **Abnormality Judgment**

If the duration of time while the following conditions are met is longer than the time indicated, judge as NG.

Judgment Value

Malfunction Criteria	Threshold Value
Battery voltage	≥ 10.9 V
Oil flow control solenoid valve control duty	≥ 99.61 %
Oil control solenoid valve control present current	< 0.306 A

Time Needed for Diagnosis: 2000 ms
Malfunction Indicator Light Illumination: Illuminates as soon as a malfunction occurs.

- **Normality Judgment**

Judge as OK and clear the NG if the continuous time while the following conditions are established is more than the predetermined time.

Judgment Value

Malfunction Criteria	Threshold Value
Battery voltage	≥ 10.9 V
Target current value of the oil flow control solenoid valve	≥ 0.14 A
|Target current value of the oil flow control solenoid valve – oil flow control solenoid valve control current value|	< 0.08 A

Time Needed for Diagnosis: 2000 ms

FD:DTC P2091 EXHAUST CAMSHAFT POSITION ACTUATOR CONTROL CIRCUIT HIGH (BANK 1)

1. OUTLINE OF DIAGNOSIS

Detect open or short circuit of oil flow control solenoid valve.
Judge as NG when the current is large even though the duty signal is small.

2. ENABLE CONDITIONS

Secondary Parameters	Enable Conditions
None	

3. GENERAL DRIVING CYCLE

Always perform the diagnosis continuously.

4. DIAGNOSTIC METHOD

- **Abnormality Judgment**

If the duration of time while the following conditions are met is longer than the time indicated, judge as NG.

Judgment Value

Malfunction Criteria	Threshold Value
Battery voltage	≥ 10.9 V
Oil flow control solenoid valve control duty	< 0.39 %
Oil control solenoid valve control present current	≥ 0.306 A

Time Needed for Diagnosis: 2000 ms
Malfunction Indicator Light Illumination: Illuminates as soon as a malfunction occurs.

- **Normality Judgment**

Judge as OK and clear the NG if the continuous time while the following conditions are established is more than the predetermined time.

Judgment Value

Malfunction Criteria	Threshold Value
Battery voltage	≥ 10.9 V
|Target current value of the oil flow control solenoid valve – oil flow control solenoid valve control current value|	< 0.08 A

Time Needed for Diagnosis: 2000 ms

FE: DTC P2092 INTAKE CAMSHAFT POSITION ACTUATOR CONTROL CIRCUIT LOW (BANK 2)

1. OUTLINE OF DIAGNOSIS

NOTE:
For the detection standard, refer to DTC P2088. <Ref. to GD(H6DO)-225, DTC P2088 INTAKE CAMSHAFT POSITION ACTUATOR CONTROL CIRCUIT LOW (BANK 1), Diagnostic Trouble Code (DTC) Detecting Criteria.>

FF: DTC P2093 INTAKE CAMSHAFT POSITION ACTUATOR CONTROL CIRCUIT HIGH (BANK 2)

1. OUTLINE OF DIAGNOSIS

NOTE:
For the detection standard, refer to DTC P2089. <Ref. to GD(H6DO)-226, DTC P2089 INTAKE CAMSHAFT POSITION ACTUATOR CONTROL CIRCUIT HIGH (BANK 1), Diagnostic Trouble Code (DTC) Detecting Criteria.>

FG: DTC P2094 EXHAUST CAMSHAFT POSITION ACTUATOR CONTROL CIRCUIT LOW (BANK 2)

1. OUTLINE OF DIAGNOSIS

NOTE:
For the detection standard, refer to DTC P2090. <Ref. to GD(H6DO)-227, DTC P2090 EXHAUST CAMSHAFT POSITION ACTUATOR CONTROL CIRCUIT LOW (BANK 1), Diagnostic Trouble Code (DTC) Detecting Criteria.>

FH: DTC P2095 EXHAUST CAMSHAFT POSITION ACTUATOR CONTROL CIRCUIT HIGH (BANK 2)

1. OUTLINE OF DIAGNOSIS

NOTE:
For the detection standard, refer to DTC P2091. <Ref. to GD(H6DO)-228, DTC P2091 EXHAUST CAMSHAFT POSITION ACTUATOR CONTROL CIRCUIT HIGH (BANK 1), Diagnostic Trouble Code (DTC) Detecting Criteria.>

FI: DTC P2096 POST CATALYST FUEL TRIM SYSTEM TOO LEAN (BANK 1)

1. OUTLINE OF DIAGNOSIS

Detect the malfunction of fuel system from the size of the sub feedback learning value.
Control the sub feedback learning and judge as NG when the learning value is in the lean zone.

2. COMPONENT DESCRIPTION

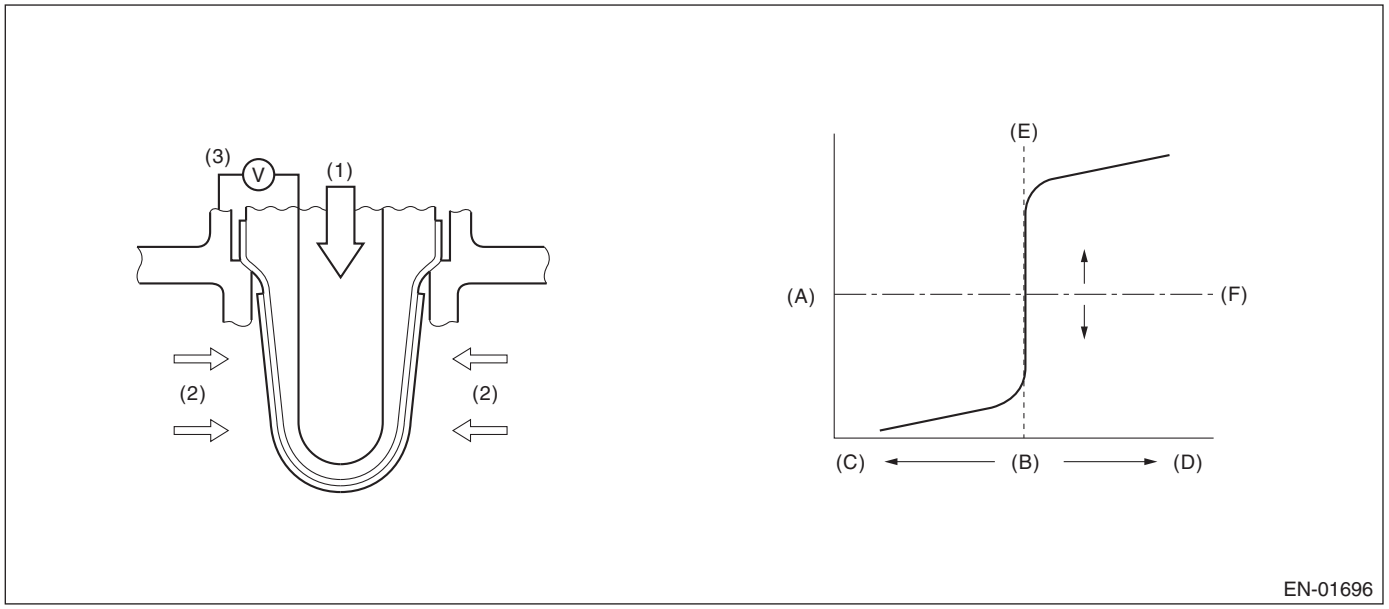

(A)	Electromotive force	(B)	Air fuel ratio	(C)	Rich
(D)	Lean	(E)	Theoretical air fuel ratio	(F)	Comparative voltage
(1)	Atmosphere	(2)	Exhaust gas	(3)	Electromotive force

3. ENABLE CONDITION

Secondary Parameters	Enable Conditions
Conditions for carrying out the sub feedback learning	Completed
Continuous time when all conditions are established.	≥ 1 s

4. GENERAL DRIVING CYCLE

Perform the diagnosis continuously when the vehicle is idling or running at a constant speed of 80 km/h (50 MPH) or more.

5. DIAGNOSTIC METHOD

• Abnormality Judgment

If the duration of time while the following conditions are met is longer than the time indicated, judge as NG.

Judgment Value

Malfunction Criteria	Threshold Value
Sub feedback learning value	< –0.032

Time Needed for Diagnosis: 1 s × 1 time(s)
Malfunction Indicator Light Illumination: Illuminates when malfunction occurs in 2 continuous driving cycles.

• Normality Judgment

Judge as OK and clear the NG if the continuous time while the following conditions are established is more than the predetermined time.

Judgment Value

Malfunction Criteria	Threshold Value
Sub feedback learning value	≥ –0.032 + 0

Time Needed for Diagnosis: 1 s

FJ: DTC P2097 POST CATALYST FUEL TRIM SYSTEM TOO RICH (BANK 1)

1. OUTLINE OF DIAGNOSIS

Detect the malfunction of fuel system from the size of the sub feedback learning value.
Sub feedback learning is being performed. When the learning value goes to the rich side, judge as NG.

2. COMPONENT DESCRIPTION

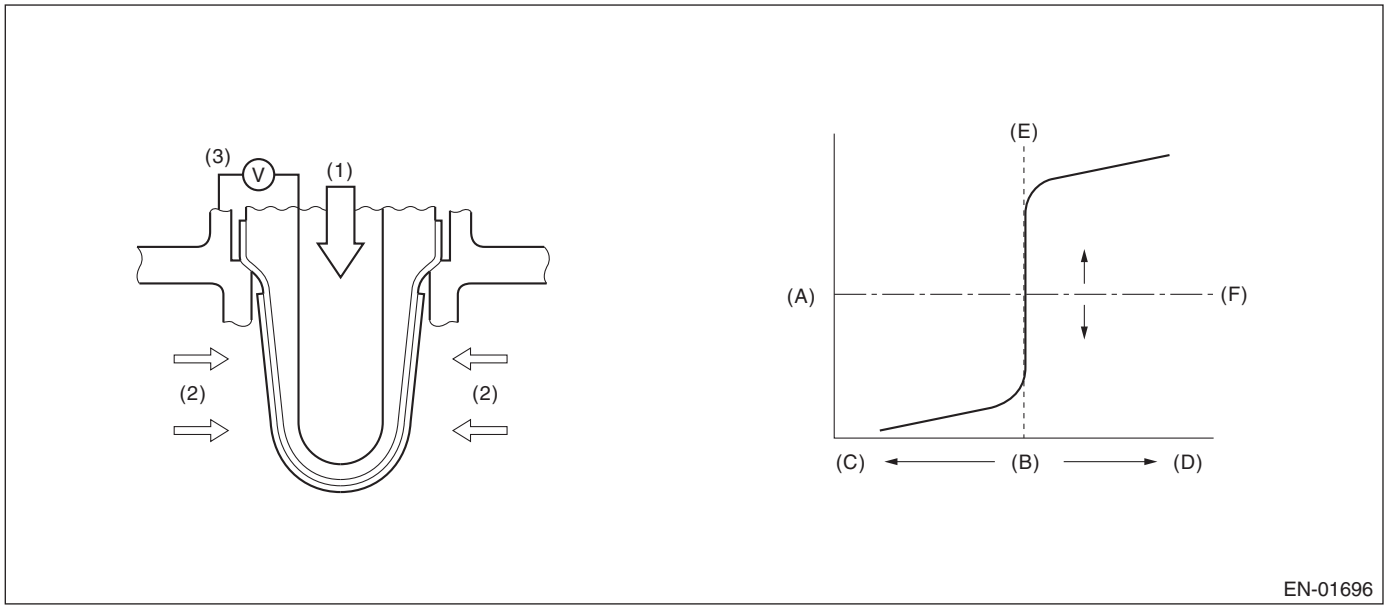

(A)	Electromotive force	(B)	Air fuel ratio	(C)	Rich
(D)	Lean	(E)	Theoretical air fuel ratio	(F)	Comparative voltage
(1)	Atmosphere	(2)	Exhaust gas	(3)	Electromotive force

3. ENABLE CONDITION

Secondary Parameters	Enable Conditions
Conditions for carrying out the sub feedback learning	Completed
Continuous time when all conditions are established.	≥ 1 s

4. GENERAL DRIVING CYCLE

Perform the diagnosis continuously when the vehicle is idling or running at a constant speed of 80 km/h (50 MPH) or more.

5. DIAGNOSTIC METHOD

• Abnormality Judgment

If the duration of time while the following conditions are met is longer than the time indicated, judge as NG.

Judgment Value

Malfunction Criteria	Threshold Value
Sub feedback learning value	≥ 0.031

Time Needed for Diagnosis: 1 s × 1 time(s)
Malfunction Indicator Light Illumination: Illuminates when malfunction occurs in 2 continuous driving cycles.

• Normality Judgment

Judge as OK and clear the NG if the continuous time while the following conditions are established is more than the predetermined time.

Judgment Value

Malfunction Criteria	Threshold Value
Sub feedback learning value	< 0.031 + 0

Time Needed for Diagnosis: 1 s

FK:DTC P2098 POST CATALYST FUEL TRIM SYSTEM TOO LEAN BANK 2

1. OUTLINE OF DIAGNOSIS

NOTE:
For the detection standard, refer to DTC P2096. <Ref. to GD(H6DO)-230, DTC P2096 POST CATALYST FUEL TRIM SYSTEM TOO LEAN (BANK 1), Diagnostic Trouble Code (DTC) Detecting Criteria.>

FL:DTC P2099 POST CATALYST FUEL TRIM SYSTEM TOO RICH BANK 2

1. OUTLINE OF DIAGNOSIS

NOTE:
For the detection standard, refer to DTC P2097. <Ref. to GD(H6DO)-232, DTC P2097 POST CATALYST FUEL TRIM SYSTEM TOO RICH (BANK 1), Diagnostic Trouble Code (DTC) Detecting Criteria.>

FM:DTC P2101 THROTTLE ACTUATOR CONTROL MOTOR CIRCUIT RANGE/ PERFORMANCE

1. OUTLINE OF DIAGNOSIS

Judge as NG when the motor current becomes large or drive circuit is heated.

2. COMPONENT DESCRIPTION

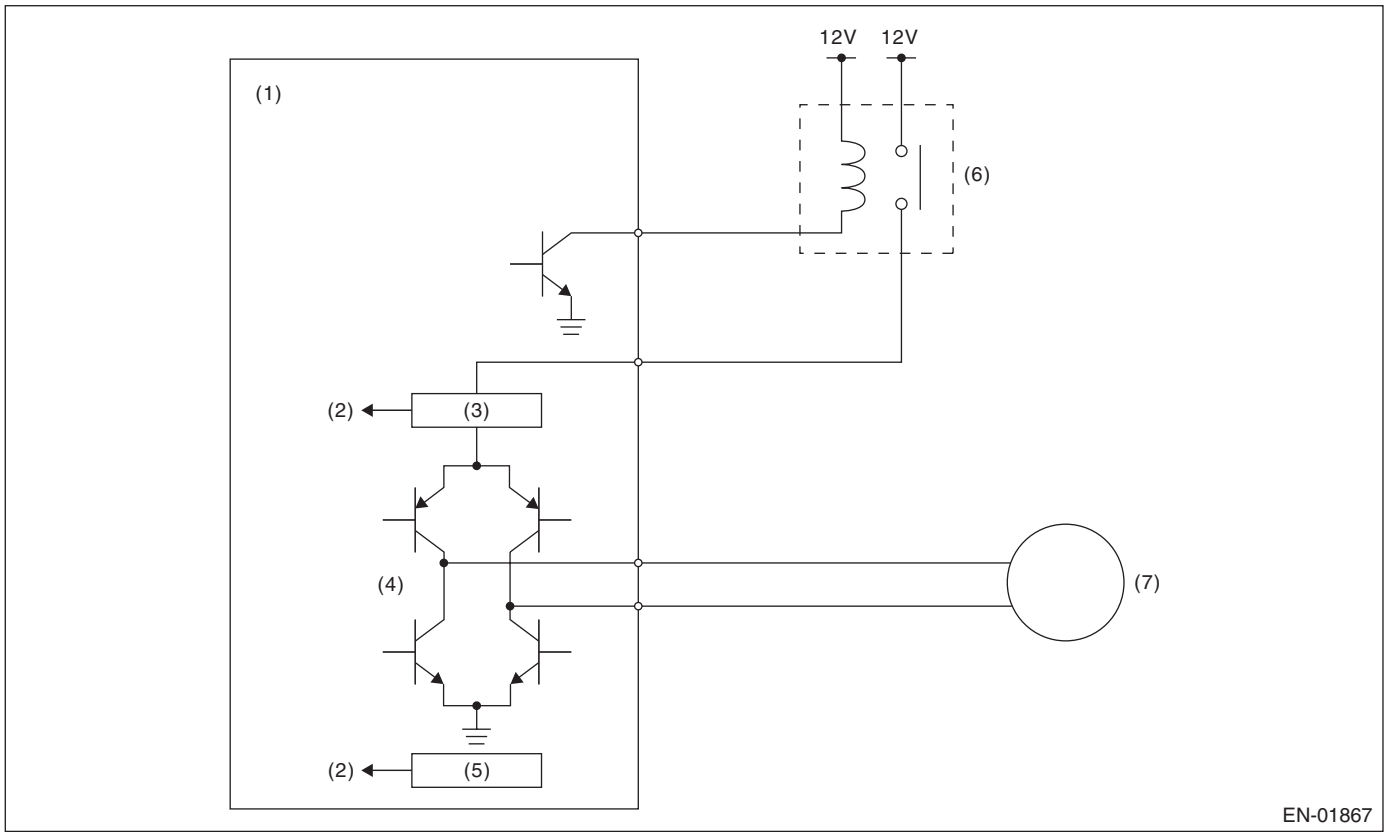

(1) Engine control module (ECM)
(2) Detecting circuit
(3) Overcurrent detection circuit
(4) Drive circuit
(5) Temperature detection circuit
(6) Electronic throttle control relay
(7) Motor

3. ENABLE CONDITION

Secondary Parameters	Enable Conditions
Under control of electronic throttle control	ON
CPU communication line sub → main normal judgment	Normal

4. GENERAL DRIVING CYCLE

Always perform the diagnosis continuously.

5. DIAGNOSTIC METHOD

- **Abnormality Judgment**

If the duration of time while the following conditions are met is longer than the time indicated, judge as NG.

Judgment Value

Malfunction criteria	Threshold value
Motor current	> 8 A
or	
Drive circuit inner temperature	> 175°C (347°F)

Time Needed for Diagnosis: 512 ms
Malfunction Indicator Light Illumination: Illuminates as soon as a malfunction occurs.

- **Normality Judgment**

Judge as OK and clear the NG if the continuous time while the following conditions are established is more than the predetermined time.

Judgment Value

Malfunction Criteria	Threshold Value
Motor current	≤ 8 A
Drive circuit inner temperature	≤ 175°C (347°F)

Time Needed for Diagnosis: 2000 ms

FN:DTC P2102 THROTTLE ACTUATOR CONTROL MOTOR CIRCUIT LOW

1. OUTLINE OF DIAGNOSIS

Judge as NG when the electronic throttle control power is not supplied even when ECM sets the electronic throttle control relay to ON.

2. COMPONENT DESCRIPTION

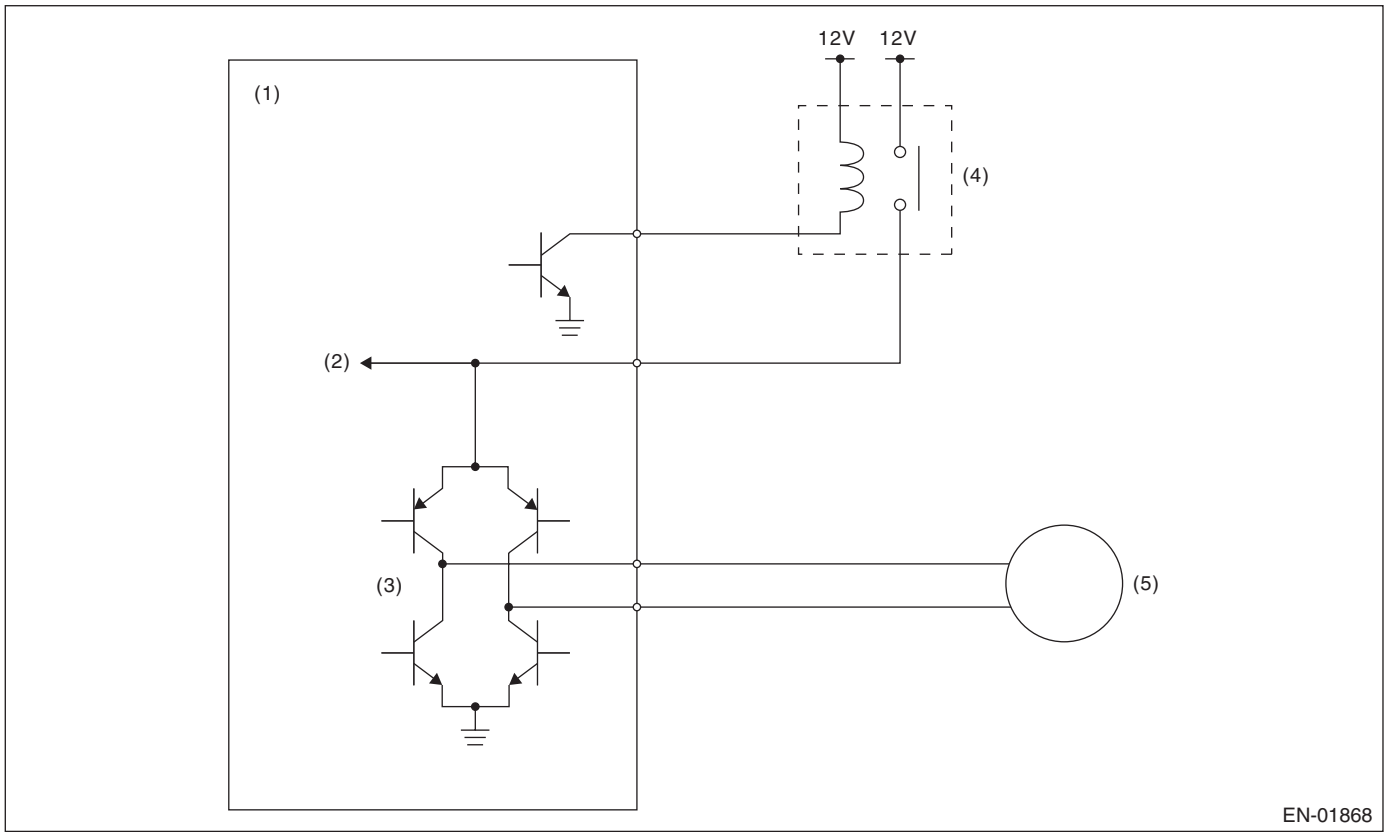

(1) Engine control module (ECM)
(2) Voltage detection circuit
(3) Drive circuit
(4) Electronic throttle control relay
(5) Motor

3. ENABLE CONDITION

Secondary Parameters	Enable Conditions
Battery voltage	≥ 11 V
Electronic throttle control relay output	ON

4. GENERAL DRIVING CYCLE

Always perform the diagnosis continuously.

5. DIAGNOSTIC METHOD

- **Abnormality Judgment**

If the duration of time while the following conditions are met is longer than the time indicated, judge as NG.

Judgment Value

Malfunction criteria	Threshold value
Motor power voltage	≤ 5 V

Time Needed for Diagnosis: 352 ms
Malfunction Indicator Light Illumination: Illuminates as soon as a malfunction occurs.

- **Normality Judgment**

Judge as OK and clear the NG if the continuous time while the following conditions are established is more than the predetermined time.

Judgment Value

Malfunction criteria	Threshold value
Motor power voltage	> 5 V

Time Needed for Diagnosis: 2000 ms

FO:DTC P2103 THROTTLE ACTUATOR CONTROL MOTOR CIRCUIT HIGH

1. OUTLINE OF DIAGNOSIS

Judge as NG when the electronic throttle control power is supplied even when ECM sets the electronic throttle control relay to OFF.

2. COMPONENT DESCRIPTION

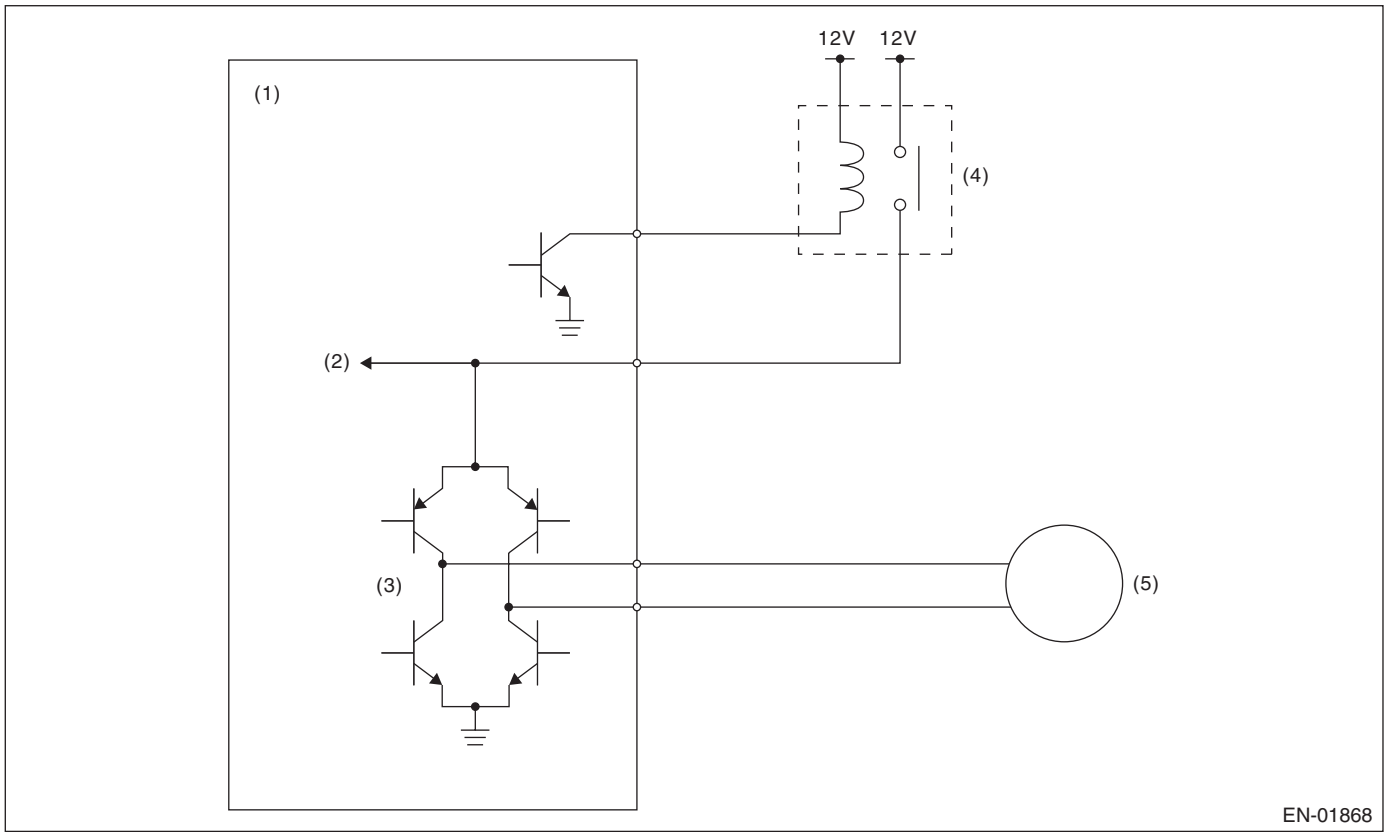

(1) Engine control module (ECM)
(2) Voltage detection circuit
(3) Drive circuit
(4) Electronic throttle control relay
(5) Motor

3. ENABLE CONDITION

Secondary Parameters	Enable Conditions
Battery voltage	≥ 6 V
Electronic throttle control relay output	OFF

4. GENERAL DRIVING CYCLE

- When ignition switch ON → OFF
- Ignition switch OFF → ON (Only after clearing memory)

5. DIAGNOSTIC METHOD

- **Abnormality Judgment**

If the duration of time while the following conditions are met is longer than the time indicated, judge as NG.

Judgment Value

Malfunction criteria	Threshold value
Motor power voltage	≥ 5 V

Time Needed for Diagnosis: 600 ms
Malfunction Indicator Light Illumination: Illuminates as soon as a malfunction occurs.

- **Normality Judgment**

Judge as OK and clear the NG if the continuous time while the following conditions are established is more than the predetermined time.

Judgment Value

Malfunction criteria	Threshold value
Motor power voltage	< 5 V

Time Needed for Diagnosis: 400 ms

FP:DTC P2109 THROTTLE/PEDAL POSITION SENSOR “A” MINIMUM STOP PERFORMANCE

1. OUTLINE OF DIAGNOSIS

Judge as NG when full close point learning cannot conducted or abnormal value is detected.

2. COMPONENT DESCRIPTION

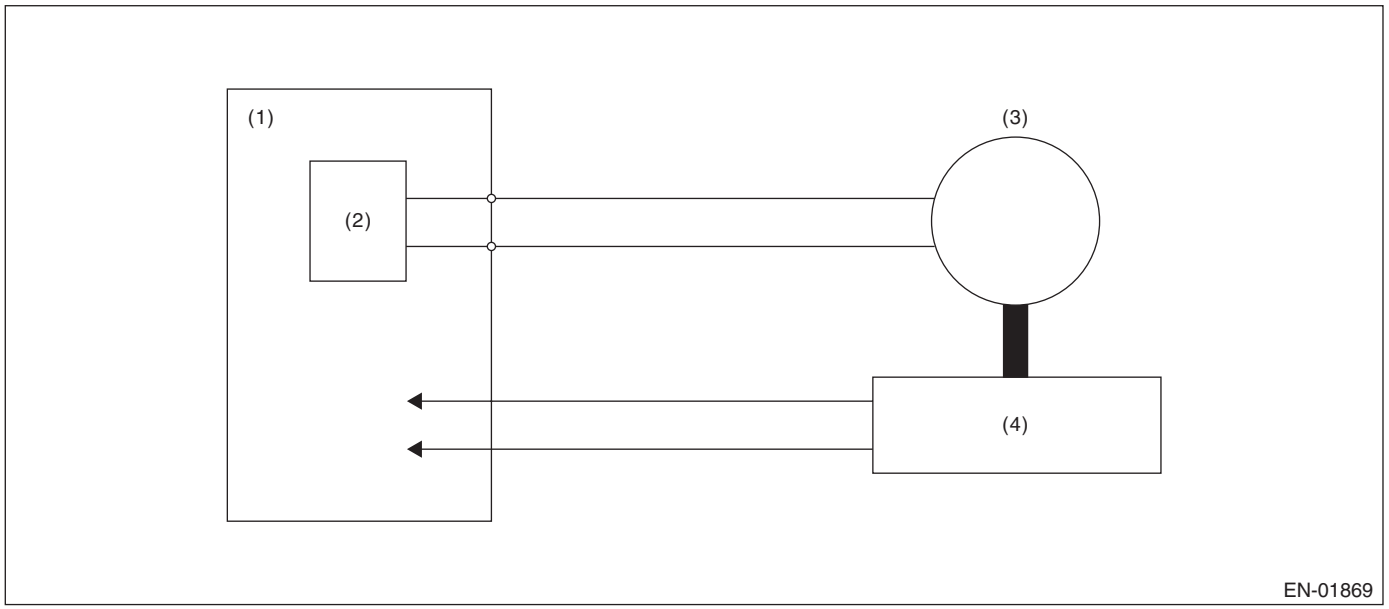

(1) Engine control module (ECM)
(2) Drive circuit
(3) Motor
(4) Throttle position sensor

3. ENABLE CONDITION

Secondary Parameters	Enable Conditions
Ignition switch	ON → OFF
Ignition switch (only after clear memory)	OFF → ON

4. GENERAL DRIVING CYCLE

Perform the diagnosis at full closed point learning.

5. DIAGNOSTIC METHOD

- **Abnormality Judgment**

If the duration of time while the following conditions are met is longer than the time indicated, judge as NG.

Judgment Value

Malfunction Criteria	Threshold Value
Throttle sensor opening angle at full close point learning or	< 9.884 ° or > 20.116 °
Throttle opening angle when the ignition switch is ON – Throttle minimum stop position	< 0.887 °

Time Needed for Diagnosis: 8 ms — 80 ms
Malfunction Indicator Light Illumination: Illuminates as soon as a malfunction occurs.

- **Normality Judgment**

Judge as OK and clear the NG if the continuous time while the following conditions are established is more than the predetermined time.

Judgment Value

Malfunction Criteria	Threshold Value
Throttle sensor opening angle at full close point learning	≥ 9.884 ° and ≤ 20.116 °
Throttle opening angle when the ignition switch is ON – Throttle minimum stop position	≥ 0.887 °

Time Needed for Diagnosis: 8 ms

FQ:DTC P2122 THROTTLE/PEDAL POSITION SENSOR/SWITCH “D” CIRCUIT LOW INPUT

1. OUTLINE OF DIAGNOSIS

Detect the open or short circuit of accelerator pedal position sensor 1.
Judge as NG if out of specification.

2. COMPONENT DESCRIPTION

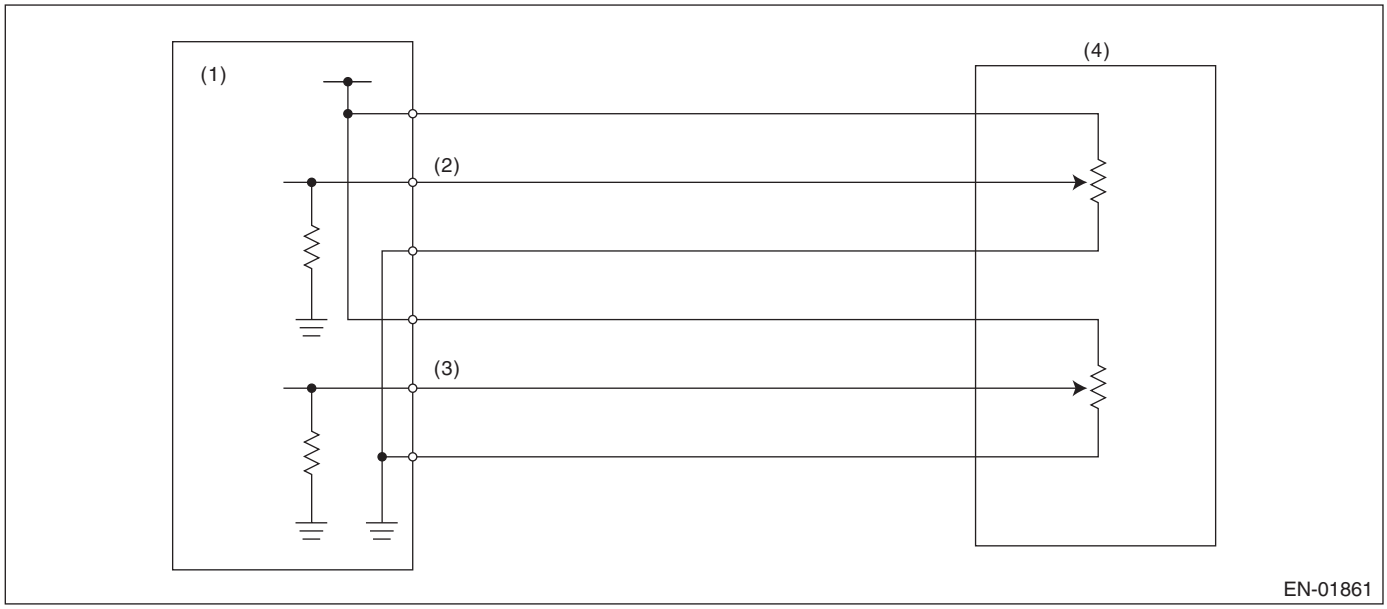

(1) Engine control module (ECM)
(2) Accelerator pedal position sensor 1 signal
(3) Accelerator pedal position sensor 2 signal
(4) Accelerator pedal position sensor

3. ENABLE CONDITION

Secondary Parameters	Enable Conditions
Ignition switch	ON
Battery voltage	≥ 6 V

4. GENERAL DRIVING CYCLE

Always perform the diagnosis continuously.

5. DIAGNOSTIC METHOD

- **Abnormality Judgment**

If the duration of time while the following conditions are met is longer than the time indicated, judge as NG.

Judgment Value

Malfunction criteria	Threshold value
Sensor 1 input voltage	< 0.295 V

Time Needed for Diagnosis: 100 ms
Malfunction Indicator Light Illumination: Illuminates as soon as a malfunction occurs.

- **Normality Judgment**

Judge as OK and clear the NG if the continuous time while the following conditions are established is more than the predetermined time.

Judgment Value

Malfunction criteria	Threshold value
Sensor 1 input voltage	≥ 0.295 V

Time Needed for Diagnosis: 100 ms

FR:DTC P2123 THROTTLE/PEDAL POSITION SENSOR/SWITCH “D” CIRCUIT HIGH INPUT

1. OUTLINE OF DIAGNOSIS

Detect the open or short circuit of accelerator pedal position sensor 1.
Judge as NG if out of specification.

2. COMPONENT DESCRIPTION

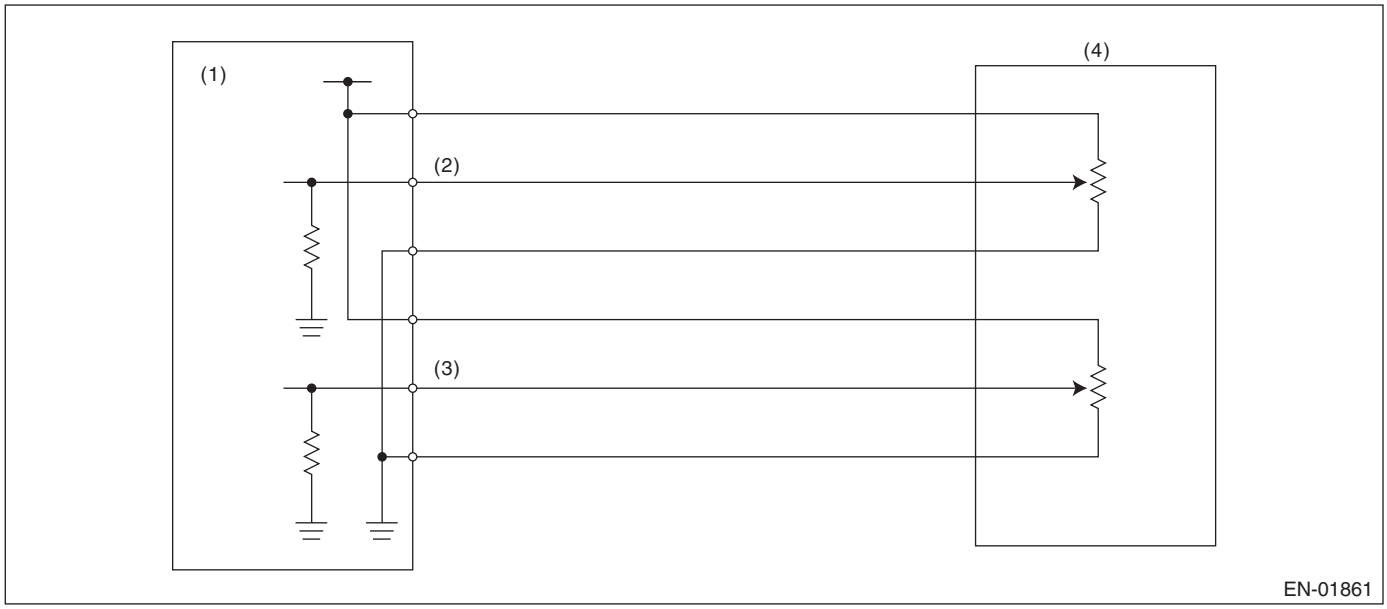

(1) Engine control module (ECM)
(2) Accelerator pedal position sensor 1 signal
(3) Accelerator pedal position sensor 2 signal
(4) Accelerator pedal position sensor

3. ENABLE CONDITION

Secondary Parameters	Enable Conditions
Ignition switch	ON
Battery voltage	≥ 6 V

4. GENERAL DRIVING CYCLE

Always perform the diagnosis continuously.

5. DIAGNOSTIC METHOD

- **Abnormality Judgment**

If the duration of time while the following conditions are met is longer than the time indicated, judge as NG.

Judgment Value

Malfunction criteria	Threshold value
Sensor 1 input voltage	≥ 4.783 V

Time Needed for Diagnosis: 32 ms
Malfunction Indicator Light Illumination: Illuminates as soon as a malfunction occurs.

- **Normality Judgment**

Judge as OK and clear the NG if the continuous time while the following conditions are established is more than the predetermined time.

Judgment Value

Malfunction criteria	Threshold value
Sensor 1 input voltage	< 4.783 V

Time Needed for Diagnosis: 32 ms

FS:DTC P2127 THROTTLE/PEDAL POSITION SENSOR/SWITCH “E” CIRCUIT LOW INPUT

1. OUTLINE OF DIAGNOSIS

Detect the open or short circuit of accelerator pedal position sensor 2.
Judge as NG if out of specification.

2. COMPONENT DESCRIPTION

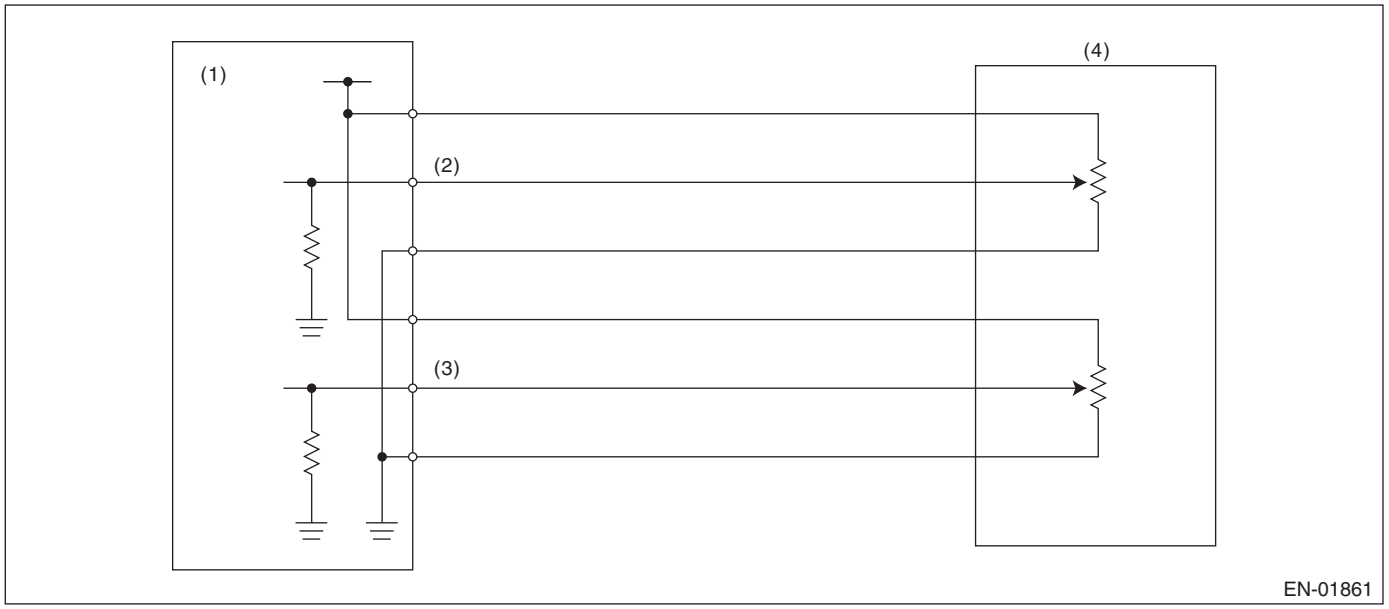

(1) Engine control module (ECM)
(2) Accelerator pedal position sensor 1 signal
(3) Accelerator pedal position sensor 2 signal
(4) Accelerator pedal position sensor

3. ENABLE CONDITION

Secondary Parameters	Enable Conditions
Ignition switch	ON
Battery voltage	≥ 6 V

4. GENERAL DRIVING CYCLE

Always perform the diagnosis continuously.

5. DIAGNOSTIC METHOD

- **Abnormality Judgment**

If the duration of time while the following conditions are met is longer than the time indicated, judge as NG.

Judgment Value

Malfunction criteria	Threshold value
Sensor 2 input voltage	< 0.295 V

Time Needed for Diagnosis: 100 ms
Malfunction Indicator Light Illumination: Illuminates as soon as a malfunction occurs.

- **Normality Judgment**

Judge as OK and clear the NG if the continuous time while the following conditions are established is more than the predetermined time.

Judgment Value

Malfunction criteria	Threshold value
Sensor 2 input voltage	≥ 0.295 V

Time Needed for Diagnosis: 100 ms

FT: DTC P2128 THROTTLE/PEDAL POSITION SENSOR/SWITCH “E” CIRCUIT HIGH INPUT

1. OUTLINE OF DIAGNOSIS

Detect the open or short circuit of accelerator pedal position sensor 2.
Judge as NG if out of specification.

2. COMPONENT DESCRIPTION

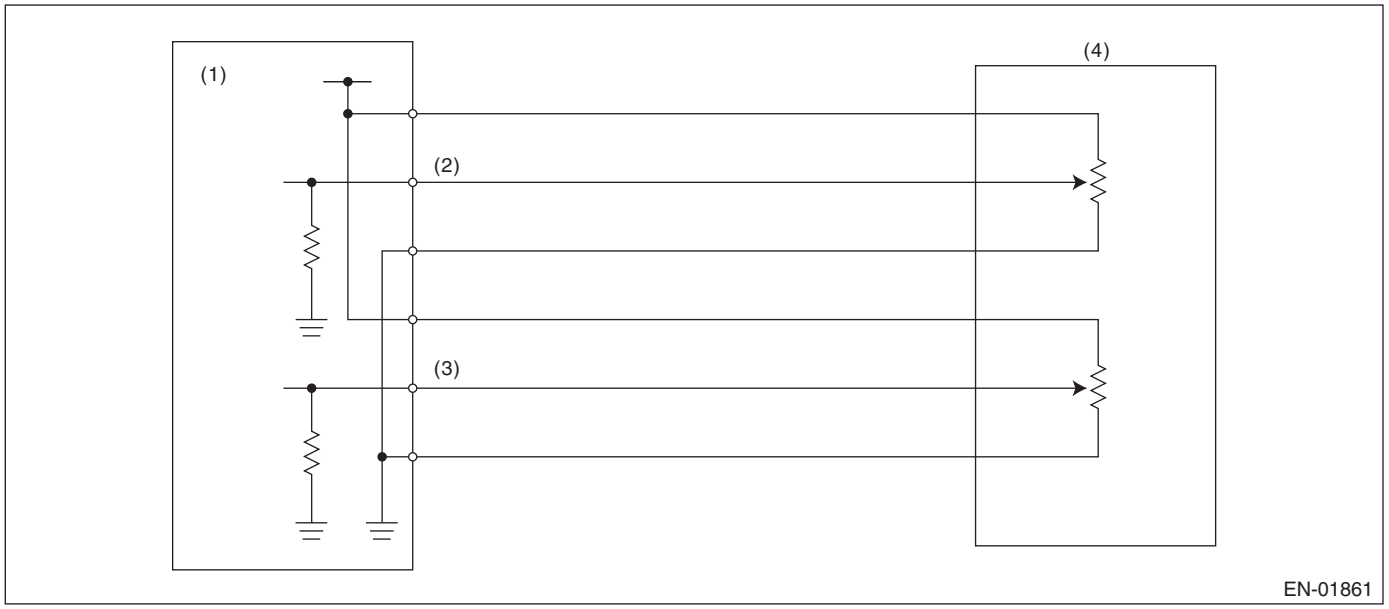

(1) Engine control module (ECM)
(2) Accelerator pedal position sensor 1 signal
(3) Accelerator pedal position sensor 2 signal
(4) Accelerator pedal position sensor

3. ENABLE CONDITION

Secondary Parameters	Enable Conditions
Ignition switch	ON
Battery voltage	≥ 6 V

4. GENERAL DRIVING CYCLE

Always perform the diagnosis continuously.

5. DIAGNOSTIC METHOD

- **Abnormality Judgment**

If the duration of time while the following conditions are met is longer than the time indicated, judge as NG.

Judgment Value

Malfunction criteria	Threshold value
Sensor 2 input voltage	≥ 4.783 V

Time Needed for Diagnosis: 100 ms
Malfunction Indicator Light Illumination: Illuminates as soon as a malfunction occurs.

- **Normality Judgment**

Judge as OK and clear the NG if the continuous time while the following conditions are established is more than the predetermined time.

Judgment Value

Malfunction criteria	Threshold value
Sensor 2 input voltage	< 4.783 V

Time Needed for Diagnosis: 100 ms

FU:DTC P2135 THROTTLE/PEDAL POSITION SENSOR/SWITCH “A”/“B” VOLTAGE CORRELATION

1. OUTLINE OF DIAGNOSIS

Judge as NG when the signal level of throttle position sensor 1 is different from the throttle position sensor 2.

2. COMPONENT DESCRIPTION

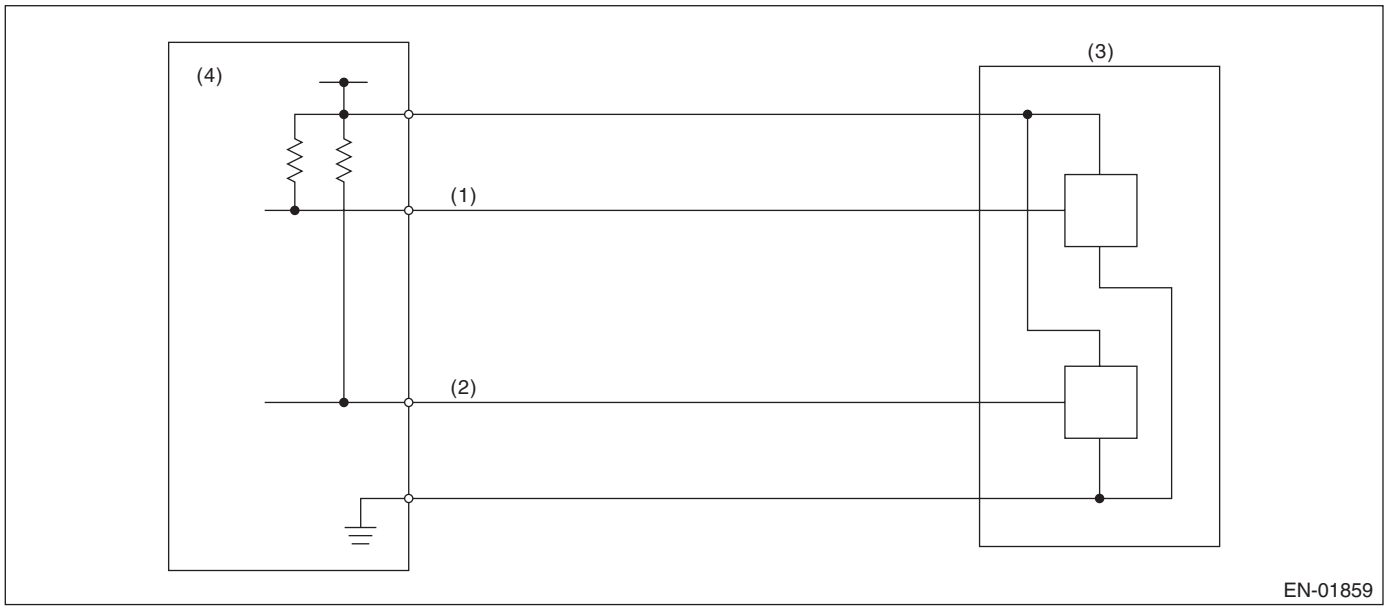

(1) Throttle position sensor 1 signal
(2) Throttle position sensor 2 signal
(3) Throttle position sensor
(4) Engine control module (ECM)

3. ENABLE CONDITION

Secondary Parameters	Enable Conditions
Ignition switch	ON
Battery voltage	≥ 6 V

4. GENERAL DRIVING CYCLE

Always perform the diagnosis continuously.

5. DIAGNOSTIC METHOD

• Abnormality Judgment

If the duration of time while the following conditions are met is longer than the time indicated, judge as NG.

Judgment Value

Malfunction Criteria	Threshold Value
Signal difference between two sensors	Within the NG range of **judgment value detail**

Details of Judgment Value

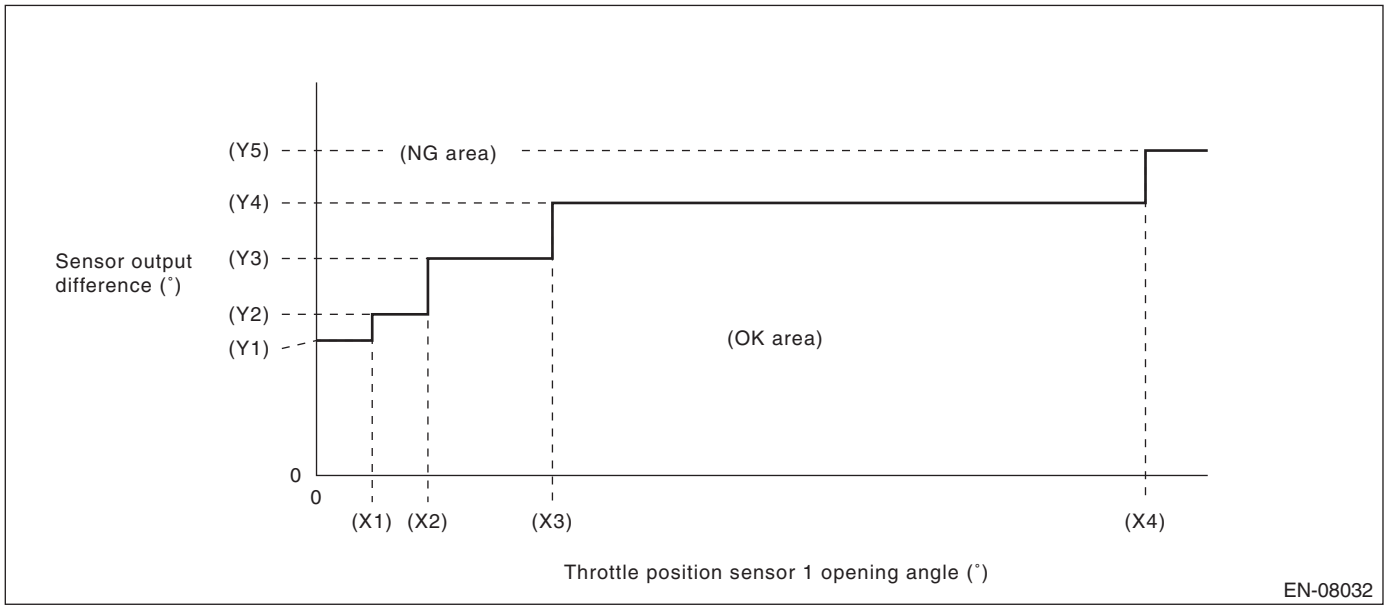

(X1) 2.125 °
(X2) 4.25 °
(X3) 9 °
(X4) 31.625 °

(Y1) 5.15 °
(Y2) 6.15 °
(Y3) 8.28 °
(Y4) 10.4 °
(Y5) 12.4 °

Time Needed for Diagnosis: 212 ms
Malfunction Indicator Light Illumination: Illuminates as soon as a malfunction occurs.

• Normality Judgment

Judge as OK and clear the NG if the continuous time while the following conditions are established is more than the predetermined time.

Judgment Value

Malfunction Criteria	Threshold Value
Signal difference between two sensors	Within the OK range of **judgment value detail**

Time Needed for Diagnosis: 24 ms

FV:DTC P2138 THROTTLE/PEDAL POSITION SENSOR/SWITCH “D”/“E” VOLTAGE CORRELATION

1. OUTLINE OF DIAGNOSIS

Judge as NG when the signal level of throttle position sensor 1 is different from the throttle position sensor 2.

2. COMPONENT DESCRIPTION

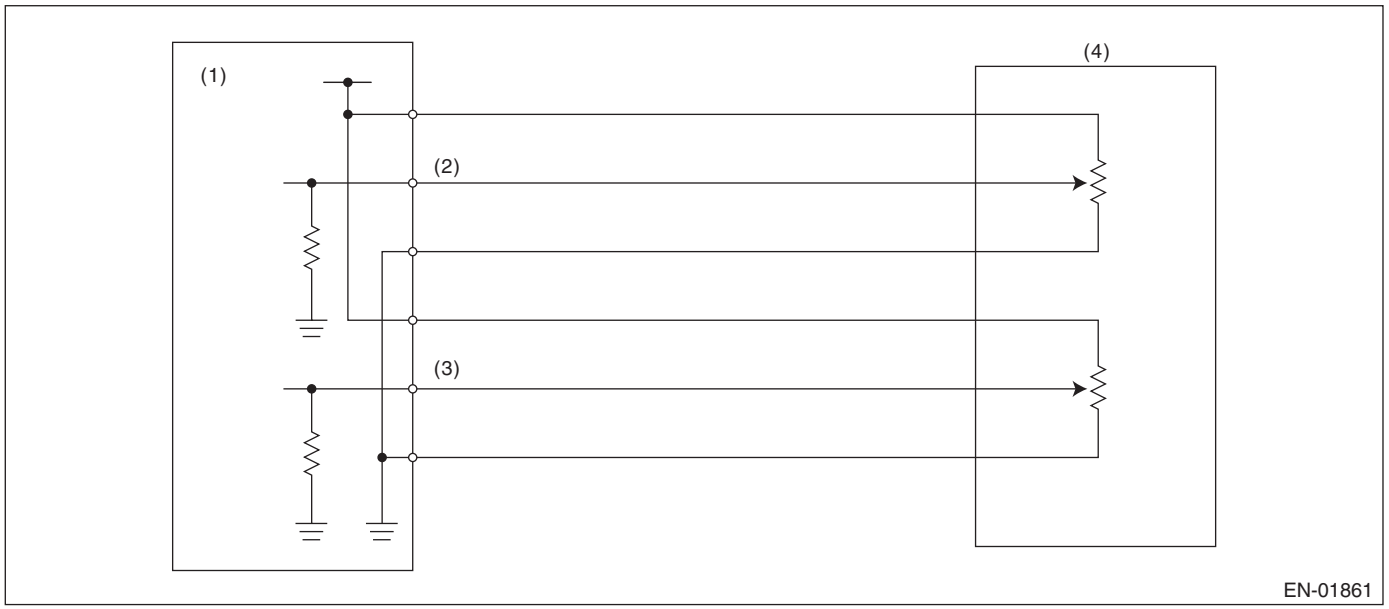

(1) Engine control module (ECM)
(2) Accelerator pedal position sensor 1 signal
(3) Accelerator pedal position sensor 2 signal
(4) Accelerator pedal position sensor

3. ENABLE CONDITION

Secondary Parameters	Enable Conditions
Ignition switch	ON
Battery voltage	≥ 6 V

4. GENERAL DRIVING CYCLE

Always perform the diagnosis continuously.

5. DIAGNOSTIC METHOD

• Abnormality Judgment

If the duration of time while the following conditions are met is longer than the time indicated, judge as NG.

Judgment Value

Malfunction Criteria	Threshold Value
Signal difference between two sensors	Within the NG range of **judgment value detail**

Details of Judgment Value

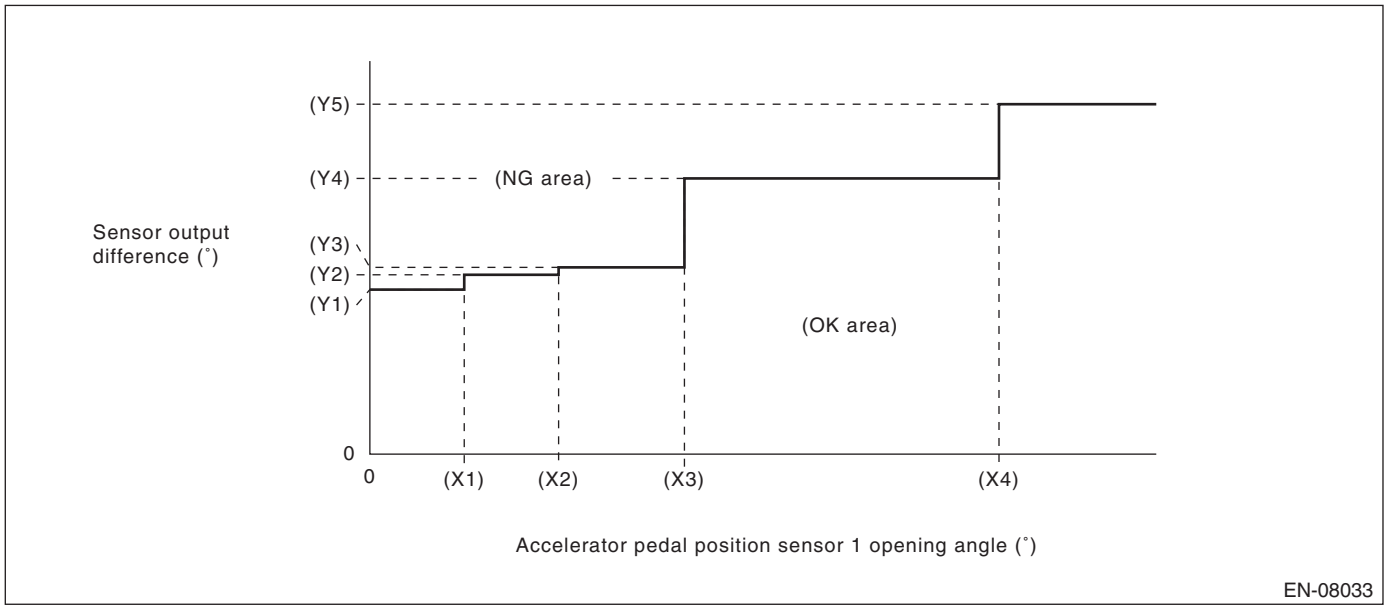

(X1) 0.6 °
(X2) 1.2 °
(X3) 2 °
(X4) 4 °

(Y1) 1.465 °
(Y2) 1.597 °
(Y3) 1.663 °
(Y4) 2.455 °
(Y5) 3.116 °

Time Needed for Diagnosis: 116 ms
Malfunction Indicator Light Illumination: Illuminates as soon as a malfunction occurs.

• Normality Judgment

Judge as OK and clear the NG if the continuous time while the following conditions are established is more than the predetermined time.

Judgment Value

Malfunction Criteria	Threshold Value
Signal difference between two sensors	Within the OK range of **judgment value detail**

Time Needed for Diagnosis: 116 ms

FW:DTC P219A BANK 1 AIR-FUEL RATIO IMBALANCE

1. OUTLINE OF DIAGNOSIS

Detect malfunction of air fuel ratio deviation between cylinders from main feedback learning value, sub feedback learning value and engine speed variation.

2. ENABLE CONDITIONS

Secondary Parameters	Enable Conditions
Battery voltage	> 10.9 V
Atmospheric pressure	> 75 kPa (563 mmHg, 22.2 inHg)
A/F main learning system	In operation
Engine speed	> 500 rpm
Engine coolant temperature	> 75 °C (167 °F)
Intake air temperature	< 70 °C (158 °F)
Engine load	> Value of Map 1
Engine load change	< 0.02 g/rev (0 oz/rev)
Evaporative system leak check	Not in operation
Cumulative time of canister purge after engine start	≥ 20.48 s
Learning value of EVAP conc.	< 0.07
Vehicle dynamic control or AT torque control	Not in operation
Intake manifold pressure change at 120°CA	< Value of Map 2
Throttle position change during 16 milliseconds	< 20 °
Fuel shut-off function	Not in operation

Map 1

Engine speed (rpm)	Idling	700	1000	1500	2000	2500	3000	3500	4000	4500	5000
Measured value (g (oz)/rev)	na	0.357 (0.01)	0.25 (0.01)	0.25 (0.01)	0.317 (0.01)	0.326 (0.01)	0.337 (0.01)	0.397 (0.01)	0.439 (0.02)	0.454 (0.02)	0.454 (0.02)

Map 2

rpm	700	1000	1500	2000	2500	3000	3500	4000
kPa (mmHg, inHg)	20 (150, 5.9)	20 (150, 5.9)	20 (150, 5.9)	20 (150, 5.9)	20 (150, 5.9)	20 (150, 5.9)	20 (150, 5.9)	20 (150, 5.9)

rpm	4500	5000	5500	6000	6500	7000
kPa (mmHg, inHg)	20 (150, 5.9)	20 (150, 5.9)	20 (150, 5.9)	20 (150, 5.9)	20 (150, 5.9)	20 (150, 5.9)

3. GENERAL DRIVING CYCLE

Always perform the diagnosis continuously.

4. DIAGNOSTIC METHOD

• Abnormality Judgment

Judge as NG when the following conditions are established.

Judgment Value

Malfunction Criteria	Threshold Value
Rich	
Main feedback learning value	< –0.01
Sub feedback learning value	< –0.03
When any one of the followings is established.	
• any one of the rich side misfire counters for each cylinder when in idling	> 20 time(s)
• total of the rich side misfire counters for each cylinder when in idling	> 255 time(s)
• any one of the rich side misfire counters for each cylinder when not in idling	> 20 time(s)
• total of the rich side misfire counters for each cylinder when not in idling	> 255 time(s)
Lean	
Main feedback learning value	> 0.01
Sub feedback learning value	< –0.012
When any one of the followings is established.	
• any one of the lean side misfire counters for each cylinder when in idling	> 20 time(s)
• total of the lean side misfire counters for each cylinder when in idling	> 255 time(s)
• any one of the lean side misfire counters for each cylinder when not in idling	> 20 time(s)
• total of the lean side misfire counters for each cylinder when not in idling	> 255 time(s)

Time Needed for Diagnosis: 1000 engine revs.
Malfunction Indicator Light Illumination: Illuminates when malfunction occurs in 2 continuous driving cycles.

- **Normality Judgment**

Judge as OK and clear the NG if the following conditions are established.

Judgment Value

Malfunction Criteria	Threshold Value
Rich	
Main feedback learning value	≥ –0.01
or	
Sub feedback learning value	≥ –0.03
or	
All of the following conditions are established.	
• any one of the rich side misfire counters for each cylinder when in idling	≤ 20 time(s)
• total of the rich side misfire counters for each cylinder when in idling	≤ 255 time(s)
• any one of the rich side misfire counters for each cylinder when not in idling	≤ 20 time(s)
• total of the rich side misfire counters for each cylinder when not in idling	≤ 255 time(s)
Lean	
Main feedback learning value	≤ 0.01
or	
Sub feedback learning value	≥ –0.012
or	
All of the following conditions are established.	
• any one of the lean side misfire counters for each cylinder when in idling	≤ 20 time(s)
• total of the lean side misfire counters for each cylinder when in idling	≤ 255 time(s)
• any one of the lean side misfire counters for each cylinder when not in idling	≤ 20 time(s)
• total of the lean side misfire counters for each cylinder when not in idling	≤ 255 time(s)

Time Needed for Diagnosis: 1000 engine revs.

FX:DTC P219B BANK 2 AIR-FUEL RATIO IMBALANCE

1. OUTLINE OF DIAGNOSIS

NOTE:
For the detection standard, refer to DTC P219A. <Ref. to GD(H6DO)-254, DTC P219A BANK 1 AIR-FUEL RATIO IMBALANCE, Diagnostic Trouble Code (DTC) Detecting Criteria.>

FY:DTC P2227 BAROMETRIC PRESSURE CIRCUIT RANGE/PERFORMANCE

1. OUTLINE OF DIAGNOSIS

Detect the malfunction of barometric pressure sensor output property.
Judge as NG when the barometric pressure sensor output is largely different from the intake manifold pressure at engine start.

2. COMPONENT DESCRIPTION

The barometric pressure sensor is built into the ECM.

3. ENABLE CONDITION

Secondary Parameters	Enable Conditions
Engine speed	< 300 rpm
Vehicle speed	< 1 km/h (0.6 MPH)

4. GENERAL DRIVING CYCLE

Perform the diagnosis once at ignition switch ON.

5. DIAGNOSTIC METHOD

- **Abnormality Judgment**

If the duration of time while the following conditions are met is longer than the time indicated, judge as NG.

Judgment Value

Malfunction Criteria	Threshold Value
|Barometric pressure – Intake manifold pressure|	≥ 26.7 kPa (200 mmHg, 7.9 inHg)
|Intake manifold pressure at engine start – Intake manifold pressure|	< 1.3 kPa (9.99 mmHg, 0.4 inHg)

Time Needed for Diagnosis: 328 ms
Malfunction Indicator Light Illumination: Illuminates when malfunction occurs in 2 continuous driving cycles.

- **Normality Judgment**

Judge as OK and clear the NG if the continuous time while the following conditions are established is more than the predetermined time.

Judgment Value

Malfunction Criteria	Threshold Value
|Barometric pressure – Intake manifold pressure|	< 26.7 kPa (200 mmHg, 7.9 inHg)

Time Needed for Diagnosis: 262 ms

FZ: DTC P2228 BAROMETRIC PRESSURE CIRCUIT LOW

1. OUTLINE OF DIAGNOSIS

Detect the open/short circuit of the barometric pressure sensor.
Judge as NG if out of specification.

2. COMPONENT DESCRIPTION

The barometric pressure sensor is built into the ECM.

3. ENABLE CONDITION

Secondary Parameters	Enable Conditions
None	

4. GENERAL DRIVING CYCLE

Always perform the diagnosis continuously.

5. DIAGNOSTIC METHOD

- **Abnormality Judgment**

If the duration of time while the following conditions are met is longer than the time indicated, judge as NG.

Judgment Value

Malfunction Criteria	Threshold Value
Output voltage	< 2.146 V

Time Needed for Diagnosis: 500 ms
Malfunction Indicator Light Illumination: Illuminates as soon as a malfunction occurs.

- **Normality Judgment**

Judge as OK and clear the NG if the continuous time while the following conditions are established is more than the predetermined time.

Judgment Value

Malfunction Criteria	Threshold Value
Output voltage	≥ 2.146 V

Time Needed for Diagnosis: Less than 1 second

GA:DTC P2229 BAROMETRIC PRESSURE CIRCUIT HIGH

1. OUTLINE OF DIAGNOSIS

Detect the open/short circuit of the barometric pressure sensor.
Judge as NG if out of specification.

2. COMPONENT DESCRIPTION

The barometric pressure sensor is built into the ECM.

3. ENABLE CONDITION

Secondary Parameters	Enable Conditions
None	

4. GENERAL DRIVING CYCLE

Always perform the diagnosis continuously.

5. DIAGNOSTIC METHOD

- **Abnormality Judgment**

If the duration of time while the following conditions are met is longer than the time indicated, judge as NG.

Judgment Value

Malfunction Criteria	Threshold Value
Output voltage	≥ 3.875 V

Time Needed for Diagnosis: 500 ms
Malfunction Indicator Light Illumination: Illuminates as soon as a malfunction occurs.

- **Normality Judgment**

Judge as OK and clear the NG if the continuous time while the following conditions are established is more than the predetermined time.

Judgment Value

Malfunction Criteria	Threshold Value
Output voltage	< 3.875 V

Time Needed for Diagnosis: Less than 1 second

GB:DTC P2610 ECM/PCM INTERNAL ENGINE OFF TIMER PERFORMANCE

1. OUTLINE OF DIAGNOSIS

Detect malfunction of soaking timer IC by the five diagnoses below.

Monitor Number	Explanation	Time required for diagnosis
Monitor #1 <Timer diagnosis>	Perform diagnosis of the soaking timer IC accuracy	196 ms
Monitor #2 <Full count diagnosis>	Perform diagnosis of the soaking timer IC counter function	4000 ms
Monitor #3 <Soaking timer IC setting diagnosis>	Perform diagnosis of communication between ECM and soaking timer IC	196 ms
Monitor #4 <Timer diagnosis (during soaking)>	Perform diagnosis of the soaking timer IC accuracy during soaking	3000 ms
Monitor #5 <Wake-up diagnosis>	Perform diagnosis of wake-up function	64 ms

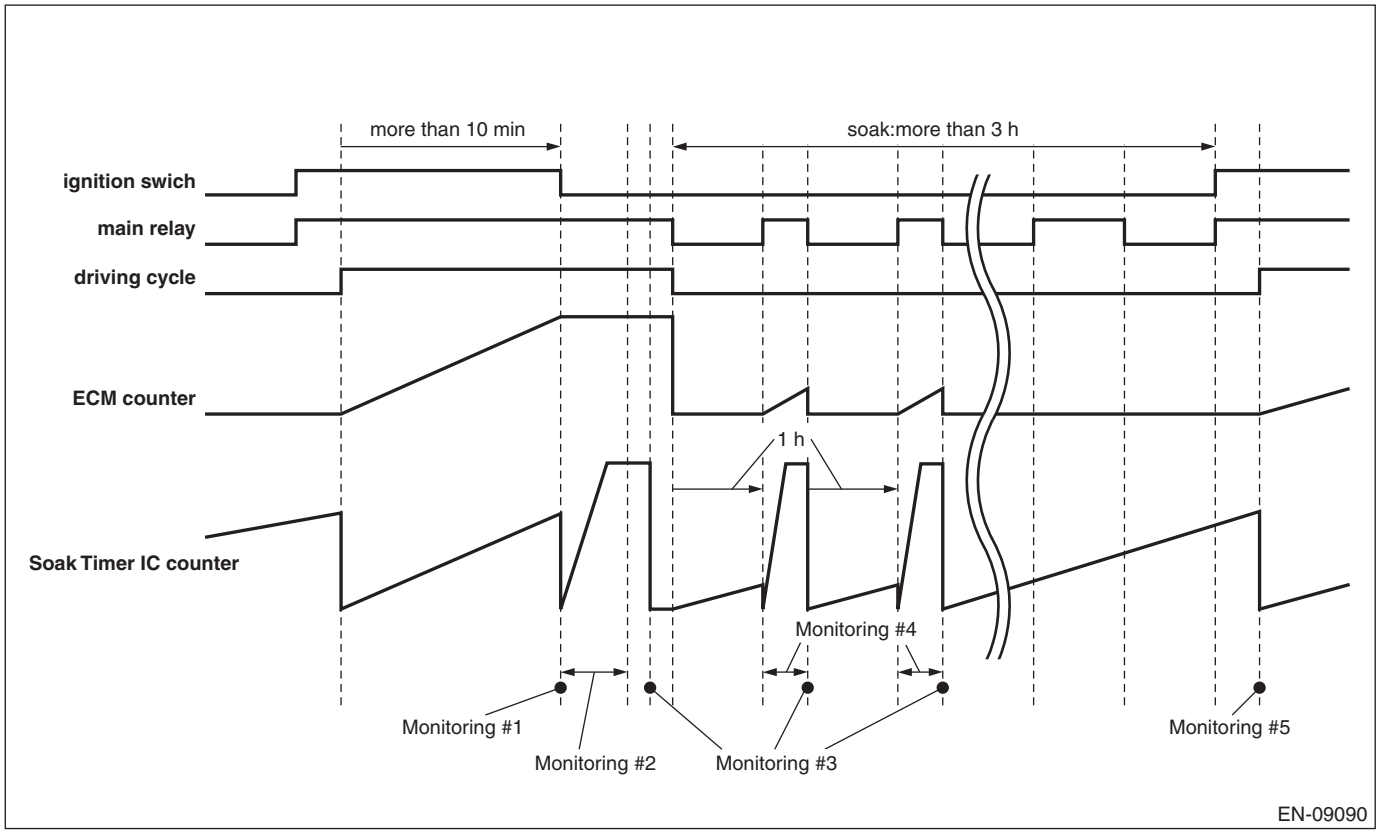

2. COMPONENT DESCRIPTION

The soaking timer IC is built into the ECM.

3. ENABLE CONDITIONS

Secondary Parameters	Enable Conditions
<Timer diagnosis>	
Battery voltage	≥ 10.9 V
Ignition switch	OFF
Elapsed time after starting the engine	> 600 s
< Full count diagnosis & soaking timer IC setting diagnosis>	
Battery voltage	≥ 10.9 V
Ignition switch	OFF
<Timer diagnosis (during soaking)>	
Battery voltage	≥ 10.9 V
Ignition switch	OFF
Number of wake-up	< 2 time(s)
<Wake-up diagnosis>	
Ignition switch	ON
Wake-up activation time setting	Completed
Time in the soaking timer IC	> 3600 s × 2 time(s)

4. GENERAL DRIVING CYCLE

Perform the diagnosis only once when 10 minutes have passed after the engine start and the ignition switch is OFF, and also when the ignition switch is ON after the soaking of five hours or more.

5. DIAGNOSTIC METHOD

<Timer diagnosis>

Start the count up operation of counters in ECM and in soaking timer IC when the engine is started.
Judge as timer malfunction if the difference between the counter in ECM and counter in soaking timer IC exceeds the allowable limit when the ignition switch is OFF.

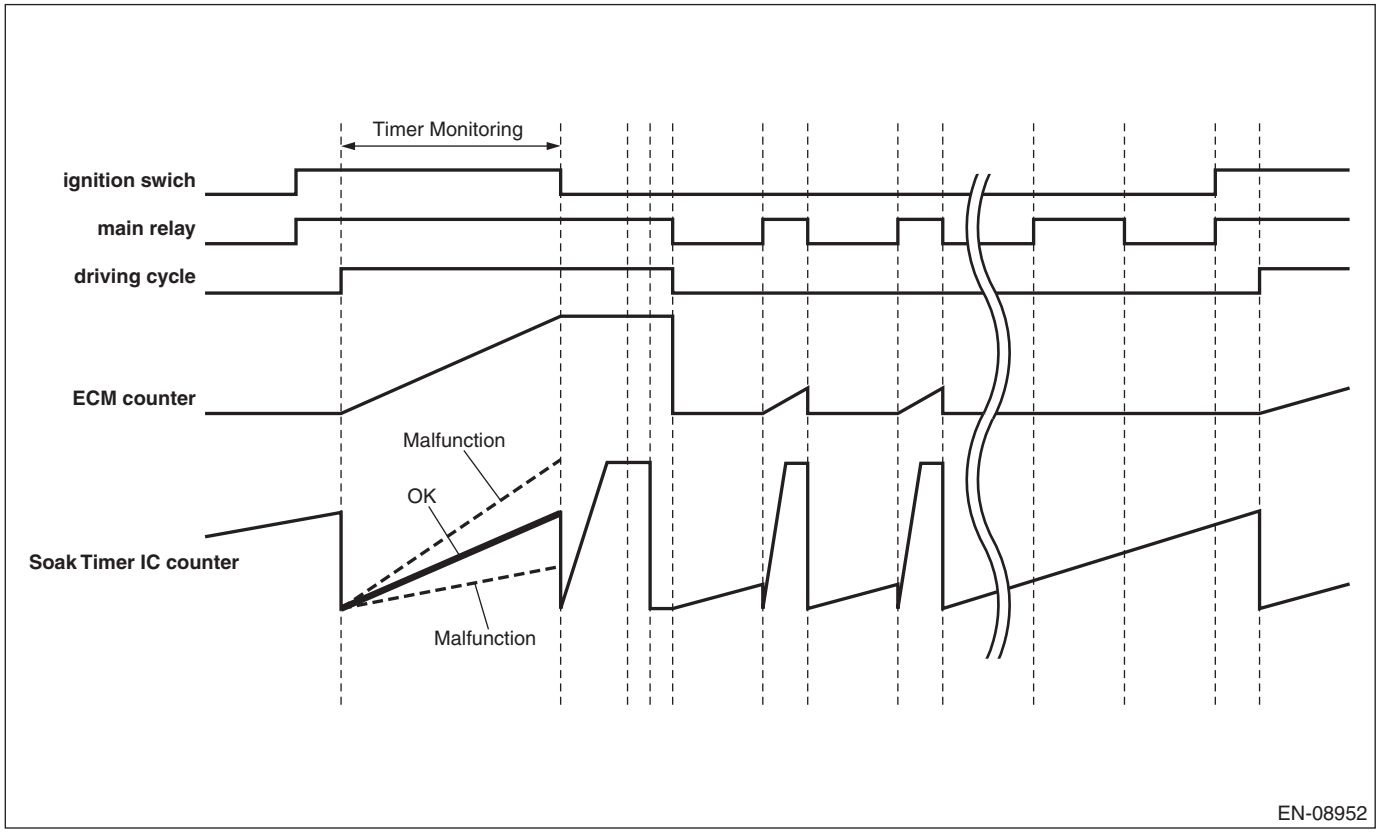

- **Abnormality Judgment**

Judge as NG when the following conditions are established.

Judgment Value

Malfunction Criteria	Threshold Value
|osoaktimcpu – osoaktimic| / osoaktimcpu osoaktimcpu = Counter in ECM osoaktimic = Counter in soaking timer IC	> 0.24

- **Normality Judgment**

Judge as OK when the following conditions are established.

Judgment Value

Malfunction Criteria	Threshold Value
|osoaktimcpu – osoaktimic| / osoaktimcpu	≤ 0.24

<Full count diagnosis>

After the timer diagnosis is completed, reset the counter in soaking timer IC and start the count up operation. Judge as full count diagnosis malfunction if counter in soaking timer IC is not $3FF (1023 count) after 4 seconds.

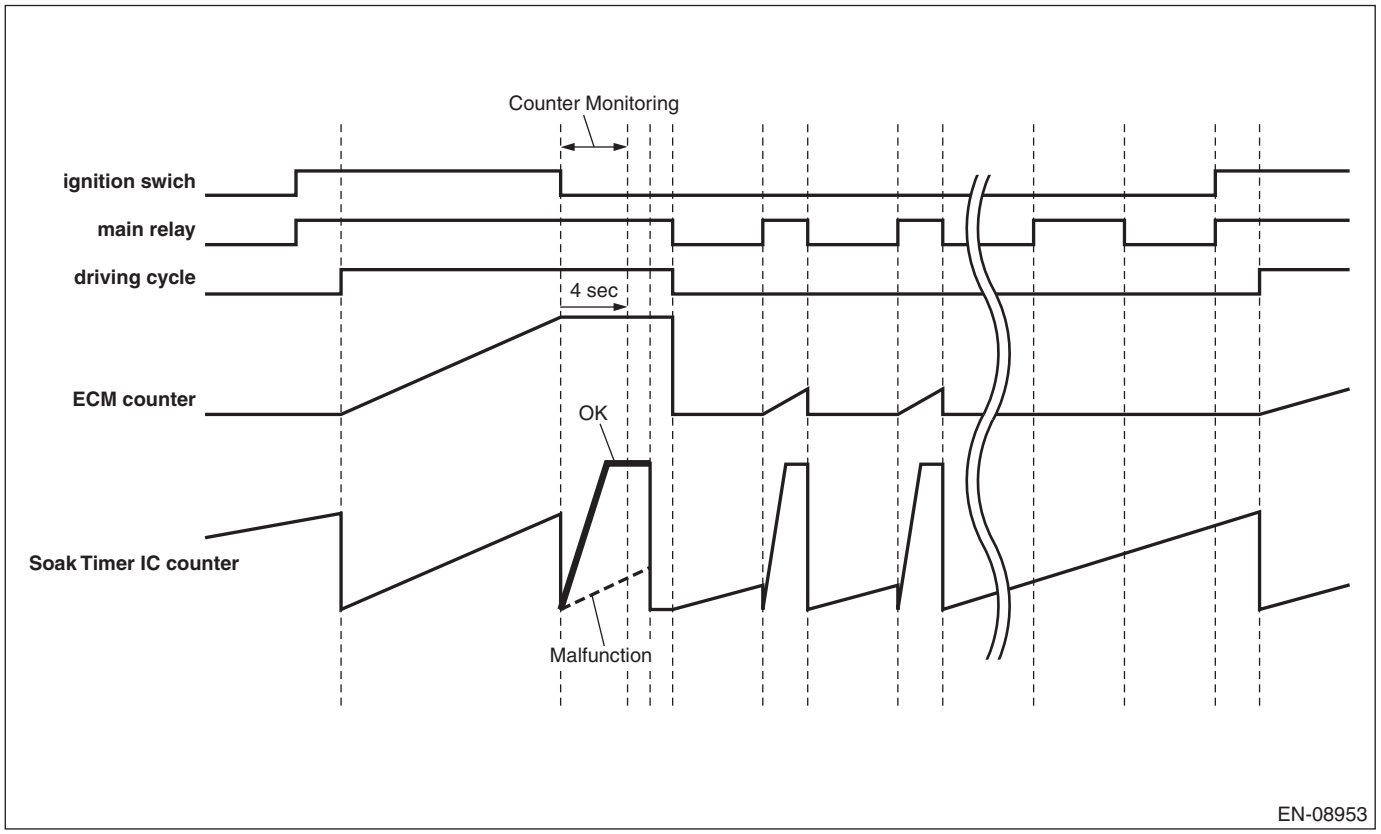

- **Abnormality Judgment**

Judge as NG when the following conditions are established.

Judgment Value

Malfunction Criteria	Threshold Value
osoakfcntic osoakfcntic = Counter in soaking timer IC	≠ $3FF (1023 count)

- **Normality Judgment**

Judge as OK when the following conditions are established.

Judgment Value

Malfunction Criteria	Threshold Value
osoakfcntic	= $3FF (1023 count)

<Soaking timer IC setting diagnosis>

When setting the activation setting time to soaking timer IC, compare the writing value to soaking timer IC with read out value. Judge as malfunction if the values do not match 3 times in a row.

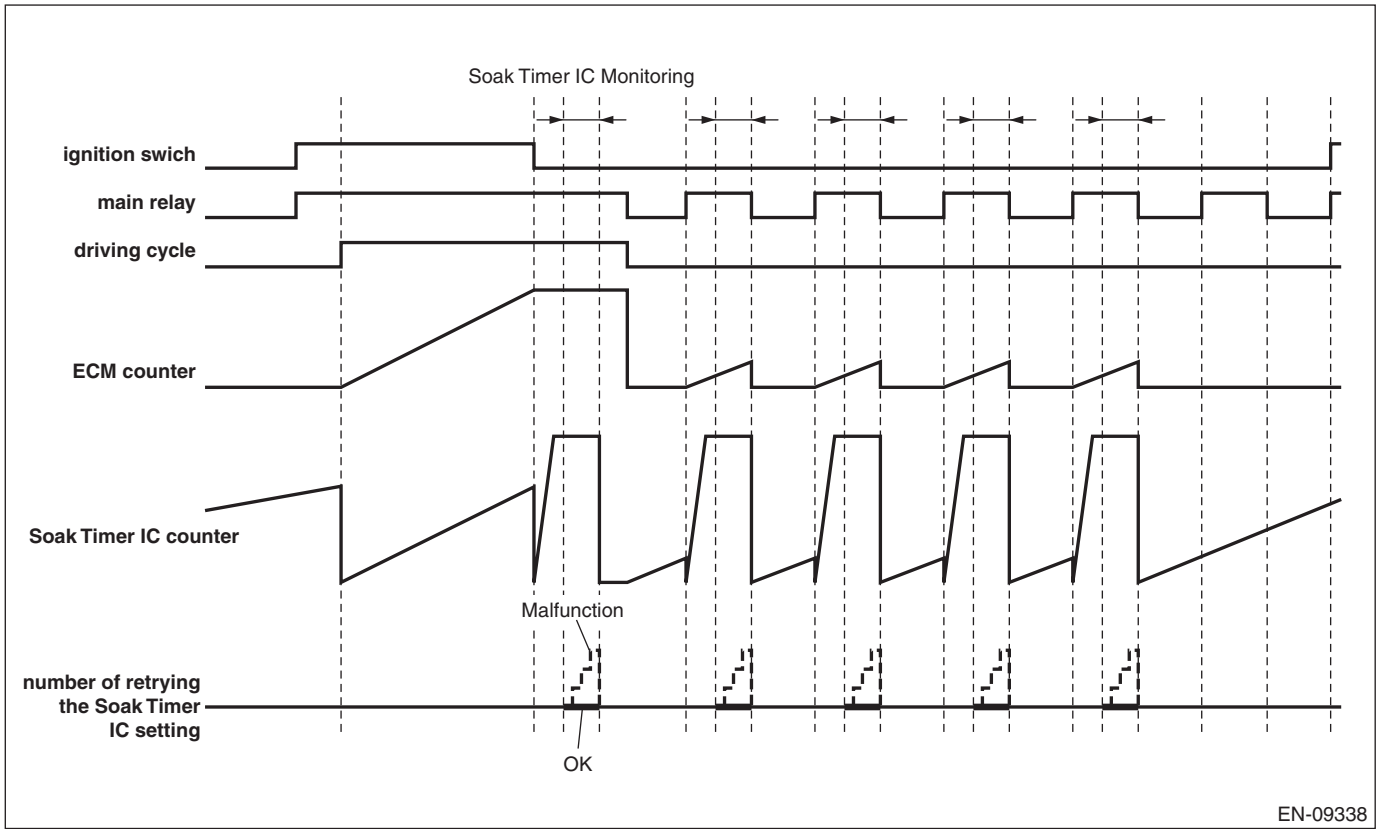

- **Abnormality Judgment**

Judge as NG when the following conditions are established.

Judgment Value

Malfunction Criteria	Threshold Value
Writing value and read out value when setting the soaking timer	Unmatch
Number of retrying the soaking timer setting	≥ 3 times

- **Normality Judgment**

Judge as OK when the following conditions are established.

Judgment Value

Malfunction Criteria	Threshold Value
Writing value and read out value when setting the soaking timer	Match

<Timer diagnosis (during soaking)>

Wake-up at the predetermined interval until five hours have passed after the ignition switch is OFF, and compare the counter in soaking timer IC with the counter in ECM.
Judge as malfunction if the counter in soaking timer IC is counted up to maximum value (1023 count) when the counter in ECM is 1637 ms, or if the counter in soaking timer IC is not counted up to maximum value (1023 count) when the counter in ECM is 2455 ms.

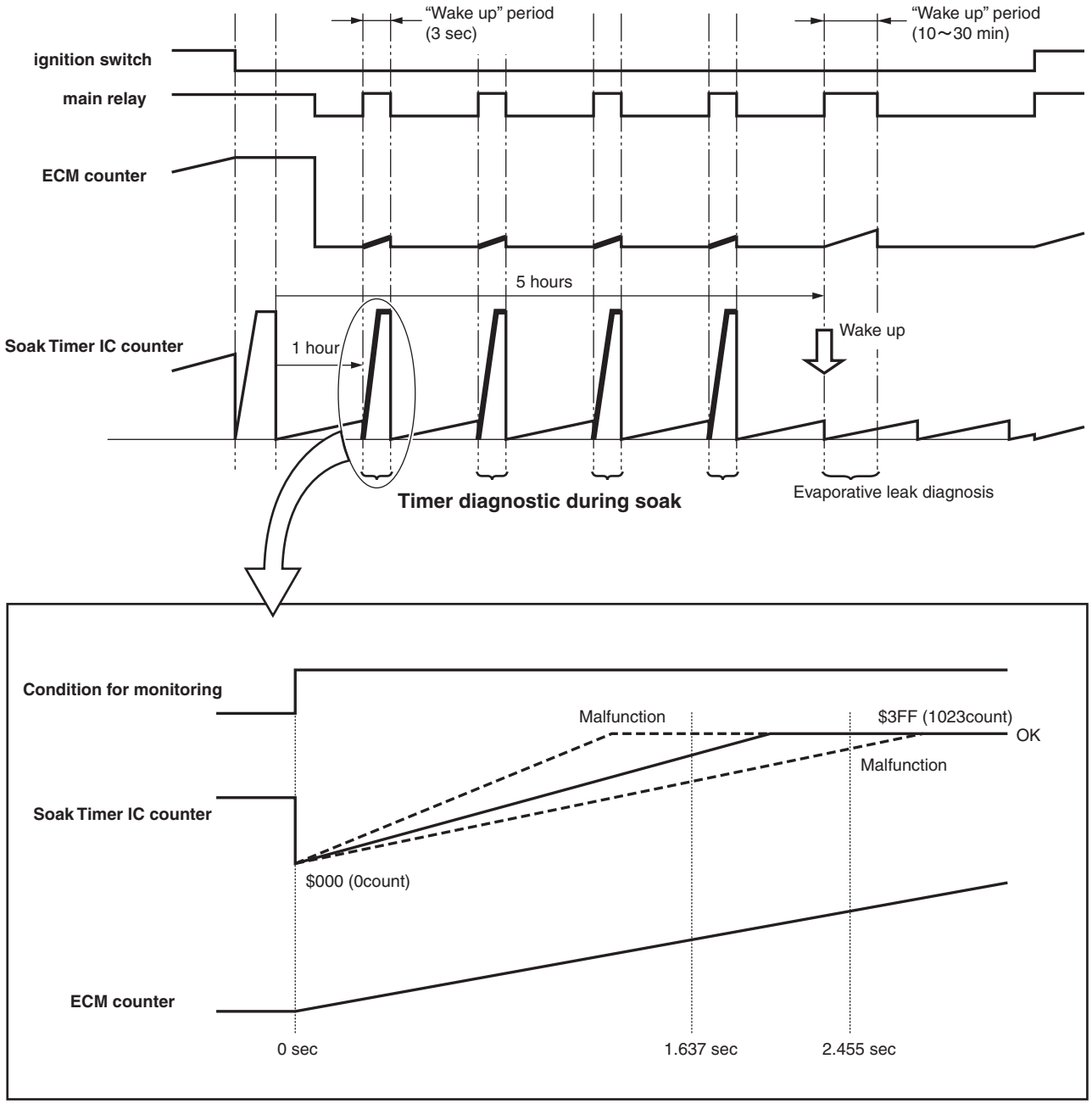

EN-08981

- **Abnormality Judgment**

Judge as NG when the following conditions are established.

Judgment Value

Malfunction Criteria	Threshold Value
When any one of the followings is established.	
• All of the following conditions are established.	
Counter in ECM	≤ 1637 ms
Counter in soaking timer IC	= $ $3FF (1023 count)
• All of the following conditions are established.	
Counter in ECM	≥ 2455 ms
Counter in soaking timer IC	≠ $ $3FF (1023 count)

- **Normality Judgment**

Judge as OK when the following conditions are established.

Judgment Value

Malfunction Criteria	Threshold Value
Following conditions are established.	
• All of the following conditions are established.	
Counter in ECM	≤ 1637 ms
Counter in soaking timer IC	≠ $ $3FF (1023 count)
• All of the following conditions are established.	
Counter in ECM	≥ 2455 ms
Counter in soaking timer IC	= $ $3FF (1023 count)

<Wake-up diagnosis>

Store the number of wake-up activation when the ECM wakes up by the soaking timer IC.
Next time when the ignition switch is ON, if the number of wake-up activation does not reach the predetermined value even though the counter in soaking timer IC exceeds the activation setting time, judge as wake-up malfunction.

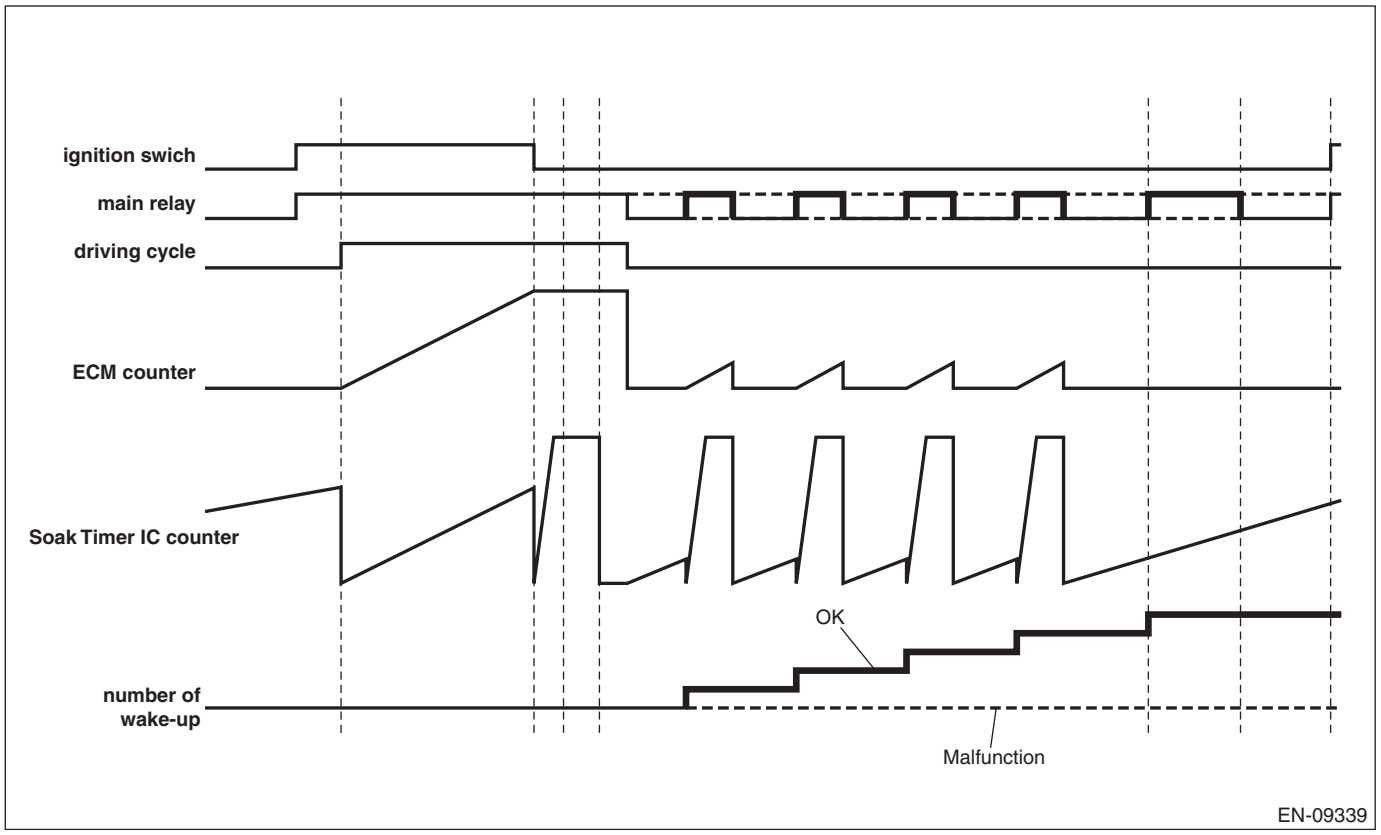

- **Abnormality Judgment**

Judge as NG when the following conditions are established.

Judgment Value

Malfunction Criteria	Threshold Value
Number of wake-up	< 2 time(s)

- **Normality Judgment**

Judge as OK when the following conditions are established.

Judgment Value

Malfunction Criteria	Threshold Value
Number of wake-up	≥ 2 time(s)

- **Abnormality Judgment**

Judge as NG when the following conditions are established.

Judgment Value

Malfunction Criteria	Threshold Value
Ignition switch	ON
Driving cycle	Completed
When any one of the followings is established.	
• Timer diagnosis	NG
• Full count diagnosis	NG
• Soaking timer IC setting diagnosis	NG
• Timer diagnosis (during soaking)	NG
• Wake-up diagnosis	NG

Time Needed for Diagnosis: 18620 s (Approx. 5 hours)
Malfunction Indicator Light Illumination: Illuminates when malfunction occurs in 2 continuous driving cycles.

- **Normality Judgment**

Judge as OK and clear the NG if the following conditions are established.

Judgment Value

Malfunction Criteria	Threshold Value
Ignition switch	ON
Driving cycle	Completed
All of the following conditions are established.	
• Timer diagnosis	OK
• Full count diagnosis	OK
• Soaking timer IC setting diagnosis	OK
• Timer diagnosis (during soaking)	OK
• Wake-up diagnosis	OK

Time Needed for Diagnosis: 18620 s (Approx. 5 hours)

GC:DTC U0073 CAN FAILURE, BUS 'OFF' DETECTION

1. OUTLINE OF DIAGNOSIS

Detect malfunction of CAN communication.
Judge as NG when CAN communication failure has occurred.

2. COMPONENT DESCRIPTION

(Common Specifications)
CAN Protocol 2.0 B (Active)
Frame Format: 11 Bit ID Frame (Standard Frame)
Conforms to ISO11898
Communication Speed: 500 kbps

3. ENABLE CONDITIONS

Secondary Parameters	Enable Conditions
None	

4. GENERAL DRIVING CYCLE

Perform the diagnosis continuously after starting the engine.

5. DIAGNOSTIC METHOD

• Abnormality Judgment

Judge as NG when the following conditions are established.

Judgment Value

Malfunction Criteria	Threshold Value
Battery voltage	> 10.9 V
Starter switch	OFF
Engine	run
bus off flag or error warning flag	set (error)

Time Needed for Diagnosis: 436 ms
Malfunction Indicator Light Illumination: Illuminates as soon as a malfunction occurs.

• Normality Judgment

Judge as OK and clear the NG if the continuous time while the following conditions are established is more than the predetermined time.

Judgment Value

Malfunction Criteria	Threshold Value
Engine	run
bus off flag or error warning flag	clear (No error)

Time Needed for Diagnosis: 1000 ms

GD:DTC U0101 CAN (TCU) DATA NOT LOADED

1. OUTLINE OF DIAGNOSIS

Detect malfunction of CAN communication.
Judge as NG when CAN communication failure has occurred between TCM, VDC CM and body integrated unit.

2. COMPONENT DESCRIPTION

(Common Specifications)
CAN Protocol 2.0 B (Active)
Frame Format: 11 Bit ID Frame (Standard Frame)
Conforms to ISO11898
Communication Speed: 500 kbps

3. ENABLE CONDITIONS

Secondary Parameters	Enable Conditions
None	

4. GENERAL DRIVING CYCLE

Perform the diagnosis continuously after starting the engine.

5. DIAGNOSTIC METHOD

• Abnormality Judgment

Judge as NG when the following conditions are established.

Judgment Value

Malfunction Criteria	Threshold Value
Battery voltage	> 10.9 V
Starter switch	OFF
Engine	run
ID received from control module connected to CAN	None during 500 milliseconds

Time Needed for Diagnosis: 500 ms
Malfunction Indicator Light Illumination: Illuminates as soon as a malfunction occurs.

• Normality Judgment

Judge as OK and clear the NG if the continuous time while the following conditions are established is more than the predetermined time.

Judgment Value

Malfunction Criteria	Threshold Value
Engine	run
ID received from control module connected to CAN	Yes

Time Needed for Diagnosis: 1000 ms

GE:DTC U0122 CAN (VDC) DATA NOT LOADED

1. OUTLINE OF DIAGNOSIS

NOTE:
For the detection standard, refer to DTC U0101. <Ref. to GD(H6DO)-270, DTC U0101 CAN (TCU) DATA NOT LOADED, Diagnostic Trouble Code (DTC) Detecting Criteria.>

GF:DTC U0140 CAN (BCU) DATA NOT LOADED

1. OUTLINE OF DIAGNOSIS

NOTE:
For the detection standard, refer to DTC U0101. <Ref. to GD(H6DO)-270, DTC U0101 CAN (TCU) DATA NOT LOADED, Diagnostic Trouble Code (DTC) Detecting Criteria.>

GG:DTC U0402 CAN (TCU) DATA ABNORMAL

1. OUTLINE OF DIAGNOSIS

Detect malfunction of CAN communication.
Judge as NG when data received from TCM, VDC CM and body integrated unit is not normal.

2. COMPONENT DESCRIPTION

(Common Specifications)
CAN Protocol 2.0 B (Active)
Frame Format: 11 Bit ID Frame (Standard Frame)
Conforms to ISO11898
Communication Speed: 500 kbps

3. ENABLE CONDITIONS

Secondary Parameters	Enable Conditions
None	

4. GENERAL DRIVING CYCLE

Perform the diagnosis continuously after starting the engine.

5. DIAGNOSTIC METHOD

• Abnormality Judgment

Judge as NG when the following conditions are established.

Judgment Value

Malfunction Criteria	Threshold Value
Battery voltage	> 10.9 V
Starter switch	OFF
Engine	run
Data updated from control module connected to CAN	None during 2000 milliseconds

Time Needed for Diagnosis: 2 seconds
Malfunction Indicator Light Illumination: Illuminates as soon as a malfunction occurs.

• Normality Judgment

Judge as OK and clear the NG if the continuous time while the following conditions are established is more than the predetermined time.

Judgment Value

Malfunction Criteria	Threshold Value
Engine	run
Data updated from control module connected to CAN	Yes

Time Needed for Diagnosis: 1000 ms

GH:DTC U0416 CAN (VDC) DATA ABNORMAL

1. OUTLINE OF DIAGNOSIS

NOTE:
For the detection standard, refer to DTC U0402. <Ref. to GD(H6DO)-272, DTC U0402 CAN (TCU) DATA ABNORMAL, Diagnostic Trouble Code (DTC) Detecting Criteria.>

GI: DTC U0422 CAN (BCU) DATA ABNORMAL

1. OUTLINE OF DIAGNOSIS

NOTE:
For the detection standard, refer to DTC U0402. <Ref. to GD(H6DO)-272, DTC U0402 CAN (TCU) DATA ABNORMAL, Diagnostic Trouble Code (DTC) Detecting Criteria.>

TRANSMISSION SECTION

CONTROL SYSTEMS	CS
CONTINUOUSLY VARIABLE TRANSMISSION	CVT
CONTINUOUSLY VARIABLE TRANSMISSION (DIAGNOSTICS)	CVT(diag)
AUTOMATIC TRANSMISSION	5AT
AUTOMATIC TRANSMISSION (DIAGNOSTICS)	5AT(diag)
MANUAL TRANSMISSION AND DIFFERENTIAL	6MT
CLUTCH SYSTEM	CL

This service manual has been prepared to provide SUBARU service personnel with the necessary information and data for the correct maintenance and repair of SUBARU vehicles.
This manual includes the procedures for maintenance, disassembling, reassembling, inspection and adjustment of components and diagnostics for guidance of experienced mechanics.
Please peruse and utilize this manual fully to ensure complete repair work for satisfying our customers by keeping their vehicle in optimum condition. When replacement of parts during repair work is needed, be sure to use SUBARU genuine parts.

All information, illustration and specifications contained in this manual are based on the latest product information available at the time of publication approval.

FUJI HEAVY INDUSTRIES LTD. G2480BE5

CONTROL SYSTEMS

CS

		Page
1.	General Description	2
2.	AT Shift Lock Control System	8
3.	Select Lever	22
4.	Select Cable	42
5.	AT Shift Lock Solenoid and “P” Range Switch	53
6.	Body Integrated Unit	56
7.	MT Gear Shift Lever	57
8.	MT Gear Shift Cable	64
9.	MT Gear Select Cable	73
10.	General Diagnostic Table	100

1. General Description

A: COMPONENT

1. AT SELECT LEVER

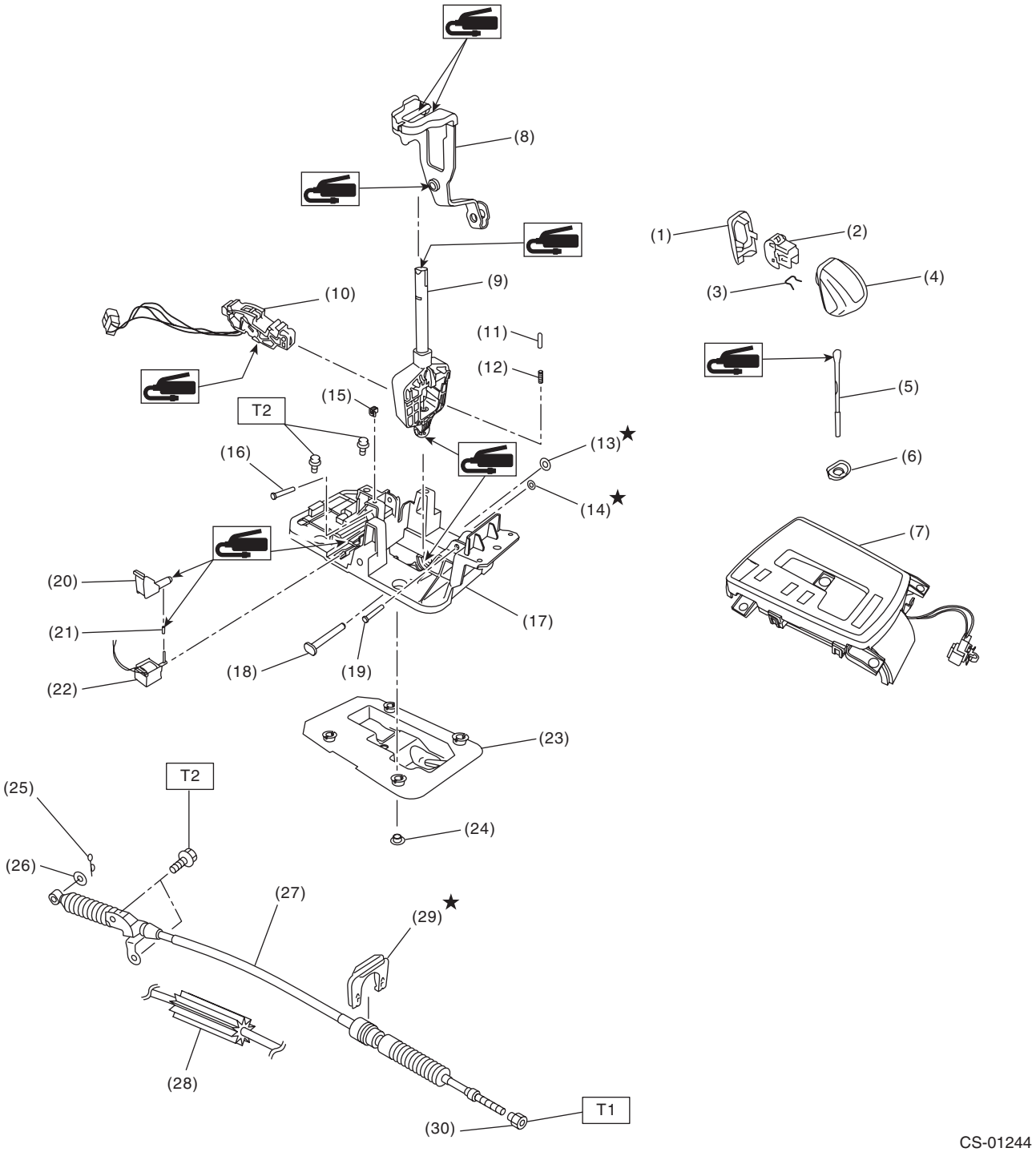

(1) Cover grip AT
(2) Button ASSY-AT
(3) Clamp grip pin
(4) Grip ASSY sub
(5) Rod COMPL
(6) Cover grip AT
(7) Indicator ASSY
(8) Arm ASSY
(9) Selector lever COMPL
(10) Plate guide
(11) Rod detent
(12) Detent spring
(13) Clamp push nut
(14) Clamp push nut
(15) Clamp pin
(16) Spacer pin guide
(17) Plate COMPL
(18) Shaft control
(19) Spacer pin guide
(20) Rod shift lock
(21) Cushion solenoid
(22) Solenoid unit
(23) Gasket
(24) Spacer plate
(25) Snap pin
(26) Washer
(27) Select cable (AT model)
(28) Select cable (CVT model)
(29) Clamp
(30) Nut

Tightening torque:N·m (kgf-m, ft-lb)
T1: 7.5 (0.8, 5.5)
T2: 18 (1.8, 13.3)

2. 6MT GEAR SHIFT LEVER

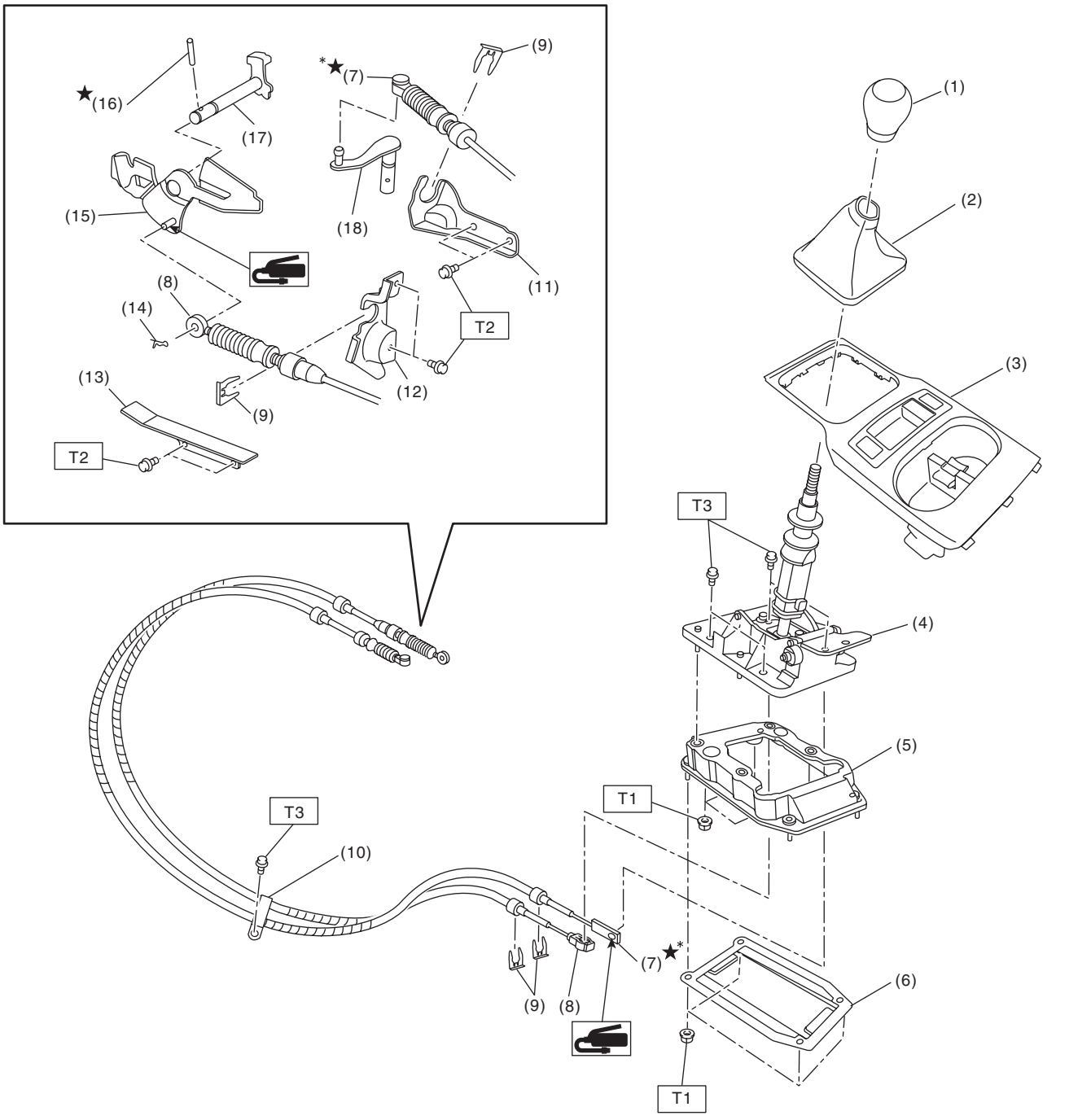

CS-01354

(1) Shift knob
(2) Shift boot
(3) Console front cover ASSY
(4) Gear shift lever ASSY
(5) Cover cable ASSY
(6) Plate cable ASSY
(7) MT gear select cable (identification tape color: green)
(8) MT gear shift cable (identification tape color: yellow)
(9) Clamp
(10) Clamp cable
(11) Select bracket
(12) Shift bracket
(13) Dust cover
(14) Snap pin
(15) Shift lever COMPL
(16) Spring pin
(17) Shifter arm No. 2
(18) Selector lever

Tightening torque:N·m (kgf-m, ft-lb)
T1: 7.5 (0.8, 5.5)
T2: 15 (1.5, 11.1)
T3: 18 (1.8, 13.3)

*: Always use new MT gear select cable if the cable is removed from select lever COMPL of transmission side.

B: CAUTION

- Wear appropriate work clothing, including a cap, protective goggles and protective shoes when performing any work.
- Remove contamination including dirt and corrosion before removal, installation or disassembly.
- Keep the disassembled parts in order and protect them from dust and dirt.
- Before removal, installation or disassembly, be sure to clarify the failure. Avoid unnecessary removal, installation, disassembly and replacement.
- Use SUBARU genuine fluid, grease or equivalent. Do not mix fluid and grease of different grades or manufacturers.
- Be sure to tighten fasteners including bolts and nuts to the specified torque.
- Place shop jacks or rigid racks at the specified points.
- Apply grease onto sliding or revolving surfaces before installation.
- Before installing the O-ring or snap ring, apply a sufficient amount of fluid to avoid damage and deformation.
- Before securing a part in a vise, place cushioning material such as wood blocks, aluminum plate or cloth between the part and the vise.
- Before disconnecting electrical connectors, be sure to disconnect the negative terminal from battery.

C: PREPARATION TOOL

1. SPECIAL TOOL

ILLUSTRATION	TOOL NUMBER	DESCRIPTION	REMARKS
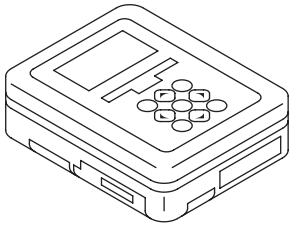 ST1B022XU0	1B022XU0	SUBARU SELECT MONITOR III KIT	Used for troubleshooting the electrical system.
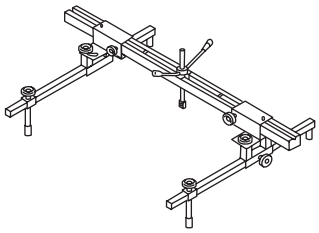 ST99099AJ000	99099AJ000	ENGINE HANGER	• Used for holding and balancing the engine unit when removing and installing the MT gear select cable. • Used together with CHAIN BALANCER (99099AJ010).
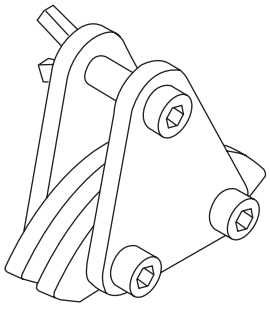 ST99099AJ010	99099AJ010	CHAIN BALANCER	• Used for holding and balancing the engine unit when removing and installing the MT gear select cable. • Used together with ENGINE HANGER (99099AJ000).
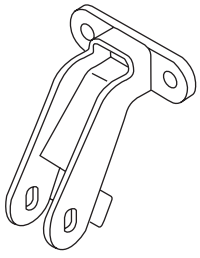 ST41099AJ000	41099AJ000	SPECIAL TOOL H4	Used for holding and balancing the engine unit when removing and installing the MT gear select cable.

ILLUSTRATION	TOOL NUMBER	DESCRIPTION	REMARKS
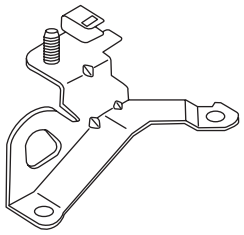 ST10004AA180	10004AA180 (SUBARU genuine part)	ENGINE HANGER REAR	• Used for holding and balancing the engine unit when removing and installing the MT gear select cable. (ENGINE HANGER REAR for turbo model) • For 2.5 L non-turbo model.

2. GENERAL TOOL

TOOL NAME	REMARKS
Chain sling	Used for holding and balancing the engine unit when removing and installing the MT gear select cable. • Length: 0.8 — 1 m (2.6 — 3.3 ft) • Load capacity: 1.2 t (2646 lb) or more • Diameter: 6 mm (0.24 in) or 6.3 mm (0.25 in) • Chain external width: 23.5 mm (0.93 in) or less • Chain internal width: 8.5 mm (0.33 in) or more
Screw shackle	Used for holding and balancing the engine unit when removing and installing the MT gear select cable. • Load capacity: 250 kg (551 lb) or more • Use two pieces.
Circuit tester	Used for measuring resistance and voltage.

2. AT Shift Lock Control System

A: LOCATION

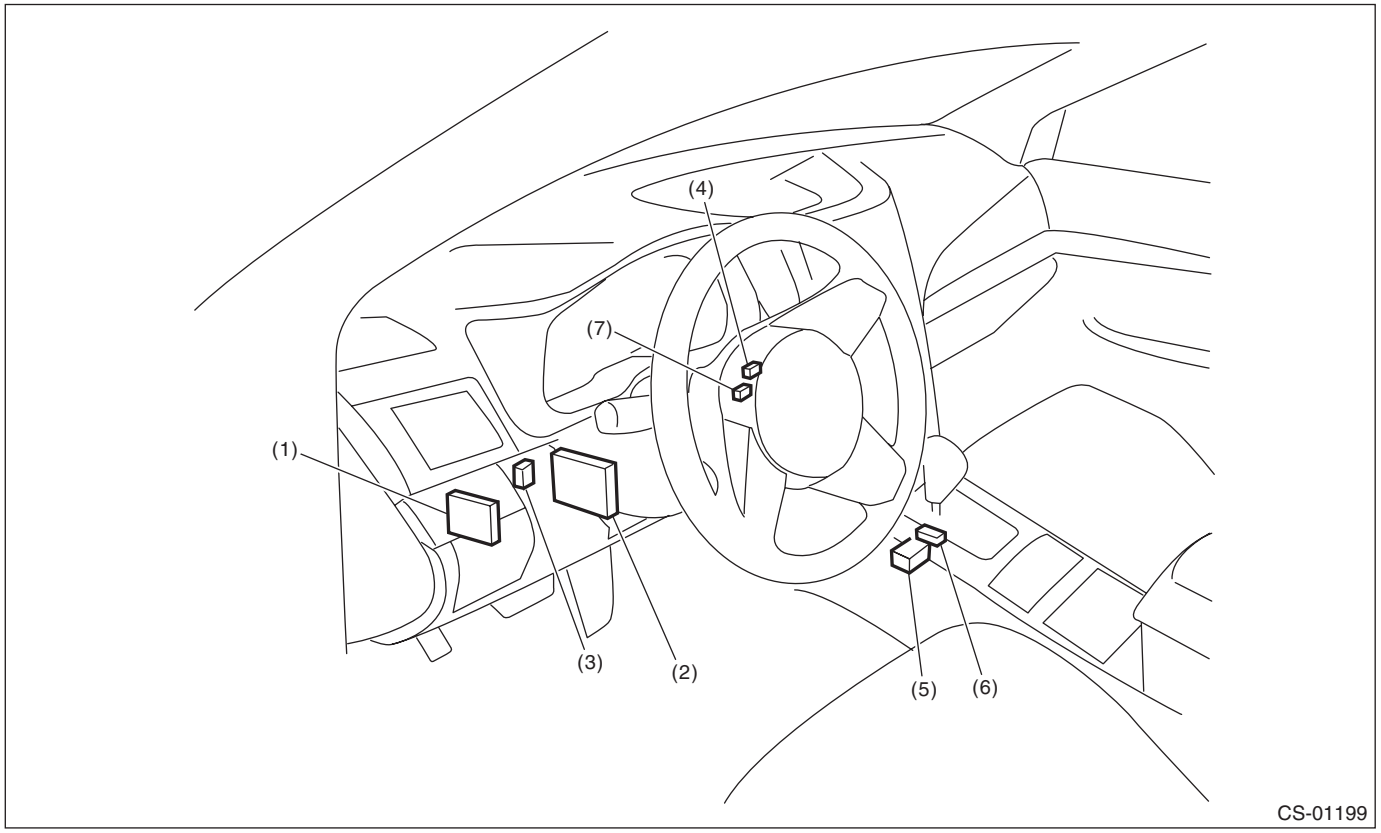

(1) TCM (“P” range)
(2) Body integrated unit
(3) Stop light switch
(4) Key cylinder (with built-in key warning switch)
(5) Solenoid unit
(6) “P” range switch
(7) Key lock solenoid

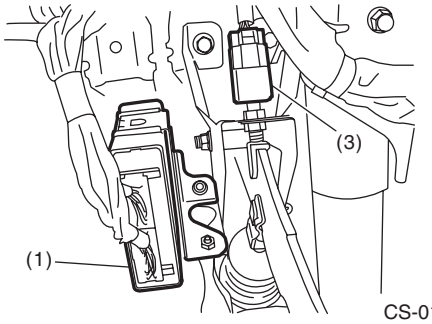

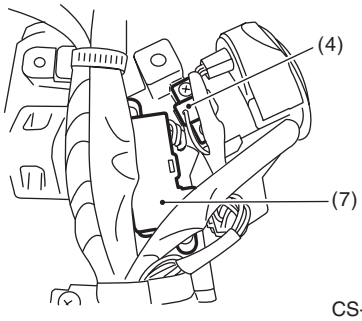

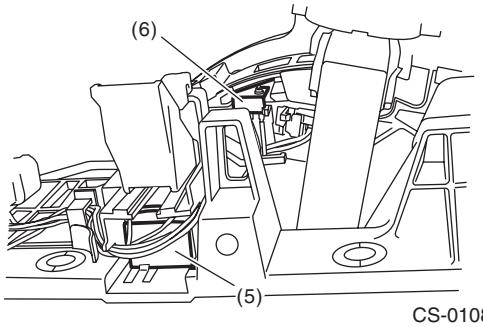

B: ELECTRICAL SPECIFICATION

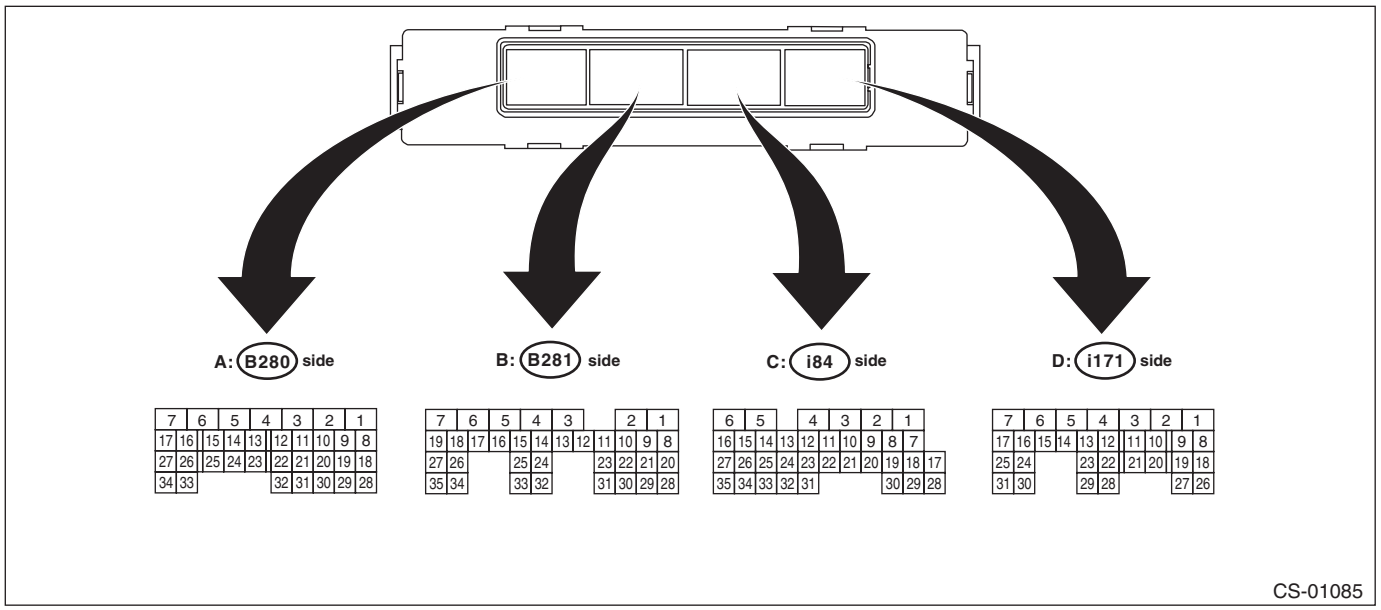

Item	Connector No.	Terminal No.	Input/Output signal Measured value and measuring conditions
Battery power supply	B281	6	9 — 16 V
	i84	6	
Ignition power supply	i171	17	9 — 16 V when ignition switch is at ON or START.
		25	9 — 16 V when ignition switch is at ACC.
TCM (“P” range)	B281	20	Pulse signal
		28	
Stop light switch	B280	10	9 — 16 V when stop light switch is ON. Less than 1.5 V when stop light switch is OFF.
“P” range switch	B281	21	Less than 1.5 V when select lever is in “P” range. 9 — 16 V when select lever is in other positions than “P” range.
Solenoid unit output	B281	5	8.5 — 16 V when shift lock is released. Less than 1.5 V when shift lock is operating.
Key warning switch signal	B280	4	9 — 16 V when key is inserted. Less than 1.5 V when key is removed.
Key lock solenoid output	B281	3	7 — 14 V (unlock) *1
		4	7 — 14 V (lock) *1
Ground	B280	1	—
	B281	31	
	i84	1	
	i171	29	

*1: Measuring condition

Key warning switch	“P” range switch	Ignition switch	Output
OFF	—	—	Unlock (Key can be removed)
ON	OFF	—	Lock (Key cannot be removed)
ON	ON	OFF	Unlock
ON	ON	ON	Lock

Output signal for key lock solenoid (unlock)

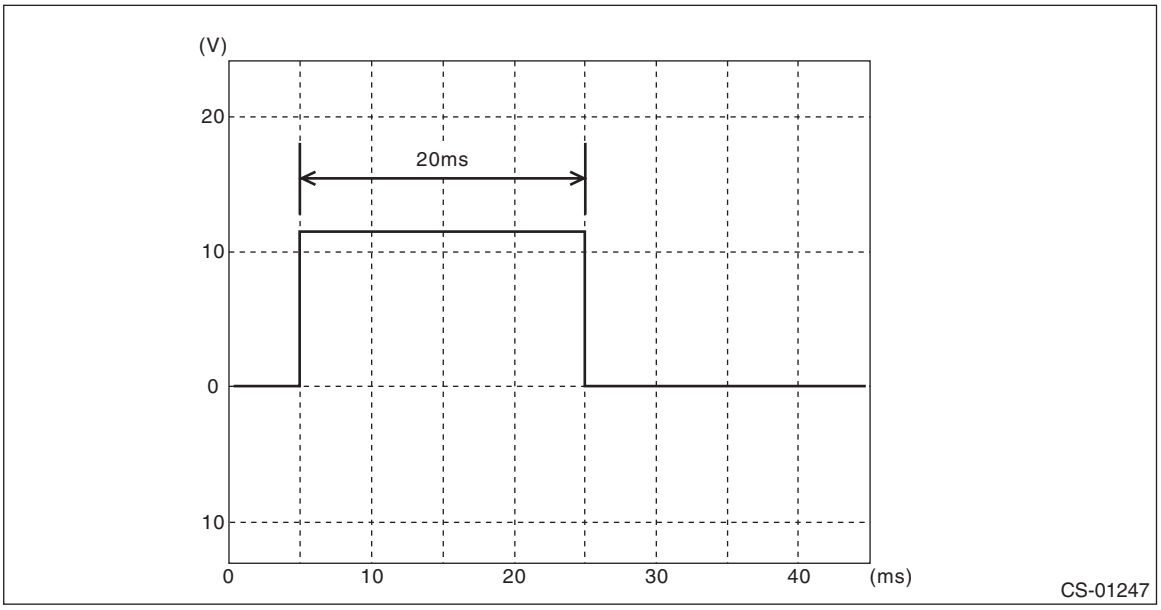

Output signal for key lock solenoid (lock)

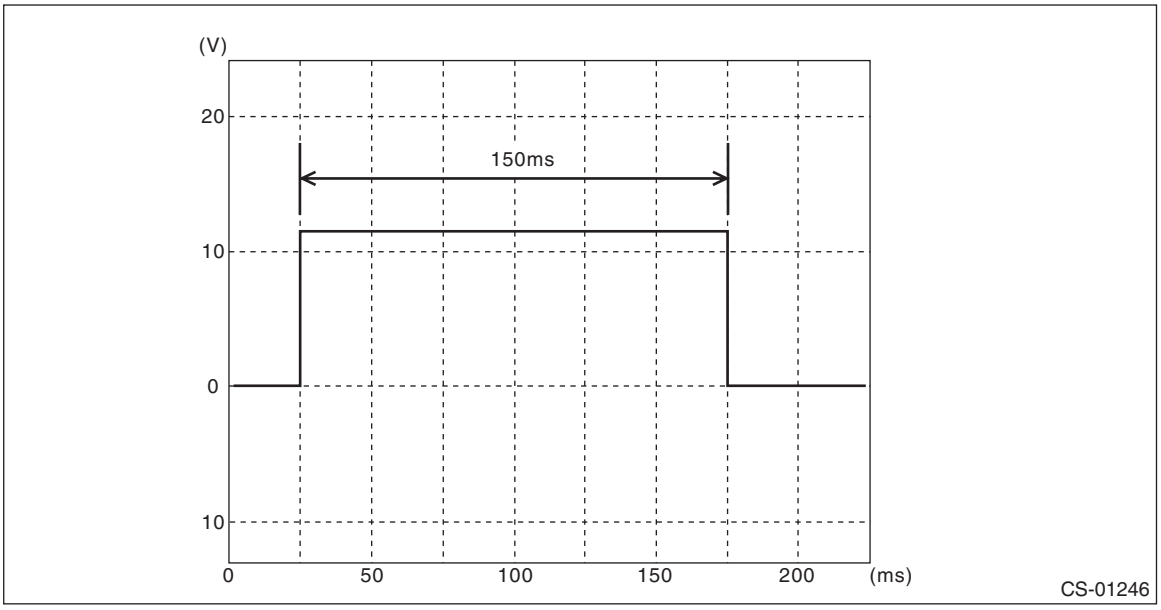

C: WIRING DIAGRAM

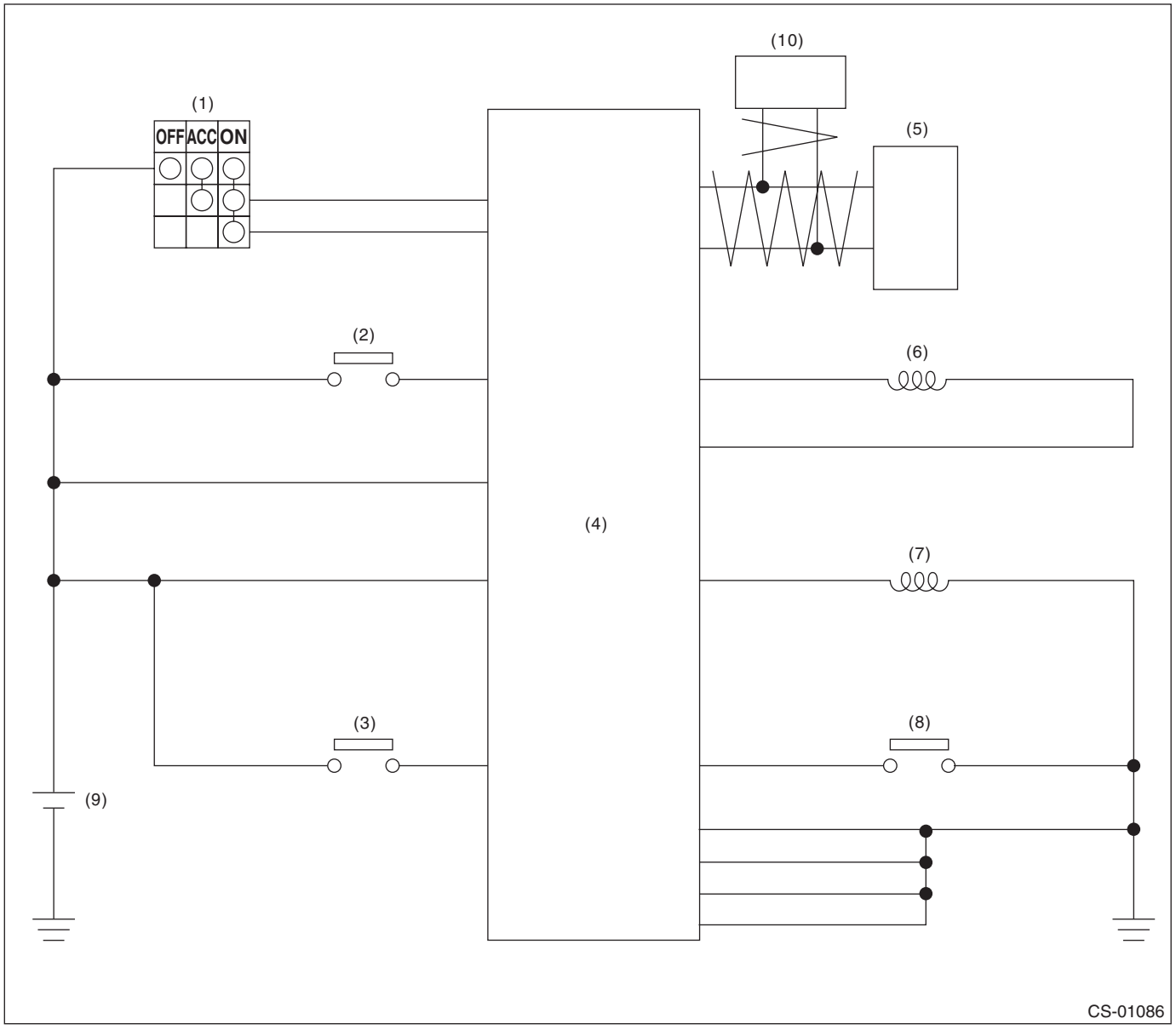

(1) Ignition switch
(2) Stop light switch
(3) Key warning switch
(4) Body integrated unit
(5) TCM (shift range information)
(6) Key lock solenoid
(7) Solenoid unit
(8) “P” range switch
(9) Battery
(10) VDC (vehicle speed information)

D: INSPECTION

1. SHIFT LOCK OPERATION

	Step	Check	Yes	No
1	**CHECK COMMUNICATION OF SUBARU SELECT MONITOR.** 1) Turn the ignition switch to ON. 2) Using the Subaru Select Monitor, check whether communication to all systems can be executed normally.	Is the system name displayed?	Go to step **2**.	For diagnostic procedures, refer to the LAN section.
2	**CHECK SHIFT LOCK.** 1) Turn the ignition switch to ON. 2) Shift the select lever to “P” range.	While brake pedal is not depressed, is it possible to move the select lever from the “P” range to other ranges?	Perform the inspection of “SELECT LEVER CANNOT BE LOCKED OR RELEASED”. <Ref. to CS-16, SELECT LEVER CANNOT BE LOCKED OR RELEASED, INSPECTION, AT Shift Lock Control System.>	Go to step **3**.
3	**CHECK SHIFT LOCK.**	While brake pedal is depressed, is it possible to move the select lever from the “P” range to other ranges?	Go to step **4**.	Perform the inspection of “SELECT LEVER CANNOT BE LOCKED OR RELEASED”. <Ref. to CS-16, SELECT LEVER CANNOT BE LOCKED OR RELEASED, INSPECTION, AT Shift Lock Control System.>
4	**CHECK SHIFT LOCK.** Shift the select lever to “N” range.	Is it possible to move the select lever from the “N” range to the “P” range?	Go to step **5**.	Perform the inspection of “SELECT LEVER CANNOT BE LOCKED OR RELEASED”. <Ref. to CS-16, SELECT LEVER CANNOT BE LOCKED OR RELEASED, INSPECTION, AT Shift Lock Control System.>

	Step	Check	Yes	No
5	**CHECK SHIFT LOCK.** 1) Shift the select lever to “N” range. 2) Turn the ignition switch to ACC.	While brake pedal is depressed, is it possible to move the select lever from the “N” range to the “P” range?	Go to step **6**.	Perform the inspection of “SELECT LEVER CANNOT BE LOCKED OR RELEASED”. <Ref. to CS-16, SELECT LEVER CANNOT BE LOCKED OR RELEASED, INSPECTION, AT Shift Lock Control System.>
6	**CHECK KEY INTERLOCK.** 1) Shift the select lever to other than “P” range. 2) Turn the ignition switch to OFF.	Can the ignition key be removed?	Perform the inspection of “KEY INTERLOCK CANNOT BE LOCKED OR RELEASED”. <Ref. to CS-19, KEY INTERLOCK DOES NOT LOCK OR RELEASE, INSPECTION, AT Shift Lock Control System.>	Go to step **7**.
7	**CHECK KEY INTERLOCK.** Shift the select lever to “P” range.	Can the ignition key be removed?	AT shift lock system is normal.	Perform the inspection of “KEY INTERLOCK CANNOT BE LOCKED OR RELEASED”. <Ref. to CS-19, KEY INTERLOCK DOES NOT LOCK OR RELEASE, INSPECTION, AT Shift Lock Control System.>

2. BODY INTEGRATED UNIT POWER SUPPLY AND GROUND CIRCUIT

NOTE:
For the DC power supply circuit, refer to “WIRING DIAGRAMS”. <Ref. to WI-15, Power Supply Circuit.>

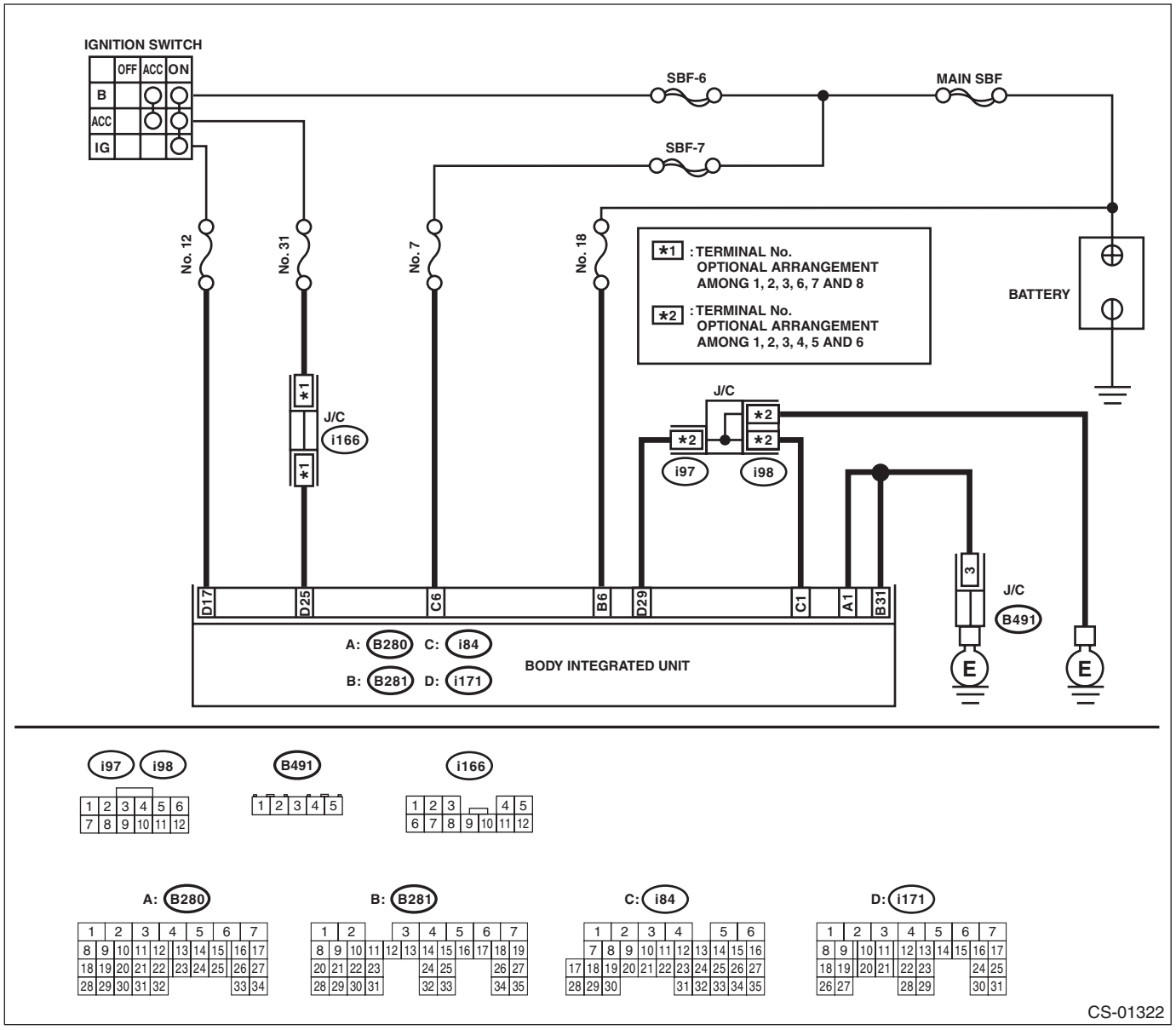

Step		Check	Yes	No
1	**CHECK DTC OF BODY INTEGRATED UNIT.** Check DTC of body integrated unit.	Is the DTC of power line displayed on body integrated unit?	Repair or replace it according to the DTC.	Go to step **2**.
2	**CHECK HARNESS BETWEEN BODY INTEGRATED UNIT AND BATTERY.** 1) Turn the ignition switch to ON. 2) Measure the voltage between body integrated unit and chassis ground. ***Connector & terminal*** ***(i84) No. 6 (+) — Chassis ground (–):*** ***(i171) No. 17 (+) — Chassis ground (–):*** ***(i171) No. 25 (+) — Chassis ground (–):*** ***(B281) No. 6 (+) — Chassis ground (–):***	Is the voltage 9 — 16 V?	Go to step **3**.	Check harness for open circuit between the body integrated unit and the battery or a blown fuse.

	Step	Check	Yes	No
3	**CHECK HARNESS BETWEEN BODY INTEGRATED UNIT AND CHASSIS GROUND.** 1) Turn the ignition switch to OFF. 2) Measure the harness resistance between the body integrated unit and chassis ground. ***Connector & terminal*** ***(B280) No. 1 — Chassis ground:*** ***(B281) No. 31 — Chassis ground:*** ***(i84) No. 1 — Chassis ground:*** ***(i171) No. 29 — Chassis ground:***	Is the resistance less than 1 Ω?	Go to step **4**.	Repair the open circuit of harness between the body integrated unit and chassis ground.
4	**CHECK FOR POOR CONTACT.**	Is there poor contact of connector?	Repair the poor contact.	End.

3. SELECT LEVER CANNOT BE LOCKED OR RELEASED

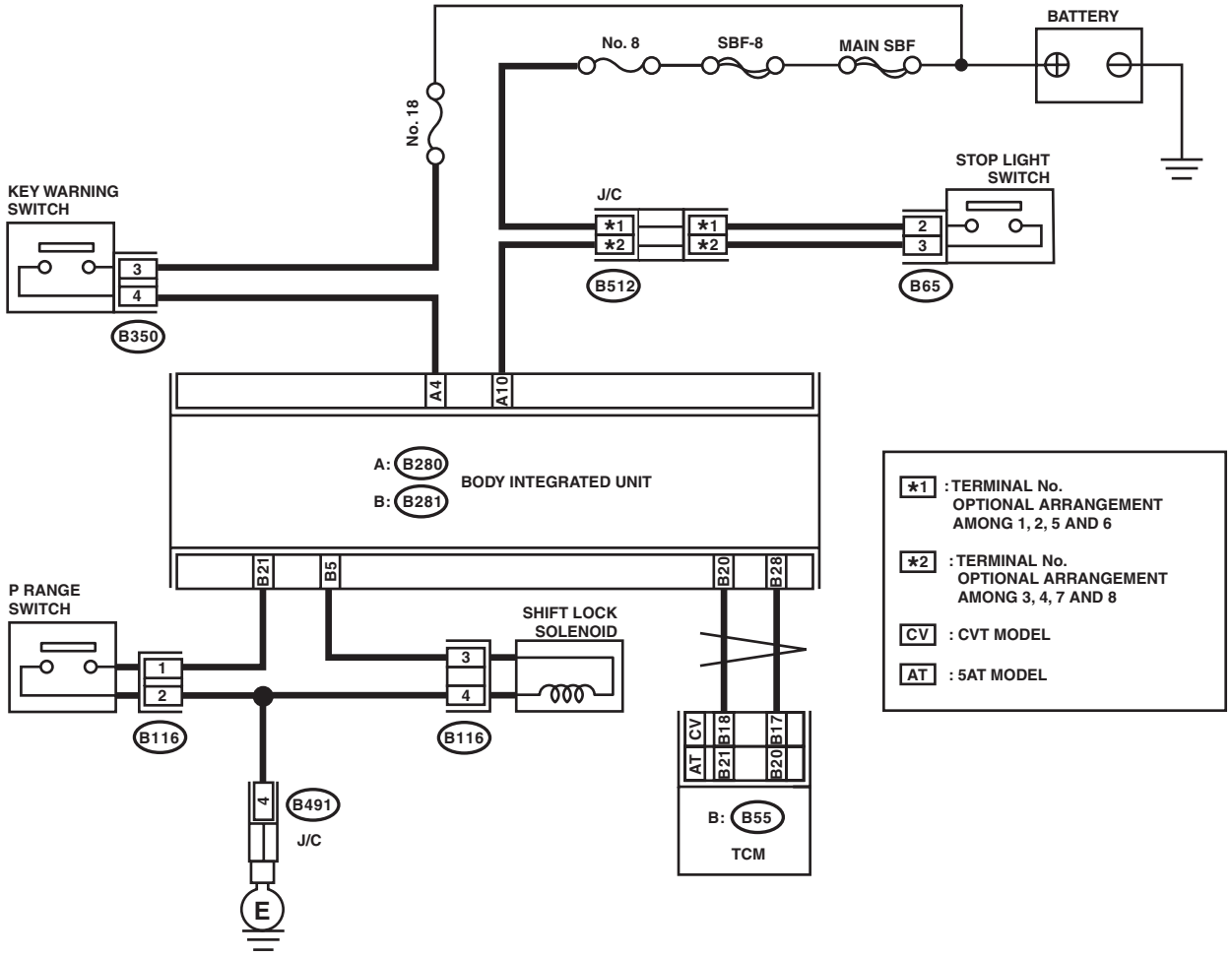

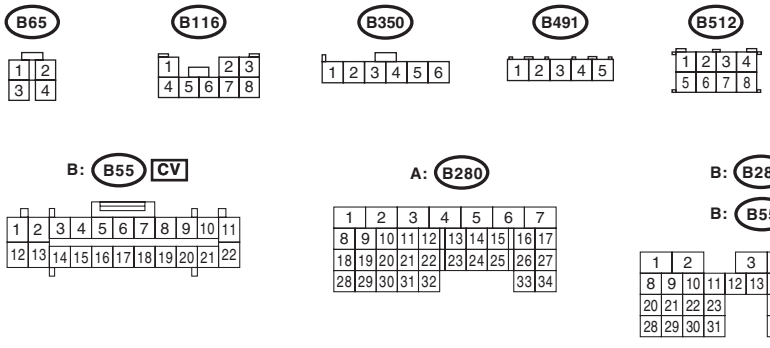

CS-01323

	Step	Check	Yes	No
1	**CHECK BODY INTEGRATED UNIT POWER SUPPLY AND GROUND CIRCUIT.** <Ref. to CS-14, BODY INTEGRATED UNIT POWER SUPPLY AND GROUND CIRCUIT, INSPECTION, AT Shift Lock Control System.>	Is there any fault?	Follow the procedures to perform inspection and repair.	Go to step **2**.
2	**CHECK CURRENT DATA.** 1) Connect the Subaru Select Monitor. 2) Shift the select lever to “P” range. 3) Turn the ignition switch to ON. 4) Select the current data display and display «P SW».	Is the display “ON” in the P range and “OFF” in ranges other than P?	Go to step **3**.	Go to step **8**.
3	**CHECK CURRENT DATA.** Select the current data display and display «Stop Light Switch».	Is “ON” displayed when the brake pedal is depressed and “OFF” displayed when the brake pedal is released?	Go to step **4**.	Go to step **11**.
4	**CHECK BODY INTEGRATED UNIT DTC.** Check the DTC of the body integrated unit when the brake pedal is pressed and when it is released. (Hold each condition for 5 seconds or more.)	Is there a DTC of a current malfunction?	Follow the DTC to perform inspection and repair.	Go to step **5**.
5	**CHECK CURRENT DATA.** Select the current data display and display «Shift Lock Solenoid».	Is “ON” displayed when the brake pedal is depressed and “OFF” displayed when the brake pedal is released?	Go to step **6**.	Replace the body integrated unit. <Ref. to SL-71, Body Integrated Unit.>
6	**CHECK CURRENT DATA.** Select the current data display and display «Shift Position».	Is the display “7” in the “P” range and other than “7” in ranges other than “P”?	Go to step **7**.	Check the following items. • Inhibitor switch • Harness between inhibitor switch and TCM • TCM input signal • TCM CAN communication • Body integrated unit CAN receive
7	**CHECK CURRENT DATA.** 1) Select the current data display and display «Front Wheel Speed». 2) Start the engine. 3) Raise vehicle speed gradually up to approximately 20 km/h.	Is a figure equivalent to the speedometer being indicated?	Go to step **12**.	Check the following items. • Vehicle speed sensor • VDC/ABS CAN communication • Body integrated unit CAN receive Replace the vehicle speed sensor, VDC/ABS or body integrated unit, or both.

	Step	Check	Yes	No
8	**CHECK HARNESS BETWEEN BODY INTEGRATED UNIT AND "P" RANGE SWITCH.** 1) Disconnect the connector from body integrated unit. 2) Disconnect the connector of "P" range switch. 3) Check for open circuit of harness, short circuit to battery or short circuit to ground between the body integrated unit and "P" range switch. ***Connector & terminal*** ***(B281) No. 21 — (B116) No. 1:***	Is the harness normal?	Repair or replace the harness between the body integrated unit and the "P" range switch.	Go to step **9**.
9	**CHECK HARNESS BETWEEN "P" RANGE SWITCH AND CHASSIS GROUND.** Measure the resistance of harness between "P" range switch and chassis ground. ***Connector & terminal*** ***(B116) No. 2 — Chassis ground:***	Is it less than 10 Ω?	Go to step **10**.	Repair the harness between the "P" range switch and chassis ground.
10	**CHECK "P" RANGE SWITCH.** Measure the resistance between "P" range switch connector terminals. ***Terminals*** ***No. 2 — No. 1:***	Is it less than 10 Ω in the "P" range, and 1 MΩ or more in ranges other than "P"?	Replace the body integrated unit. <Ref. to SL-71, Body Integrated Unit.>	Replace the "P" range switch. <Ref. to CS-53, AT Shift Lock Solenoid and "P" Range Switch.>
11	**CHECK STOP LIGHT SWITCH INPUT SIGNAL.** 1) Disconnect the connector from body integrated unit. 2) Measure the voltage between the body integrated unit connector terminal and chassis ground. ***Connector & terminal*** ***(B280) No. 10 (+) — Chassis ground (–):***	Is the voltage 9 — 16 V when the brake pedal is depressed, and less than 1.5 V when not pressed?	Replace the body integrated unit. <Ref. to SL-71, Body Integrated Unit.>	Check the stop light system.
12	**CHECK SOLENOID UNIT OPERATION.** Connect the battery to the solenoid unit connector terminal, and operate the solenoid unit. ***Terminals*** ***No. 3 (+) — No. 4 (–):***	Does the solenoid unit operate normally?	Check the lock mechanism of the select lever body.	Replace the solenoid unit. <Ref. to CS-53, AT Shift Lock Solenoid and "P" Range Switch.>

4. KEY INTERLOCK DOES NOT LOCK OR RELEASE

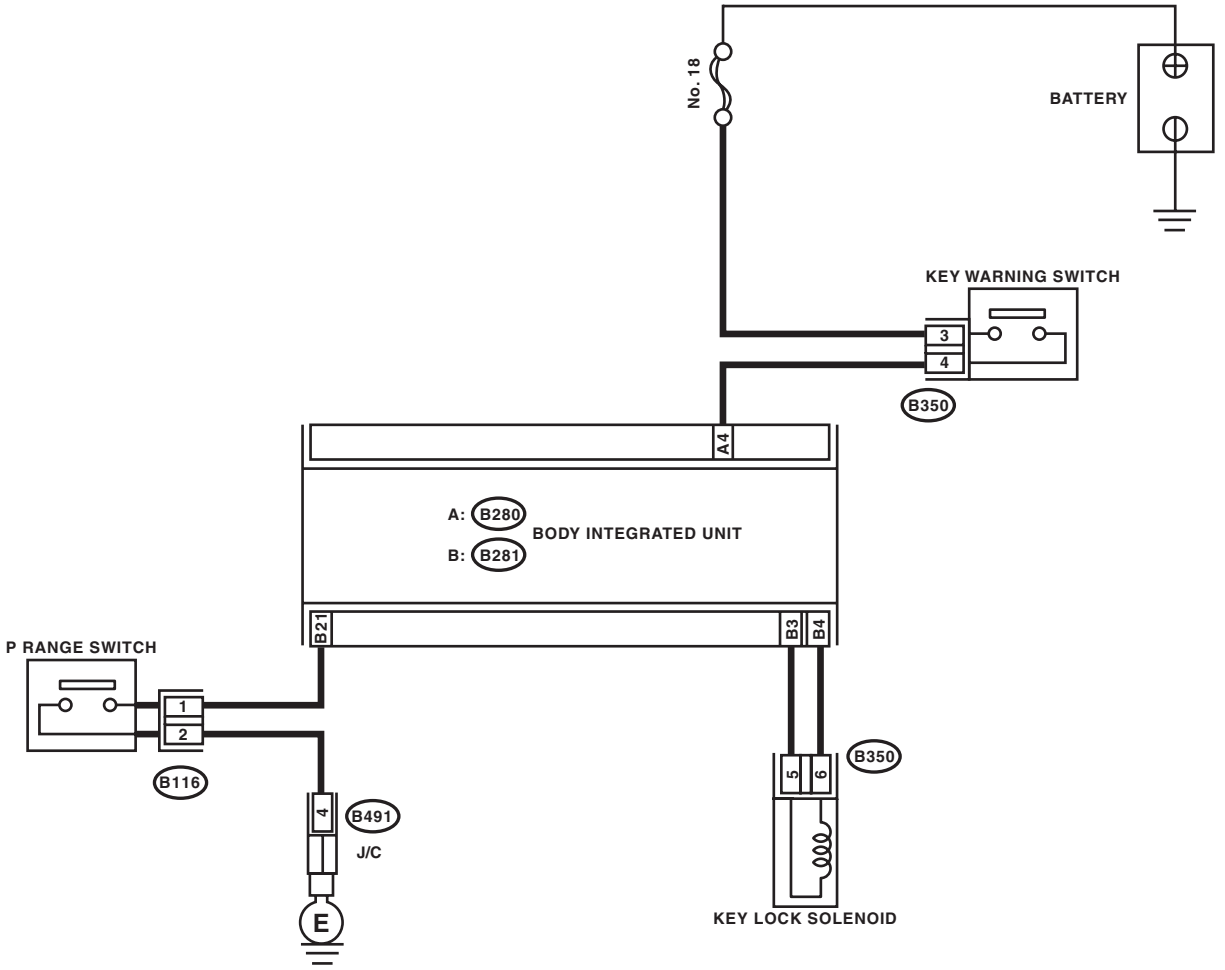

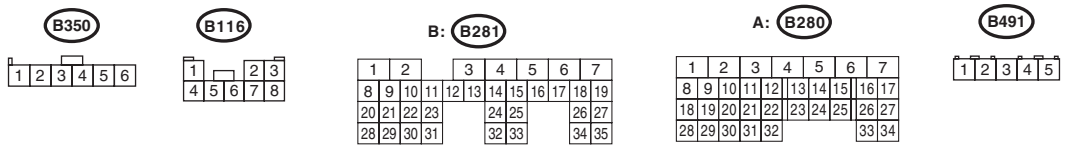

CS-01241

	Step	Check	Yes	No
1	**CHECK BODY INTEGRATED UNIT POWER SUPPLY AND GROUND CIRCUIT.** <Ref. to CS-14, BODY INTEGRATED UNIT POWER SUPPLY AND GROUND CIRCUIT, INSPECTION, AT Shift Lock Control System.>	Is there any fault?	Follow the procedures to inspect and repair.	Go to step **2**.
2	**CHECK CURRENT DATA.** 1) Connect the Subaru Select Monitor. 2) Shift the select lever to "P" range. 3) Turn the ignition switch to ON. 4) Select the current data display and display «P SW».	Is the display "ON" in the P range and "OFF" in ranges other than P?	Go to step **3**.	Go to step **5**.
3	**CHECK CURRENT DATA.** 1) Select the current data display and display the «key-lock warning SW». 2) Turn the ignition switch to OFF.	Does the display change from "ON" ←→ "OFF" when the key is inserted and removed?	Go to step **4**.	Go to step **8**.
4	**CHECK CURRENT DATA.** 1) Turn the ignition switch to OFF. 2) Select the current data display and display «Key locking output».	Is the display "Unlock" in the "P" range and "Lock" in ranges other than "P"?	Go to step **9**.	Go to step **5**.
5	**CHECK HARNESS BETWEEN BODY INTEGRATED UNIT AND "P" RANGE SWITCH.** 1) Disconnect the connector from body integrated unit. 2) Disconnect the connector of "P" range switch. 3) Check for open circuit of harness, short circuit to battery or short circuit to ground between the body integrated unit and "P" range switch. ***Connector & terminal*** ***(B281) No. 21 — (B116) No. 1:***	Is the harness normal?	Repair or replace the harness between the body integrated unit and the "P" range switch.	Go to step **6**.
6	**CHECK HARNESS BETWEEN "P" RANGE SWITCH AND CHASSIS GROUND.** Measure the resistance of harness between "P" range switch and chassis ground. ***Connector & terminal*** ***(B116) No. 2 — Chassis ground:***	Is it less than 10 Ω?	Go to step **7**.	Repair the harness between the "P" range switch and chassis ground.
7	**CHECK "P" RANGE SWITCH.** Measure the resistance between "P" range switch connector terminals. ***Terminals*** ***No. 2 — No. 1:***	Is it less than 10 Ω in the "P" range, and 1 MΩ or more in ranges other than "P"?	Replace the body integrated unit. <Ref. to SL-71, Body Integrated Unit.>	Replace the "P" range switch. <Ref. to CS-53, AT Shift Lock Solenoid and "P" Range Switch.>
8	**CHECK HARNESS BETWEEN BATTERY AND KEY WARNING SWITCH AND BODY INTEGRATED UNIT.** 1) Disconnect the connector from body integrated unit. 2) Measure the voltage between body integrated unit and chassis ground. ***Connector & terminal*** ***(B280) No. 4 (+) — Chassis ground (–):***	Is the display 9 — 16 V when the key is inserted, and less than 1.5 V with the key removed?	Replace the body integrated unit. <Ref. to SL-71, Body Integrated Unit.>	Check the following items. • Key warning switch • Harness/fuse • Ignition circuit

	Step	Check	Yes	No
9	**CHECK HARNESS BETWEEN BODY INTEGRATED UNIT AND KEY LOCK SOLENOID.** 1) Disconnect the connector from body integrated unit. 2) Disconnect the connector of key lock solenoid. 3) Check for open circuit of harness, short circuit to battery or short circuit to ground between the body integrated unit and key lock solenoid. ***Connector & terminal*** ***(B281) No. 3 — (B350) No. 5:*** ***(B281) No. 4 — (B350) No. 6:***	Is the harness normal?	Repair or replace the harness between the body integrated unit and the key lock solenoid.	Go to step **10**.
10	**CHECK KEY LOCK SOLENOID OPERATION.** Connect the battery to the key lock solenoid connector terminal, and operate the solenoid.	Does the key lock solenoid operate normally?	Go to step **11**.	Replace the key lock solenoid.
11	**CHECK OUTPUT OF BODY INTEGRATED UNIT.** 1) Connect all connectors. 2) Insert the key. 3) Shift the select lever to “P” range. 4) Turn the ignition switch to OFF. 5) Using an oscilloscope, measure the voltage between body integrated unit and chassis ground. ***Connector & terminal*** ***Lock*** ***(B281) No. 4 (+) — Chassis ground (–):*** ***Unlock*** ***(B281) No. 3 (+) — Chassis ground (–):***	Is the lock output voltage 7 — 14 V when the grip button of select lever is pressed? Is the unlock output voltage 7 — 14 V when the grip button of select lever is released? <Ref. to CS-9, ELECTRICAL SPECIFICATION, AT Shift Lock Control System.>	Check the lock mechanism of the steering lock body.	Replace the body integrated unit. <Ref. to SL-71, Body Integrated Unit.>

3. Select Lever

A: REMOVAL

1) Shift the select lever to “N” range.
2) Disconnect the ground cable from battery.
3) Lift up the vehicle.
4) Remove the rear exhaust pipe.
• 2.5 L non-turbo model
<Ref. to EX(H4SO)-9, REMOVAL, Rear Exhaust Pipe.>
• 3.6 L model
<Ref. to EX(H6DO)-8, REMOVAL, Rear Exhaust Pipe.>
5) Remove the heat shield cover.

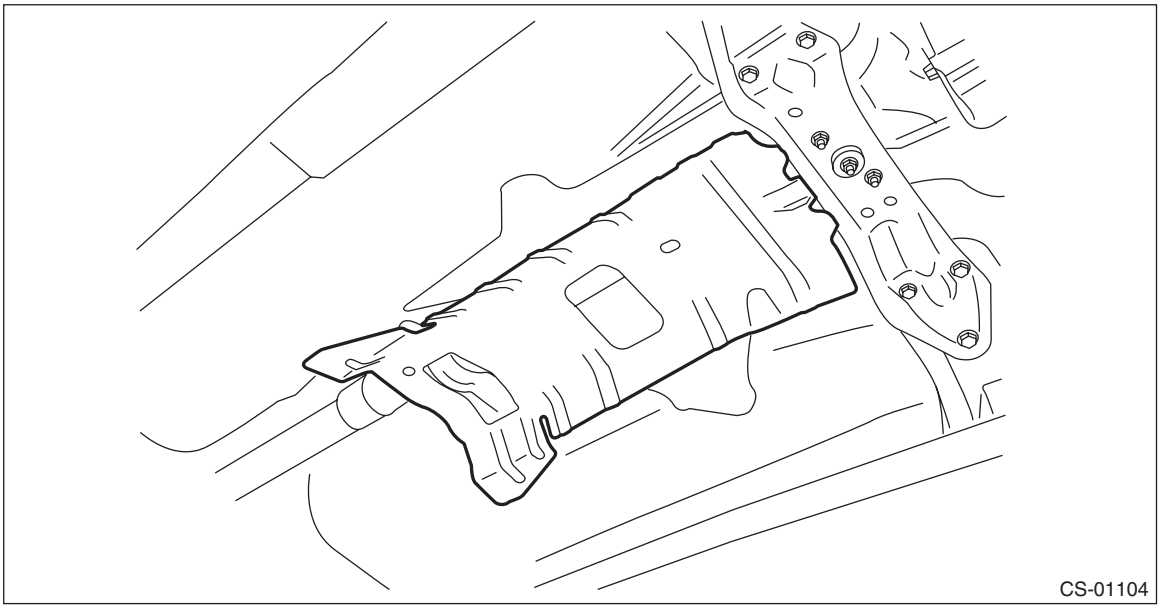
CS-01104

6) Remove the cable from arm assembly.

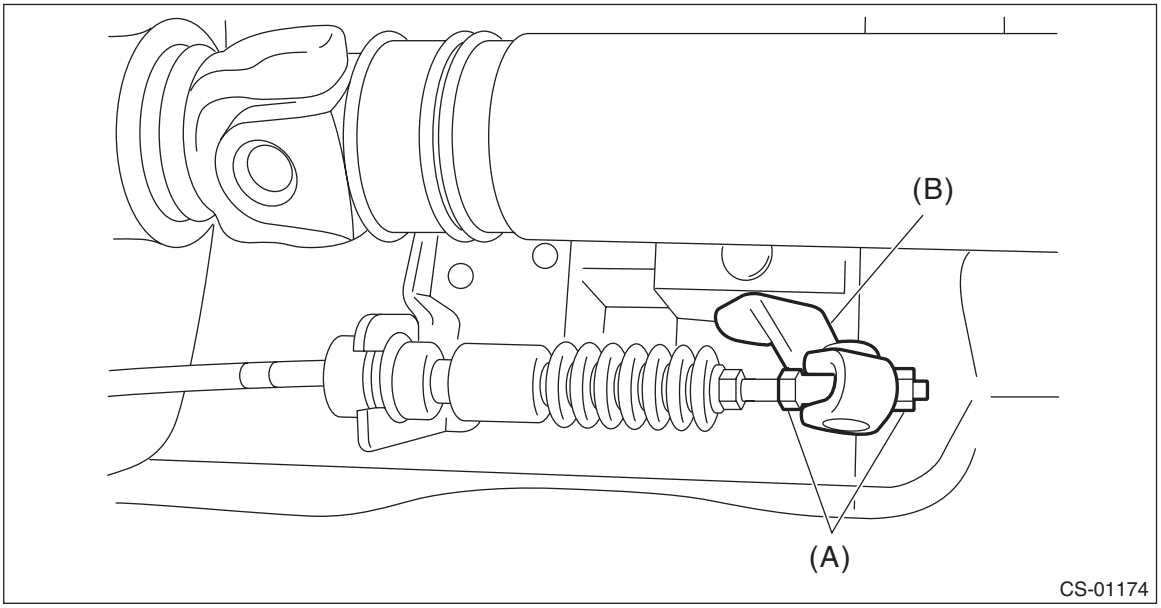

CS-01174

(A) Nut
(B) Arm ASSY

7) Raise the claw of clamp and remove the cable.

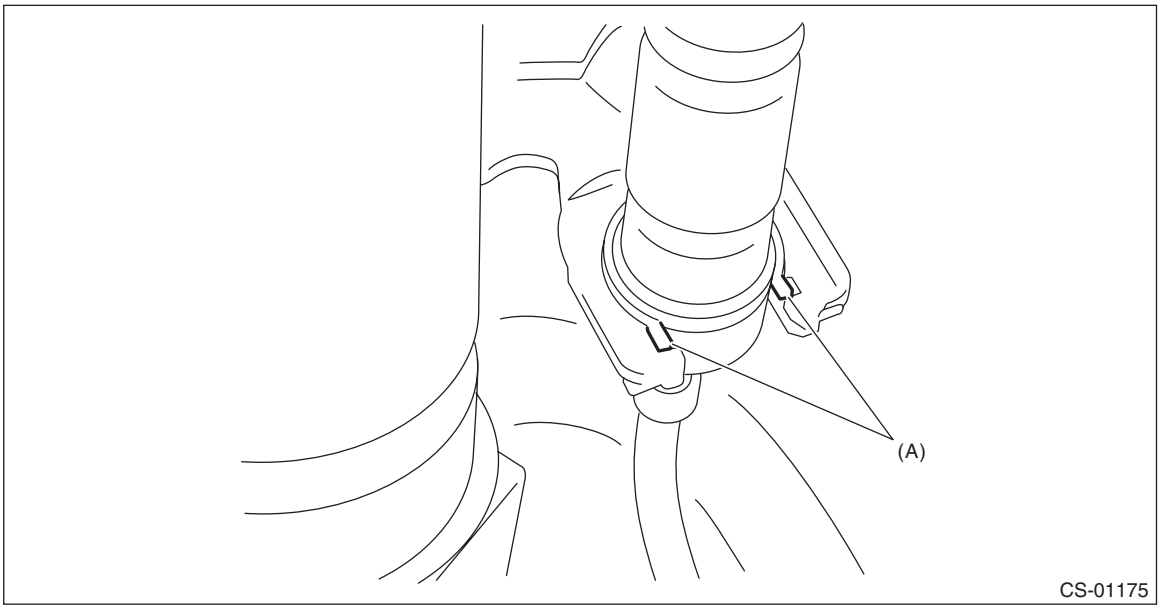

(A) Claw

8) Lower the vehicle.
9) Lower the cover grip AT vertically toward the lever.

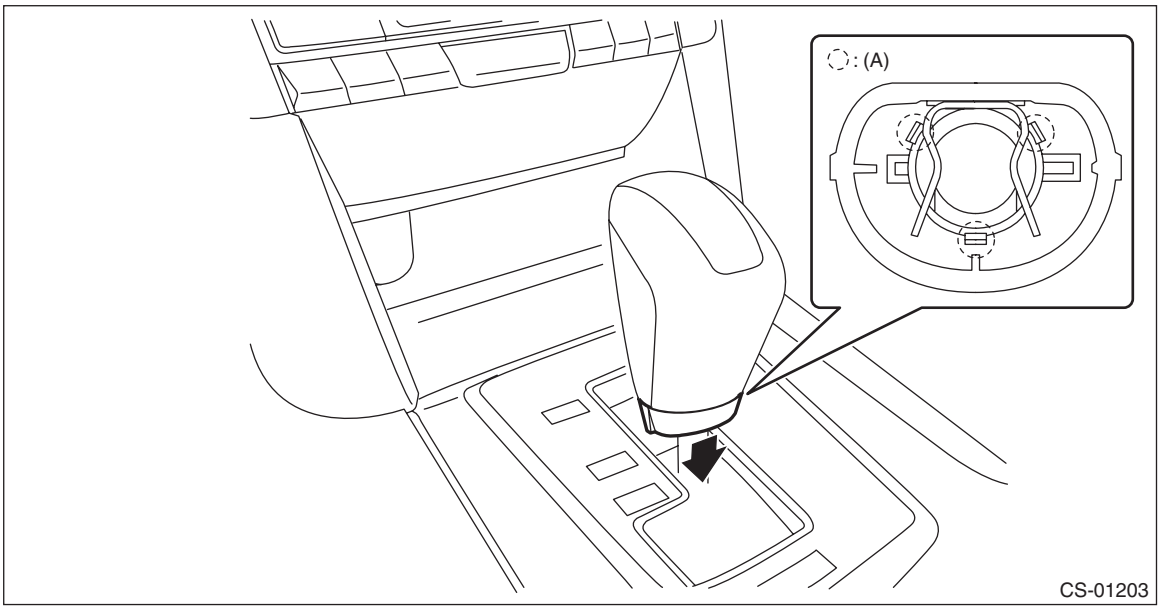

(A) Claws (3 places)

10) Remove the clamp grip pin.

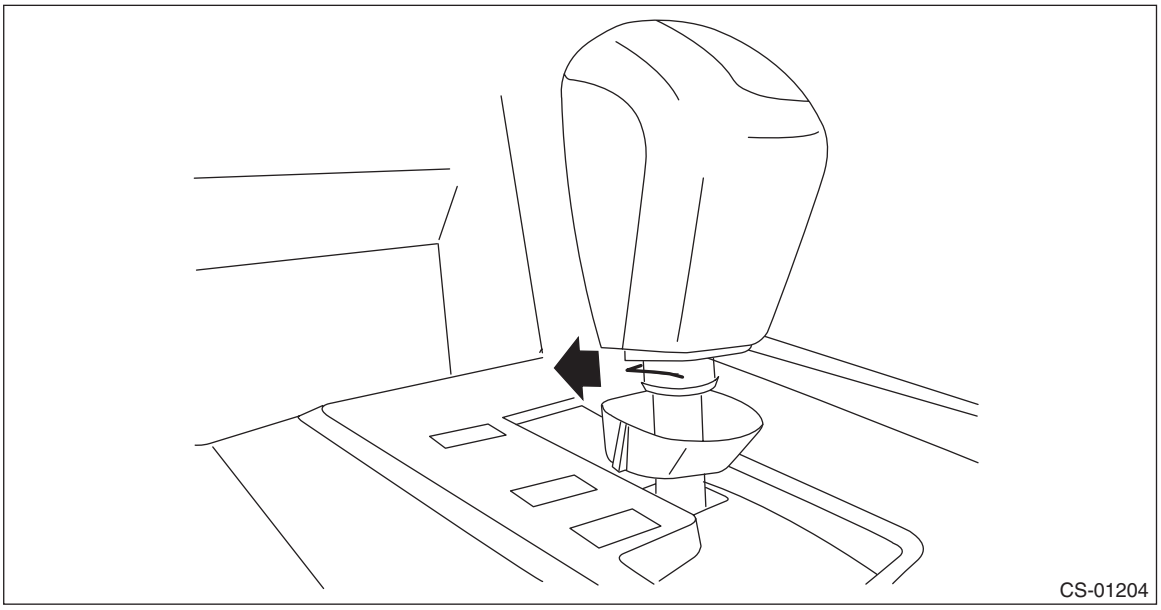

11) Remove the grip assembly.

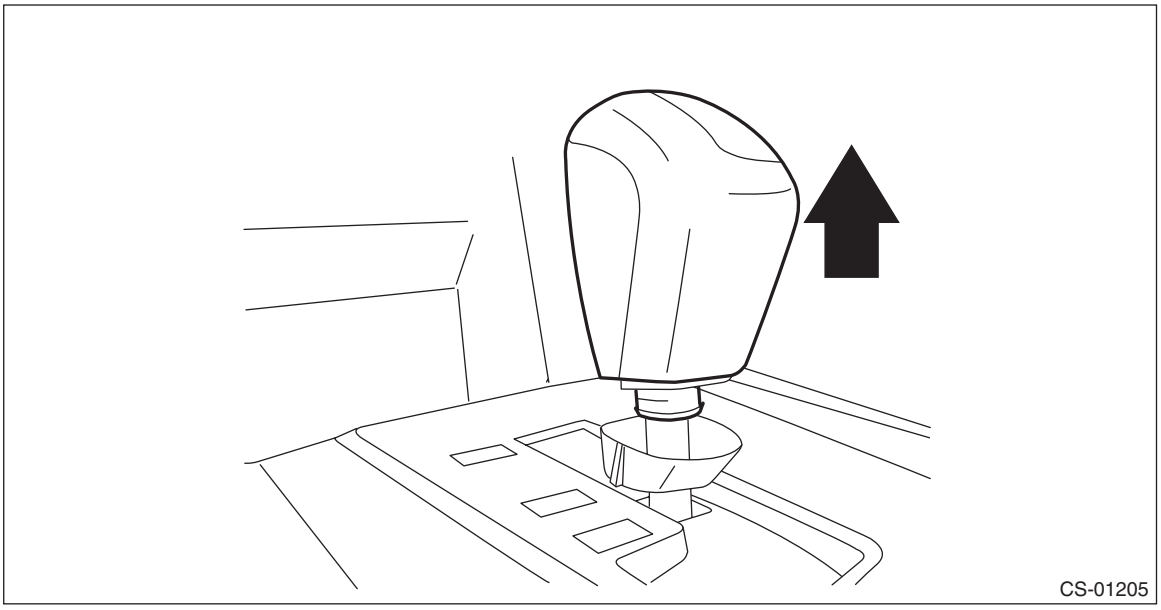

12) Turn over the rubber and remove the console front cover assembly.

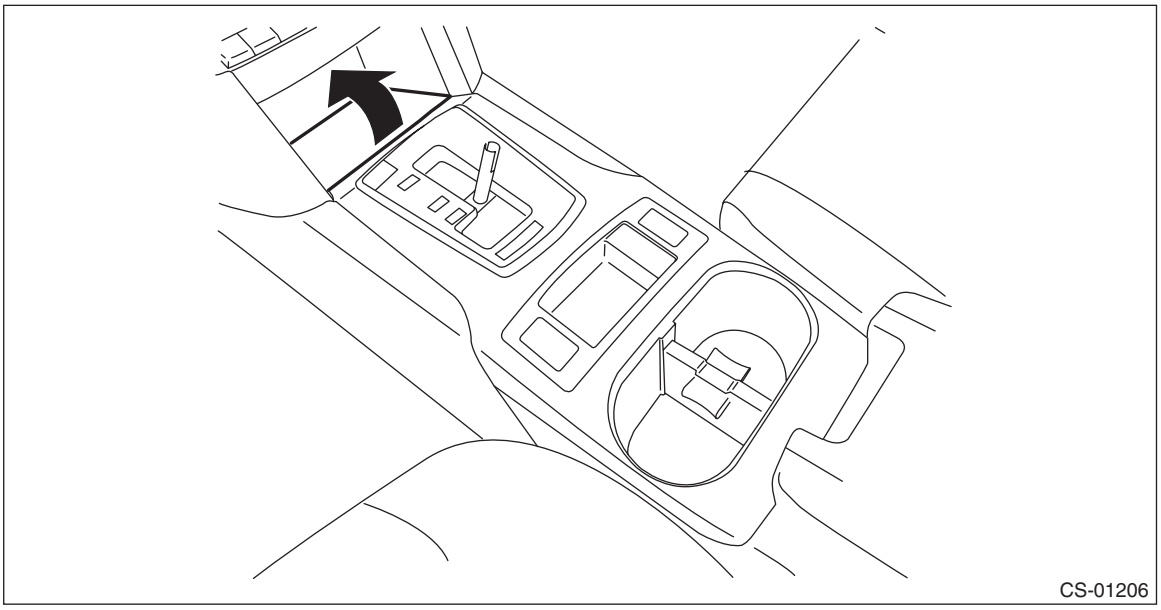

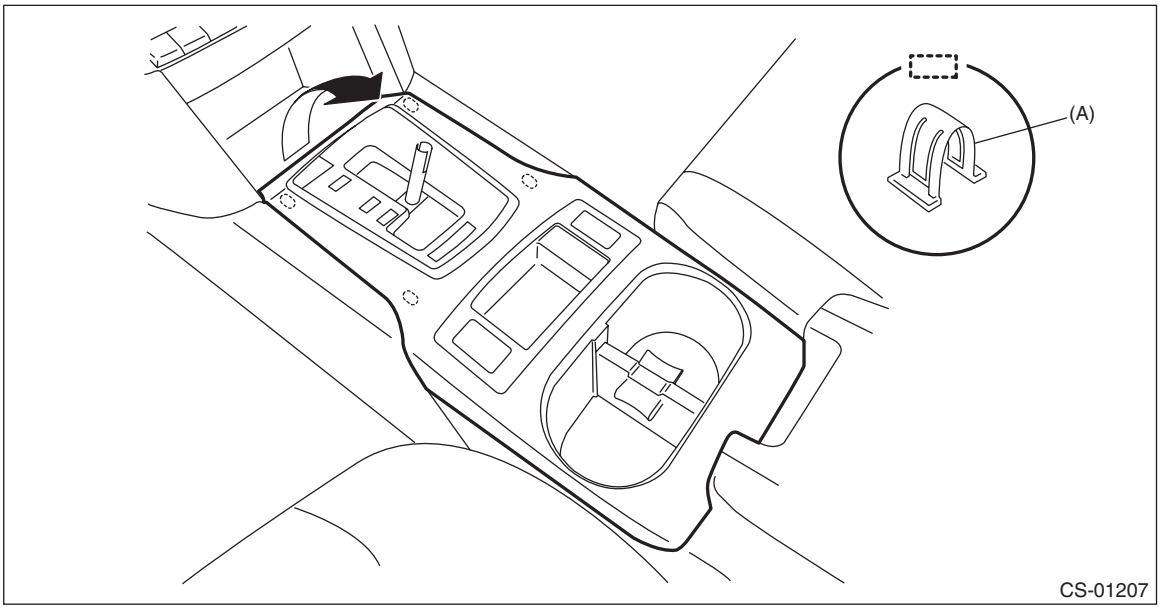

(A) Hooks (4 places)

13) Remove the console box. <Ref. to EI-73, REMOVAL, Console Box.>

14) Remove the harness clip from the select lever.

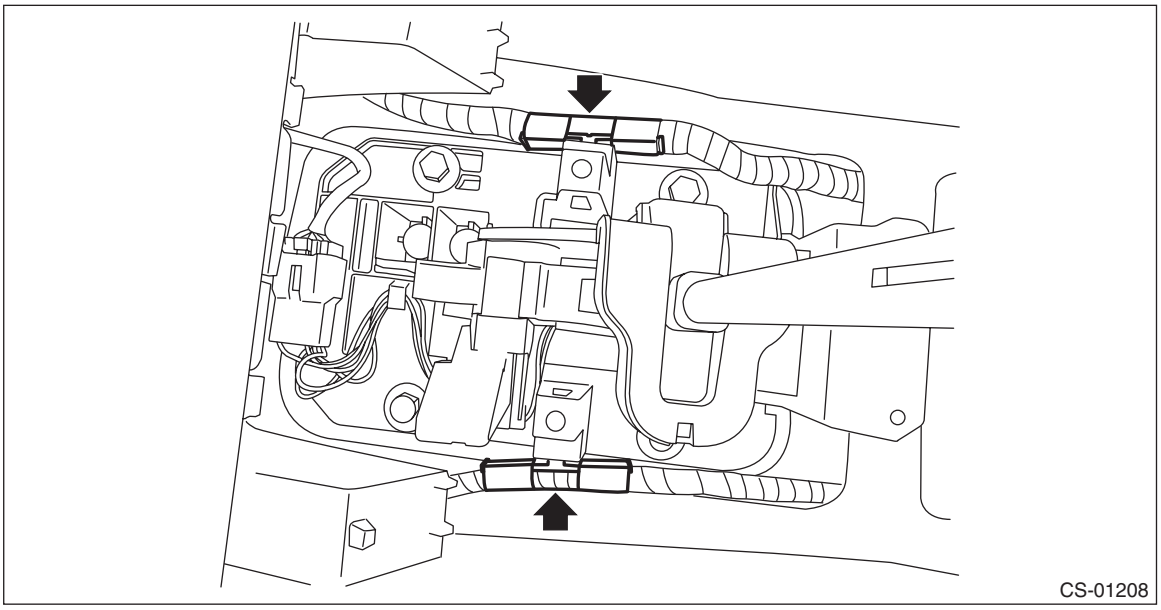

15) Disconnect the harness connector.

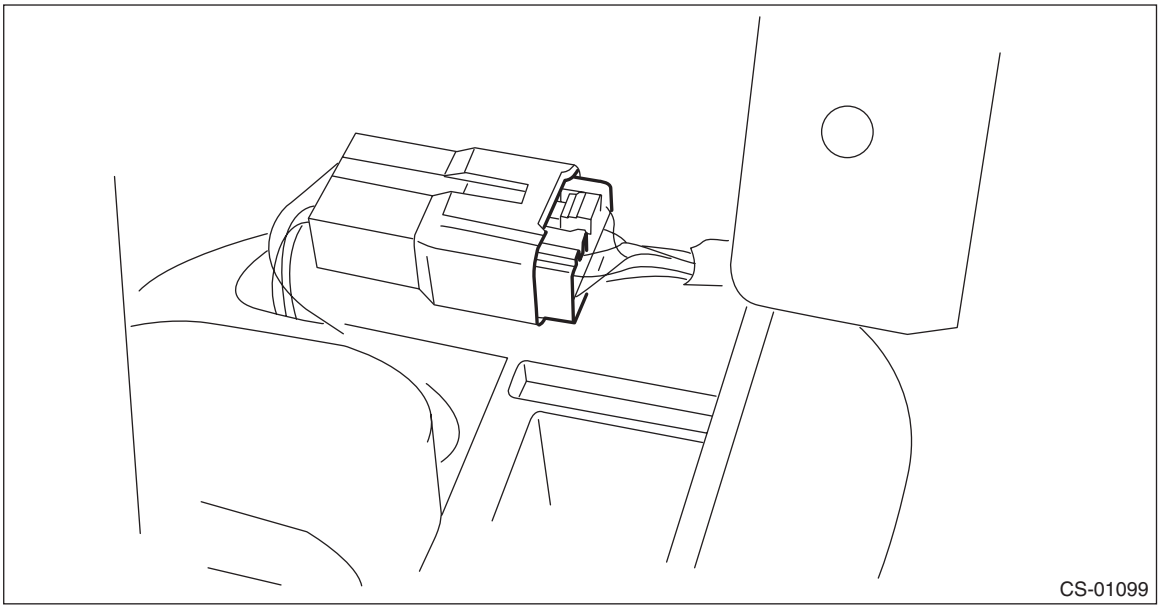

16) Remove the four bolts to remove the select lever assembly.

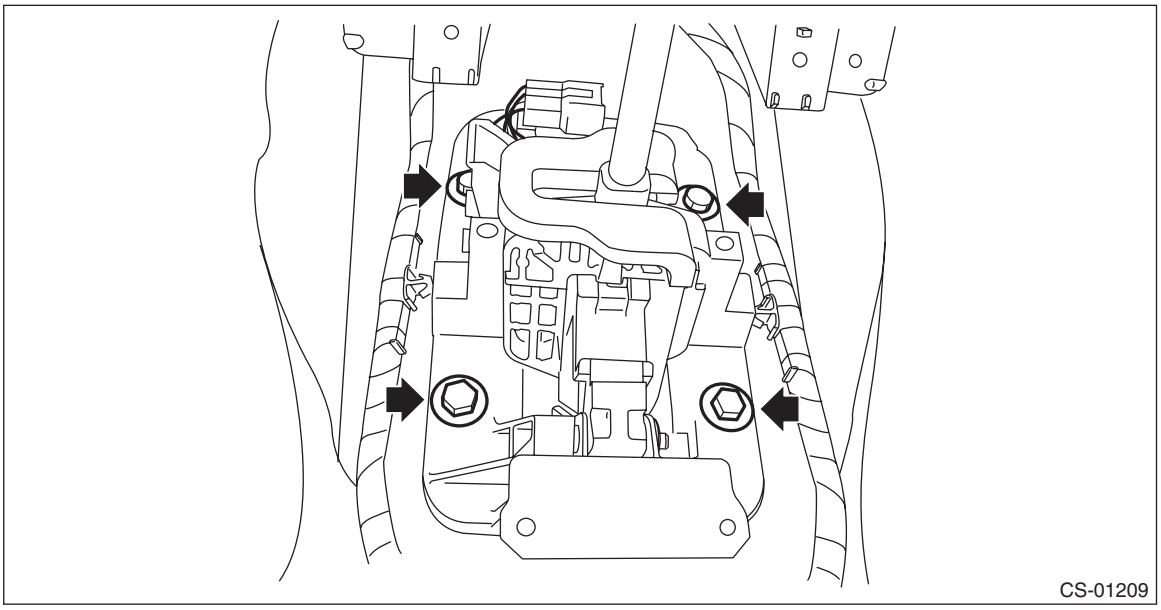

B: INSTALLATION

1) Set the select lever assembly to the vehicle body.
2) Tighten the four mounting bolts to attach the select lever assembly to the vehicle body.

Tightening torque:
18 N·m (1.8 kgf-m, 13.3 ft-lb)

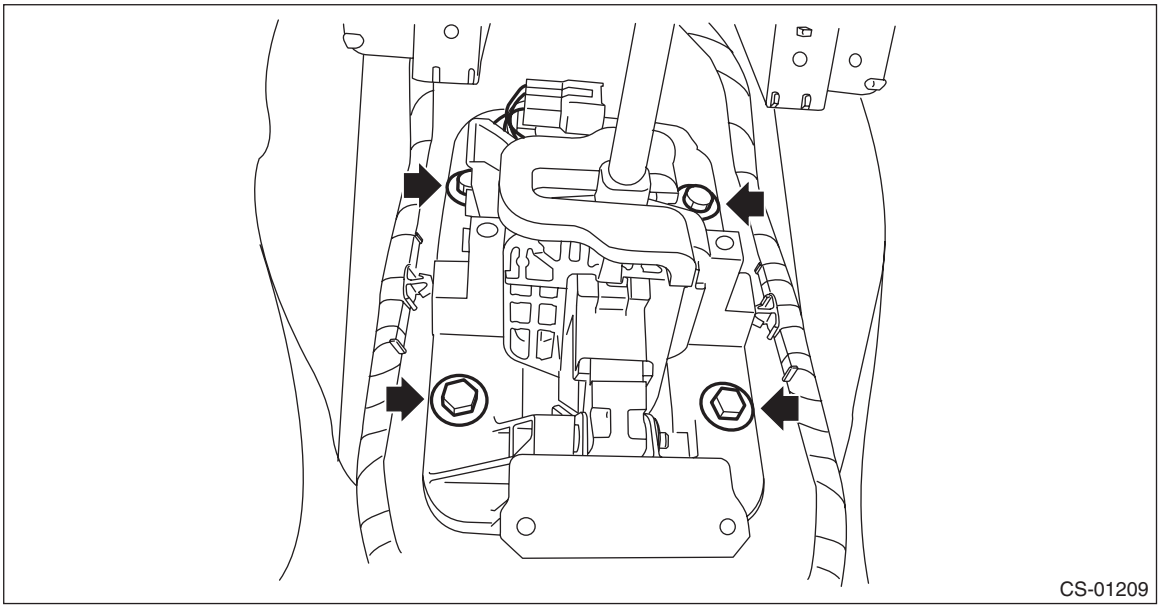

3) Connect the harness connector.

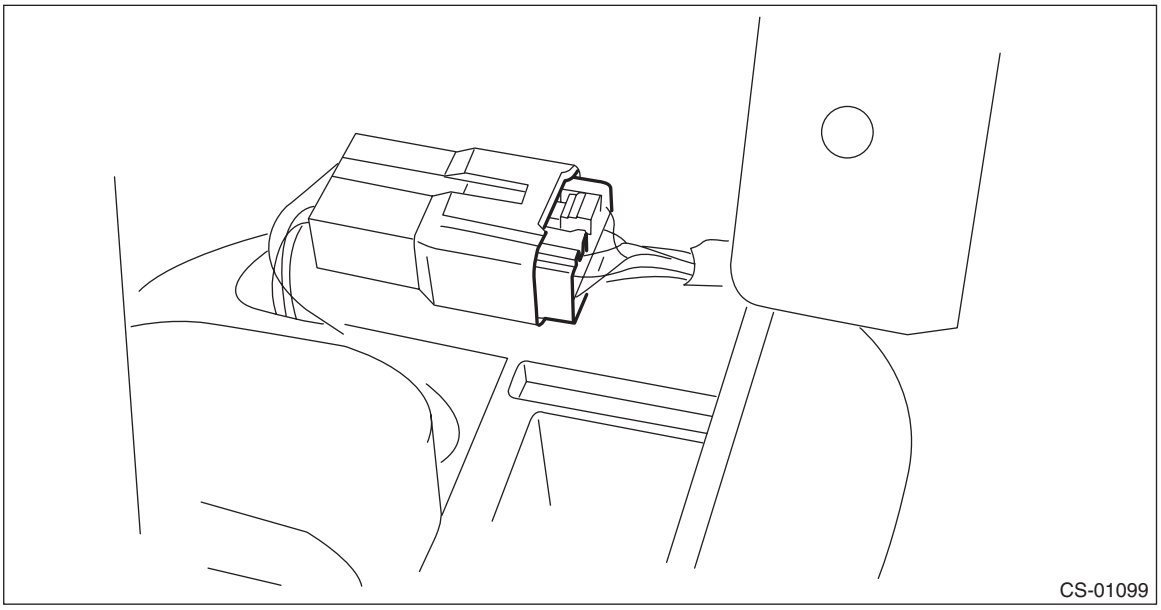

4) Install the harness clip to the select lever assembly.

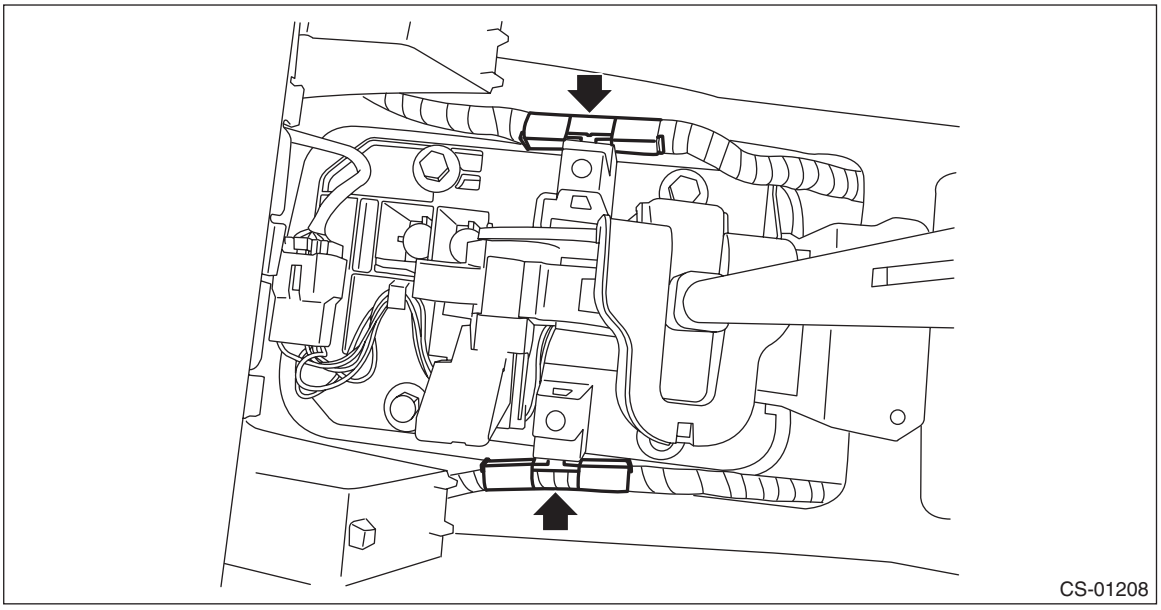

5) Shift the select lever to “N” range.
6) Install the console box and the console front cover assembly. <Ref. to EI-75, INSTALLATION, Console Box.>

7) Accessing from the button side of the grip, attach the clamp grip pin.

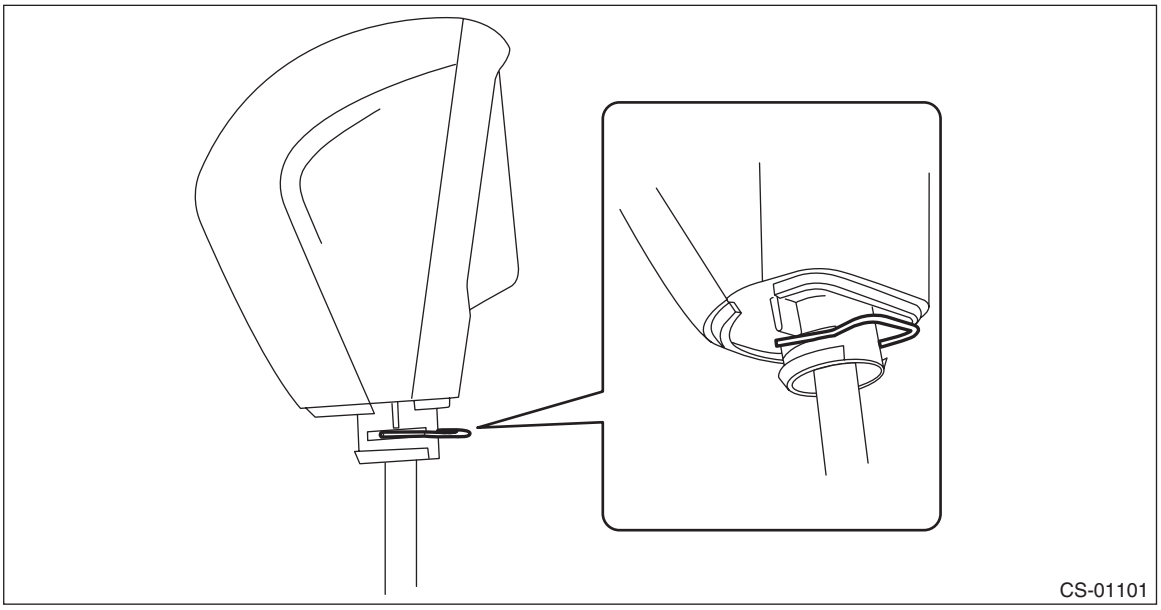

8) Install the cover grip AT securely.

NOTE:
After installation, check that the cover grip AT cannot be detached.

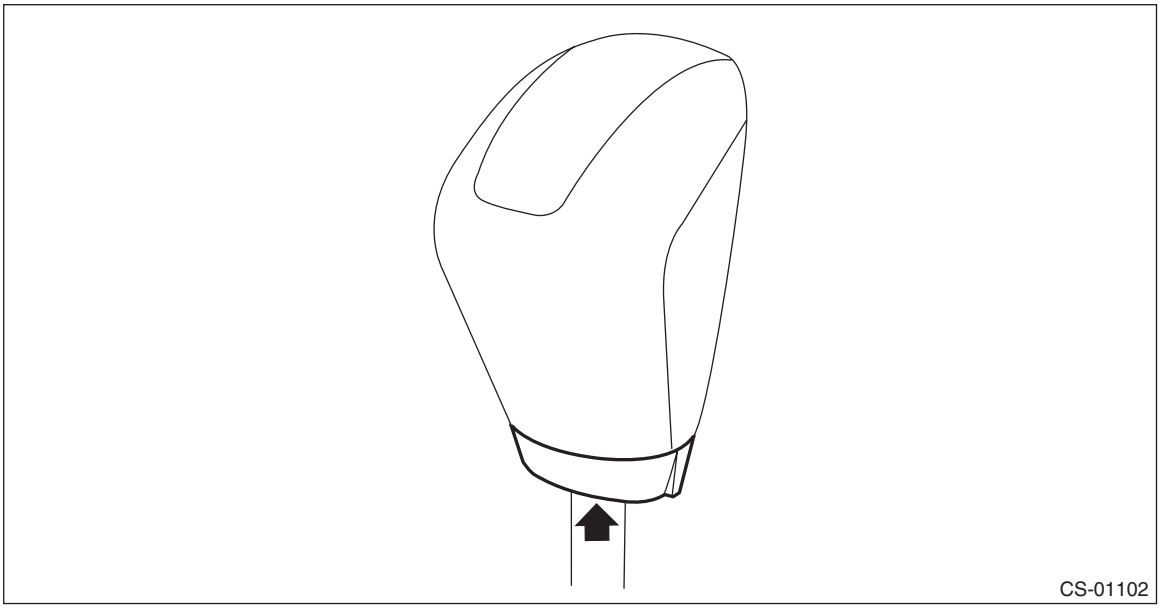

9) Insert the grip assembly to the select lever and press it down until a click is heard.

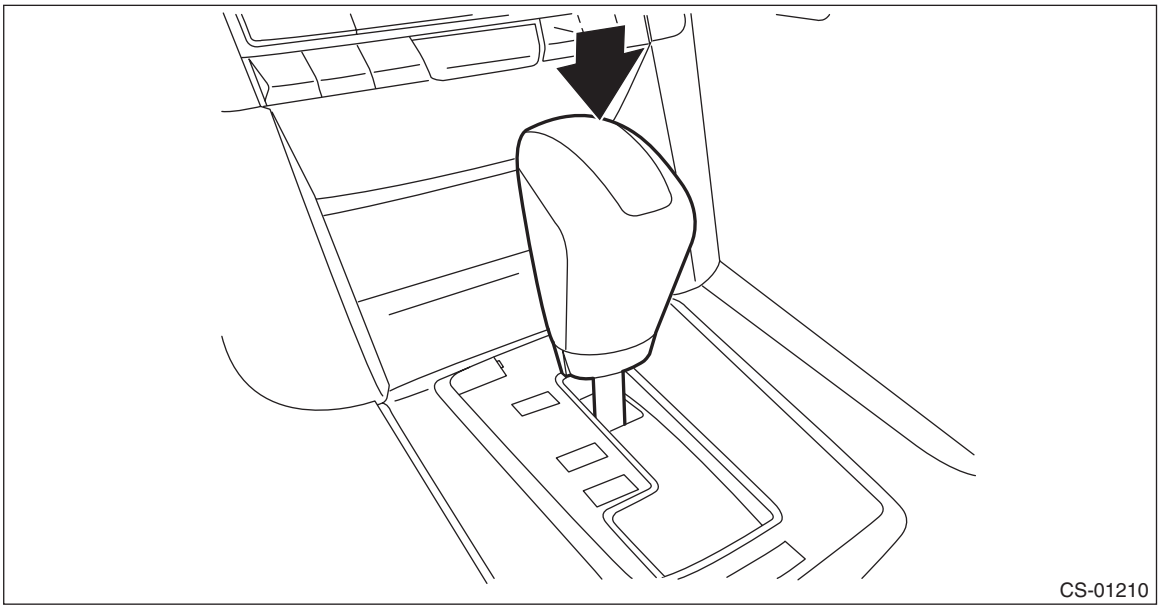

10) After installation of grip, check the following points.
- The grip will not come off.
- The button on the grip operates normally.

11) Lift up the vehicle.
12) Shift the range select lever to “N” range.
13) Secure the cable to the bracket. <Ref. to CS-46, INSTALLATION, Select Cable.>
14) Adjust the select cable position. <Ref. to CS-50, ADJUSTMENT, Select Cable.>
15) After adjustment, confirm that the select lever operates properly at all range positions using the shift lock release button.
16) Install the heat shield cover.

Tightening torque:
18 N·m (1.8 kgf-m, 13.3 ft-lb)

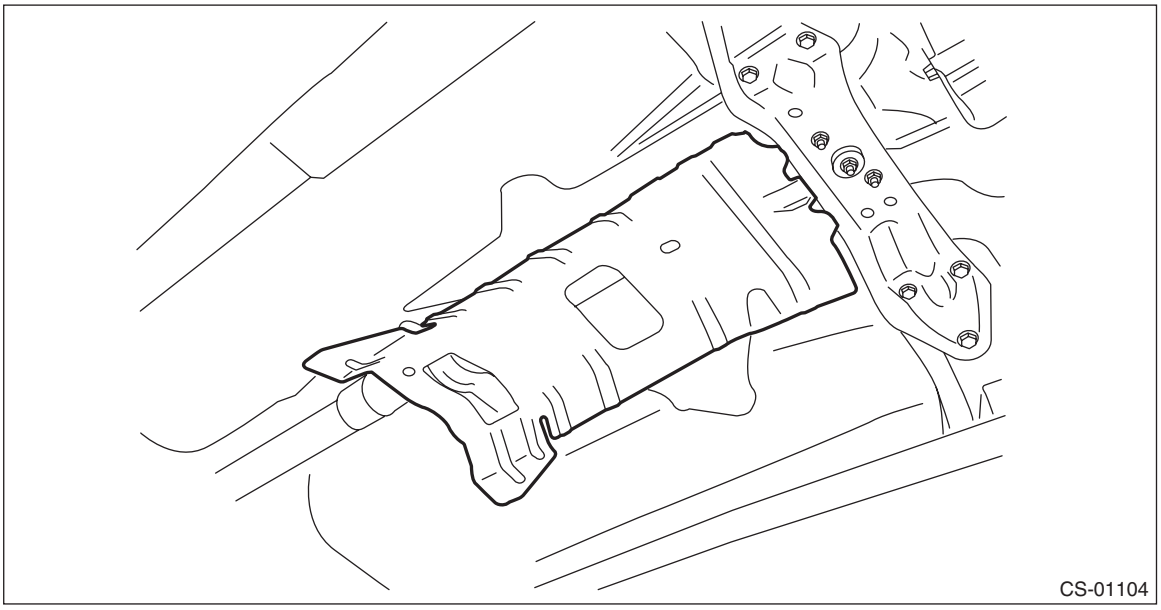

17) Install the rear exhaust pipe.
- 2.5 L non-turbo model

<Ref. to EX(H4SO)-9, INSTALLATION, Rear Exhaust Pipe.>
- 3.6 L model

<Ref. to EX(H6DO)-8, INSTALLATION, Rear Exhaust Pipe.>

18) Inspect the following items. If a malfunction is found in the inspection, adjust the select cable or inhibitor switch (CVT model).
(1) The shift lock operates normally. <Ref. to CS-12, SHIFT LOCK OPERATION, INSPECTION, AT Shift Lock Control System.>
(2) Engine starts when the select lever is in “P” or “N” range, but not in other ranges.
(3) Back-up light illuminates when the select lever is in the “R” range, but not in other ranges.
(4) Select lever and indicator positions are matched.

C: DISASSEMBLY

1. GRIP ASSY

1) Remove the cover grip AT.

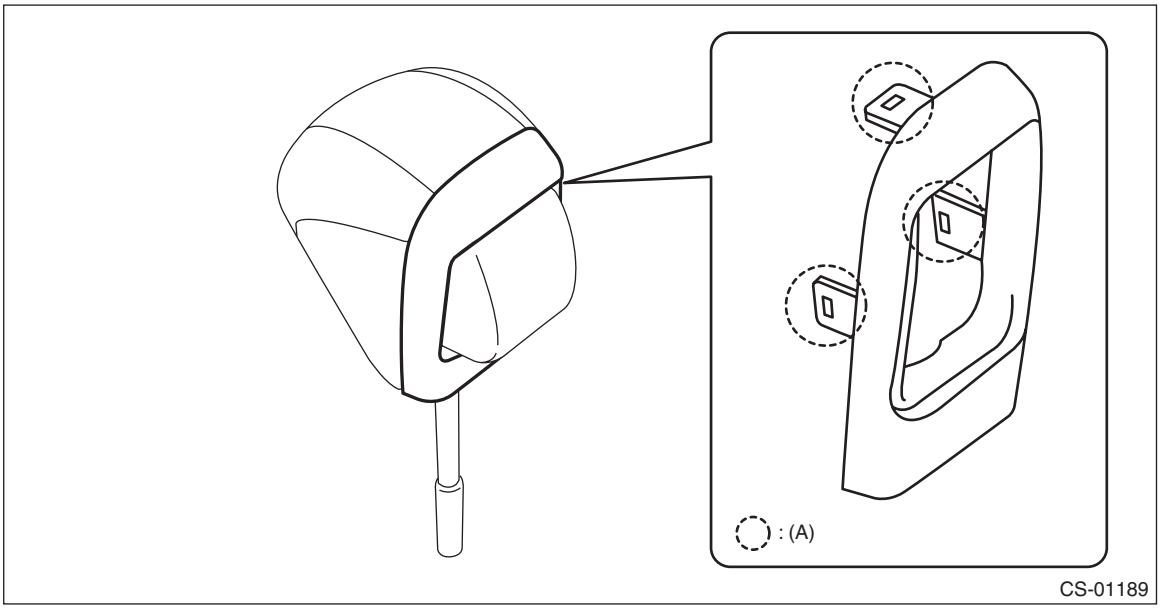

(A) Claws (3 places)

2) Remove the button assembly-AT.

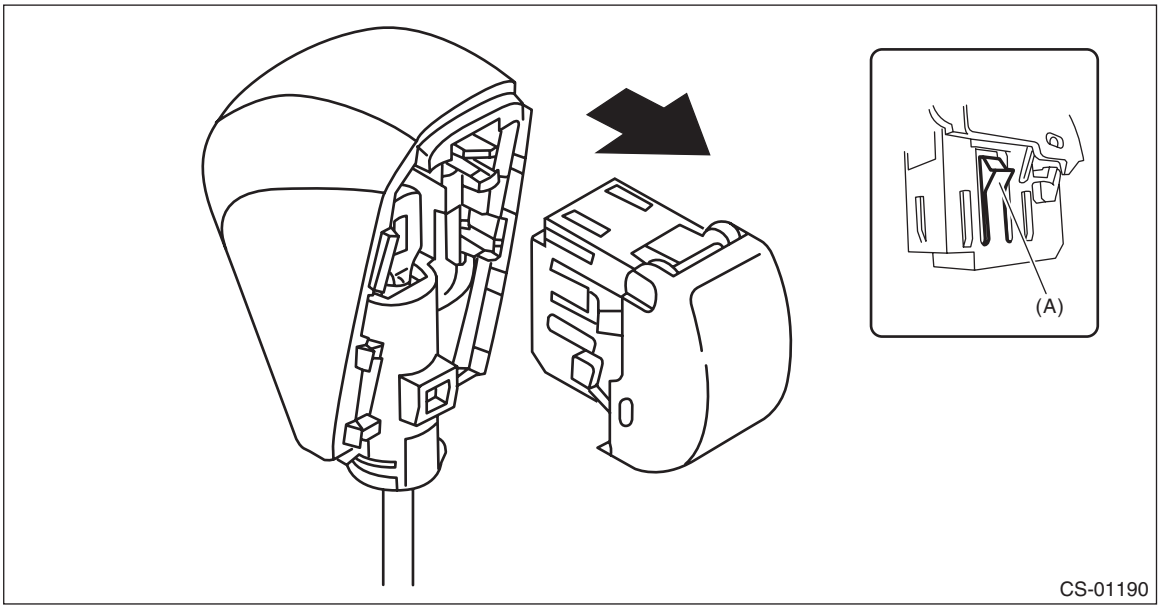

(A) Claw

3) Remove the rod COMPL.

2. AT SELECT LEVER ASSEMBLY

1) Remove the spacer plate.

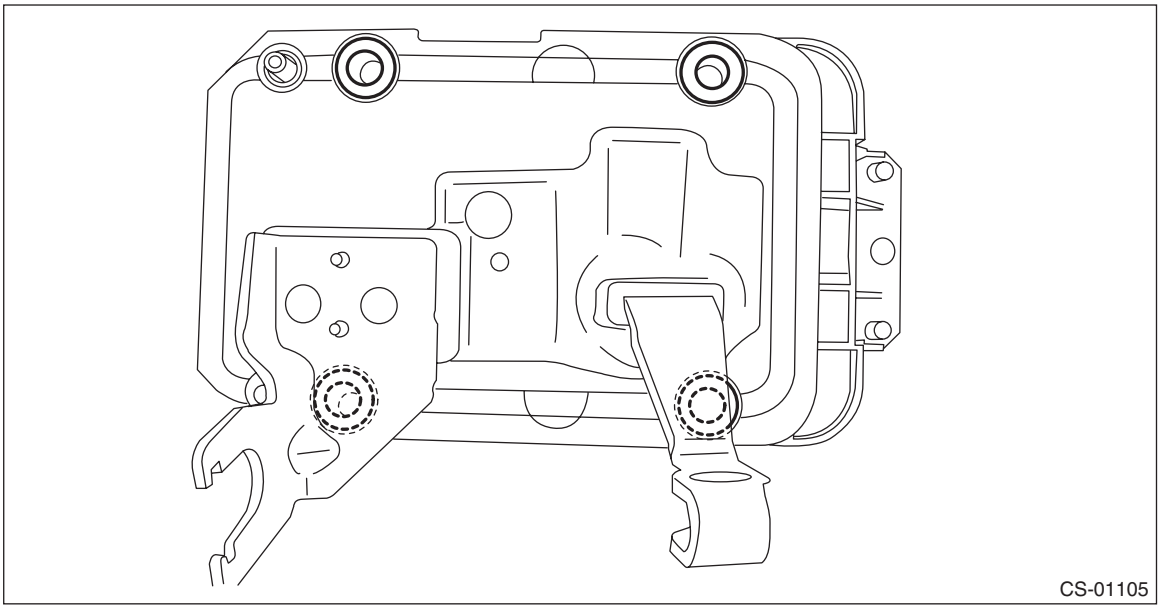

2) Remove the gasket.

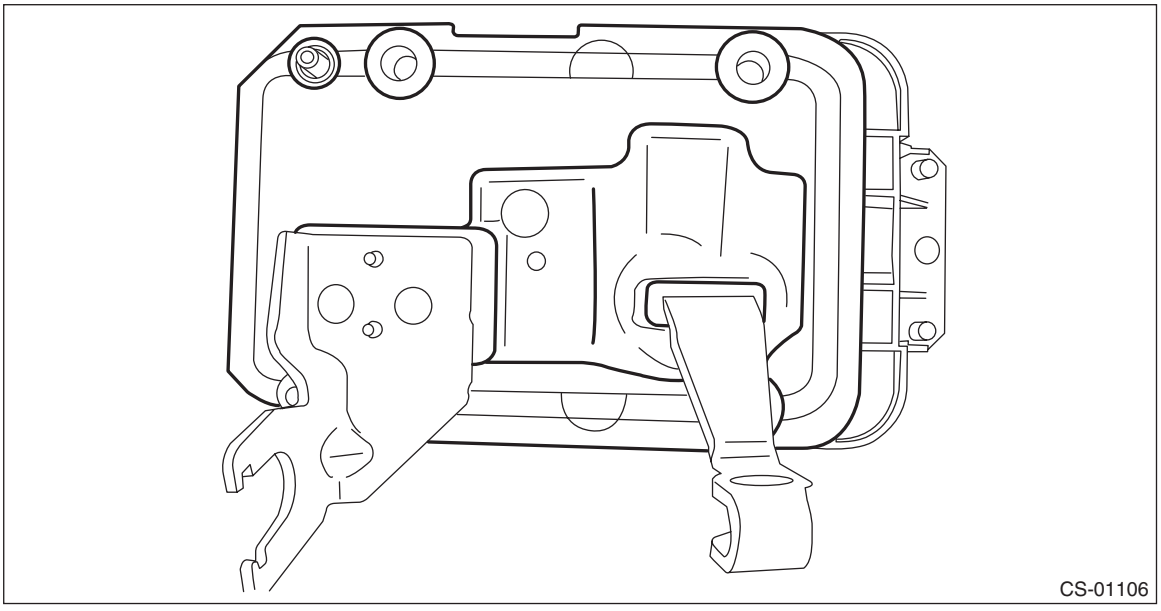

3) Insert a flat tip screwdriver with a thin tip under the connector and disconnect the harness connector from the plate COMPL.

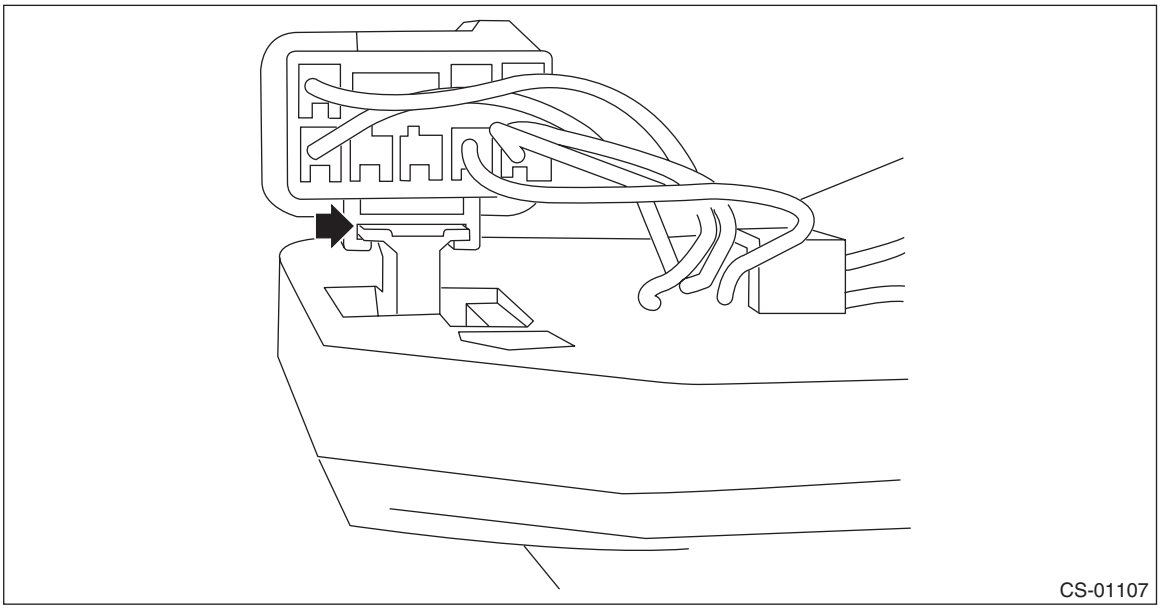

4) Remove the harness from the plate COMPL.

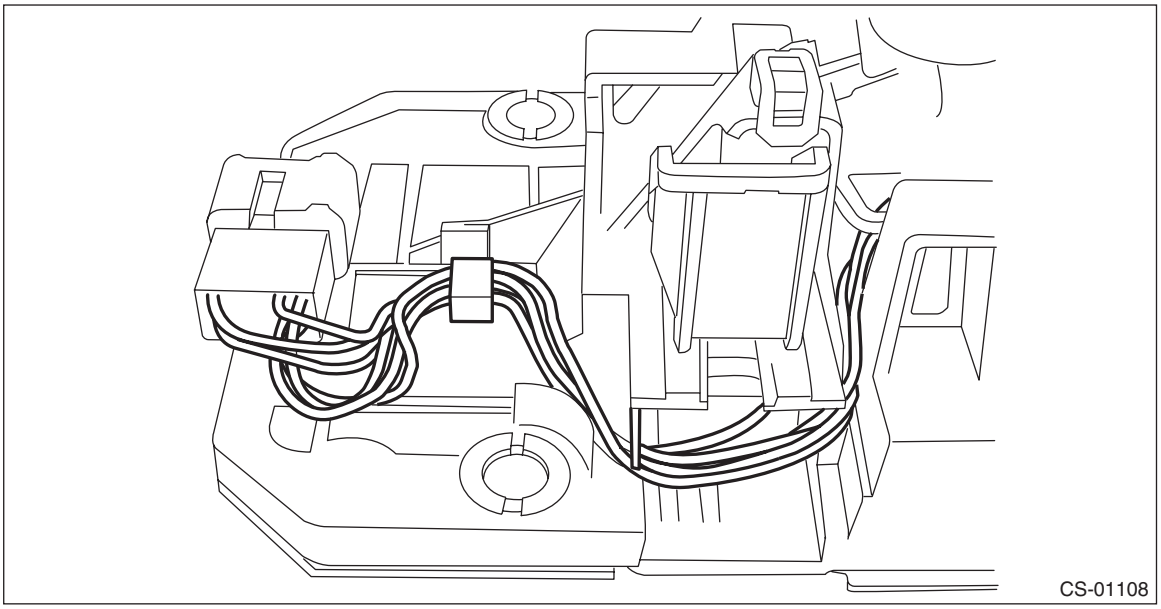

5) Raise the claw with a flat tip screwdriver with a thin tip and remove the solenoid unit.

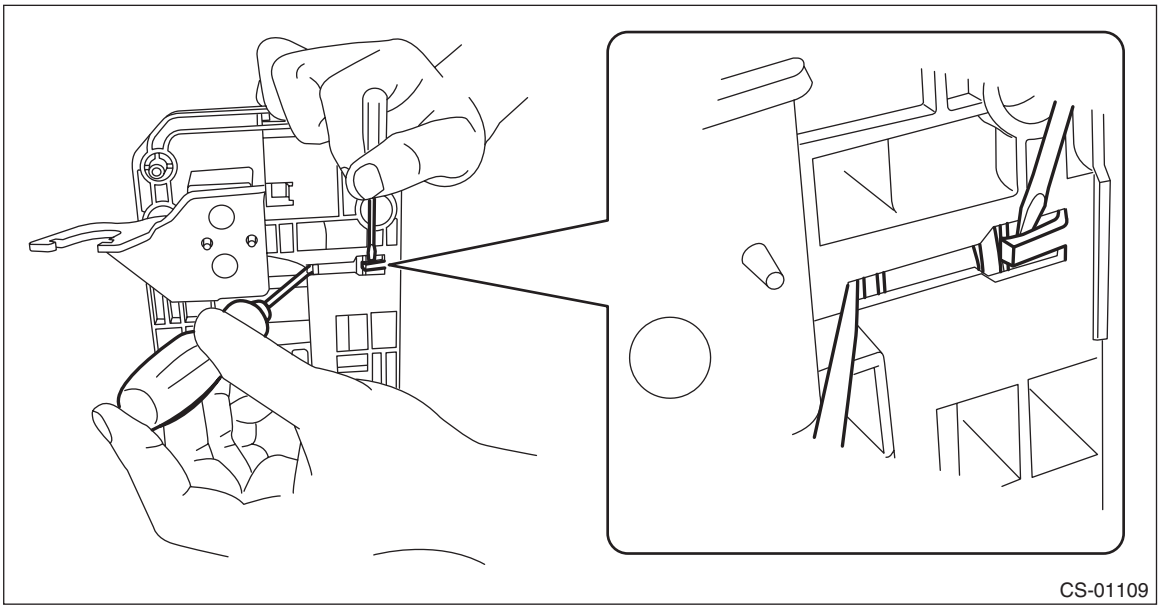

6) Using a flat tip screwdriver with a thin tip, remove the solenoid unit terminals from the connector.

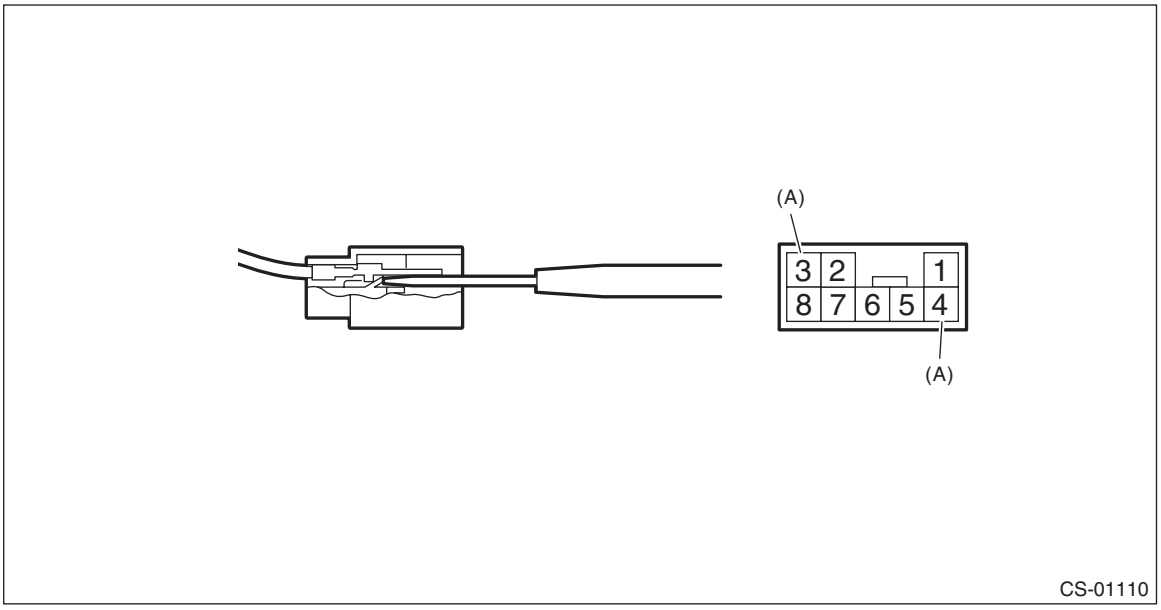

(A) Solenoid unit terminals

7) Remove the clamp push nut.

NOTE:
Replace the clamp push nut with a new part.

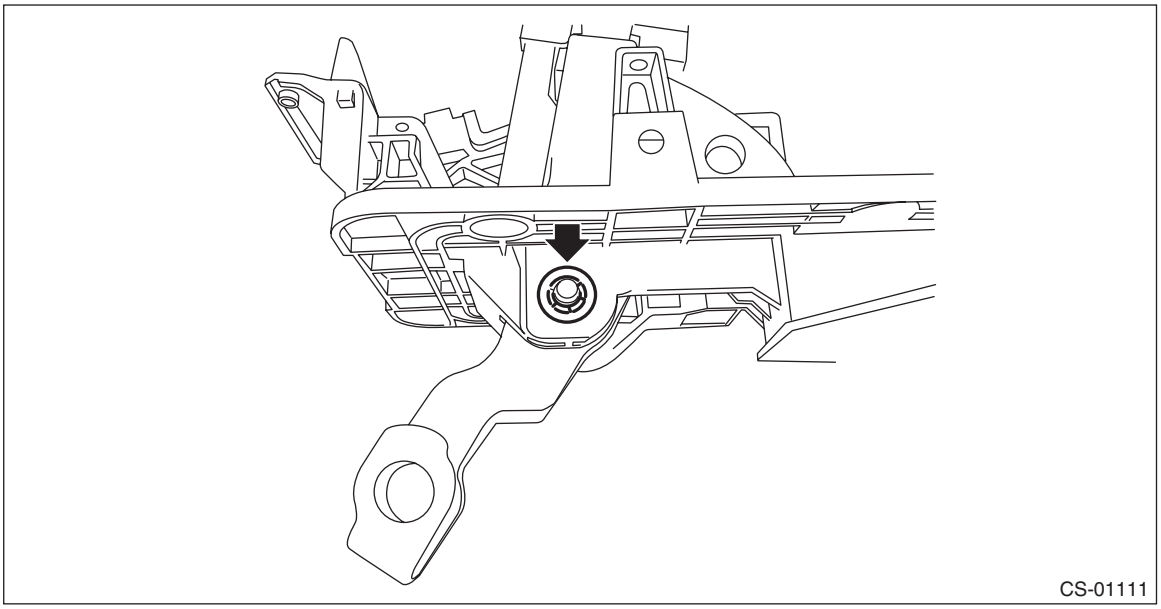

8) Pull out shaft control.

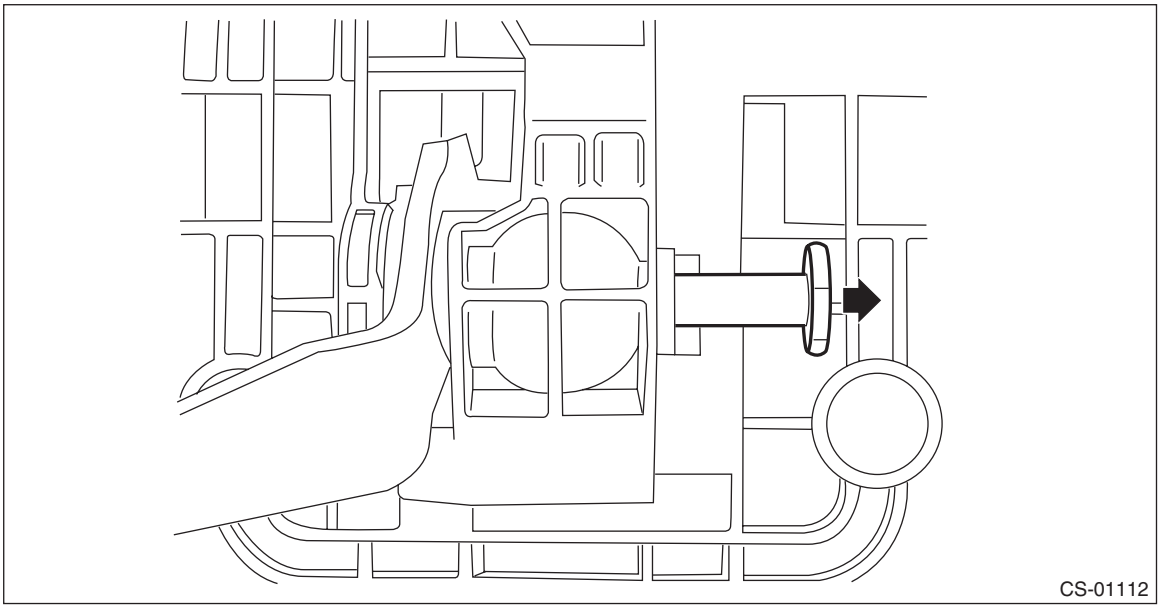

9) Remove the clamp push nut.

NOTE:
Replace the clamp push nut with a new part.

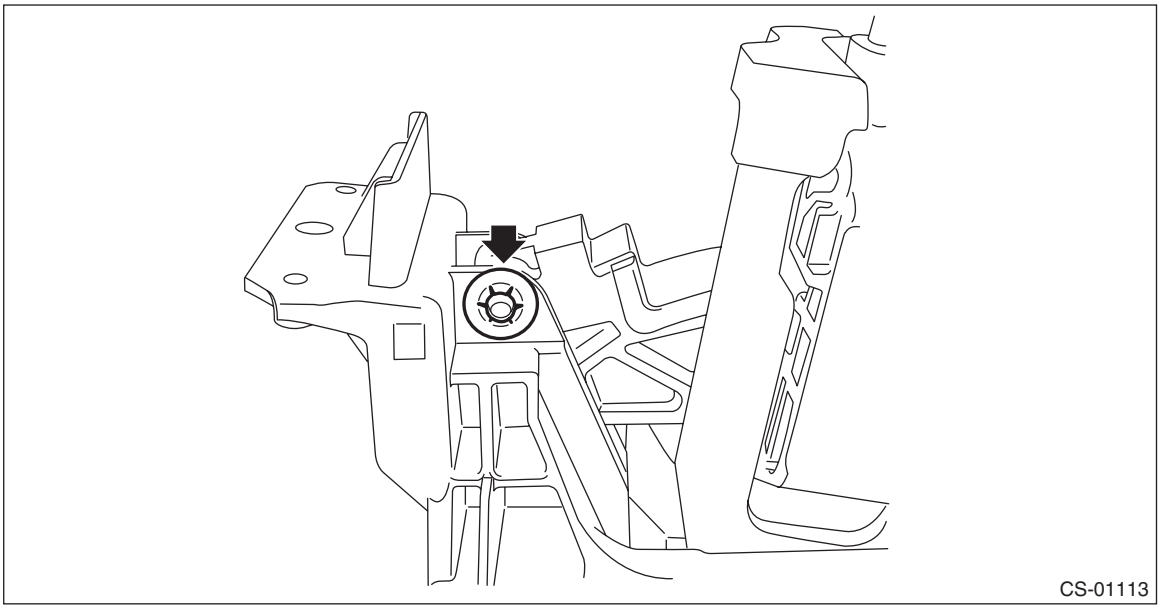

10) Pull out spacer pin guide.

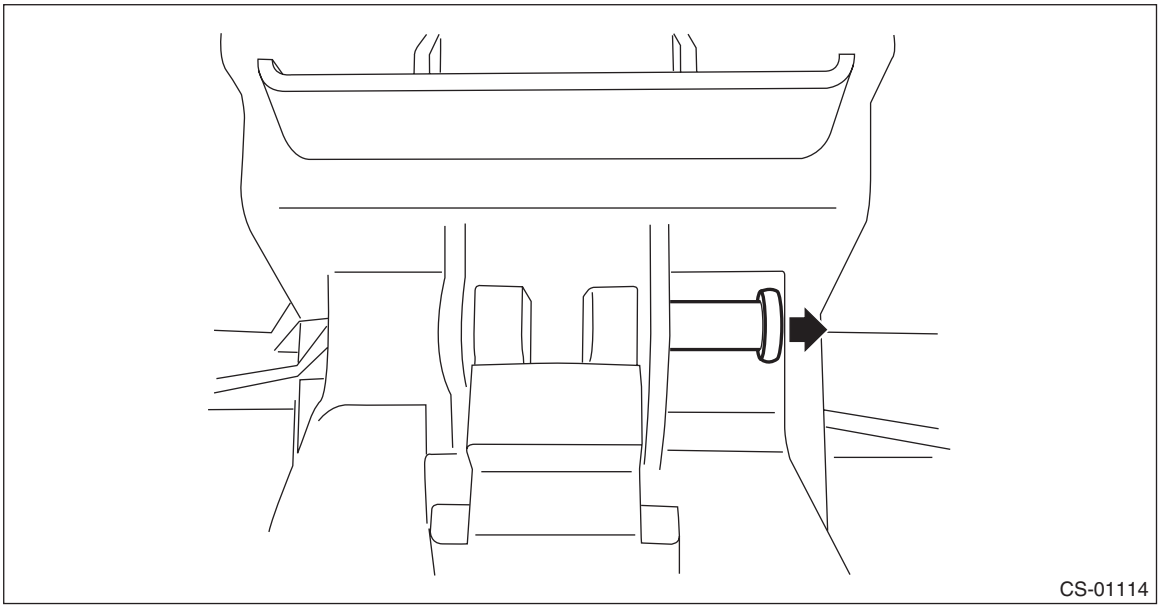

11) Remove the clamp pin.

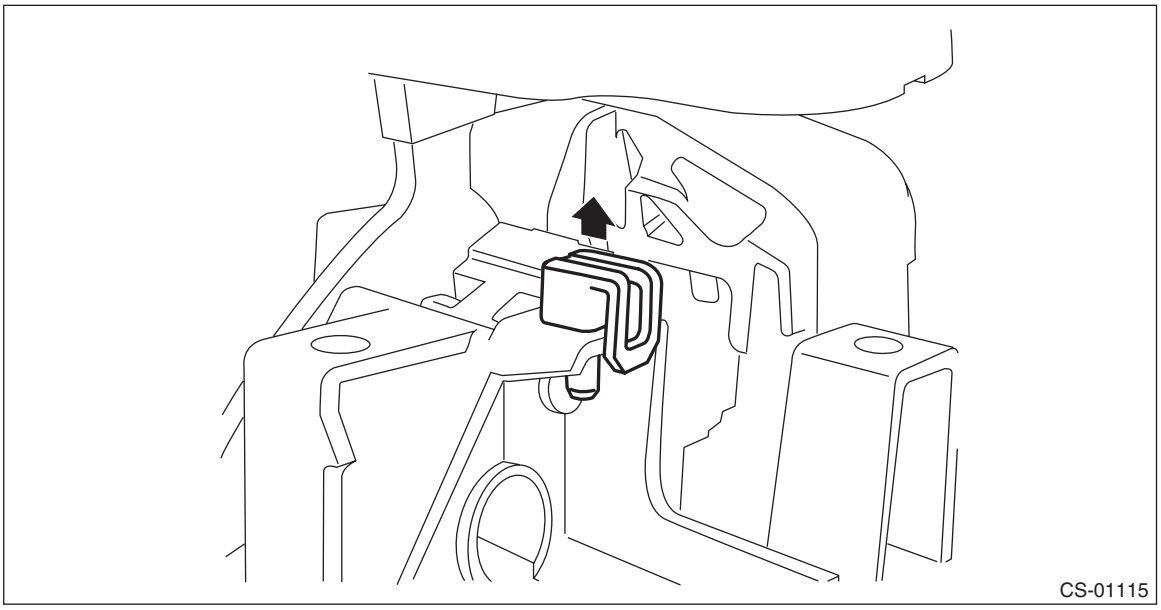

12) Remove the spacer pin guide.

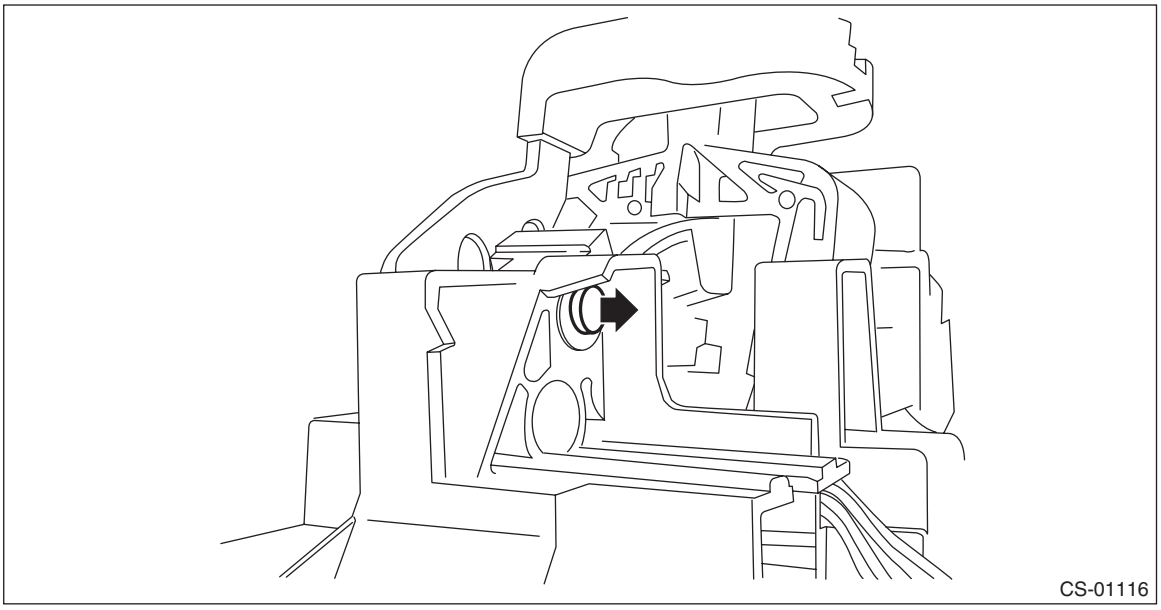

13) Remove the select lever COMPL from the plate COMPL.

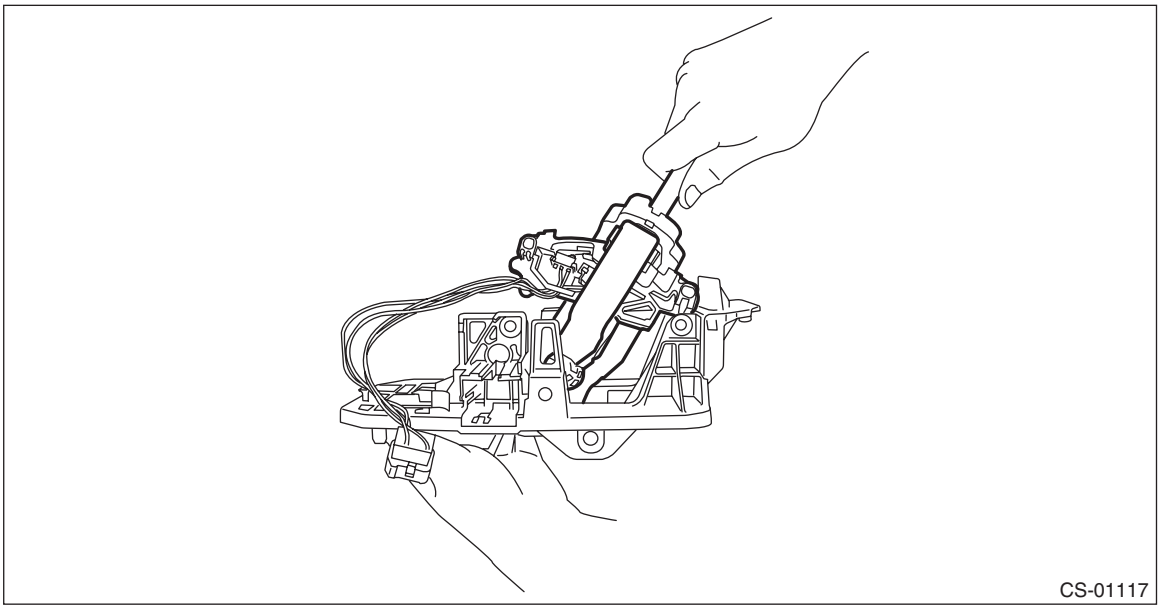

14) Remove the arm assembly.

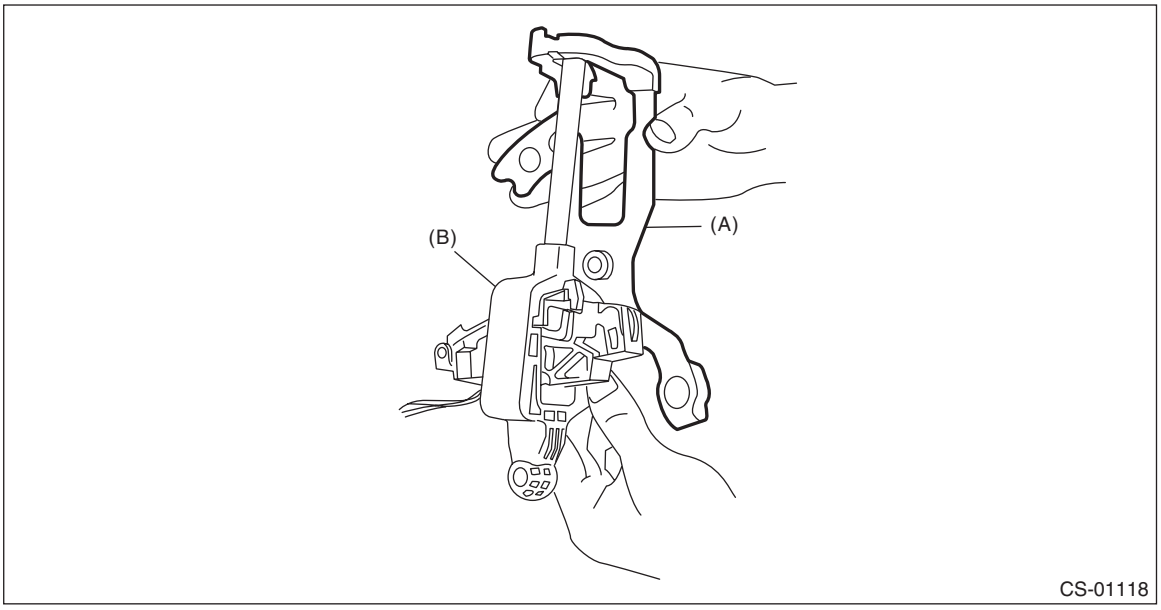

(A) Arm ASSY
(B) Selector lever COMPL

15) Remove the plate guide from the select lever COMPL.

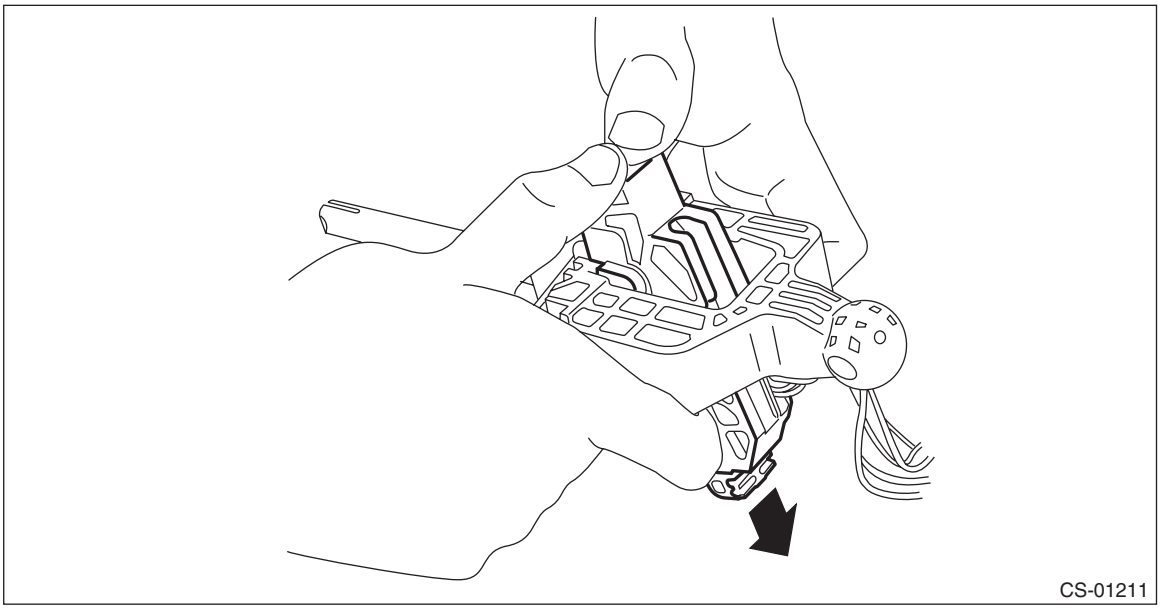

16) Remove the rod detent and detent spring from the select lever COMPL.

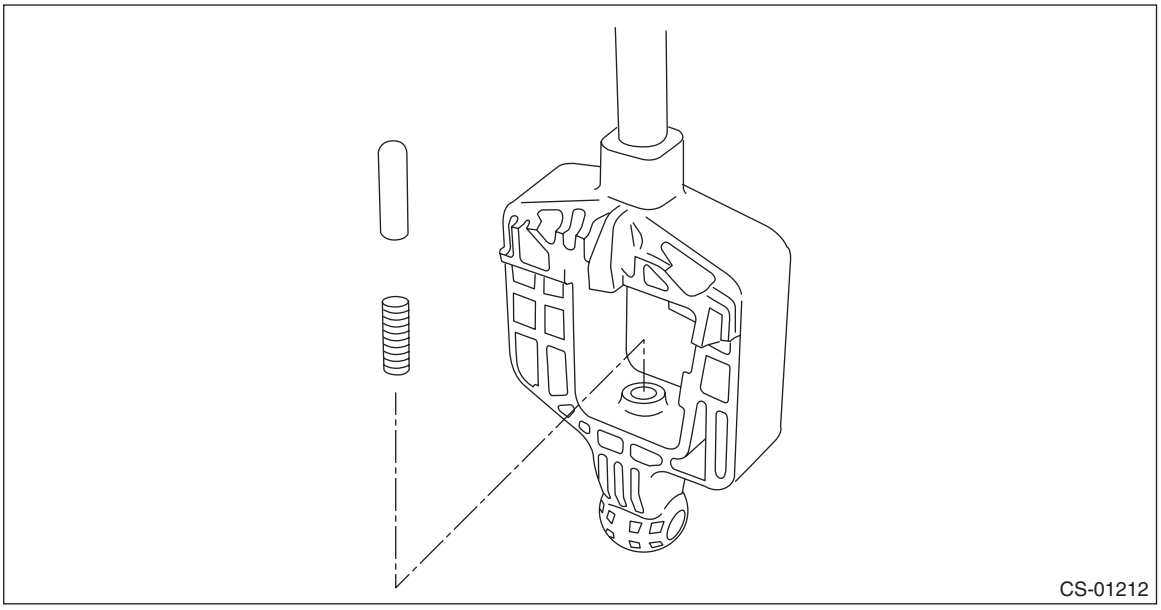

3. INDICATOR ASSY

1) Disconnect the harness connector from the console front cover assembly.

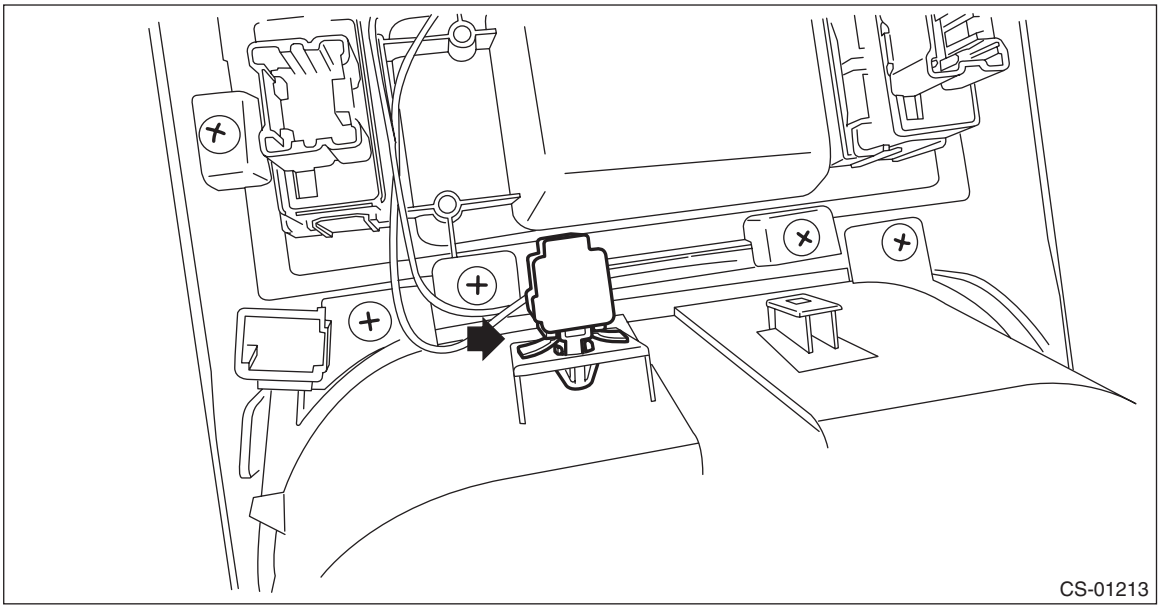

2) Remove the four screws and remove the indicator assembly from the console front cover assembly.

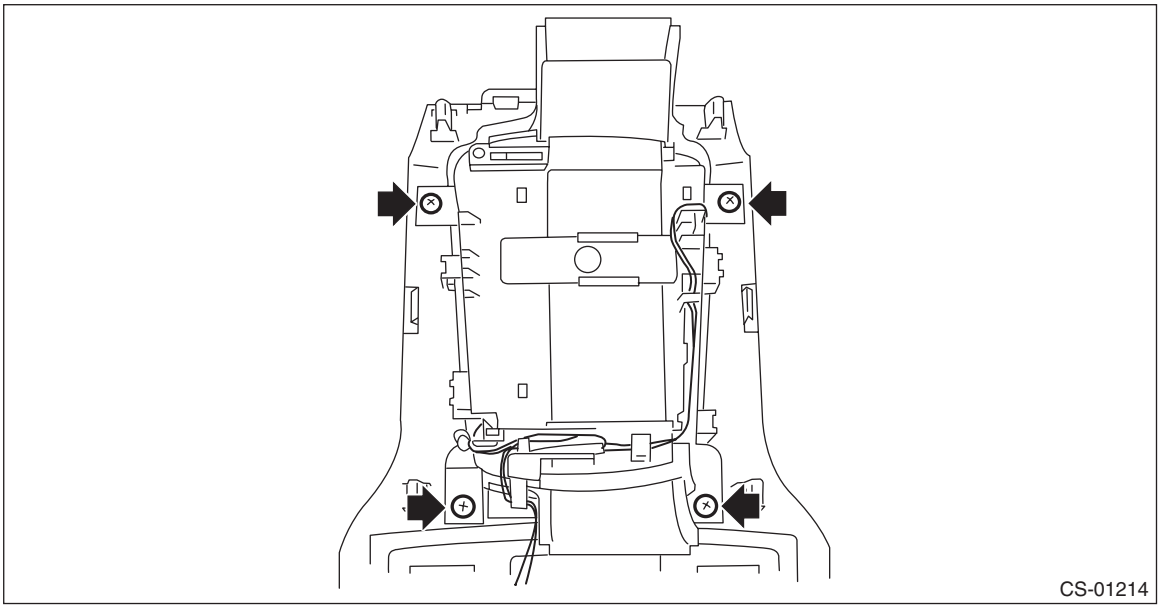

D: ASSEMBLY

1) Clean all the parts before assembly.
2) Apply Multemp D or equivalent to the sliding portion of each part.
3) Assemble in the reverse order of disassembly.

NOTE:
Insert the solenoid unit terminals to the harness connector.

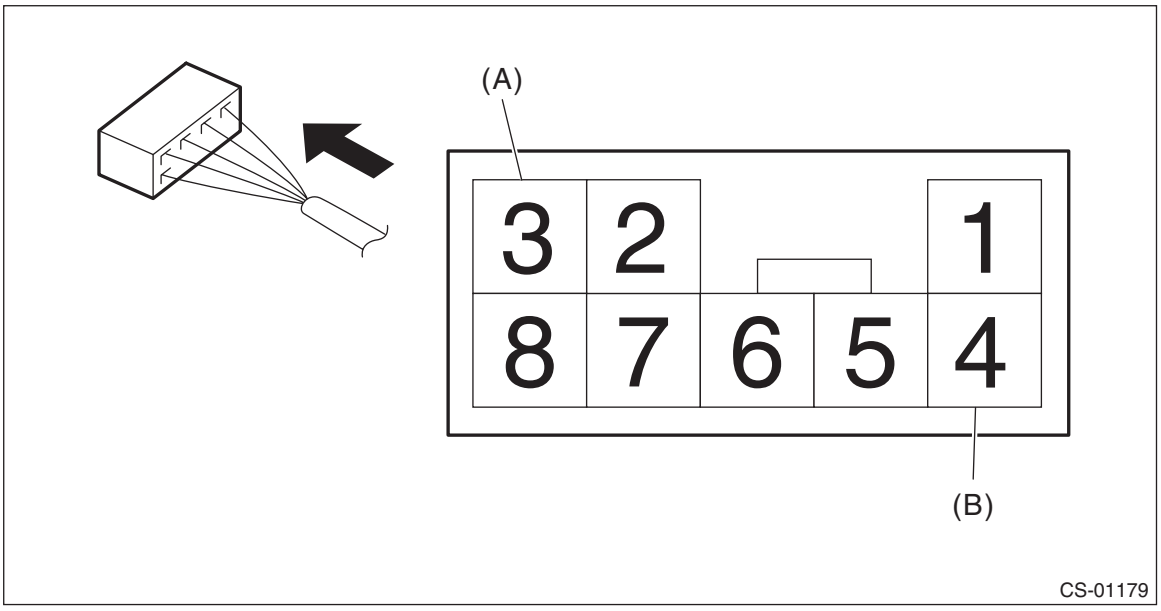

(A) Solenoid unit (color code: blue)
(B) Solenoid unit (color code: black)

4) After installation, check the following points.
- The select indicator matches the select lever position when the select lever is changed from “P” range to “D” range.
- The select lever position and the position mark match each other.
- Operating force to move the select lever from “P” to “D” range.

E: INSPECTION

1) Inspect the removed parts by comparing with new ones for deformation, damage and wear. Repair or replace if defective.
2) Inspect the select lever assembly operating condition before assembly. Normal if it operates smoothly.

4. Select Cable

A: REMOVAL

1) Shift the select lever to “N” range.
2) Disconnect the ground cable from battery.
3) Lift up the vehicle.
4) Remove the front exhaust pipe and rear exhaust pipe.
• 2.5 L model
<Ref. to EX(H4SO)-5, REMOVAL, Front Exhaust Pipe.> <Ref. to EX(H4SO)-9, REMOVAL, Rear Exhaust Pipe.>
• 3.6 L model
<Ref. to EX(H6DO)-5, REMOVAL, Front Exhaust Pipe.> <Ref. to EX(H6DO)-8, REMOVAL, Rear Exhaust Pipe.>
5) Remove the heat shield cover.

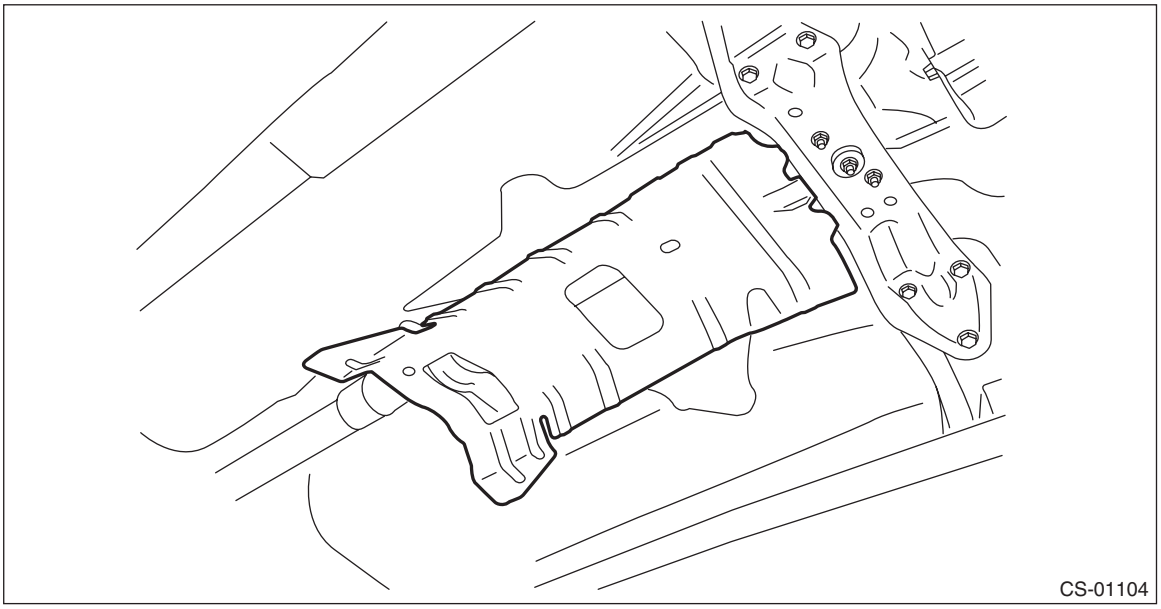

6) Remove the snap pin and washer from the shifter arm and remove the select cable from the shifter arm.

- CVT model

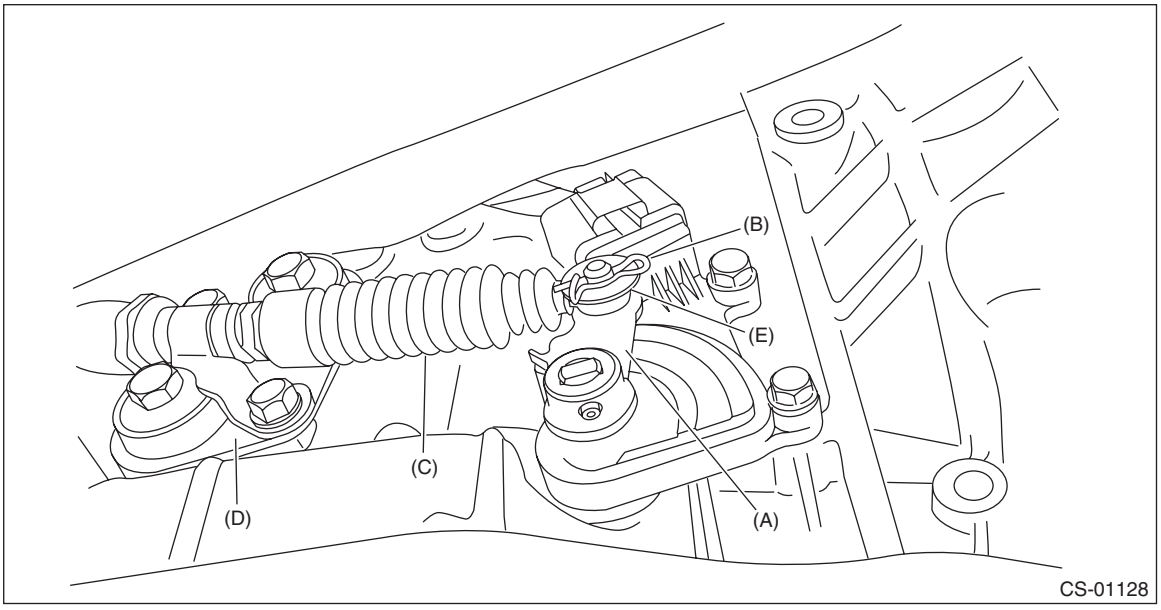

(A) Shifter arm
(B) Snap pin
(C) Select cable
(D) Plate ASSY
(E) Washer

- AT model

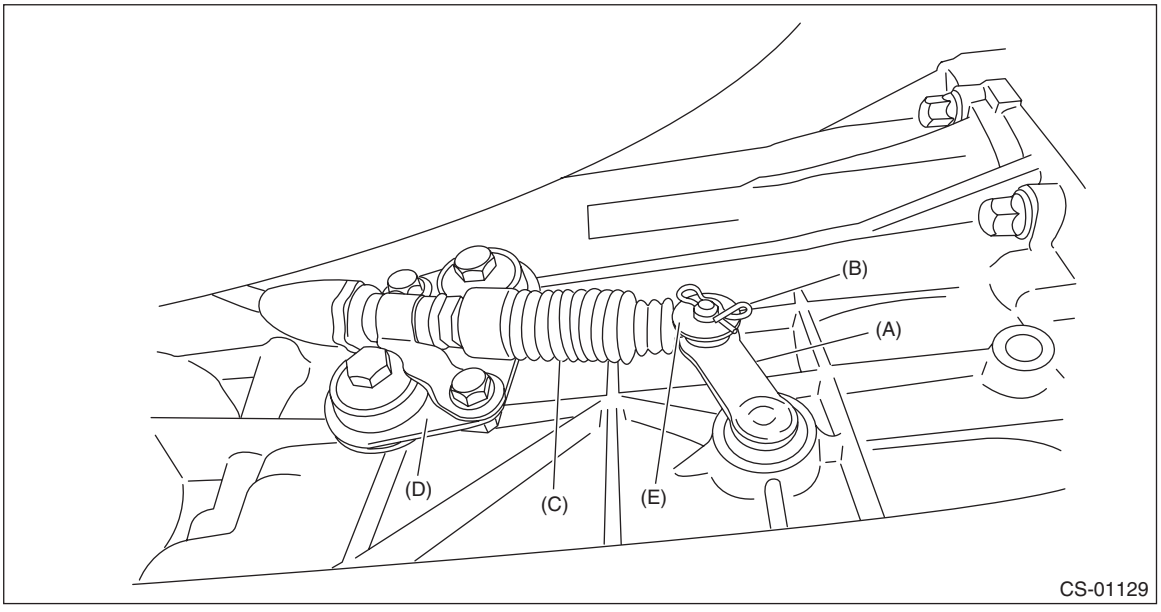

(A) Shifter arm
(B) Snap pin
(C) Select cable
(D) Plate ASSY
(E) Washer

7) Remove the plate assembly from the transmission case.
• CVT model

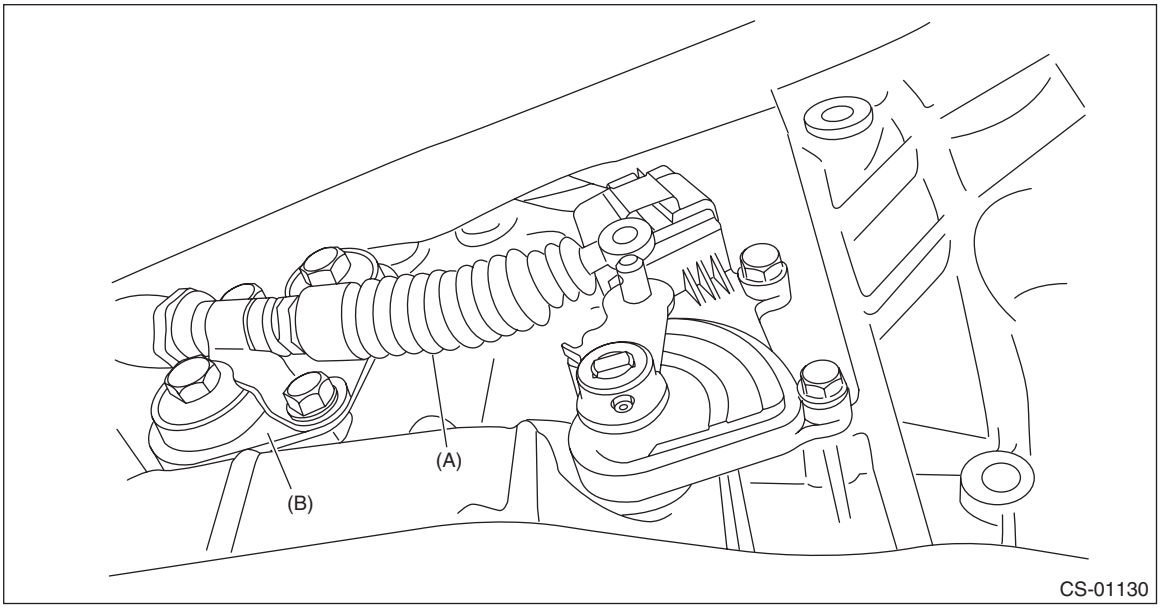

(A) Select cable
(B) Plate ASSY

• AT model

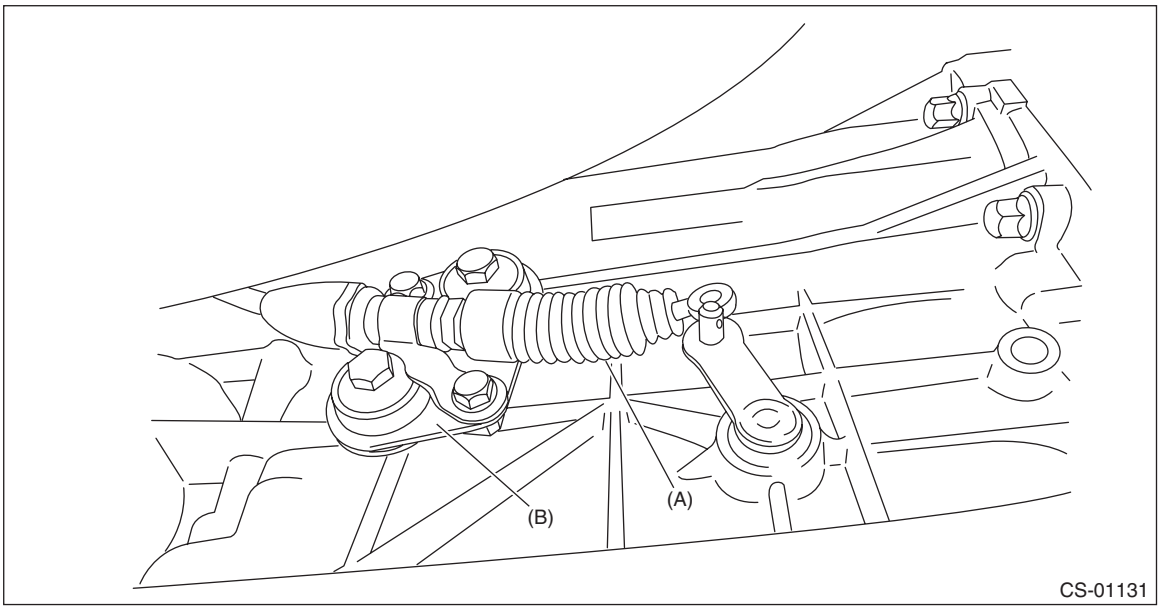

(A) Select cable
(B) Plate ASSY

8) Disconnect the cable from arm assembly.

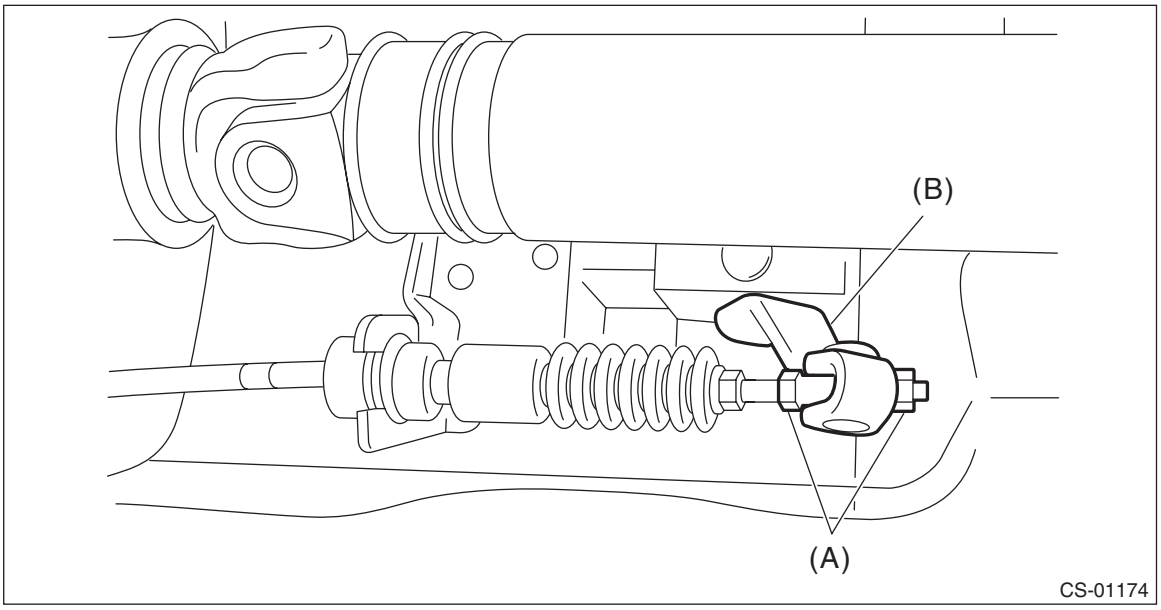

(A) Nut
(B) Arm ASSY

9) Raise the claw of clamp to remove the cable from bracket.

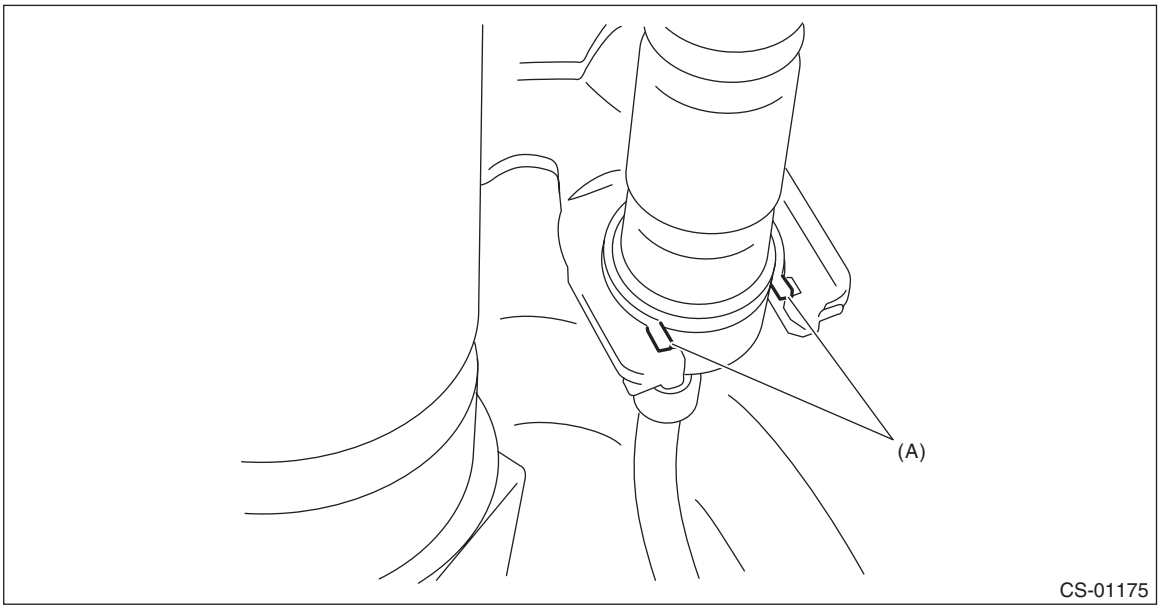

(A) Claw

10) Remove the select cable from plate assembly.

B: INSTALLATION

1) Install the select cable to plate assembly.

Tightening torque:
18 N·m (1.8 kgf-m, 13.3 ft-lb)

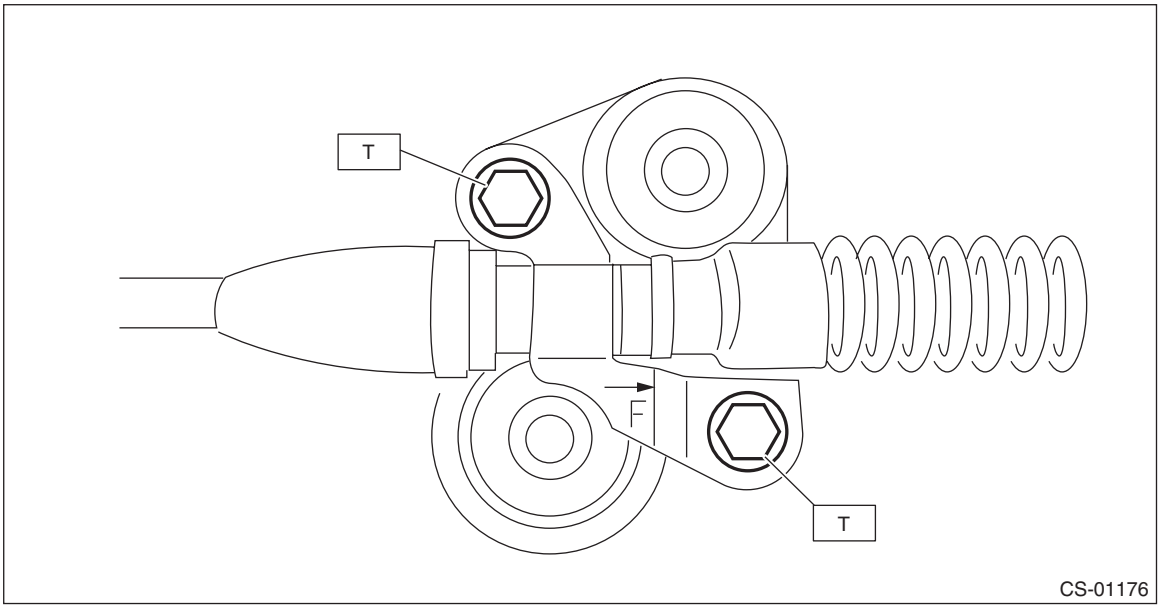

2) Install the select cable to range select lever.
3) Install the plate assembly to transmission.

Tightening torque:
T: 25 N·m (2.5 kgf-m, 18.4 ft-lb)

- CVT model

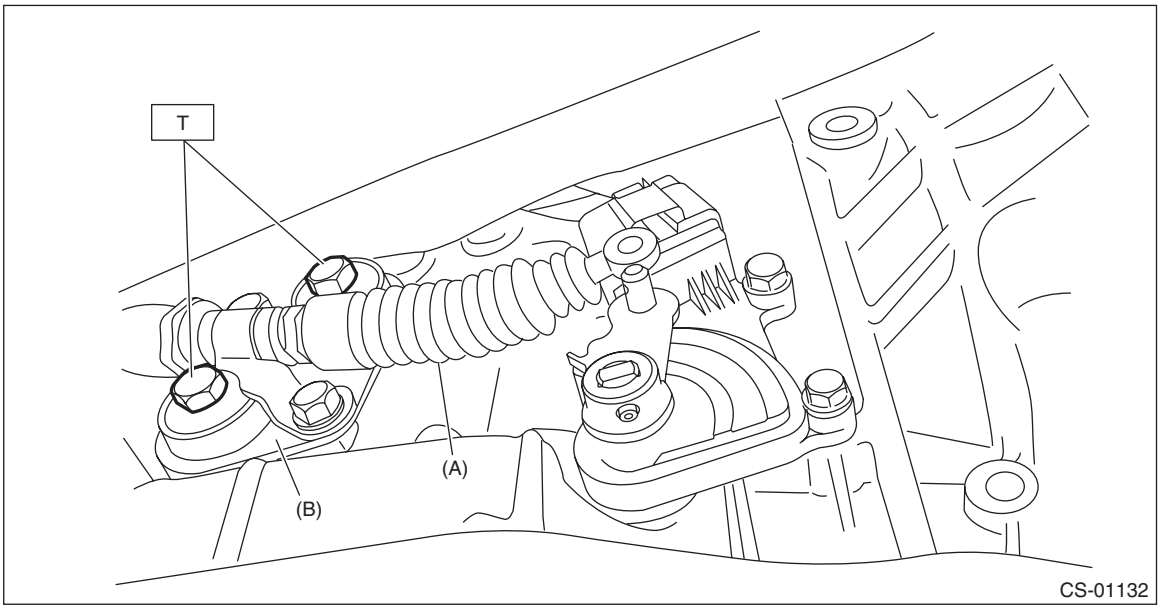

(A) Select cable
(B) Plate ASSY

• AT model

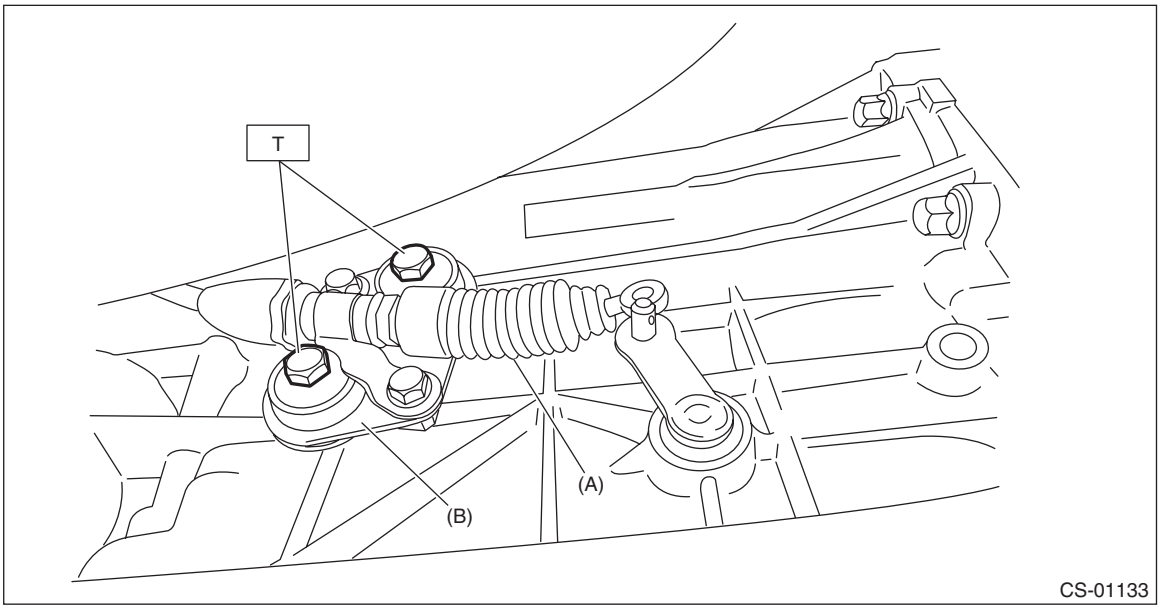

(A) Select cable
(B) Plate ASSY

4) Install the washer and snap pin to the shifter arm.

• CVT model

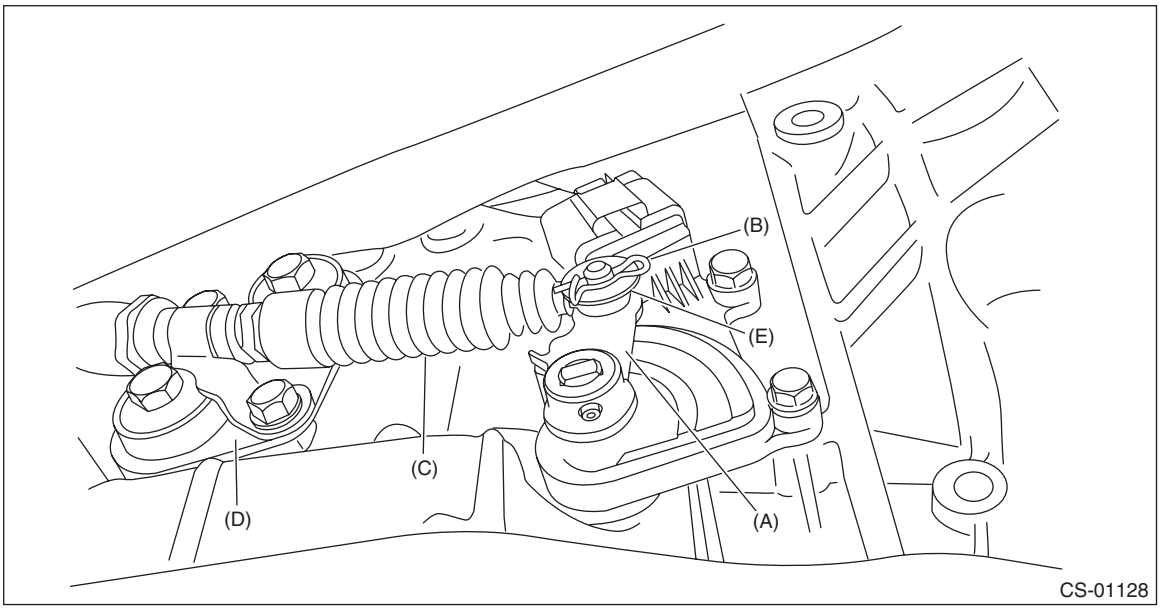

(A) Shifter arm
(B) Snap pin
(C) Select cable
(D) Plate ASSY
(E) Washer

- AT model

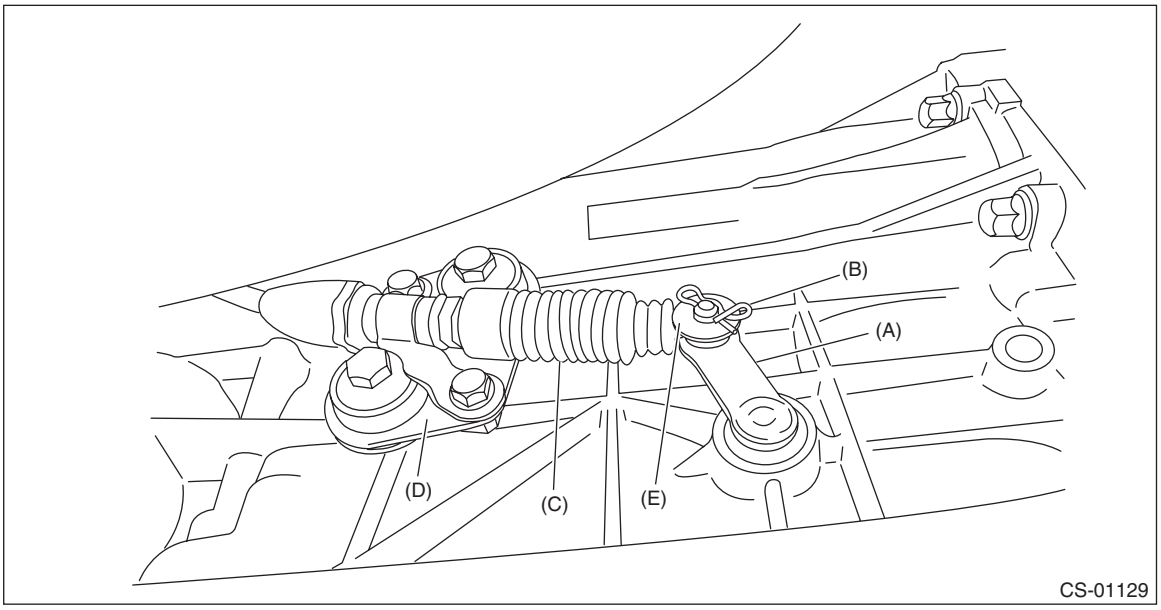

(A) Shifter arm
(B) Snap pin
(C) Select cable
(D) Plate ASSY
(E) Washer

5) Install new clamp paying attention to the installing direction.

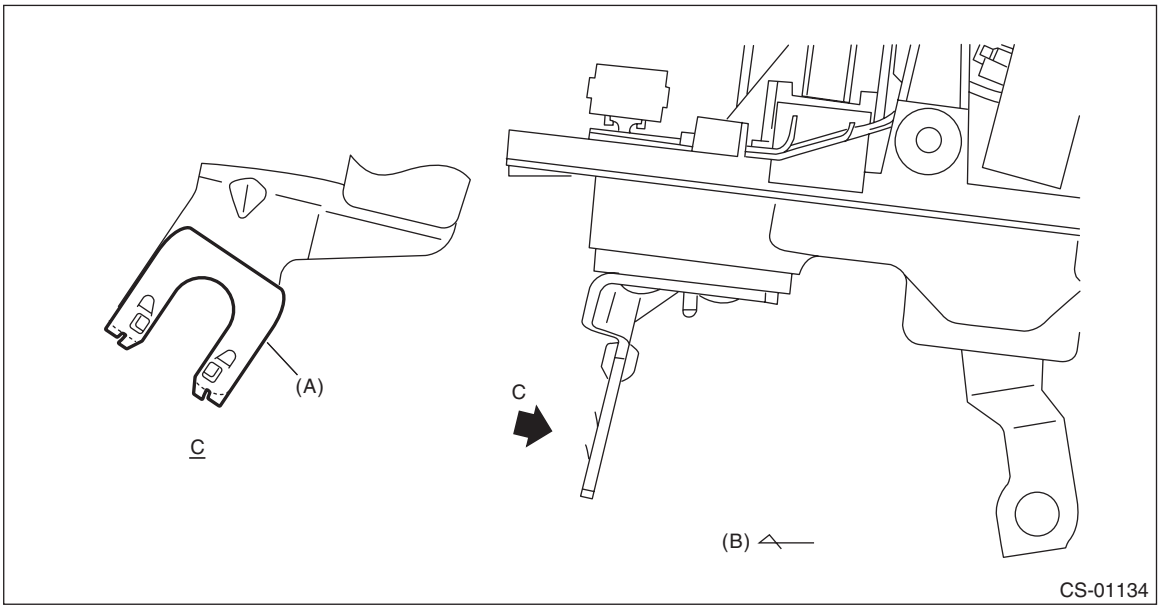

(A) Clamp
(B) Forward

6) Insert the tip of inner cable into connector hole of select lever, and fix the cable to bracket.

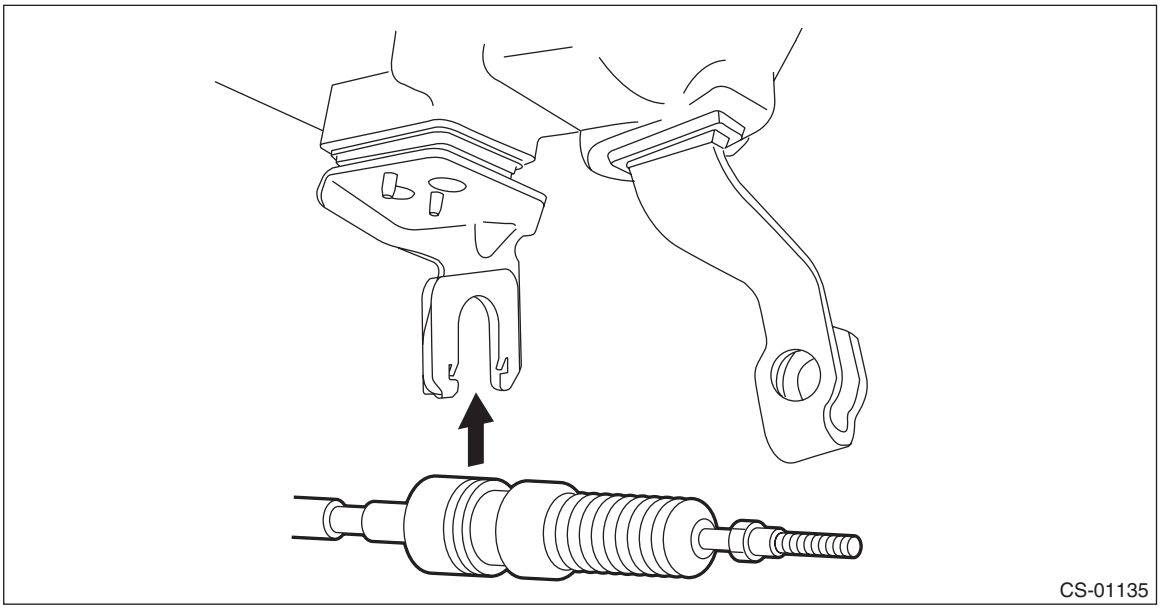

7) Shift the select lever to the “N” range, and then adjust the select cable position. <Ref. to CS-50, ADJUSTMENT, Select Cable.>
8) Install the heat shield cover.

Tightening torque:
18 N·m (1.8 kgf-m, 13.3 ft-lb)

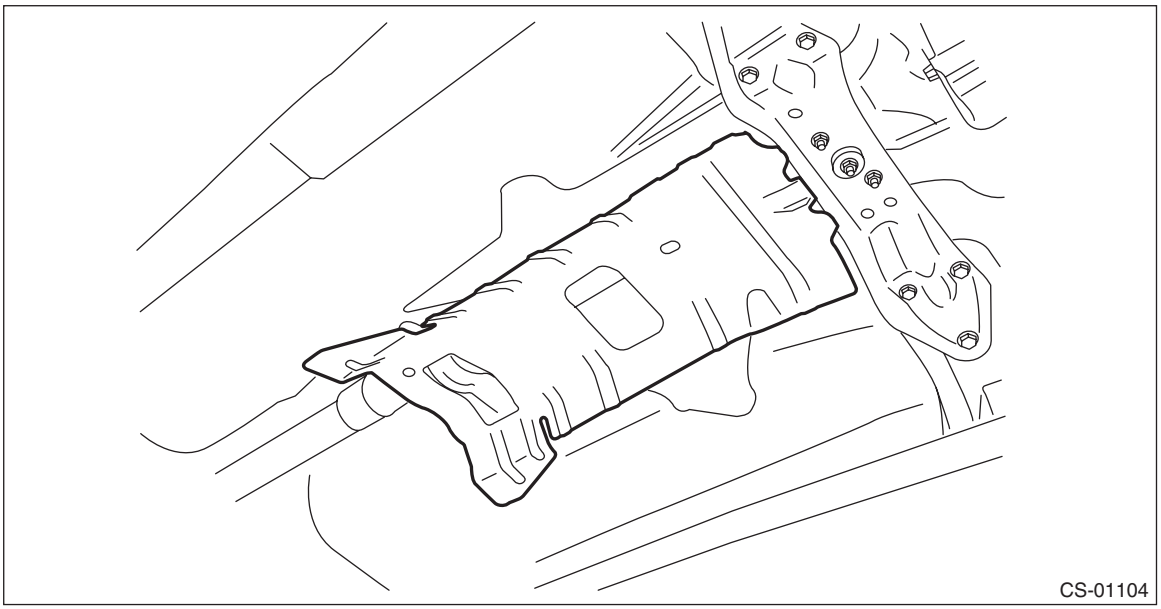

9) Install the front exhaust pipe and rear exhaust pipe.
- 2.5 L model

<Ref. to EX(H4SO)-6, INSTALLATION, Front Exhaust Pipe.> <Ref. to EX(H4SO)-9, INSTALLATION, Rear Exhaust Pipe.>
- 3.6 L model

<Ref. to EX(H6DO)-6, INSTALLATION, Front Exhaust Pipe.> <Ref. to EX(H6DO)-8, INSTALLATION, Rear Exhaust Pipe.>

C: INSPECTION

Check the removed cable and replace or adjust if damaged, rusty or malfunctioning.
1) Check that the inner cable moves smoothly without drag.
2) Check the inner cable for damage and rust.
3) Check the outer cable for damage, bends and cracks.
4) Check the boot for damage, cracks and deterioration.
5) Shift the select lever from “P” range to “D” range. Check the existence of feel to contact the detents in each range. If the detents cannot be felt or the position pointer is improperly aligned, adjust the cable.
6) Check that the starter motor rotates when the select lever is set to “P” or “N” range.
7) Check the back-up light illumination when the select lever is in “R” range.
8) Check the shift lock operation when the select lever is in “P” range.

D: ADJUSTMENT

1) Shift the select lever to “N” range.
2) Lift up the vehicle.
3) Remove the front exhaust pipe and rear exhaust pipe.
• 2.5 L non-turbo model
<Ref. to EX(H4SO)-5, REMOVAL, Front Exhaust Pipe.> <Ref. to EX(H4SO)-9, REMOVAL, Rear Exhaust Pipe.>
• 3.6 L model
<Ref. to EX(H6DO)-5, REMOVAL, Front Exhaust Pipe.> <Ref. to EX(H6DO)-8, REMOVAL, Rear Exhaust Pipe.>
4) Remove the heat shield cover.

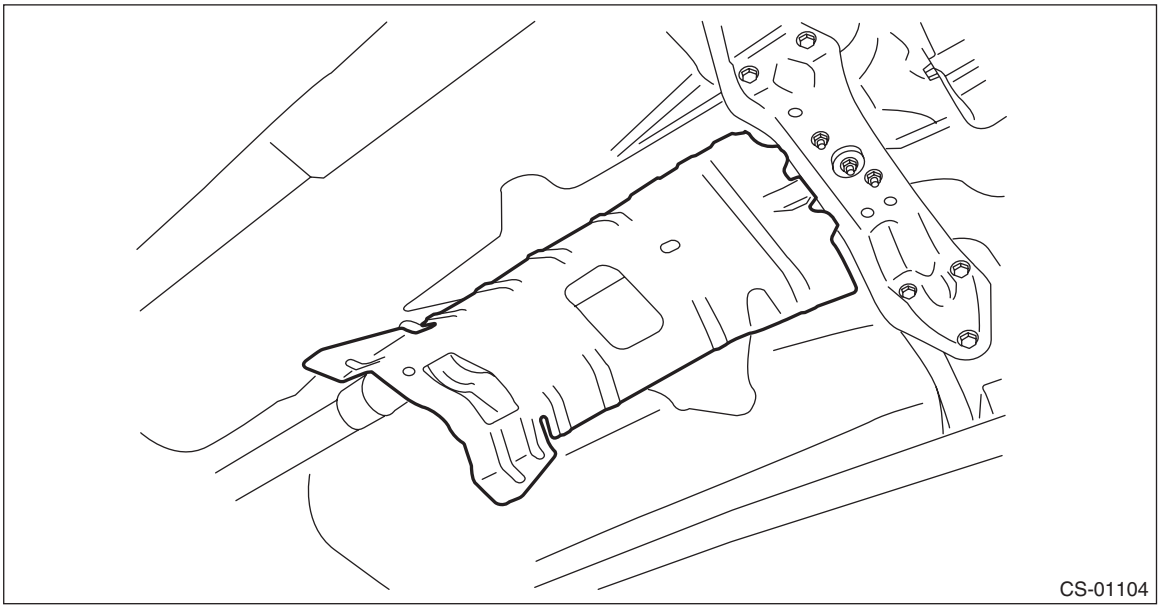

5) Loosen the nuts on both sides.

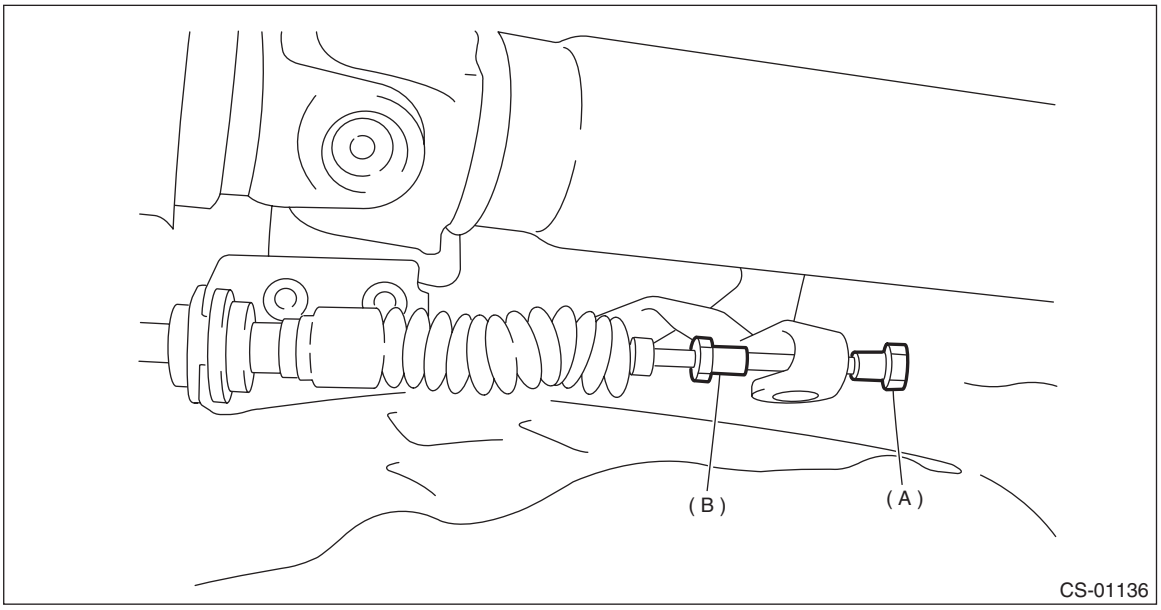

(A) Nut A
(B) Nut B

6) Turn the nut B until it lightly touches the connector.

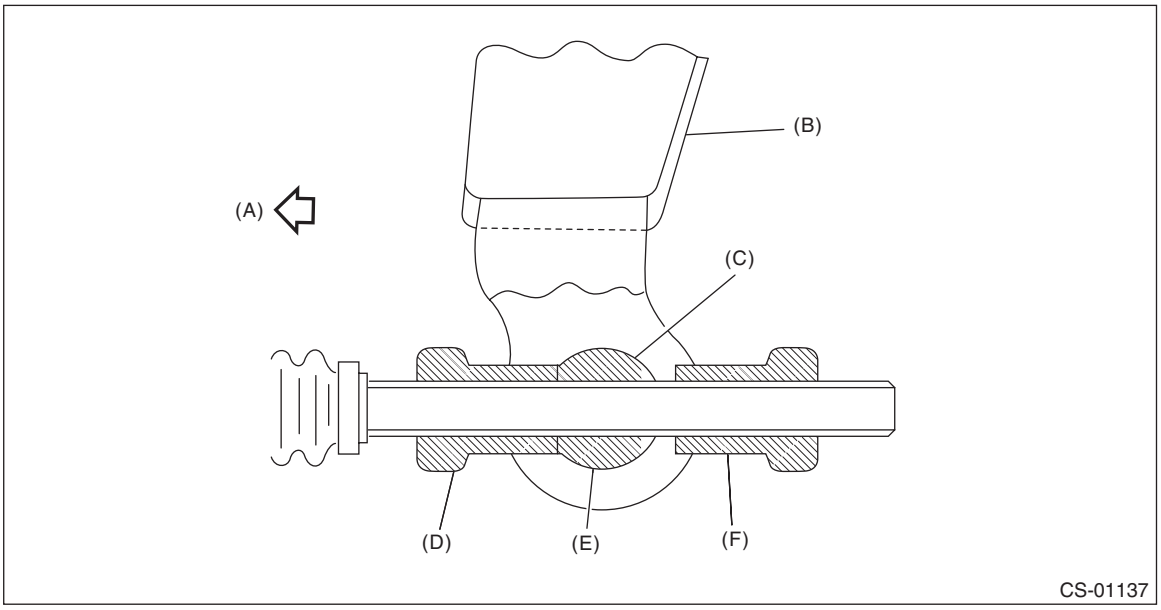

(A) Forward side
(B) Select lever
(C) Connector
(D) Nut B
(E) Contact point
(F) Nut A

7) Set a spanner wrench to the nut B so that it does not rotate, and then tighten the nut A.

Tightening torque:
7.5 N·m (0.8 kgf-m, 5.5 ft-lb)

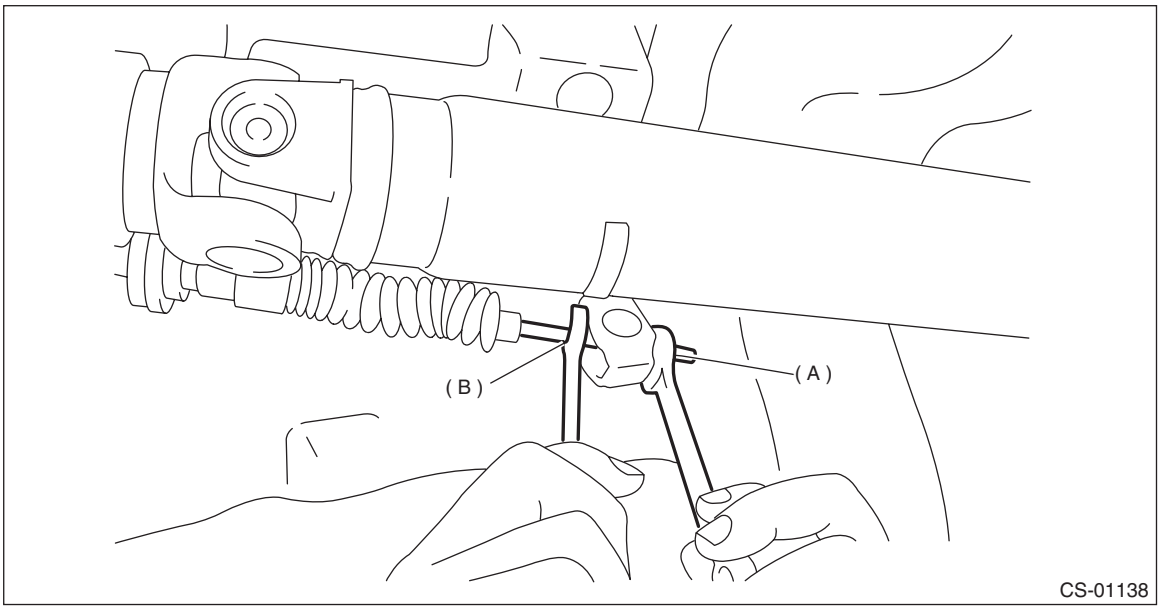

(A) Nut A
(B) Nut B

8) After the completion of adjustment, confirm that the select lever operates normally at all ranges.
9) Install in the reverse order of removal.

5. AT Shift Lock Solenoid and “P” Range Switch

A: REMOVAL

1. SOLENOID UNIT

1) Remove the AT select lever. <Ref. to CS-22, REMOVAL, Select Lever.>
2) Remove the spacer and gasket. <Ref. to CS-31, DISASSEMBLY, Select Lever.>
3) Using a flat tip screwdriver with a thin tip, remove the harness connector from the plate COMPL.

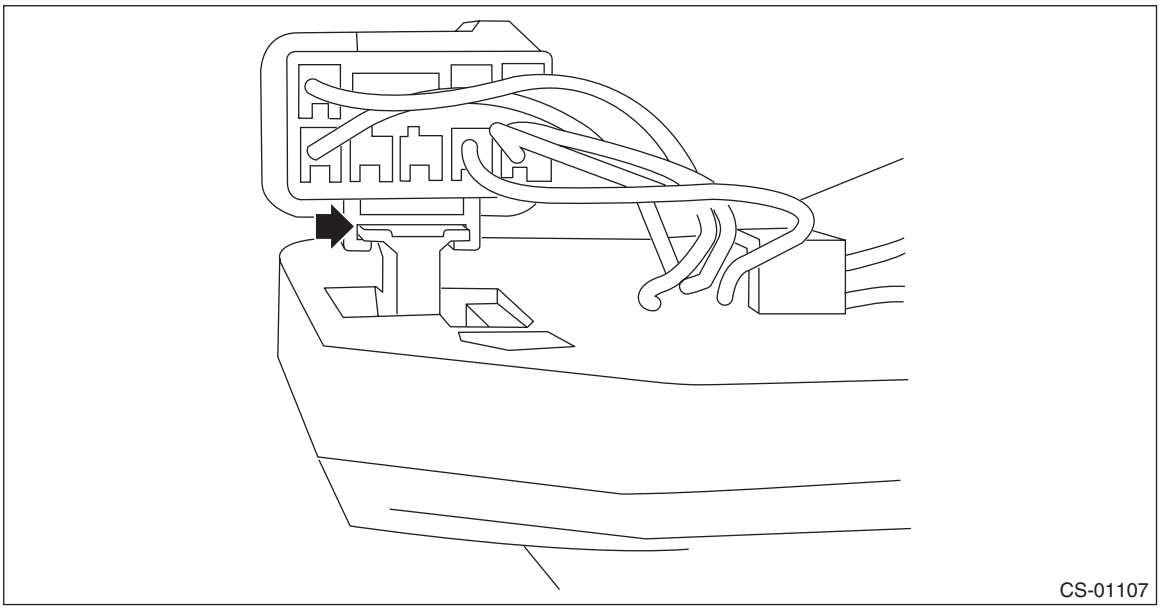

4) Raise the claw using a flat tip screwdriver with a thin tip, and remove the solenoid unit from the plate COMPL.

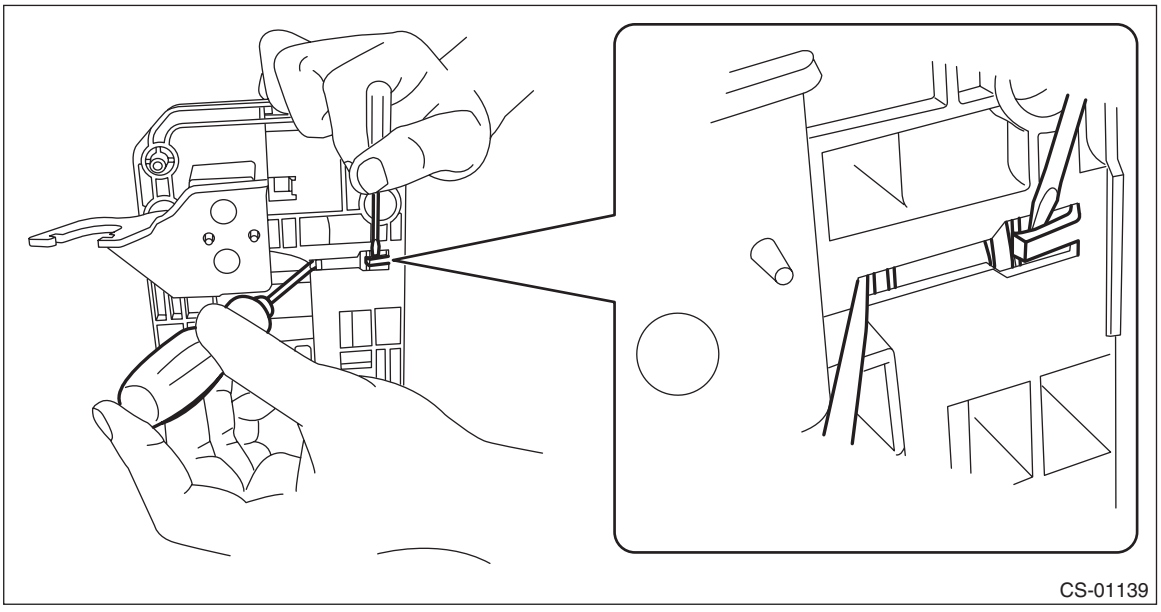

5) Using a flat tip screwdriver with a thin tip, remove the solenoid unit terminals from the harness connector.

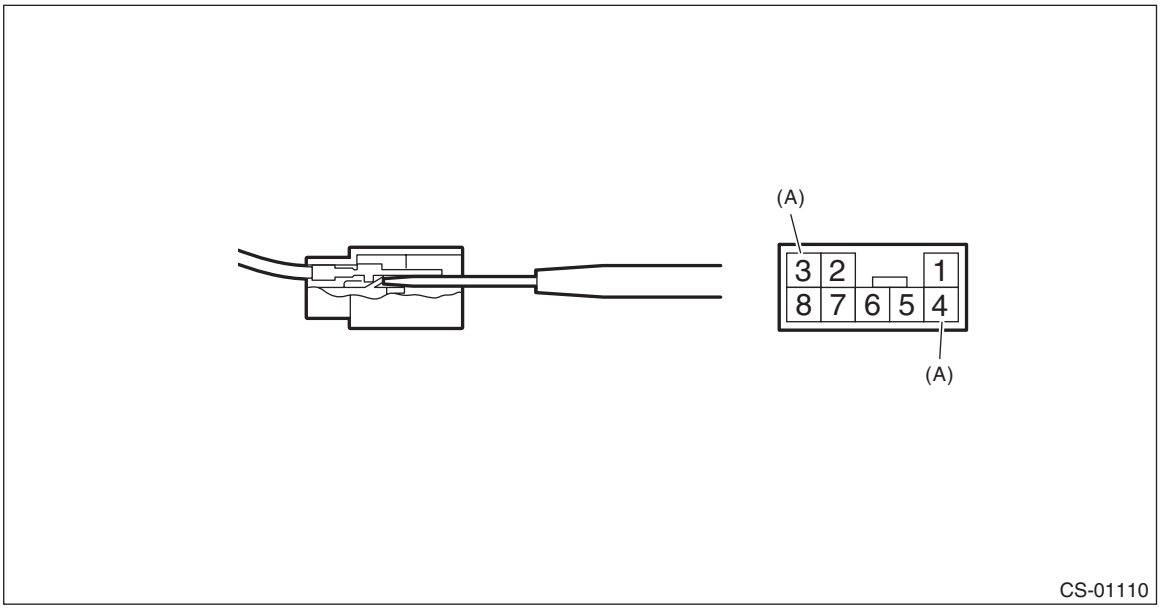

(A) Solenoid unit terminals

2. “P” RANGE SWITCH

For the removal of “P” range switch, refer to the procedure for AT select lever. <Ref. to CS-31, DISASSEMBLY, Select Lever.>
<Ref. to CS-32, AT SELECT LEVER ASSEMBLY, DISASSEMBLY, Select Lever.>

B: INSTALLATION

Install in the reverse order of removal.

NOTE:
Insert the solenoid unit terminals to the harness connector.

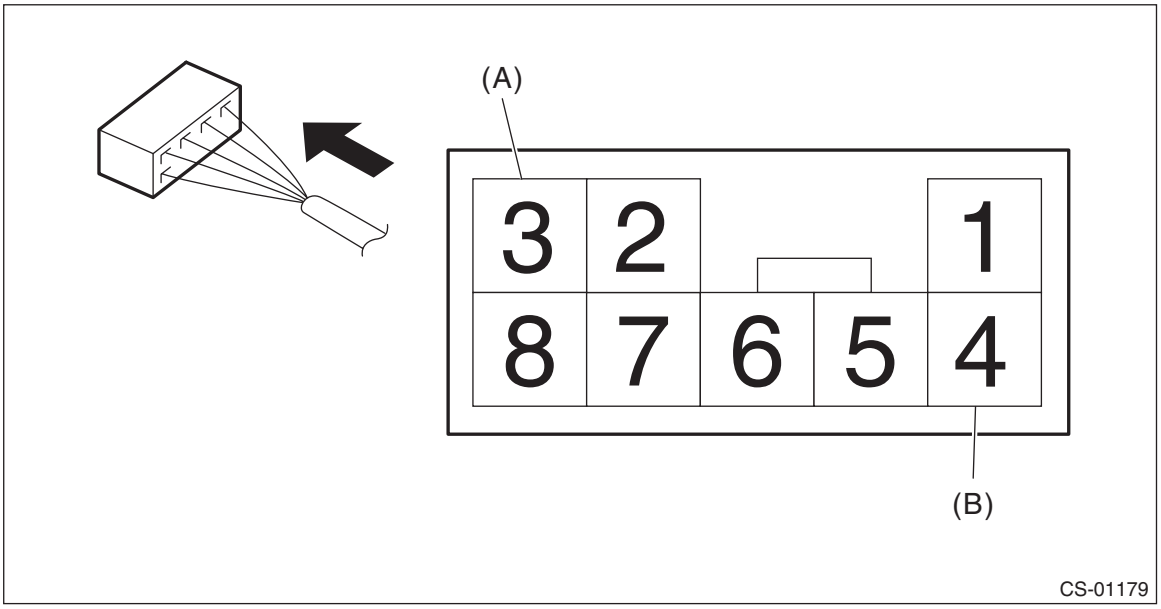

(A) Solenoid unit (color code: blue)
(B) Solenoid unit (color code: black)

C: INSPECTION

	Step	Check	Yes	No
1	**CHECK SOLENOID UNIT.** Measure the resistance of solenoid unit connector terminals. ***Terminals*** ***No. 4 — No. 3:***	Is the resistance 27.6 — 30.5 Ω?	Go to step **2**.	Replace the solenoid unit. <Ref. to CS-53, AT Shift Lock Solenoid and “P” Range Switch.>
2	**CHECK SOLENOID UNIT.** Connect the battery to the solenoid unit connector terminals, and then operate the solenoid. ***Terminals*** ***No. 3 (+) — No. 4 (–):***	Does the solenoid unit operate normally?	Go to step **3**.	Replace the solenoid unit. <Ref. to CS-53, AT Shift Lock Solenoid and “P” Range Switch.>
3	**CHECK “P” RANGE SWITCH.** 1) Shift the select lever to “P” range. 2) Measure the resistance between “P” range switch connector terminals. ***Terminals*** ***No. 1 — No. 2:***	Is the resistance less than 1 Ω?	Go to step **4**.	Replace the “P” range switch. <Ref. to CS-53, AT Shift Lock Solenoid and “P” Range Switch.>
4	**CHECK “P” RANGE SWITCH.** 1) Shift the select lever to other than “P” range. 2) Measure the resistance between “P” range switch connector terminals. ***Terminals*** ***No. 1 — No. 2:***	Is the resistance 1 MΩ or more?	Normal operation.	Replace the “P” range switch. <Ref. to CS-53, AT Shift Lock Solenoid and “P” Range Switch.>

6. Body Integrated Unit

A: NOTE

Refer to “Body Integrated Unit” for removal and installation procedure. <Ref. to SL-71, Body Integrated Unit.>

7. MT Gear Shift Lever

A: REMOVAL

1) Disconnect the ground cable from battery.
2) Lift up the vehicle.
3) Remove the center exhaust pipe and rear exhaust pipe. (non-turbo model) <Ref. to EX(H4SO)-8, REMOVAL, Center Exhaust Pipe.> <Ref. to EX(H4SO)-9, REMOVAL, Rear Exhaust Pipe.>
4) Remove the center exhaust pipe (rear) and rear exhaust pipe. (turbo model) <Ref. to EX(H4DOTC)-12, REMOVAL, Center Exhaust Pipe.> <Ref. to EX(H4DOTC)-15, REMOVAL, Rear Exhaust Pipe.>
5) Remove the heat shield cover.

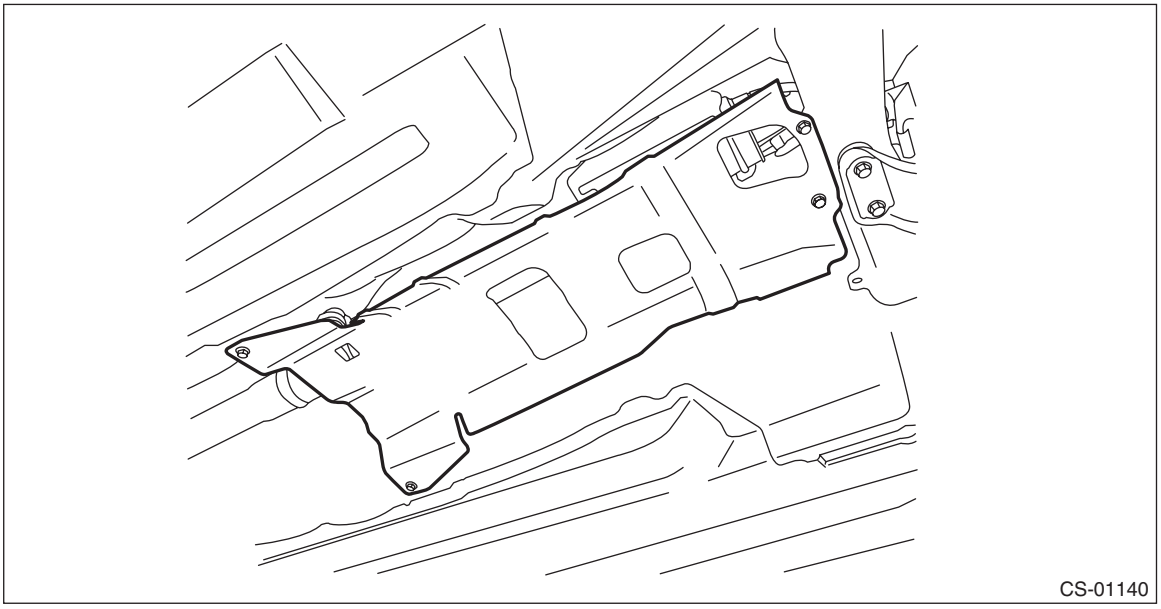
CS-01140

6) Remove the plate cable assembly.

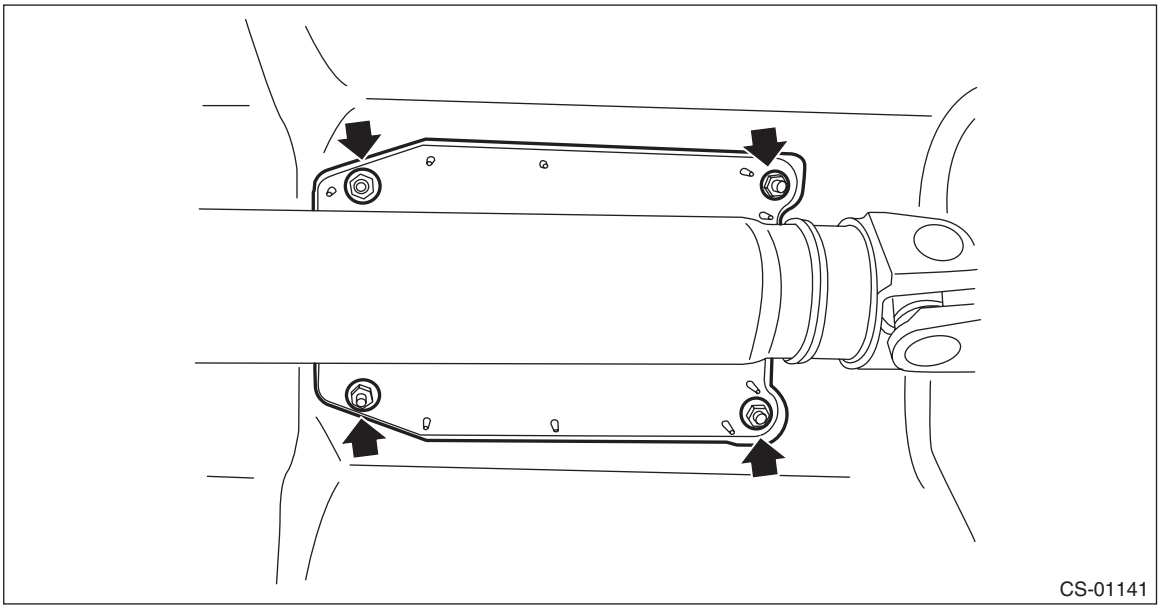
CS-01141

7) Remove the spring at the MT gear shift cable by expanding it and pulling down, and remove the MT gear shift cable from the gear shift lever assembly.

CAUTION:
Be careful not to deform the cable inner.

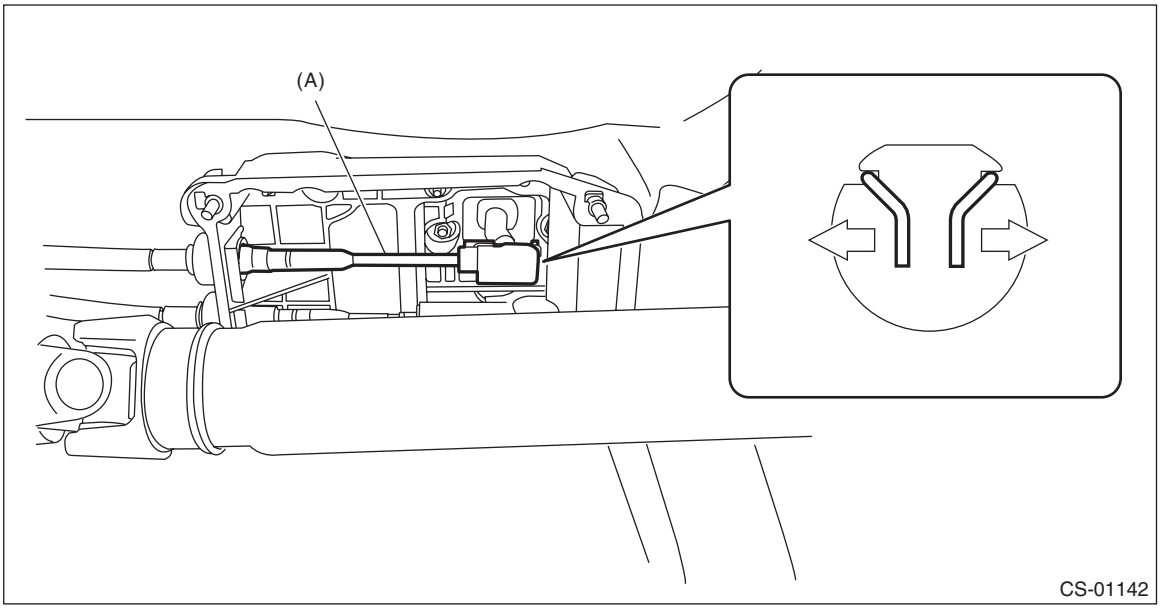

(A) MT gear shift cable

8) Remove the MT gear select cable from the gear shift lever assembly by pulling it in the direction of arrow in the figure.

CAUTION:
Be careful not to deform the cable inner.

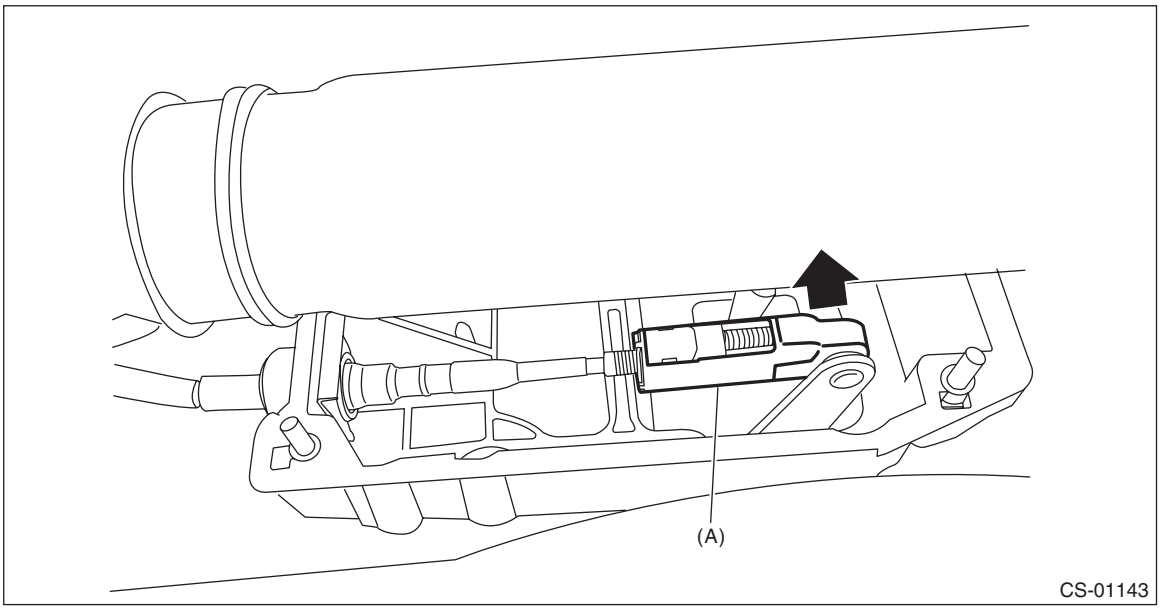

(A) MT gear select cable

9) Remove the cover cable assembly.

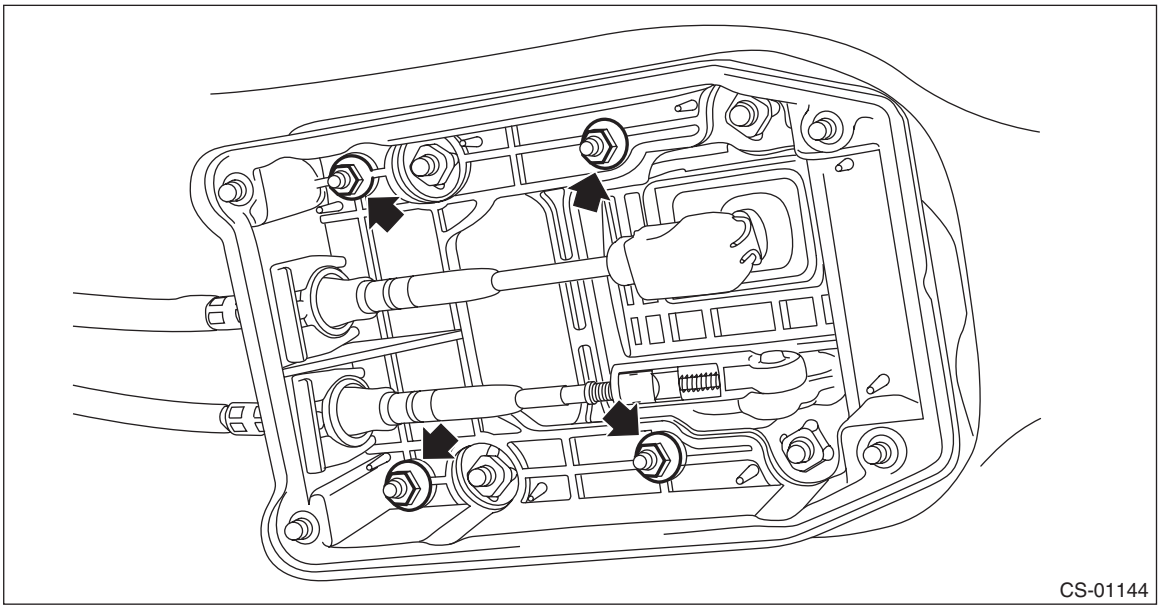

10) Lower the vehicle.
11) Remove the gear shift knob.
12) Remove the console front cover assembly and console box. <Ref. to EI-73, REMOVAL, Console Box.>
13) Remove the bolts, and then remove the gear shift lever assembly from the vehicle.

NOTE:
The MT gear shift lever cannot be disassembled.

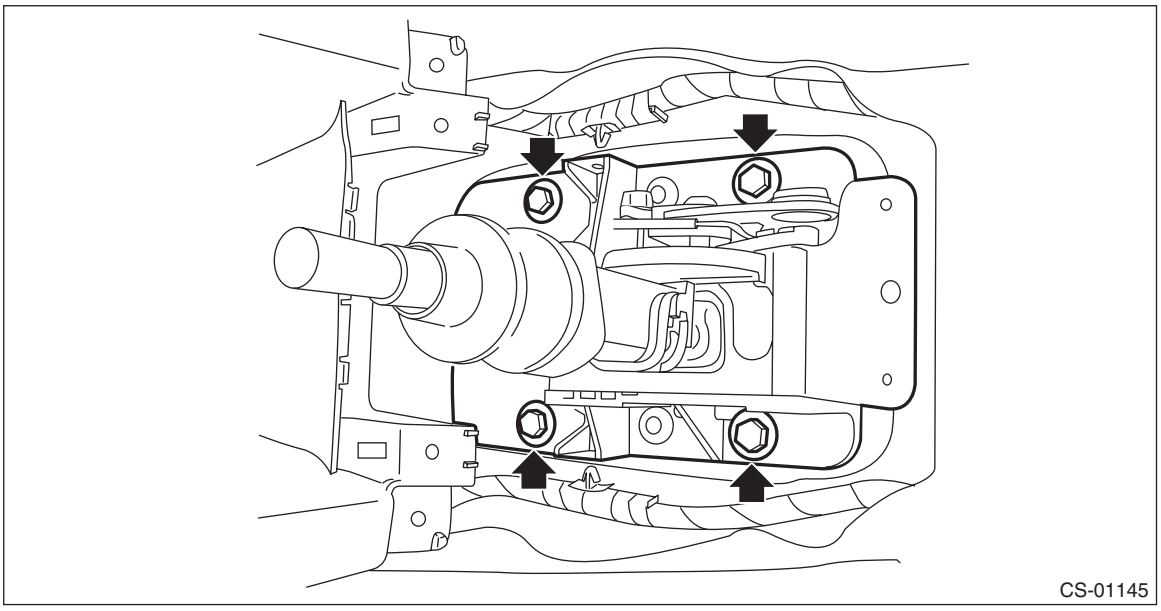

B: INSTALLATION

1) Install the gear shift lever assembly.

Tightening torque:
18 N·m (1.8 kgf-m, 13.3 ft-lb)

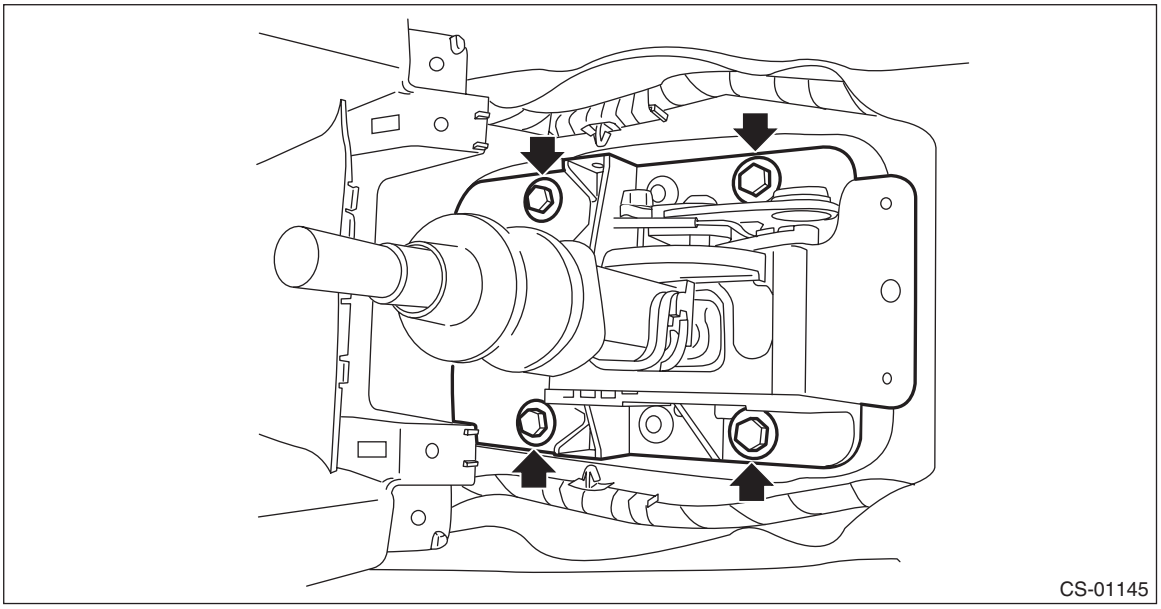

2) Lift up the vehicle.
3) Install the cover cable assembly.

Tightening torque:
7.5 N·m (0.8 kgf-m, 5.5 ft-lb)

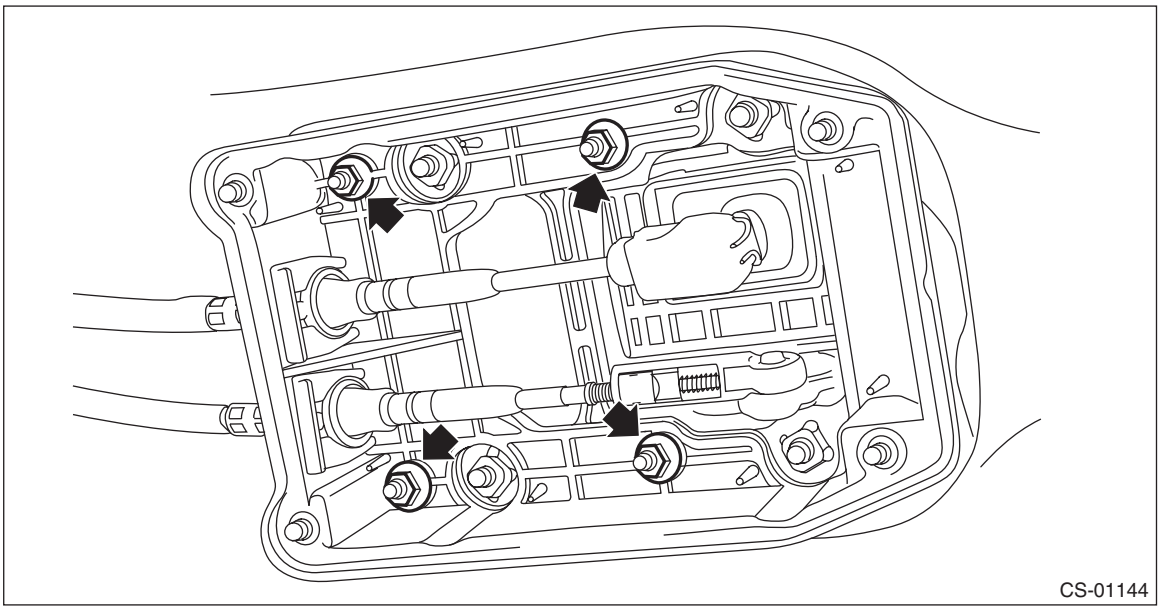

4) Connect the MT gear shift cable and MT gear select cable.

CAUTION:
- **Be careful not to deform the cable inner.**
- **Do not twist the cable inner excessively.**

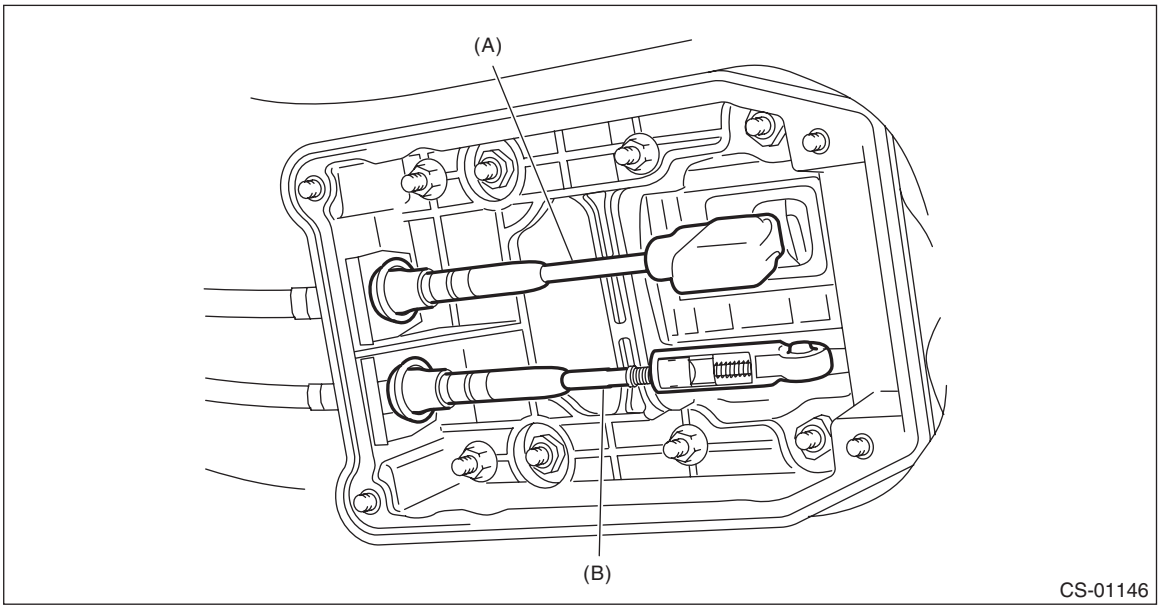

(A) MT gear shift cable
(B) MT gear select cable

5) Install the plate cable assembly.

Tightening torque:
7.5 N·m (0.8 kgf-m, 5.5 ft-lb)

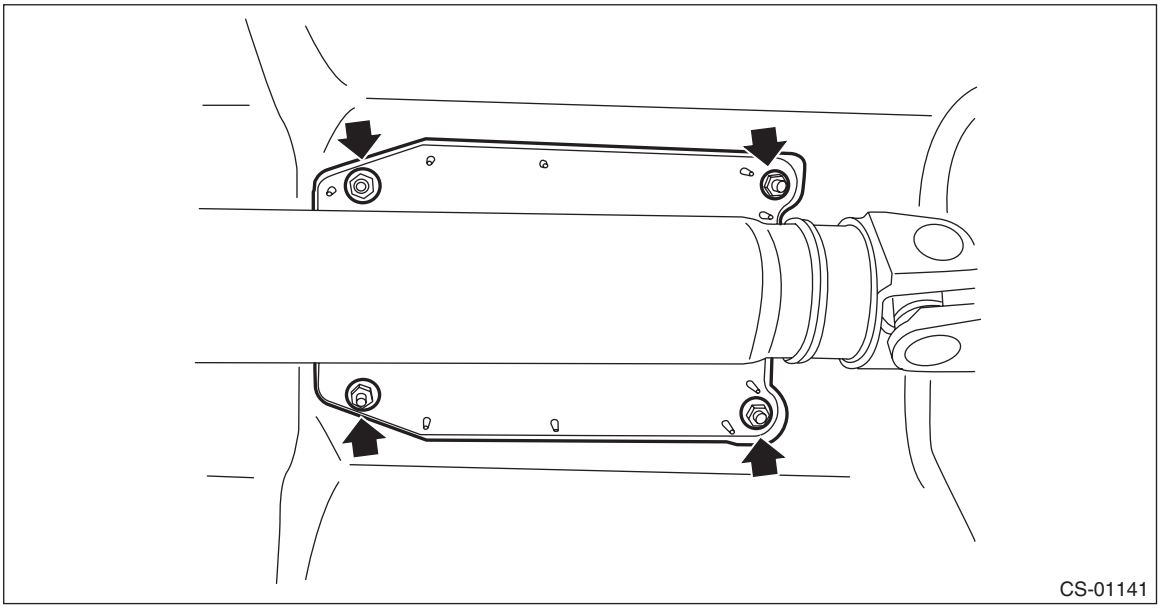

6) Install the heat shield cover.

Tightening torque:
18 N·m (1.8 kgf-m, 13.3 ft-lb)

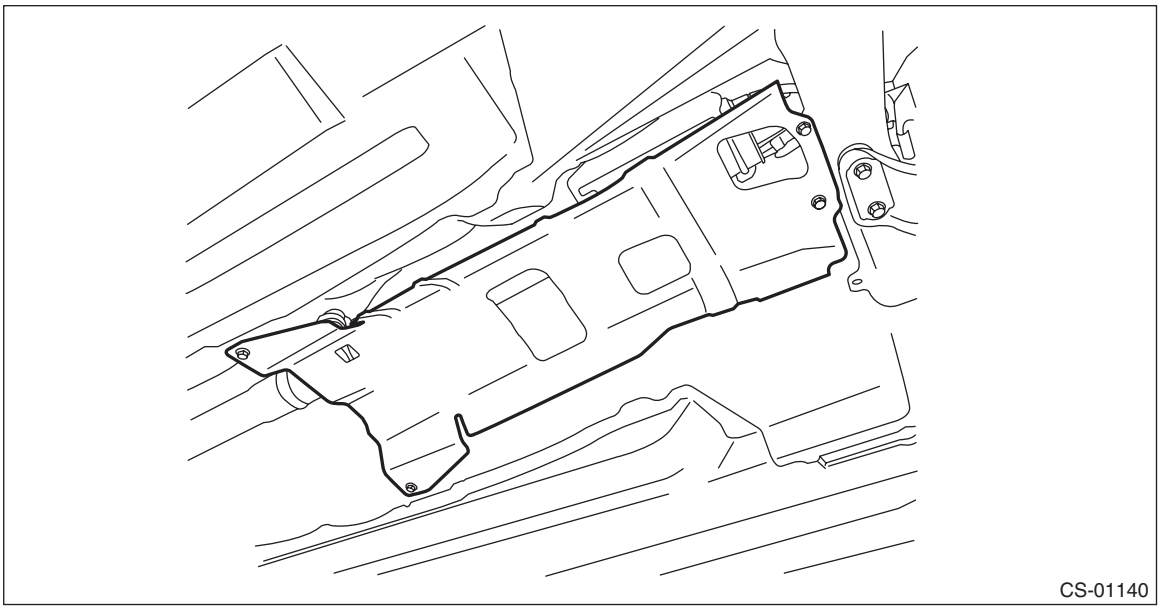

7) Install the center exhaust pipe and rear exhaust pipe. (non-turbo model) <Ref. to EX(H4SO)-8, INSTALLATION, Center Exhaust Pipe.> <Ref. to EX(H4SO)-9, INSTALLATION, Rear Exhaust Pipe.>
8) Install the center exhaust pipe (rear) and rear exhaust pipe. (turbo model) <Ref. to EX(H4DOTC)-13, INSTALLATION, Center Exhaust Pipe.> <Ref. to EX(H4DOTC)-15, INSTALLATION, Rear Exhaust Pipe.>
9) Lower the vehicle.
10) Install the console front cover assembly and the console box. <Ref. to EI-75, INSTALLATION, Console Box.>
11) Install the gear shift knob.
12) Make sure the gears can be shifted accurately into each gear. Adjust the MT gear select cable, if the gears cannot be shifted correctly. <Ref. to CS-95, ADJUSTMENT, MT Gear Select Cable.>

C: INSPECTION

1) Check for any deformed, damaged or worn part. Repair or replace as necessary compare the removed parts with new parts to check if there are damages or not.
2) Check that the lever cannot be moved to the reverse position unless the slider is pulled up.
3) Check that the lever can be moved to the reverse position when the slider is pulled up to maximum.
4) Check that the shift lever returns to the initial position when it is moved to “N” from the condition in 3).

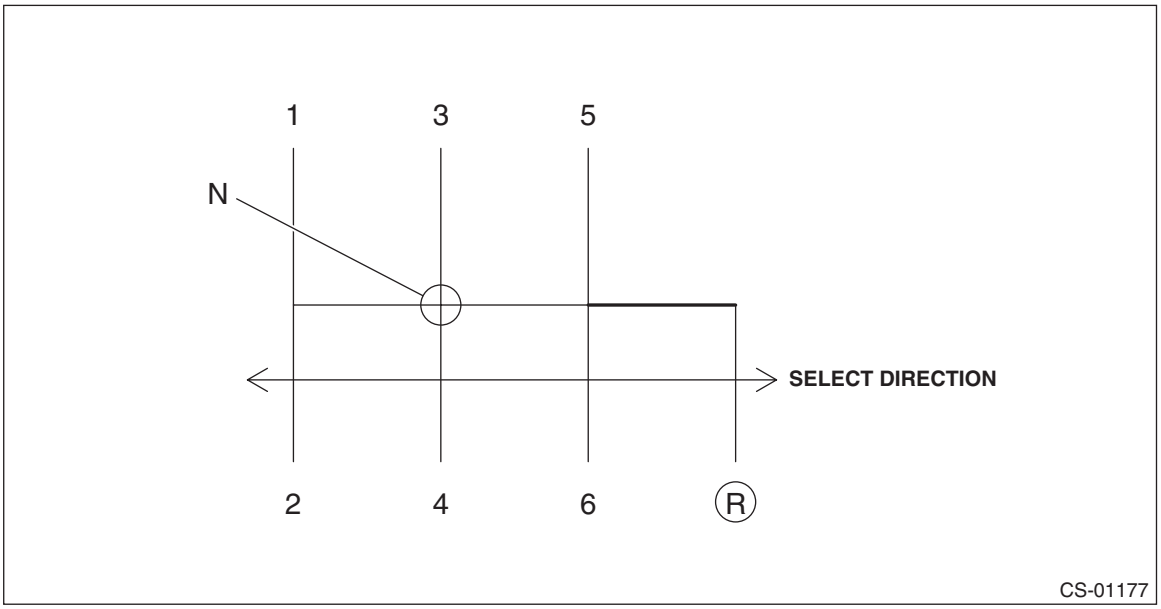

8. MT Gear Shift Cable

A: REMOVAL

1) Disconnect the ground cable from battery.
2) Lift up the vehicle.
3) Remove the center exhaust pipe and rear exhaust pipe. (non-turbo model) <Ref. to EX(H4SO)-8, REMOVAL, Center Exhaust Pipe.> <Ref. to EX(H4SO)-9, REMOVAL, Rear Exhaust Pipe.>
4) Remove the center exhaust pipe (rear) and rear exhaust pipe. (turbo model) <Ref. to EX(H4DOTC)-12, REMOVAL, Center Exhaust Pipe.> <Ref. to EX(H4DOTC)-15, REMOVAL, Rear Exhaust Pipe.>
5) Remove the heat shield cover.

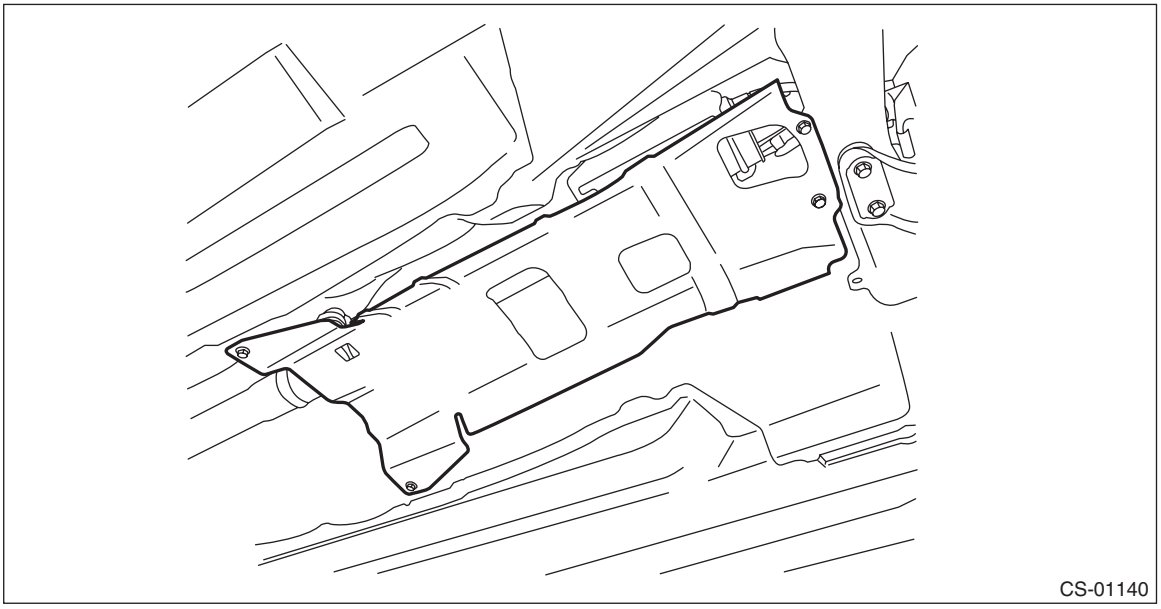

6) Remove the clamp cable and take out the MT gear shift cable from the clamp.

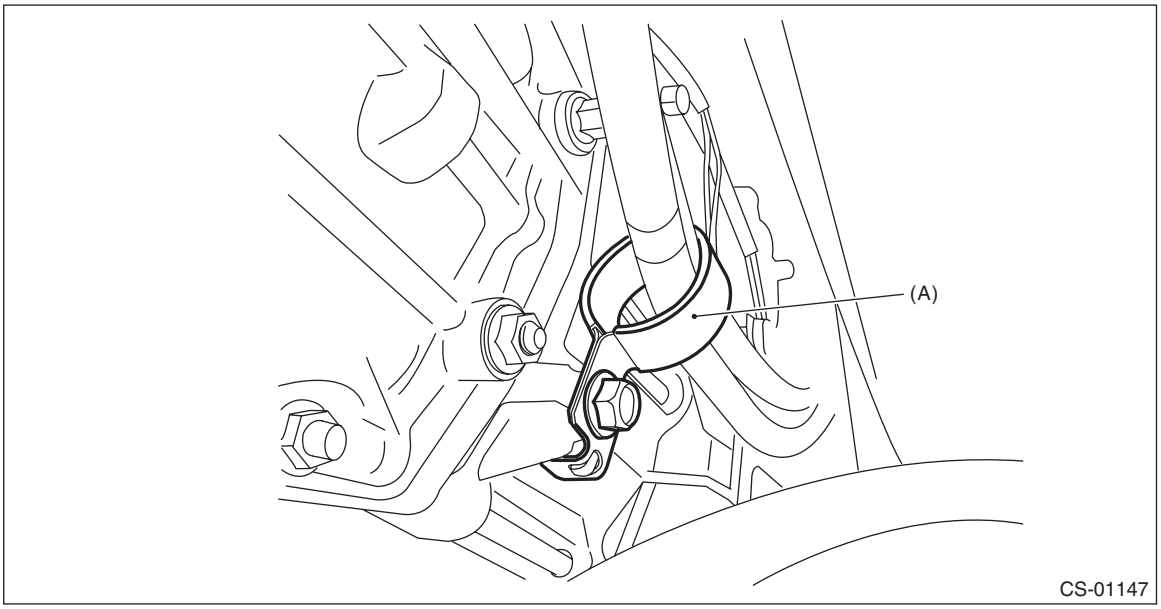

(A) Clamp cable

7) Remove the dust cover from transmission body. (OUTBACK model)

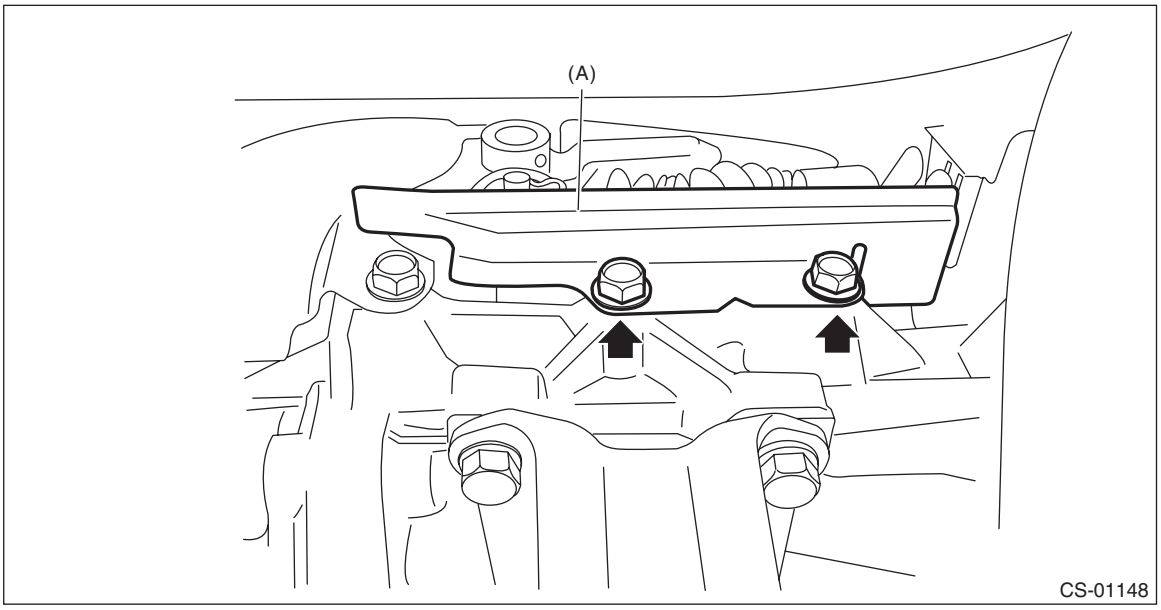

(A) Dust cover

8) Apply a mark on the top end of the MT gear shift cable.
9) Remove the snap pin from the shift lever COMPL.

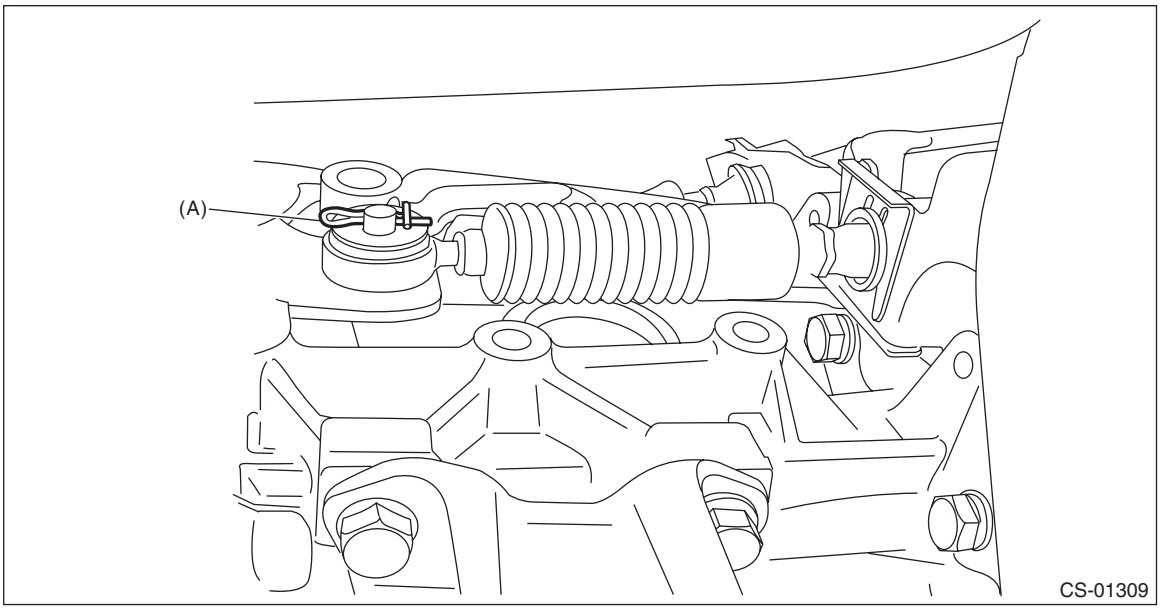

(A) Snap pin

10) Remove the shift bracket and MT gear shift cable as a single unit from the transmission body.

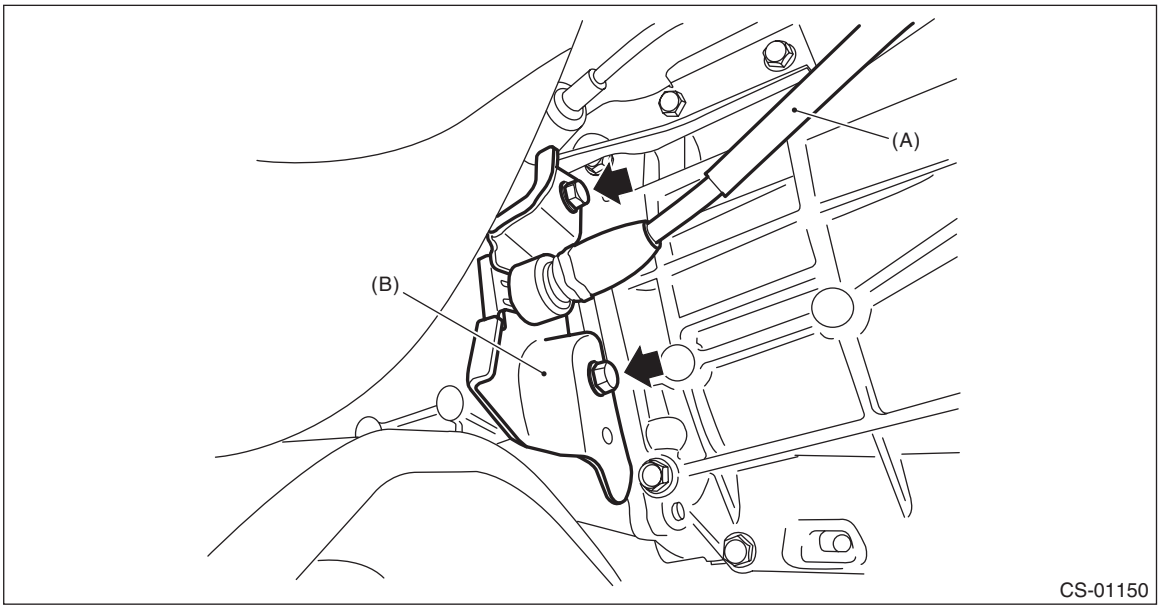

(A) MT gear shift cable
(B) Shift bracket

11) Remove the plate cable assembly.

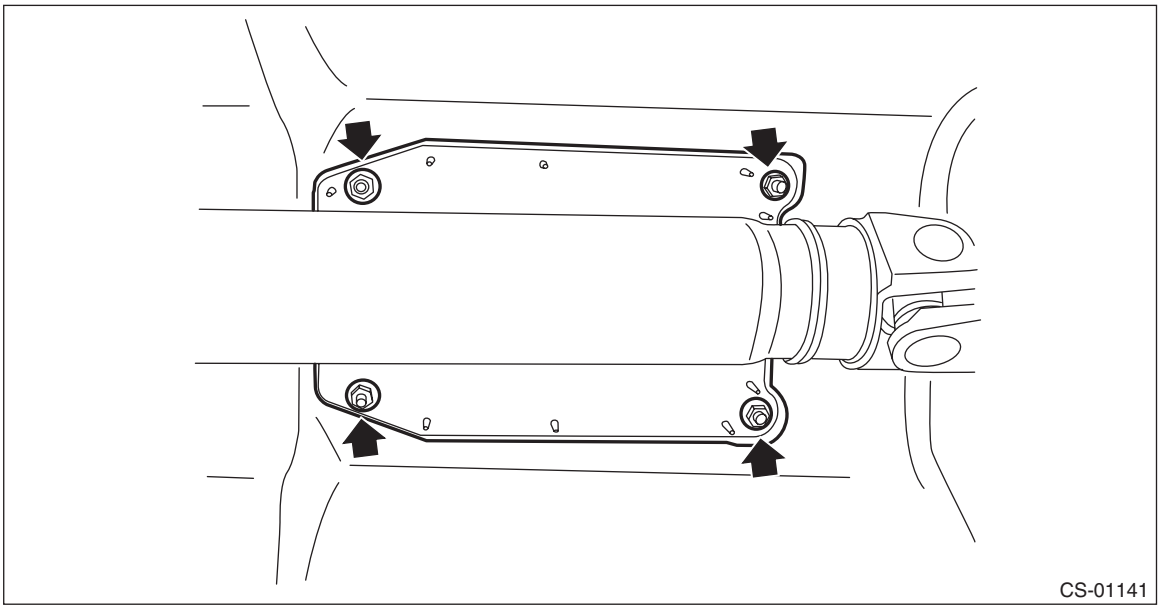

12) Remove the spring at the MT gear shift cable by expanding it and pulling down, and remove the MT gear shift cable from the gear shift lever assembly.

CAUTION:
Be careful not to deform the cable inner.

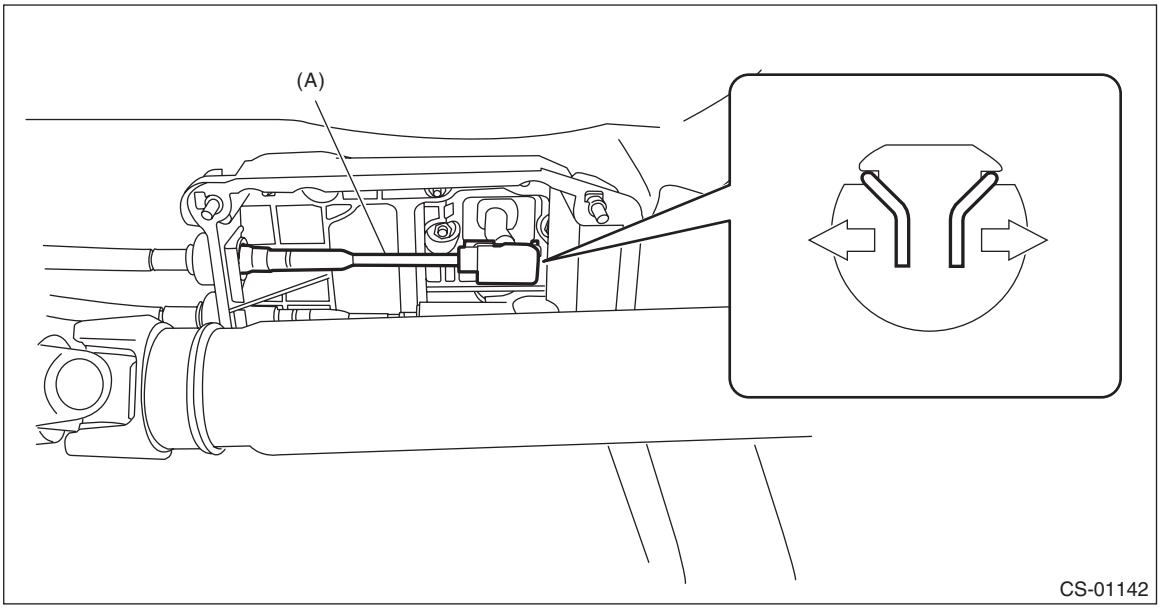

(A) MT gear shift cable

13) Remove the clamp which holds the MT gear shift cable.

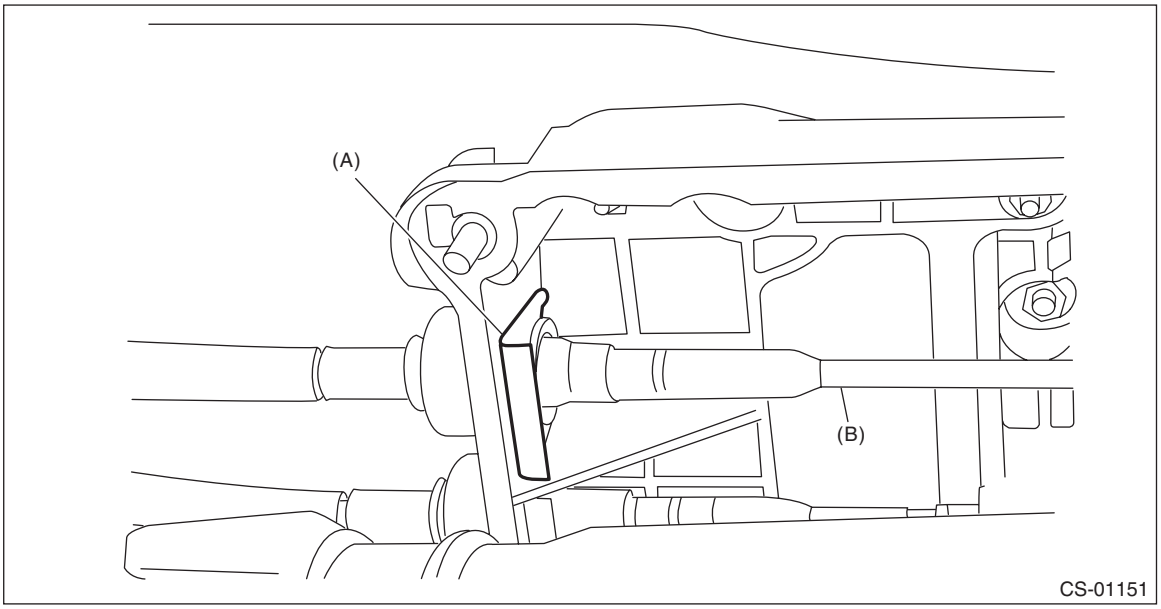

(A) Clamp
(B) MT gear shift cable

14) Pull out the MT gear shift cable from cover cable assembly.

B: INSTALLATION

1) When replacing the new MT gear shift cable, secure it to shift bracket with the clamps, be careful not to mistake the installing direction.

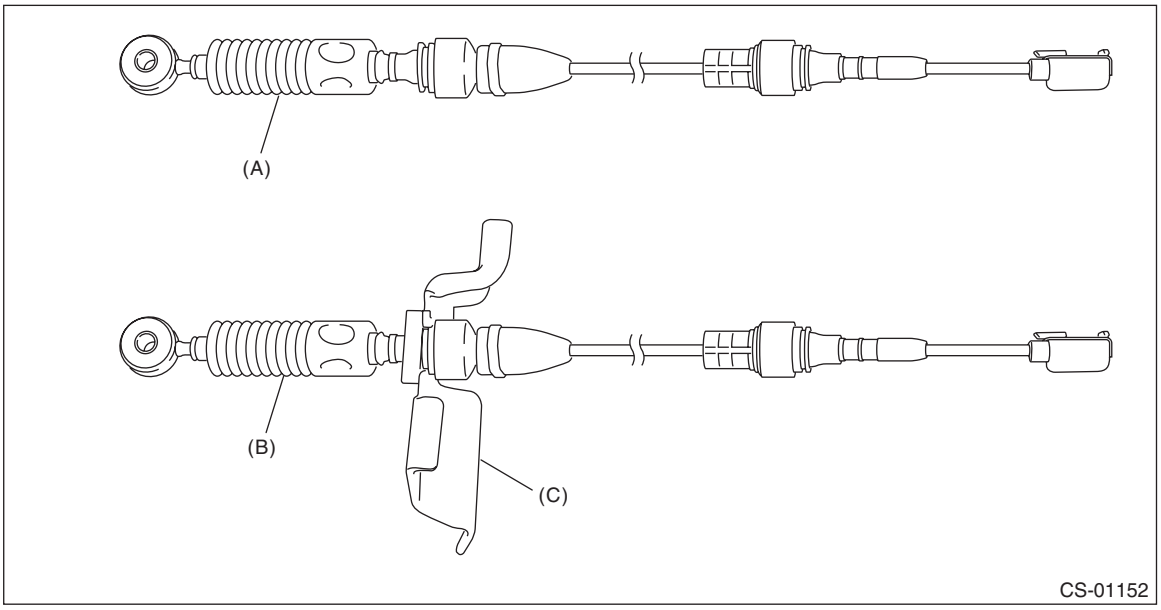

(A) Old MT gear shift cable
(B) New MT gear shift cable
(C) Shift bracket

2) Install the MT gear shift cable and shift bracket as a single unit onto transmission.

CAUTION:
- **Do not bend MT gear shift cable at a sharp angle.**
- **Do not twist the cable inner excessively.**

NOTE:
When installing the MT gear shift cable, make sure that the mark or blue mark on the cable faces up.

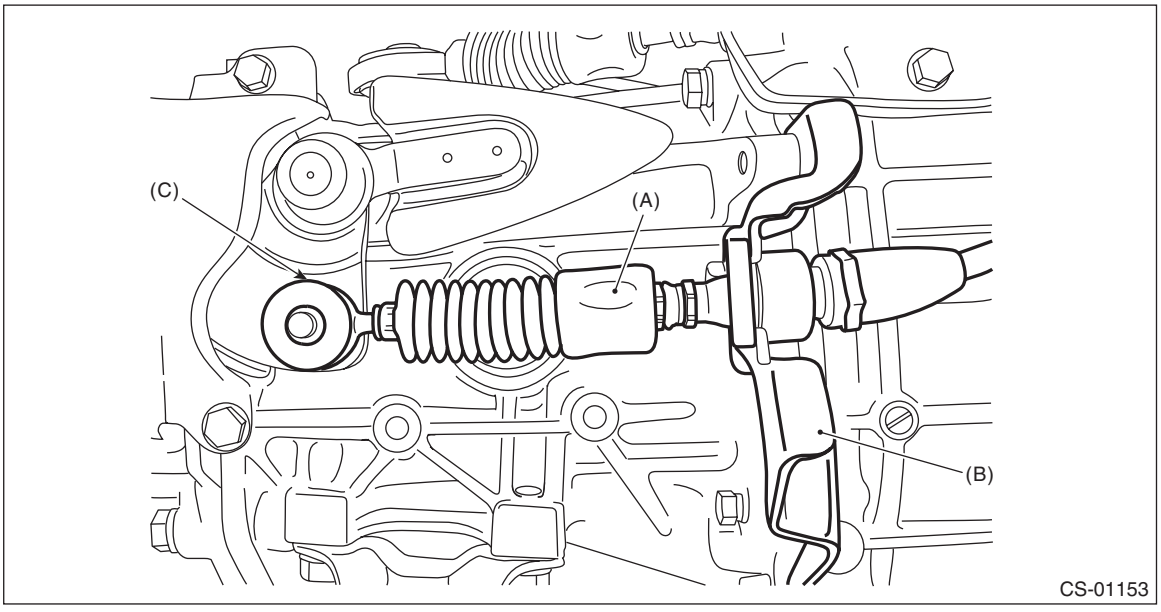

(A) MT gear shift cable
(B) Shift bracket
(C) Mark

3) Tighten the shift bracket with specified torque.

Tightening torque:
18 N·m (1.8 kgf-m, 13.3 ft-lb)

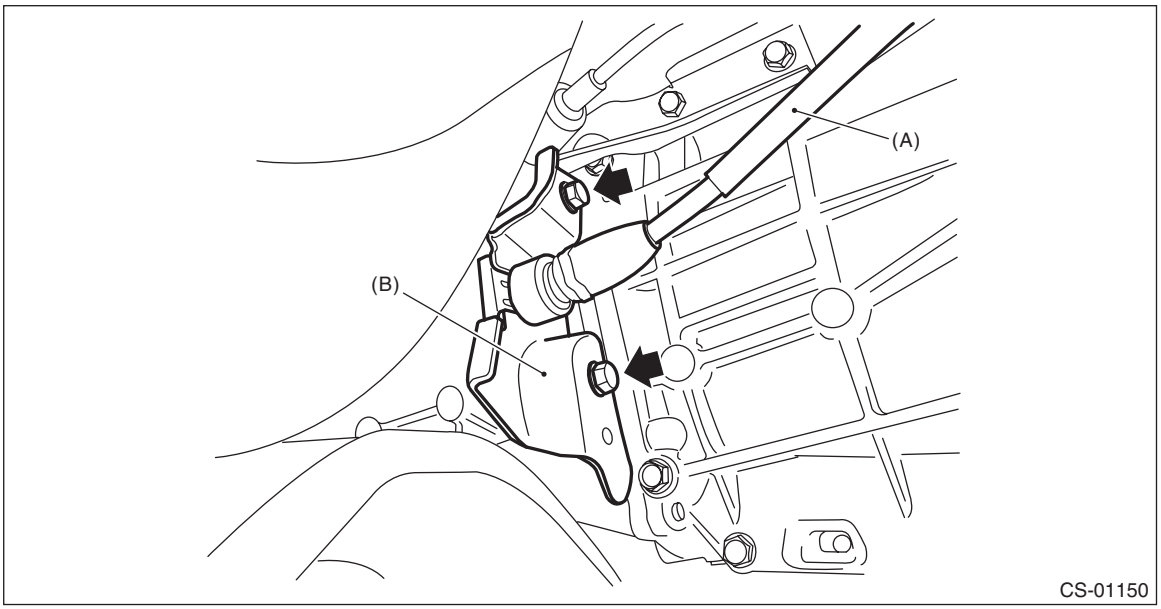

(A) MT gear shift cable
(B) Shift bracket

4) Install the snap pin.

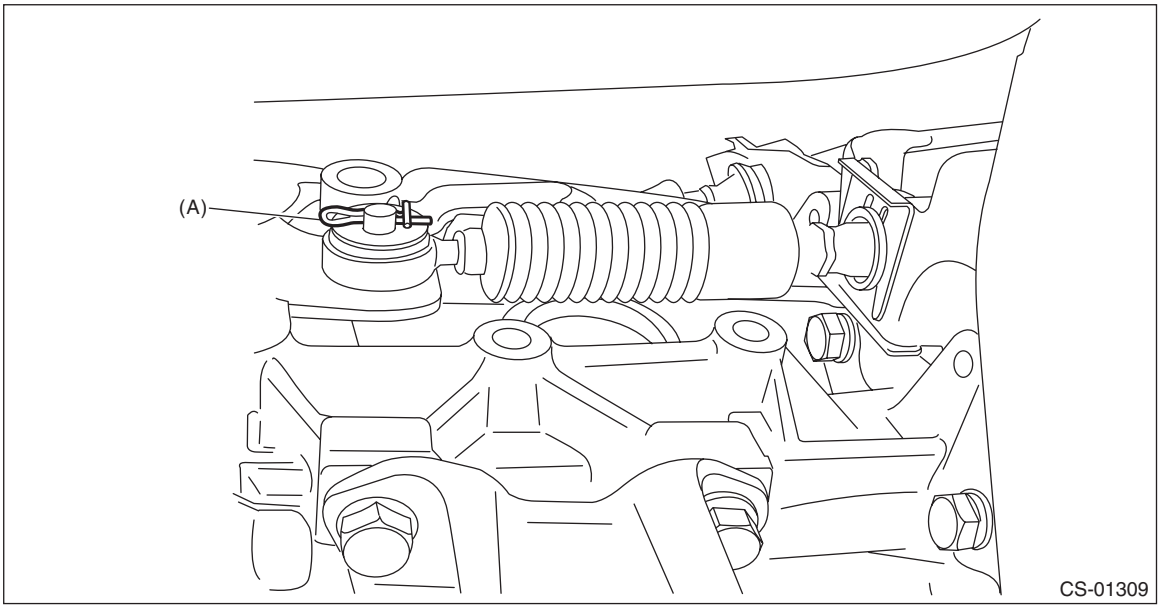

(A) Snap pin

5) Install the dust cover to the transmission body. (OUTBACK model)

Tightening torque:
15 N·m (1.5 kgf-m, 11.1 ft-lb)

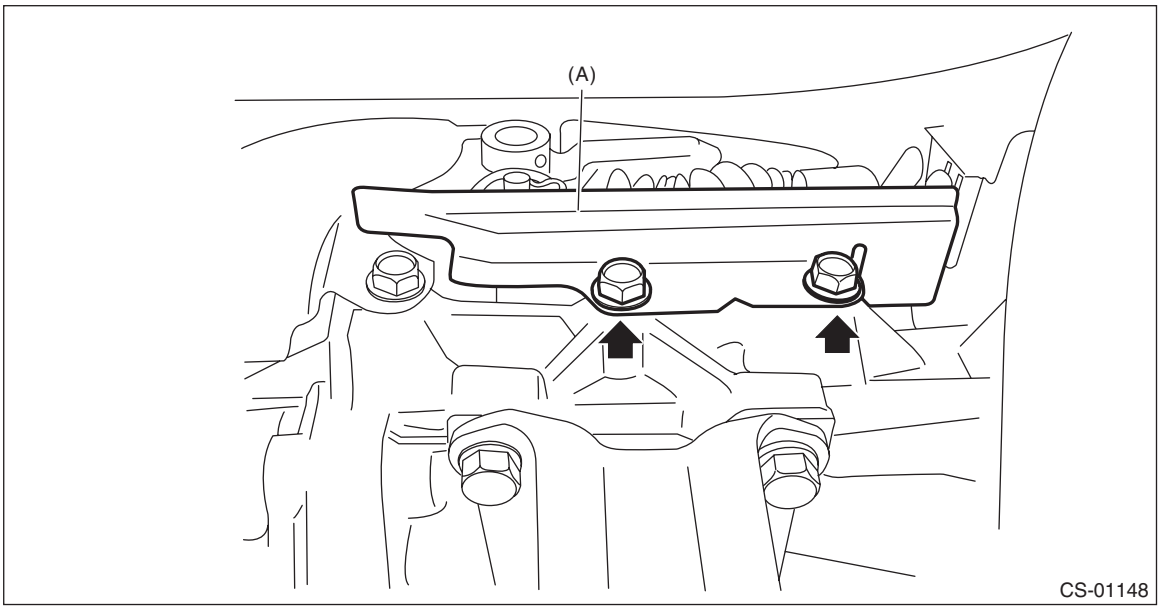

(A) Dust cover

6) Insert the MT gear shift cable into the cover cable assembly, and secure it with the clamp.

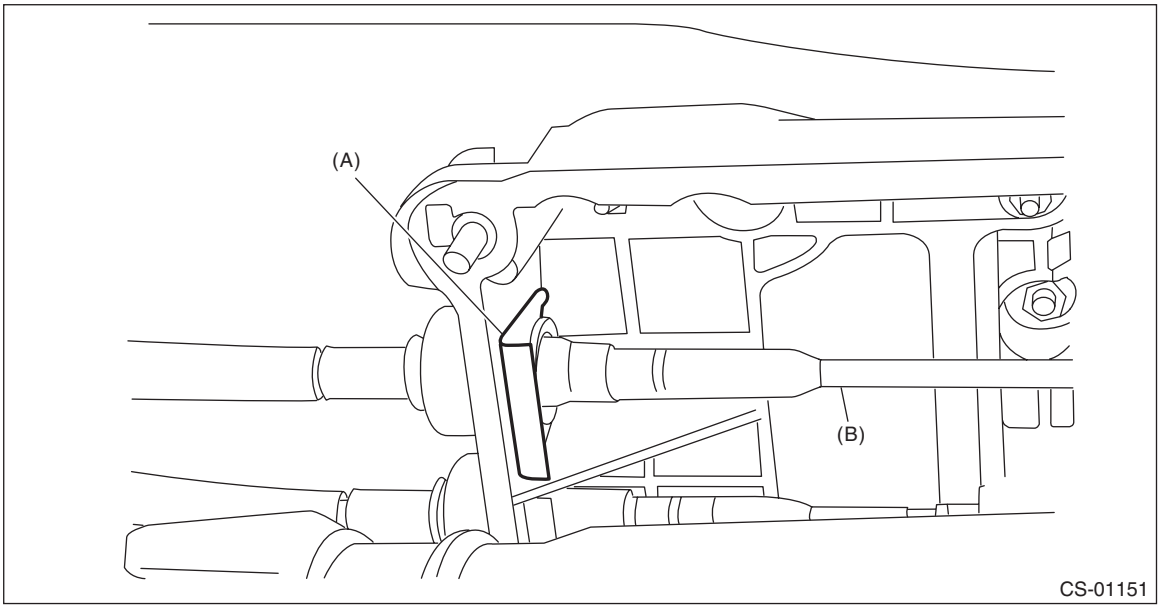

(A) Clamp
(B) MT gear shift cable

7) Connect the MT gear shift cable.

8) Install the plate cable assembly.

Tightening torque:
7.5 N·m (0.8 kgf-m, 5.5 ft-lb)

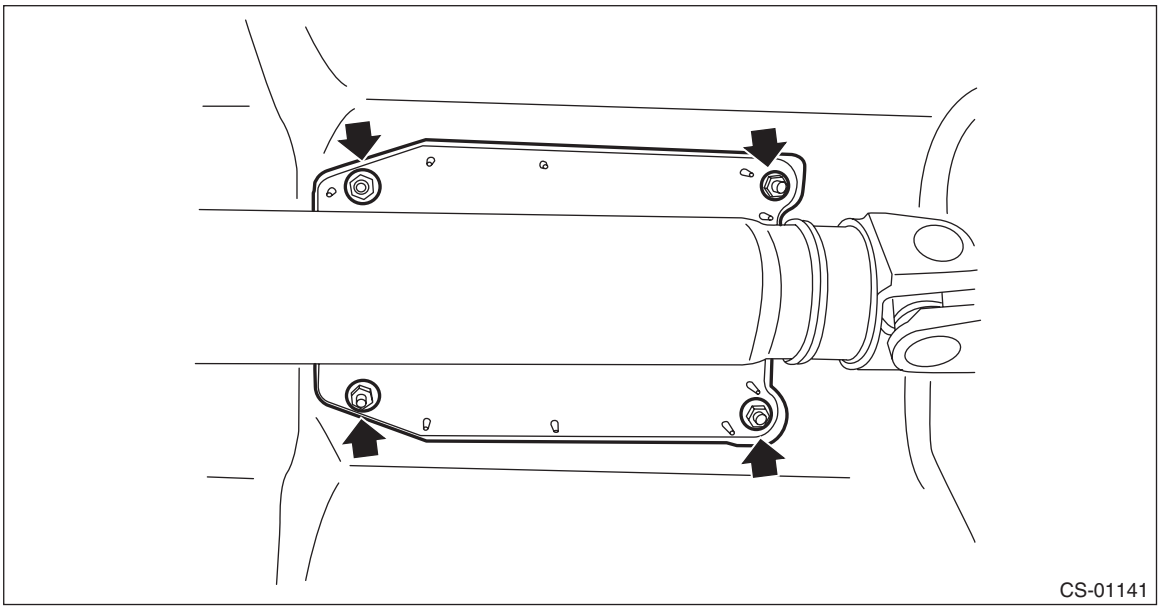

9) Insert the MT gear shift cable into clamp cable, and install to the transmission.

Tightening torque:
18 N·m (1.8 kgf-m, 13.3 ft-lb)

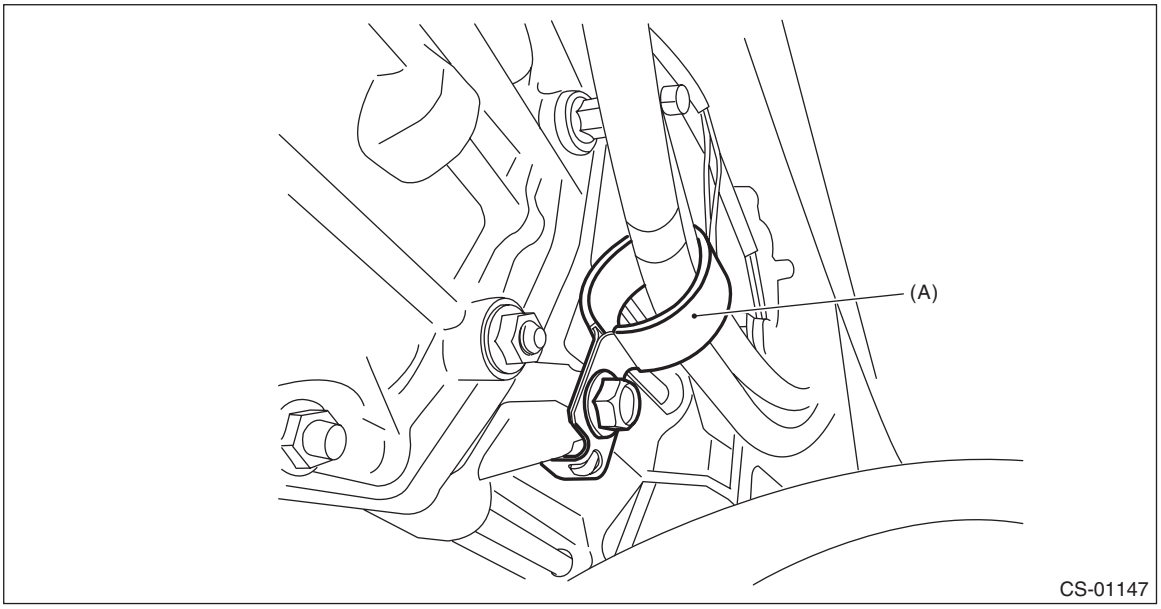

(A) Clamp cable

10) Install the heat shield cover.

Tightening torque:
18 N·m (1.8 kgf-m, 13.3 ft-lb)

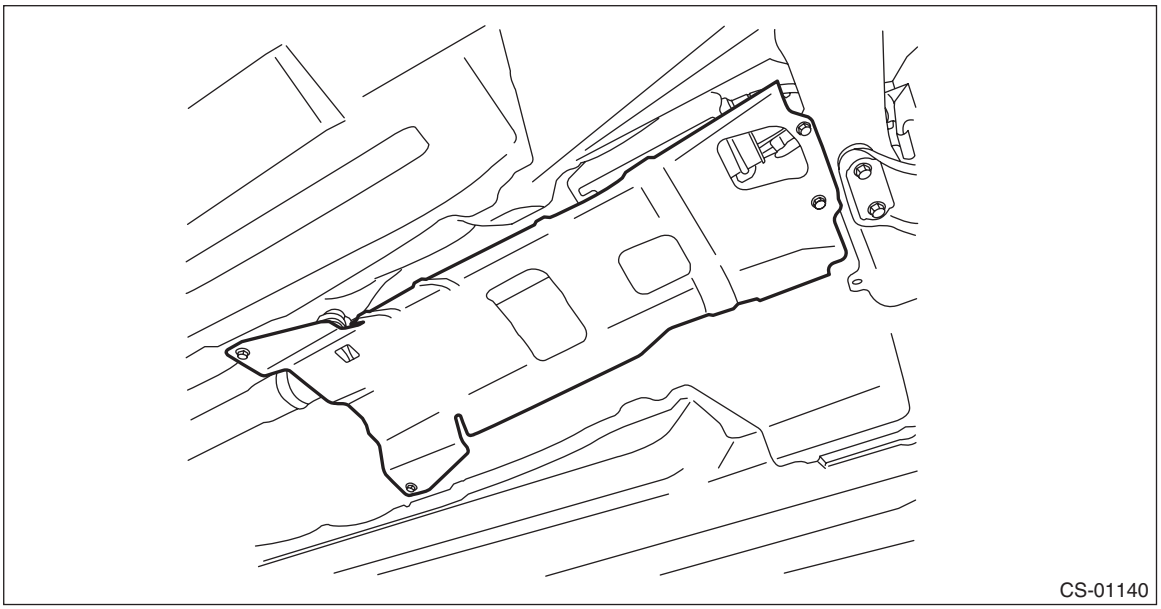

11) Install the center exhaust pipe and rear exhaust pipe. (non-turbo model) <Ref. to EX(H4SO)-8, INSTALLATION, Center Exhaust Pipe.> <Ref. to EX(H4SO)-9, INSTALLATION, Rear Exhaust Pipe.>
12) Install the center exhaust pipe (rear) and rear exhaust pipe. (turbo model) <Ref. to EX(H4DOTC)-13, INSTALLATION, Center Exhaust Pipe.> <Ref. to EX(H4DOTC)-15, INSTALLATION, Rear Exhaust Pipe.>
13) Lower the vehicle.
14) Make sure the gears can be shifted accurately into each gear.

9. MT Gear Select Cable

A: REMOVAL

CAUTION:
Always use new MT gear select cable if the cable is removed from selector lever COMPL of transmission side.

1) Disconnect the ground cable from battery.
2) Remove the ten clips and remove the grille bracket.

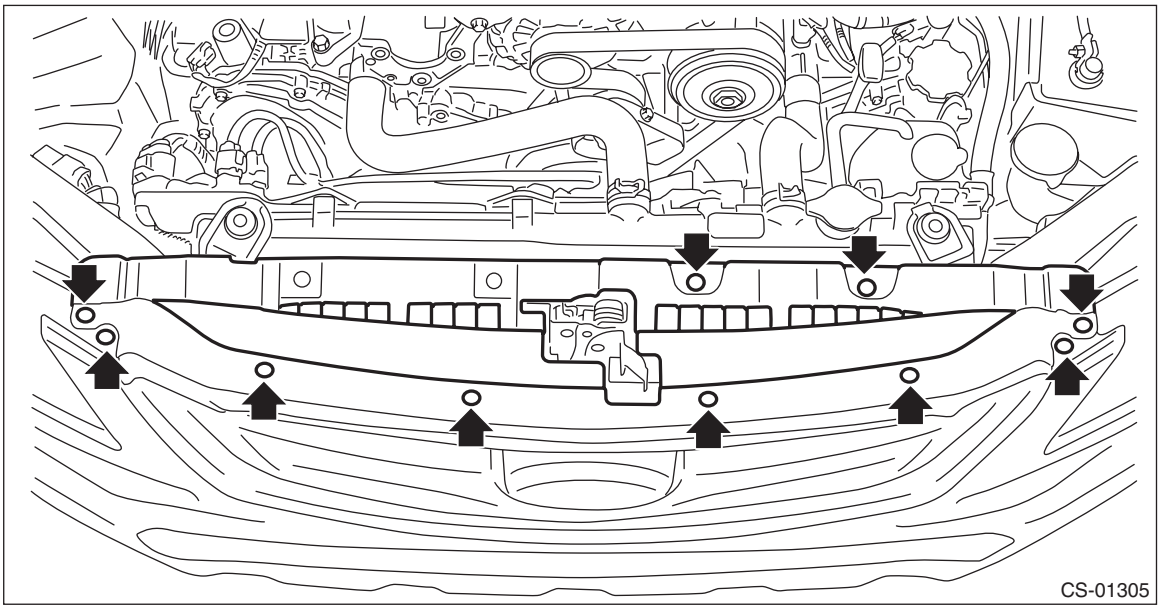

3) Remove the air intake duct.
- Non-turbo model

<Ref. to IN(H4SO)-9, REMOVAL, Air Intake Duct.>
- Turbo model

<Ref. to IN(H4DOTC)-12, REMOVAL, Air Intake Duct.>
4) Remove the intercooler and the intercooler stay. (turbo model) <Ref. to IN(H4DOTC)-17, REMOVAL, Intercooler.>
5) Remove the air intake boot assembly. (non-turbo model) <Ref. to IN(H4SO)-8, REMOVAL, Air Intake Boot.>
6) Remove the throttle body. (non-turbo model) <Ref. to FU(H4SO)-15, REMOVAL, Throttle Body.>

7) Remove the bolt and disconnect the engine harness connector. (non-turbo model)

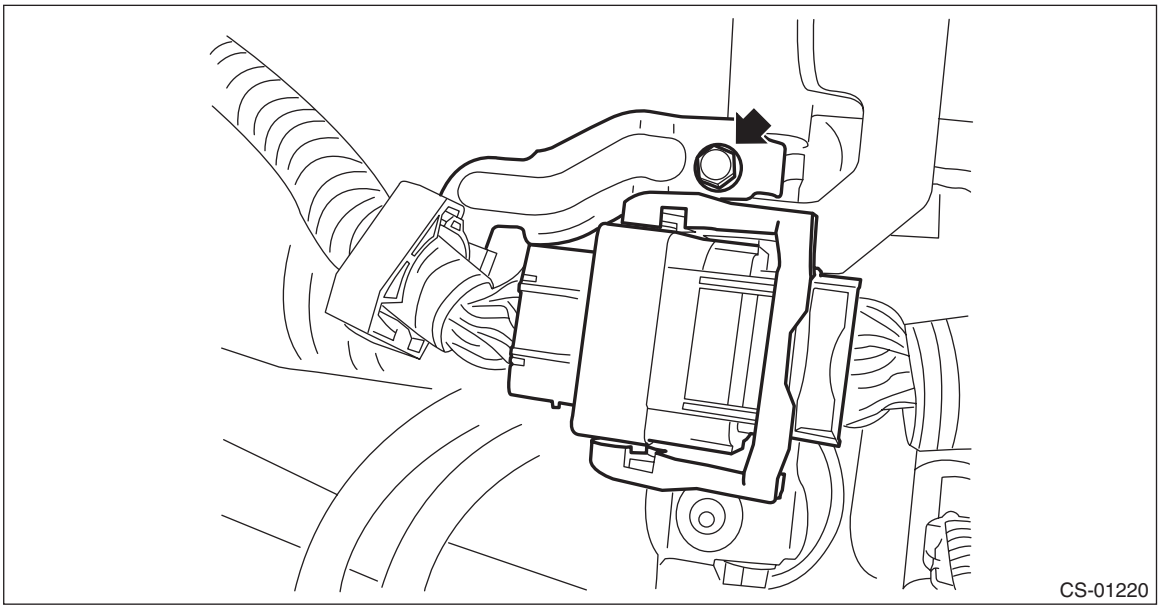

8) Remove the engine harness connector from the engine hanger rear. (non-turbo model)

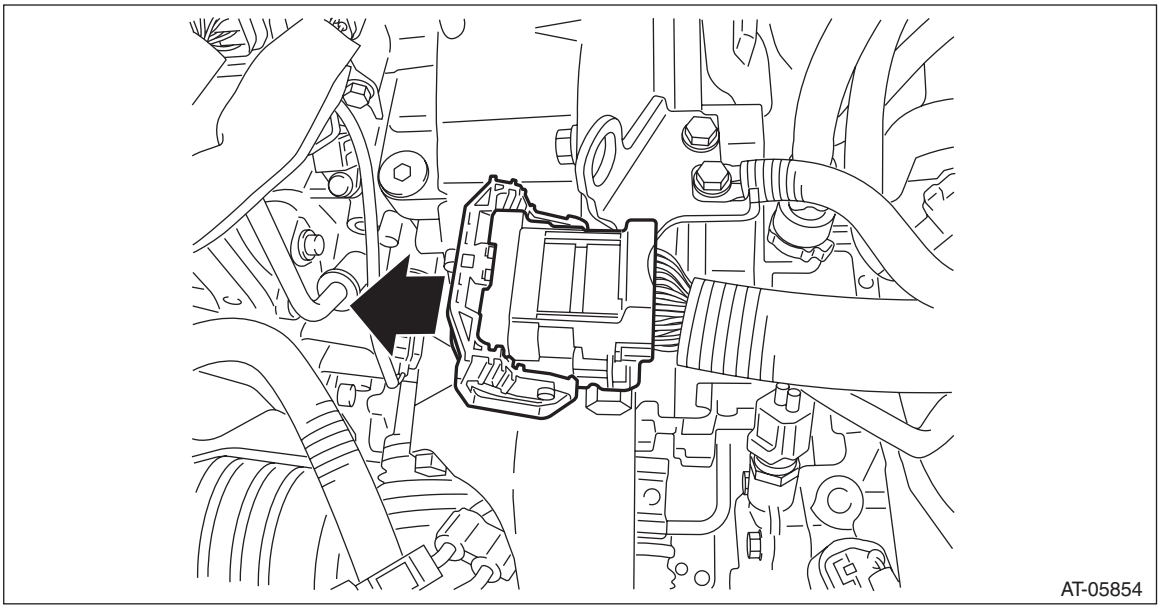

9) Remove the engine hanger rear. (non-turbo model)

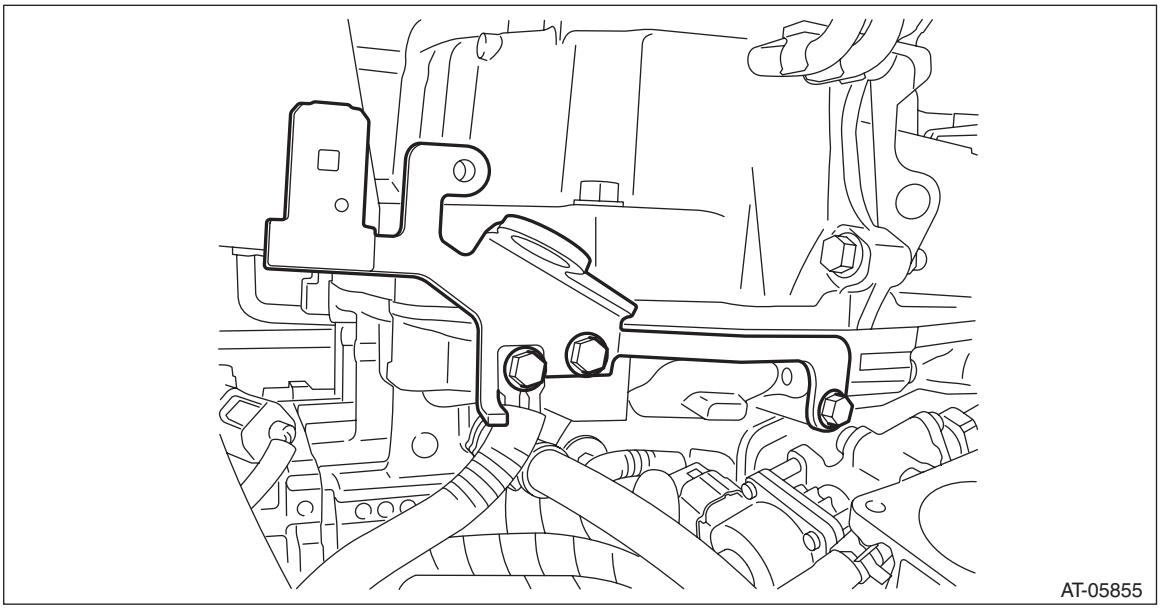

10) Install the engine hanger rear for turbo model. (non-turbo model)
Part No. 10004AA180 Engine hanger rear

Tightening torque:
16 N·m (1.6 kgf-m, 11.8 ft-lb)

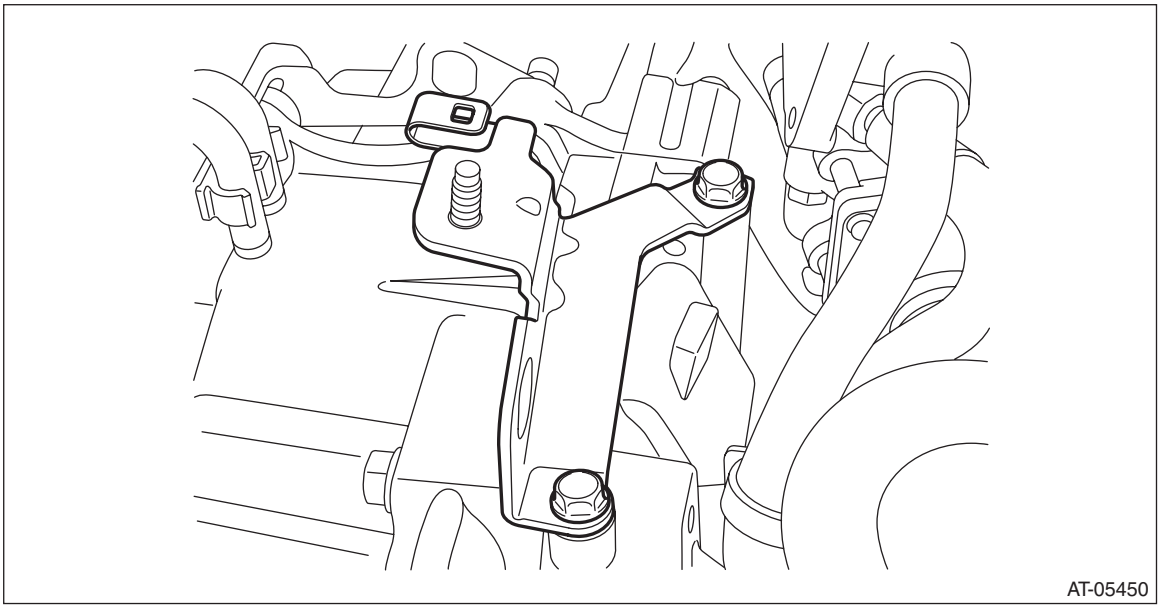

11) Lift up the vehicle.
12) Remove the center exhaust pipe and rear exhaust pipe. (non-turbo model) <Ref. to EX(H4SO)-8, REMOVAL, Center Exhaust Pipe.> <Ref. to EX(H4SO)-9, REMOVAL, Rear Exhaust Pipe.>
13) Remove the center exhaust pipe (rear) and rear exhaust pipe. (turbo model) <Ref. to EX(H4DOTC)-12, REMOVAL, Center Exhaust Pipe.> <Ref. to EX(H4DOTC)-15, REMOVAL, Rear Exhaust Pipe.>

14) Remove the heat shield cover.

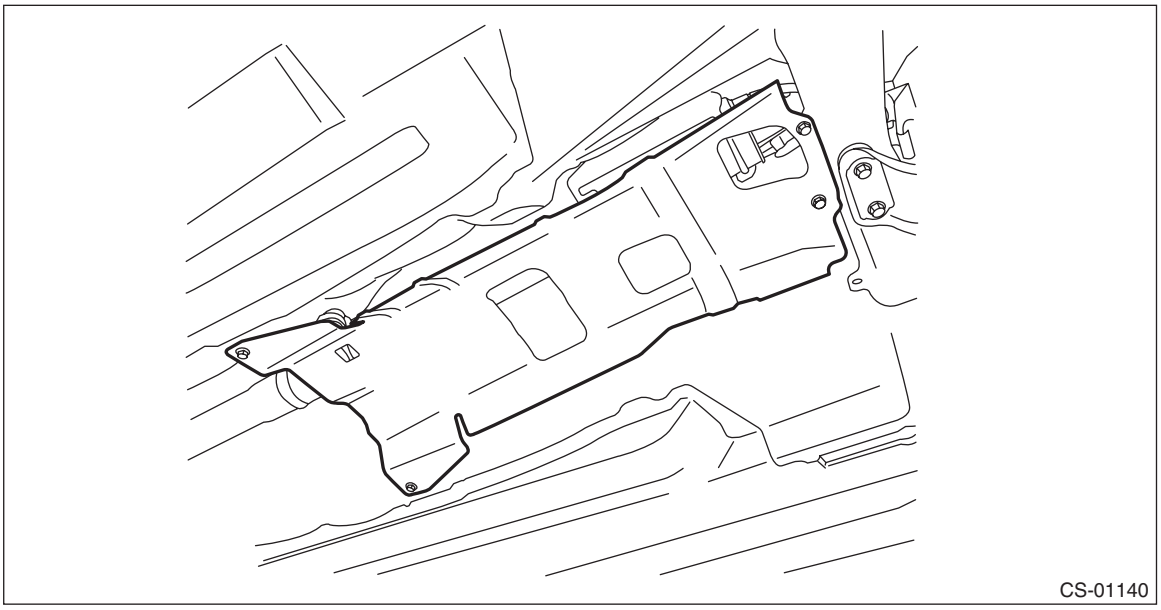

15) Lower the vehicle.
16) Remove the nuts from left and right transmission mounting brackets.

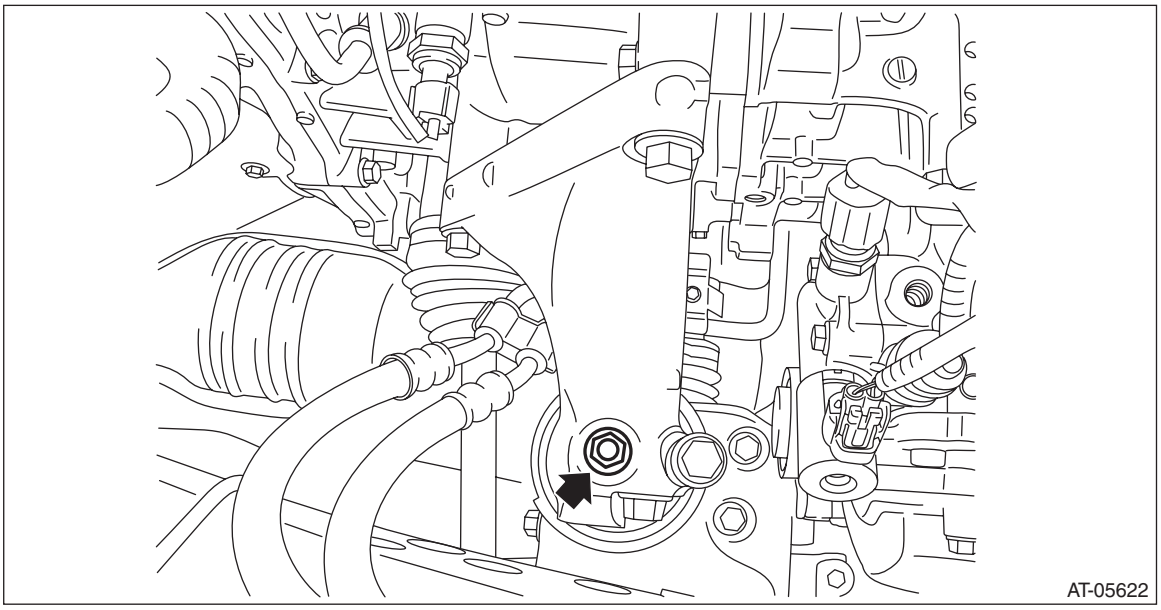

17) Set the ST1 and ST2 to vehicle.
ST1 99099AJ000 ENGINE HANGER
ST2 99099AJ010 CHAIN BALANCER

CAUTION:
- **Set so that the chain sling does not hit the engine parts.**
- **Set the arms of ST (ENGINE HANGER) at the locations shown in the figure.**

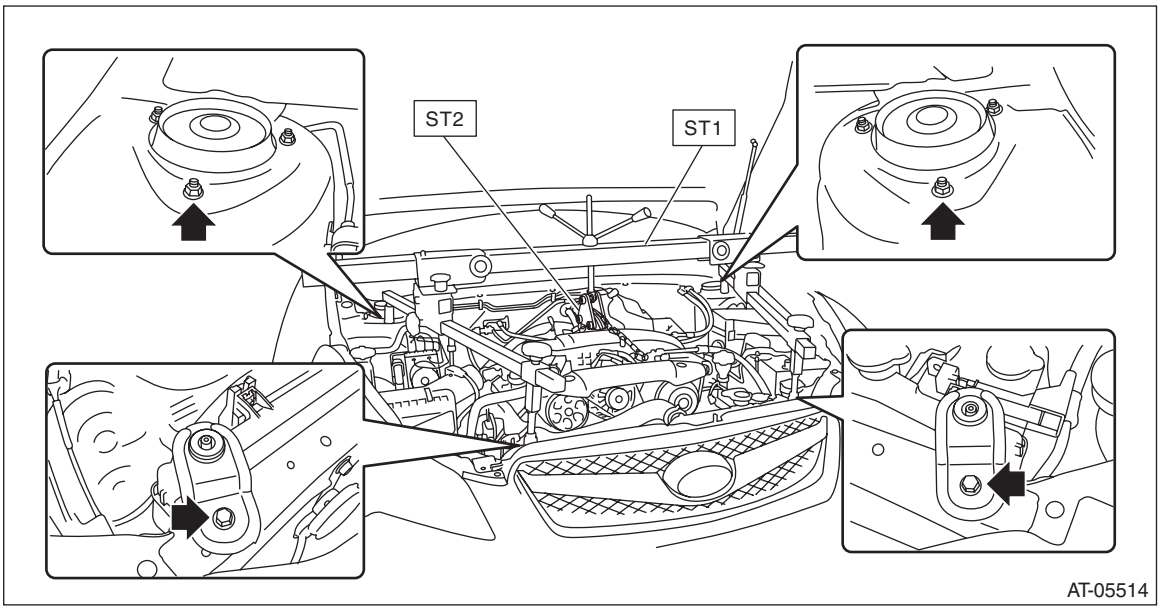

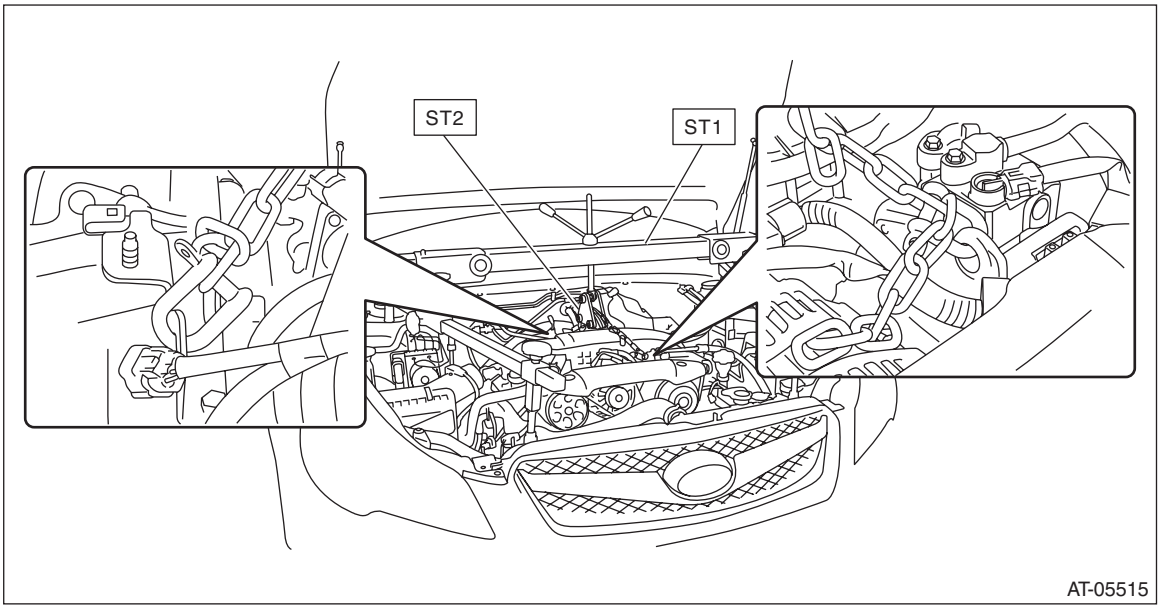

18) Remove the stopper rod.

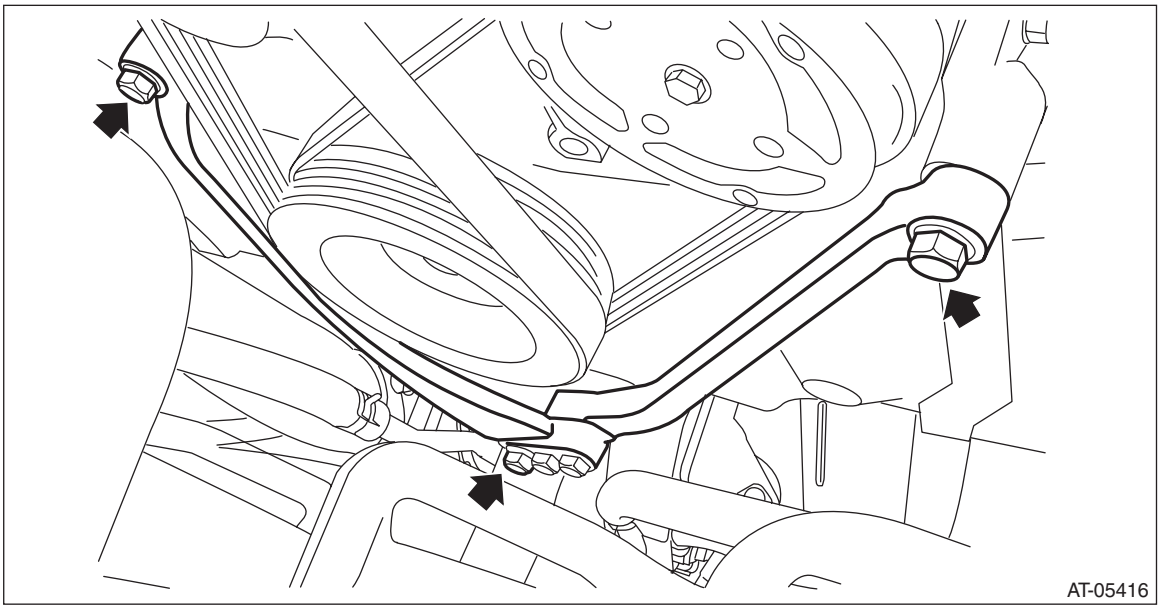

19) Lift the engine slightly and remove the engine mounting bolts.

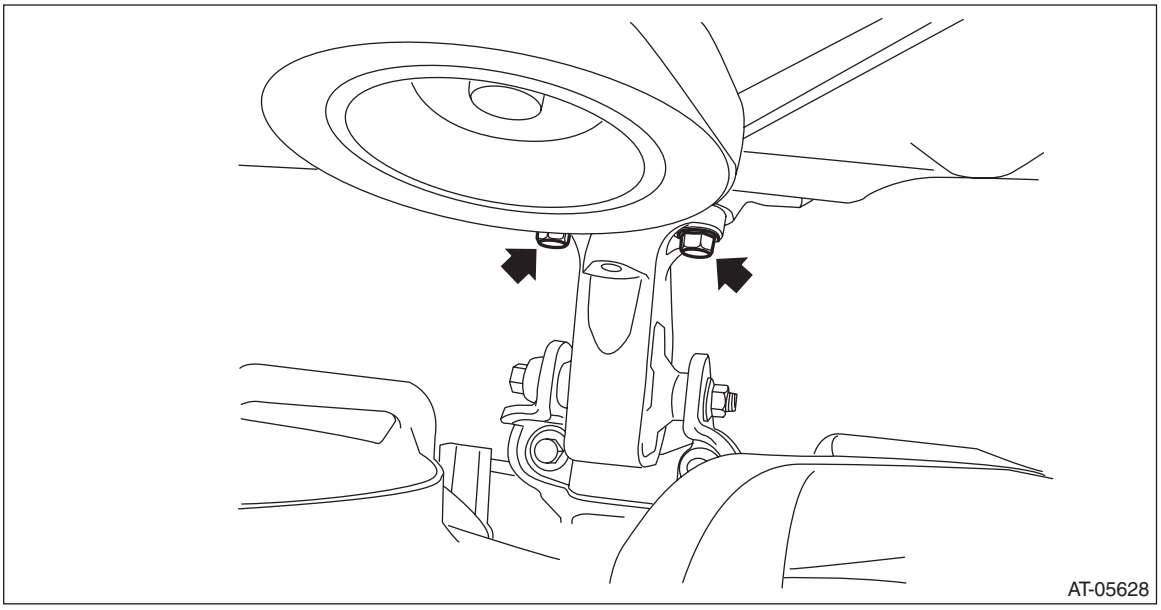

20) Remove the engine mounting nut and bolt to remove the engine mounting.

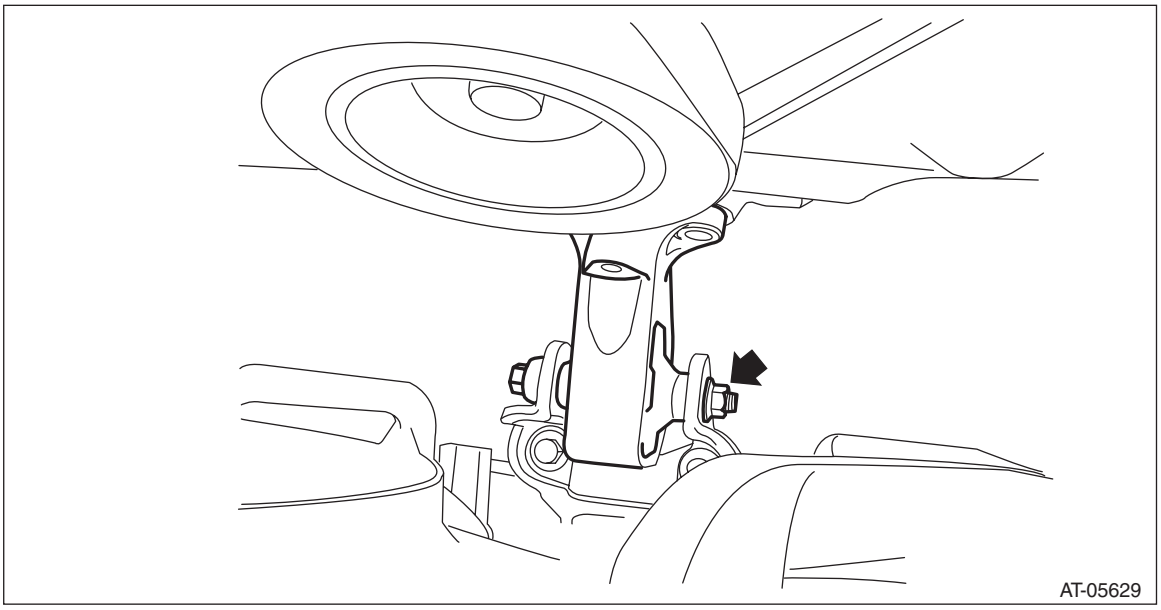

21) Temporarily attach ST by using two bolts.
ST 41099AJ000 SPECIAL TOOL H4

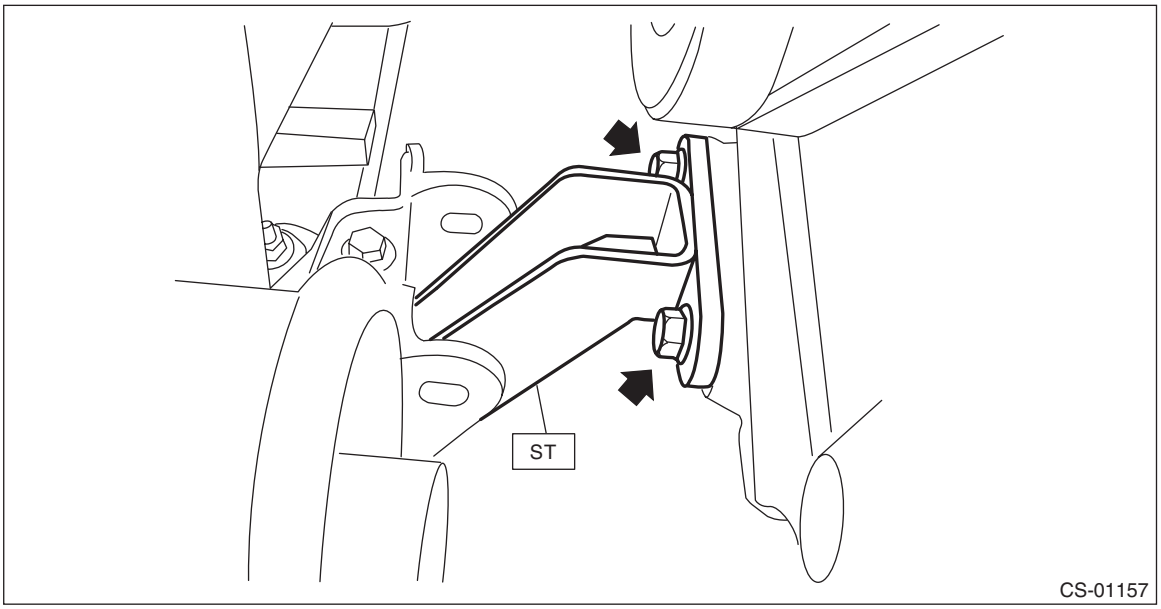

22) Lift up the engine unit high enough to install the bolt and nut to vehicle.

CAUTION:
Do not lift up higher than enough level to install the ST to avoid damage to the hoses and pipes inside the engine room.

NOTE:
• If it is difficult to pull out the stud bolt from transmission mounting bracket, slightly shake the engine unit while lifting up.

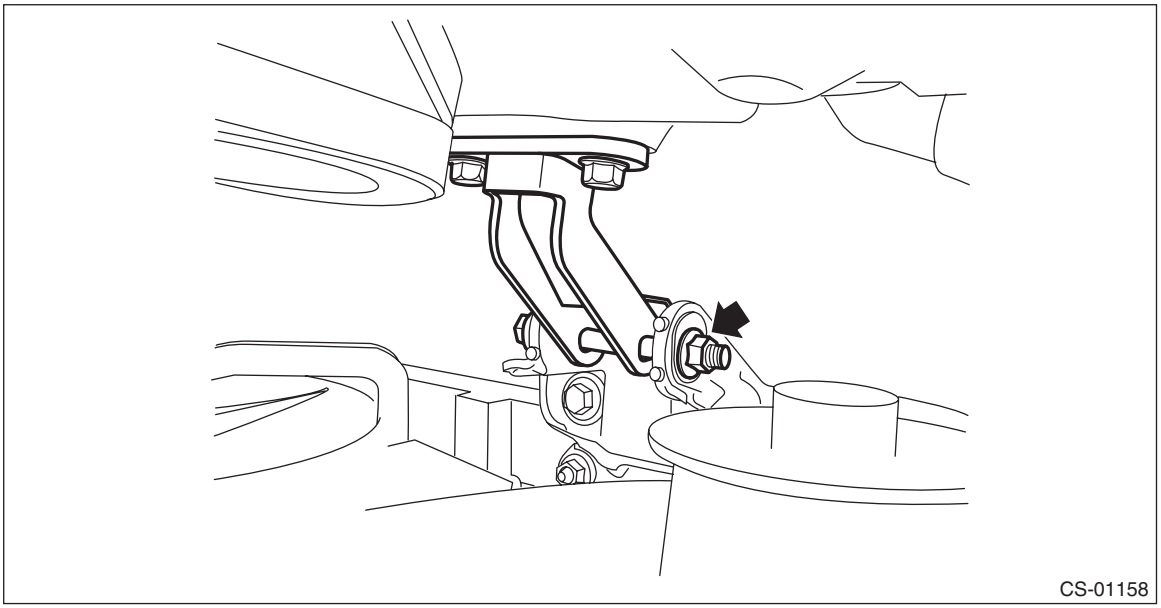

23) Tighten the mounting bolts on the engine side.

Tightening torque:
25 N·m (2.5 kgf-m, 18.4 ft-lb)

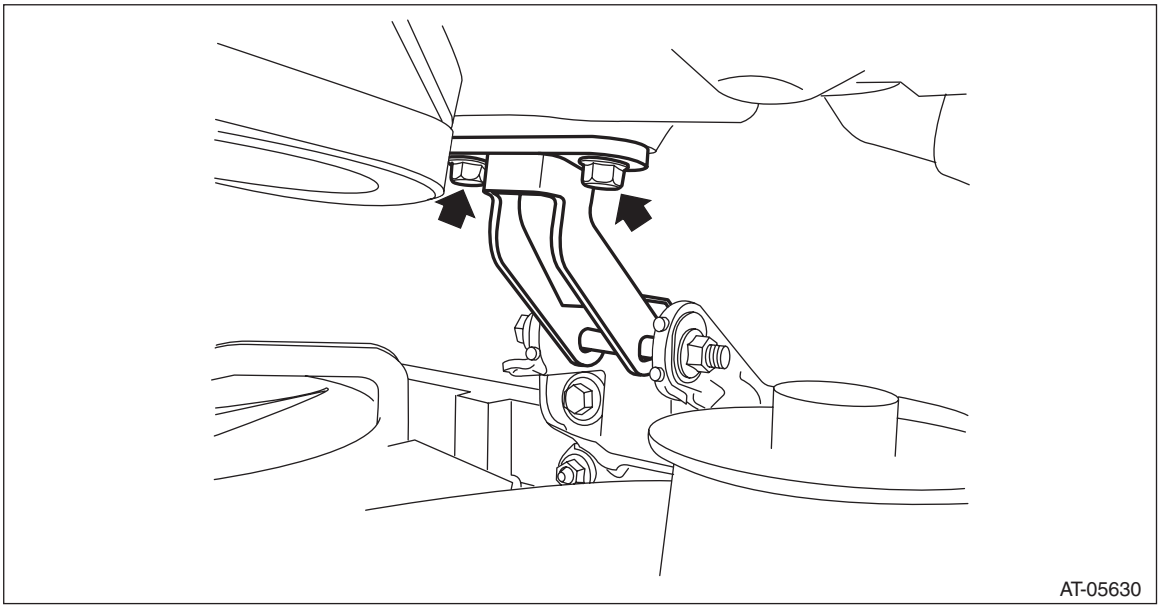

24) Rotate the handle of the ST (ENGINE HANGER) to loosen the sling chain.
25) Lift up the vehicle.
26) Set the transmission jack to the transmission.

27) Remove the clamp cable and take out the MT gear select cable from the clamp.

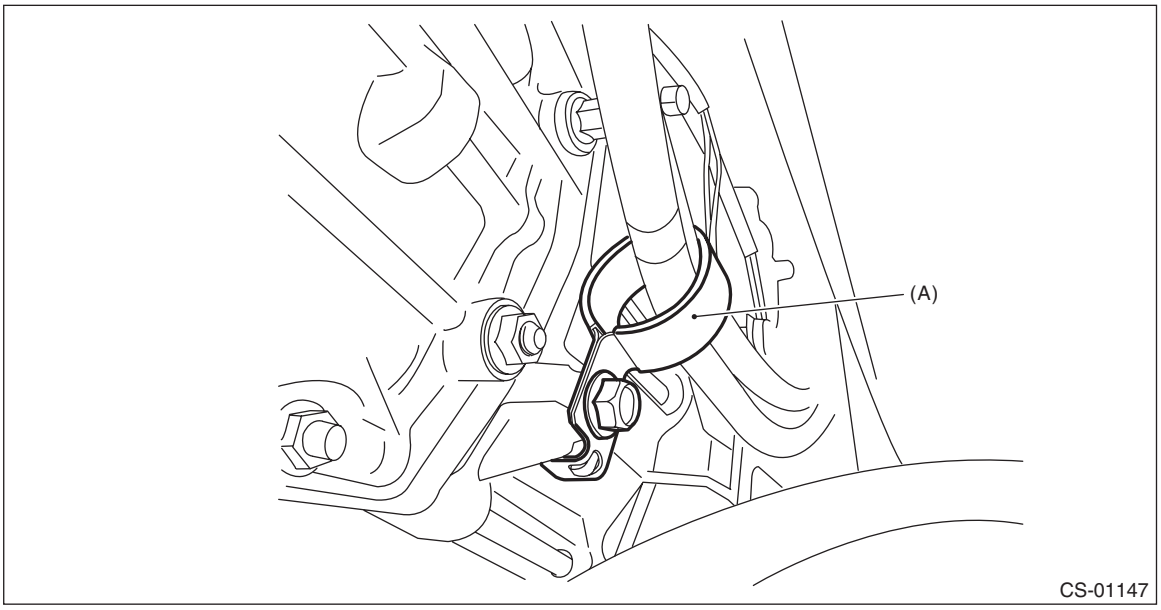

(A) Clamp cable

28) Remove the mounting bolts from the front crossmember and rear crossmember, and lower the transmission.

CAUTION:
When lowering the transmission, make sure that the transmission jack does not come off from the transmission.

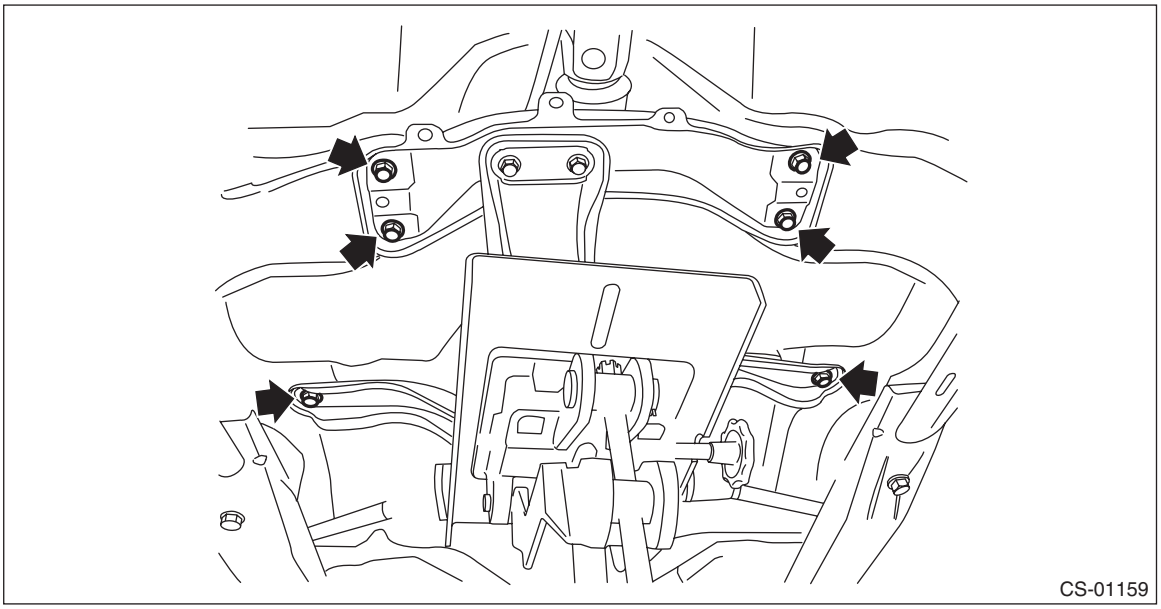

29) Insert a spanner between the selector lever COMPL and the MT gear select cable and remove the MT gear select cable by raising the handle.

NOTE:
- Use a spanner with 11 to 13 in size.
- The thickness of the spanner must not exceed 6 mm (0.2 in).

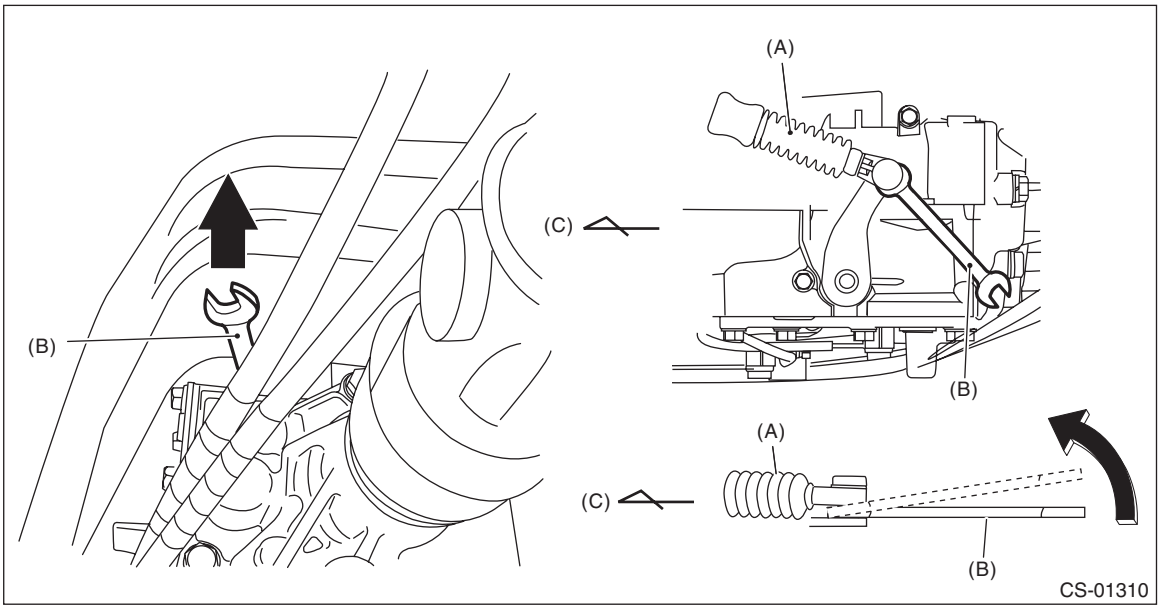

(A) MT gear select cable
(B) Spanner
(C) Forward

30) Remove the MT gear select cable and select bracket as a single unit from the transmission body.

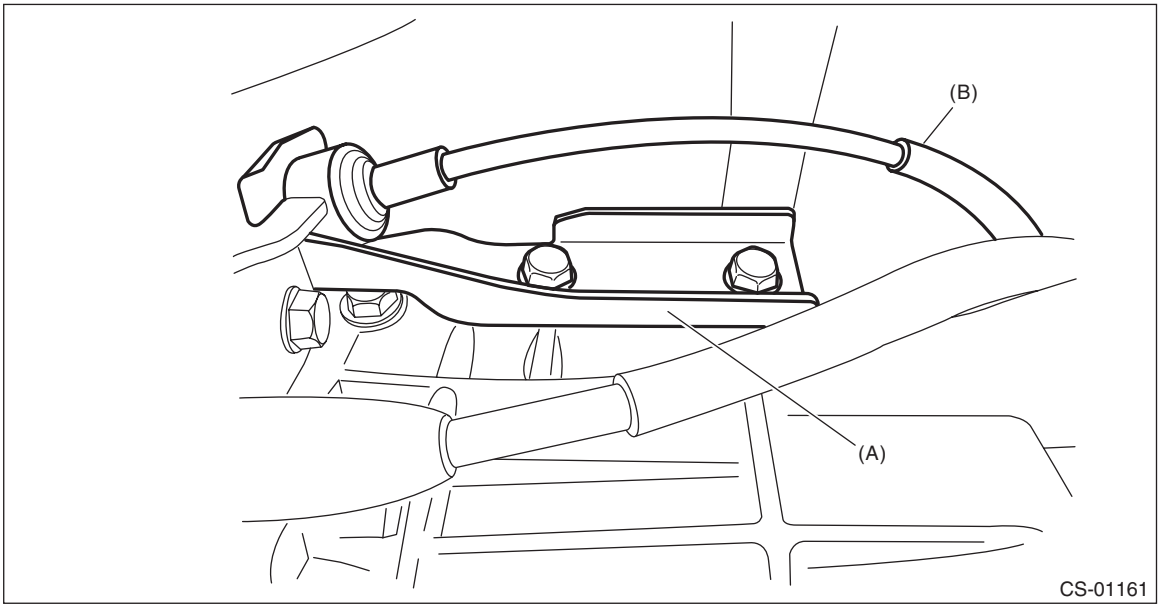

(A) Select bracket
(B) MT gear select cable

31) Remove the plate cable assembly.

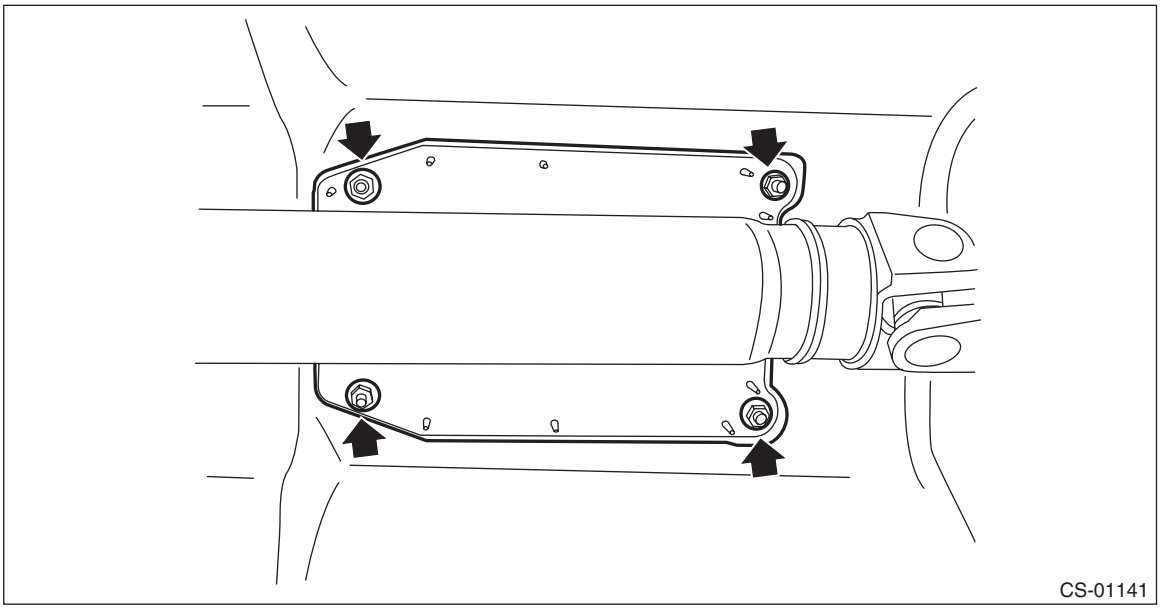

32) Disconnect the MT gear select cable.

CAUTION:
Be careful not to deform the cable inner.

NOTE:
Push the MT gear select cable in the direction of arrow, and remove it.

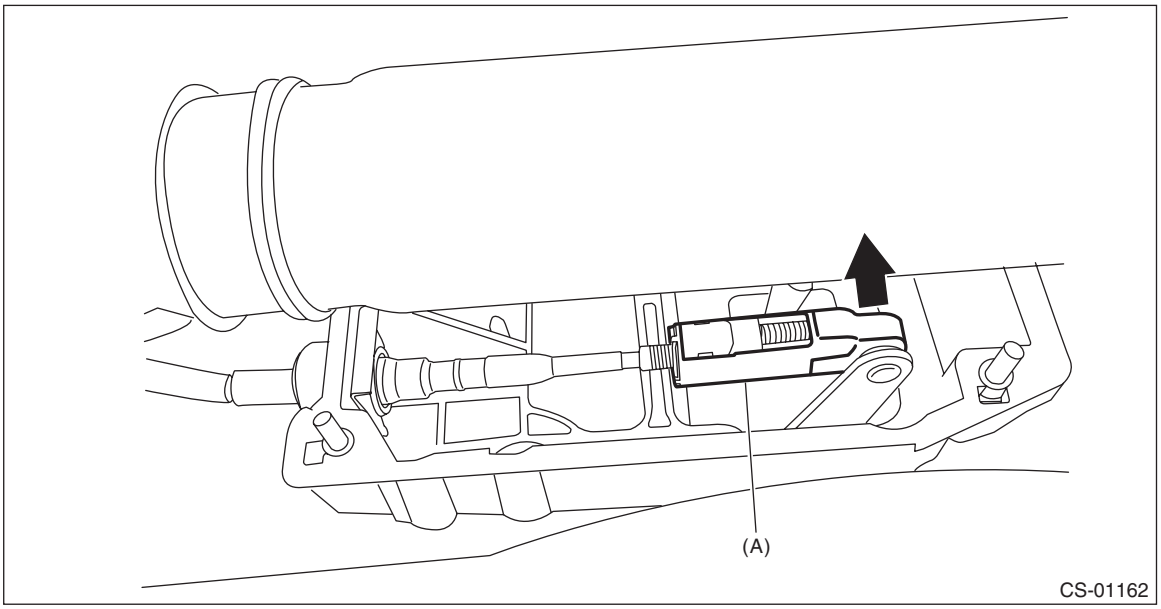

(A) MT gear select cable

33) Remove the clamp which holds the MT gear select cable.

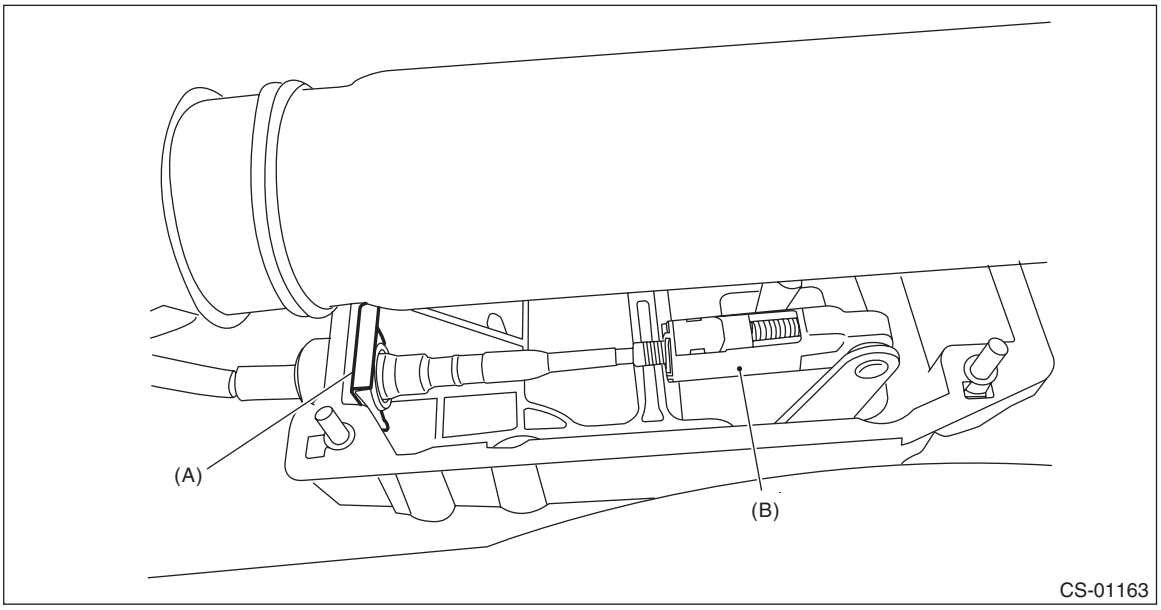

(A) Clamp
(B) MT gear select cable

34) Pull out the MT gear select cable from the cover cable assembly.

CAUTION:
Do not bend the MT gear select cable sharply.

B: INSTALLATION

CAUTION:
• Always use new MT gear select cable if the cable is removed from selector lever COMPL of transmission side.
• Do not bend the MT gear select cable sharply.
• Do not twist the inner cable excessively.
1) Remove the MT gear select cable from the select bracket.

CAUTION:
Check for assembling position before removing the MT gear select cable from the select bracket.

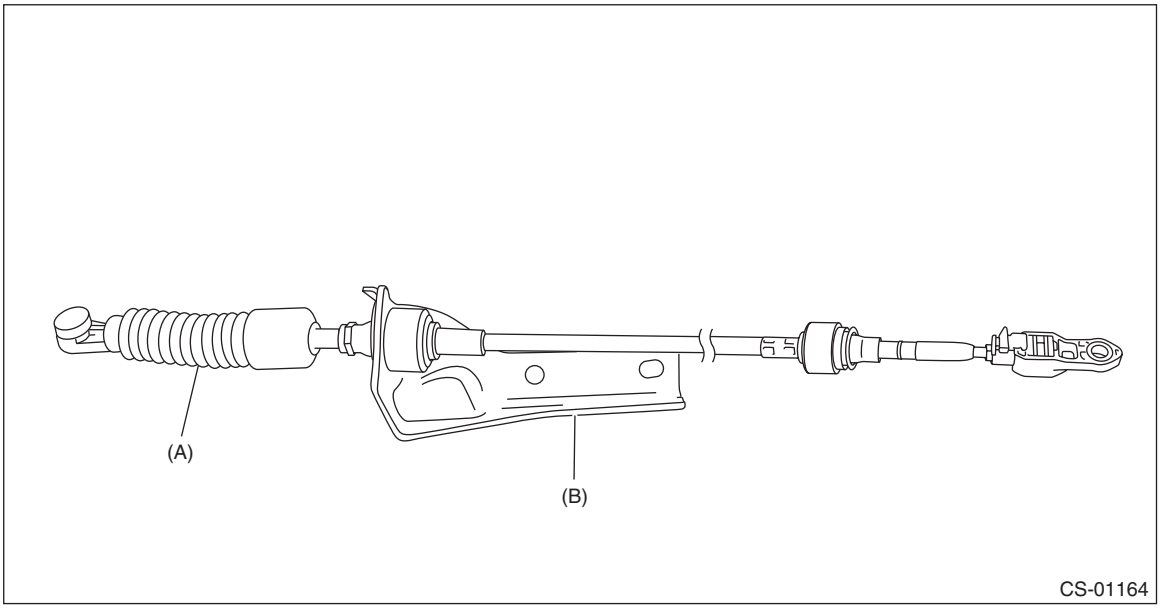

(A) MT gear select cable
(B) Select bracket

2) Set to the new MT gear select cable to the select bracket and secure it with the clamp.

CAUTION:
Be careful not to mistake the MT gear select cable installing direction.

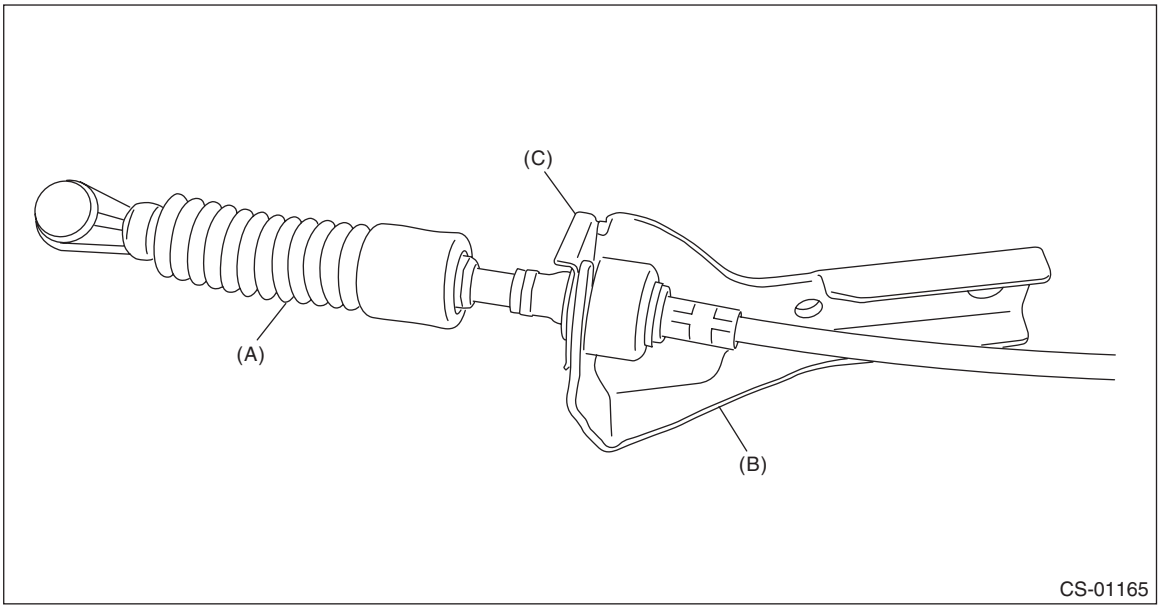

(A) MT gear select cable
(B) Select bracket
(C) Clamp

3) Install the MT gear select cable and select bracket as a single unit to the transmission body.

Tightening torque:
18 N·m (1.8 kgf-m, 13.3 ft-lb)

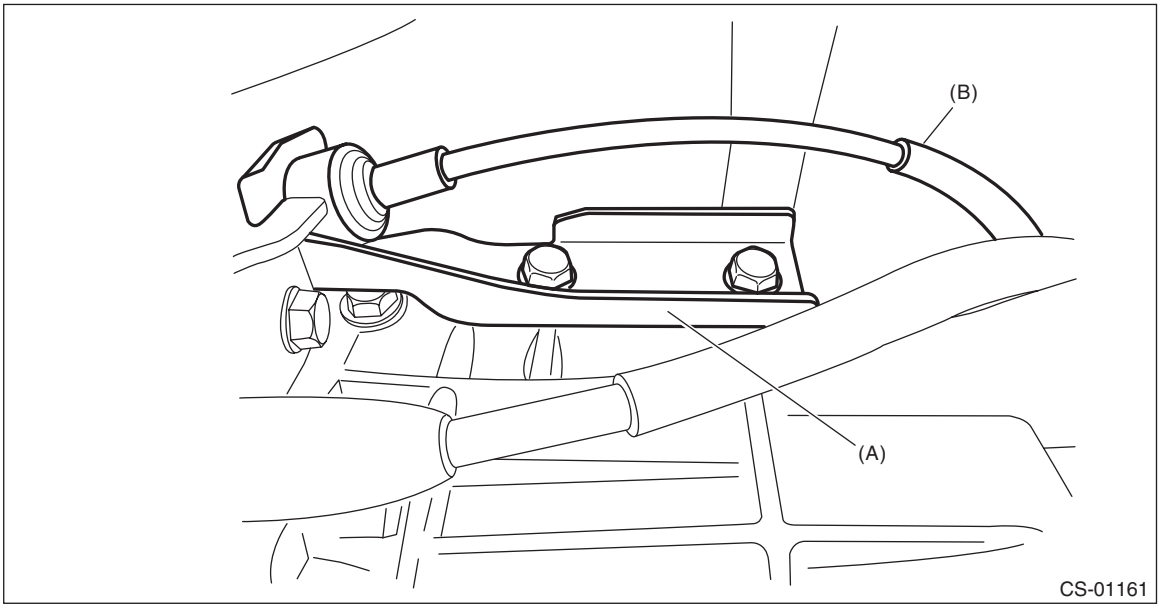

(A) Select bracket
(B) MT gear select cable

4) Install the MT gear select cable to the select lever COMPL.

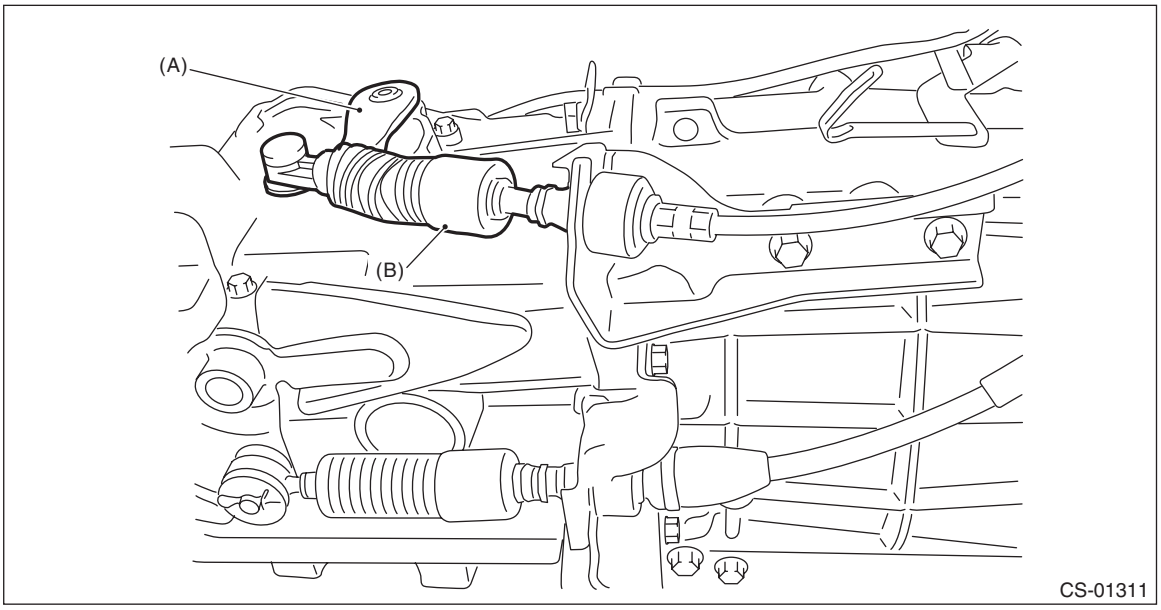

(A) Selector lever COMPL
(B) MT gear select cable

5) Measure the exposed length (a) of MT gear select cable. If out of specification, adjust the MT gear select cable. <Ref. to CS-95, ADJUSTMENT, MT Gear Select Cable.>

Exposed length (a) of MT gear select cable:
Specification: 11 mm (0.4 in)

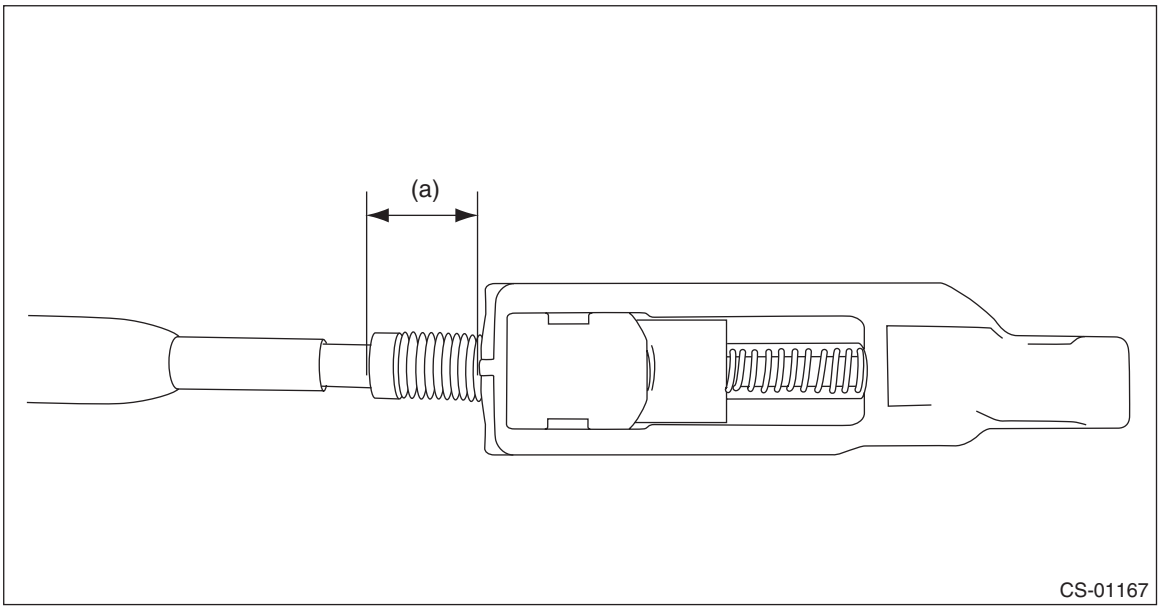

6) Connect the MT gear select cable.

7) Install the plate cable assembly.

Tightening torque:
7.5 N·m (0.8 kgf-m, 5.5 ft-lb)

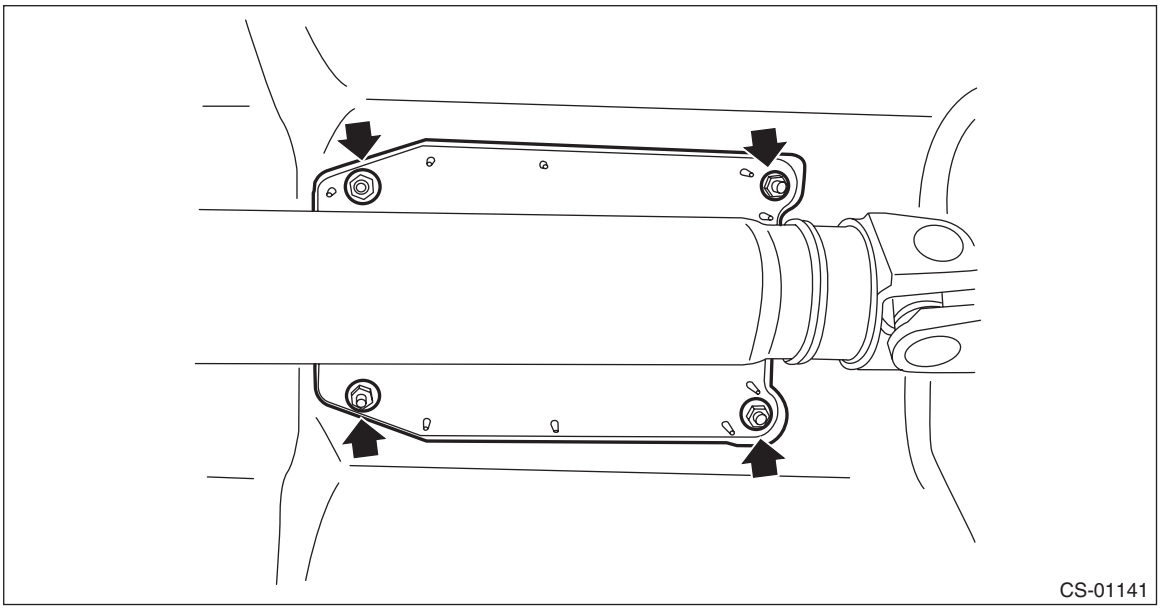

8) Insert the MT gear select cable into clamp cable, and install to the transmission.

Tightening torque:
18 N·m (1.8 kgf-m, 13.3 ft-lb)

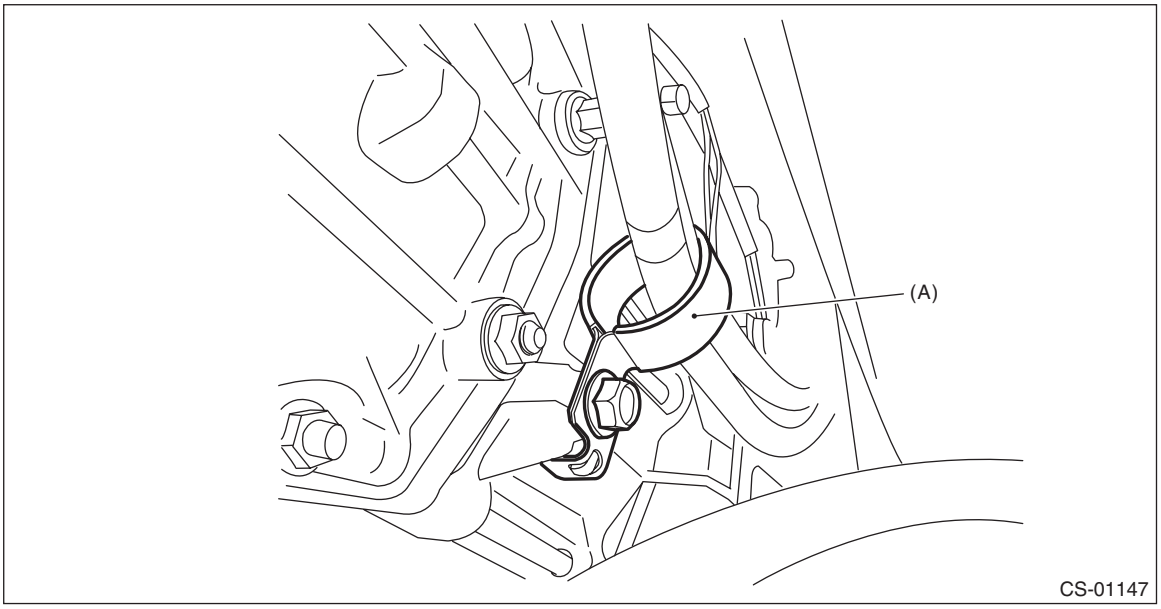

(A) Clamp cable

9) Raise the transmission jack, install the front crossmember and rear crossmember.

Tightening torque:
T1: 75 N·m (7.6 kgf-m, 55.3 ft-lb)
T2: 140 N·m (14.3 kgf-m, 103.3 ft-lb)

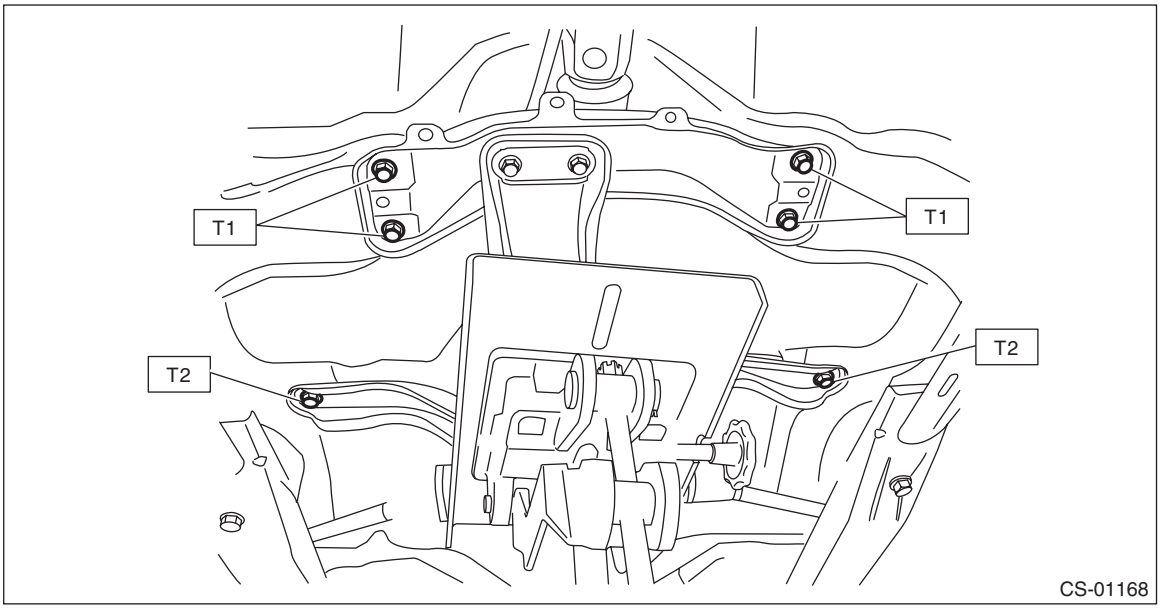

10) Rotate the handle of ST (ENGINE HANGER) to apply tension to the sling chain.
11) Take out the transmission jack.
12) Install the heat shield cover.

Tightening torque:
18 N·m (1.8 kgf-m, 13.3 ft-lb)

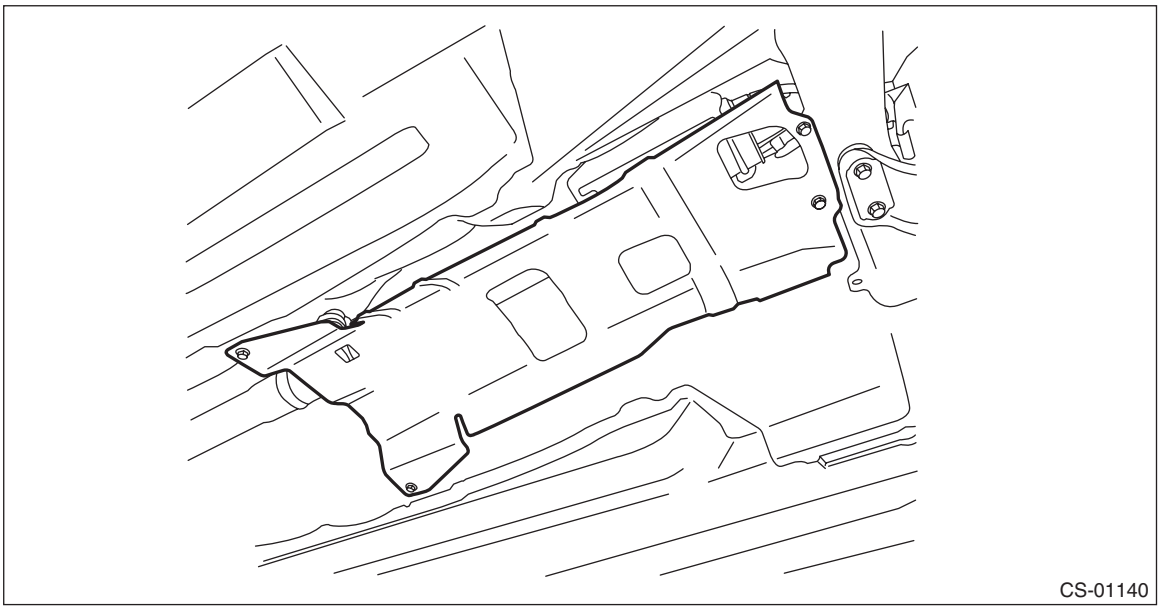

13) Install the center exhaust pipe and rear exhaust pipe. (non-turbo model) <Ref. to EX(H4SO)-8, INSTALLATION, Center Exhaust Pipe.> <Ref. to EX(H4SO)-9, INSTALLATION, Rear Exhaust Pipe.>
14) Install the center exhaust pipe (rear) and rear exhaust pipe. (turbo model) <Ref. to EX(H4DOTC)-13, INSTALLATION, Center Exhaust Pipe.> <Ref. to EX(H4DOTC)-15, INSTALLATION, Rear Exhaust Pipe.>
15) Lower the vehicle.
16) Rotate the handle of ST (ENGINE HANGER) to lift up the engine slightly.

17) Remove the bolts from ST (SPECIAL TOOL H4).

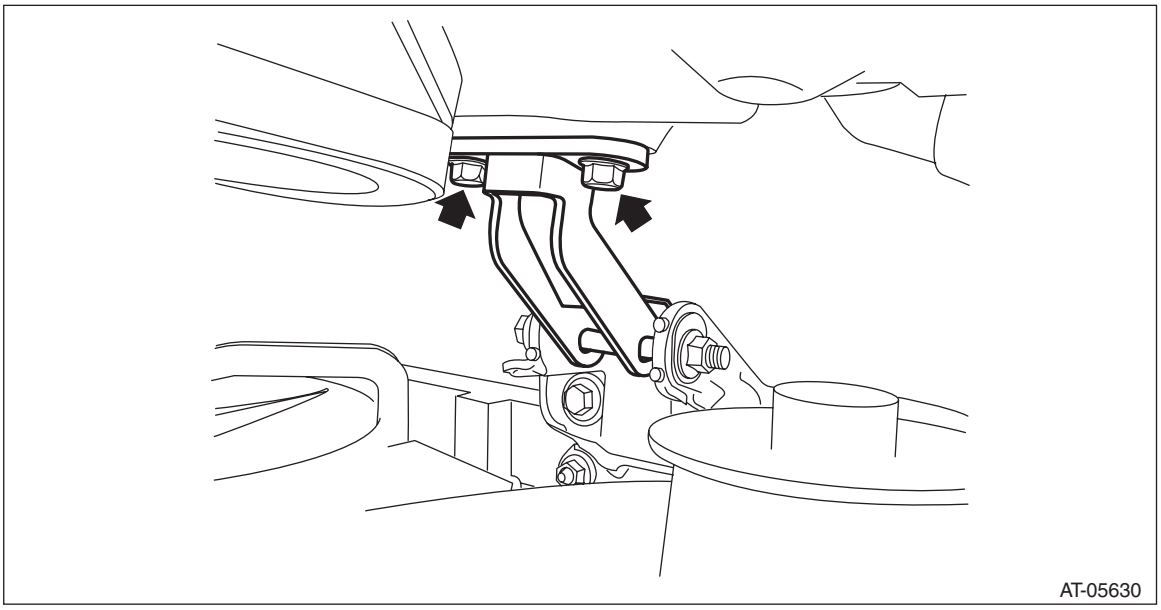

18) Remove the bolt and nut to remove ST (SPECIAL TOOL H4).

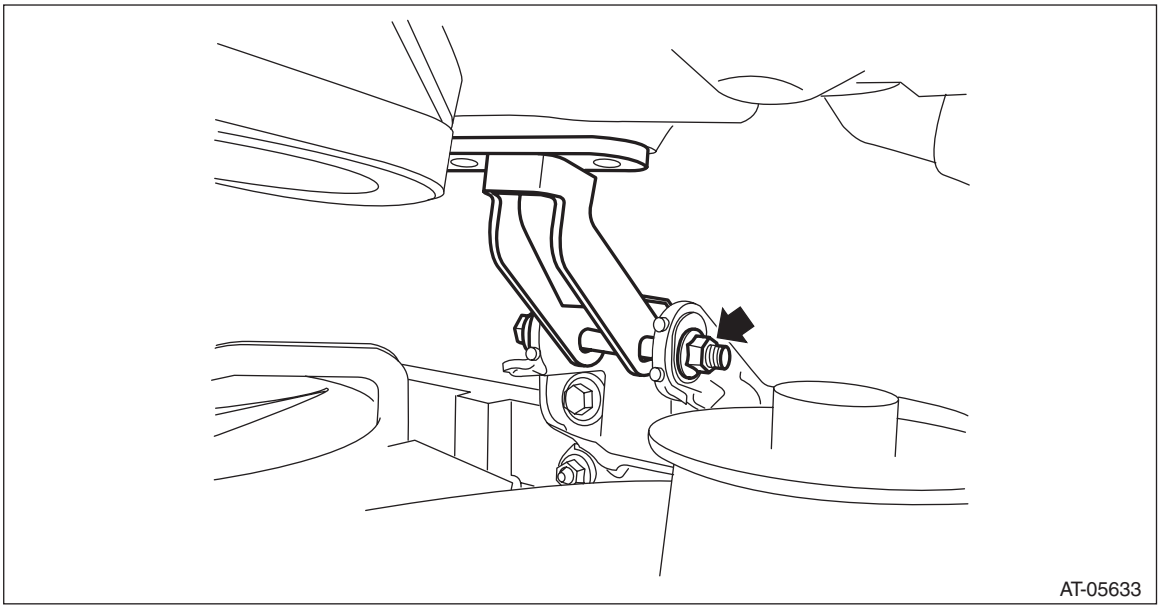

19) Temporarily attach the front engine mounting with bolts.

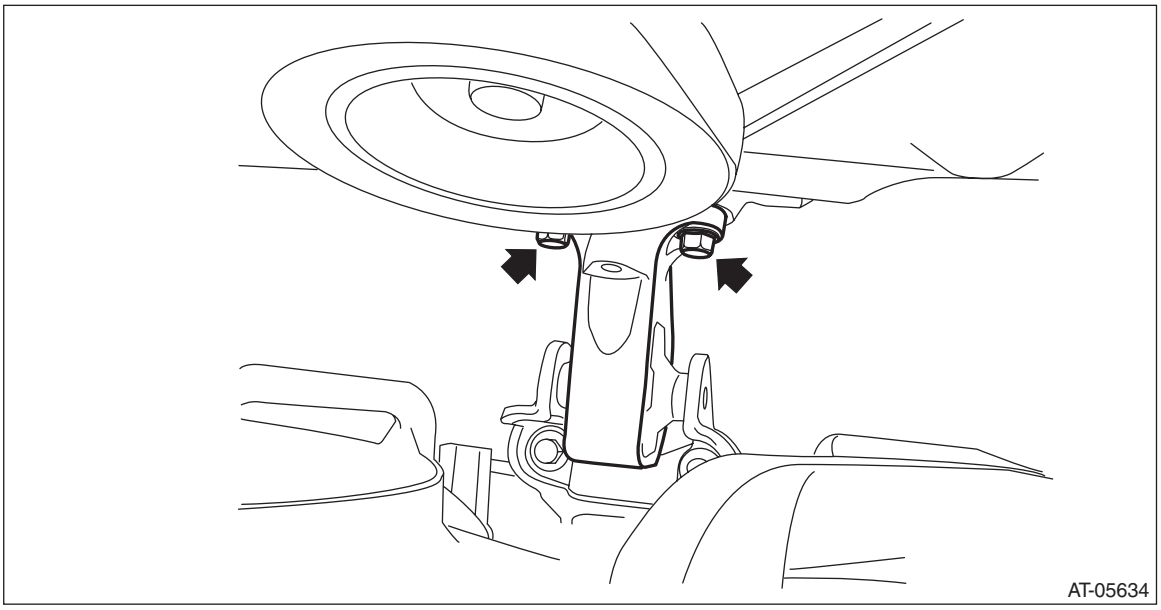

20) Install the bolt and nut to the front engine mounting.

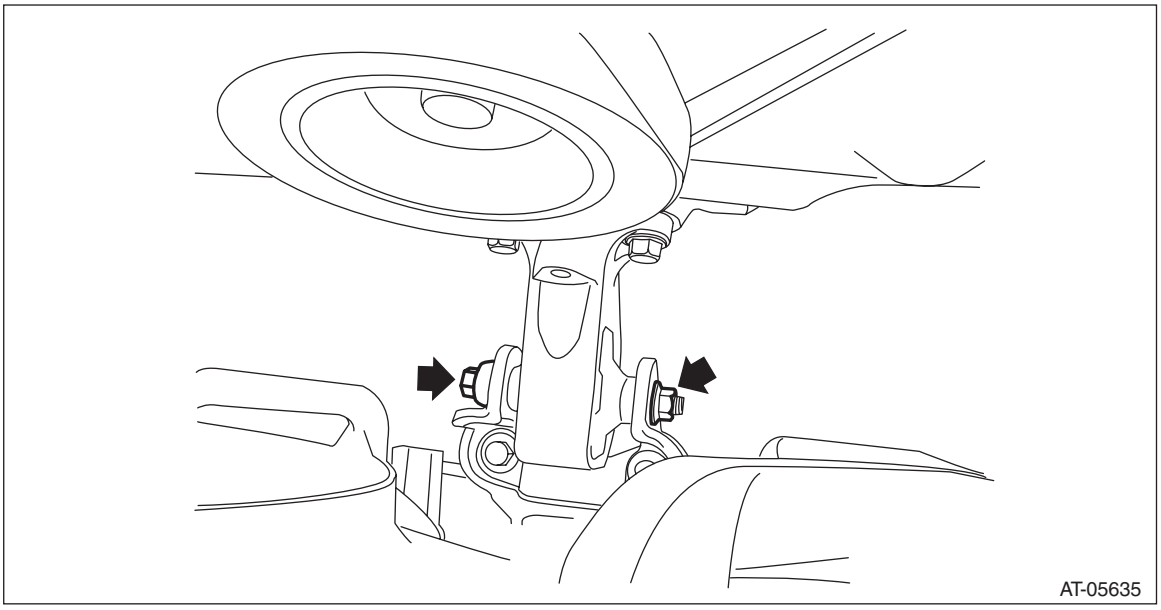

21) Tighten the bolts and nuts of front engine mounting.

Tightening torque:
T1: 25 N·m (2.5 kgf-m, 18.4 ft-lb)
T2: 45 N·m (4.6 kgf-m, 33.2 ft-lb)

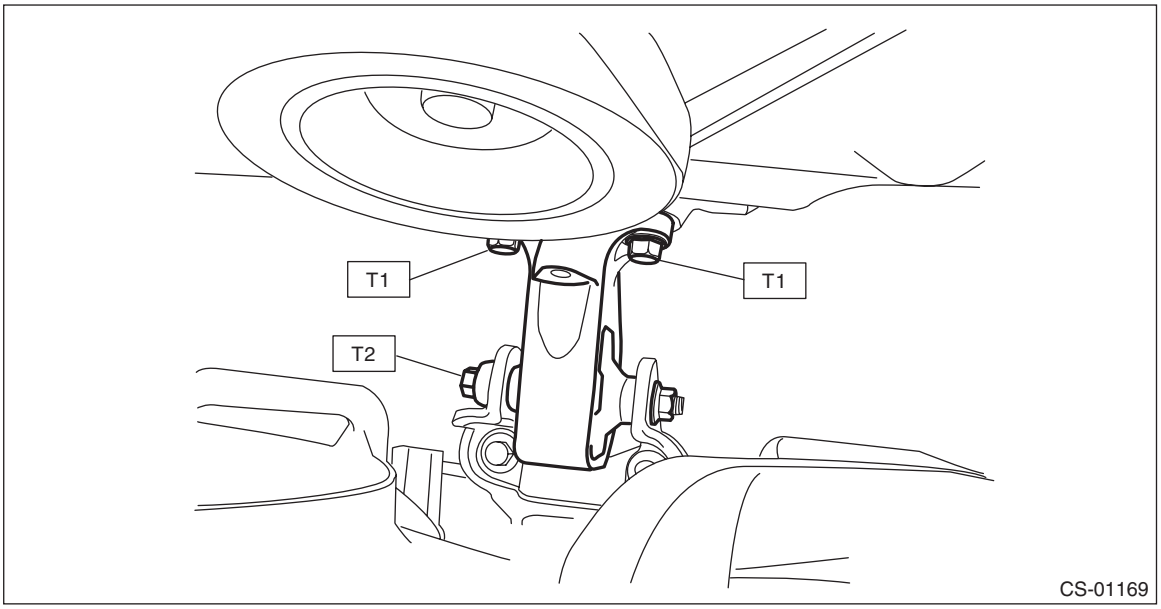

22) Install the stopper rod.

Tightening torque:
36 N·m (3.7 kgf-m, 26.6 ft-lb)

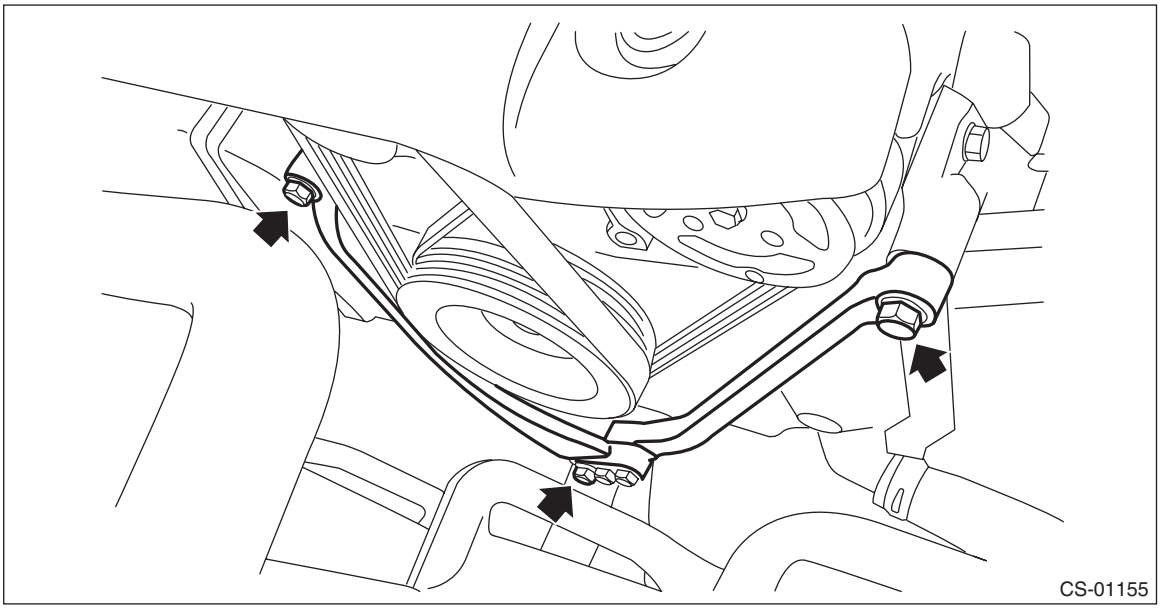

23) Attach the nuts to the left and right transmission mounting brackets.

Tightening torque:
45 N·m (4.6 kgf-m, 33.2 ft-lb)

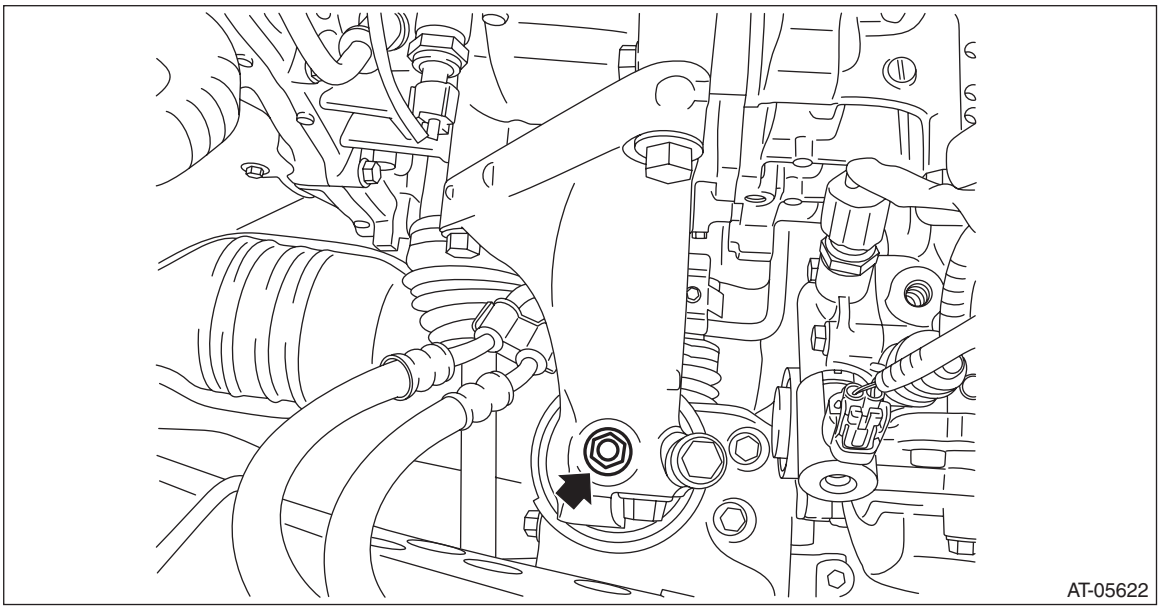

24) Remove the engine hanger rear for turbo model and install the engine hanger rear for non-turbo model. (non-turbo model)

Tightening torque:
T1: 16 N·m (1.6 kgf-m, 11.8 ft-lb)
T2: 19 N·m (1.9 kgf-m, 14.0 ft-lb)

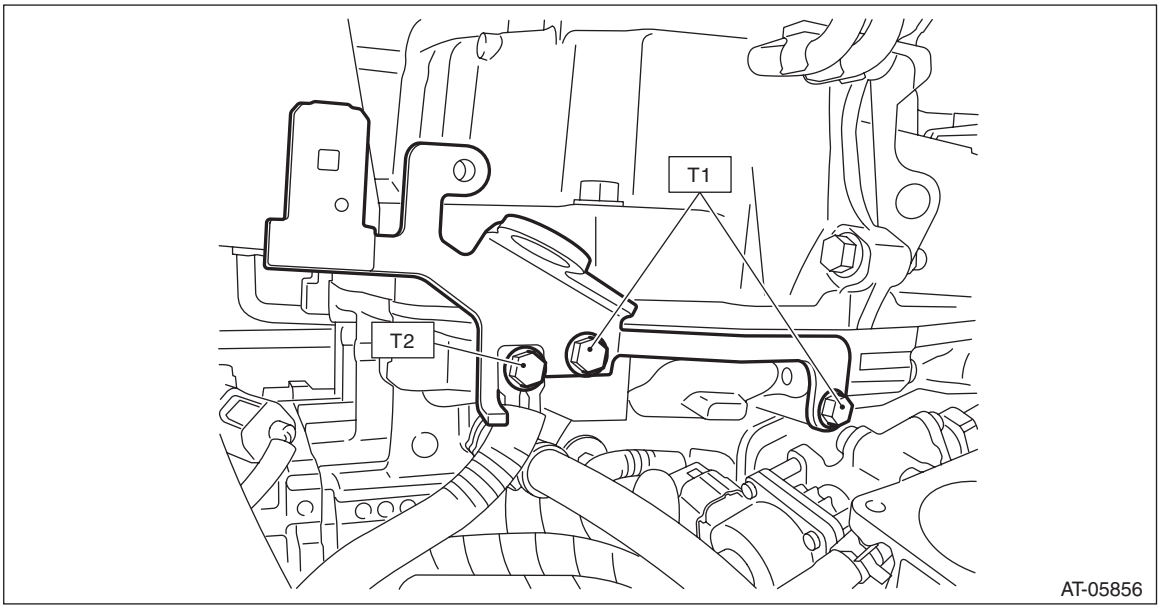

25) Install the throttle body. (non-turbo model) <Ref. to FU(H4SO)-15, INSTALLATION, Throttle Body.>
26) Install the engine harness connectors to the engine hanger rear. (non-turbo model)

27) Connect the engine harness connectors, and install harness bracket to the engine hanger rear. (non-turbo model)

Tightening torque:
7.5 N·m (0.8 kgf-m, 5.5 ft-lb)

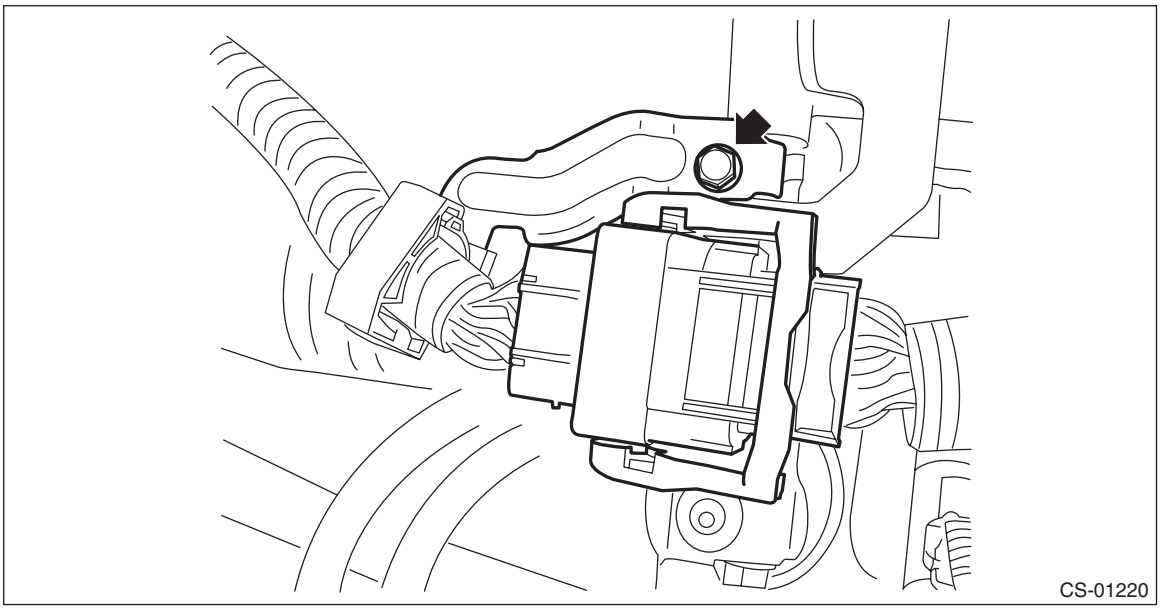

28) Install the air intake boot assembly. (non-turbo model) <Ref. to IN(H4SO)-8, INSTALLATION, Air Intake Boot.>
29) Install the intercooler stay and the intercooler. (turbo model) <Ref. to IN(H4DOTC)-18, INSTALLATION, Intercooler.>
30) Attach the grille bracket.

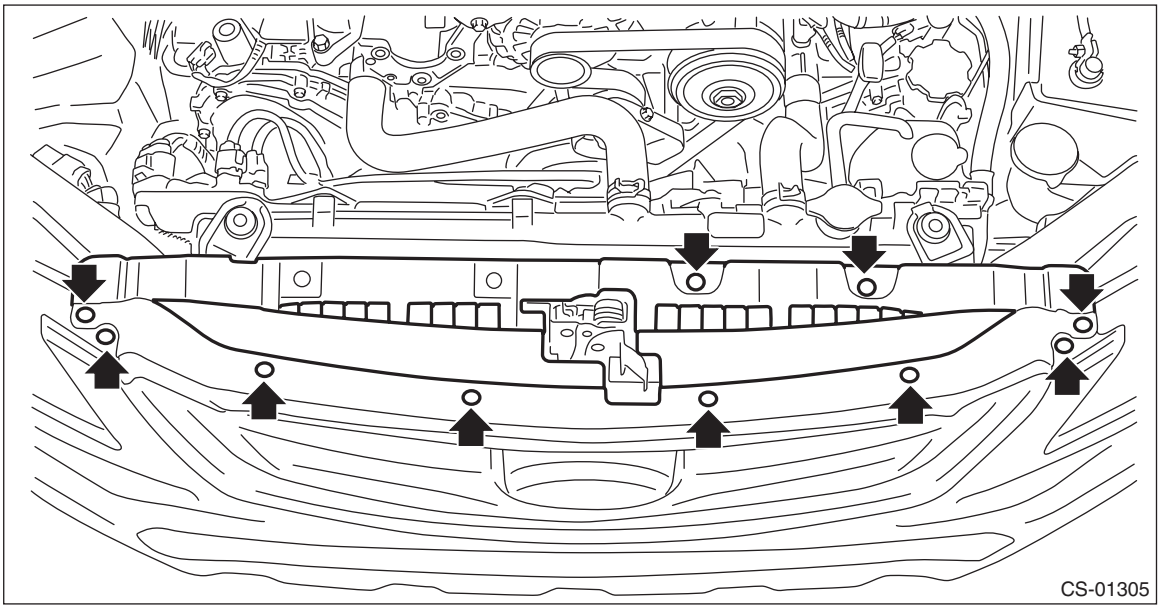

31) Install the air intake duct.
- Non-turbo model

<Ref. to IN(H4SO)-9, INSTALLATION, Air Intake Duct.>
- Turbo model

<Ref. to IN(H4DOTC)-12, INSTALLATION, Air Intake Duct.>
32) Install the collector cover. (turbo model)
33) Connect the battery ground terminal.
34) Make sure the gears can be shifted accurately into each gear.

C: INSPECTION

1) Check that exposed length (a) of MT gear select cable is within specification.

Exposed length (a) of MT gear select cable:
Specification: 11 mm (0.4 in)

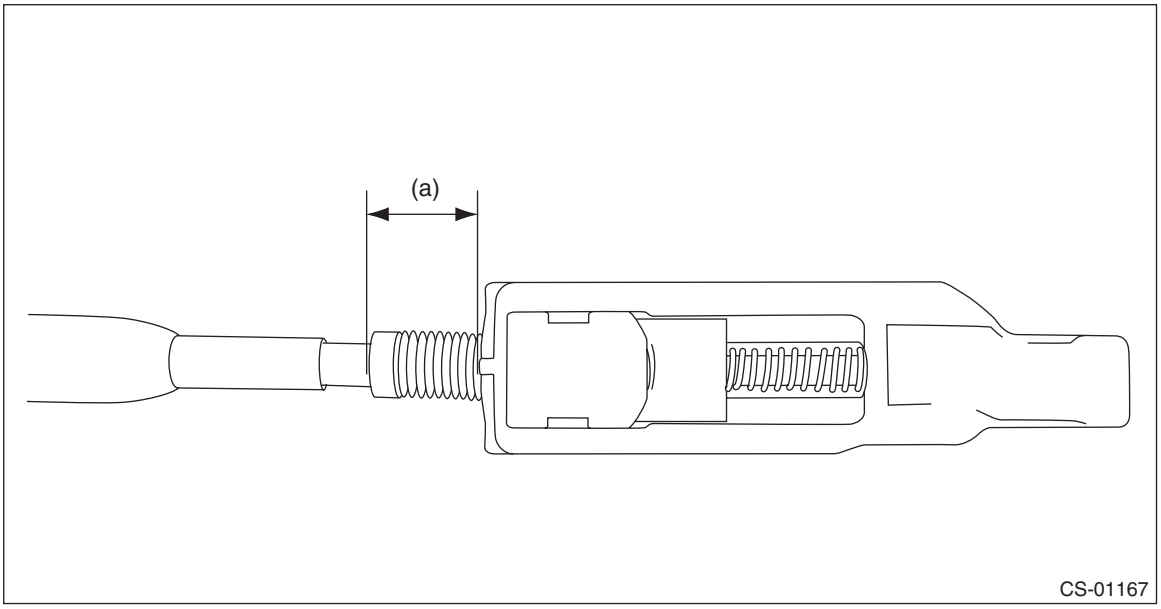

2) If it is not within the specification, perform the adjustment. <Ref. to CS-95, ADJUSTMENT, MT Gear Select Cable.>

D: ADJUSTMENT

NOTE:
Two person are required to perform the MT gear select cable adjustment. (Only the step 7) requires two workers.)
1) Shift the select lever to the 6th.
2) Remove the plate cable assembly.

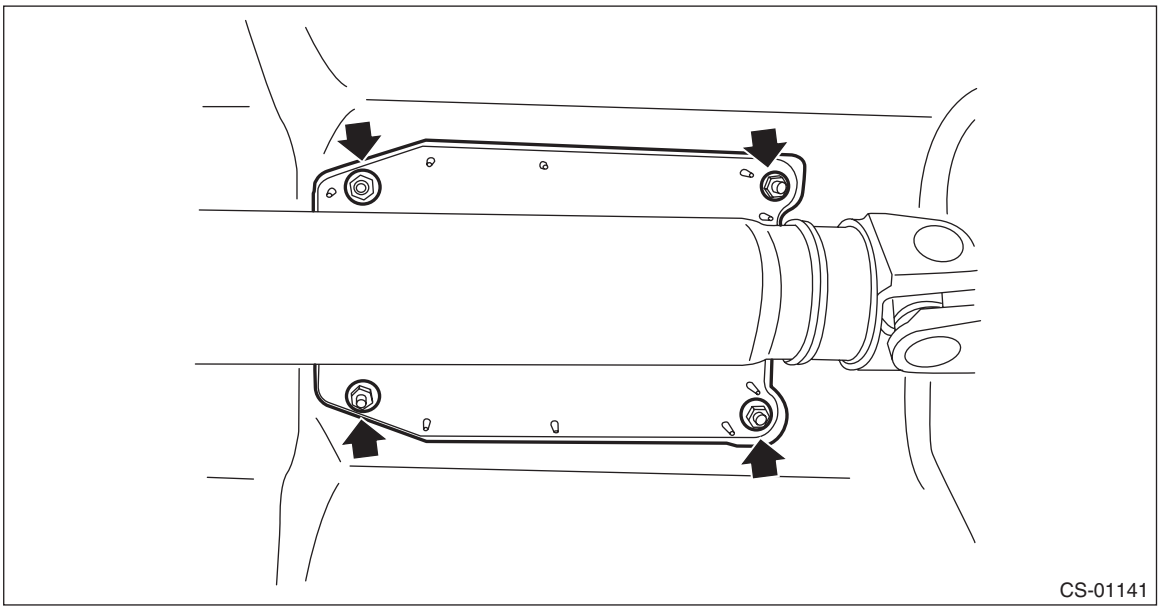

3) Disconnect the MT gear select cable.

NOTE:
Push the MT gear select cable in the direction of arrow, and remove it.

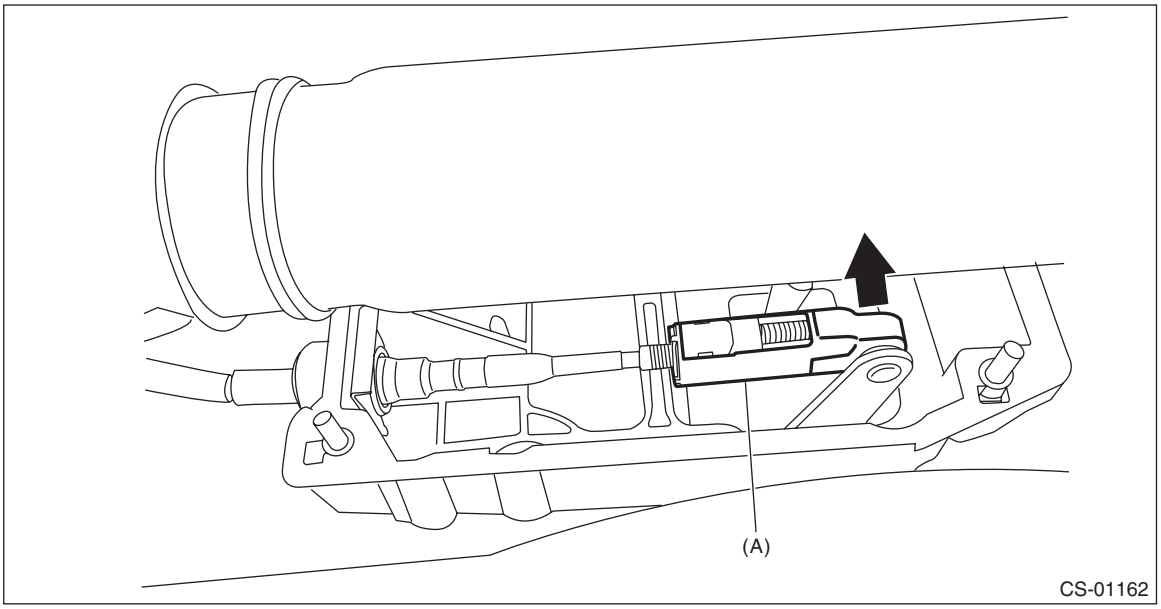

(A) MT gear select cable

4) Measure the exposed length (a) of MT gear select cable.

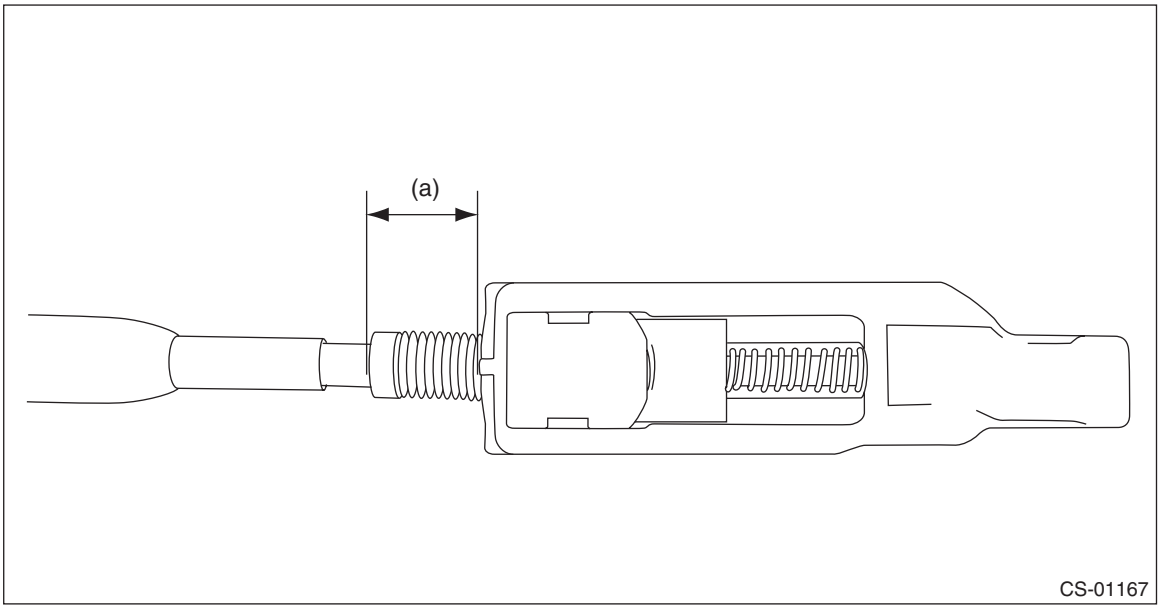

5) With the slider (green) moved in the direction of arrow, release the lock piece (pink) using a flat tip screwdriver or equivalent tool.

CAUTION:
Lock piece is easily damaged for the resin. If the lock piece is damaged, replace the MT gear select cable with a new one.

NOTE:
Rotate the MT gear select cable to 180 degrees, slide the slider in the direction of the arrow and push the claw of lock piece.

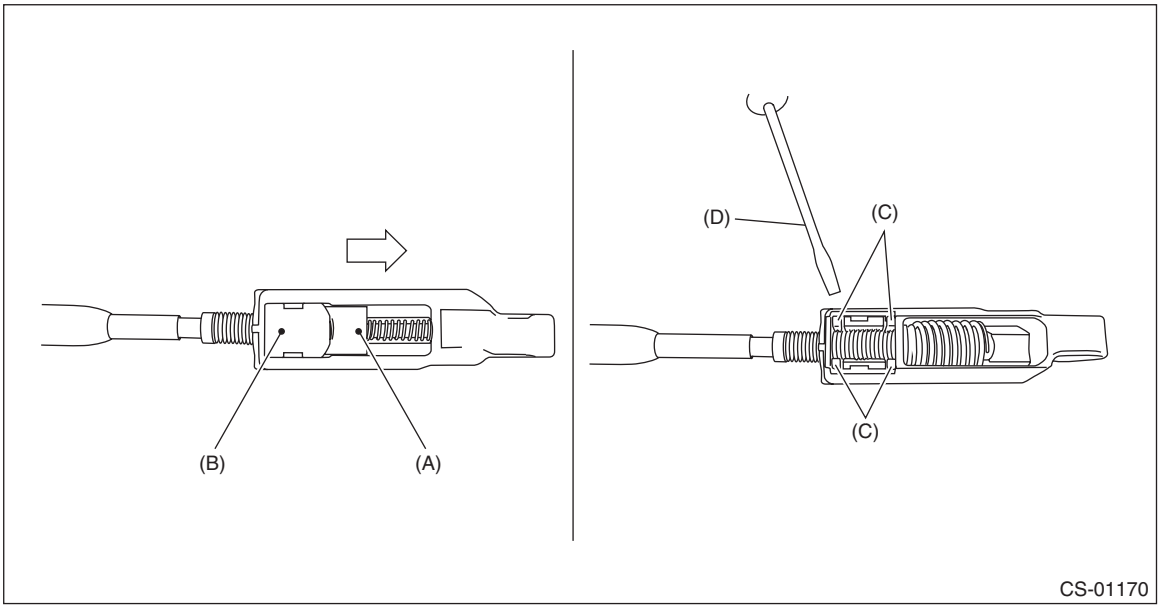

(A) Slider
(B) Lock piece
(C) Claw
(D) Flat tip screwdriver

6) Connect the MT gear select cable to the select lever, with the lock piece released.

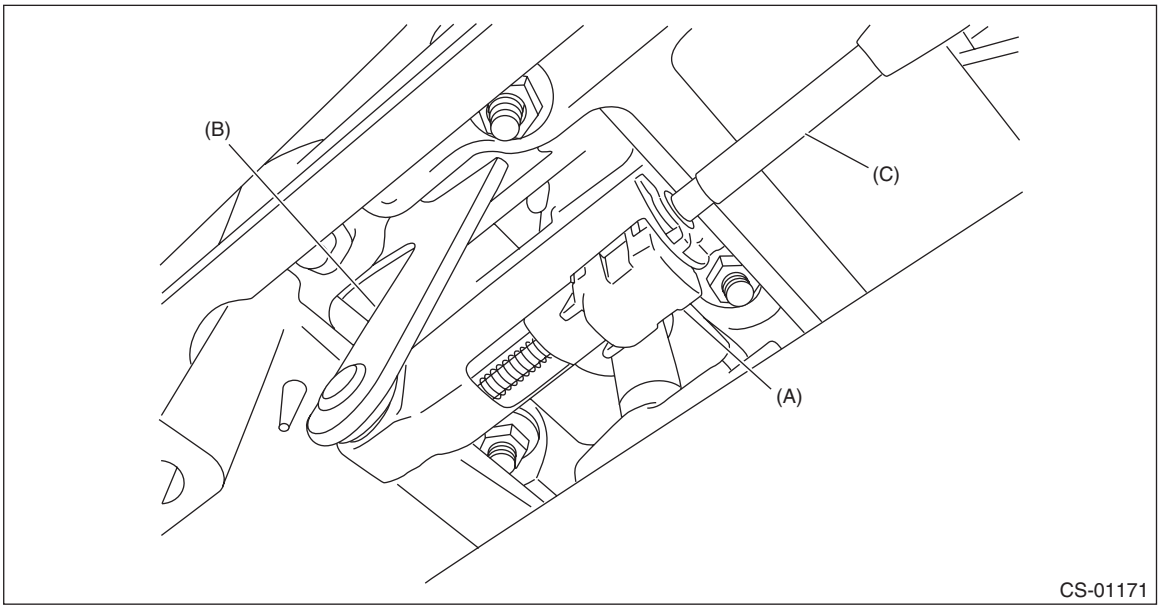

(A) Lock piece
(B) Select lever
(C) MT gear select cable

7) Move the select lever to the Rev side, hold the exposed length (a) of MT gear select cable 11 mm (0.4 in) and then push the lock piece.

NOTE:
While pulling up the gear shift lever assembly slider, operate the lever to the Rev side.

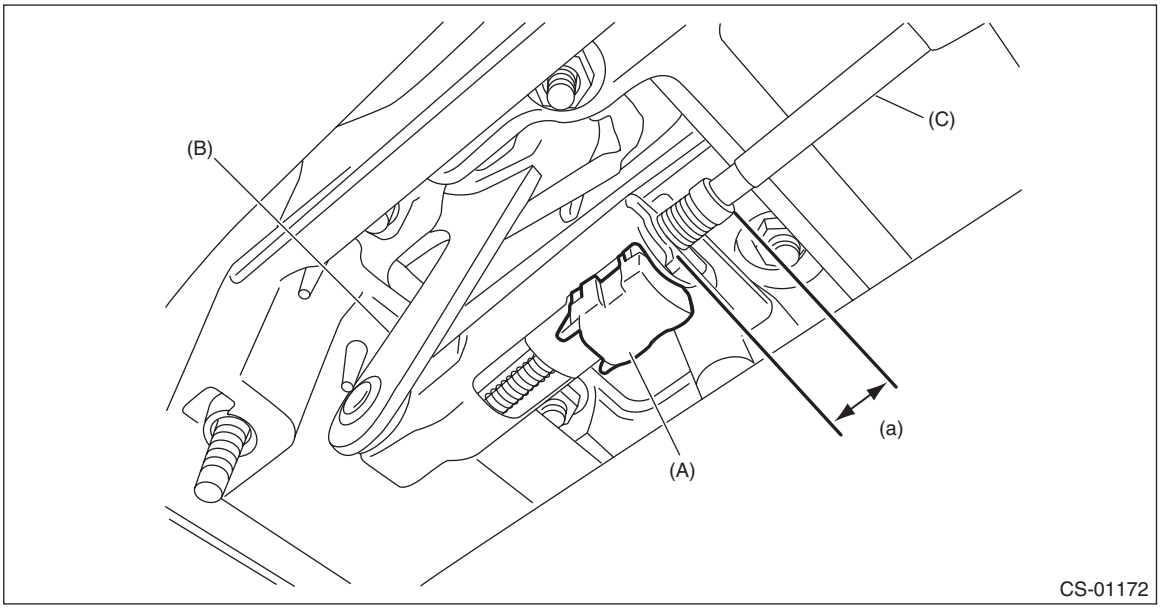

(a) Exposed length 11 mm (0.4 in)
(A) Lock piece
(B) Select lever
(C) MT gear select cable

8) Shift the 5th ←→ 6th and Rev, check whether it is caught.
9) If no fault is found in the shift and select operation, restore the vehicle.

10) If the shift operation is not smooth, readjust the exposed length (a) of the MT gear select cable referring to the figure below.

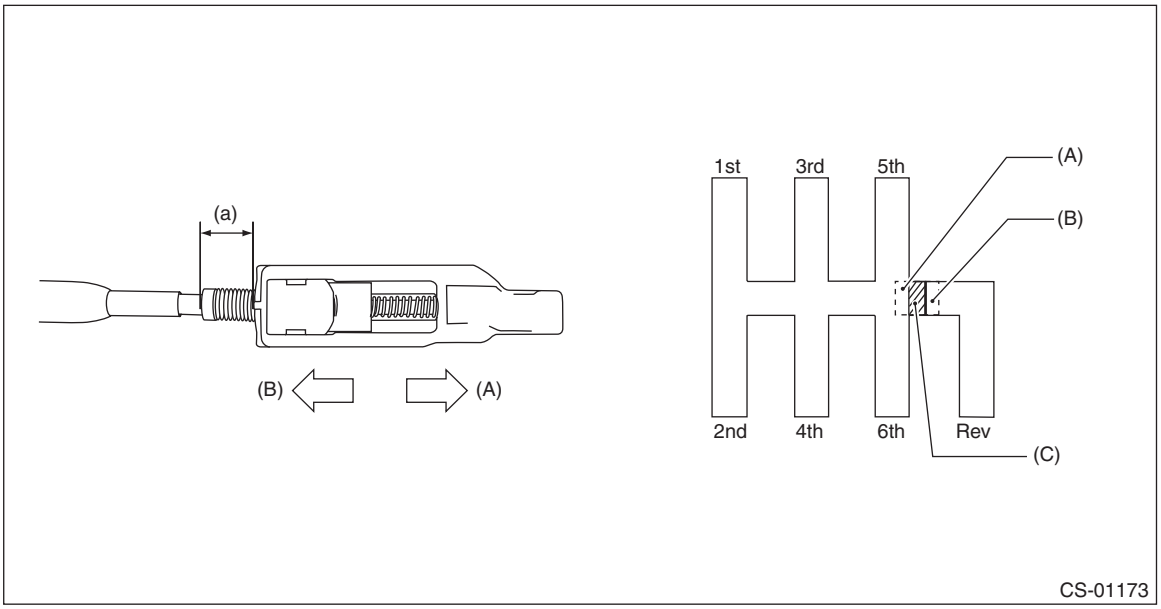

(a) Exposed length of MT gear select cable
(A) Extend direction of exposed length of MT gear select cable
(B) Shorten direction of exposed length of MT gear select cable
(C) Specification of exposed length (a)

- If 5th or 6th gear cannot be selected when cable is pressed to reverse lock bracket:

→ Extend the exposed length (a) of MT gear select cable.

- If select lever does not move along the cranking line when it is operated from 4th to 5th gear:

→ Shorten the exposed length (a) of MT gear select cable.

NOTE:
If it cannot adjust, replace the MT gear select cable.

10.General Diagnostic Table

A: INSPECTION

Symptoms	Possible cause	Corrective action
AT select lever	Starter does not run.	Adjust the select cable and inhibitor switch, or inspect the circuit.
	Back-up light does not illuminate.	Adjust the select cable and inhibitor switch, or inspect the circuit.
	AT shift lock system does not operate normally.	Adjust the select cable and inhibitor switch, or inspect the circuit.
	Manual mode can not be set.	Inspect the mode switch and select lever, or inspect the circuit.
	Up-shift is not engaged at manual mode.	Check the shift-up switch and circuit.
	Down-shift is not engaged at manual mode.	Check the shift-down switch and circuit.
MT gear shift lever (6MT)	Cannot shift into reverse.	Adjust the MT gear select cable.
	Shifted to 6th though it shifted to reverse.	Adjust or replace the MT gear select cable.
	Can shift into reverse when the slider is not pulled up.	Adjust or replace the MT gear select cable.
	Slider cannot be pulled up or sticks in the pulled-up position.	• Check the shift link system of the transmission. • Replace the MT gear select lever.

CONTINUOUSLY VARIABLE TRANSMISSION

CVT

		Page
1.	General Description	3
2.	CVTF	37
3.	Differential Gear Oil	41
4.	Variator Chain Break-in	44
5.	AWD ON/OFF Switching Mode	45
6.	Road Test	46
7.	Stall Test	47
8.	Time Lag Test	49
9.	Secondary Pressure (Line Pressure) Test	50
10.	Transfer Clutch Pressure Test	53
11.	Automatic Transmission Assembly	55
12.	Transmission Mounting System	86
13.	Extension Case Oil Seal	89
14.	Differential Side Retainer Oil Seal	91
15.	Inhibitor Switch	95
16.	Secondary Speed Sensor	102
17.	Primary Speed Sensor	105
18.	Front Wheel Speed Sensor	107
19.	Secondary Pressure Sensor	109
20.	Control Valve Body	111
21.	Transmission Harness	121
22.	Transmission Control Module (TCM)	124
23.	CVTF Cooler Pipe and Hose	126
24.	Air Breather Hose	132
25.	Drive Plate	133
26.	Preparation for Overhaul	135
27.	Torque Converter Assembly	136
28.	Extension Case	138
29.	Rear Drive Shaft	141
30.	Transfer Clutch	146
31.	Transfer Reduction Driven Gear	158
32.	Parking Pawl	163
33.	Intermediate Case	165
34.	CVTF Filter	170
35.	Reverse Brake Assembly	171
36.	Forward Clutch Assembly	180
37.	Reduction Driven Gear	200
38.	Transmission Control Device	207
39.	Transmission Case	211
40.	Primary Pulley and Secondary Pulley	226
41.	Variator Chain	241
42.	Drive Pinion Shaft Assembly	242
43.	Front Differential Assembly	263

44. Oil Pump 281
45. Oil Pump Chain 282
46. Converter Case Cover 289
47. Front Reduction Drive Gear 297
48. Front Reduction Driven Gear 304
49. Converter Case 314
50. Diagnostics with Phenomenon 317

1. General Description

A: SPECIFICATION

1. TORQUE CONVERTER

Model	2.5 L SOHC non-turbo
Type	Symmetric, 3-element, single stage, 2-phase torque converter
Stall torque ratio	2.07
Nominal mm (in)	236 (9.29)
Stall speed (at sea level)	2,400 — 3,100
One-way clutch	Sprague type one-way clutch

2. OIL PUMP

Type		Internal gear pump
Driving method		Driven by chain
Number of teeth	Inner rotor	8
	Outer rotor	9

3. TRANSMISSION CONTROL ELEMENT

Type	Forward continuously variable speed change, 1 reverse, planetary gear
Multi-plate clutch	1 sets
Multi-plate brake	1 sets

4. TRANSMISSION GEAR RATIO

Forward	3.525 — 0.558
Rev	2.358

5. PLATE

Number of input clutch drive plates	5
Number of forward clutch drive plates	6
Number of reverse brake drive plates	5

6. SELECTOR POSITION

P (Park)	Transmission neutral, output shaft locked, engine start enabled
R (Reverse)	Rev
N (Neutral)	Transmission neutral, engine start enabled
D (Drive)	Forward continuously variable speed change
M (manual mode) (paddle shift + side)	Manual gear change 1st → 2nd → 3rd → 4th → 5th → 6th
M (manual mode) (paddle shift — side)	Manual gear change 1st ← 2nd ← 3rd ← 4th ← 5th ← 6th

7. HYDRAULIC CONTROL AND LUBRICATION

Type	Electronic hydraulic control (speed changed by signals of vehicle speed and accelerator opening angle)
Fluid	SUBARU CVT OIL FOR LINEARTRONIC (specified fluid) or equivalent **CAUTION:** **Always use specified CVTF or equivalent. Using other fluid except for specified or equivalent will cause malfunction.**
Fluid capacity ℓ (US qt, Imp qt)	12.0 — 12.5 (12.7 — 13.2, 10.6 — 11.0)
Lubrication system	Forced feed lubrication with oil pump

8. COOLING AND HARNESS

Cooling system	Liquid-cooler incorporated in radiator
Inhibitor switch harness	12 poles
Transmission harness	20 poles

9. TRANSFER

Transfer type	Multi-plate transfer (MP-T)
Number of transfer clutch drives & driven plates	5
Control method	Electronic hydraulic type
Reduction gear ratio	1.000 (37/37)

10.REDUCTION GEAR RATIO

Model	Except for OUTBACK	OUTBACK
Front final reduction gear ratio	3.700	3.900

11.RECOMMENDED GEAR OIL

Lubrication oil	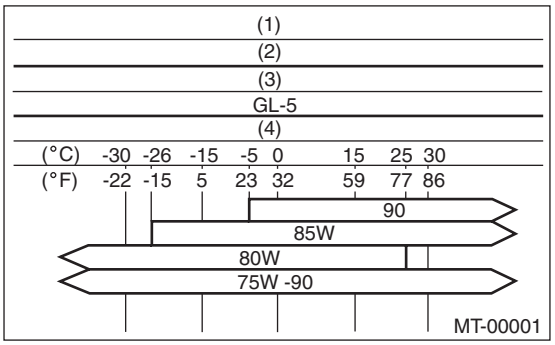 (1) Item (2) Front differential gear oil (3) API standard (4) SAE viscosity No. and applicable temperature
Front differential oil capacity ℓ (US qt, Imp qt)	1.3 — 1.5 (1.4 — 1.6, 1.1 — 1.3)

B: COMPONENT

1. TORQUE CONVERTER ASSEMBLY AND CONVERTER CASE

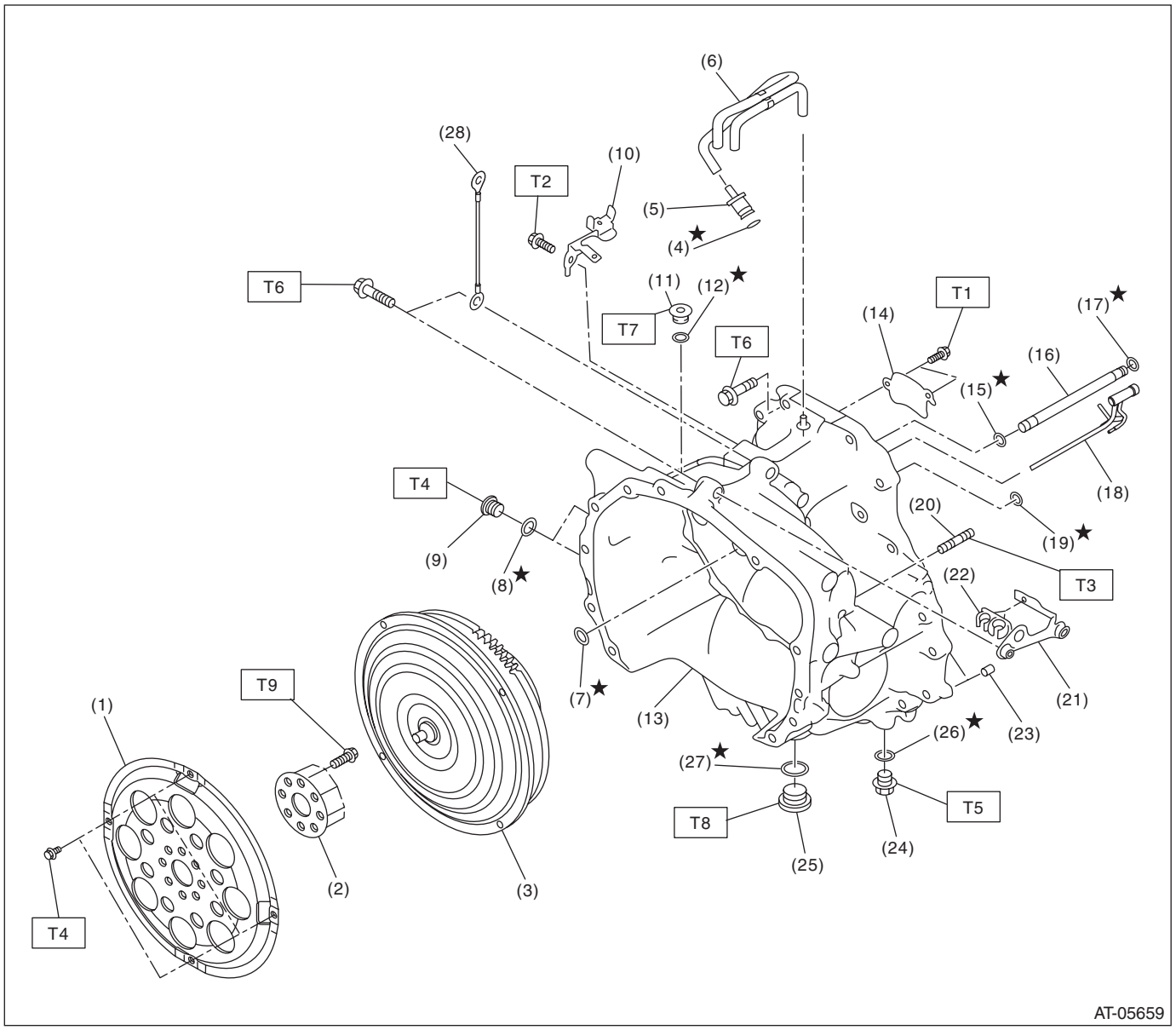

(1) Drive plate
(2) Reinforcement drive plate
(3) Torque converter ASSY
(4) O-ring
(5) Oil charge pipe cap
(6) Air breather hose ASSY
(7) O-ring
(8) O-ring
(9) Plug
(10) Transmission harness stay
(11) Plug
(12) O-ring
(13) Converter case
(14) Oil stopper plate
(15) O-ring
(16) Lubrication pipe
(17) O-ring
(18) Lubrication pipe
(19) O-ring
(20) Stud bolt
(21) Transmission hanger
(22) Clip
(23) Straight pin
(24) Overflow drain plug
(25) Front differential gear oil drain plug
(26) Gasket
(27) Gasket
(28) Transmission radio ground cord

Tightening torque:N·m (kgf-m, ft-lb)
T1: 9 (0.9, 6.6)
T2: 16 (1.6, 11.8)
T3: 18 (1.8, 13.3)
T4: 25 (2.5, 18.4)
T5: 35 (3.6, 25.8)
T6: 41 (4.2, 30.2)
T7: 50 (5.1, 36.9)
T8: 70 (7.1, 51.6)
T9: <Ref. to CVT-133, INSTALLATION, Drive Plate.>

2. OIL PUMP ASSY

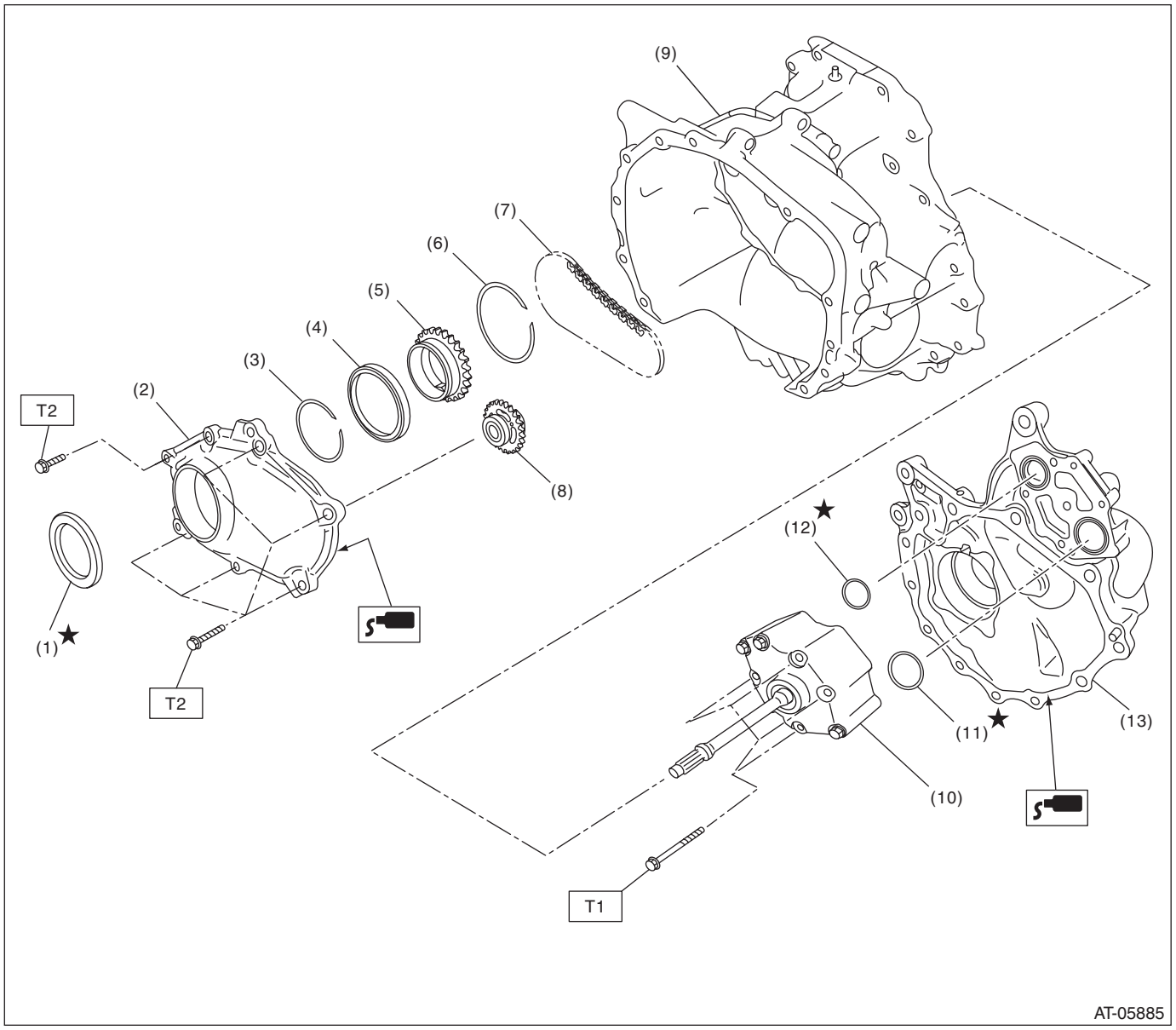

(1) Oil seal
(2) Oil pump chain cover
(3) Snap ring
(4) Ball bearing
(5) Drive sprocket
(6) Snap ring
(7) Oil pump chain
(8) Driven sprocket
(9) Converter case
(10) Oil pump ASSY
(11) O-ring (large)
(12) O-ring (small)
(13) Drive pinion retainer

Tightening torque:N·m (kgf-m, ft-lb)
T1: 8.5 (0.9, 6.3)
T2: 24 (2.4, 17.7)

3. TRANSMISSION CASE

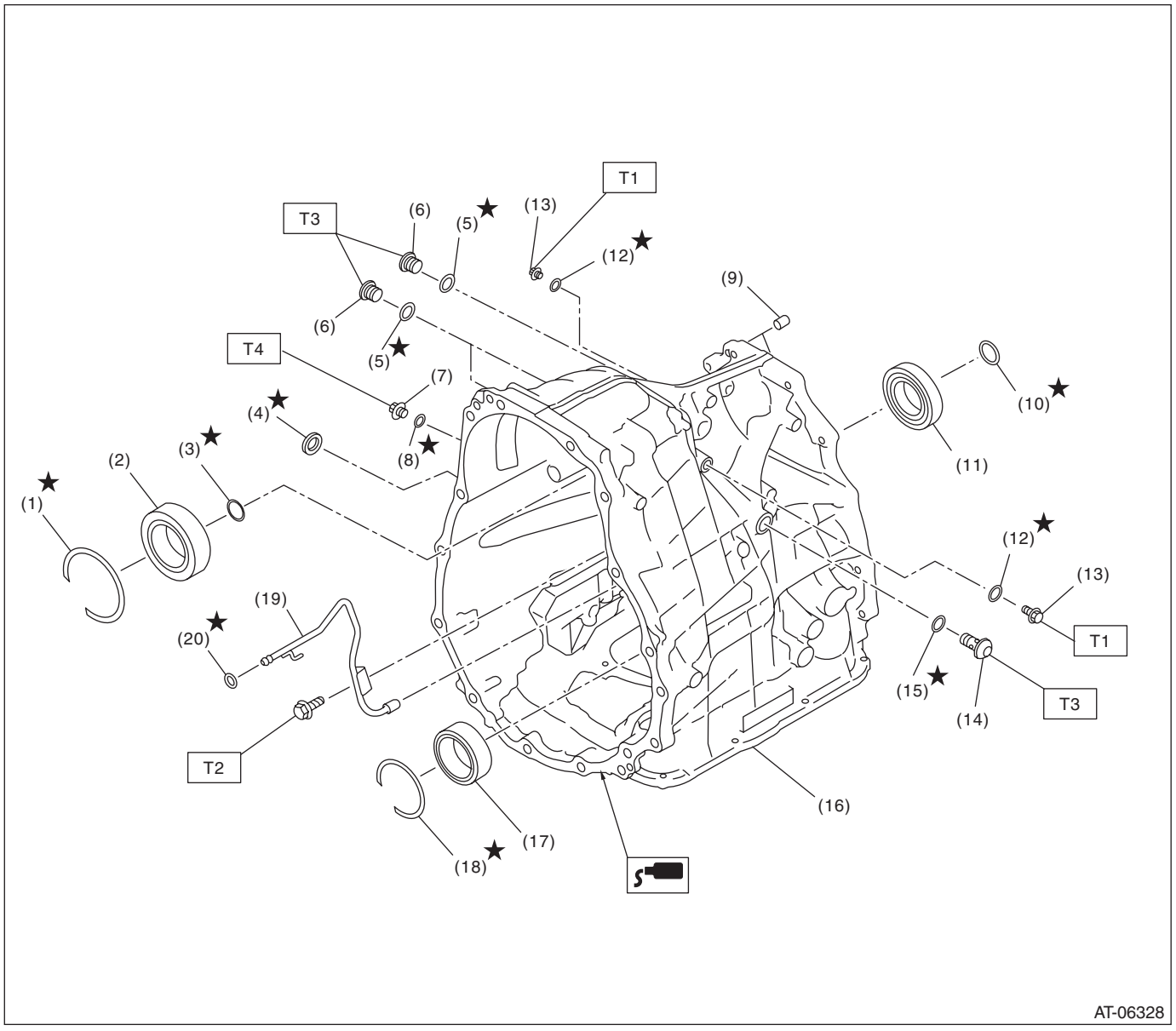

(1) Snap ring
(2) Roller bearing
(3) Seal ring
(4) Oil seal
(5) O-ring
(6) Plug
(7) Plug
(8) Gasket
(9) Straight pin
(10) Seal ring
(11) Ball bearing
(12) O-ring
(13) Plug
(14) Plug
(15) O-ring
(16) Transmission case
(17) Roller bearing
(18) Snap ring
(19) Lubrication pipe
(20) O-ring

Tightening torque:N·m (kgf-m, ft-lb)
T1: 13 (1.3, 9.6)
T2: 16 (1.6, 11.8)
T3: 25 (2.5, 18.4)
T4: 35 (3.6, 25.8)

4. CONTROL VALVE BODY

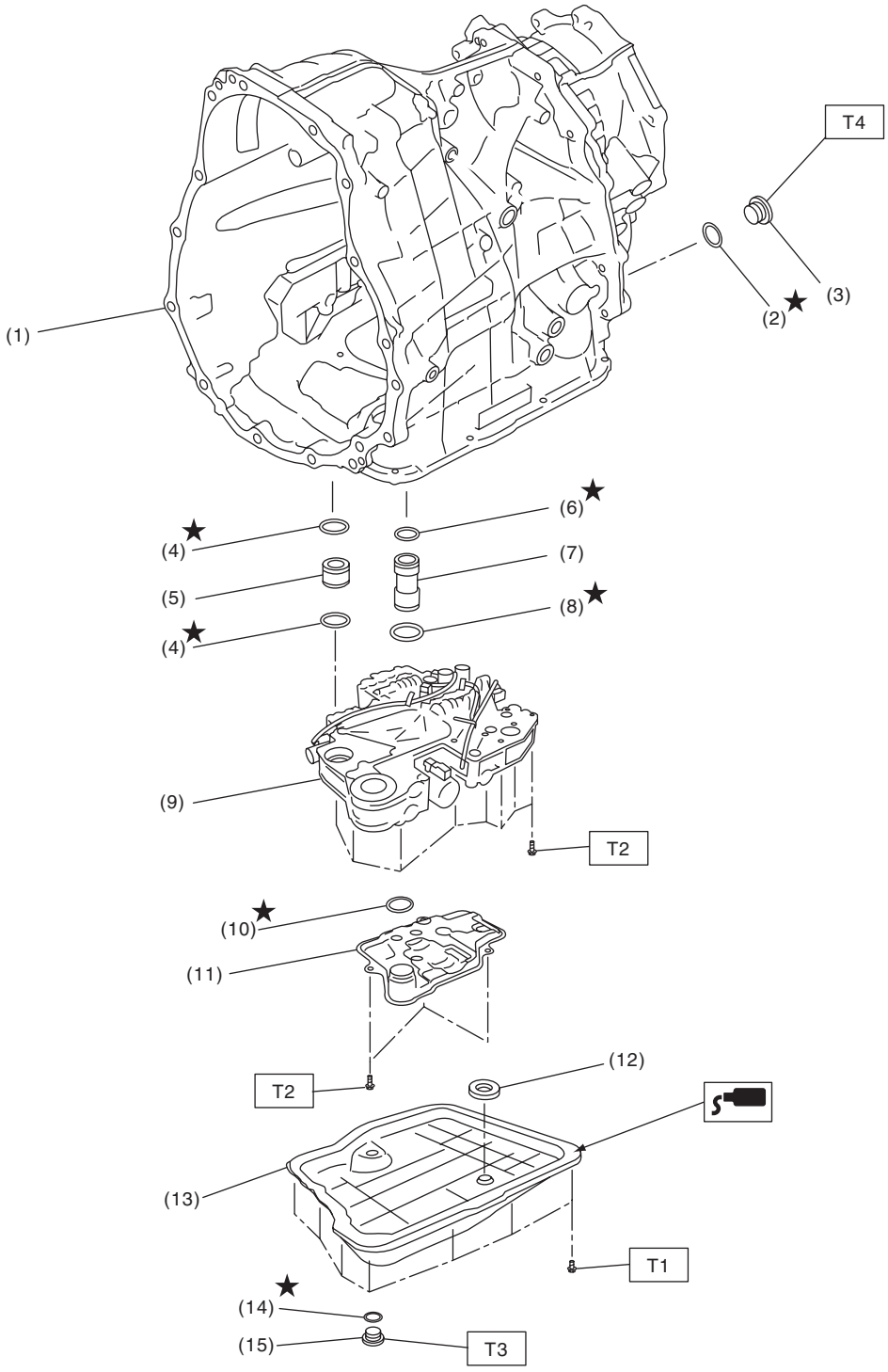

(1)	Transmission case	(8)	O-ring (large)	(15)	CVTF drain plug
(2)	Gasket	(9)	Control valve body		
(3)	Filler plug	(10)	O-ring	***Tightening torque:N·m (kgf-m, ft-lb)***	
(4)	O-ring	(11)	Oil strainer	***T1:***	***5 (0.5, 3.7)***
(5)	Pressure pipe	(12)	Magnet	***T2:***	***9 (0.9, 6.6)***
(6)	O-ring (small)	(13)	Oil pan	***T3:***	***20 (2.0, 14.8)***
(7)	CVTF pipe	(14)	Gasket	***T4:***	***50 (5.1, 36.9)***

5. REVERSE BRAKE ASSEMBLY AND INTERMEDIATE CASE

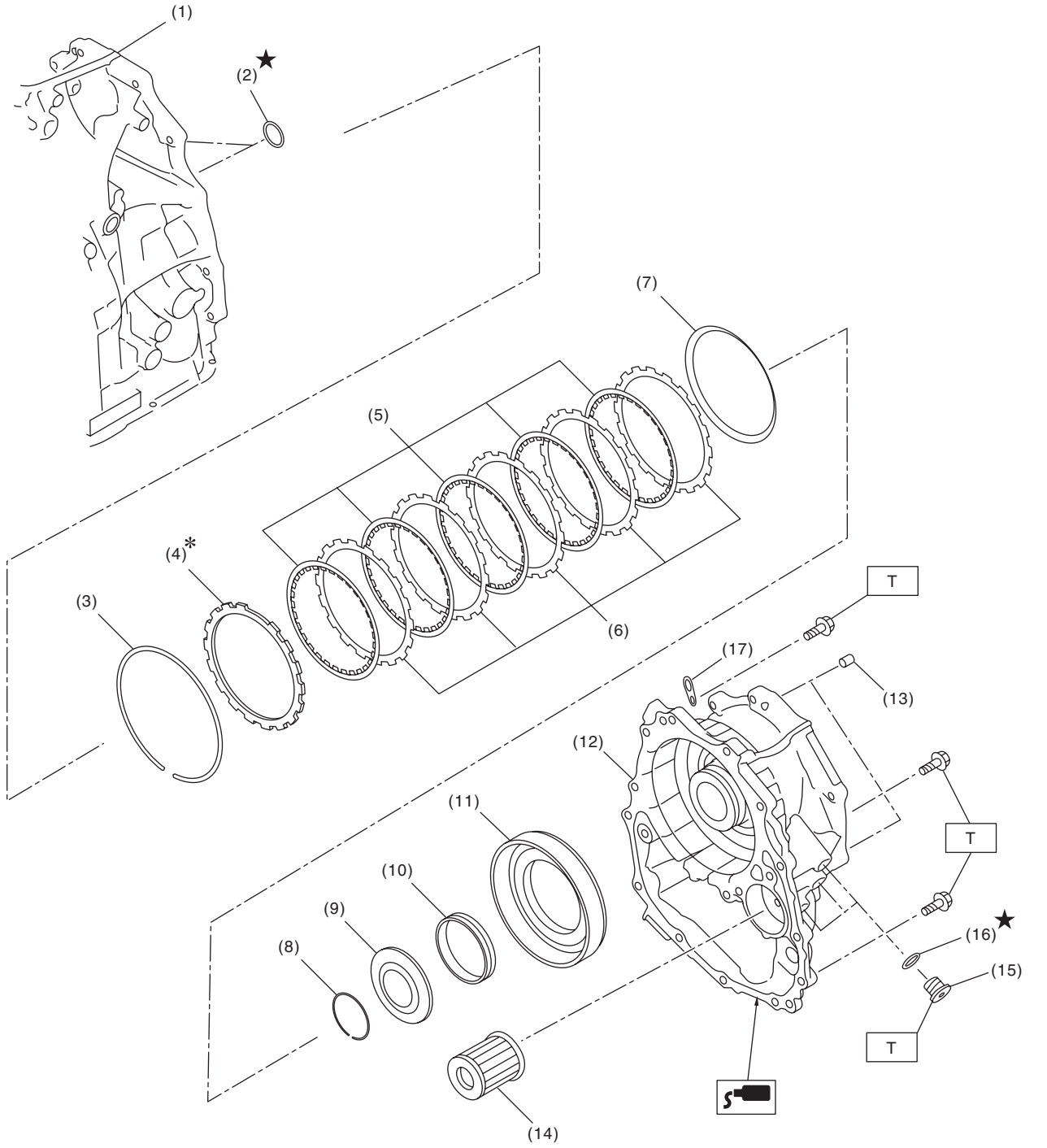

(1) Transmission case
(2) O-ring
(3) Snap ring
(4) Retaining plate
(5) Drive plate
(6) Driven plate
(7) Dish plate
(8) Snap ring
(9) Spring retainer
(10) Return spring
(11) Reverse brake piston
(12) Intermediate case
(13) Straight pin
(14) CVTF filter
(15) Plug
(16) O-ring
(17) Transmission hanger

Tightening torque:N·m (kgf-m, ft-lb)
T: 25 (2.5, 18.4)

6. FORWARD CLUTCH ASSEMBLY AND REDUCTION DRIVEN GEAR

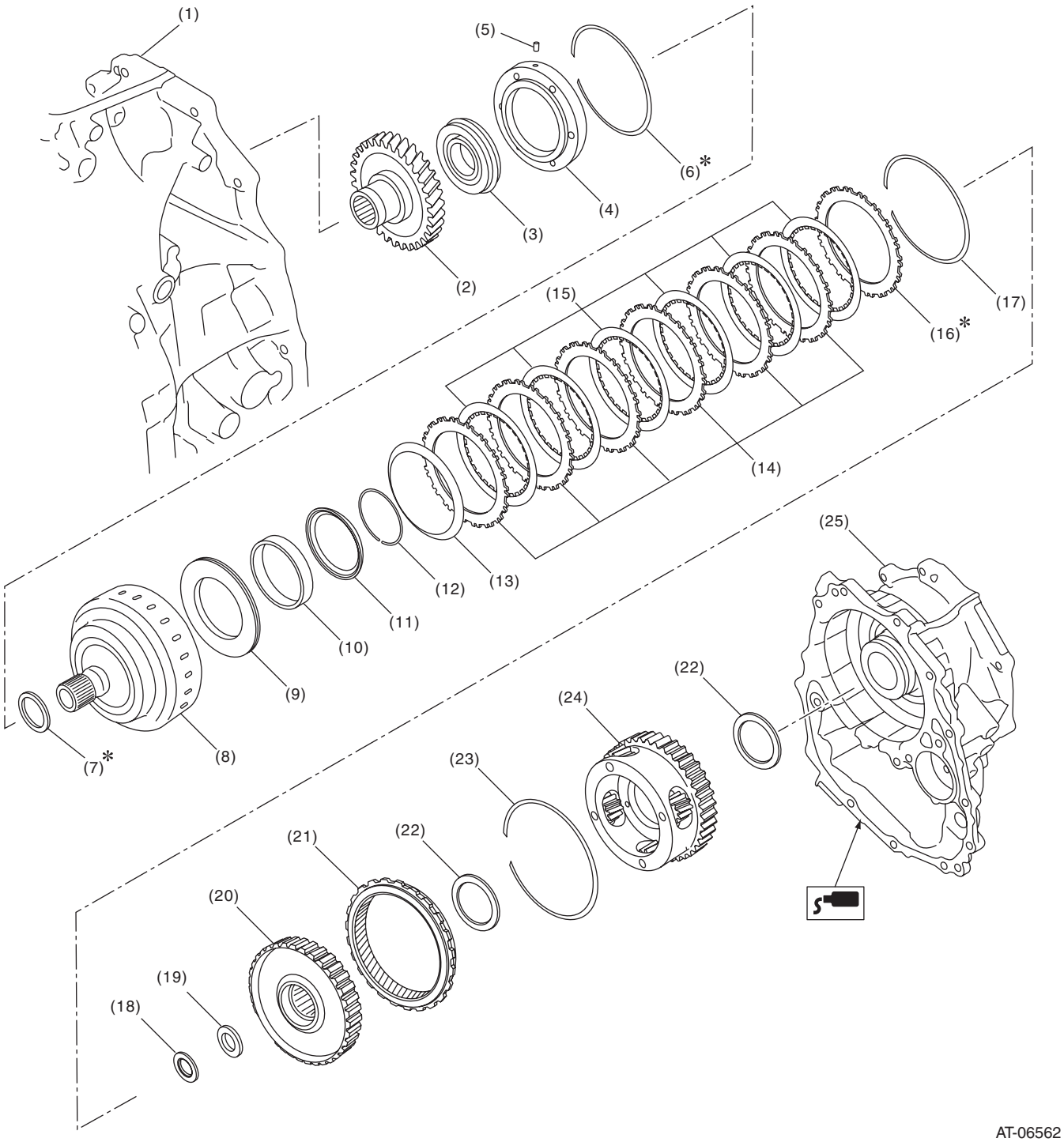

(1) Transmission case
(2) Reduction driven gear
(3) Ball bearing
(4) Reduction driven gear retainer
(5) Straight pin
(6) Snap ring
(7) Washer
(8) Forward clutch drum
(9) Forward clutch piston
(10) Return spring
(11) Forward clutch piston retainer
(12) Snap ring
(13) Dish plate
(14) Driven plate
(15) Drive plate
(16) Retaining plate
(17) Snap ring
(18) Thrust needle bearing
(19) Washer
(20) Sun gear ASSY
(21) Internal gear
(22) Thrust needle bearing
(23) Snap ring
(24) Planetary carrier ASSY
(25) Intermediate case

7. FRONT REDUCTION DRIVE GEAR AND FRONT REDUCTION DRIVEN GEAR

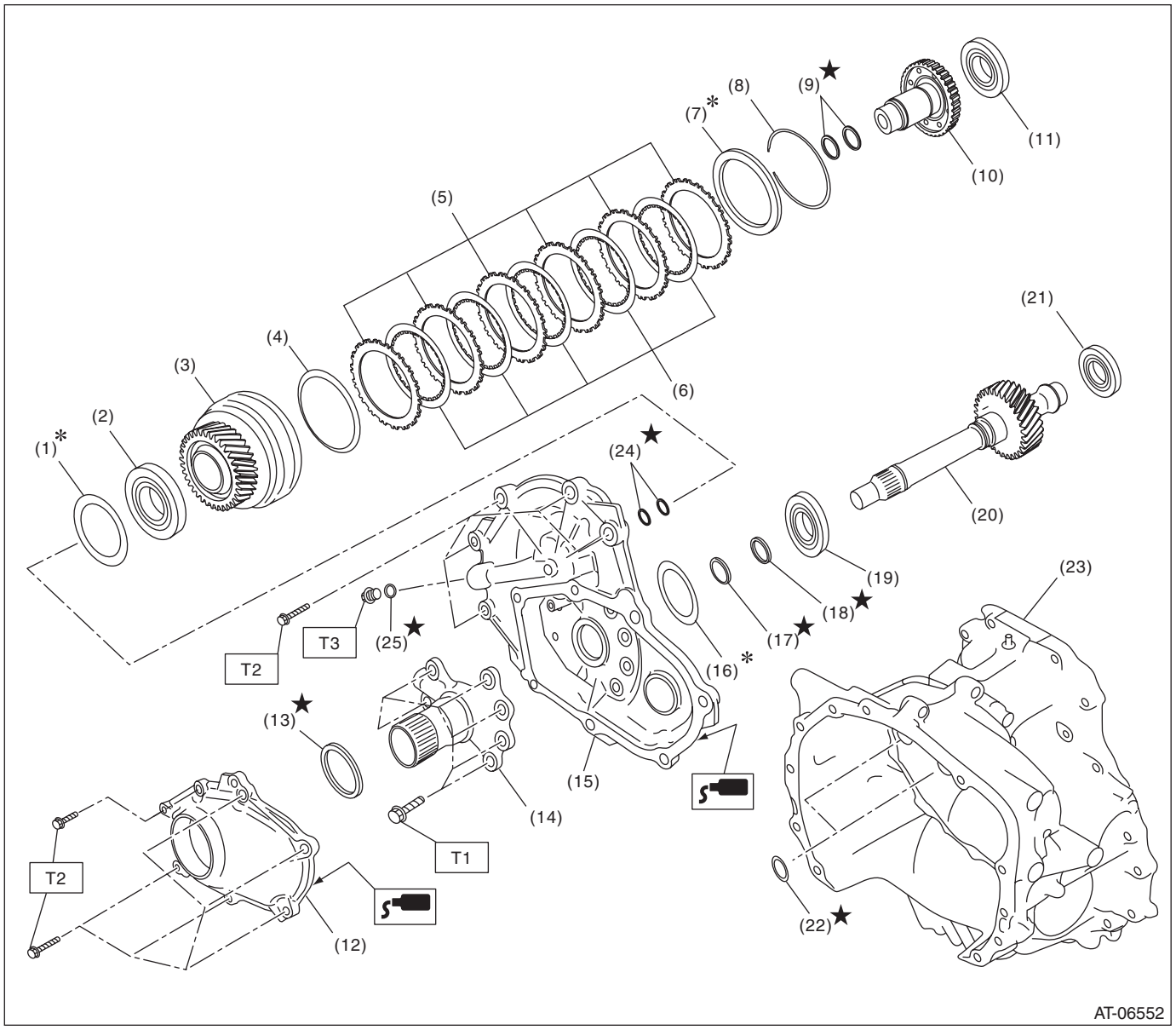

AT-06552

(1) Shim
(2) Ball bearing
(3) Front reduction driven gear
(4) Dish plate
(5) Driven plate
(6) Drive plate
(7) Retaining plate
(8) Snap ring
(9) Seal ring
(10) Front reduction driven shaft
(11) Ball bearing
(12) Oil pump chain cover
(13) Seal ring
(14) Center support COMPL
(15) Converter case cover
(16) Shim
(17) O-ring
(18) Seal ring
(19) Ball bearing
(20) Front reduction drive gear
(21) Ball bearing
(22) O-ring
(23) Converter case
(24) Seal ring
(25) O-ring

Tightening torque:N·m (kgf-m, ft-lb)
T1: 21.5 (2.2, 15.9)
T2: 24 (2.4, 17.7)
T3: 25 (2.5, 18.4)

8. TRANSMISSION CONTROL DEVICE

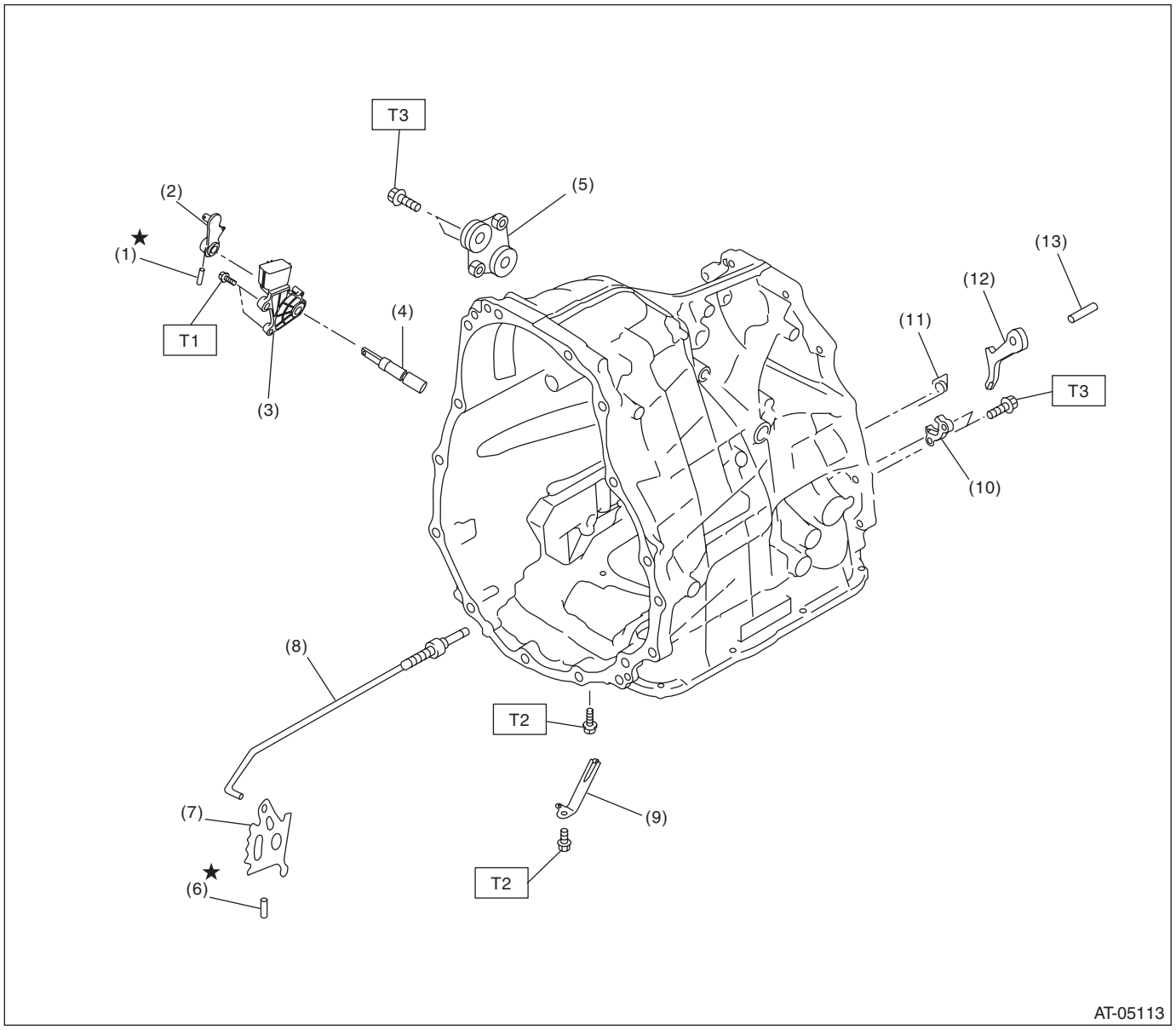

(1) Spring pin
(2) Shifter arm
(3) Inhibitor switch
(4) Shifter arm shaft
(5) Plate ASSY
(6) Spring pin
(7) Manual plate
(8) Parking rod
(9) Detent spring
(10) Parking support
(11) Return spring
(12) Parking pawl
(13) Shaft

Tightening torque:N·m (kgf-m, ft-lb)
T1: 5 (0.5, 3.7)
T2: 7 (0.7, 5.2)
T3: 25 (2.5, 18.4)

9. PRIMARY PULLEY, SECONDARY PULLEY AND VARIATOR CHAIN

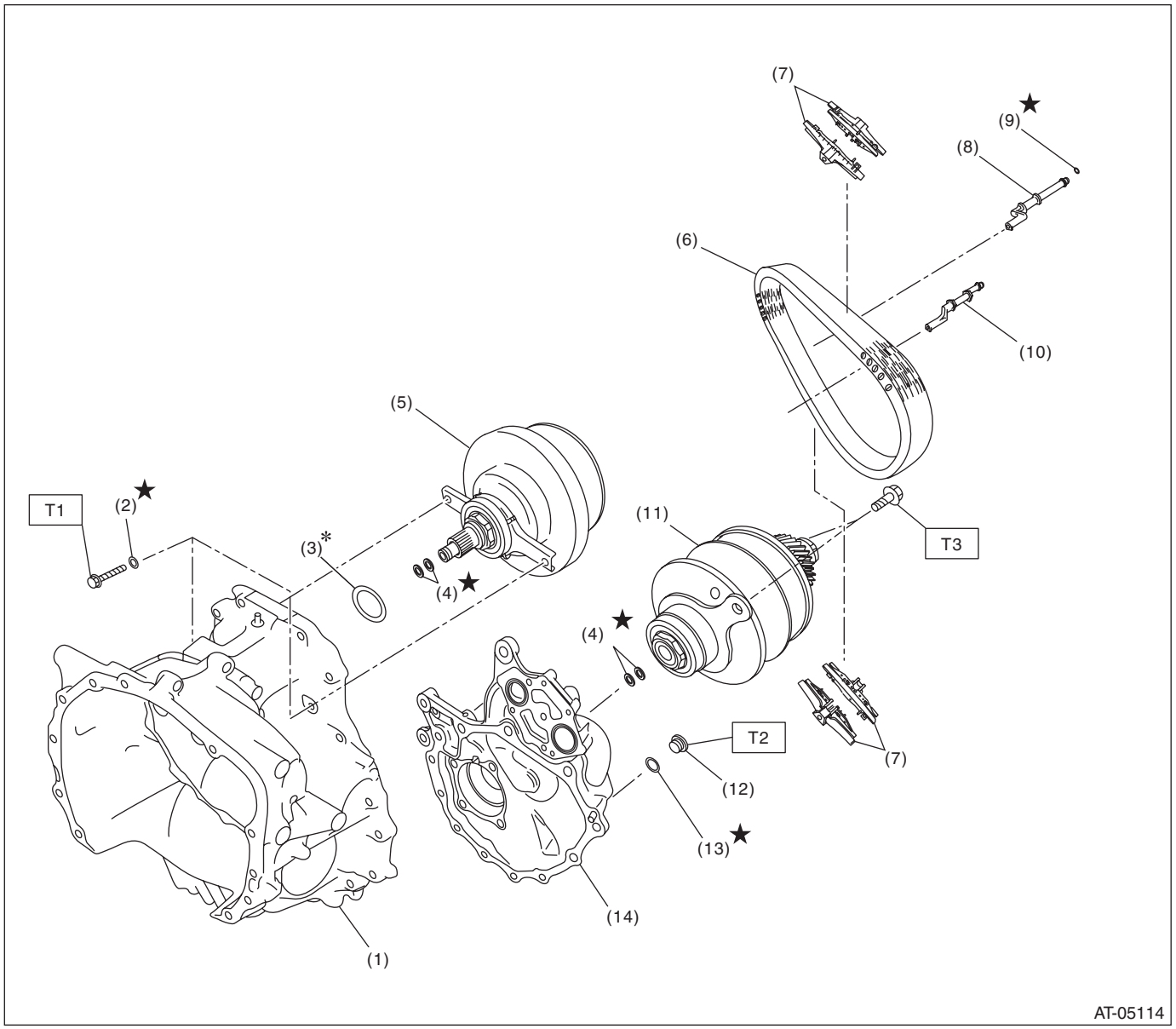

(1) Converter case
(2) Seal washer
(3) Shim
(4) Seal ring
(5) Primary pulley ASSY
(6) Variator chain
(7) Chain guide
(8) Lubrication pipe
(9) O-ring
(10) Support rod
(11) Secondary pulley ASSY
(12) Plug
(13) O-ring
(14) Drive pinion retainer

Tightening torque:N·m (kgf-m, ft-lb)
T1: 21 (2.1, 15.5)
T2: 25 (2.5, 18.4)
T3: 33 (3.4, 24.3)

10.FRONT DIFFERENTIAL GEAR

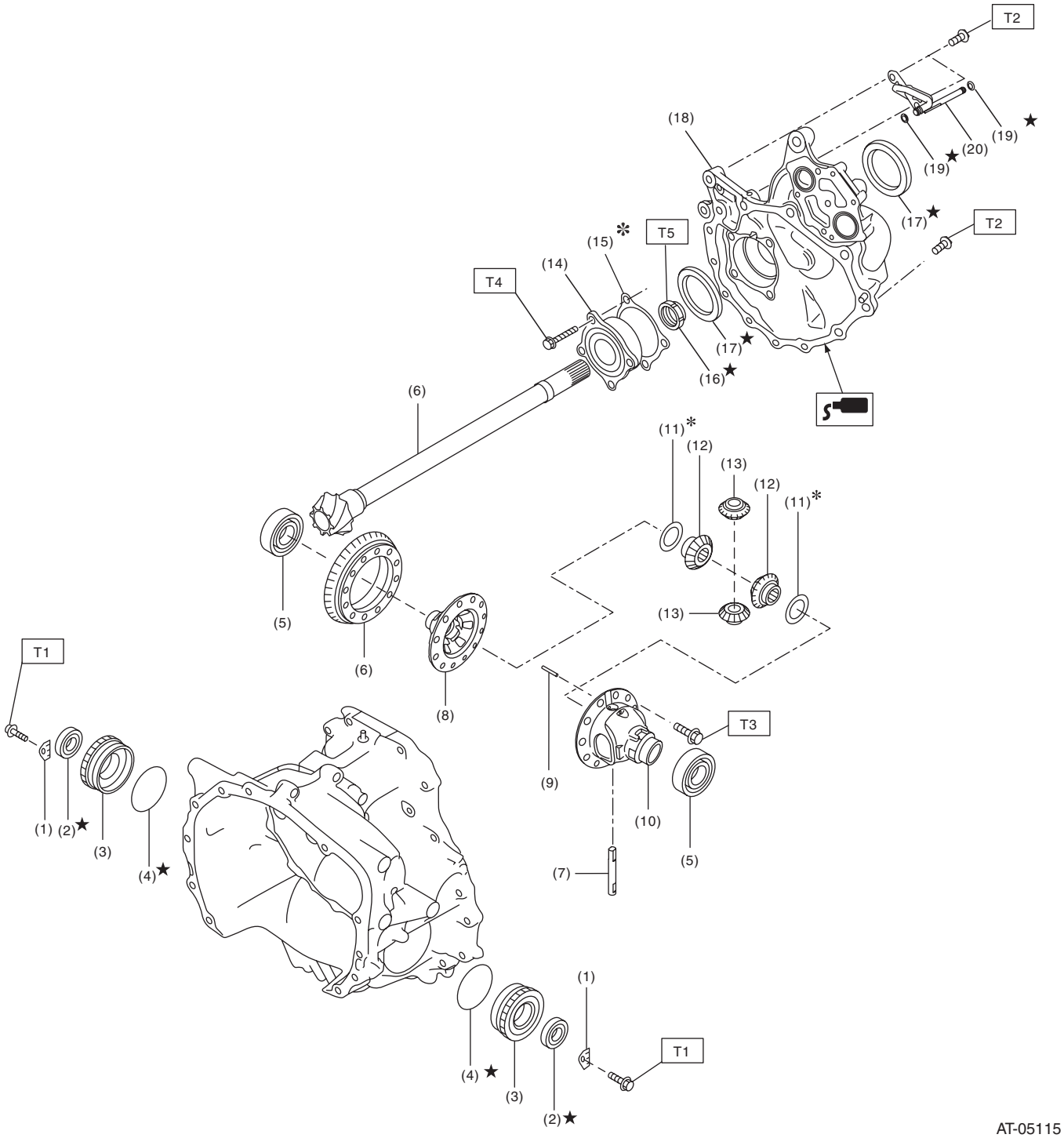

(1) Lock plate
(2) Oil seal
(3) Differential side retainer
(4) O-ring
(5) Taper roller bearing
(6) Drive pinion gear set
(7) Pinion shaft
(8) Differential case RH
(9) Straight pin
(10) Differential case LH
(11) Washer
(12) Differential bevel gear
(13) Differential bevel pinion
(14) Taper roller bearing
(15) Shim
(16) Lock nut
(17) Oil seal
(18) Drive pinion retainer
(19) O-ring
(20) Lubrication pipe

Tightening torque:N·m (kgf-m, ft-lb)
T1: 25 (2.5, 18.4)
T2: 43 (4.4, 31.7)
T3: <Ref. to CVT-271, DIFFERENTIAL CASE ASSY, ASSEMBLY, Front Differential Assembly.>
T4: 70 (7.1, 51.6)
T5: 130 (13.3, 95.9)

11.TRANSFER AND EXTENSION CASE

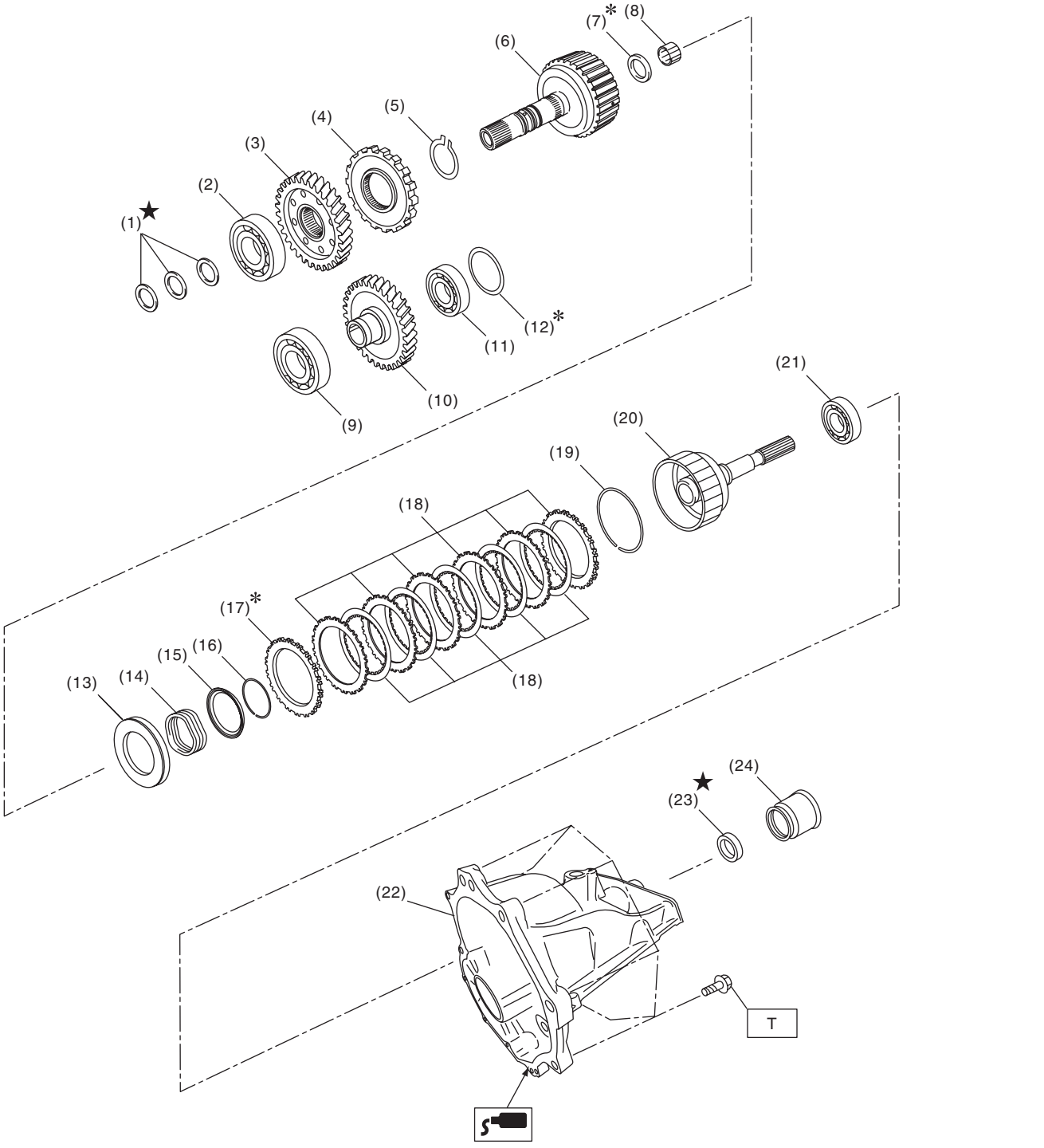

AT-06119

(1) Seal ring
(2) Ball bearing
(3) Transfer drive gear
(4) Parking gear
(5) Snap ring
(6) Reduction drive gear shaft
(7) Thrust needle bearing
(8) Needle bearing
(9) Ball bearing
(10) Transfer reduction driven gear
(11) Ball bearing
(12) Shim
(13) Transfer piston
(14) Return spring
(15) Transfer piston seal
(16) Snap ring
(17) Pressure plate
(18) Transfer clutch plate set
(19) Snap ring
(20) Rear drive shaft
(21) Ball bearing
(22) Extension case
(23) Oil seal
(24) Dust cover

Tightening torque:N·m (kgf-m, ft-lb)
T: 25 (2.5, 18.4)

12.TRANSMISSION HARNESS AND SENSOR

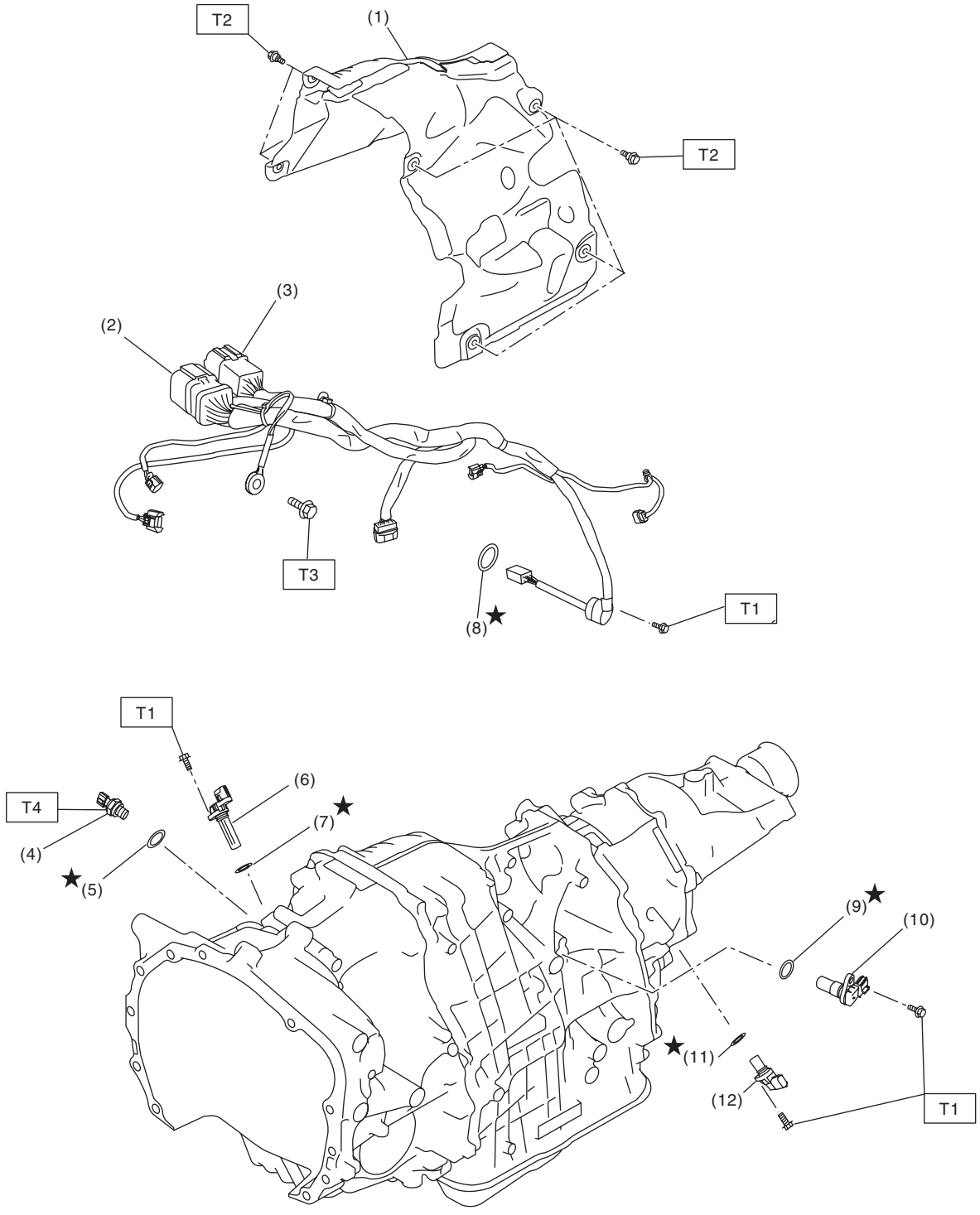

(1)	Transmission cover	(7)	O-ring
(2)	Transmission harness	(8)	O-ring
(3)	Inhibitor harness	(9)	O-ring
(4)	Secondary pressure sensor	(10)	Secondary speed sensor
(5)	O-ring	(11)	O-ring
(6)	Primary speed sensor	(12)	Front wheel speed sensor

Tightening torque:N·m (kgf-m, ft-lb)
T1: 5 (0.5, 3.7)
T2: 8 (0.8, 5.9)
T3: 16 (1.6, 11.8)
T4: 39 (4.0, 28.8)

13.CVTF COOLER PIPE AND HOSE

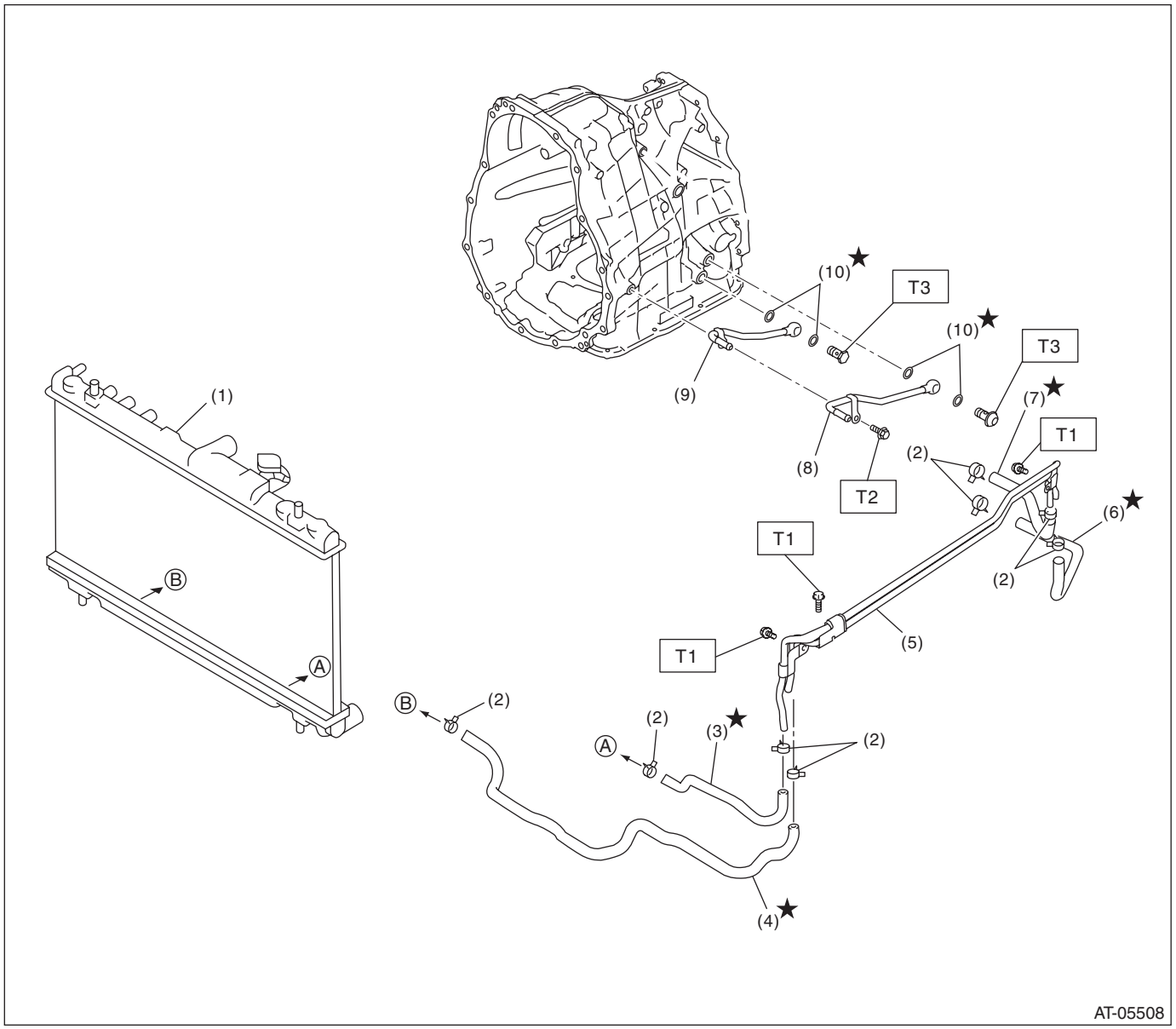

(1)	Radiator	(6)	CVTF CVT inlet hose
(2)	Clip	(7)	CVTF CVT outlet hose
(3)	CVTF radiator outlet hose	(8)	CVTF outlet pipe
(4)	CVTF radiator inlet hose	(9)	CVTF inlet pipe
(5)	CVTF cooler pipe ASSY	(10)	Gasket

Tightening torque:N·m (kgf-m, ft-lb)
T1: 7.5 (0.76, 5.5)
T2: 16 (1.6, 11.8)
T3: 40 (4.1, 29.5)

14.TRANSMISSION CONTROL MODULE

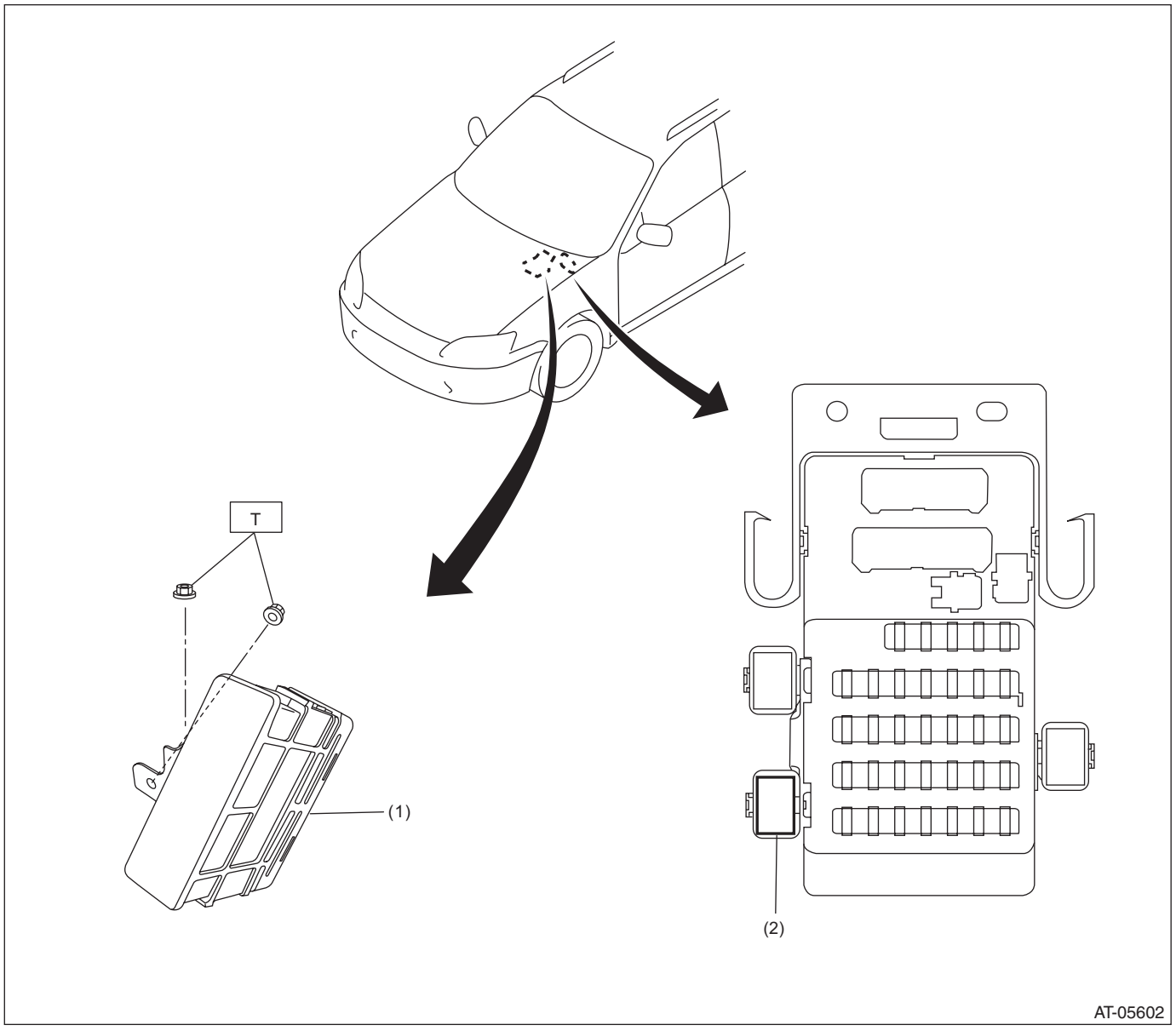

(1) Transmission control module (TCM)
(2) Relay

Tightening torque:N·m (kgf-m, ft-lb)

T: 7.5 (0.75, 5.5)

15.TRANSMISSION MOUNTING

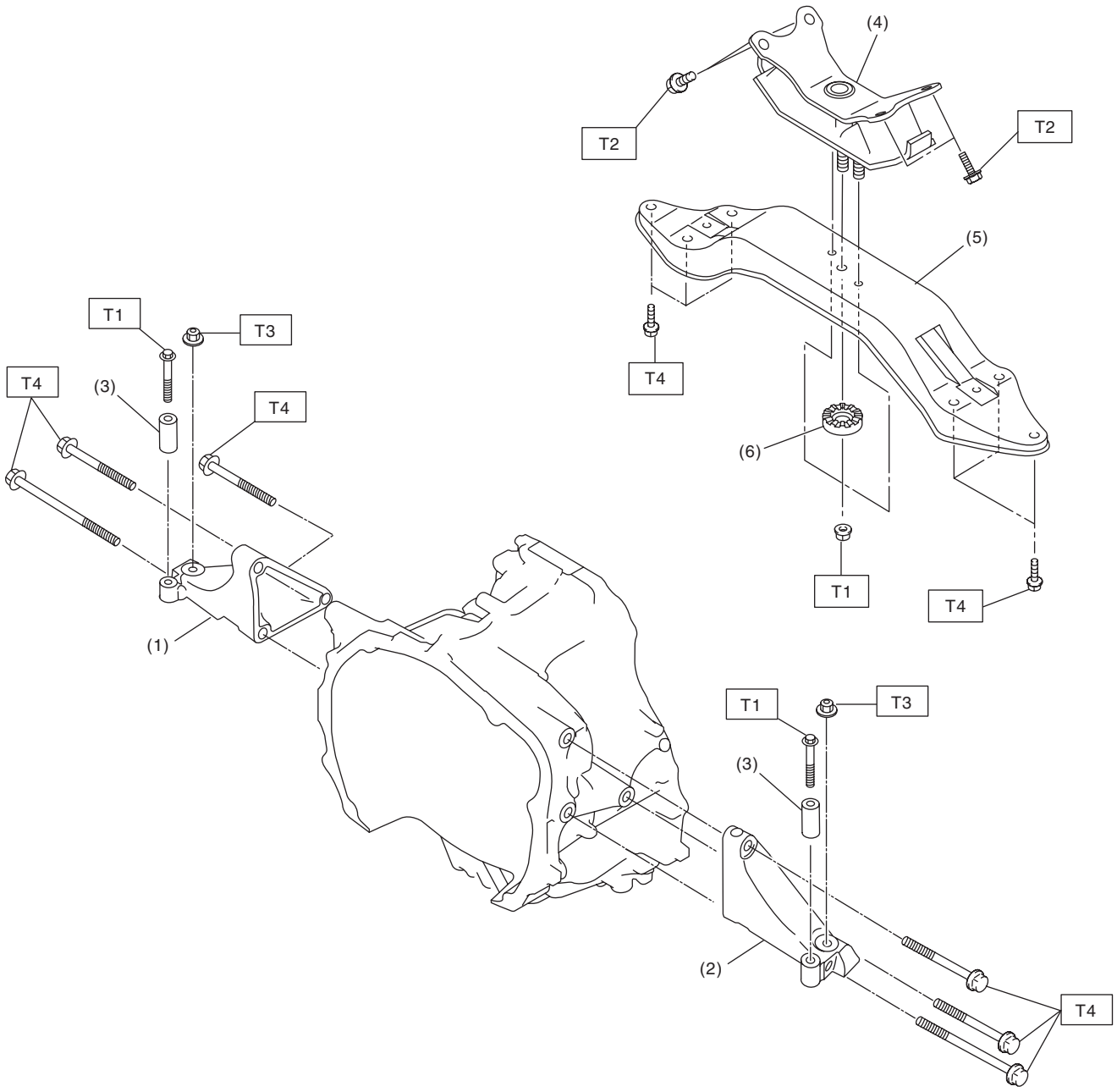

AT-05603

(1)	Transmission mounting bracket (RH)	(4)	Rear cushion rubber	***Tightening torque:N·m (kgf-m, ft-lb)***
(2)	Transmission mounting bracket (LH)	(5)	Transmission rear crossmember	***T1: 35 (3.6, 25.8)***
(3)	Collar	(6)	Stopper	***T2: 40 (4.1, 29.5)***
				T3: 45 (4.6, 33.2)
				T4: 75 (7.6, 55.3)

C: CAUTION

- Wear appropriate work clothing, including a cap, protective goggles and protective shoes when performing any work.
- Remove contamination including dirt and corrosion before removal, installation or disassembly.
- Keep the disassembled parts in order and protect them from dust and dirt.
- Do not place the oil pan with its inner side facing up until it is installed, to prevent intrusion of foreign matter into the control valve body.
- Before removal, installation or disassembly, be sure to clarify the failure. Avoid unnecessary removal, installation, disassembly and replacement.
- When disassembling the case and other light alloy parts, use a plastic hammer to force it apart. Do not pry apart with screwdrivers or other tools.
- Vehicle components are extremely hot after driving. Be wary of receiving burns from heated parts.
- Use SUBARU genuine CVTF and recommended grease. Do not mix CVTF, grease etc. of different grades or manufacturers.
- Be sure to tighten bolts and nuts to the specified torque.
- Place lifts, shop jacks or rigid racks at specified locations.
- Apply CVTF onto sliding or revolving surfaces before installation.
- Replace deformed or damaged snap rings with new parts.
- Before installing O-rings or oil seals, apply sufficient amount of CVTF to avoid damage and deformation.
- Be careful not to incorrectly install or fail to install O-rings, snap rings and other such parts.
- Before securing a part on a vise, place cushioning material such as wood blocks, aluminum plate, or cloth between the part and the vise.
- Avoid damaging the mating surface of the case.
- Before applying liquid gasket, completely remove the old liquid gasket.
- After removing the sensors, breather hose and plugs, plug the holes to avoid foreign materials intruding as necessary.
- During disassembly or assembly, be sure to use nylon gloves or paper towels. Do not use cloth gloves or waste cloth.

D: PREPARATION TOOL

1. SPECIAL TOOL

ILLUSTRATION	TOOL NUMBER	DESCRIPTION	REMARKS
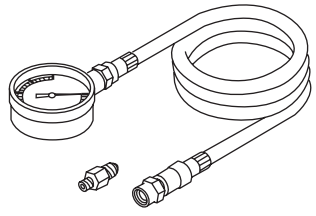 ST18801AA000	18801AA000	OIL PRESSURE GAUGE ASSY	Used for measuring the secondary hydraulic pressure (line pressure).
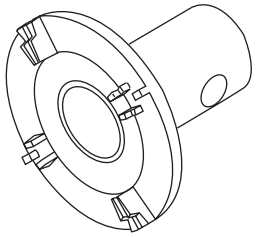 ST18658AA020	18658AA020	WRENCH COMPL RETAINER	Used for removing and installing the differential side retainer.

ILLUSTRATION	TOOL NUMBER	DESCRIPTION	REMARKS
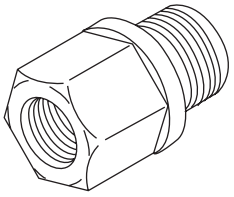 ST18681AA000	18681AA000	PRESSURE GAUGE ADAPTER	Used for measuring oil pressure. NOTE: Used together with the genuine O-ring (part No. 806911080).
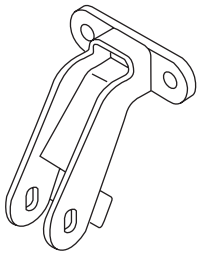 ST41099AJ000	41099AJ000	SPECIAL TOOL H4	Used for holding and balancing the engine unit.
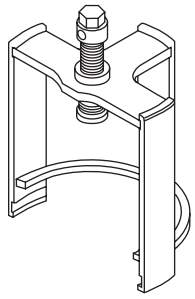 ST18769AA000	18769AA000	EXPANDER PULLEY	Used for removing and installing the secondary pulley assembly.
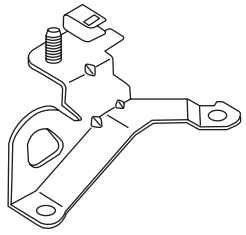 ST10004AA180	10004AA180 (SUBARU genuine part)	ENGINE HANGER REAR	Used for removing and installing the automatic transmission assembly. (ENGINE HANGER REAR for turbo model)
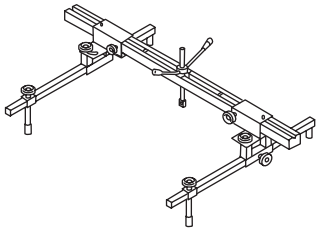 ST99099AJ000	99099AJ000	ENGINE HANGER	• Used for removing and installing the automatic transmission assembly. • Used together with CHAIN BALANCER (99099AJ010).

ILLUSTRATION	TOOL NUMBER	DESCRIPTION	REMARKS
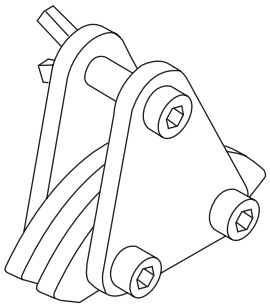 ST99099AJ010	99099AJ010	CHAIN BALANCER	• Used for removing and installing the automatic transmission assembly. • Used together with ENGINE HANGER (99099AJ000).
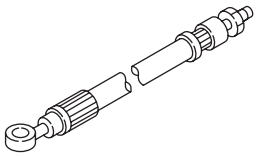 ST-498897700	498897700	OIL PRESSURE ADAPTER SET	Used for measuring the secondary pressure (line pressure) and transfer clutch hydraulic pressure.
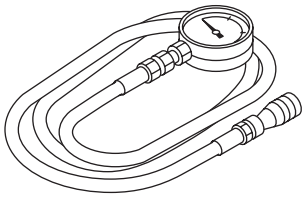 ST-498575400	498575400	OIL PRESSURE GAUGE ASSY	Used for measuring the transfer clutch hydraulic pressure.
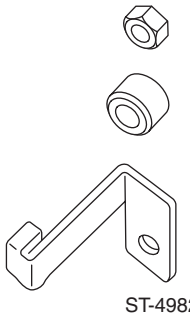 ST-498277200	498277200	STOPPER SET	• Used for removing and installing automatic transmission assembly to engine. • Used for preventing the torque converter from dropping off.
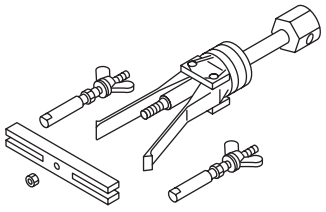 ST-398527700	398527700	PULLER ASSY	• Used for removing the extension case oil seal. • Used for removing the roller bearing of the primary pulley and secondary pulley. • Used for removing the bearing of reduction driven gear. • Used for removing the differential side retainer bearing outer race.

ILLUSTRATION	TOOL NUMBER	DESCRIPTION	REMARKS
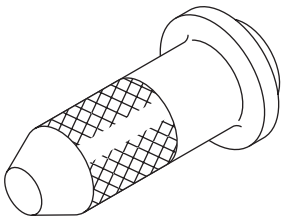 ST-498057300	498057300	INSTALLER	Used for installing the extension case oil seal.
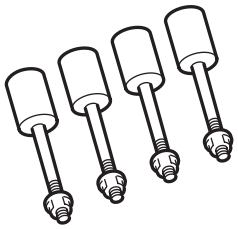 ST18632AA000	18632AA000	TRANSMISSION STAND	Used for disassembling and assembling the transmission.
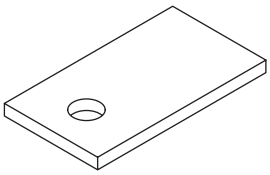 ST-498255400	498255400	PLATE	Used for measuring the backlash of hypoid gear.
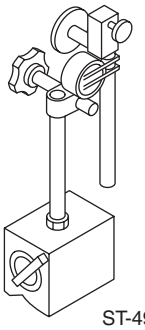 ST-498247001	498247001	MAGNET BASE	• Used for measuring the backlash of differential bevel pinion gear. • Used for measuring the backlash of hypoid gear. • Used together with DIAL GAUGE (498247100).
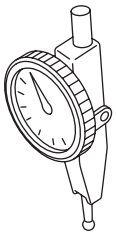 ST-498247100	498247100	DIAL GAUGE	• Used for measuring the backlash of differential bevel pinion gear. • Used for measuring the backlash of hypoid gear. • Used together with MAGNET BASE (498247001).

ILLUSTRATION	TOOL NUMBER	DESCRIPTION	REMARKS
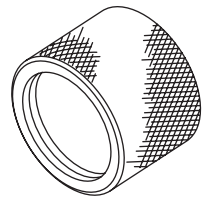 ST18675AA000	18675AA000	DIFFERENTIAL SIDE OIL SEAL INSTALLER	Used for installing the differential side retainer oil seal.
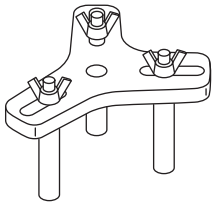 ST18762AA000	18762AA000	COMPRESSOR SPECIAL TOOL	Used for disassembling and installing the multi-plate clutch piston for shifting.
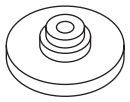 ST18765AA000	18765AA000	COMPRESSOR SUPPORT	Used for disassembling and installing the multi-plate clutch piston for shifting.
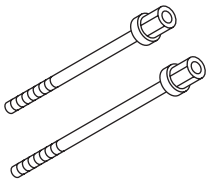 ST18763AA000	18763AA000	COMPRESSOR SHAFT	Used for disassembling and installing the multi-plate clutch piston for shifting.
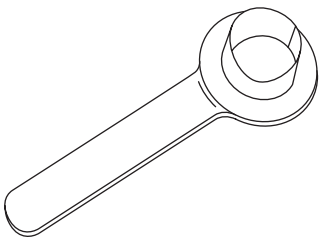 ST28399SA010	28399SA010	OIL SEAL PROTECTOR	Used for protecting oil seal when installing front drive shaft.

ILLUSTRATION	TOOL NUMBER	DESCRIPTION	REMARKS
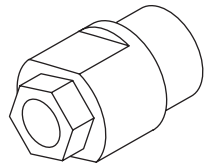 ST18667AA010	18667AA010	HOLDER	• Used for removing and installing the drive pinion lock nut. • Used as a holder to rotate gear when checking tooth contact.
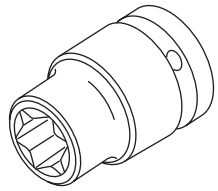 ST18270KA010	18270KA010	SOCKET (E16)	Used for removing and installing the center support COMPL.
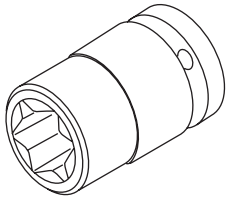 ST18270KA020	18270KA020	SOCKET (E20)	• Used for removing and installing the hypoid driven gear. • Used for removing and installing the drive pinion shaft retainer.
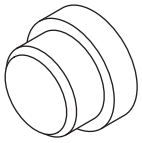 ST-398497701	398497701	SEAT	Used for removing and installing the ball bearing.
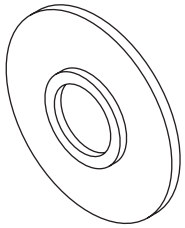 ST-398177700	398177700	INSTALLER	• Used for removing and installing the ball bearing and tapered roller bearing. • Used for installing the parking gear.

ILLUSTRATION	TOOL NUMBER	DESCRIPTION	REMARKS
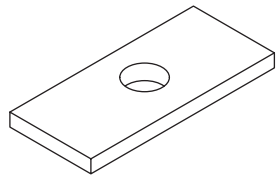 ST-398643600	398643600	GAUGE	Used for measuring the total end play, extension end play and drive pinion height.
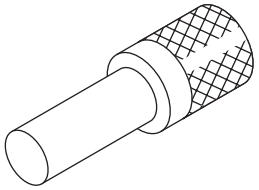 ST-899864100	899864100	REMOVER	Used for removing and installing the ball bearing.
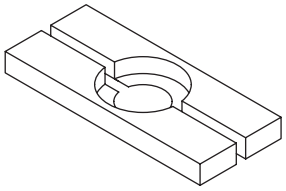 ST-498077000	498077000	REMOVER	• Used for removing ball bearing of front reduction drive gear. • Used for removing the taper roller bearing front side inner race of the drive pinion shaft. • Used for removing the differential taper roller bearing.
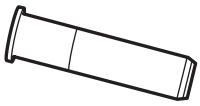 ST18657AA010	18657AA010	INSTALLER	Used for installing the oil seal of inhibitor switch.
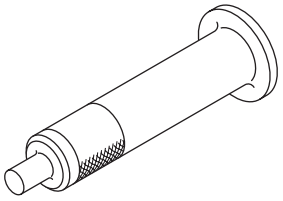 ST18657AA020	18657AA020	OIL SEAL INSTALLER	Used for installing the oil seal.

ILLUSTRATION	TOOL NUMBER	DESCRIPTION	REMARKS
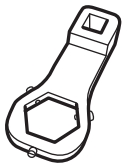 ST18621AA000	18621AA000	ADAPTER WRENCH	Used for removing and installing the drive pinion shaft lock nut.
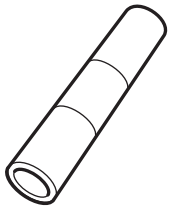 ST18651AA000	18651AA000	INSTALLER	Used for installing the bearing of front reduction drive gear.
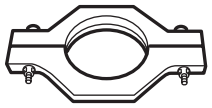 ST18720AA000	18720AA000	REMOVER	Used for removing ball bearing of reduction driven gear.
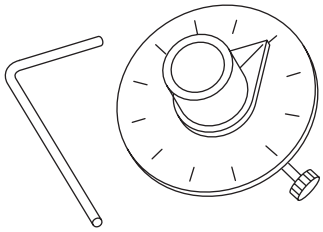 ST18854AA000	18854AA000	ANGLE GAUGE	• Used for installing the drive plate. • Used for installing the hypoid driven gear.
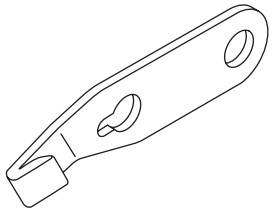 ST-498497100	498497100	CRANKSHAFT STOPPER	Used for stopping the drive plate rotation when removing and installing the drive plate.

ILLUSTRATION	TOOL NUMBER	DESCRIPTION	REMARKS
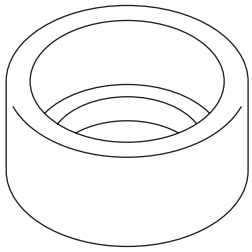 ST20299AG010	20299AG010	PRESS SNAP RING	Used for installing the bearing on primary pulley side.
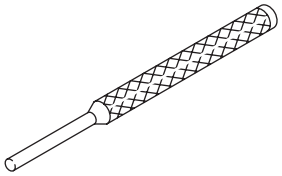 ST-398791600	398791600	REMOVER	Used for removing and installing the shifter arm spring pin.
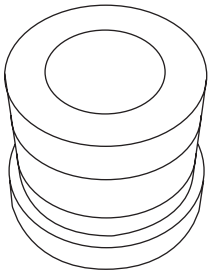 ST-399513600	399513600	INSTALLER	• Used for removing the ball bearing of the rear drive shaft. • Used for removing the bearing of the oil pump chain sprocket.
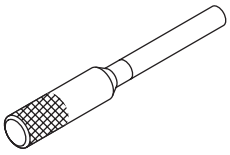 ST-499267300	499267300	STOPPER PIN	Used for adjusting the inhibitor switch.
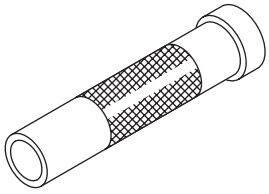 ST-499277100	499277100	BUSHING 1-2 INSTALLER	• Used for installing the front differential taper roller bearing. • Used for removing and installing the transfer reduction drive gear. • Used for installing the ball bearing of the transfer reduction drive gear. • Used for installing the oil seal. • Used for installing the ball bearing of the transfer reduction driven gear.

ILLUSTRATION	TOOL NUMBER	DESCRIPTION	REMARKS
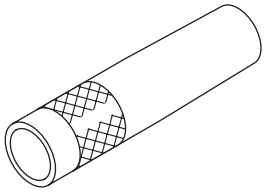 ST-499277200	499277200	INSTALLER	• Used for installing the taper roller bearing inner race of drive pinion shaft. • Used for installing the reduction driven gear.
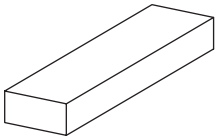 ST-499575400	499575400	GAUGE	Used for measuring height of end play.
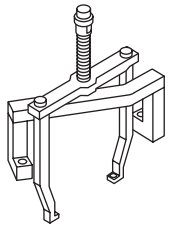 ST-499737100	499737100	PULLER SET	• Used for measuring the transfer end play. • Use the rack only.
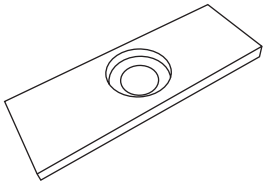 ST-499575600	499575600	GAUGE	Used for measuring height of end play.
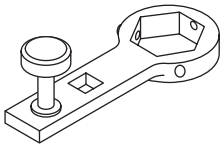 ST-499787700	499787700	WRENCH	Used for measuring the differential pinion shaft backlash.

ILLUSTRATION	TOOL NUMBER	DESCRIPTION	REMARKS
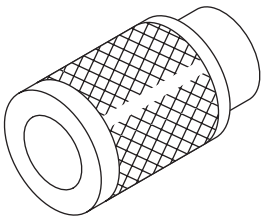 ST-499757002	499757002	INSTALLER	Used for removing the transfer reduction driven gear.
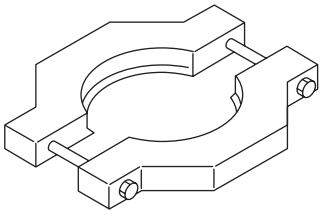 ST18767AA000	18767AA000	BEARING REMOVER	• Used for removing the transfer reduction drive gear. • Used for removing the reduction driven gear bearing retainer. • Used for removing the front reduction driven shaft.
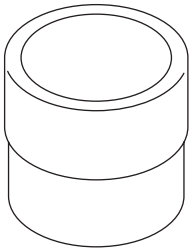 ST-499755602	499755602	PRESS SNAP RING	• Used for installing the oil seal. • Used for installing the ball bearing and roller bearing.
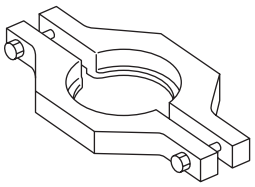 ST-498077600	498077600	REMOVER	• Used for removing the ball bearing of the rear drive shaft. • Used for removing the ball bearing of transfer reduction driven gear. • Used for removing ball bearing of reduction driven gear. • Used for removing the ball bearing of drive sprocket.
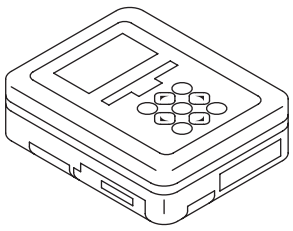 ST1B022XU0	1B022XU0	SUBARU SELECT MONITOR III KIT	Used for troubleshooting the electrical system.

2. GENERAL TOOL

TOOL NAME	REMARKS
Circuit tester	Used for measuring resistance and voltage.
Thickness gauge	Used for the clearance in reverse brake, forward clutch, transfer clutch and input clutch.
Caliper	Used for measuring the clearance at the parts.
Spring scale	Used for measuring the starting torque of the drive pinion.
TORX® bit T70	Used for removing and installing differential gear oil drain plug.
TORX® bit E16	Used for removing and installing the center support COMPL.
Straight pin remover	Used for removing and installing transmission gear oil drain plug.
Deep socket	Used for removing and installing the secondary pressure sensor. NOTE: Use Ko-ken 3/8 12-point 27 mm (manufacturer product No. 3305M-27).
Push/pull gauge	Used for measuring clutch clearance.
Chain sling	Used for removing and installing transmission. • Length: 0.8 — 1 m (2.6 — 3.3 ft) • Load capacity: 1.2 t (2646 lb) or more • Diameter: 6 mm (0.24 in) or 6.3 mm (0.25 in) • Chain external width: 23.5 mm (0.93 in) or less • Chain internal width: 8.5 mm (0.33 in) or more
Screw shackle	Used for removing and installing transmission. • Load capacity: 250 kg (551 lb) or more • Use two pieces.

2. CVTF

A: INSPECTION

Check for leakage of CVTF from transmission.

B: ADJUSTMENT

CAUTION:
• CVTF level changes along with CVTF temperature. When inspecting CVTF level, observe the specified CVTF temperature.
• Always use specified CVTF or equivalent. Using other fluid than specified or equivalent will cause malfunction.

1) Idle the engine to raise CVTF temperature to 35 — 45°C (95 — 113°F) on Subaru Select Monitor.
2) Operate the select lever in P → R → N → D and D → N → R → P to circulate CVTF with the engine idling.
3) With the engine running, lift up the vehicle and remove the filler plug.

CAUTION:
Pay special attention to the following operations as the engine is at idle.

NOTE:
CVTF is at the specified level when it is up to the filler plug hole lower section.

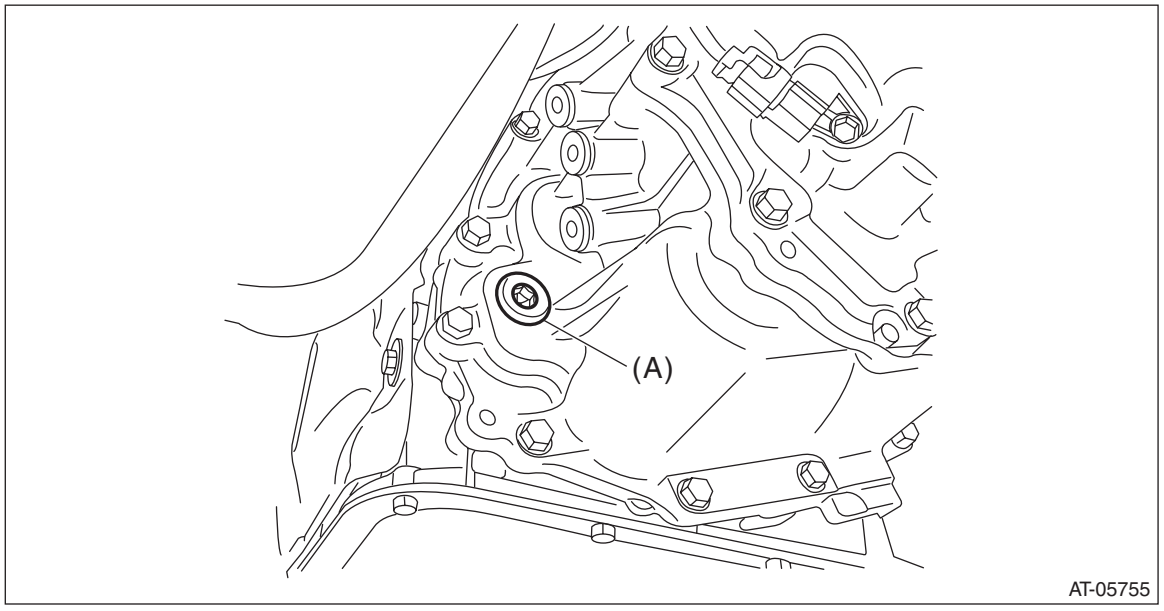

(A) Filler plug

4) When there is no CVTF leakage from the transmission, add the specified fluid or equivalent up to the filler plug hole lower section.

CVT fluid:
<Ref. to CVT-4, HYDRAULIC CONTROL AND LUBRICATION, SPECIFICATION, General Description.>

CAUTION:
Note that when CVTF is added up to the lower section of filler plug while the transmission is in cold condition, overfilling of CVTF occurs, causing the oil to spill out.

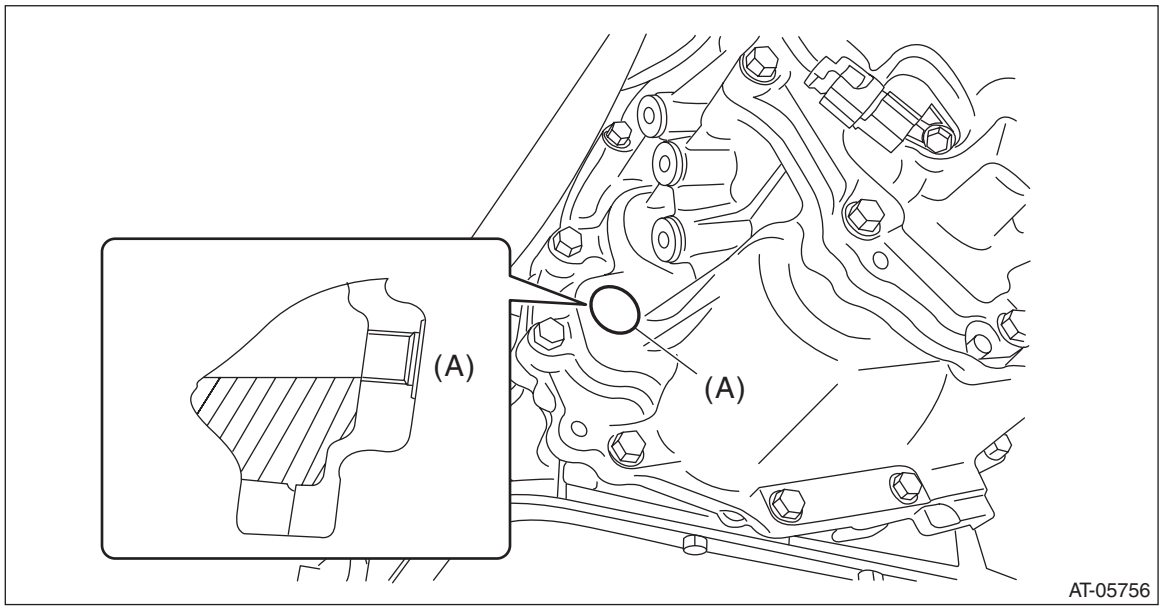

(A) Filler plug hole

5) Install the filler plug.

NOTE:
Use a new gasket.

Tightening torque:
50 N·m (5.1 kgf-m, 36.9 ft-lb)

C: REPLACEMENT

CAUTION:
• Directly after the vehicle has been running or the engine has been long idle running, the CVTF is hot. Be careful not to burn yourself.
• Be careful not to spill the CVTF on exhaust pipe to prevent it from emitting smoke or causing fires. If CVTF adheres, wipe it off completely.
• Always use specified CVTF or equivalent. Using other fluid than specified or equivalent will cause malfunction.

1) Lift up the vehicle, and remove the CVTF drain plug.

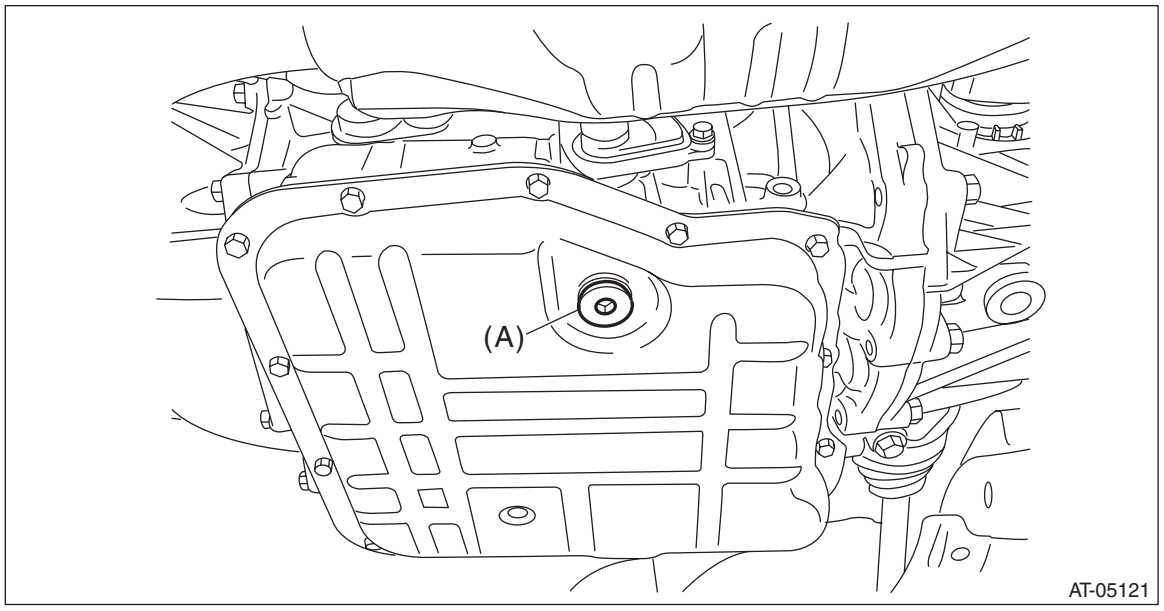

(A) CVTF drain plug

2) Check the CVTF condition. <Ref. to CVT-40, CONDITION CHECK, CVTF.>
3) Install the CVTF drain plug and gasket.

NOTE:
- Use a new gasket.

Tightening torque:
20 N·m (2.0 kgf-m, 14.8 ft-lb)

4) Remove the filler plug.

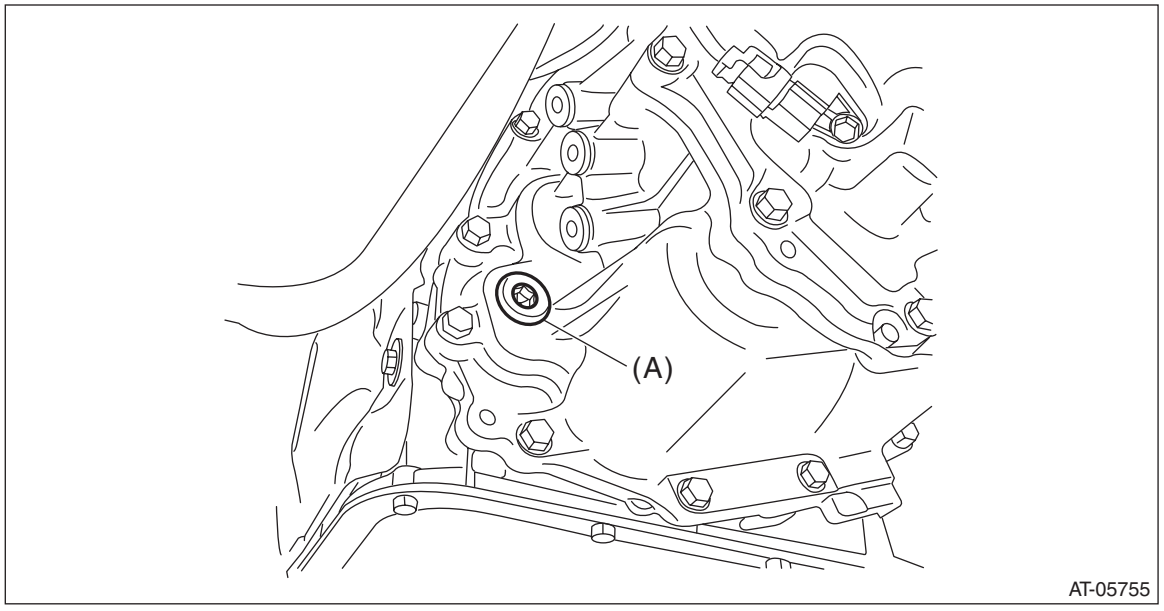

(A) Filler plug

5) Fill in the specified fluid or equivalent through the filler plug.

CVT fluid:
<Ref. to CVT-4, HYDRAULIC CONTROL AND LUBRICATION, SPECIFICATION, General Description.>

Capacity:
Fill with the same amount of CVTF as drained.

6) Temporarily tighten the filler plug.
7) Idle the engine to raise CVTF temperature to 35 — 45°C (95 — 113°F) on Subaru Select Monitor.
8) Operate the select lever in P → R → N → D and D → N → R → P to circulate CVTF with the engine idling.

CAUTION:
Pay special attention to the following operations as the engine is at idle.

9) Place the select lever in “P” range. Then lift up the vehicle with the engine at idle to adjust the CVTF level and check for leakage. <Ref. to CVT-37, ADJUSTMENT, CVTF.>
10) Replace with a new gasket, and attach the filler plug.

Tightening torque:
50 N·m (5.1 kgf-m, 36.9 ft-lb)

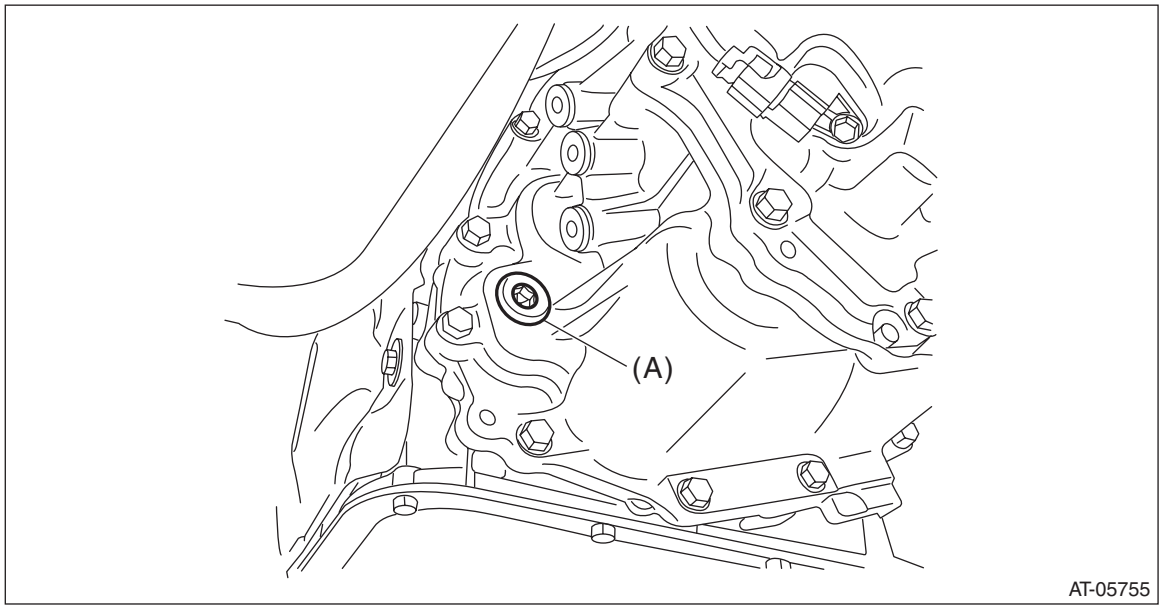

(A) Filler plug

D: CONDITION CHECK

NOTE:
When replacing CVTF, determine the condition inside the transmission body by inspecting the drained CVTF.

Fluid condition	Trouble and possible cause	Corrective action
Metal particles.	Excessive wear of the internal of the transmission body.	Replace CVTF and check if CVT operates correctly.
Thick and varnish-form fluid.	Burnt clutches	Replace CVTF and check the CVT body or vehicle for faulty.
Clouded CVTF or bubbles.	Water mixed in fluid.	Replace CVTF and check the water entering point.

3. Differential Gear Oil

A: INSPECTION

Check that there is no leakage of differential gear oil from the converter case.

B: ADJUSTMENT

NOTE:
Immediately after removing the overflow drain plug, remaining gear oil (approx. 8 cc) may come out of the overflow pipe. This is not included in the specified amount. When removing the overflow drain plug, make sure the gear oil flows out of the overflow drain plug hole by filling with gear oil.

1) Remove the air breather cap.

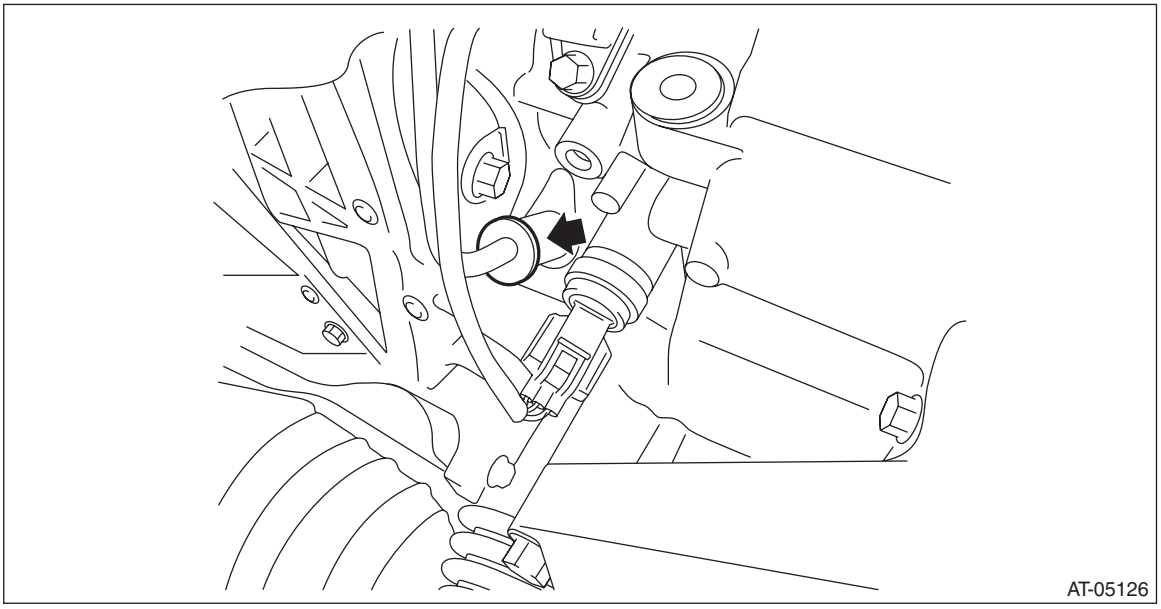

2) Lift up the vehicle.
3) Remove the overflow drain plug.

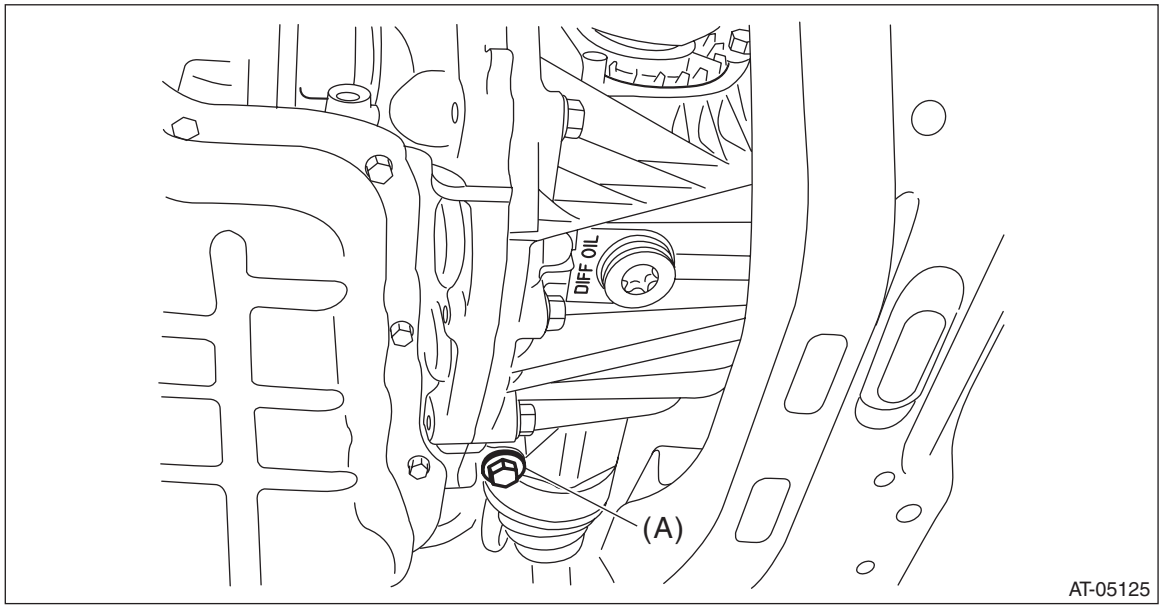

(A) Overflow drain plug

4) Fill in the differential gear oil through the charge pipe up to where the oil flows out of the overflow drain plug.

Recommended gear oil:
<Ref. to CVT-5, RECOMMENDED GEAR OIL, SPECIFICATION, General Description.>

5) When the flow of the differential gear oil turns into a narrow stream, install the overflow drain plug.

NOTE:
Use a new gasket.

Tightening torque:
35 N·m (3.6 kgf-m, 25.8 ft-lb)

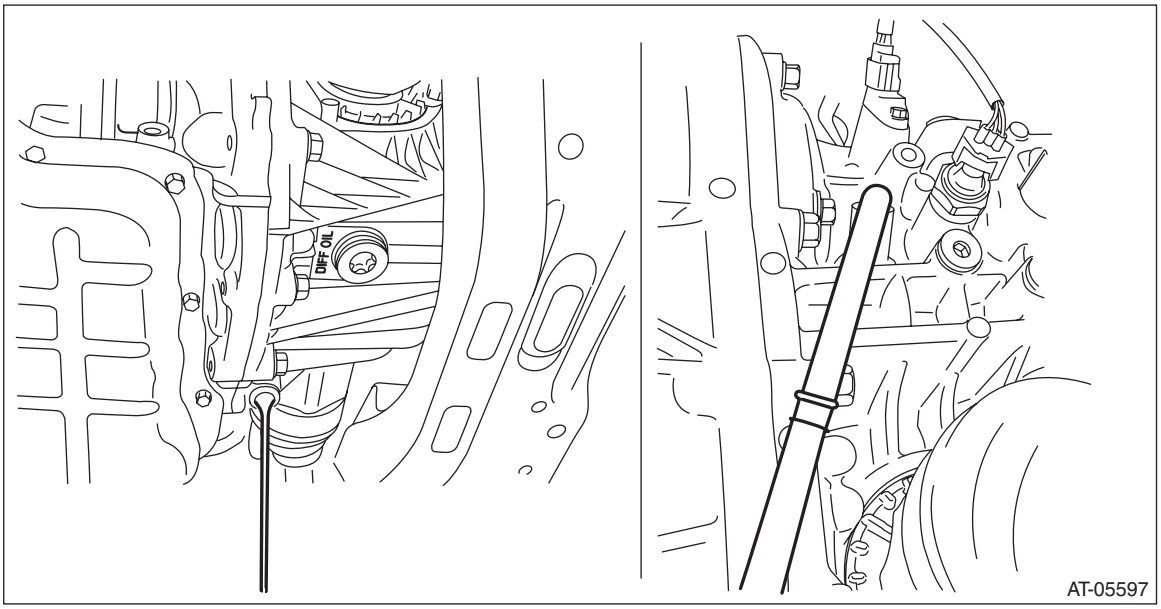

6) Install the air breather cap.

C: REPLACEMENT

CAUTION:
• Immediately after the vehicle has been running or after idling for a long time, the differential gear oil will be hot. Be careful not to burn yourself.
• Be careful not to spill differential gear oil on the exhaust pipe to prevent it from emitting smoke or causing a fire. If gear oil adheres, wipe it off completely.

1) Lift up the vehicle.
2) Remove the differential gear oil drain plug using TORX® bit T70. Drain differential gear oil.
3) Install the differential gear oil drain plug using TORX® bit T70.

NOTE:
Use a new gasket.

Tightening torque:
70 N·m (7.1 kgf-m, 51.6 ft-lb)

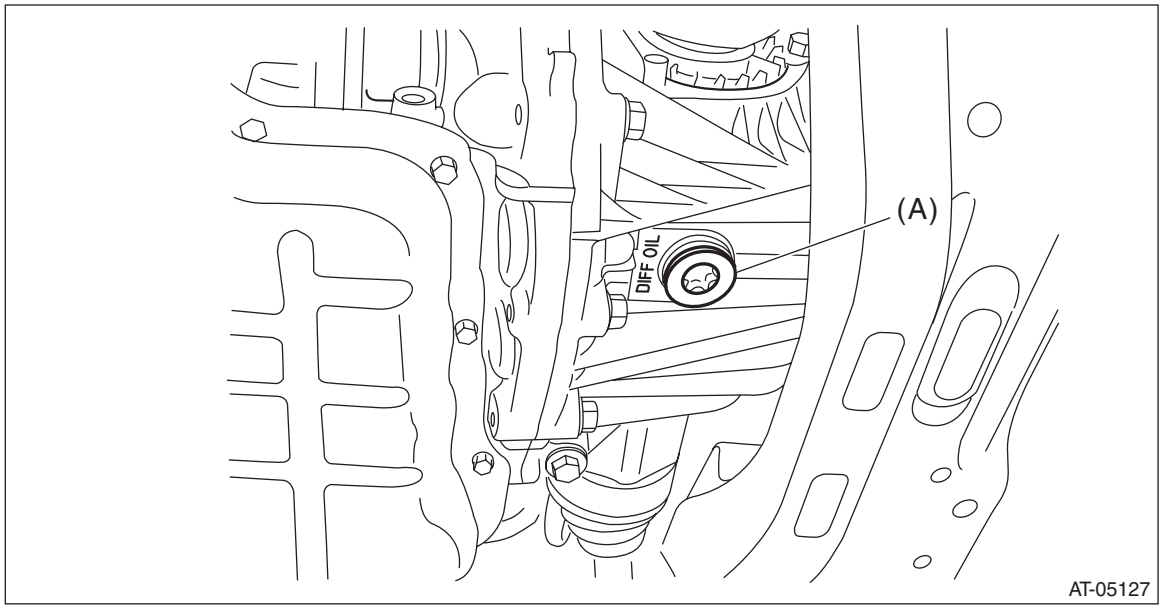

(A) Differential gear oil drain plug

4) Pour gear oil from the charge pipe.

Recommended gear oil:
<Ref. to CVT-5, RECOMMENDED GEAR OIL, SPECIFICATION, General Description.>

Gear oil capacity:
<Ref. to CVT-5, RECOMMENDED GEAR OIL, SPECIFICATION, General Description.>

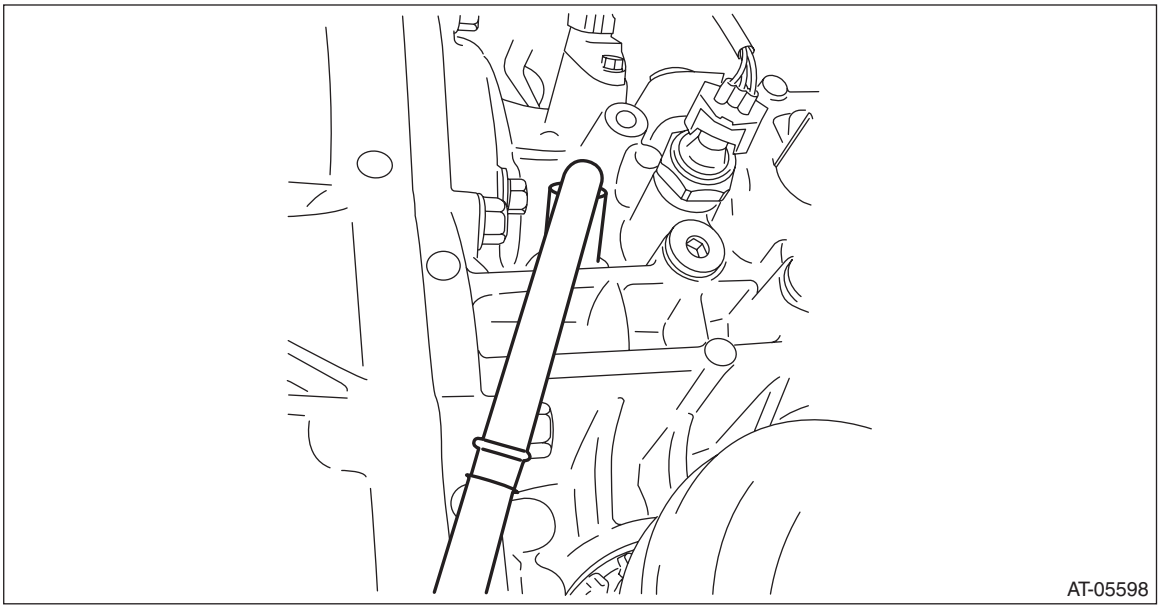

5) Adjust the level of differential gear oil. <Ref. to CVT-41, ADJUSTMENT, Differential Gear Oil.>

4. Variator Chain Break-in

A: GENERAL DESCRIPTION

Perform Variator Chain Break-in when the following work has been performed.
- Variator chain replacement
- Primary pulley and secondary pulley replacement

B: PROCEDURE

NOTE:
• During variator chain break-in, VDC warning light and EPB warning light illuminate because of the difference between the vehicle speed value and G sensor value. This is not the malfunction. If the warning light illuminates, clear the VDC and EPB memory after the variator chain break-in is finished. <Ref. to VDC(diag)-25, Clear Memory Mode.> <Ref. to PB(diag)-25, Clear Memory Mode.>
• During variator chain break-in, if the above malfunction code is detected, fail mode is entered. If this happens, symptom such as engine speed rapid increase occurs, even when the accelerator pedal is depressed gradually.

1) Lift up the vehicle.

CAUTION:
Lift up the vehicle until the tire bottom is 0.3 m (0.98 ft) or more above the ground.

2) Shift the select lever to “P” or “N” range.
3) Apply the electronic parking brake.
4) Connect the Subaru Select Monitor to data link connector.
5) Idle the engine to raise the CVTF temperature to 40 — 50°C (104 — 122°F) displayed on the Subaru Select Monitor.

NOTE:
When CVTF temperature does not rise easily or if you want to rise CVTF temperature faster, maintain the engine speed within 2,000 — 2,500 rpm at “P” or “N” range to raise the CVTF temperature.

6) With the select lever in “P” or “N” range, increase the engine speed to 3,000 — 3,500 rpm from the idling condition, and maintain the speed for approximately five seconds, then release the accelerator pedal.
7) Depress the accelerator pedal gradually again from idling condition to increase the engine speed to 3,000 — 3,500 rpm, maintain the speed for approximately five seconds, then release the accelerator pedal.
8) Release the electronic parking brake.
9) Shift the select lever into manual mode and set to 1st.
10) Depress the accelerator pedal gradually, and increase the engine speed to 5,300 rpm from engine idling condition.

NOTE:
Increase the engine speed while taking care that the engine speed does not become too high.

11) Release the accelerator pedal to fully closed position to lower the engine speed to 4,000 rpm.
12) Depress the accelerator pedal gradually again, and increase the engine speed to 5,300 rpm.
13) Repeat the step 11) and 12) for 40 times.
14) Release the accelerator pedal to return the engine speed to idling.
15) Shift the select lever to “P” range, and then turn the engine to OFF.

5. AWD ON/OFF Switching Mode

A: GENERAL DESCRIPTION

- Follow the messages displayed on the Subaru Select Monitor when working.
- Perform as necessary in FWD mode.
- When switched to FWD, AWD light illuminates.

B: PROCEDURE

CAUTION:
• Do not turn the power of the Subaru Select Monitor OFF during work, and do not disconnect the data link connector.
• On completing the work in FWD, switch back in AWD.
1) Shift the select lever to “P” range.
2) Connect the Subaru Select Monitor to data link connector.
3) Turn the ignition switch to ON. (In the case of a push button start, press the push button ignition switch twice without stepping on the brake)
4) Turn off all switches causing an electrical load, such as headlights, A/C, seat heater and rear defogger.
5) Select {AT related learning & inspecting mode} in the «Transmission Diagnosis» screen of the Subaru Select Monitor.
6) Select {AWD ON/OFF switching mode} in the «Learning and inspection mode related to AT» display screen of the Subaru Select Monitor.
7) Follow the messages displayed on the Subaru Select Monitor screen when working.
Switching completes successfully if any of the following messages is displayed.
- When switching from AWD to FWD: {Switched to FF. To return to AWD, perform basic mode again.}
- When switching from FWD to AWD: {Switched to AWD. To return to FF, perform basic mode again.}

NOTE:
- If communication error occurs during switching mode, start in the “AWD ON/OFF switching mode” again.
- If operation is interrupted before the successful end message is displayed, perform the {AWD ON/OFF switching mode} from the beginning until confirming the operation is successfully ended. If this mode fails to complete successfully, the cause is as follows.
  - Select lever is not in “P” range.
  - Engine is running.
- For details concerning the operation procedure, refer to “PC application help for Subaru Select Monitor”.

6. Road Test

A: INSPECTION

1. GENERAL PRECAUTION

Road tests should be conducted to properly diagnose the condition of CVT.

CAUTION:
Always observe the local traffic laws when performing the test.

2. D RANGE SHIFT FUNCTION

Make sure the engine speed is 1,100 — 1,300 rpm while driving on the level road at 50 km/h (31 MPH) after accelerating from halting to 1/4 of accelerator opening angle. Then stop the vehicle. Check normal gear change has occurred while the vehicle speed changes from a constant speed to zero.

3. KICK-DOWN FUNCTION

Check if engine speed will rise by operating the accelerator opening angle to the full from a constant speed of 50 km/h (31 MPH) or more.

4. ENGINE BRAKE OPERATION

- Drive in “6th speed of manual mode” [70 — 80 km/h (43 — 50 MPH)], and shift down from 6th to 5th. Check if the indicator of combination meter switches “6” → “5”. At the same time, check the engine brake in 5th gear.
- Drive in “5th speed of manual mode” [60 — 70 km/h (37 — 43 MPH)], and shift down from 5th to 4th. Check if the indicator of combination meter switches “5” → “4”. At the same time, check the engine brake in 4th gear.
- Drive in “4th speed of manual mode” [50 — 60 km/h (31 — 37 MPH)], and shift down from 4th to 3rd. Check if the indicator of combination meter switches “4” → “3”. At the same time, check the engine brake in 3rd gear.
- Drive in “3rd speed of manual mode” [40 — 50 km/h (25 — 31 MPH)], and shift down from 3rd to 2nd. Check if the indicator of combination meter switches “3” → “2”. At the same time, check the engine brake in 2nd gear.
- Drive in “2nd speed of manual mode” [20 — 30 km/h (12 — 19 MPH)], and shift down from 2nd to 1st. Check if the indicator of combination meter switches “2” → “1”. At the same time, check the engine brake in 1st gear.

5. LOCK-UP FUNCTION

When the accelerator is lightly depressed while driving on a flat road in “D” range, check that rpm does not change abruptly.

6. P RANGE OPERATION

Stop the vehicle on an uphill grade of 5% or more and shift to the “P” range and apply the parking brake. Check that the vehicle does not move when the parking brake is released.

7. NOISE AND VIBRATION

Check for noise and vibration during a constant driving, accelerating, decelerating and manual shift operation.

8. OIL LEAKAGE

After the driving test, inspect for leakage of CVTF and differential gear oil from the transmission body.

7. Stall Test

A: INSPECTION

CAUTION:
Make sure no other person is around the vehicle during stall test measurement.

NOTE:
Stall test is extremely important in diagnosing the condition of CVT and engine. The test is necessary to measure the engine stall speeds in “R” and “D” range.
Purposes of the stall test:
- Operational check of forward clutch and reverse brake
- Operational check of the torque converter assembly
- Engine performance check

1) Place wheel chocks at the front and rear of all wheels and engage the electronic parking brake.
2) Turn the A/C OFF.
3) Using the Subaru Select Monitor, check if the throttle valve operates when you depress the accelerator pedal. <Ref. to EN(H4SO)(diag)-33, READ CURRENT DATA FOR ENGINE (NORMAL MODE), OPERATION, Subaru Select Monitor.>
4) Check the engine oil level.
5) Check the coolant level.
6) Adjust the CVTF level. <Ref. to CVT-37, ADJUSTMENT, CVTF.>
7) Increase the CVT temperature to 60 to 80°C (140 to 176°F) by idling the engine (with select lever set to “N” or “P” range).
8) Shift the select lever to “D” range.
9) Depress the accelerator pedal to the full while fully depressing the foot brake pedal with your left foot.
10) When the engine speed stabilizes, quickly record the engine speed and release accelerator pedal. Shift the select lever to “N” range. Let the engine idle for one minute or more to cool it down.
11) Shift to “R” range and perform the same stall test.

NOTE:
- Do not perform a stall test for over 5 seconds at a time. (from closed throttle, fully open throttle to stall speed reading.) Failure to follow this instruction will cause the engine oil and CVTF to deteriorate and the clutch and brake to be adversely affected.
- Be sure to cool down the engine for at least one minute after each stall test with the select lever set in the “P” or “N” range and with the idle speed of 1,200 rpm or less.
- If the stall speed is higher than the specified range, attempt to finish the stall test in as short a time as possible, in order to prevent the CVT from sustaining damage.

Stall speed standard:
2,400 — 3,100 rpm

Stall test judgment

Range	Range	Probable cause
Lower than standard value	D, R	• Throttle valve is not fully open. • Insufficient engine output • Torque converter malfunction
Higher than standard value	D	• Forward clutch slippage • Secondary pressure (line pressure) is low. • Variator chain malfunction • Input clutch slippage
	R	• Reverse brake slippage • Secondary pressure (line pressure) is low. • Variator chain malfunction • Input clutch slippage
	D, R	• Torque converter malfunction • Control valve body malfunction • TCM malfunction • Damaged harness and harness connector

8. Time Lag Test

A: INSPECTION

NOTE:
When the select lever is shifted while the engine is idling, there will be a certain time elapse or lag before shock is felt. This symptom helps to check the condition of forward clutch and reverse brake.

- Perform the test at normal operation CVTF temperature of 60 — 80°C (140 — 176°F).
- Be sure to allow one minute or more interval between tests.
- Make three measurements and take the average value.

1) Apply the electronic parking brake.
2) Start the engine. Check the idle speed. (A/C OFF)
3) Shift the select lever from “N” to “D” range. Using a stop watch, measure the time elapsed from shifting the lever until the shock is felt.

Time lag standard:
1.2 seconds or less

If “N” → “D” time lag is longer than specified:

- Secondary pressure (line pressure) is too low.
- Forward clutch worn
- Piston malfunction
- Control valve body malfunction
- Learning incomplete

4) In the same manner, measure the time lag when shifting from “N” range to “R” range.

Time lag standard:
1.5 seconds or less

If “N” → “R” time lag is longer than specified:

- Secondary pressure (line pressure) is too low.
- Reverse brake worn
- Piston malfunction
- Control valve body malfunction
- Learning incomplete

9. Secondary Pressure (Line Pressure) Test

A: INSPECTION

CAUTION:
Make sure no other person is around the vehicle during secondary pressure (line pressure) test measurement.

NOTE:
• If the pulley and variator chain, clutch or brake show signs of slipping or shift feel is not correct, check the secondary pressure (line pressure).
• Connect Subaru Select Monitor to vehicle so as to measure the engine speed and actual secondary pressure (secondary pressure (line pressure)).
• In many cases, slippage or inability to operate the vehicle may be due to insufficient oil pressure for the operation of clutch, brake or control valve.

1) Remove the front wheel RH. <Ref. to WT-4, REMOVAL, Tire and Wheel.>
2) Lift up the vehicle.
3) Remove the test plug for secondary pressure (line pressure).

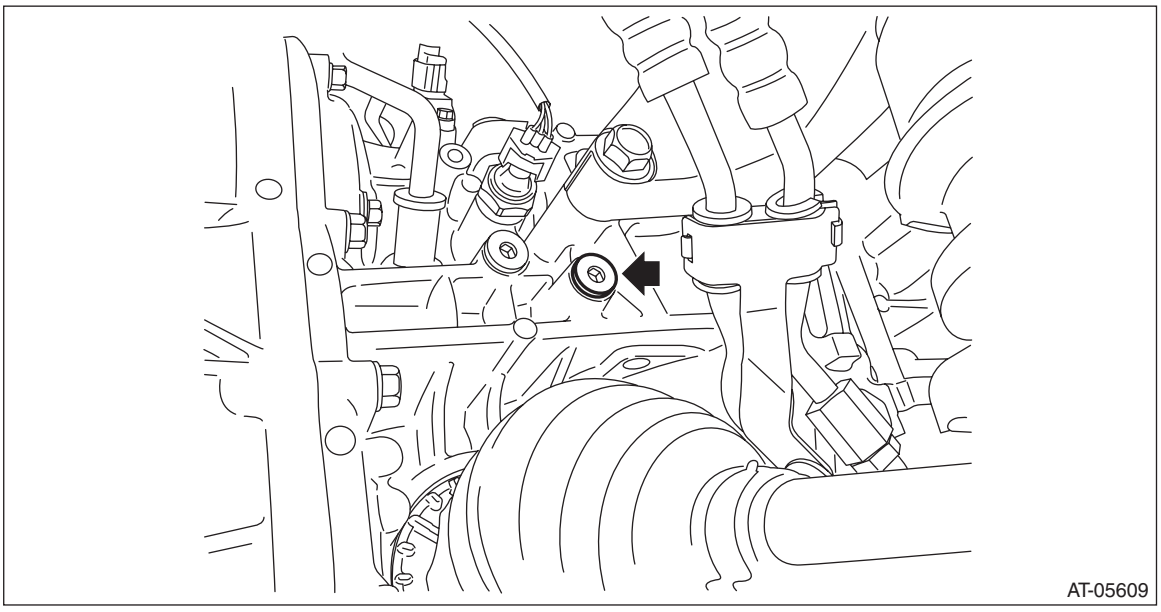

4) Attach ST1, ST2 and ST3 to transmission.

ST1	18801AA000	OIL PRESSURE GAUGE ASSY
ST2	18681AA000	PRESSURE GAUGE ADAPTER
ST3	498897700	OIL PRESSURE ADAPTER SET

NOTE:
Used together with genuine O-ring (part No. 806911080) attached to ST2 PRESSURE GAUGE ADAPTER.

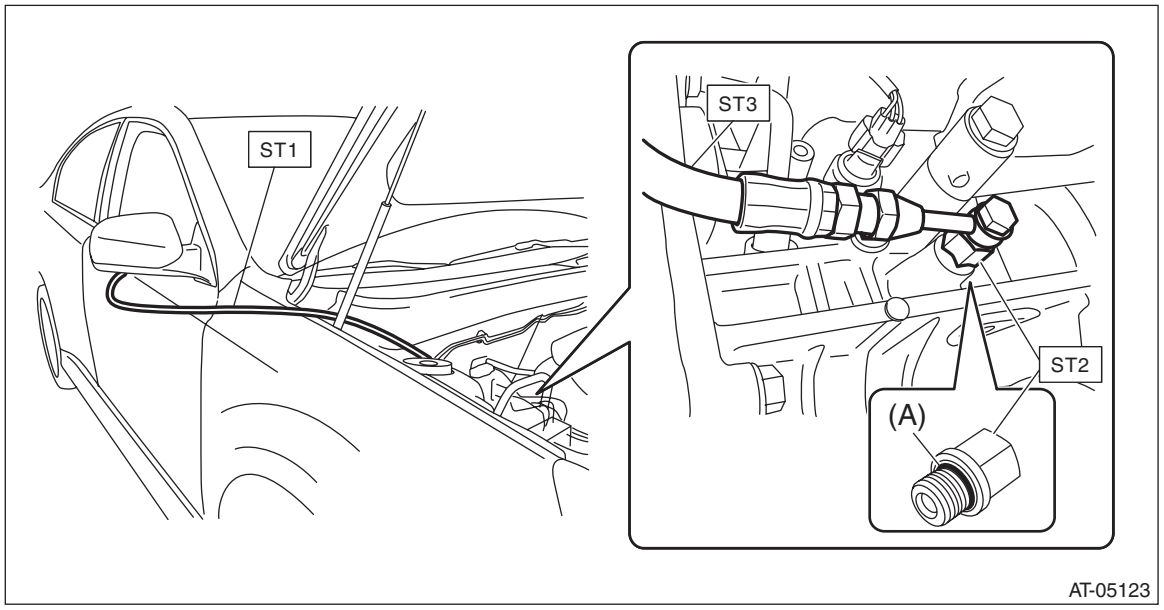

(A) O-ring (genuine part)

5) Set the gauge so that it can be seen from the driver's seat.
6) Install the front wheel RH. <Ref. to WT-4, INSTALLATION, Tire and Wheel.>
7) Using the Subaru Select Monitor, check if the throttle valve operates when you depress the accelerator pedal. <Ref. to EN(H4SO)(diag)-33, READ CURRENT DATA FOR ENGINE (NORMAL MODE), OPERATION, Subaru Select Monitor.>
8) Check the engine oil level. <Ref. to LU(H4SO)-13, Engine Oil.>
9) Check the coolant level. <Ref. to CO(H4SO)-14, Engine Coolant.>
10) Adjust the CVTF level. <Ref. to CVT-37, ADJUSTMENT, CVTF.>
11) Increase the CVTF temperature to 60 — 80°C (140 — 176°F) by idling the engine with the select lever shifted to "N" or "P" range.
12) Shift the select lever to "D" range.
13) Depress the accelerator pedal to the full while fully depressing the foot brake pedal with your left foot.
14) Immediately after the engine speed becomes steady, record the reading of the secondary pressure (line pressure), engine speed and actual secondary pressure on Subaru Select Monitor. And then release the accelerator pedal. Shift the select lever to "N" range. Let the engine idle for one minute or more to cool it down.

NOTE:
• Do not continue the stall test for 5 seconds or more at a time (from fully closed throttle, fully open throttle to secondary pressure (line pressure) reading). Failure to follow this instruction will cause the engine oil and CVTF to deteriorate and the clutch and brake to be adversely affected.
• After performing the secondary pressure (line pressure) test, be sure to cool down the engine for at least one minute with the select lever set in "P" or "N" range and with the idle speed at 1,200 rpm or less.
• Under each condition, check that the measured pressure matches almost totally with actual secondary pressure.
• When both measured pressure and actual secondary pressure are out of specification, judge as control valve malfunction.
• The value at stall is for reference because the pressure changes under different conditions or circumstances.

- The value at idling is steady because it is not affected by any condition or circumstance.

Secondary pressure (line pressure) standard				
	Range	Throttle	Brake	Secondary pressure (line pressure) (MPa (kgf/cm^2, psi))
Stall	D, R	Full open	ON	4.5 — 6 (45.9 — 61.2, 652 — 870)
Idling	P, N	Full closed	OFF	0.5 — 1.5 (5.1 — 15.3, 72 — 218)

15) Remove the ST and install the plug after measurement.

NOTE:
Use new O-rings.

Tightening torque:
25 N·m (2.5 kgf-m, 18.4 ft-lb)

10.Transfer Clutch Pressure Test

A: INSPECTION

1) Lift up the vehicle.
2) Remove the test plug.

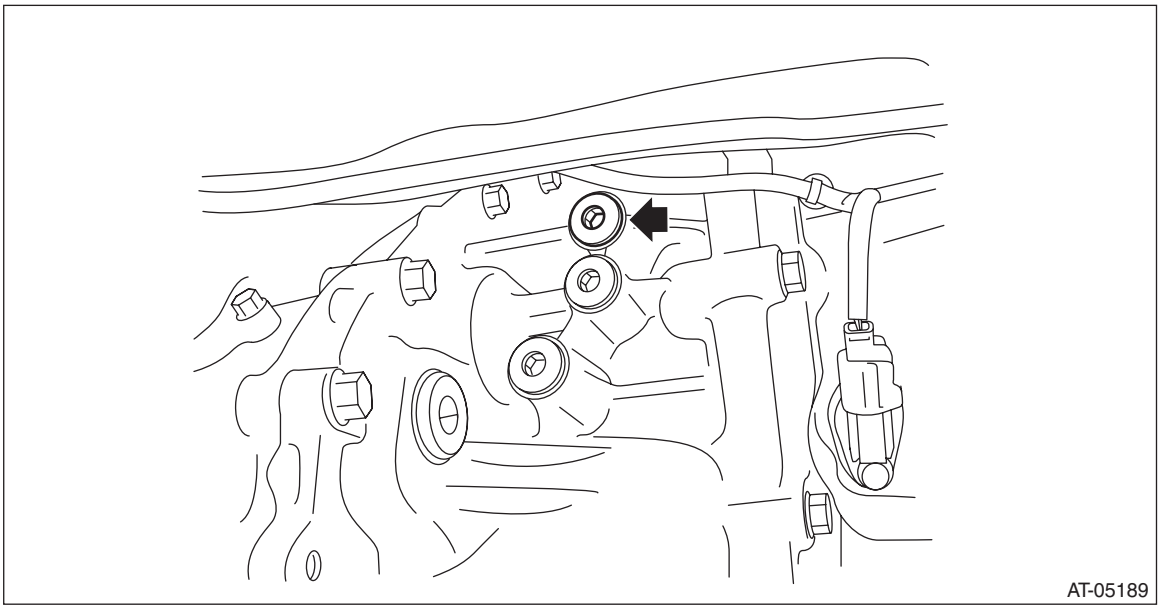

3) Set the ST1, ST2 and ST3 to transmission.

ST1	498575400	OIL PRESSURE GAUGE ASSY
ST2	498897700	OIL PRESSURE ADAPTER SET
ST3	18681AA000	PRESSURE GAUGE ADAPTER

NOTE:
Used together with genuine O-ring (part No. 806911080) attached to ST3 PRESSURE GAUGE ADAPTER.

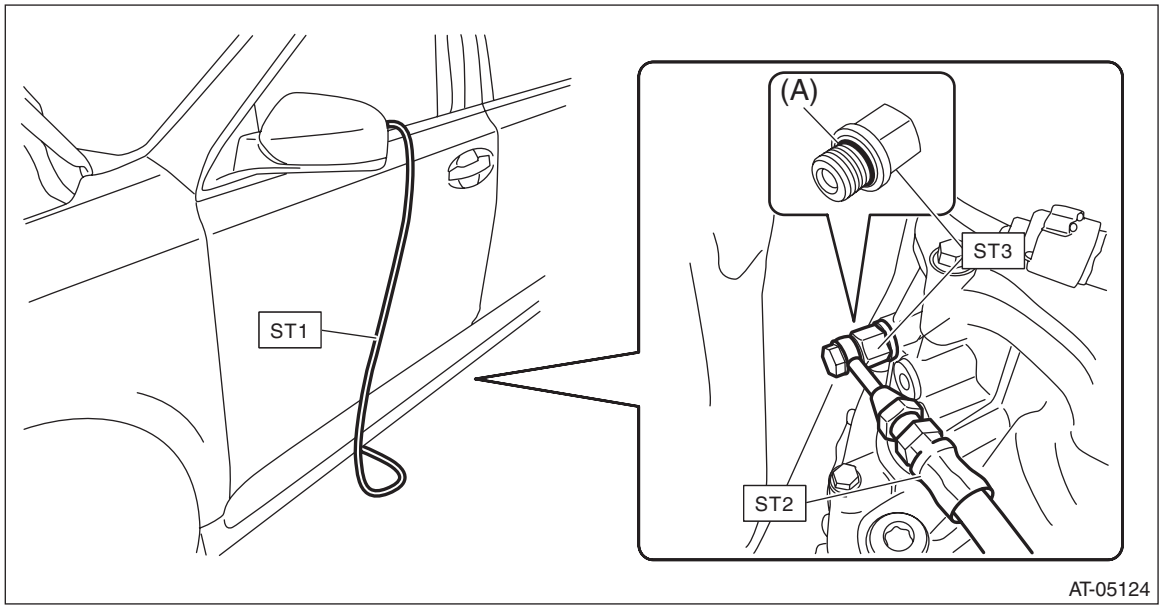

(A) O-ring (genuine part)

4) Lower the vehicle.
5) Connect the Subaru Select Monitor to the data link connector and read the current data.

6) Check the transfer clutch pressure as in secondary pressure (line pressure) test. <Ref. to CVT-50, Secondary Pressure (Line Pressure) Test.>

NOTE:
- Use Subaru Select Monitor for switching to FWD mode. <Ref. to CVT-45, AWD ON/OFF Switching Mode.>
- If no oil pressure is produced, if it does not change in AWD mode or if oil pressure is produced in FWD mode, there may be a problem in the control valve body.

Range position	ON Duty ratio (%)	Accelerator pedal opening angle (%)	Standard transfer clutch pressure kPa (kgf/cm^2, psi)	
			AWD mode	FWD mode
Manual mode (2nd)	95 — 100	Fully opened (100)	1,000 — 1,200 (10.2 — 12.2, 145 — 174)	—
	60	Adjust ON Duty ratio to 60%.	400 — 700 (4.1 — 7.1, 58 — 102)	—
	0	Fully closed (0)	—	0 (0, 0)
N or P	0	Fully closed (0)	0	—

7) Remove the ST and install the plug after measurement.

NOTE:
Use new O-rings.

Tightening torque:
25 N·m (2.5 kgf-m, 18.4 ft-lb)

11.Automatic Transmission Assembly

A: REMOVAL

1) Remove the front wheels.
2) Disconnect the ground cable from battery.
3) Remove the air intake duct. <Ref. to IN(H4SO)-9, REMOVAL, Air Intake Duct.>
4) Remove the air intake boot assembly. <Ref. to IN(H4SO)-8, REMOVAL, Air Intake Boot.>
5) Remove the ten clips and remove the grille bracket.

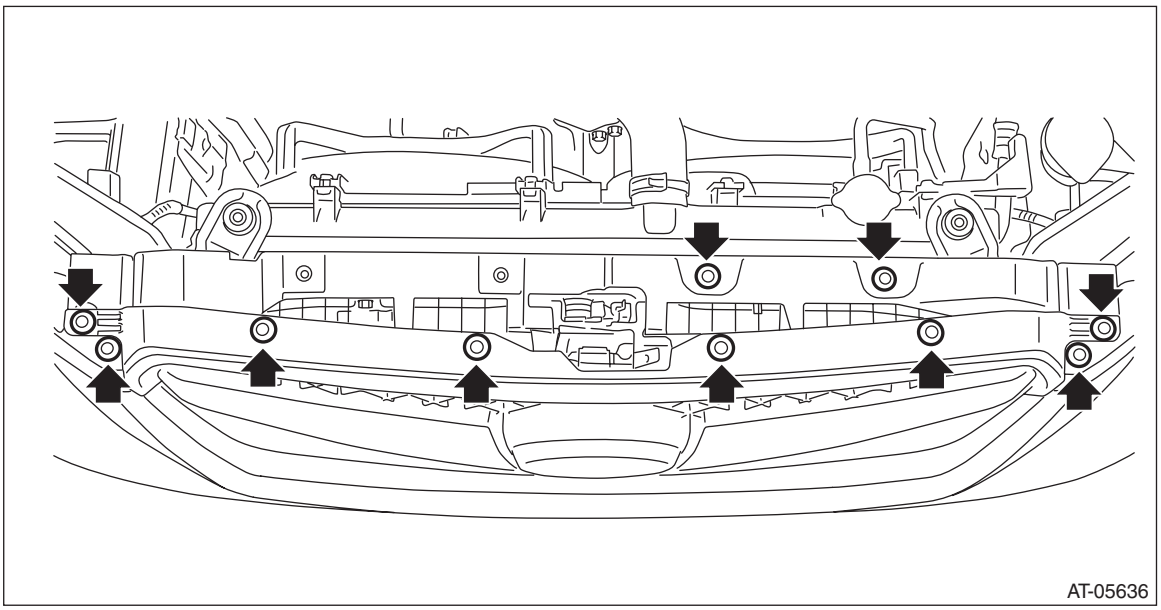

6) Disconnect the following connectors.
- Transmission harness connectors
- Transmission radio ground terminal
- Inhibitor harness connector

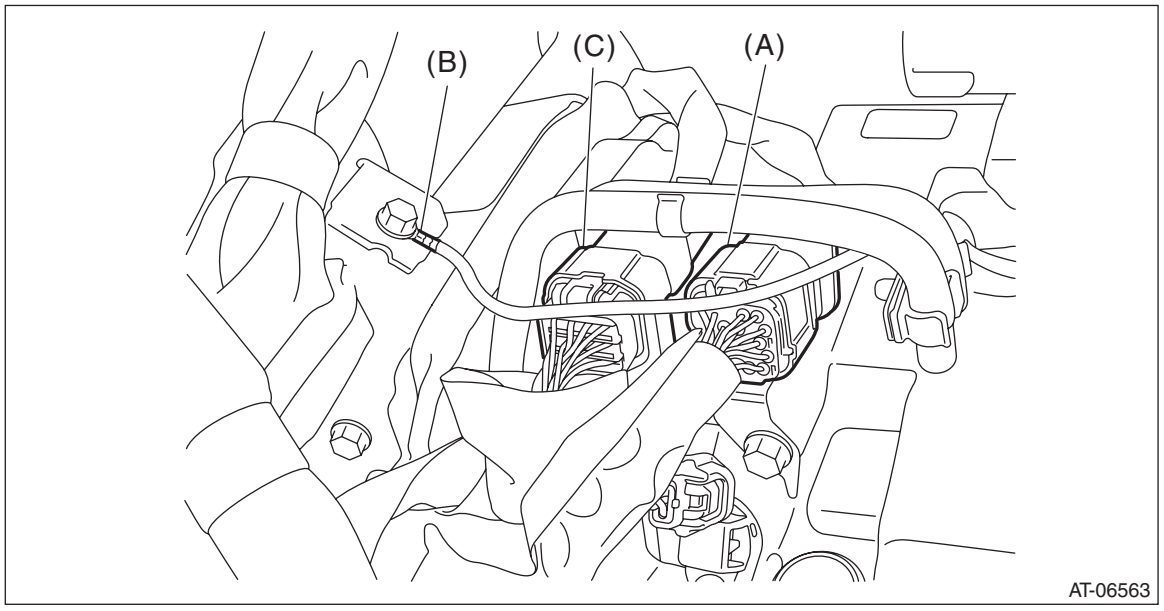

(A) Transmission harness connectors
(B) Transmission radio ground terminal
(C) Inhibitor harness connector

7) Separate the battery cable clip to remove the bracket.

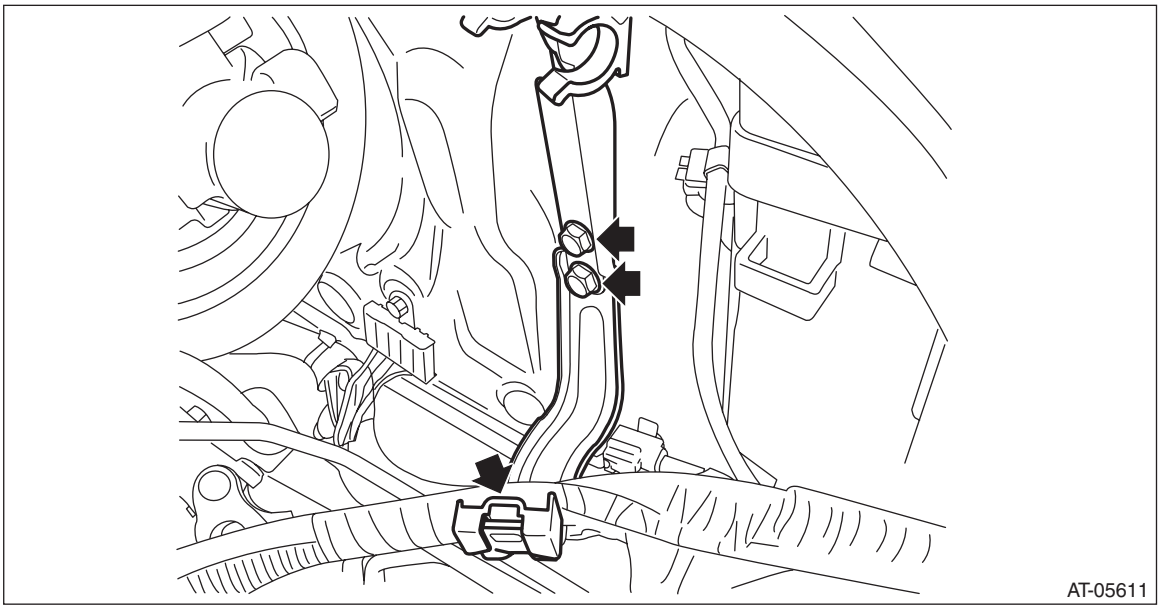

8) Remove the starter. <Ref. to SC(H4SO)-9, REMOVAL, Starter.>
9) Remove the throttle body. <Ref. to FU(H4SO)-15, REMOVAL, Throttle Body.>
10) Remove the manifold absolute pressure sensor. <Ref. to FU(H4SO)-33, REMOVAL, Manifold Absolute Pressure Sensor.>
11) Remove the bolt and disconnect the engine harness connector.

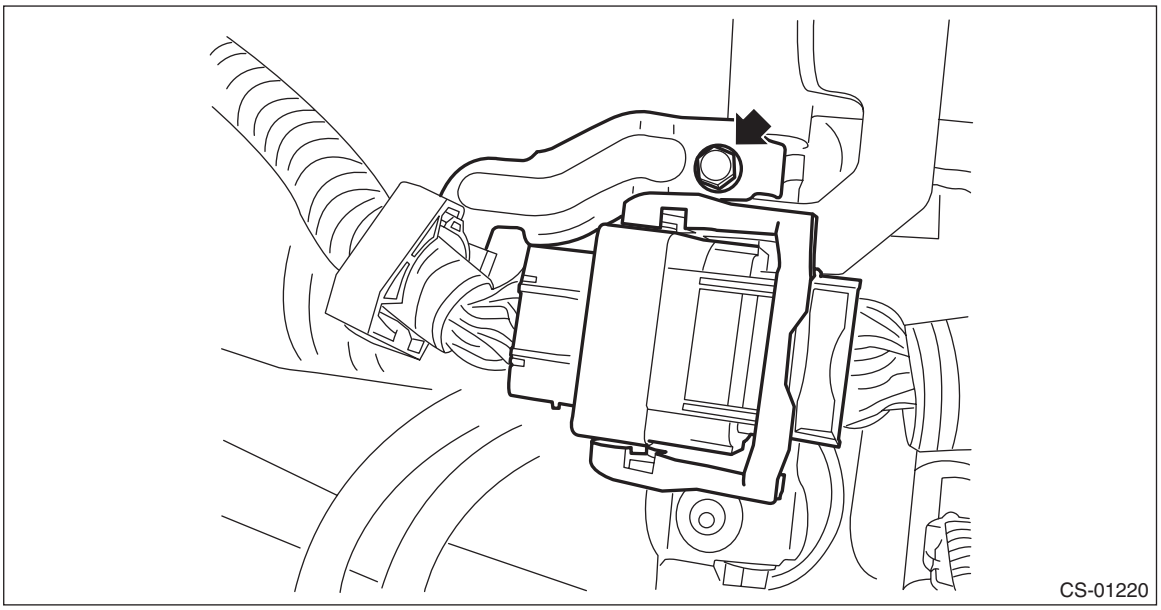

12) Remove the engine harness connector from the engine hanger rear.

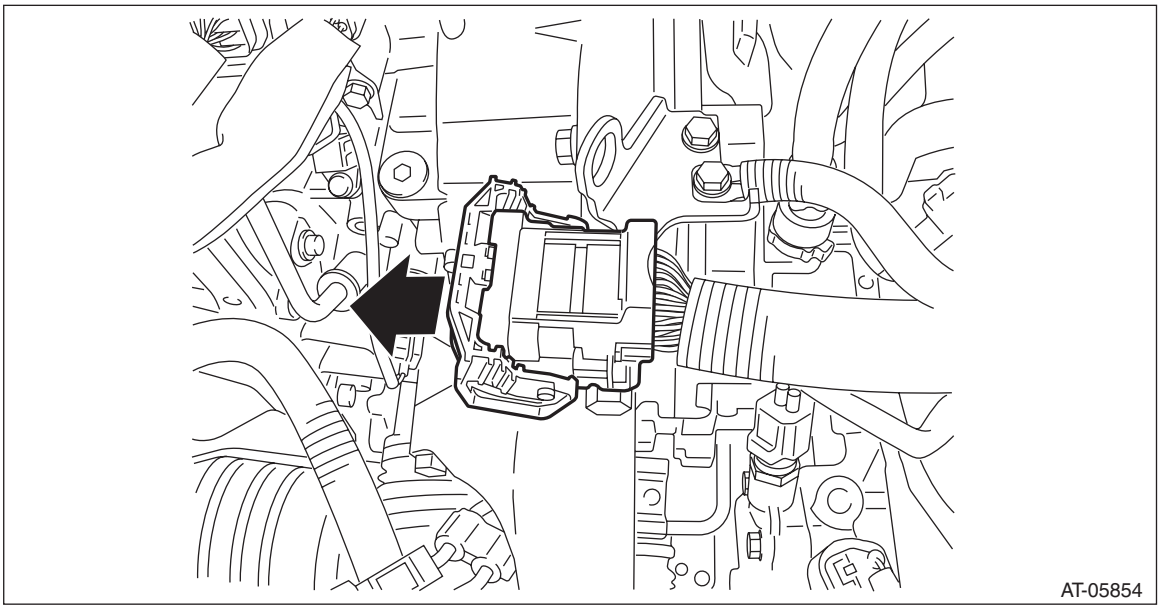

13) Remove the engine hanger rear.

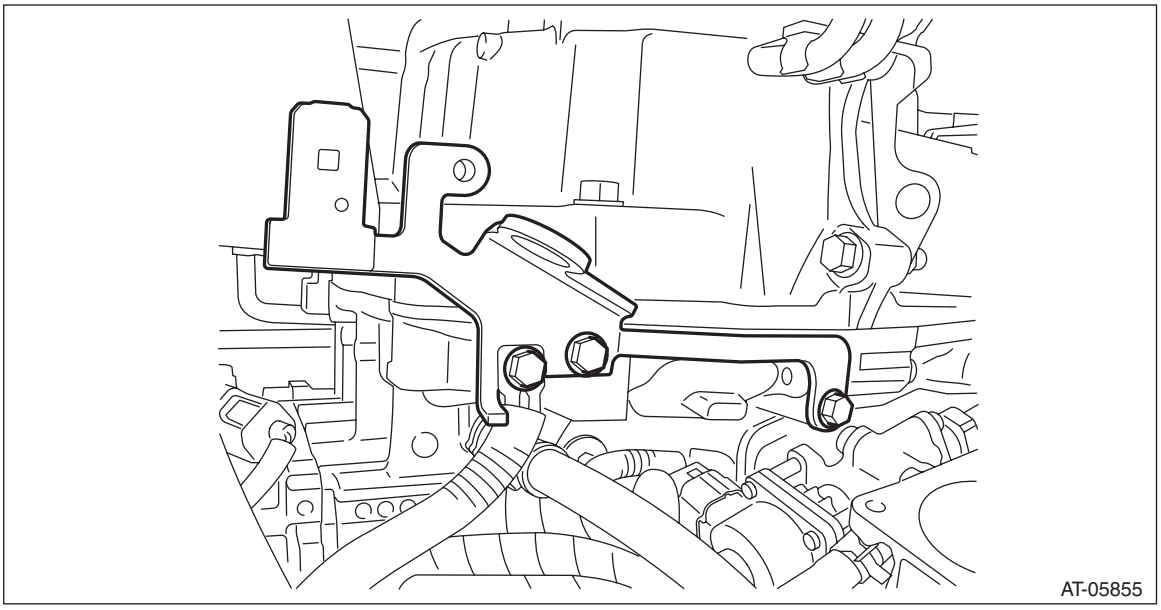

14) Remove the service hole plug.

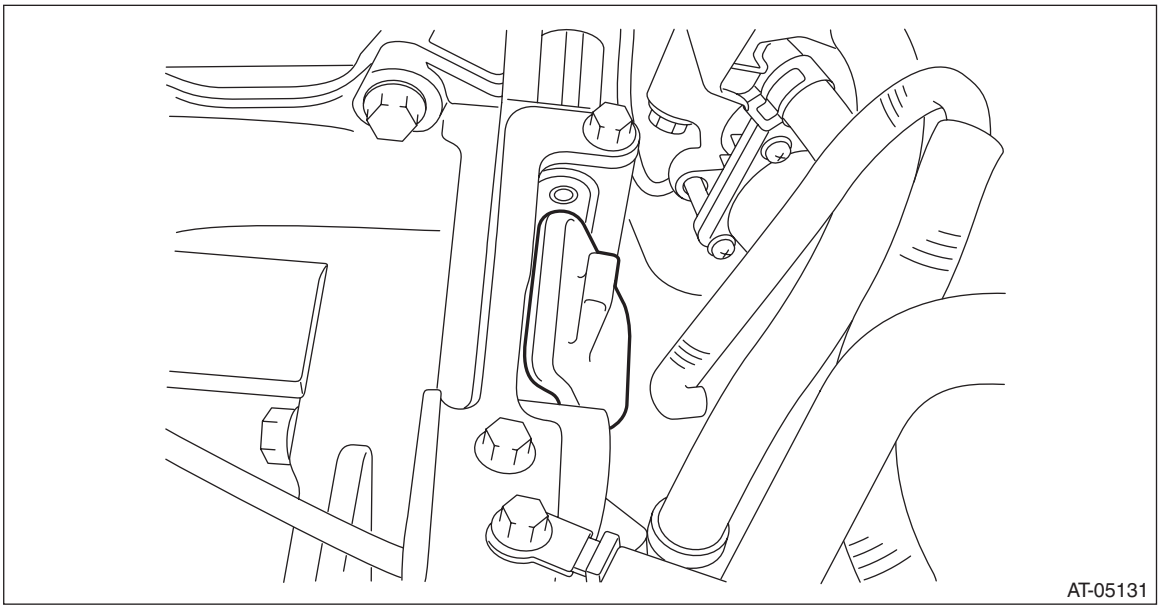

15) Install the engine hanger rear for turbo model.
Part No. 10004AA180 Engine hanger rear

Tightening torque:
16 N·m (1.6 kgf-m, 11.8 ft-lb)

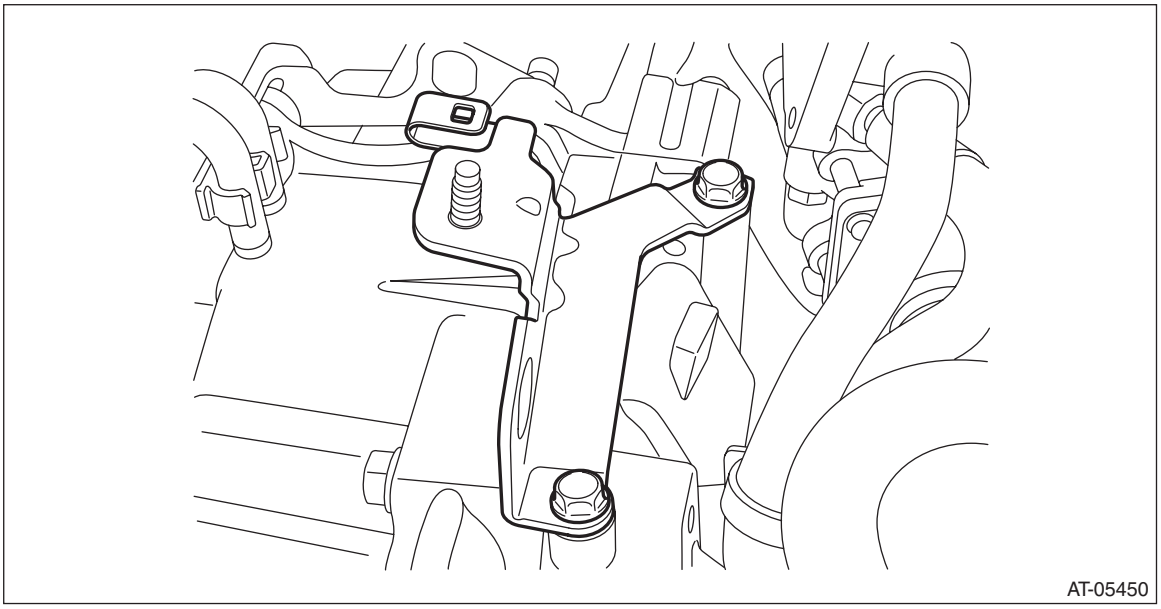

16) Remove the four bolts combining the torque converter and drive plate while rotating the crank pulley a little at a time in the same direction as engine revolution.

CAUTION:
- **Be careful not to drop bolts into converter housing.**
- **Be careful not to damage the mounting bolts.**

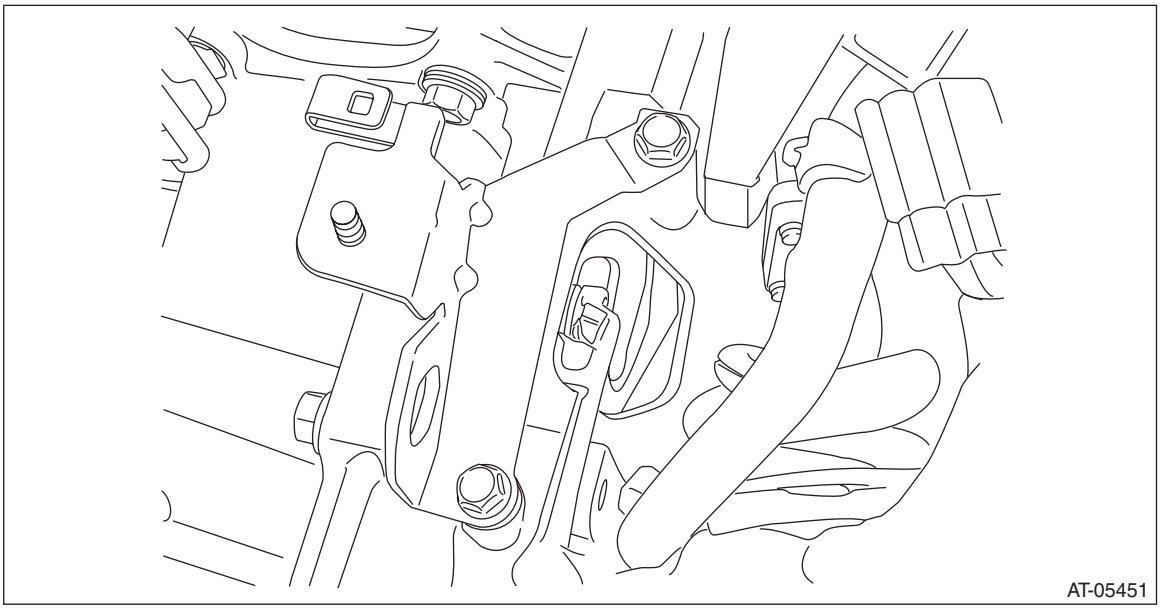

17) Make sure the torque converter moves freely by rotating with finger through the starter installation hole.
18) Attach the ST to the converter case.
ST 498277200 STOPPER SET

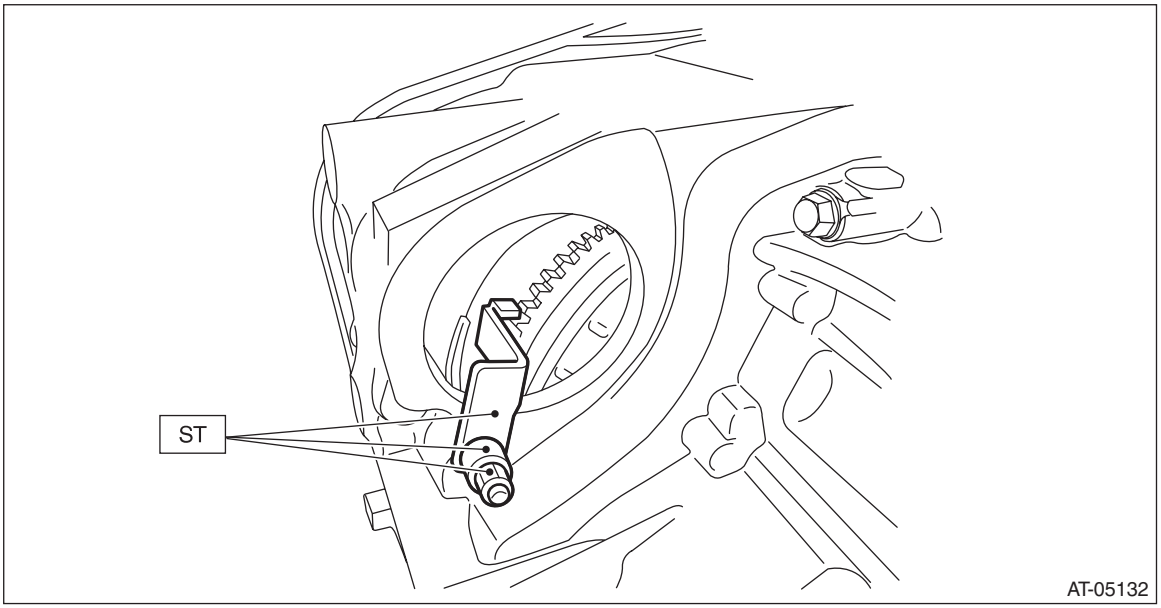

19) After pulling off the cotter pin and removing the castle nut, use a puller to remove the tie-rod end from the knuckle arm.

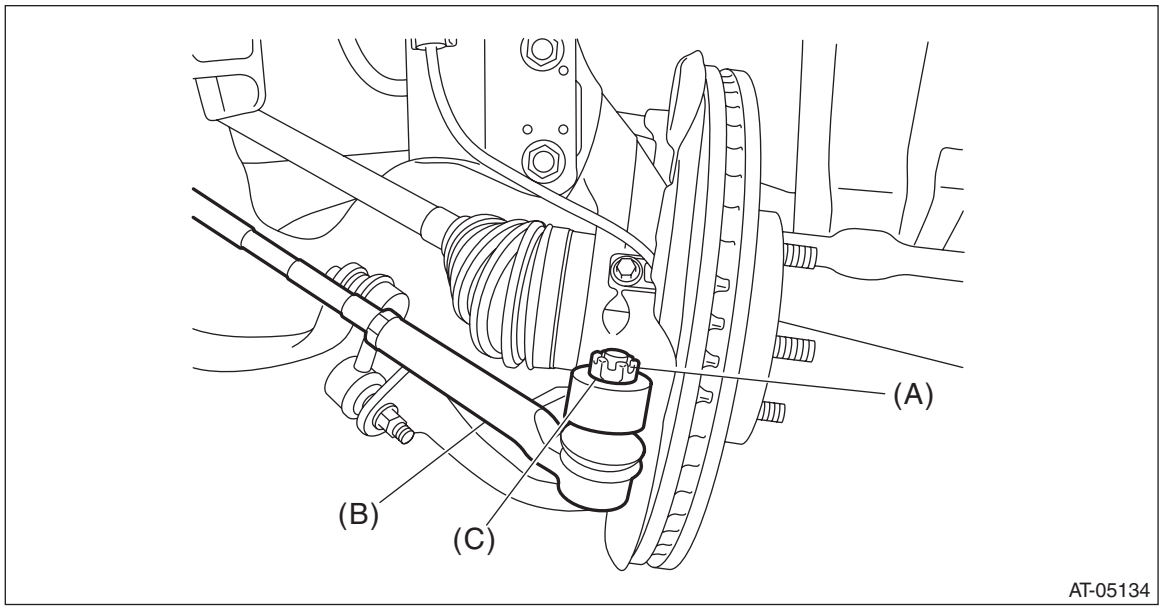

(A) Cotter pin
(B) Tie-rod end
(C) Castle nut

20) Lift up the vehicle.
21) Remove the under cover.
22) Remove the center exhaust pipe. <Ref. to EX(H4SO)-8, REMOVAL, Center Exhaust Pipe.>
23) Remove the CVTF drain plug to drain CVTF. <Ref. to CVT-38, REPLACEMENT, CVTF.>
24) Remove the heat shield cover.

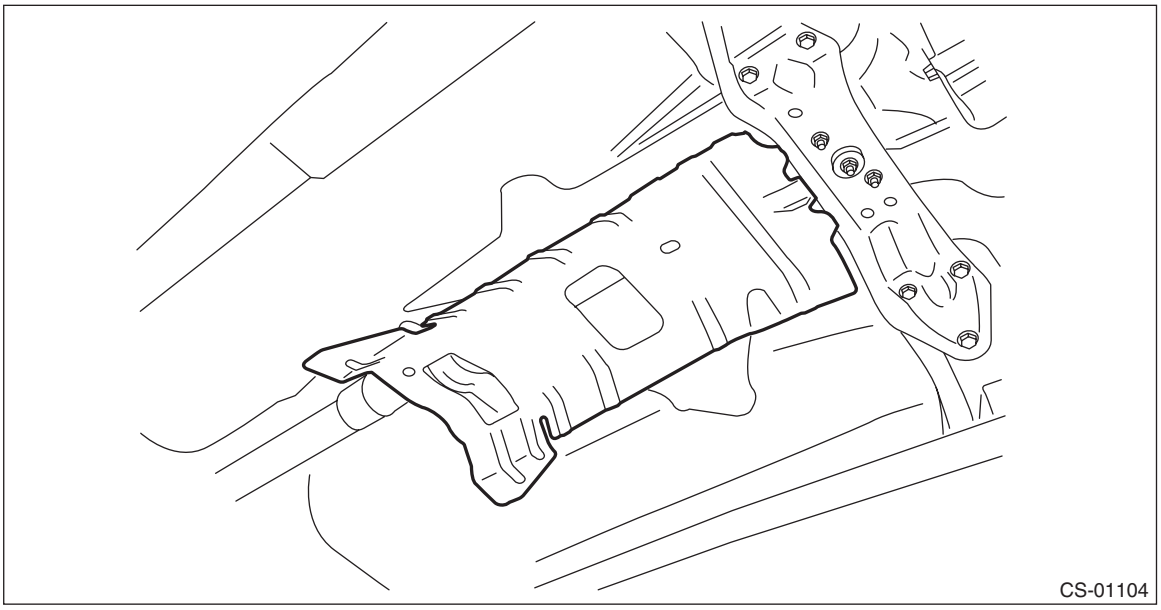

25) Remove the snap pin and washer from shifter arm and remove the select cable from shifter arm.

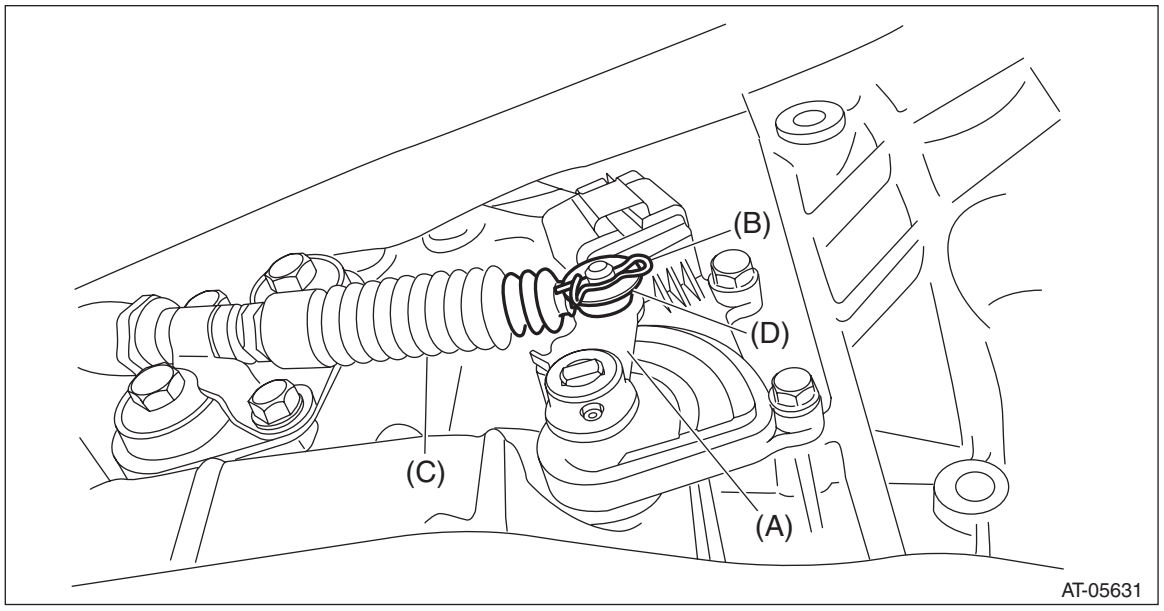

(A) Shifter arm
(B) Snap pin
(C) Select cable
(D) Washer

26) Remove the plate assembly from the transmission case.

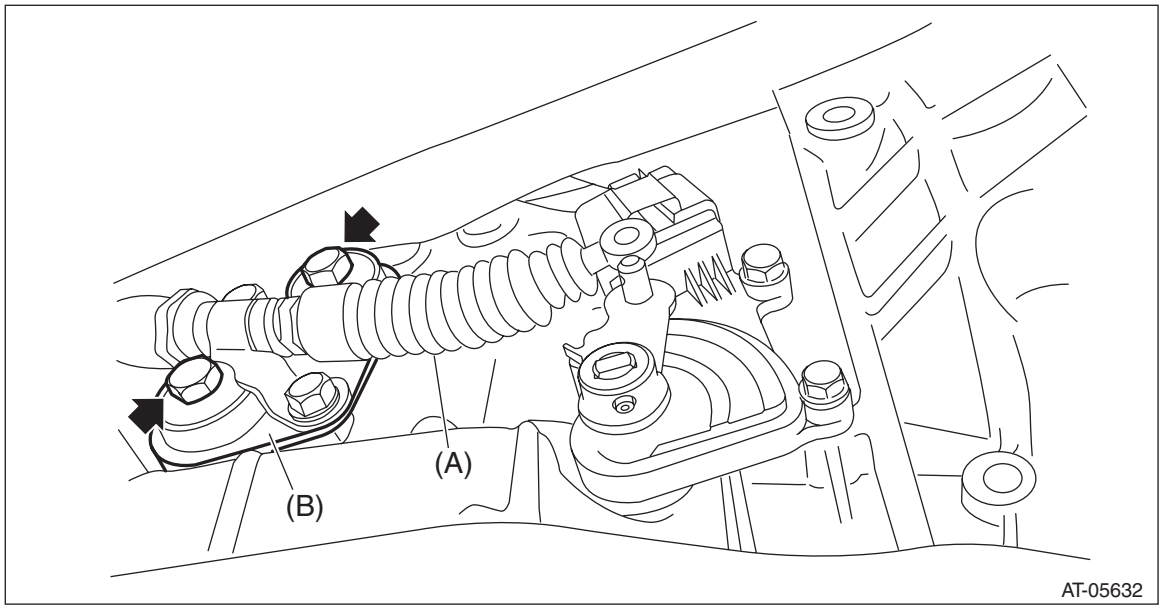

(A) Select cable
(B) Plate ASSY

27) Drain differential gear oil. <Ref. to CVT-42, REPLACEMENT, Differential Gear Oil.>

28) Remove the CVTF CVT inlet hose and CVTF CVT outlet hose.

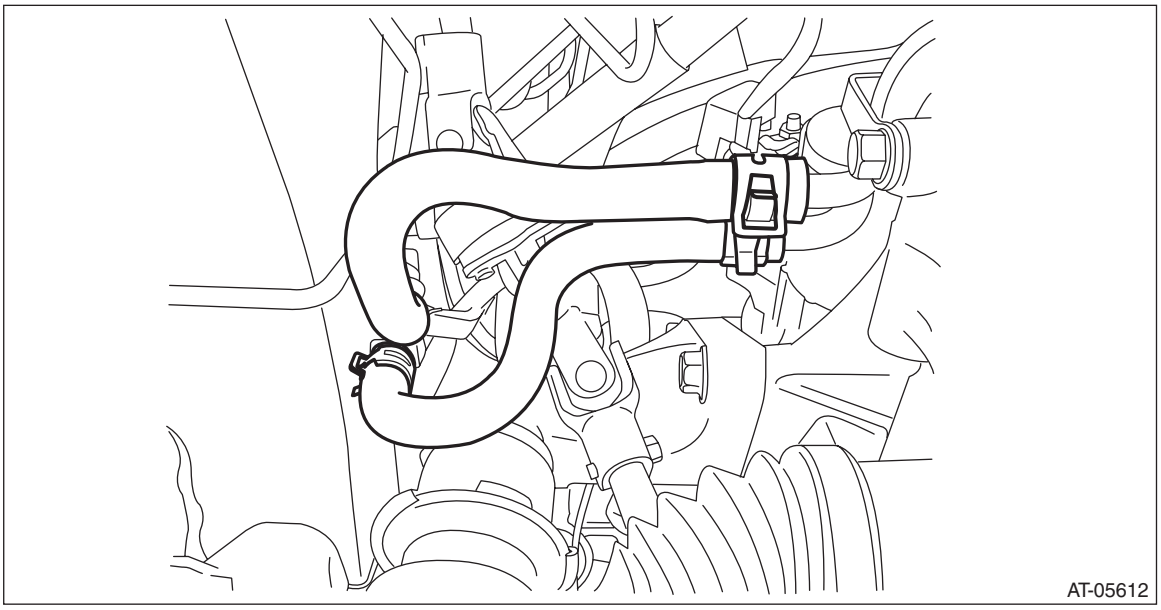

29) Remove the universal joint. <Ref. to PS-21, REMOVAL, Universal Joint.>
30) Remove the propeller shaft. <Ref. to DS-10, REMOVAL, Propeller Shaft.>
31) Remove the stabilizer link.
32) Disconnect the lower arm ball joint and housing.
33) Pull out the front drive shaft from transmission using a crowbar.
34) Holding the joint of front drive shaft from transmission side, pull out the drive shaft from transmission with care not to stretch the boot.
35) Lower the vehicle.
36) Remove the nuts from left and right transmission mounting brackets.

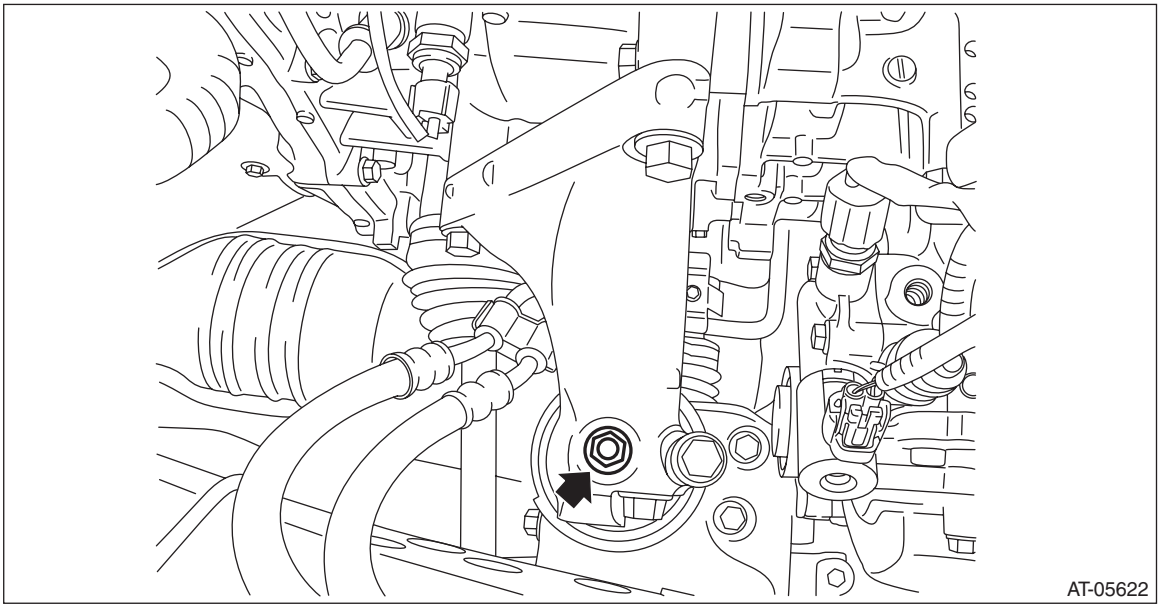

37) Set the ST1 and ST2 to vehicle.
ST1 99099AJ000 ENGINE HANGER
ST2 99099AJ010 CHAIN BALANCER

CAUTION:
- **Set so that the chain sling does not contact the engine parts.**
- **Set the arms of ST (ENGINE HANGER) at the locations shown in the figure.**

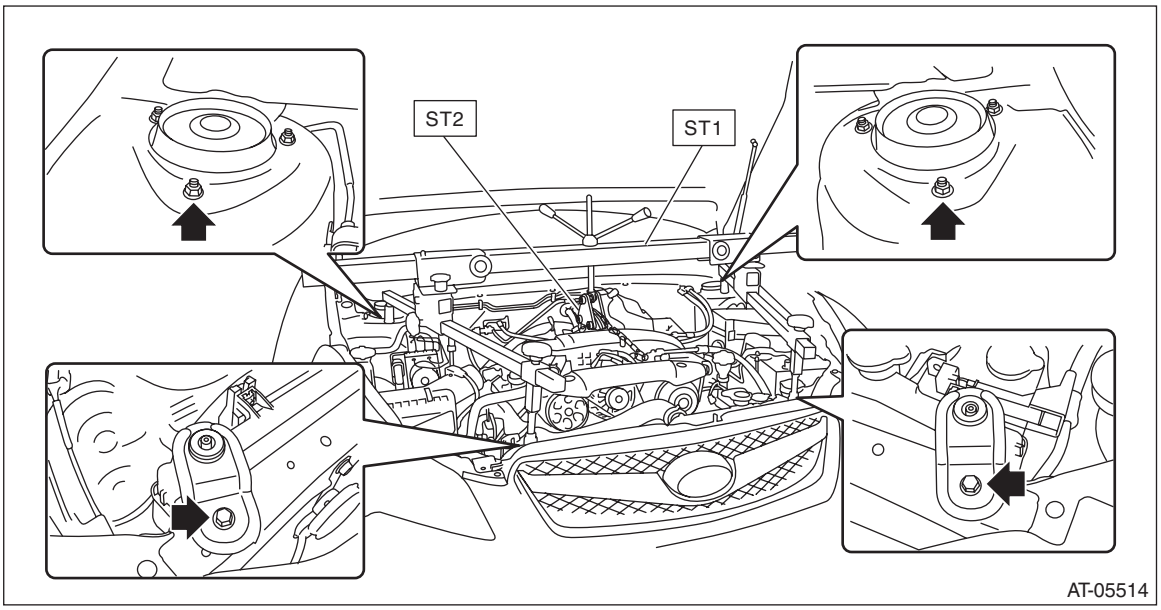

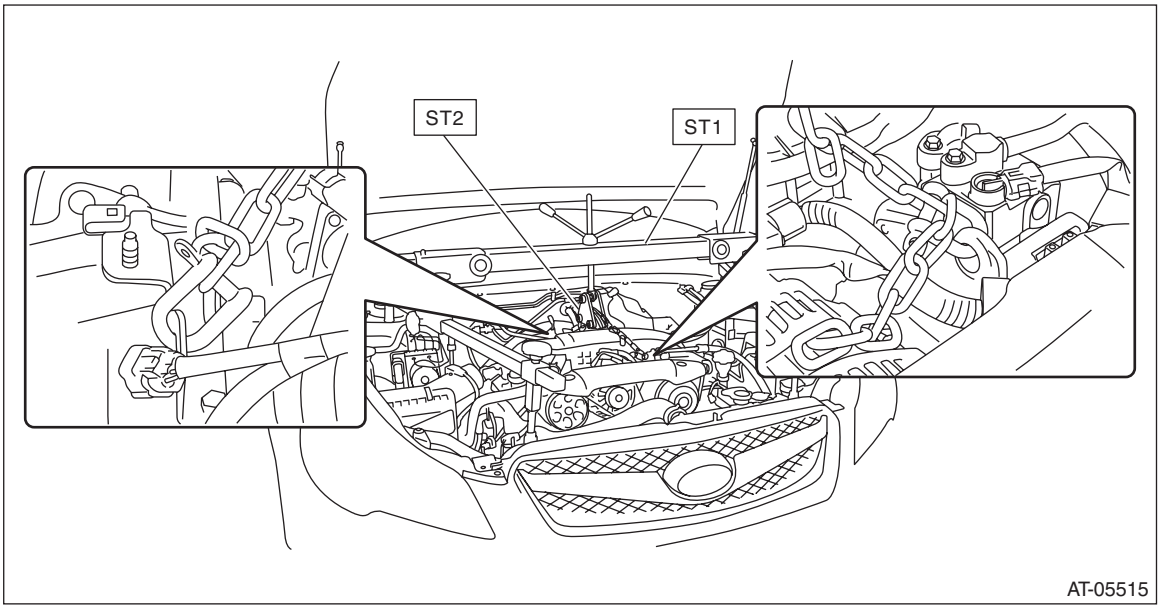

38) Remove the stopper rod.

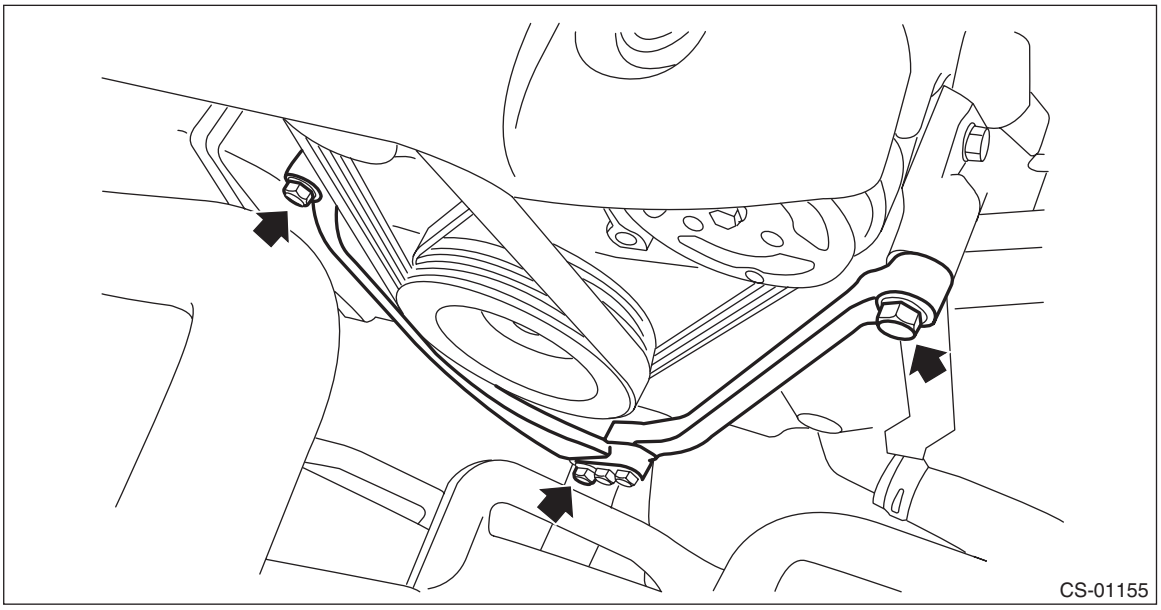

39) Lift the engine slightly and remove the engine mounting bolts.

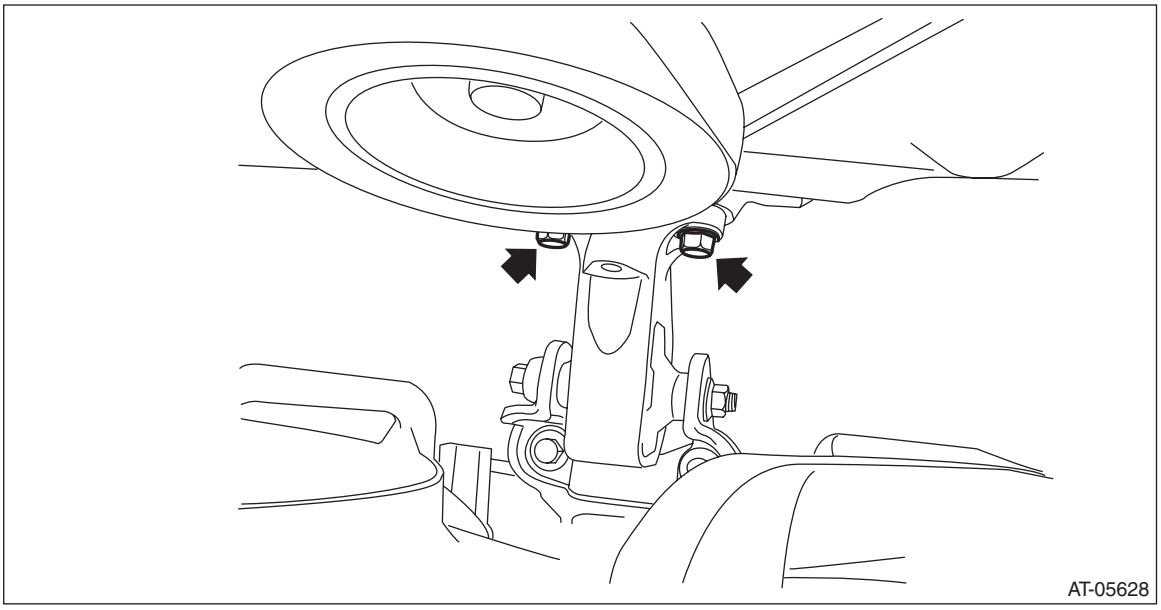

40) Remove the engine mounting nut and bolt to remove the front cushion rubber.

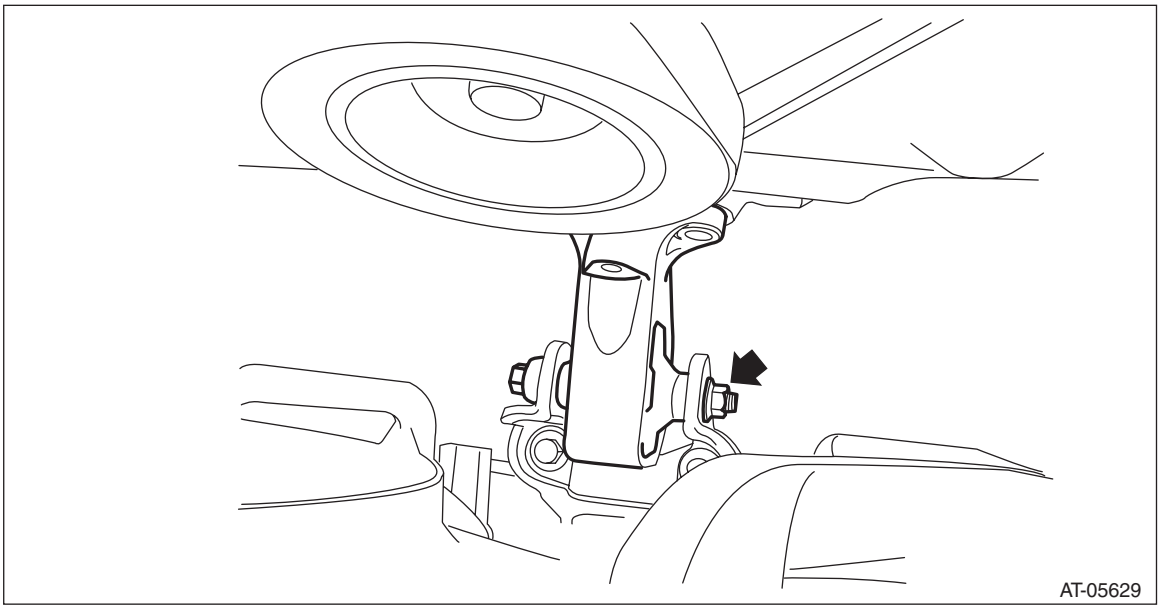

41) Temporarily attach ST by using two bolts.
ST 41099AJ000 SPECIAL TOOL H4

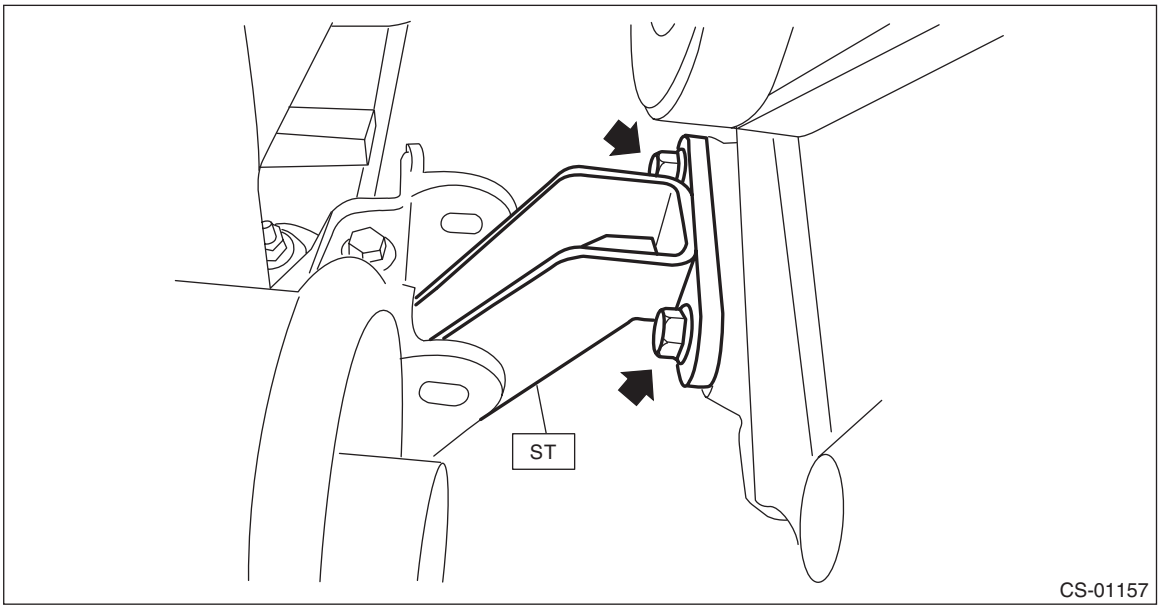

42) Lift up the engine unit high enough to install the bolt and nut to vehicle.

CAUTION:
Do not lift up higher than enough level to install the ST to avoid damage to the hoses and pipes inside the engine room.

NOTE:
• If it is difficult to pull out the stud bolt from transmission mounting bracket, shake the engine unit slightly while lifting up.

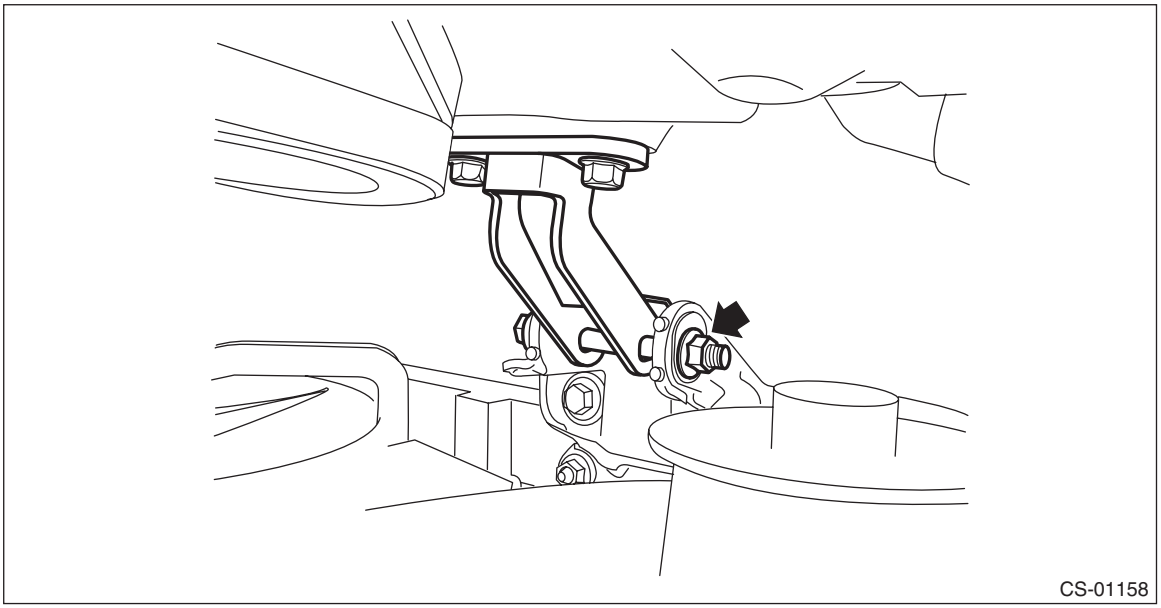

43) Tighten the mounting bolts on the engine side.

Tightening torque:
25 N·m (2.5 kgf-m, 18.4 ft-lb)

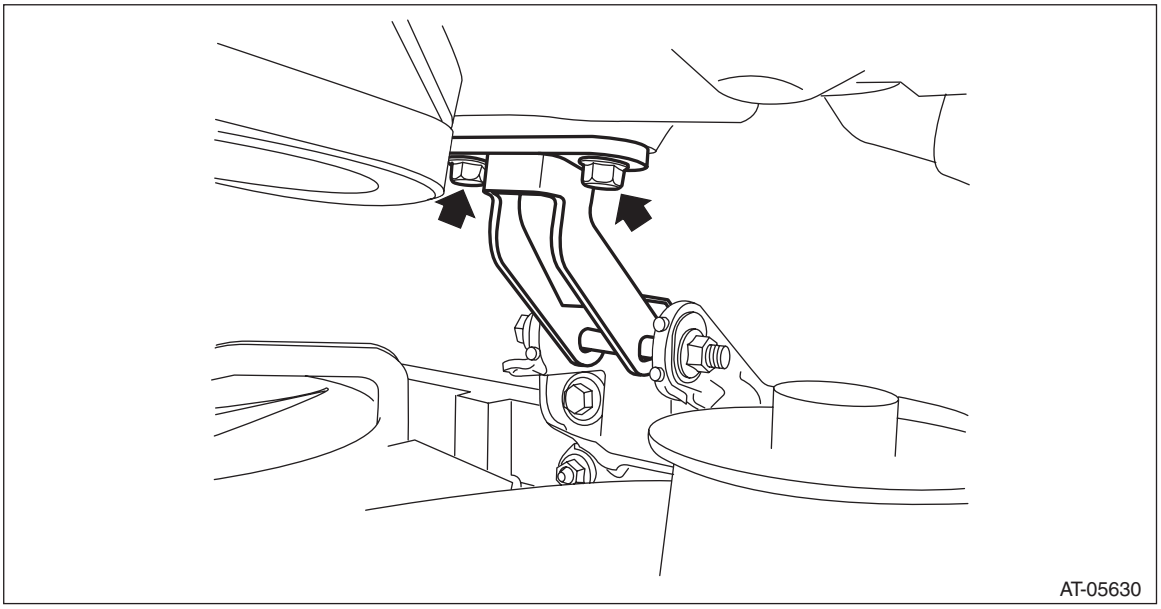

44) Remove the ST (ENGINE HANGER).

45) Remove the left and right transmission mounting brackets.

NOTE:
First, remove the transmission mounting bracket on the right side of vehicle, and then tilt the engine unit to remove the left transmission mounting bracket.

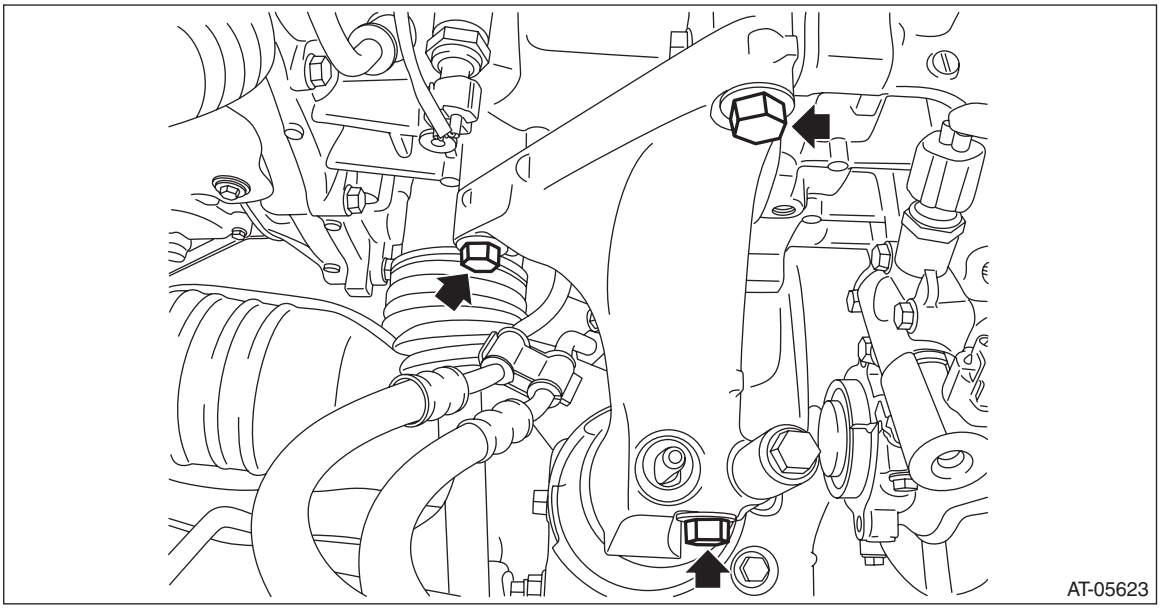

46) Remove the four transmission connecting bolts.

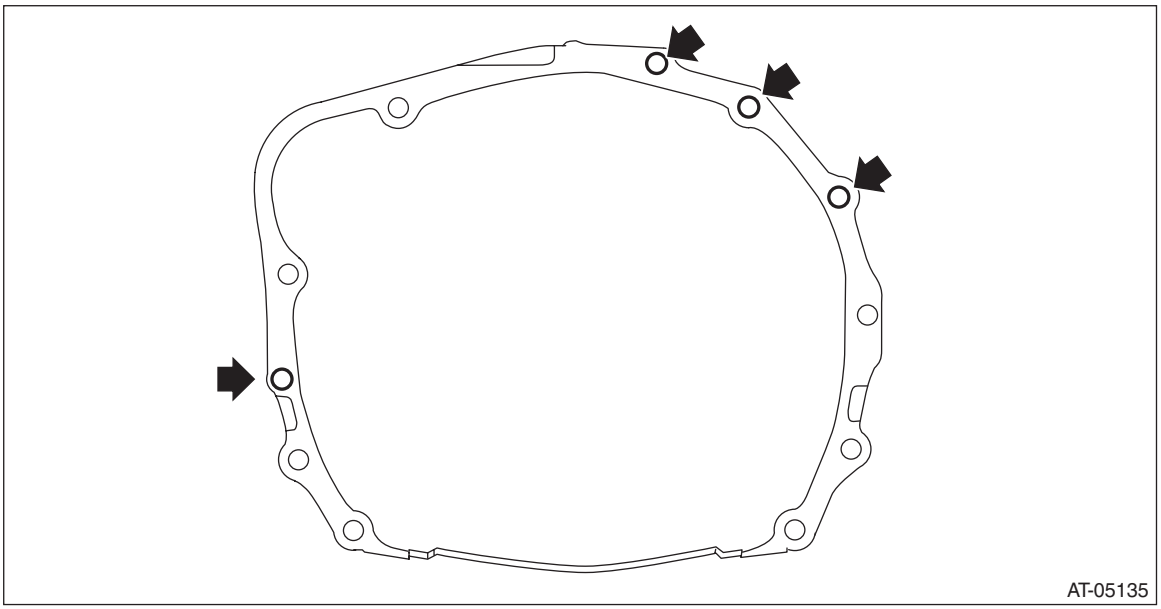

47) Set the ST (ENGINE HANGER) again to loosen the chain sling.
48) Lift up the vehicle.
49) Set the transmission jack under the transmission.

50) Remove the rear crossmember.

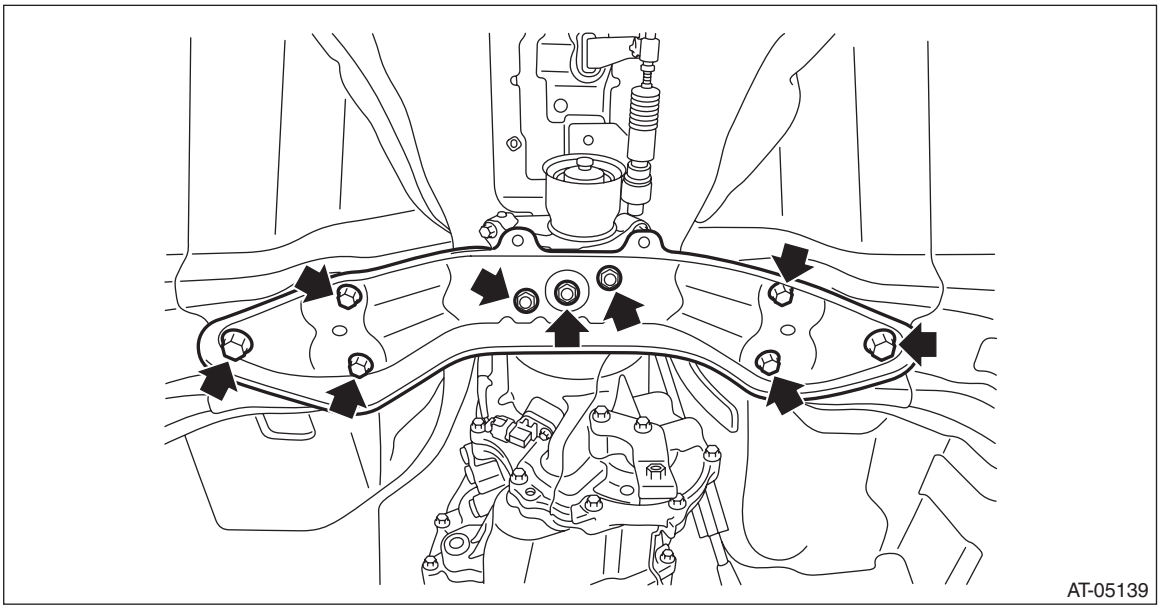

51) Lower the transmission rear end (dust cover rear end).

CAUTION:
When lowering the transmission rear end, be careful not to let the converter case and steering mechanical parts contact each other.

NOTE:
Lower the transmission rear end by approx. 80 mm (3.1 in) (reference).

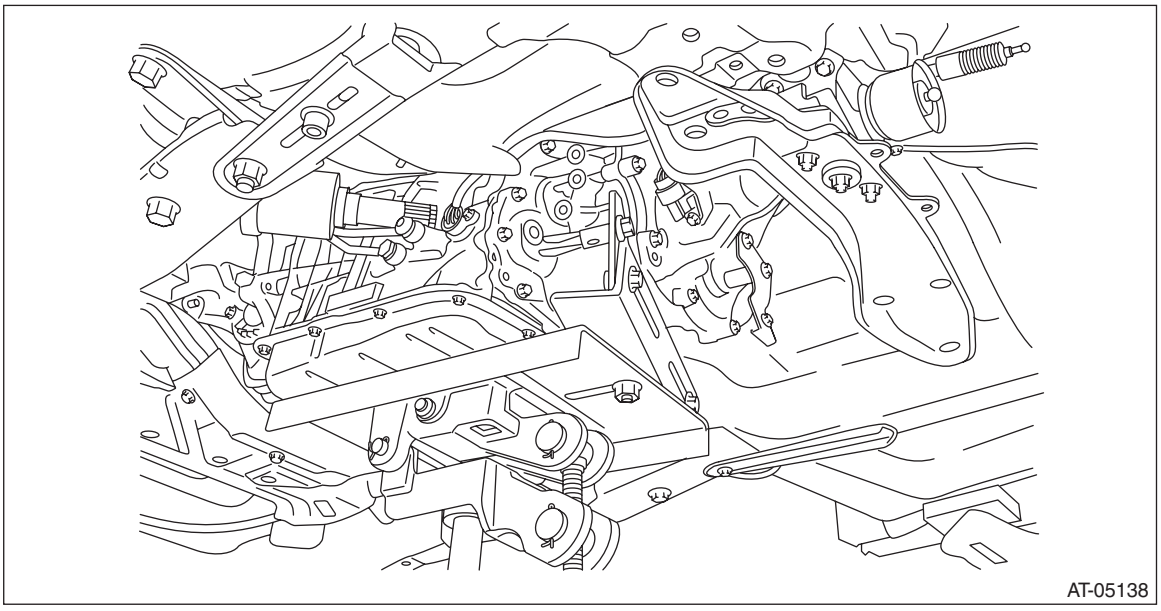

52) Rotate the handle of ST (ENGINE HANGER) to apply tension to the chain sling.

53) Remove the two transmission connecting bolts and two nuts (lower side).

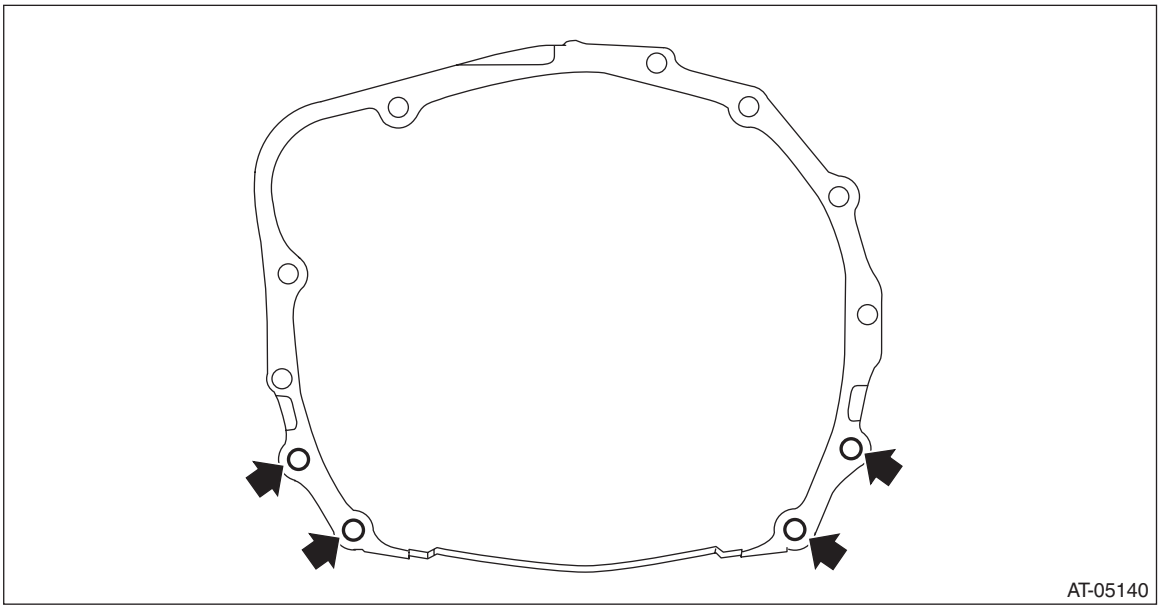

54) Remove the transmission assembly.

NOTE:
Remove it while moving the transmission jack up and down so that the engine and transmission remain directly aligned.

55) Remove the cushion rubber.

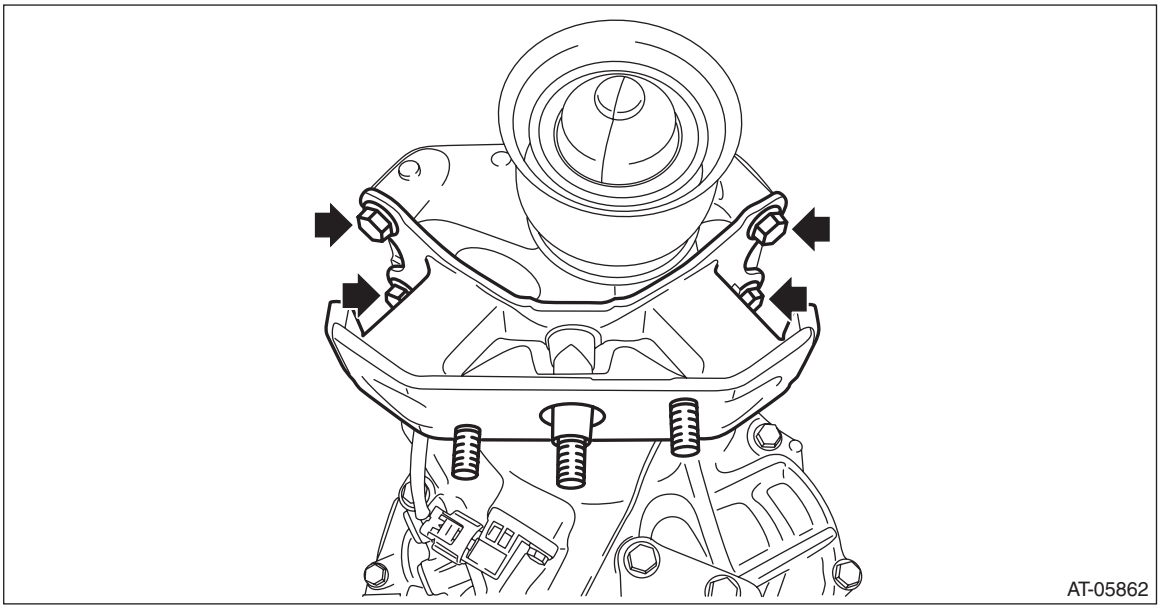

B: INSTALLATION

1) Attach the ST to converter case.
ST 498277200 STOPPER SET

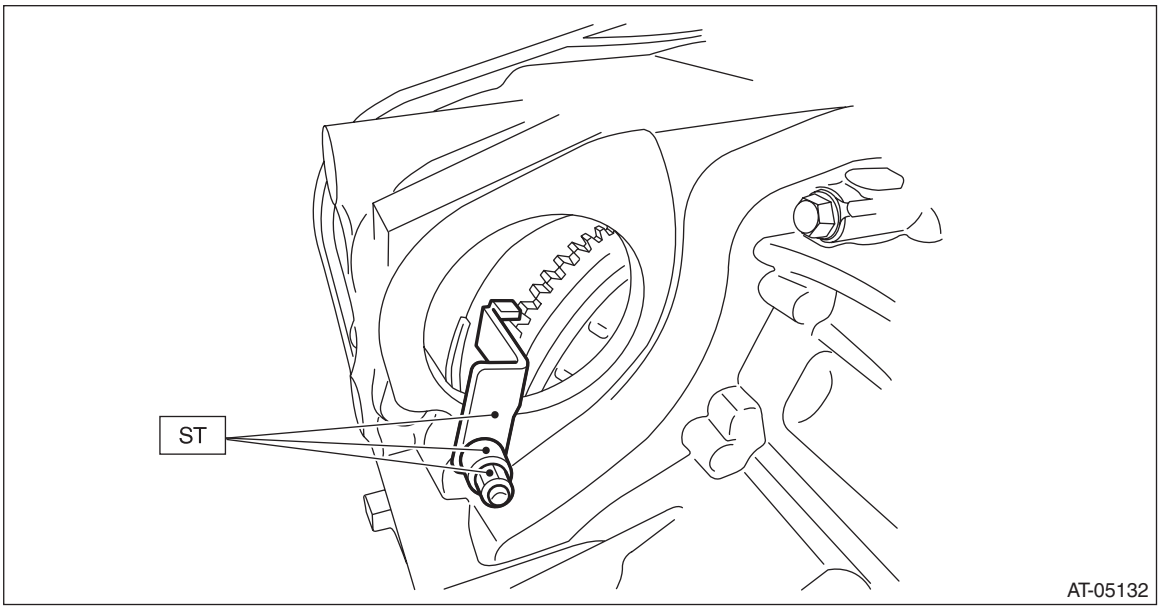

2) When completely overhauling the transmission, refill approx. 10 ℓ (2.6 US qt, 8.8 Imp qt) of CVTF through the transmission right side plug, and install the plug.

CAUTION:
Always use specified CVTF or equivalent. Using other fluid than specified or equivalent will cause malfunction. <Ref. to CVT-4, HYDRAULIC CONTROL AND LUBRICATION, SPECIFICATION, General Description.>

NOTE:
Use a new gasket.

Tightening torque:
35 N·m (3.6 kgf-m, 25.8 ft-lb)

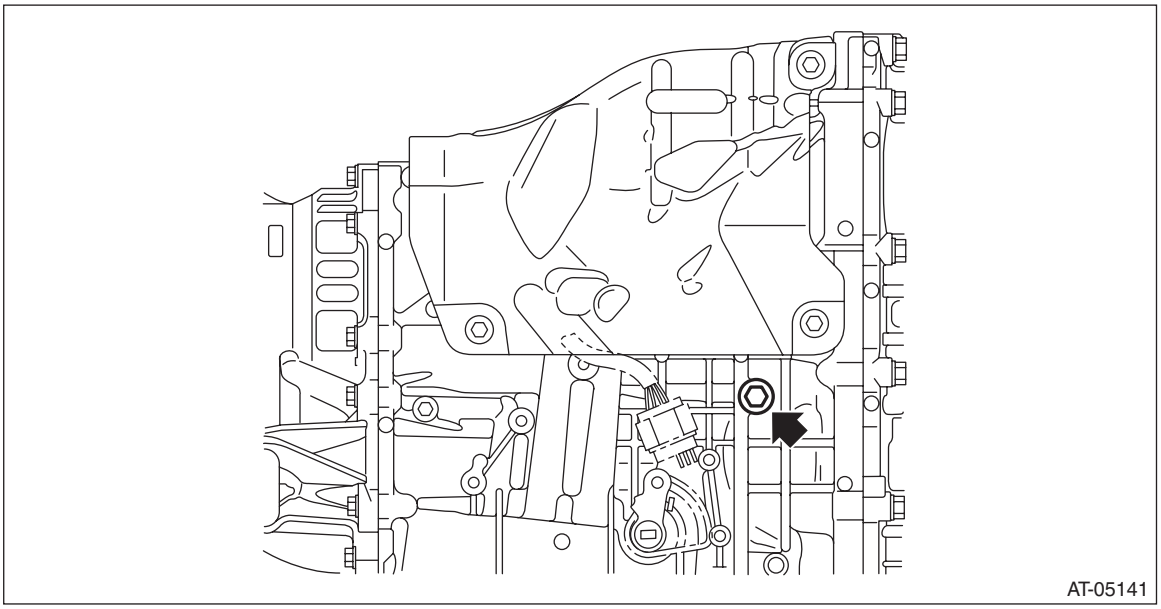

3) Replace the front differential side retainer oil seal. <Ref. to CVT-91, REPLACEMENT, Differential Side Retainer Oil Seal.>

NOTE:
• Be sure to replace the differential side retainer oil seal with a new part whenever the front drive shaft is removed from the transmission.
• When a new differential side retainer oil seal has been installed, replacement is not required.

4) Install the cushion rubber on the transmission.

Tightening torque:
40 N·m (4.1 kgf-m, 29.5 ft-lb)

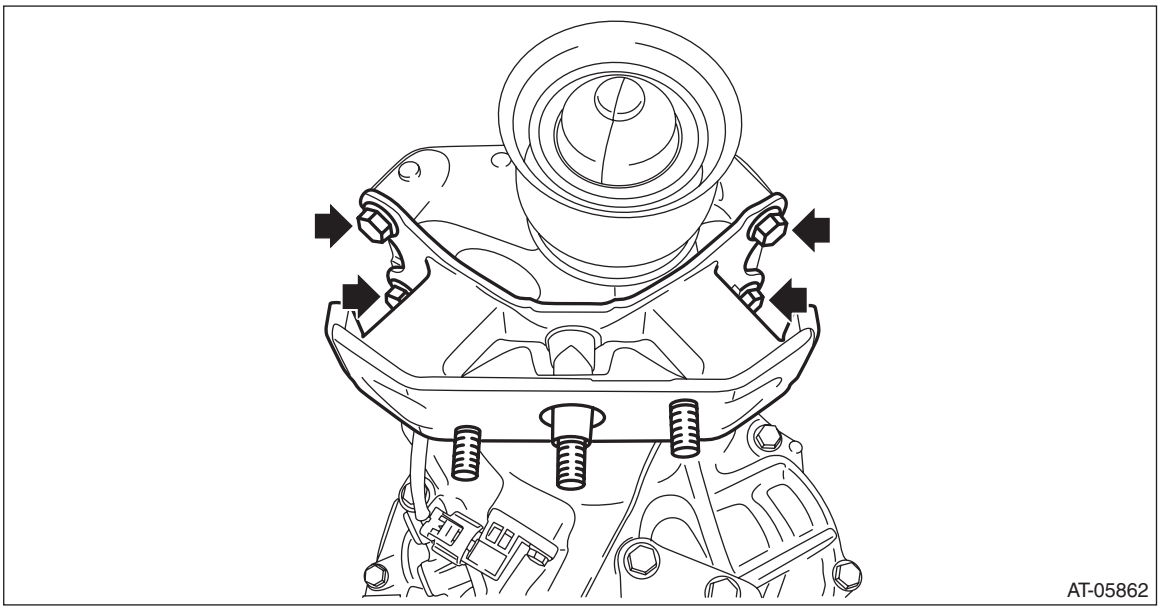
AT-05862

5) Mount the transmission onto the transmission jack.
6) Strike and bend the transmission hanger of transmission rear with a soft rubber hammer etc. so that it gets in contact with the transmission case.

CAUTION:
Do not apply extra overload or impact to the transmission case.

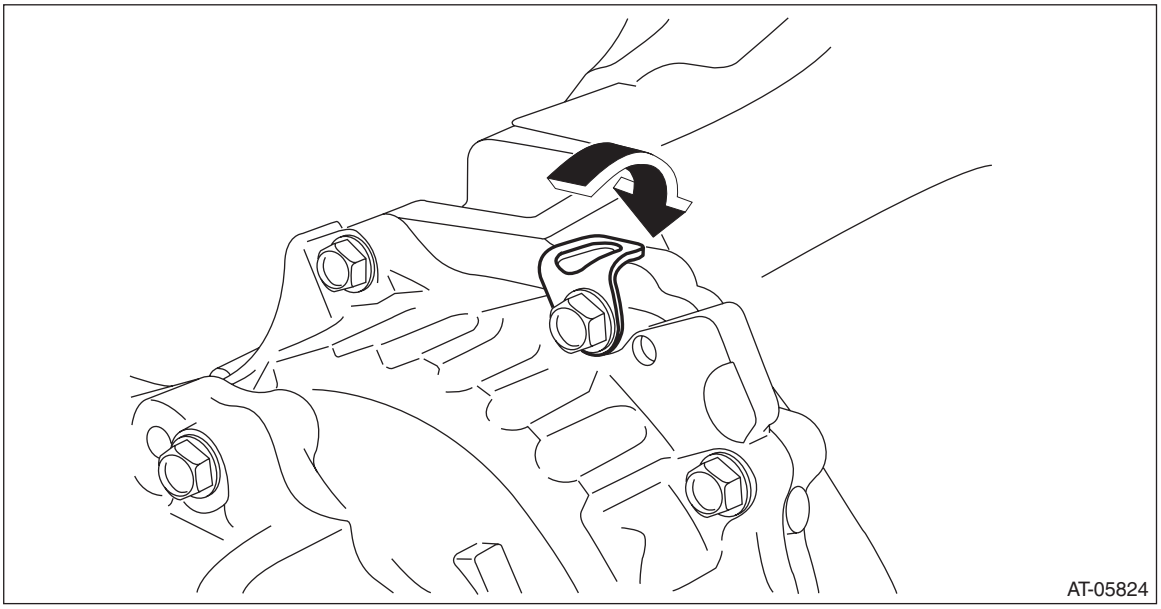
AT-05824

7) While lifting up the transmission gradually, install the transmission to the engine.

CAUTION:
This operation requires at least two persons.

NOTE:
Keep the engine level.
8) Install the two engine connecting bolts and two nuts (lower side).

Tightening torque:
50 N·m (5.1 kgf-m, 36.9 ft-lb)

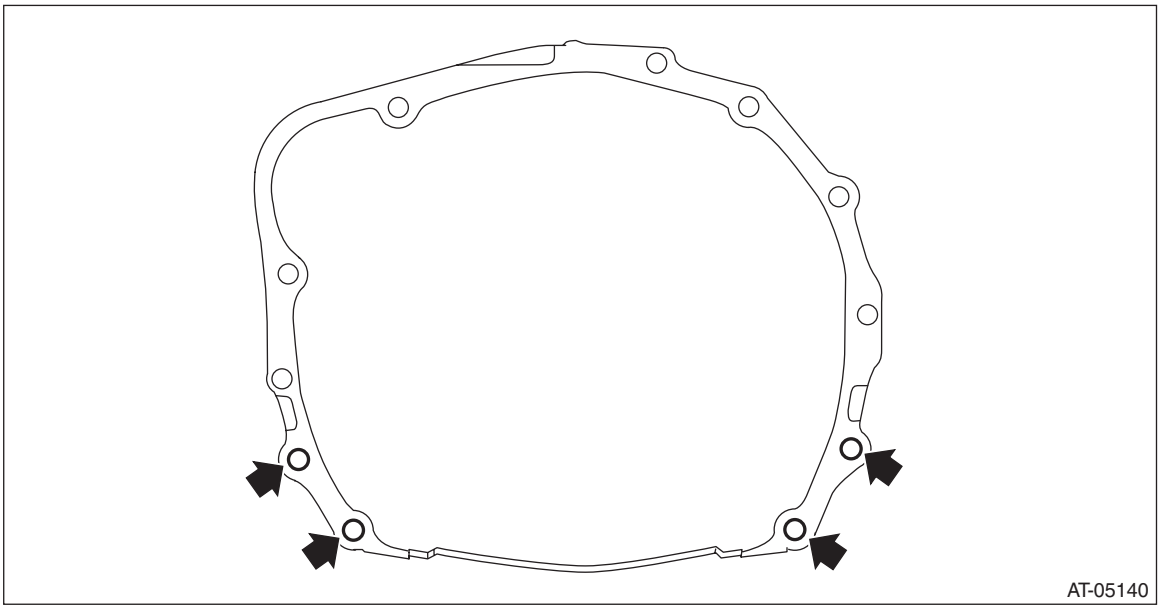

9) Secure the transmission rear crossmember to the vehicle body.

Tightening torque:
T1: 35 N·m (3.6 kgf-m, 25.8 ft-lb)
T2: 75 N·m (7.6 kgf-m, 55.3 ft-lb)

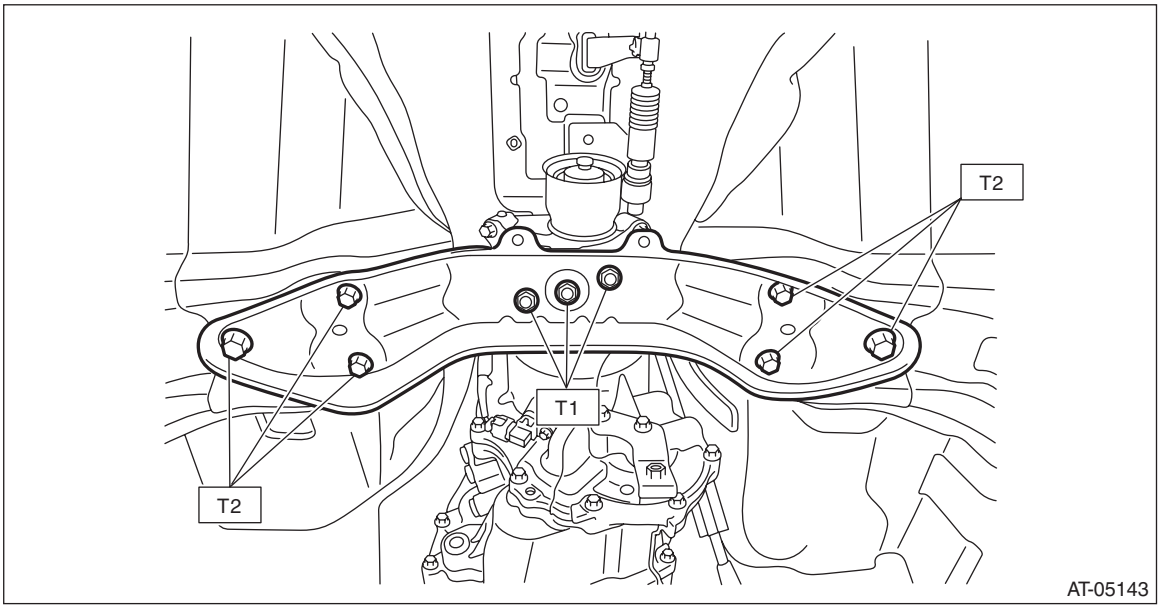

10) Remove the transmission jack.
11) Lower the vehicle.
12) Remove the ST (ENGINE HANGER).

13) Install the four engine mounting bolts (upper side).

Tightening torque:
50 N·m (5.1 kgf-m, 36.9 ft-lb)

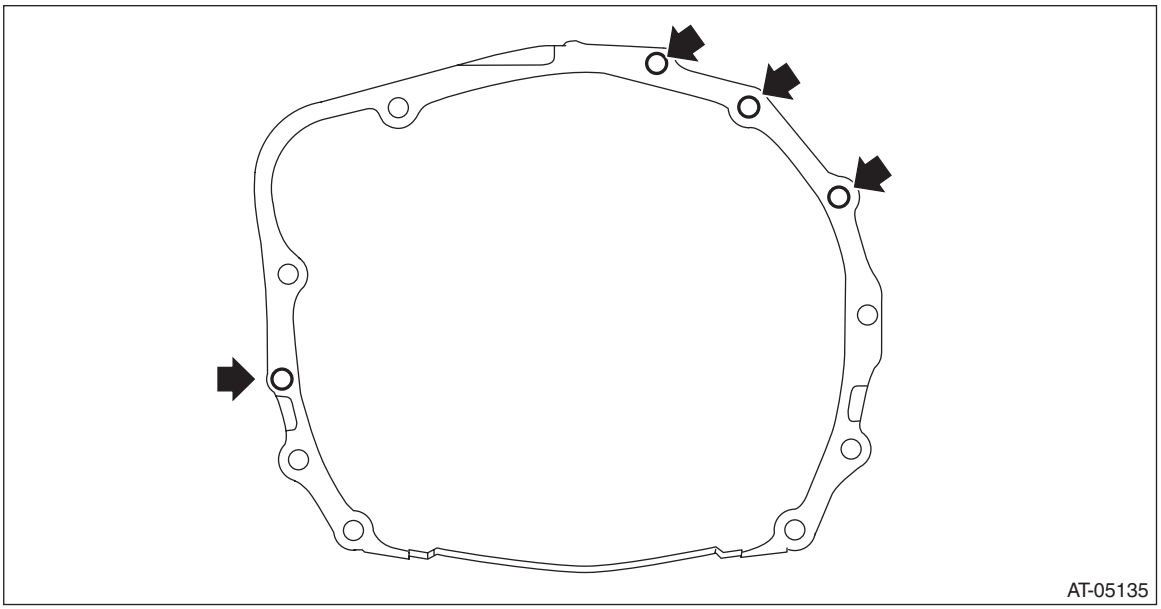

14) Install the left and right transmission mounting brackets.

NOTE:
- Install to the left side of vehicle first because the engine inclines to the left.
- Temporarily tighten the bolt arrowed in the figure.

Tightening torque:
75 N·m (7.6 kgf-m, 55.3 ft-lb)

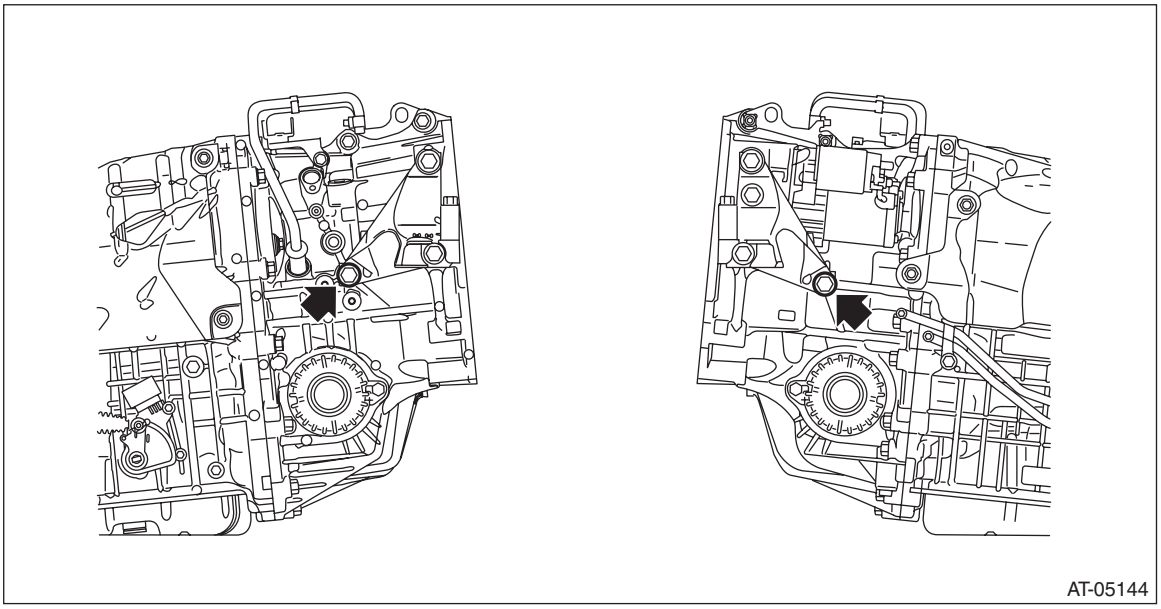

15) Set the ST1 to vehicle body and lift up the engine unit slightly.
ST1 99099AJ000 ENGINE HANGER
ST2 99099AJ010 CHAIN BALANCER

CAUTION:
- **Set so that the chain sling does not contact the engine parts.**
- **Set the arms of ST (ENGINE HANGER) at the locations shown in the figure.**

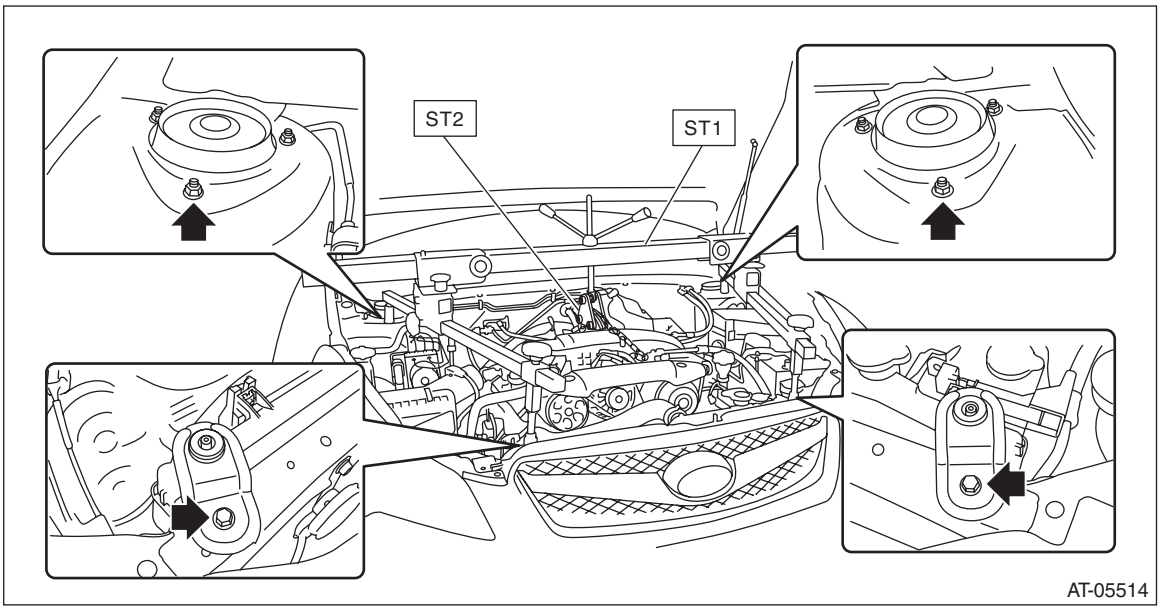

16) Remove the bolts from ST (SPECIAL TOOL H4).

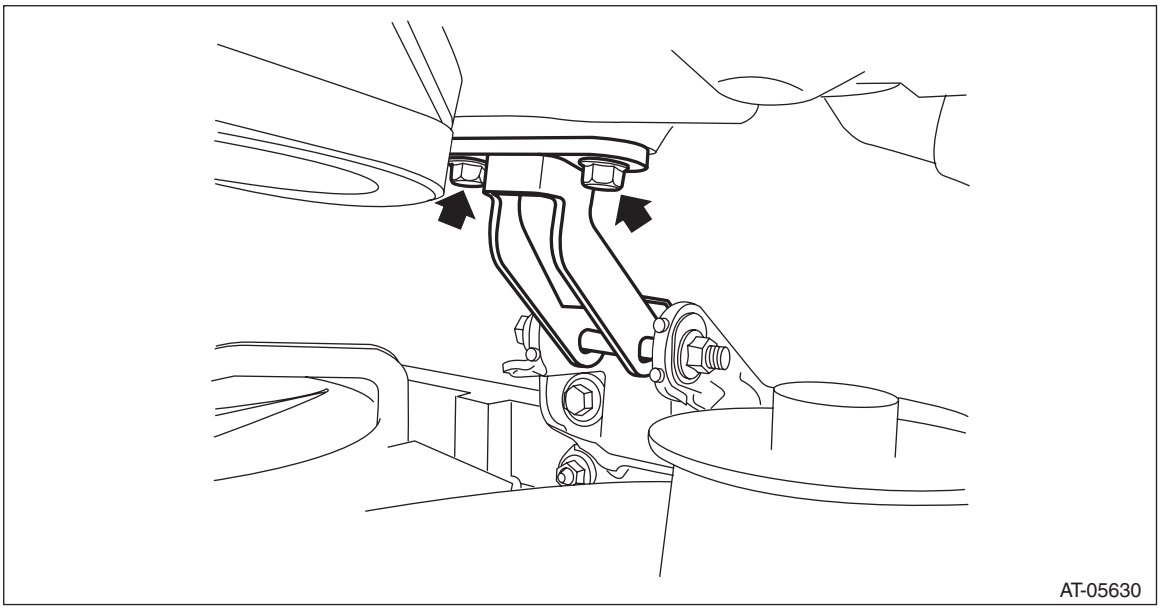

17) Remove the bolt and nut to remove ST (SPECIAL TOOL H4).

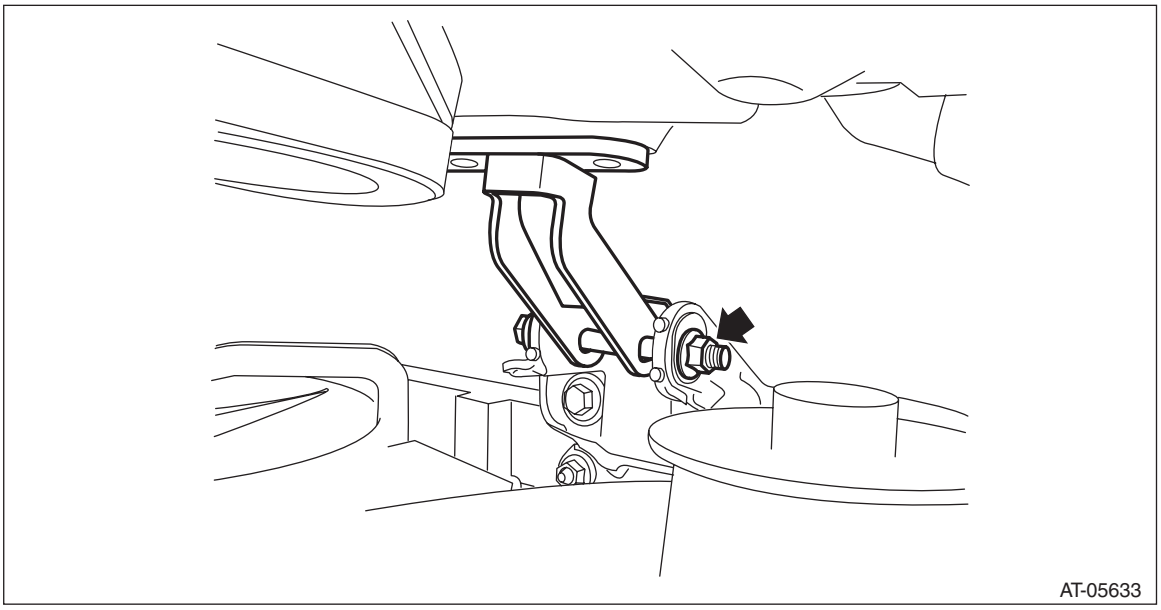

18) Temporarily attach the front cushion rubber with bolts.

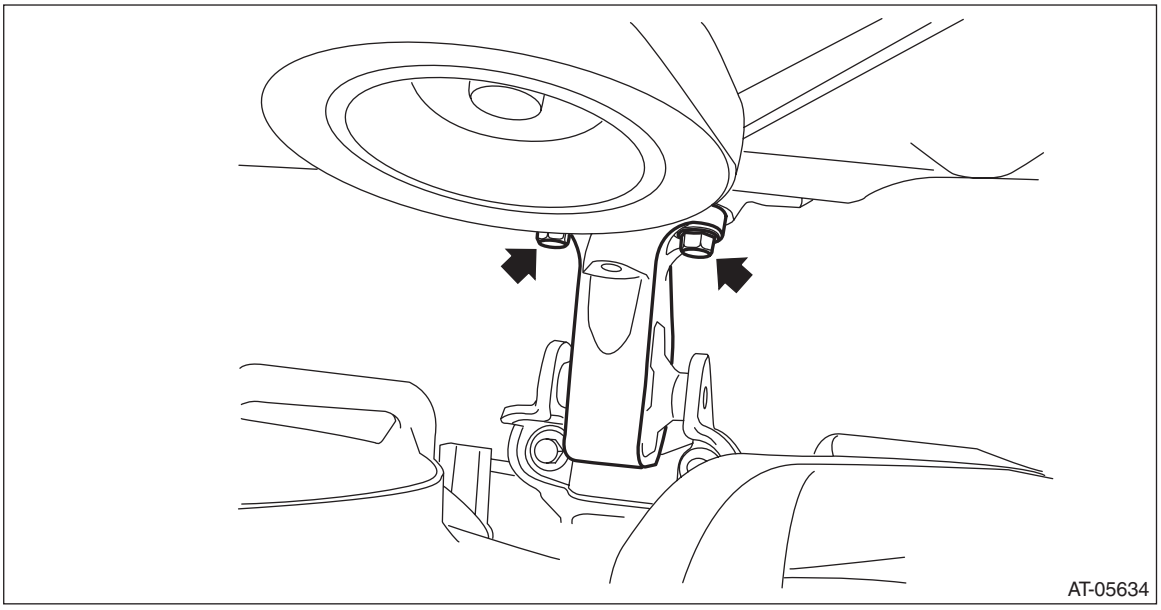

19) Install the bolt and nut to the front cushion rubber.

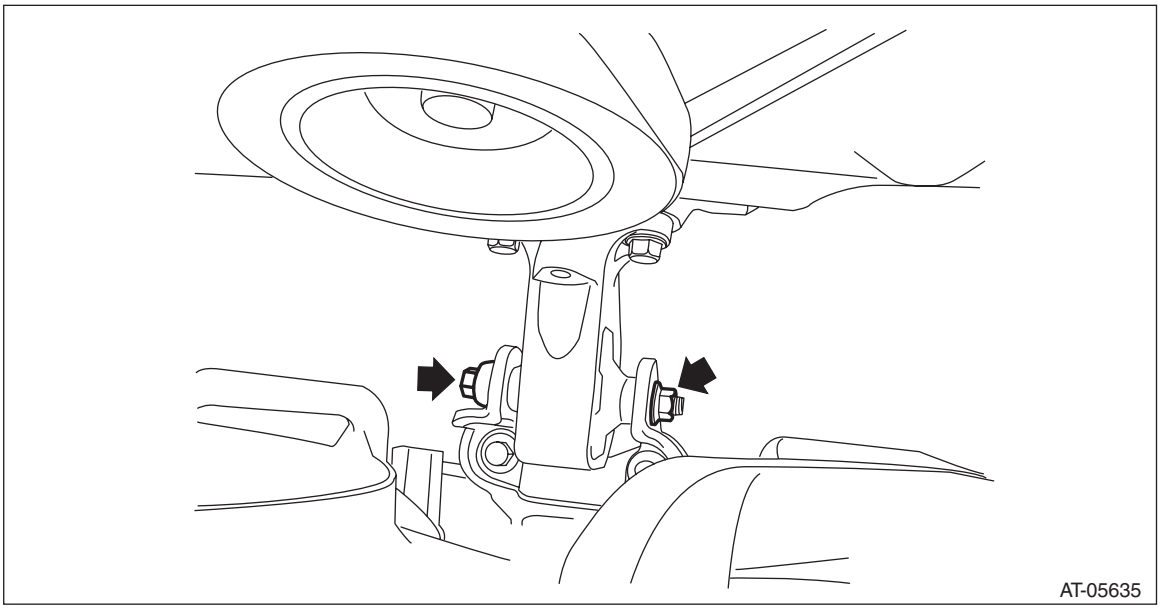

20) Tighten the bolts and nuts of front cushion rubber.

NOTE:
Always start tightening from the bolts on the engine side.

Tightening torque:
T1: 25 N·m (2.5 kgf-m, 18.4 ft-lb)
T2: 45 N·m (4.6 kgf-m, 33.2 ft-lb)

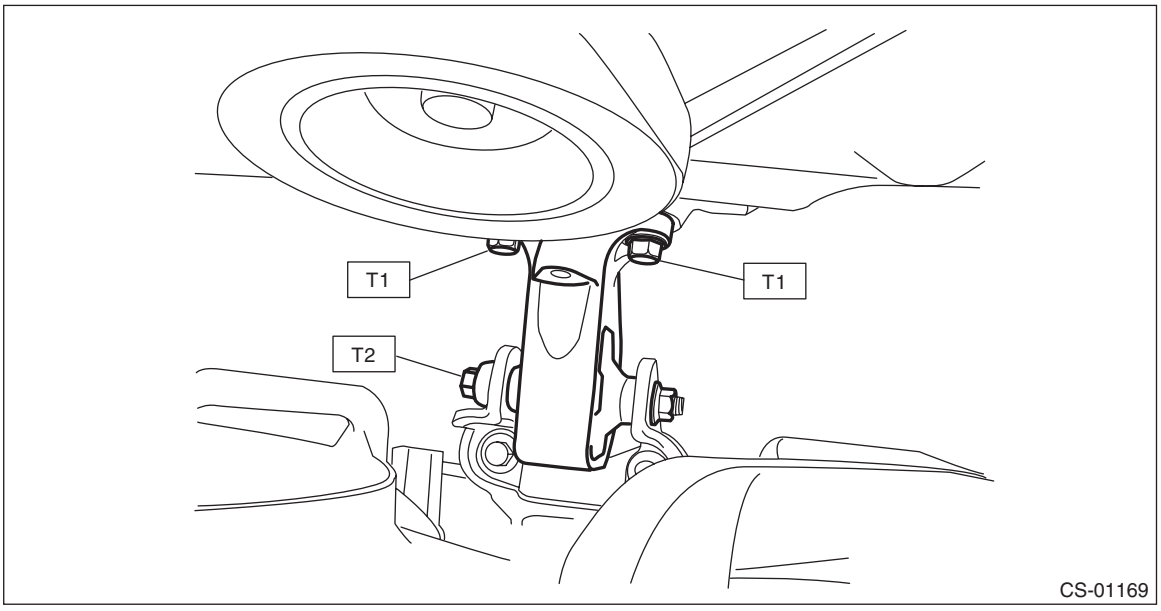

21) Remove the ST (ENGINE HANGER and CHAIN SLING).

22) Install the stopper rod.

Tightening torque:
36 N·m (3.7 kgf-m, 26.6 ft-lb)

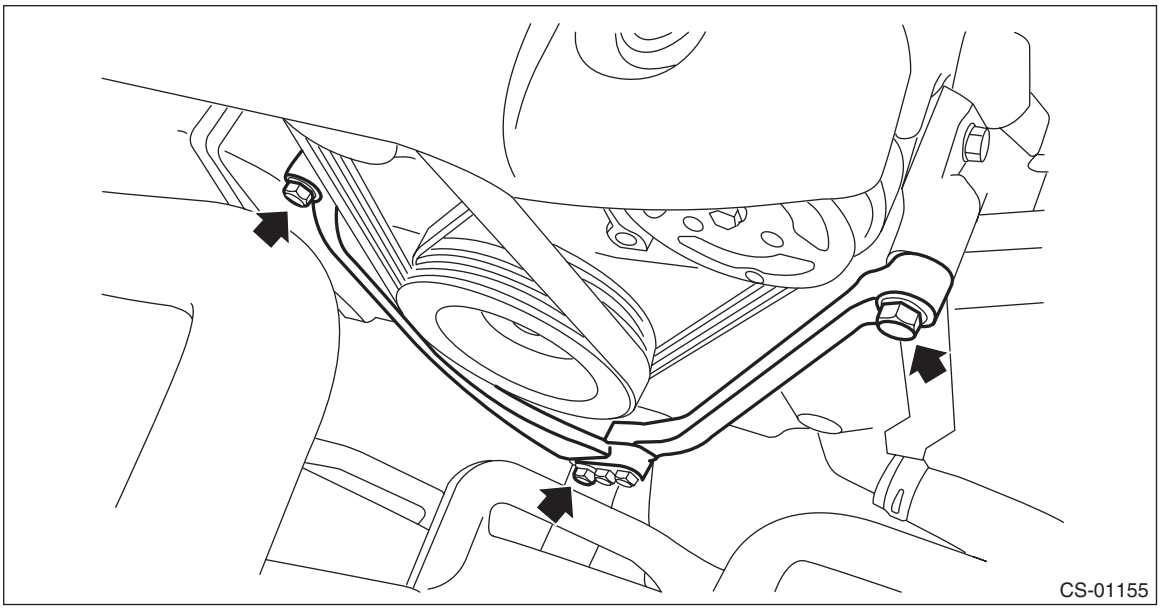

23) Install the nut to the transmission mounting bracket.

Tightening torque:
45 N·m (4.6 kgf-m, 33.2 ft-lb)

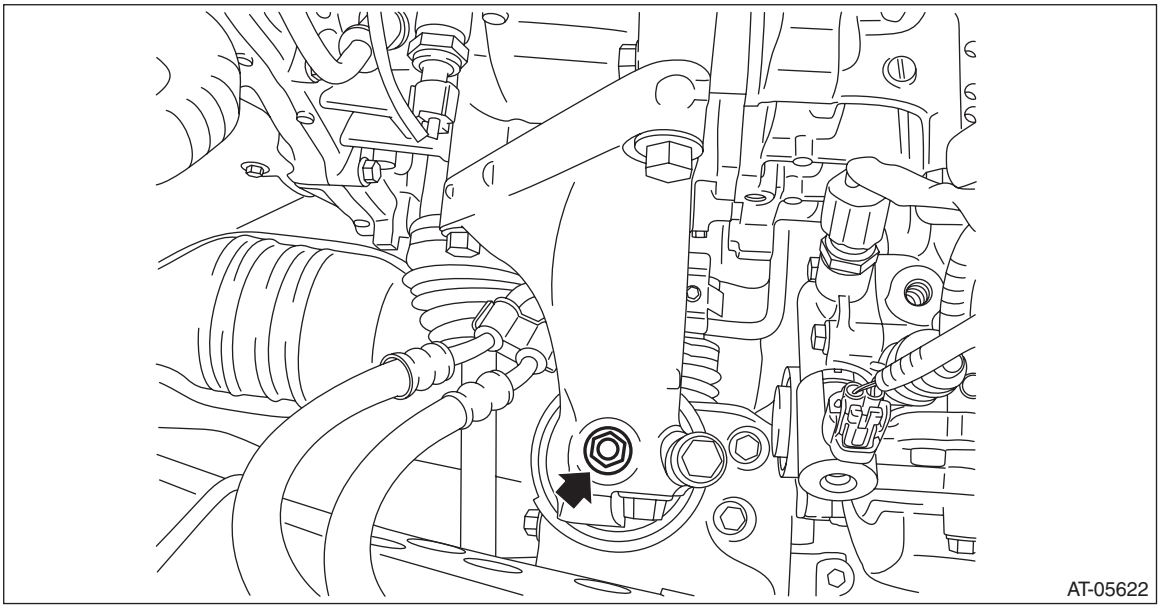

24) Remove the ST (STOPPER SET) from converter case.
25) Match the torque converter screw hole with drive plate hole to install the bolt.

CAUTION:
- **Do not drop the mounting bolt in the converter housing.**
- **Do not damage the mounting bolt.**

Tightening torque:
25 N·m (2.5 kgf-m, 18.4 ft-lb)

26) Install the remaining three bolts by rotating the crank pulley a little at a time in the same direction as engine revolution.

Tightening torque:
25 N·m (2.5 kgf-m, 18.4 ft-lb)

27) Install the service hole plug.

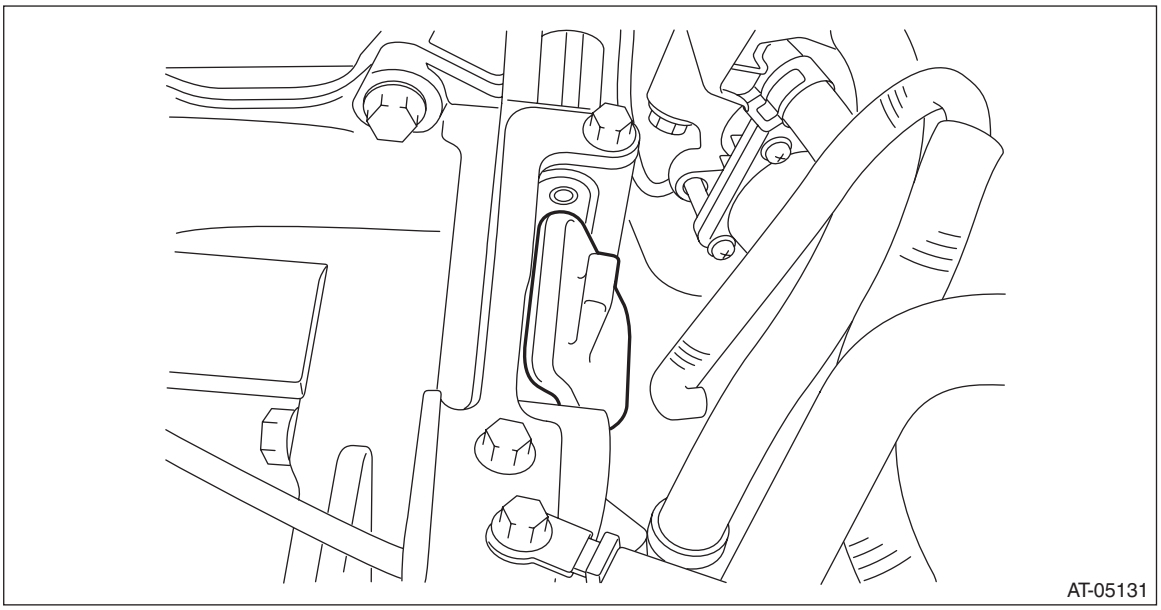

28) Install the starter. <Ref. to SC(H4SO)-10, INSTALLATION, Starter.>
29) Lift up the vehicle.
30) Tighten the single mounting bolt of transmission mounting bracket.

Tightening torque:
75 N·m (7.6 kgf-m, 55.3 ft-lb)

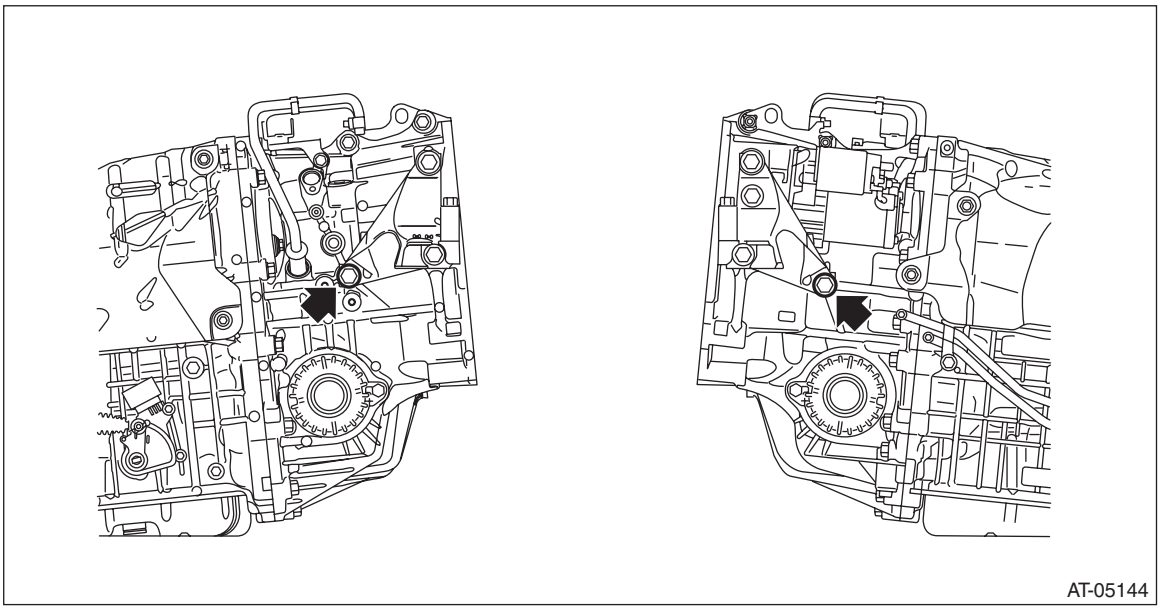

31) Set the ST to side retainer.
ST 28399SA010 OIL SEAL PROTECTOR

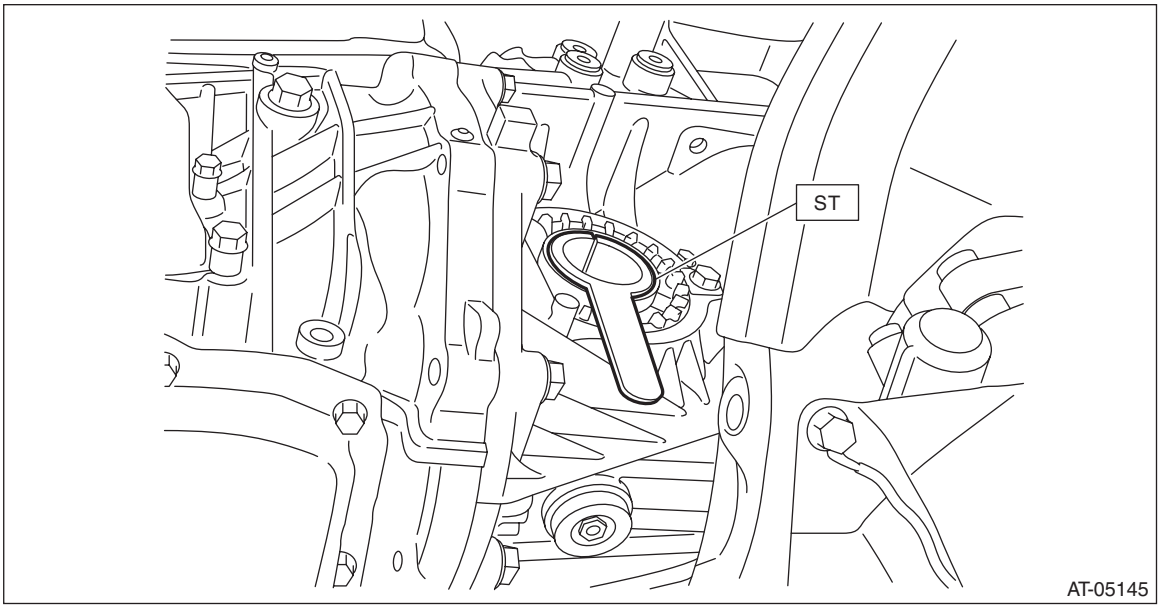

32) Replace the circlip of the drive shaft with a new part.
33) Insert the front drive shaft spline section into transmission and remove the ST (OIL SEAL PROTECTOR).
34) Insert the drive shaft into the transmission securely by pressing the housing from outside of the vehicle.
35) Install the CVTF CVT inlet hose and CVTF CVT outlet hose.

NOTE:
Use new CVTF CVT inlet hose and CVTF CVT outlet hose.

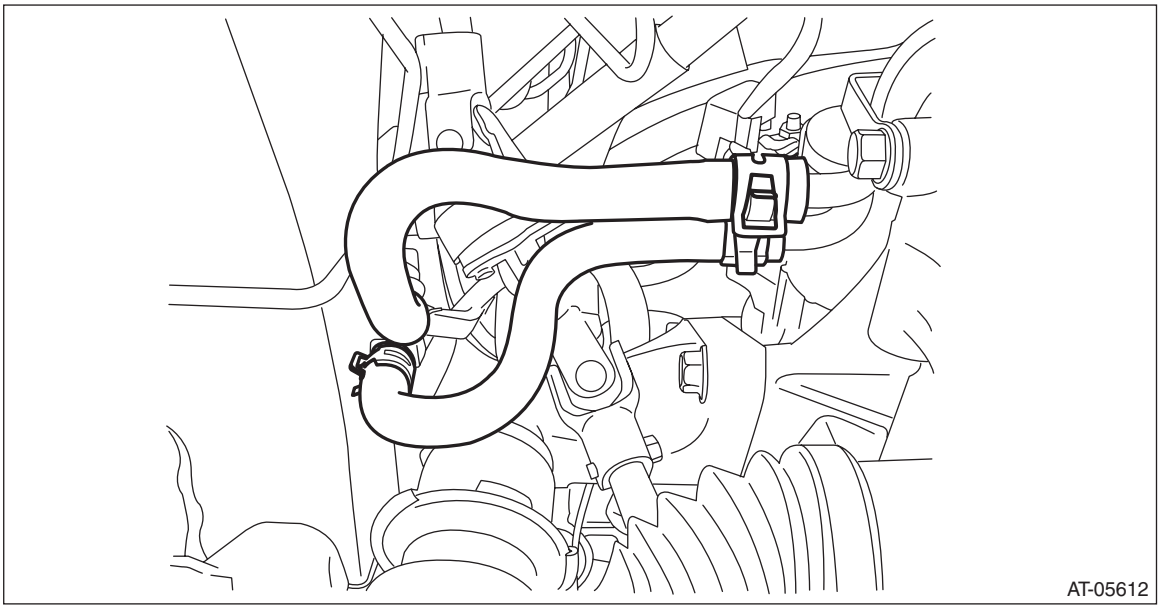

36) Insert the ball joint into housing and secure with bolt.

Tightening torque:
50 N·m (5.1 kgf-m, 36.9 ft-lb)

CAUTION:
- **Do not apply grease to the tapered portion of ball stud.**
- **Before tightening, make sure the lower side of housing and stepped section of ball joint are in contact.**

37) Install the stabilizer link.

Tightening torque:
60 N·m (6.1 kgf-m, 44.3 ft-lb)
38) Connect the tie-rod end and knuckle arm, and attach the castle nut.

Tightening torque:
27 N·m (2.75 kgf-m, 19.9 ft-lb)

CAUTION:
When connecting, do not hit the cap at the bottom of tie-rod end with hammer.
39) After tightening the castle nut to the specified tightening torque, tighten it further within 60° until the cotter pin hole is aligned with slot in the nut. Fit the cotter pin into the nut, and then bend the pin to lock.

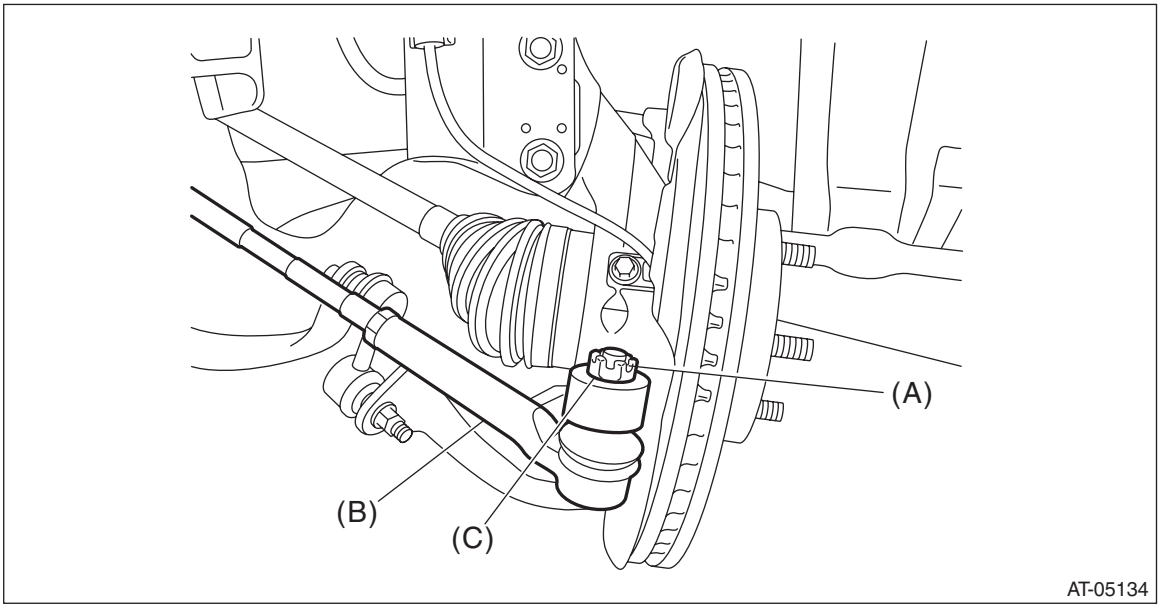

(A) Cotter pin
(B) Tie-rod end
(C) Castle nut

40) Install the propeller shaft. <Ref. to DS-11, INSTALLATION, Propeller Shaft.>
41) Install the universal joint. <Ref. to PS-22, INSTALLATION, Universal Joint.>

42) Install the plate assembly to transmission.

Tightening torque:
T: 25 N·m (2.5 kgf-m, 18.4 ft-lb)

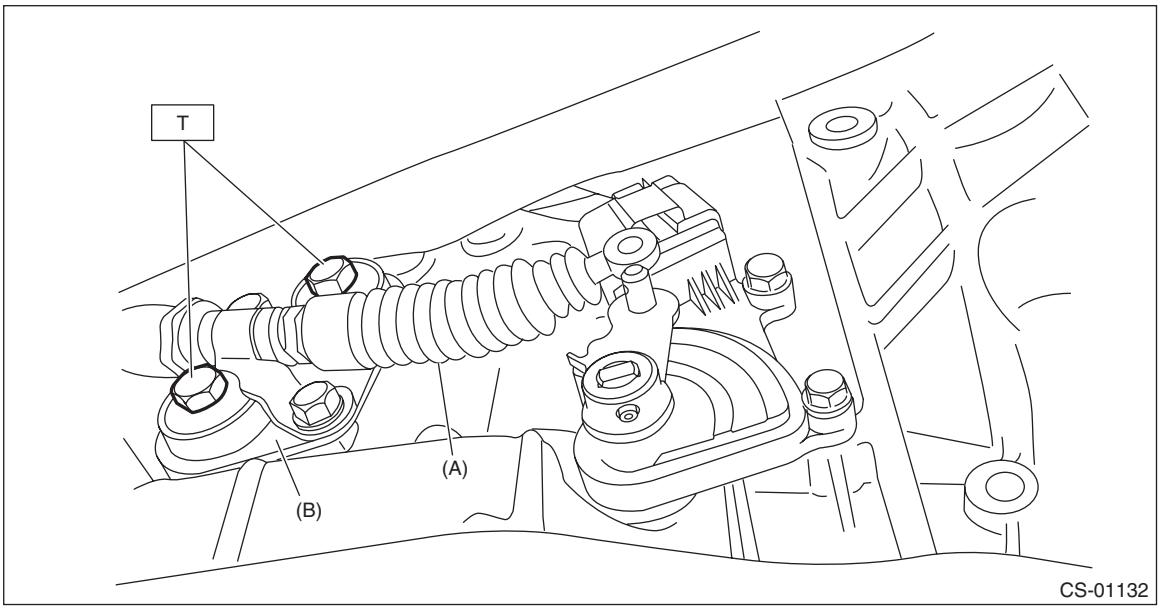

(A) Select cable
(B) Plate ASSY

43) Install the washer and snap pin to the shifter arm.

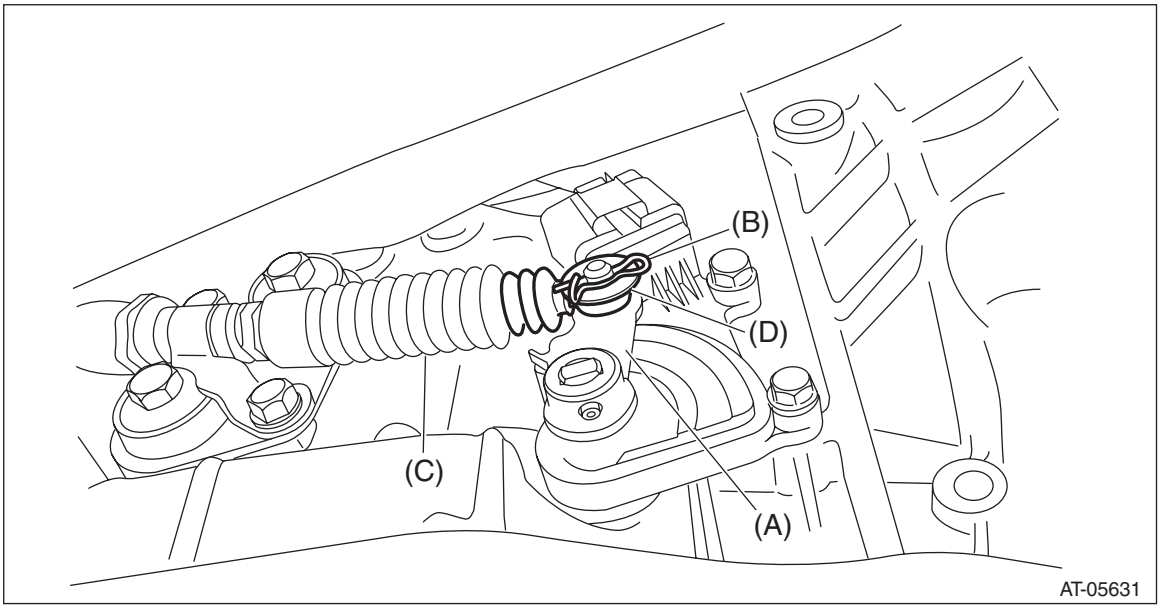

(A) Shifter arm
(B) Snap pin
(C) Select cable
(D) Washer

44) Install the heat shield cover.

Tightening torque:
18 N·m (1.8 kgf-m, 13.3 ft-lb)

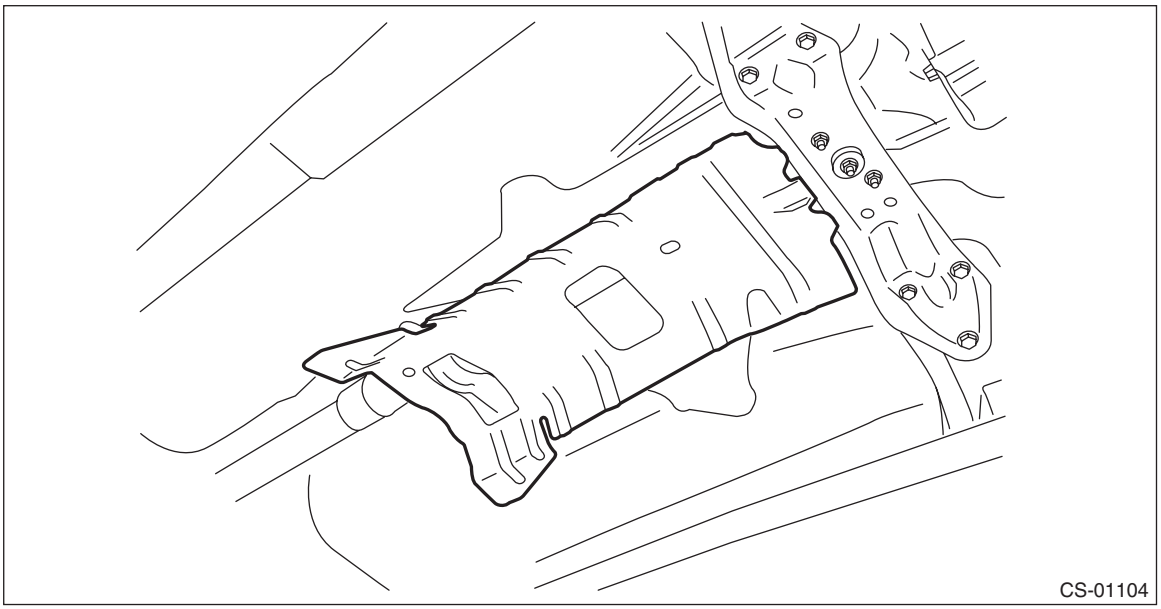

45) Install the center exhaust pipe. <Ref. to EX(H4SO)-8, INSTALLATION, Center Exhaust Pipe.>
46) Install the under cover.
47) Lower the vehicle.
48) Remove the engine hanger rear for turbo model and install the engine hanger rear for non-turbo model.

Tightening torque:
16 N·m (1.6 kgf-m, 11.8 ft-lb)

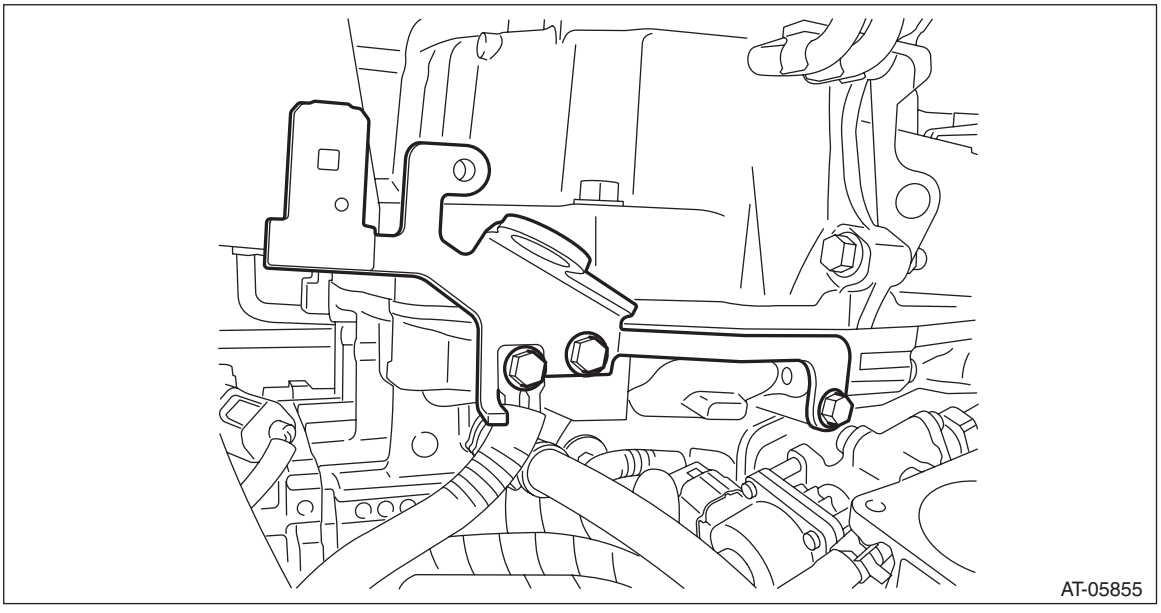

49) Install the engine harness connector to the engine hanger rear, connect the harness connector, and install the harness connector bracket.

Tightening torque:
7.5 N·m (0.76 kgf-m, 5.5 ft-lb)

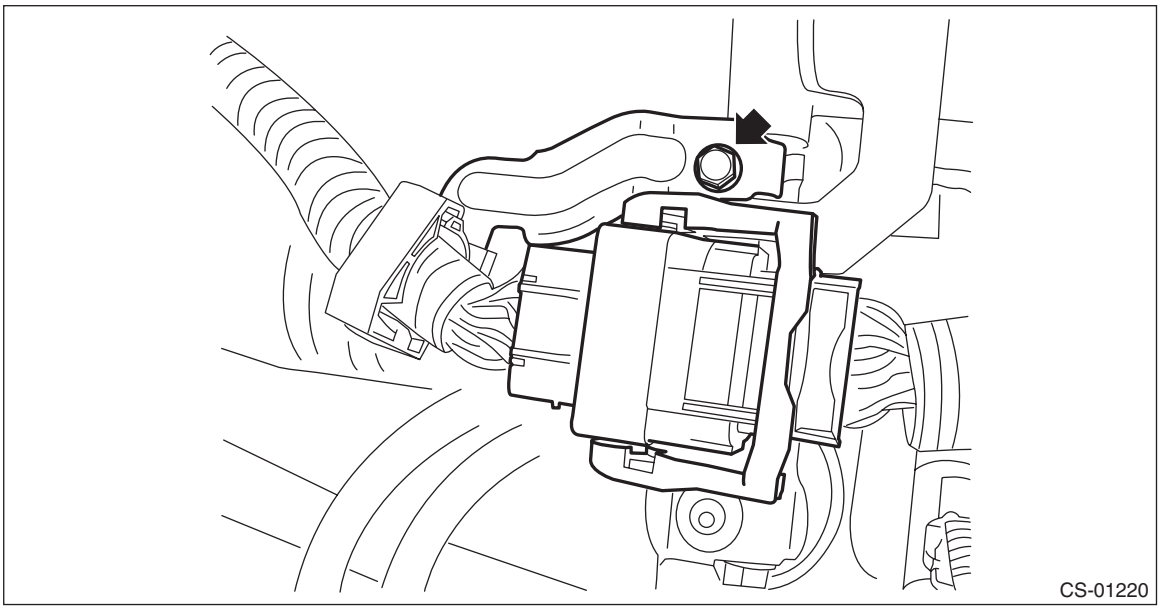

50) Install the throttle body. <Ref. to FU(H4SO)-15, INSTALLATION, Throttle Body.>
51) Install the manifold absolute pressure sensor. <Ref. to FU(H4SO)-34, INSTALLATION, Manifold Absolute Pressure Sensor.>
52) Connect the following harness connectors.
- Transmission harness connectors
- Transmission radio ground terminal
- Inhibitor harness connector

Tightening torque:
13 N·m (1.3 kgf-m, 9.6 ft-lb)

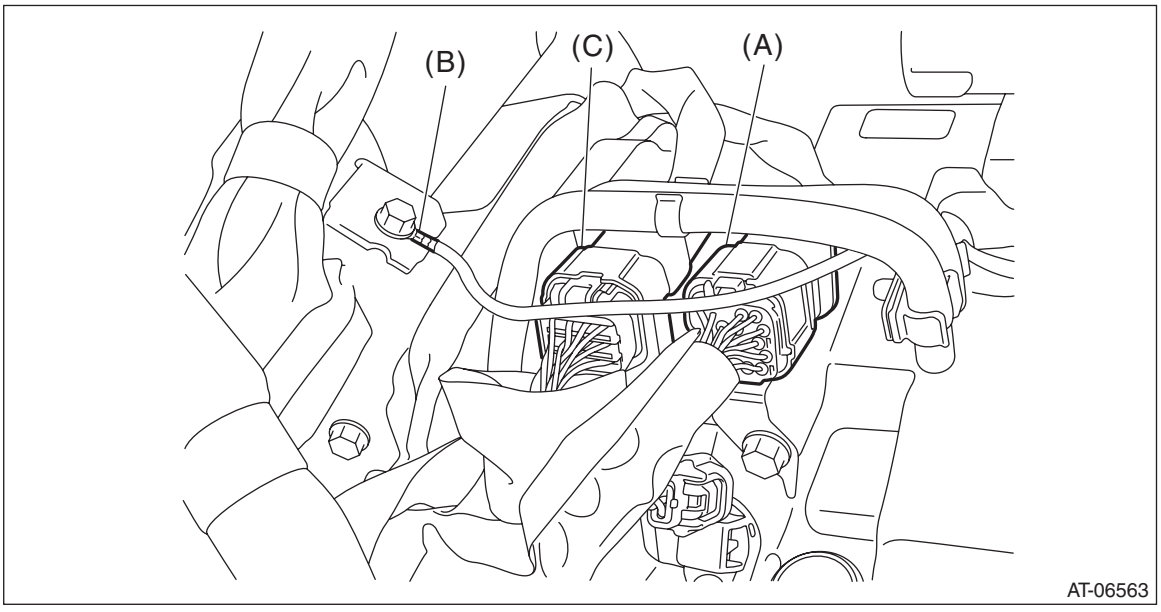

(A) Transmission harness connectors
(B) Transmission radio ground terminal
(C) Inhibitor harness connector

53) Install the battery cable bracket, and install the battery cable clip to the bracket.

Tightening torque:
7.5 N·m (0.76 kgf-m, 5.5 ft-lb)

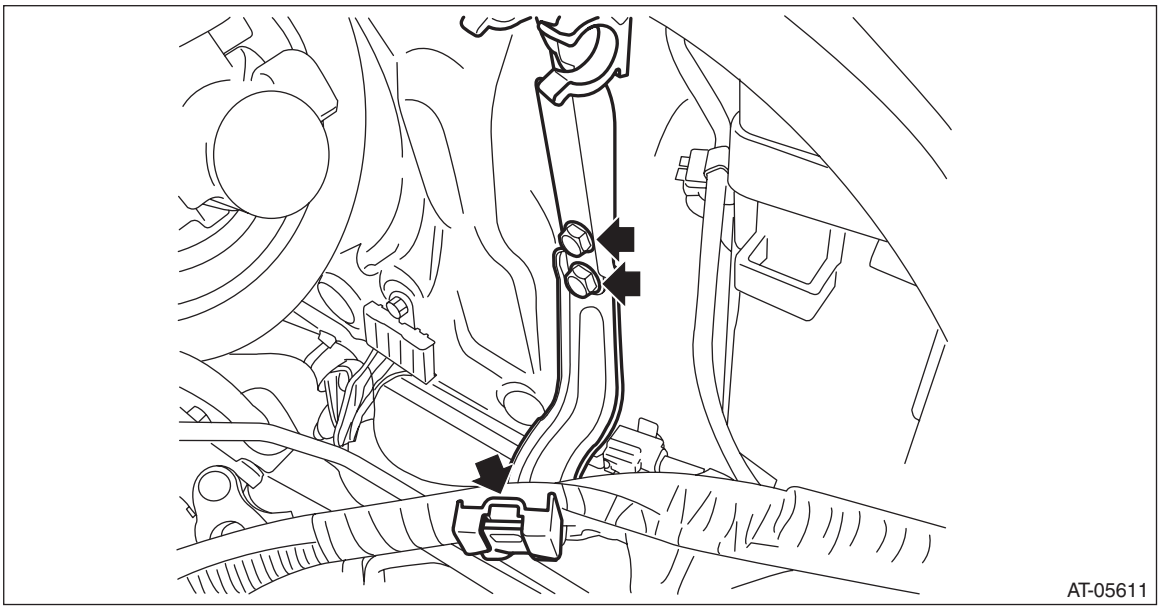

54) Attach the grille bracket.

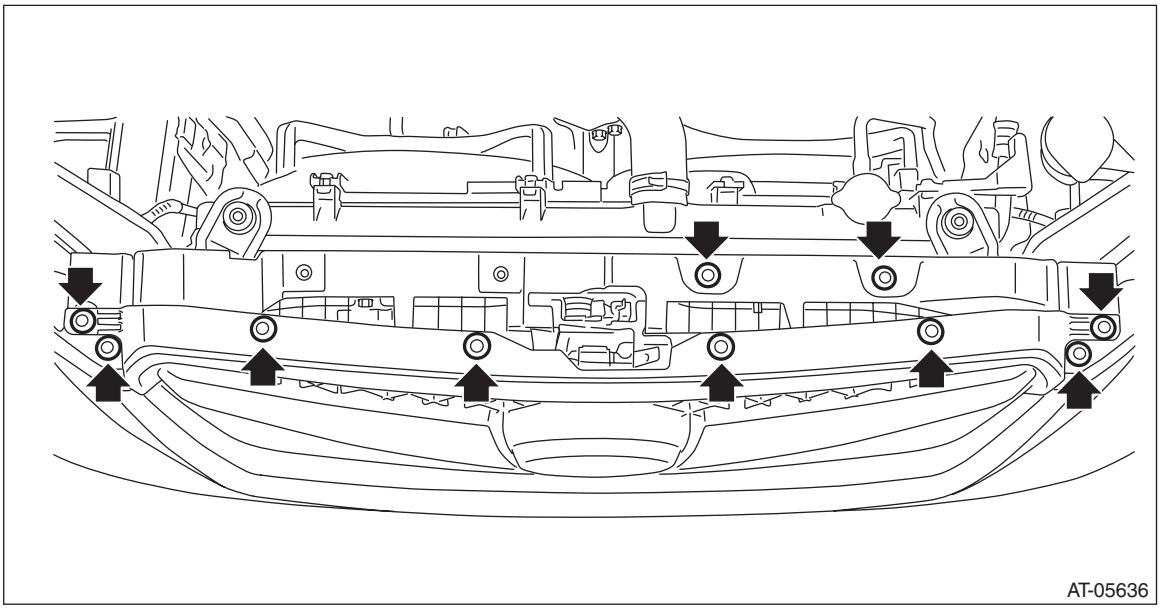

55) Install the air intake boot assembly. <Ref. to IN(H4SO)-8, INSTALLATION, Air Intake Boot.>
56) Install the air intake duct. <Ref. to IN(H4SO)-9, INSTALLATION, Air Intake Duct.>
57) Install the front wheels.
58) Connect the battery ground terminal.
59) Refill differential gear oil to adjust the differential gear oil amount. <Ref. to CVT-41, Differential Gear Oil.>
60) Refill CVTF to adjust the CVTF amount. <Ref. to CVT-37, CVTF.>
61) Perform the variator chain break-in. <Ref. to CVT-44, Variator Chain Break-in.>

CAUTION:
Always execute the variator chain break-in after the replacement of the following.
- **Variator chain replacement**
- **Primary pulley and secondary pulley replacement**

62) Perform Clear Memory 2 operation. <Ref. to CVT(diag)-18, Clear Memory Mode.>
63) Perform learning control promotion. <Ref. to CVT(diag)-20, Learning Control.>

64) Execute the rear differential inspection mode. <Ref. to DI-84, Rear Differential Inspection Mode.>

CAUTION:
Always execute the rear differential inspection mode at the replacement of the following.
- **Replacement of transmission assembly**
- **Replacement of front differential hypoid gear set**

65) Perform the road test to make sure there is no fault. <Ref. to CVT-46, INSPECTION, Road Test.>

12.Transmission Mounting System

A: REMOVAL

1) Disconnect the ground cable from battery.
2) Lift up the vehicle.
3) Remove the center exhaust pipe. <Ref. to EX(H4SO)-8, REMOVAL, Center Exhaust Pipe.>
4) Remove the heat shield cover.

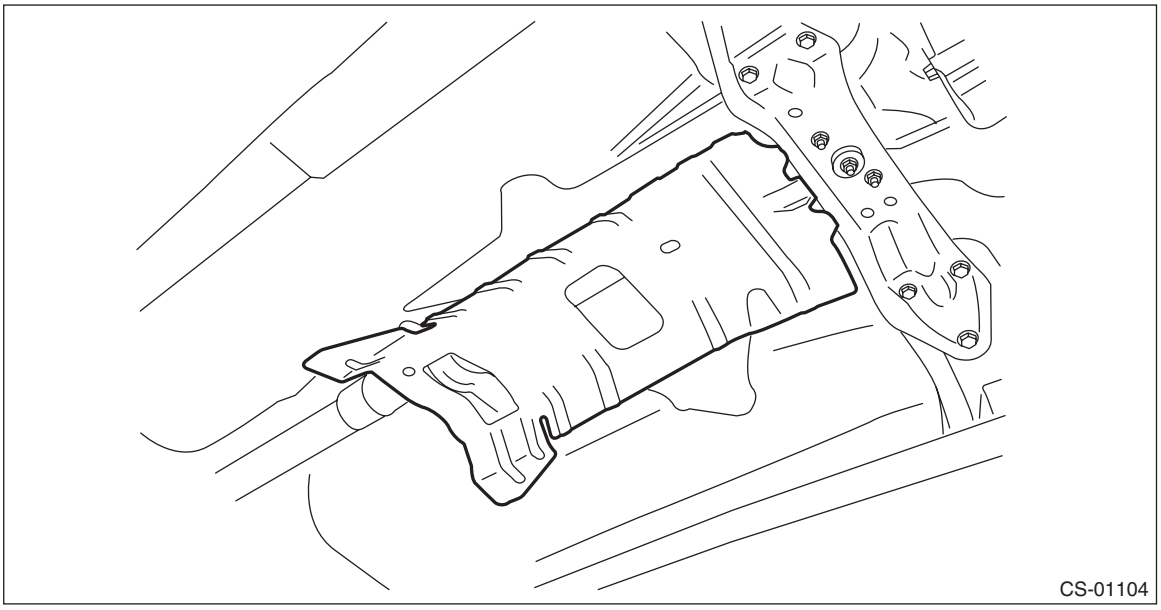

5) Set the transmission jack under the transmission. Make sure that the support plate of transmission jack does not touch the oil pan.
6) Remove the transmission rear crossmember.

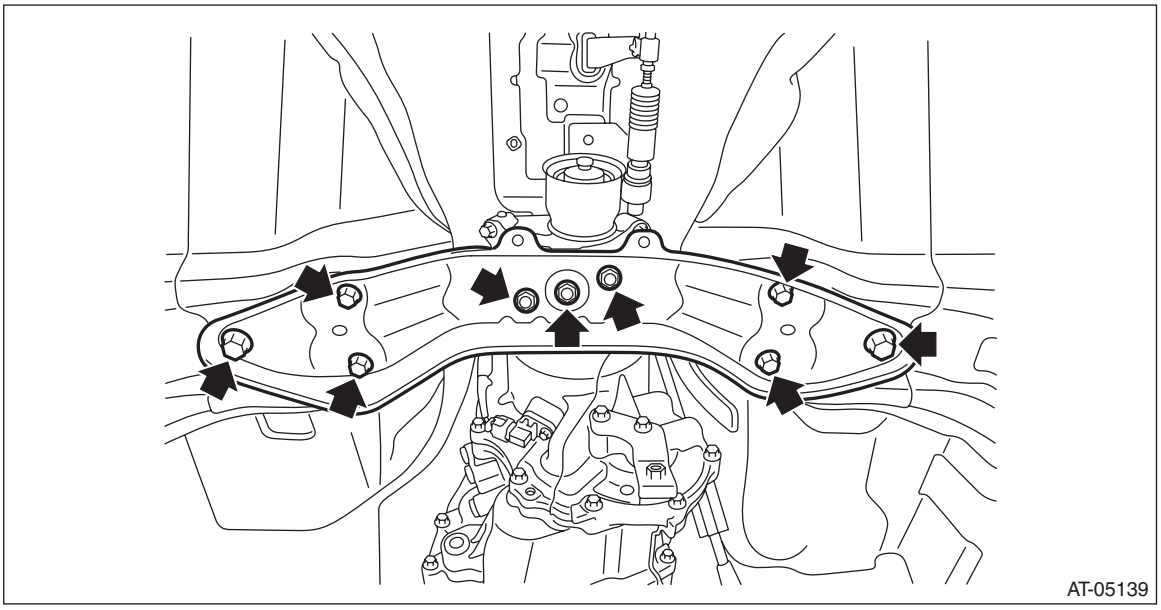

7) Remove the rear cushion rubber.

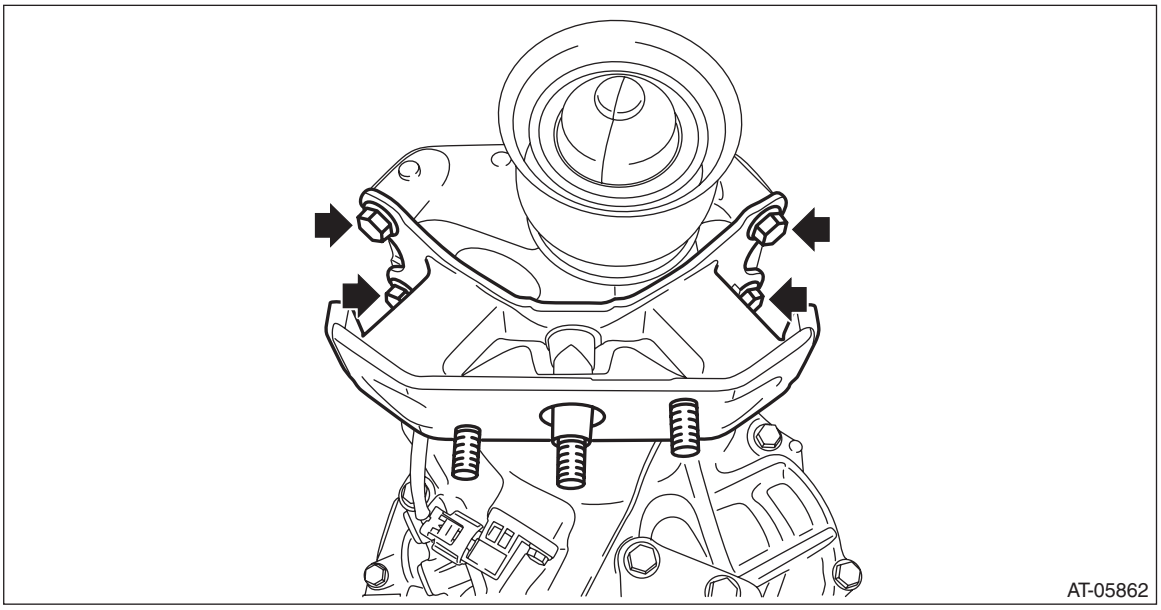

B: INSTALLATION

1) Attach the rear cushion rubber to the transmission.

Tightening torque:
40 N·m (4.1 kgf-m, 29.5 ft-lb)

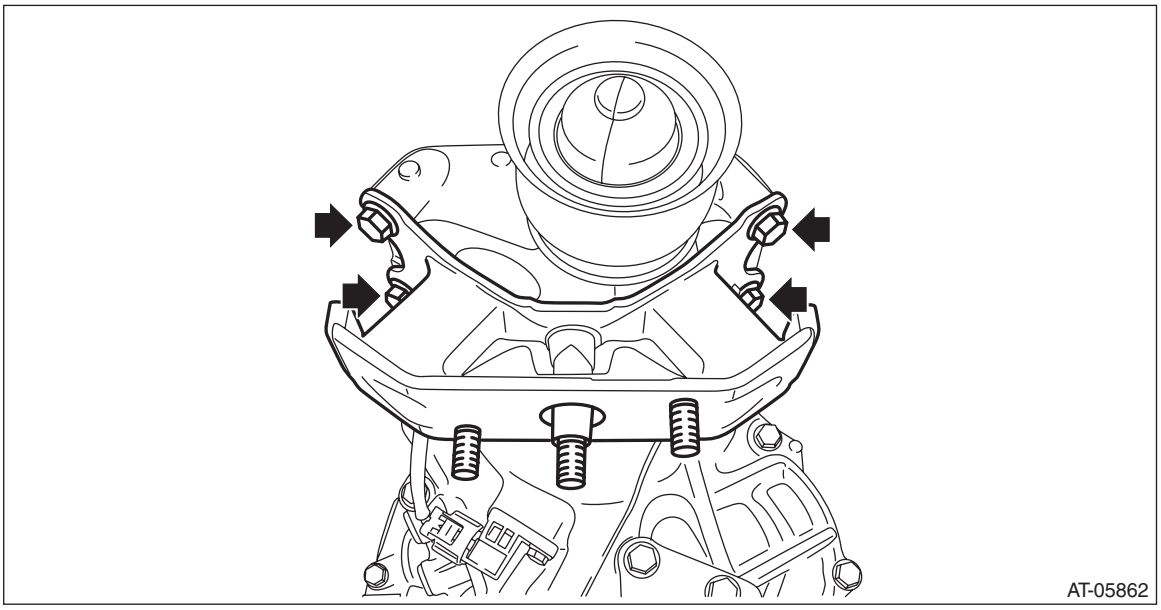

2) Install the crossmember.

Tightening torque:
T1: 35 N·m (3.6 kgf-m, 25.8 ft-lb)
T2: 75 N·m (7.6 kgf-m, 55.3 ft-lb)

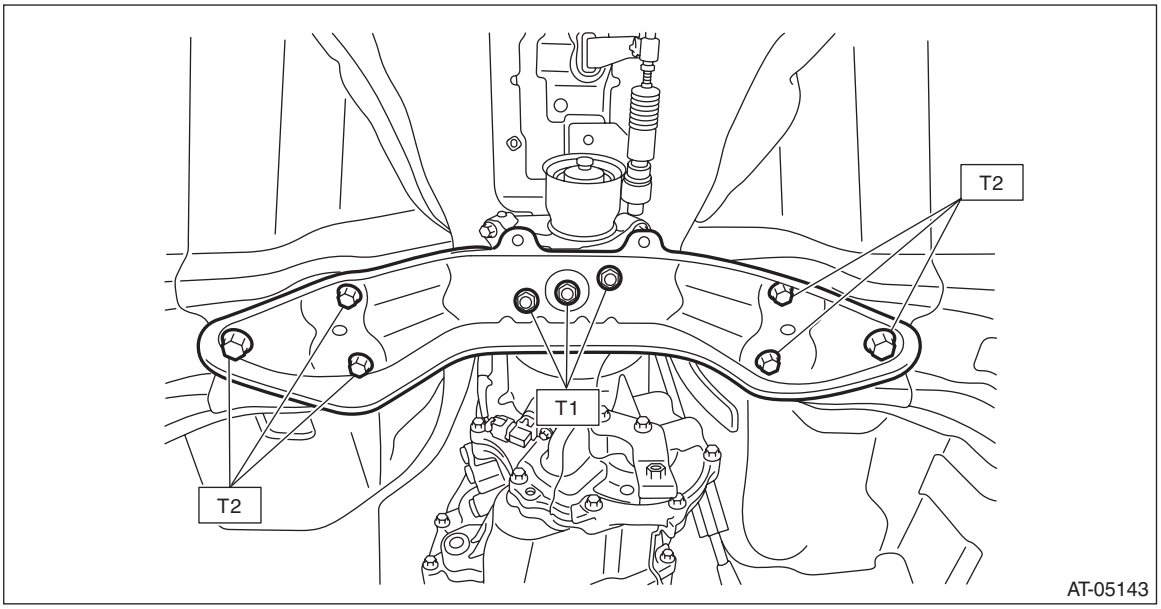

3) Remove the transmission jack.
4) Install the heat shield cover.

Tightening torque:
18 N·m (1.8 kgf-m, 13.3 ft-lb)

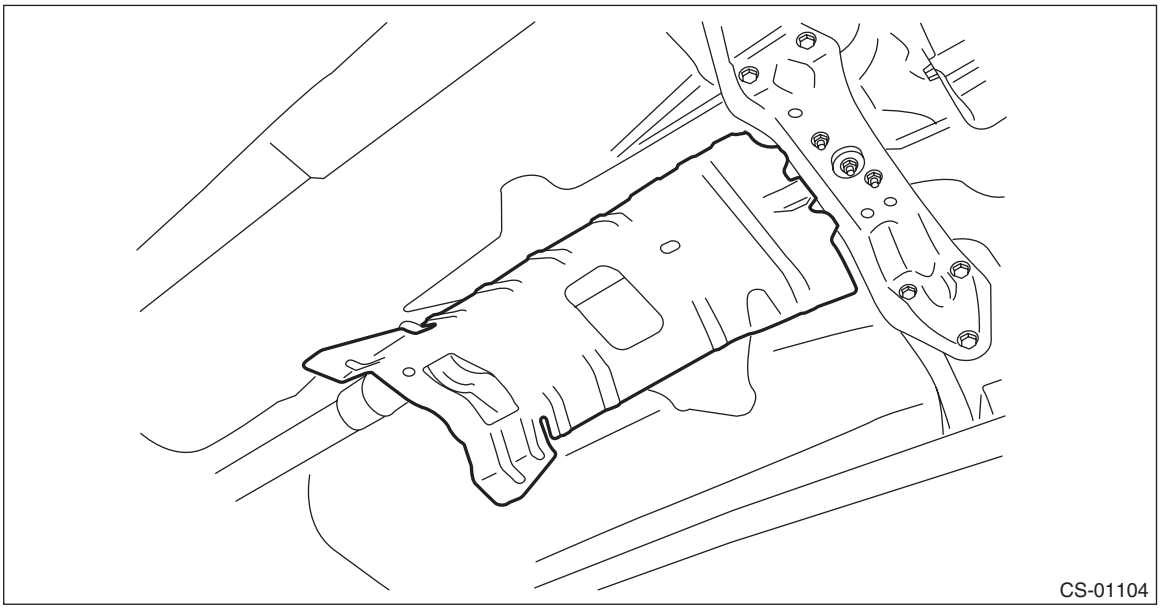

5) Install the center exhaust pipe. <Ref. to EX(H4SO)-8, INSTALLATION, Center Exhaust Pipe.>
6) Connect the battery ground terminal.

C: INSPECTION

- Check the crossmember for bends or damage.
- Check that the cushion rubber is not stiff, cracked or otherwise damaged.

13.Extension Case Oil Seal

A: INSPECTION

Check for leakage of CVTF from the joint section of transmission and propeller shaft. If a leak is found, inspect the propeller shaft and replace the oil seal.

B: REPLACEMENT

CAUTION:
Immediately after the vehicle has been running or after idling for a long time, the differential gear oil will be hot. Be careful not to burn yourself.

1) Lift up the vehicle.
2) Clean the transmission exterior.
3) Remove the center exhaust pipe. <Ref. to EX(H4SO)-8, REMOVAL, Center Exhaust Pipe.>
4) Remove the heat shield cover.

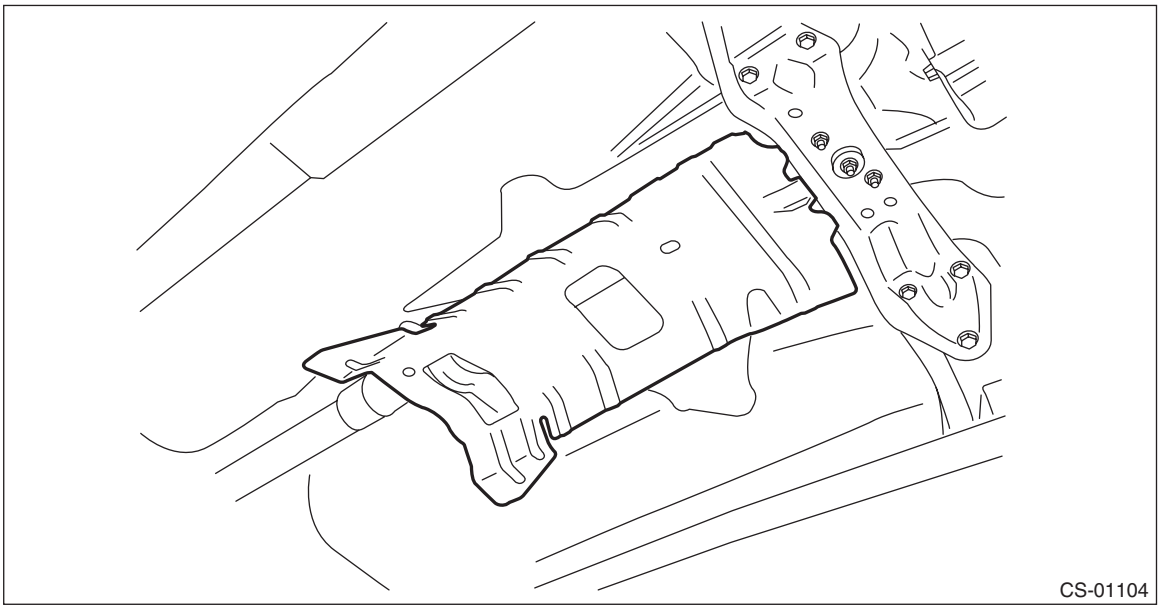

5) Remove the propeller shaft. <Ref. to DS-10, REMOVAL, Propeller Shaft.>
6) Using a screwdriver or ST, remove the oil seal trying not to damage the extension case.
ST 398527700 PULLER ASSY
7) Using the ST, install the oil seal.

NOTE:
Use a new oil seal.
ST 498057300 OIL SEAL DRIFT
8) Install the propeller shaft. <Ref. to DS-11, INSTALLATION, Propeller Shaft.>

9) Install the heat shield cover.

Tightening torque:
18 N·m (1.8 kgf-m, 13.3 ft-lb)

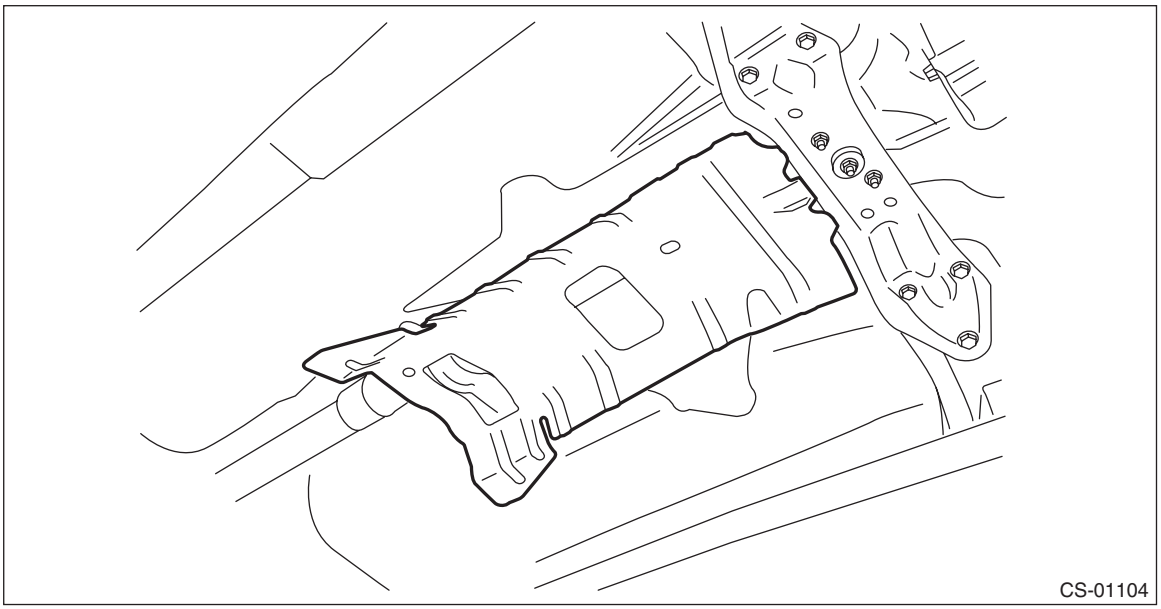

10) Install the center exhaust pipe. <Ref. to EX(H4SO)-8, INSTALLATION, Center Exhaust Pipe.>
11) Adjust the CVTF level and check there is no leakage. <Ref. to CVT-37, ADJUSTMENT, CVTF.>

14.Differential Side Retainer Oil Seal

A: INSPECTION

Check for leakage of gear oil from differential side retainer oil seal part. If there is an oil leak, inspect the front drive shaft and replace the oil seal.

B: REPLACEMENT

CAUTION:
• Immediately after the vehicle has been running or after idling for a long time, the differential gear oil will be hot. Be careful not to burn yourself.
• Be careful not to spill the differential gear oil on exhaust pipe to prevent it from emitting smoke or fire. If differential gear oil is spilled on the exhaust pipe, wipe it off completely.
1) Lift up the vehicle, and remove the front wheels.
2) After pulling off the cotter pin and removing the castle nut, use a puller to remove the tie-rod end from the knuckle arm.

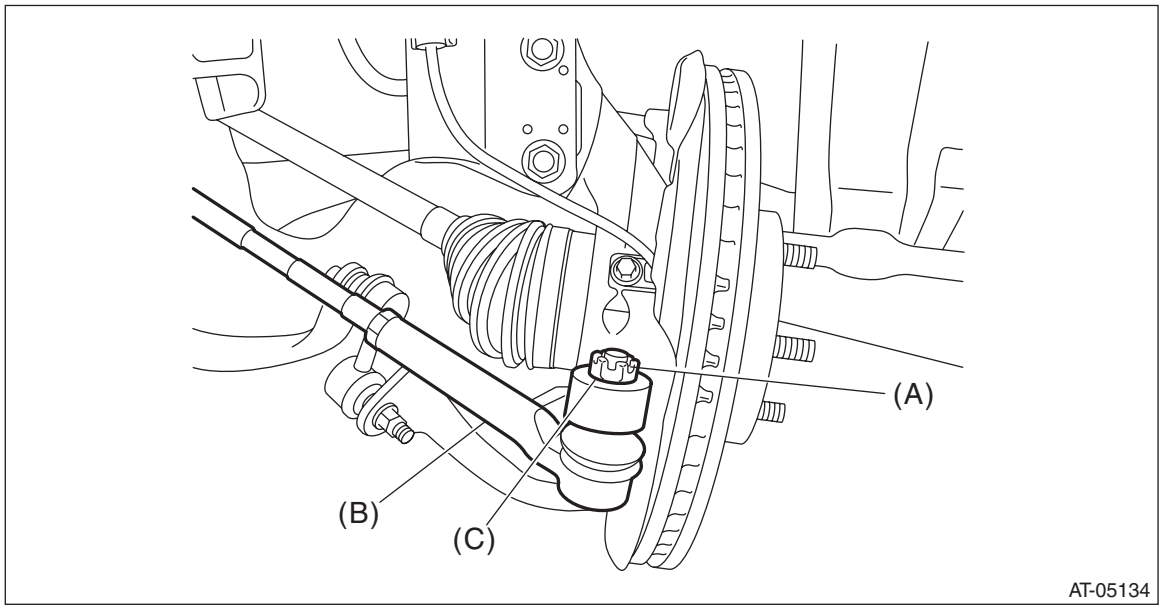

(A) Cotter pin
(B) Tie-rod end
(C) Castle nut

3) Lift up the vehicle.
4) Remove the center exhaust pipe. <Ref. to EX(H4SO)-8, REMOVAL, Center Exhaust Pipe.>

5) Remove the differential gear oil drain plug using TORX® bit T70, and then drain differential gear oil.

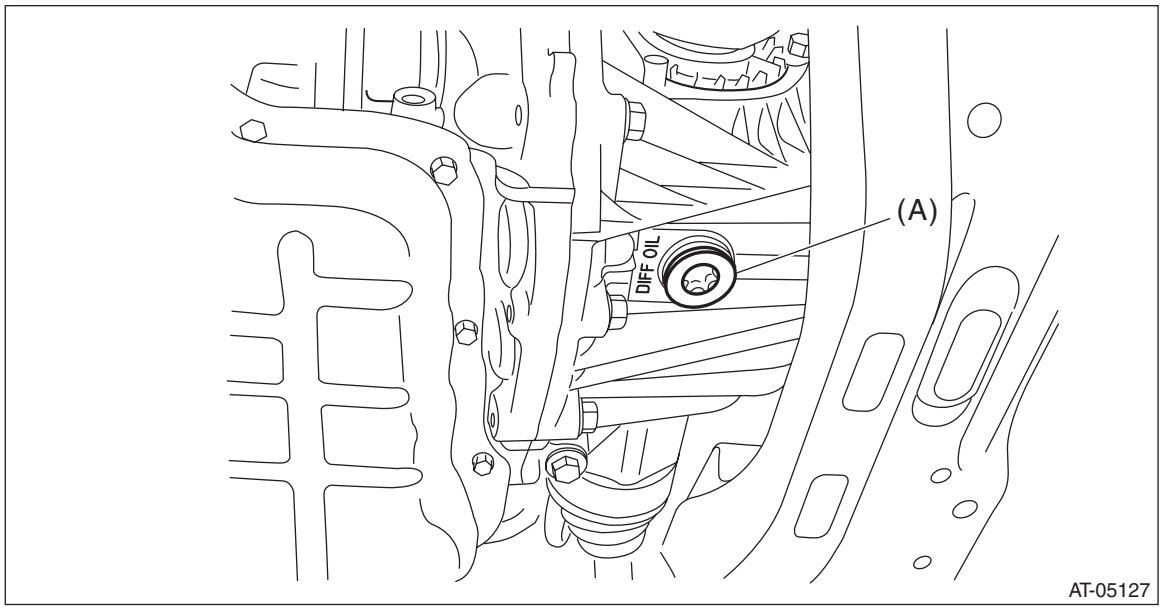

(A) Differential gear oil drain plug

6) Tighten the differential gear oil drain plug.

NOTE:
Use a new gasket.

Tightening torque:
70 N·m (7.1 kgf-m, 51.6 ft-lb)

7) Remove the stabilizer link. <Ref. to FS-29, REMOVAL, Front Stabilizer.>
8) Disconnect the ball joint and housing.
9) Holding the joint of front drive shaft from transmission side, pull out the drive shaft from transmission with care not to stretch the boot.
10) Remove the differential side retainer oil seal using driver wrapped with vinyl tape etc.

11) Using the ST, install the differential side retainer oil seal by lightly tapping with a hammer.
ST 18675AA000 DIFFERENTIAL SIDE OIL SEAL INSTALLER

NOTE:
- Apply differential gear oil to the oil seal lips.
- Oil seal has an identification mark (R, L). When installing oil seals, do not confuse the left and right.

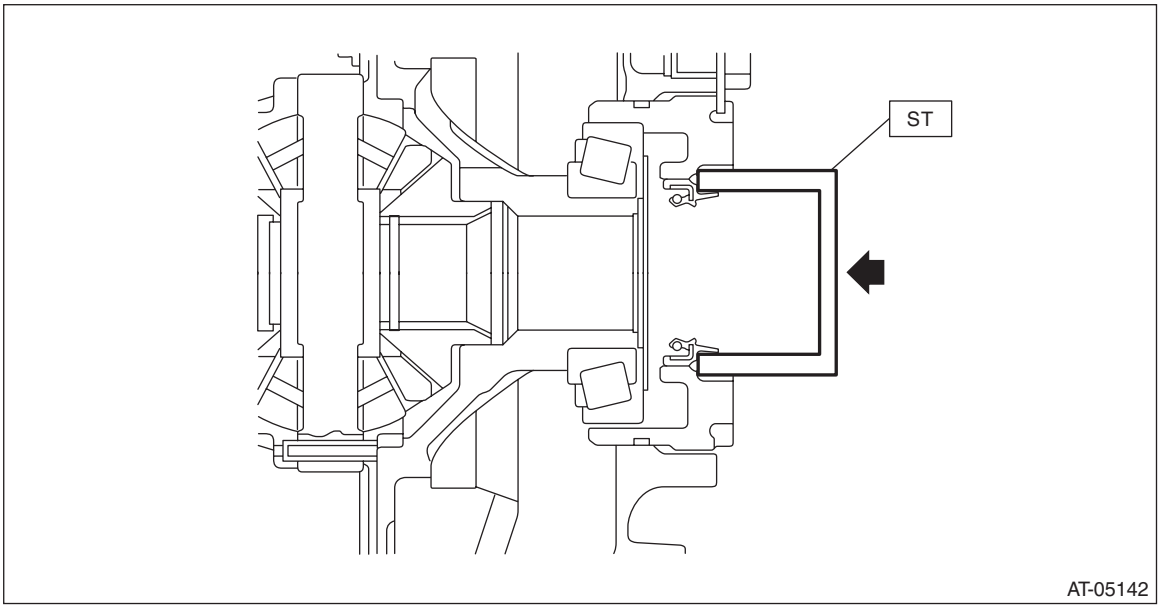

12) Set the ST to side retainer.
ST 28399SA010 OIL SEAL PROTECTOR

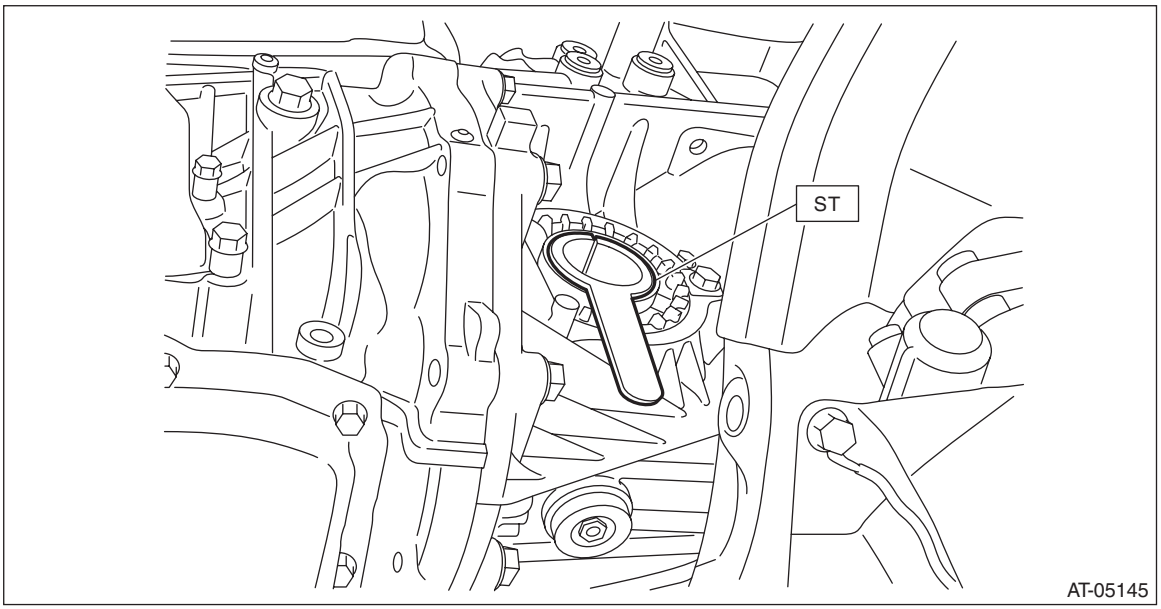

13) Replace the circlip of the drive shaft with a new part.
14) Insert the front drive shaft spline section into transmission and remove the ST (DIFFERENTIAL SIDE OIL SEAL INSTALLER).
15) Insert the drive shaft into the transmission securely by pressing the housing from outside of the vehicle.

16) Insert the ball joint into housing and secure with bolt.

Tightening torque:
50 N·m (5.1 kgf-m, 36.9 ft-lb)

CAUTION:
- **Do not apply grease to the tapered portion of ball stud.**
- **Before tightening, make sure the lower side of housing and stepped section of ball joint are in contact.**

17) Install the stabilizer link.

Tightening torque:
60 N·m (6.1 kgf-m, 44.3 ft-lb)

18) Install the center exhaust pipe. <Ref. to EX(H4SO)-8, INSTALLATION, Center Exhaust Pipe.>
19) Lower the vehicle.
20) Connect the tie-rod end and knuckle arm, and attach the castle nut.

Tightening torque:
27 N·m (2.75 kgf-m, 19.9 ft-lb)

CAUTION:
When connecting, do not hit the cap at the bottom of tie-rod end with hammer.

21) After tightening the castle nut to the specified tightening torque, tighten it further within 60° until the cotter pin hole is aligned with slot in the nut. Fit the cotter pin into the nut, and then bend the pin to lock.

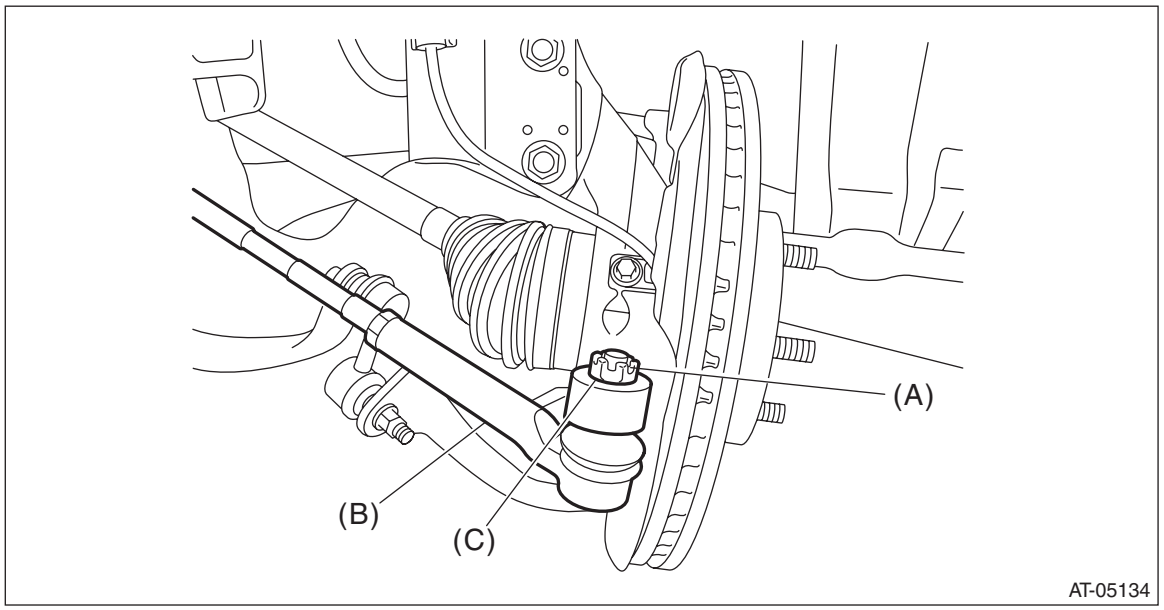

(A) Cotter pin
(B) Tie-rod end
(C) Castle nut

22) Refill differential gear oil from the charge pipe. <Ref. to CVT-41, Differential Gear Oil.>
23) Adjust the level of differential gear oil. <Ref. to CVT-41, ADJUSTMENT, Differential Gear Oil.>
24) Install the front wheels.

15.Inhibitor Switch

A: INSPECTION

When the driving condition or starter motor operation is improper, first check the shift linkage for improper operation. If the shift linkage is functioning properly, check the inhibitor switch.

1) Remove the air intake boot assembly. <Ref. to IN(H4SO)-8, REMOVAL, Air Intake Boot.>
2) Disconnect the inhibitor harness connector.

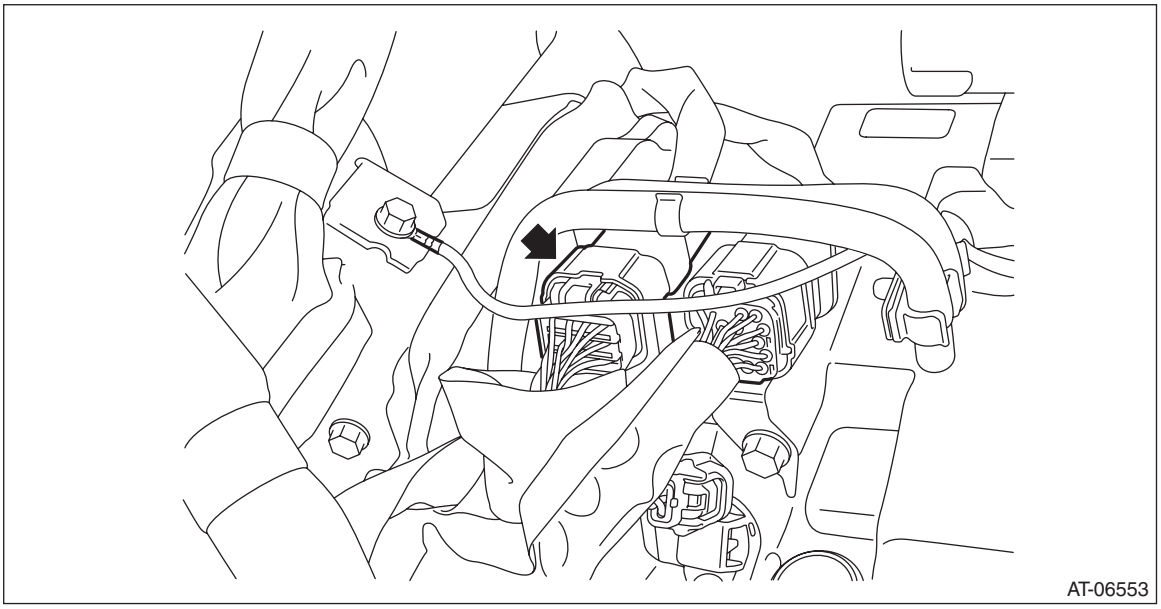

3) Check for continuity in inhibitor switch circuit by shifting the select lever in “P”, “R”, “N” and “D” respectively.

NOTE:
- Check that there is no continuity in the ignition circuit when the select lever is in the “R” and “D” ranges.
- When inhibitor switch is normal, check there is no poor contact in vehicle side connector and no open circuit in harness.

	Range	Terminal No.
Signal sent to TCM	P	4 — 3
	R	4 — 2
	N	4 — 1
	D	4 — 8
Starter circuit	P/N	12 — 11
Back-up light circuit	R	10 — 9

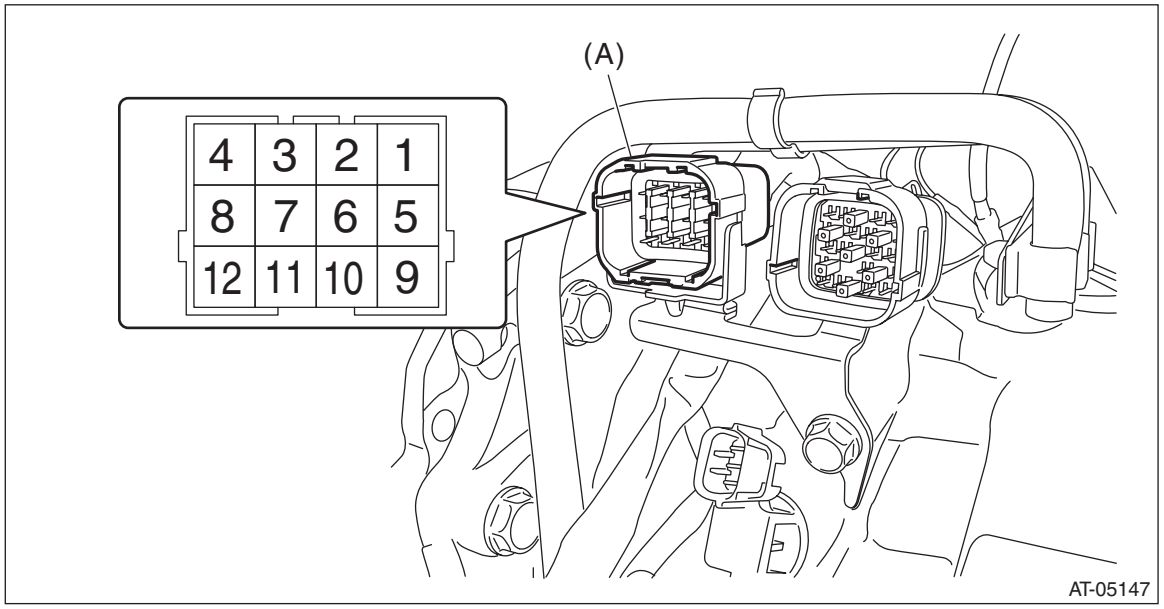

(A) Inhibitor harness connector

4) Check that there is continuity at equal points when the select lever is moved 1.5° in both directions from the “N” range.
If there is continuity in only one direction or in other points, adjust the inhibitor switch. <Ref. to CVT-97, ADJUSTMENT, Inhibitor Switch.>

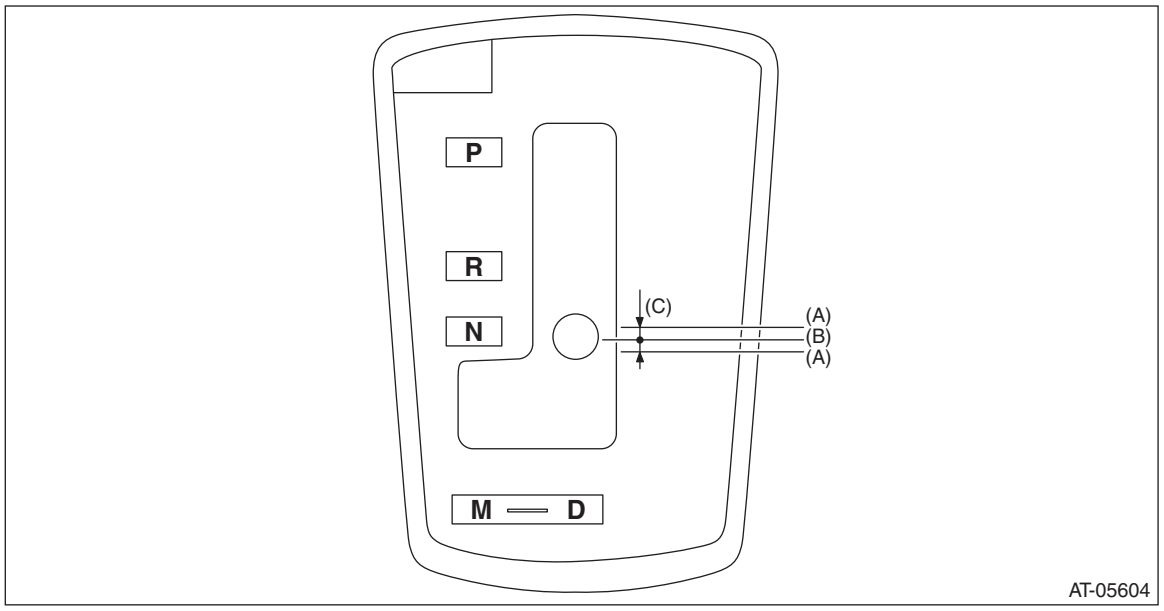

(A) Continuity does not exist.
(B) Continuity exists.
(C) 1.5°

5) Repeat the above inspection in other gear ranges. If there is fault, adjust the inhibitor switch and select cable. <Ref. to CVT-97, ADJUSTMENT, Inhibitor Switch.> <Ref. to CS-50, ADJUSTMENT, Select Cable.>

B: ADJUSTMENT

1) Shift the select lever to “N” range.
2) Loosen the two bolts holding the inhibitor switch.
3) Insert the ST vertically into the holes of the shifter arm and switch body.
ST 499267300 STOPPER PIN

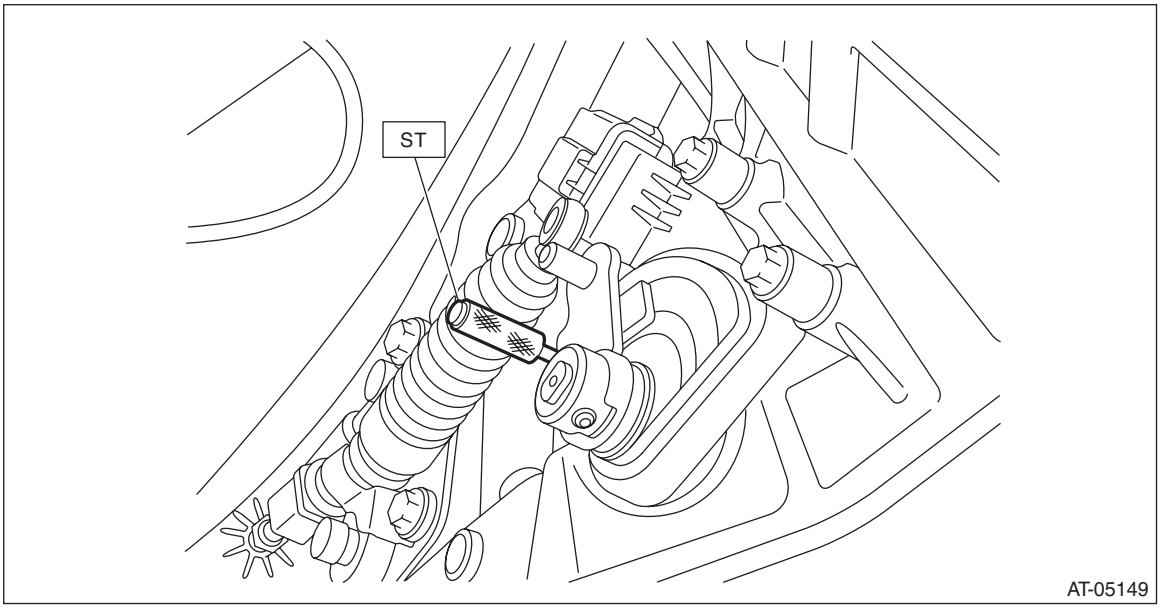

4) Tighten the two bolts holding the inhibitor switch.

Tightening torque:
5 N·m (0.5 kgf-m, 3.7 ft-lb)

5) Repeat the inspection of the inhibitor switch. If the inhibitor switch is determined to be “faulty”, replace it.

C: REMOVAL

1) Shift the select lever to “N” range.
2) Disconnect the ground cable from battery.
3) Lift up the vehicle.
4) Remove the center exhaust pipe. <Ref. to EX(H4SO)-8, REMOVAL, Center Exhaust Pipe.>
5) Remove the snap pin and washer from the shifter arm.

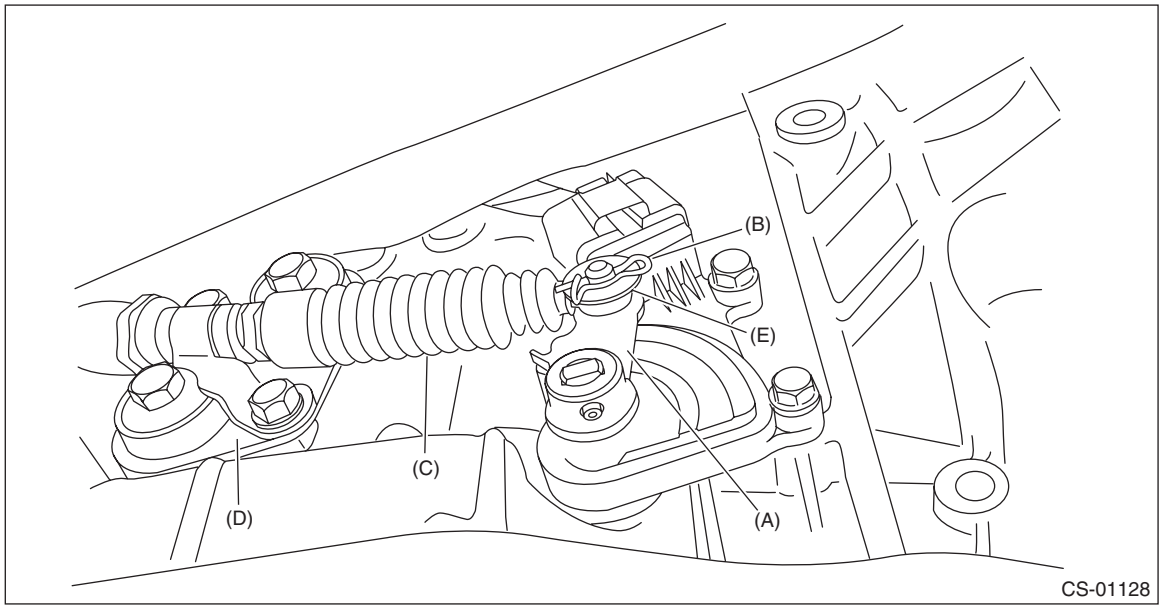

(A) Shifter arm
(B) Snap pin
(C) Select cable
(D) Plate ASSY
(E) Washer

6) Using the ST, remove the spring pin and shifter arm.
ST 398791600 REMOVER

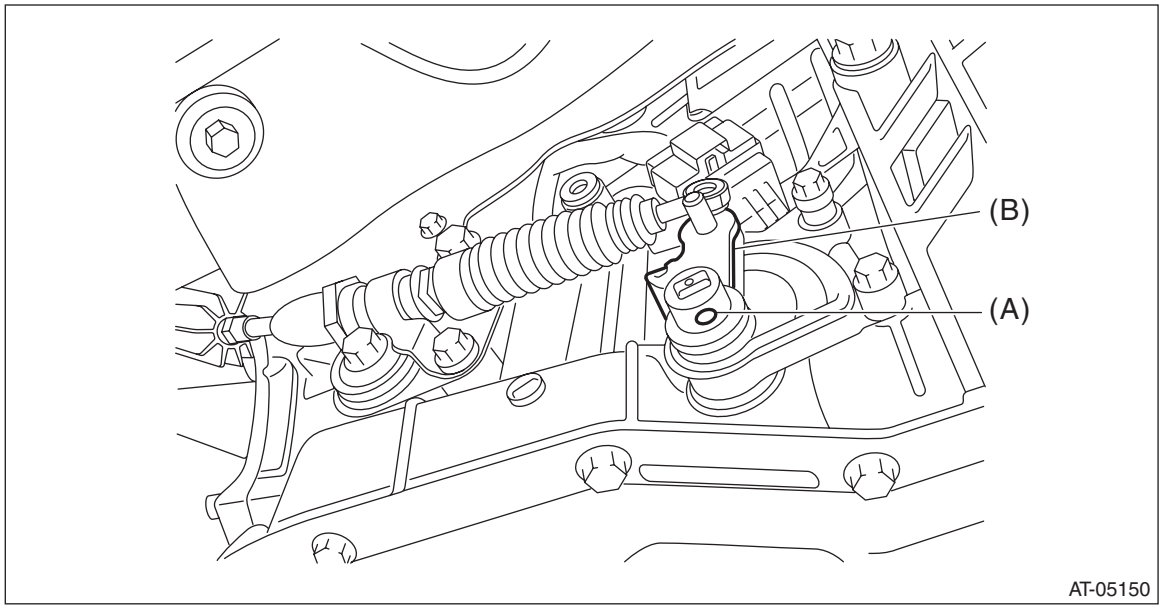

(A) Spring pin
(B) Shifter arm

7) Remove the inhibitor harness connector from inhibitor switch.
8) Remove the two inhibitor switch securing bolts.

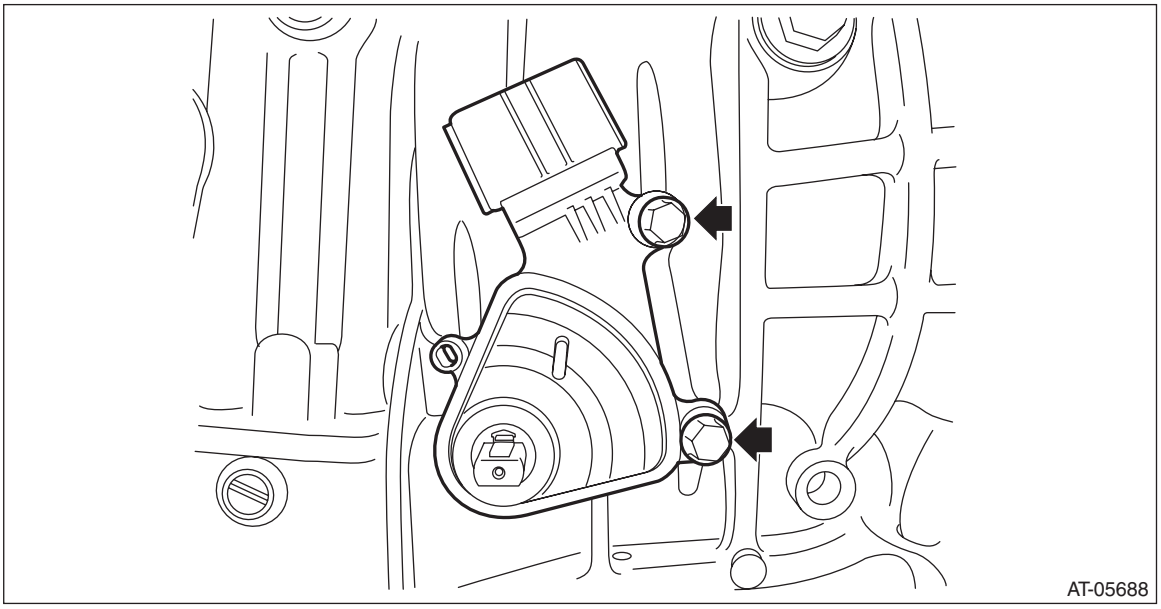

9) Remove the inhibitor switch from the transmission case.

D: INSTALLATION

1) Install the inhibitor switch to the transmission case temporarily.

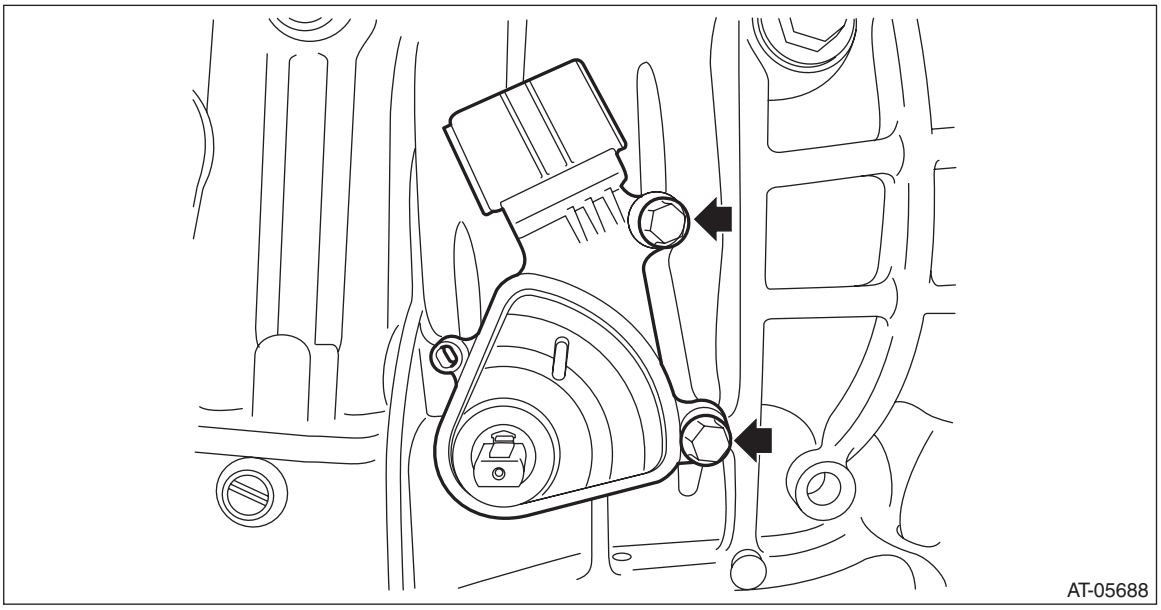

2) Connect the inhibitor harness connector to the inhibitor switch.
3) Install the shifter arm and fix with the spring pin.

NOTE:
Use new spring pin.

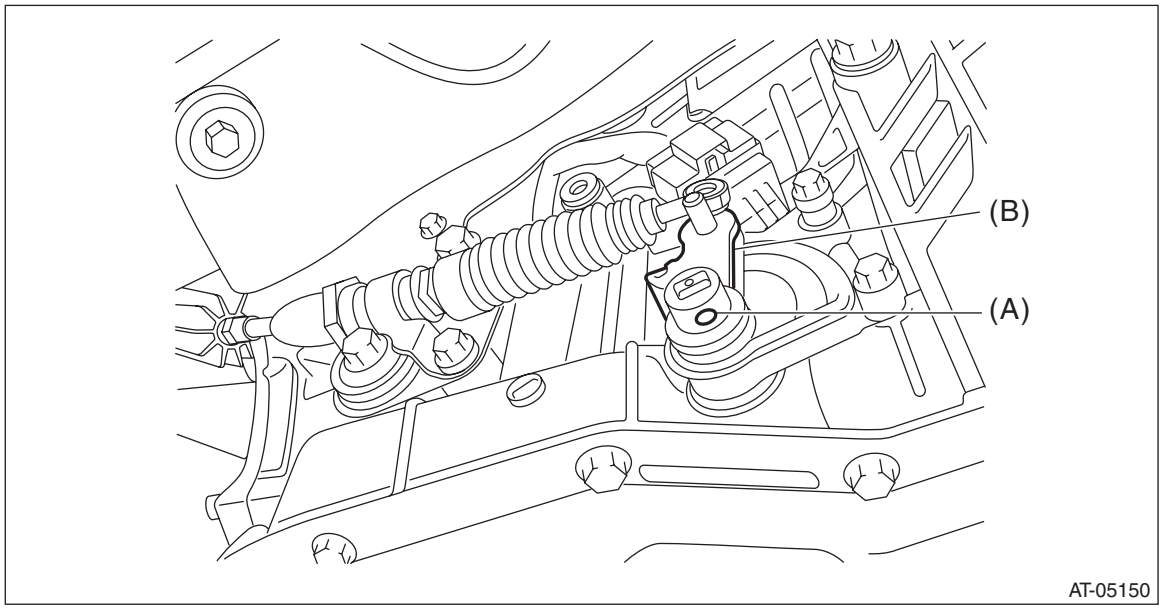

(A) Spring pin
(B) Shifter arm

4) Shift the shifter arm to “N” range.

5) Install the ST vertically in the cutout of shifter arm and the hole of switch body.
ST 499267300 STOPPER PIN

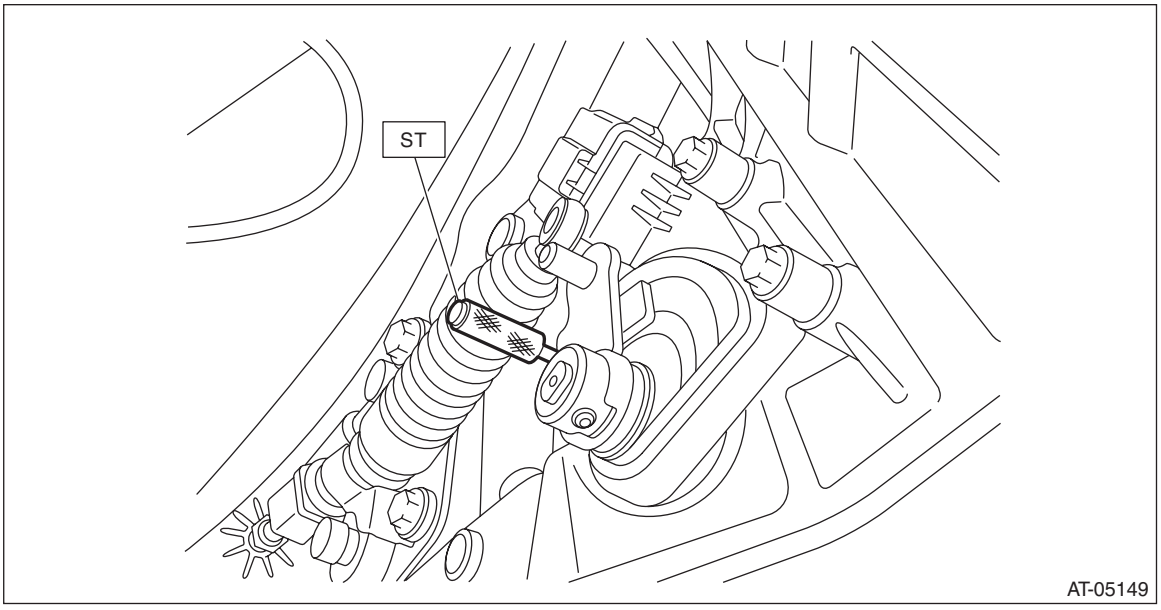

6) Tighten the two bolts holding the inhibitor switch.

Tightening torque:
5 N·m (0.5 kgf-m, 3.7 ft-lb)

7) Install the select cable to the shifter arm.
8) Install the washer and snap pin to the shifter arm.

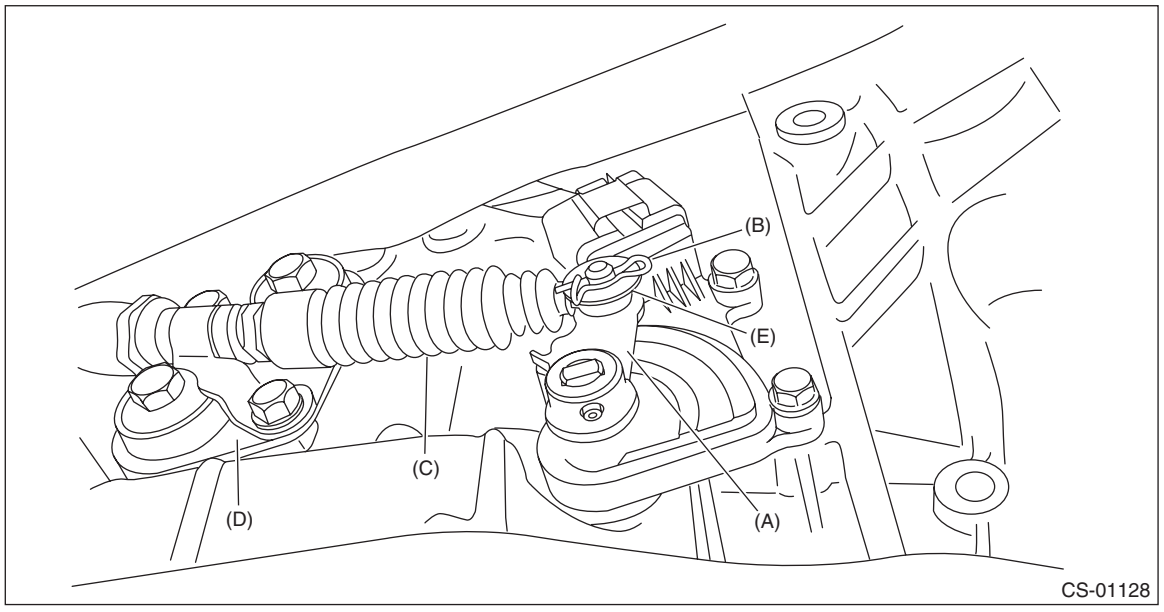

(A) Shifter arm
(B) Snap pin
(C) Select cable
(D) Plate ASSY
(E) Washer

9) Install the center exhaust pipe. <Ref. to EX(H4SO)-8, INSTALLATION, Center Exhaust Pipe.>
10) Lower the vehicle.
11) Connect the battery ground terminal.
12) Check the inhibitor switch. <Ref. to CVT-95, INSPECTION, Inhibitor Switch.>

16.Secondary Speed Sensor

A: REMOVAL

CAUTION:
Be sure to prevent water or oil from contacting the connector terminal of secondary speed sensor. If adhesion occurs, replace with a new part.

1) Remove the transmission from the vehicle. <Ref. to CVT-55, REMOVAL, Automatic Transmission Assembly.>
2) Remove the transmission cover on the transmission upper side.

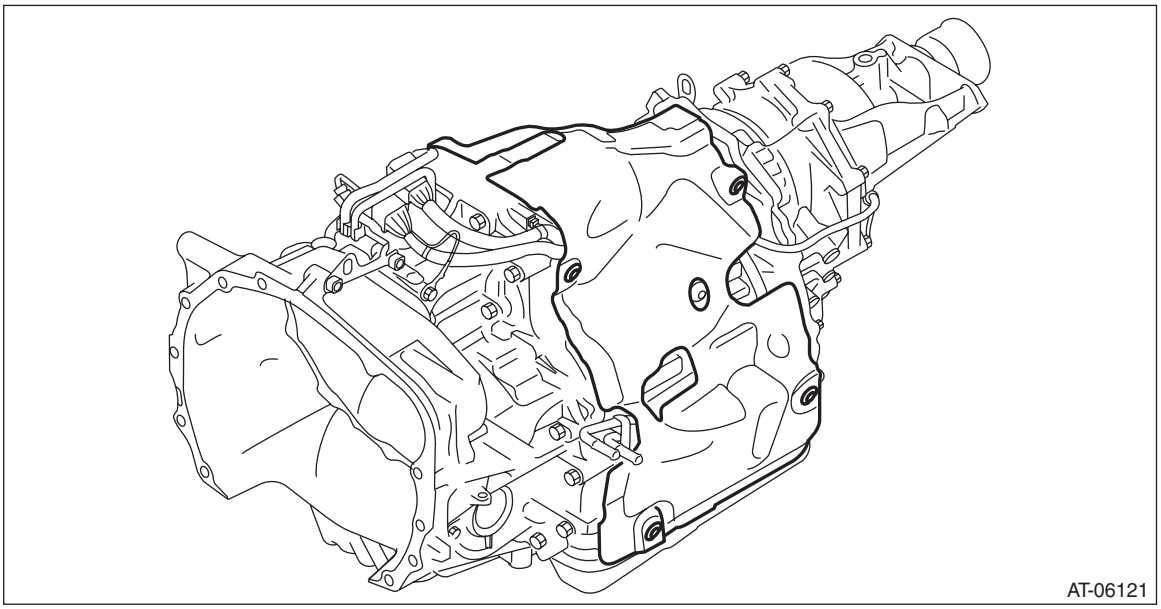
AT-06121

3) Remove the harness connector from secondary speed sensor.
4) Remove the secondary speed sensor.

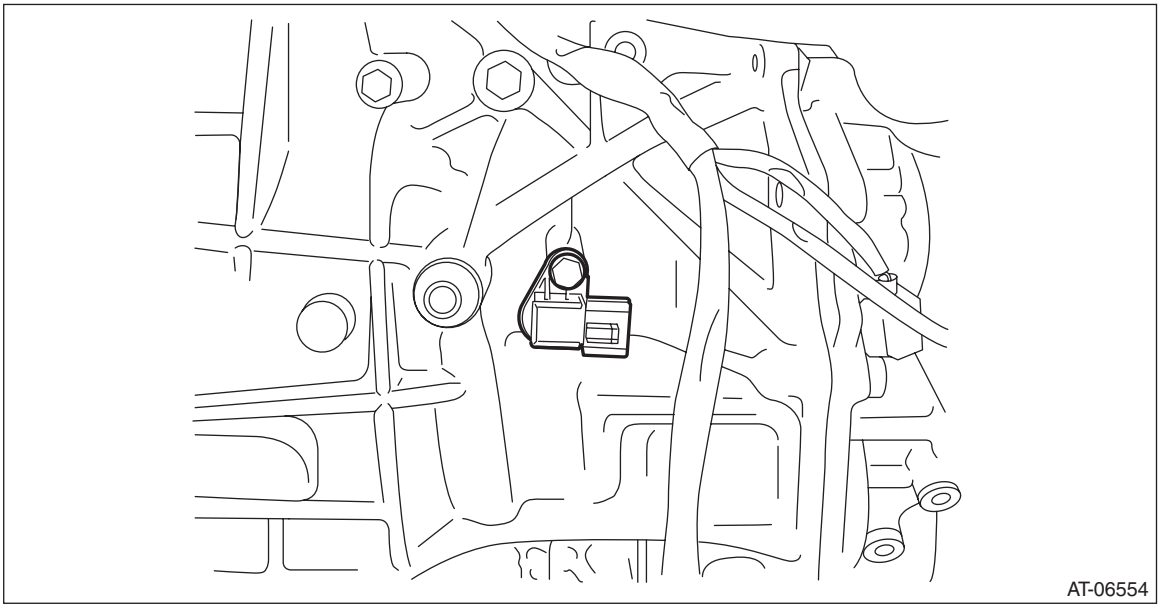
AT-06554

B: INSTALLATION

CAUTION:
Be sure to prevent water or oil from contacting the connector terminal of secondary speed sensor. If adhesion occurs, replace with a new part.
Install in the reverse order of removal.

NOTE:
- Use new O-rings.
- Apply CVTF to the O-ring.

Tightening torque:
Secondary speed sensor
5 N·m (0.5 kgf-m, 3.7 ft-lb)
Transmission cover
8 N·m (0.8 kgf-m, 5.9 ft-lb)

C: INSPECTION

1) Remove the instrument panel lower cover. <Ref. to EI-64, REMOVAL, Instrument Panel Lower Cover.>
2) Set the probe of oscilloscope to TCM harness connector.

Connector & terminal
(B54) No. 7 (+) — No. 14 (–):

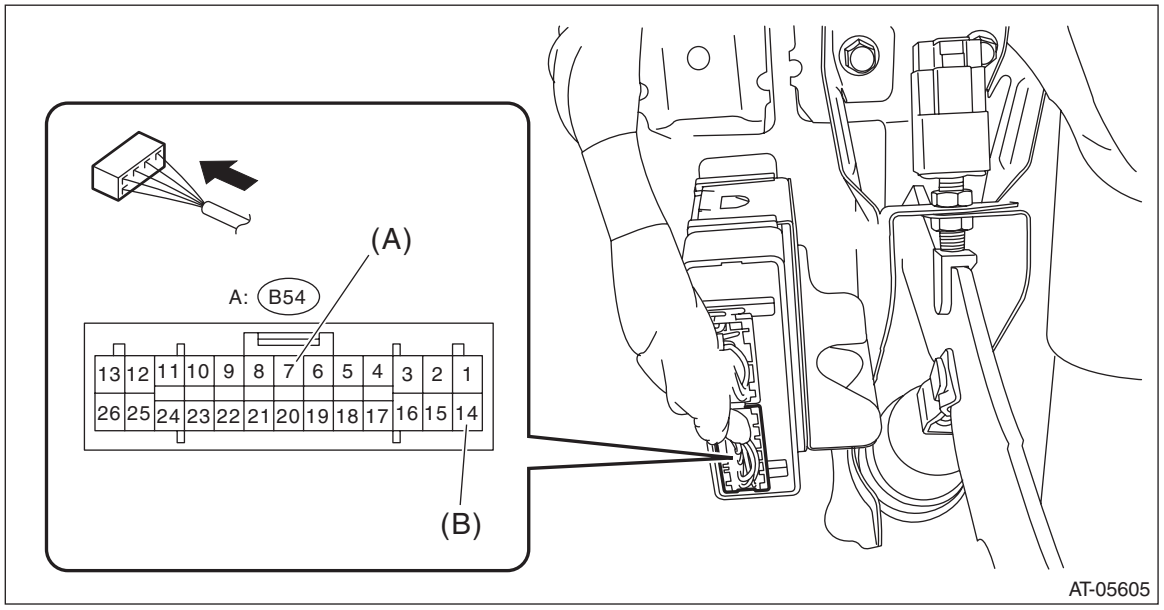

(A) + probe
(B) – probe

3) Start and warm up the engine.

4) Check the waveform of secondary speed sensor with engine idling.

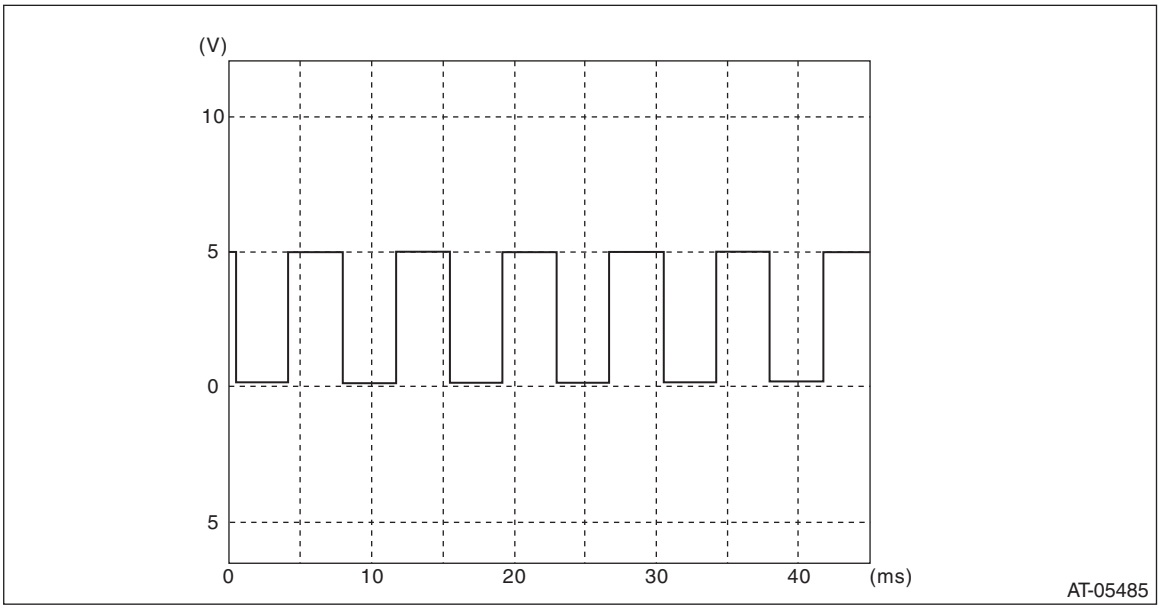

17.Primary Speed Sensor

A: REMOVAL

CAUTION:
Be sure to prevent water or oil from contacting the connector terminal of primary speed sensor. If adhesion occurs, replace with a new part.

1) Remove the air intake boot assembly. <Ref. to IN(H4SO)-8, REMOVAL, Air Intake Boot.>
2) Remove the harness connector from primary speed sensor.
3) Remove the primary speed sensor.

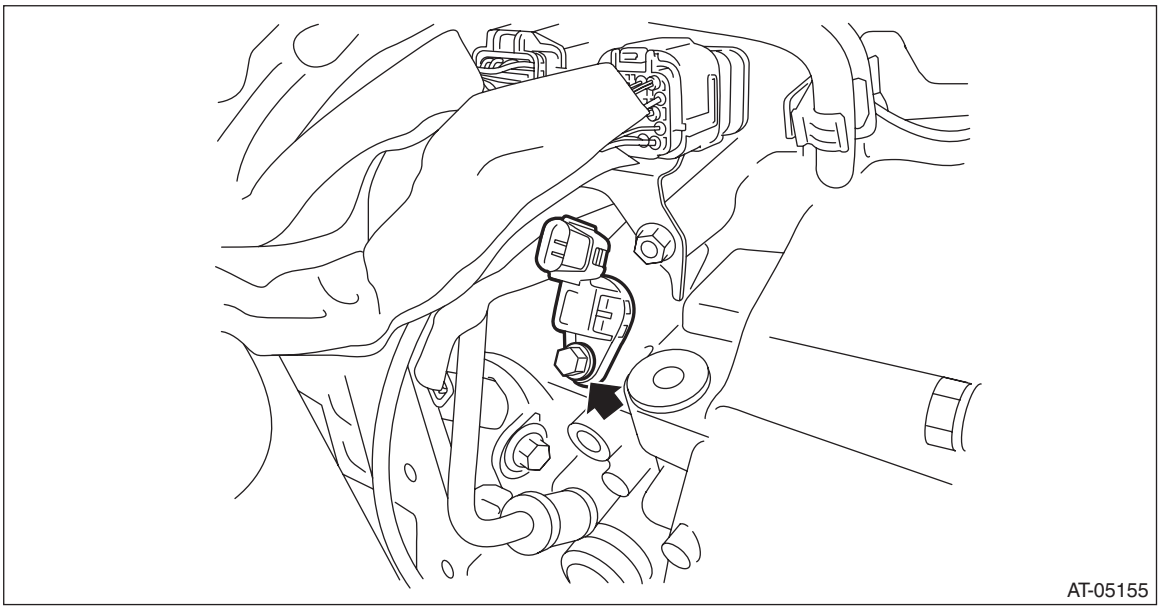

B: INSTALLATION

CAUTION:
Be sure to prevent water or oil from contacting the connector terminal of primary speed sensor. If adhesion occurs, replace with a new part.

Install in the reverse order of removal.

NOTE:
- Use new O-rings.
- Apply CVTF to the O-ring.

Tightening torque:
5 N·m (0.5 kgf-m, 3.7 ft-lb)

C: INSPECTION

1) Remove the instrument panel lower cover. <Ref. to EI-64, REMOVAL, Instrument Panel Lower Cover.>
2) Set the probe of oscilloscope to TCM harness connector.

Connector & terminal
(B54) No. 6 (+) — No. 1 (–):

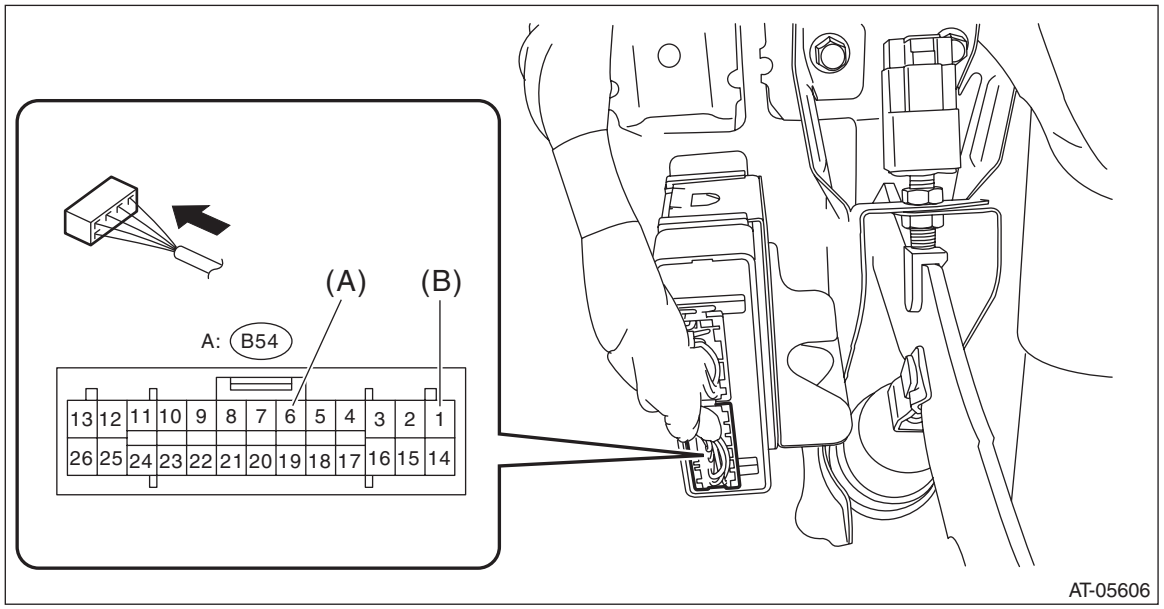

(A) + probe
(B) – probe

3) Start and warm up the engine.
4) Check the waveform of primary speed sensor with engine idling.

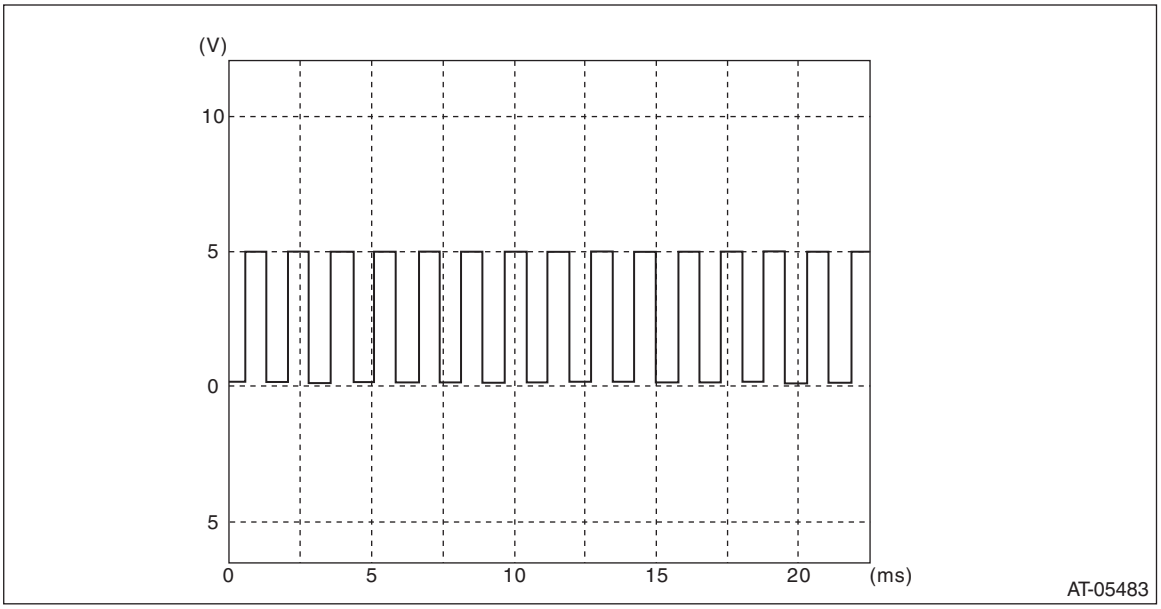

18.Front Wheel Speed Sensor

A: REMOVAL

CAUTION:
• Be sure to prevent water or oil from contacting the connector terminal of front wheel speed sensor. If adhesion occurs, replace with a new part.
• When removing front wheel speed sensor, CVTF may let out. If CVTF has leaked, adjust the CVTF level after installing the front wheel speed sensor.
1) Lift up the vehicle.
2) Clean the transmission exterior.
3) Remove the harness connector from front wheel speed sensor.
4) Remove the front wheel speed sensor.

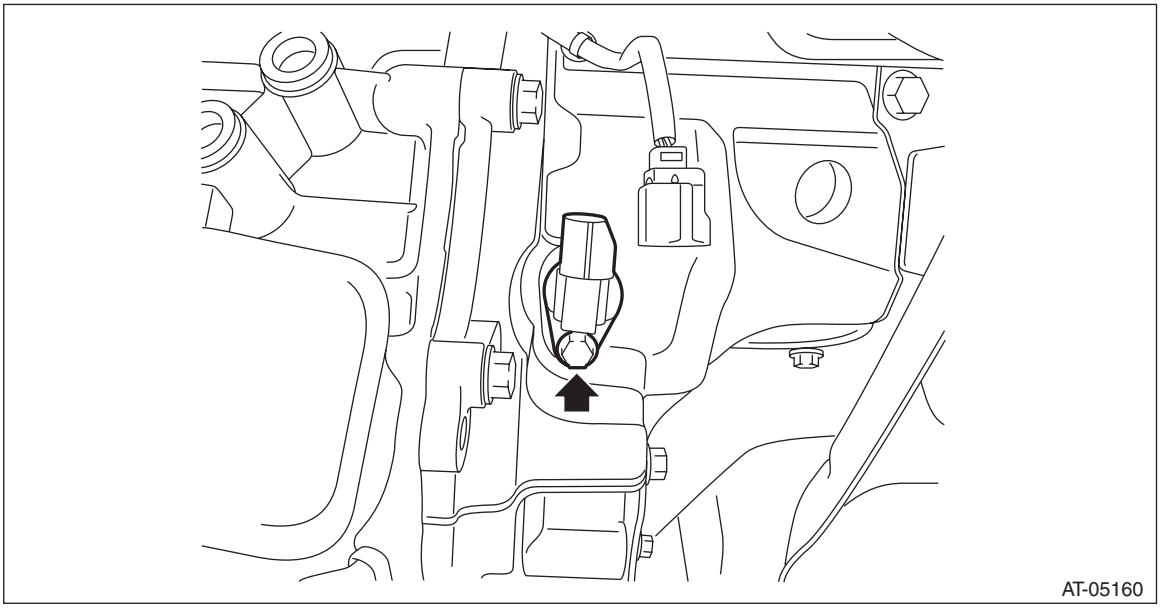

B: INSTALLATION

CAUTION:
• Be sure to prevent water or oil from contacting the connector terminal of front wheel speed sensor. If adhesion occurs, replace with a new part.
• After installing the front wheel speed sensor, adjust the CVTF level.
Install in the reverse order of removal.

NOTE:
• Use new O-rings.
• Apply CVTF to the O-ring.

Tightening torque:
5 N·m (0.5 kgf-m, 5.2 ft-lb)

C: INSPECTION

1) Remove the instrument panel lower cover. <Ref. to EI-64, REMOVAL, Instrument Panel Lower Cover.>
2) Set the probe of oscilloscope to TCM harness connector.

Connector & terminal
(B54) No. 20 (+) — No. 1 (–):

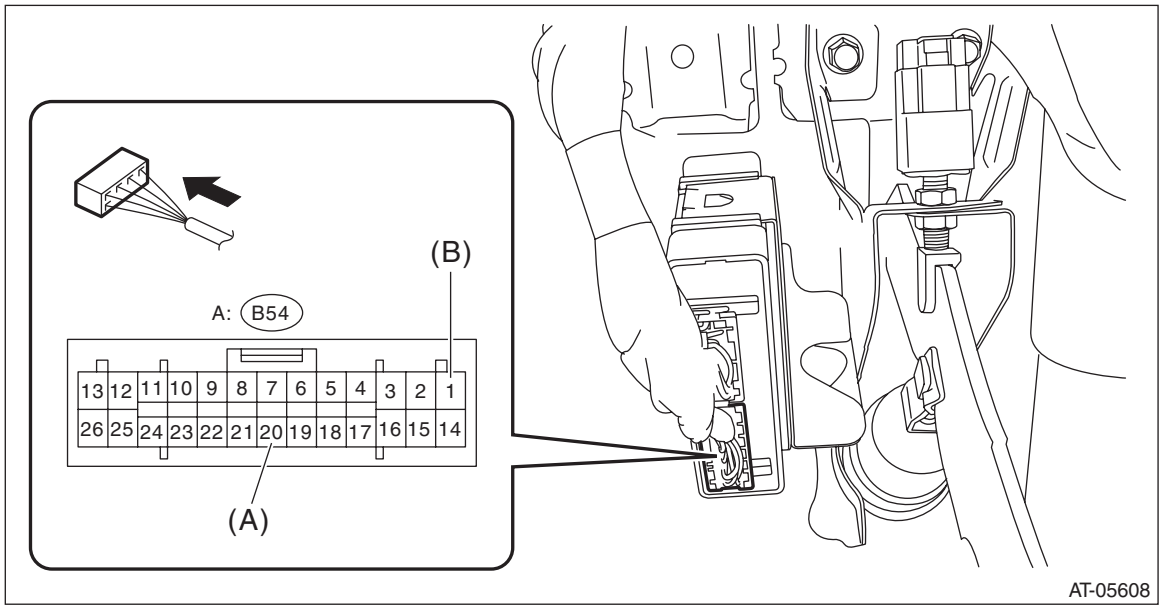

(A) + probe
(B) – probe

3) Lift up the vehicle and raise the vehicle speed up to 20 km/h (12 MPH).
4) Check the waveform of front wheel speed sensor when vehicle speed is at 20 km/h (12 MPH).

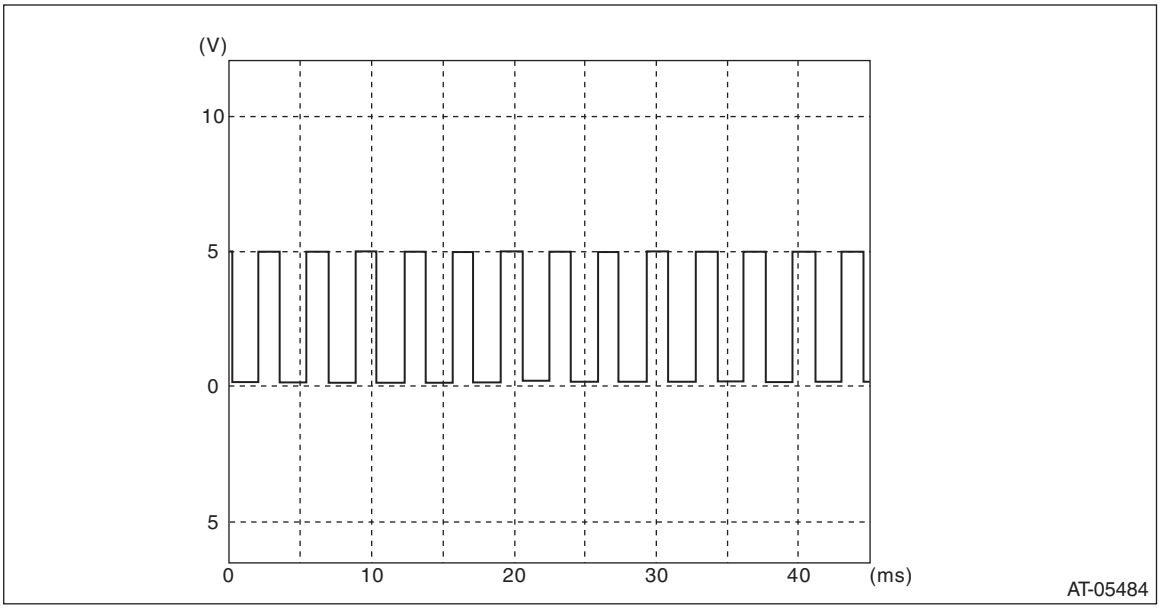

19.Secondary Pressure Sensor

A: REMOVAL

CAUTION:
• Be sure to prevent water or oil from contacting the connector terminal of secondary pressure sensor. If adhesion occurs, replace with a new part.
• When removing secondary pressure sensor, CVTF may let out. If CVTF has leaked, adjust the CVTF level after installing the secondary pressure sensor.
1) Remove the air intake boot assembly. <Ref. to IN(H4SO)-8, REMOVAL, Air Intake Boot.>
2) Remove the secondary pressure sensor connector.
3) Remove the secondary pressure sensor.

NOTE:
Use Ko-ken 3/8 12-point 27 mm (manufacturer product No. 3305M-27) deep socket.

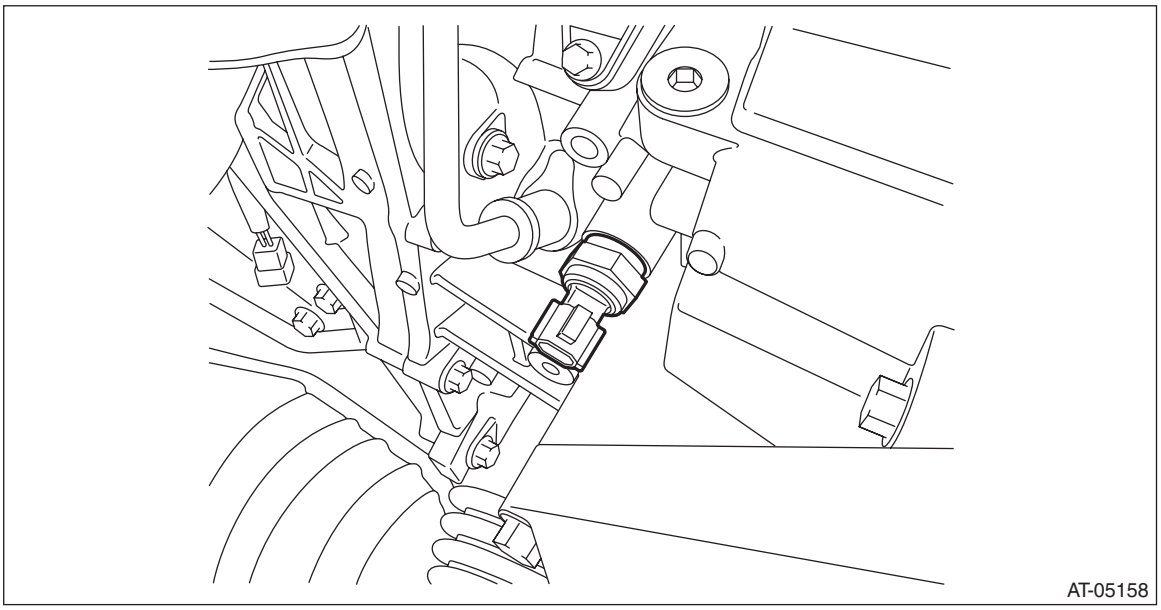

B: INSTALLATION

CAUTION:
• Be sure to prevent water or oil from contacting the connector terminal of secondary pressure sensor. If adhesion occurs, replace with a new part.
• After installing the secondary pressure sensor, adjust the CVTF level.
Install in the reverse order of removal.

NOTE:
Use new O-rings.

Tightening torque:
39 N·m (4.0 kgf-m, 28.8 ft-lb)

C: INSPECTION

1) Remove the instrument panel lower cover. <Ref. to EI-64, REMOVAL, Instrument Panel Lower Cover.>
2) Start and warm up the engine.
3) Check the voltage of secondary pressure sensor with engine idling.

Connector & terminal
(B54) No. 17 (+) — No. 15 (–):

Specification
0.7 — 0.9 V

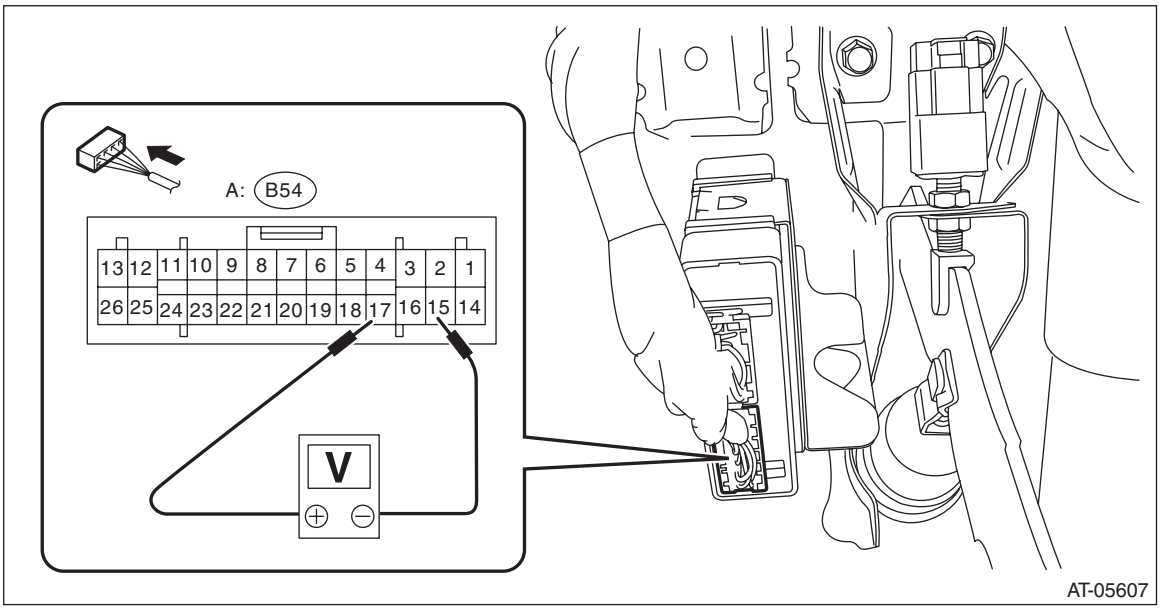

20.Control Valve Body

A: REMOVAL

CAUTION:
• Directly after the vehicle has been running or the engine has been long idle running, the CVTF is hot. Be careful not to burn yourself.
• Be careful not to spill CVTF on the exhaust pipe to prevent it from emitting smoke or causing a fire. If gear oil adheres, wipe it off completely.

NOTE:
The control valve body is replaced as an assembly only, because it is a non-disassembly part.
1) Lift up the vehicle.
2) Clean the transmission exterior.
3) Remove the CVTF drain plug to drain CVTF.

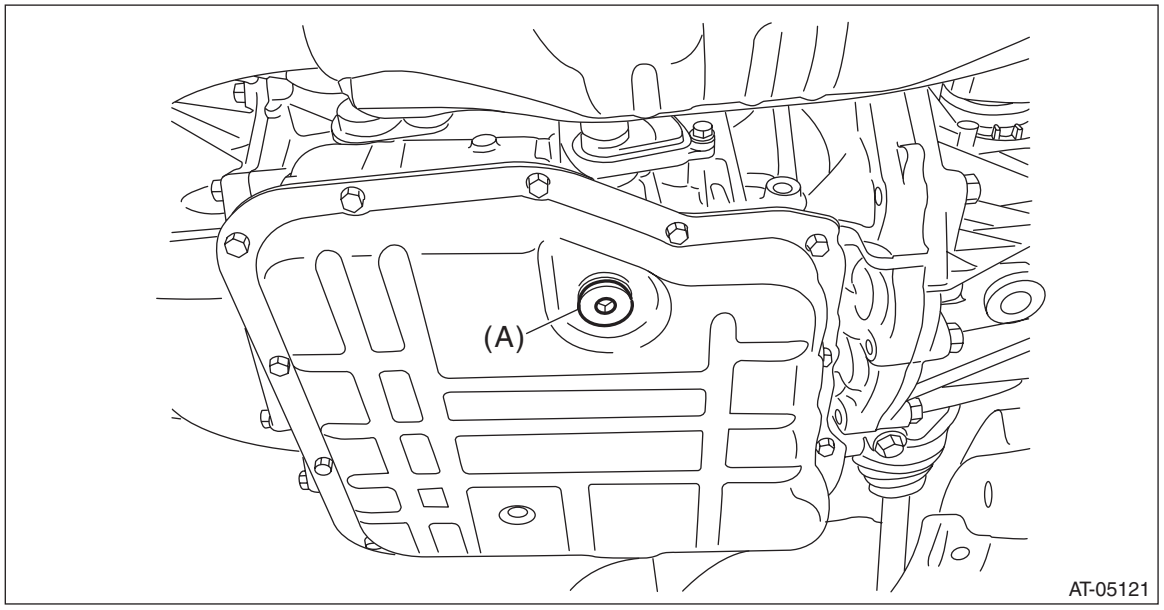

(A) CVTF drain plug

4) Install the CVTF drain plug.

NOTE:
Use a new gasket.

Tightening torque:
20 N·m (2.1 kgf-m, 14.8 ft-lb)

5) Remove the oil pan.

CAUTION:
Be careful not to allow foreign matter such as dust or dirt to enter the oil pan.

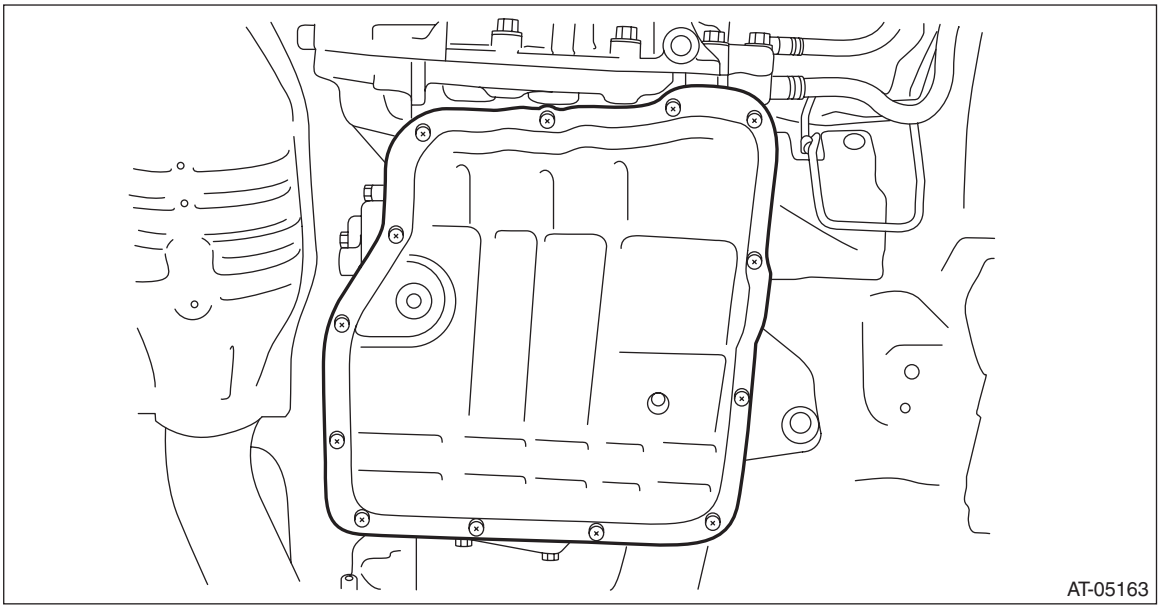

6) Remove the magnet.
7) Disconnect the control valve harness connector.

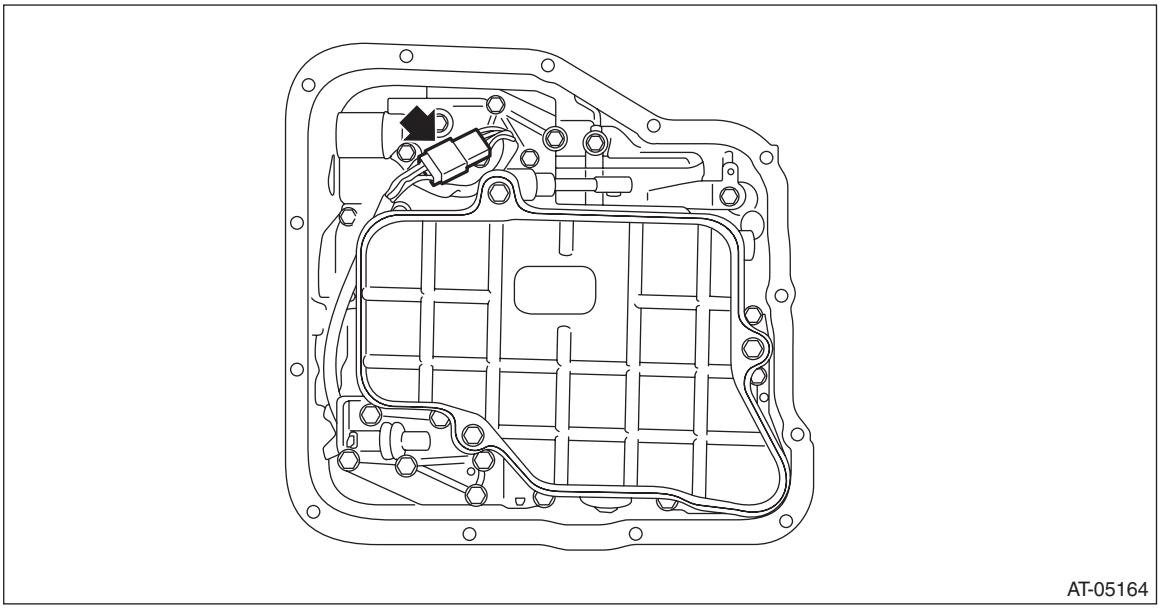

8) Remove the oil strainer.

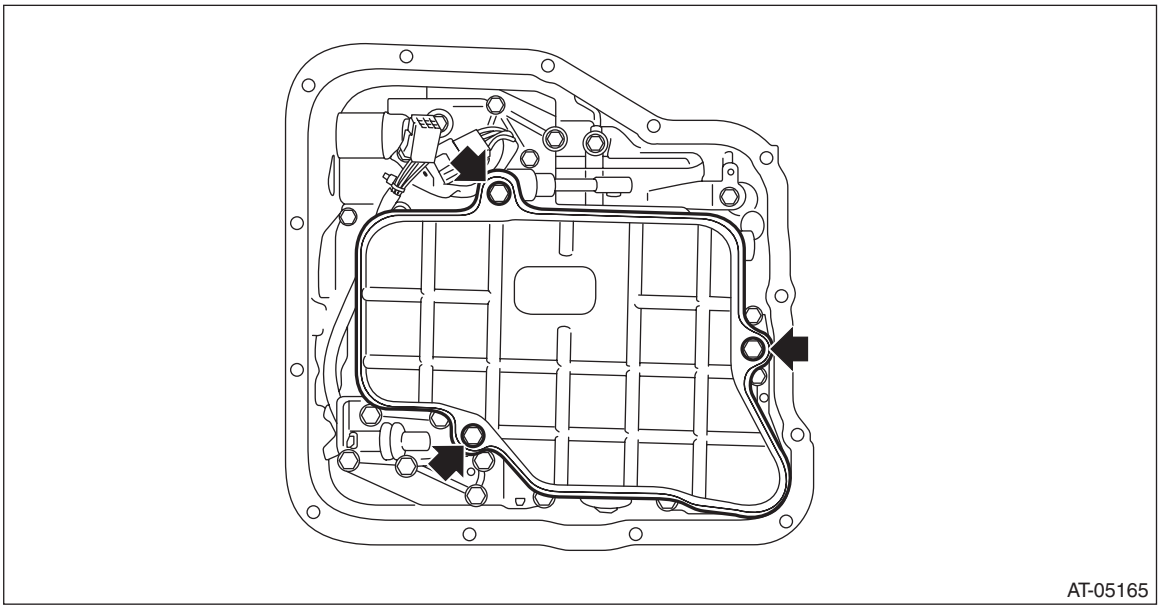

9) Remove the control valve body.

CAUTION:
Do not let the manual valve drop off.

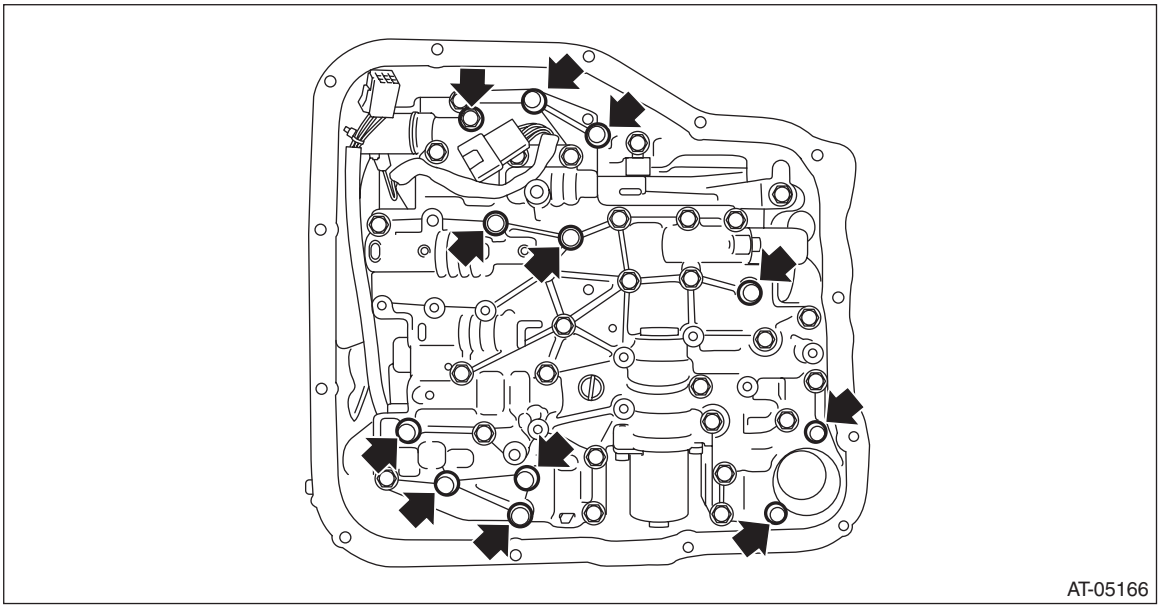

10) Remove the pressure pipe.

NOTE:
It may be located in transmission case side.

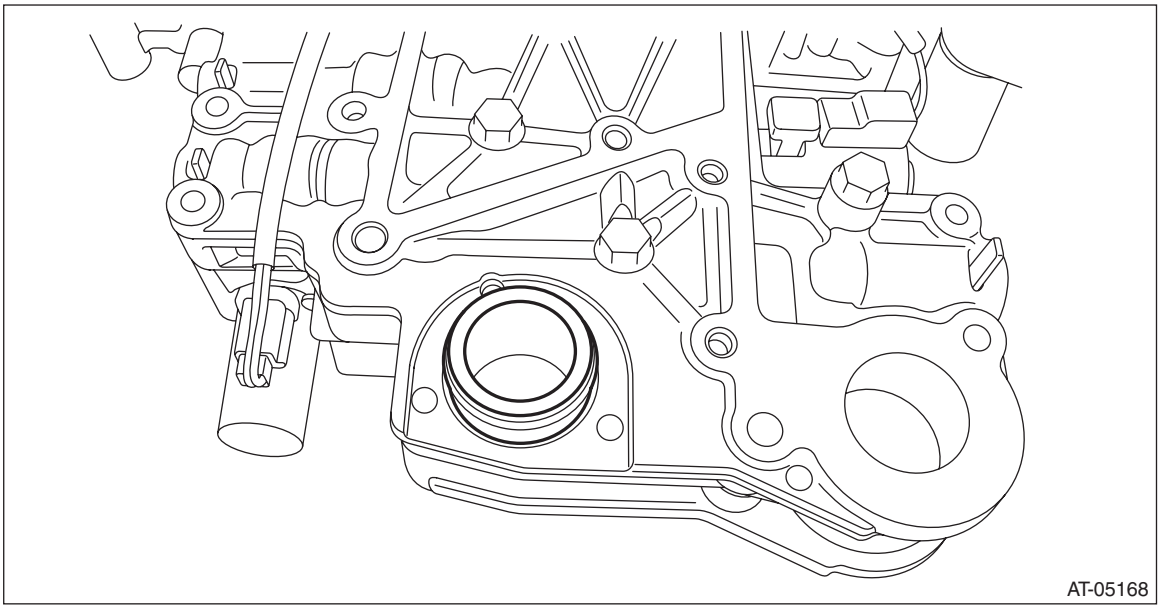

11) Remove the O-ring from oil strainer.

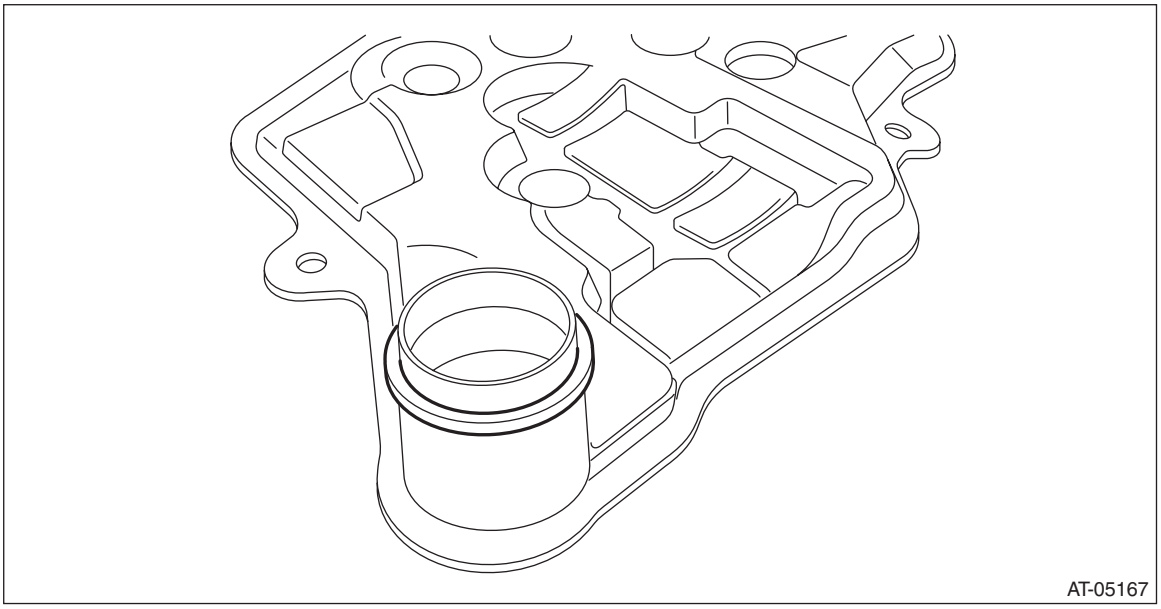

12) Remove the O-ring from pressure pipe.

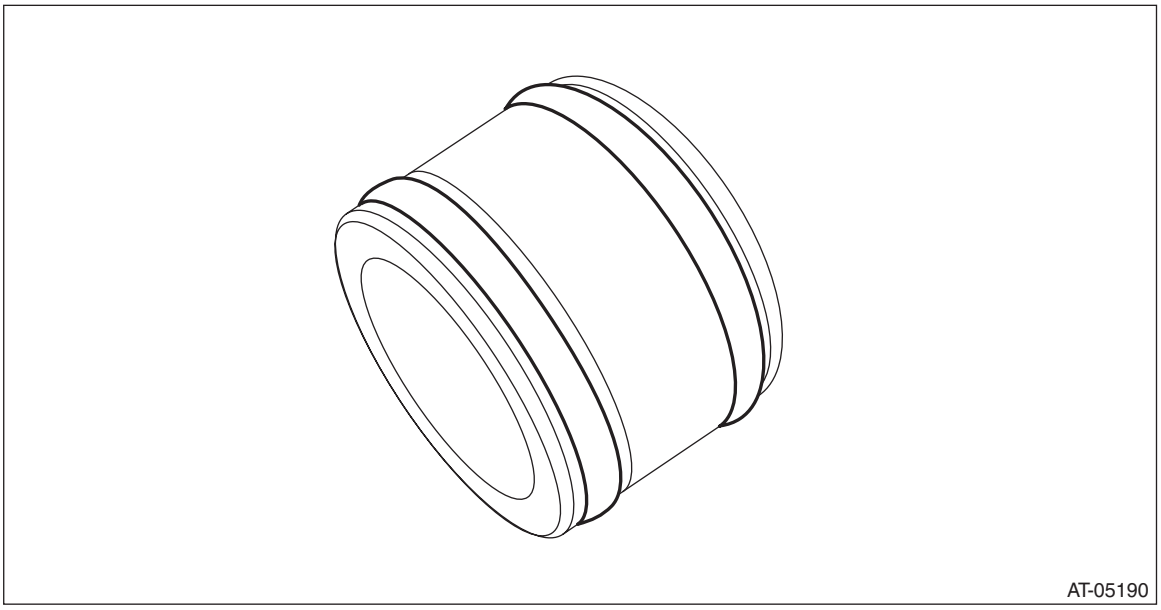

B: INSTALLATION

1) Clean the mating surface of oil pan and transmission case.
2) Check the control valve body for dust and other foreign matter.
3) Install the O-ring to the pressure pipe.

NOTE:
- Use new O-rings.
- Apply CVTF to the O-ring.

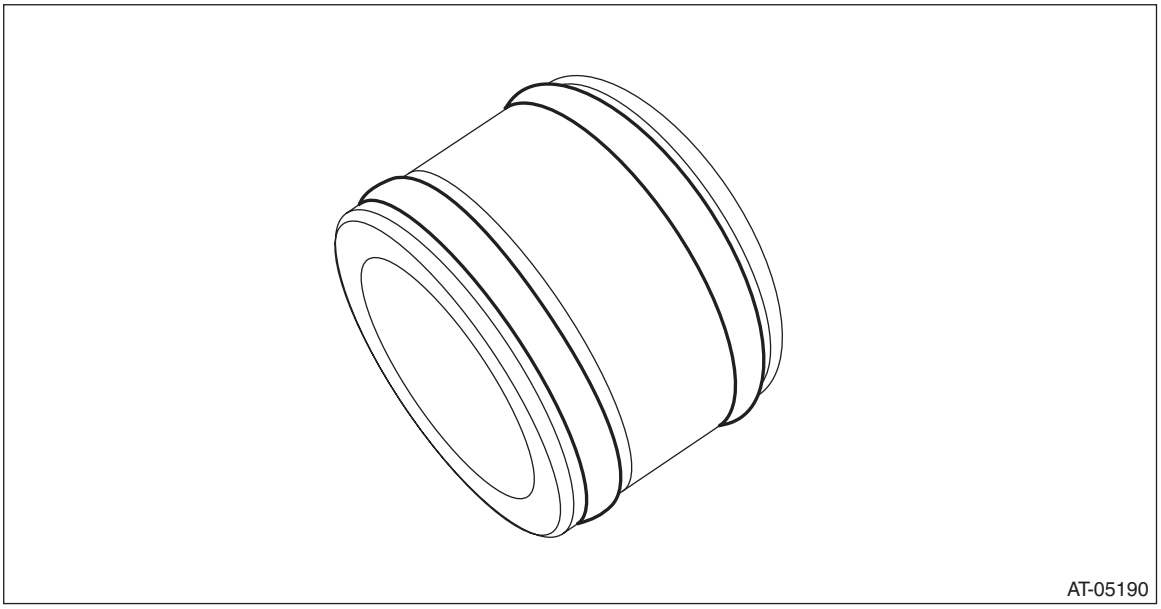

4) Install the pressure pipe.

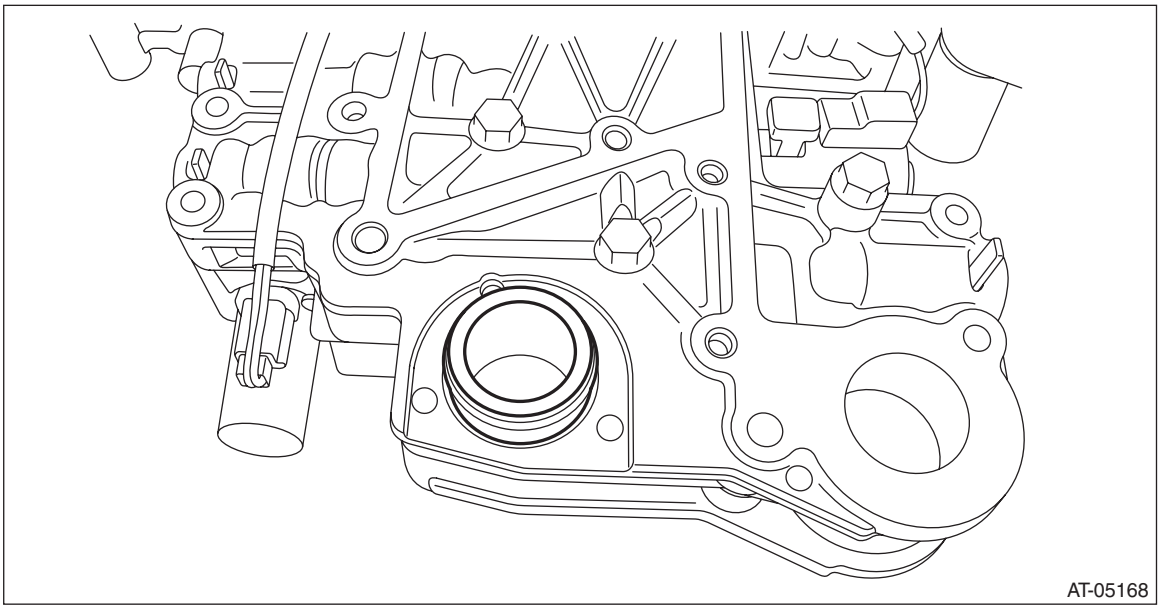

5) Install the control valve body to the transmission.

CAUTION:
- **Beware of the transmission harness getting caught in between.**
- **Do not impact or bend the transmission harness because it has the oil temperature sensor inside.**

NOTE:
- Engage the manual valve to the manual plate.
- Lead the transmission harness through from the point indicated by dashed line in the figure.

Tightening torque:
9 N·m (0.9 kgf-m, 6.6 ft-lb)

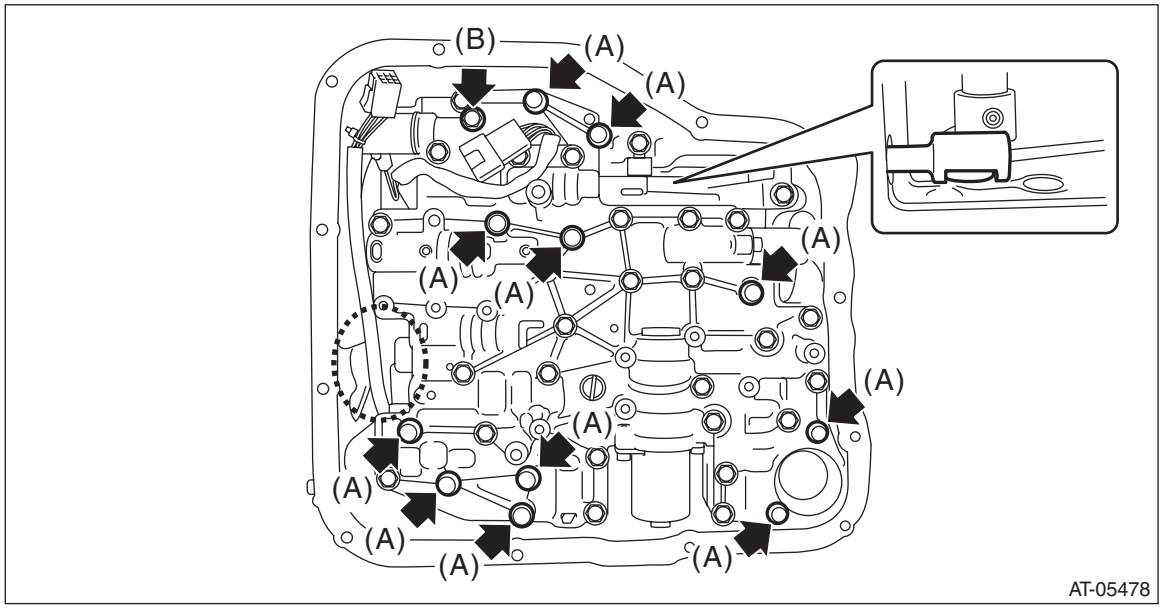

(A) Short bolt (11 pcs)
(B) Long bolt (1 pcs)

6) Install the O-ring to oil strainer and install the oil strainer.

NOTE:
- Use new O-rings.
- Apply CVTF to the O-ring.
- Let the transmission harness run between control valve body and oil strainer.

Tightening torque:
9 N·m (0.9 kgf-m, 6.6 ft-lb)

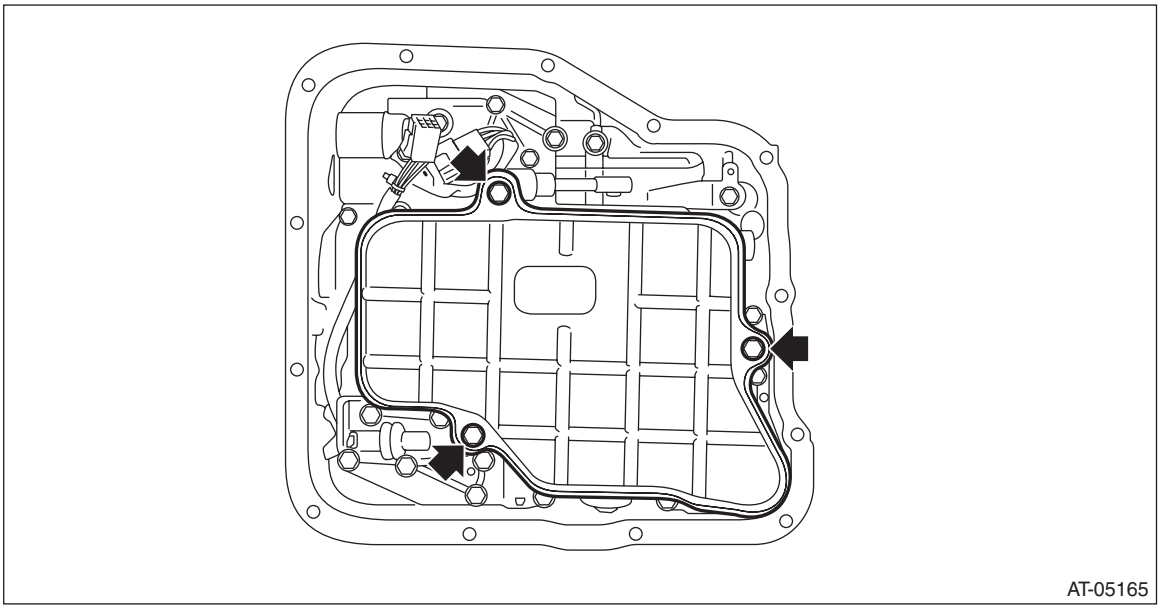
AT-05165

7) Connect the control valve harness connector.

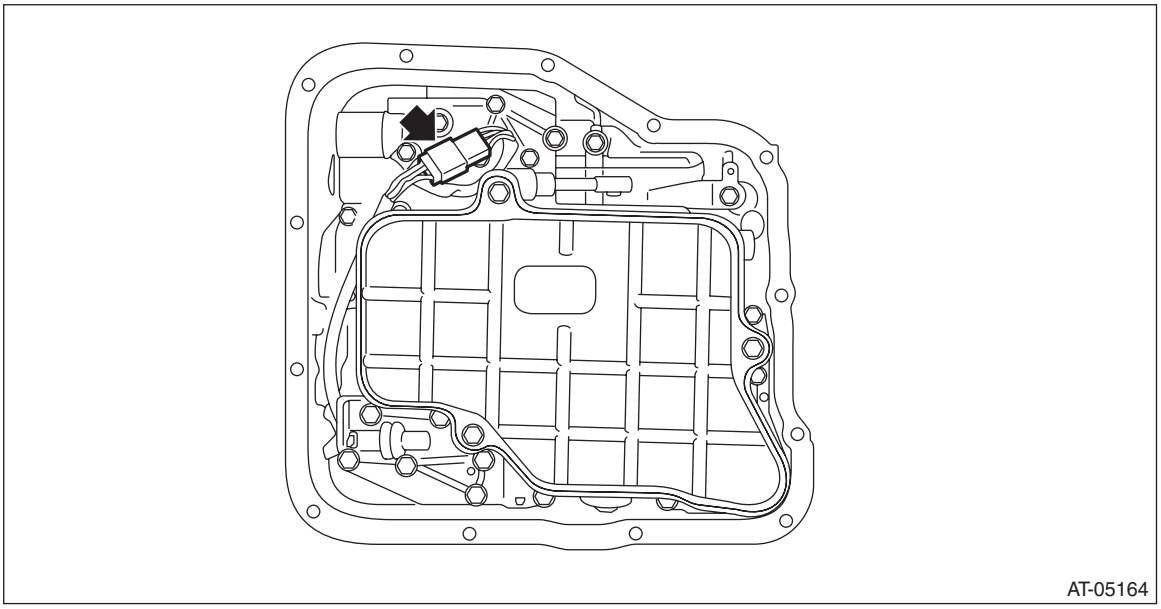
AT-05164

8) Clean the magnet.

9) Attach the magnet at the specified position of the oil pan.

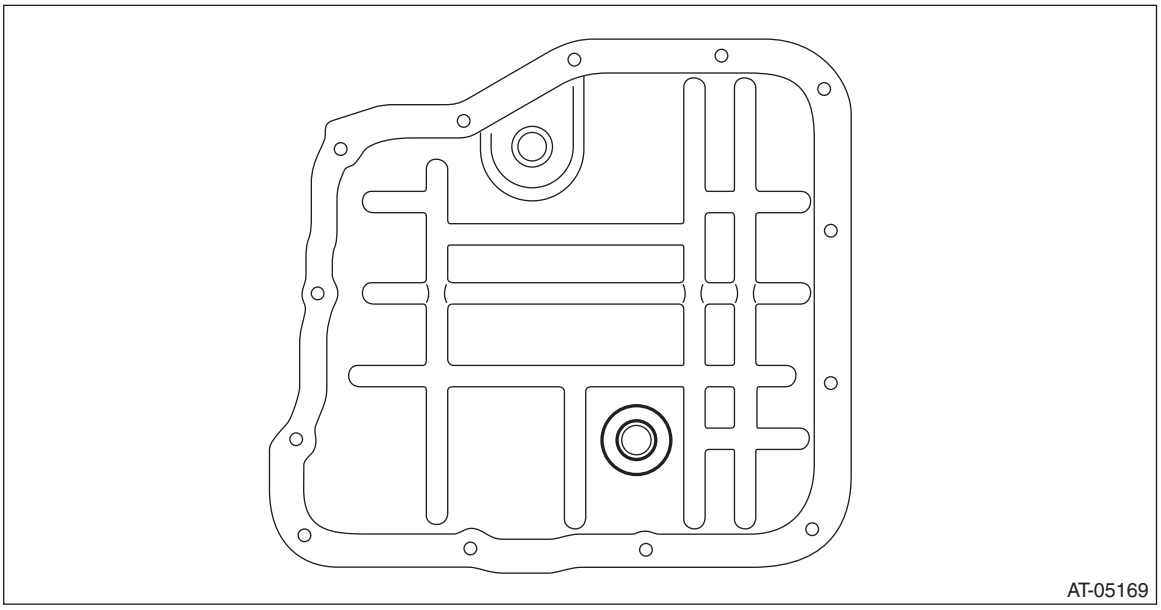

10) Apply liquid gasket all around the oil pan mating surface seamlessly.

Liquid gasket:
THREE BOND 1217B (Part No. K0877YA020) or equivalent

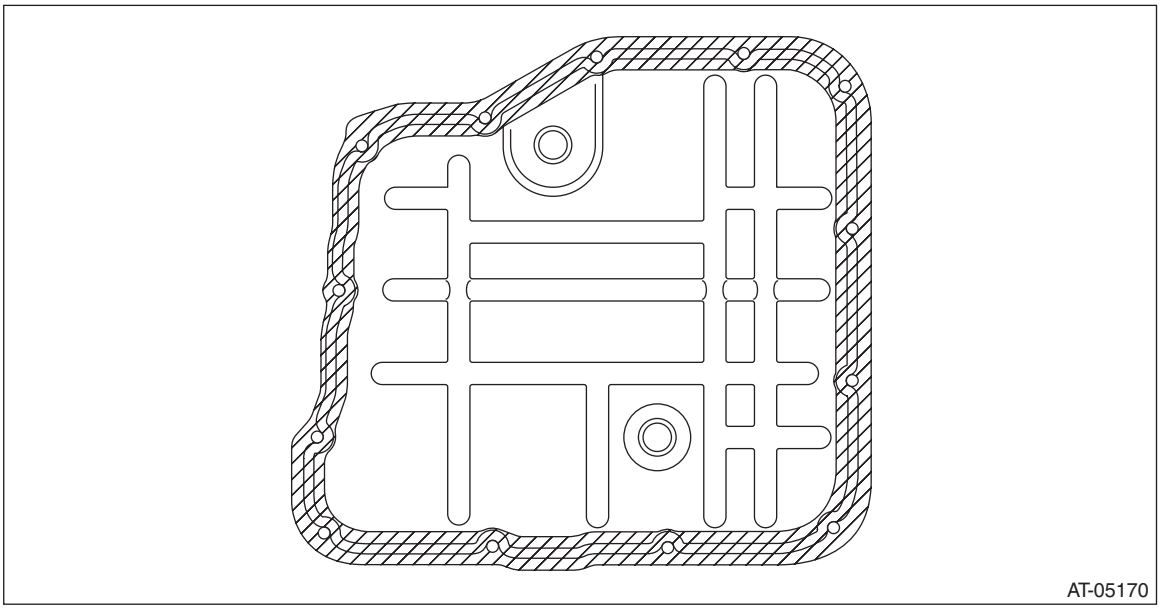

11) Install the oil pan by equally tightening the bolts.

CAUTION:
Beware of the transmission harness getting caught in between.

Tightening torque:
5 N·m (0.5 kgf-m, 3.7 ft-lb)

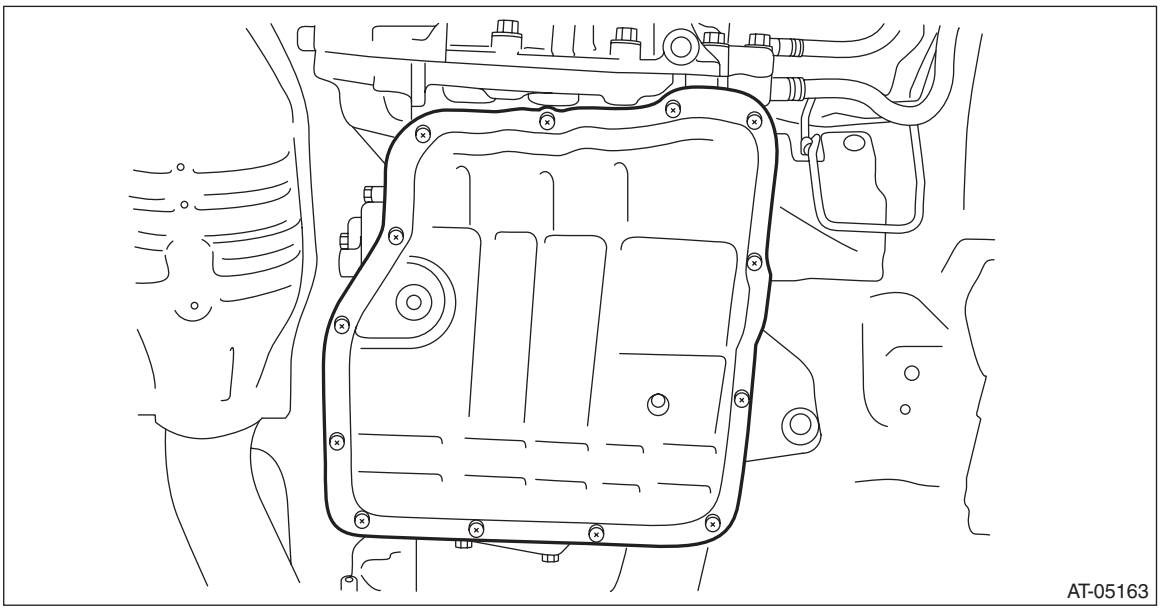

12) Fill with CVTF. <Ref. to CVT-38, REPLACEMENT, CVTF.>
13) Adjust the CVTF level. <Ref. to CVT-37, ADJUSTMENT, CVTF.>

C: INSPECTION

- Check each part for damage or dust.
- Check oil strainer for clogging.
- Measure the resistance of each solenoid.

NOTE:
Measurement should be performed at a temperature of 20°C (68°F).

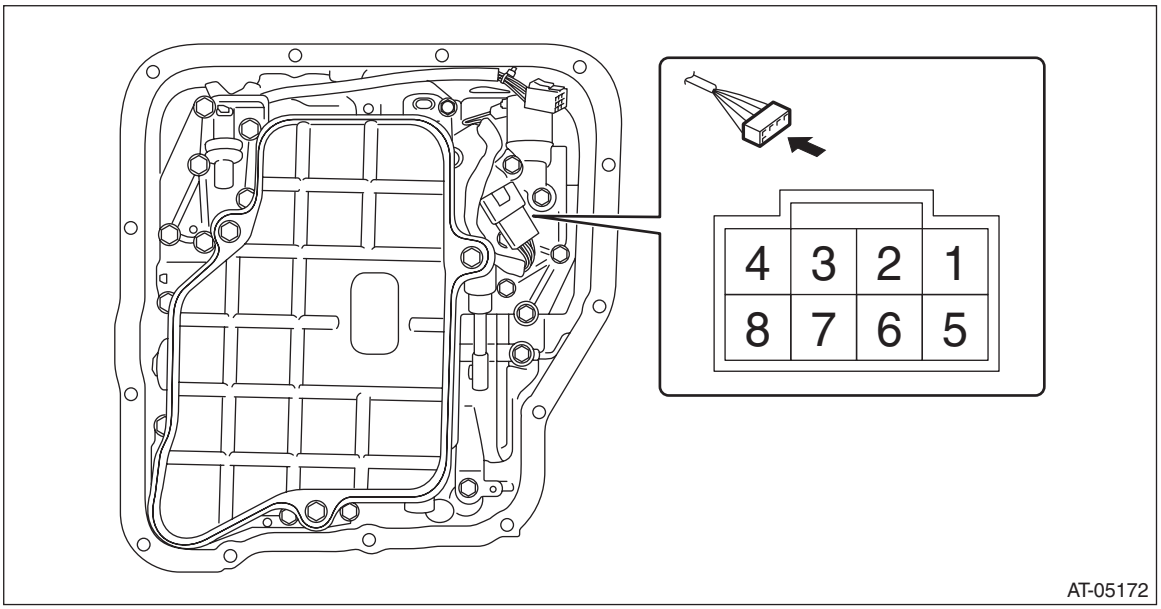

Solenoid	Terminal No.	Standard (Ω)
Secondary solenoid	No. 1 — control valve body	Approx. 6.6 Ω
Lock-up duty solenoid	No. 2 — control valve body	Approx. 12 Ω
F&R solenoid	No. 3 — control valve body	Approx. 5.3 Ω
Lock-up ON/OFF solenoid	No. 5 — control valve body	Approx. 16 Ω
Primary DOWN solenoid	No. 6 — control valve body	Approx. 12 Ω
Primary UP solenoid	No. 7 — control valve body	Approx. 12 Ω
AWD solenoid	No. 8 — control valve body	Approx. 3.2 Ω

21.Transmission Harness

A: REMOVAL

1) Remove the transmission from the vehicle. <Ref. to CVT-55, REMOVAL, Automatic Transmission Assembly.>
2) Prepare for overhaul. <Ref. to CVT-135, Preparation for Overhaul.>
3) Remove the transmission harness ground terminal and remove the harness connectors from front wheel speed sensor and secondary speed sensor.

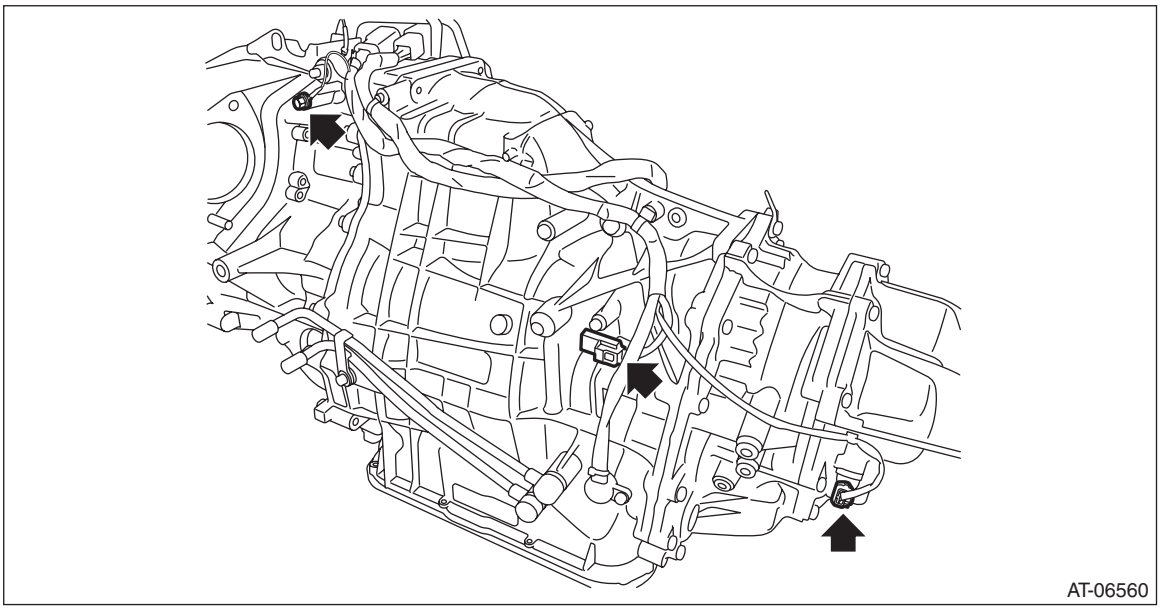

4) Remove the harness connectors from inhibitor switch, primary speed sensor and secondary pressure sensor.

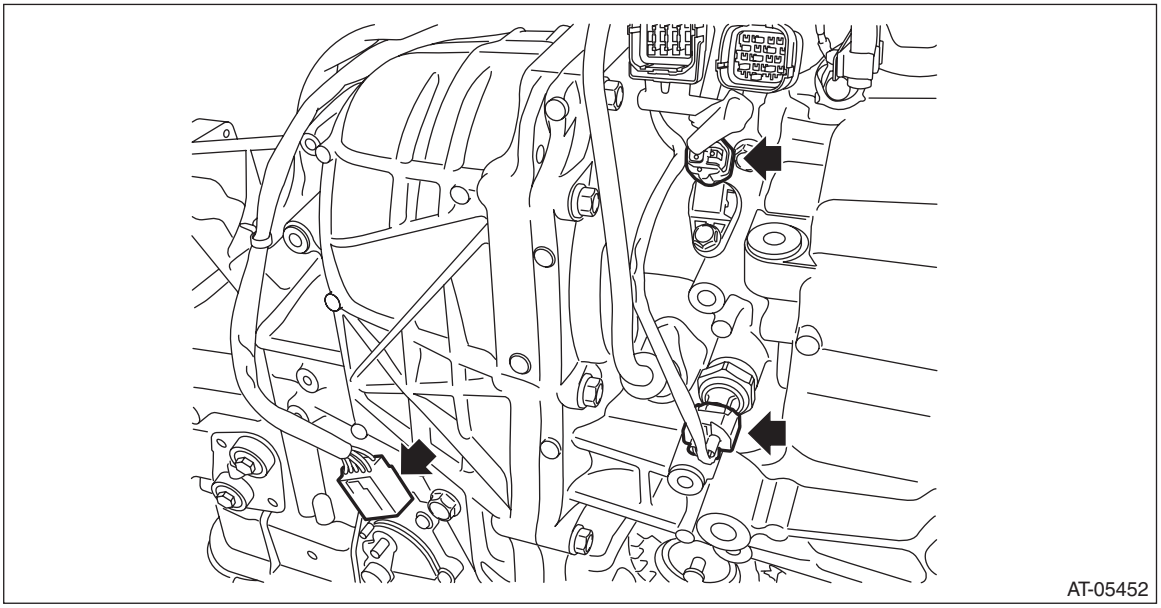

5) Remove the transmission harness stay.

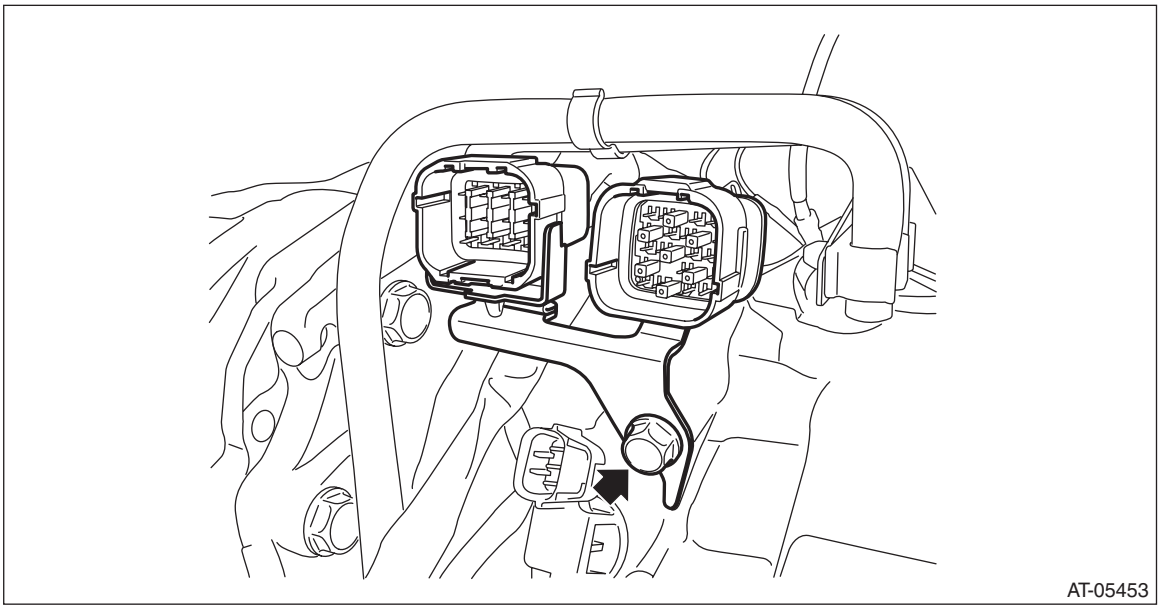

6) Remove transmission harness connector and inhibitor harness connector from harness stay.
7) Remove the control valve body. <Ref. to CVT-111, REMOVAL, Control Valve Body.>
8) Remove the mounting bolt to pull out the bushing of transmission harness from transmission case round hole.

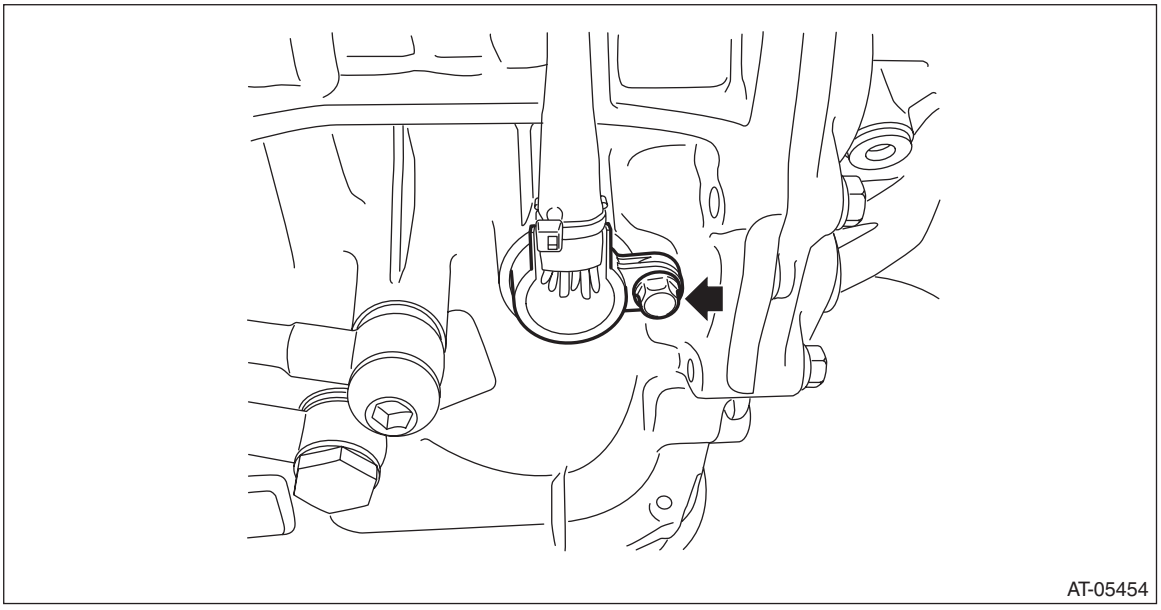

9) Remove the harness clip from transmission assembly.

B: INSTALLATION

Install in the reverse order of removal.

NOTE:
- Use new O-rings.
- Do not impact or bend the transmission harness because it has the oil temperature sensor inside.
- Install the transmission ground terminal approximately at an angle of 45°.

Tightening torque:
T1: 5 N·m (0.5 kgf-m, 3.7 ft-lb)
T2: 16 N·m (1.6 kgf-m, 11.8 ft-lb)

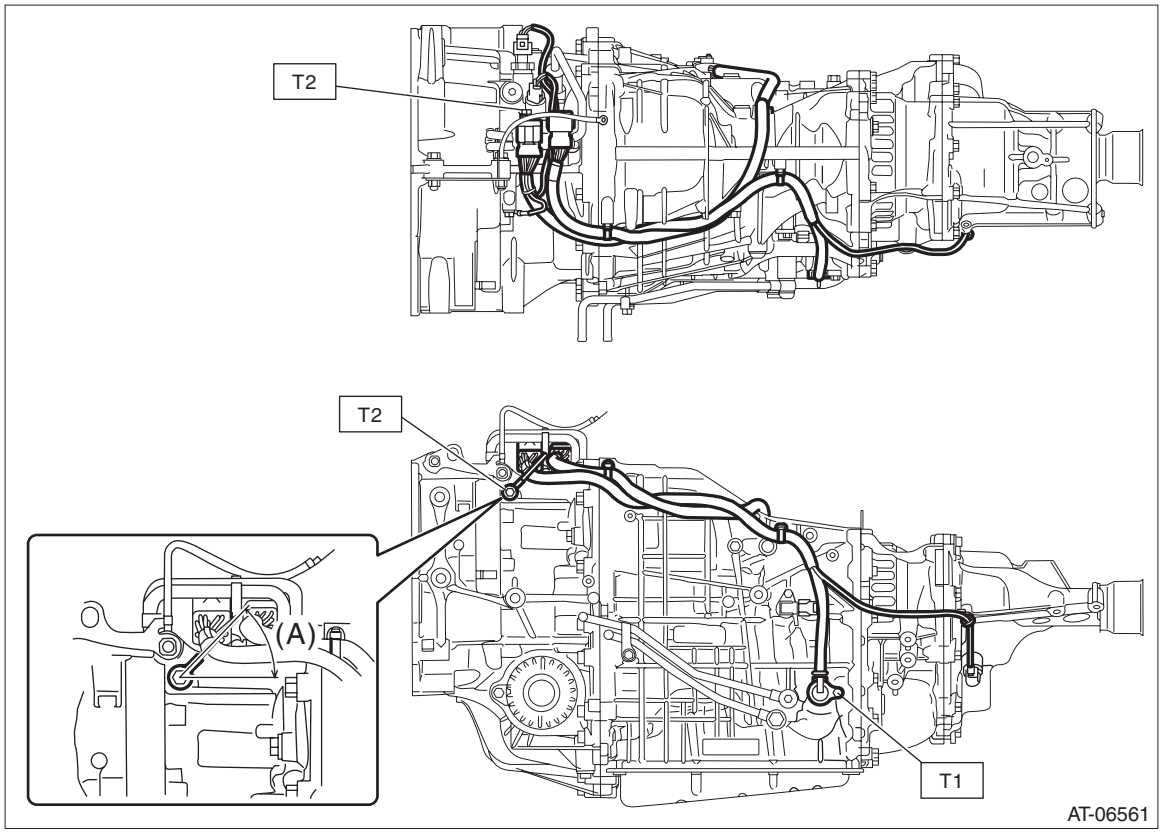

(A) Install at an angle of 45° approximately.

C: INSPECTION

1) Visually check the harness and connector for damage or crack.
2) Check the harness terminal for rust, disconnection or poor contact.
3) Check the continuity between harness terminals and oil temperature sensor.

NOTE:
Refer to WIRING SECTION for transmission harness terminal and oil temperature sensor terminal. <Ref. to WI-112, WIRING DIAGRAM, CVT Control System.>

Harness continuity standard
Less than 1 Ω

Oil temperature sensor standard
Approx. 2.6 kΩ (at 20°C)

22.Transmission Control Module (TCM)

A: REMOVAL

1) Disconnect the ground cable from battery.
2) Remove the instrument panel lower cover. <Ref. to EI-64, REMOVAL, Instrument Panel Lower Cover.>
3) Remove the bulkhead harness connector from TCM.
4) Remove the TCM.

NOTE:
Replace TCM and bracket as a set.

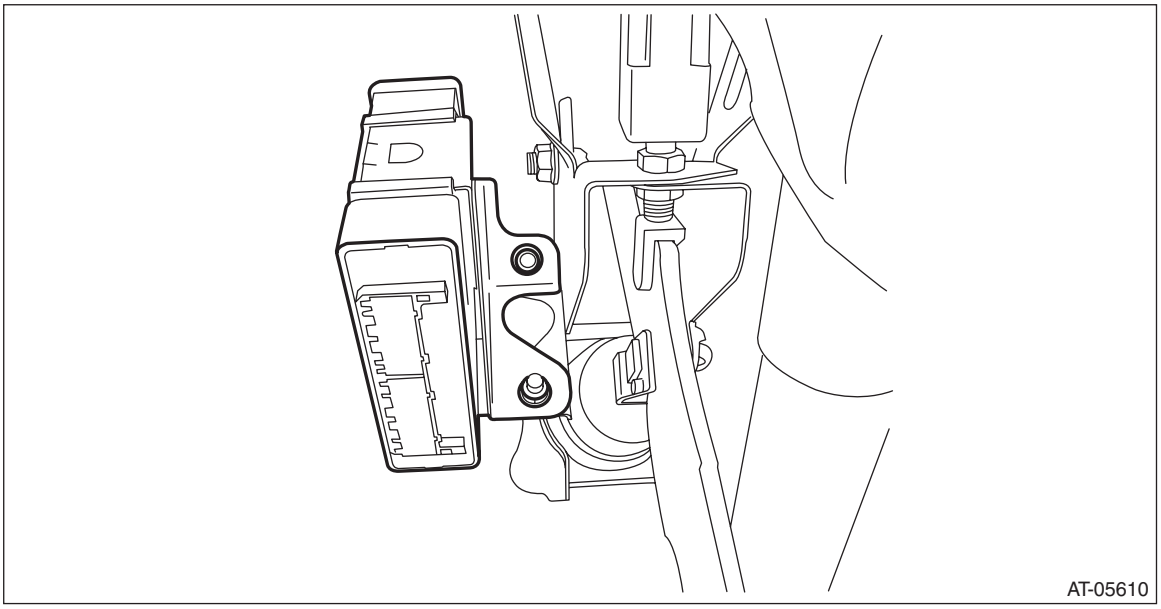

B: INSTALLATION

1) Install the TCM to the bracket.

CAUTION:
To avoid the damage to bracket and TCM, do not remove after installing TCM to bracket. If installed by mistake, the part must be replaced with a new part.

2) Install the TCM.

Tightening torque:
7.5 N·m (0.76 kgf-m, 5.5 ft-lb)

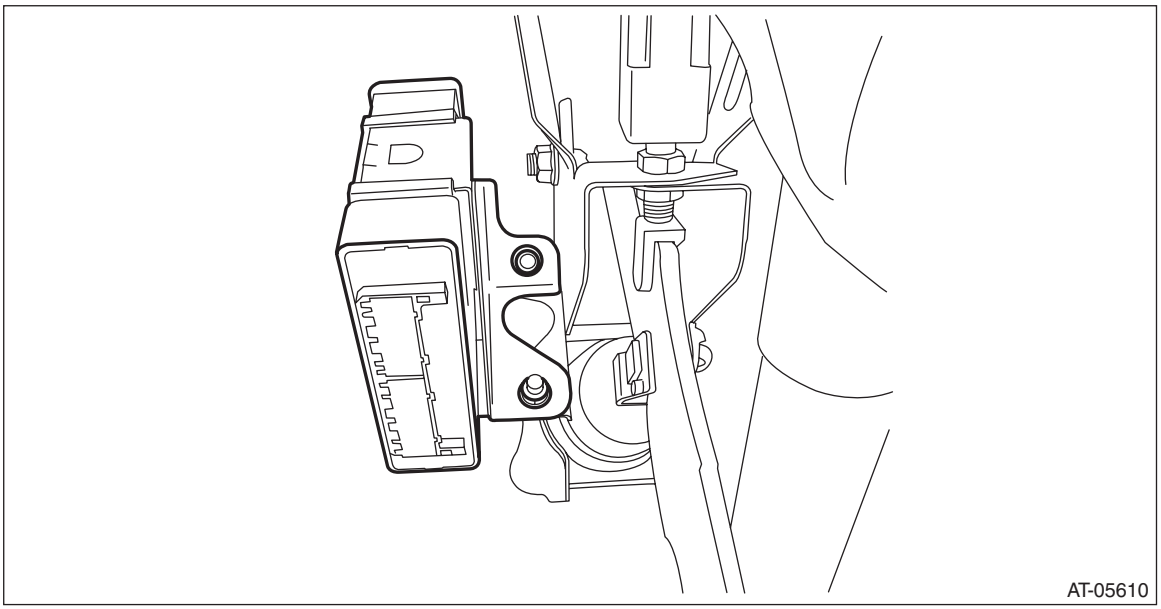

3) Install the harness connector to TCM.
4) Install the instrument panel lower cover. <Ref. to EI-65, INSTALLATION, Instrument Panel Lower Cover.>
5) Perform the diagnosis again. <Ref. to CVT(diag)-20, Learning Control.>

23.CVTF Cooler Pipe and Hose

A: REMOVAL

CAUTION:
• Immediately after the vehicle has been running or after idling for a long time, the CVTF will be hot. Be careful not to burn yourself.
• If the CVTF is spilt over exhaust pipe, wipe it off with cloth to avoid emitting smoke or causing a fire.
• When removing the CVTF cooler pipe assembly on vehicle side, be careful not to bend the A/C pipe.

1) Lift up the vehicle.
2) Remove the under cover.
3) Remove the CVTF CVT inlet hose and CVTF CVT outlet hose.

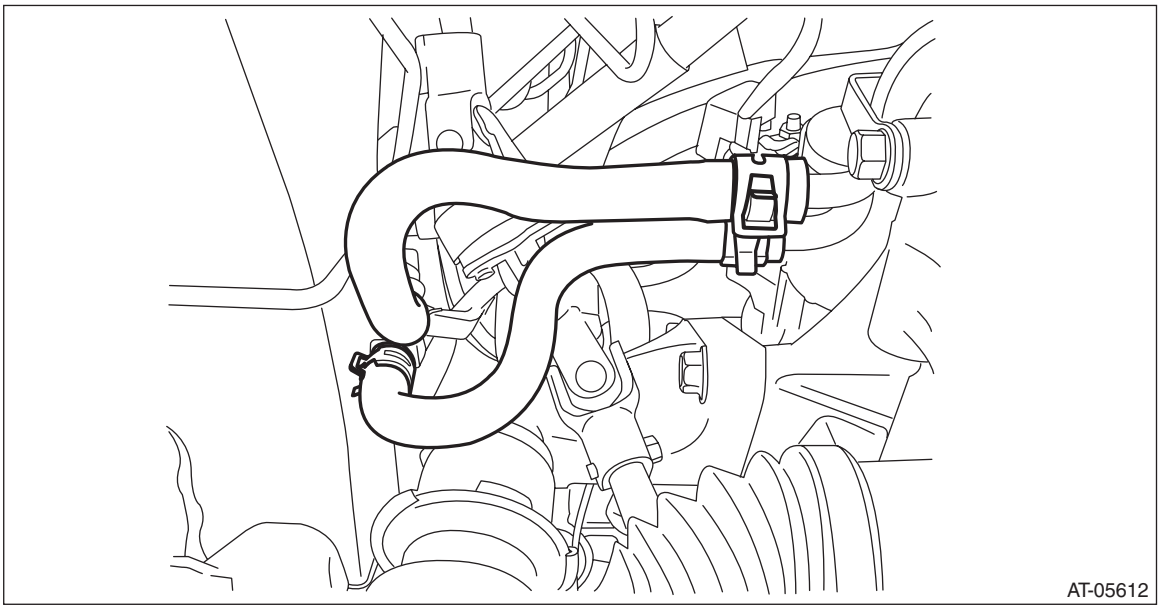

4) Remove the CVTF radiator inlet hose and CVTF radiator outlet hose on radiator side.

CAUTION:
Do not use a screwdriver or other pointed tools.

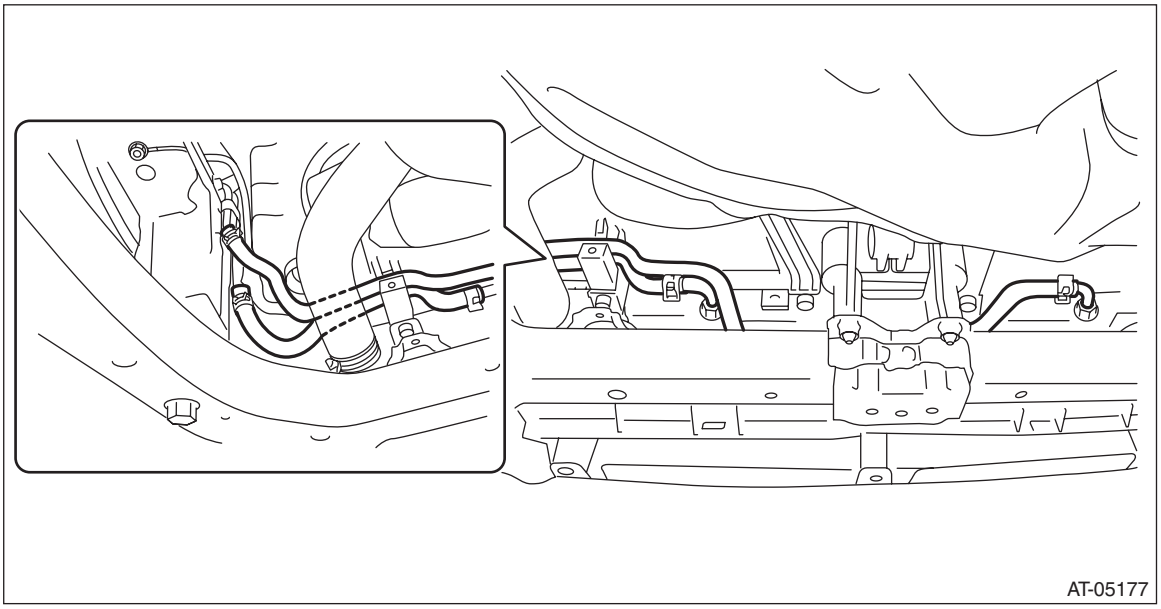

5) Lower the vehicle.

6) Remove the battery.
7) Remove the battery cable clip from the bracket, and remove the battery cable bracket.

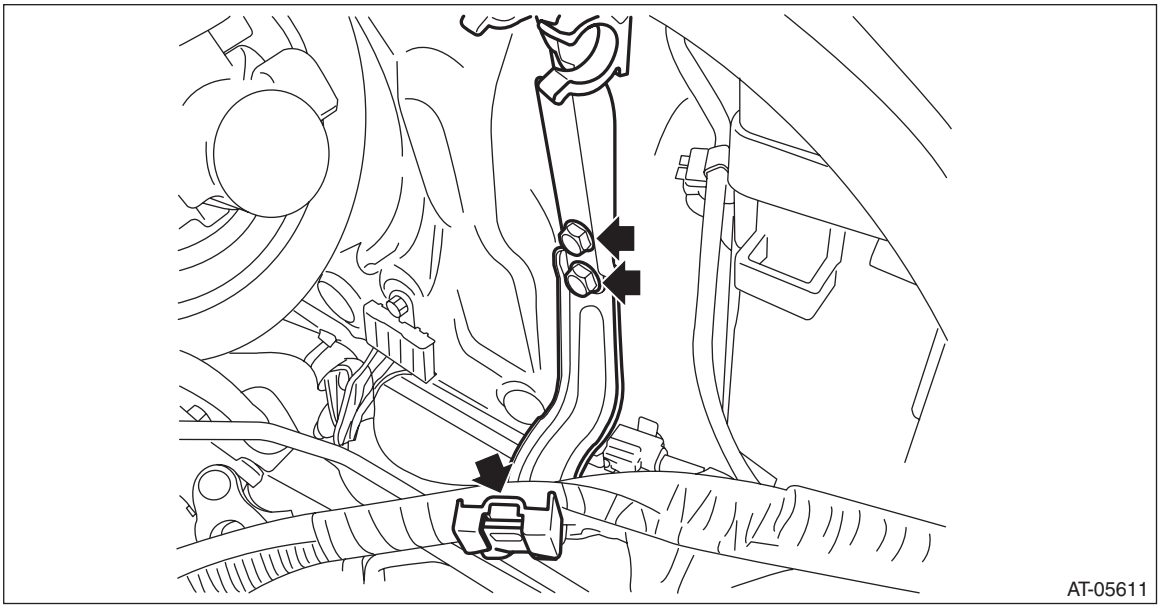

8) Remove the engine coolant reservoir tank. <Ref. to CO(H4SO)-26, REMOVAL, Reservoir Tank.>
9) Remove the CVTF cooler pipe assembly mounting bolt.

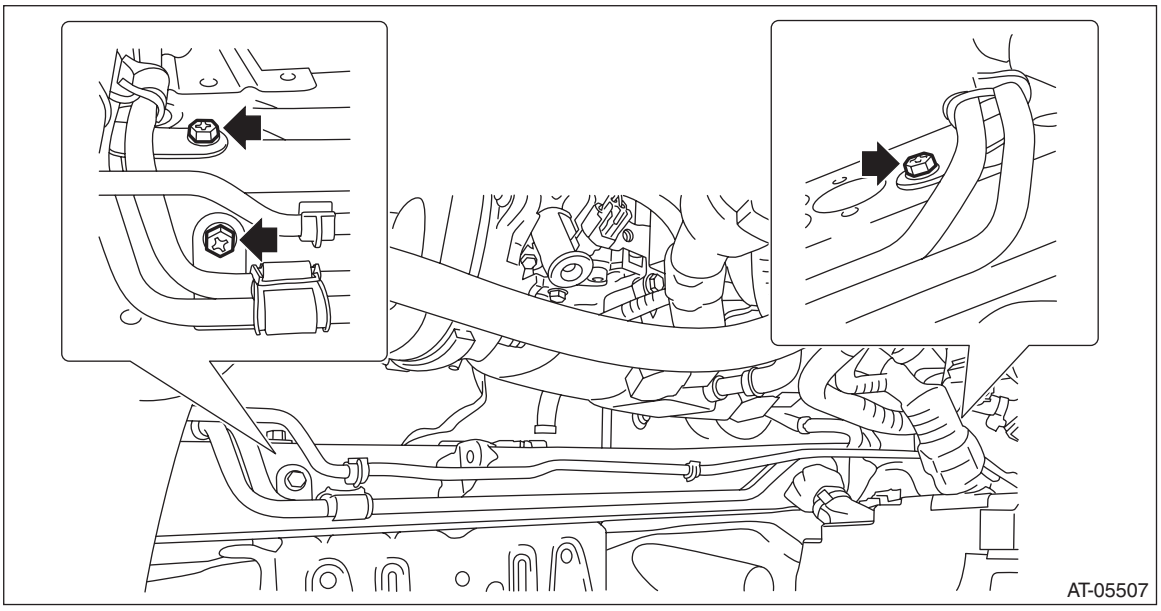

10) Detach the A/C pipe from clip.

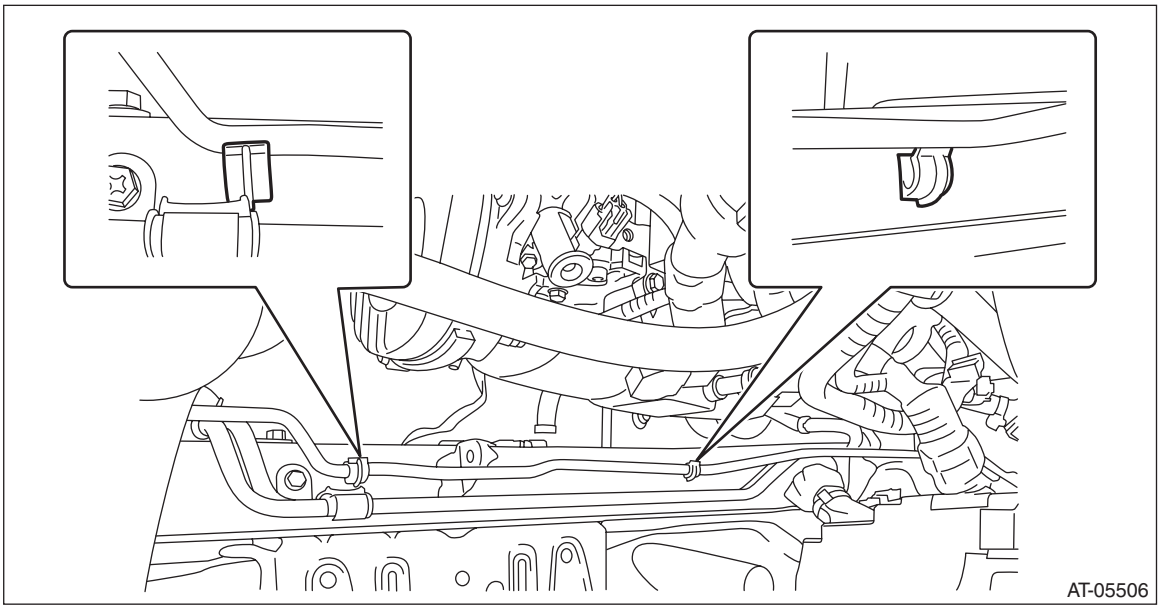

11) Remove the CVTF cooler pipe assembly from the vehicle.

B: INSTALLATION

CAUTION:
When installing the CVTF cooler pipe assembly on vehicle side, be careful not to bend the A/C pipe.
1) Install the CVTF cooler pipe assembly to vehicle.

Tightening torque:
7.5 N·m (0.76 kgf-m, 5.5 ft-lb)

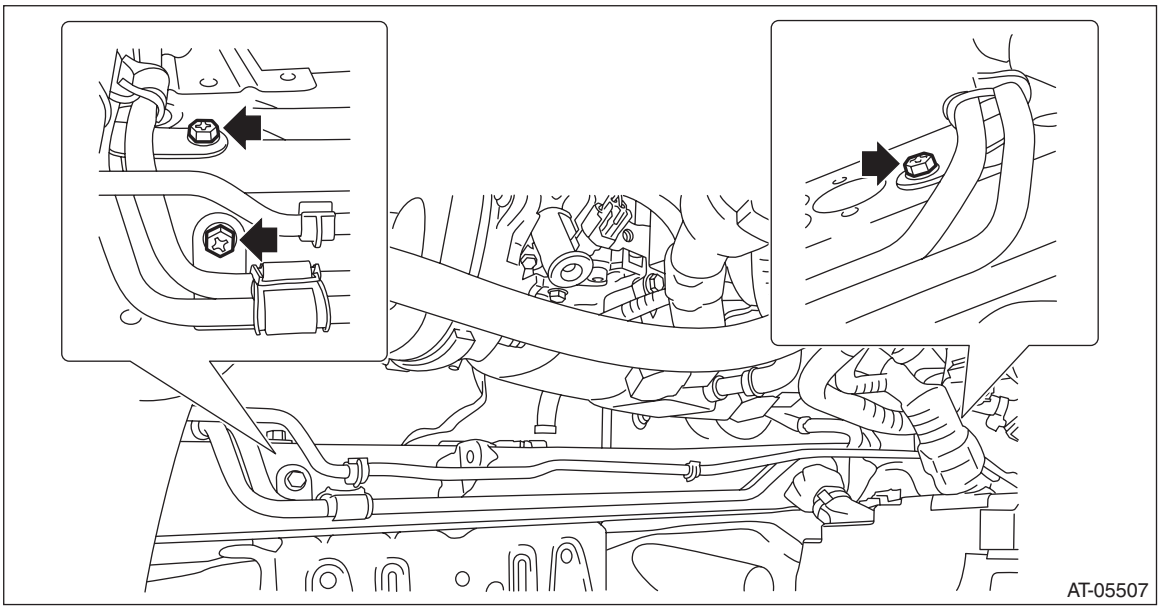

2) Install the A/C pipe to clip.
3) Install the battery cable bracket, and install the battery cable clip to the bracket.

Tightening torque:
7.5 N·m (0.76 kgf-m, 5.5 ft-lb)

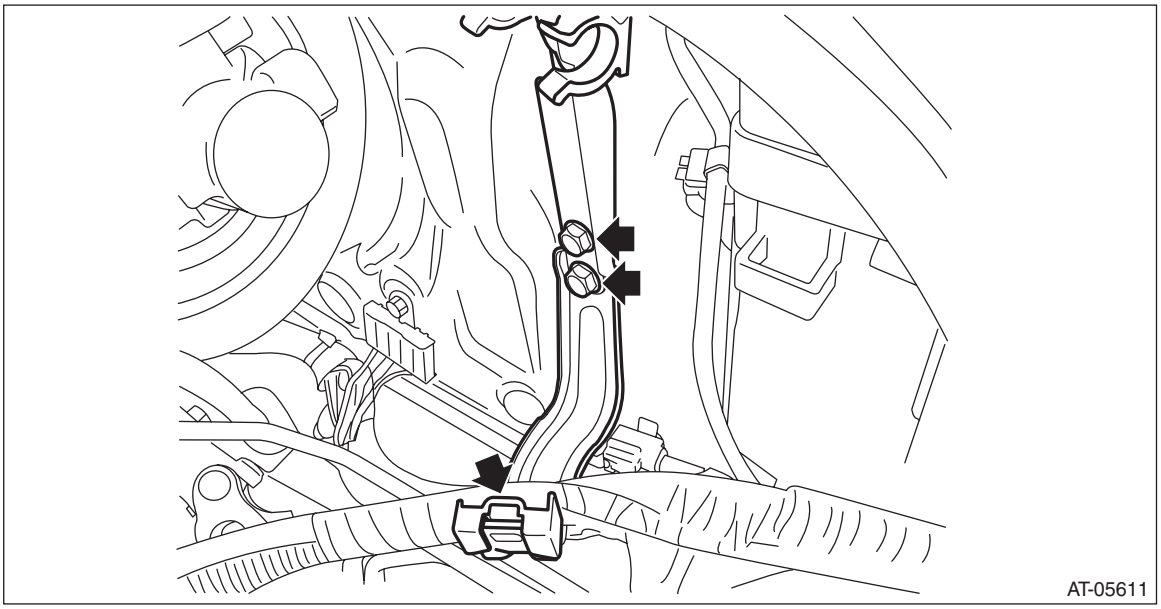

4) Install the engine coolant reservoir tank. <Ref. to CO(H4SO)-26, INSTALLATION, Reservoir Tank.>
5) Lift up the vehicle.

6) Install the CVTF CVT inlet hose and CVTF CVT outlet hose.

NOTE:
Use new CVTF CVT inlet hose and CVTF CVT outlet hose.

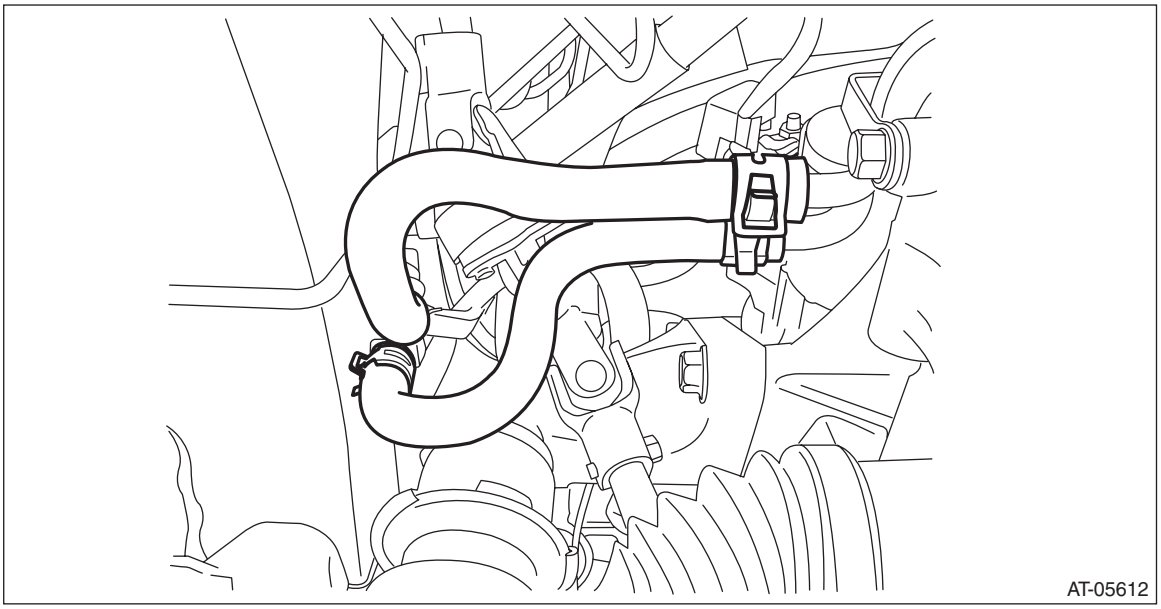

7) Install the CVTF radiator inlet hose and CVTF radiator outlet hose on radiator side.

NOTE:
Use new CVTF radiator inlet hose and CVTF radiator outlet hose.

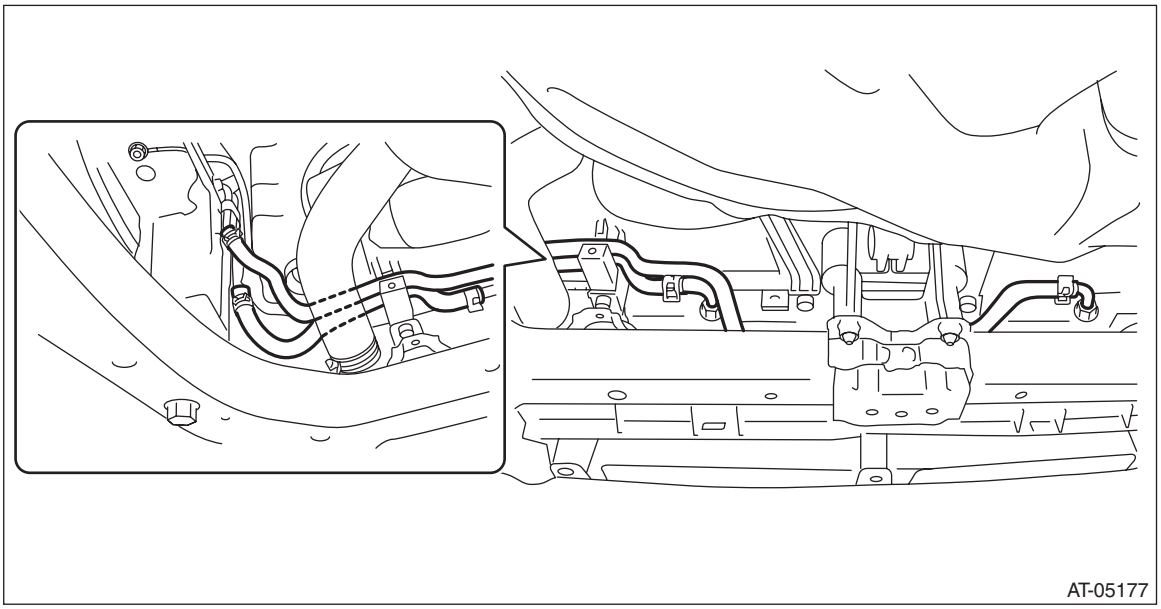

8) Install the under cover.
9) Lower the vehicle.
10) Install the battery.
11) Adjust the CVTF level and check there is no leakage. <Ref. to CVT-37, ADJUSTMENT, CVTF.>

C: INSPECTION

Repair or replace any faulty hoses, pipes, clamps, and washers found in the inspection below.

- Check for CVTF leaks in joints between the transmission, radiator, pipes, and hoses.
- Check the clamp for deformation.
- Lightly bend the hose and check for cracks in the surface or other damages.
- Pinch the hose with your fingers and check for poor elasticity. Also check for poor elasticity in the parts where the clamp was installed by pressing with your fingernail.
- Check for peeling, cracks, and deformation at the tip of the hose.

24.Air Breather Hose

A: REMOVAL

1) Remove the air intake boot assembly. <Ref. to IN(H4SO)-8, REMOVAL, Air Intake Boot.>
2) Remove the two air breather hoses.

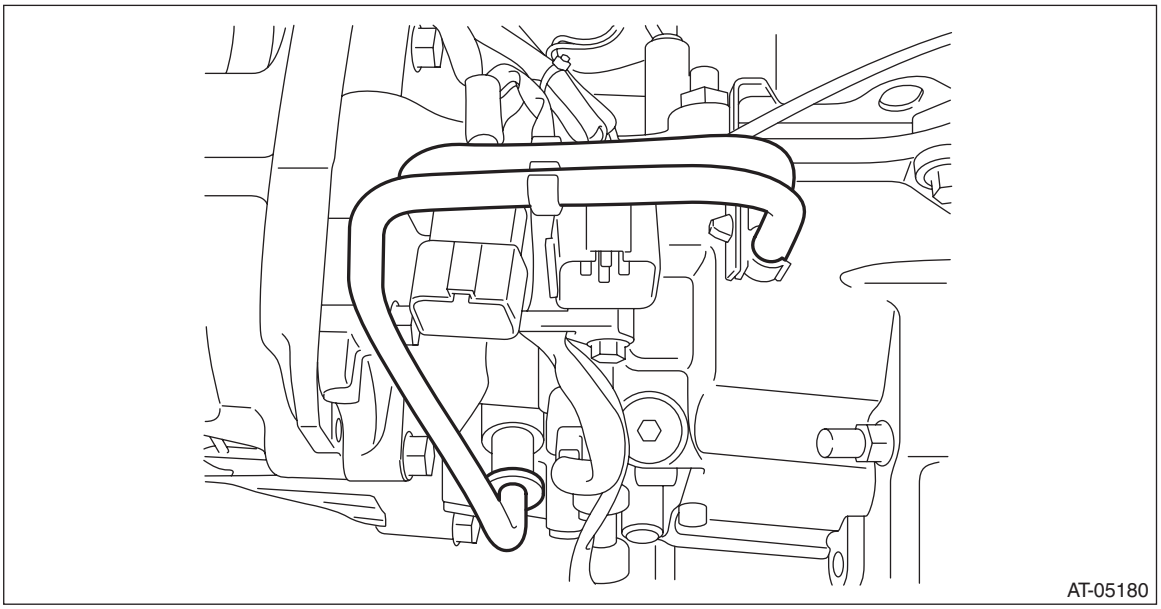

3) Remove the oil cap.

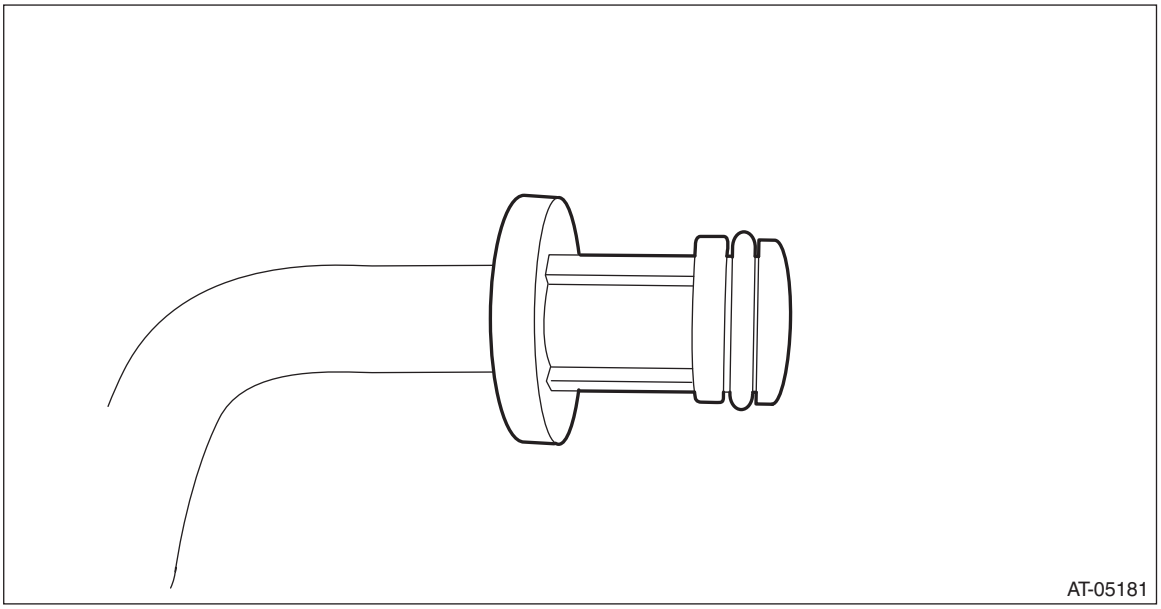

B: INSTALLATION

Install in the reverse order of removal.

NOTE:
Use new O-rings.

C: INSPECTION

- Check the hose for peeling, crack or clogging.
- Check the oil cap is not cracked or clogged.
- Check O-ring of oil cap is not damaged.

25.Drive Plate

A: REMOVAL

1) Remove the transmission assembly from the vehicle. <Ref. to CVT-55, REMOVAL, Automatic Transmission Assembly.>
2) Set the ST.
ST 498497100 CRANKSHAFT STOPPER

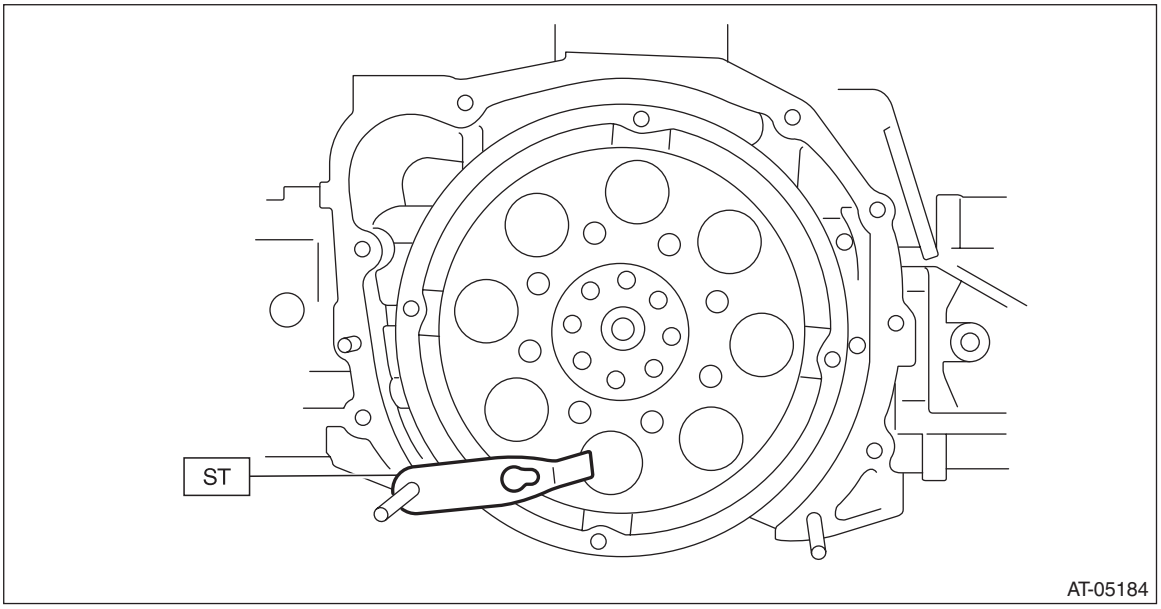

3) Remove the drive plate and reinforcement drive plate.

B: INSTALLATION

1) Temporarily install the drive plate and reinforcement drive plate.
2) Set the ST.
ST 498497100 CRANKSHAFT STOPPER

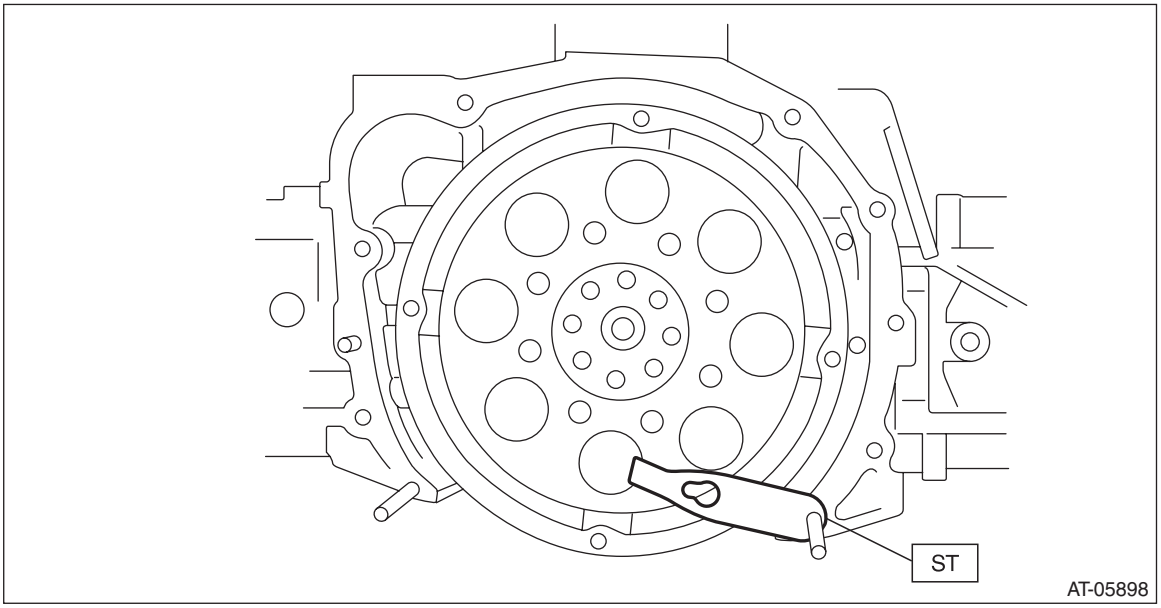

3) Tighten the drive plate mounting bolt in three stages.

NOTE:
Fix the engine unit.

(1) Tighten the drive plate mounting bolt.

Tightening torque:
10 N·m (1.0 kgf-m, 7.4 ft-lb)

(2) Additionally tighten the drive plate mounting bolts.

Tightening torque:
40 N·m (4.1 kgf-m, 29.5 ft-lb)

(3) While checking the tightening angle with the ST, tighten the drive plate mounting bolts to the specified angle.

Tightening angle:
30°±5°

ST 18854AA000 ANGLE GAUGE

4) Install the transmission assembly to the vehicle. <Ref. to CVT-70, INSTALLATION, Automatic Transmission Assembly.>

C: INSPECTION

Check the drive cable for damage.

26.Preparation for Overhaul

A: GENERAL DESCRIPTION

Before disassembling and assembling the transmission, follow the following procedures to prepare.

B: PROCEDURE

1) Clean the transmission exterior.
2) Remove the torque converter assembly. <Ref. to CVT-136, Torque Converter Assembly.>
3) Attach the ST on the transmission.
ST 18632AA000 STAND ASSY

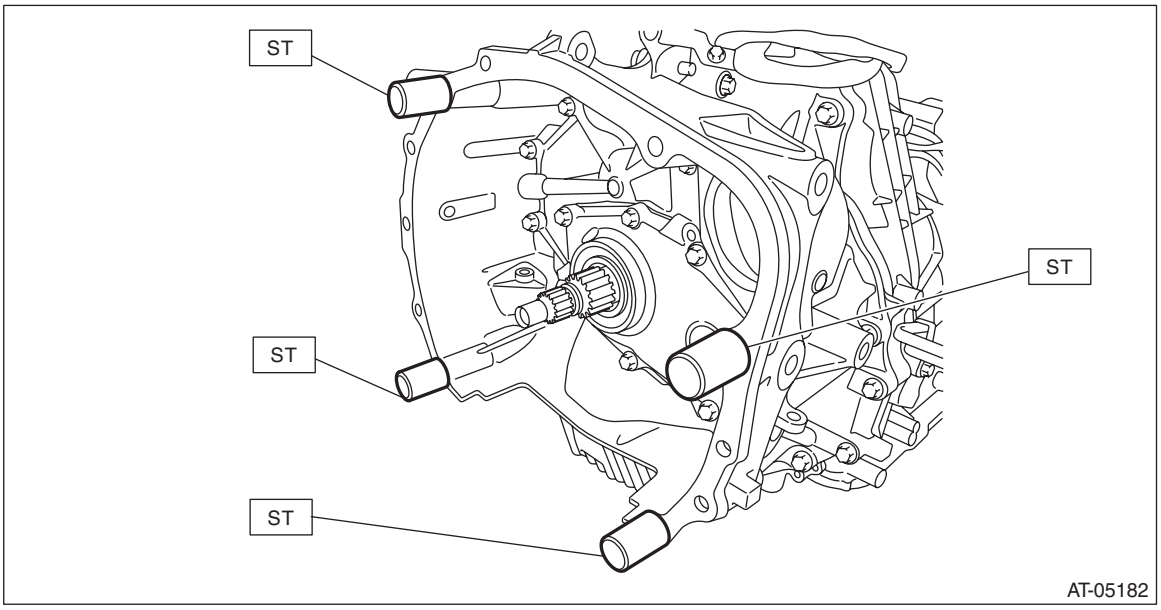

4) Remove the transmission cover on the transmission upper side.

NOTE:
Install using the following tightening torque.

Tightening torque:
8 N·m (0.8 kgf-m, 5.9 ft-lb)

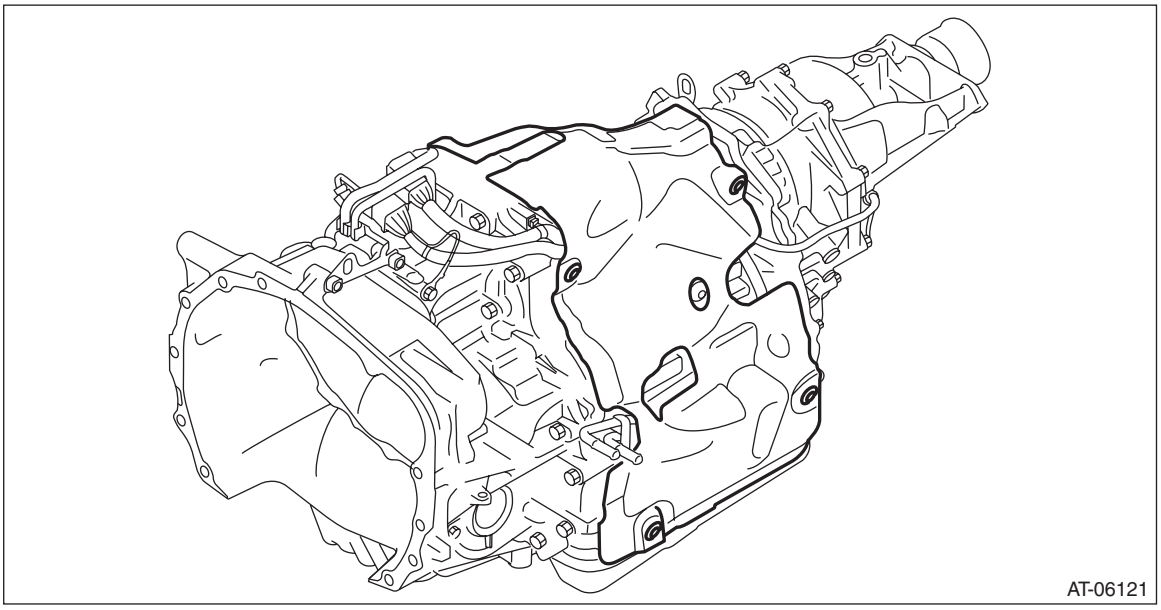

5) Place the transmission assembly on end.

27.Torque Converter Assembly

A: REMOVAL

1) Remove the transmission assembly from the vehicle. <Ref. to CVT-55, REMOVAL, Automatic Transmission Assembly.>
2) Pull out the torque converter assembly horizontally.

CAUTION:
Do not scratch the inside of engaging parts.

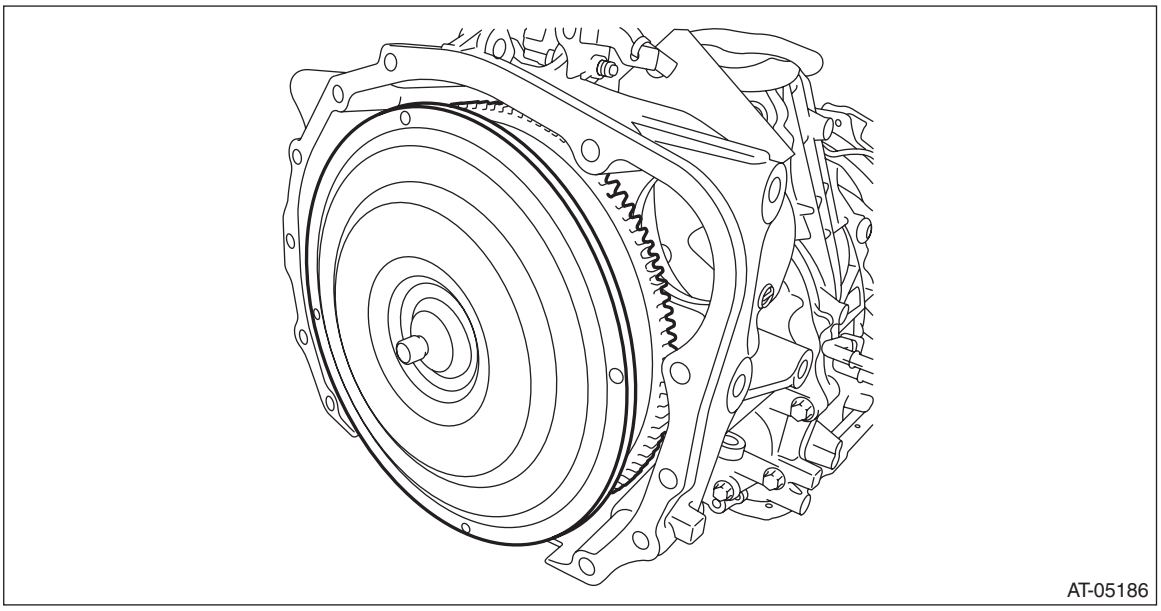

3) Remove the O-ring from the front reduction drive gear.

B: INSTALLATION

1) Install the O-ring to front reduction drive gear.

NOTE:
- Use new O-rings.
- Apply CVTF to the O-ring.

2) While holding the torque converter assembly by hand, carefully install it into the torque converter case.

NOTE:
- Apply CVTF to the oil seal lip.
- Do not damage the oil seal and O-ring.

3) Engage the splines while gently rotating the torque converter assembly by hand, and securely insert the assembly.

4) Measure depth “A”, from converter case end surface to drive plate contacting surface.

Standard (A) (reference):
6.8 mm (0.268 in)

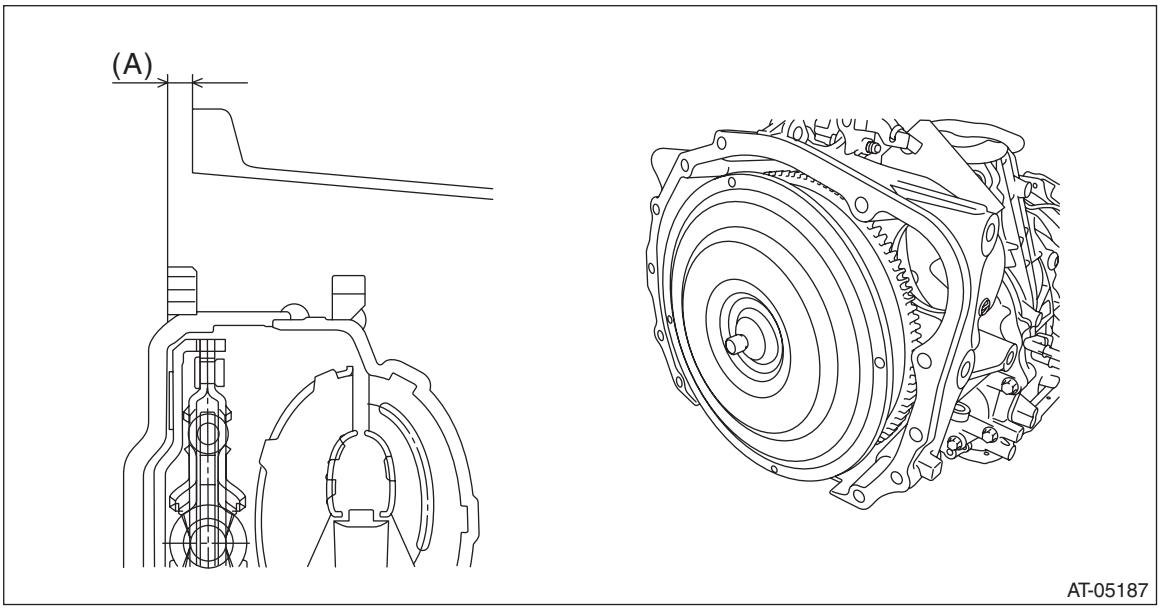

5) Install the transmission assembly to the vehicle. <Ref. to CVT-70, INSTALLATION, Automatic Transmission Assembly.>

C: INSPECTION

- Check the protrusion of torque converter center (front boss) is not deformed or damaged.
- Check the ring gear and exterior for break or damage.

28.Extension Case

A: REMOVAL

1) Remove the transmission assembly from vehicle body. <Ref. to CVT-55, REMOVAL, Automatic Transmission Assembly.>
2) Remove the front wheel speed sensor. <Ref. to CVT-107, REMOVAL, Front Wheel Speed Sensor.>
3) Remove the harness clip, and remove the extension case.

NOTE:
The total number of extension case mounting bolts is ten.

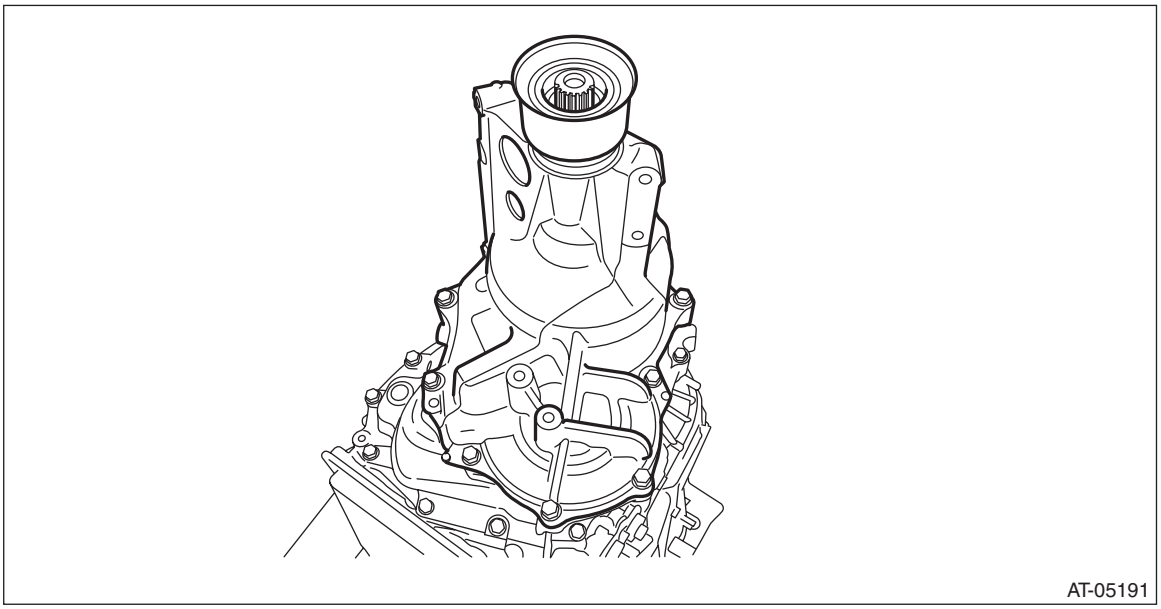

B: INSTALLATION

1) Clean the mating surface of the extension case and intermediate case.
2) Select the thrust needle bearing. <Ref. to CVT-143, ADJUSTMENT, Rear Drive Shaft.>
3) Select the shim for transfer reduction driven gear. <Ref. to CVT-161, ADJUSTMENT, Transfer Reduction Driven Gear.>
4) Install the selected thrust needle bearing to transfer clutch assembly.

NOTE:
Install the thrust needle bearing in the correct direction.

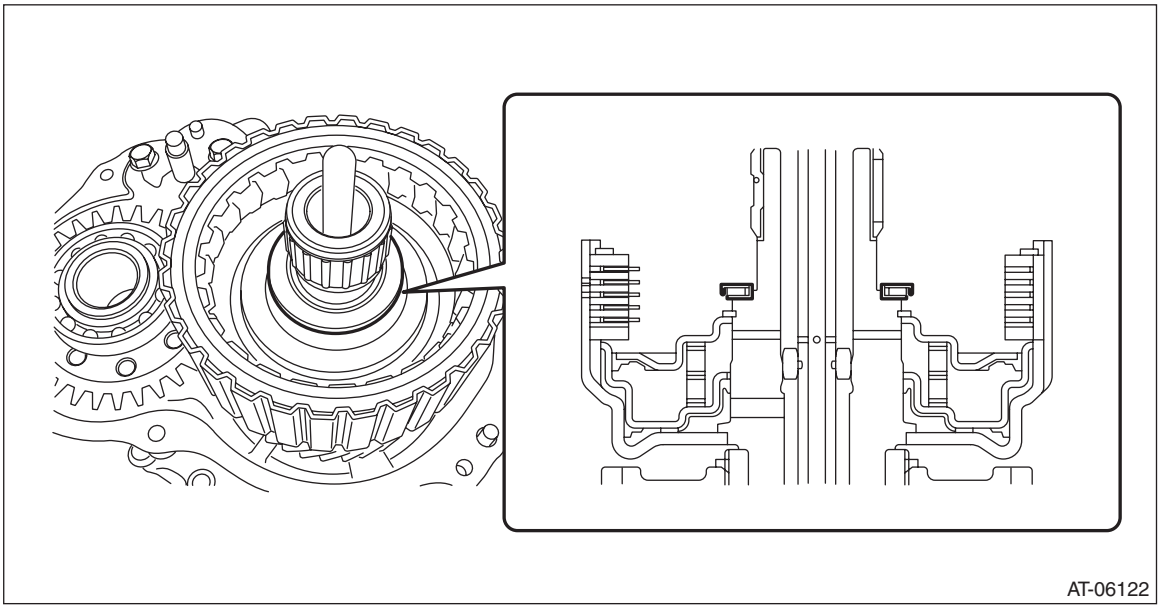

5) Attach the selected shim to transfer reduction driven gear assembly.
6) Apply liquid gasket to extension case seamlessly.

Liquid gasket:
THREE BOND 1215 (Part No. 004403007) or equivalent

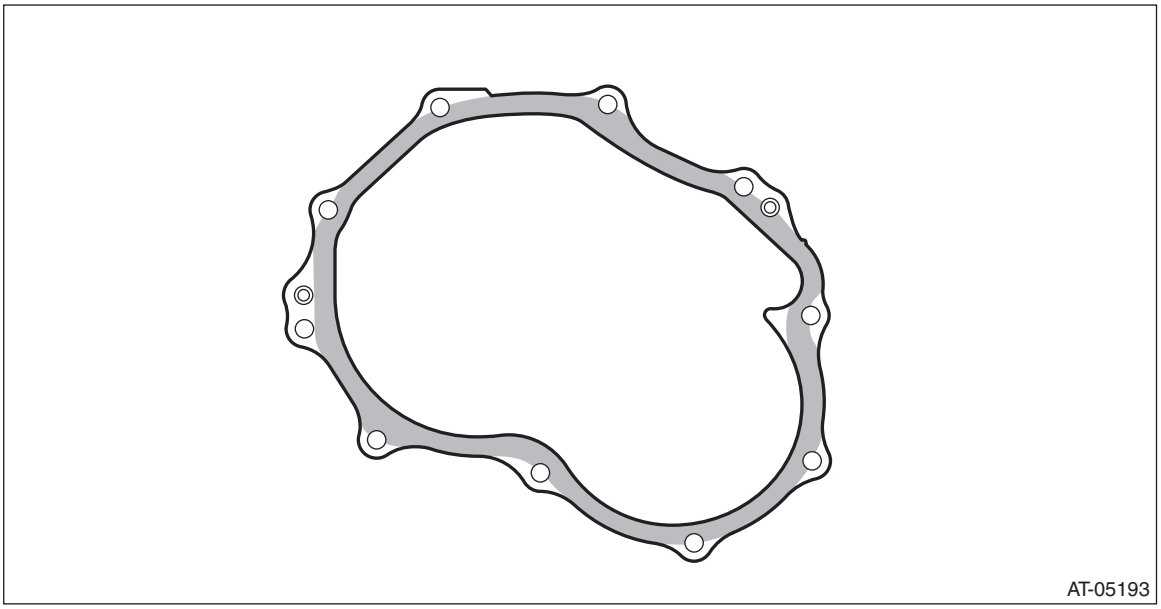

7) Install the extension case.

Tightening torque:
25 N·m (2.5 kgf-m, 18.4 ft-lb)

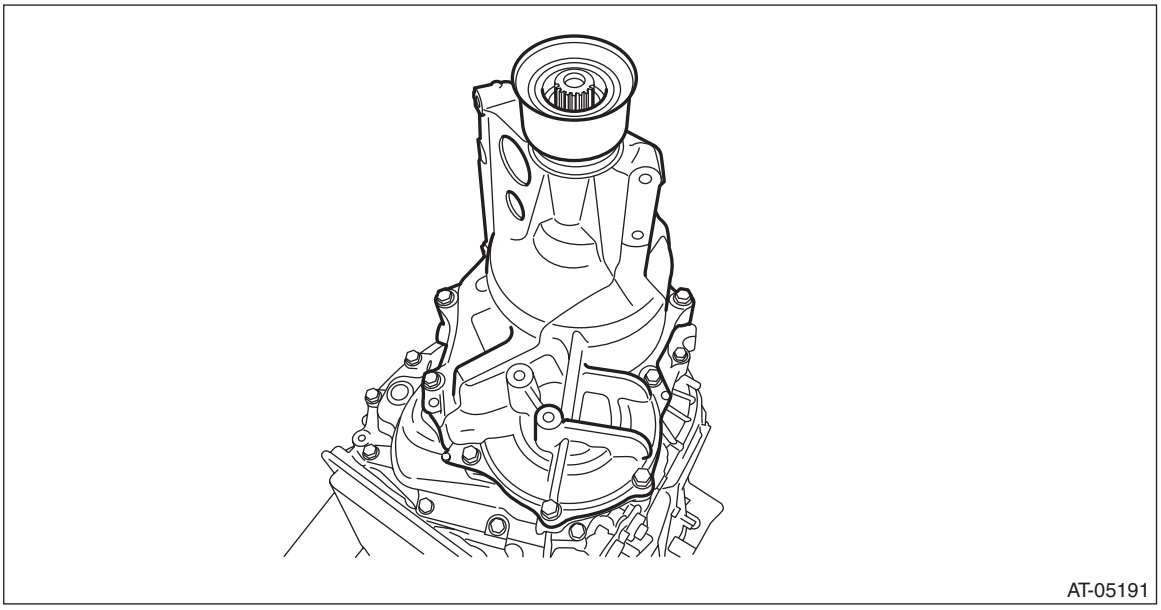

8) Install the front wheel speed sensor. <Ref. to CVT-107, INSTALLATION, Front Wheel Speed Sensor.>
9) Install the transmission assembly. <Ref. to CVT-70, INSTALLATION, Automatic Transmission Assembly.>

C: DISASSEMBLY

1) Remove the dust cover from extension case.
2) Remove the extension case oil seal from the extension case.

D: ASSEMBLY

1) Press-fit the dust cover into extension case.
2) Install the extension case oil seal to extension case.
ST 498057300 INSTALLER

E: INSPECTION

- Check there is no leak of CVTF from the joint between extension case and intermediate case.
- Check there is no damage or cracks on the extension case.

F: ADJUSTMENT

NOTE:
When replacing the extension case, select the shims for rear drive shaft thrust needle bearing and transfer reduction driven gear. <Ref. to CVT-143, ADJUSTMENT, Rear Drive Shaft.> <Ref. to CVT-161, ADJUSTMENT, Transfer Reduction Driven Gear.>

29.Rear Drive Shaft

A: REMOVAL

1) Remove the transmission assembly from vehicle body. <Ref. to CVT-55, REMOVAL, Automatic Transmission Assembly.>
2) Remove the extension case. <Ref. to CVT-138, REMOVAL, Extension Case.>
3) Remove the rear drive shaft.

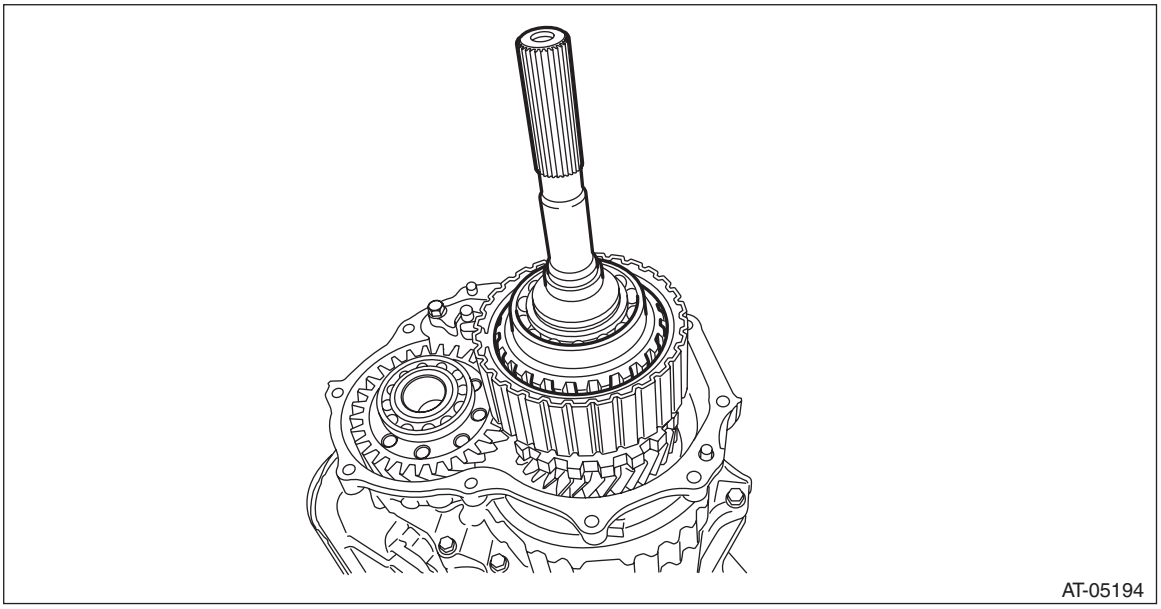

B: INSTALLATION

1) Select the thrust needle bearing. <Ref. to CVT-143, ADJUSTMENT, Rear Drive Shaft.>
2) Install the selected thrust needle bearing to transfer clutch assembly.

NOTE:
Install the thrust needle bearing in the correct direction.

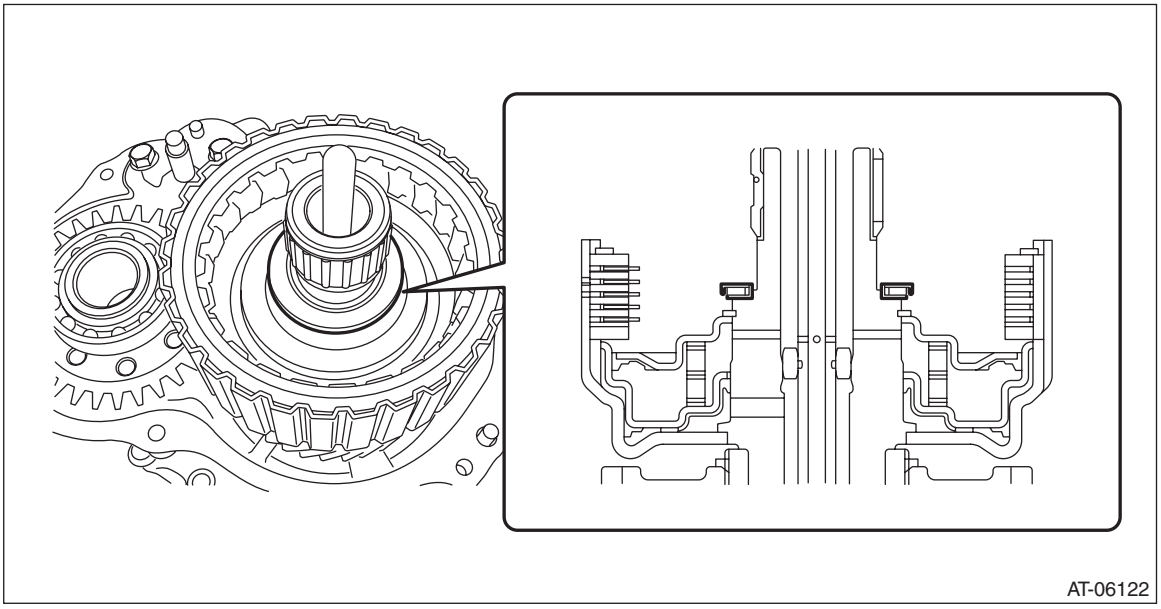

3) Install the rear drive shaft.

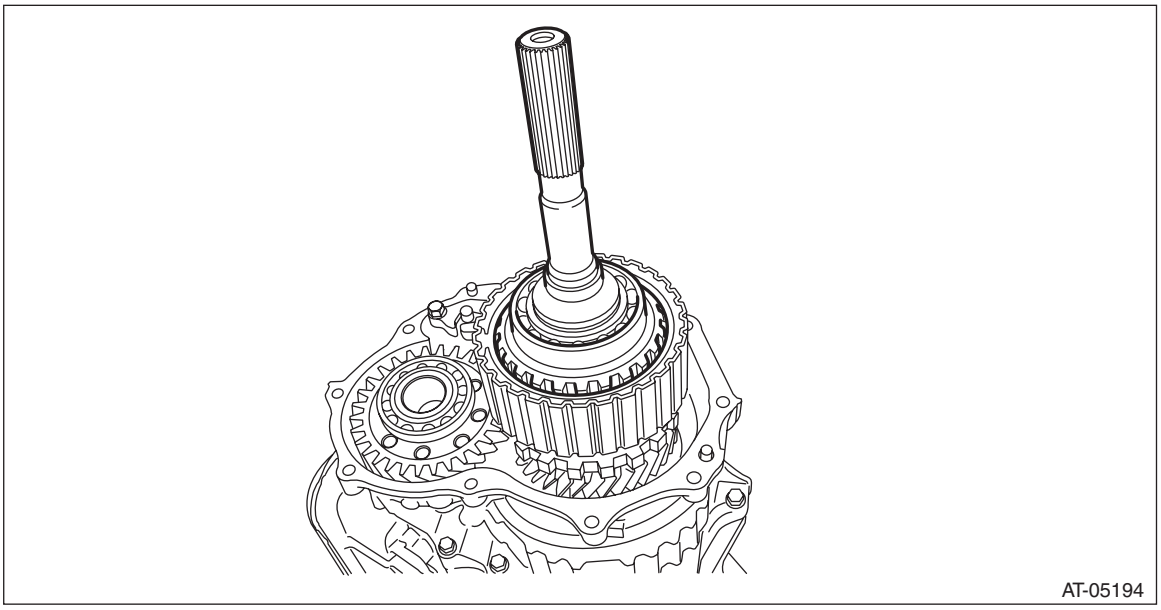

4) Install the extension case. <Ref. to CVT-138, INSTALLATION, Extension Case.>
5) Install the transmission assembly to the vehicle. <Ref. to CVT-70, INSTALLATION, Automatic Transmission Assembly.>

C: DISASSEMBLY

1) Remove the ball bearing using ST.
ST 498077600 REMOVER

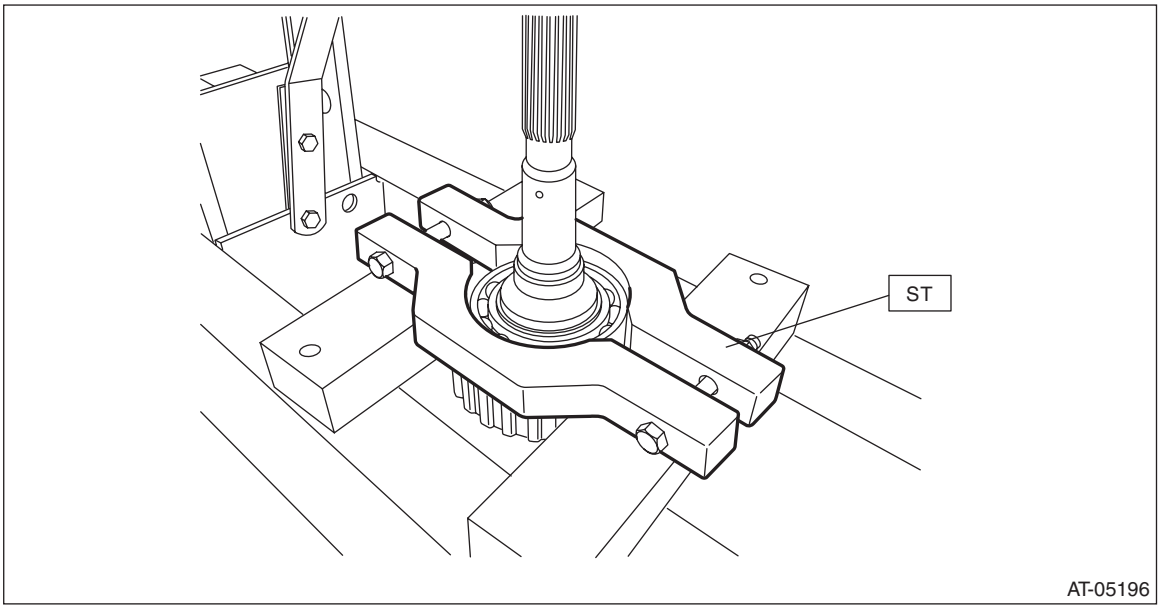

D: ASSEMBLY

1) Using the ST, install the ball bearing.

NOTE:
- Use a new ball bearing.
- Apply CVTF to press-fitting surface of ball bearing.

ST 399513600 INSTALLER

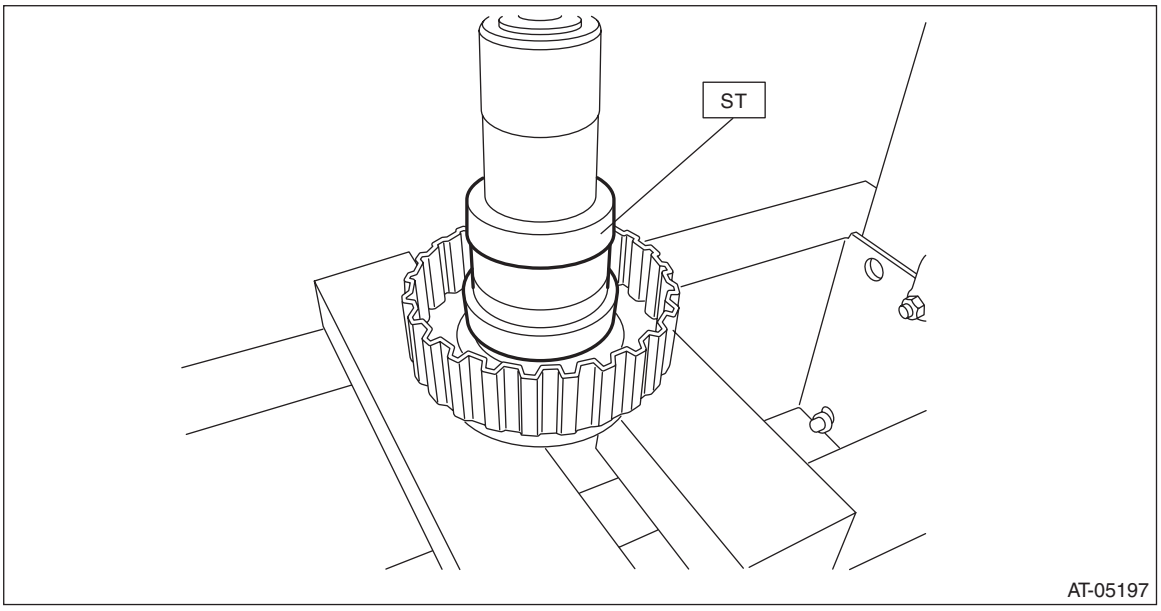

E: INSPECTION

- Check each part for crack, damage or dust.
- Check the ball bearing for smooth rotation.
- Check the ball bearing for excessive looseness.

F: ADJUSTMENT

NOTE:
When replacing the rear drive shaft or bearing, select the thrust needle bearing.

1) Using the ST, measure the distance “A” from ST end face to rear drive shaft thrust needle bearing catch surface.

ST 398643600 GAUGE

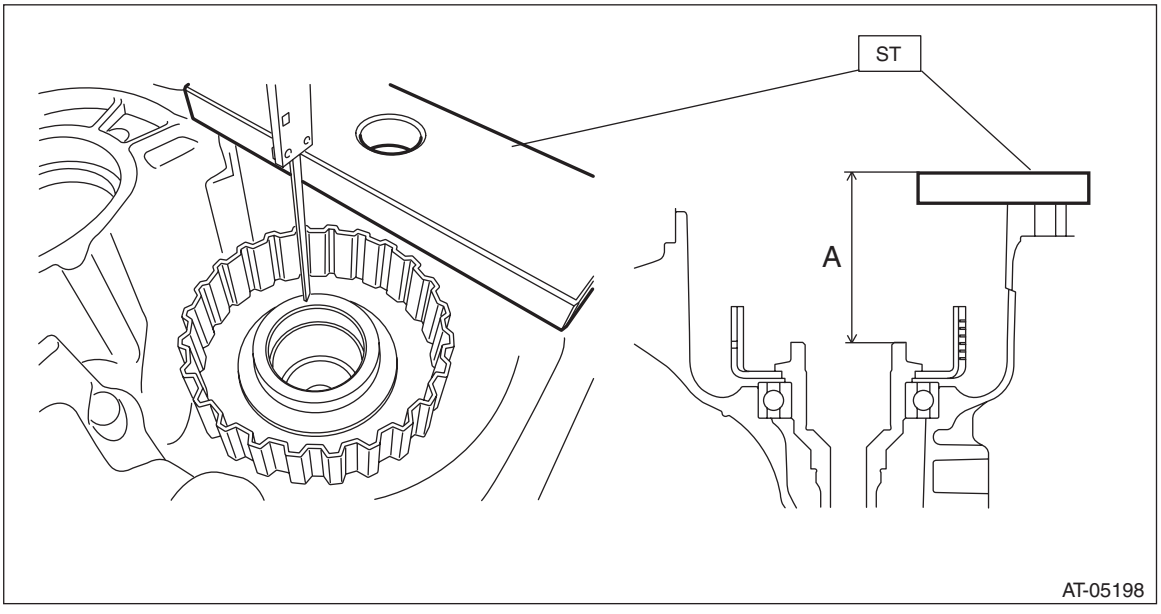

2) Using the ST, measure the height “B” from the intermediate case mating surface to the ST end face.

NOTE:
Place the measurement tool at the dent on ST upper side to measure.
ST 499737100 PULLER SET

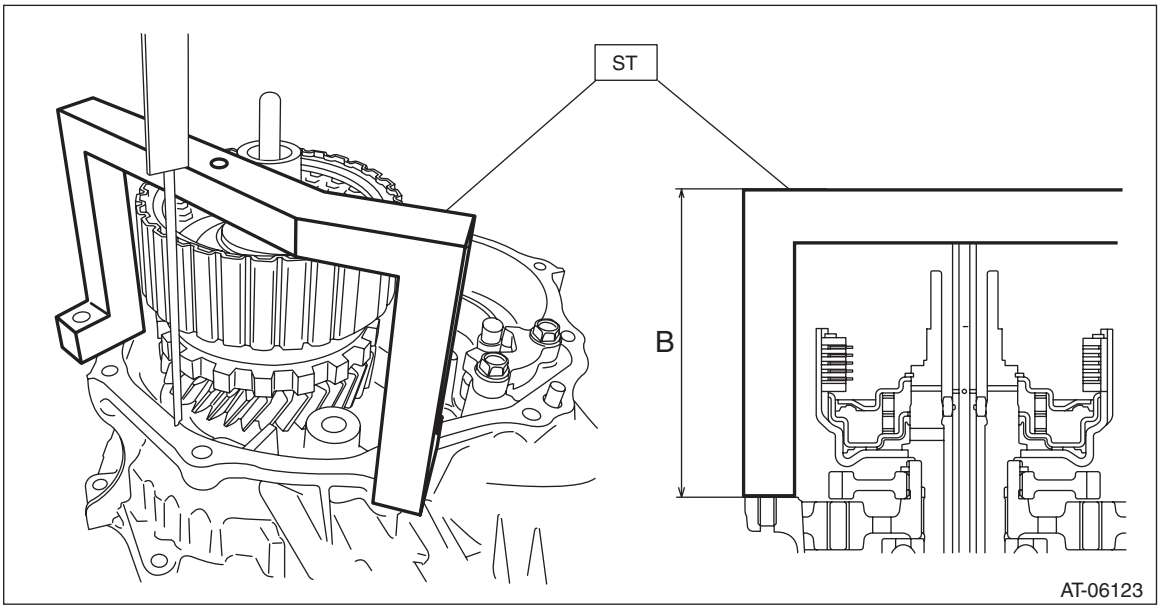

3) Using the ST, measure the height “C” from ST end face to transfer clutch assembly thrust needle bearing catch surface.

NOTE:
Place the measurement tool at the dent on ST upper side to measure.
ST 499737100 PULLER SET

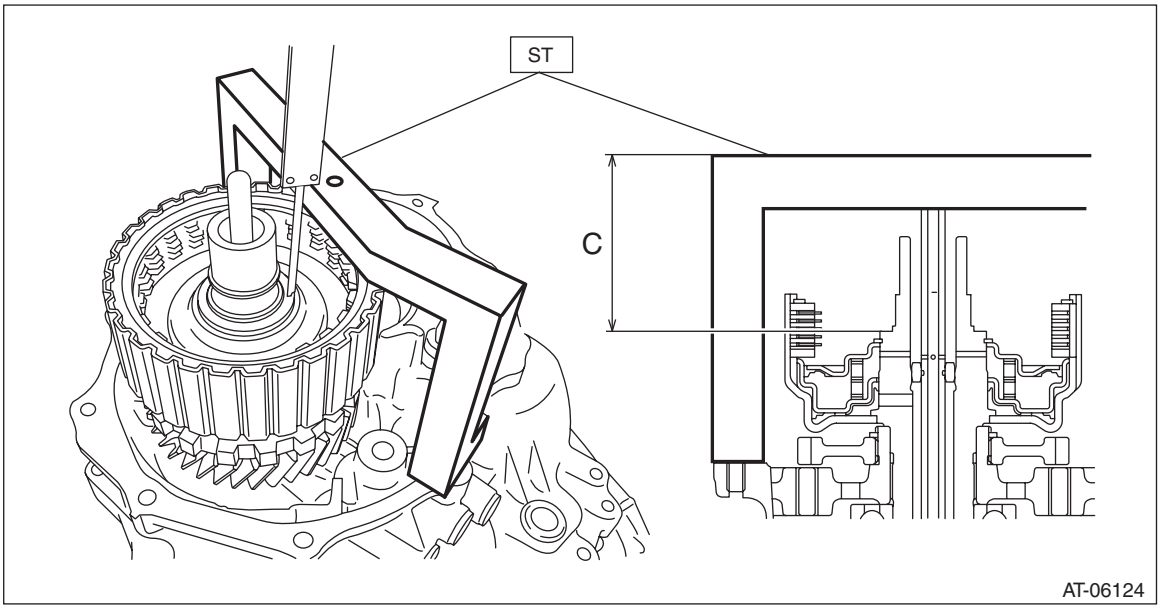

4) Obtain the thickness of thrust bearing using the following formula to select the thrust bearing.
T mm = (A – 15) – (B – C) – (0.05 — 0.25)
[T in = (A – 0.59) – (B – C) – (0.002 — 0.01)]
T: Thrust bearing thickness
A: Height from the ST end face to the rear drive shaft thrust needle bearing catch surface
B: Height from the mating surface of the intermediate case to the ST end face
C: Height from the ST end face to the transfer clutch assembly thrust needle bearing catch surface
15 mm (0.591 in): Thickness of ST
0.05 — 0.25 mm (0.002 — 0.01 in): Clearance

Thrust bearing	
Part No.	Thickness mm (in)
806536020	3.8 (0.15)
806535030	4.0 (0.157)
806535040	4.2 (0.165)
806535050	4.4 (0.173)
806535060	4.6 (0.181)
806535070	4.8 (0.189)
806535090	5.0 (0.197)

30.Transfer Clutch

A: REMOVAL

1) Remove the transmission assembly from the vehicle. <Ref. to CVT-55, REMOVAL, Automatic Transmission Assembly.>
2) Remove the extension case. <Ref. to CVT-138, REMOVAL, Extension Case.>
3) Remove the rear drive shaft. <Ref. to CVT-141, REMOVAL, Rear Drive Shaft.>
4) Remove the thrust needle bearing and needle bearing.

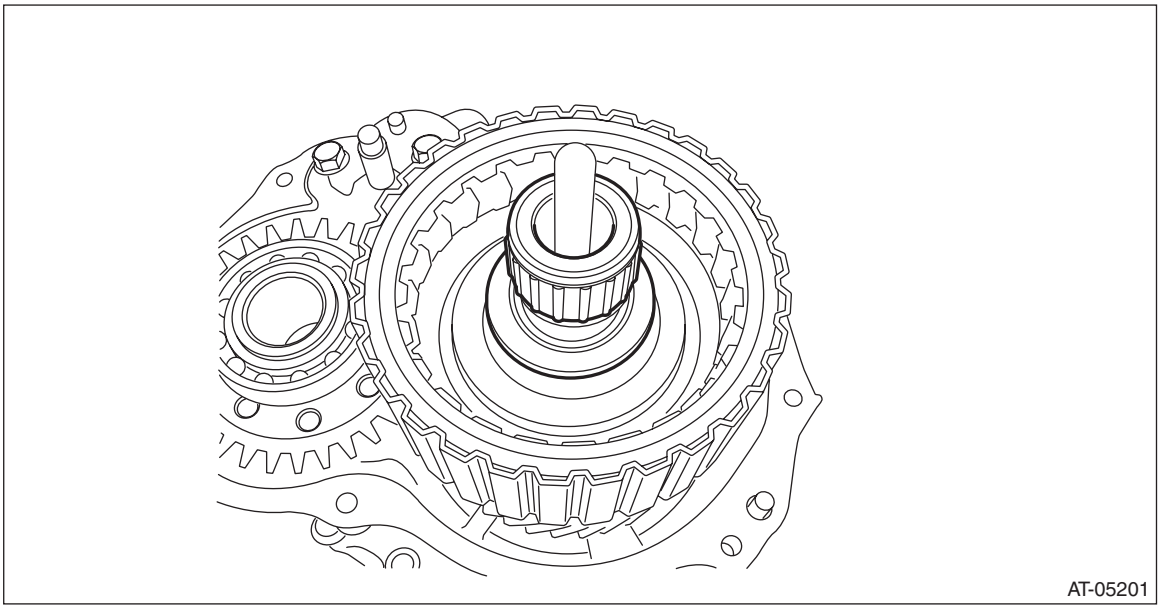
AT-05201

5) Remove the transfer clutch assembly.

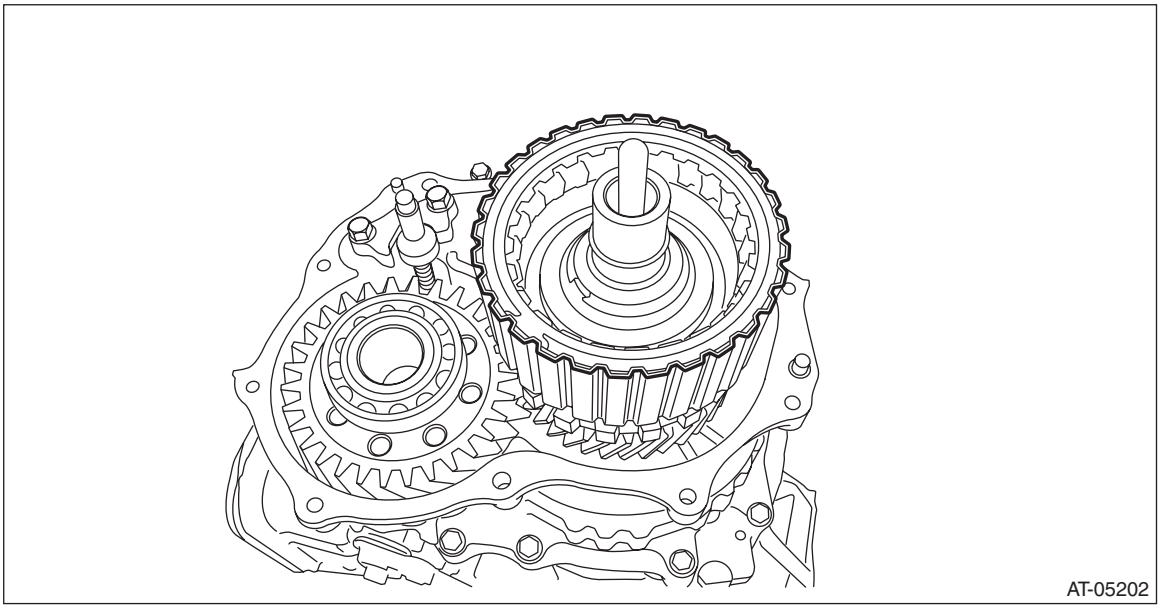
AT-05202

6) Remove the seal ring from transfer clutch assembly.

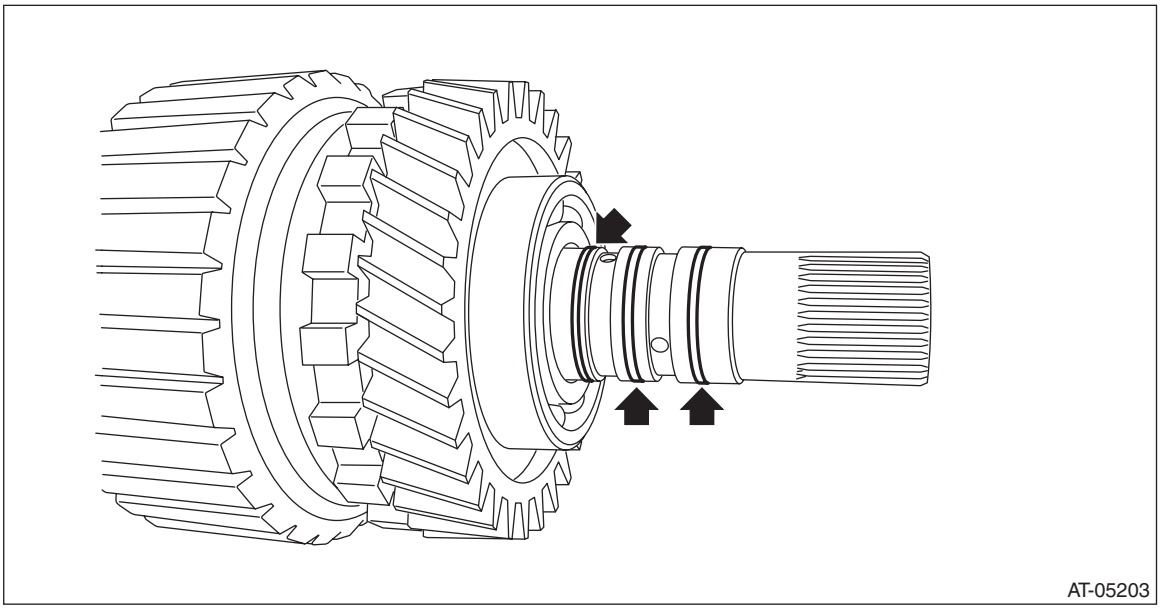

B: INSTALLATION

1) Apply vaseline to the seal ring and attach it to the seal ring groove of transfer clutch assembly.

NOTE:
- Use a new seal ring.
- When installing the seal ring, do not expand the seal ring too much.

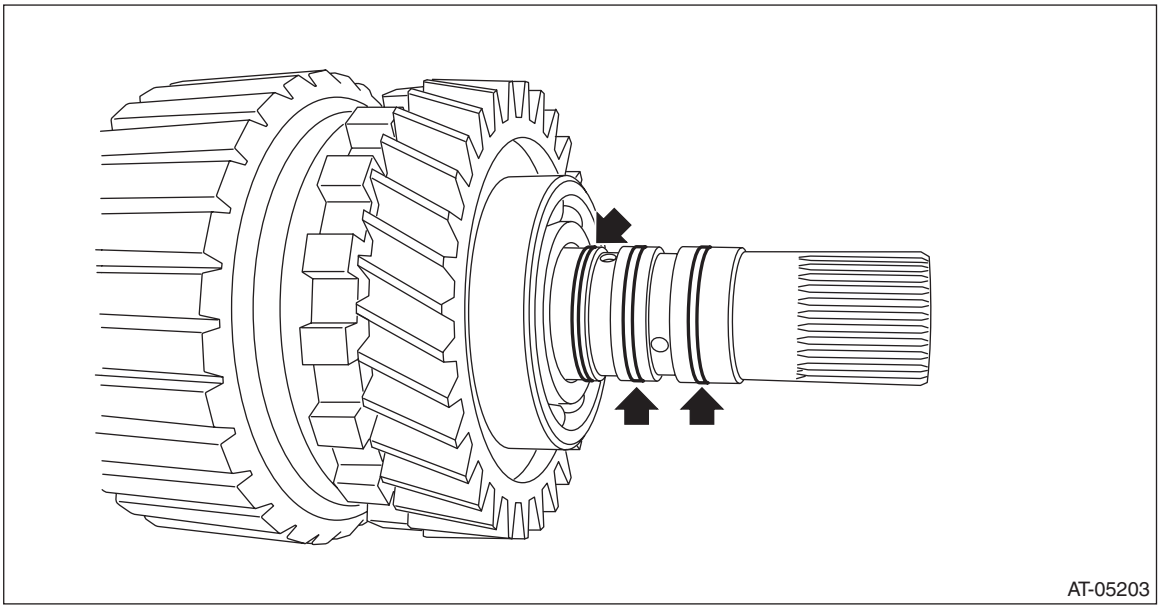

2) Install the transfer clutch assembly.

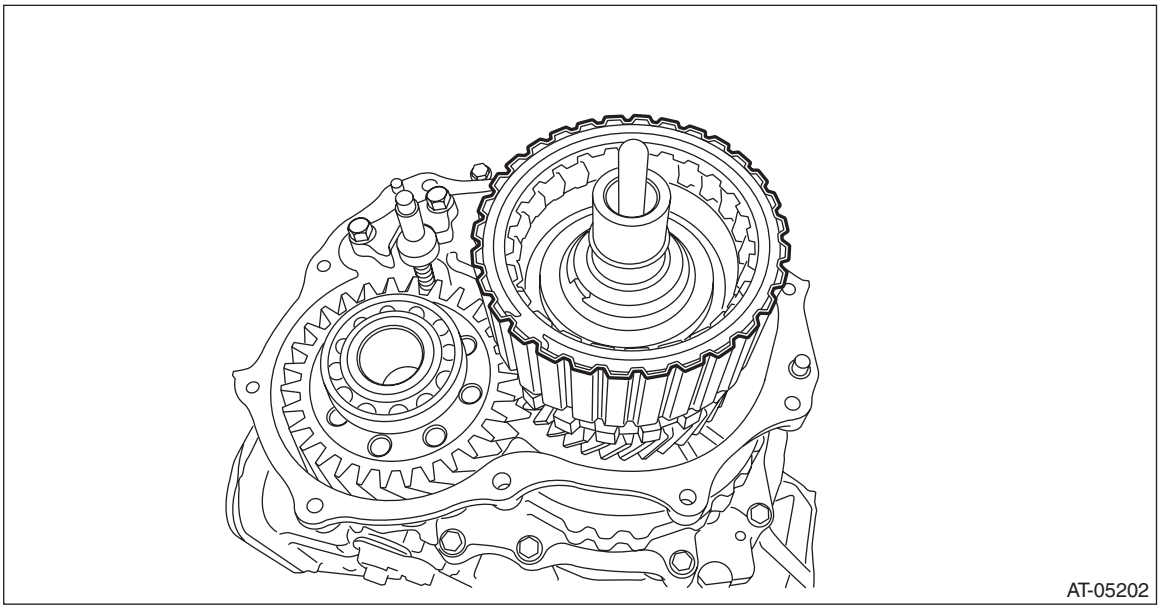

3) Select the thrust needle bearing. <Ref. to CVT-143, ADJUSTMENT, Rear Drive Shaft.>
4) Install the selected thrust needle bearing and needle bearing to transfer clutch assembly.

NOTE:
Install the thrust needle bearing in the correct direction.

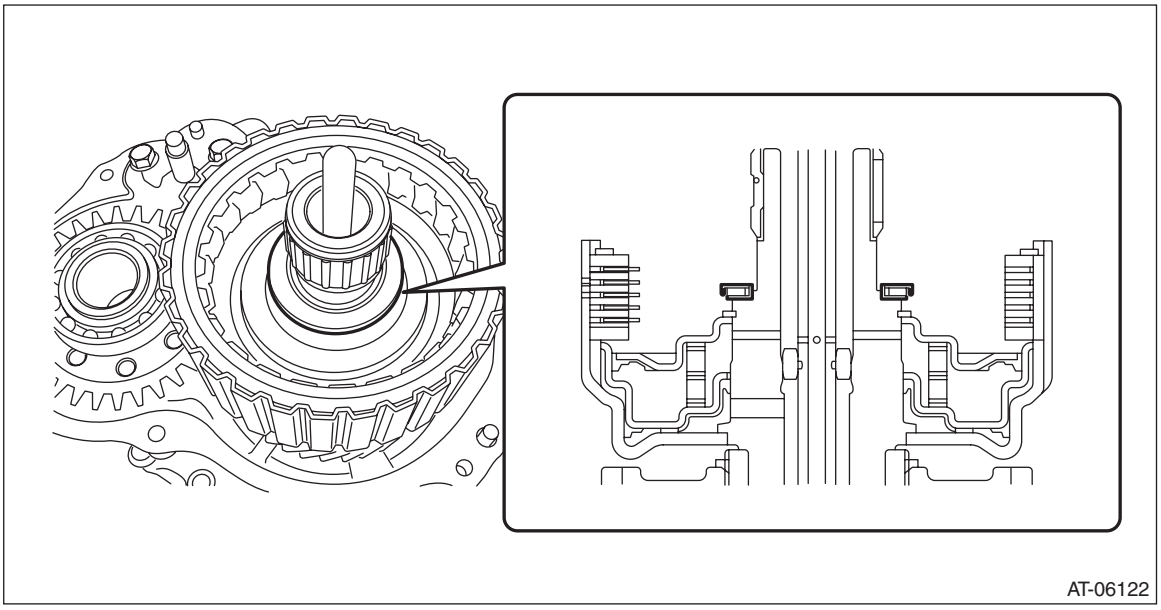

5) Install the rear drive shaft. <Ref. to CVT-141, INSTALLATION, Rear Drive Shaft.>
6) Install the extension case. <Ref. to CVT-138, INSTALLATION, Extension Case.>
7) Install the transmission assembly to the vehicle. <Ref. to CVT-70, INSTALLATION, Automatic Transmission Assembly.>

C: DISASSEMBLY

1) Remove the snap ring, and then remove the retaining plate, drive plate and driven plate.

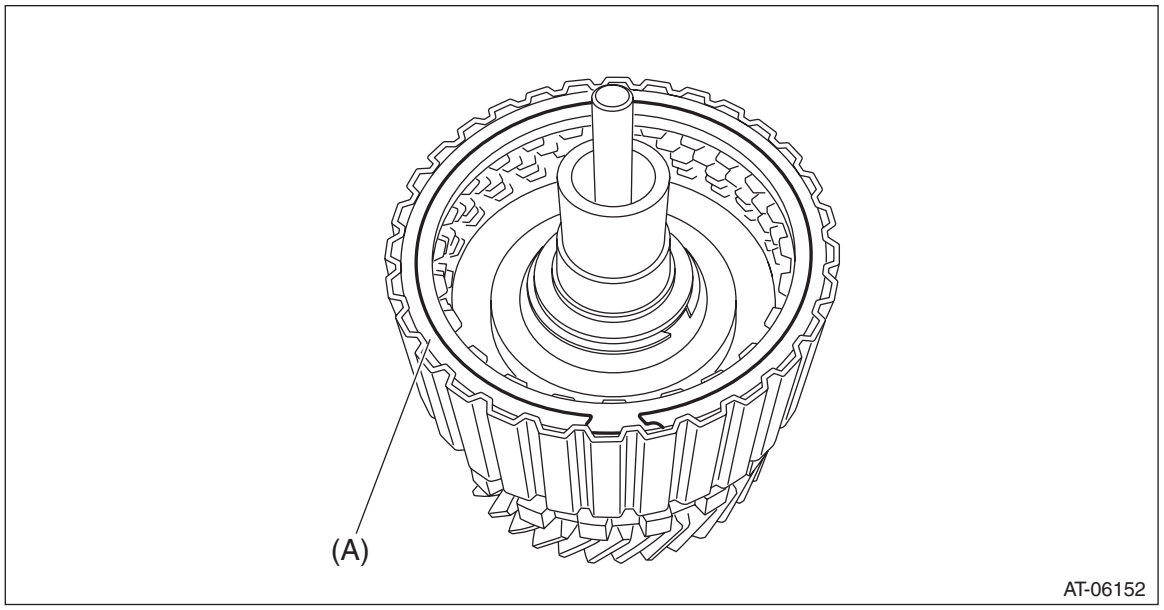

(A) Snap ring

2) Using the ST, remove the snap ring.
ST 18762AA000 COMPRESSOR SPECIAL TOOL

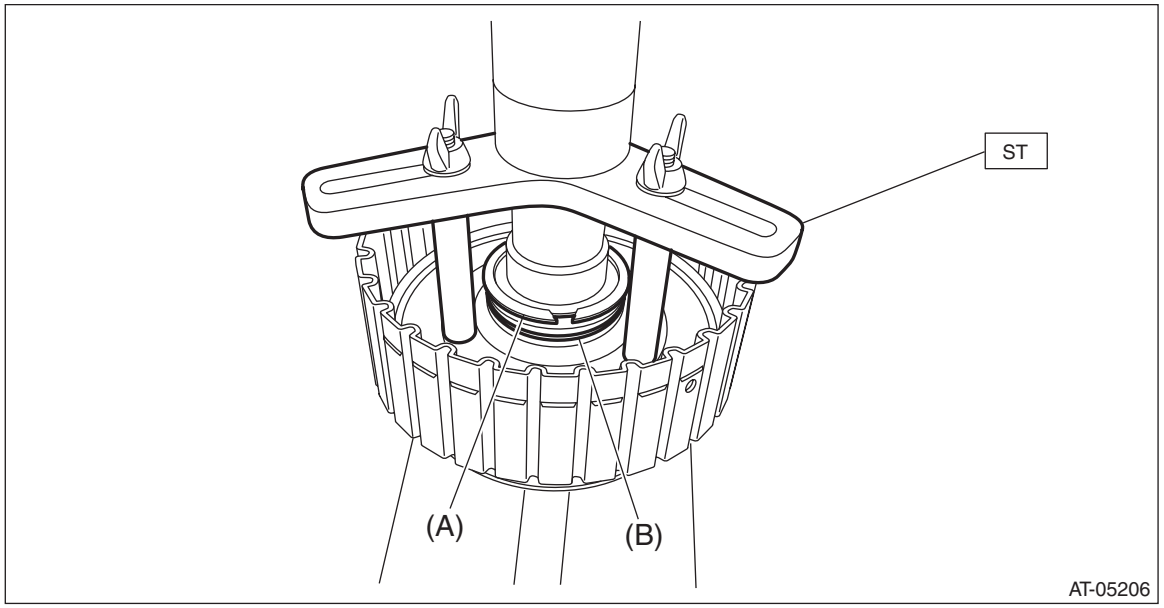

(A) Snap ring
(B) Transfer clutch piston seal

3) Remove the transfer clutch piston seal.

4) Remove the return spring.

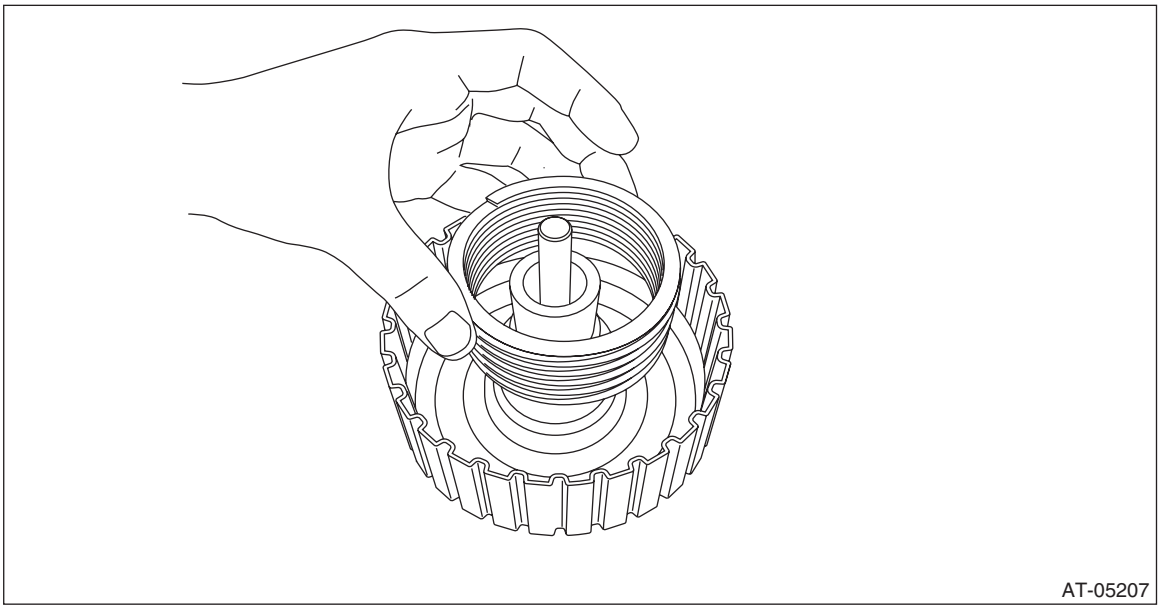

5) Remove the transfer clutch piston by blowing compressed air through transfer clutch assembly hole.

NOTE:
Block the hole opposite to the one to be blown with compressed air by your finger.

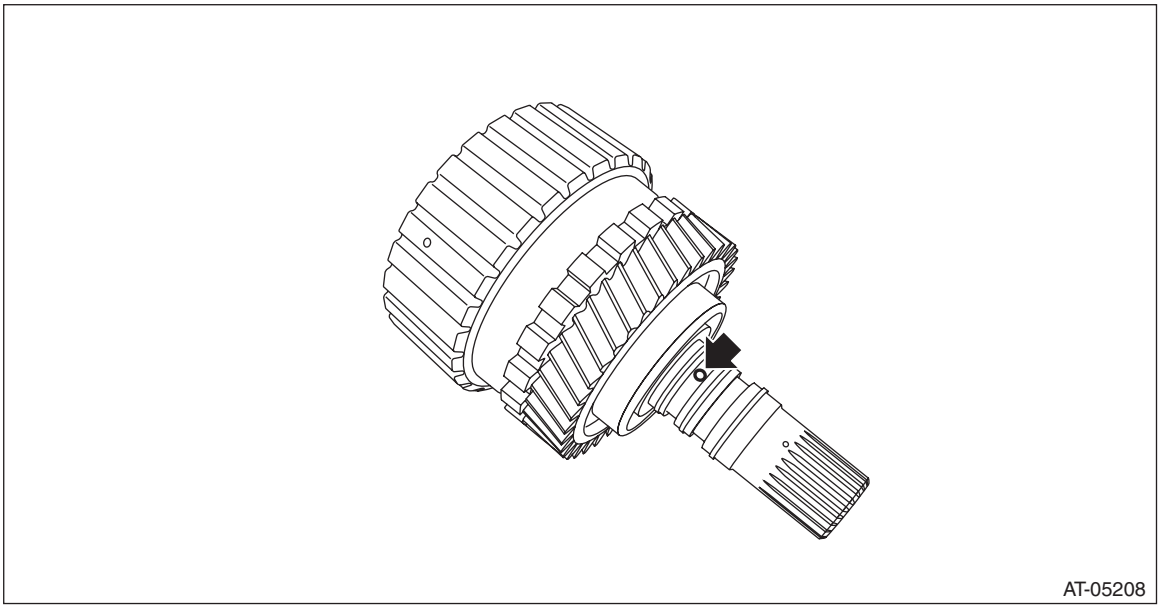

6) Using ST, remove transfer drive gear, parking gear and ball bearing.
ST 18767AA000 BEARING REMOVER

NOTE:
Let the ST sit on the parking gear.

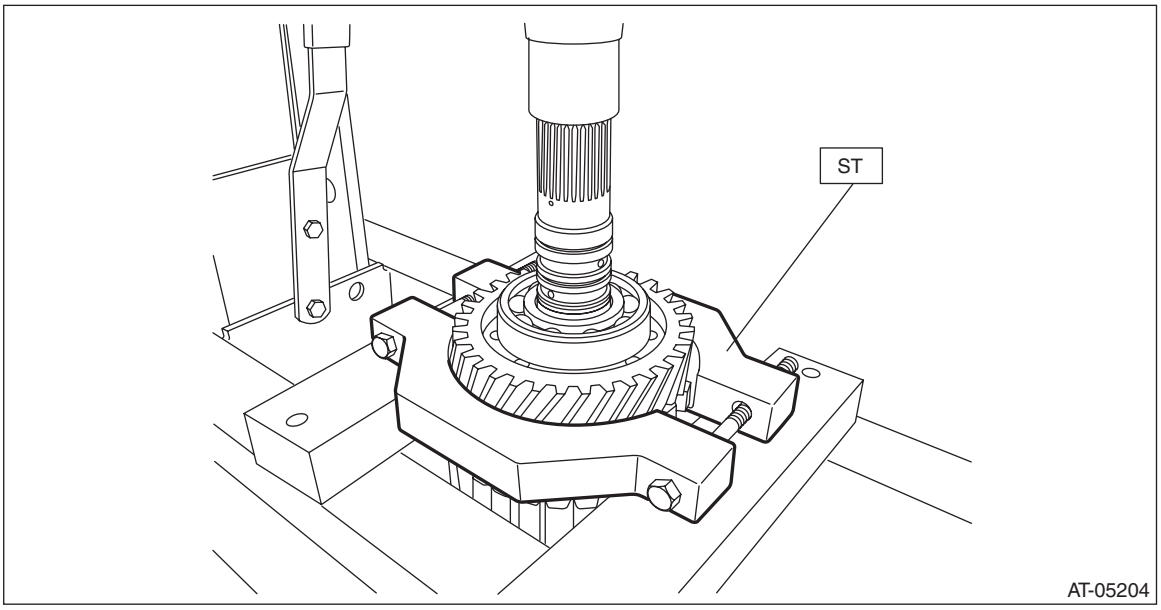

7) Remove the snap ring from transfer reduction drive gear.

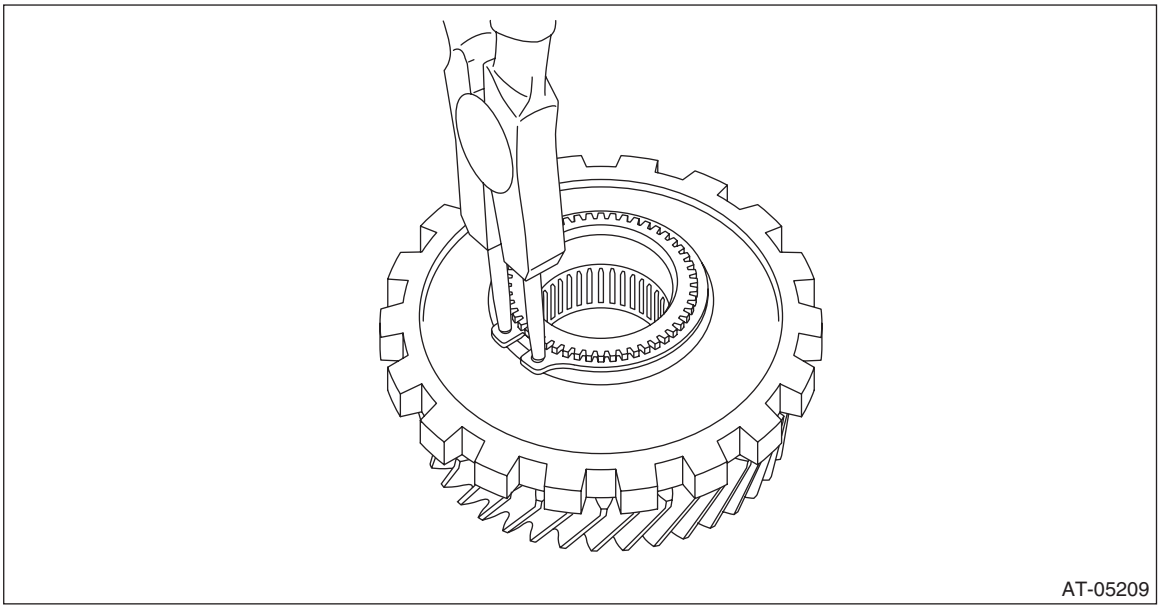

8) Using the ST, remove the parking gear from transfer reduction drive gear.
ST1 499277100 BUSHING 1-2 INSTALLER
ST2 18767AA000 BEARING REMOVER

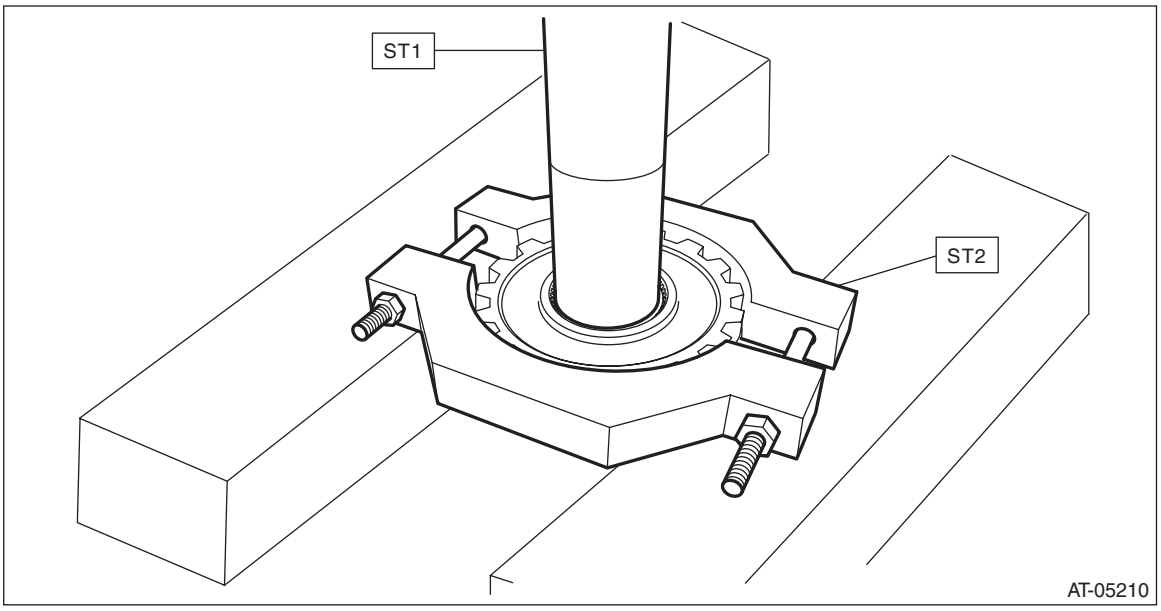

D: ASSEMBLY

1) Using the ST, install the parking gear to transfer reduction drive gear.
ST 398177700 INSTALLER

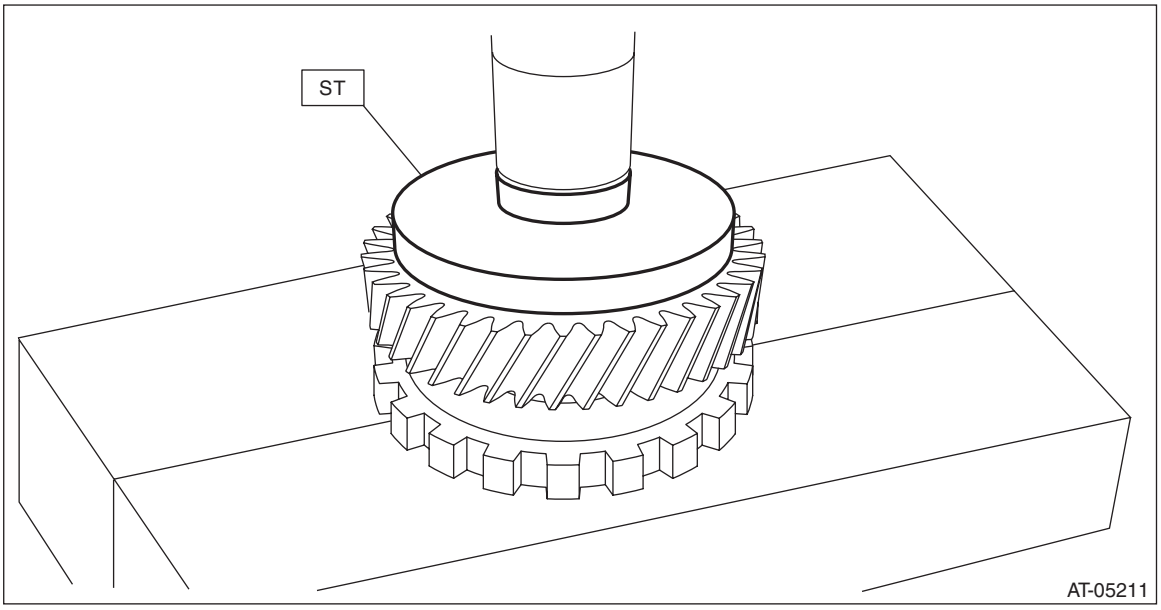

2) Install the snap ring to transfer reduction drive gear.

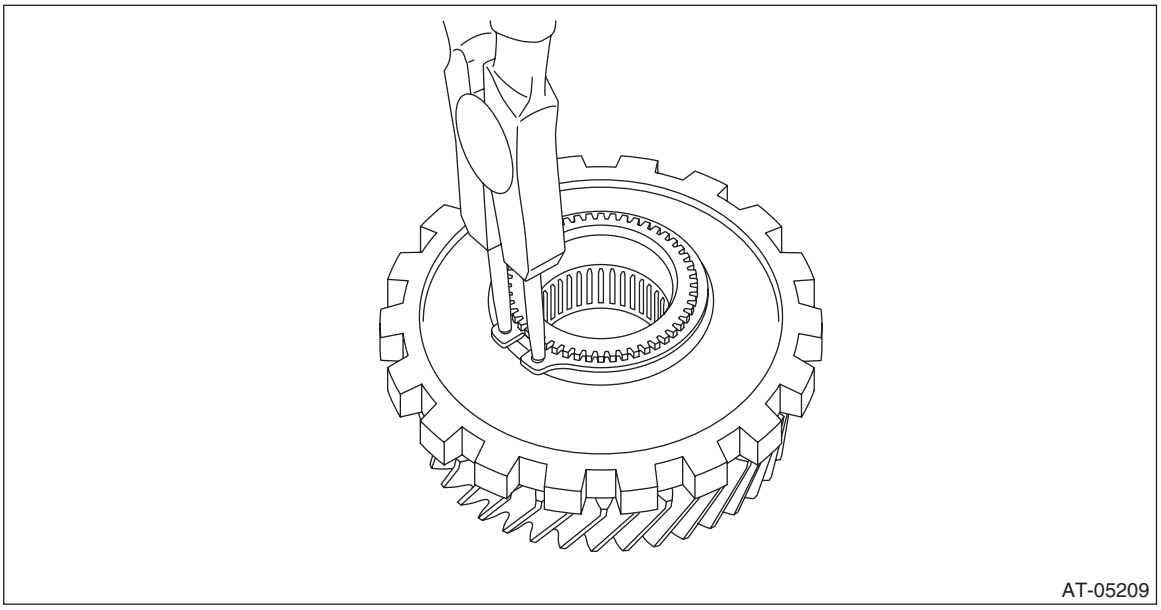

3) Using the ST, install the transfer reduction drive gear to transfer reduction drive gear shaft.
ST 499277100 BUSHING 1-2 INSTALLER

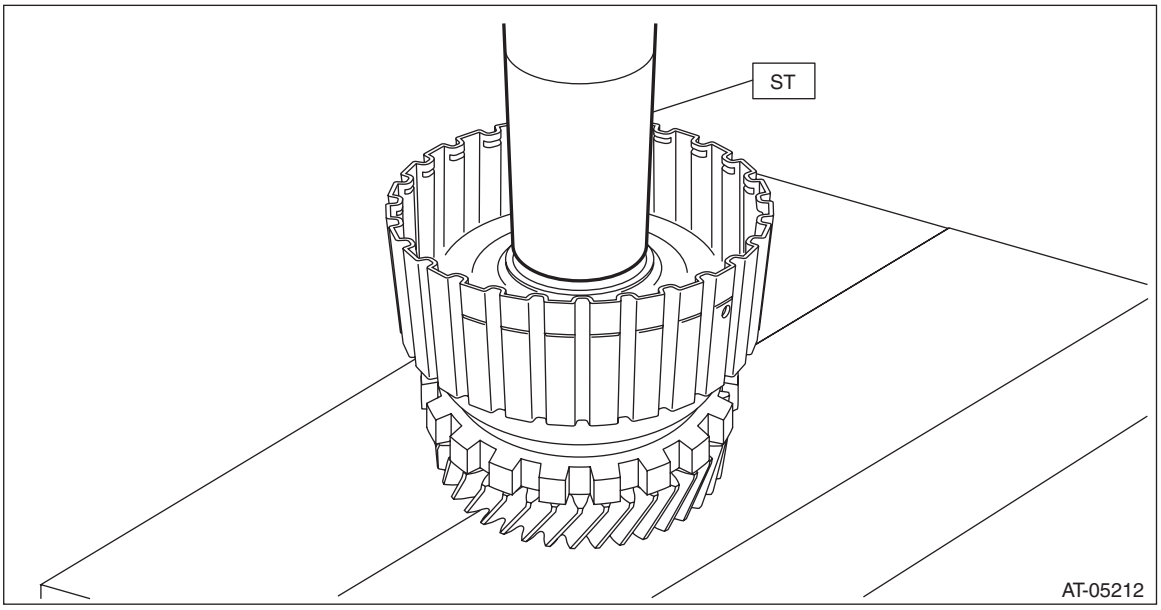

4) Using the ST, install the ball bearing.

NOTE:
Use a new ball bearing.
ST 499277100 BUSHING 1-2 INSTALLER

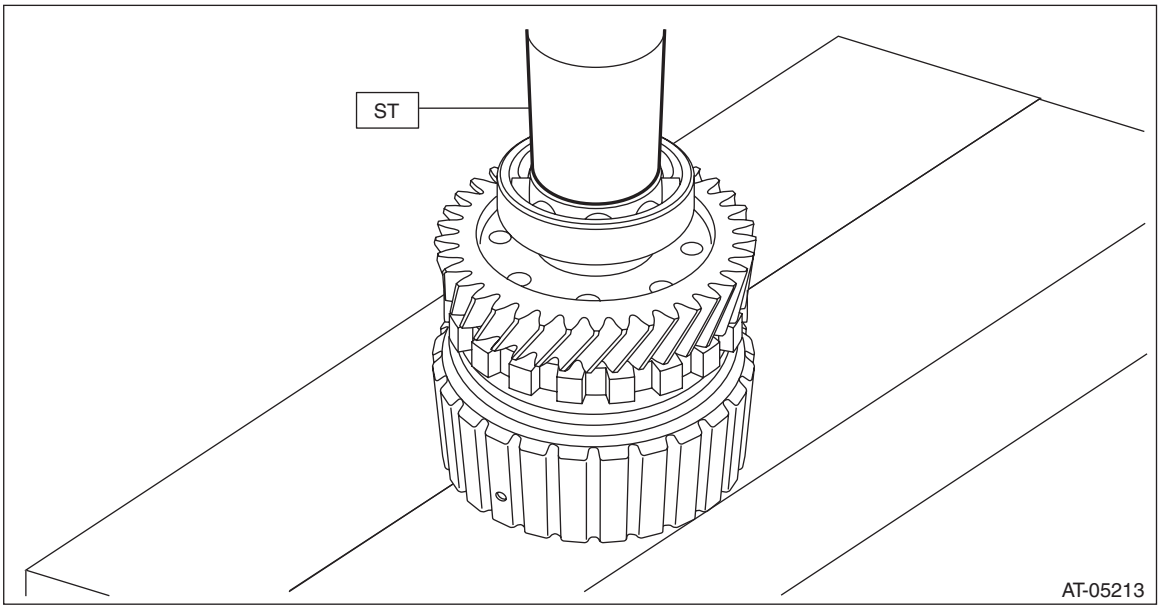

5) Attach the transfer clutch piston to the reduction drive gear shaft.

NOTE:
Apply CVTF to the transfer clutch piston lip.

6) Install the return spring.

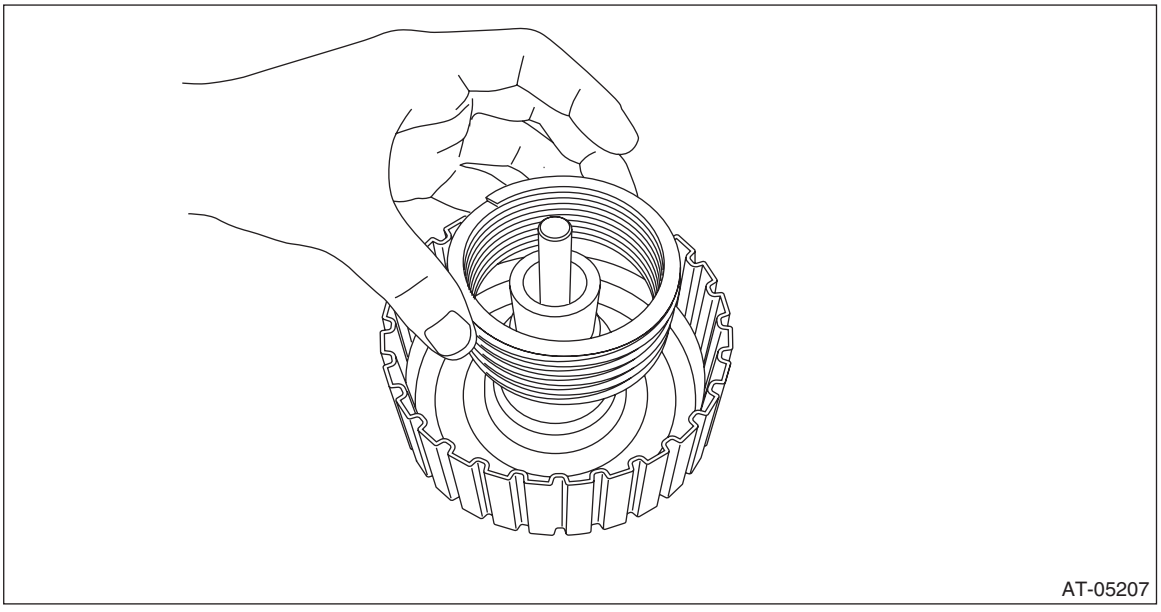

7) Install the transfer clutch piston seal.

8) Using the ST, install the snap ring.
ST 18762AA000 COMPRESSOR SPECIAL TOOL

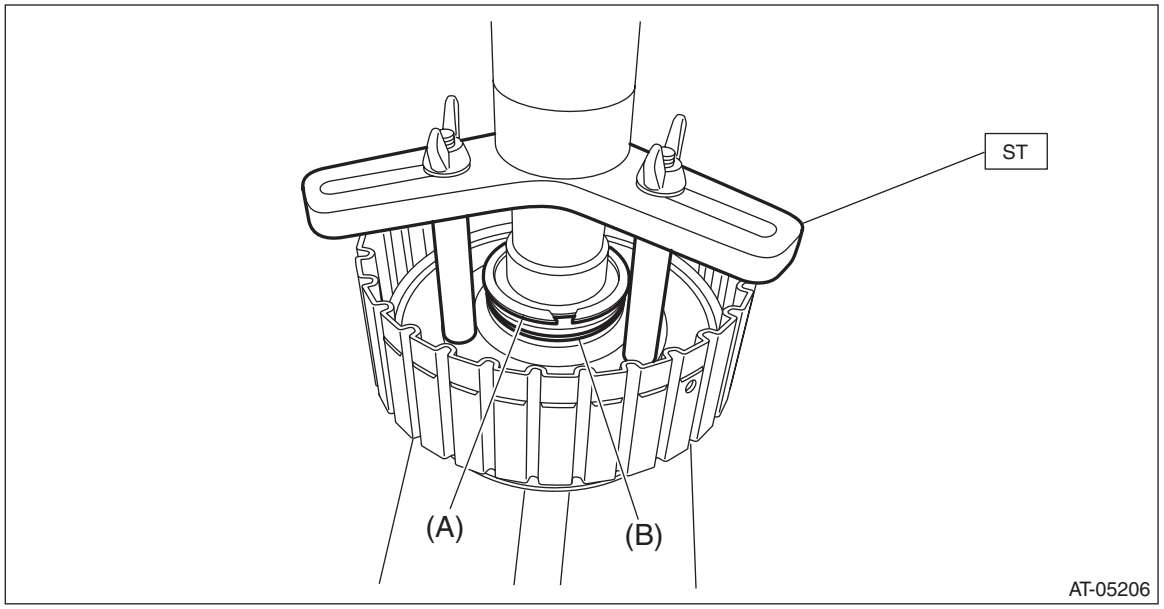

(A) Snap ring
(B) Transfer clutch piston seal

9) Install the pressure plate, driven plate, drive plate and snap ring.

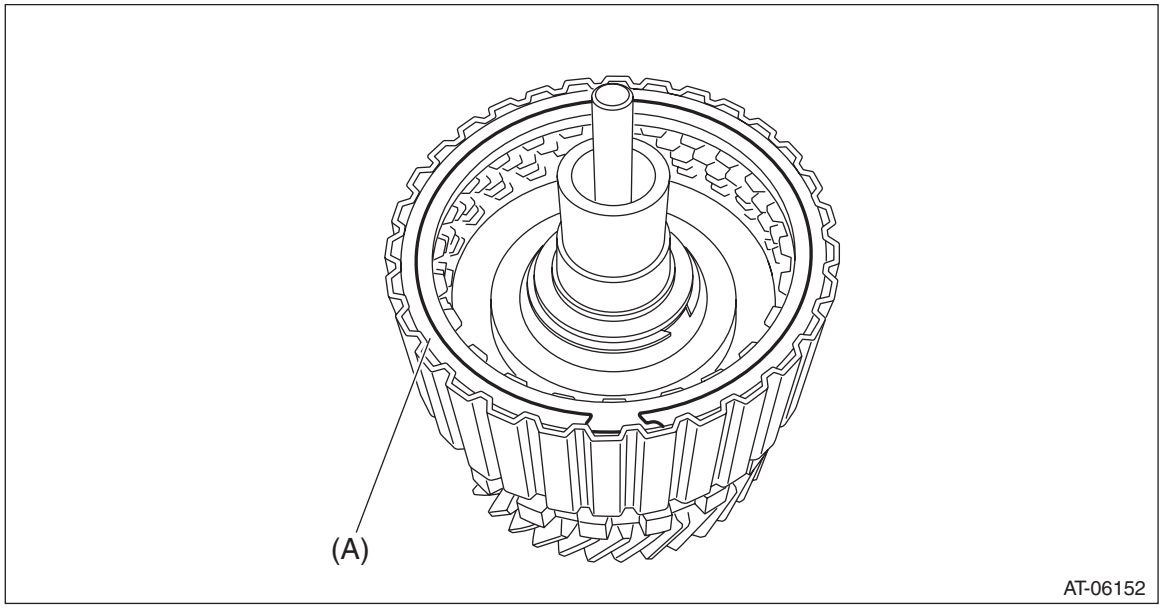

(A) Snap ring

10) Before measuring clearance “A”, place same thickness shims on both sides to prevent the retaining plate from tilting.

11) When clearance “A” exceeds the limit for use, replace the drive plate and driven plate as a set, and select and adjust the pressure plate within the initial specified value.

Initial standard:
0.7 — 1.1 mm (0.028 — 0.043 in)

Limit thickness:
1.6 mm (0.063 in)

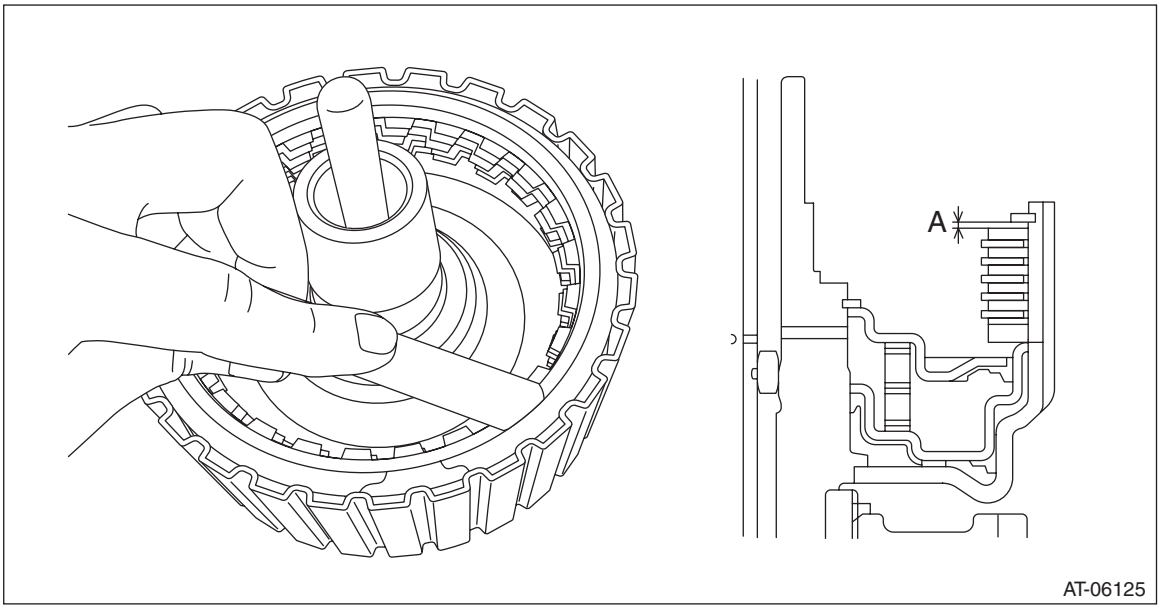

Pressure plate	
Part No.	Thickness mm (in)
31593AA151	3.3 (0.130)
31593AA161	3.7 (0.146)

12) Check the clearance between the snap ring and retaining plate. <Ref. to CVT-156, INSPECTION, Transfer Clutch.>

E: INSPECTION

- Inspect the drive plate facing for wear and damage.
- Driven plate for discoloration (burned color)
- Make sure the snap ring is not worn and the return spring has no permanent distortion, damage, or deformation.
- Check the lip seal for damage.
- Inspect the extension end play, and adjust it to within the standard value. <Ref. to CVT-157, ADJUSTMENT, Transfer Clutch.>

1) Before measuring clearance “A” between snap ring and retaining plate, place same thickness shims on both sides to prevent the retaining plate from tilting.

2) When clearance “A” exceeds the limit for use, replace the drive plate and driven plate as a set, and select the pressure plate within the initial specified value.

Initial standard:
0.7 — 1.1 mm (0.028 — 0.043 in)

Limit thickness:
1.6 mm (0.063 in)

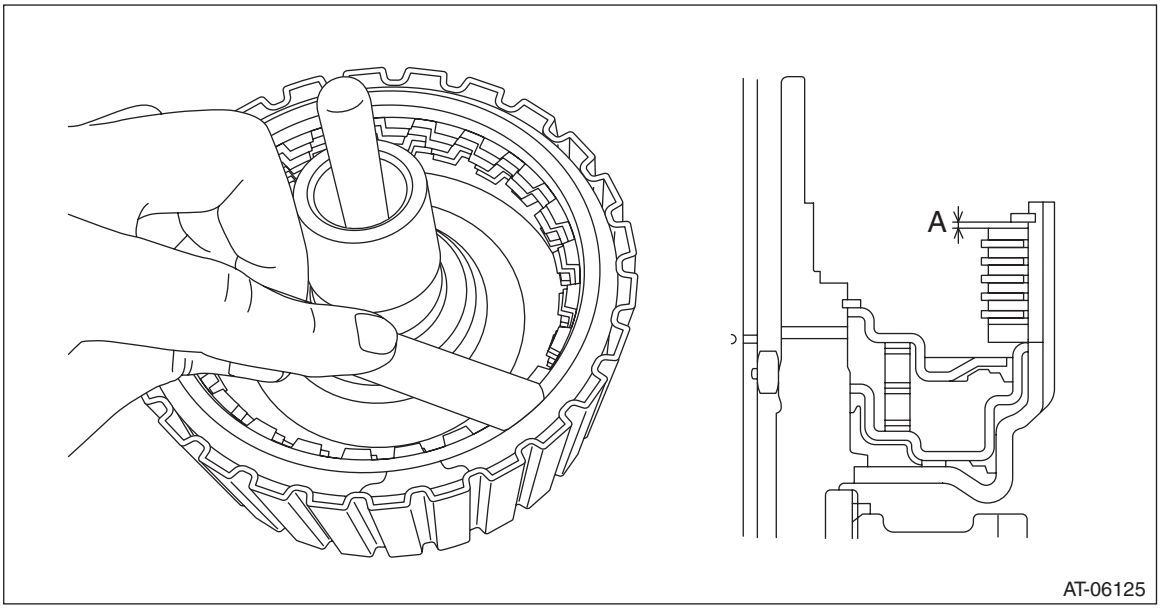

3) Check for tight corner braking phenomenon when the vehicle is moved forward with the steering fully turned. If tight corner braking occurs, perform the following procedures.
(1) With the steering wheel held at fully turned position, drive the vehicle in “D” range and with vehicle speed at approx. 5 km/h (3 MPH) in both clockwise and counterclockwise directions for approx. ten times each, while repeating acceleration and braking intermittently.
(2) If the tight corner braking phenomenon still persists, drive the vehicle again in a circle for several laps.

F: ADJUSTMENT

NOTE:
Refer to the Rear Drive Shaft. <Ref. to CVT-143, ADJUSTMENT, Rear Drive Shaft.>

31.Transfer Reduction Driven Gear

A: REMOVAL

1) Remove the transmission assembly from the vehicle. <Ref. to CVT-55, REMOVAL, Automatic Transmission Assembly.>
2) Remove the extension case. <Ref. to CVT-138, REMOVAL, Extension Case.>
3) Remove the transfer clutch assembly. <Ref. to CVT-146, REMOVAL, Transfer Clutch.>
4) Remove the transfer reduction driven gear assembly.

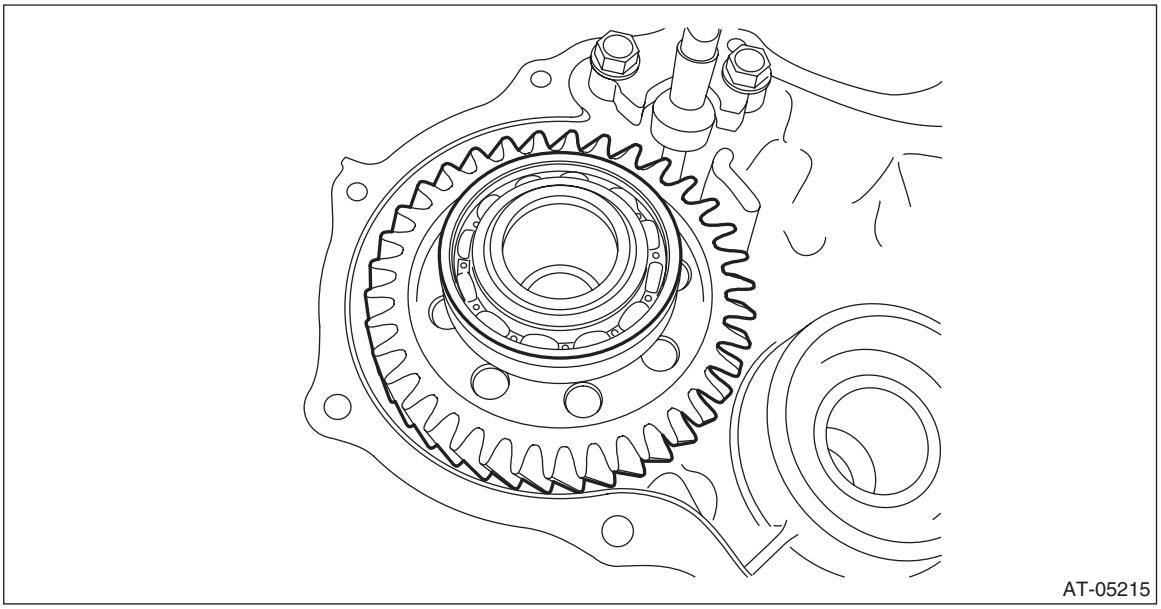

B: INSTALLATION

1) Install the reduction driven gear assembly.

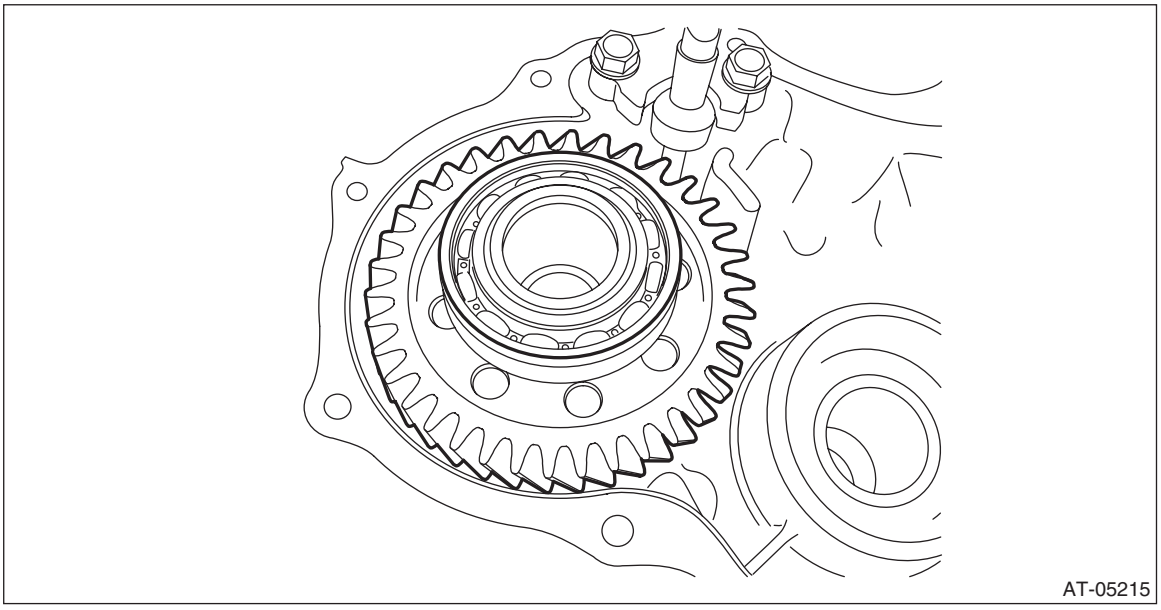

2) Select shims. <Ref. to CVT-161, ADJUSTMENT, Transfer Reduction Driven Gear.>
3) Mount the selected shim onto ball bearing.
4) Install the transfer clutch assembly. <Ref. to CVT-147, INSTALLATION, Transfer Clutch.>
5) Install the extension case. <Ref. to CVT-138, INSTALLATION, Extension Case.>
6) Install the transmission assembly to the vehicle. <Ref. to CVT-70, INSTALLATION, Automatic Transmission Assembly.>

C: DISASSEMBLY

1) Using the ST, remove the ball bearing (large) from transfer reduction driven gear.
ST1 899864100 REMOVER
ST2 398497701 SEAT
ST3 498077600 REMOVER

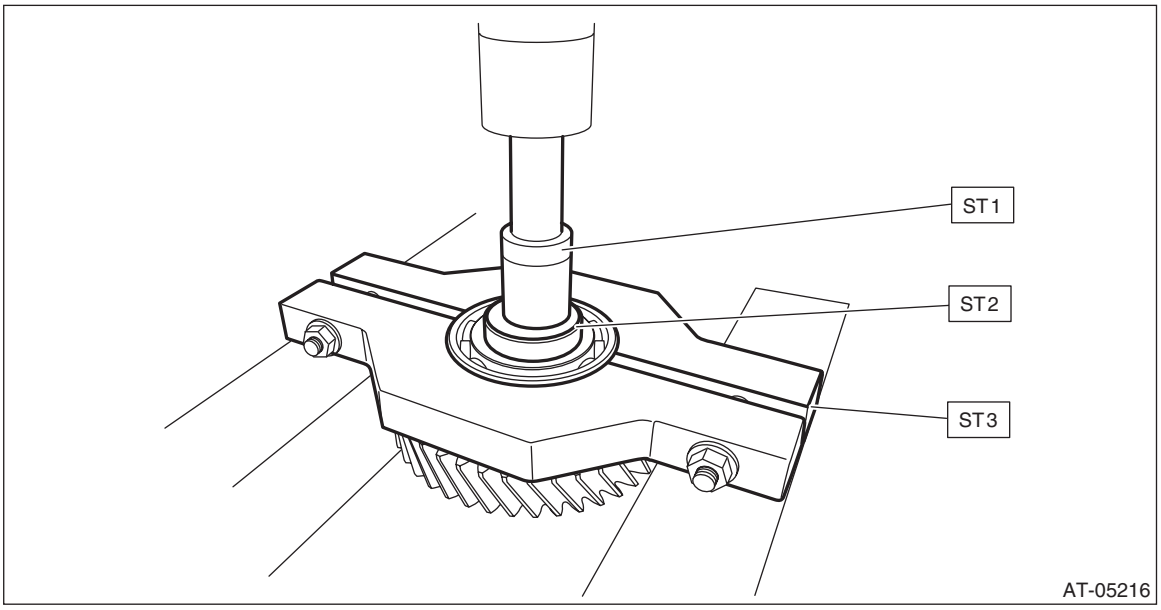

2) Using the ST, remove the ball bearing (small) from transfer reduction driven gear.
ST1 899864100 REMOVER
ST2 398497701 SEAT
ST3 18720AA000 REMOVER

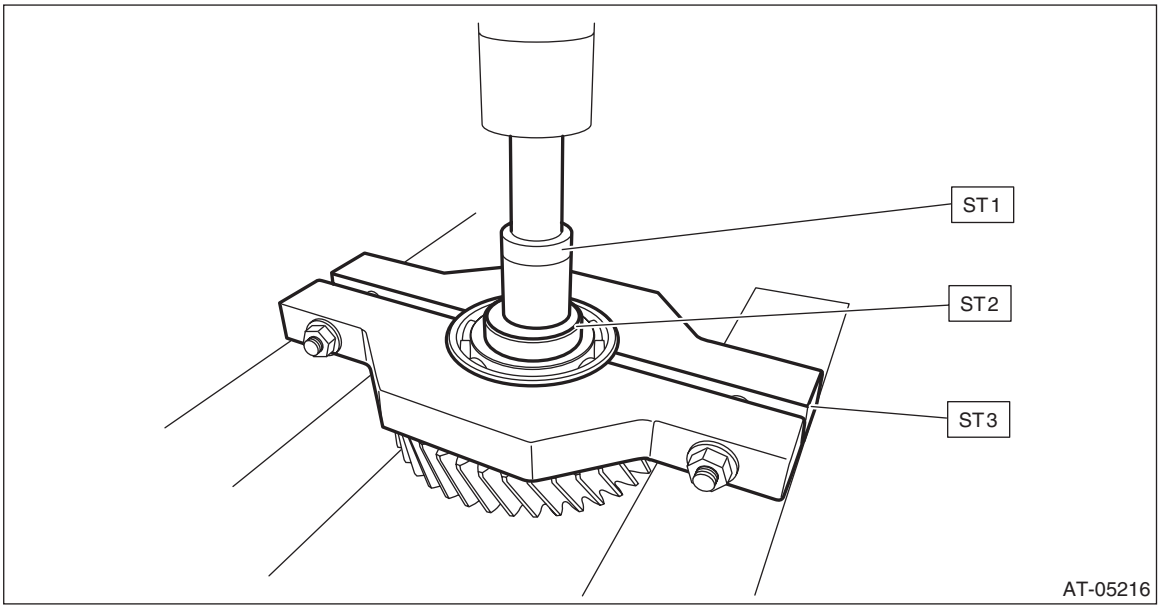

D: ASSEMBLY

1) Install the new ball bearing (large) to reduction driven gear using the ST.
ST 499277100 BUSHING 1-2 INSTALLER

NOTE:
- Use a new ball bearing.
- Install to the splines inside transfer reduction driven gear shaft.

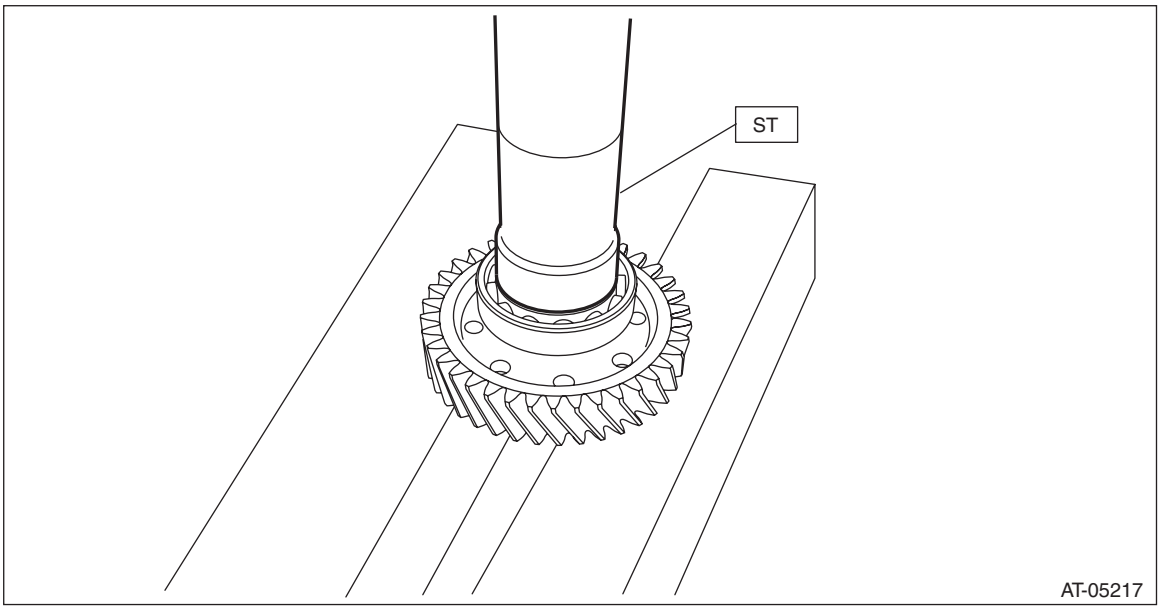

2) Install the new ball bearing (small) to reduction driven gear.

NOTE:
Use a new ball bearing.
ST 499277100 BUSHING 1-2 INSTALLER

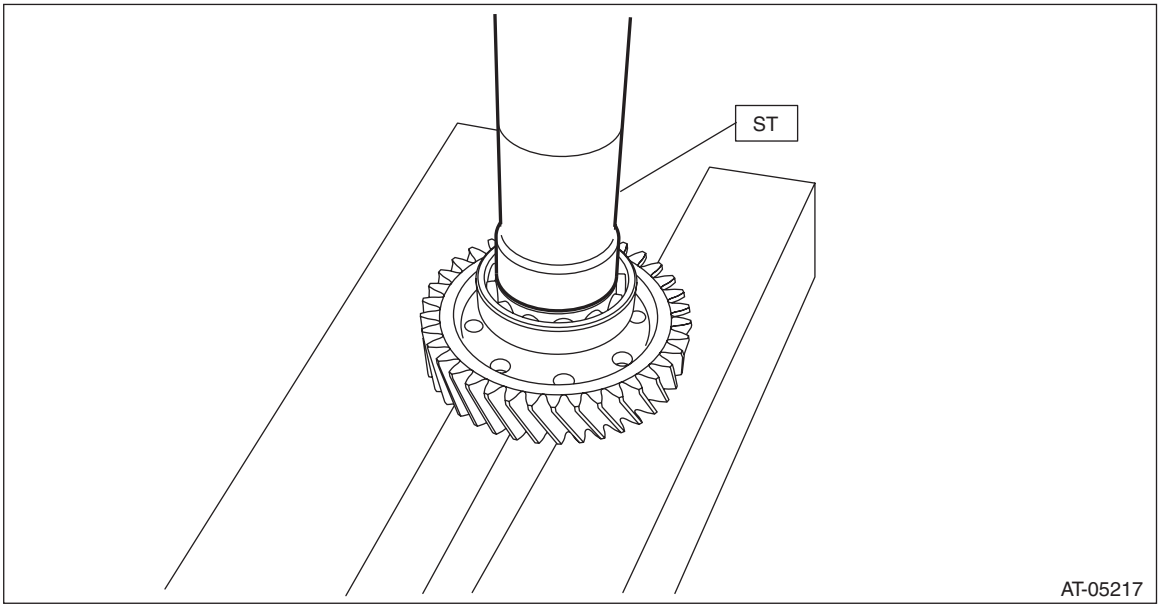

E: INSPECTION

- Check the ball bearing for smooth rotation.
- Check the ball bearing for excessive looseness.
- Make sure the gear is not broken or damaged.

F: ADJUSTMENT

1) Measure depth “A” from the ST upper face to the ball bearing catch surface.
ST 398643600 GAUGE

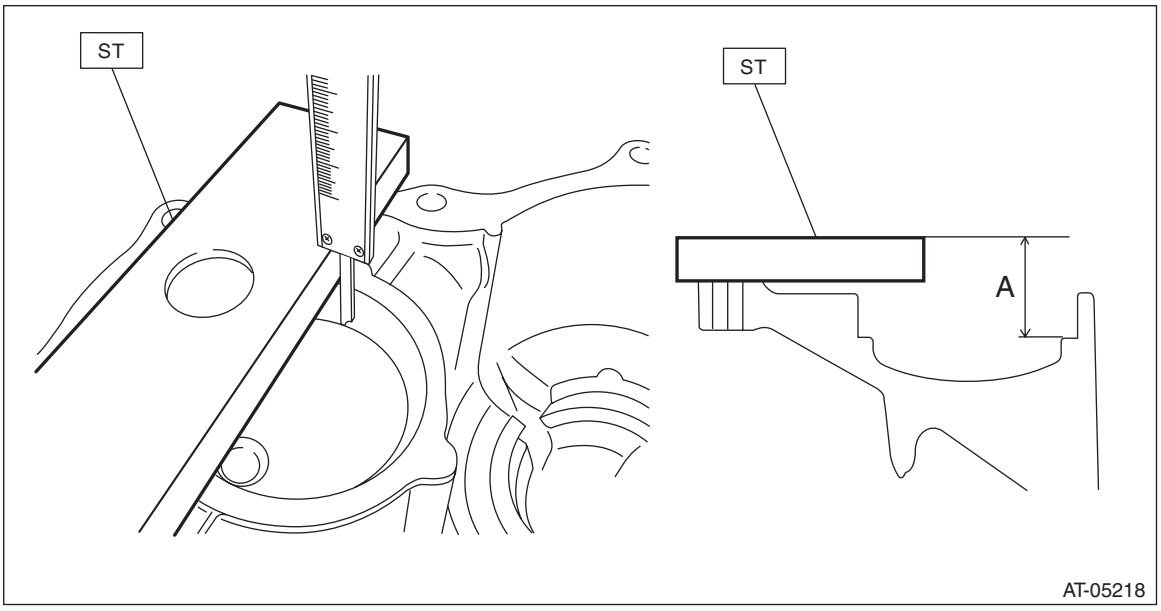

2) Measure height “B” from the ST to the end of the ball bearing outer ring.
ST 398643600 GAUGE

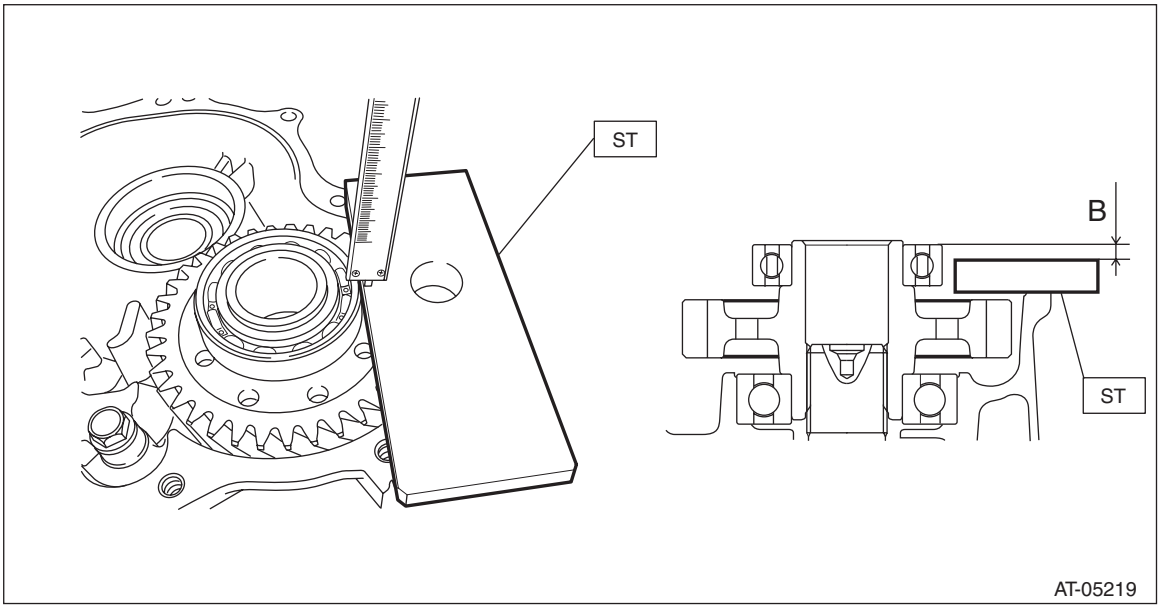

3) Obtain the thickness of shim using the following formula to select none to two shims.
T mm = (A – 15) – (B + 15) – (0.05 — 0.25)
[T in = (A – 0.591) – (B + 0.591) – (0.002 — 0.01)]
T: Shim thickness
A: Depth from the ST upper face to the ball bearing catch surface
B: Height from the ST to the end of the ball bearing outer ring
15 mm (0.591 in): Thickness of ST
0.05 — 0.25 mm (0.002 — 0.01 in): Clearance

Shim	
Part number	Thickness mm (in)
31288AA190	0.2 (0.008)
31288AA200	0.3 (0.012)
31288AA210	0.5 (0.02)

32.Parking Pawl

A: REMOVAL

1) Remove the transmission assembly from the vehicle. <Ref. to CVT-55, REMOVAL, Automatic Transmission Assembly.>
2) Shift the range select lever to “N” range.
3) Remove the extension case. <Ref. to CVT-138, REMOVAL, Extension Case.>
4) Remove the parking pawl shaft, return spring and parking pawl.

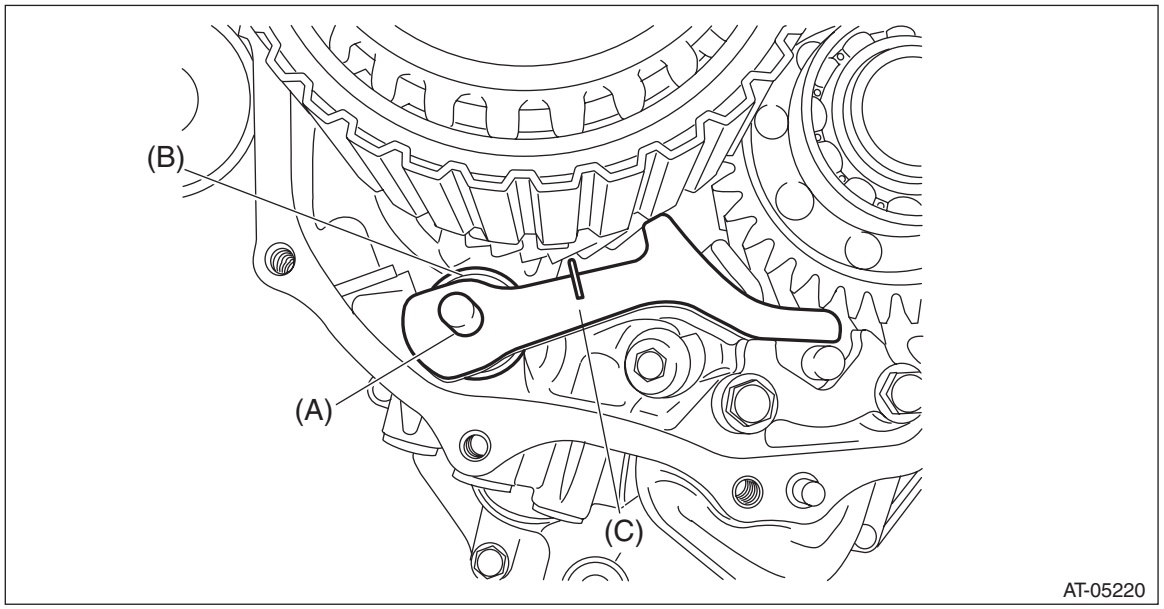

(A) Parking pawl shaft
(B) Return spring
(C) Parking pawl

B: INSTALLATION

1) Set the range select lever to the “N” range.
2) Install the parking pawl shaft, return spring and parking pawl.

NOTE:
Make sure that the end of return spring sticks out of parking pawl as shown in (a). Make sure that the other end contacts the rib of intermediate case as shown in (b).

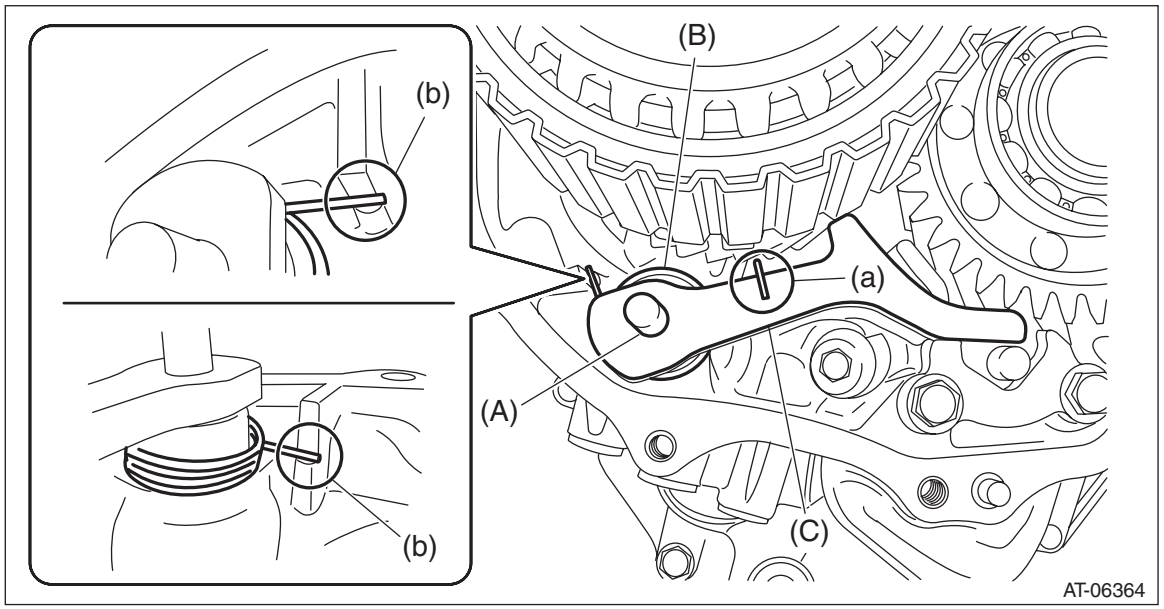

(A) Parking pawl shaft
(B) Return spring
(C) Parking pawl

3) Install the extension case. <Ref. to CVT-138, INSTALLATION, Extension Case.>
4) Install the transmission assembly to the vehicle. <Ref. to CVT-70, INSTALLATION, Automatic Transmission Assembly.>

C: INSPECTION

- Check the parking pawl for breakage or damage.
- Check the return spring for fatigue.

33.Intermediate Case

A: REMOVAL

1) Remove the transmission assembly from vehicle body. <Ref. to CVT-55, REMOVAL, Automatic Transmission Assembly.>
2) Remove the extension case. <Ref. to CVT-138, REMOVAL, Extension Case.>
3) Remove the rear drive shaft. <Ref. to CVT-141, REMOVAL, Rear Drive Shaft.>
4) Remove the transfer clutch assembly. <Ref. to CVT-146, REMOVAL, Transfer Clutch.>
5) Remove the transfer reduction driven gear assembly. <Ref. to CVT-158, REMOVAL, Transfer Reduction Driven Gear.>
6) Remove the intermediate case.

NOTE:
- The total number of intermediate case mounting bolts is 14.
- Inside the transmission is a single bolt (arrowed).

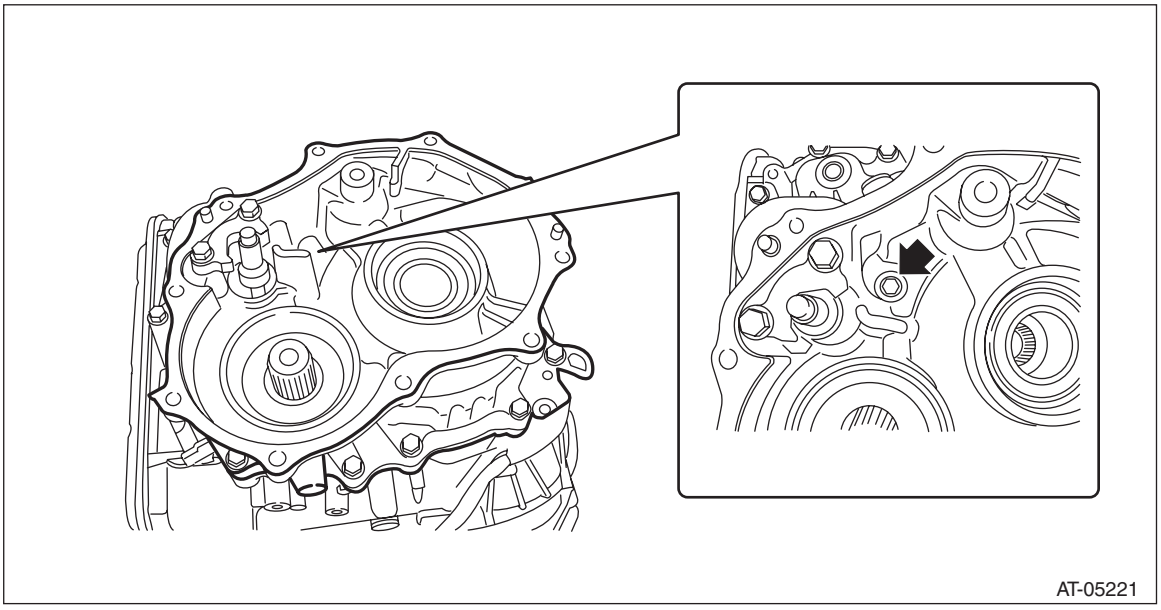
AT-05221

7) Remove the CVTF filter.

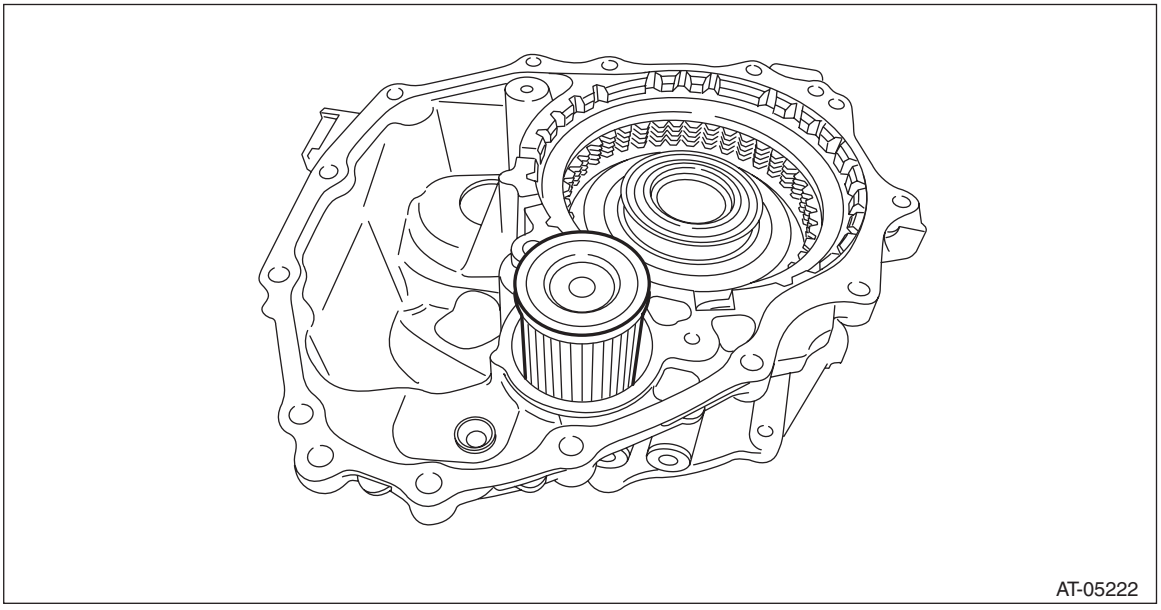
AT-05222

8) Remove the O-ring from the transmission case.

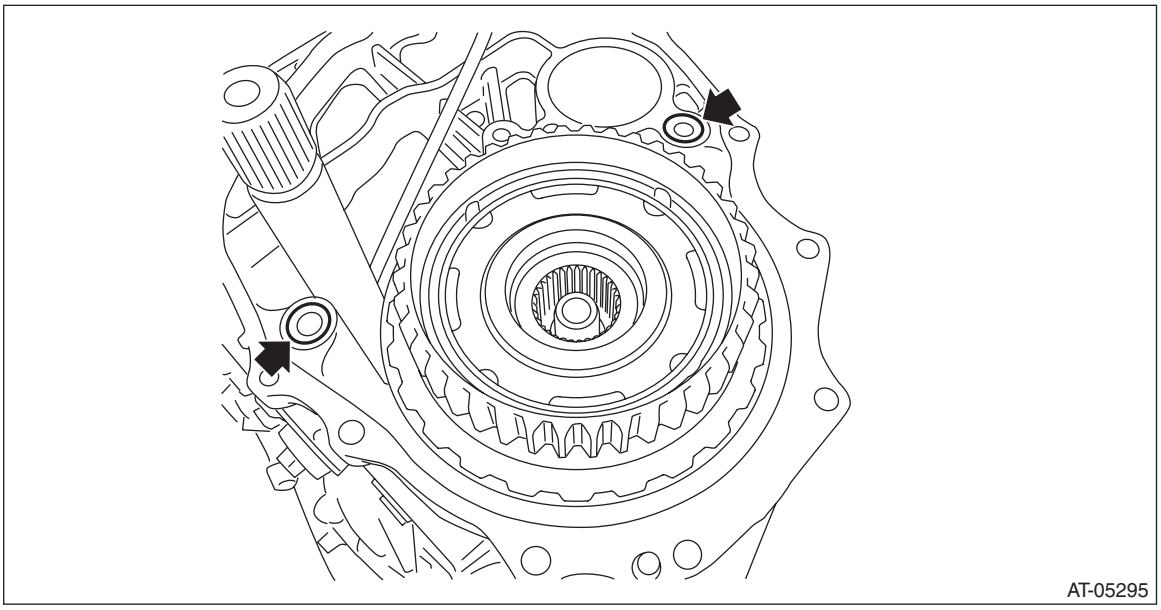

B: INSTALLATION

1) Clean the mating surface of intermediate case and transmission case.
2) Face the O-ring side of the CVTF filter to the intermediate case side, and install the CVTF filter.

NOTE:
Apply CVTF to the O-ring.

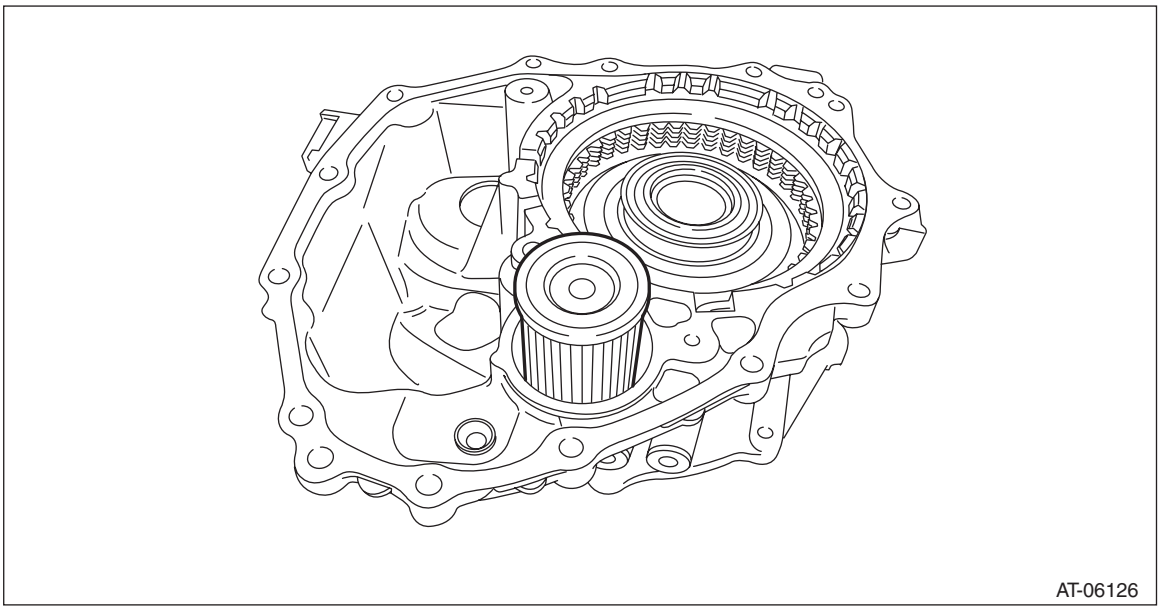

3) Install the O-ring to the transmission case.

NOTE:
- Use new O-rings.
- Apply CVTF to the O-ring.

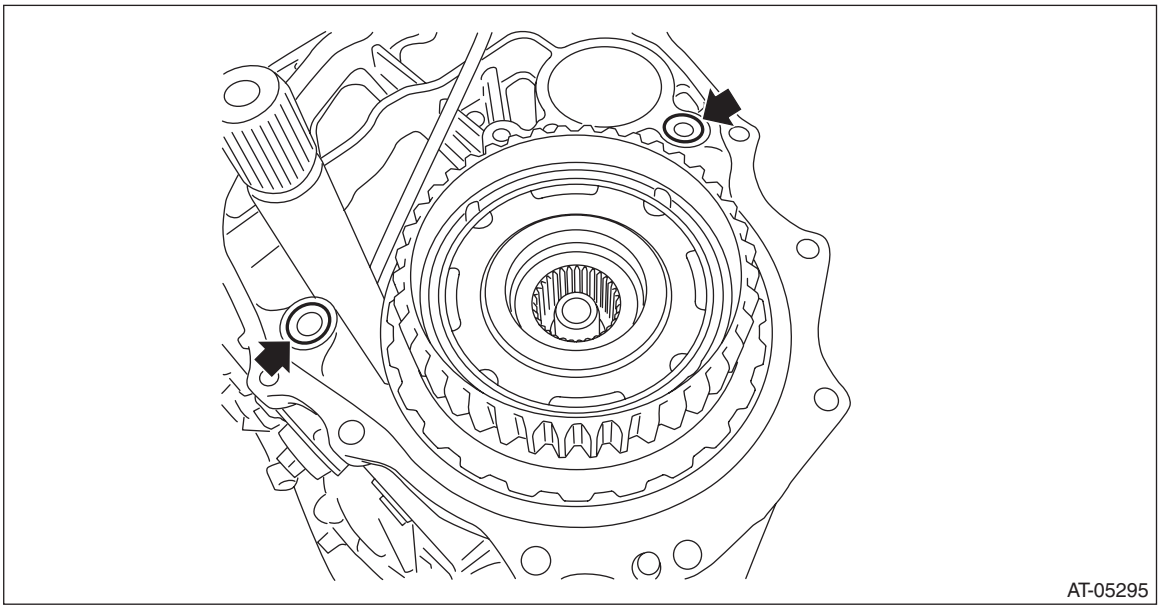

4) Apply liquid gasket to intermediate case seamlessly.

Liquid gasket:
THREE BOND 1215 (Part No. 004403007) or equivalent

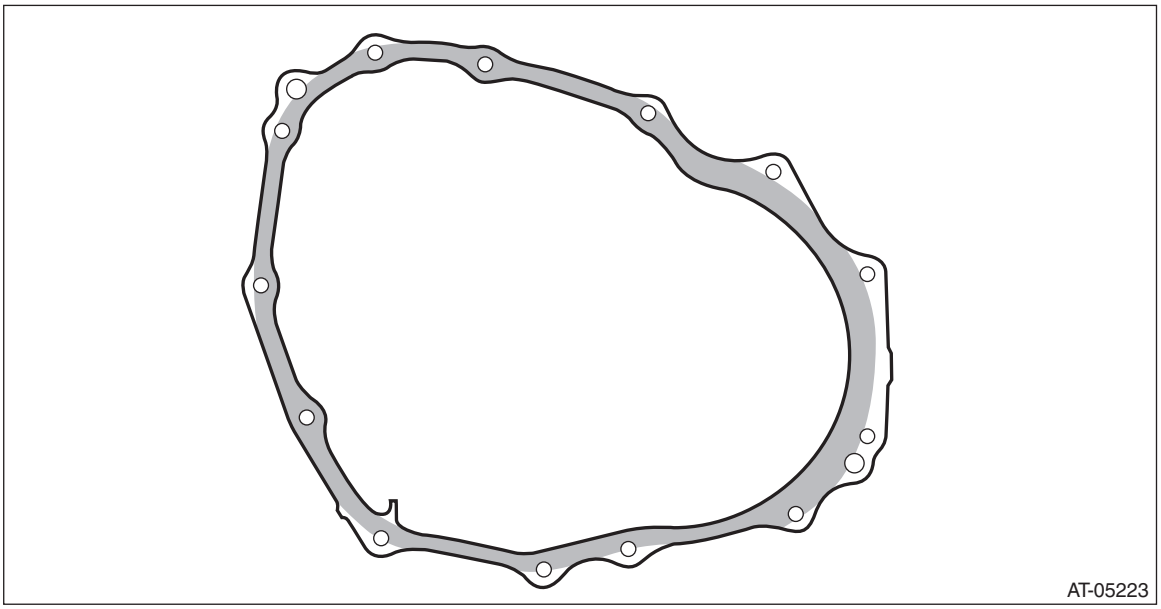

5) Install the intermediate case and the transmission hanger to the transmission case.

NOTE:
Make sure to install the arrowed bolt.

Tightening torque:
25 N·m (2.5 kgf-m, 18.4 ft-lb)

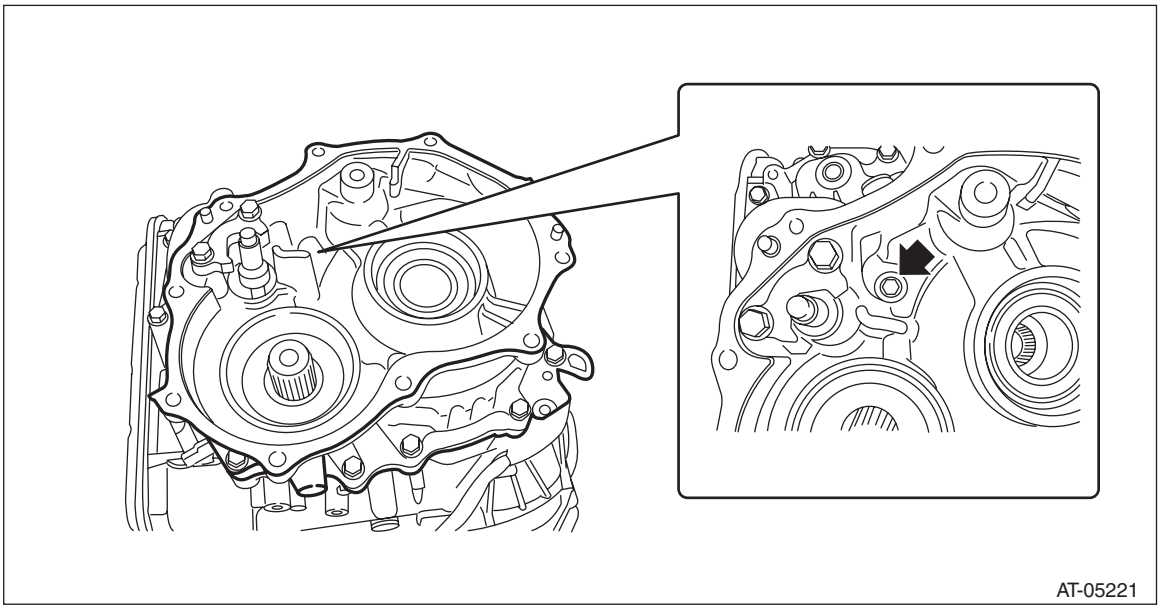

6) Install the transfer reduction driven gear assembly. <Ref. to CVT-158, INSTALLATION, Transfer Reduction Driven Gear.>
7) Install the transfer clutch assembly. <Ref. to CVT-147, INSTALLATION, Transfer Clutch.>
8) Install the rear drive shaft. <Ref. to CVT-141, INSTALLATION, Rear Drive Shaft.>
9) Install the extension case. <Ref. to CVT-138, INSTALLATION, Extension Case.>
10) Install the transmission to vehicle. <Ref. to CVT-70, INSTALLATION, Automatic Transmission Assembly.>

C: DISASSEMBLY

1) Remove the CVTF filler plug.
2) Remove all plugs from intermediate case.

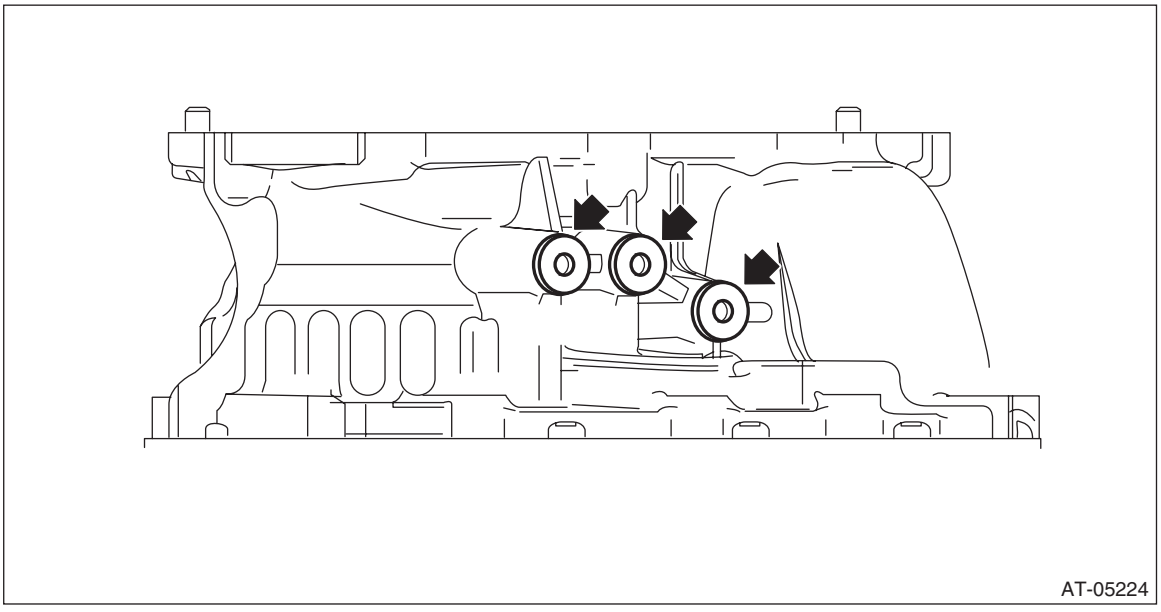

3) Remove the reverse brake assembly. <Ref. to CVT-171, DISASSEMBLY, Reverse Brake Assembly.>

D: ASSEMBLY

1) Install the reverse brake. <Ref. to CVT-174, ASSEMBLY, Reverse Brake Assembly.>
2) install all plugs to intermediate case.

Tightening torque:
25 N·m (2.5 kgf-m, 18.4 ft-lb)

NOTE:
Use new O-rings.

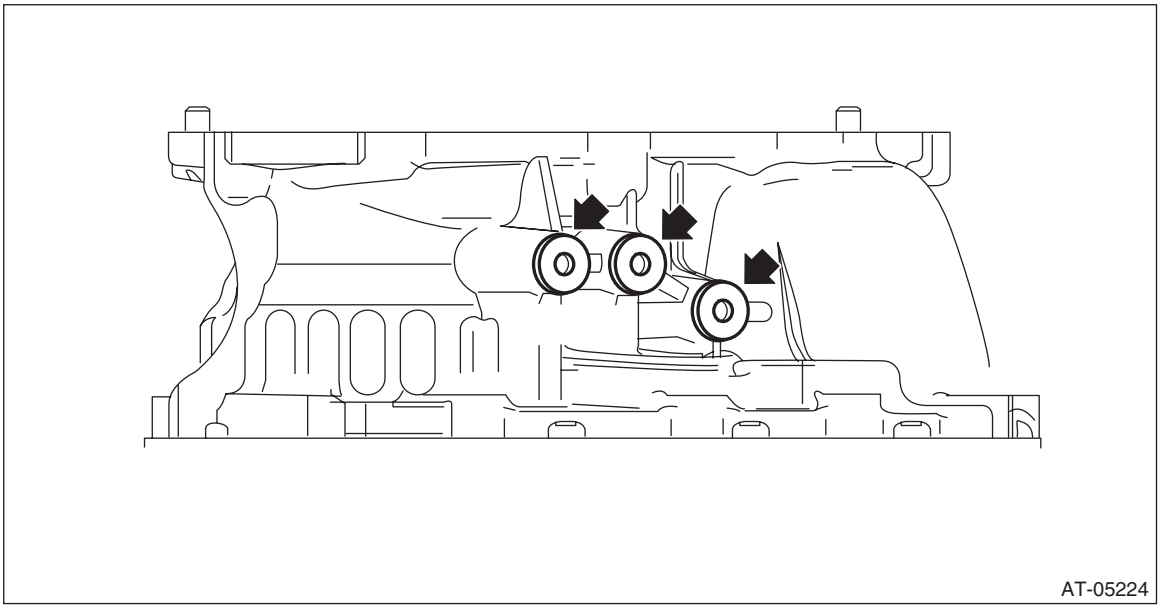

3) Install the CVTF filler plug.

NOTE:
Replace the gasket of CVTF filler plug with a new part after installing the transmission assembly to vehicle and adjusting CVTF fluid.

E: INSPECTION

- Check the intermediate case for fissures, cracks or damage.
- Check for leakage of CVTF from the connections between intermediate case and transmission case, and between intermediate case and extension case.

34.CVTF Filter

A: REMOVAL

NOTE:
• Although CVTF filter is a maintenance-free part, replace it if a large quantity of wear debris and metal particles are found in CVTF and CVTF filter.
• For removal of CVTF filter, refer to “Intermediate Case”. <Ref. to CVT-165, REMOVAL, Intermediate Case.>

B: INSTALLATION

NOTE:
For removal of CVTF filter, refer to “Intermediate Case”. <Ref. to CVT-166, INSTALLATION, Intermediate Case.>

C: INSPECTION

- Check if a large quantity of wear debris or metal particles are in CVTF and CVTF filter.
- Check for broken part or damaged O-ring.

35.Reverse Brake Assembly

A: REMOVAL

NOTE:
For removal of reverse brake assembly, refer to “Intermediate Case”. <Ref. to CVT-165, REMOVAL, Intermediate Case.>

B: INSTALLATION

NOTE:
For removal of reverse brake assembly, refer to “Intermediate Case”. <Ref. to CVT-166, INSTALLATION, Intermediate Case.>

C: DISASSEMBLY

1) Remove the snap ring.
2) Remove the retaining plate, drive plate, driven plate and dish plate.

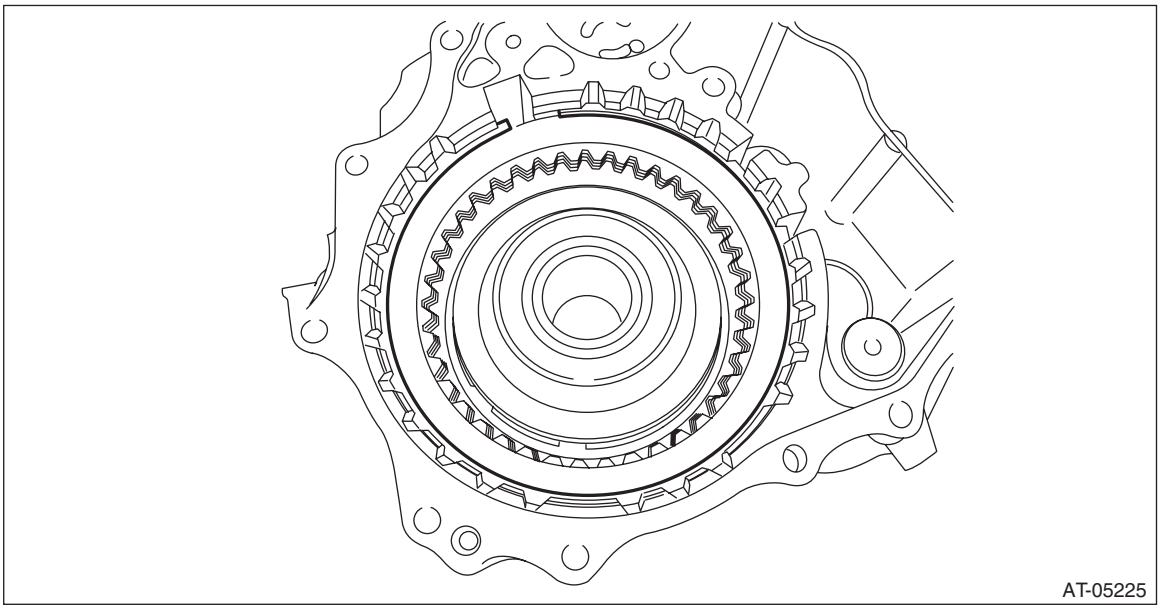

3) Set the ST1, ST2 and ST3 to intermediate case.
ST1 18762AA000 COMPRESSOR SPECIAL TOOL
ST2 18763AA000 COMPRESSOR SHAFT
ST3 18765AA000 COMPRESSOR SUPPORT

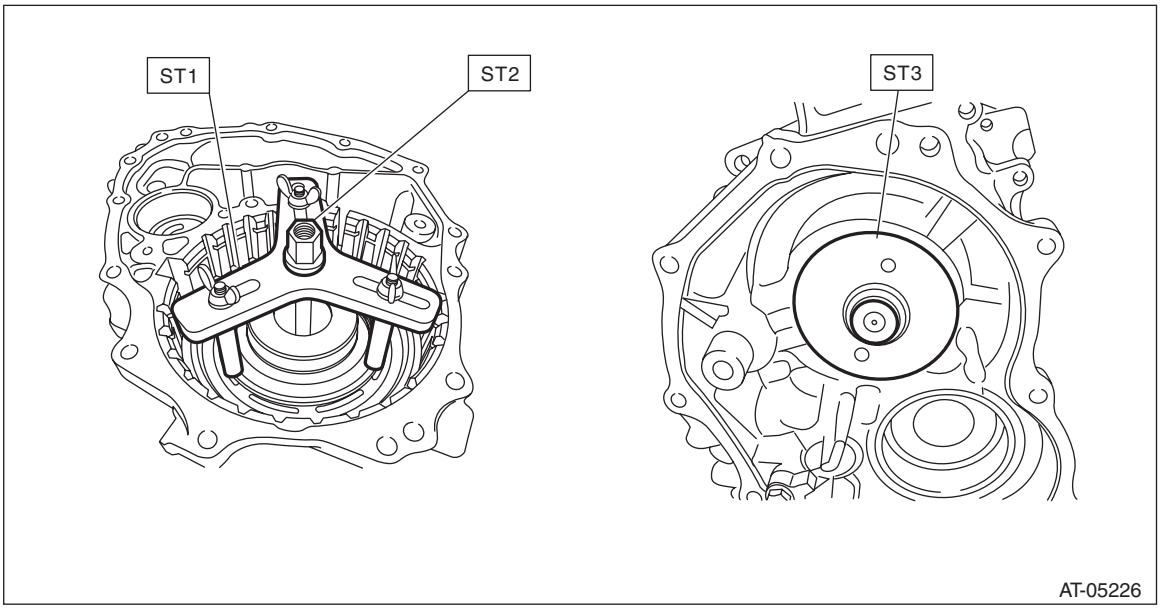

4) Compress the return spring using the set ST to remove the snap ring.

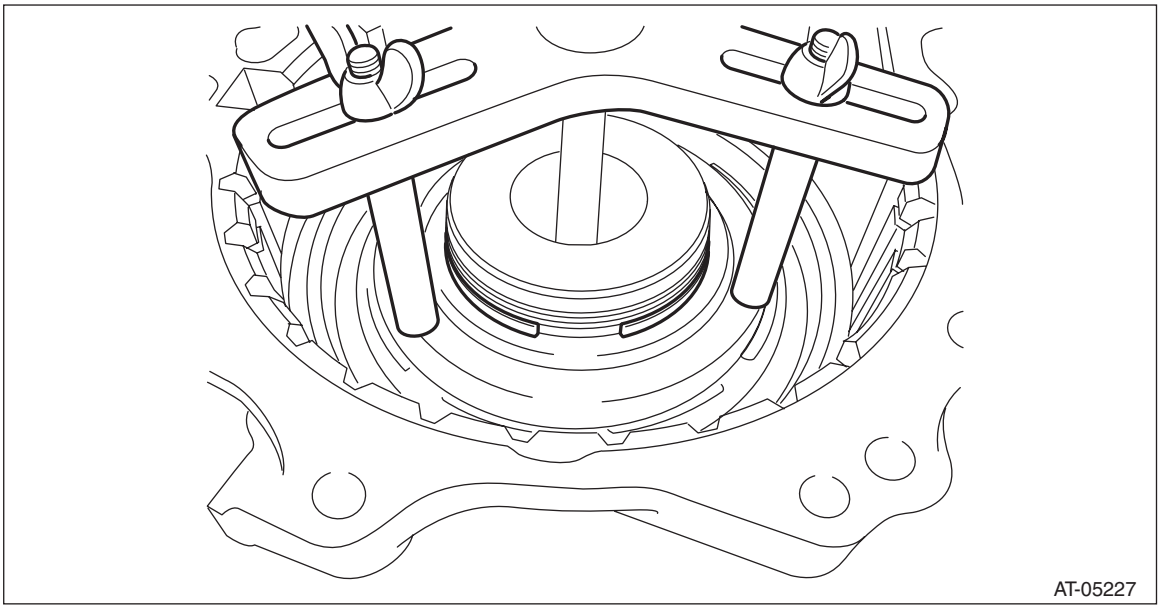

5) Using the ST, remove the snap ring and spring retainer.

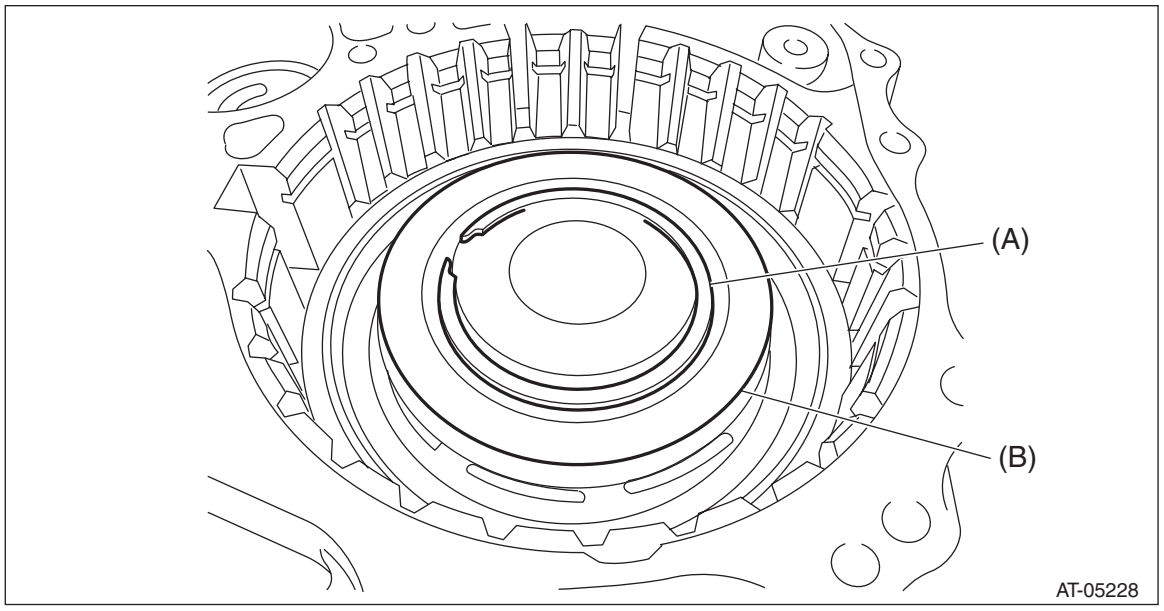

(A) Snap ring
(B) Spring retainer

6) Remove the return spring.

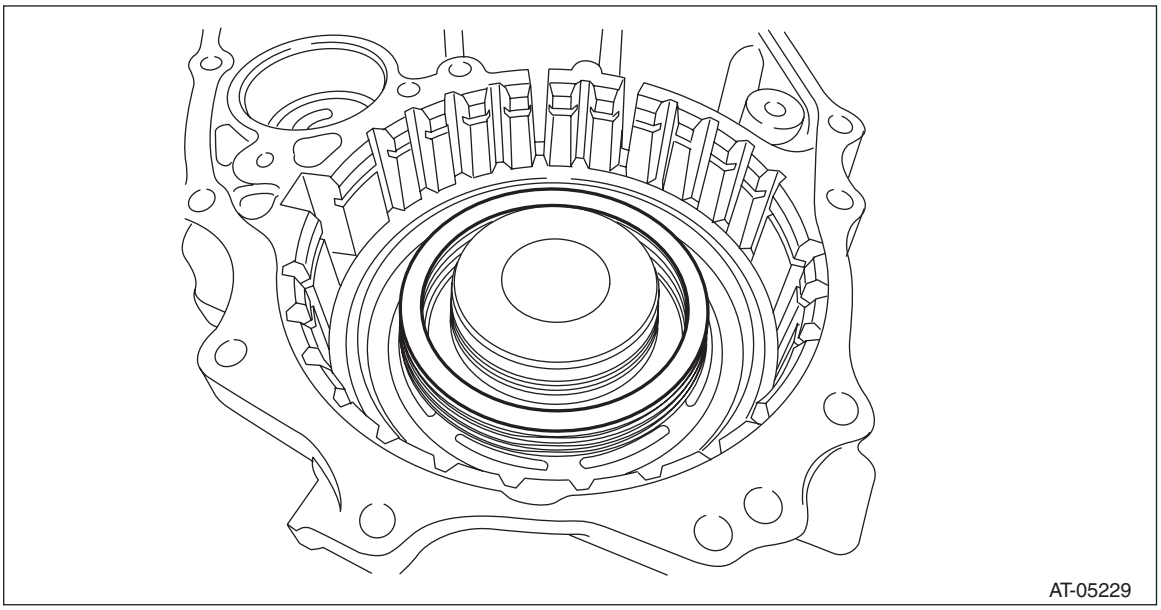

7) Remove the reverse brake piston by blowing compressed air intermittently from intermediate case hole.

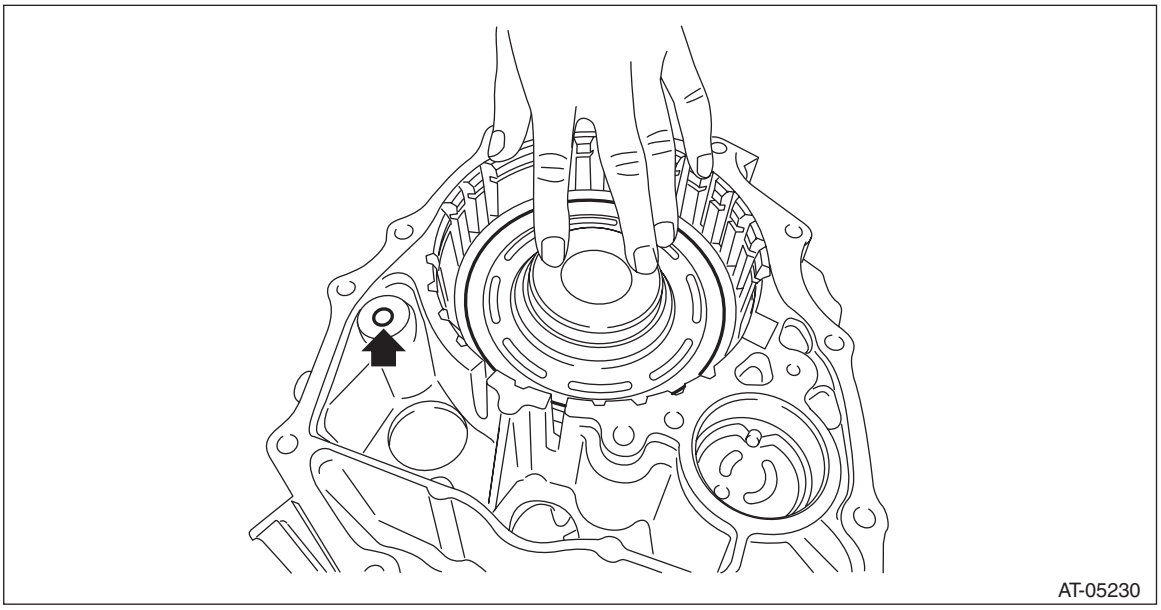

D: ASSEMBLY

1) Apply CVTF to the seal of reverse brake piston and install it to intermediate case.

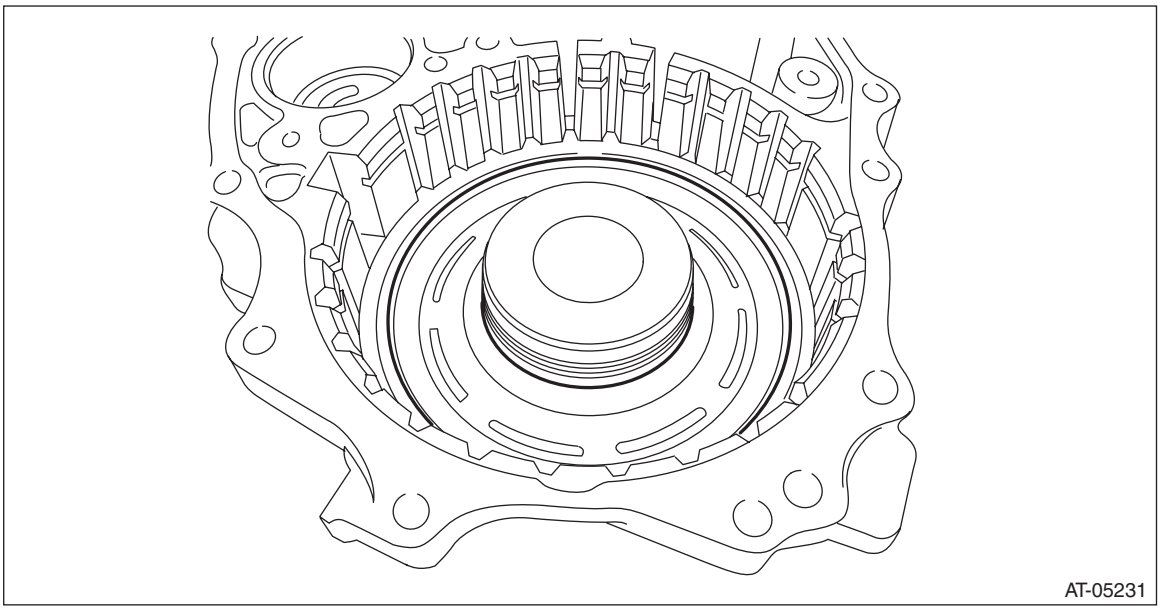

2) Install the return spring.

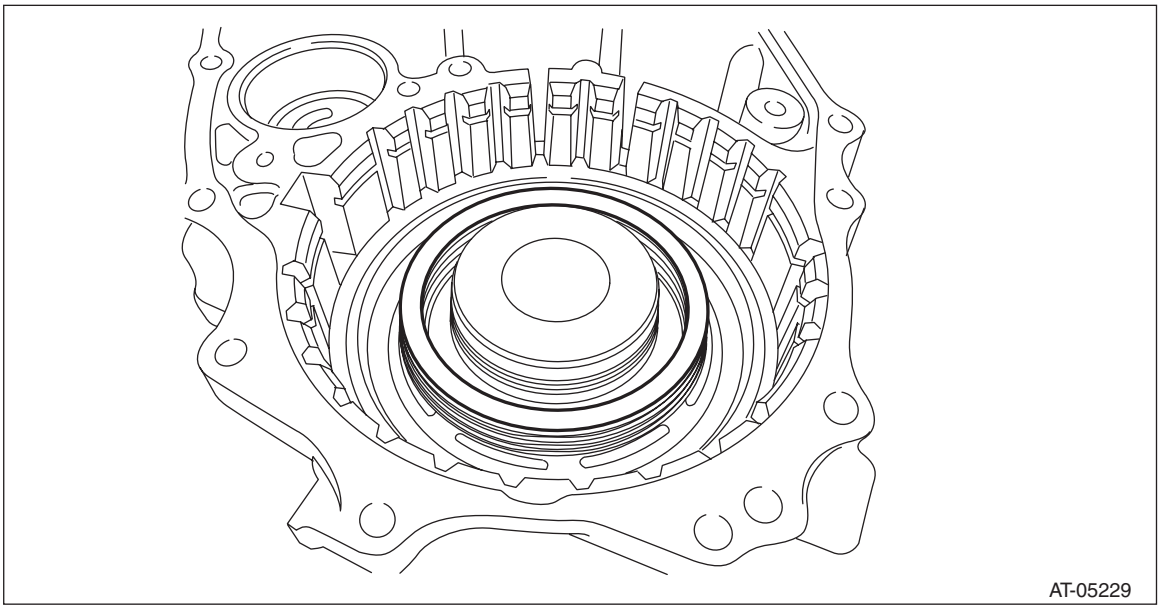

3) Install the spring retainer.

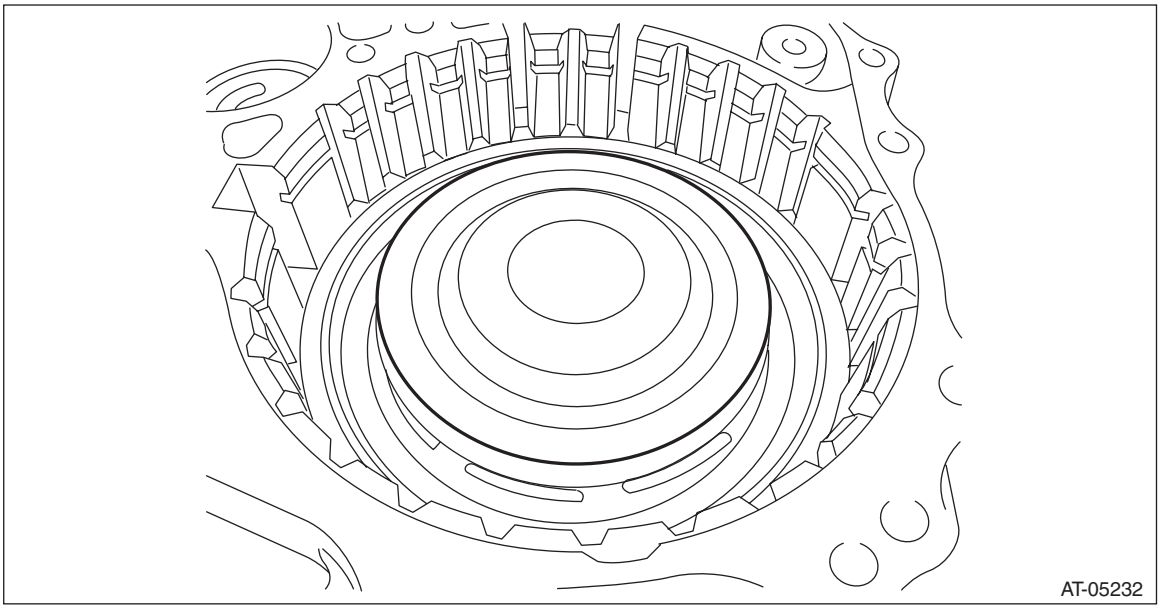

4) Set the ST1, ST2 and ST3 to intermediate case.
ST1 18762AA000 COMPRESSOR SPECIAL TOOL
ST2 18763AA000 COMPRESSOR SHAFT
ST3 18765AA000 COMPRESSOR SUPPORT

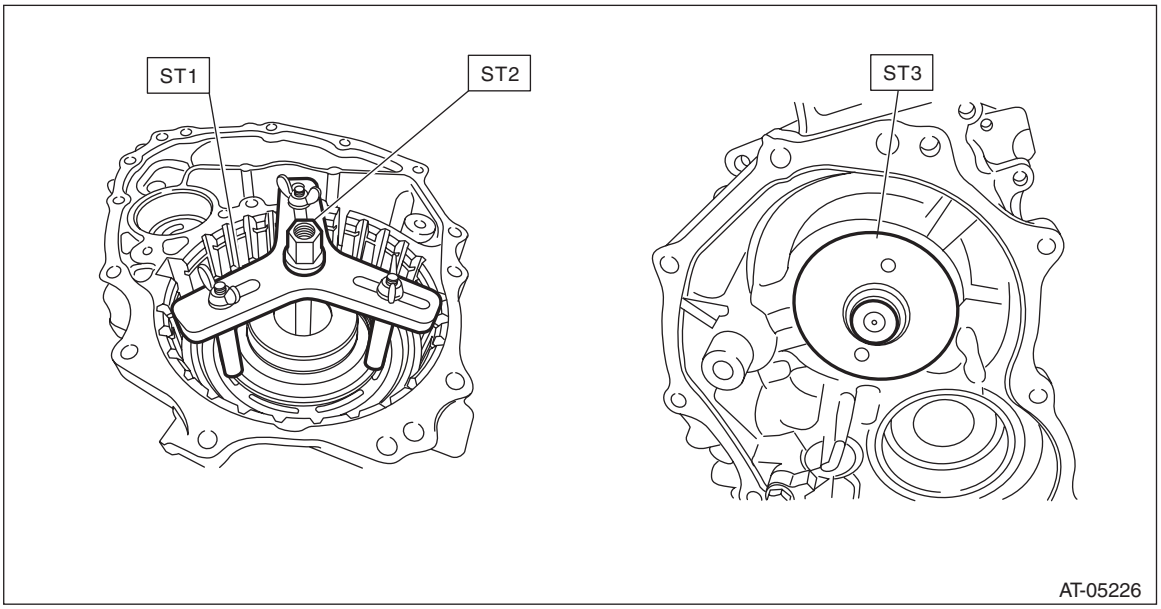

5) Compress the return spring using the set ST to install the snap ring.

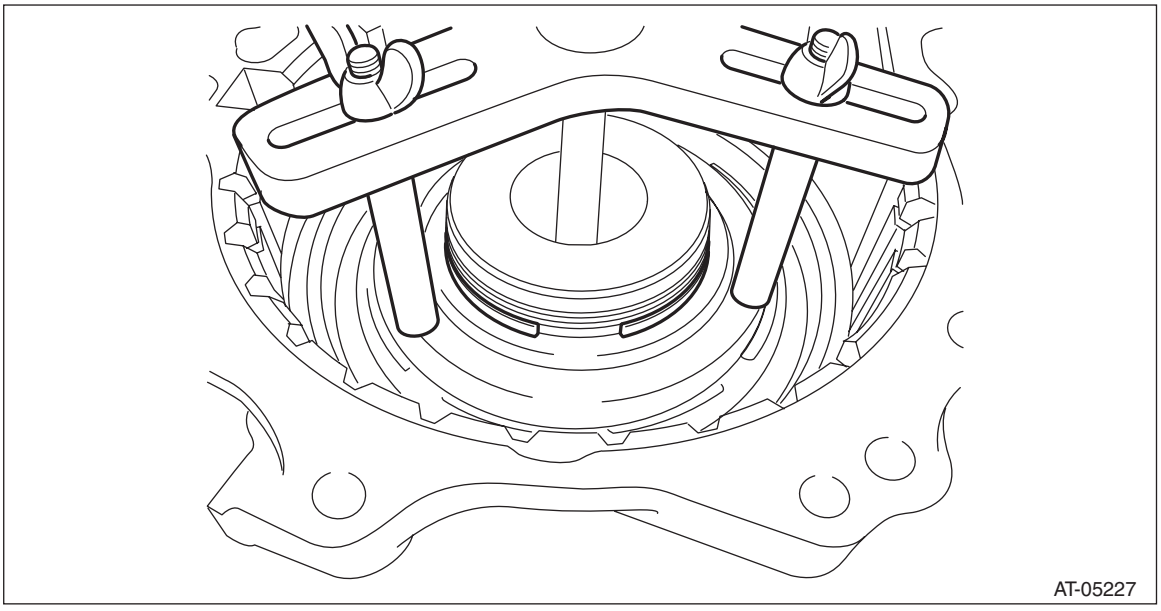

6) Check the operation of reverse brake piston by blowing compressed air intermittently from intermediate case hole.

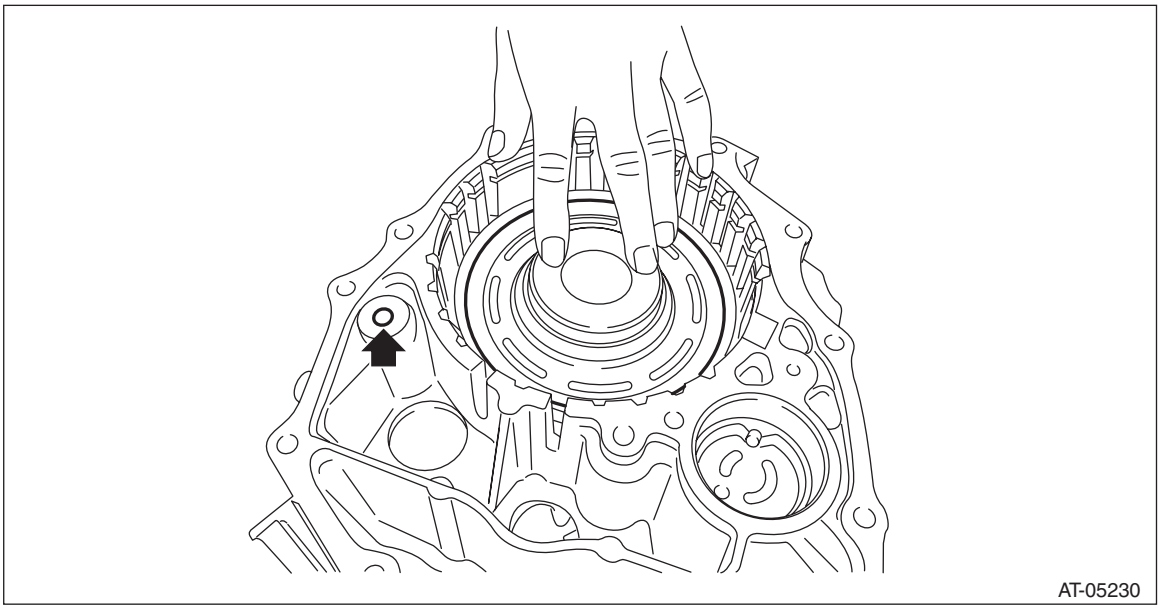
AT-05230

7) Place the dish plate, driven plate, drive plate and retaining plate neatly in this order on surface table.
8) Set the dial gauge to retaining plate, and read its scale.

NOTE:
The value, which is read in the gauge at this time, is zero point.
9) Scale and record the weight "Z" of a flat board which will be put on retaining plate.

NOTE:
- Use a stiff board which does not bend against load as a flat board to be put on retaining plate.
- Use a flat board weighing less than 84 N (8.6 kgf, 18.9 lb).

10) Put the flat board on retaining plate.

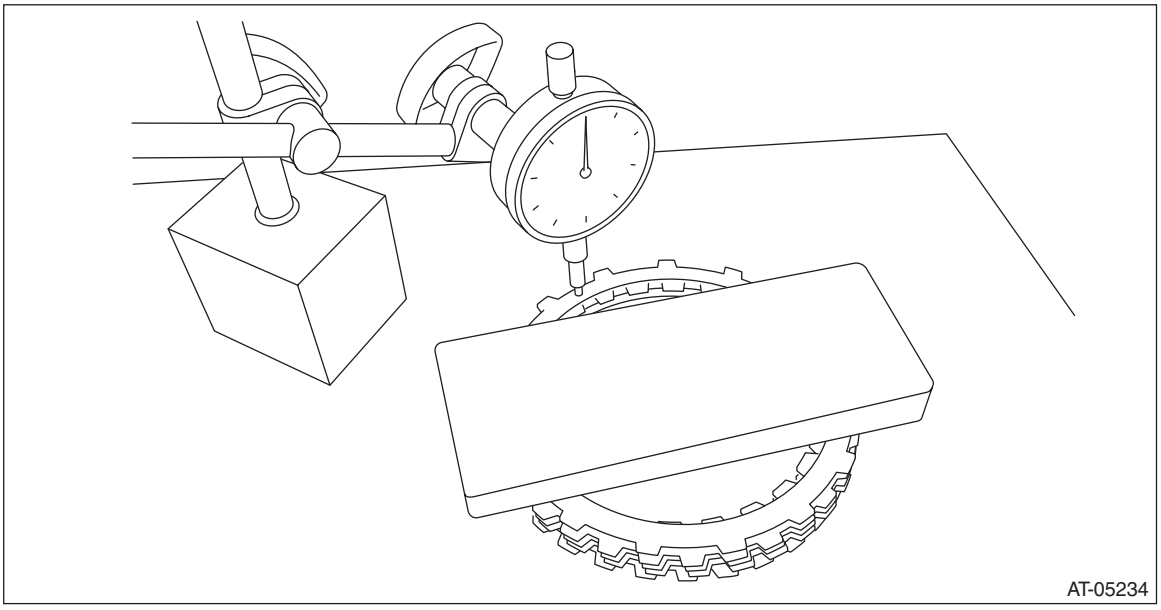
AT-05234

11) Using the following formula, read the push/pull gauge and calculate "N".
N = 84 N (8.6 kgf, 18.9 lb) – Z
84 N (8.6 kgf, 18.9 lb) : Load applied to clutch plate
Z: Flat board weight

12) Press the center of retaining plate by applying a force of “N” or more using push/pull gauge, and then measure and record the compression amount “A”.

NOTE:
Measure at four points with a 90° interval and calculate the average.

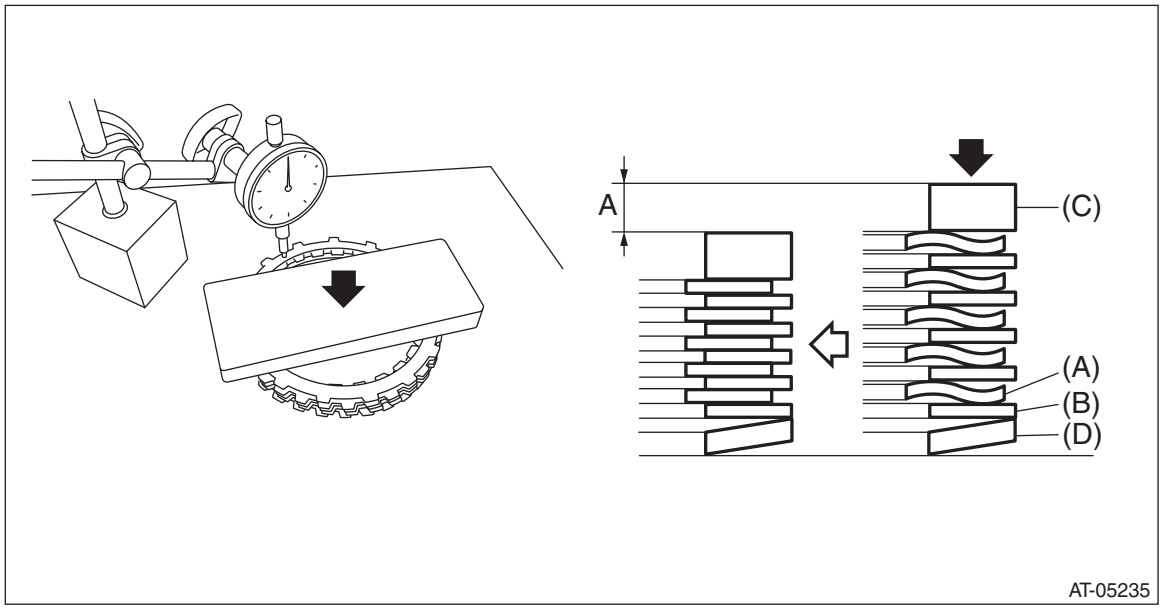

(A) Drive plate
(B) Driven plate
(C) Retaining plate
(D) Dish plate

13) Install the dish plate, drive plate, driven plate, retaining plate and snap ring to intermediate case.

NOTE:
Install the dish plate in the correct direction.

14) Measure and record the clearance “B” between the retaining plate and snap ring.

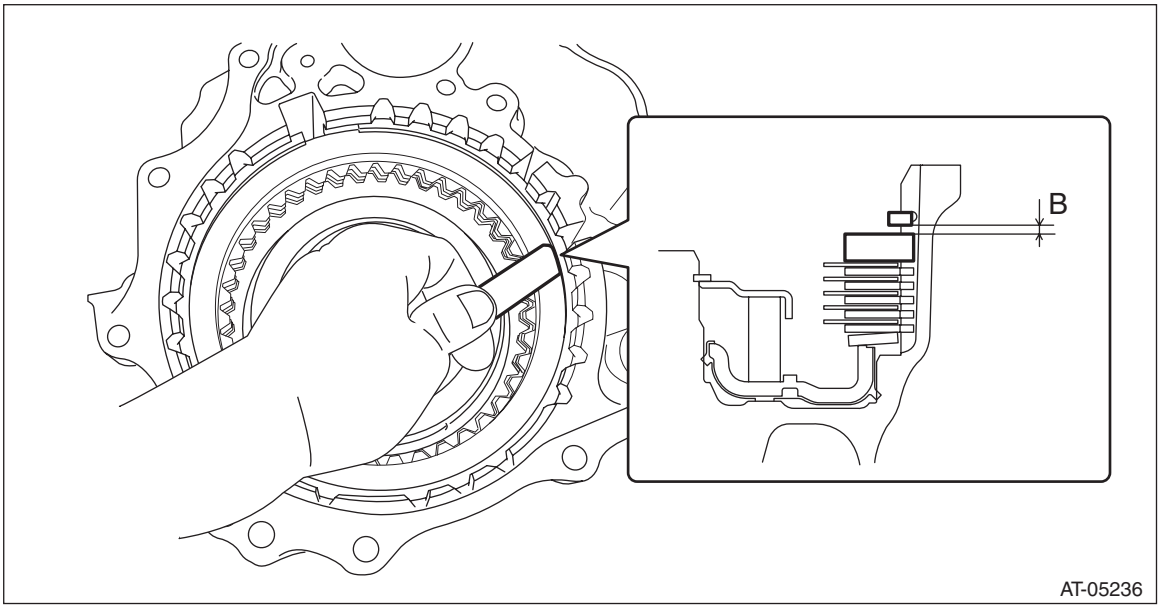

15) Piston stroke calculation
Calculate with A and B dimensions recorded before. If it exceeds the limit, replace with a new drive plate and adjust within the initial standard value.
S mm (in) = A + B
S: Piston stroke
A: Compression amount of drive plate and dish plate
B: Clearance between retaining plate and snap ring

Initial standard:
2.88 — 3.18 mm (0.113 — 0.125 in)

Limit thickness:
3.38 mm (0.133 in)

Retaining plate	
Part No.	Thickness mm (in)
31567AB680	5.6 (0.220)
31567AB690	5.8 (0.228)
31567AB700	6.0 (0.236)
31579AB710	6.2 (0.244)

E: INSPECTION

- Inspect the drive plate facing for wear and damage.
- Check the driven plate for discoloration (burnt color).
- Check for worn snap ring, fatigue or damaged return spring or deformed spring retainer.
- Make sure the clearance between retaining plate and snap ring of reverse brake is within the limit. If it exceeds the limit, replace with a new drive plate and select and adjust the retaining plate within the initial standard value. <Ref. to CVT-174, ASSEMBLY, Reverse Brake Assembly.>

36.Forward Clutch Assembly

A: REMOVAL

1) Remove the transmission from the vehicle. <Ref. to CVT-55, REMOVAL, Automatic Transmission Assembly.>
2) Remove the extension case. <Ref. to CVT-138, REMOVAL, Extension Case.>
3) Remove the rear drive shaft. <Ref. to CVT-141, REMOVAL, Rear Drive Shaft.>
4) Remove the transfer clutch assembly. <Ref. to CVT-146, REMOVAL, Transfer Clutch.>
5) Remove the transfer reduction driven gear. <Ref. to CVT-158, REMOVAL, Transfer Reduction Driven Gear.>
6) Remove the intermediate case. <Ref. to CVT-165, REMOVAL, Intermediate Case.>
7) Remove the thrust needle bearing.

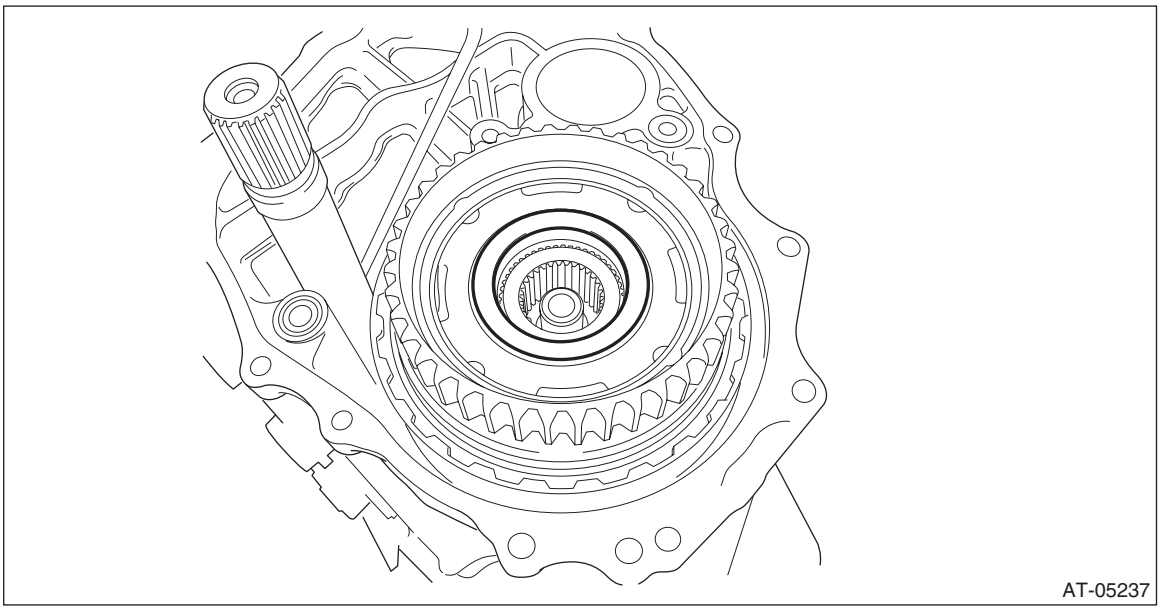
AT-05237

8) Remove the forward clutch assembly.

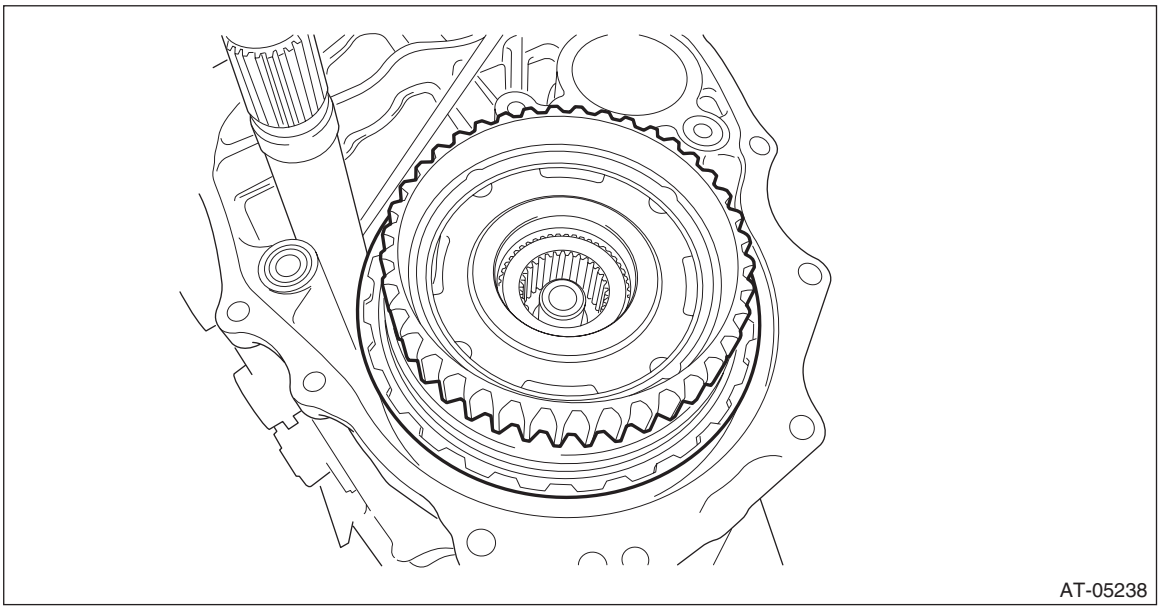
AT-05238

9) Remove the washer.

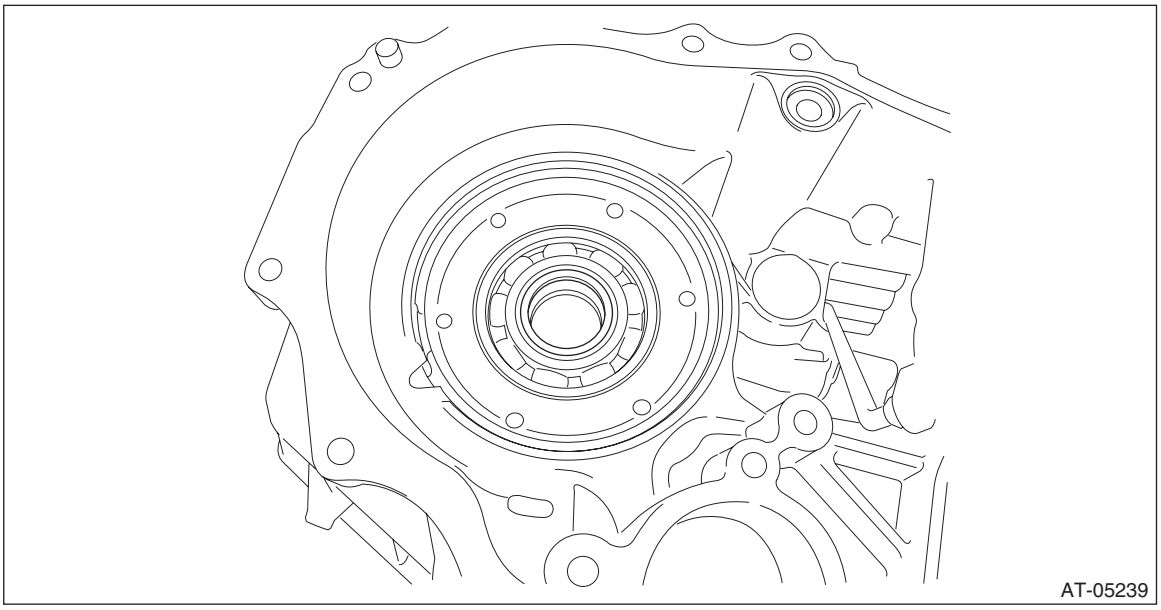

B: INSTALLATION

1) Select a washer. <Ref. to CVT-198, ADJUSTMENT, Forward Clutch Assembly.>
2) Install the selected washer.

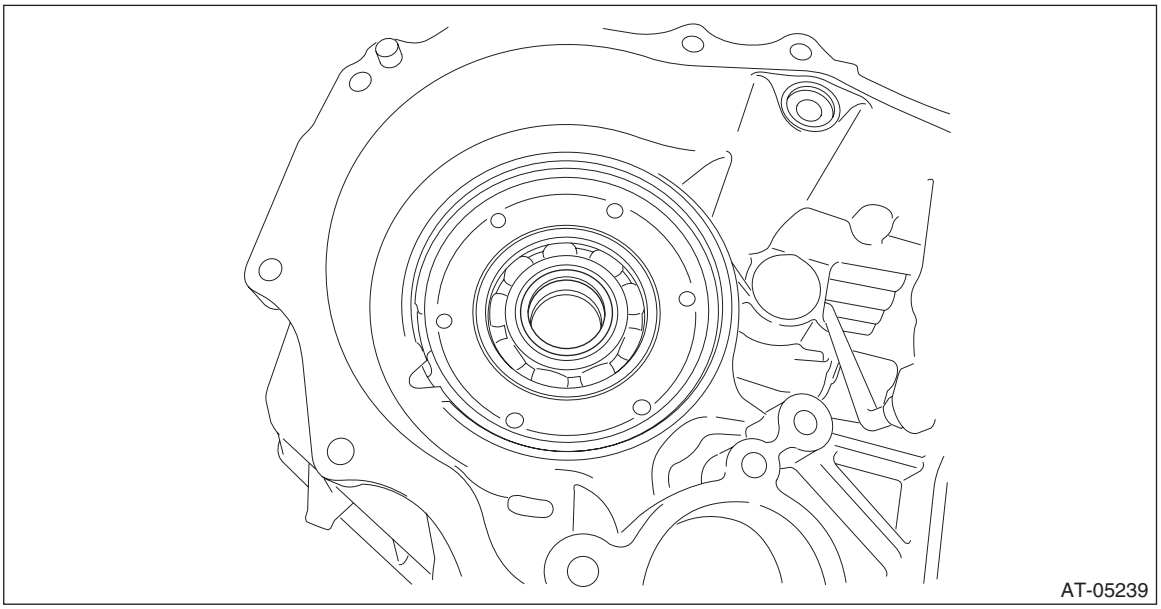

3) Install the forward clutch assembly.

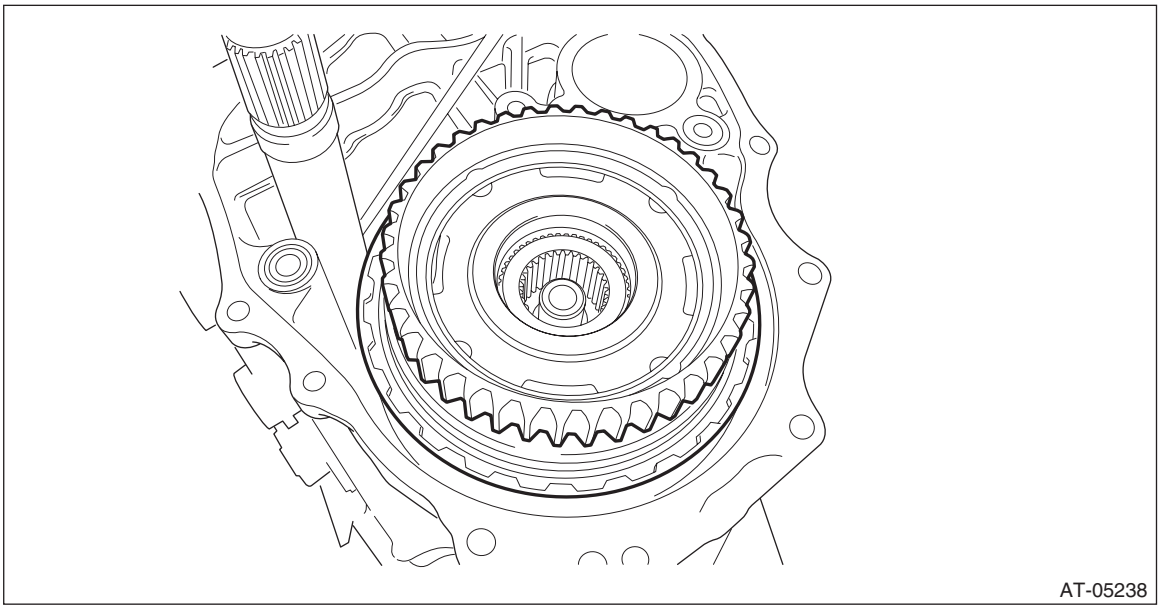
AT-05238

4) Install the thrust needle bearing.

NOTE:
Install the thrust needle bearing in the correct direction.

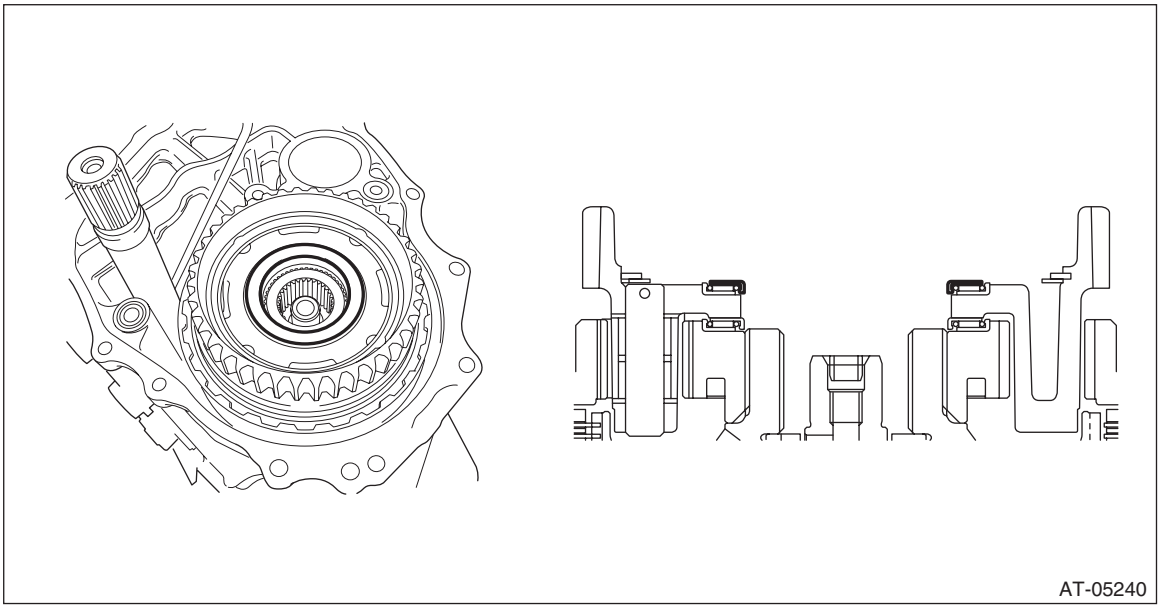
AT-05240

5) Install the intermediate case. <Ref. to CVT-166, INSTALLATION, Intermediate Case.>
6) Install the transfer reduction driven gear assembly. <Ref. to CVT-158, INSTALLATION, Transfer Reduction Driven Gear.>
7) Install the transfer clutch assembly. <Ref. to CVT-147, INSTALLATION, Transfer Clutch.>
8) Install the rear drive shaft. <Ref. to CVT-141, INSTALLATION, Rear Drive Shaft.>
9) Install the extension case. <Ref. to CVT-138, INSTALLATION, Extension Case.>
10) Install the transmission to vehicle. <Ref. to CVT-70, INSTALLATION, Automatic Transmission Assembly.>

C: DISASSEMBLY

1) Remove the planetary carrier assembly.

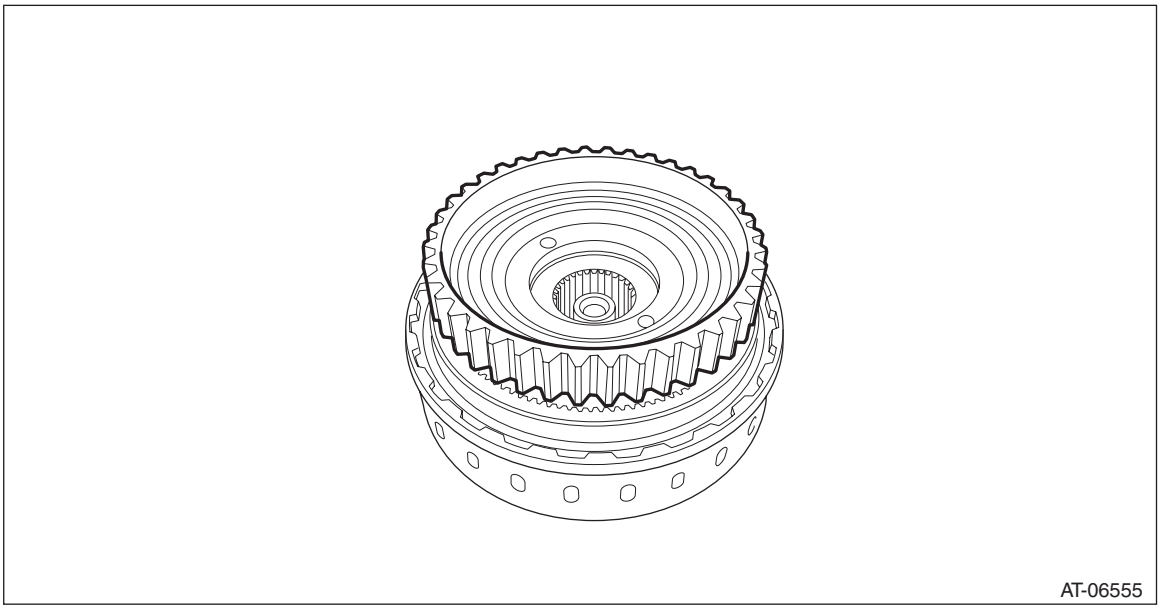

2) Remove the thrust needle bearing.

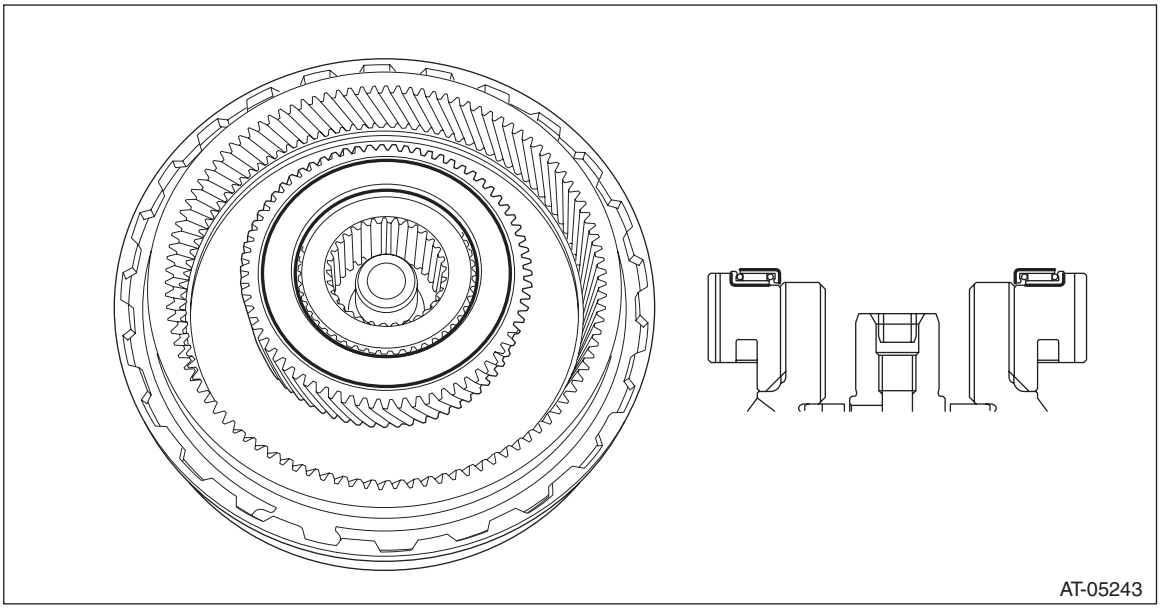

3) Remove the snap ring.

NOTE:
Use marking or labeling to the upper snap ring for measurement of the snap ring thickness when selecting the retaining plate.

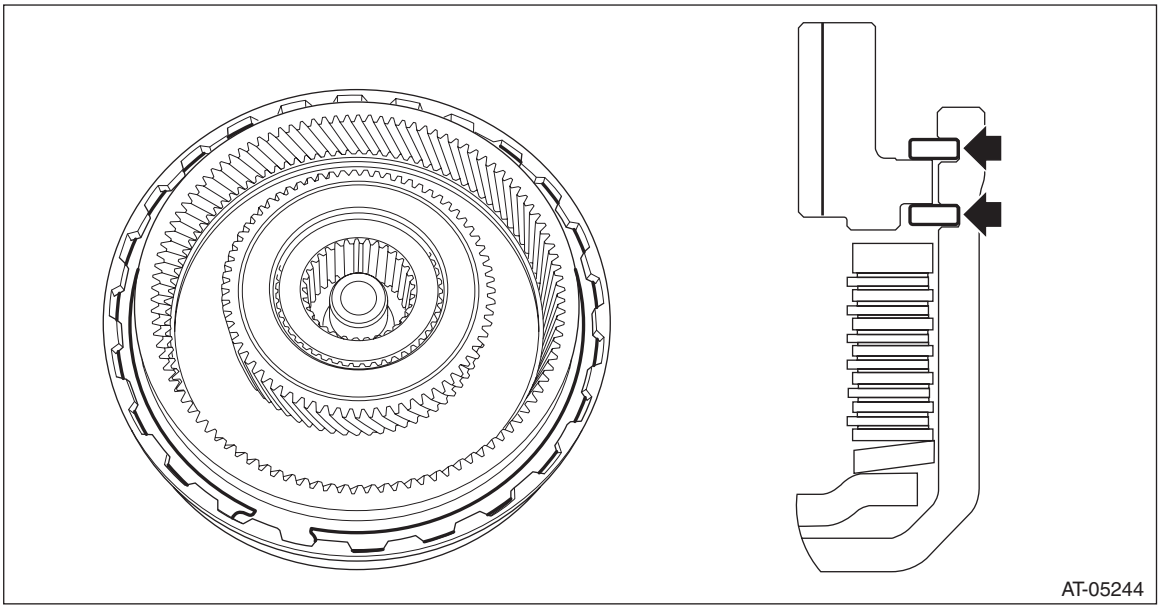

4) Remove the internal gear.

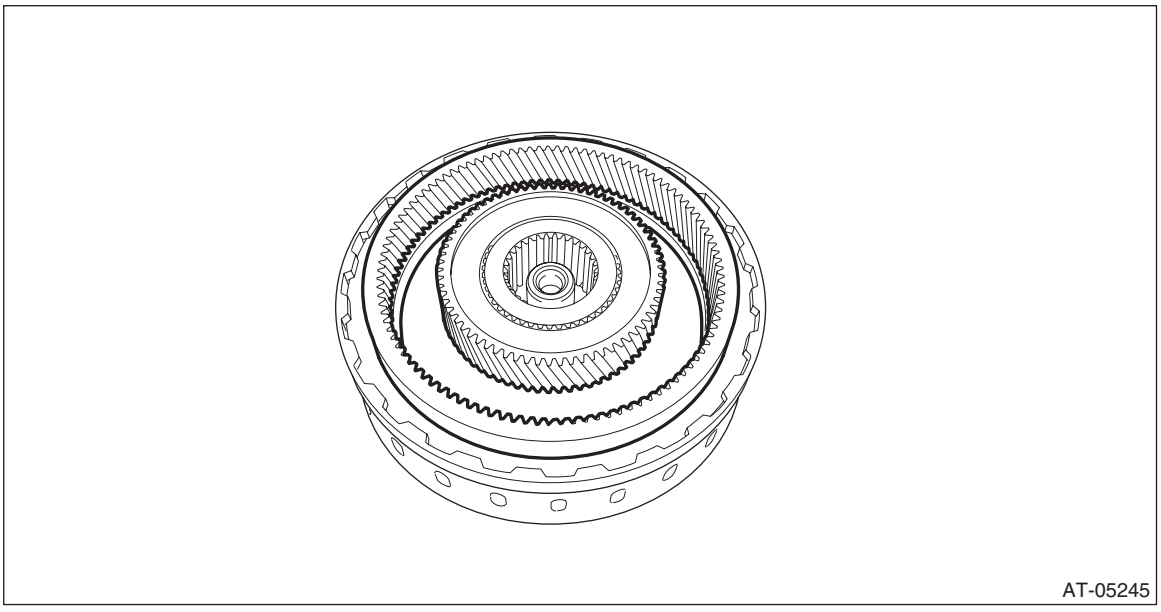

5) Remove the sun gear.

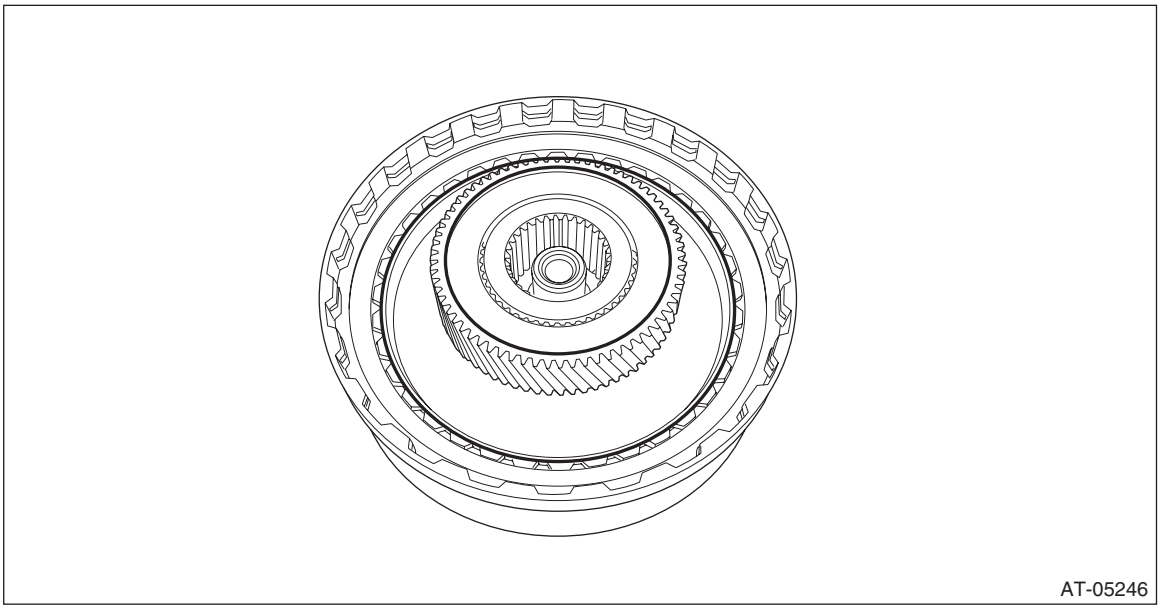

6) Remove the washer.

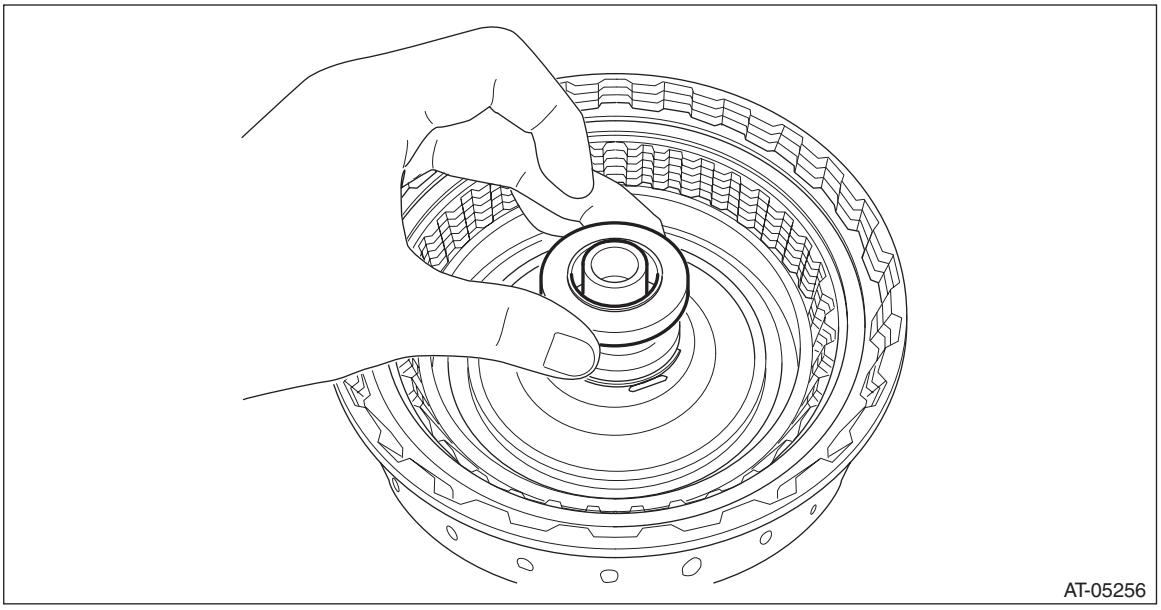

7) Remove the thrust needle bearing.

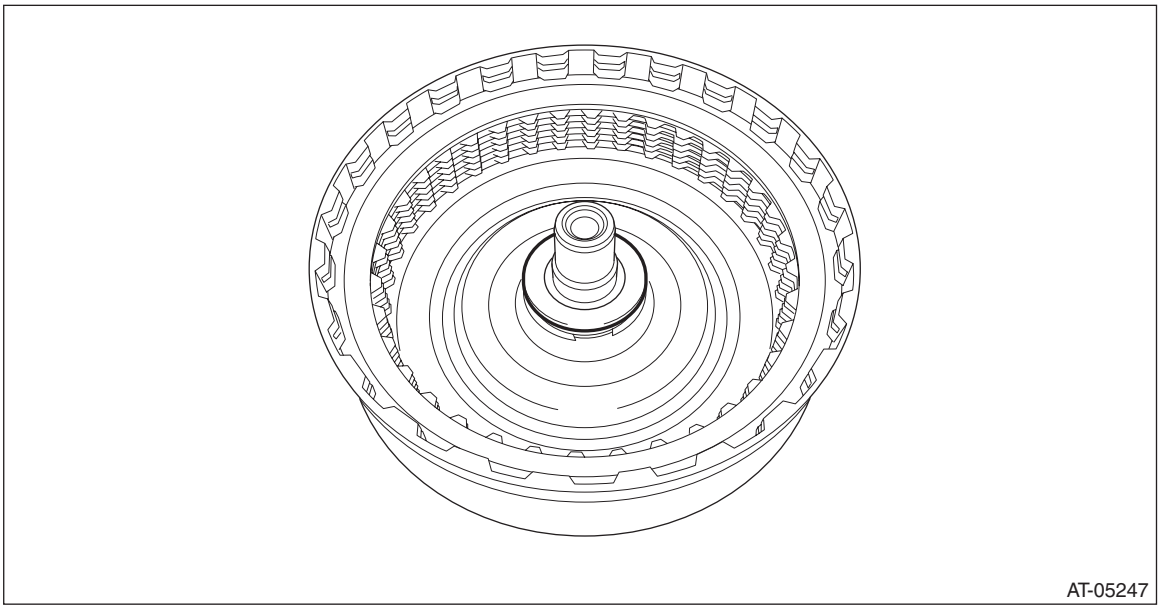

8) Remove the snap ring.

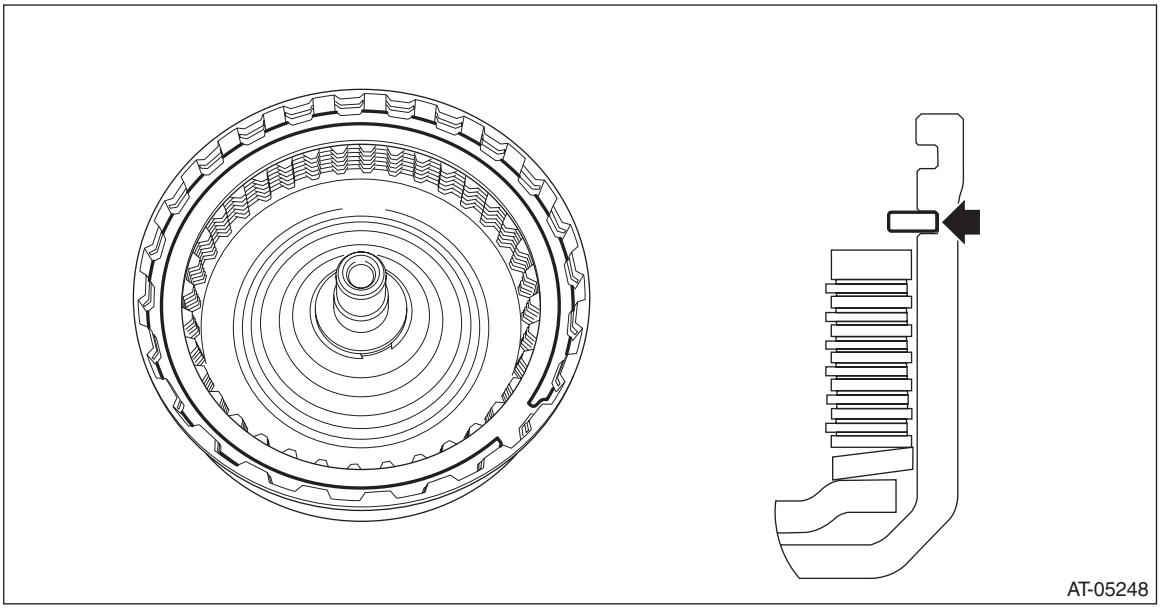

9) Remove the retaining plate, drive plate, driven plate and dish plate.

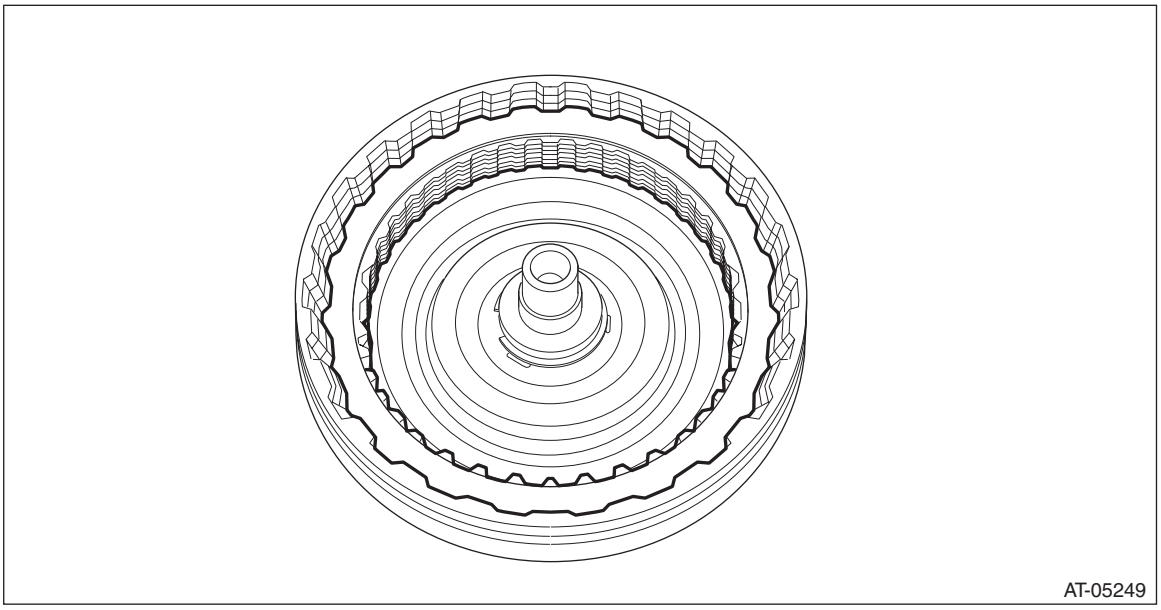

10) Using the ST, remove the snap ring.
ST 18762AA000 COMPRESSOR SPECIAL TOOL

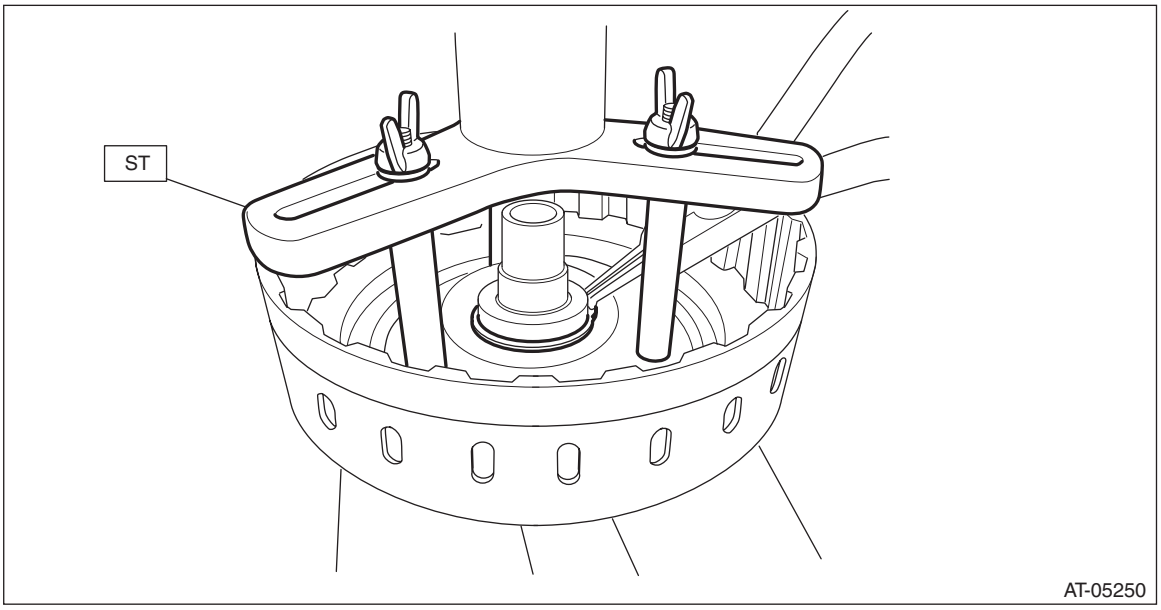

11) Remove the forward clutch piston seal.

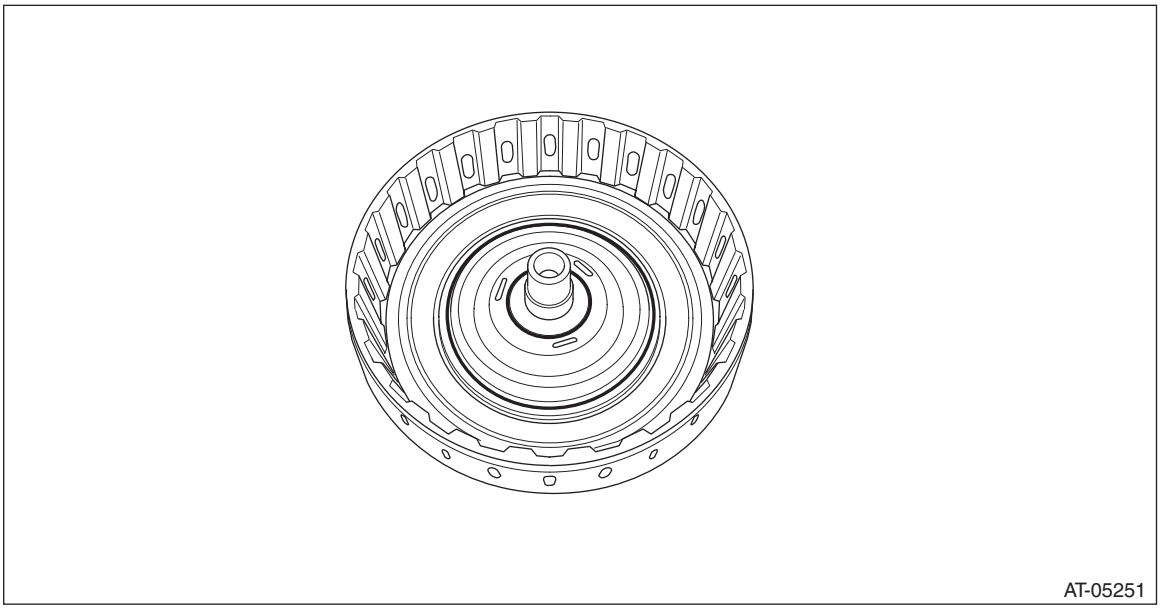

12) Remove the return spring.

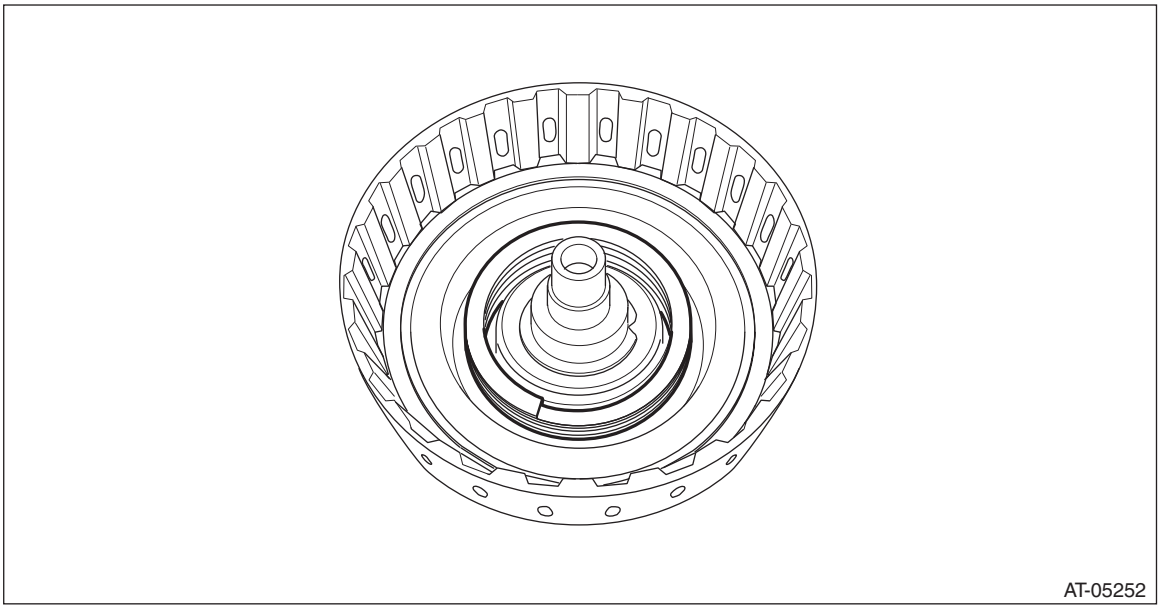

13) Remove the forward clutch piston by blowing compressed air intermittently from end of forward clutch drum.

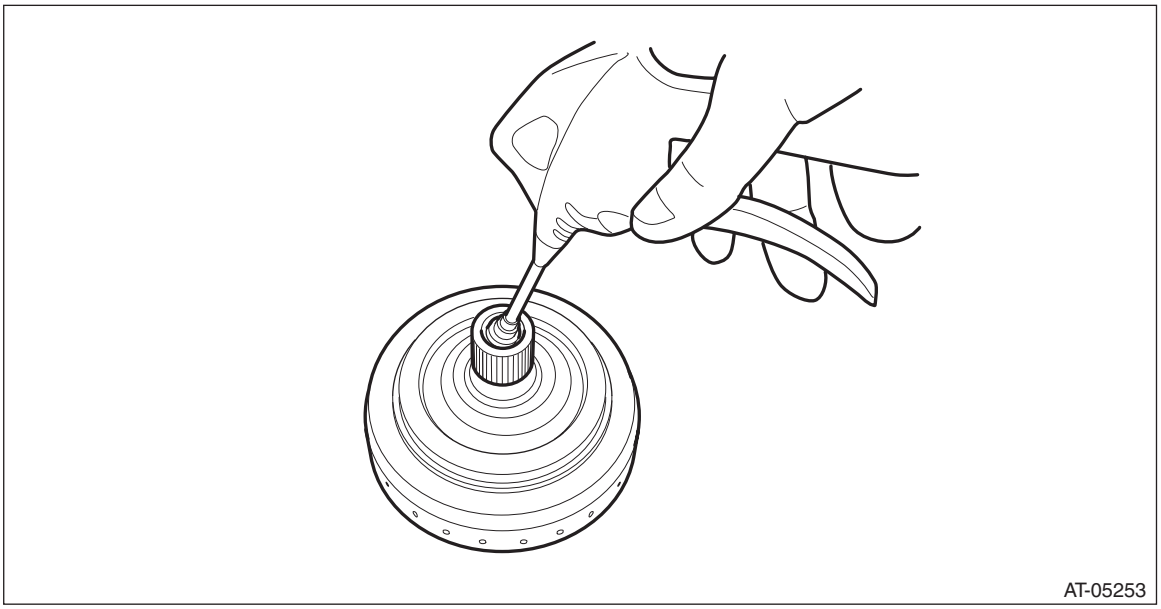

D: ASSEMBLY

1) Install the forward clutch piston to forward clutch drum.

NOTE:
- Apply CVTF to the seal of forward clutch piston.
- Insert it all the way to the end.

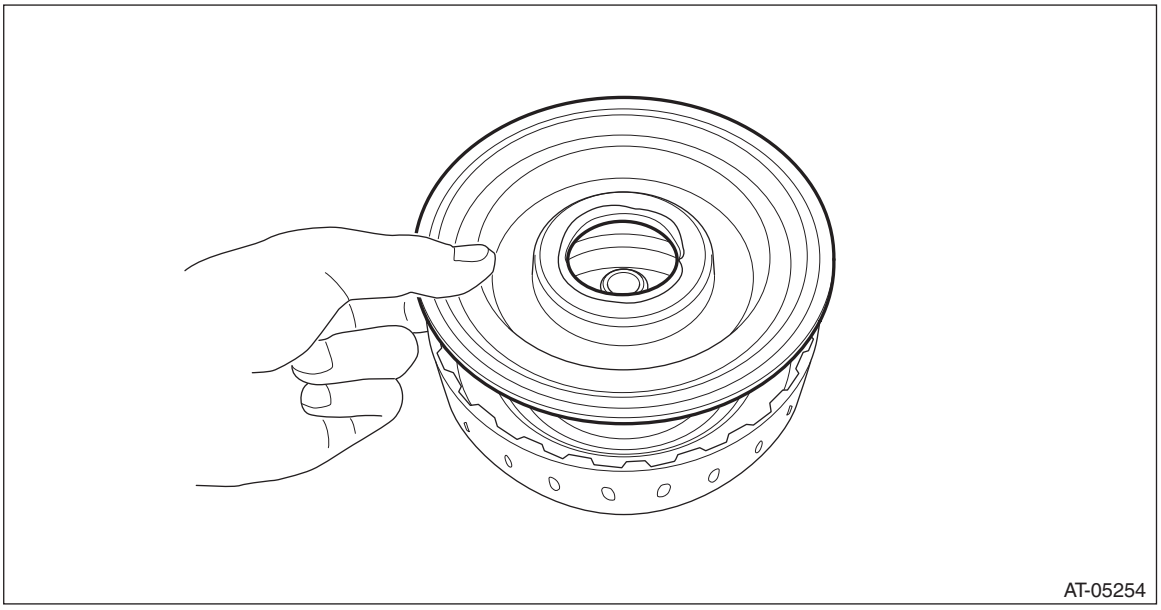

2) Install the return spring.

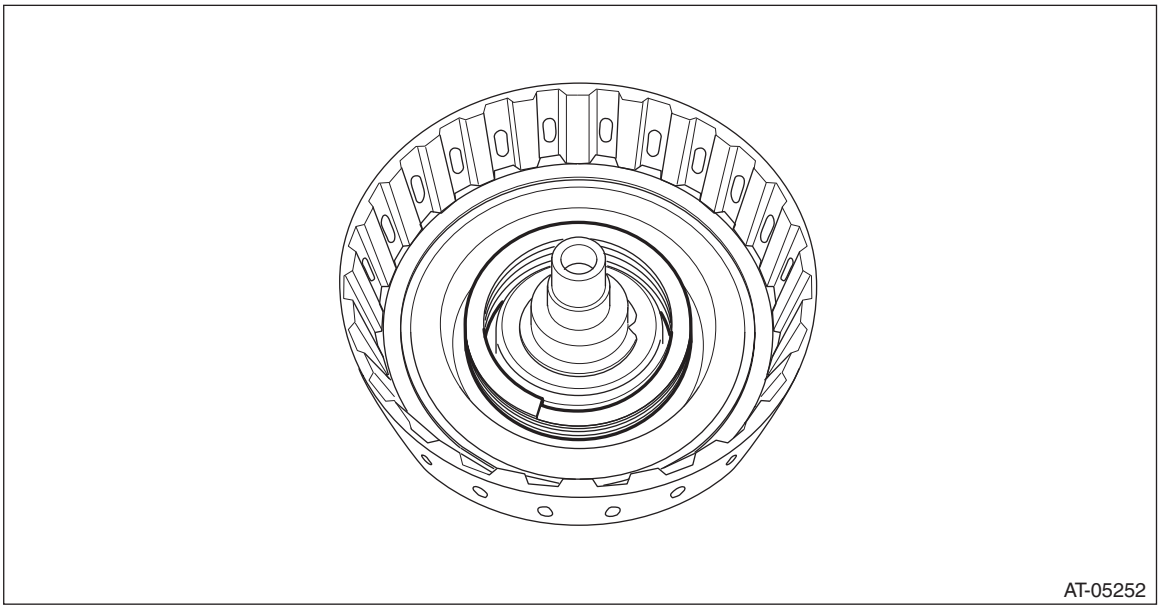

3) Install the forward clutch piston seal.

NOTE:
Apply CVTF to the sealing area of forward clutch piston seal.

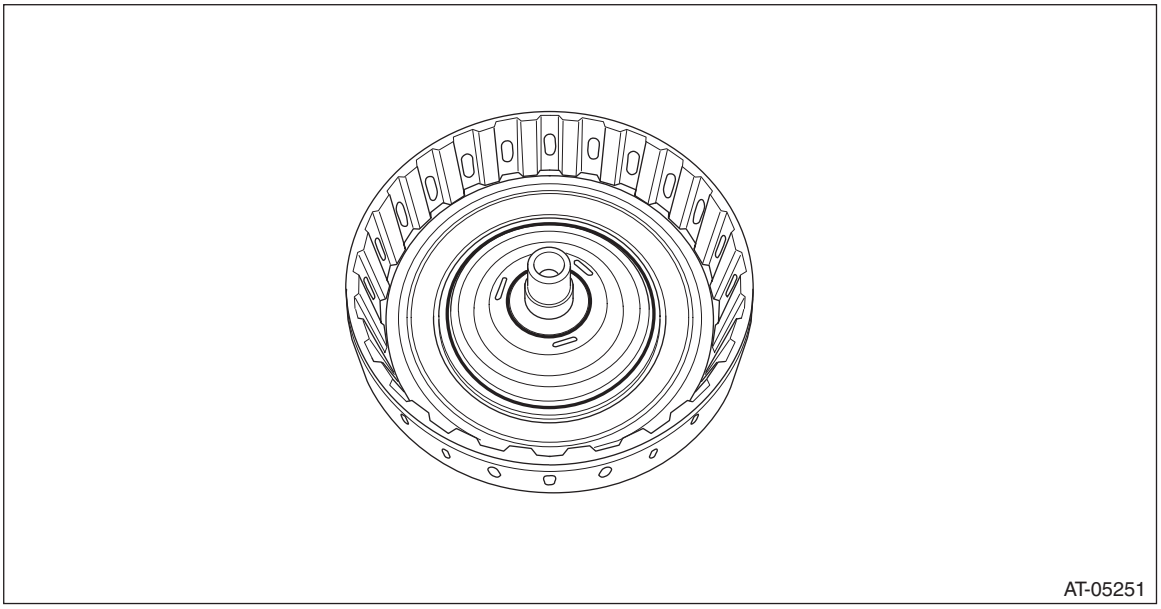

4) Compress the return spring using the ST to install the snap ring.
ST 18762AA000 COMPRESSOR SPECIAL TOOL

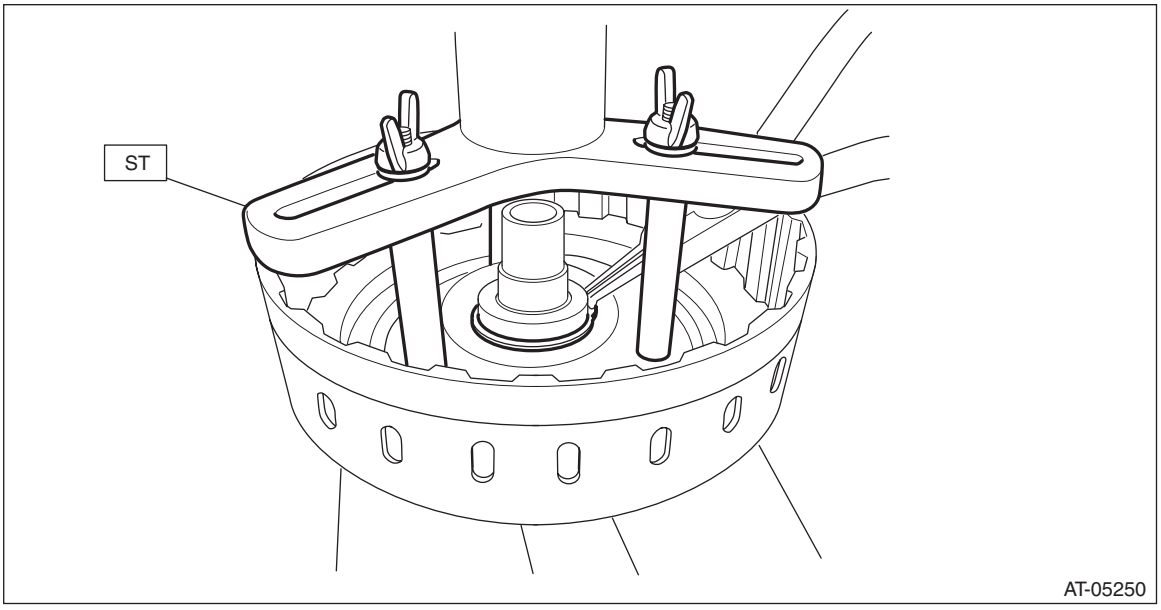

5) Measure thickness “A” of the retaining plate installed.

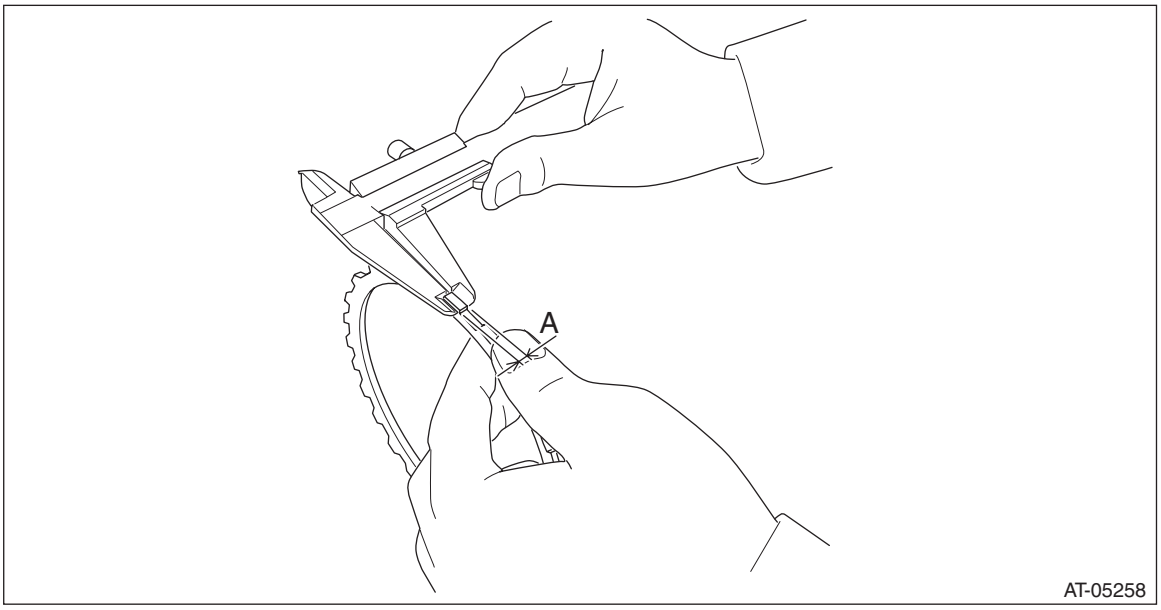

6) Measure thickness “B” of internal gear on the workbench.

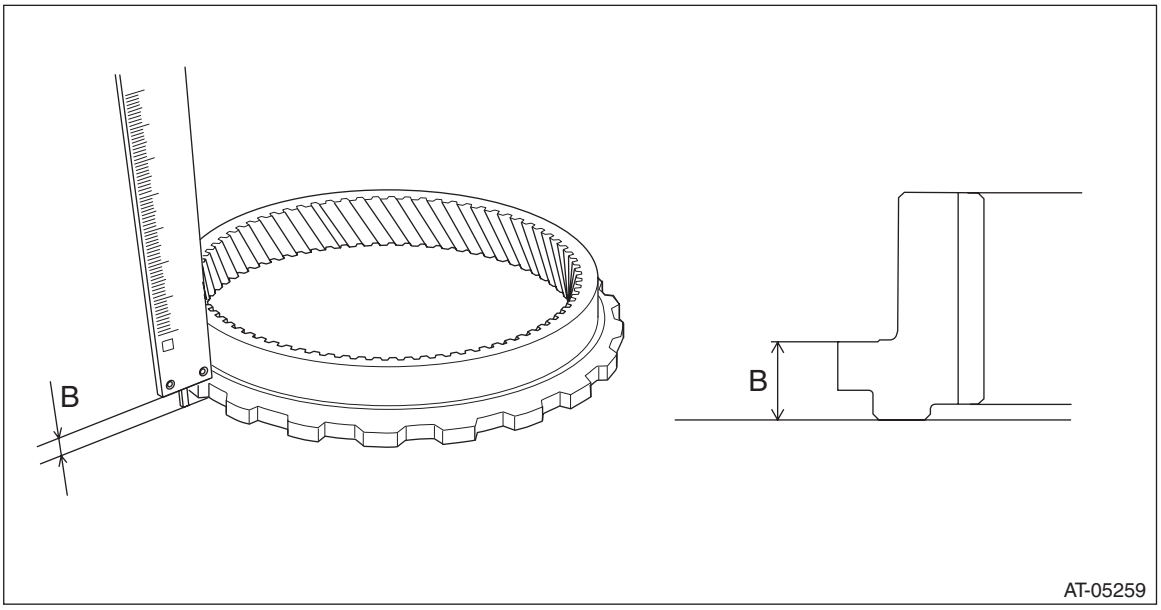

7) Measure thickness “C” of labelled or marked snap ring.

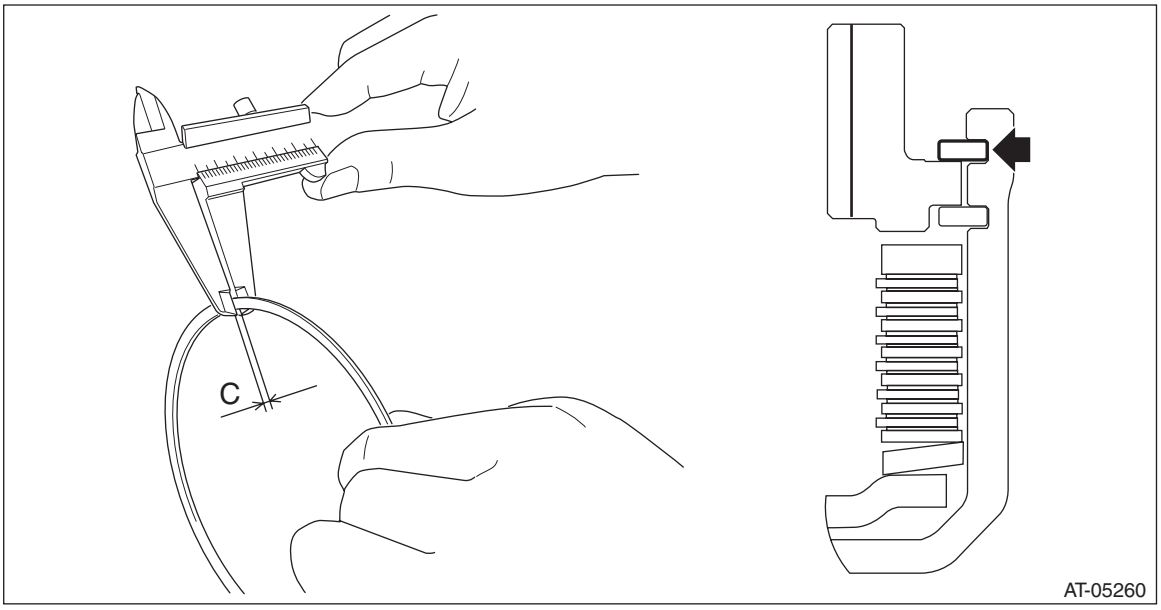

8) Install the dish plate, drive plate and driven plate.

9) Install the snap ring at the location (upper groove) indicated in the figure.

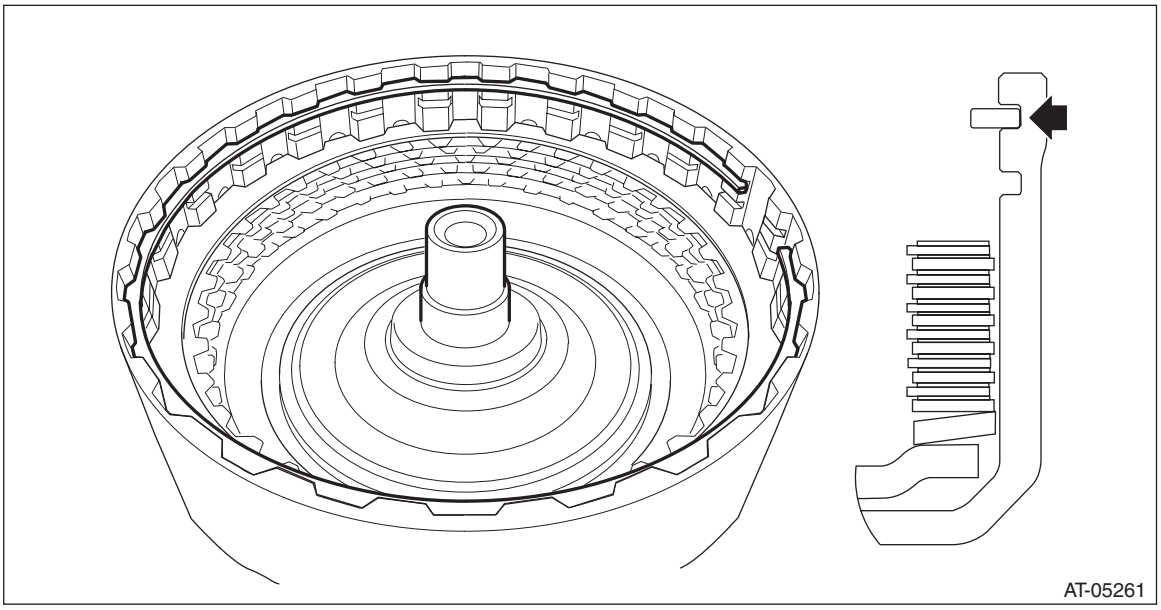

10) Measure depth “D” of snap ring and driven plate while lifting the snap ring.

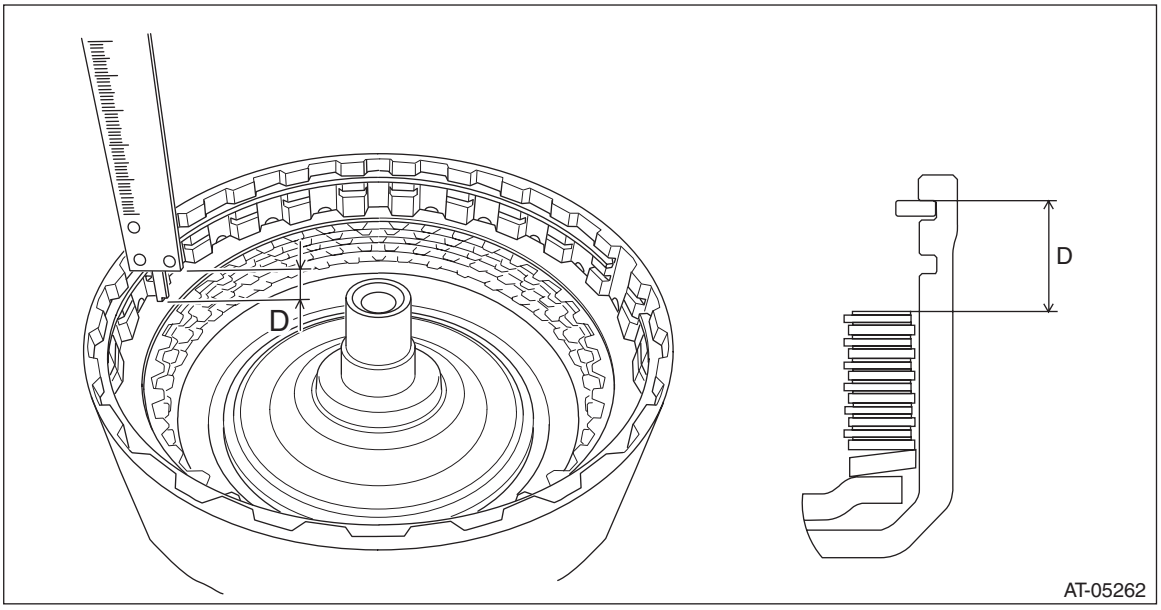

11) Calculate clearance “T” from internal gear to retaining plate with the obtained value from step 5) through step 10).
Formula: T mm (in) = D – A – B – C

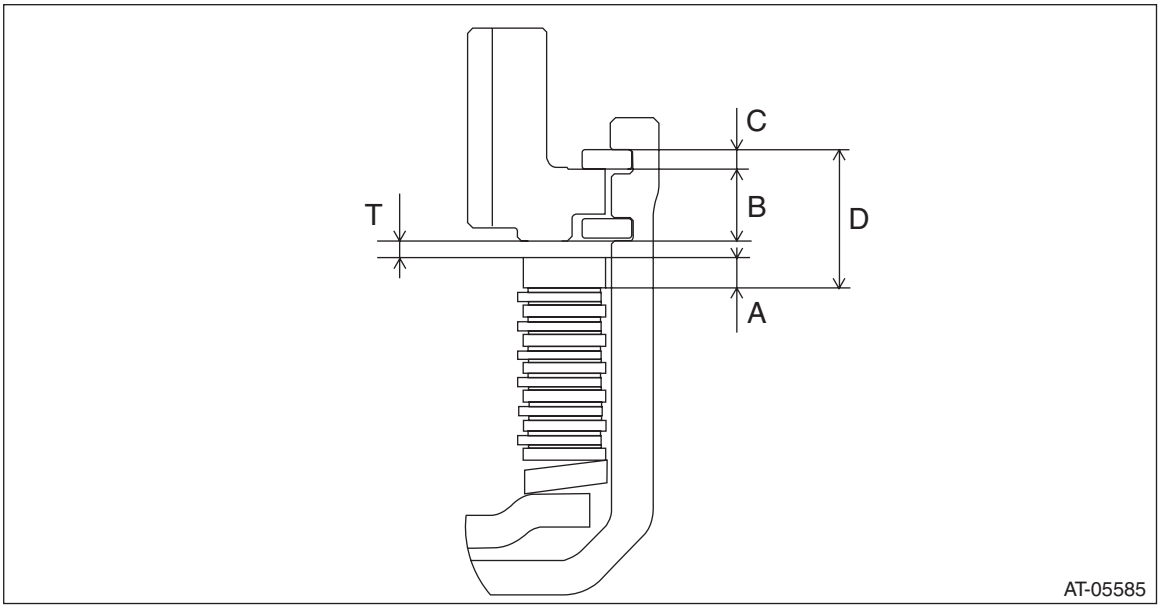

12) If the value “T” obtained from step 11) exceeds the limit for use, replace the drive plate and driven plate with new parts and select the retaining plate within the initial standard value.

Initial standard:
1.2 — 1.6 mm (0.047 — 0.063 in)

Limit thickness:
2.4 mm (0.09 in)

Retaining plate	
Item number	Thickness mm (in)
31567AB670	3.2 (0.126)
31567AB660	3.0 (0.118)
31567AB650	2.8 (0.110)
31567AB640	2.6 (0.102)

13) Remove the snap ring.

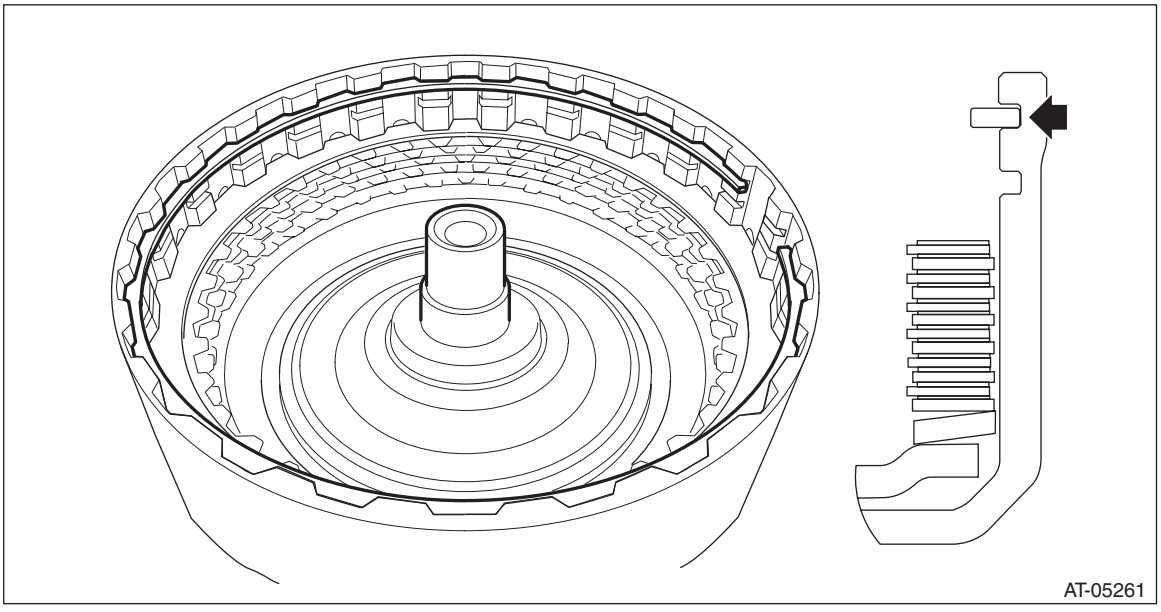

14) Replace with the selected retaining plate to install.
15) Install the snap ring to the lower groove.

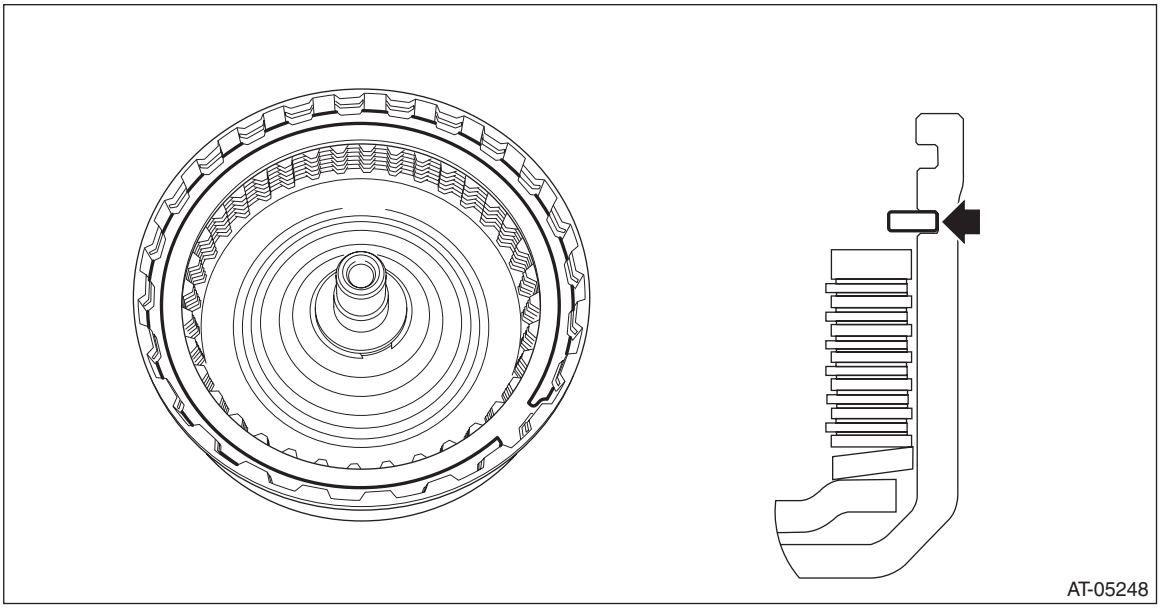

16) Install the thrust needle bearing.

NOTE:
Install the thrust needle bearing in the correct direction.

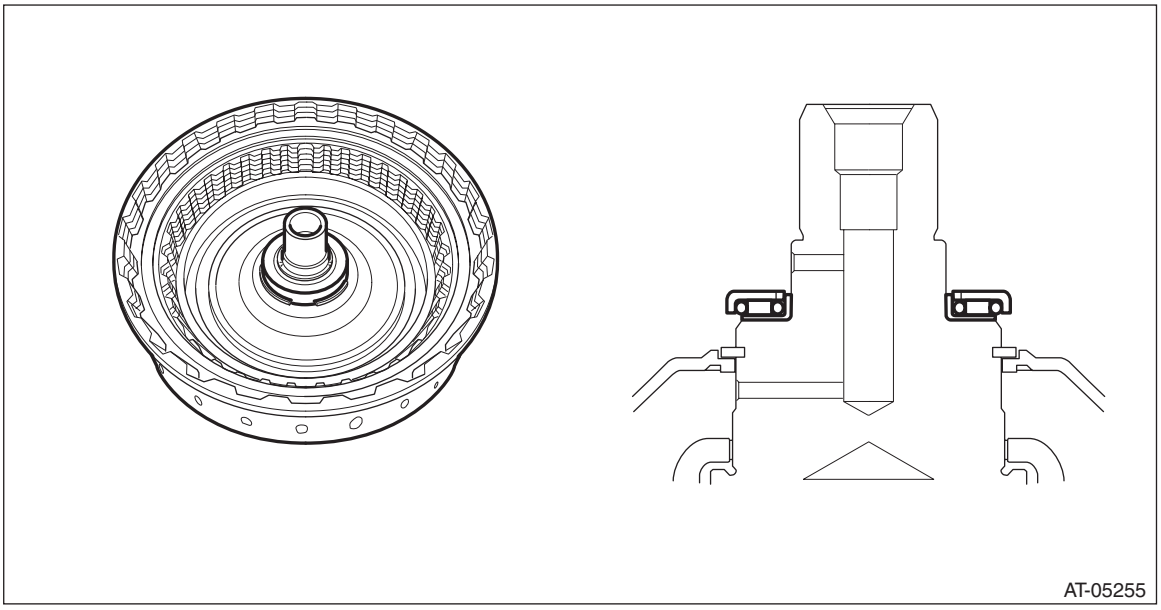

17) Install the washer.

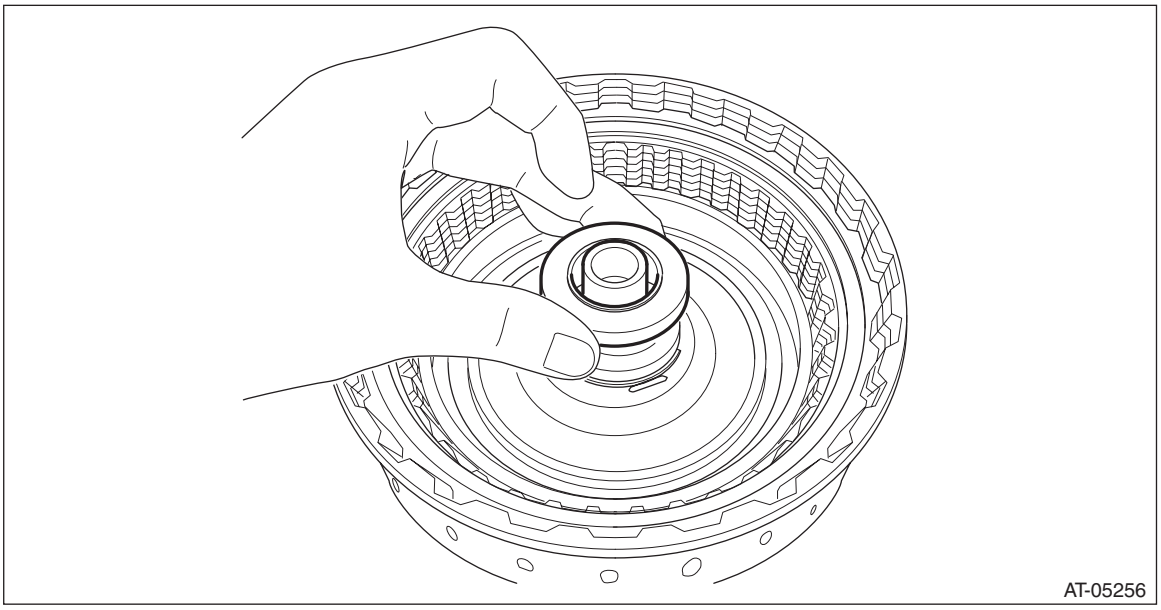

18) Install the sun gear.

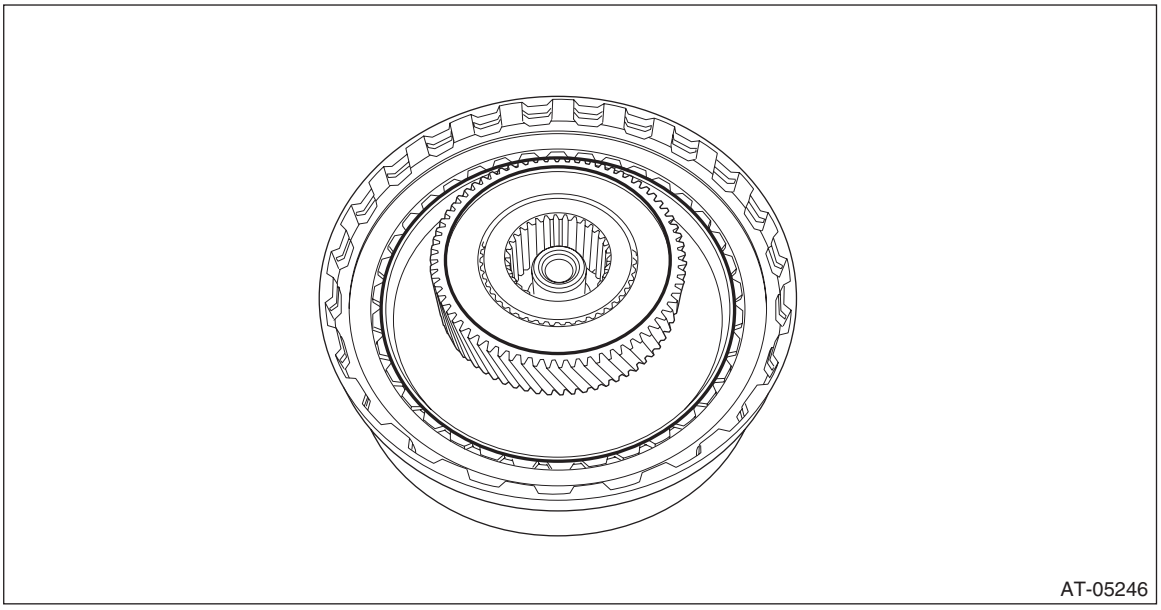

19) Install the internal gear.

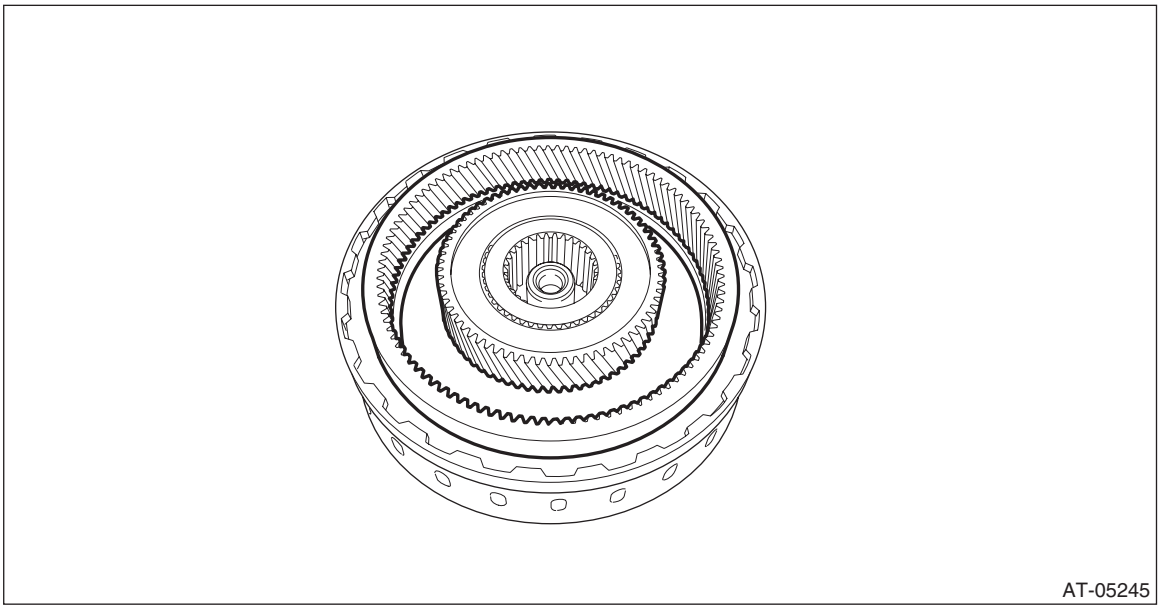

20) Install the snap ring.
21) Install the thrust needle bearing.

NOTE:
Make sure to install in the right direction.

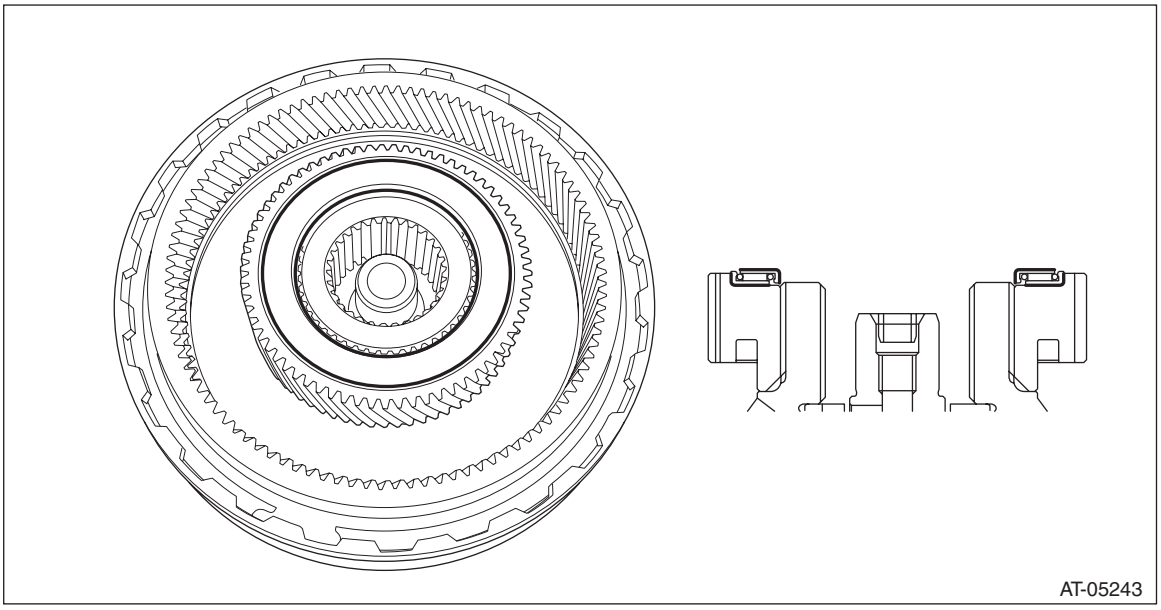

22) Install the planetary carrier assembly.

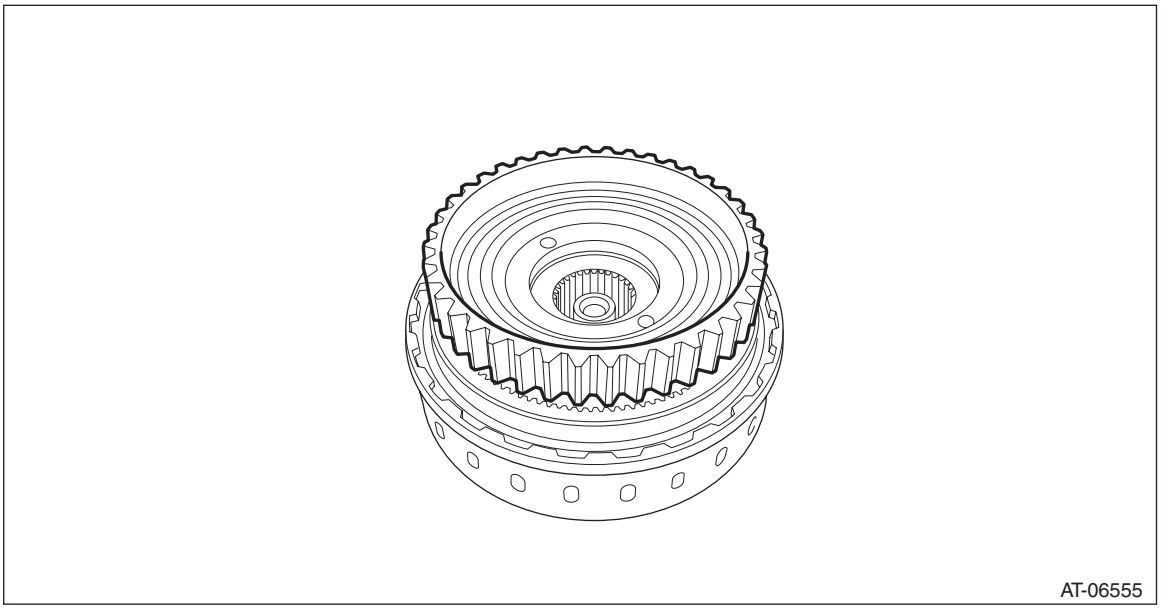

E: INSPECTION

- Check the forward clutch drum, internal gear, sun gear and forward clutch piston lip for wear or damage.
- Inspect the drive plate facing for wear and damage.
- Check the driven plate for discoloration (burnt color).
- Check for worn snap ring, fatigue or damaged return spring or deformed spring retainer.
- Make sure the clearance between retaining plate and internal gear of forward clutch is within the limit. If it exceeds the standard, replace the forward clutch assembly. <Ref. to CVT-189, ASSEMBLY, Forward Clutch Assembly.>

F: ADJUSTMENT

1) Measure depth “A” from the ST upper face to the washer catch surface.
ST 398643600 GAUGE

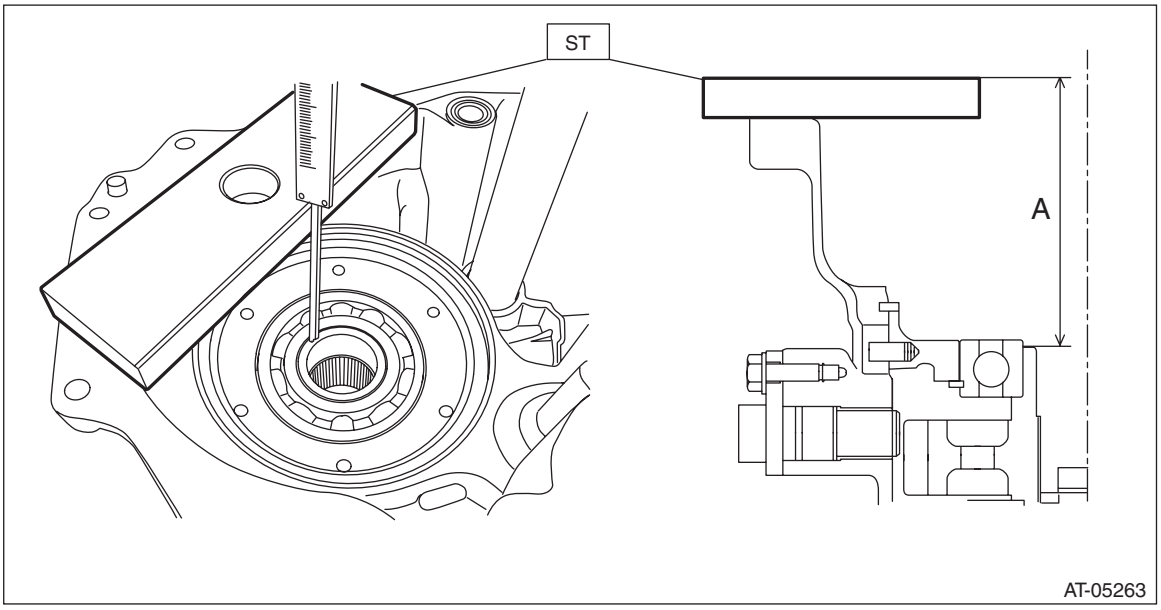

2) Install the forward clutch assembly to intermediate case.

3) Setting the ST, measure height “B” from the ST upper side to the immediate case mating surface.
ST 499575600 GAUGE

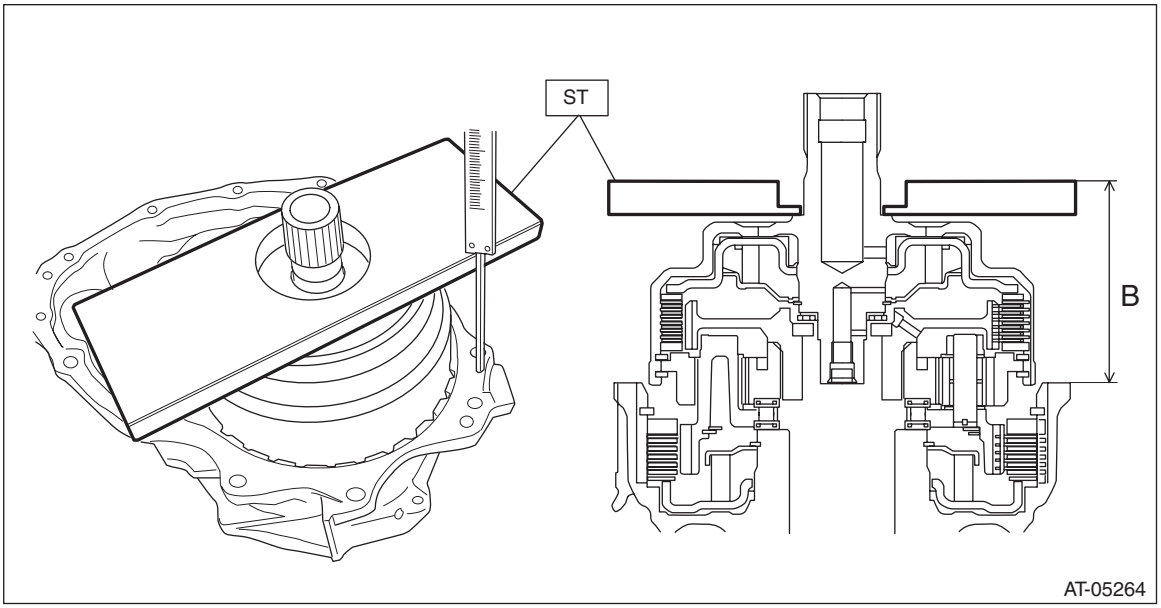

4) Obtain the thickness of washer using the following formula.
Calculation formula:
T (mm) = (A – 15) – (B – 15) – (0.35 — 0.70)
[T (in) = (A – 0.591) – (B – 0.591) – (0.014 — 0.028)]
T: Washer thickness
A: Depth from the ST upper face to the washer catch surface
B: Height from the upper surface of the ST to the mating surface of the intermediate case
15 mm (0.591 in): Thickness of ST
0.35 — 0.70 mm (0.014 — 0.028 in): Clearance
5) Select the washer matching value “T” obtained from step 4).

Washer	
Part number	Washer thickness mm (in)
803034040	1.0 (0.039)
803034041	1.2 (0.047)
803034042	1.4 (0.055)
803034043	1.6 (0.063)

37.Reduction Driven Gear

A: REMOVAL

1) Remove the transmission from the vehicle. <Ref. to CVT-55, REMOVAL, Automatic Transmission Assembly.>
2) Remove the extension case. <Ref. to CVT-138, REMOVAL, Extension Case.>
3) Remove the rear drive shaft. <Ref. to CVT-141, REMOVAL, Rear Drive Shaft.>
4) Remove the transfer clutch assembly. <Ref. to CVT-146, REMOVAL, Transfer Clutch.>
5) Remove the transfer reduction driven gear assembly. <Ref. to CVT-158, REMOVAL, Transfer Reduction Driven Gear.>
6) Remove the intermediate case. <Ref. to CVT-165, REMOVAL, Intermediate Case.>
7) Remove the forward clutch assembly. <Ref. to CVT-180, REMOVAL, Forward Clutch Assembly.>
8) Remove the snap ring.

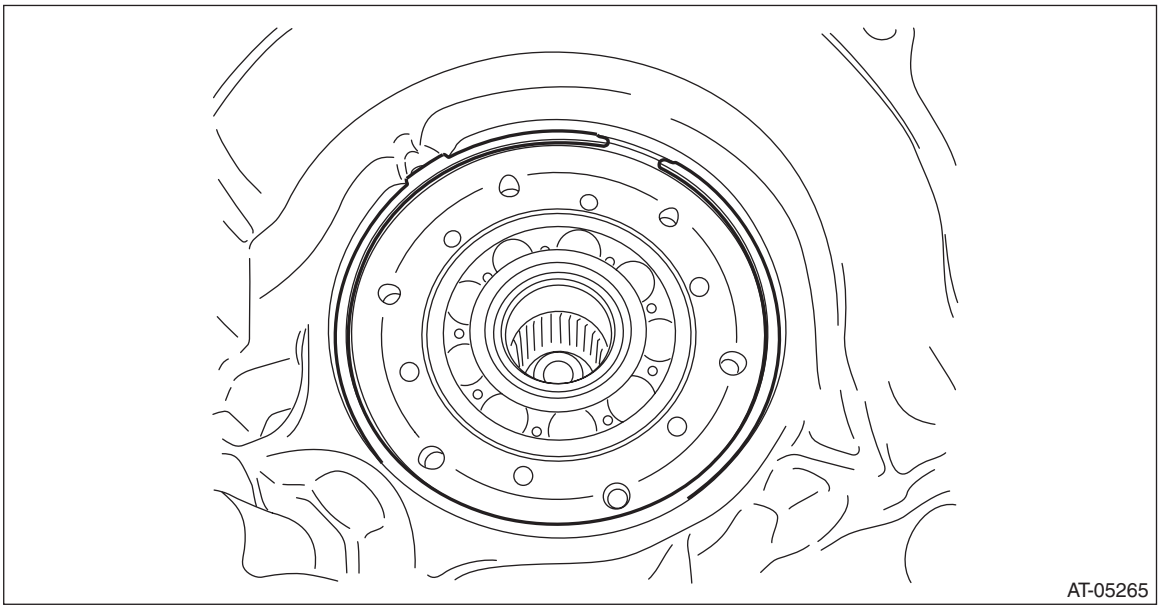
AT-05265

9) Remove the reduction driven gear assembly.

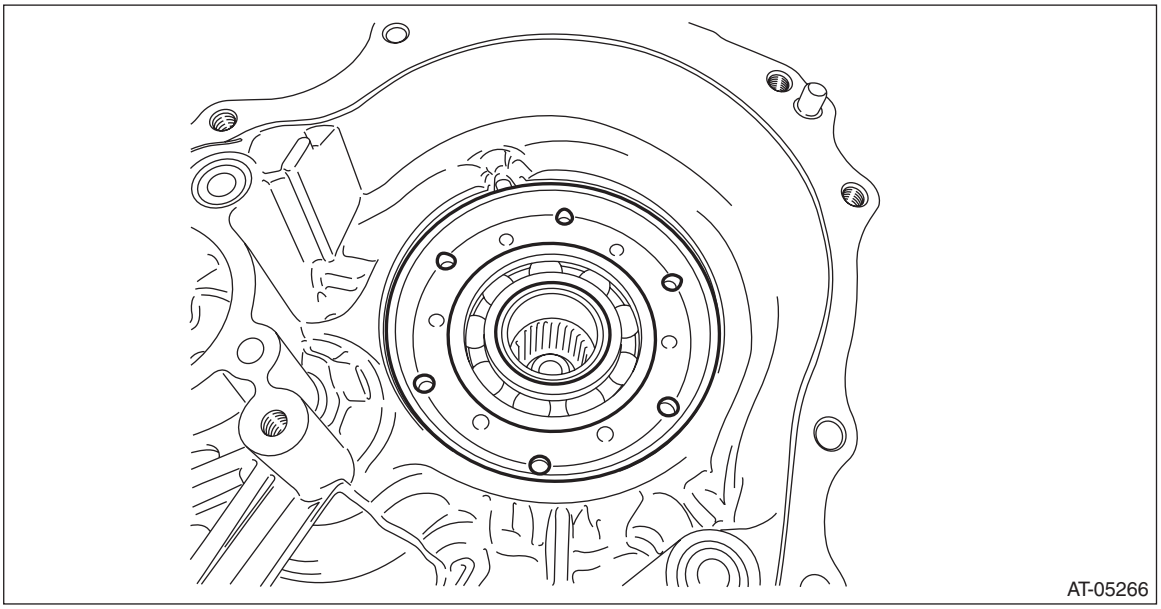
AT-05266

10) Remove the straight pin.

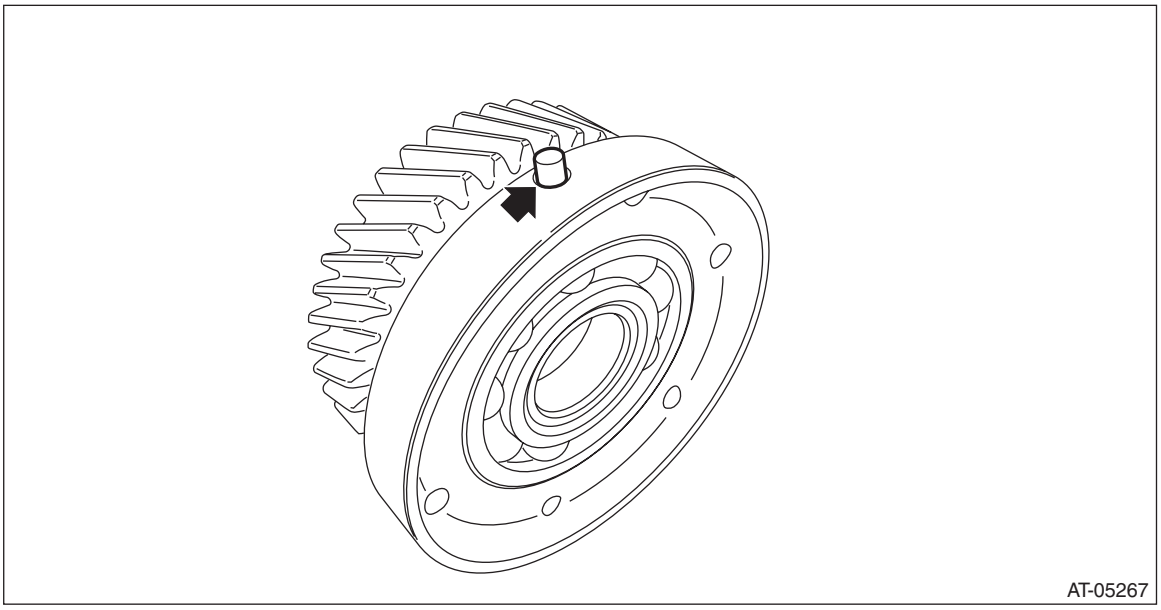

B: INSTALLATION

1) Install the straight pin to reduction driven gear assembly.

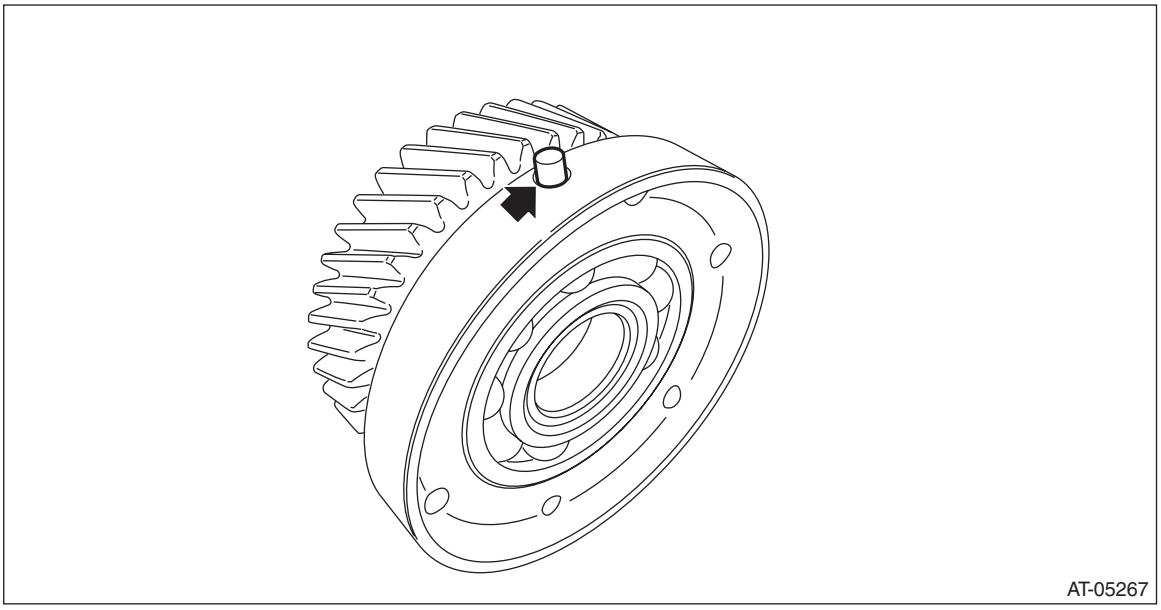

2) Fit the straight pin portion to the recess portion of transmission case and install the reduction driven gear and install the snap ring.

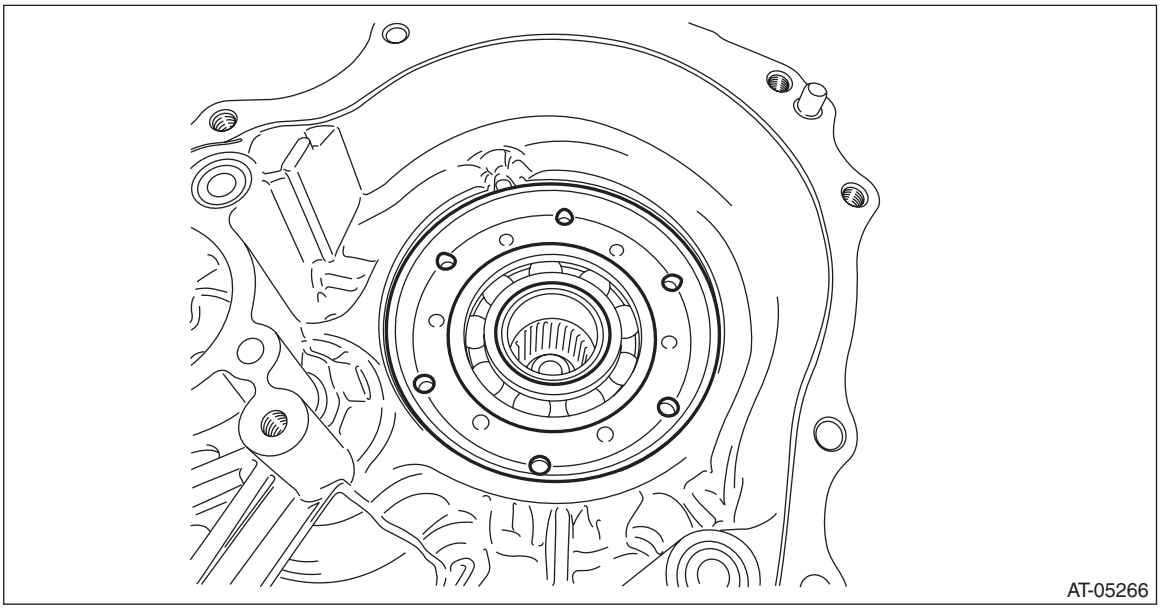

3) Select the snap ring. <Ref. to CVT-205, ADJUSTMENT, Reduction Driven Gear.>
4) Replace with the selected snap ring.

NOTE:
If the clearance measured in step 3) is within standard, the snap ring replacement is not necessary.
5) Install the forward clutch assembly. <Ref. to CVT-181, INSTALLATION, Forward Clutch Assembly.>
6) Install the intermediate case. <Ref. to CVT-166, INSTALLATION, Intermediate Case.>
7) Install the transfer reduction driven gear assembly. <Ref. to CVT-158, INSTALLATION, Transfer Reduction Driven Gear.>
8) Install the transfer clutch assembly. <Ref. to CVT-147, INSTALLATION, Transfer Clutch.>
9) Install the rear drive shaft. <Ref. to CVT-141, INSTALLATION, Rear Drive Shaft.>
10) Install the extension case. <Ref. to CVT-138, INSTALLATION, Extension Case.>
11) Install the transmission to vehicle. <Ref. to CVT-70, INSTALLATION, Automatic Transmission Assembly.>

C: DISASSEMBLY

1) Remove the bearing retainer using ST1, ST2 and ST3.
ST1 899864100 REMOVER
ST2 398497701 SEAT
ST3 18767AA000 BEARING REMOVER

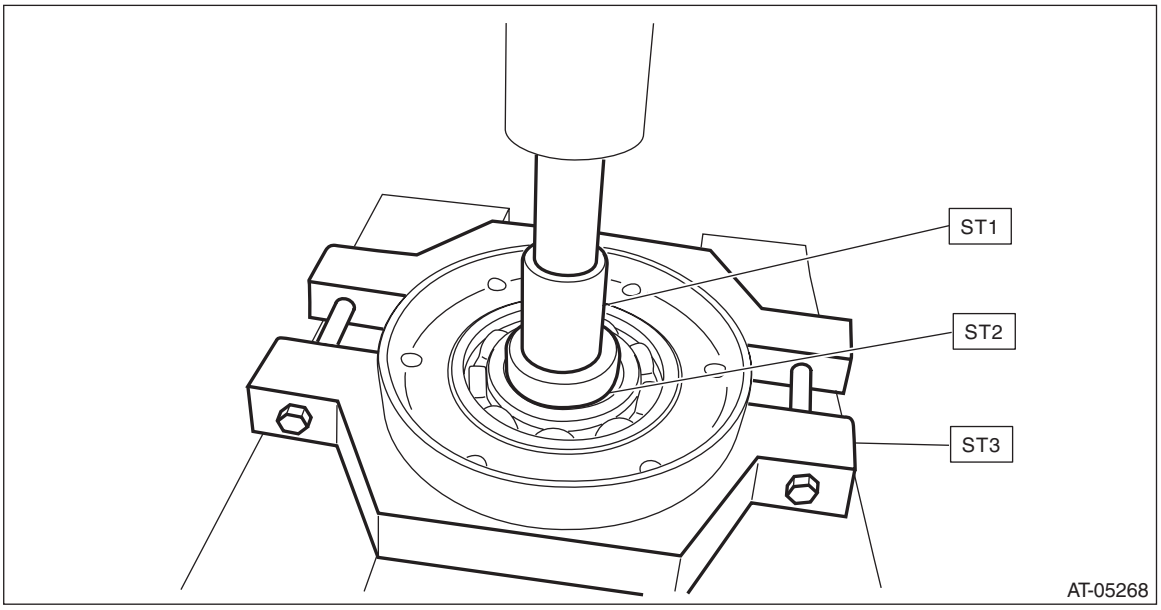

2) Remove the snap ring.

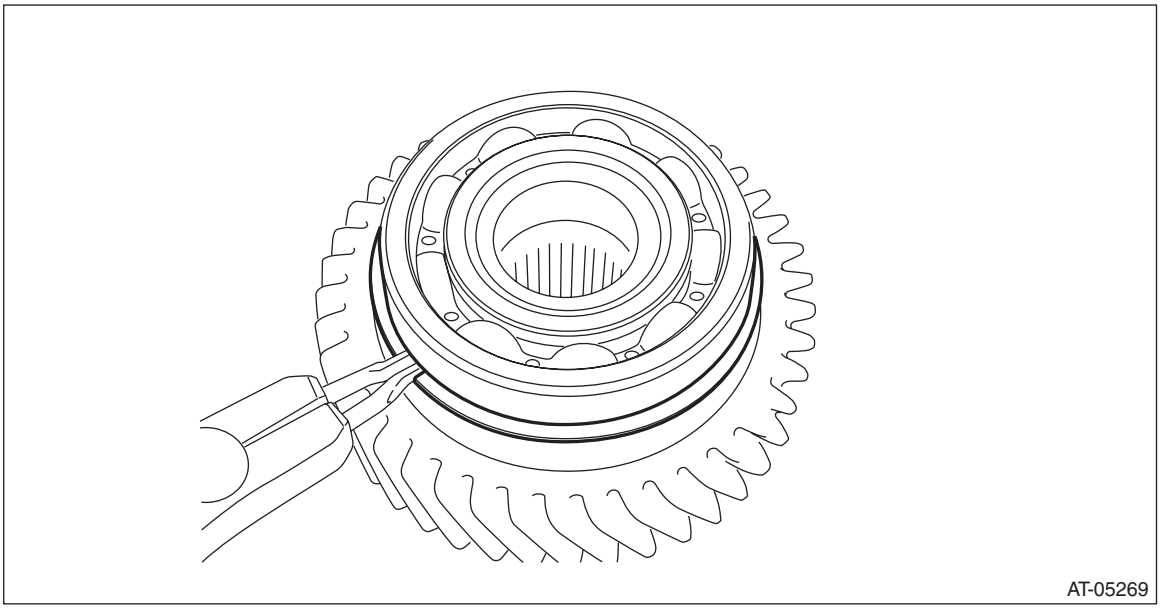

3) Remove the ball bearing using ST1, ST2 and ST3.
ST1 899864100 REMOVER
ST2 398497701 SEAT
ST3 498077600 REMOVER

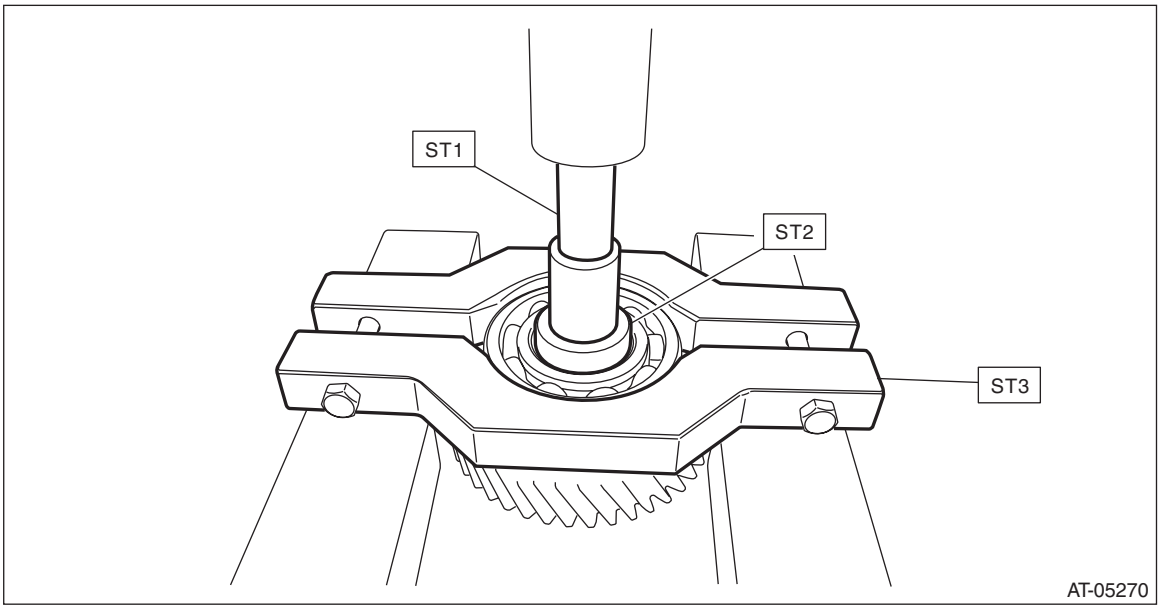

D: ASSEMBLY

1) Using the ST, install the ball bearing to bearing retainer.
ST 398177700 INSTALLER

NOTE:
- Use a new ball bearing.
- Make sure to install the ball bearing in the right direction.
- Apply CVTF to the press-fitting area.

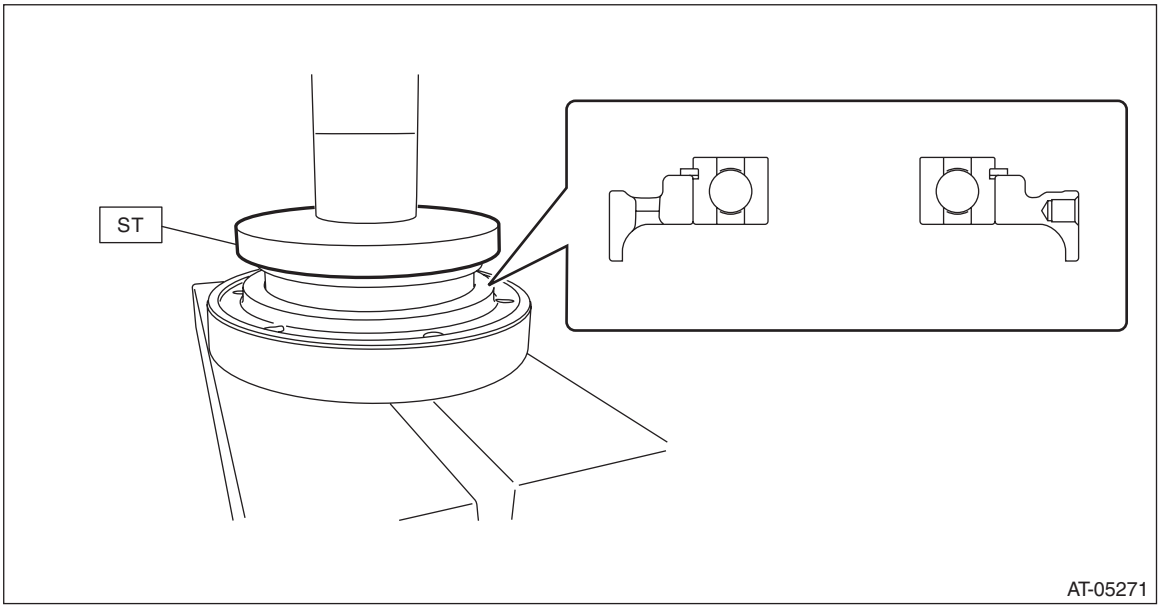

2) Using the ST, install the reduction driven gear.
ST 499277200 INSTALLER

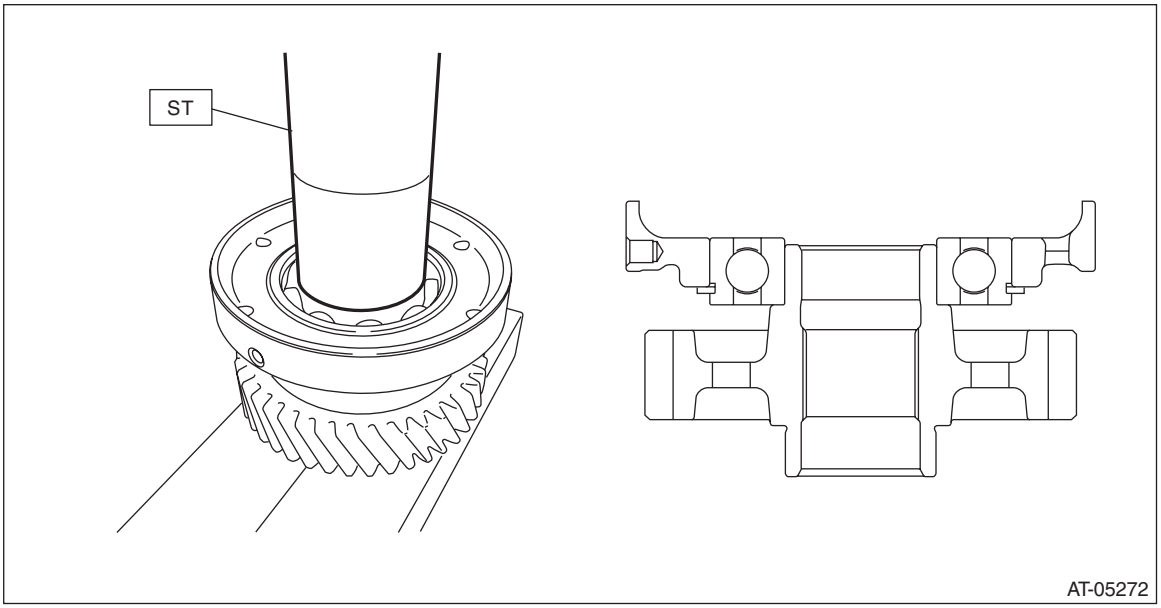

E: INSPECTION

- Check the ball bearing for smooth rotation.
- Check the ball bearing for excessive looseness.
- Check the reduction driven gear for breakage or damage.
- Check the clearance between snap ring and transmission case and replace the snap ring as necessary.

F: ADJUSTMENT

1) Measure clearance “A” between snap ring and transmission case.

Specification:
0.05 — 0.25 mm (0.002 — 0.01 in)

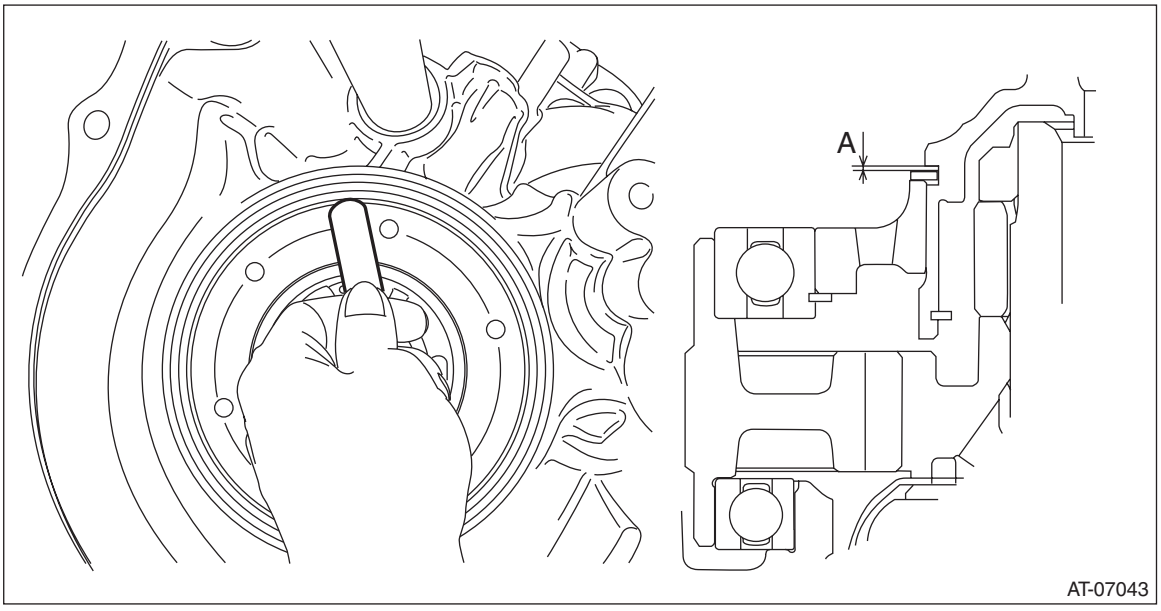

2) If clearance “A” is out of standard, select the snap ring within standard.

Snap ring	
Part No.	Thickness mm (in)
805100460	2.0 (0.079)
805100461	2.1 (0.083)
805100462	2.2 (0.087)
805100463	2.3 (0.091)
805100464	2.4 (0.094)

38.Transmission Control Device

A: REMOVAL

1) Remove the transmission assembly from vehicle body. <Ref. to CVT-55, REMOVAL, Automatic Transmission Assembly.>
2) Remove the oil pan and control valve body. <Ref. to CVT-111, REMOVAL, Control Valve Body.>
3) Remove the inhibitor switch. <Ref. to CVT-98, REMOVAL, Inhibitor Switch.>
4) Remove the spring pin.

NOTE:
Prevent the spring pin from dropping in the transmission using paper towel etc.

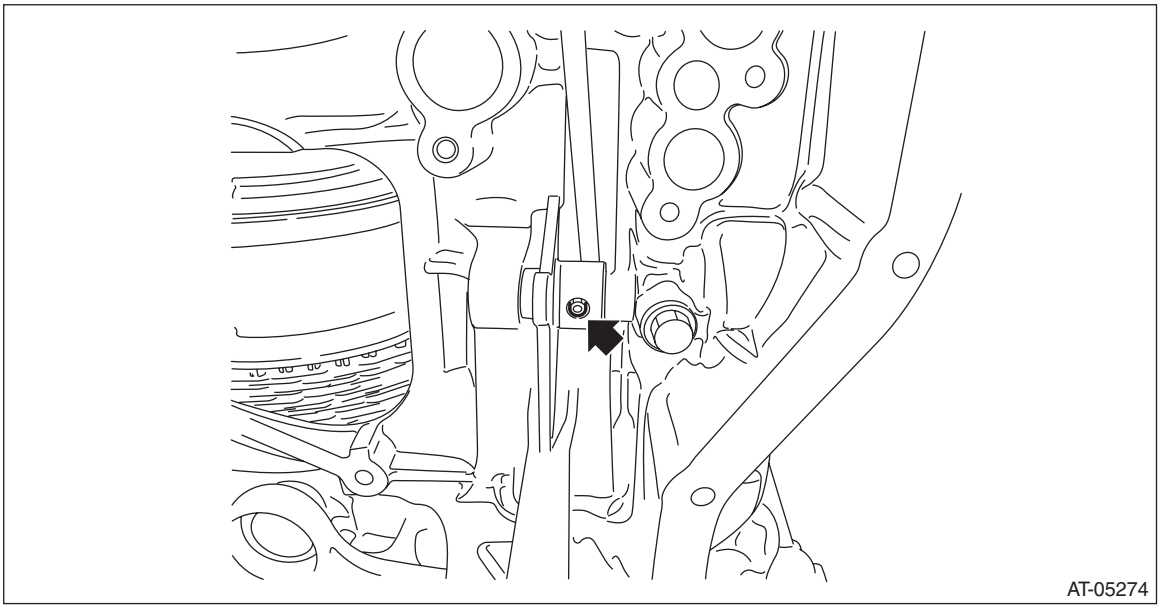

5) Remove the bolt and remove the range select lever, manual plate and parking rod.

NOTE:
Do not damage the lip of oil seal press-fitted in the case.

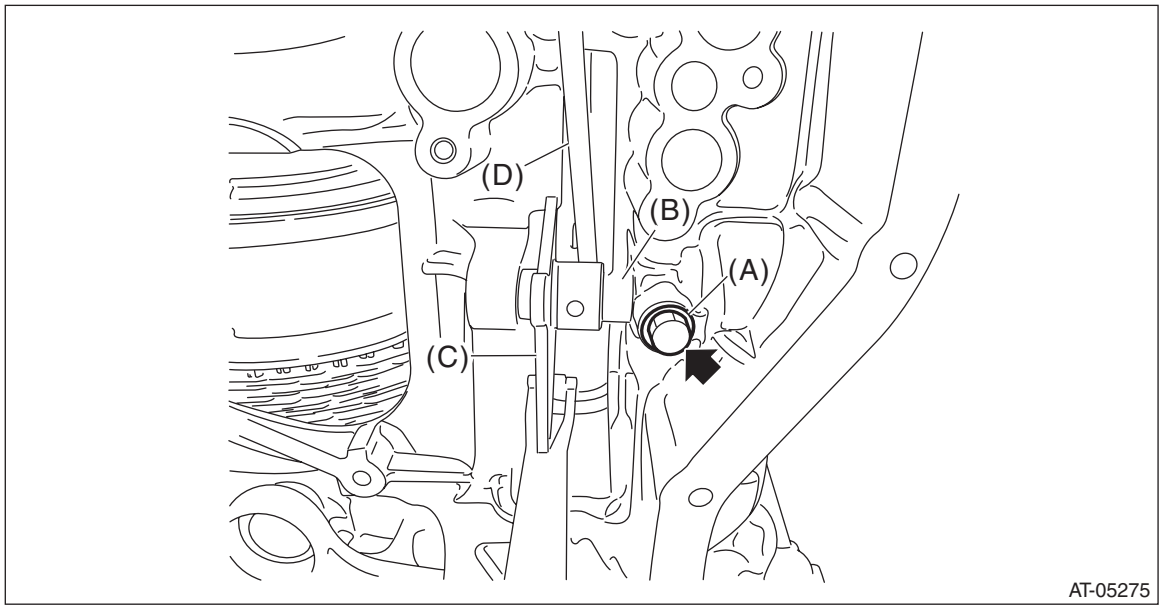

(A) Bolt
(B) Range select lever
(C) Manual plate
(D) Parking rod

6) Remove the detent spring.

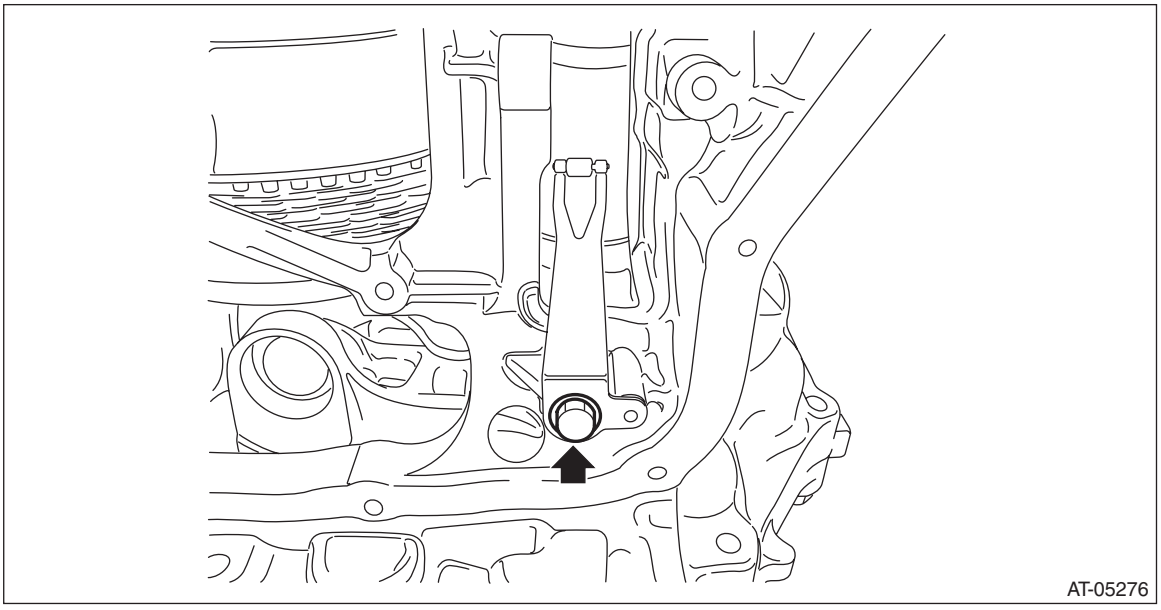

B: INSTALLATION

1) Install the detent spring to the transmission case.

Tightening torque:
7 N·m (0.7 kgf-m, 5.2 ft-lb)

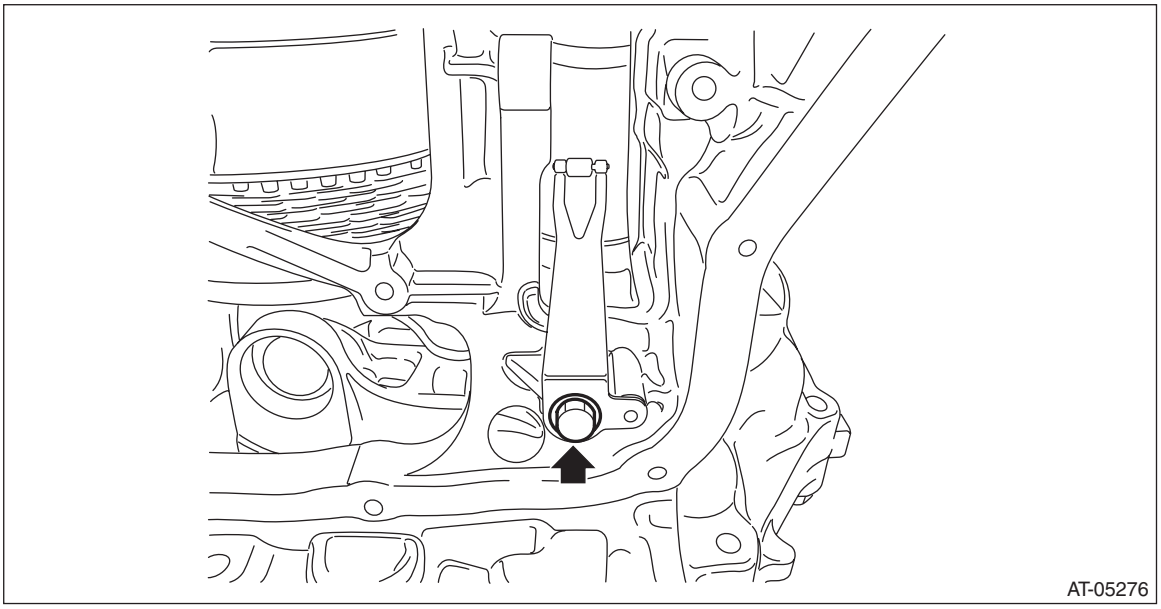

2) Install the manual plate, parking rod, range select lever and bolt.

Tightening torque:
7 N·m (0.7 kgf-m, 5.2 ft-lb)

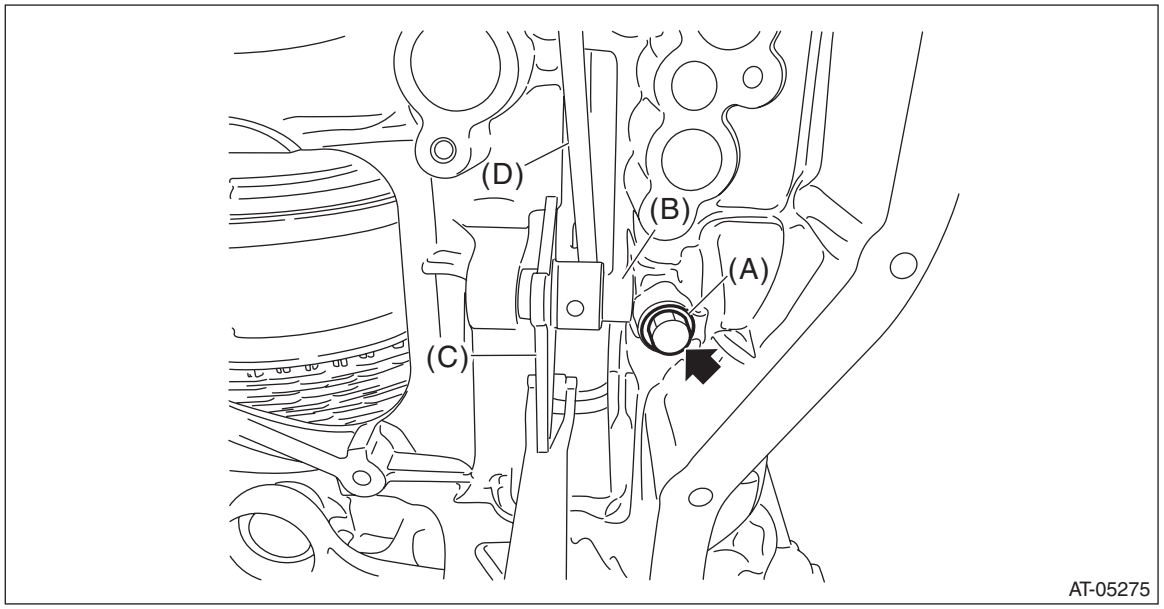

(A) Bolt
(B) Range select lever
(C) Manual plate
(D) Parking rod

3) Install the spring pin.

NOTE:
Use new spring pin.

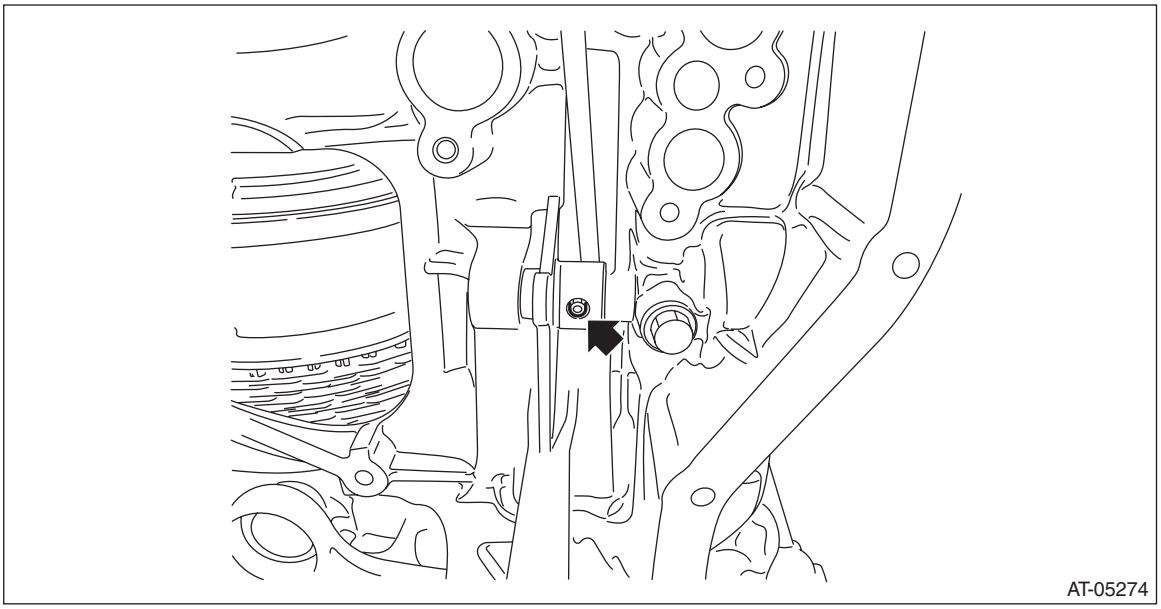

4) Install the inhibitor switch. <Ref. to CVT-95, Inhibitor Switch.>
5) Adjust the inhibitor switch. <Ref. to CVT-95, Inhibitor Switch.>
6) Install the control valve body and oil pan. <Ref. to CVT-115, INSTALLATION, Control Valve Body.>
7) Install the transmission assembly to the vehicle. <Ref. to CVT-70, INSTALLATION, Automatic Transmission Assembly.>

C: INSPECTION

Make sure that the manual lever and detent spring are not worn or otherwise damaged.

39.Transmission Case

A: REMOVAL

1) Remove the transmission assembly from the vehicle. <Ref. to CVT-55, REMOVAL, Automatic Transmission Assembly.>
2) Remove the air breather hose. <Ref. to CVT-132, REMOVAL, Air Breather Hose.>
3) Remove the transmission harness. <Ref. to CVT-121, REMOVAL, Transmission Harness.>
4) Remove the secondary speed sensor. <Ref. to CVT-102, REMOVAL, Secondary Speed Sensor.>
5) Remove the inhibitor switch. <Ref. to CVT-98, REMOVAL, Inhibitor Switch.>
6) Remove the extension case. <Ref. to CVT-138, REMOVAL, Extension Case.>
7) Remove the rear drive shaft. <Ref. to CVT-141, REMOVAL, Rear Drive Shaft.>
8) Remove the transfer clutch assembly. <Ref. to CVT-146, REMOVAL, Transfer Clutch.>
9) Remove the transfer reduction driven gear assembly. <Ref. to CVT-158, REMOVAL, Transfer Reduction Driven Gear.>
10) Remove the intermediate case. <Ref. to CVT-165, REMOVAL, Intermediate Case.>
11) Remove the forward clutch assembly. <Ref. to CVT-180, REMOVAL, Forward Clutch Assembly.>
12) Remove the reduction driven gear. <Ref. to CVT-200, REMOVAL, Reduction Driven Gear.>
13) Remove the oil pan and control valve body. <Ref. to CVT-111, REMOVAL, Control Valve Body.>

NOTE:
When removing the control valve body, also remove the pressure pipe if it is attached on the case.

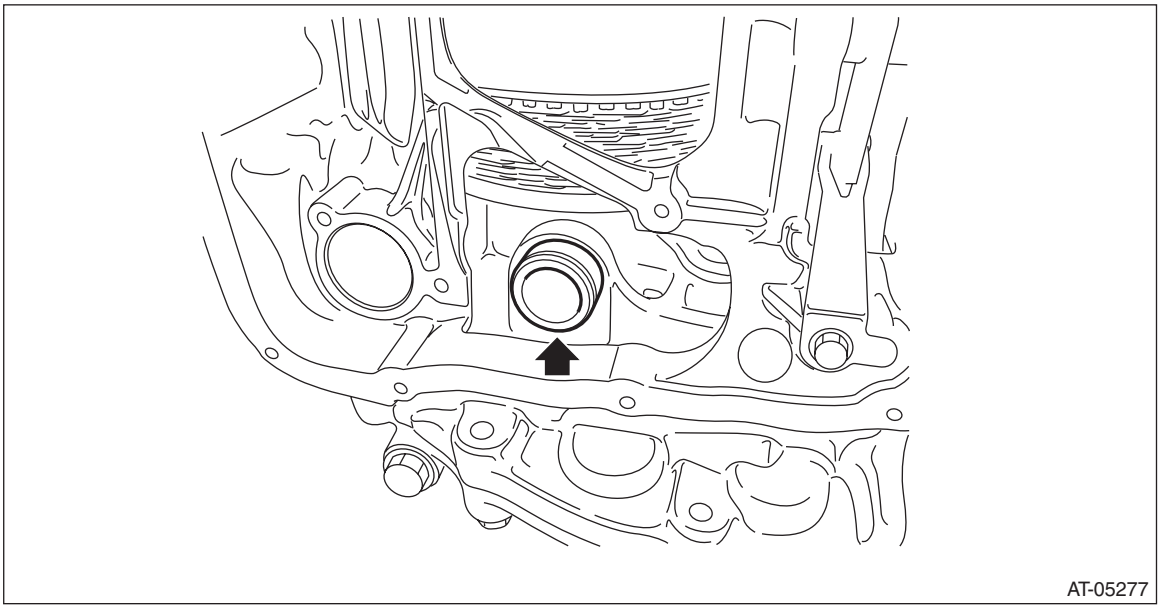

14) Remove the CVTF pipe using a tire lever etc.

NOTE:
Remove by hooking the stepped portion of CVTF pipe with a tire lever etc.

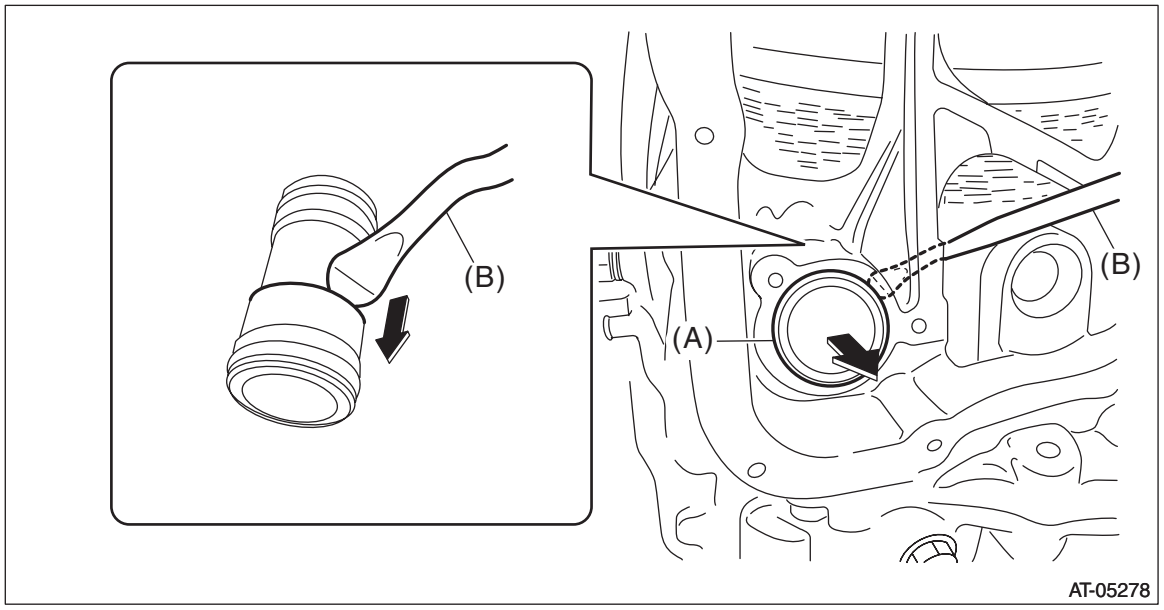

(A) CVTF pipe
(B) Tire lever

15) Remove the transmission case.

NOTE:
The total number of transmission case mounting bolts is 15.

16) Remove the O-ring of lubrication pipe.

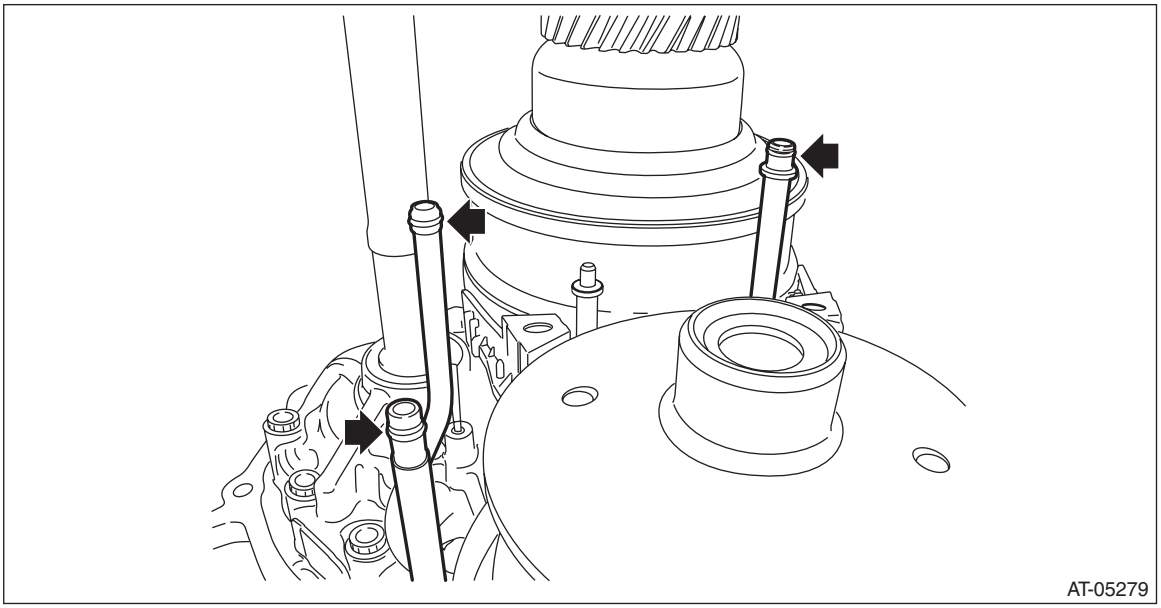

17) Remove the control device system. <Ref. to CVT-207, REMOVAL, Transmission Control Device.>

B: INSTALLATION

1) Clean the mating surface of transmission case and converter case.
2) Install the control device system. <Ref. to CVT-209, INSTALLATION, Transmission Control Device.>
3) Install the O-ring to the lubrication pipe.

NOTE:
- Use new O-rings.
- Apply CVTF to the O-ring.

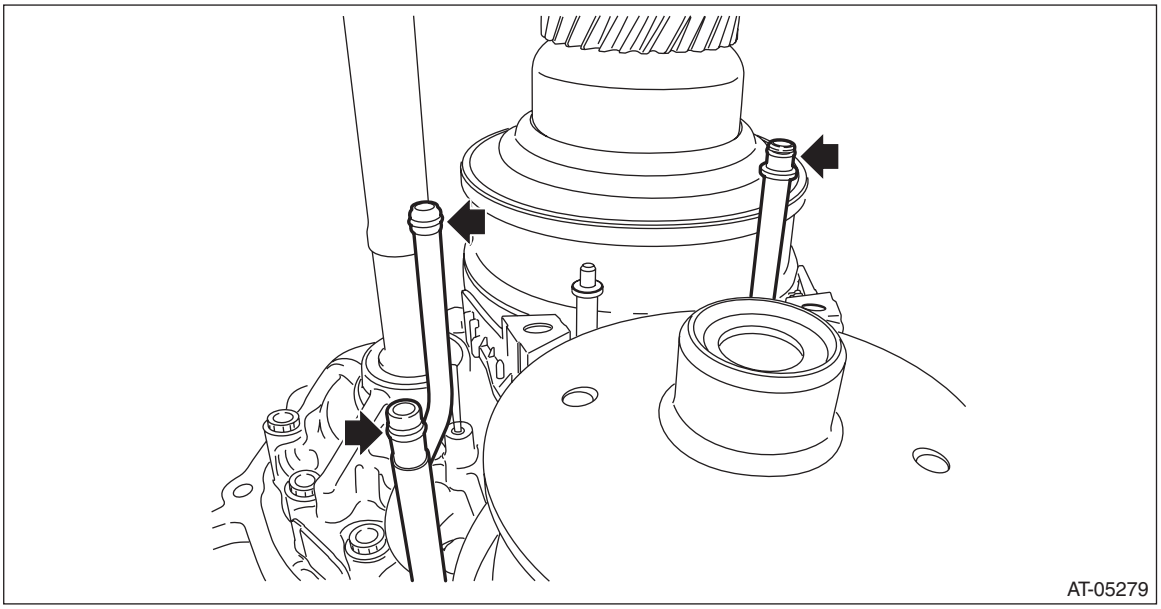

4) Make sure the lubrication pipe and support rod are in vertical position.

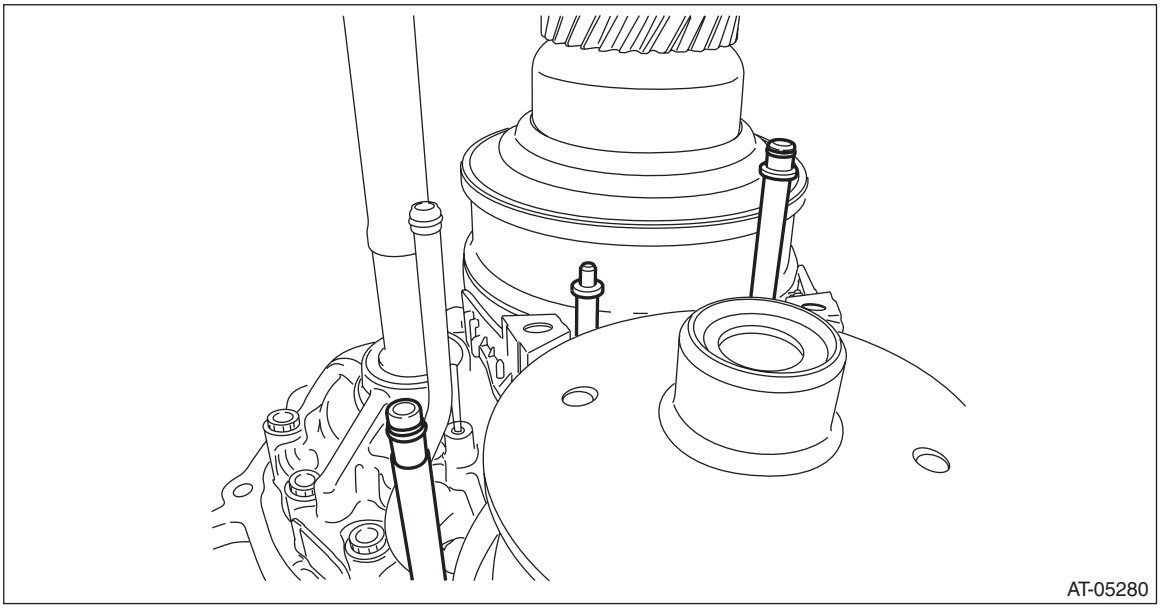

5) Apply liquid gasket seamlessly to the mating surface of transmission case.

Liquid gasket:
THREE BOND 1215 (Part No. 004403007) or equivalent

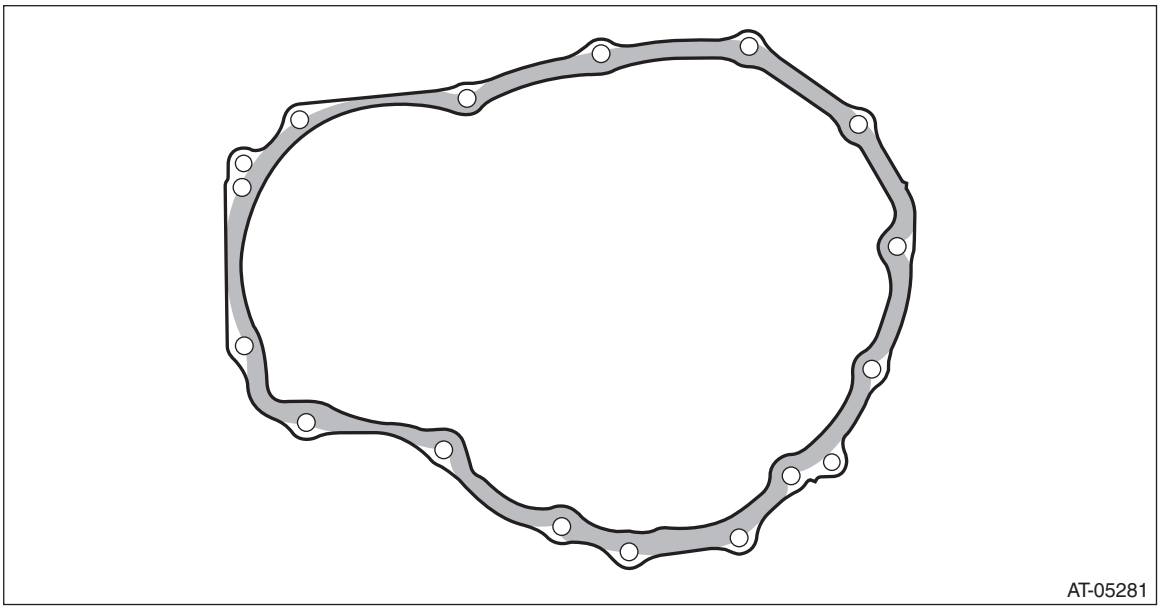

6) Install the transmission case.

CAUTION:
If the transmission case gets in contact with the lubrication pipe and support rod, do not install the transmission case forcibly.

NOTE:
- Install while checking the lubrication pipe and support rod is being inserted properly into transmission case.
- If installing the transmission is difficult, check if the lubrication pipe and support rod are bent.
- The total number of transmission case mounting bolts is 15.

Tightening torque:
41 N·m (4.2 kgf-m, 30.2 ft-lb)

7) Install the O-ring to CVTF pipe.

NOTE:
- Use new O-rings.
- Apply CVTF to the O-ring.

8) The smaller opening of CVTF pipe should be inserted to transmission.

NOTE:
After installing, make sure the CVTF pipe does not stick out of transmission case.

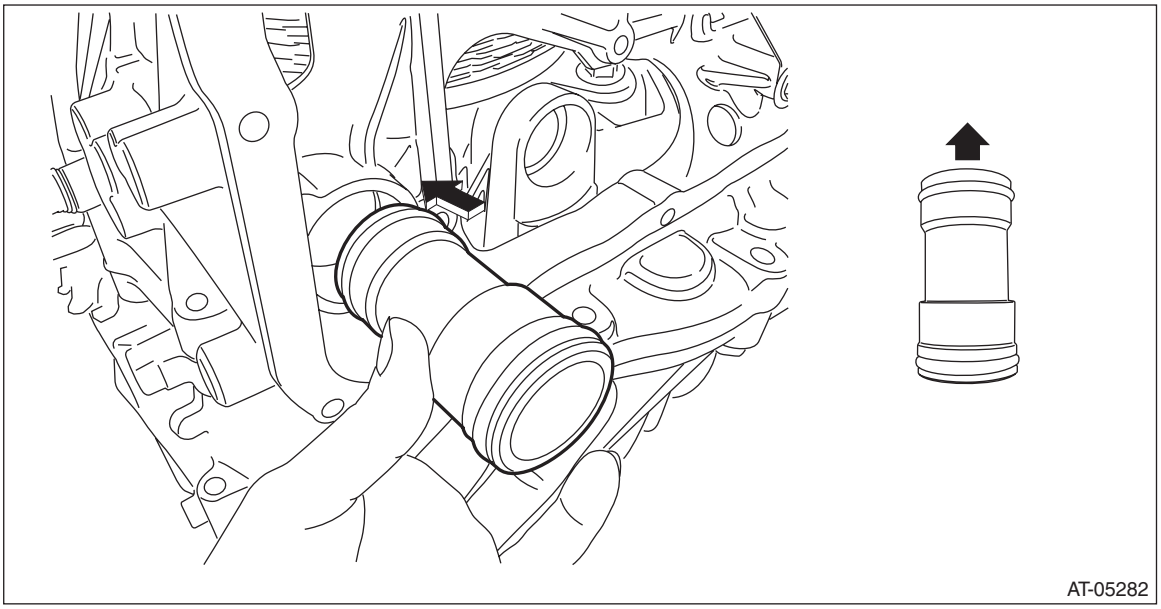

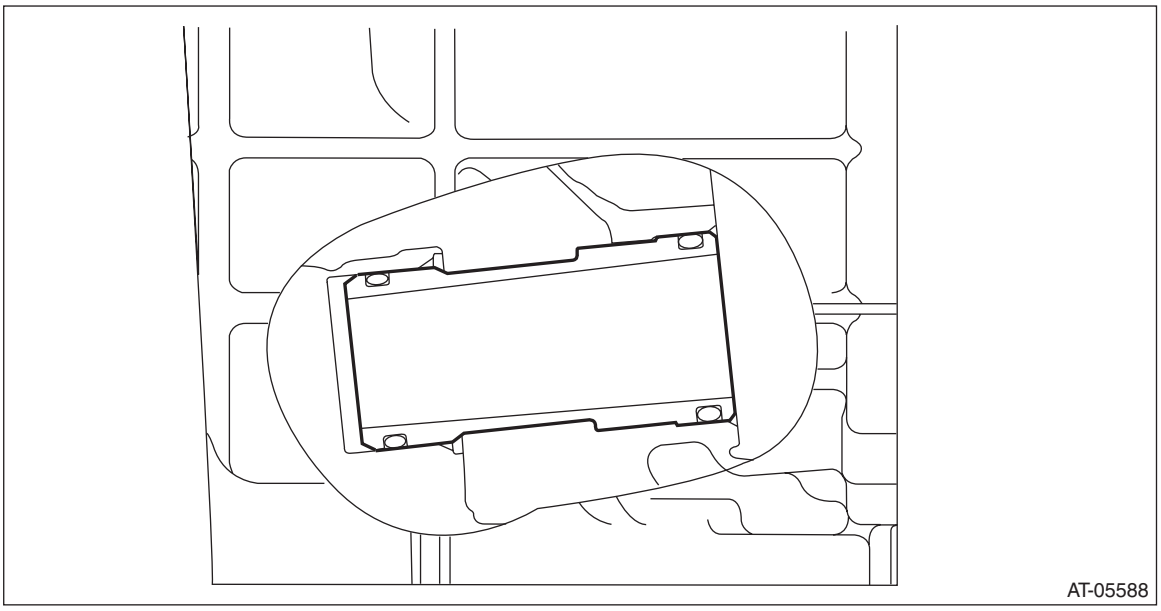

9) Install the reduction driven gear. <Ref. to CVT-201, INSTALLATION, Reduction Driven Gear.>
10) Install the forward clutch assembly. <Ref. to CVT-181, INSTALLATION, Forward Clutch Assembly.>
11) Install the intermediate case. <Ref. to CVT-166, INSTALLATION, Intermediate Case.>
12) Install the transfer reduction driven gear assembly. <Ref. to CVT-158, INSTALLATION, Transfer Reduction Driven Gear.>
13) Install the transfer clutch assembly. <Ref. to CVT-147, INSTALLATION, Transfer Clutch.>
14) Install the rear drive shaft. <Ref. to CVT-147, INSTALLATION, Transfer Clutch.>
15) Install the extension case. <Ref. to CVT-138, INSTALLATION, Extension Case.>
16) Install the inhibitor switch. <Ref. to CVT-100, INSTALLATION, Inhibitor Switch.>
17) Install the secondary speed sensor. <Ref. to CVT-103, INSTALLATION, Secondary Speed Sensor.>
18) Install the transmission harness. <Ref. to CVT-123, INSTALLATION, Transmission Harness.>
19) Install the control valve body and oil pan. <Ref. to CVT-115, INSTALLATION, Control Valve Body.>
20) Install the air breather hose. <Ref. to CVT-132, INSTALLATION, Air Breather Hose.>
21) Install the transmission assembly to the vehicle. <Ref. to CVT-70, INSTALLATION, Automatic Transmission Assembly.>

C: DISASSEMBLY

1) Remove the CVTF inlet pipe and CVTF outlet pipe.

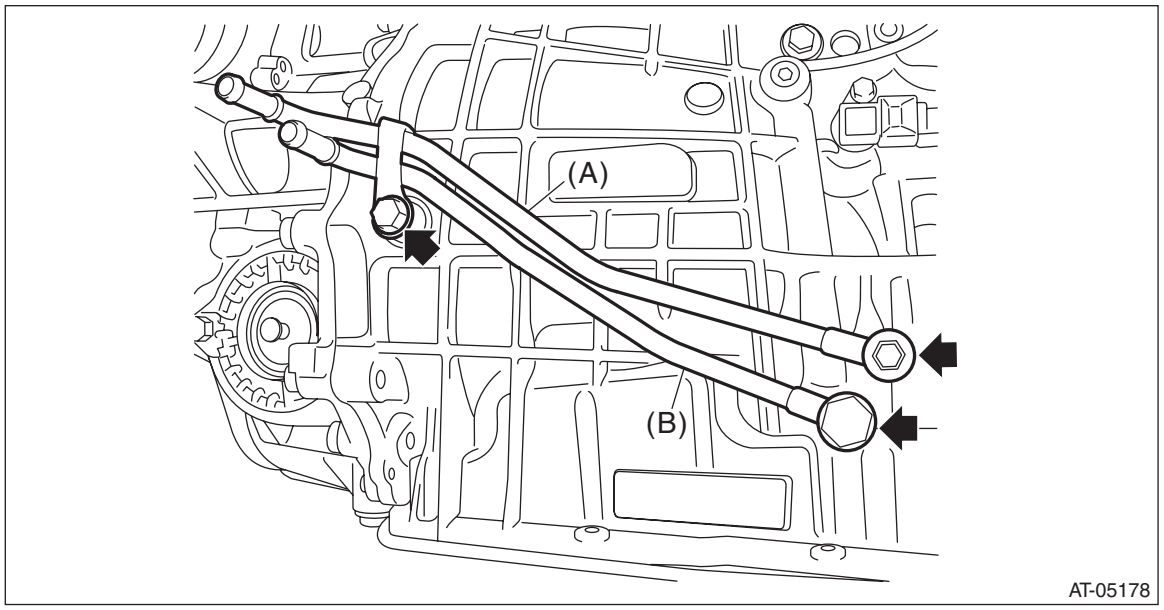

(A) CVTF outlet pipe
(B) CVTF inlet pipe

2) Remove all plugs from the transmission case.

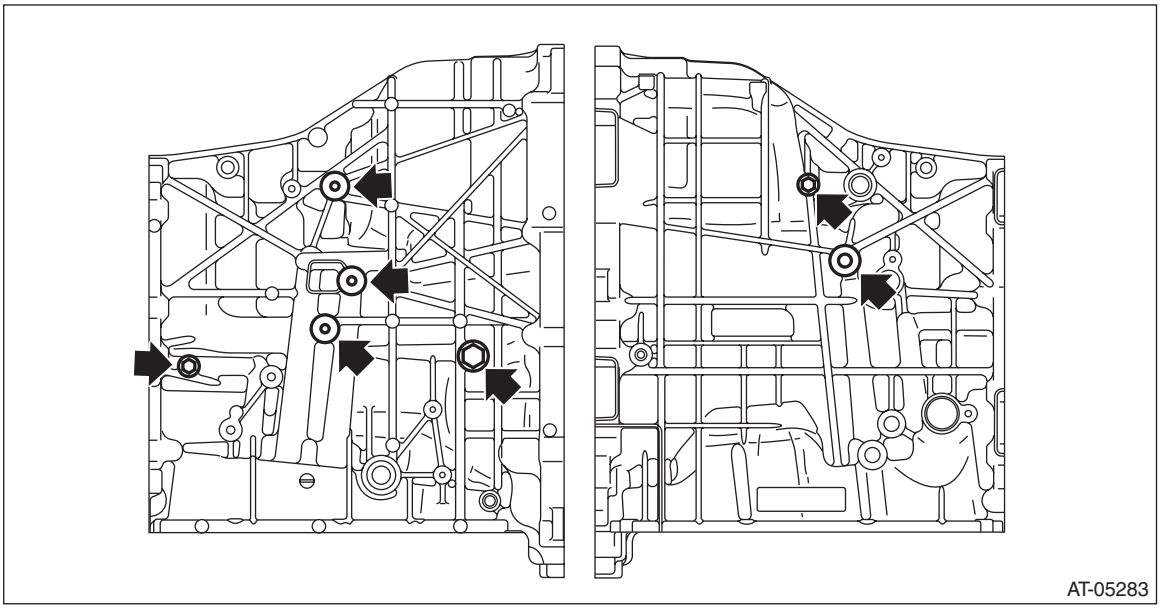

3) Remove the lubrication pipe.

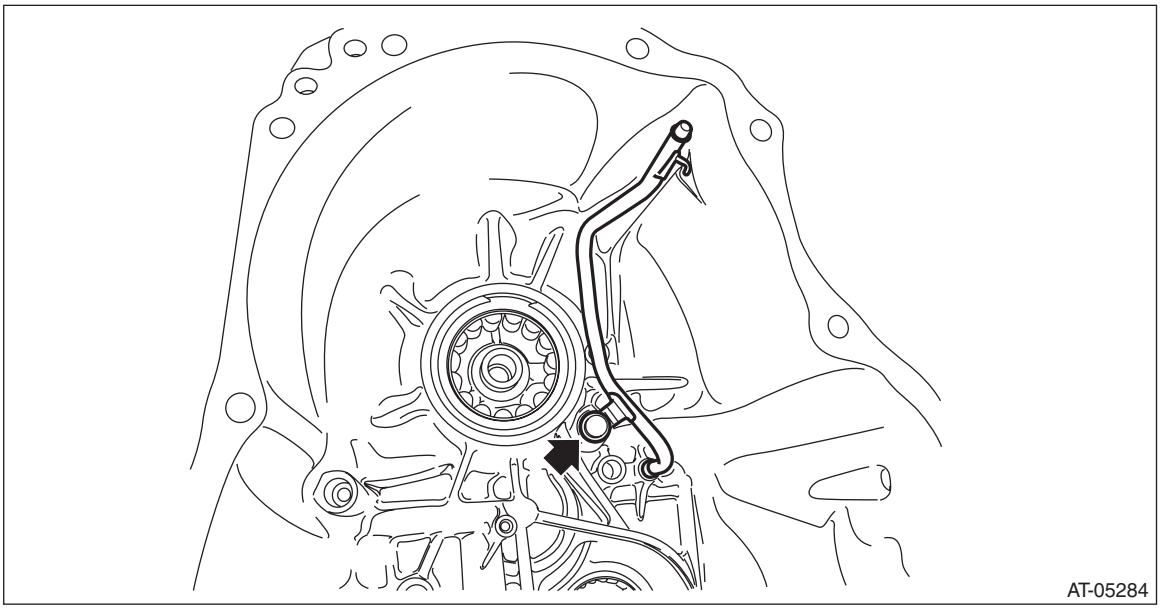

4) Remove the oil seal using a screwdriver wrapped with cloth etc.

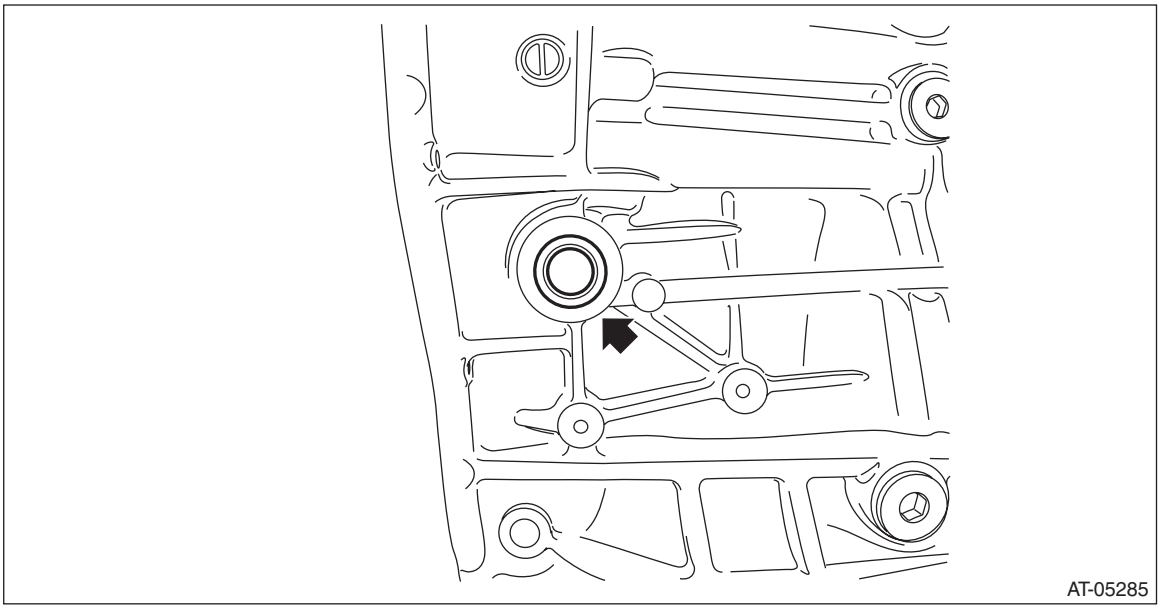

5) Remove the ball bearing from reduction driven gear using ST.
ST 398527700 PULLER ASSY

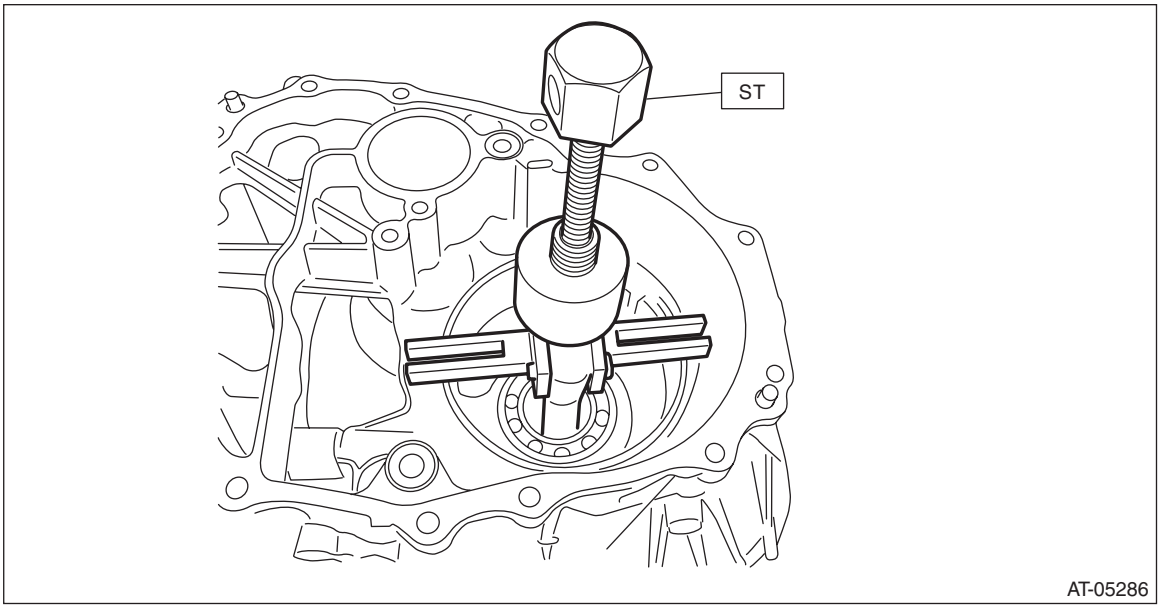

6) Remove the snap ring on primary pulley side.

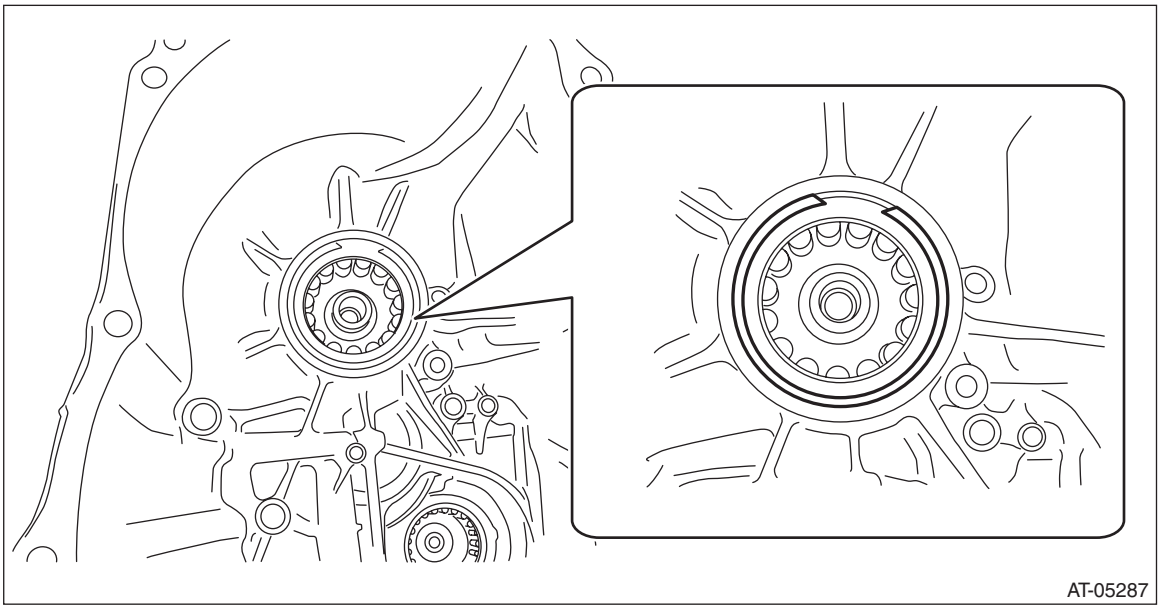

7) Using the ST, remove the roller bearing on primary pulley side.

NOTE:
Warm up the bearing area of transmission case using a drier or heat gun.
ST 398527700 PULLER ASSY

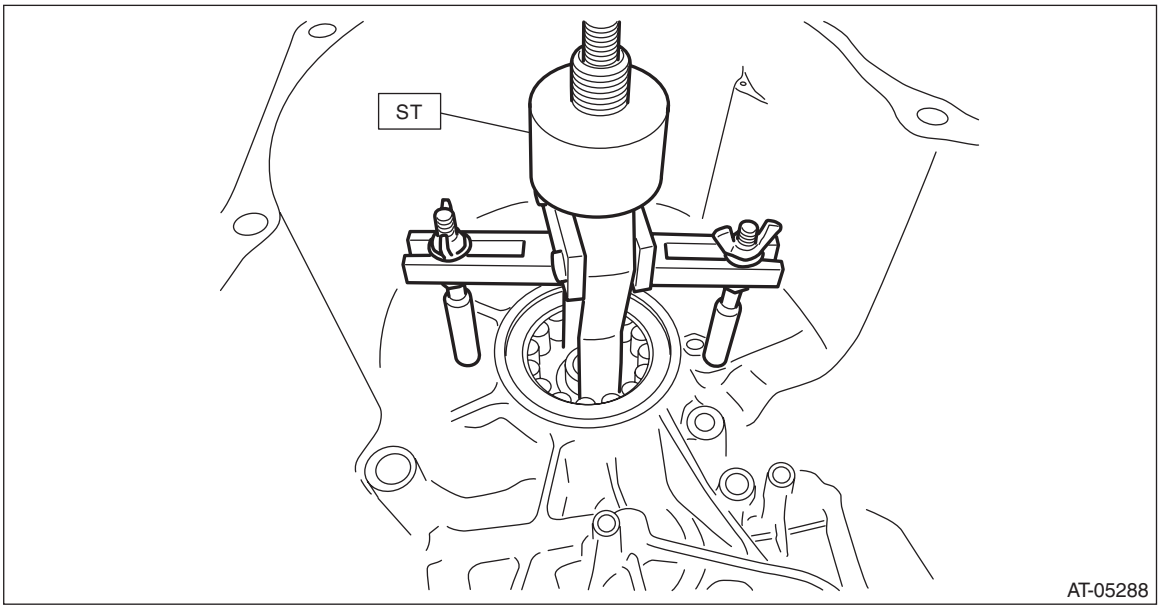

8) Remove the snap ring on secondary pulley side.

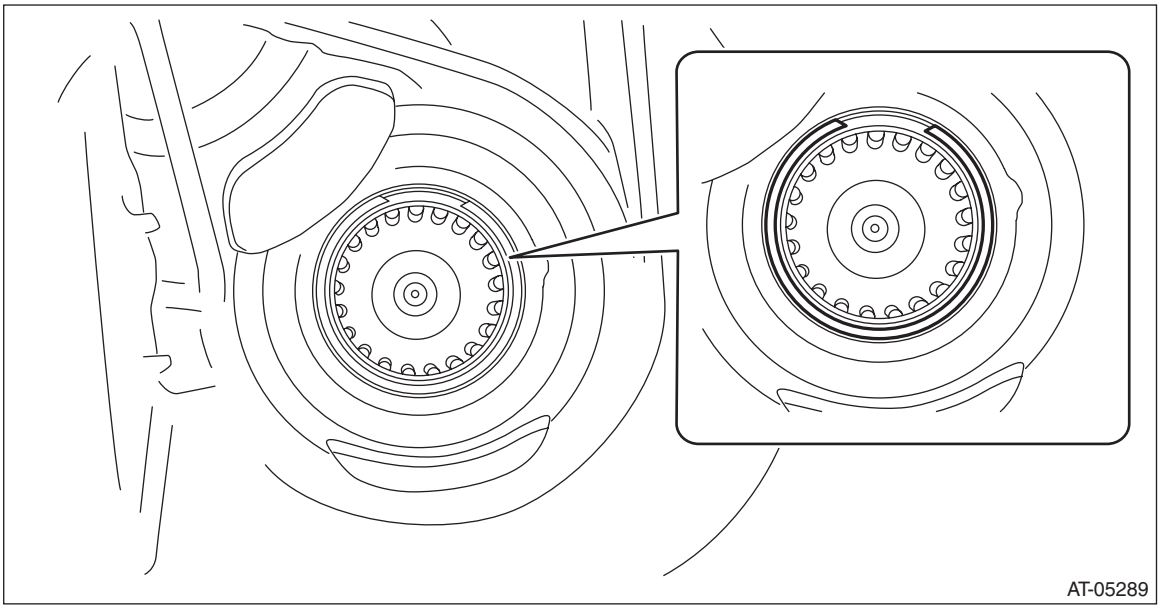

9) Using the ST, remove the roller bearing on secondary pulley side.

NOTE:
Warm up the bearing area of transmission case using a drier or heat gun.
ST 398527700 PULLER ASSY

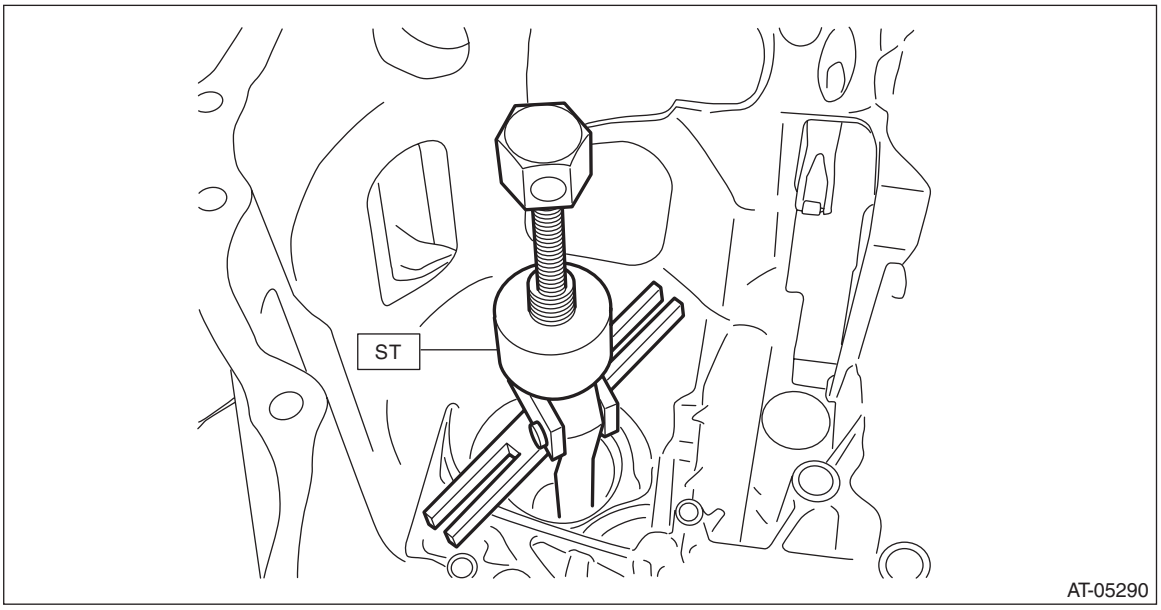

D: ASSEMBLY

1) Using the ST, install the oil seal.
ST 18657AA000 INSTALLER

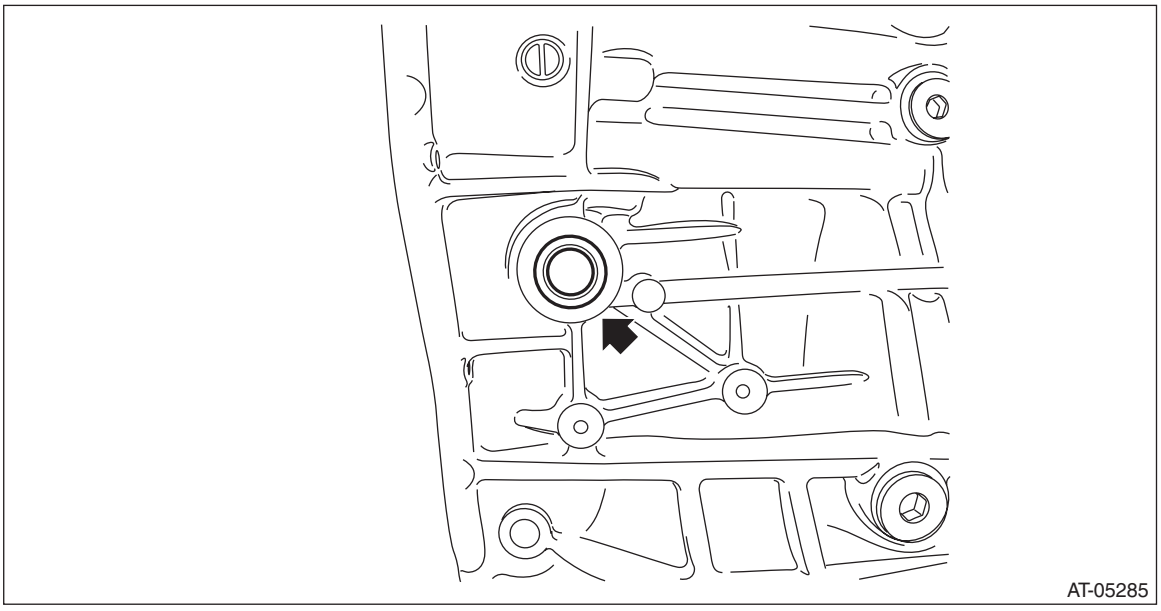

2) Using ST1 and ST2, install the ball bearing on the reduction gear side.

NOTE:
Use a new ball bearing.
ST1 398177700 INSTALLER
ST2 499755602 PRESS SNAP RING

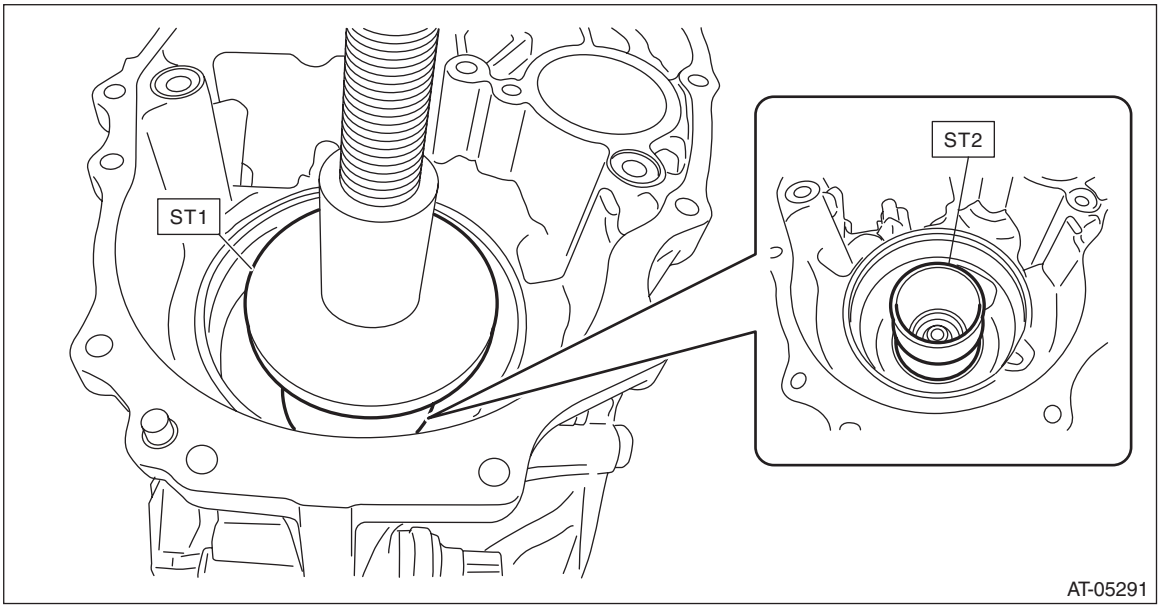

3) Using ST1 and ST2, install the roller bearing on primary pulley side.

NOTE:
- Use a new roller bearing.
- Make adjustment so that PRESS gets in contact with the center of ST2.

ST1 398177700 INSTALLER
ST2 20299AG010 PRESS SNAP RING

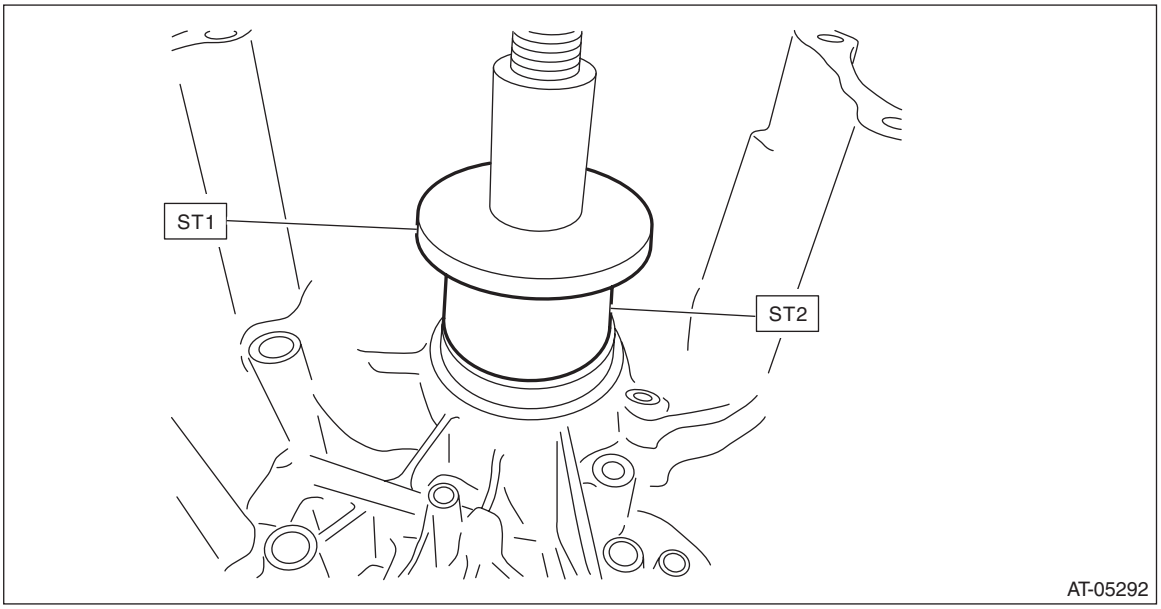

4) Install the snap ring on primary pulley side.

NOTE:
Use new snap rings.

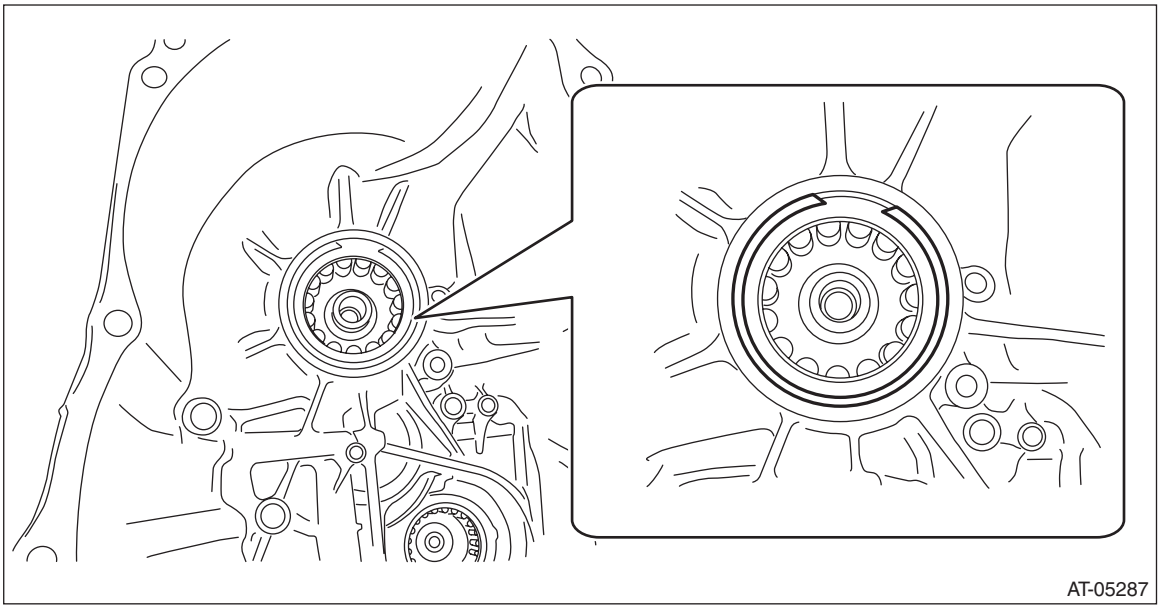

5) Using ST1 and ST2, install the roller bearing on secondary pulley side.

NOTE:
- Use a new roller bearing.
- Make adjustment so that PRESS gets in contact with the center of ST2.

ST1 398177700 INSTALLER
ST2 499755602 PRESS SNAP RING

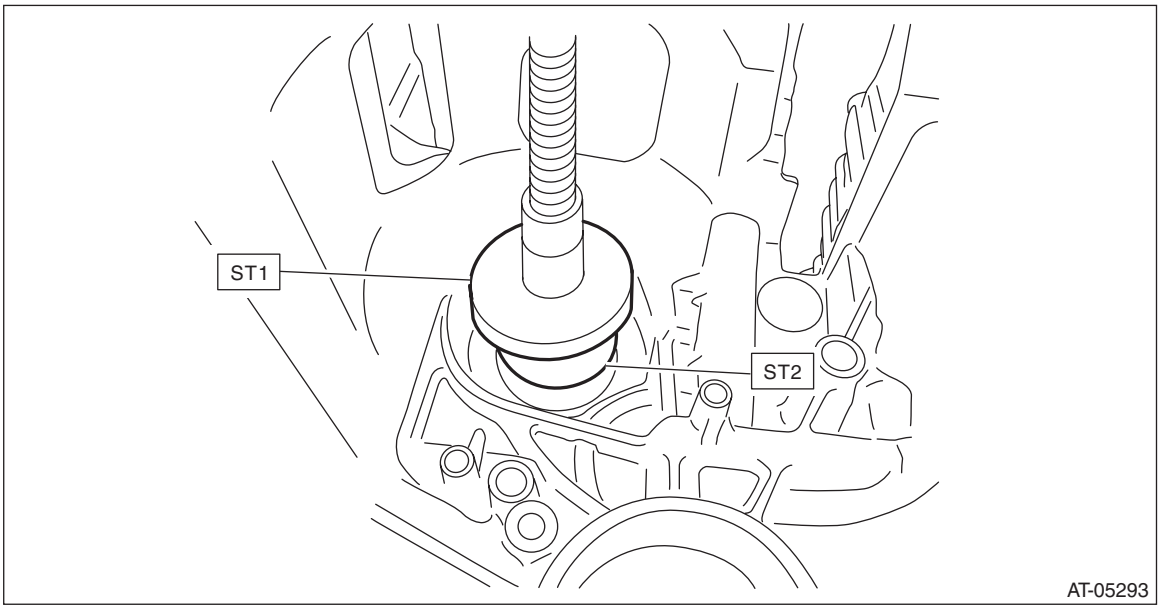

6) Install the snap ring on secondary pulley side.

NOTE:
Use new snap rings.

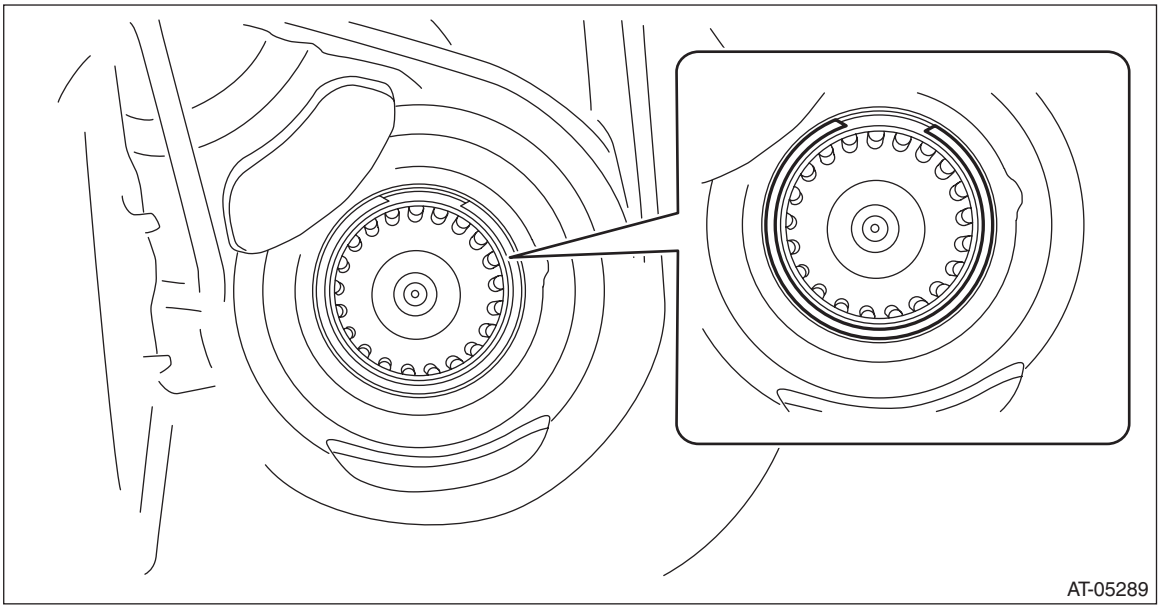

7) Install all plugs.

NOTE:
Use new gaskets and O-rings.

Tightening torque:
T1: 13 N·m (1.3 kgf-m, 9.6 ft-lb)
T2: 25 N·m (2.5 kgf-m, 18.4 ft-lb)
T3: 35 N·m (3.5 kgf-m, 25.8 ft-lb)

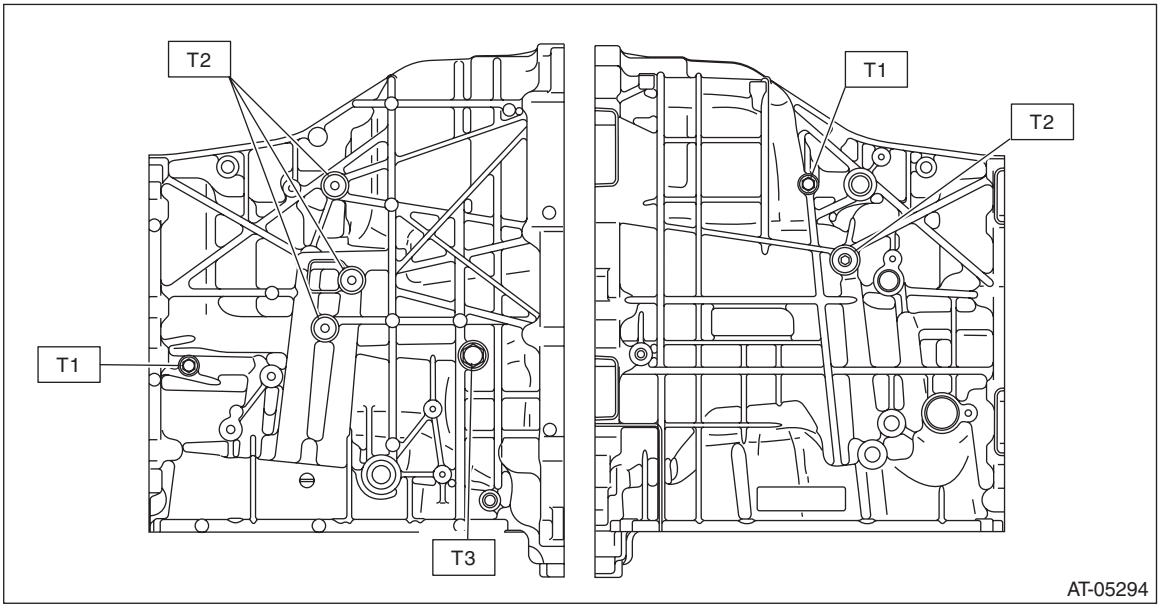

8) Install the lubrication pipe and O-ring.

NOTE:
- Use new O-rings.
- Apply CVTF to the O-ring.

Tightening torque:
16 N·m (1.6 kgf-m, 11.8 ft-lb)

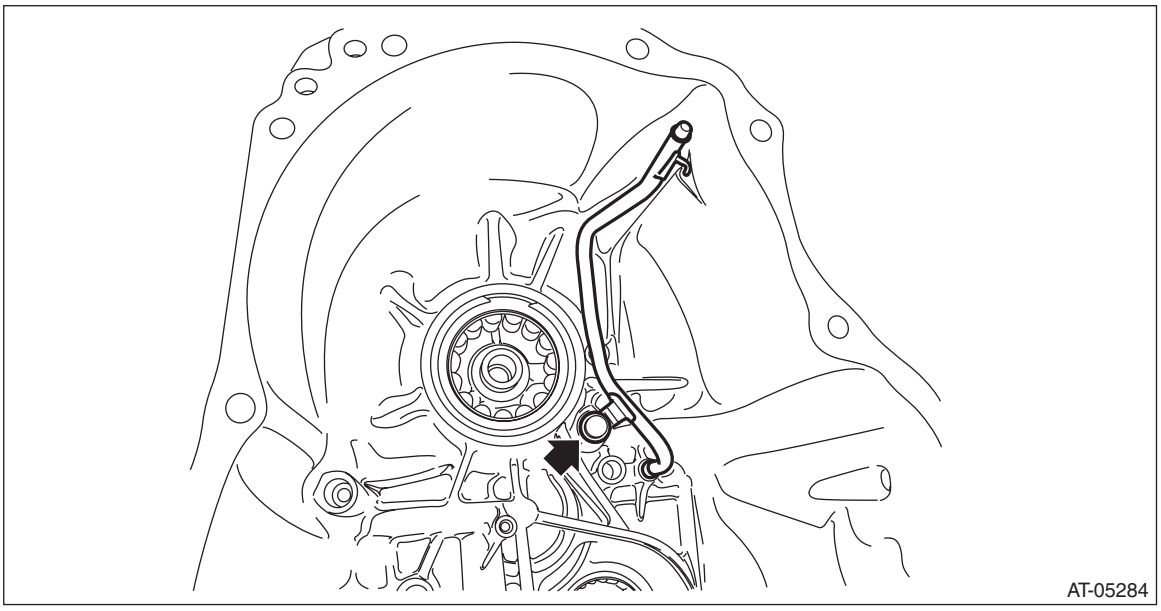

9) Install the CVTF inlet pipe and CVTF outlet pipe.

NOTE:
Use a new gasket.

Tightening torque:
T1: 16 N·m (1.6 kgf-m, 11.8 ft-lb)
T2: 40 N·m (4.1 kgf-m, 29.5 ft-lb)

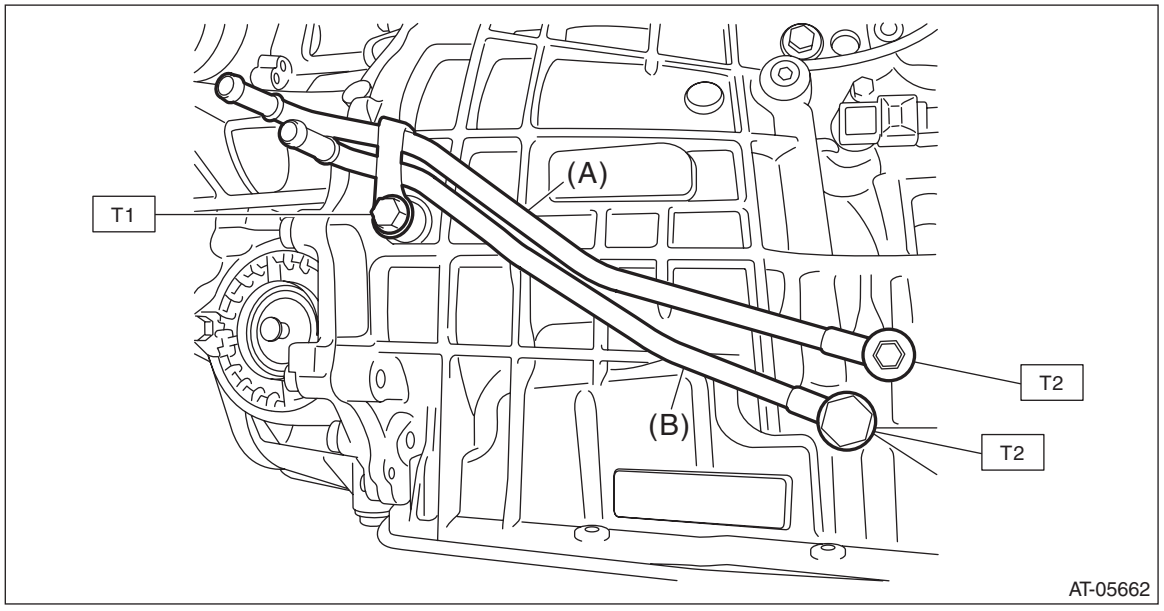

(A) CVTF outlet pipe
(B) CVTF inlet pipe

E: INSPECTION

- Check the transmission case for damage.
- Check for leakage of CVTF from the connection between converter case and transmission case.
- Check for leakage of CVTF from the connection between intermediate case and transmission case.
- Check the lubrication pipe for bend or damage.
- Check the bearing for smooth rotation.
- Check the bearing for seizure or wear.

F: ADJUSTMENT

NOTE:
When replacing the transmission case with a new part, perform the following check and adjustment for the selection.

- Select the thrust bearing for the forward clutch assembly. <Ref. to CVT-198, ADJUSTMENT, Forward Clutch Assembly.>
- Select the snap ring for the reduction gear. <Ref. to CVT-205, ADJUSTMENT, Reduction Driven Gear.>

40.Primary Pulley and Secondary Pulley

A: REMOVAL

NOTE:
Always replace primary pulley and secondary pulley as an assembly because they are non-disassembled parts.
1) Remove the transmission assembly from the vehicle. <Ref. to CVT-55, REMOVAL, Automatic Transmission Assembly.>
2) Remove the air breather hose. <Ref. to CVT-132, REMOVAL, Air Breather Hose.>
3) Remove the oil pan and control valve body. <Ref. to CVT-111, REMOVAL, Control Valve Body.>
4) Remove the transmission harness. <Ref. to CVT-121, REMOVAL, Transmission Harness.>
5) Remove the extension case. <Ref. to CVT-138, REMOVAL, Extension Case.>
6) Remove the rear drive shaft. <Ref. to CVT-141, REMOVAL, Rear Drive Shaft.>
7) Remove the transfer clutch assembly. <Ref. to CVT-146, REMOVAL, Transfer Clutch.>
8) Remove the transfer reduction driven gear assembly. <Ref. to CVT-158, REMOVAL, Transfer Reduction Driven Gear.>
9) Remove the intermediate case. <Ref. to CVT-165, REMOVAL, Intermediate Case.>
10) Remove the forward clutch assembly. <Ref. to CVT-180, REMOVAL, Forward Clutch Assembly.>
11) Remove the transmission case. <Ref. to CVT-211, REMOVAL, Transmission Case.>
12) Set the ST to the secondary pulley, and expand the V groove of pulley until the variator chain gets completely loose.
ST 18769AA000 EXPANDER PULLEY

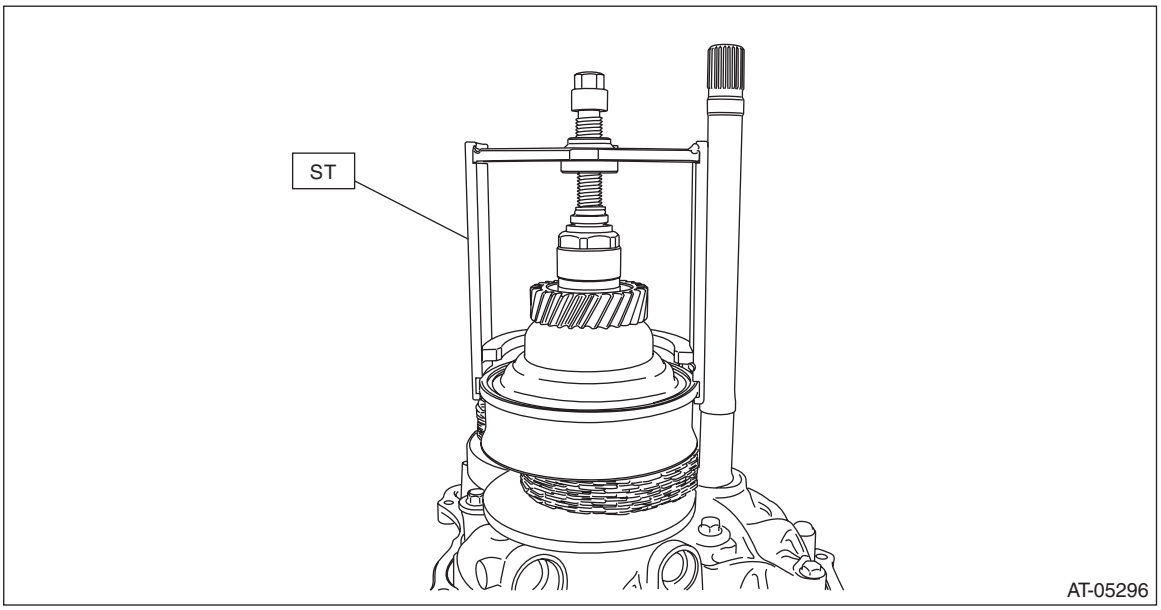

13) Remove the chain guide from lubrication pipe and support rod.

14) Remove the lubrication pipe and support rod.

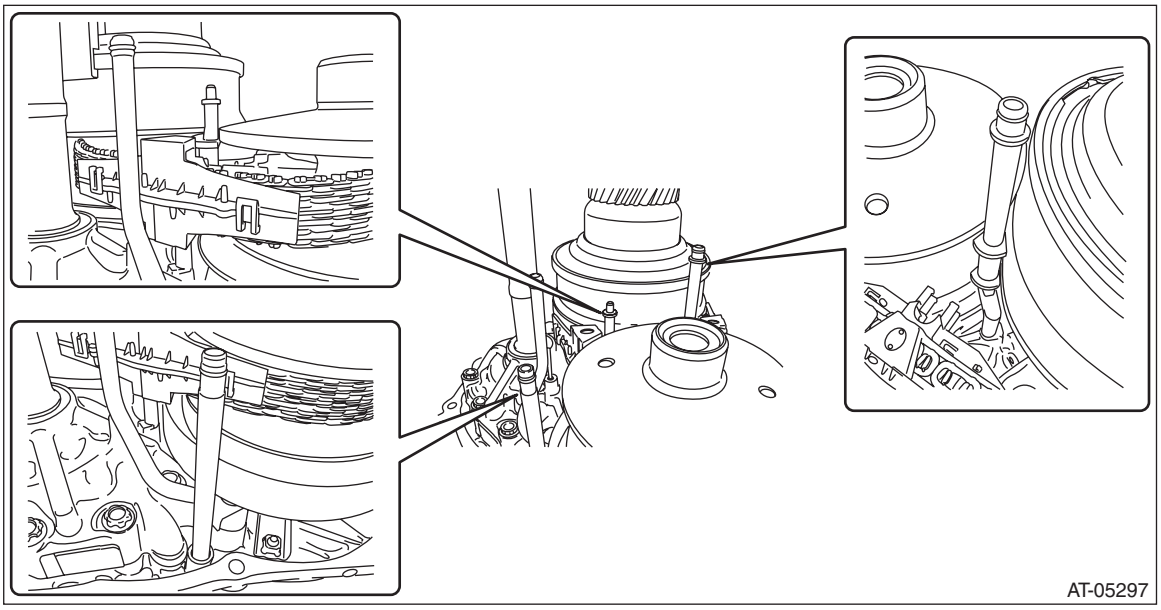

15) Detach the six claws to remove the two chain guide.

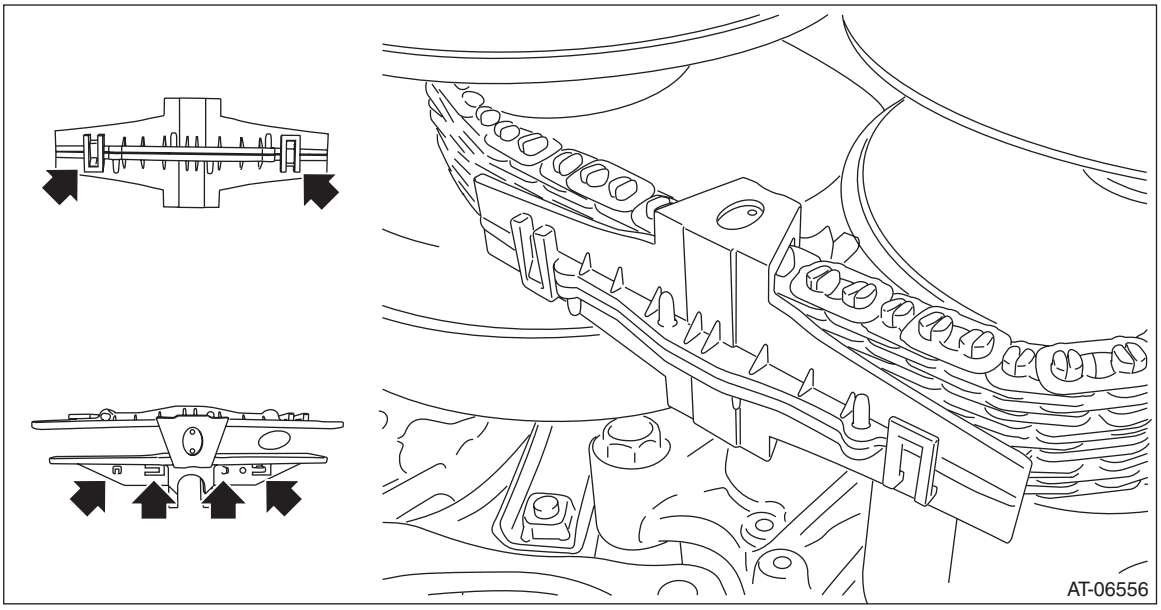

16) Remove the secondary pulley mounting bolt.

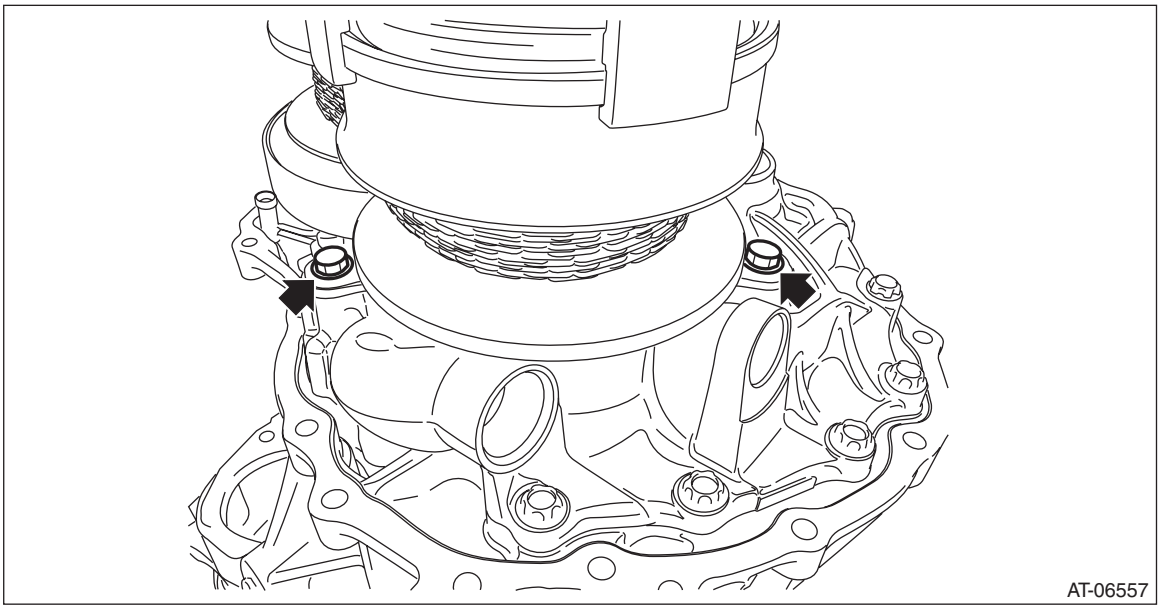

17) Remove the secondary pulley from drive pinion retainer and intersect the V groove of secondary pulley and V groove of primary pulley. Remove the variator chain from secondary pulley and remove the secondary pulley.

CAUTION:
Cover the V grooves of secondary pulley and primary pulley with cloth to protect the both pulleys and variator chain from scratching.

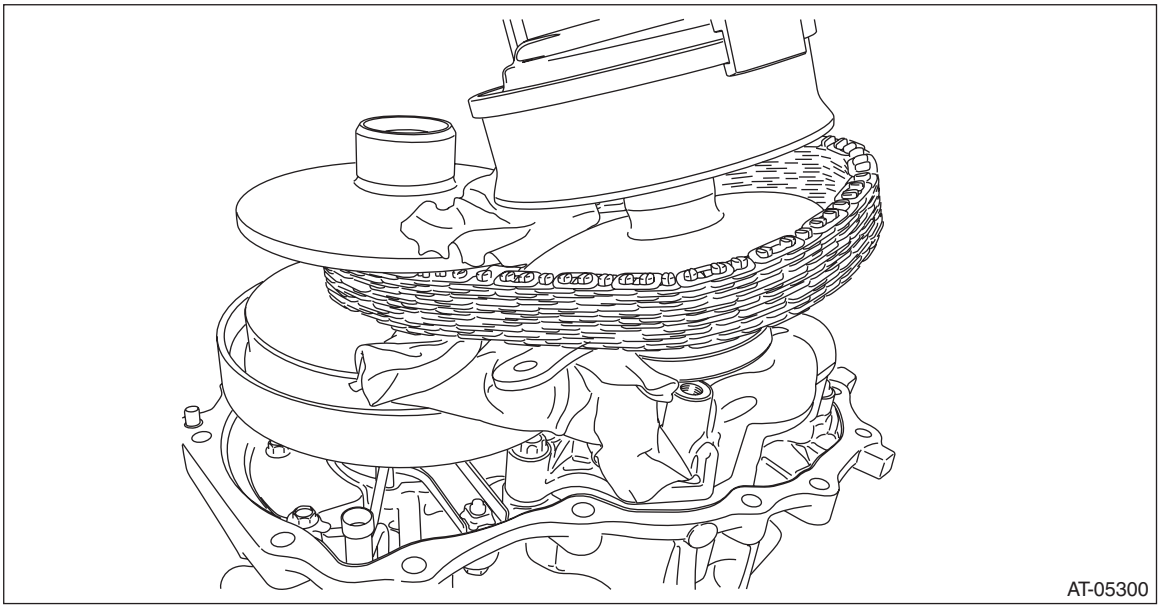

18) Remove the variator chain from primary pulley.

19) Remove the primary pulley mounting bolt.

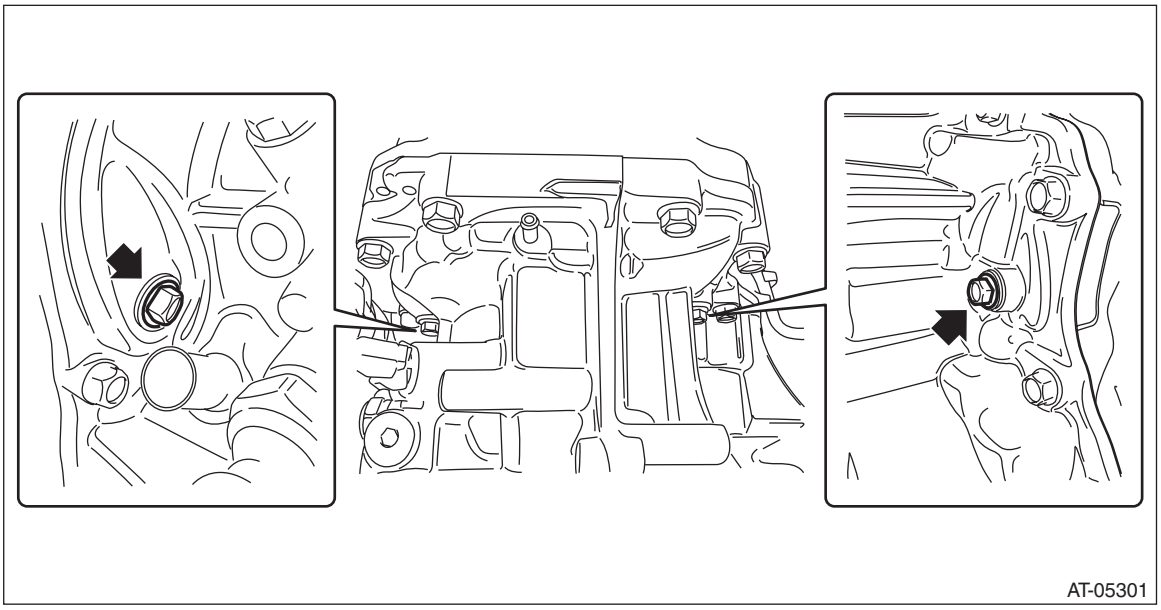

20) Remove the primary pulley.
21) Remove the two seal rings from drive pinion retainer.

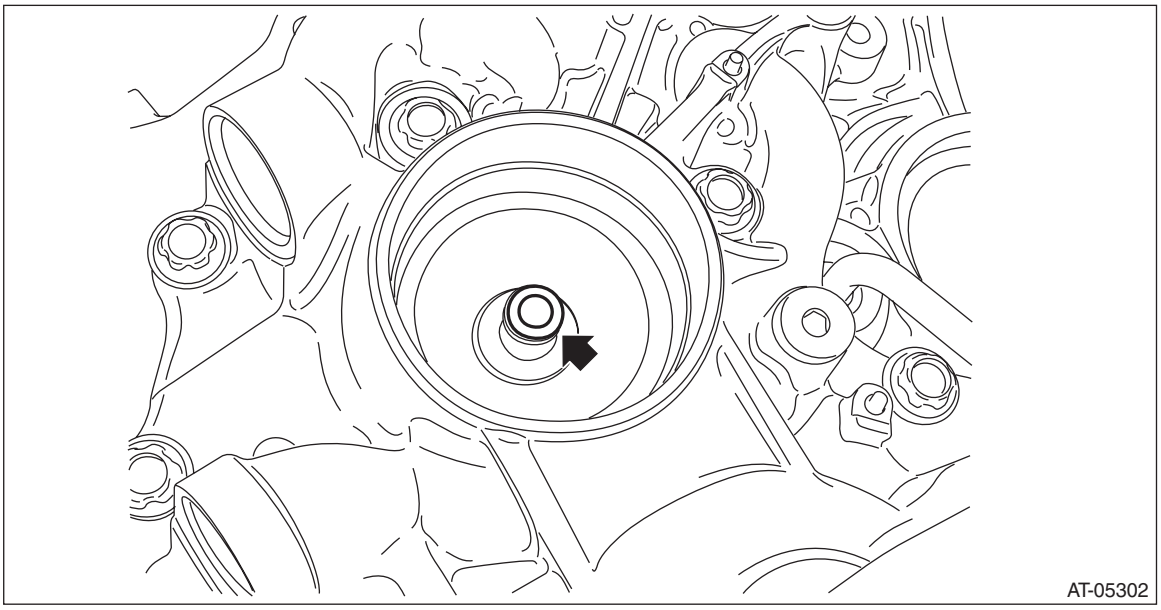

22) Remove the two seal rings from primary pulley.

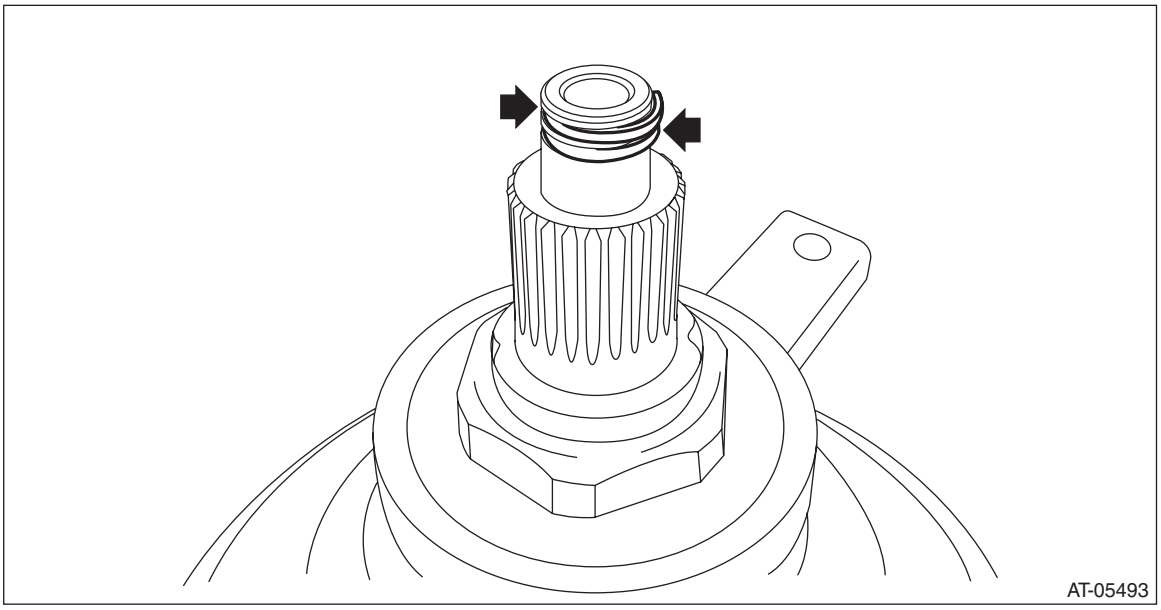

B: INSTALLATION

1) Select shims for pulley alignment. <Ref. to CVT-236, ADJUSTMENT, Primary Pulley and Secondary Pulley.>
2) Install the two seal rings to drive pinion retainer.

NOTE:
- Use a new seal ring.
- Apply CVTF to the seal rings.
- When installing the seal ring, do not expand the seal ring too much.

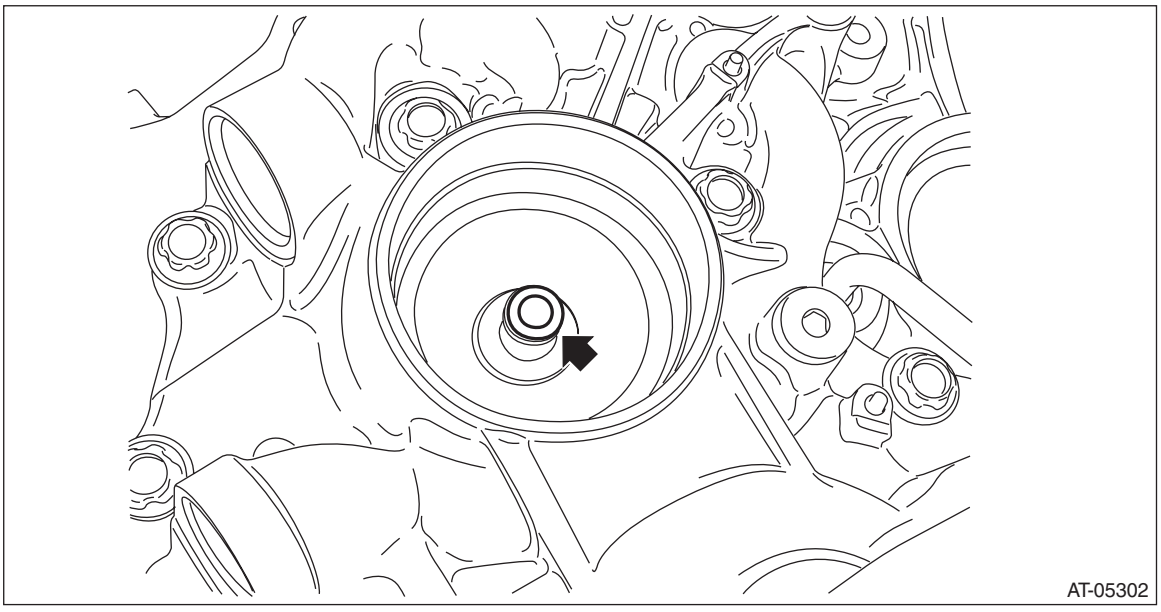

3) Install the selected shims to the primary pulley bearing catch surface.

4) Install the two seal rings to primary pulley.

NOTE:
- Use a new seal ring.
- Apply CVTF to the seal rings.

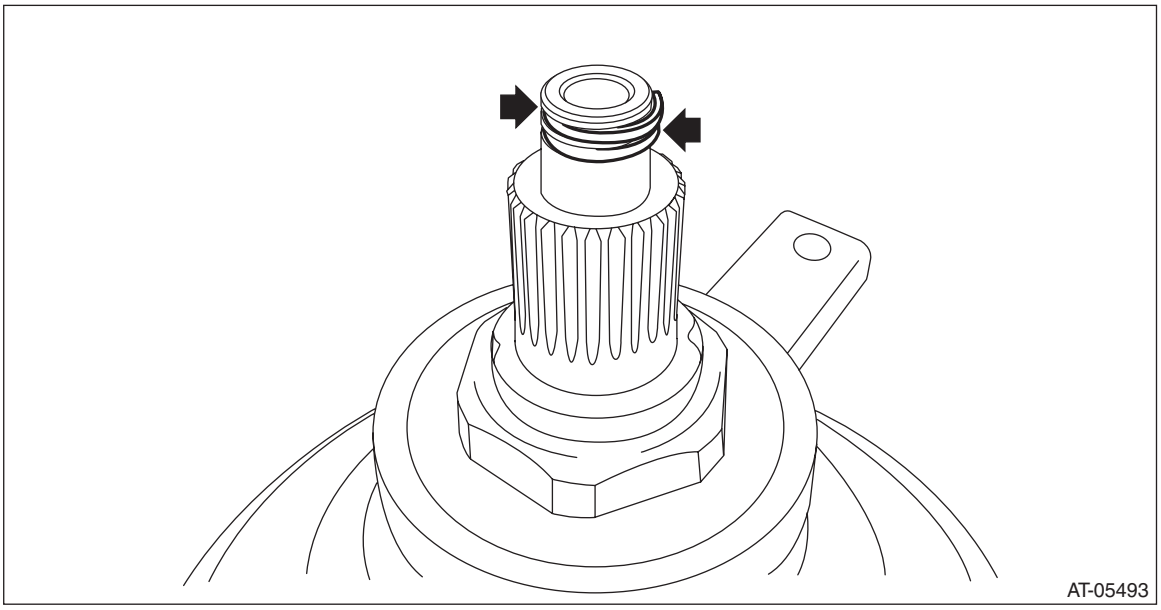

5) Install the primary pulley and adjust the position of bolt holes of primary bearing retainer and converter case to tighten the primary pulley bolt.

NOTE:
Use a new seal washer.

Tightening torque:
21 N·m (2.1 kgf-m, 15.5 ft-lb)

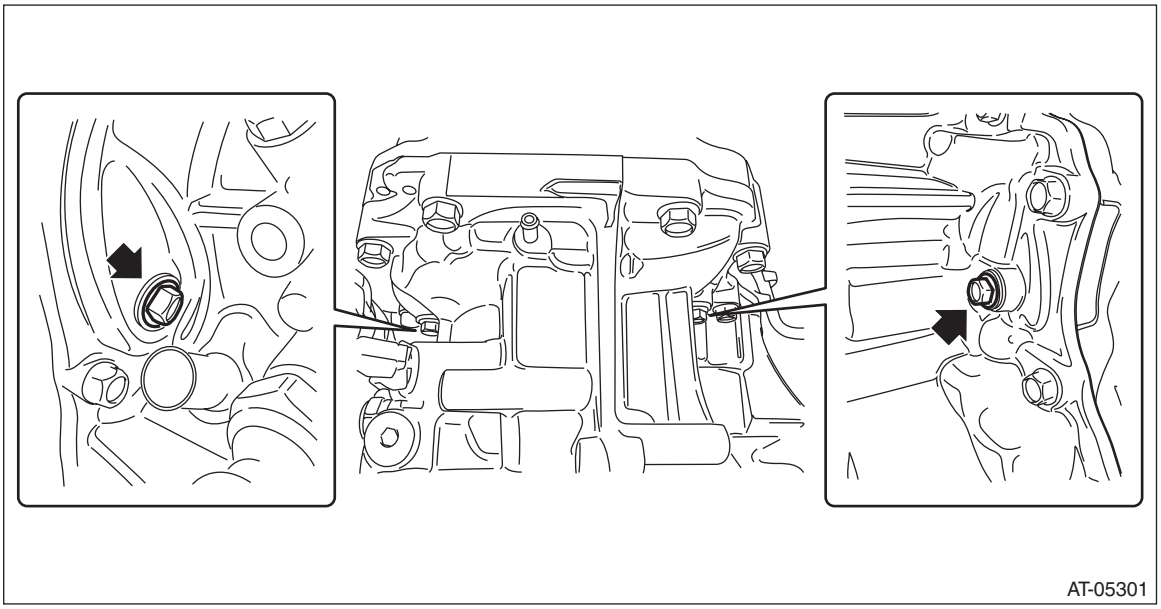

6) Set the ST to secondary pulley and expand the V groove of pulley.
ST1 18769AA000 EXPANDER PULLEY

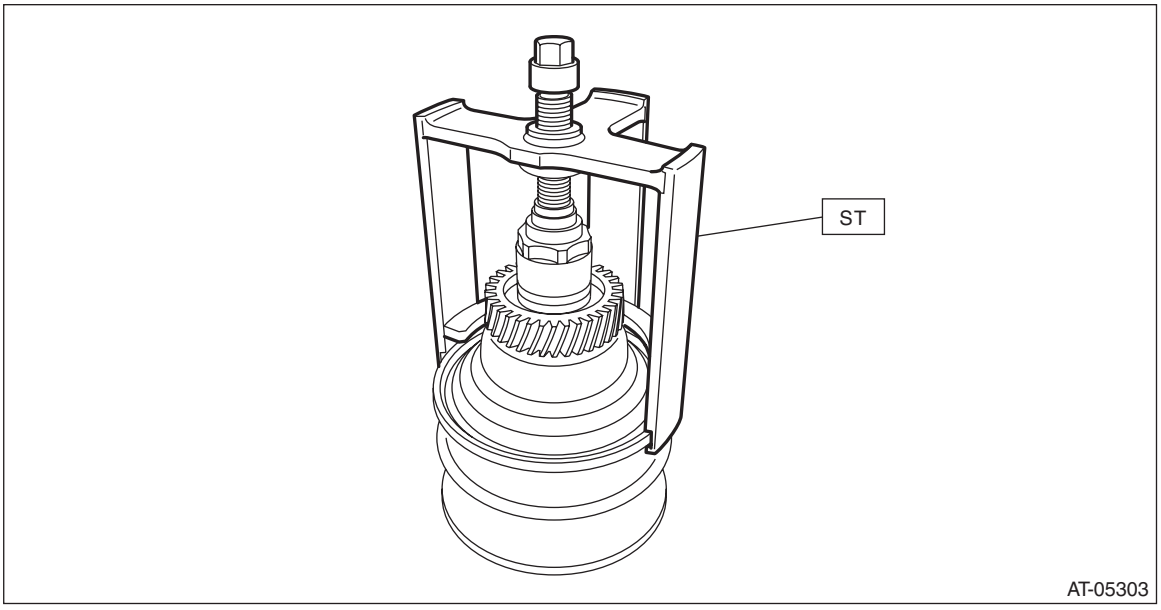

7) Place the variator chain on the primary pulley groove and attach the secondary pulley and variator chain together to the drive pinion retainer.

CAUTION:
Cover the V grooves of primary pulley and secondary pulley with cloth to protect the both pulleys and variator chain from scratching.

(1) Place the variator chain on primary pulley.
(2) Intersect the V groove of primary pulley and the V groove of secondary pulley and install the secondary pulley while placing the variator chain on secondary pulley.

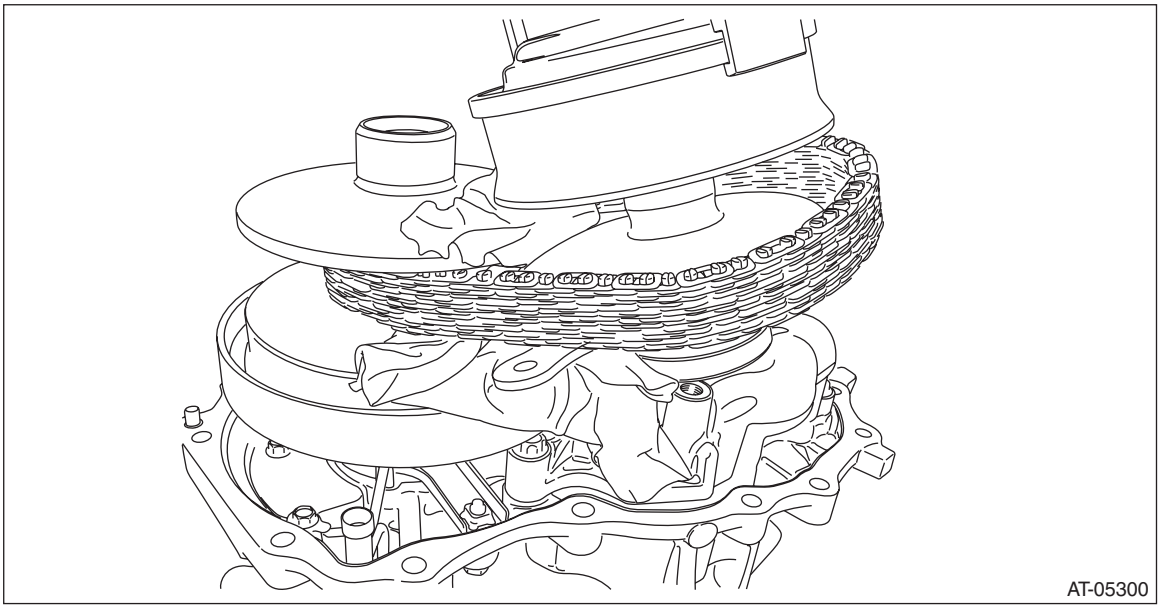

(3) While aligning the bolt hole of secondary bearing retainer and the bolt hole of driving pinion retainer, install the secondary pulley to drive pinion retainer.

8) Install the secondary pulley bolt.

Tightening torque:
33 N·m (3.4 kgf-m, 24.3 ft-lb)

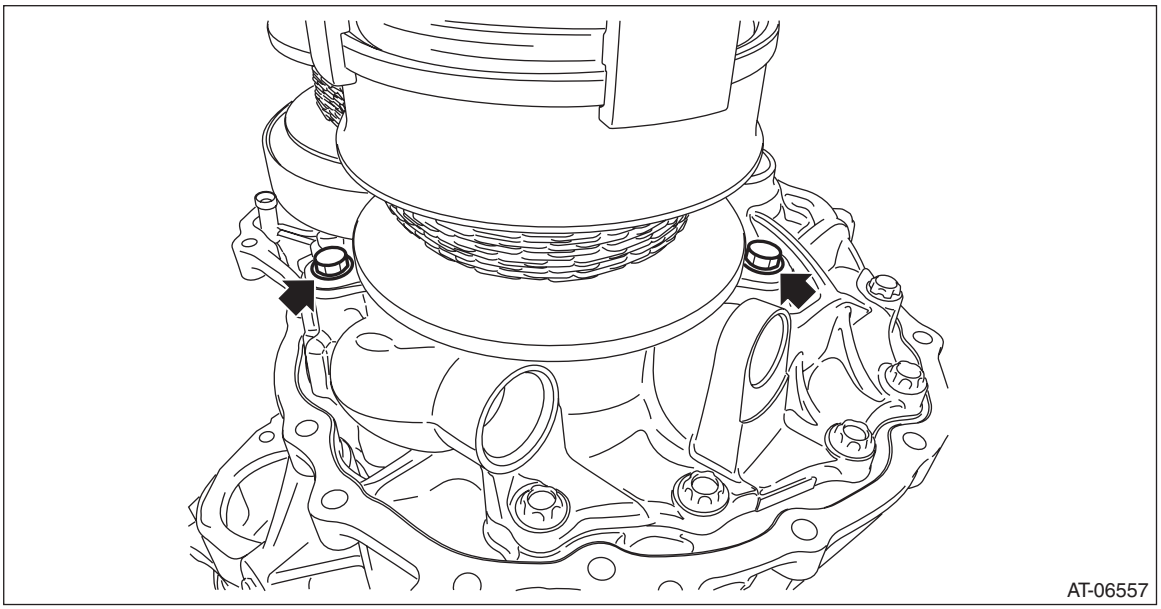

9) Install the chain guide.

NOTE:
Install it with two claws facing outward and with four claws facing inward.

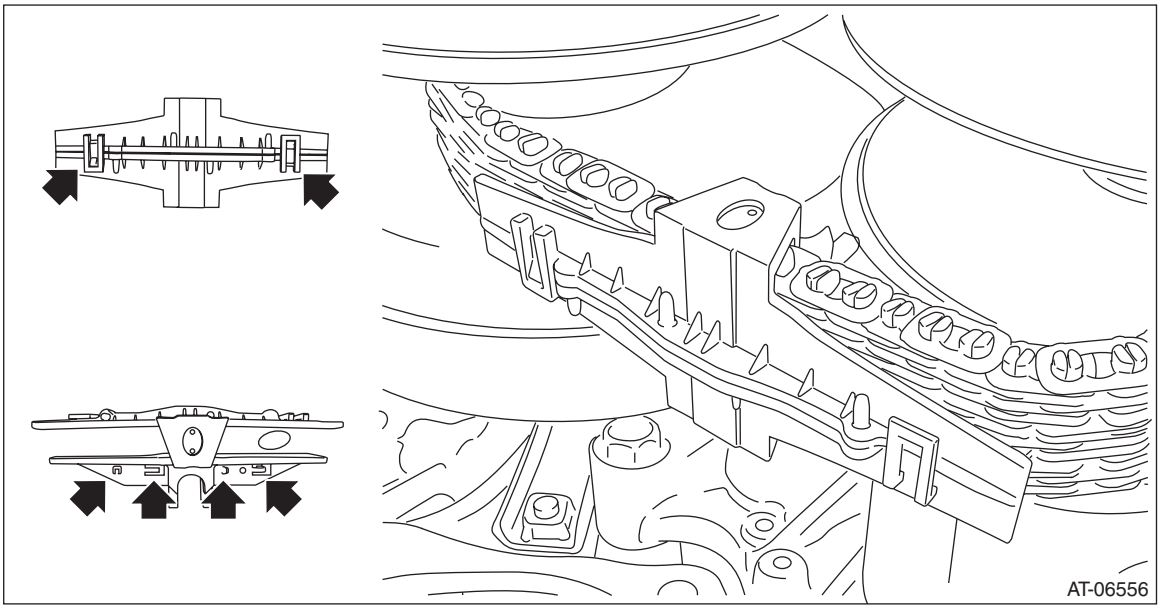

10) Engage the cutout portions of support rod and drive pinion retainer and install the support rod.

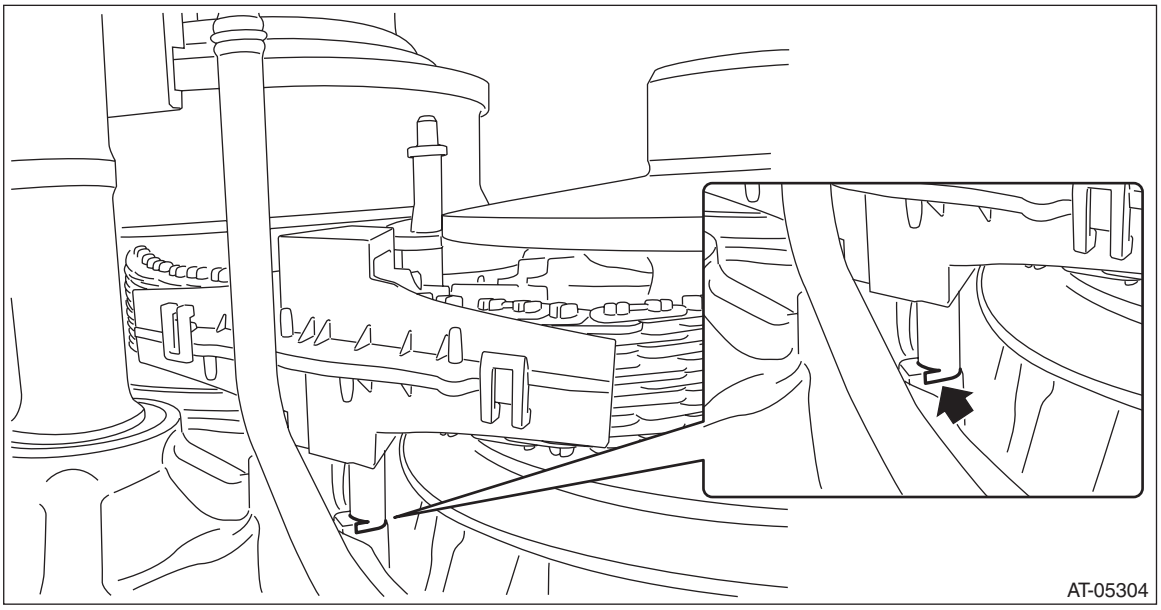

11) Engage the cutout portions of lubrication pipe and drive pinion retainer and install the lubrication pipe.

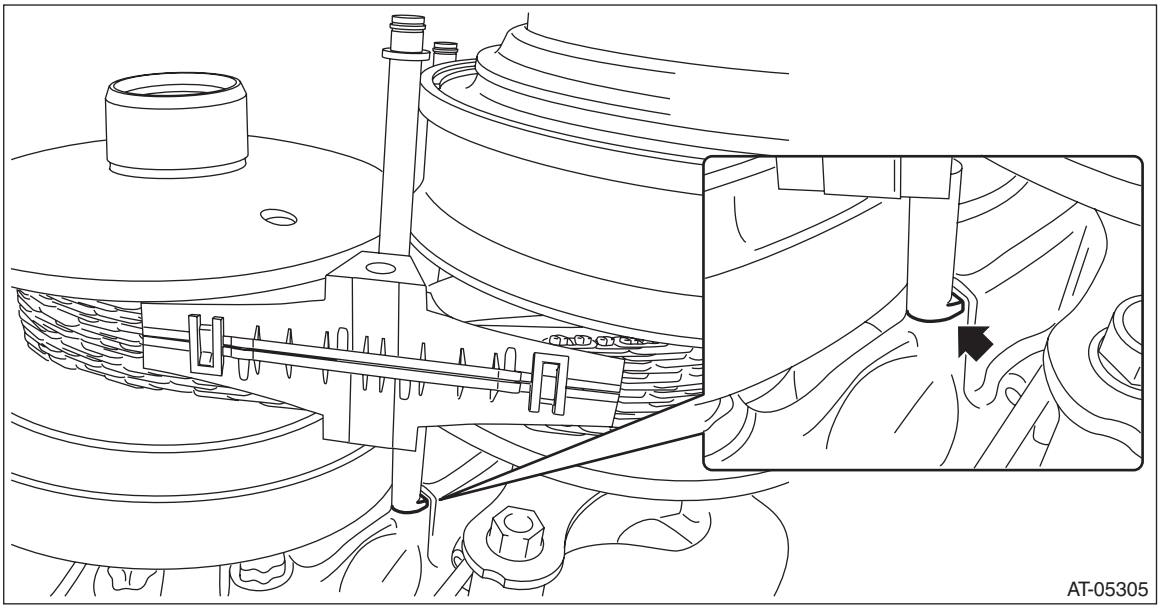

12) Install the chain guide so that the lubrication pipe and support rod run through between the protrusions of each chain guide. Then remove the ST (PULLEY EXPANDER).

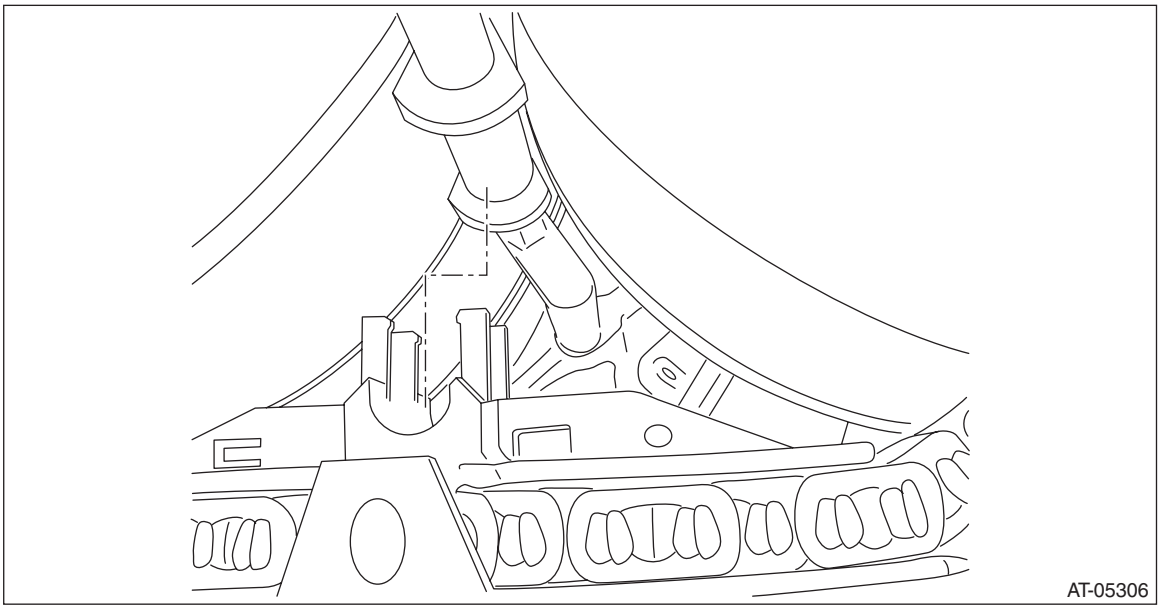

13) Install the O-ring to the lubrication pipe.

NOTE:
Use new O-rings.

14) Install the lubrication pipe.

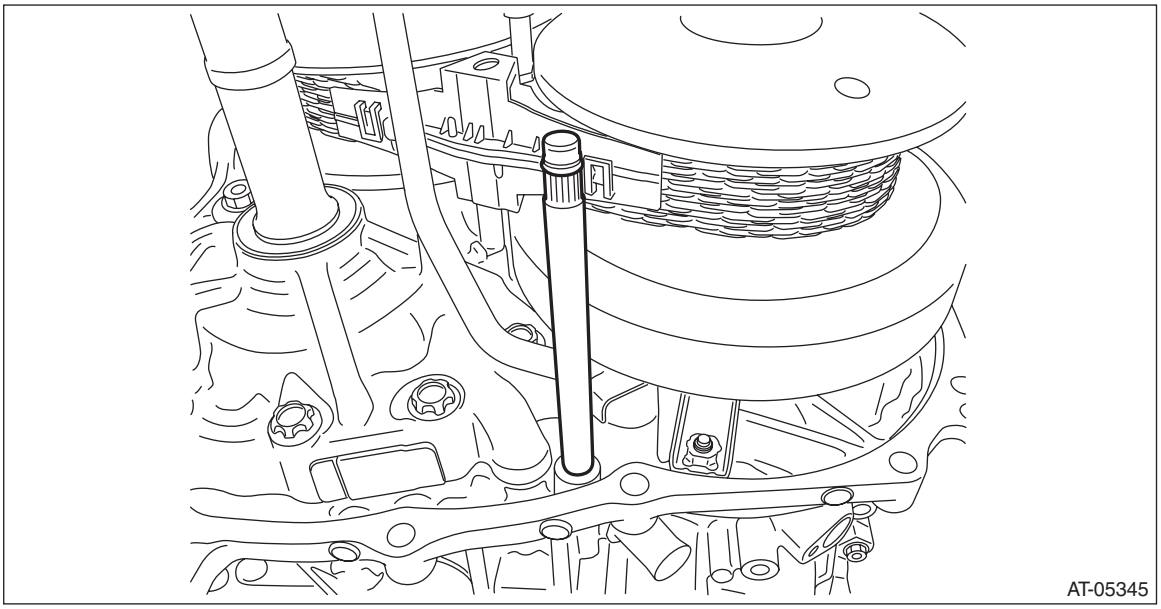

15) Install the transmission case. <Ref. to CVT-213, INSTALLATION, Transmission Case.>
16) Install the forward clutch assembly. <Ref. to CVT-181, INSTALLATION, Forward Clutch Assembly.>
17) Install the intermediate case. <Ref. to CVT-166, INSTALLATION, Intermediate Case.>
18) Install the transfer reduction driven gear assembly. <Ref. to CVT-158, INSTALLATION, Transfer Reduction Driven Gear.>
19) Install the transfer clutch assembly. <Ref. to CVT-147, INSTALLATION, Transfer Clutch.>
20) Install the rear drive shaft. <Ref. to CVT-141, INSTALLATION, Rear Drive Shaft.>
21) Install the extension case. <Ref. to CVT-138, INSTALLATION, Extension Case.>
22) Install the transmission harness. <Ref. to CVT-123, INSTALLATION, Transmission Harness.>
23) Install the control valve body and oil pan. <Ref. to CVT-115, INSTALLATION, Control Valve Body.>
24) Install the air breather hose. <Ref. to CVT-132, INSTALLATION, Air Breather Hose.>

25) Install the transmission assembly to the vehicle. <Ref. to CVT-70, INSTALLATION, Automatic Transmission Assembly.>

C: INSPECTION

- Check the surface of primary and secondary pulley cones for damage or wear.
- Check the primary and secondary pulley for damage.
- Check the bearing for seizure or wear.
- Apply CVTF to bearing and rotate the bearing to check for noise or dragging etc.

D: ADJUSTMENT

1. PROCEDURE IN REPLACEMENT OF PRIMARY AND SECONDARY PULLEY, OR IN REPLACEMENT OF PRIMARY PULLEY, SECONDARY PULLEY AND VARIATOR CHAIN

1) Measure depth “Lp” from the ST upper face to the primary pulley bearing catch surface at several points and calculate the average.
ST 499575400 GAUGE

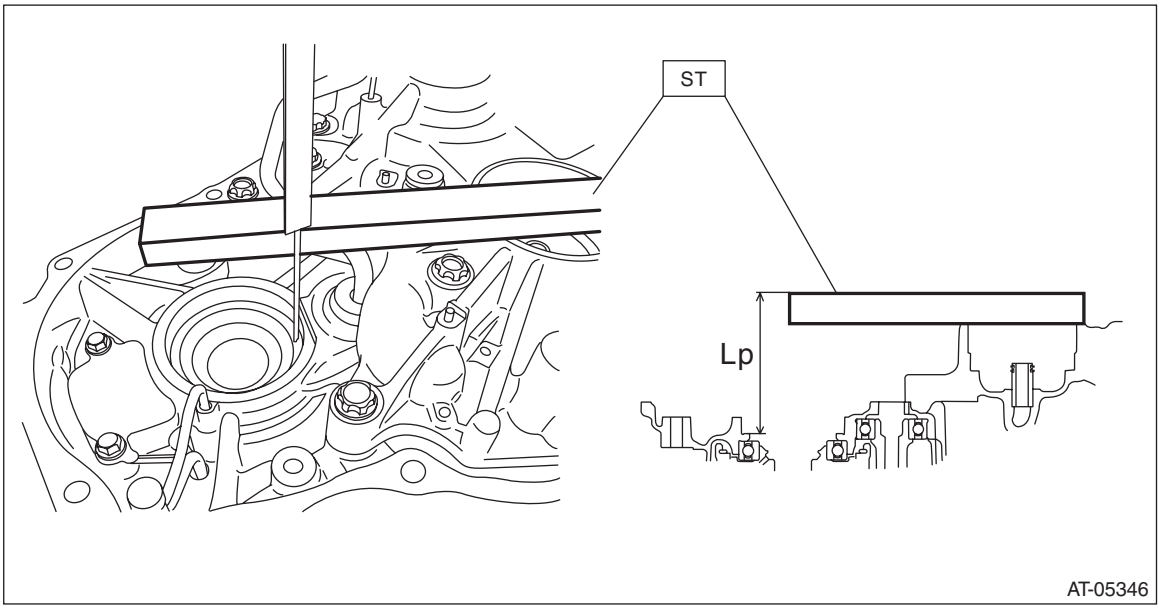

2) Measure height “Ls” from the drive pinion retainer upper face to the secondary pulley bearing catch surface at several points and calculate the average.
ST 499575400 GAUGE

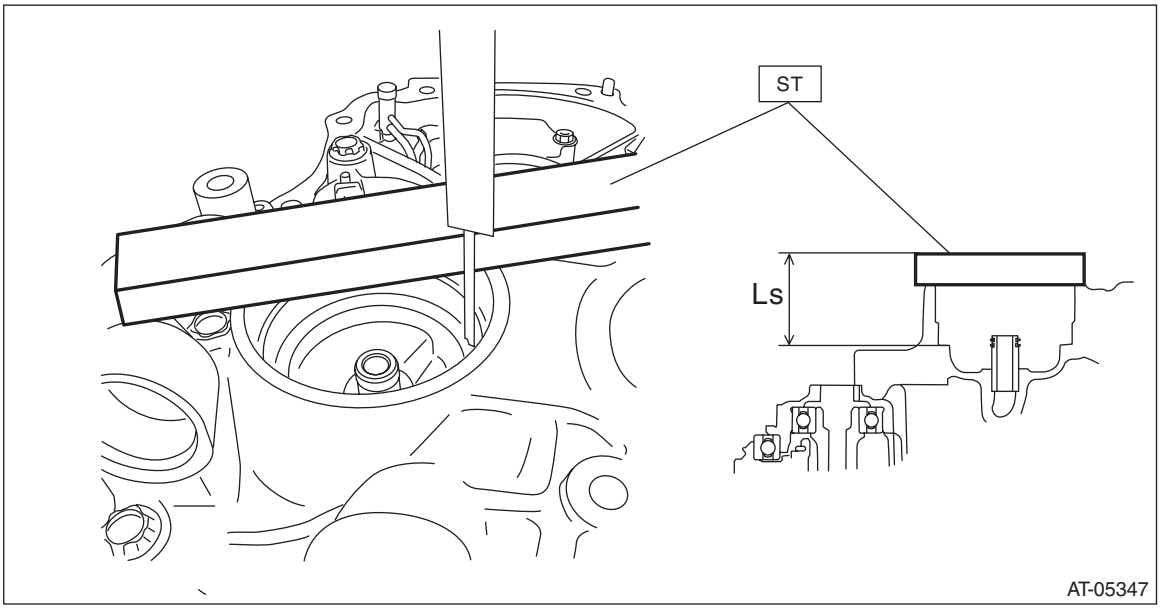

3) Calculate the following formula.
Calculation formula:
T (mm) = B + (Lp – Ls) + 31.601 – A
[T (in) = B + (Lp – Ls) + 1.224 – A]
T: Pulley alignment
A: Specified primary pulley dimension
B: Specified secondary pulley dimension
Lp: Depth from the ST upper face to the primary pulley bearing catch surface
Ls: Depth from the ST upper face to the secondary pulley bearing catch surface
31.601 mm (1.224 in): Constant

Pulley alignment T mm (in)	Shim thickness mm (in)
0.050 — 0.150 (0.002 — 0.006)	0.1 (0.004)
0.151 — 0.250 (0.006 — 0.01)	0.2 (0.008)
0.251 — 0.350 (0.01 — 0.014)	0.3 (0.012)
0.351 — 0.450 (0.014 — 0.018)	0.4 (0.016)
0.451 — 0.550 (0.018 — 0.022)	0.5 (0.020)
0.551 — 0.650 (0.022 — 0.026)	0.6 (0.024)
0.651 — 0.750 (0.026 — 0.030)	0.7 (0.028)
0.751 — 0.850 (0.030 — 0.033)	0.8 (0.031)
0.851 — 0.950 (0.033 — 0.037)	0.9 (0.035)

4) Select one to two shims so that the total thickness meets the value obtained from step 3).

Part No.	Shim thickness mm (in)
32451AA000	0.1 (0.004)
32451AA010	0.2 (0.008)
32451AA020	0.3 (0.012)
32451AA030	0.4 (0.016)
32451AA040	0.5 (0.020)

2. PROCEDURE WHEN REPLACING ONLY DRIVE PINION RETAINER OR CONVERTER CASE

1) Clean the mating surface of current drive pinion retainer and converter case.
2) Measure and record the shim thickness that is attached on the current converter case.
3) Using the current drive pinion retainer, measure depth “Lp1” from the ST upper face to the primary pulley bearing catch surface at several points and calculate the average.
ST 499575400 GAUGE

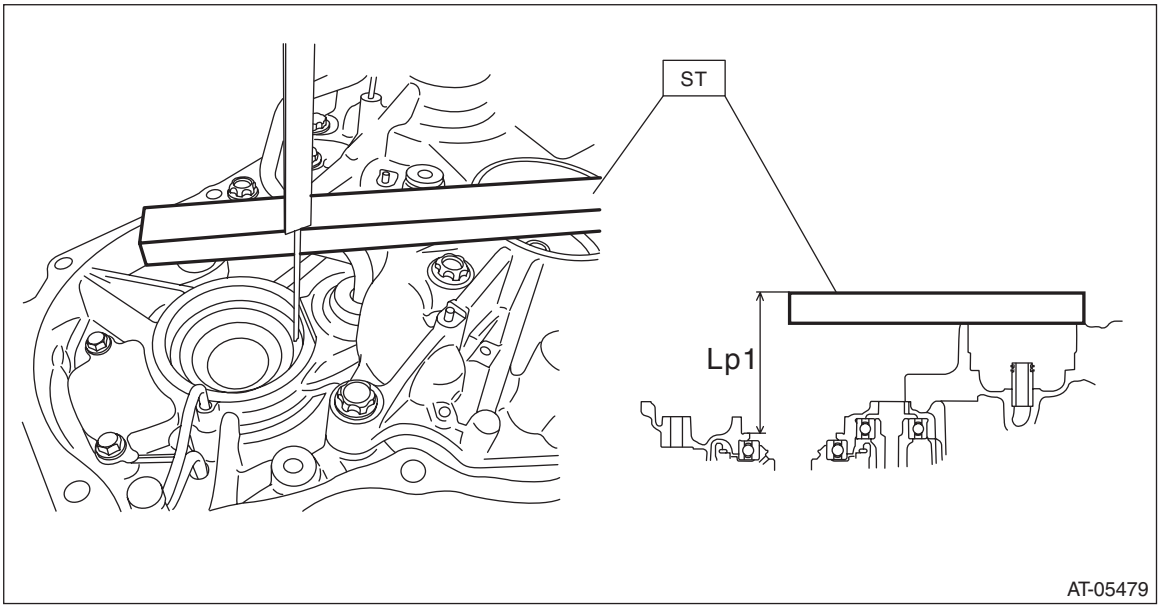

4) Using the current drive pinion retainer or current converter case, measure depth “Ls1” from the ST upper face to the secondary pulley bearing catch surface at several points and calculate the average.
ST 499575400 GAUGE

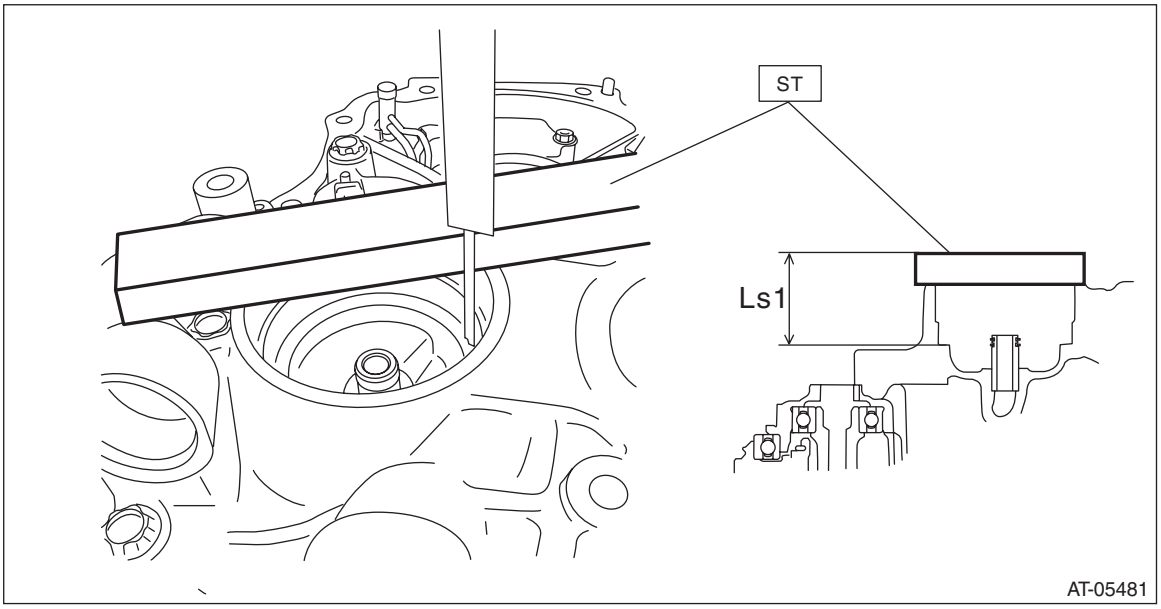

5) Calculate the “LD1” using the following formula and record it.
Calculation formula:
LD1 mm (in) = Lp1 – Ls1
LD1: Height from the primary pulley bearing catch surface to the secondary pulley bearing catch surface
Lp1: Depth from the ST upper face to the primary pulley bearing catch surface
Ls1: Depth from the ST upper face to the secondary pulley bearing catch surface

6) Using the new drive pinion retainer or new converter case, measure depth “Lp2” from the ST upper face to the primary pulley bearing catch surface at several points and calculate the average.
ST 499575400 GAUGE

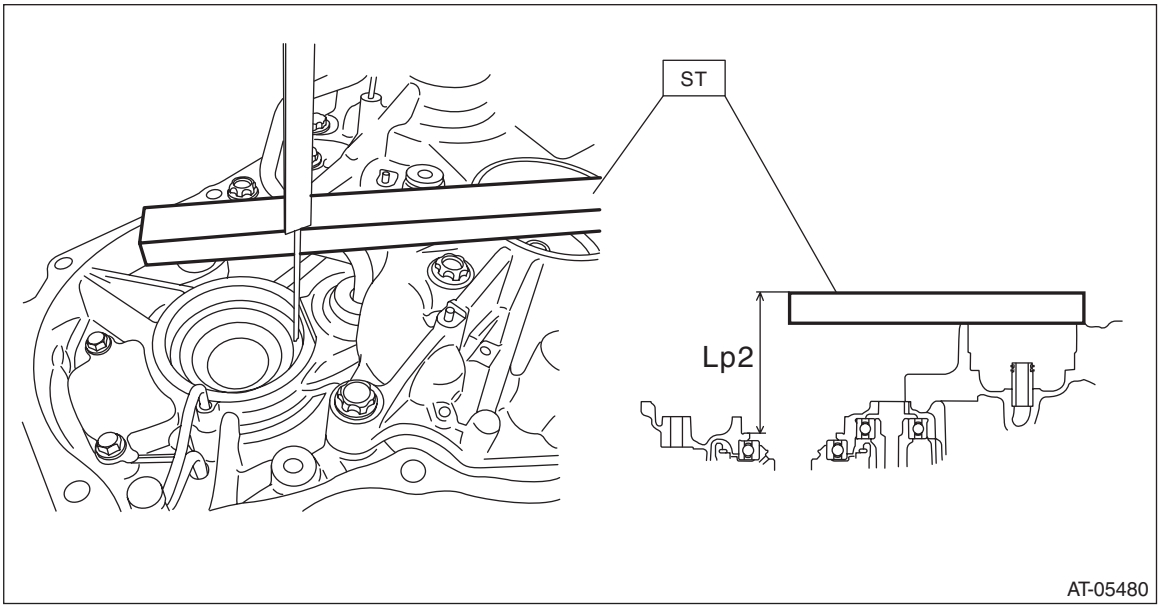

7) Using the new drive pinion retainer or new converter case, measure depth “Ls2” from the ST upper face to the secondary pulley bearing catch surface at several points and calculate the average.
ST 499575400 GAUGE

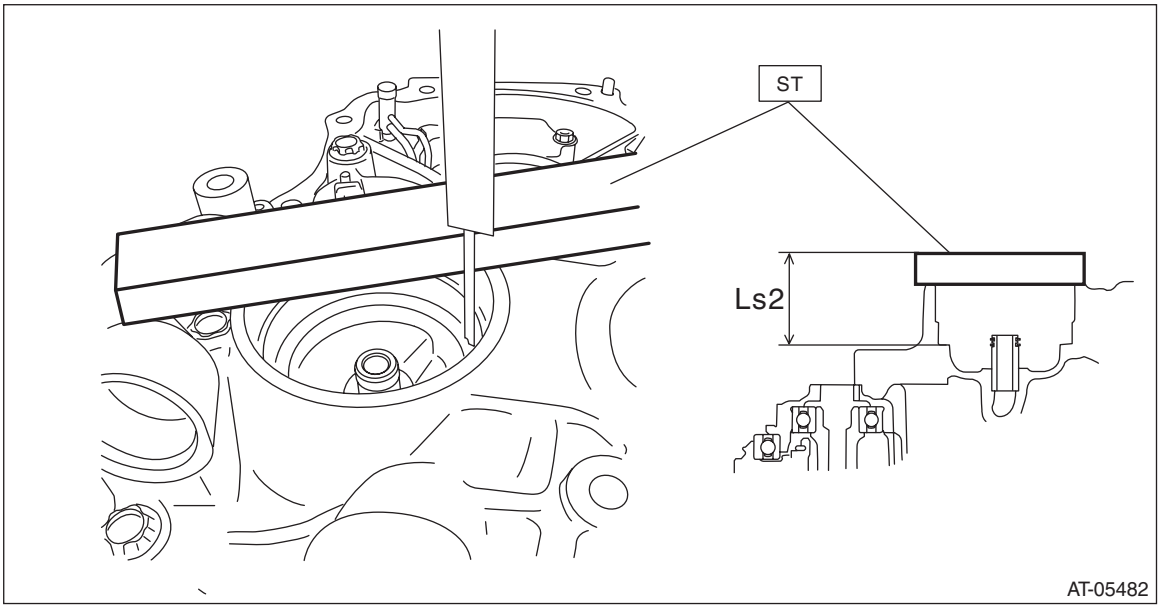

8) Calculate the “LD2” using the following formula and record it.
Calculation formula:
LD2 mm (in) = Lp2 – Ls2
LD2: Height from the primary pulley bearing catch surface to the secondary pulley bearing catch surface
Lp2: Depth from the ST upper face to the primary pulley bearing catch surface
Ls2: Depth from the ST upper face to the secondary pulley bearing catch surface

9) Calculate the recorded values of “LD1” and “LD2” to obtain the positive number to select the shims.
Calculation formula: T1 mm (in) = LD1 – LD2 or T2 mm (in) = LD2 – LD1
T1, T2: Difference between new drive pinion retainer or new converter case and current drive pinion retainer or current converter case
LD1: Calculated value of current drive pinion retainer or current converter case
LD2: Calculated value of new drive pinion retainer or new converter case

Difference of the case (T1) mm (in)	Shim selection procedure
0 — 0.020 (0 — 0.00078)	Select new shim of same thickness with the shim that is used on primary pulley side of the current converter case.
0.021 — 0.070 (0.000827 — 0.00275)	Select new shim of same thickness with the shim that is used on primary pulley side of the current converter case.
0.071 — 0.125 (0.00279 — 0.00492)	Select the shim 0.1 mm thinner than the shim that is used on primary pulley side of the current converter case.
0.126 — 0.170 (0.00496 — 0.00669)	Select the shim 0.1 mm thinner than the shim that is used on primary pulley side of the current converter case.
0.171 — 0.230 (0.00673 — 0.00905)	Select the shim 0.2 mm thinner than the shim that is used on primary pulley side of the current converter case.
0.231 — 0.250 (0.00909 — 0.00984)	Select the shim 0.3 mm thinner than the shim that is used on primary pulley side of the current converter case.
0.251 — 0.300 (0.00988 — 0.01181)	Select the shim 0.3 mm thinner than the shim that is used on primary pulley side of the current converter case.

Difference of the case (T2) mm (in)	Shim selection procedure
0 — 0.020 (0 — 0.00078)	Select new shim of same thickness with the shim that is used on primary pulley side of the current converter case.
0.021 — 0.080 (0.000827 — 0.00315)	Select new shim of same thickness with the shim that is used on primary pulley side of the current converter case.
0.081 — 0.100 (0.00318 — 0.00393)	Select the shim 0.1 mm thicker than the shim that is used on primary pulley side of the current converter case.
0.101 — 0.120 (0.00397 — 0.00472)	Select the shim 0.1 mm thicker than the shim that is used on primary pulley side of the current converter case.
0.121 — 0.180 (0.00476 — 0.00708)	Select the shim 0.1 mm thicker than the shim that is used on primary pulley side of the current converter case.
0.181 — 0.220 (0.00712 — 0.00866)	Select the shim 0.2 mm thicker than the shim that is used on primary pulley side of the current converter case.
0.221 — 0.280 (0.00870 — 0.01102)	Select the shim 0.2 mm thicker than the shim that is used on primary pulley side of the current converter case.
0.281 — 0.300 (0.01106 — 0.01181)	Select the shim 0.3 mm thicker than the shim that is used on primary pulley side of the current converter case.

Part No.	Shim thickness mm (in)
32451AA000	0.1 (0.004)
32451AA010	0.2 (0.008)
32451AA020	0.3 (0.012)
32451AA030	0.4 (0.016)
32451AA040	0.5 (0.020)

41.Variator Chain

A: REMOVAL

For removal of variator chain, refer to “Primary Pulley and Secondary Pulley”. <Ref. to CVT-226, REMOVAL, Primary Pulley and Secondary Pulley.>

B: INSTALLATION

For installation of variator chain, refer to “Primary Pulley and Secondary Pulley”. <Ref. to CVT-230, INSTALLATION, Primary Pulley and Secondary Pulley.>

C: INSPECTION

Check the variator chain for damage and wear.

42.Drive Pinion Shaft Assembly

A: REMOVAL

1) Remove the transmission assembly from the vehicle. <Ref. to CVT-55, REMOVAL, Automatic Transmission Assembly.>
2) Remove the air breather hose. <Ref. to CVT-132, REMOVAL, Air Breather Hose.>
3) Remove the oil pan and control valve body. <Ref. to CVT-111, REMOVAL, Control Valve Body.>
4) Remove the transmission harness. <Ref. to CVT-121, REMOVAL, Transmission Harness.>
5) Remove the extension case. <Ref. to CVT-138, REMOVAL, Extension Case.>
6) Remove the rear drive shaft. <Ref. to CVT-141, REMOVAL, Rear Drive Shaft.>
7) Remove the transfer clutch assembly. <Ref. to CVT-146, REMOVAL, Transfer Clutch.>
8) Remove the transfer reduction driven gear assembly. <Ref. to CVT-158, REMOVAL, Transfer Reduction Driven Gear.>
9) Remove the intermediate case. <Ref. to CVT-165, REMOVAL, Intermediate Case.>
10) Remove the forward clutch assembly. <Ref. to CVT-180, REMOVAL, Forward Clutch Assembly.>
11) Remove the transmission case. <Ref. to CVT-211, REMOVAL, Transmission Case.>
12) Remove the primary pulley, secondary pulley and variator chain. <Ref. to CVT-226, REMOVAL, Primary Pulley and Secondary Pulley.>
13) Using the ST, remove the drive pinion retainer and lubrication pipe.
ST 18270KA020 SOCKET (E20)

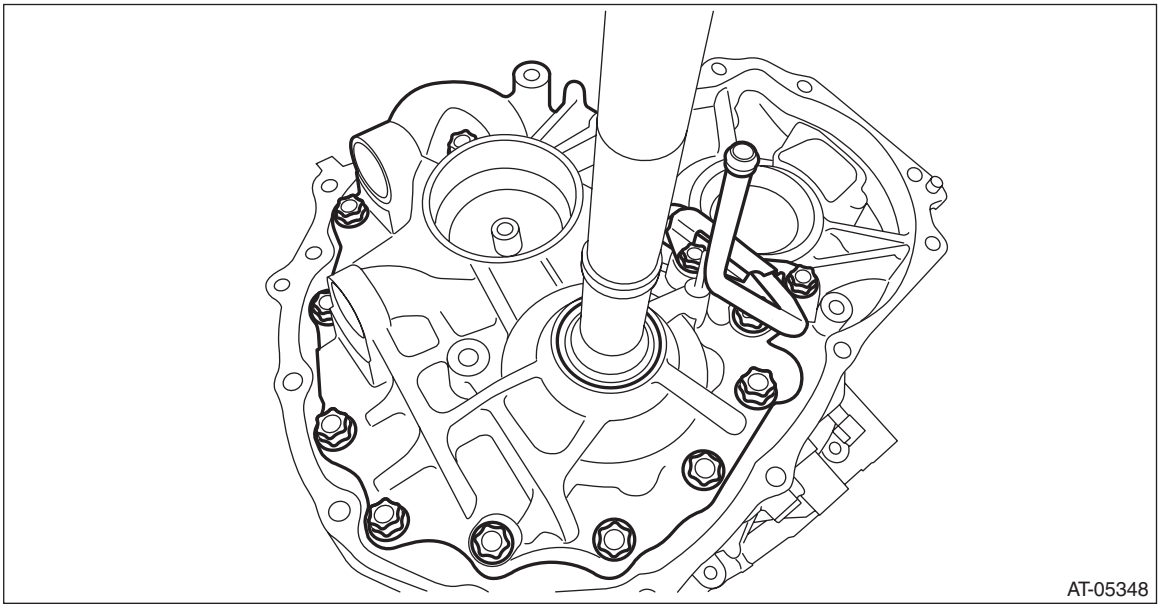

14) Remove the O-ring.

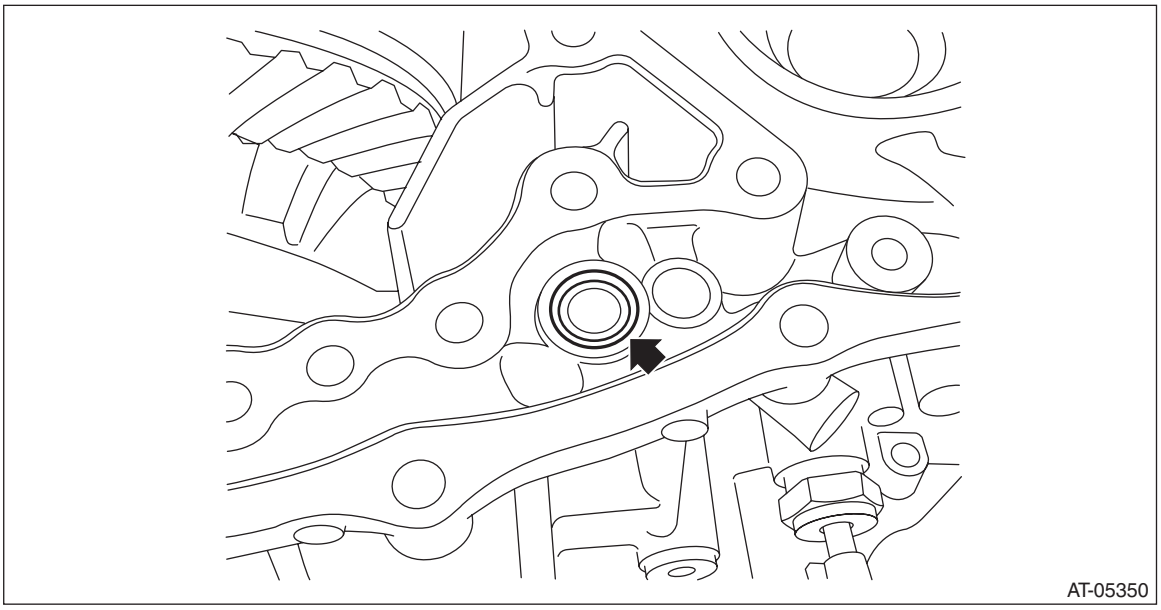

15) Remove the oil pump.

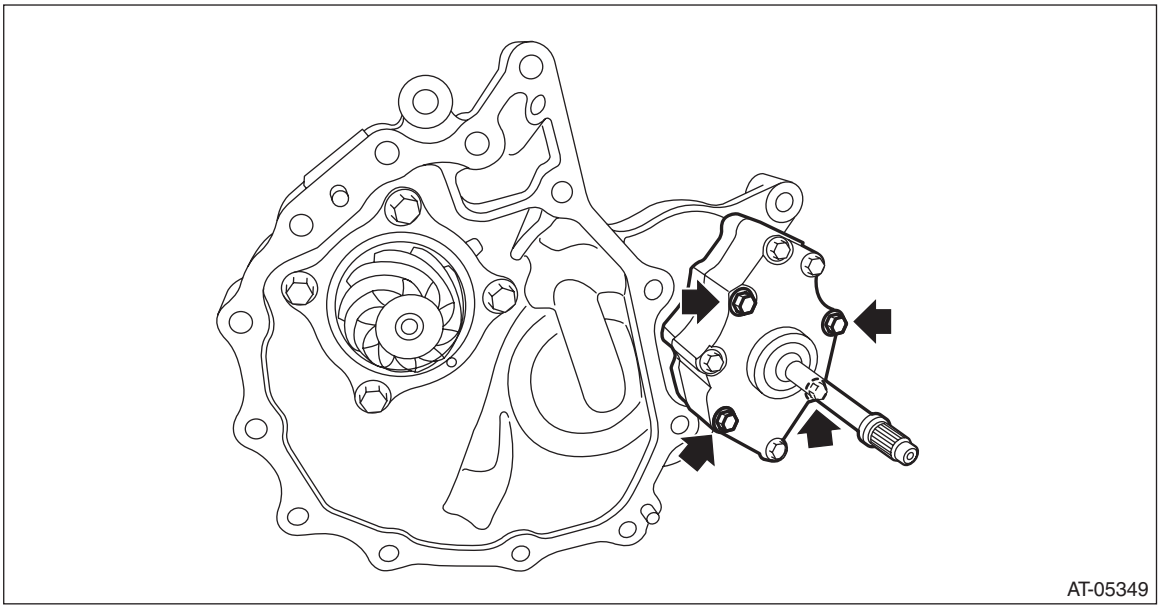

16) Remove the O-ring.

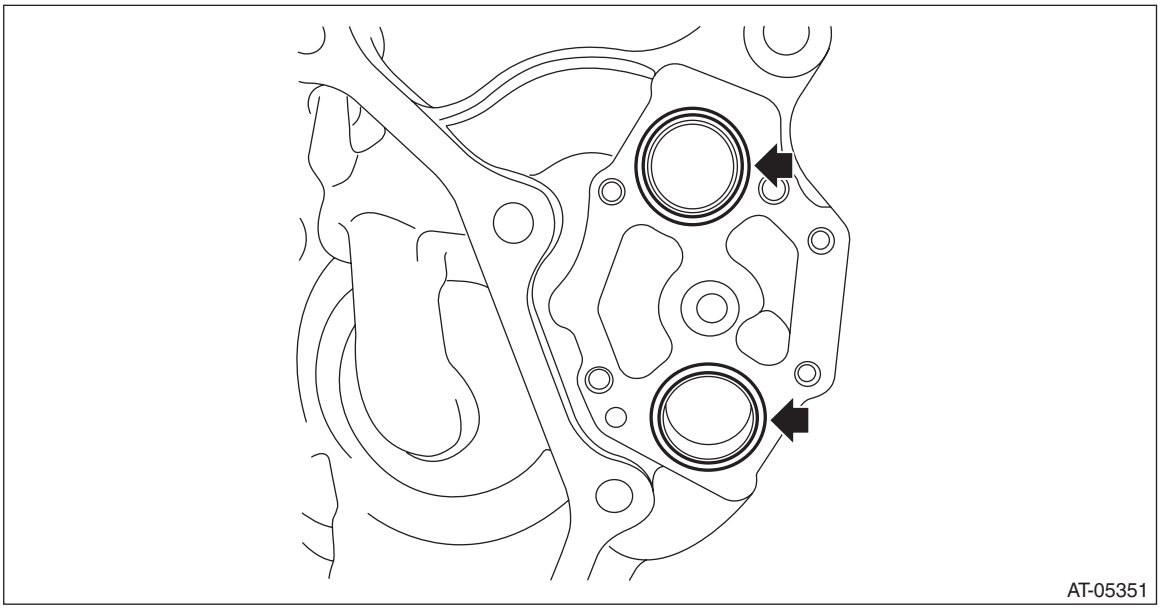

B: INSTALLATION

1) Clean the mating surface of drive pinion retainer and converter case.
2) Adjust the backlash and tooth contact between drive pinion shaft assembly and the front differential side gear. <Ref. to CVT-256, ADJUSTMENT, Drive Pinion Shaft Assembly.>
3) Install the O-ring for oil pump to drive pinion retainer.

NOTE:
- Use new O-rings.
- Apply CVTF to the O-ring.

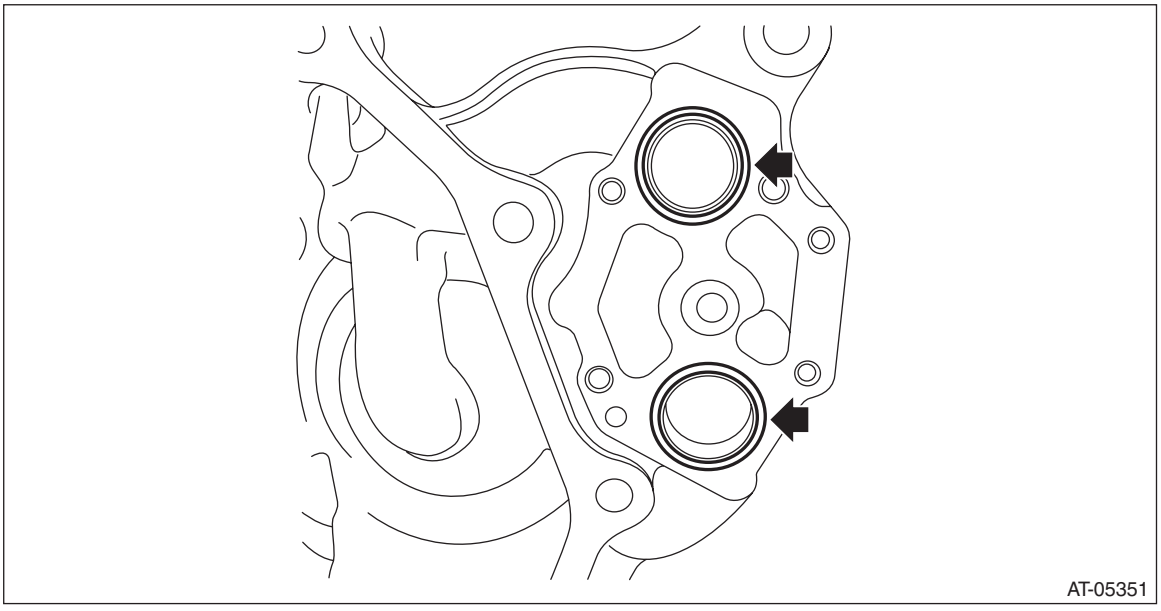

4) Install the oil pump.

NOTE:
Apply CVTF to the bolt.

Tightening torque:
8.5 N·m (0.9 kgf-m, 6.3 ft-lb)

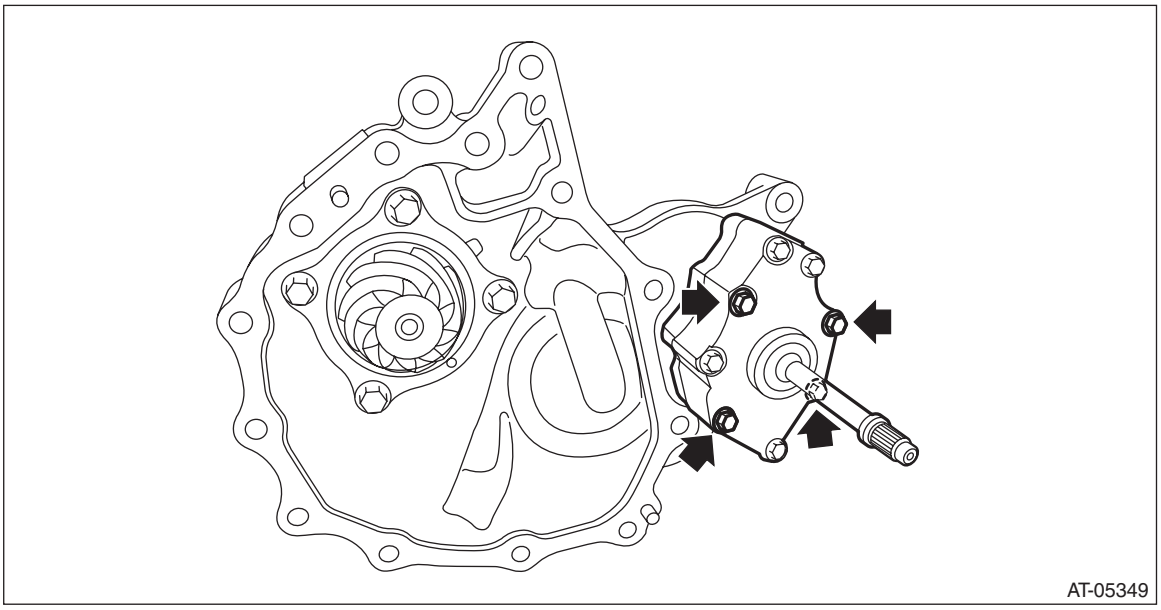

5) Apply liquid gasket seamlessly to the mating surface of drive pinion retainer.

NOTE:
Be careful not to block the arrowed hole when applying liquid gasket.

Liquid gasket:
THREE BOND 1215 (Part No. 004403007) or equivalent

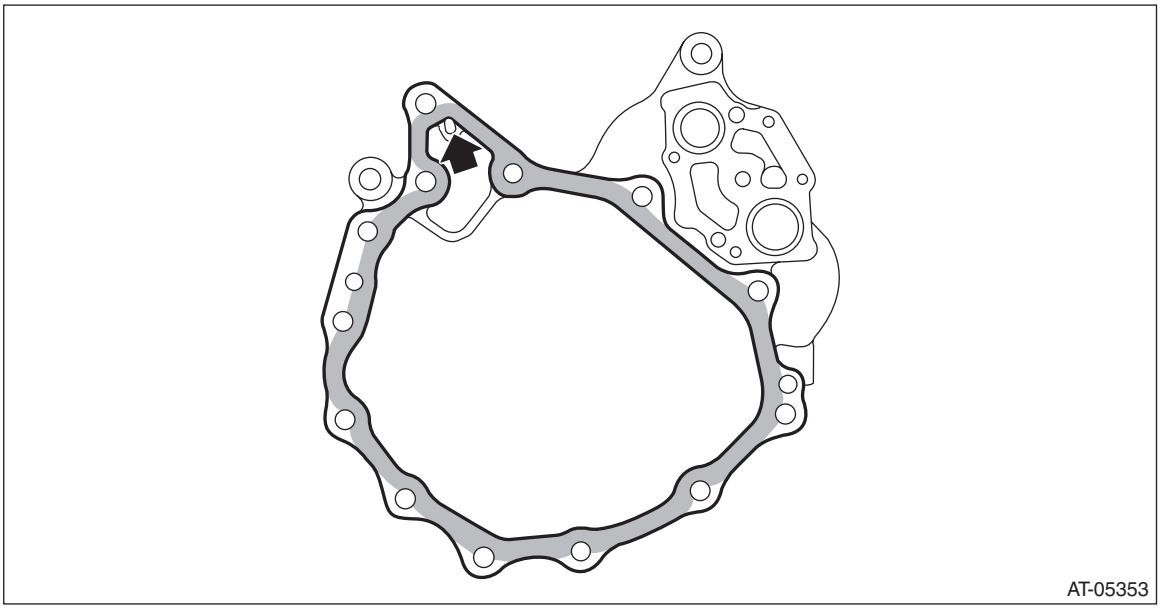

6) Install the O-ring to the lubrication pipe.

NOTE:
- Use new O-rings.
- Apply CVTF to the O-ring.

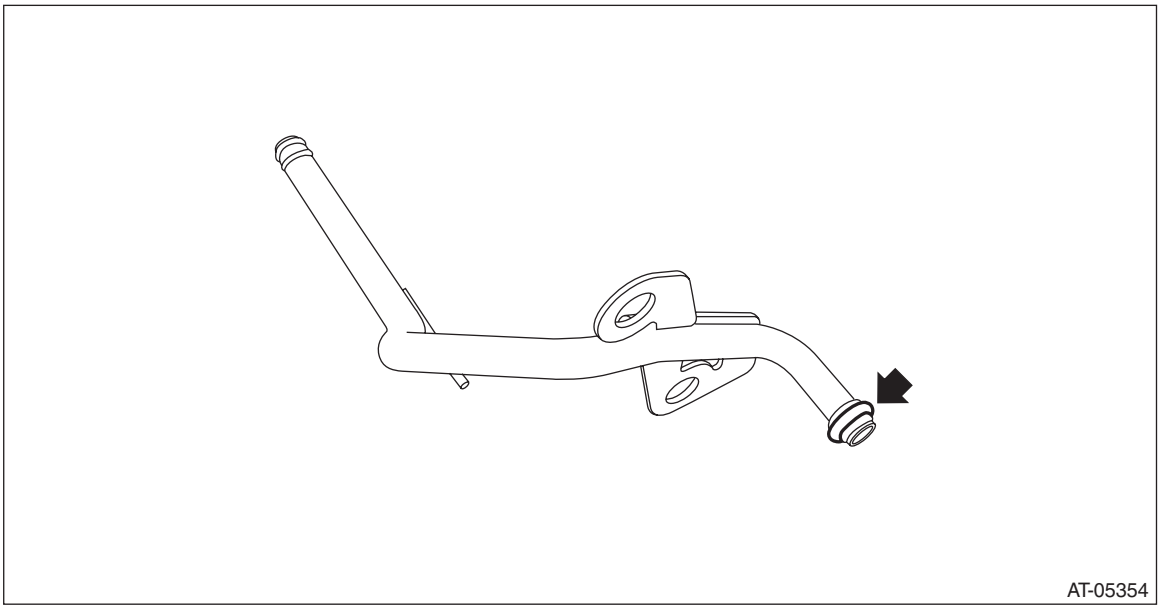

7) Install the drive pinion retainer and lubrication pipe to converter case and tighten the bolt using the ST.
ST 18270KA020 SOCKET (E20)

NOTE:
Do not confuse the three different-length bolts when installing.

Tightening torque:
43 N·m (4.4 kgf-m, 31.7 ft-lb)

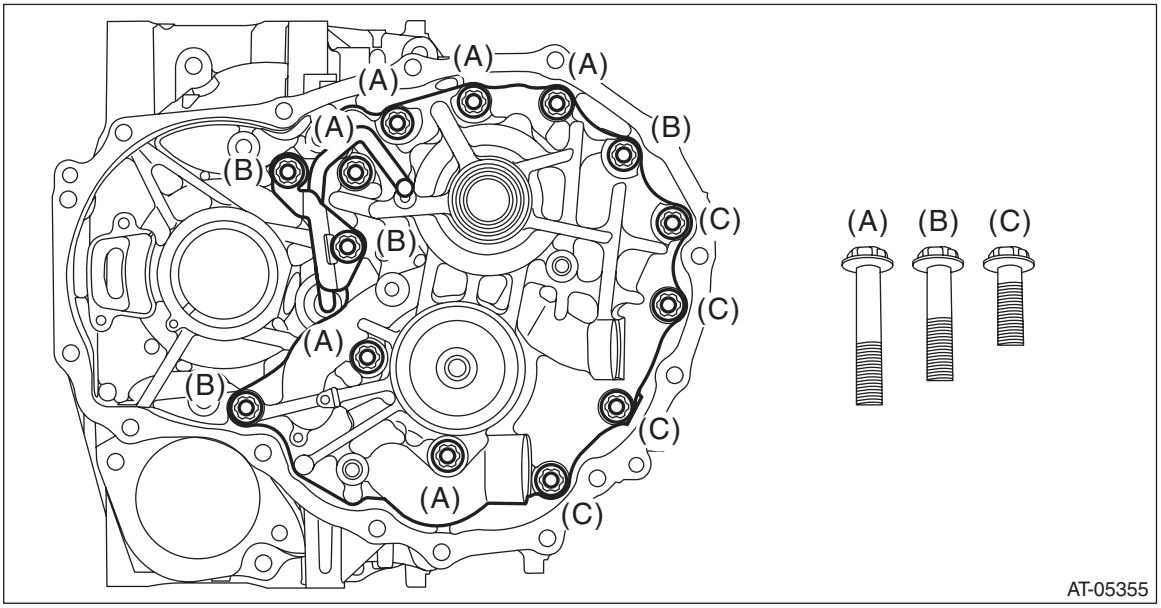

8) Install the primary pulley, secondary pulley and variator chain. <Ref. to CVT-230, INSTALLATION, Primary Pulley and Secondary Pulley.>
9) Install the transmission case. <Ref. to CVT-213, INSTALLATION, Transmission Case.>
10) Install the forward clutch assembly. <Ref. to CVT-181, INSTALLATION, Forward Clutch Assembly.>
11) Install the intermediate case. <Ref. to CVT-166, INSTALLATION, Intermediate Case.>
12) Install the transfer reduction driven gear assembly. <Ref. to CVT-158, INSTALLATION, Transfer Reduction Driven Gear.>

13) Install the transfer clutch assembly. <Ref. to CVT-147, INSTALLATION, Transfer Clutch.>
14) Install the rear drive shaft. <Ref. to CVT-141, INSTALLATION, Rear Drive Shaft.>
15) Install the extension case. <Ref. to CVT-138, INSTALLATION, Extension Case.>
16) Install the transmission harness. <Ref. to CVT-123, INSTALLATION, Transmission Harness.>
17) Install the oil pan and control valve body. <Ref. to CVT-115, INSTALLATION, Control Valve Body.>
18) Install the air breather hose. <Ref. to CVT-132, INSTALLATION, Air Breather Hose.>
19) Install the transmission assembly to the vehicle. <Ref. to CVT-70, INSTALLATION, Automatic Transmission Assembly.>

C: DISASSEMBLY

1) Remove the drive pinion assembly.

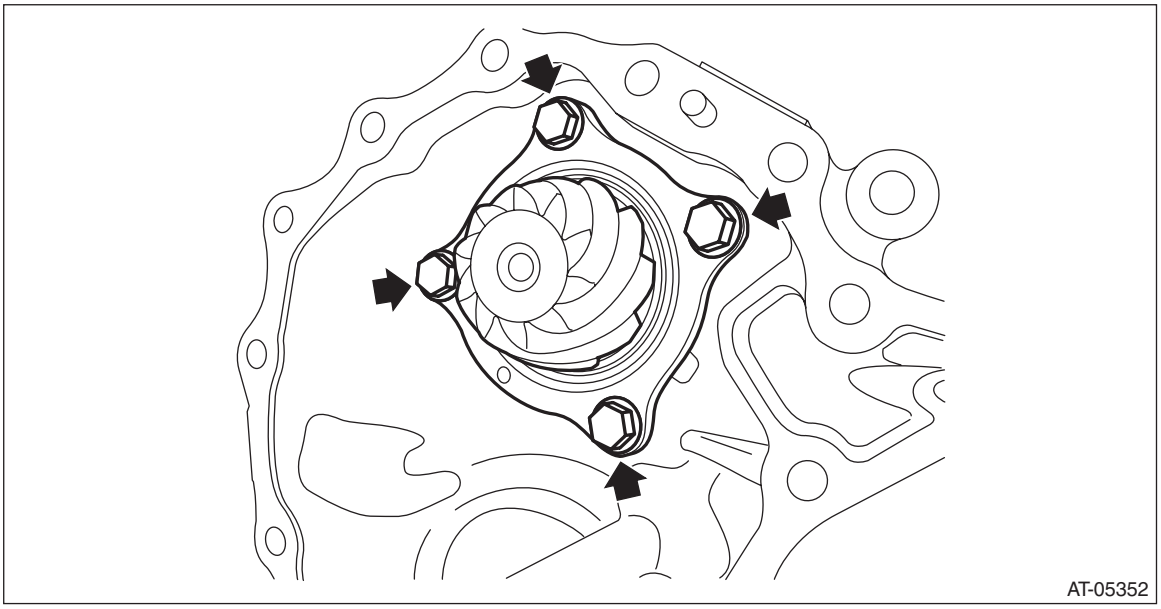

2) Flatten the tab of the lock nut.
3) Using ST1 and ST2, fix at the spline portion of drive pinion shaft to remove the lock nut.
ST1 18621AA000 WRENCH
ST2 18667AA010 HOLDER

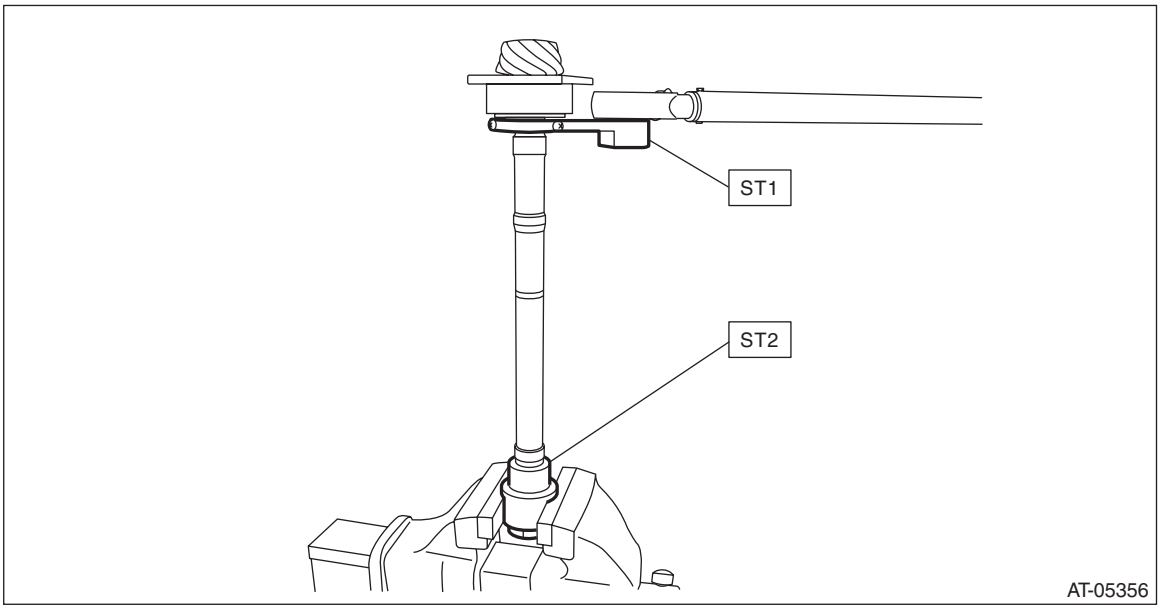

4) Remove the taper roller bearing rear side inner race and outer race from drive pinion shaft.

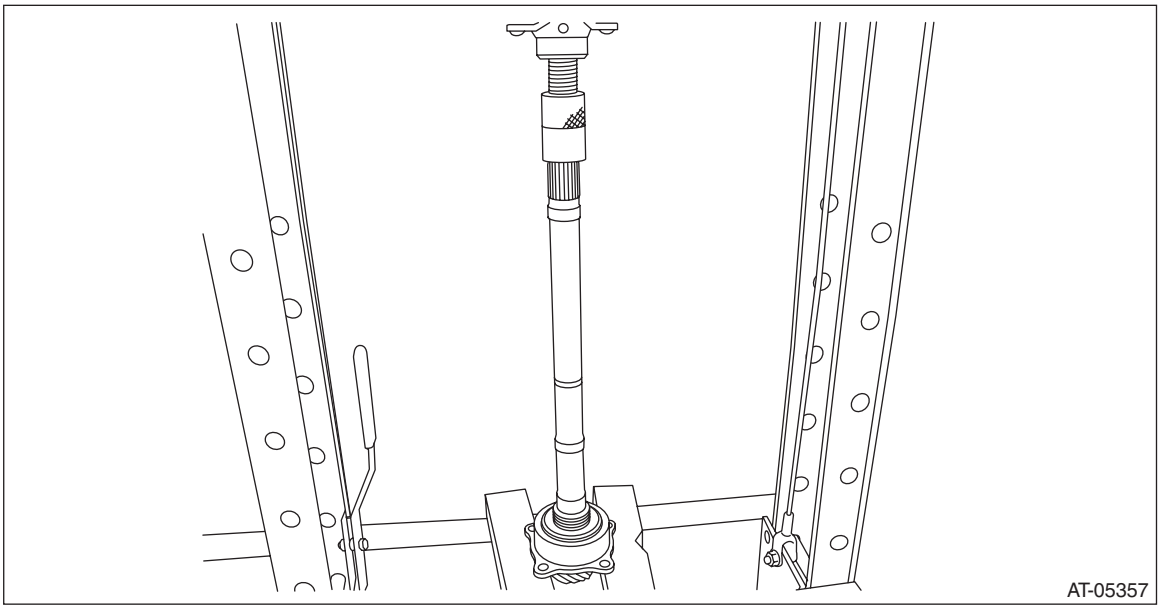

5) Using ST, remove the taper roller bearing front side inner race from drive pinion shaft.
ST 498077000 REMOVER

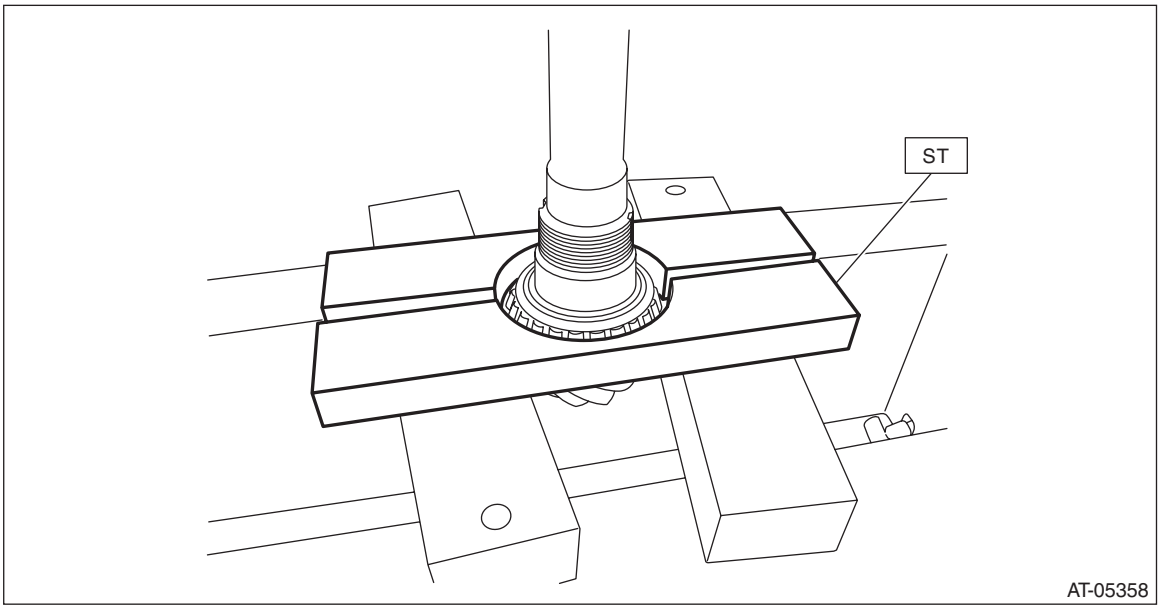

6) Remove the two oil seals using a screwdriver wrapped with cloth etc.

CAUTION:
Do not damage the fitting surface of drive pinion bearing.

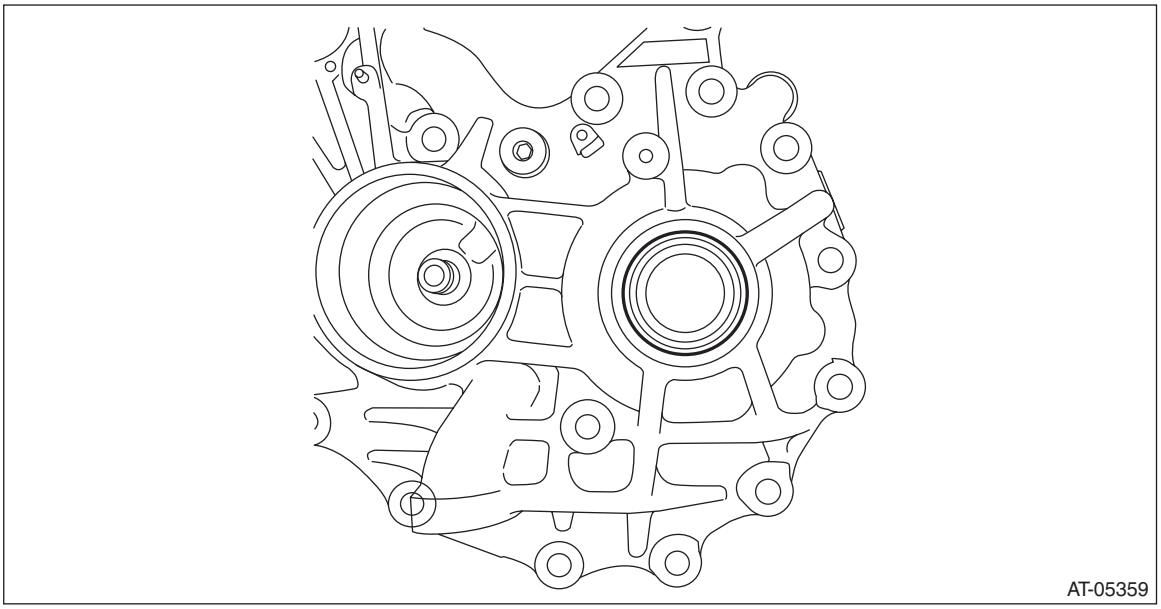

7) Remove the plug from drive pinion retainer.

D: ASSEMBLY

1) Install the O-ring to plug and install the plug to drive pinion retainer.

NOTE:
- Use new O-rings.
- Apply CVTF to the O-ring.

Tightening torque:
25 N·m (2.5 kgf-m, 18.4 ft-lb)

2) Using the ST, install the oil seal to drive pinion retainer.

NOTE:
- Apply CVTF to the oil seal press-fitting surface and lip.
- Install the oil seal in the correct direction.

Pulley side

ST 18657AA020 OIL SEAL INSTALLER

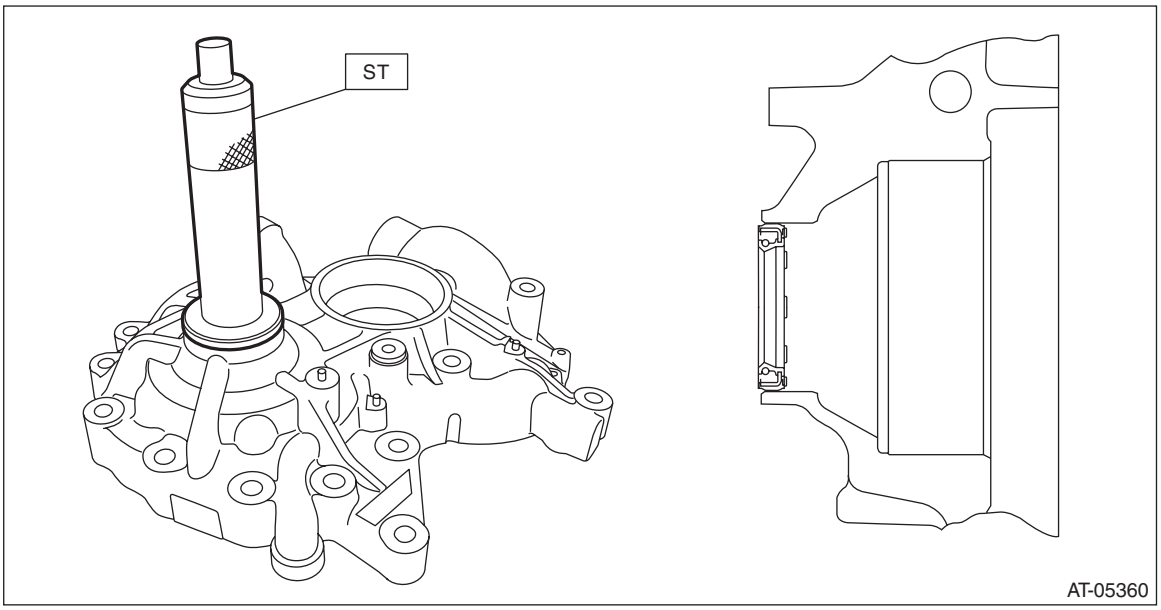

Front differential side

ST 499277100 INSTALLER

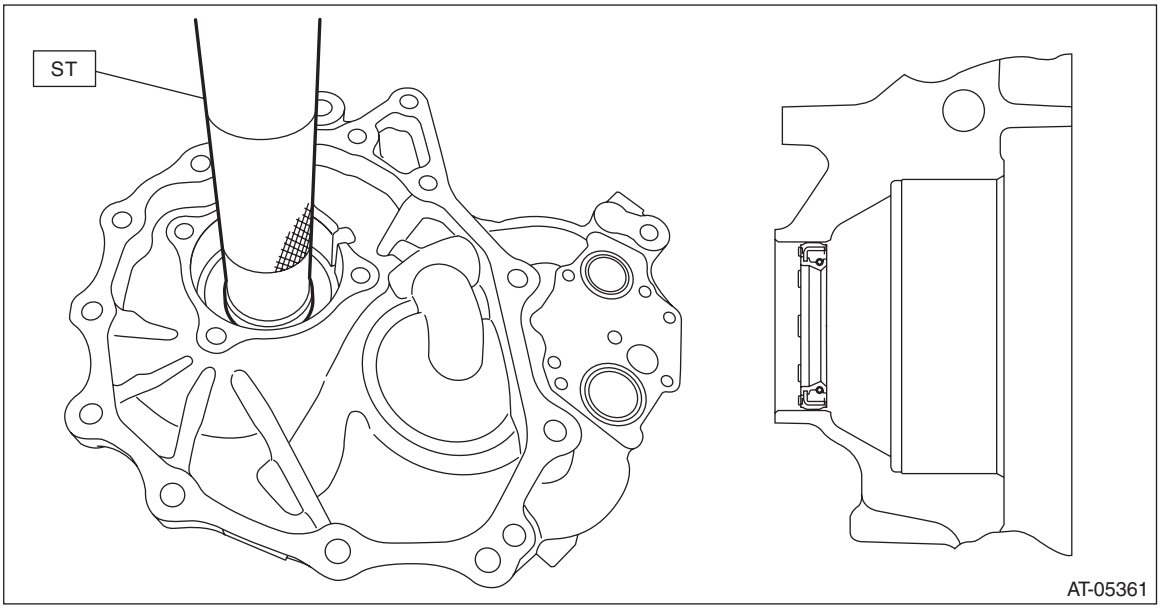

3) Measure the dimension “A” of drive pinion shaft.
ST 398643600 GAUGE

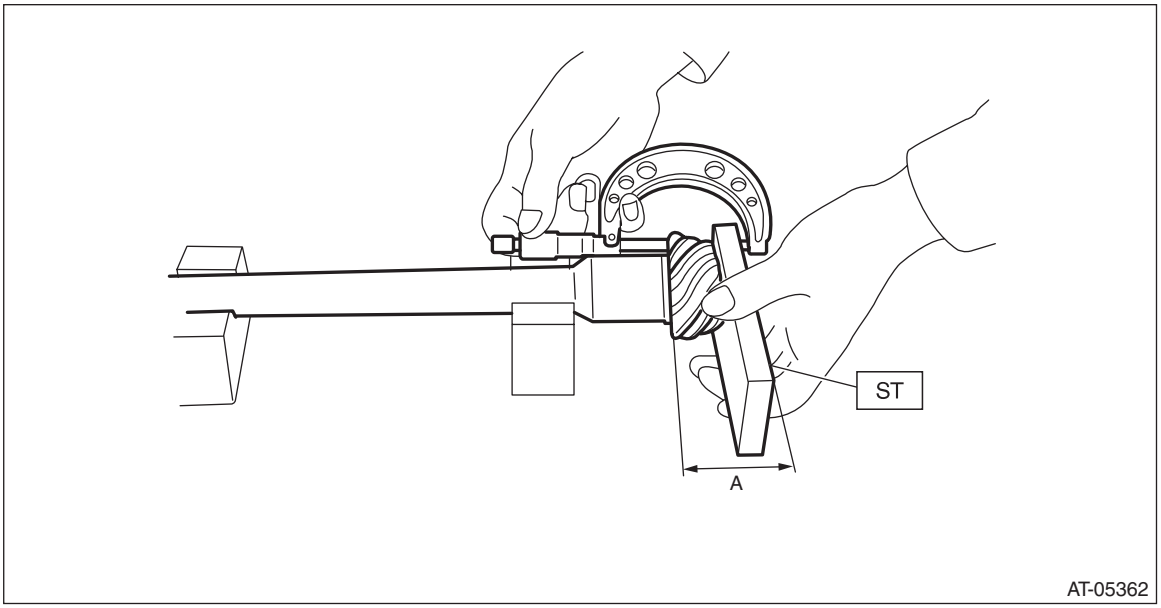

4) Press-fit the new inner bearing inner race using the ST.
ST 499277200 INSTALLER

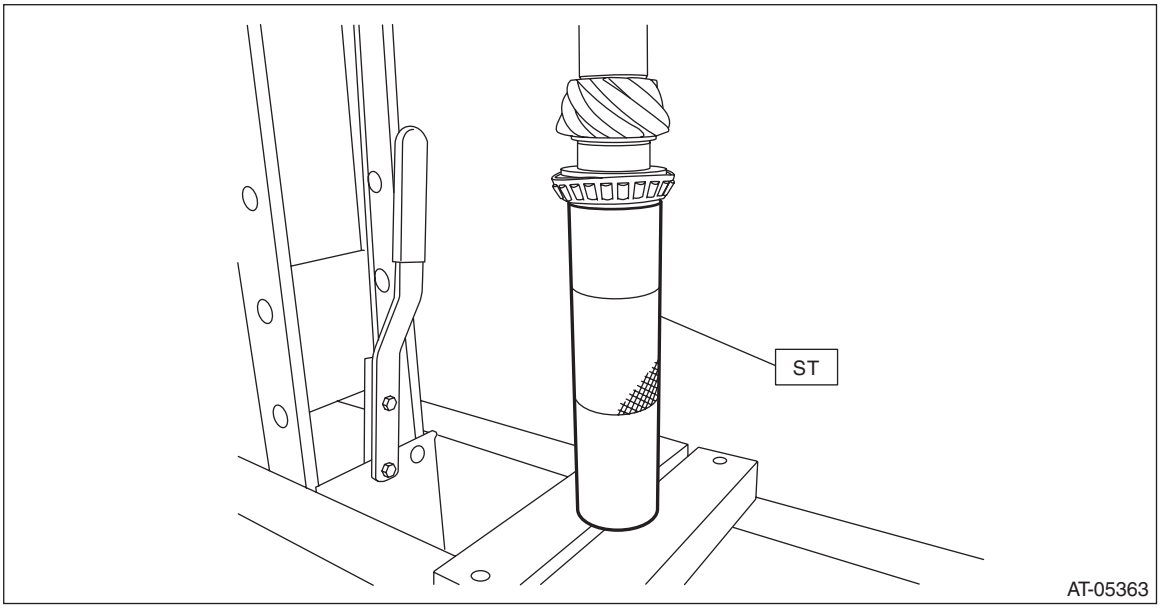

5) Press-fit the new outer bearing outer race and inner bearing inner race.

CAUTION:
Damage may result if too much force is applied to the roller bearing.

NOTE:
Press in to a position where the bearing rotates smoothly without play.

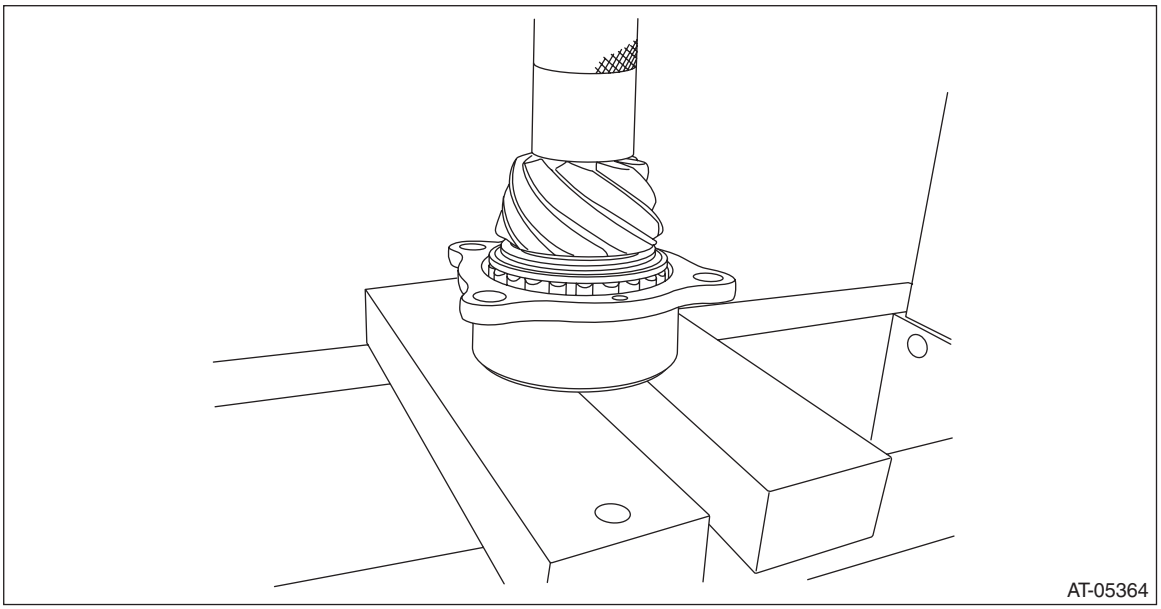

6) Tighten a new lock nut using the ST.
Using the following formula, calculate the torque for a torque wrench.
$T2 = L2/(L1 + L2) \times T1$
T1: 130 N·m (13.3 kgf-m, 95.9 ft-lb)
[Required torque setting]
T2: Tightening torque
L1: ST1 length 0.1 m (3.94 in)
L2: Torque wrench length
Example:

Torque wrench length m (in)	Tightening torque N·m (kgf-m, ft-lb)
0.4 (15.75)	104 (10.6, 76.7)
0.45 (17.72)	106 (10.8, 78.2)
0.5 (19.69)	108 (11.0, 79.7)
0.55 (21.65)	110 (11.2, 81.1)

ST1 18621AA000 WRENCH
ST2 18667AA010 HOLDER

NOTE:
Tighten the lock nut while directly aligning ST1 and torque wrench.

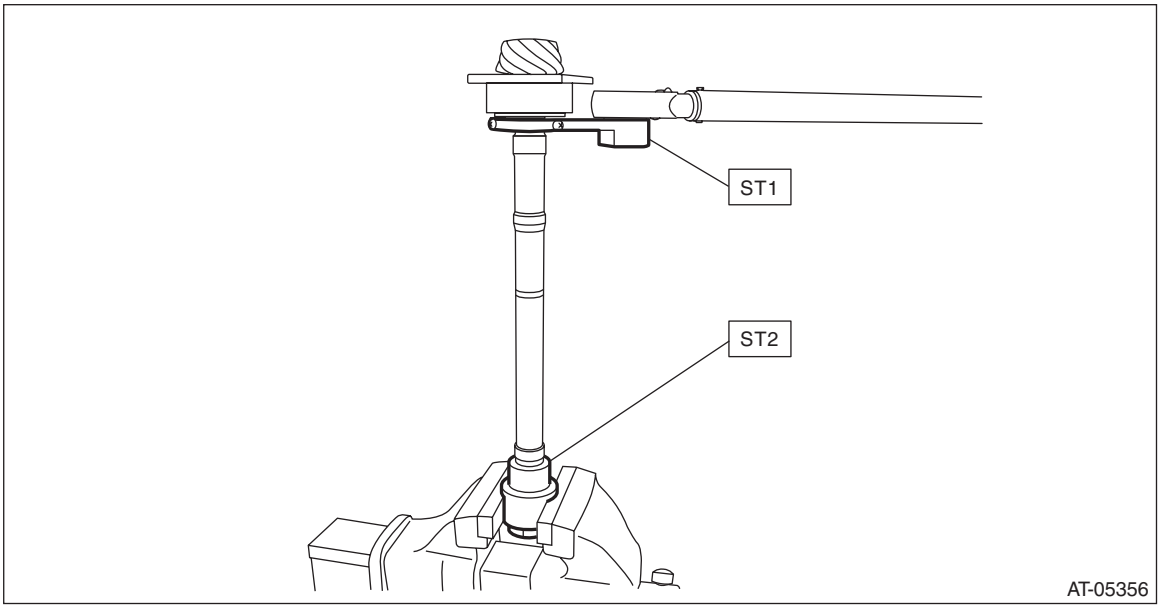

7) Apply differential gear oil to roller of bearing and rotate the bearing several times.
8) Measure the starting torque of the bearing. Make sure the starting torque is within the specified range. If the torque is not within specified range, replace the roller bearing.

Starting torque:
11.6 — 34.7 N (1.2 — 3.5 kgf, 2.6 — 7.8 lb)

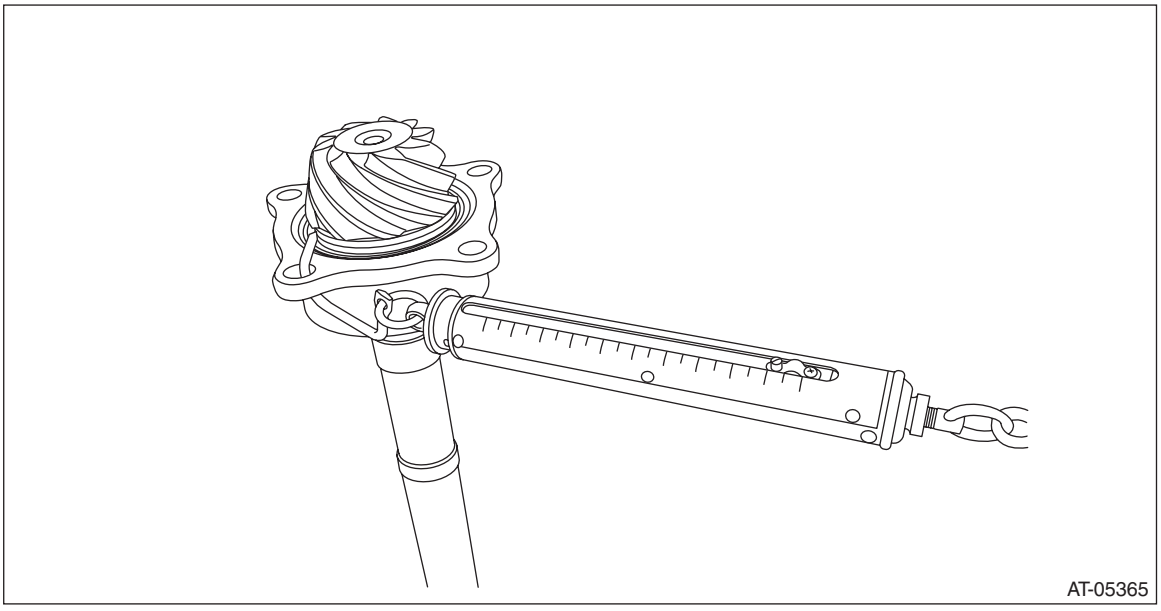

9) Crimp the lock nut in 2 locations.

10) Measure the dimension “B” of the drive pinion shaft.
ST 398643600 GAUGE

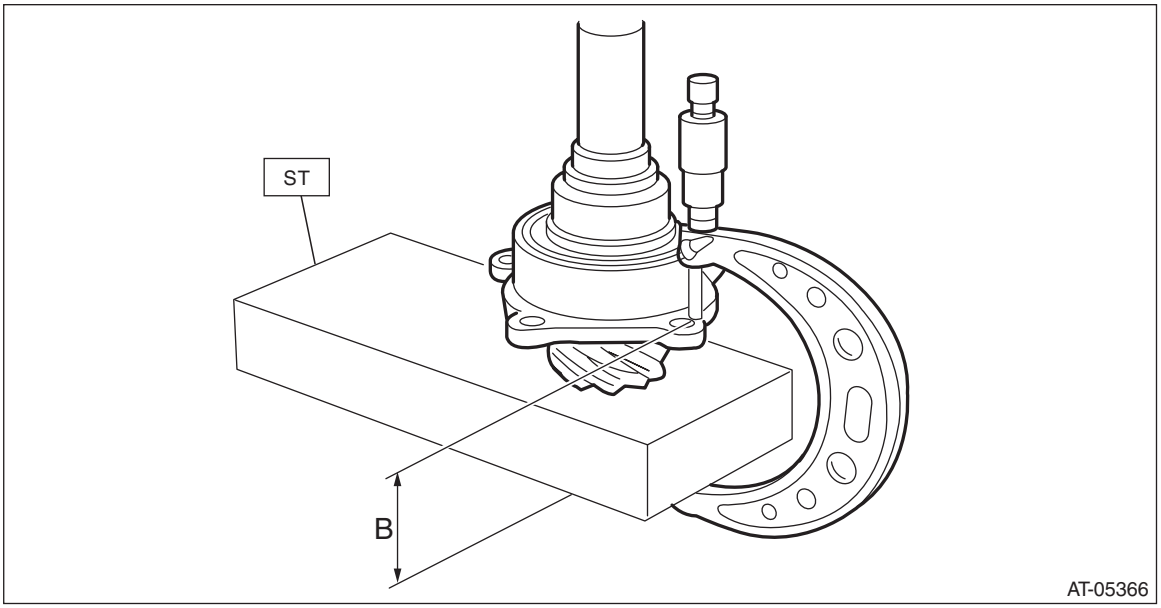

11) Obtain thickness “t” mm (in) of the drive pinion shim.
$t = 6.55 \pm 0.1225 - (B - A)$
12) Select three or less shims from following table.

Drive pinion shim	
Part number	Thickness mm (in)
31451AA050	0.150 (0.0059)
31451AA060	0.175 (0.0069)
31451AA070	0.200 (0.0079)
31451AA080	0.225 (0.0089)
31451AA090	0.250 (0.0098)
31451AA100	0.275 (0.0108)
31451AA240	0.300 (0.0118)

13) Install the shims selected for drive pinion retainer and drive pinion shaft assembly.

NOTE:
Be careful not to bend the shim.

Tightening torque:
70 N·m (7.1 kgf-m, 51.6 ft-lb)

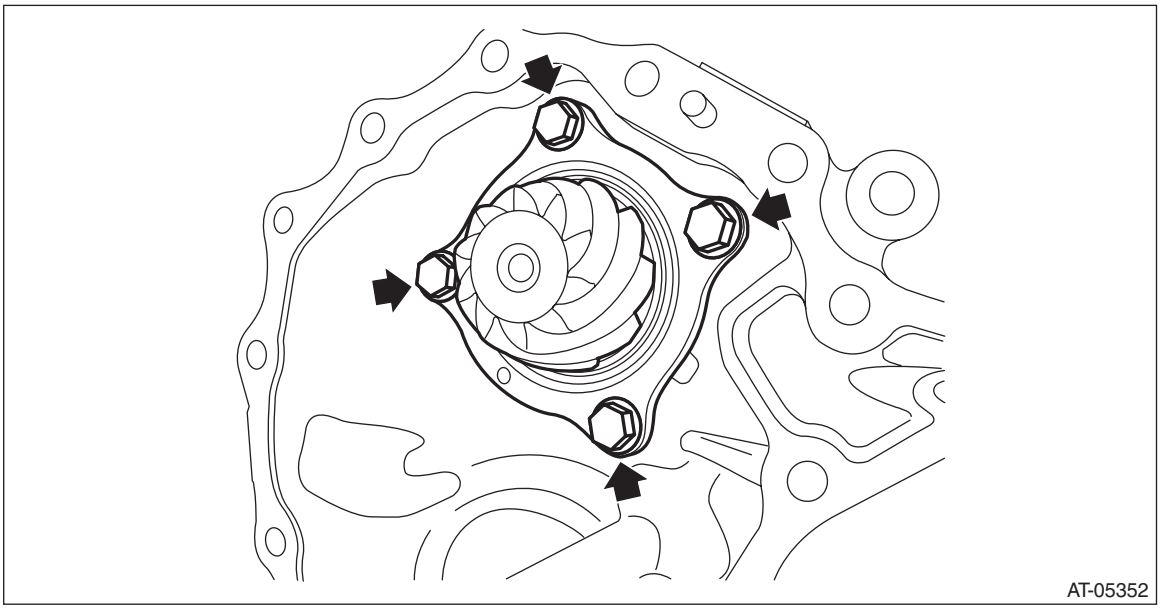

E: INSPECTION

- Make sure that all component parts are free of scratches, holes and other faults.
- Check the tooth contact. <Ref. to CVT-256, ADJUSTMENT, Drive Pinion Shaft Assembly.>
- Apply CVTF to bearing and rotate the bearing to check for noise or dragging etc.
- Check the bearing preload of drive pinion shaft.

CAUTION:
Before measuring, apply differential gear oil to roller of bearing and rotate the bearing several times.

Starting torque:
11.6 — 34.7 N (1.2 — 3.5 kgf, 2.6 — 7.8 lb)

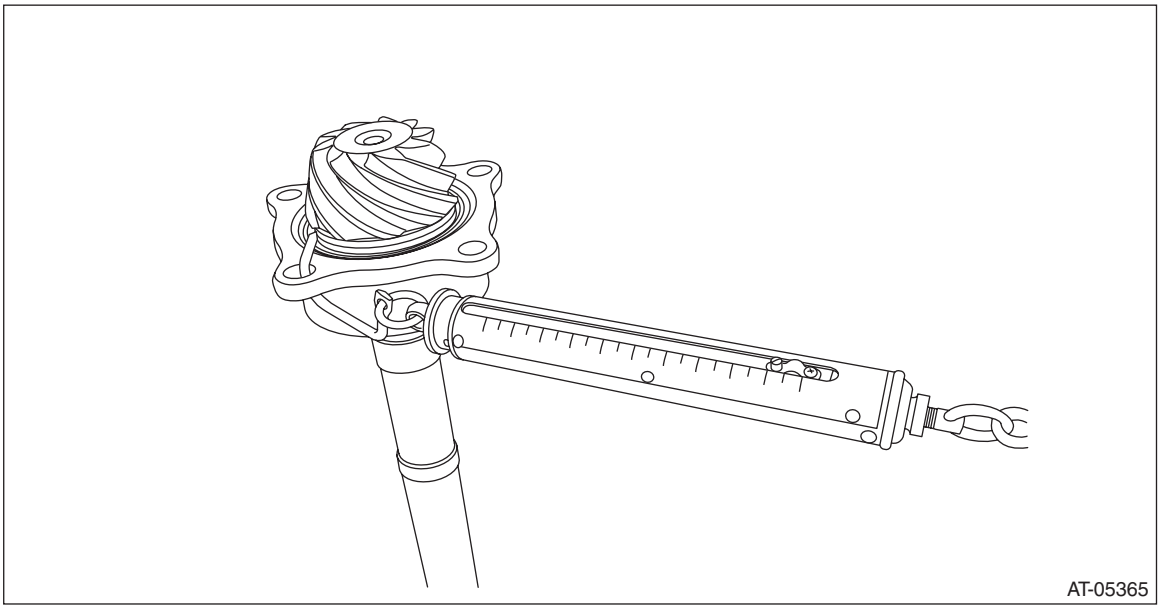

F: ADJUSTMENT

1) Remove the liquid gasket from the mating surface completely.
2) Using the ST, install the drive pinion retainer to converter case.
ST1 18270KA020 SOCKET (E20)

NOTE:
Do not confuse the three different-length bolts when installing.

Tightening torque:
43 N·m (4.4 kgf-m, 31.7 ft-lb)

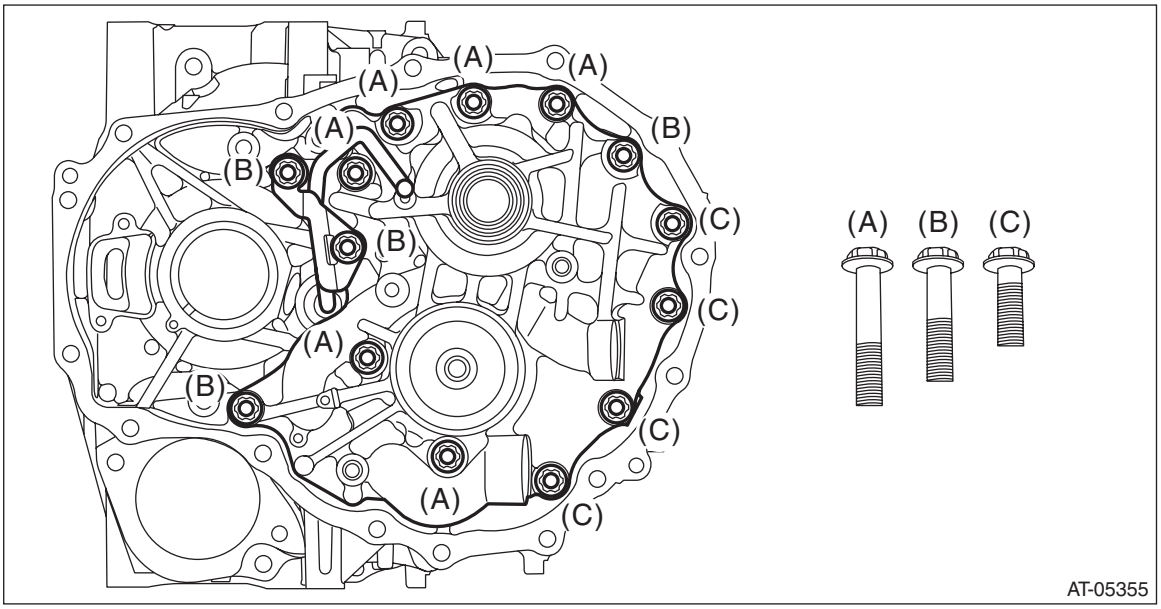

AT-05355

3) Rotate the drive pinion several times using ST1 and ST2.
ST1 18667AA010 HOLDER
ST2 499787700 WRENCH

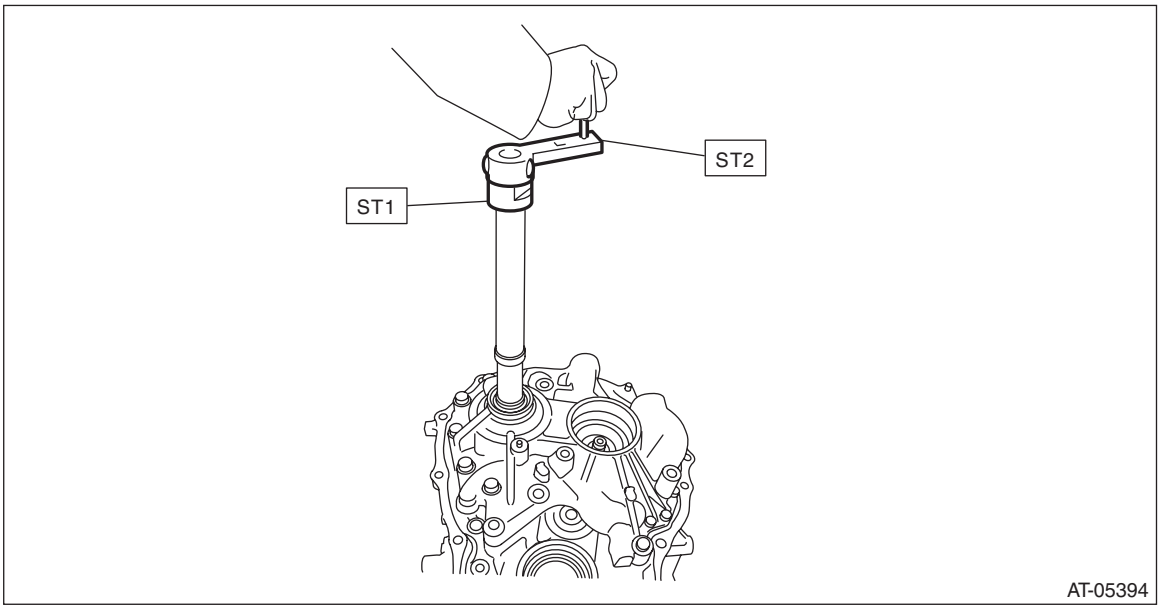

AT-05394

4) Adjust the drive pinion and hypoid driven gear backlash. <Ref. to CVT-277, ADJUSTMENT, Front Differential Assembly.>
5) Using the ST, remove the drive pinion retainer from converter case.
ST1 18270KA020 SOCKET (E20)

6) Apply lead-free red dye evenly on the both sides of three to four teeth of the hypoid driven gear. Then install the drive pinion retainer and rotate the drive pinion in both directions several times. Remove the drive pinion retainer and check the tooth contact pattern.
If the teeth contact is inappropriate, adjust the backlash or thickness of the shim. <Ref. to CVT-277, ADJUSTMENT, Front Differential Assembly.>

NOTE:
After correction, wipe off the lead-free red dye.

- Correct tooth contact

Check item: Tooth contact surface is slightly shifted toward the toe side under a no-load condition. (When driving, it moves towards the heel side.)

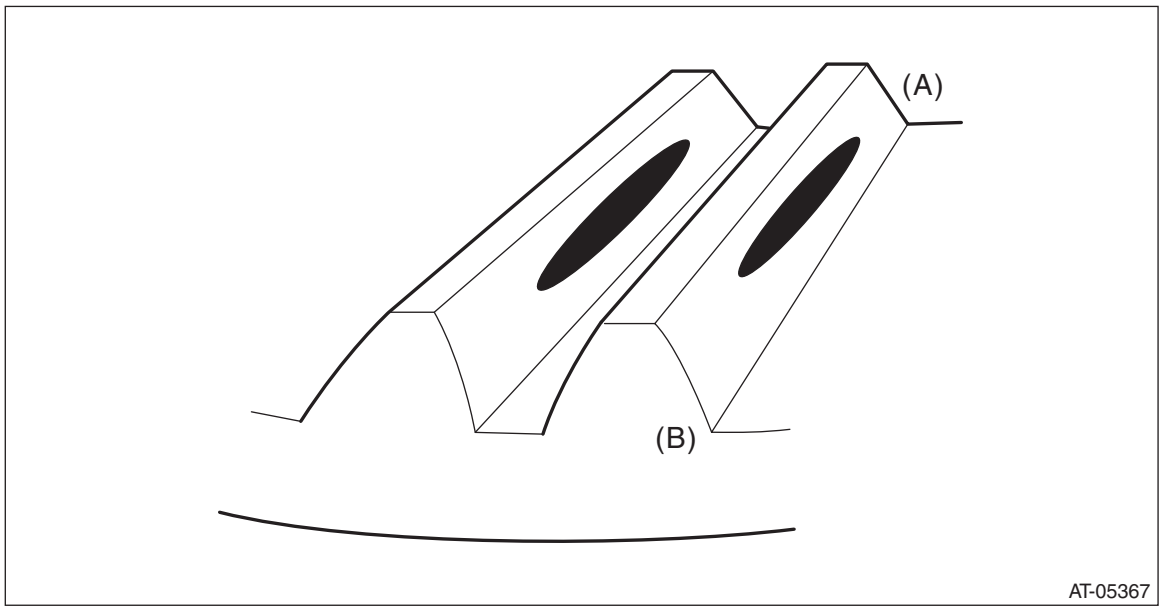

(A) Toe side
(B) Heel side

- Face contact

Check item: Backlash is too large.

Contact pattern

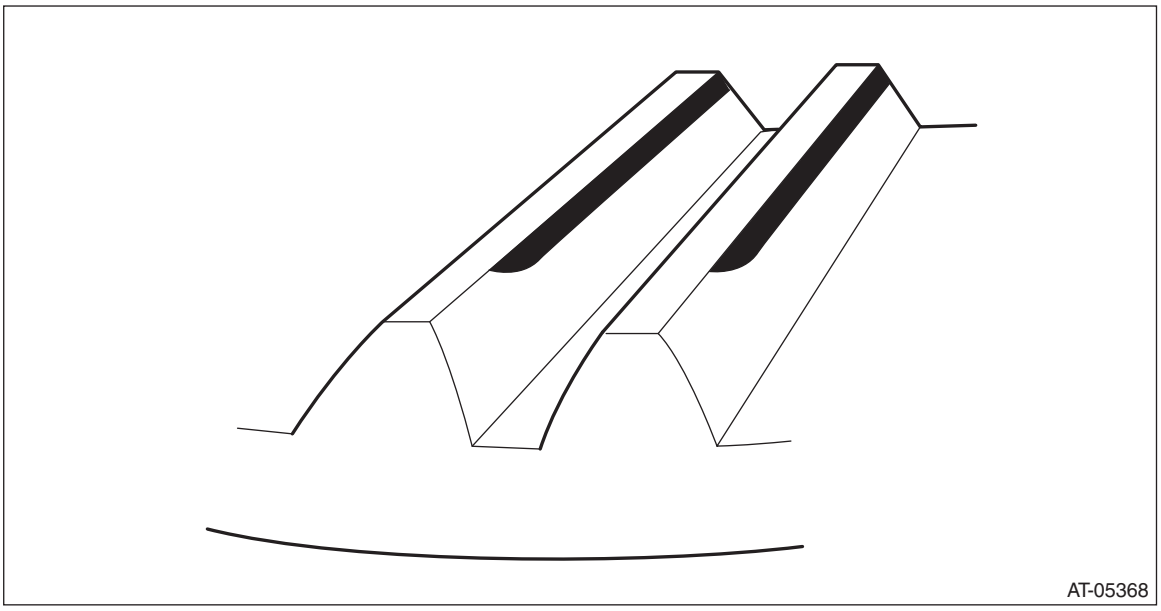

Corrective action: Increase thickness of pinion height adjusting washer according to the procedure for bringing drive pinion close to hypoid driven gear side.

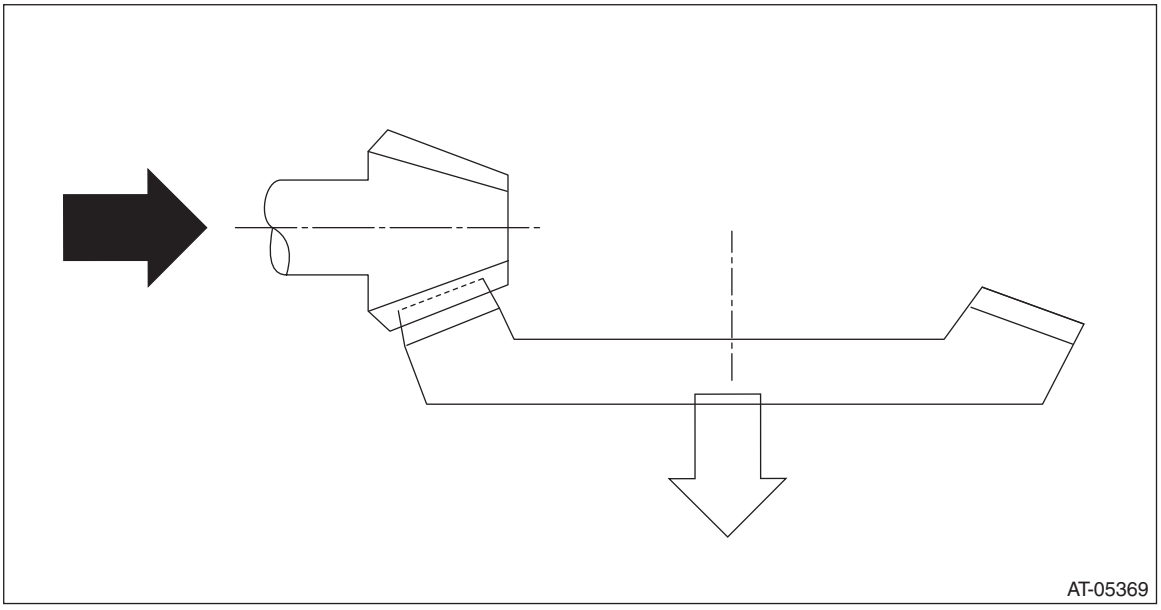

- Flank contact

Check item: Backlash is too small.

Contact pattern

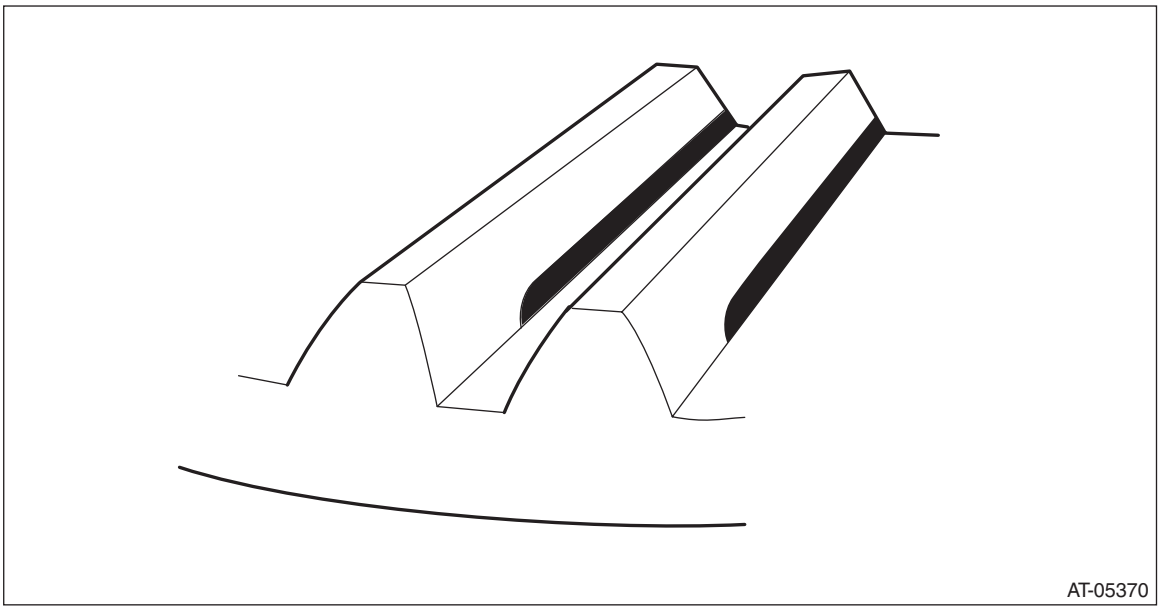

Corrective action: Reduce the thickness of pinion height adjusting washer according to the procedure for bringing drive pinion away from hypoid driven gear.

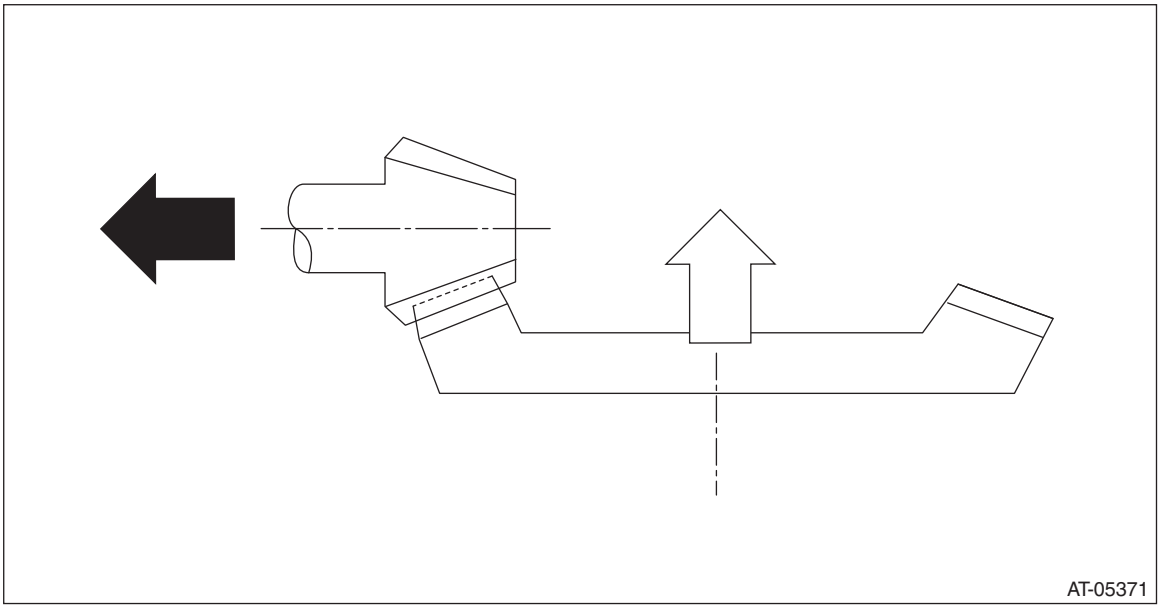

- Toe contact (inside contact)

Check item: Teeth contact area is too small.

Contact pattern

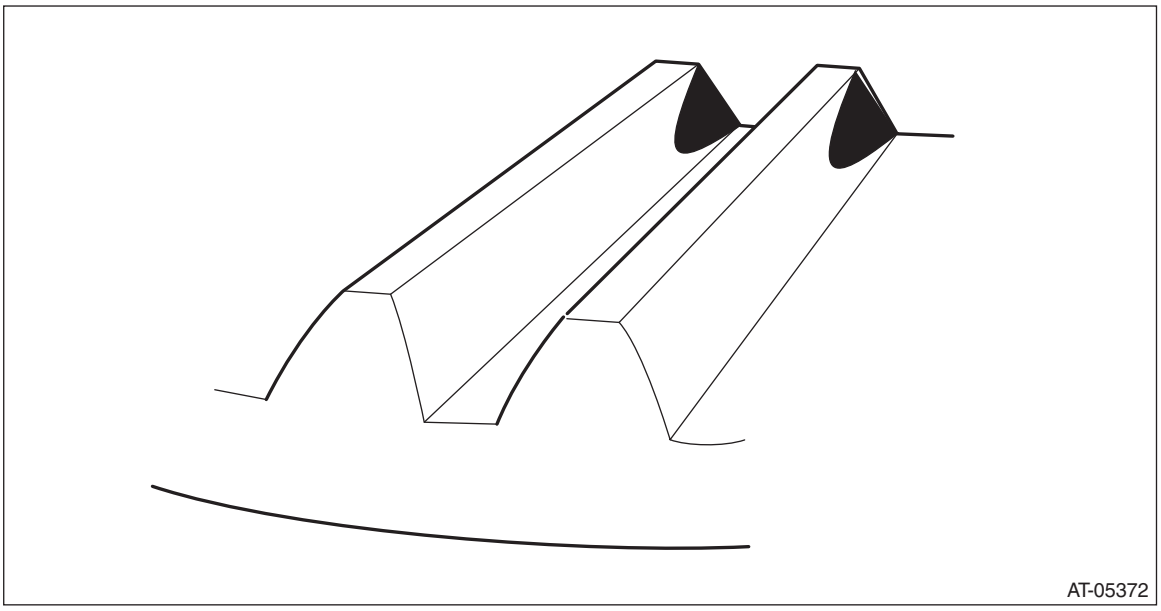

Corrective action: Reduce the thickness of pinion height adjusting washer according to the procedure for bringing drive pinion away from hypoid driven gear side.

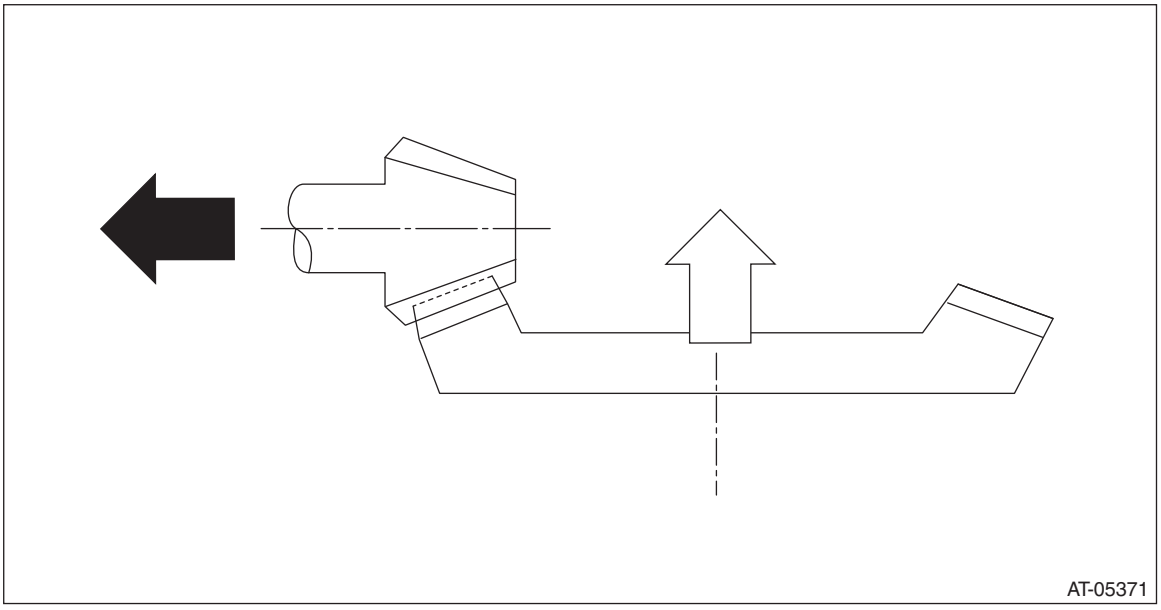

- Heel contact (outside end contact)

Check item: Teeth contact area is too small.

Contact pattern

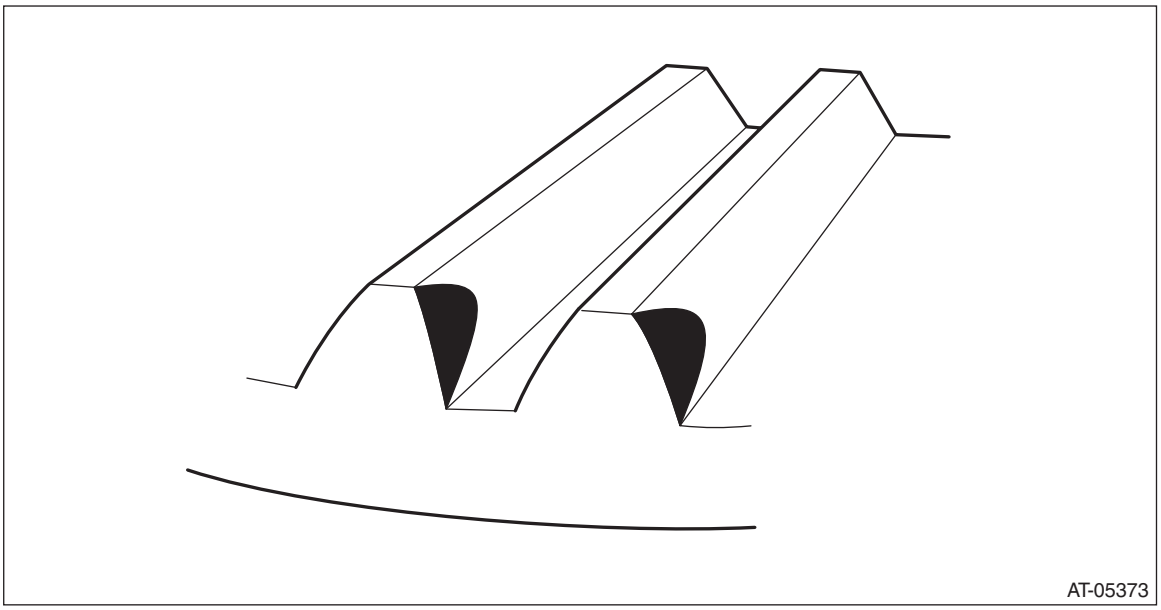

Corrective action: Increase the thickness of the pinion height adjusting washer according to the procedures for moving the drive pinion closer to the hypoid driven gear.

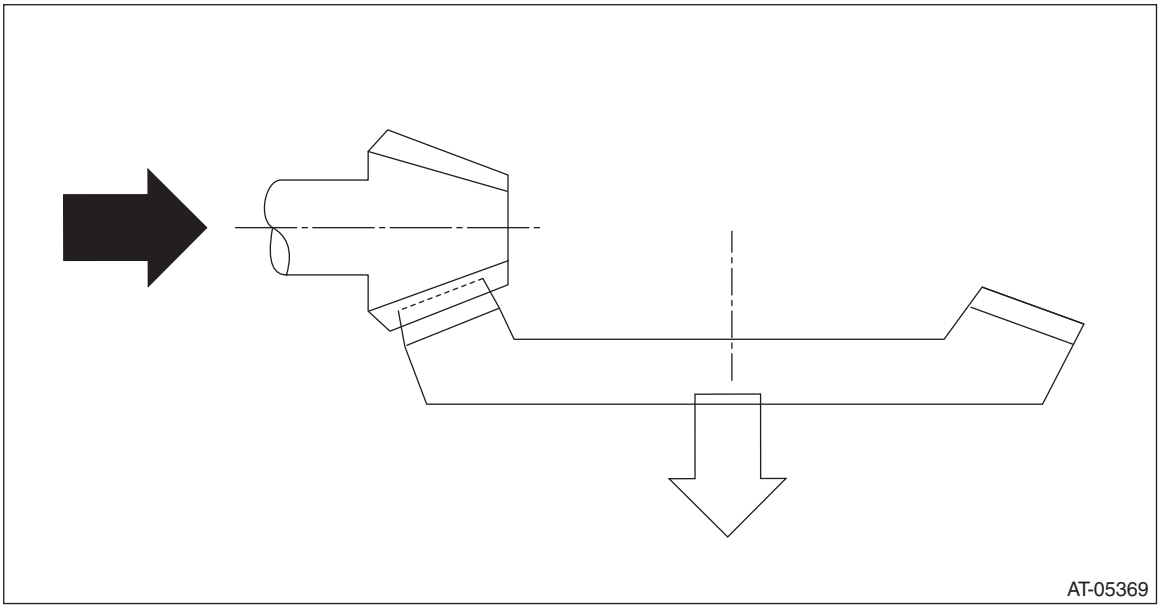

7) If tooth contact is correct, mark the differential side retainer position and loosen. After fitting a new O-ring and oil seal, screw in the differential side retainer to the marked position.

8) Tighten the lock plate with specified torque.

Tightening torque:
25 N·m (2.5 kgf-m, 18.4 ft-lb)

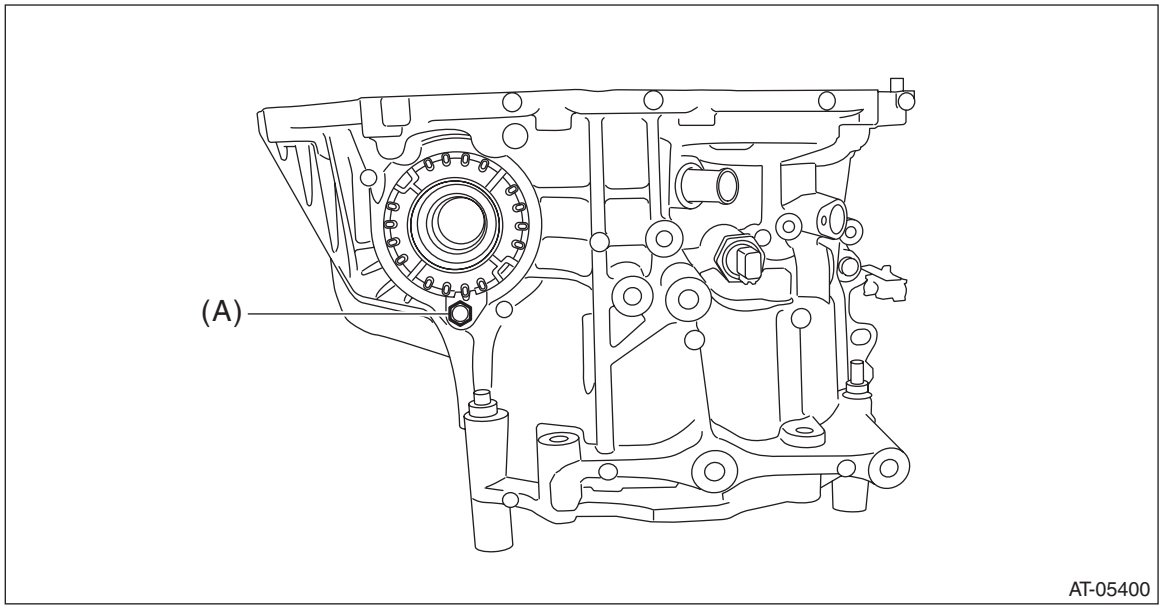

(A) Lock plate

43.Front Differential Assembly

A: REMOVAL

1) Remove the transmission assembly from the vehicle. <Ref. to CVT-55, REMOVAL, Automatic Transmission Assembly.>
2) Remove the air breather hose. <Ref. to CVT-132, REMOVAL, Air Breather Hose.>
3) Remove the oil pan and control valve body. <Ref. to CVT-111, REMOVAL, Control Valve Body.>
4) Remove the transmission harness. <Ref. to CVT-121, REMOVAL, Transmission Harness.>
5) Remove the extension case. <Ref. to CVT-138, REMOVAL, Extension Case.>
6) Remove the rear drive shaft. <Ref. to CVT-141, REMOVAL, Rear Drive Shaft.>
7) Remove the transfer clutch assembly. <Ref. to CVT-146, REMOVAL, Transfer Clutch.>
8) Remove the transfer reduction driven gear assembly. <Ref. to CVT-158, REMOVAL, Transfer Reduction Driven Gear.>
9) Remove the intermediate case. <Ref. to CVT-165, REMOVAL, Intermediate Case.>
10) Remove the forward clutch assembly. <Ref. to CVT-180, REMOVAL, Forward Clutch Assembly.>
11) Remove the transmission case. <Ref. to CVT-211, REMOVAL, Transmission Case.>
12) Remove the primary pulley, secondary pulley and variator chain. <Ref. to CVT-226, REMOVAL, Primary Pulley and Secondary Pulley.>
13) Remove the drive pinion shaft assembly. <Ref. to CVT-242, REMOVAL, Drive Pinion Shaft Assembly.>
14) Remove the lock plates on both sides.

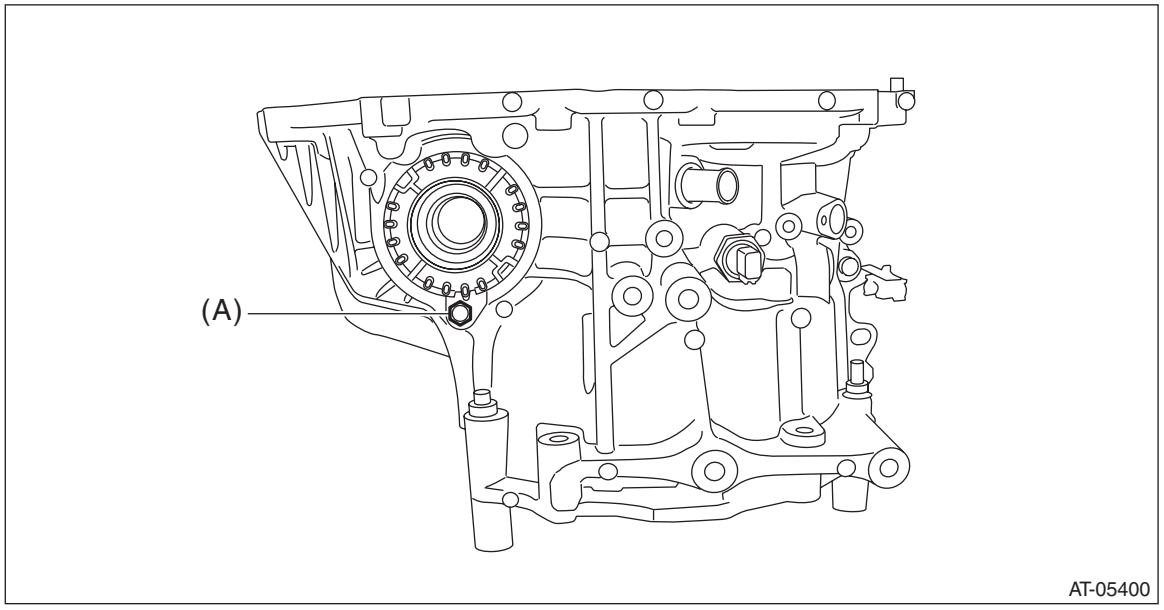

(A) Lock plate

15) Remove the differential side retainers using ST.
ST 18658AA020 WRENCH COMPL RETAINER

NOTE:
• Support the differential case assembly by hand to avoid damaging the retainer mounting hole of the converter case.
• When keeping the retainers aside, use labels etc. to avoid confusing the left and right.

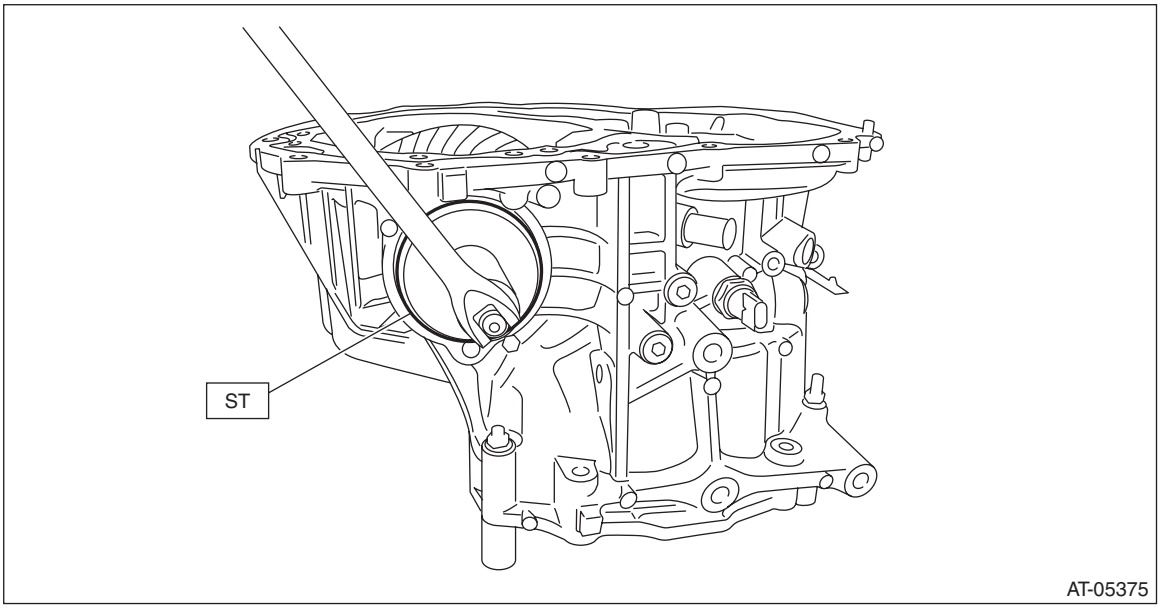

16) Remove the front differential assembly while being careful not to damage the attachment part of the retainer.
17) Remove the oil seals and O-rings from both differential side retainers. <Ref. to CVT-269, SIDE RETAINER, DISASSEMBLY, Front Differential Assembly.>

B: INSTALLATION

1) Install the front differential assembly to the converter case.

NOTE:
Be careful not to damage the inside of the case (especially the mating surface of the differential side retainers).
2) Temporarily install the differential side retainers using ST.
ST 18658AA020 WRENCH COMPL RETAINER

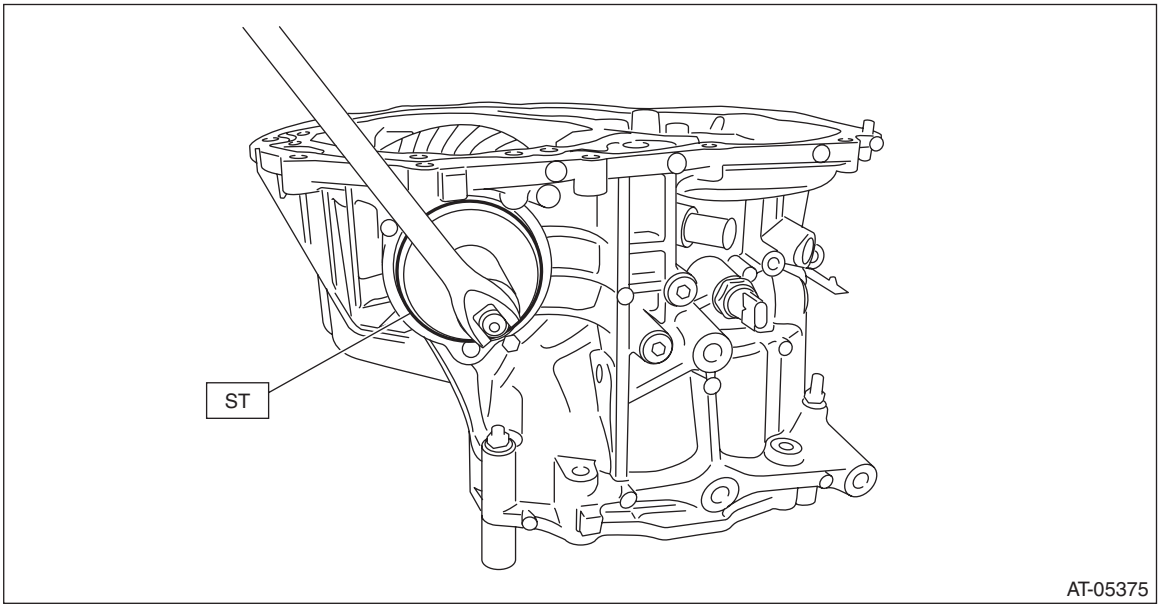

3) Adjust the backlash of the front differential. <Ref. to CVT-277, ADJUSTMENT, Front Differential Assembly.>
4) Inspect and adjust the tooth contact. <Ref. to CVT-256, ADJUSTMENT, Drive Pinion Shaft Assembly.>
5) Remove the differential side retainers and install the O-rings and oil seals. <Ref. to CVT-276, SIDE RETAINER, ASSEMBLY, Front Differential Assembly.>

NOTE:
- Record how many turns were needed to remove.
- Use new O-rings and oil seals.

6) Install the differential side retainers using ST.

NOTE:
When attaching, turn the differential side retainer by the same number of turns it took to remove, and align the marks.
ST 18658AA020 WRENCH COMPL RETAINER
7) Install the lock plate.

Tightening torque:
25 N·m (2.5 kgf-m, 18.4 ft-lb)

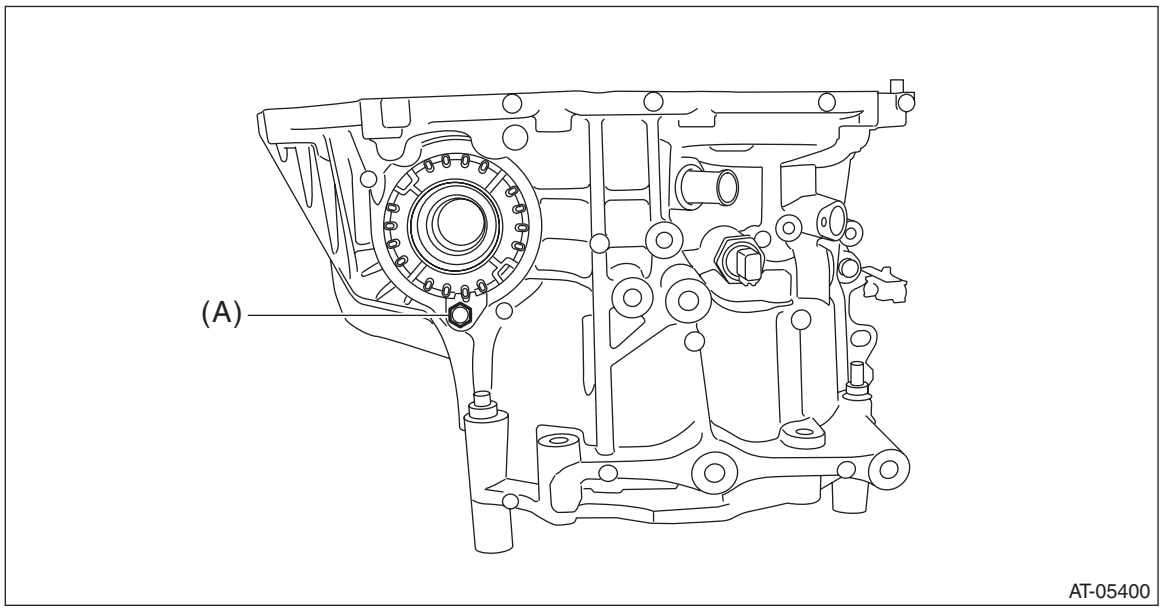

(A) Lock plate

8) Install the drive pinion shaft assembly. <Ref. to CVT-244, INSTALLATION, Drive Pinion Shaft Assembly.>
9) Install the primary pulley, secondary pulley and variator chain. <Ref. to CVT-230, INSTALLATION, Primary Pulley and Secondary Pulley.>
10) Install the transmission case. <Ref. to CVT-213, INSTALLATION, Transmission Case.>
11) Install the forward clutch assembly. <Ref. to CVT-181, INSTALLATION, Forward Clutch Assembly.>
12) Install the intermediate case. <Ref. to CVT-166, INSTALLATION, Intermediate Case.>
13) Install the transfer reduction driven gear assembly. <Ref. to CVT-158, INSTALLATION, Transfer Reduction Driven Gear.>
14) Install the transfer clutch assembly. <Ref. to CVT-147, INSTALLATION, Transfer Clutch.>
15) Install the rear drive shaft. <Ref. to CVT-141, INSTALLATION, Rear Drive Shaft.>
16) Install the extension case. <Ref. to CVT-138, INSTALLATION, Extension Case.>
17) Install the transmission harness. <Ref. to CVT-123, INSTALLATION, Transmission Harness.>
18) Install the control valve body and oil pan. <Ref. to CVT-115, INSTALLATION, Control Valve Body.>
19) Install the air breather hose. <Ref. to CVT-132, INSTALLATION, Air Breather Hose.>
20) Install the transmission assembly to the vehicle. <Ref. to CVT-70, INSTALLATION, Automatic Transmission Assembly.>

C: DISASSEMBLY

1. DIFFERENTIAL CASE ASSEMBLY

1) Remove the taper roller bearing using the ST.
ST 498077000 REMOVER

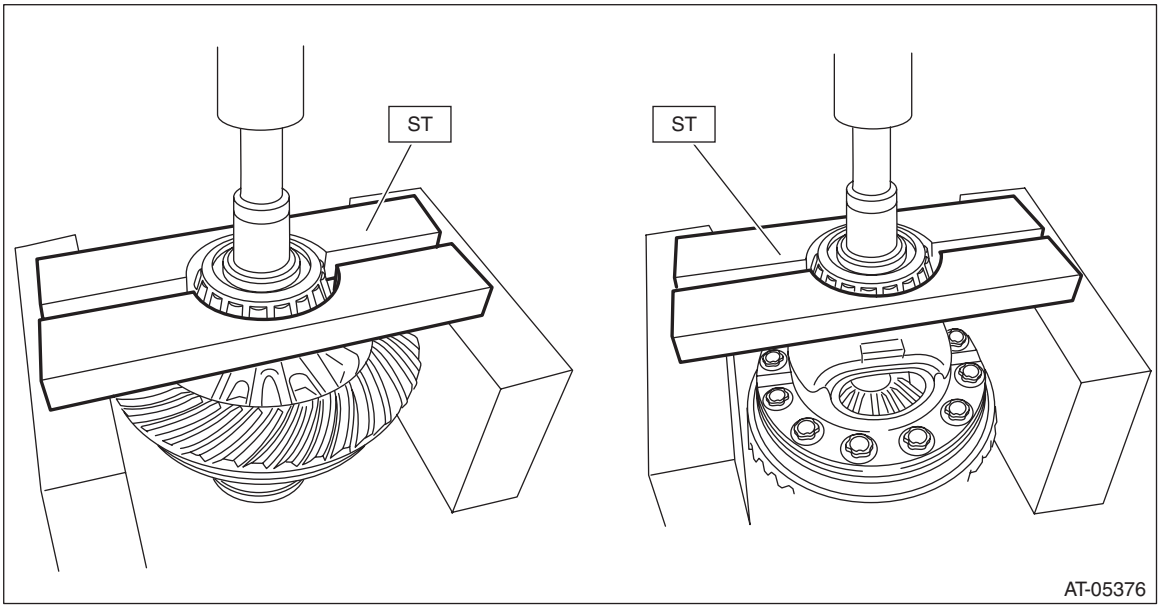

2) Remove the hypoid driven gear mounting bolt using the ST.
ST 18270KA020 SOCKET (E20)

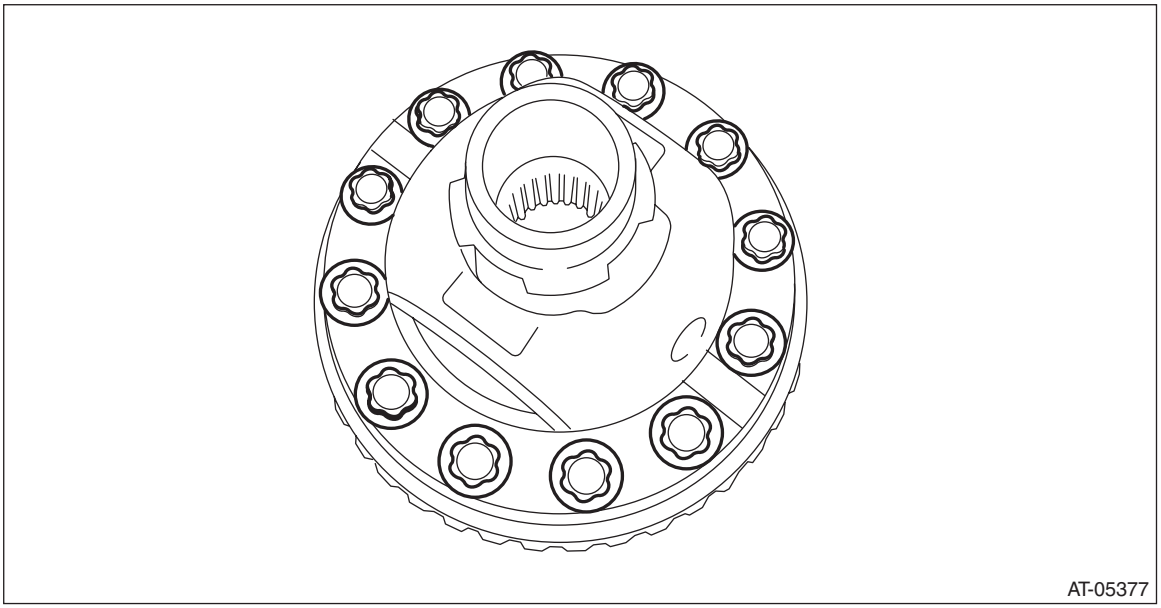

3) Remove the differential case (LH).

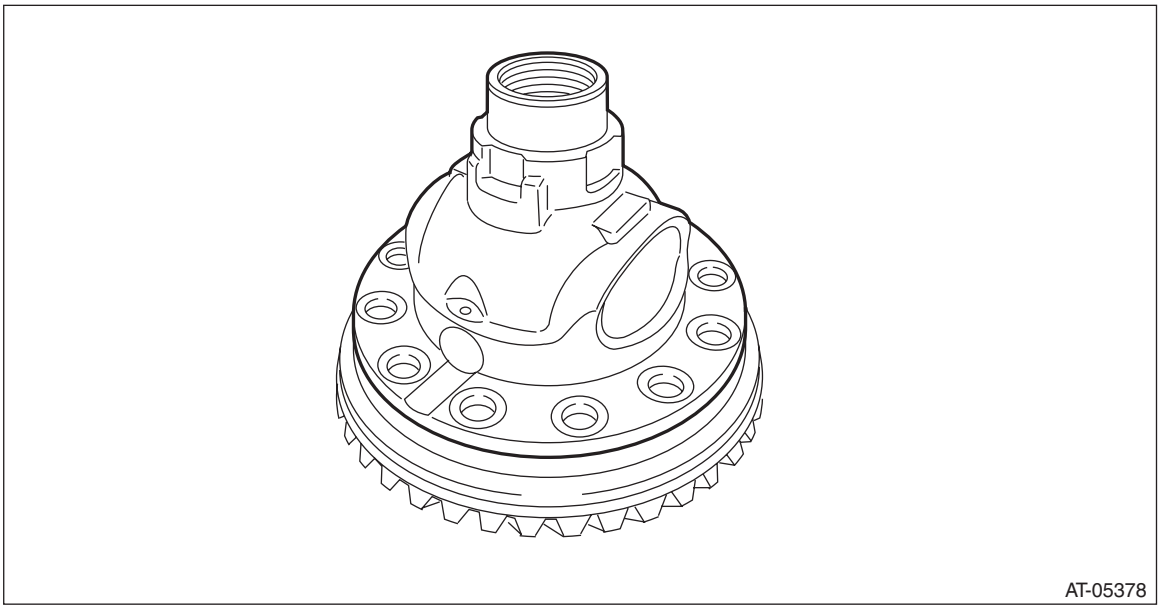

4) Remove the differential bevel gear and washer from differential case.

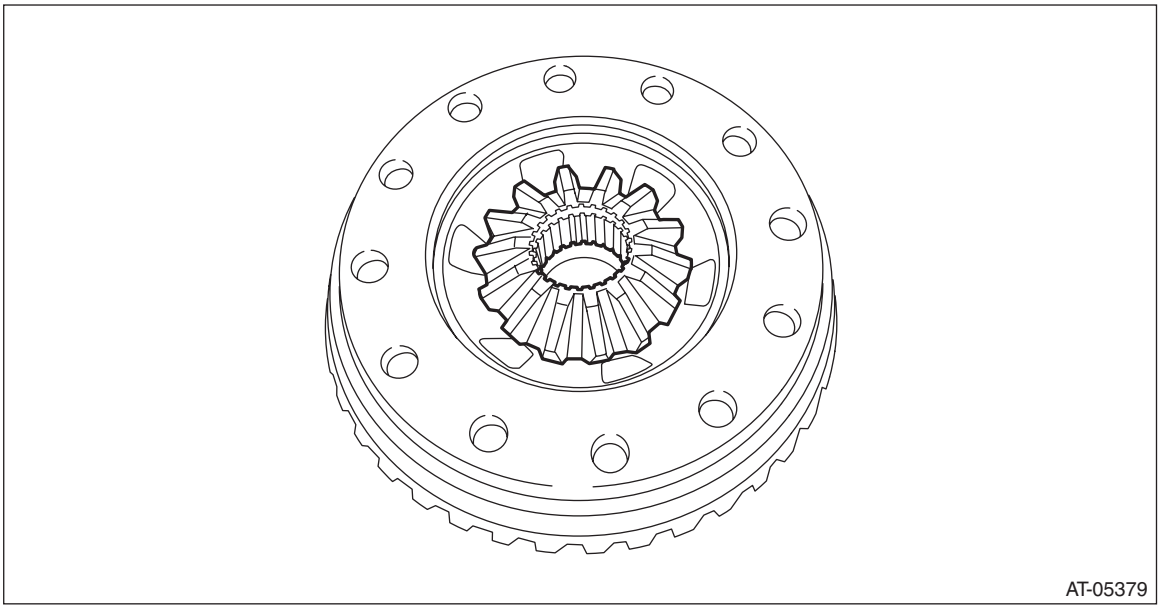

5) Remove the straight pin.

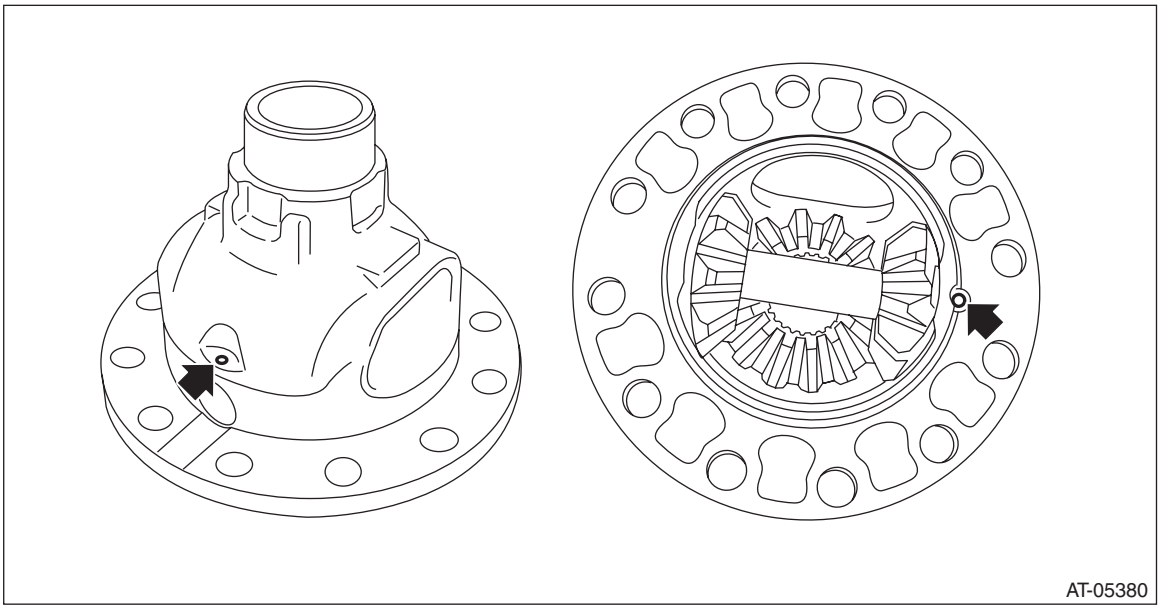

6) Remove the pinion shaft, then remove the differential bevel gear, washer and differential bevel pinion.

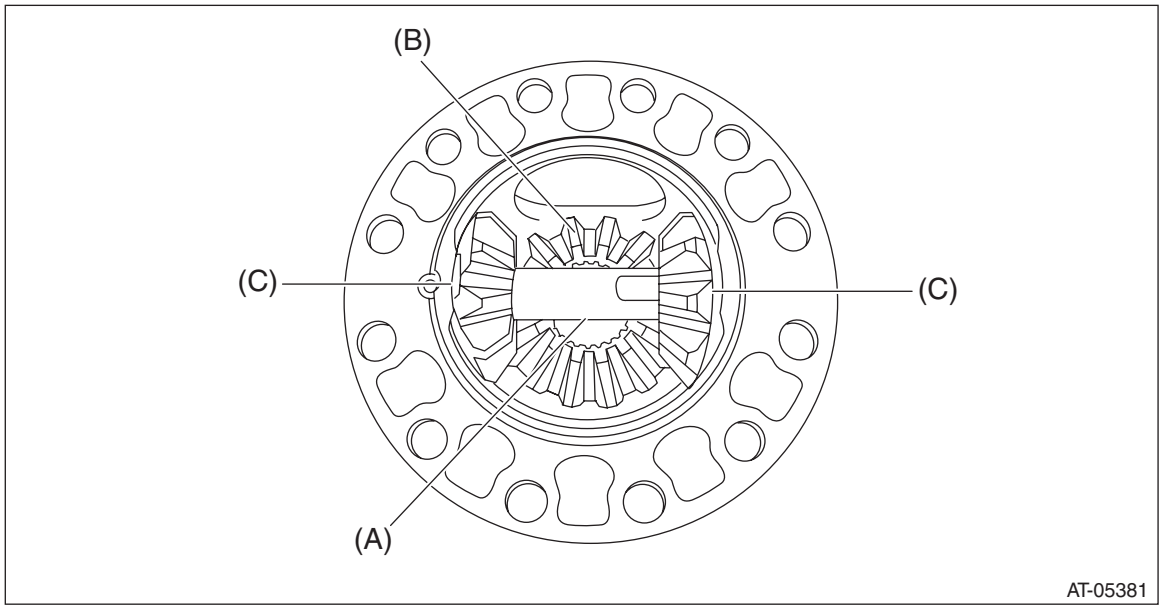

(A) Pinion shaft
(B) Differential bevel gear
(C) Differential bevel pinion

2. SIDE RETAINER

NOTE:
After adjusting the drive pinion backlash and tooth contact, replace the oil seal and O-ring with new parts.
1) Remove the O-ring.

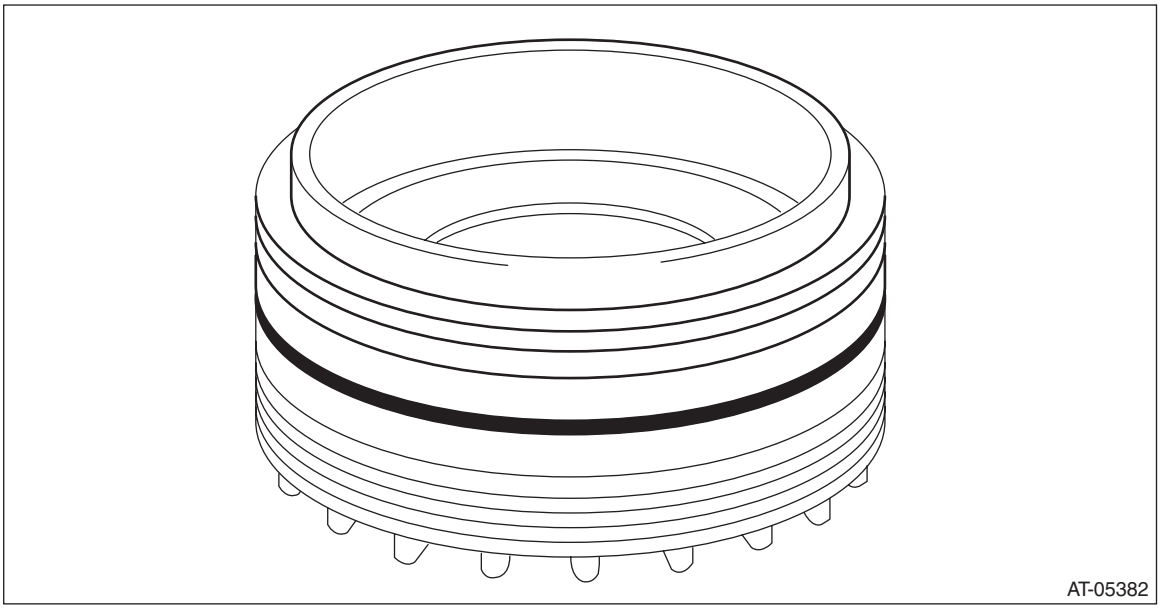

2) Remove the oil seal.

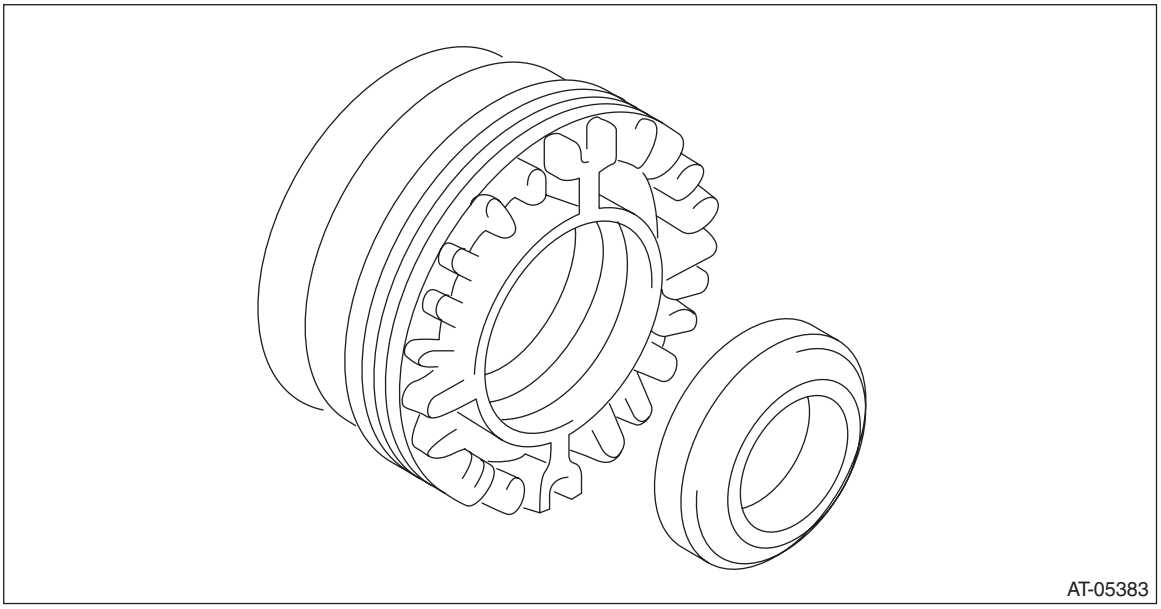

3) Remove the split pin (ST), and then remove the claw.
ST 398527700 PULLER ASSY

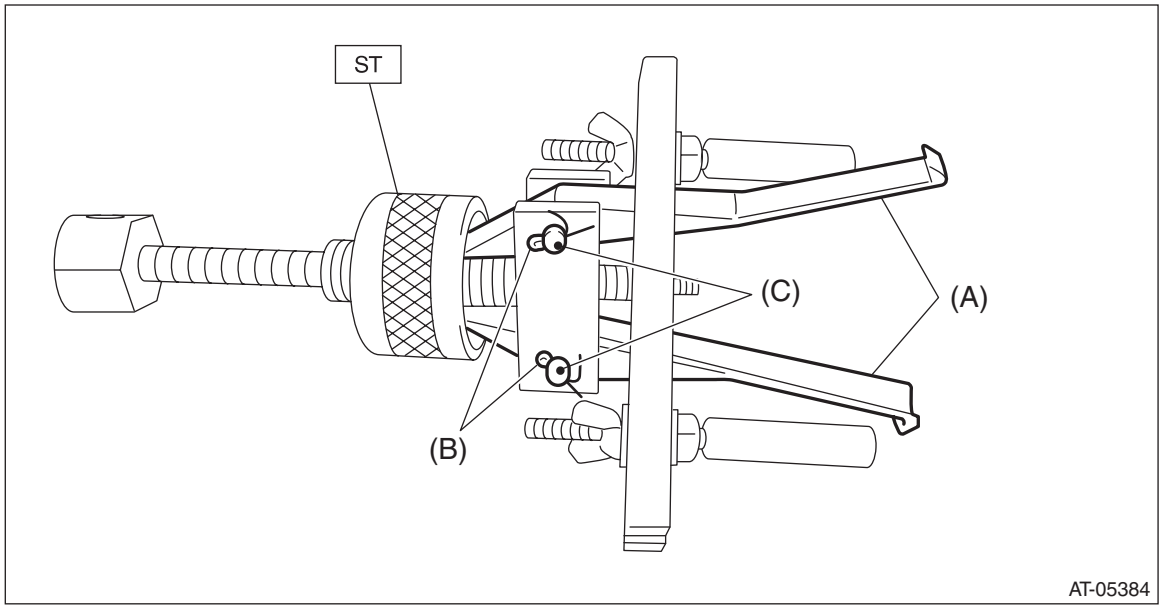

(A) Claw
(B) Split pin
(C) Pin

4) Attach two claws to the outer race, and set the ST to side retainer.
ST 398527700 PULLER ASSY

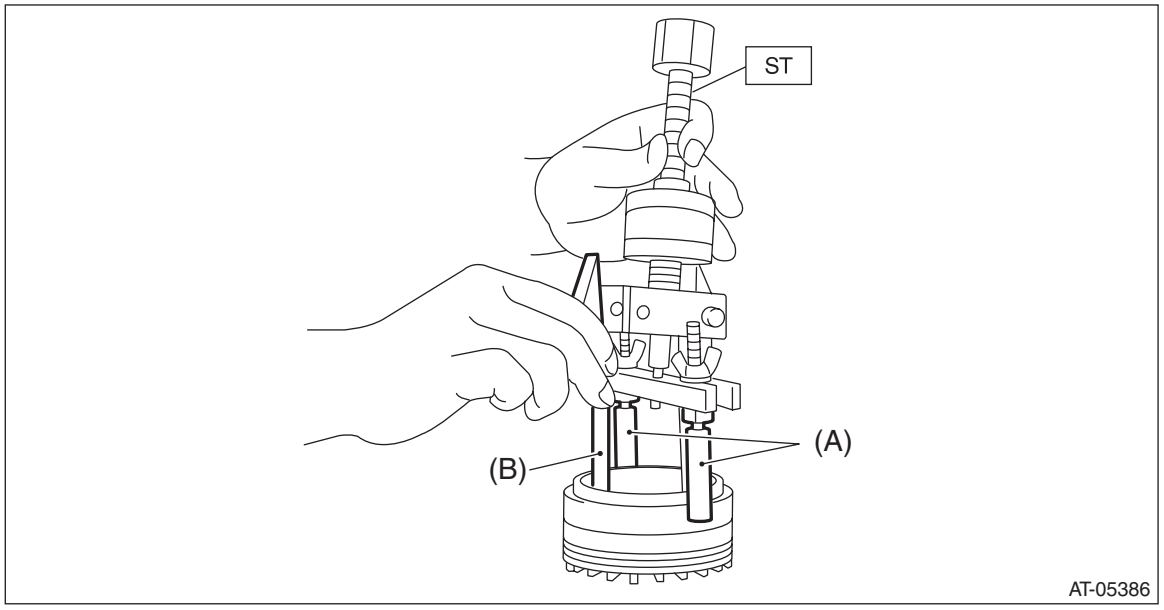

(A) Shaft
(B) Claw

5) Restore the removed claws to original position, and install the pin and split pin.

6) Hold the shaft of ST to avoid removing from side retainer, and then remove the bearing outer race.
ST 398527700 PULLER ASSY

NOTE:
Replace the bearing inner and outer races as a single unit.

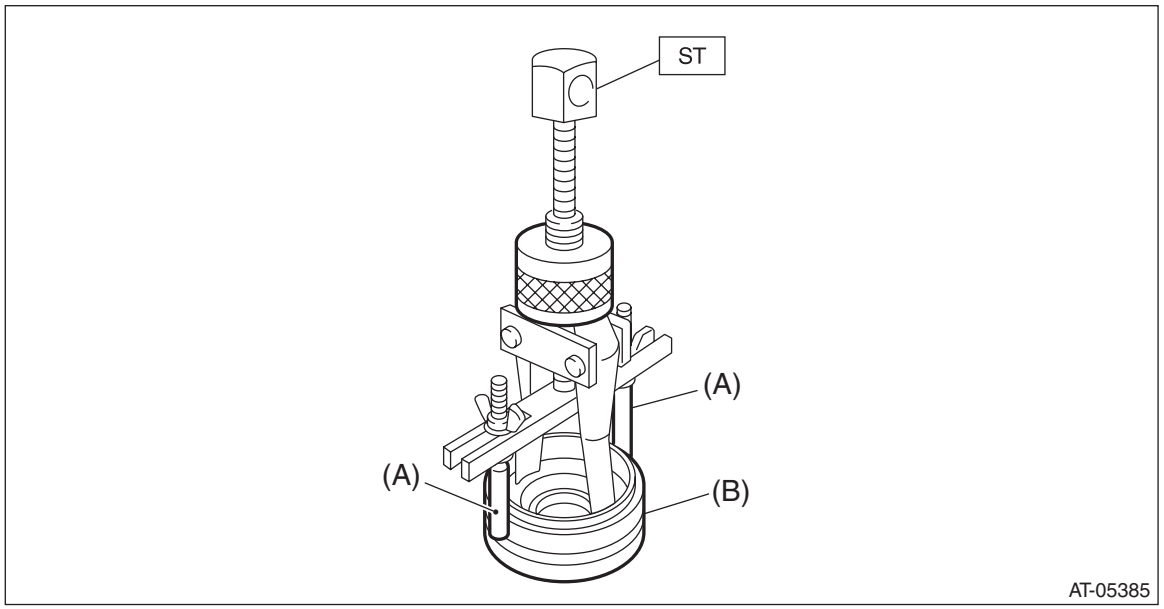

(A) Shaft
(B) Side retainer

D: ASSEMBLY

1. DIFFERENTIAL CASE ASSY

1) Install the washer and differential bevel gear into differential case (LH).

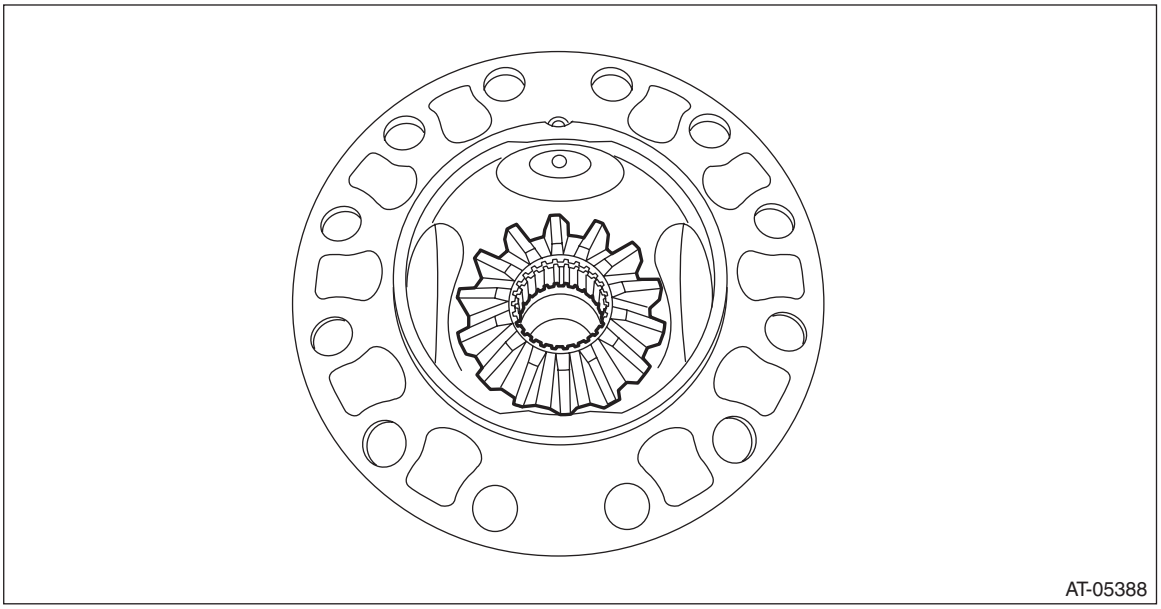

2) Install the differential bevel gear pinions into differential case (LH) and install the pinion shaft.

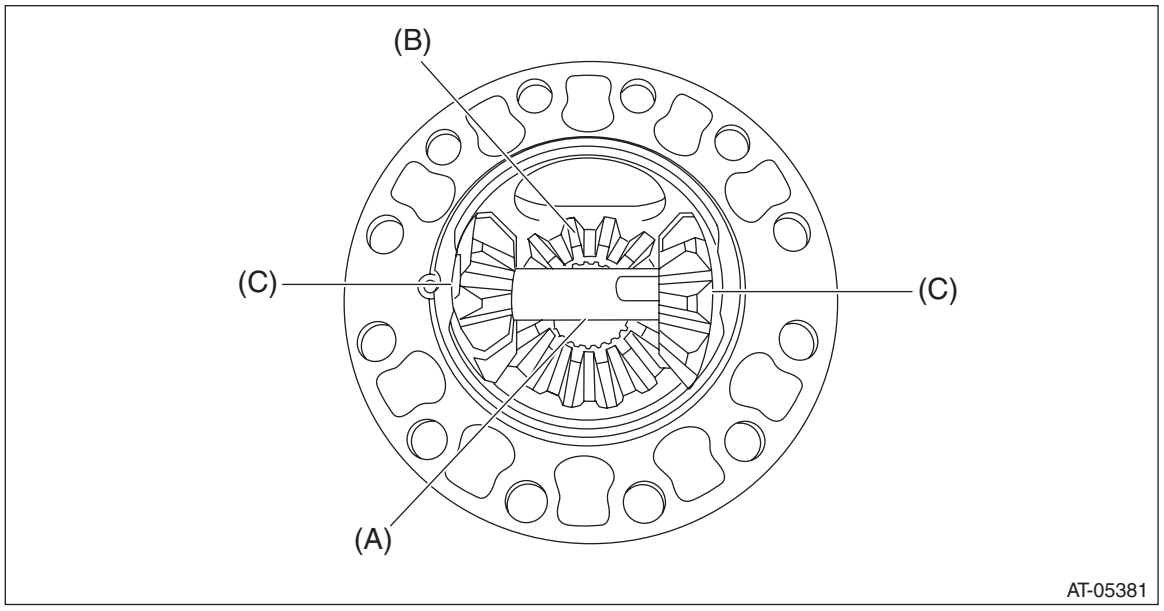

(A) Pinion shaft
(B) Differential bevel gear
(C) Differential bevel pinion

3) Install the straight pin.

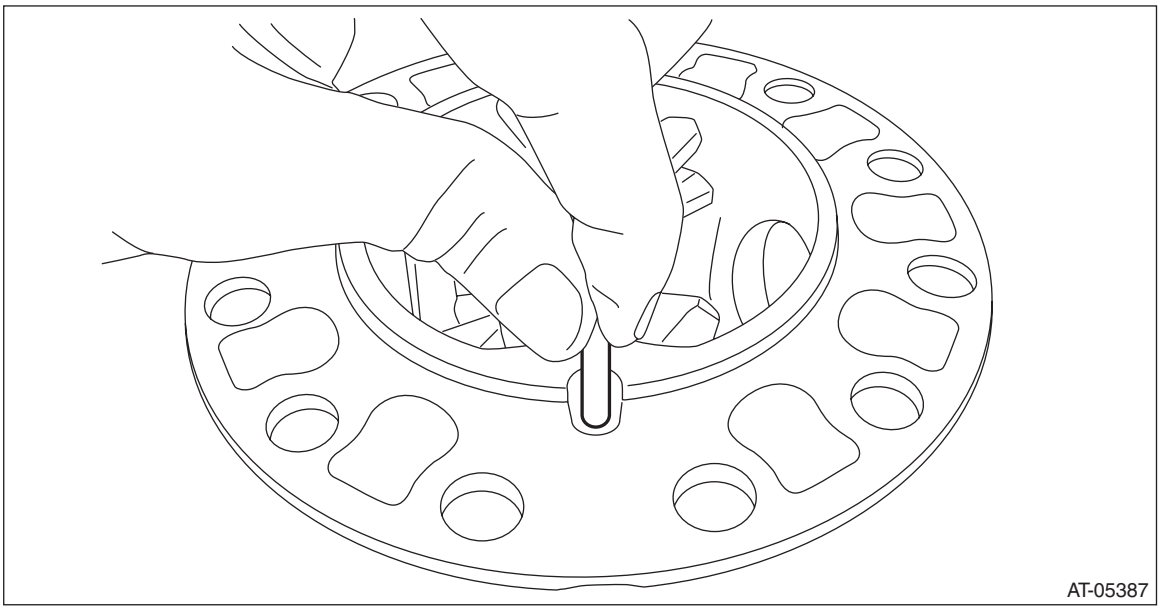

4) Install the differential case (RH) to hypoid driven gear and secure with vise.

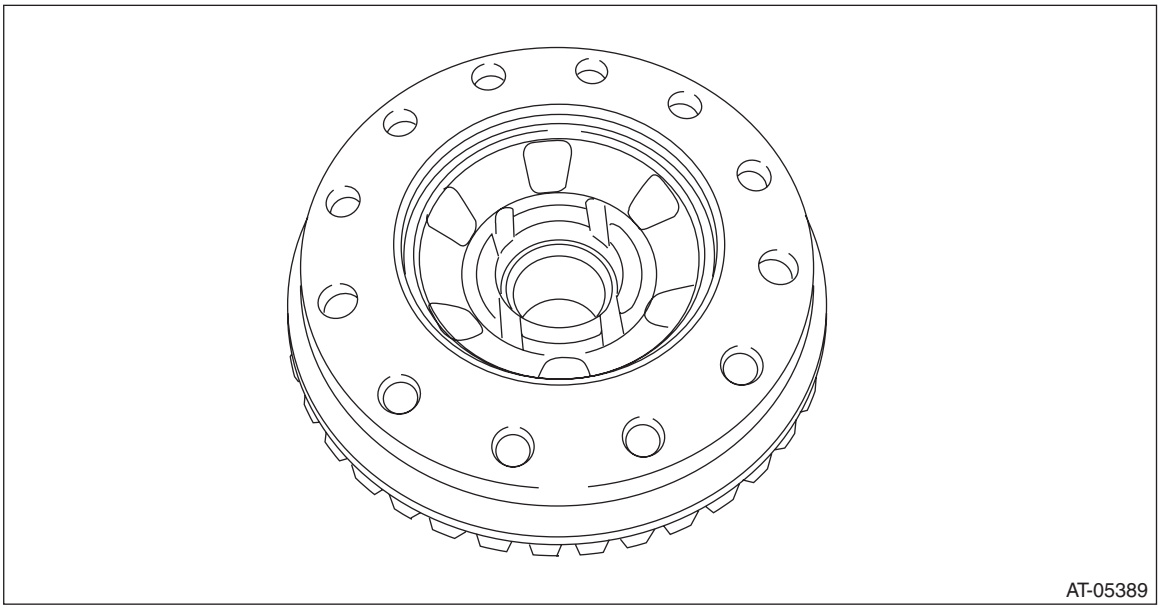

5) Install the washer and differential bevel gear to the differential case (RH).

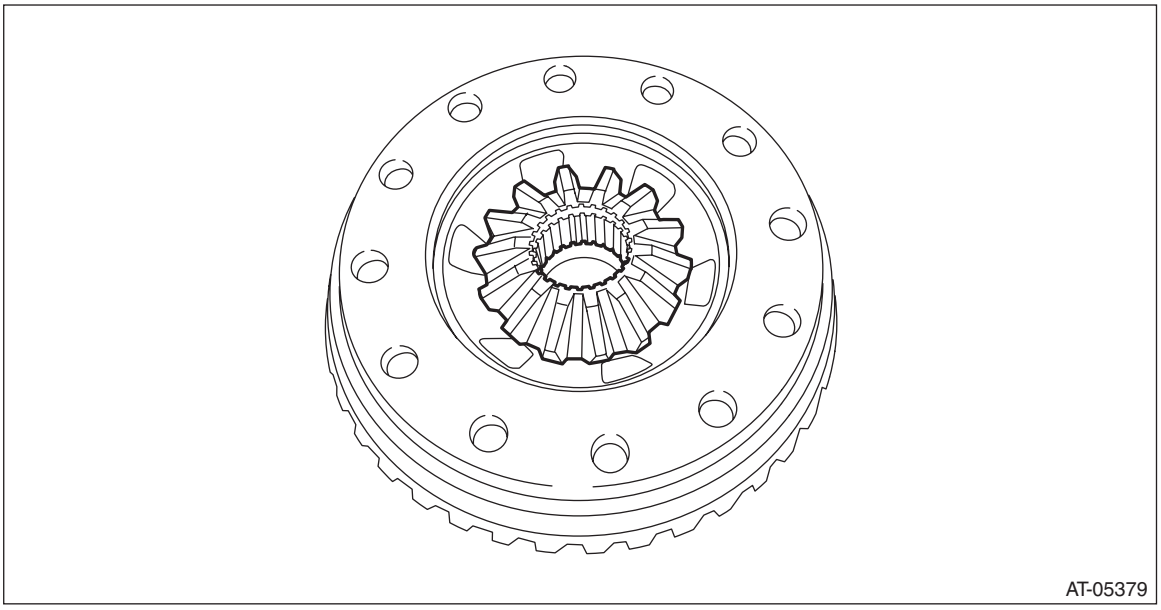

6) Using the ST, install the hypoid driven gear by tightening the installation bolt.
ST 18270KA020 SOCKET (E20)

Tightening torque:
20 N·m (2.0 kgf-m, 14.8 ft-lb)

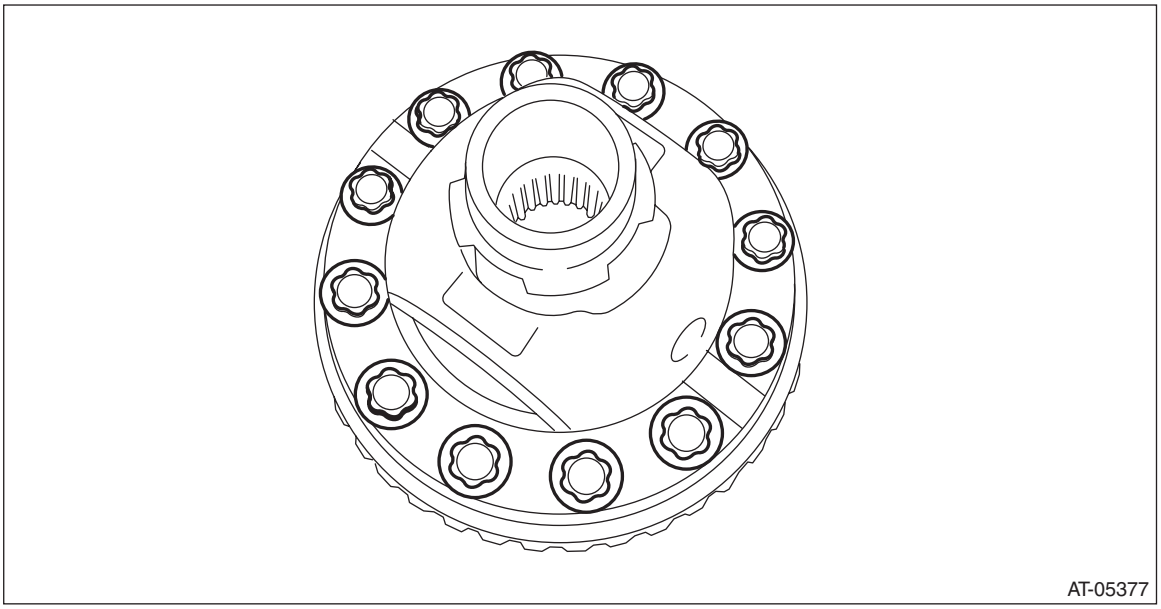

7) While checking the tightening angle with the ST, further tighten the hypoid driven gear mounting bolts.

Tightening angle:
28°±2°
ST 18554AA000 ANGLE GAUGE
8) Measurement of backlash (Selection of washer)
(1) Install the SUBARU genuine axle shaft to differential case.
Part No. 38415AA070 Axle shaft
(2) Measure the gear backlash using ST1 and ST2, and then insert the ST2 through the window of differential case.
ST1 498247001 MAGNET BASE
ST2 498247100 DIAL GAUGE

NOTE:
• Measure the backlash by applying a differential bevel pinion tooth between two differential bevel gear teeth.
• When measuring, fix the differential bevel pinion gear in place with a screwdriver covered with cloth, or a similar tool.

Specification:
0.13 — 0.18 mm (0.0051 — 0.0071 in)

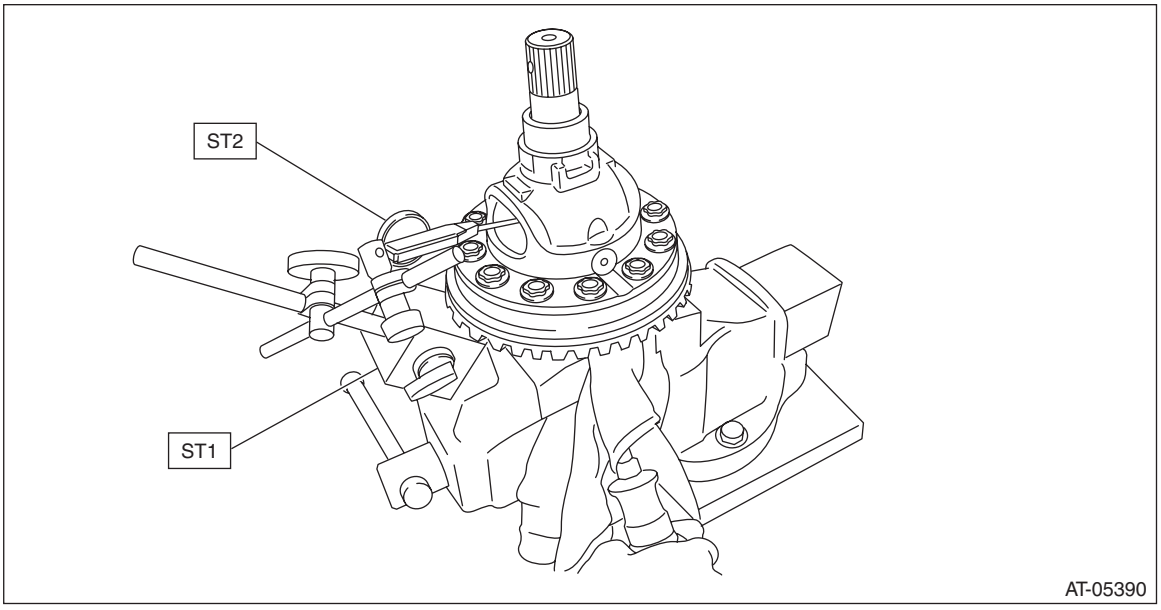

(3) If the backlash is not within specification, select a washer from the table below and replace.

Washer	
Part No.	Thickness mm (in)
803038021	0.95 (0.037)
803038022	1.00 (0.039)
803038023	1.05 (0.041)

9) Using the ST, install the left and right taper roller bearings.
ST1 499277100 BUSHING 1-2 INSTALLER
ST2 398497701 SEAT

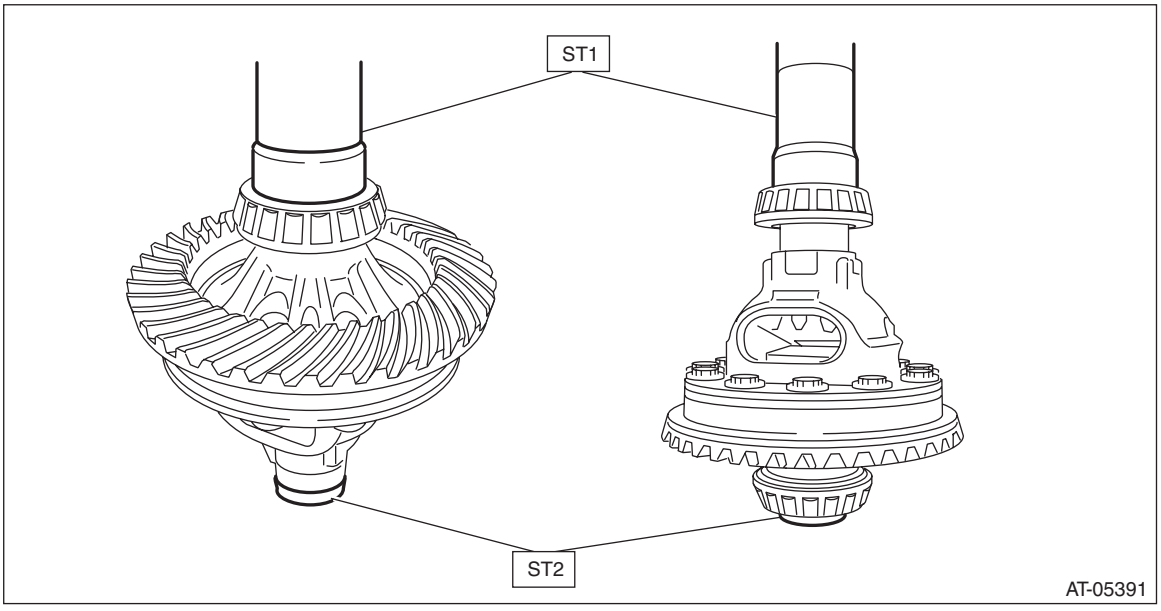

2. SIDE RETAINER

NOTE:
After adjusting the backlash and tooth contact, replace the oil seal and O-ring of side retainer with new parts.
1) Press-fit the bearing outer race to side retainer.
2) Using the ST, install the oil seal.

NOTE:
- Use a new oil seal.
- Apply differential oil to the oil seal lip.
- Oil seal has an identification mark (R, L). When installing oil seals, do not confuse the left and right.

ST 18675AA000 DIFFERENTIAL SIDE OIL SEAL INSTALLER

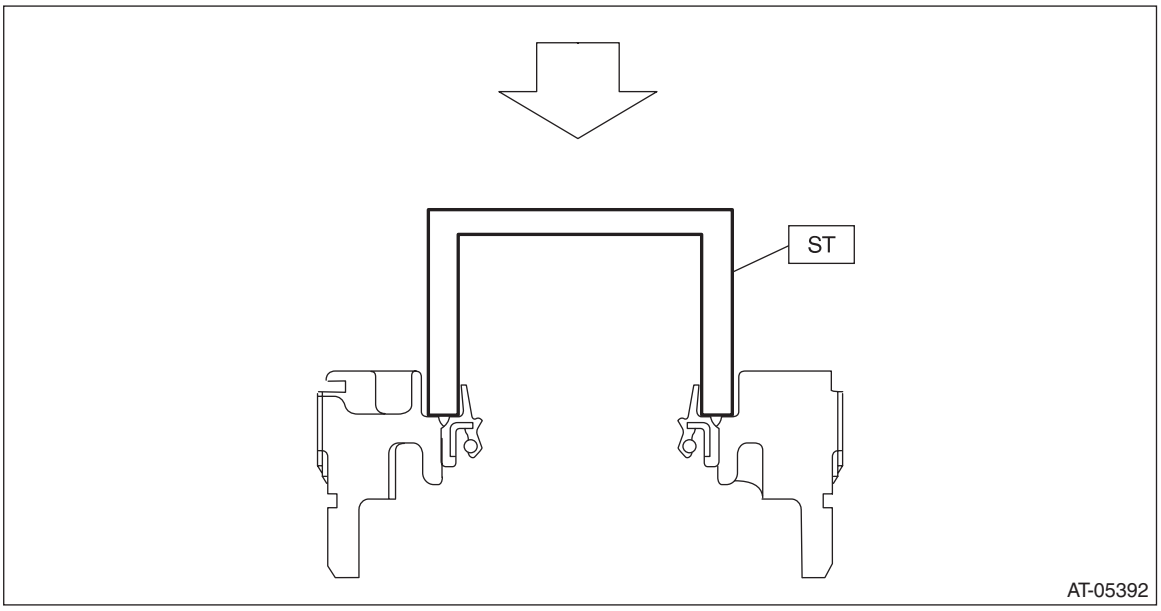

3) Install the O-ring.

NOTE:
- Use new O-rings.
- Apply CVTF to the O-ring.

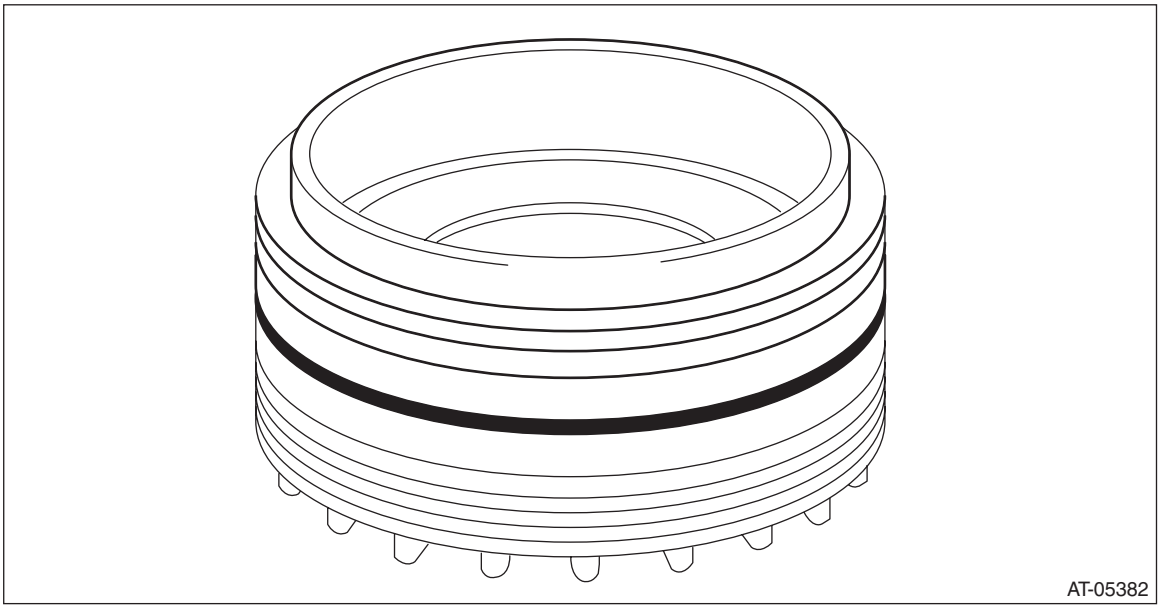

E: INSPECTION

- Check each component for scratches, damage or other faults.
- Inspect the backlash of the pinion gear.

Specification:
0.13 — 0.18 mm (0.0051 — 0.0071 in)

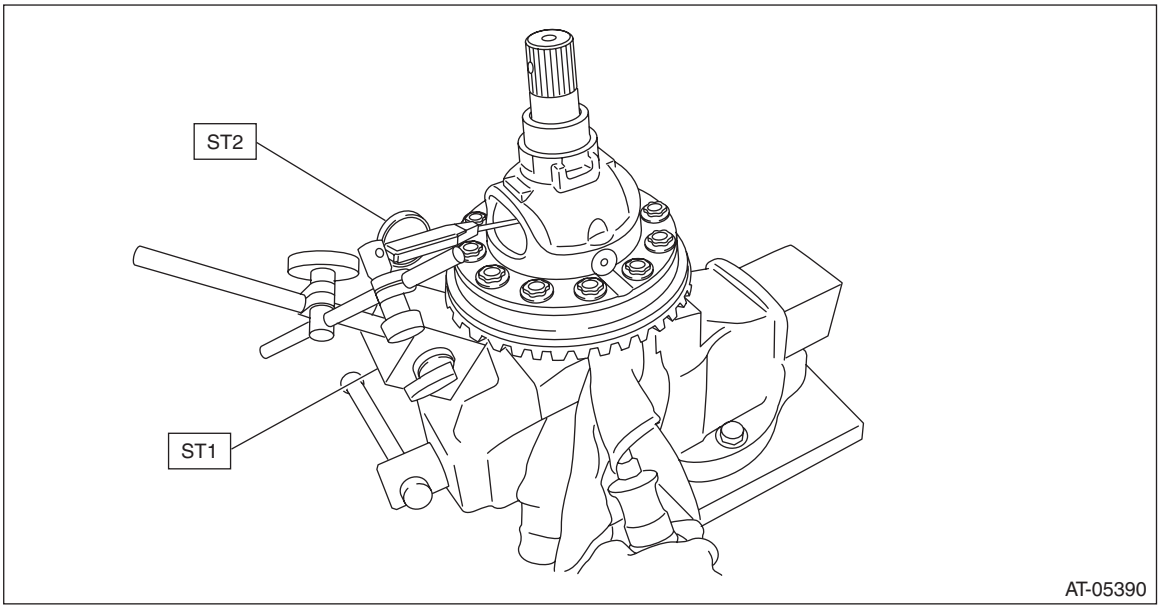

- Measure the hypoid gear backlash, and then adjust it to be within specification. <Ref. to CVT-277, ADJUSTMENT, Front Differential Assembly.>

F: ADJUSTMENT

1) Using the ST, screw-in the retainer until resistance is felt.

NOTE:
RH side should be screwed-in more than LH side.
ST 18658AA020 WRENCH COMPL RETAINER

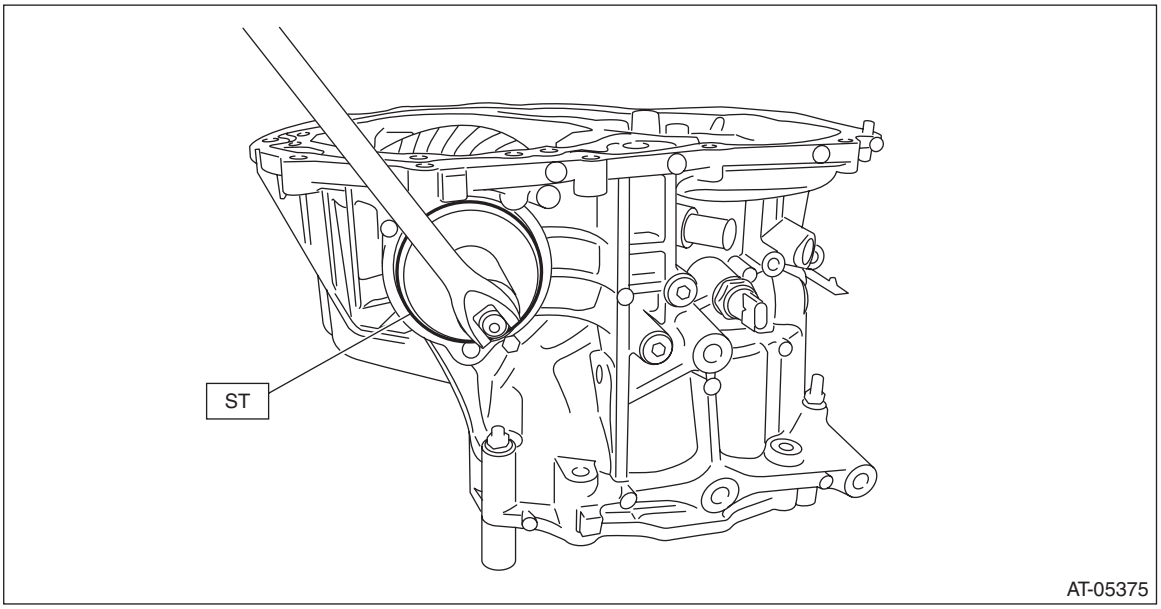

2) Remove the remaining liquid gasket from the mating surface completely.
3) Using the ST, install the drive pinion assembly to converter case.
ST1 18270KA020 SOCKET (E20)

NOTE:
Do not confuse the three different-length bolts when installing.

Tightening torque:
43 N·m (4.4 kgf-m, 31.7 ft-lb)

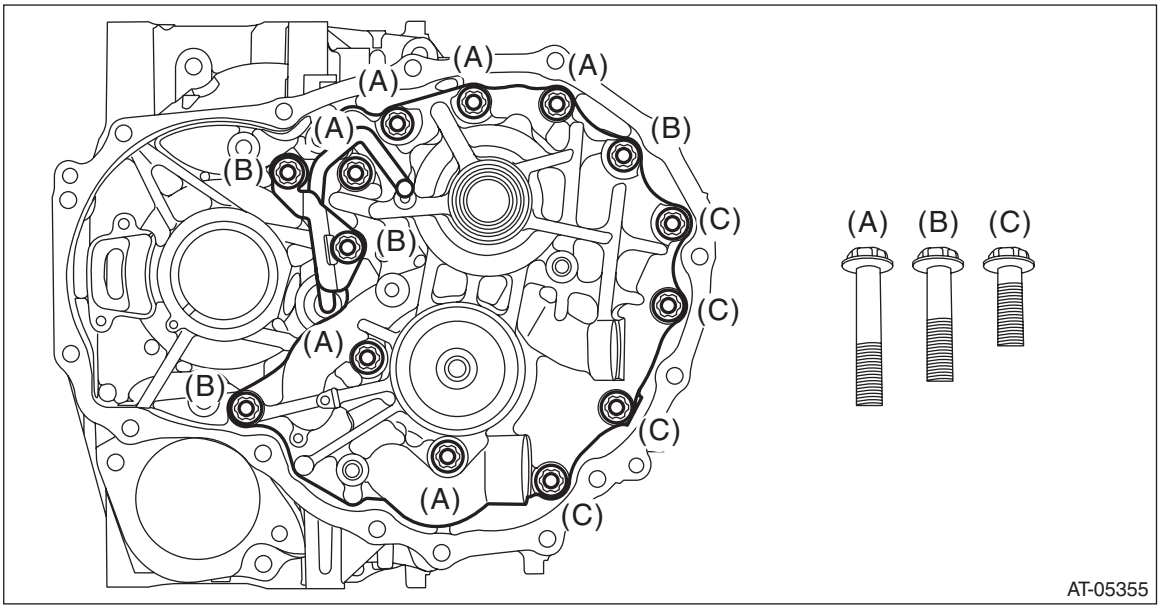

4) Rotate the drive pinion shaft more than ten times using ST1 and ST2.
ST1 18667AA010 HOLDER
ST2 499787700 WRENCH

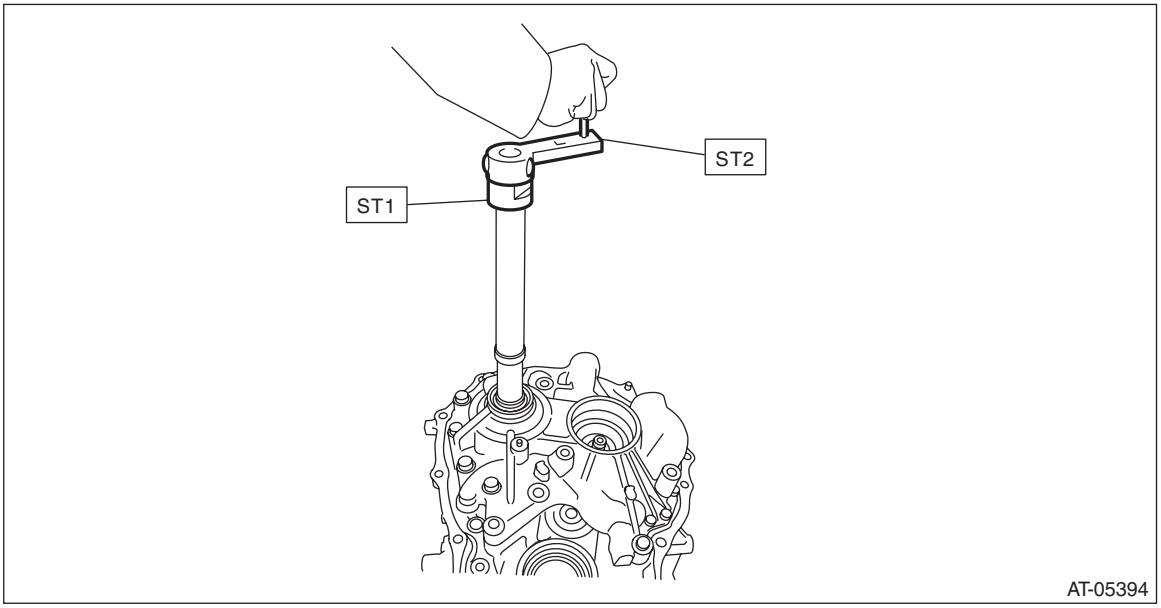

5) While rotating the pinion shaft, keep tightening the retainer LH, and loosening the retainer RH until the pinion shaft no longer be turned. When pinion shaft no longer turns, backlash is “zero”.

6) After the “zero” state is established, loosen the retainer LH by 3 notches and secure it with the lock plate. Loosen the retainer RH and retighten until it stops. Rotate the drive pinion 2 or 3 times. Tighten the retainer RH further 1-3/4 notches. This sets the preload. Finally, secure the retainer with its lock plate.

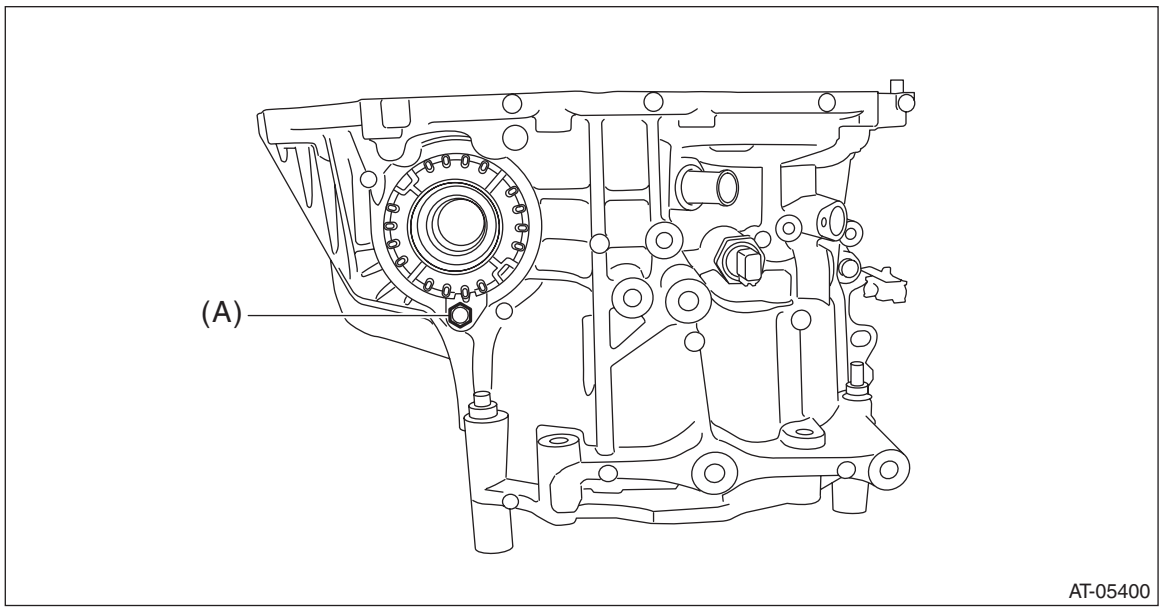

(A) Lock plate

NOTE:
Turning the retainer by every one tooth changes the backlash approx. 0.05 mm (0.0020 in).

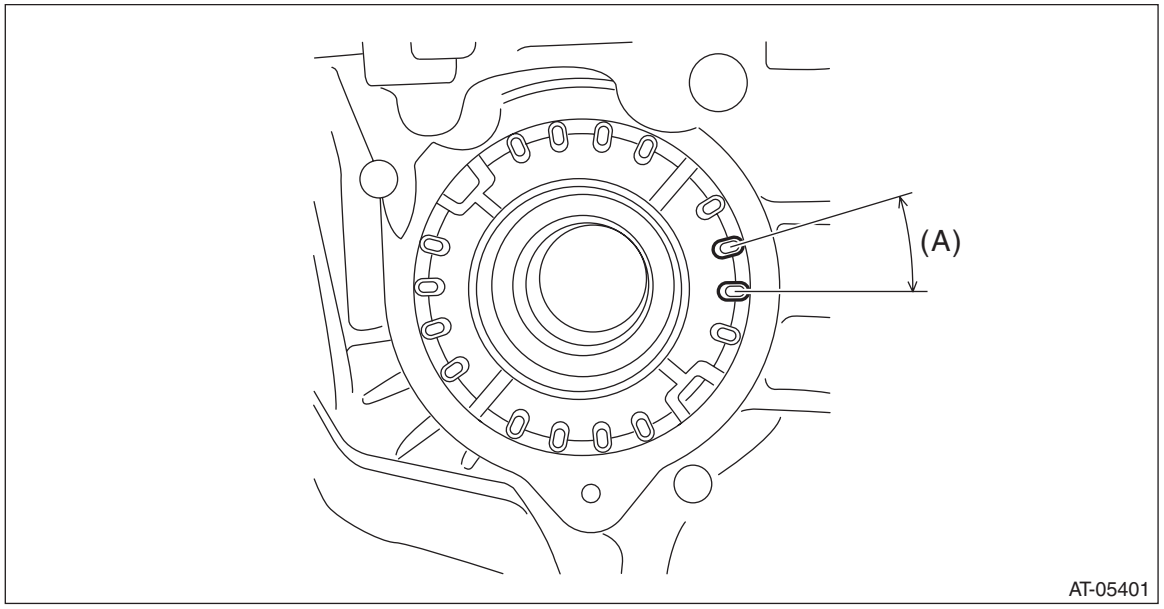

(A) 1 tooth

7) Insert the two SUBARU genuine axle shafts into differential case.
Part No. 38415AA070 Axle shaft

8) Wrap the drive shaft pinion shaft with cloth and pinch with vise pliers. Install the installation bolt into the bolt hole of secondary pulley and secure the bolt and vise pliers using a band or wire.
Make sure the drive pinion shaft does not move.

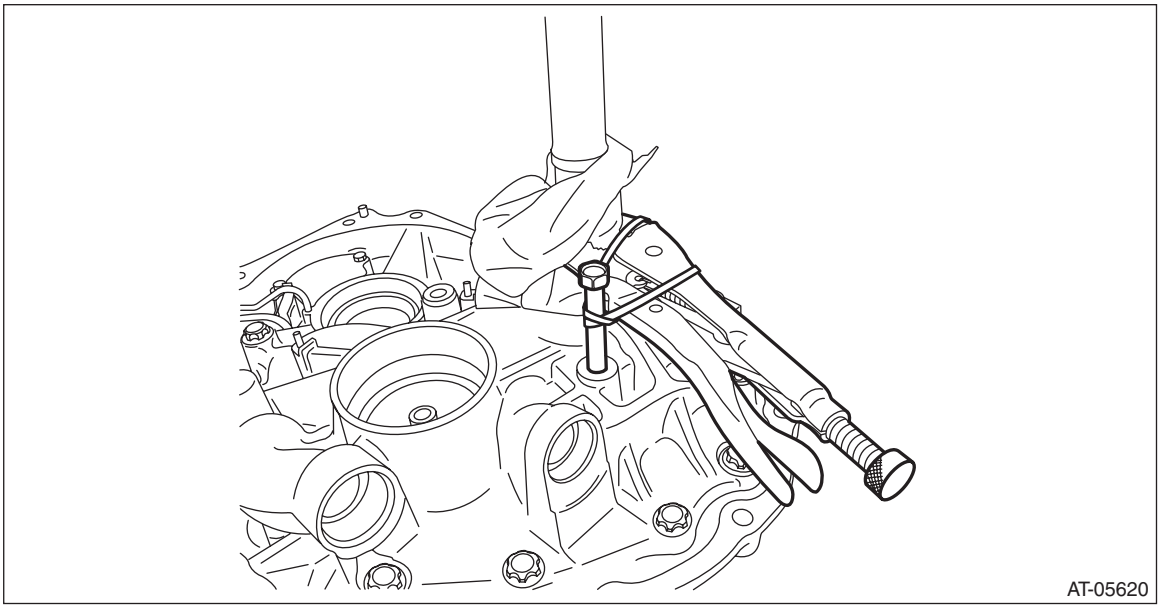

9) Check the backlash is within specification using ST1, ST2 and ST3.
ST1 498255400 PLATE
ST2 498247001 MAGNET BASE
ST3 498247100 DIAL GAUGE

Backlash:
0.13 — 0.18 mm (0.005 — 0.007 in)

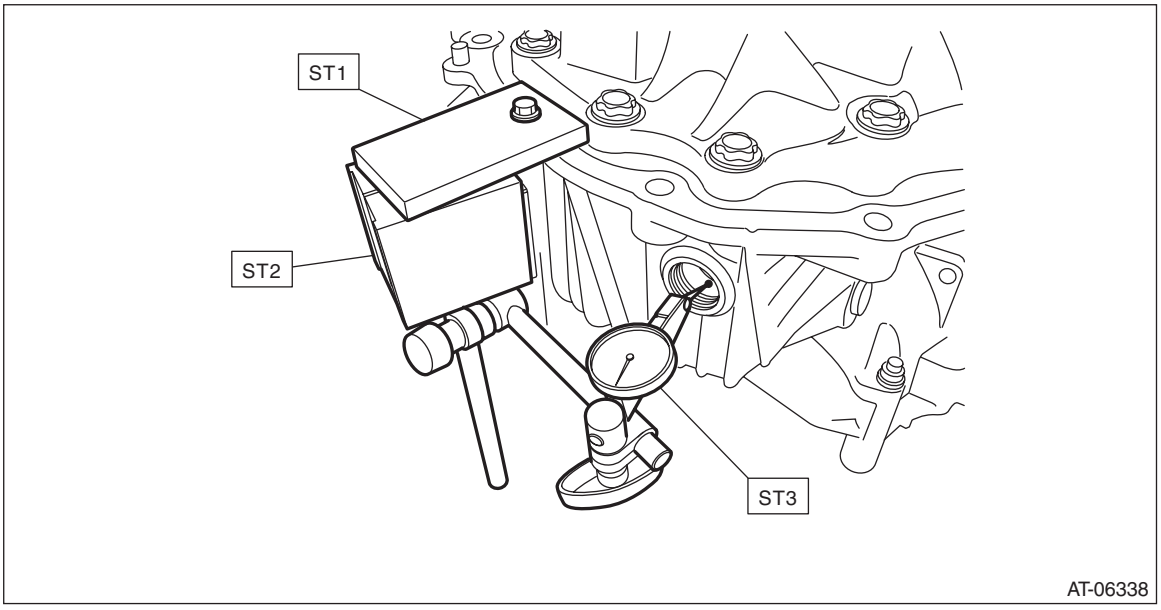

10) Adjust the teeth contact of the front differential and drive shaft. <Ref. to CVT-256, ADJUSTMENT, Drive Pinion Shaft Assembly.>

44.Oil Pump

A: REMOVAL

NOTE:
Refer to “Drive Pinion Shaft” for removal procedures. <Ref. to CVT-242, REMOVAL, Drive Pinion Shaft Assembly.>

B: INSTALLATION

NOTE:
Refer to “Drive Pinion Shaft” for removal procedures. <Ref. to CVT-244, INSTALLATION, Drive Pinion Shaft Assembly.>

C: INSPECTION

Check the following items.
- Check the oil pump for damage and wear.
- Rotate the oil pump by hand, and check that it rotates smoothly.

1) Measure the secondary pressure. <Ref. to CVT-50, INSPECTION, Secondary Pressure (Line Pressure) Test.>
2) If the secondary pressure is abnormal, remove the oil pan and oil strainer. <Ref. to CVT-111, REMOVAL, Control Valve Body.>
3) Check oil strainer for clogging.
When oil strainer has no clogging, replace the oil pump.

45.Oil Pump Chain

A: REMOVAL

1) Remove the transmission assembly from the vehicle. <Ref. to CVT-55, REMOVAL, Automatic Transmission Assembly.>
2) Remove the torque converter assembly. <Ref. to CVT-136, REMOVAL, Torque Converter Assembly.>
3) Remove the oil pump chain cover.

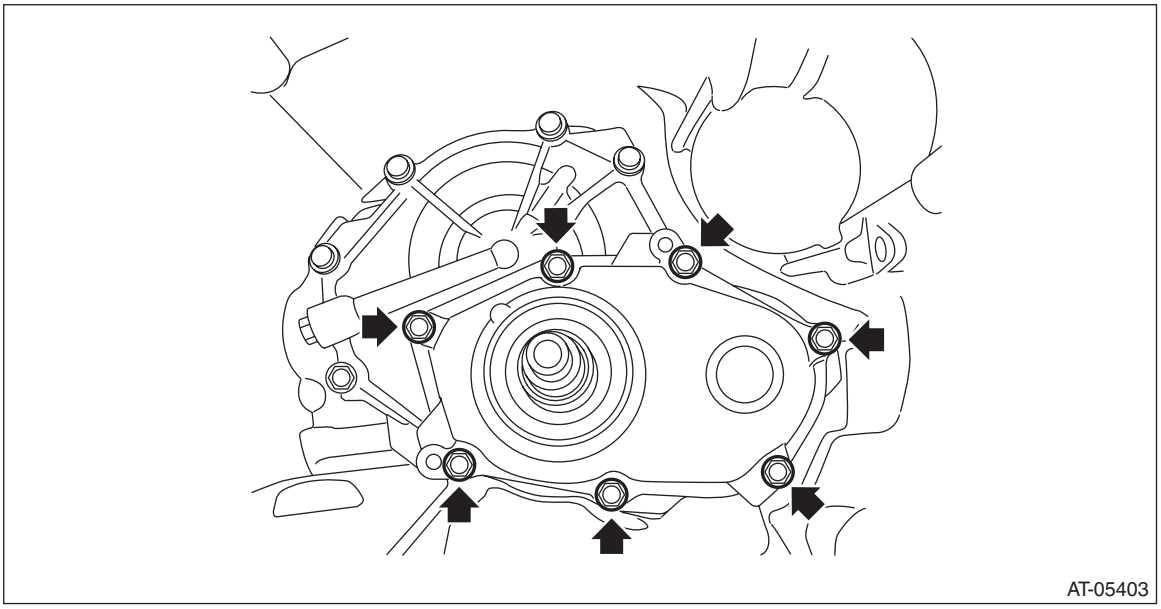

4) Remove the seal ring from center support COMPL.

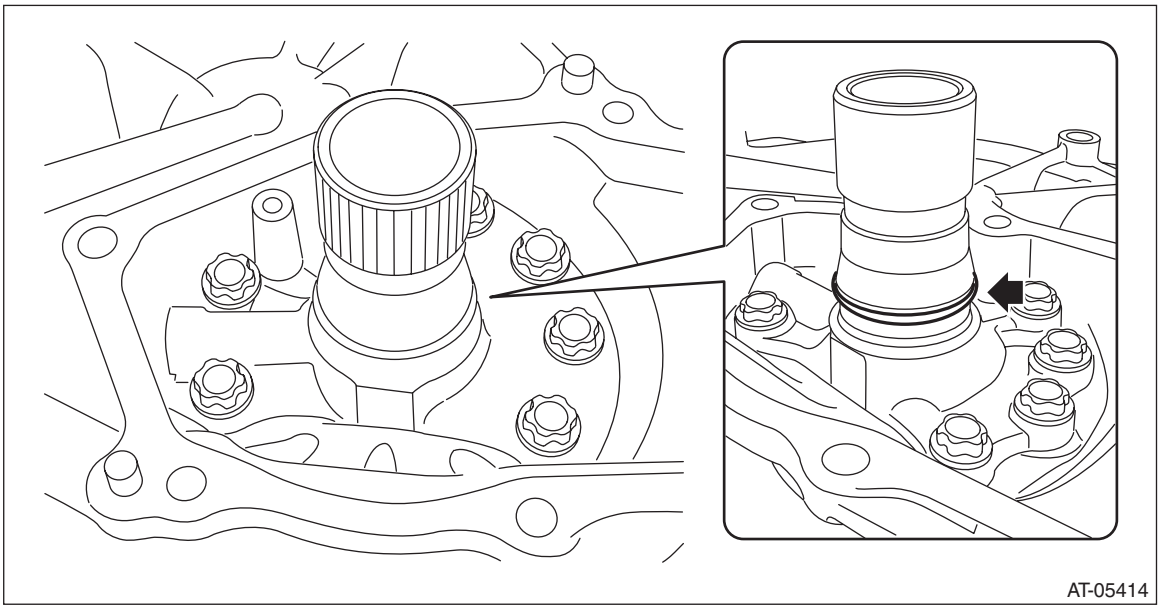

5) Remove the driven sprocket from oil pump chain cover to remove the oil pump chain.

NOTE:
The driven sprocket is replaced as an assembly only, because it is a non-disassembly part.

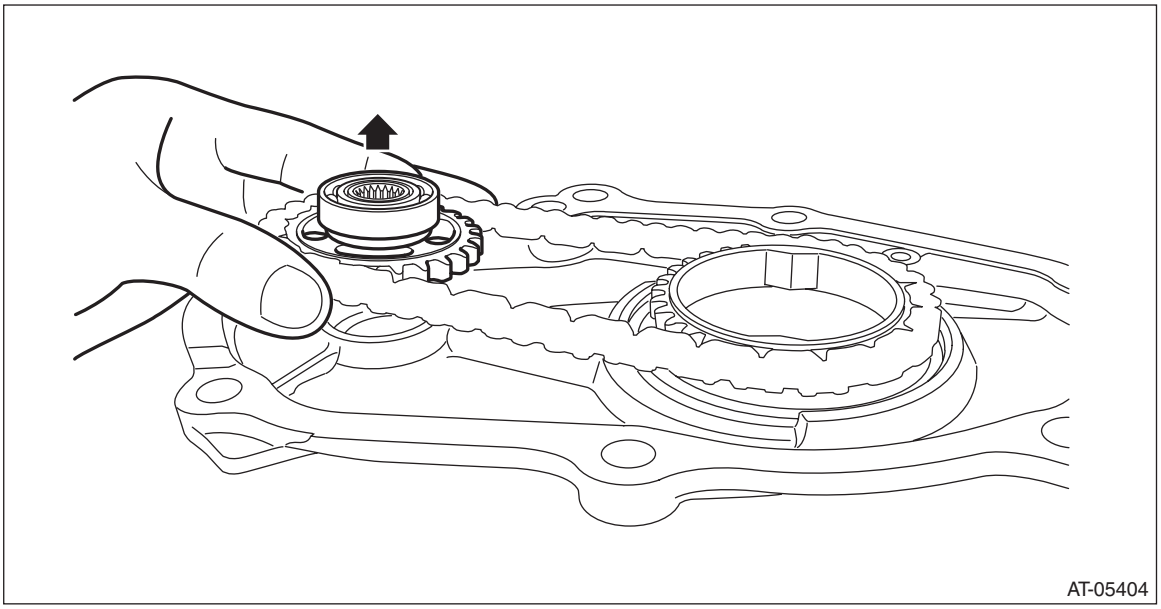

6) Remove the snap ring.

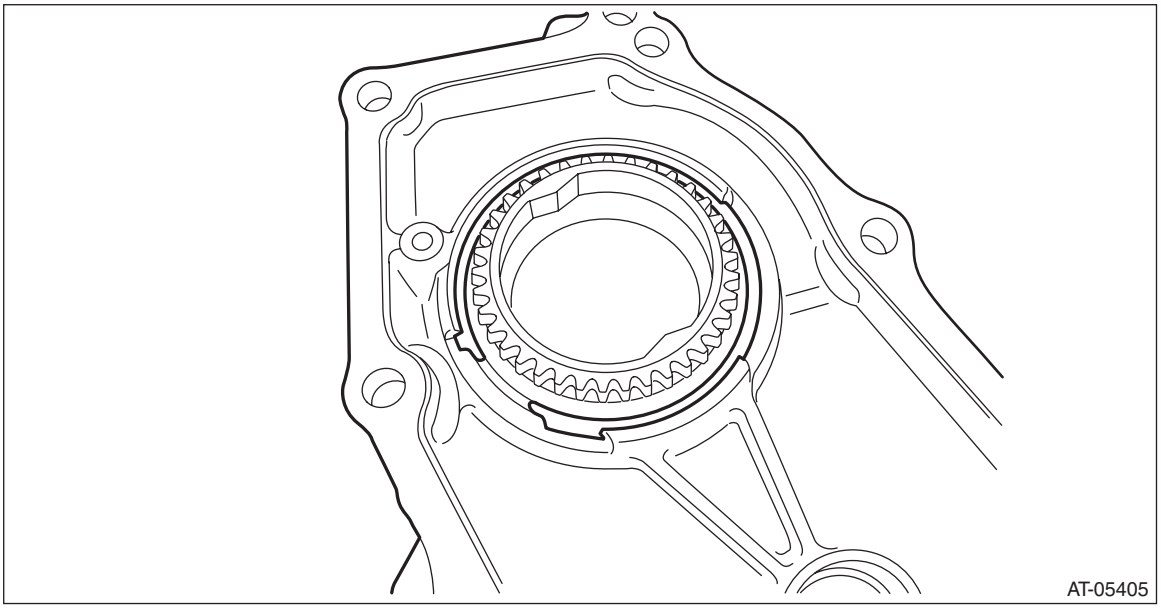

7) Remove the drive sprocket.

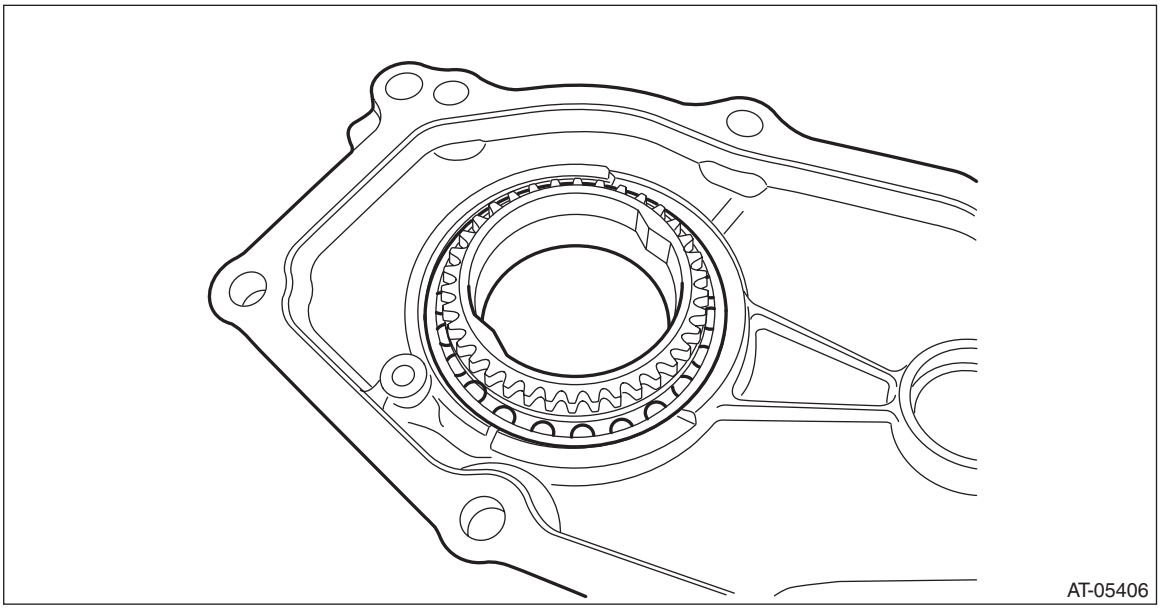

8) Remove the oil seal from the oil pump chain cover.

B: INSTALLATION

1) Clean the mating surface of oil pump chain cover and converter case cover.
2) Using the ST, install the oil seal.
ST 499755602 PRESS SNAP RING

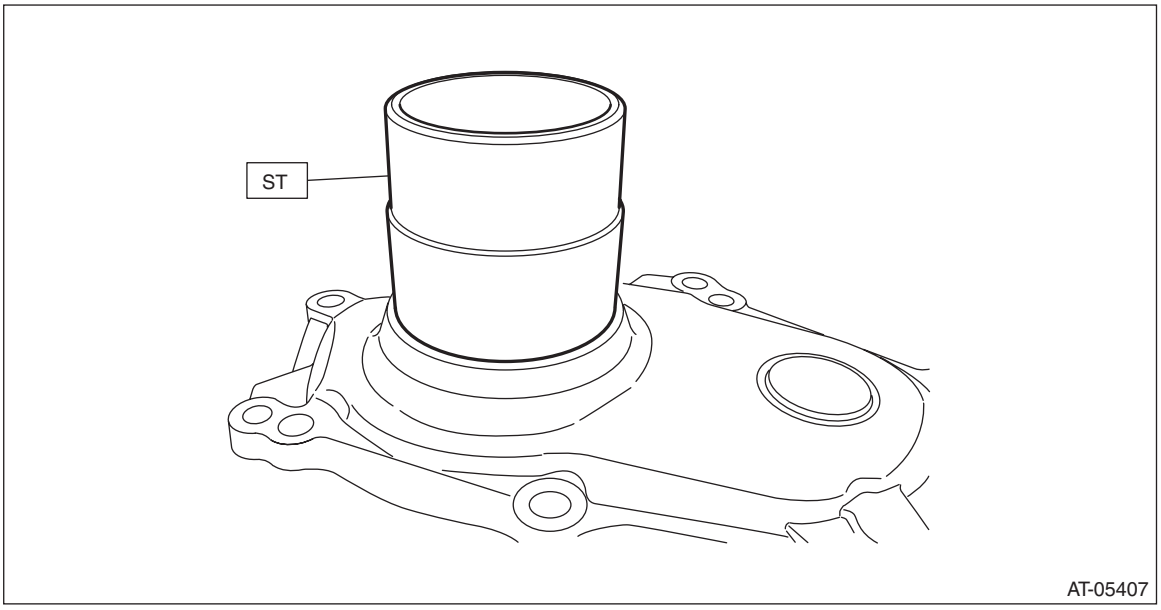

3) Install the drive sprocket and install the snap ring.

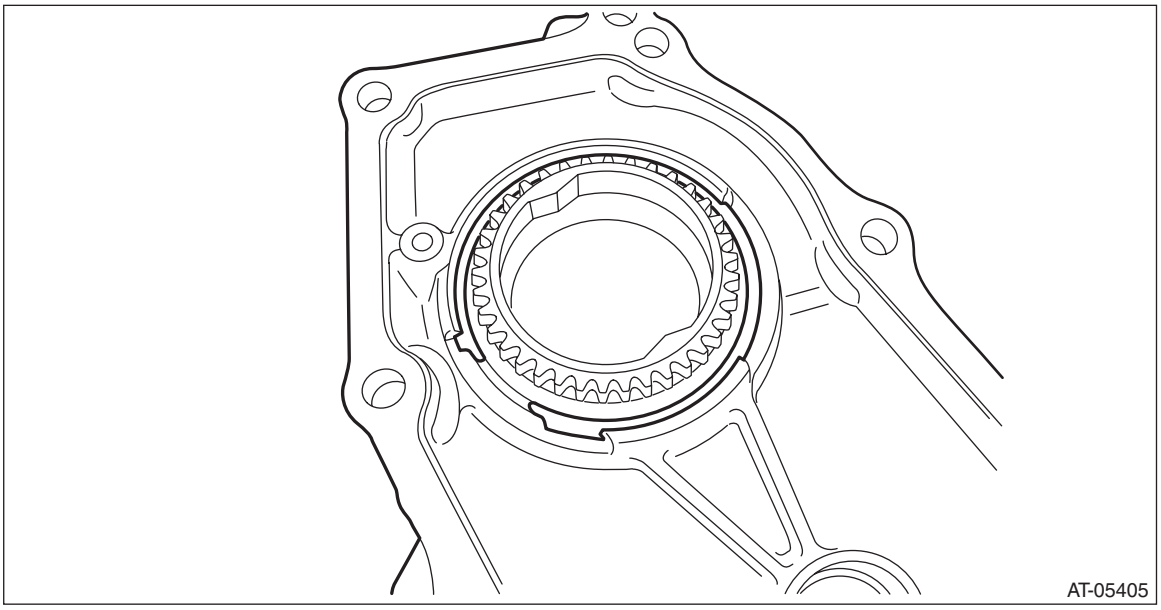

4) Place the oil pump chain on drive sprocket.
5) Place the oil pump chain on driven sprocket and install the driven sprocket to oil pump chain cover.

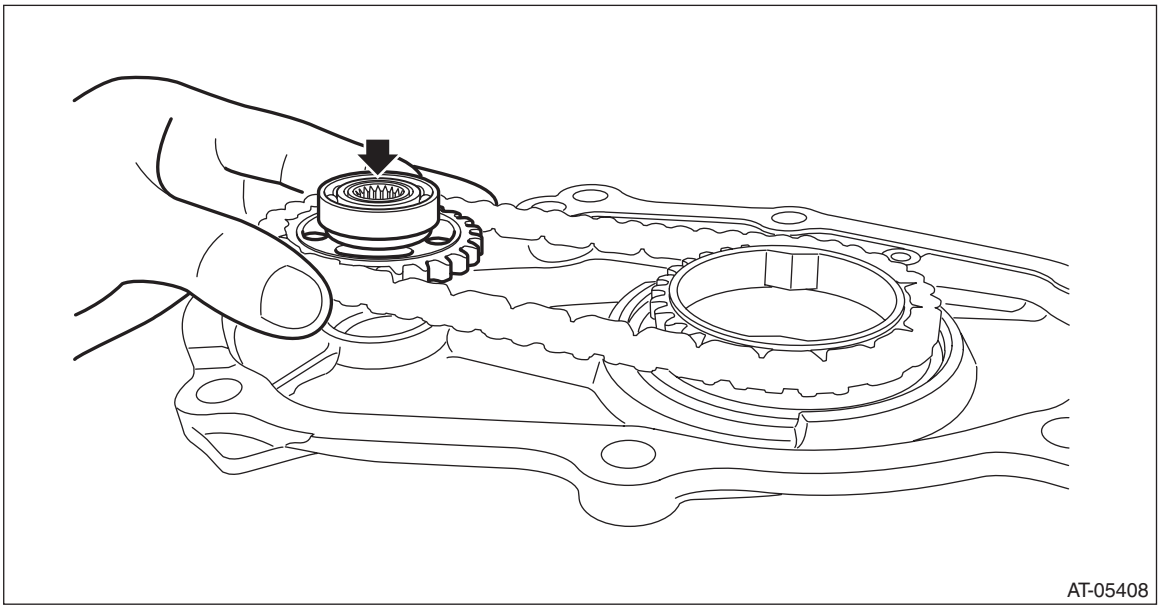

6) Install the seal ring to center support COMPL.

NOTE:
- Use a new seal ring.
- Apply CVTF to the seal rings.

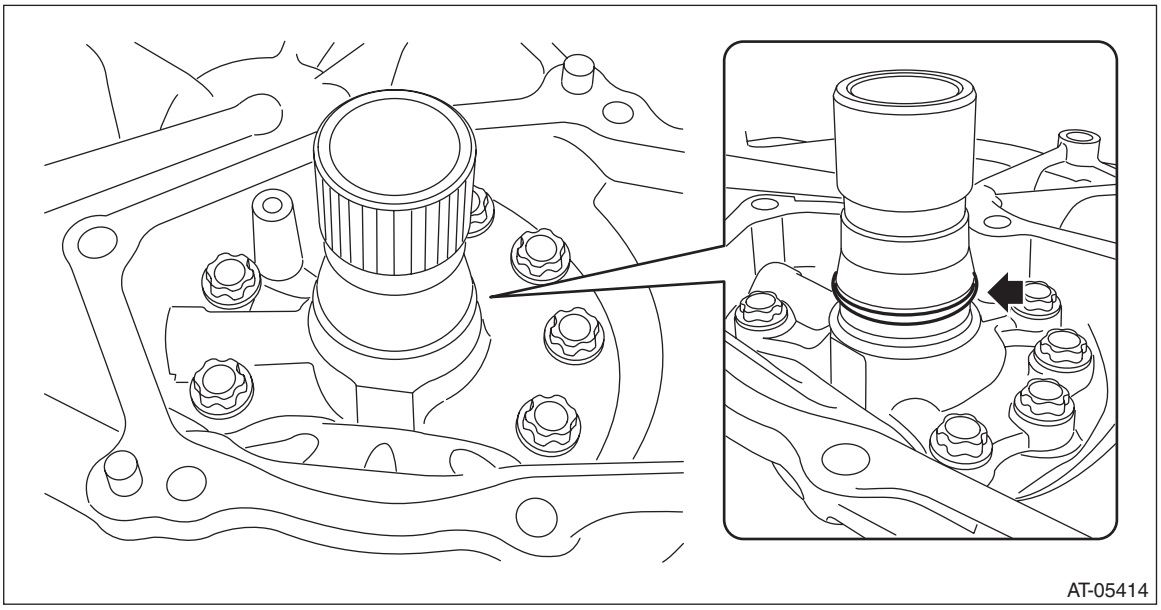

7) Apply liquid gasket seamlessly to the mating surface of oil pump chain cover.

CAUTION:
Do not apply liquid gasket at the arrowed hole.

Liquid gasket:
THREE BOND 1215 (Part No. 004403007) or equivalent

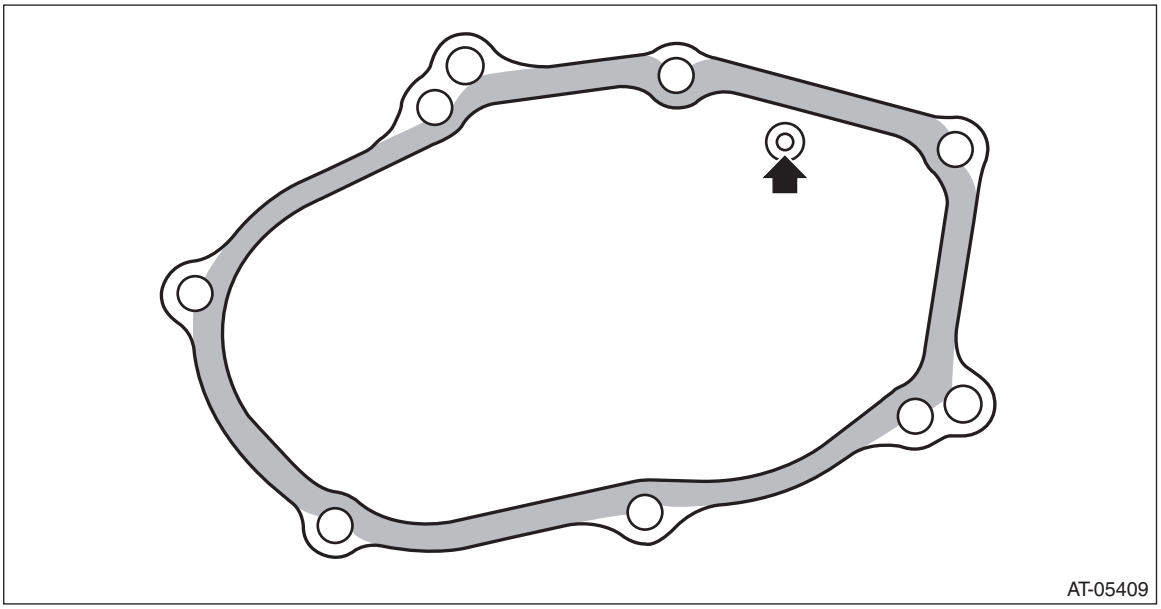

8) Install the oil pump chain cover.

NOTE:
There are two types of bolt.

Tightening torque:
24 N·m (2.4 kgf-m, 17.7 ft-lb)

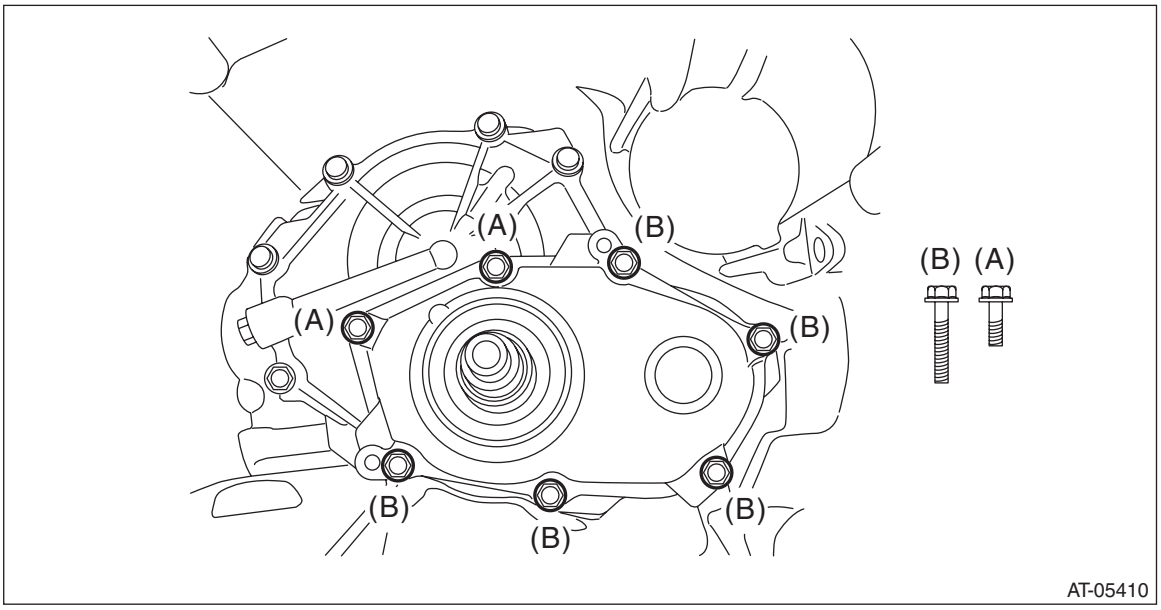

9) Install the torque converter assembly. <Ref. to CVT-136, INSTALLATION, Torque Converter Assembly.>
10) Install the transmission assembly to the vehicle. <Ref. to CVT-70, INSTALLATION, Automatic Transmission Assembly.>

C: DISASSEMBLY

1. DRIVE SPROCKET

1) Remove the ball bearing using ST.
ST1 498077600 REMOVER
ST2 399513600 INSTALLER

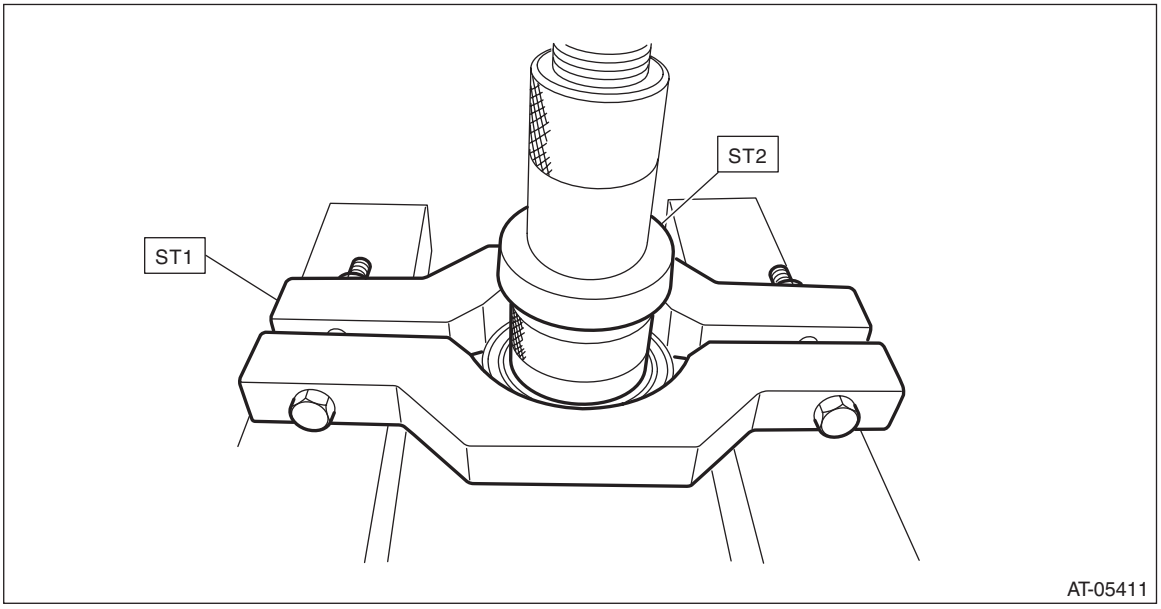

D: ASSEMBLY

1. DRIVE SPROCKET

1) Using the ST, install the ball bearing.

NOTE:
Use a new ball bearing.
ST 499755602 PRESS SNAP RING

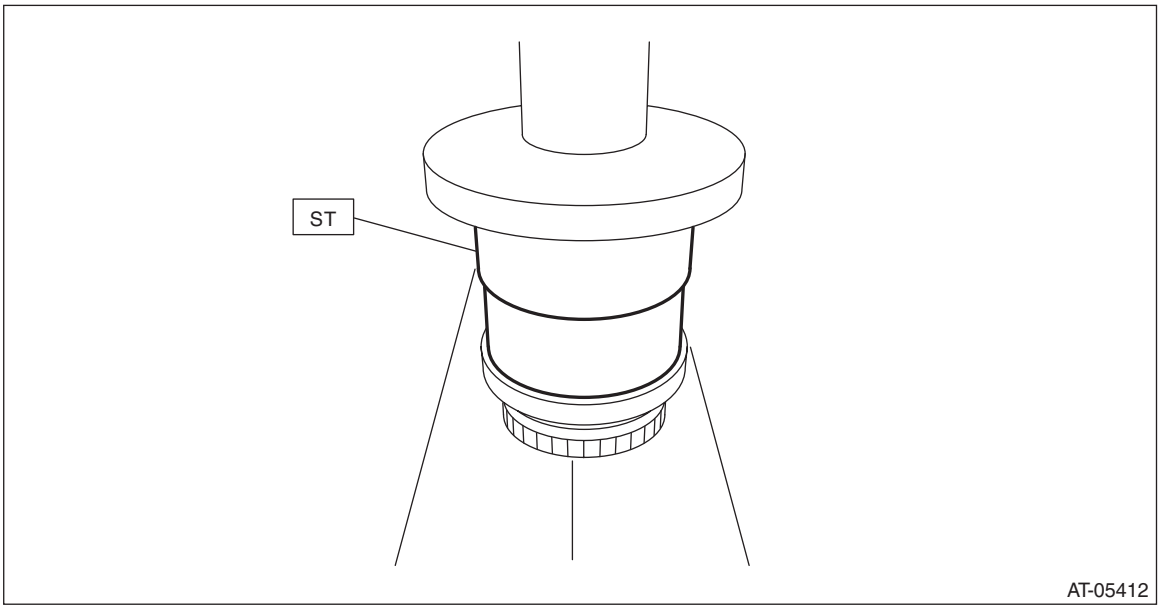

E: INSPECTION

- Check the oil pump chain for damage.
- Replace if gear teeth are broken, damaged, sharpen or excessively worn.
- Check the bearing for seizure or wear.
- Apply CVTF to bearing and rotate the bearing to check for noise or dragging etc.
- Check the oil pump chain cover for damage.
- Check for leakage of CVTF from the mating surface of oil pump chain cover.
- Check the oil seal for damage.

46.Converter Case Cover

A: REMOVAL

1) Remove the transmission assembly from the vehicle. <Ref. to CVT-55, REMOVAL, Automatic Transmission Assembly.>
2) Remove the air breather hose. <Ref. to CVT-132, REMOVAL, Air Breather Hose.>
3) Remove the oil pan and control valve body. <Ref. to CVT-111, REMOVAL, Control Valve Body.>
4) Remove the transmission harness. <Ref. to CVT-121, REMOVAL, Transmission Harness.>
5) Remove the extension case. <Ref. to CVT-138, REMOVAL, Extension Case.>
6) Remove the rear drive shaft. <Ref. to CVT-141, REMOVAL, Rear Drive Shaft.>
7) Remove the transfer clutch assembly. <Ref. to CVT-146, REMOVAL, Transfer Clutch.>
8) Remove the transfer reduction driven gear assembly. <Ref. to CVT-158, REMOVAL, Transfer Reduction Driven Gear.>
9) Remove the intermediate case. <Ref. to CVT-165, REMOVAL, Intermediate Case.>
10) Remove the forward clutch assembly. <Ref. to CVT-180, REMOVAL, Forward Clutch Assembly.>
11) Remove the transmission case. <Ref. to CVT-211, REMOVAL, Transmission Case.>
12) Remove the primary pulley, secondary pulley and variator chain. <Ref. to CVT-226, REMOVAL, Primary Pulley and Secondary Pulley.>
13) Remove the drive pinion shaft assembly. <Ref. to CVT-242, REMOVAL, Drive Pinion Shaft Assembly.>
14) Remove the oil stopper plate and lubrication pipe.

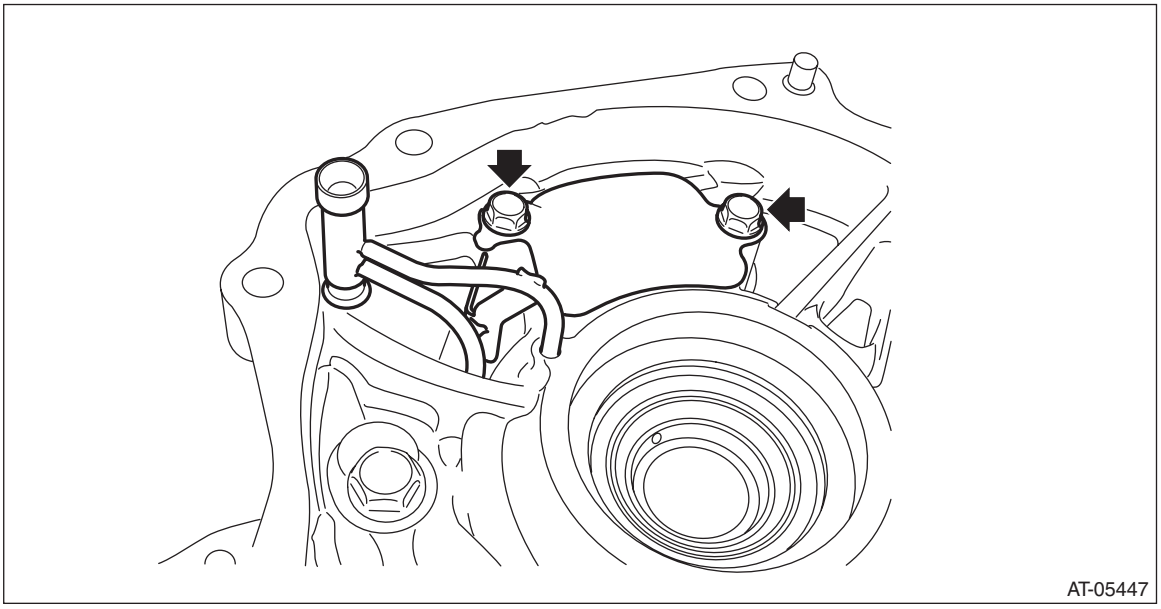

15) Flip over the converter case.
16) Remove the oil pump chain cover and the oil pump chain. <Ref. to CVT-282, REMOVAL, Oil Pump Chain.>

17) Remove the converter case cover.

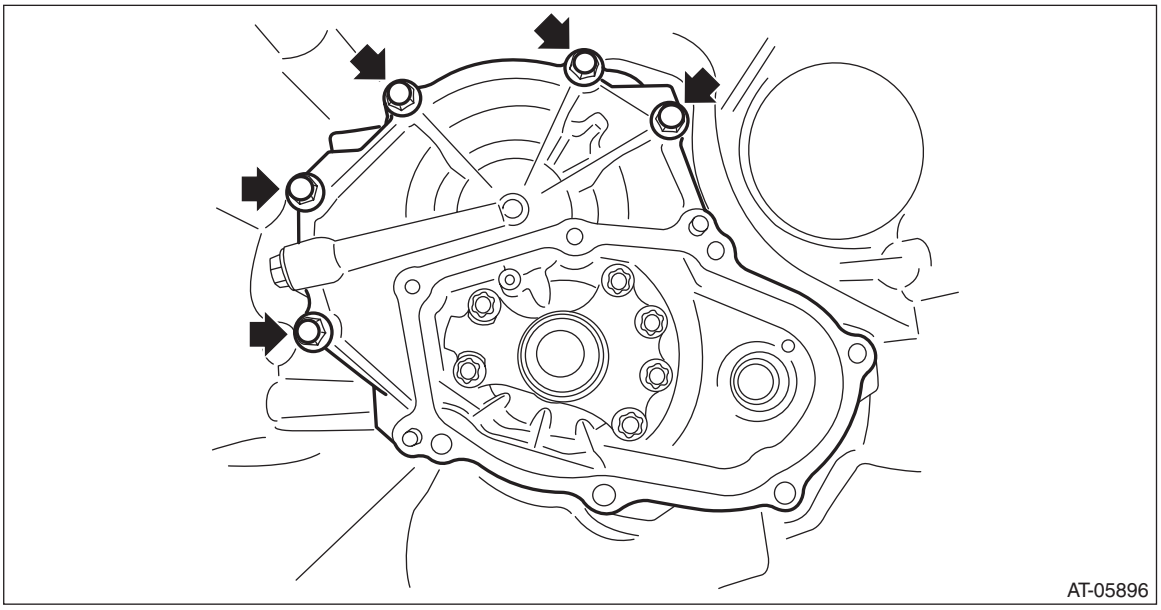

18) Remove the O-ring.

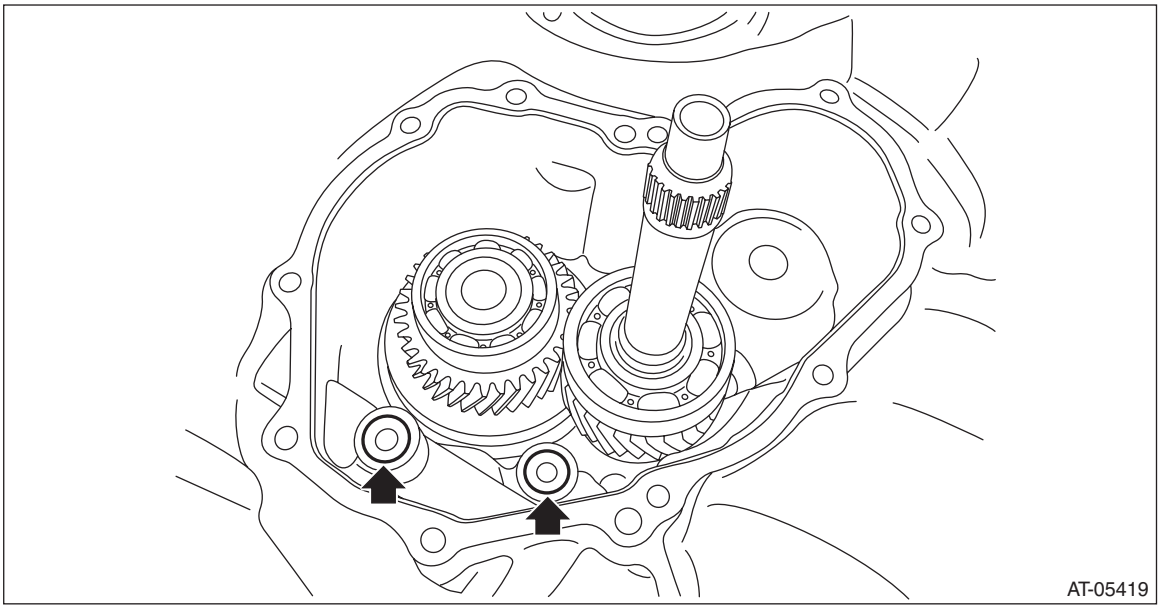

19) Remove the seal ring from converter case cover.

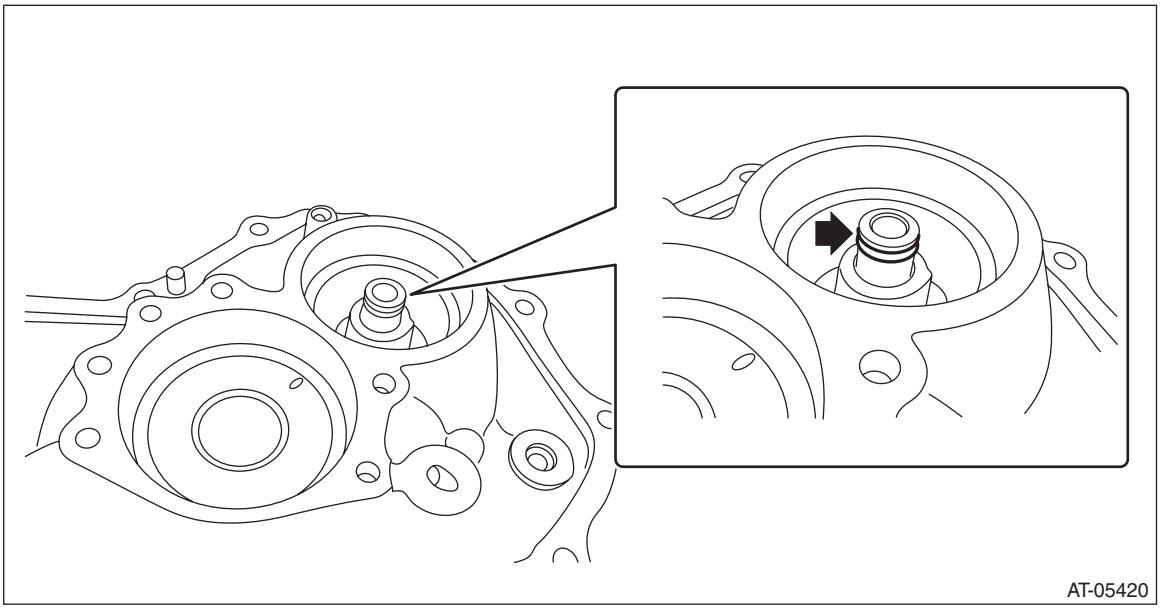

B: INSTALLATION

1) Clean the mating surface of converter case cover and converter case.
2) Adjust the shims of front reduction drive gear and front reduction driven gear. <Ref. to CVT-302, ADJUSTMENT, Front Reduction Drive Gear.> <Ref. to CVT-311, ADJUSTMENT, Front Reduction Driven Gear.>
3) Install the O-ring.

NOTE:
- Use new O-rings.
- Apply CVTF to the O-ring.

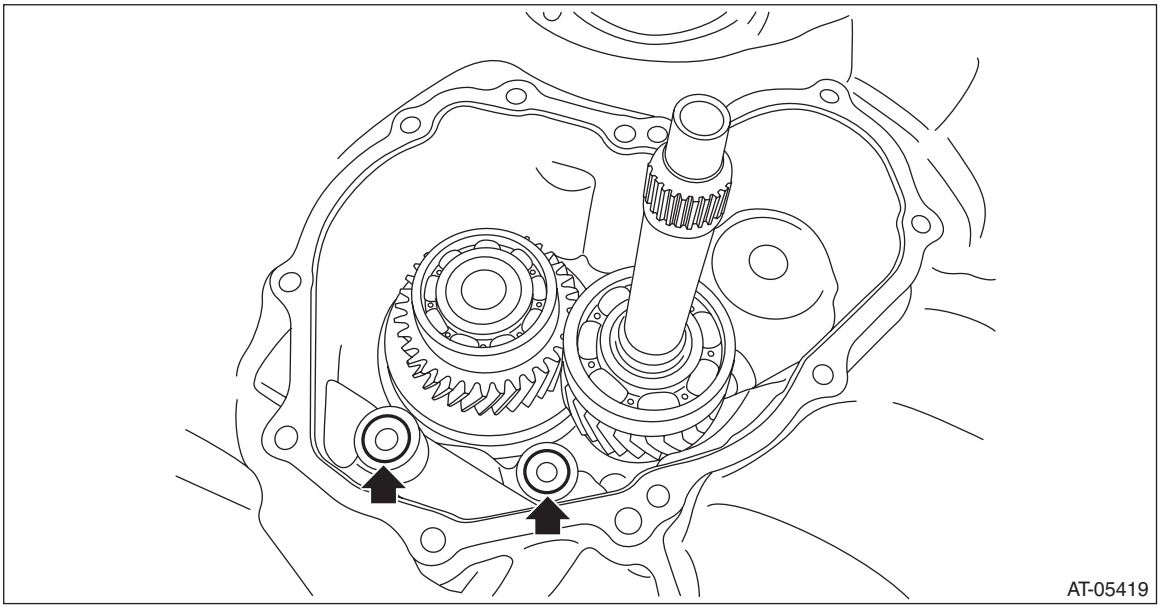

4) Apply CVTF to the selected shims and install each to the catch surface of bearing.

5) Install the seal ring to converter case cover.

NOTE:
- Use a new seal ring.
- When installing the seal ring, do not expand the seal ring too much.

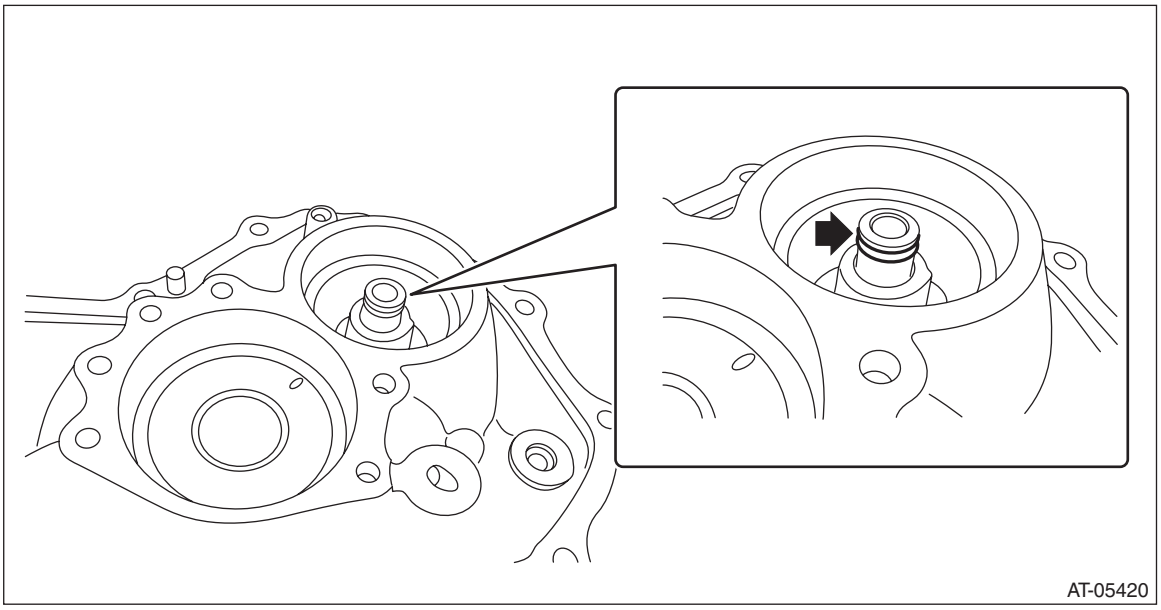

6) Apply liquid gasket seamlessly to the mating surface of converter case cover.

Liquid gasket:
THREE BOND 1215 (Part No. 004403007) or equivalent

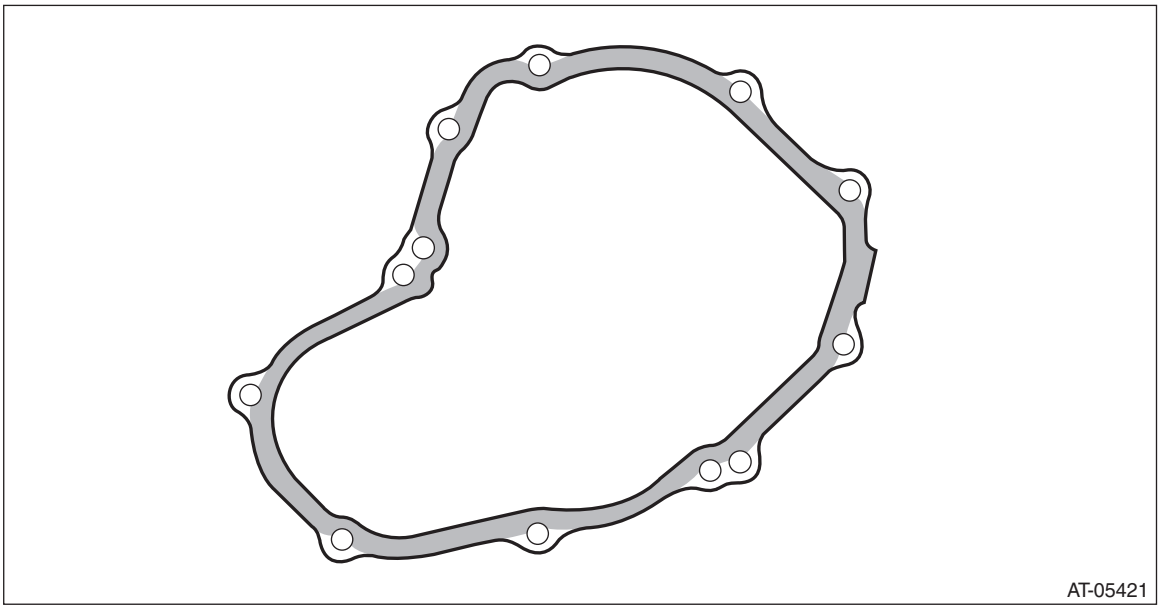

7) Install the converter case cover.

Tightening torque:
24 N·m (2.4 kgf-m, 17.7 ft-lb)

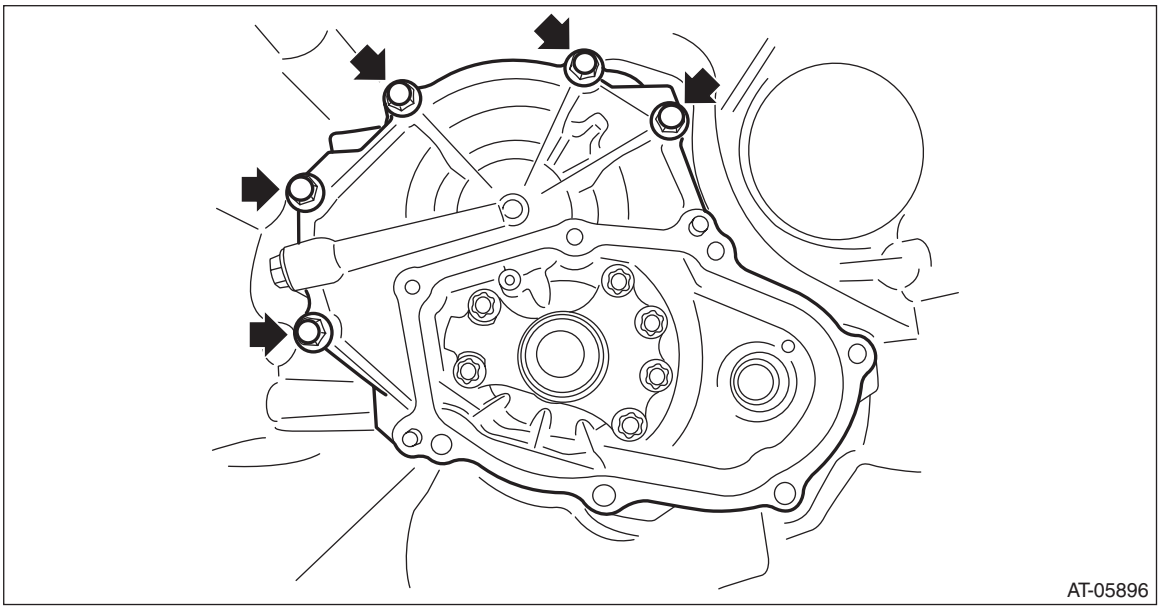

8) Install the oil pump chain cover and the oil pump chain. <Ref. to CVT-284, INSTALLATION, Oil Pump Chain.>
9) Flip over the converter case cover.
10) Install the oil stopper plate and lubrication pipe.

Tightening torque:
9 N·m (0.9 kgf-m, 6.6 ft-lb)

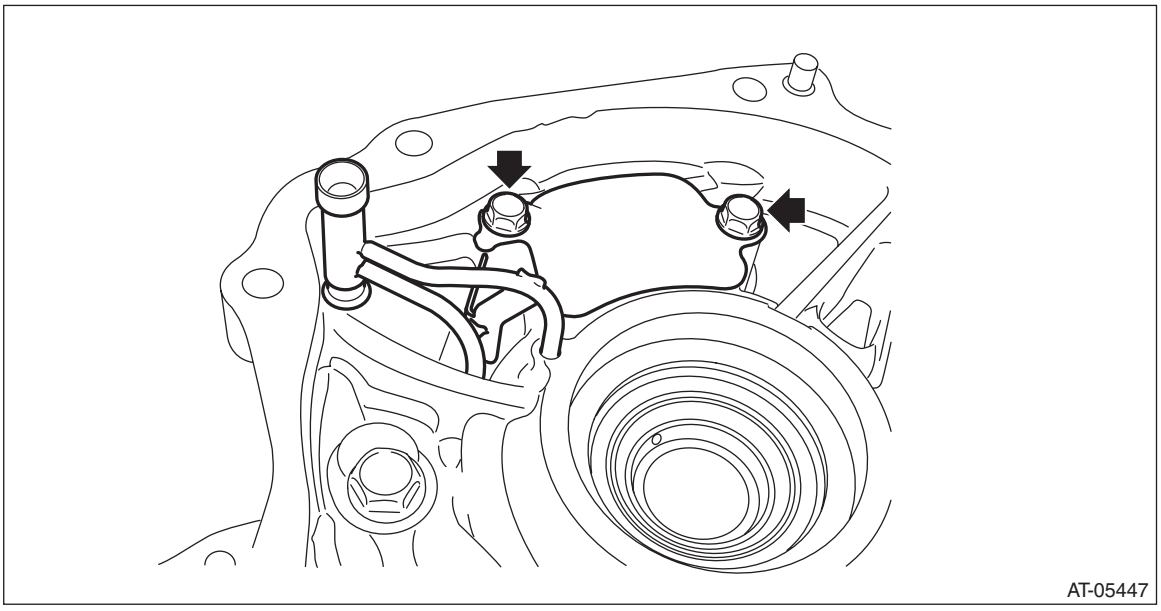

11) Install the drive pinion shaft assembly. <Ref. to CVT-244, INSTALLATION, Drive Pinion Shaft Assembly.>
12) Install the primary pulley, secondary pulley and variator chain. <Ref. to CVT-230, INSTALLATION, Primary Pulley and Secondary Pulley.>
13) Install the transmission case. <Ref. to CVT-213, INSTALLATION, Transmission Case.>
14) Install the forward clutch assembly. <Ref. to CVT-181, INSTALLATION, Forward Clutch Assembly.>
15) Install the intermediate case. <Ref. to CVT-166, INSTALLATION, Intermediate Case.>

16) Install the transfer reduction driven gear assembly. <Ref. to CVT-158, INSTALLATION, Transfer Reduction Driven Gear.>
17) Install the transfer clutch assembly. <Ref. to CVT-147, INSTALLATION, Transfer Clutch.>
18) Install the rear drive shaft. <Ref. to CVT-141, INSTALLATION, Rear Drive Shaft.>
19) Install the extension case. <Ref. to CVT-138, INSTALLATION, Extension Case.>
20) Install the transmission harness. <Ref. to CVT-123, INSTALLATION, Transmission Harness.>
21) Install the control valve body and oil pan. <Ref. to CVT-115, INSTALLATION, Control Valve Body.>
22) Install the air breather hose. <Ref. to CVT-132, INSTALLATION, Air Breather Hose.>
23) Install the transmission assembly to the vehicle. <Ref. to CVT-70, INSTALLATION, Automatic Transmission Assembly.>

C: DISASSEMBLY

1) Using ST, remove the center support COMPL.
ST 18270KA010 SOCKET (E16)

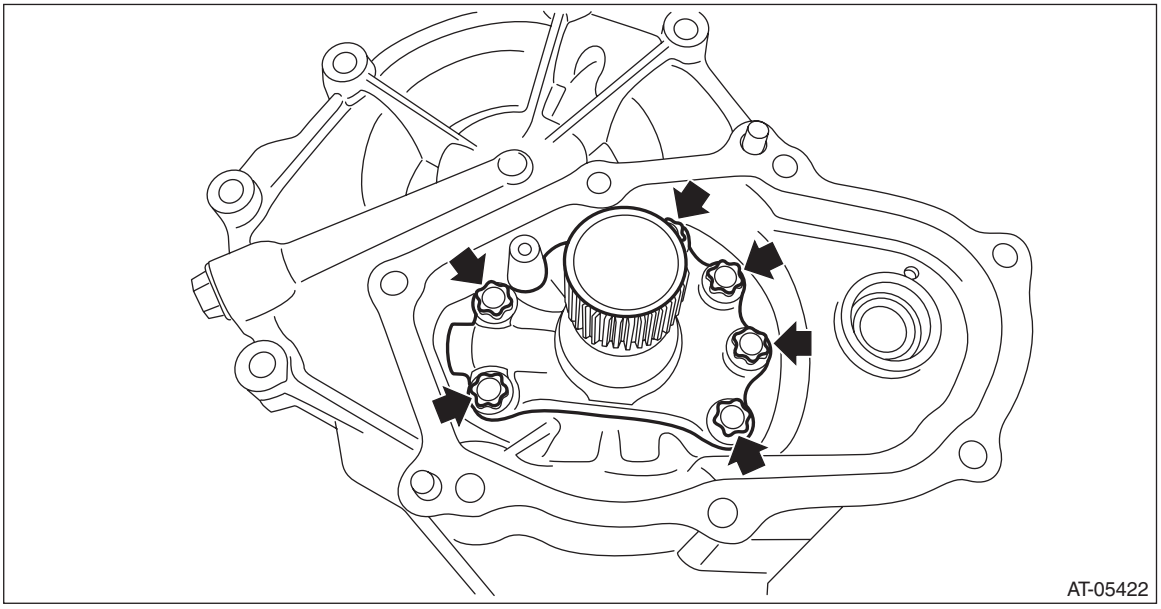

2) Remove the plug and O-ring.

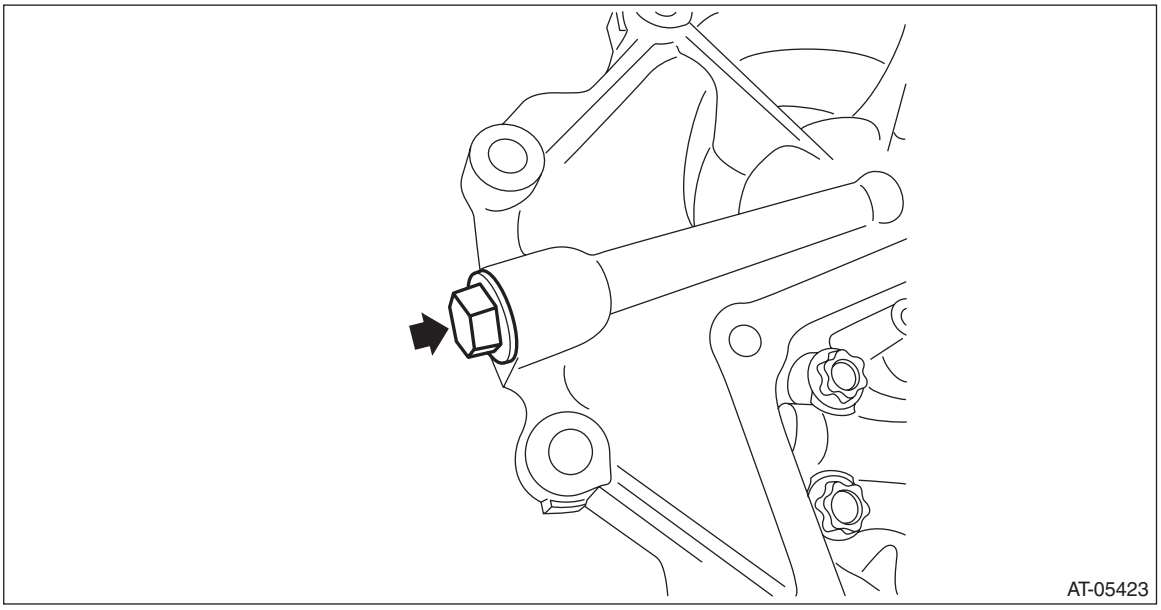

D: ASSEMBLY

1) Install the plugs.

NOTE:
- Use new O-rings.
- Apply CVTF to the O-ring.

Tightening torque:
25 N·m (2.5 kgf-m, 18.4 ft-lb)

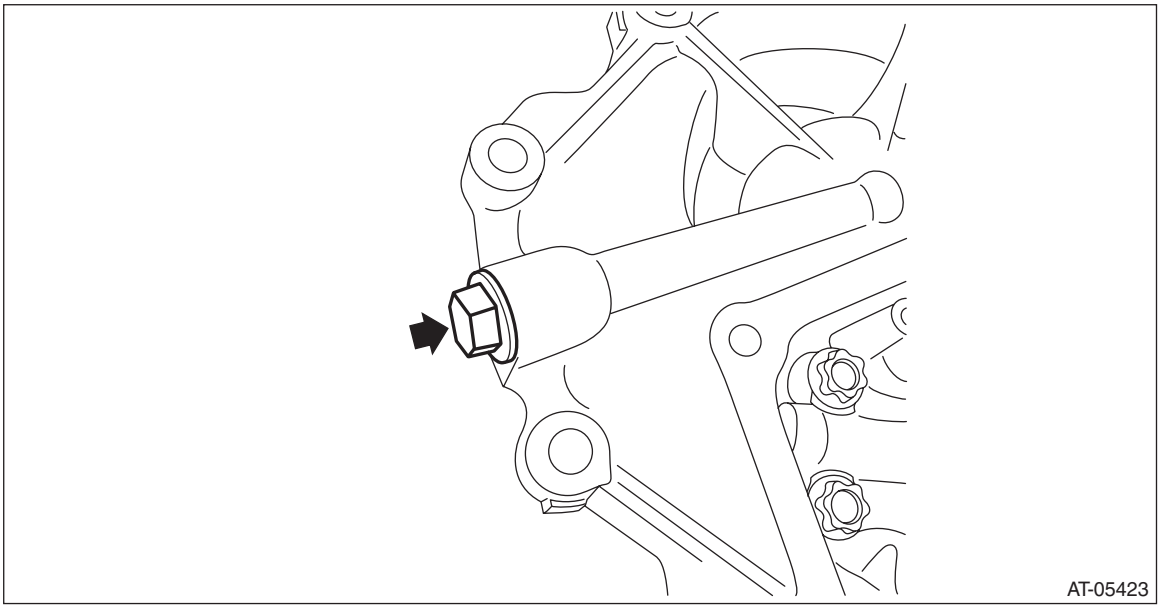

2) Using ST, install the center support COMPL.
ST 18270KA010 SOCKET (E16)

Tightening torque:
21.5 N·m (2.2 kgf-m, 15.9 ft-lb)

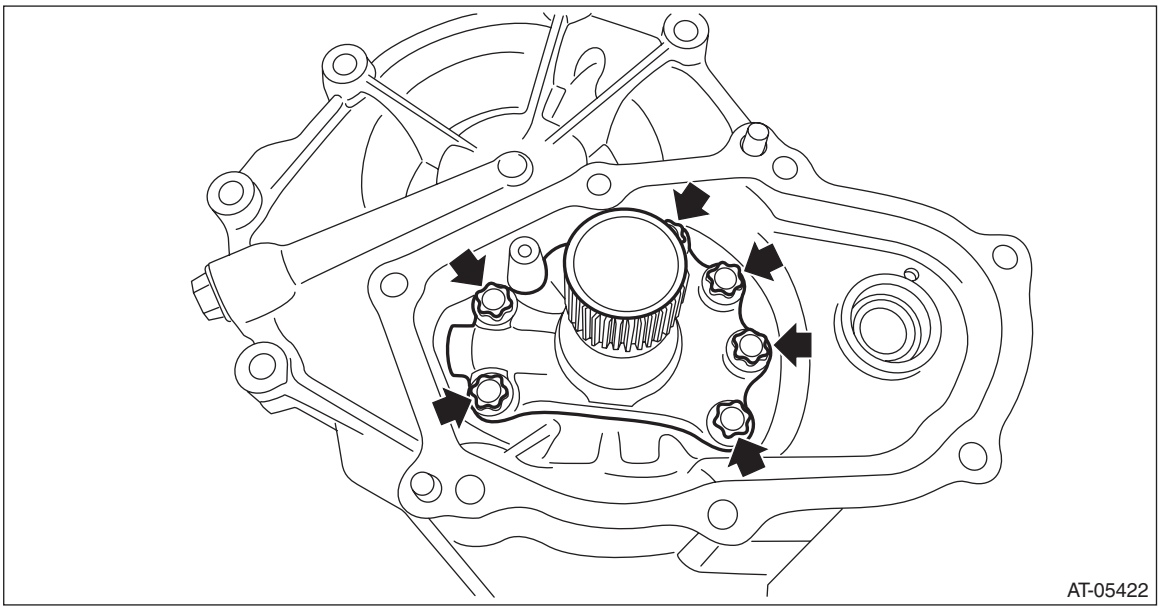

E: INSPECTION

- Check for leakage of CVTF from the connection between converter case and converter case cover.
- Check there is no damage or cracks on the converter case cover.

F: ADJUSTMENT

When replacing the converter case cover, select the following shims.

- Select the shim for front reduction drive gear. <Ref. to CVT-302, ADJUSTMENT, Front Reduction Drive Gear.>
- Select the shim for front reduction driven gear. <Ref. to CVT-311, ADJUSTMENT, Front Reduction Driven Gear.>

47.Front Reduction Drive Gear

A: REMOVAL

1) Remove the transmission assembly from the vehicle. <Ref. to CVT-55, REMOVAL, Automatic Transmission Assembly.>
2) Remove the air breather hose. <Ref. to CVT-132, REMOVAL, Air Breather Hose.>
3) Remove the oil pan and control valve body. <Ref. to CVT-111, REMOVAL, Control Valve Body.>
4) Remove the transmission harness. <Ref. to CVT-121, REMOVAL, Transmission Harness.>
5) Remove the primary speed sensor. <Ref. to CVT-105, REMOVAL, Primary Speed Sensor.>
6) Remove the extension case. <Ref. to CVT-138, REMOVAL, Extension Case.>
7) Remove the rear drive shaft. <Ref. to CVT-141, REMOVAL, Rear Drive Shaft.>
8) Remove the transfer clutch assembly. <Ref. to CVT-146, REMOVAL, Transfer Clutch.>
9) Remove the transfer reduction driven gear assembly. <Ref. to CVT-158, REMOVAL, Transfer Reduction Driven Gear.>
10) Remove the intermediate case. <Ref. to CVT-165, REMOVAL, Intermediate Case.>
11) Remove the forward clutch assembly. <Ref. to CVT-180, REMOVAL, Forward Clutch Assembly.>
12) Remove the transmission case. <Ref. to CVT-211, REMOVAL, Transmission Case.>
13) Remove the primary pulley, secondary pulley and variator chain. <Ref. to CVT-226, REMOVAL, Primary Pulley and Secondary Pulley.>
14) Remove the drive pinion shaft assembly. <Ref. to CVT-242, REMOVAL, Drive Pinion Shaft Assembly.>
15) Remove the converter case cover. <Ref. to CVT-289, REMOVAL, Converter Case Cover.>
16) Remove the front reduction drive gear and front reduction driven gear together.

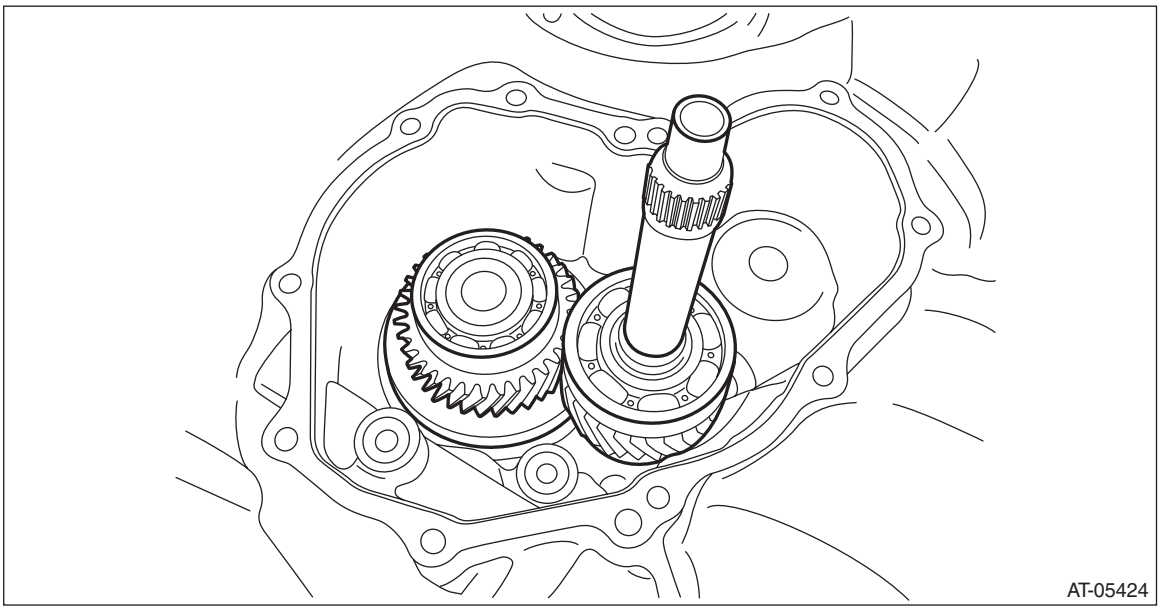

17) Remove the seal ring.

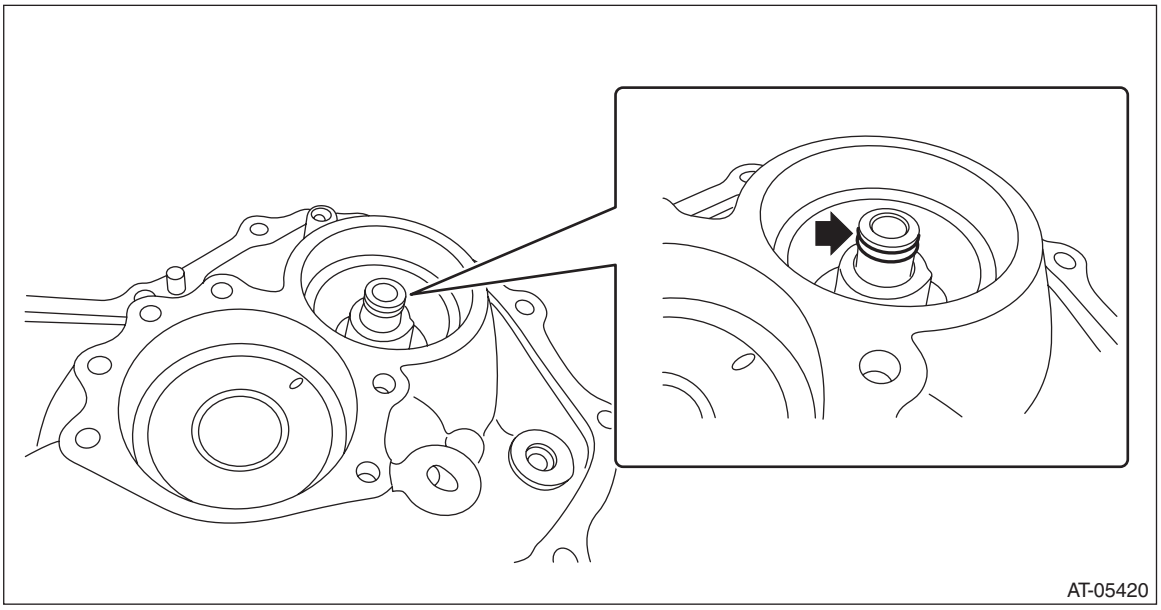

B: INSTALLATION

1) Clean the mating surface of converter case cover and converter case.
2) Select the shim for front reduction drive gear. <Ref. to CVT-302, ADJUSTMENT, Front Reduction Drive Gear.>
3) Install the front reduction drive gear and front reduction driven gear together.

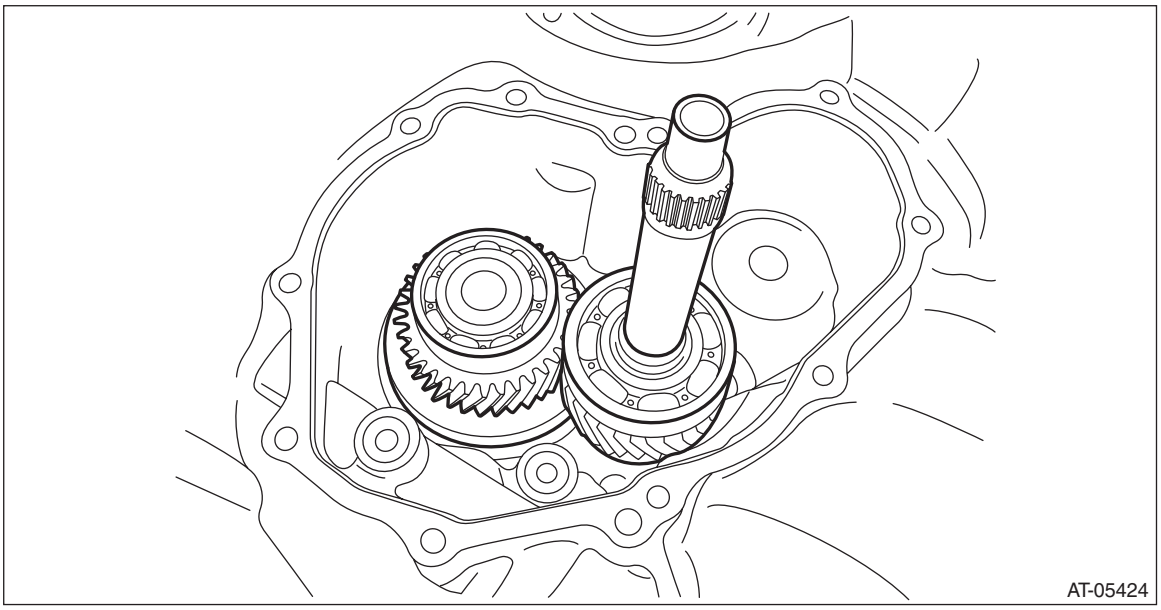

4) Install the converter case cover. <Ref. to CVT-291, INSTALLATION, Converter Case Cover.>
5) Install the drive pinion shaft assembly. <Ref. to CVT-244, INSTALLATION, Drive Pinion Shaft Assembly.>
6) Install the primary pulley, secondary pulley and variator chain. <Ref. to CVT-230, INSTALLATION, Primary Pulley and Secondary Pulley.>
7) Install the transmission case. <Ref. to CVT-213, INSTALLATION, Transmission Case.>
8) Install the forward clutch assembly. <Ref. to CVT-181, INSTALLATION, Forward Clutch Assembly.>
9) Install the intermediate case. <Ref. to CVT-166, INSTALLATION, Intermediate Case.>
10) Install the transfer reduction driven gear assembly. <Ref. to CVT-158, INSTALLATION, Transfer Reduction Driven Gear.>
11) Install the transfer clutch assembly. <Ref. to CVT-147, INSTALLATION, Transfer Clutch.>
12) Install the rear drive shaft. <Ref. to CVT-141, INSTALLATION, Rear Drive Shaft.>

13) Install the extension case. <Ref. to CVT-138, INSTALLATION, Extension Case.>
14) Install the primary speed sensor. <Ref. to CVT-105, INSTALLATION, Primary Speed Sensor.>
15) Install the transmission harness. <Ref. to CVT-123, INSTALLATION, Transmission Harness.>
16) Install the control valve body and oil pan. <Ref. to CVT-115, INSTALLATION, Control Valve Body.>
17) Install the air breather hose. <Ref. to CVT-132, INSTALLATION, Air Breather Hose.>
18) Install the transmission assembly to the vehicle. <Ref. to CVT-70, INSTALLATION, Automatic Transmission Assembly.>

C: DISASSEMBLY

1) Remove the seal ring and O-ring.

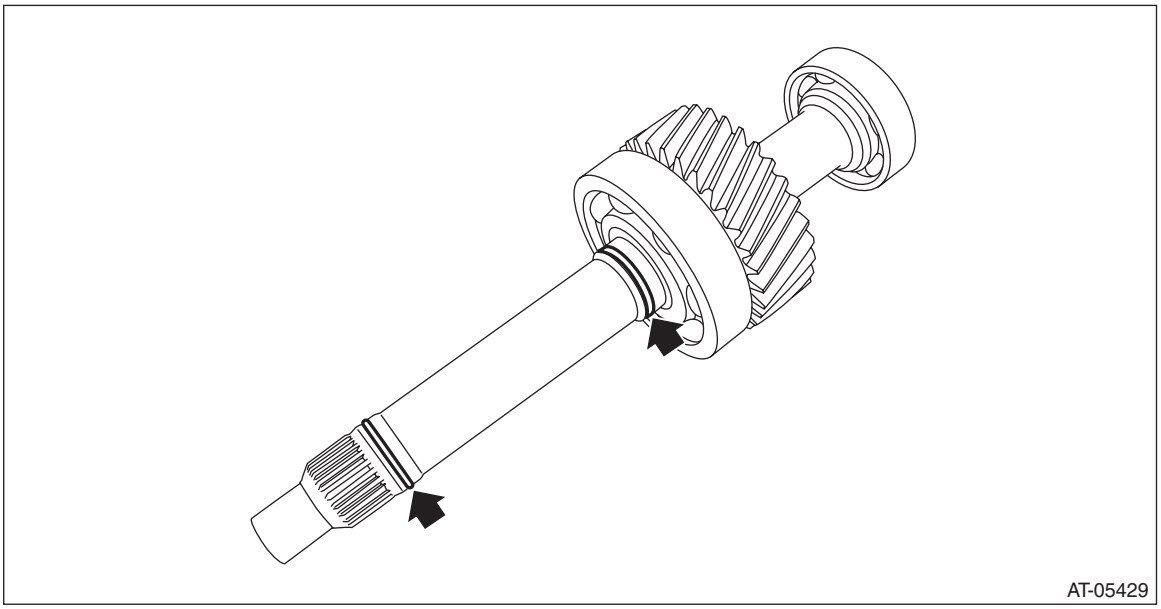

2) Using the ST, remove the ball bearing from front reduction drive gear.
ST 899864100 REMOVER

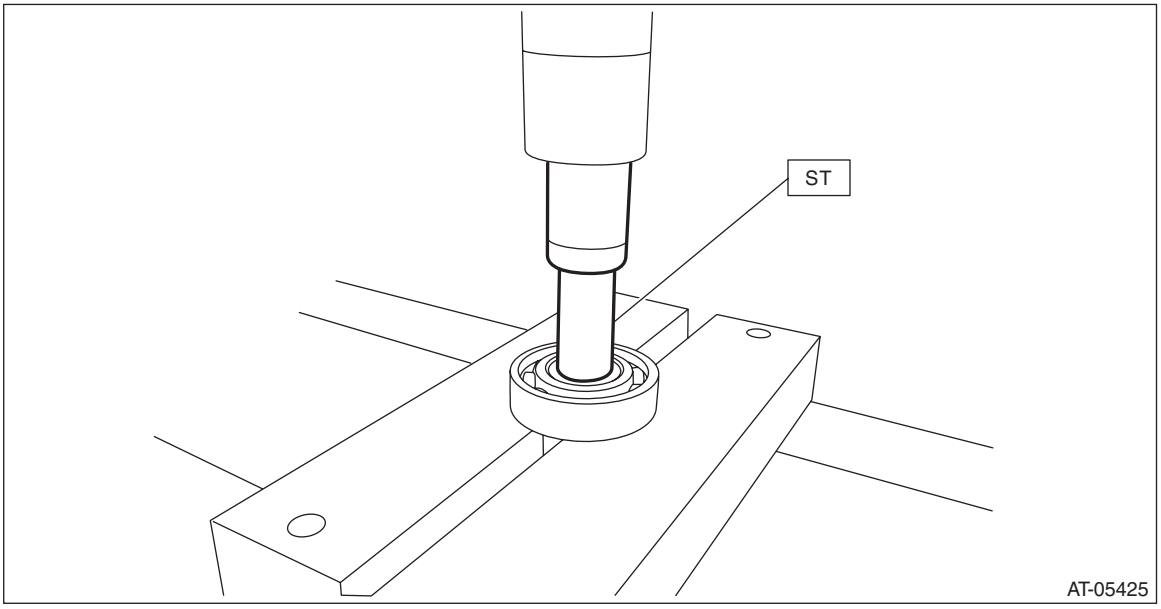

3) Using the ST, remove the ball bearing from front reduction drive gear.
ST 498077000 REMOVER

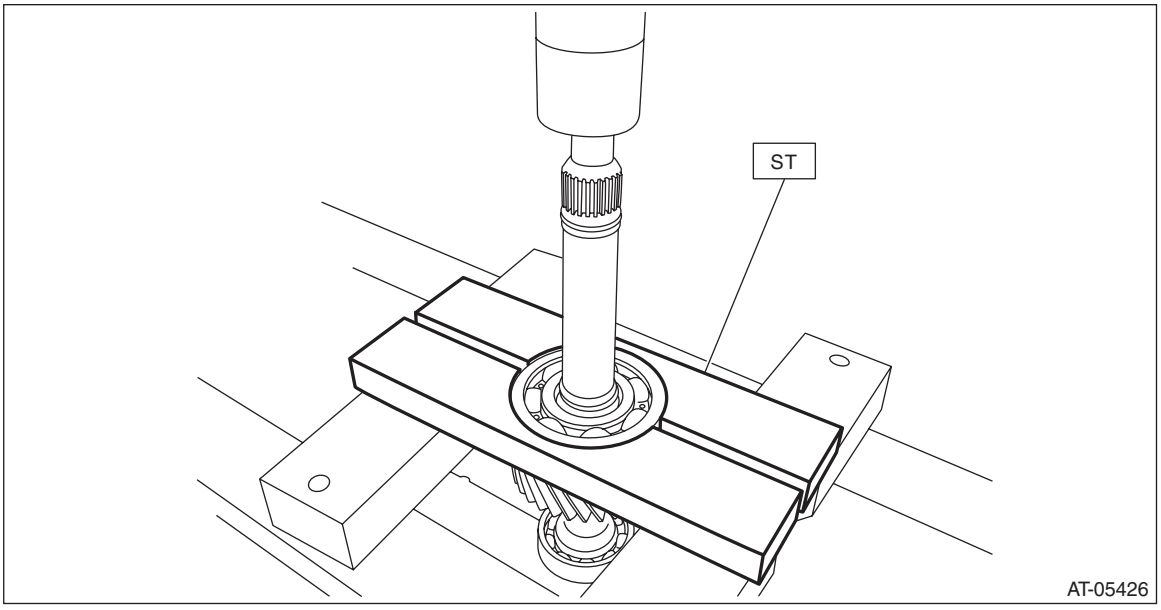

D: ASSEMBLY

1) Using the ST, install the ball bearing to front reduction drive gear.

NOTE:
Use a new ball bearing.
ST 18651AA000 INSTALLER

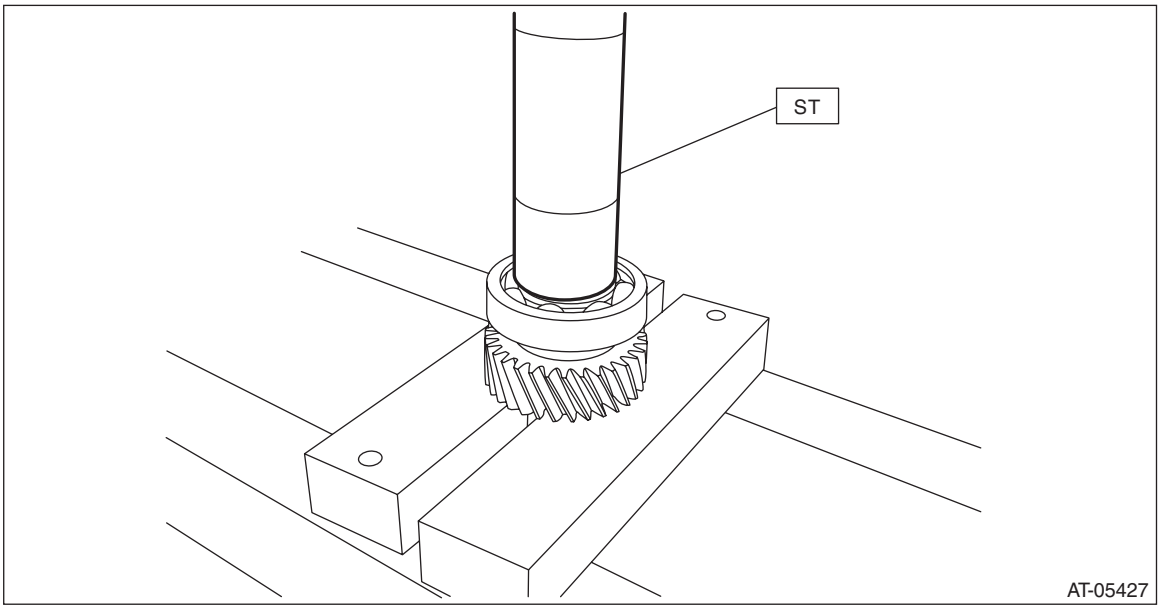

2) Using ST1 and ST2, install the ball bearing to front reduction drive gear.

NOTE:
Use a new ball bearing.
ST1 499757002 PRESS SNAP RING
ST2 398177700 INSTALLER

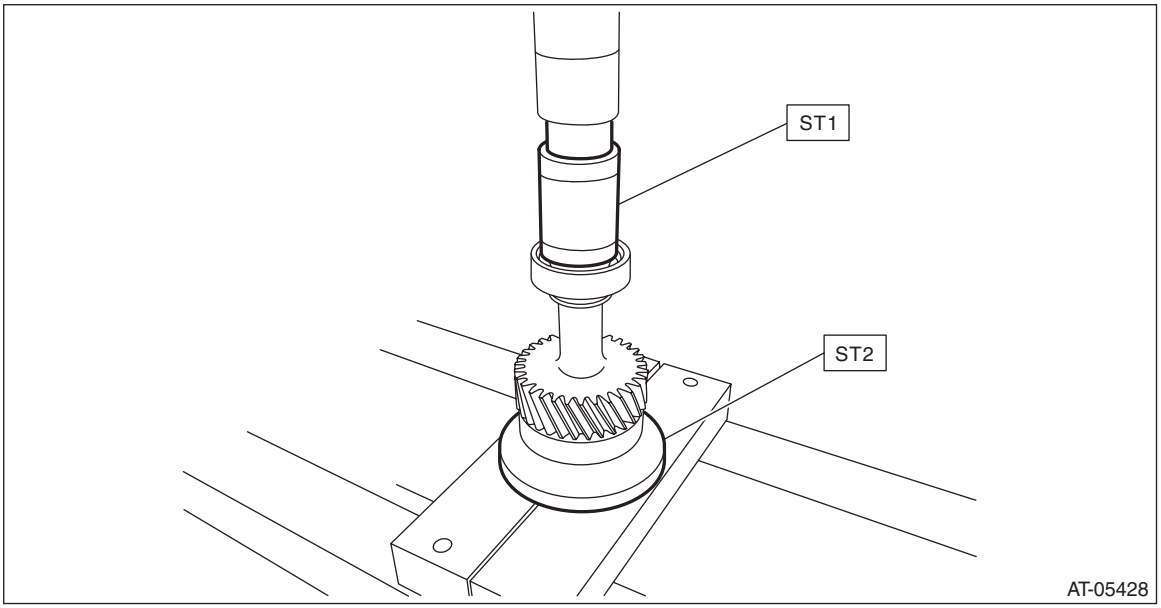

3) Install the seal ring.

NOTE:
- Use a new seal ring.
- When installing the seal ring, do not expand the seal ring too much.
- Install the O-ring when installing the torque converter assembly.

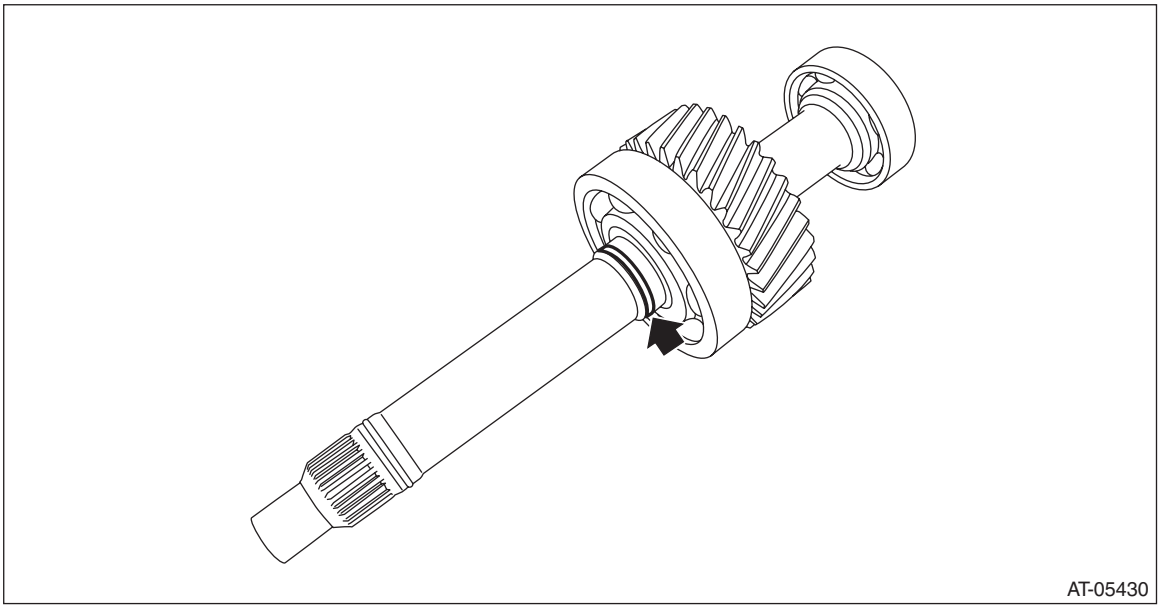

E: INSPECTION

- Replace if its tooth surfaces are broken, damaged or excessively worn.
- Check the bearing for seizure or wear.
- Apply CVTF to bearing and rotate the bearing to check for noise or dragging etc.

F: ADJUSTMENT

1) Measure height “A” from the ST upper face to the bearing end face using the ST.
ST 398643600 GAUGE

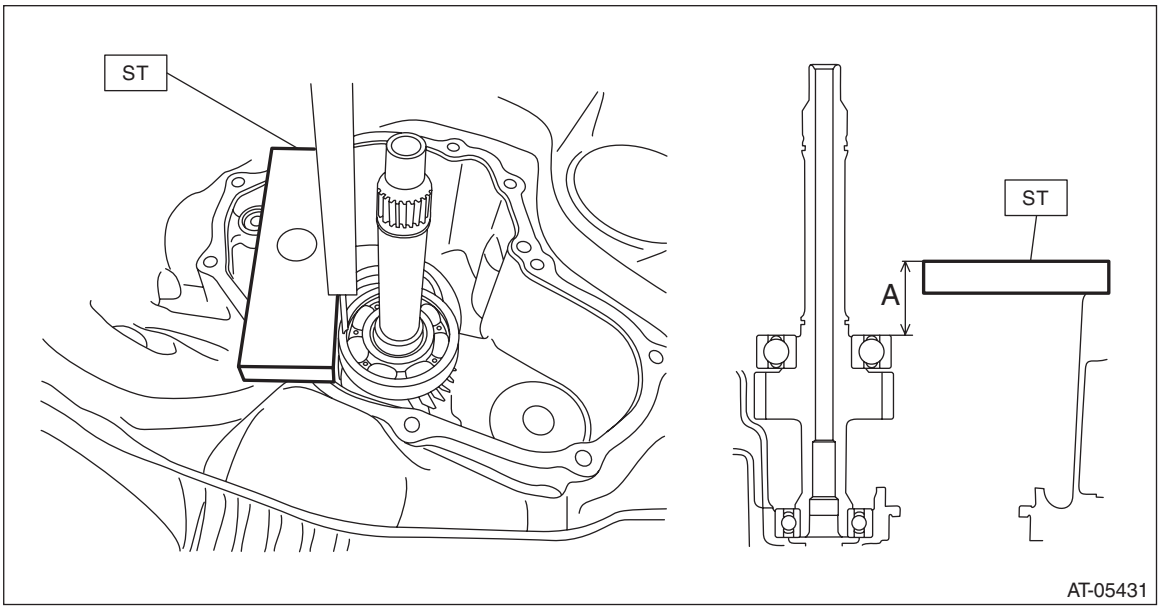

2) Measure depth “B” from the converter case cover upper face to the bearing catch surface.

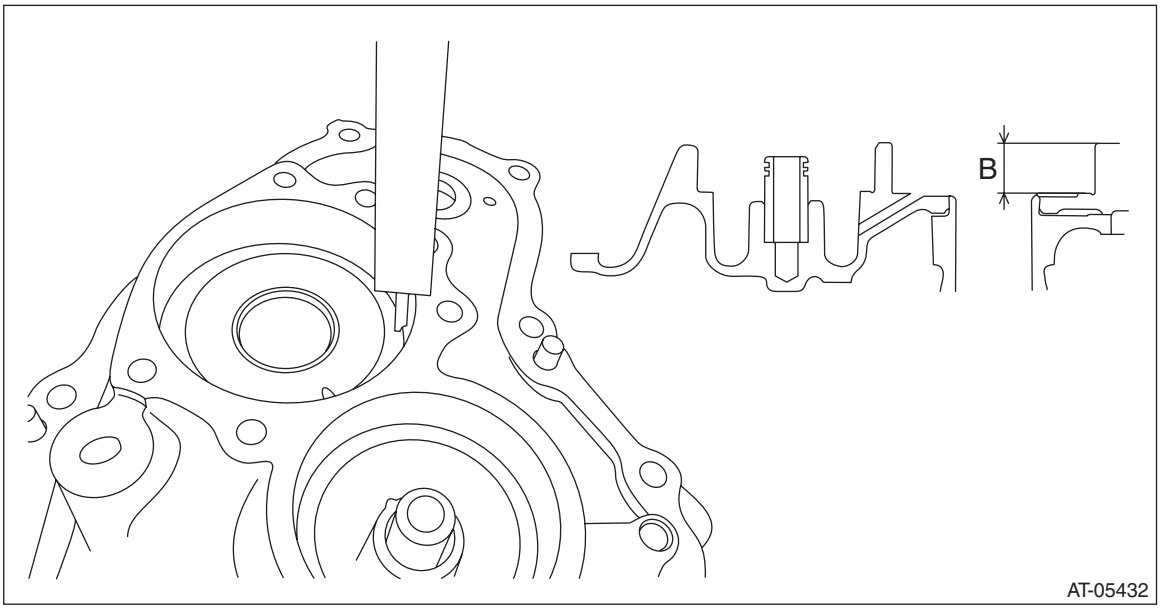

3) Using the ST, measure height “C” from the ST upper face to the converter case cover mating surface.
ST 398643600 GAUGE

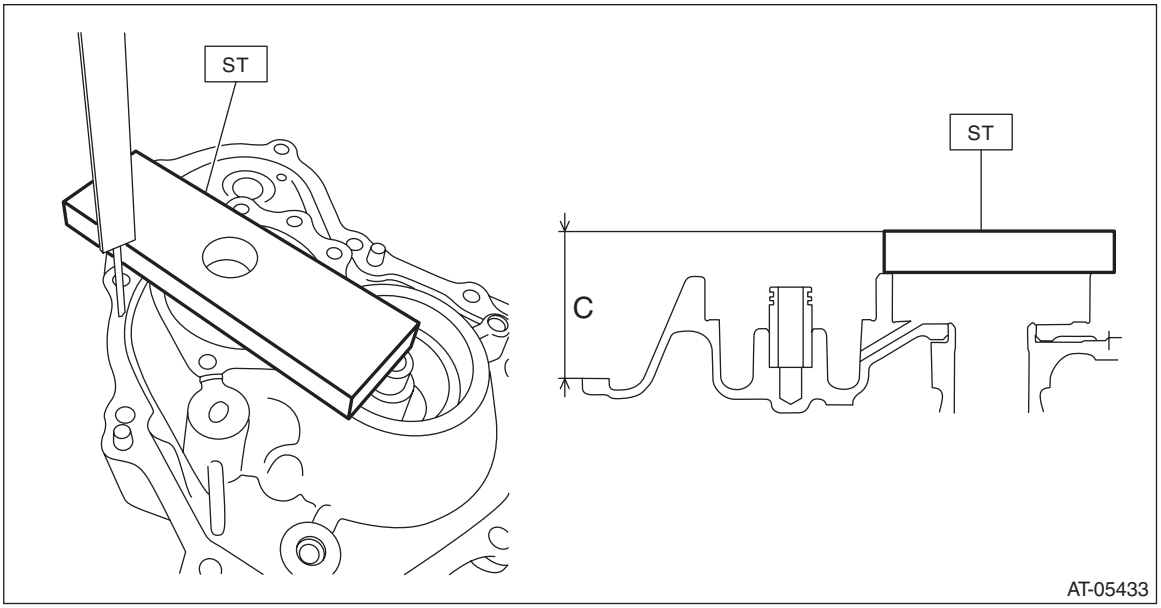

4) Calculate clearance “T” using the following formula.
Calculation formula:
T mm = (A – 15) – ((C – 15) – B)
[T in = (A – 0.591) – ((C – 0.591) – B)]
T: Clearance
A: Depth from the ST upper face to the bearing end surface
B: Depth from the converter case cover upper face to the bearing catch surface
C: Height from the ST upper face to the converter case cover mating surface
15 mm (0.591 in): Thickness of ST

Clearance “T” mm (in)	Thickness of shim mm (in)	Part number
1.070 — 1.174 (0.042 — 0.045)	1.0 (0.039)	31288AA160
1.175 — 1.274 (0.046 — 0.049)	1.1 (0.043)	31288AA170
1.275 — 1.374 (0.050 — 0.053)	1.2 (0.047)	31288AA180
1.375 — 1.474 (0.054 — 0.057)	1.3 (0.051)	31288AA220
1.475 — 1.580 (0.058 — 0.062)	1.4 (0.055)	31288AA230

48.Front Reduction Driven Gear

A: REMOVAL

NOTE:
For removal of front reduction driven gear, refer to the “Front Reduction Drive Gear”. <Ref. to CVT-297, REMOVAL, Front Reduction Drive Gear.>

B: INSTALLATION

NOTE:
For installation of front reduction driven gear, refer to the “Front Reduction Drive Gear”. <Ref. to CVT-298, INSTALLATION, Front Reduction Drive Gear.>

C: DISASSEMBLY

1) Using the ST, remove the ball bearing, front reduction driven gear and front reduction driven shaft.
ST1 899864100 REMOVER
ST2 18767AA000 BEARING REMOVER

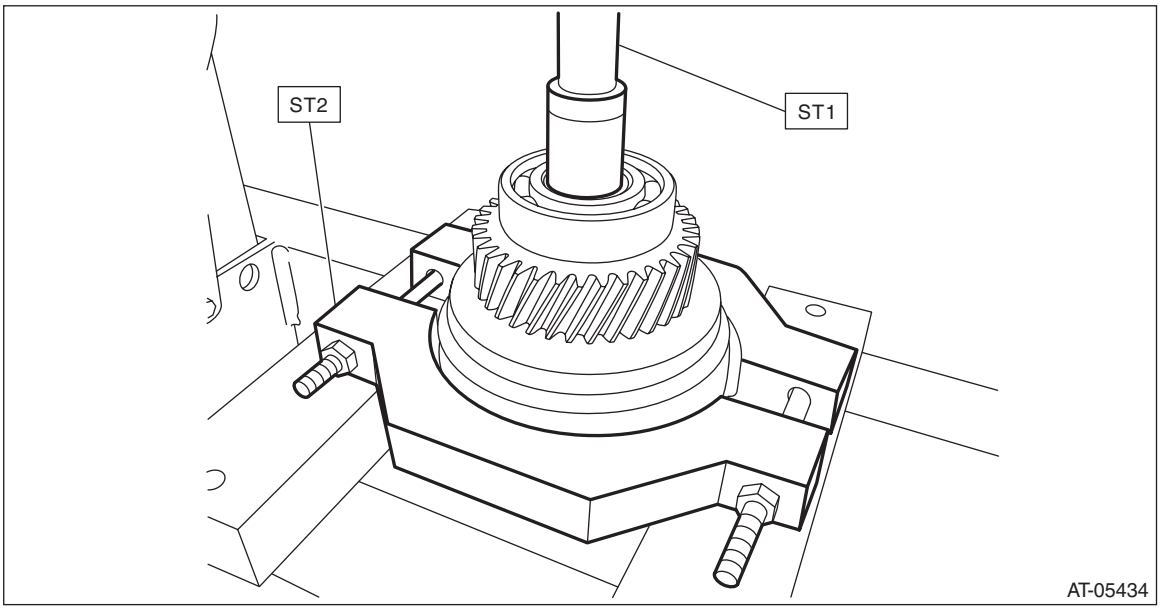

2) Remove the snap ring.

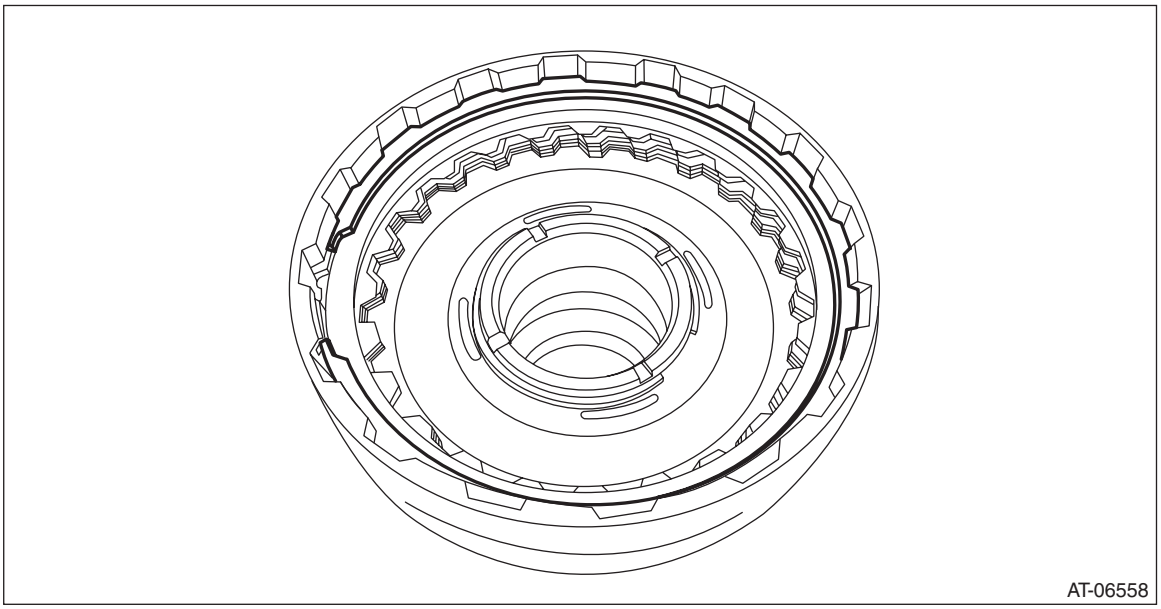

3) Remove the retaining plate, drive plate, driven plate and dish plate.

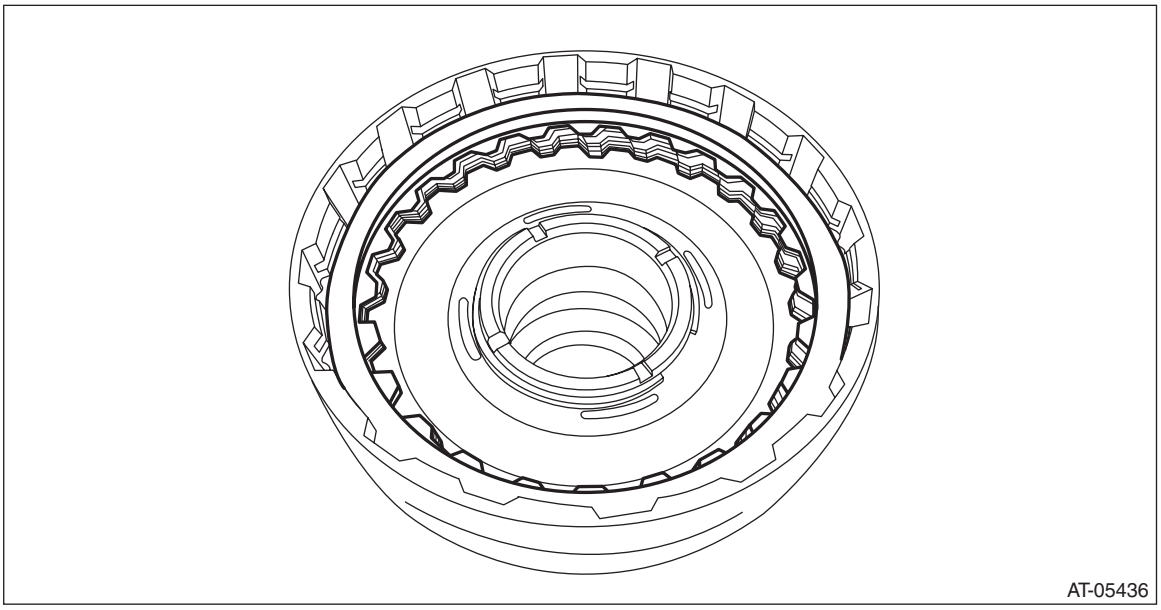

4) Remove the seal ring from front reduction driven shaft.

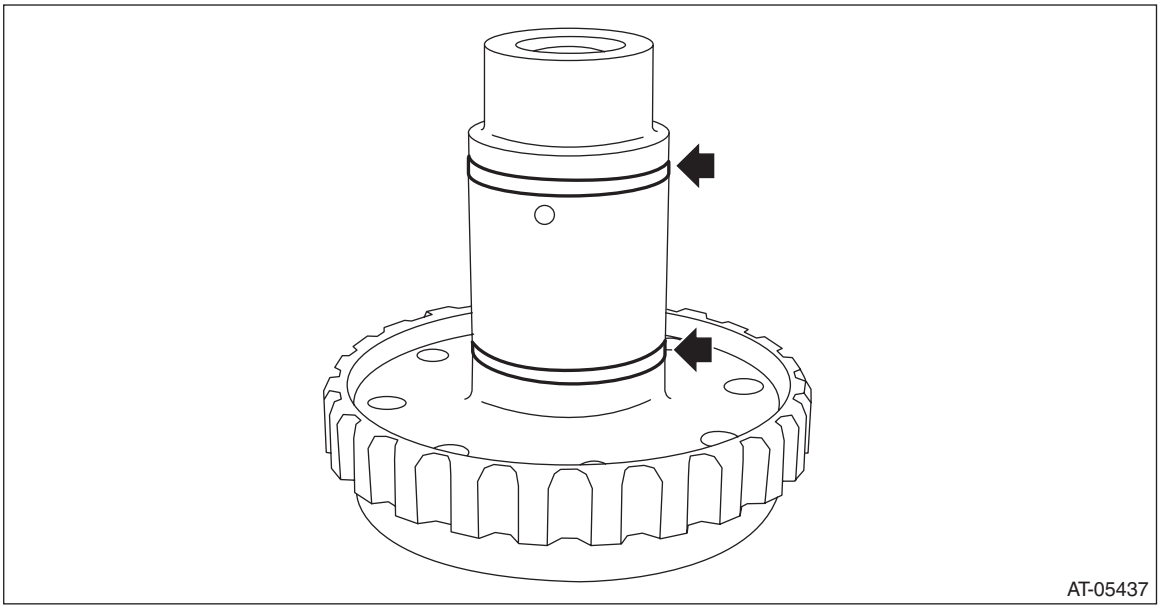

5) Using the round bar with diameter of 7 mm (0.28 in), tap the entire circumference around the ball bearing outer race a little at a time through the front reduction driven shaft hole, to remove the ball bearing.

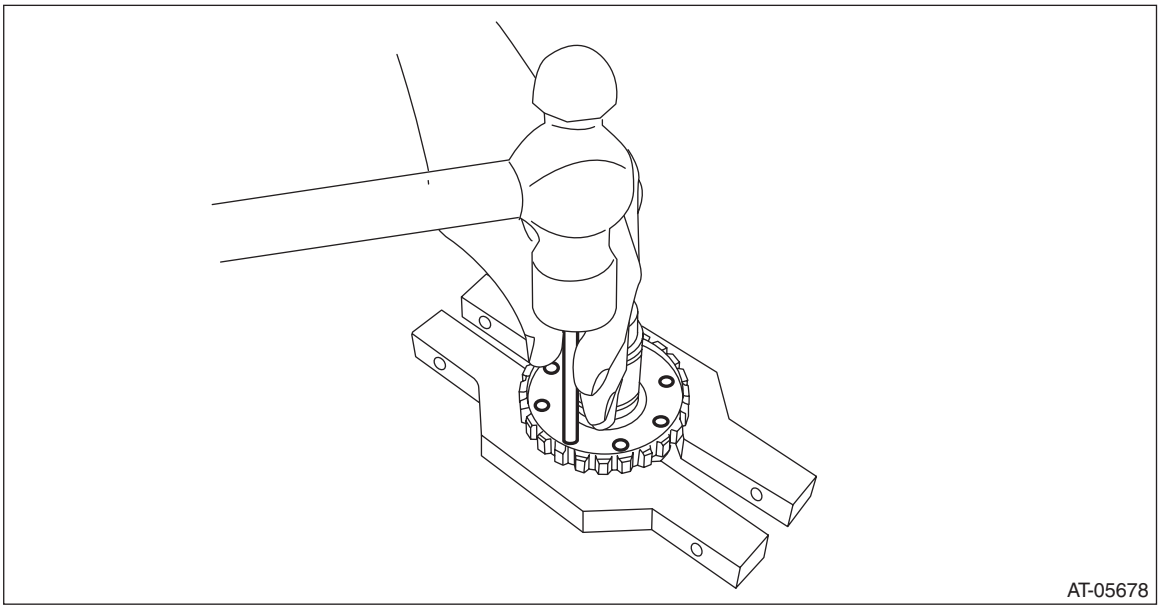

D: ASSEMBLY

1) Place the dish plate, driven plate, drive plate and retaining plate neatly in this order on surface table.

NOTE:
Make sure of the direction of dish plate.

2) Set the dial gauge to retaining plate, and read its scale.

NOTE:
The value, which is read in the gauge at this time, is zero point.

3) Scale and record the weight “Z” of a flat board which will be put on retaining plate.

NOTE:
- Use a stiff board which does not bend against load as a flat board to be put on retaining plate.
- Use a flat board weighing less than 130 N (13.3 kgf, 29.2 lb).

4) Put the flat board on retaining plate.

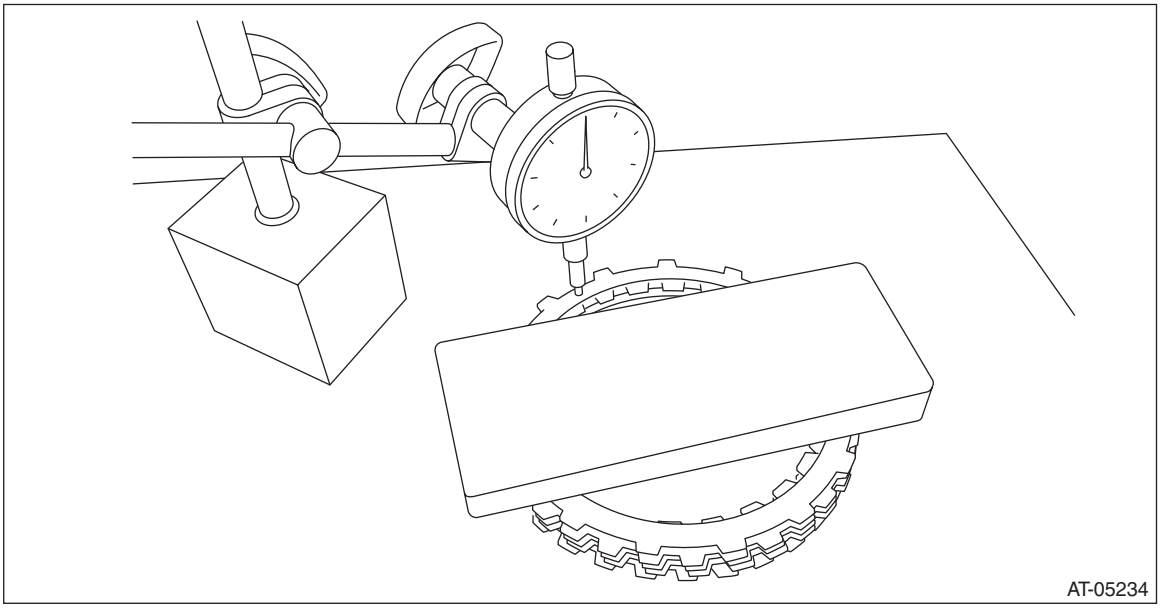

5) Using the following formula, calculate load “N”, a force of pressing with push/pull gauge.
N = 130 N (13.3 kgf, 29.2 lb) – Z
130 N (13.3 kgf, 29.2 lb) : Load applied to clutch plate
Z: Flat board weight
6) Press the center of retaining plate by applying a force of “N” using push/pull gauge, and then measure and record the compression amount “A”.

NOTE:
Measure at four points with a 90° interval and calculate the average.

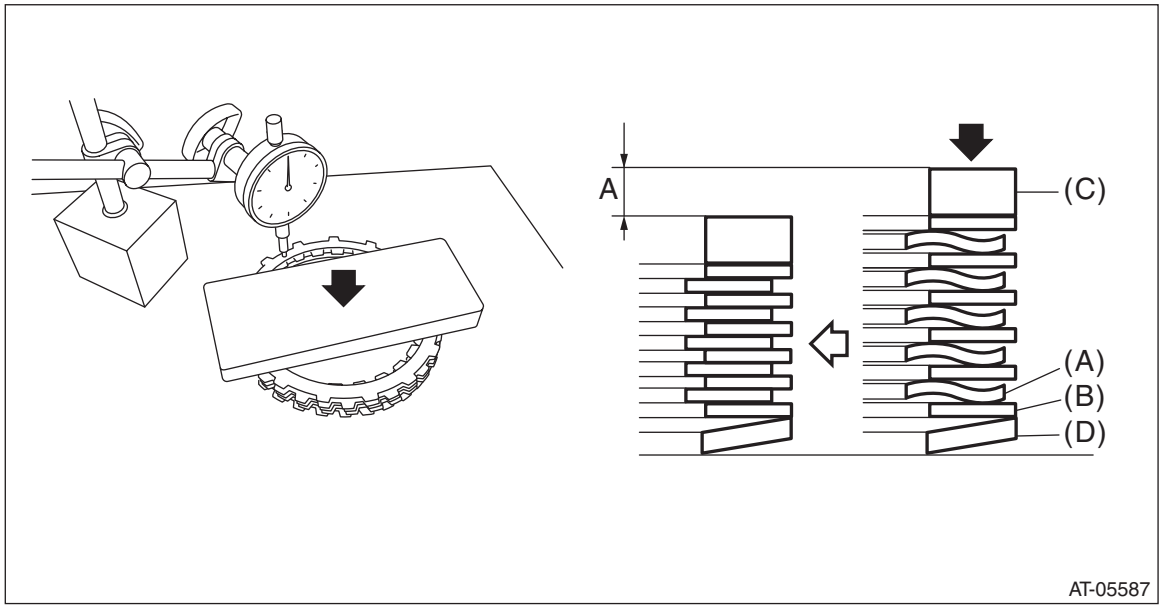

(A) Drive plate
(B) Driven plate
(C) Retaining plate
(D) Dish plate

7) Install the dish plate, driven plate, drive plate, retaining plate and snap ring.

NOTE:
Make sure of the direction of dish plate.

8) Measure and record the clearance “B” between the retaining plate and snap ring.

NOTE:
Before measuring, press down the whole circumference of retaining plate using your finger.

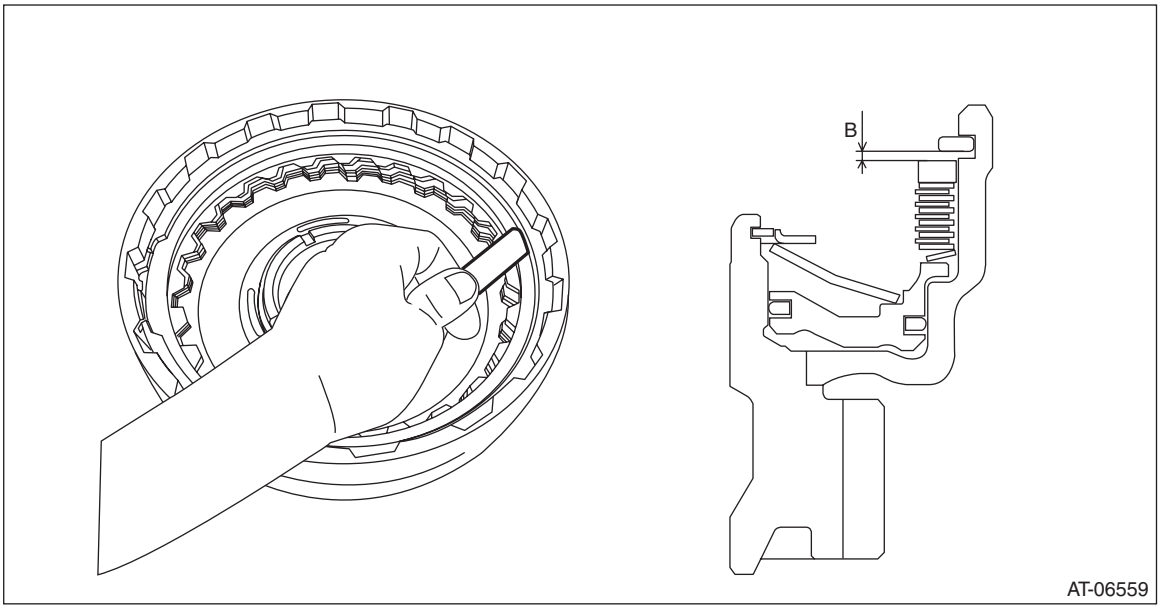

9) Piston stroke calculation
Calculate with A and B dimensions recorded before.
If out of standard, replace with a new drive plate and adjust it within standard.
S mm (in) = A + B
S: Piston stroke
A: Compression amount of drive plate and dish plate
B: Clearance between retaining plate and snap ring

Specification:
2.4 — 2.8 mm (0.094 — 0.11 in)

Retaining plate	
Part No.	Thickness mm (in)
31667AA430	3.1 (0.122)
31667AA440	3.3 (0.130)
31667AA450	3.5 (0.138)

10) Press-fit the ball bearing into front driven shaft.

NOTE:
Use a new ball bearing.

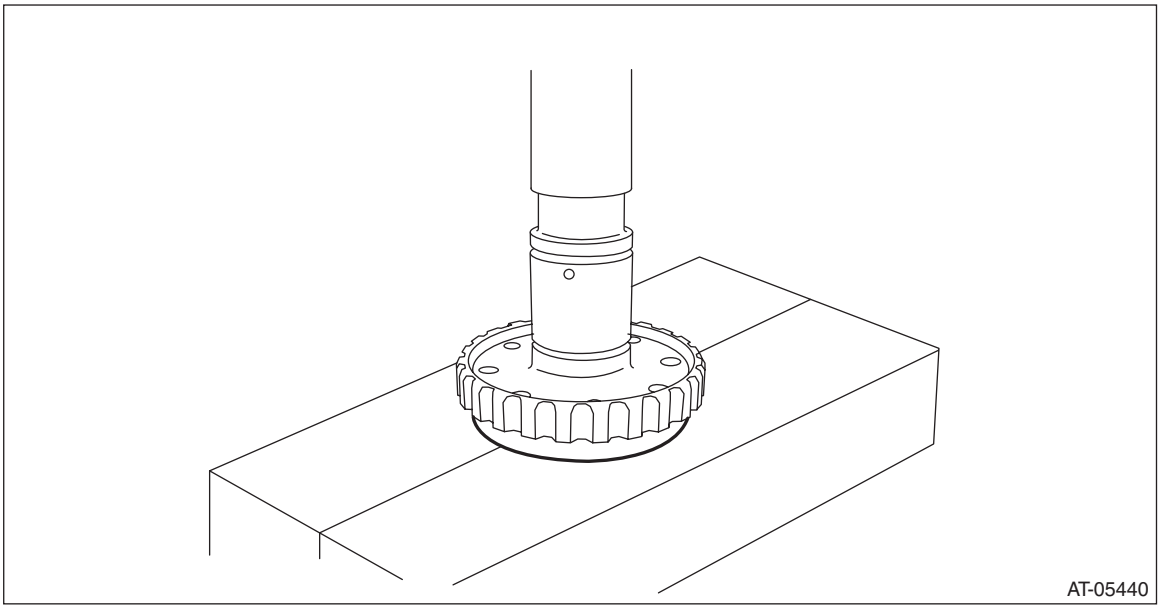

11) Install the seal ring to the front driven shaft.

NOTE:
- Install a new seal ring.
- Apply CVTF to the seal rings.

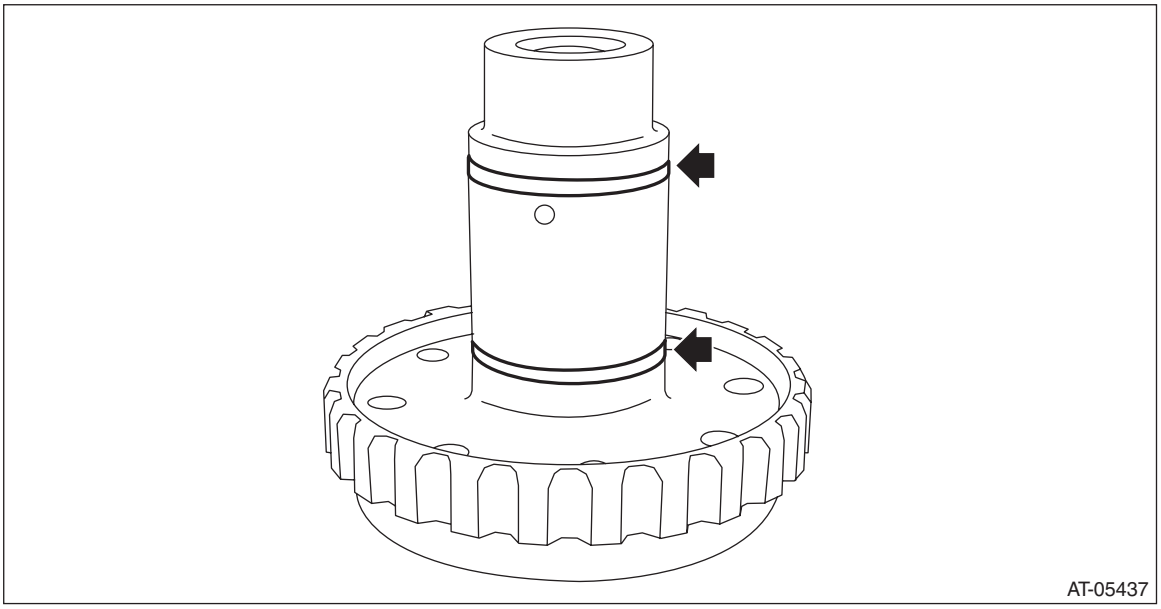

12) Install the front driven shaft to front driven gear.

13) Using the ST, install the ball bearing.

NOTE:
Use a new ball bearing.
ST 18651AA000 INSTALLER

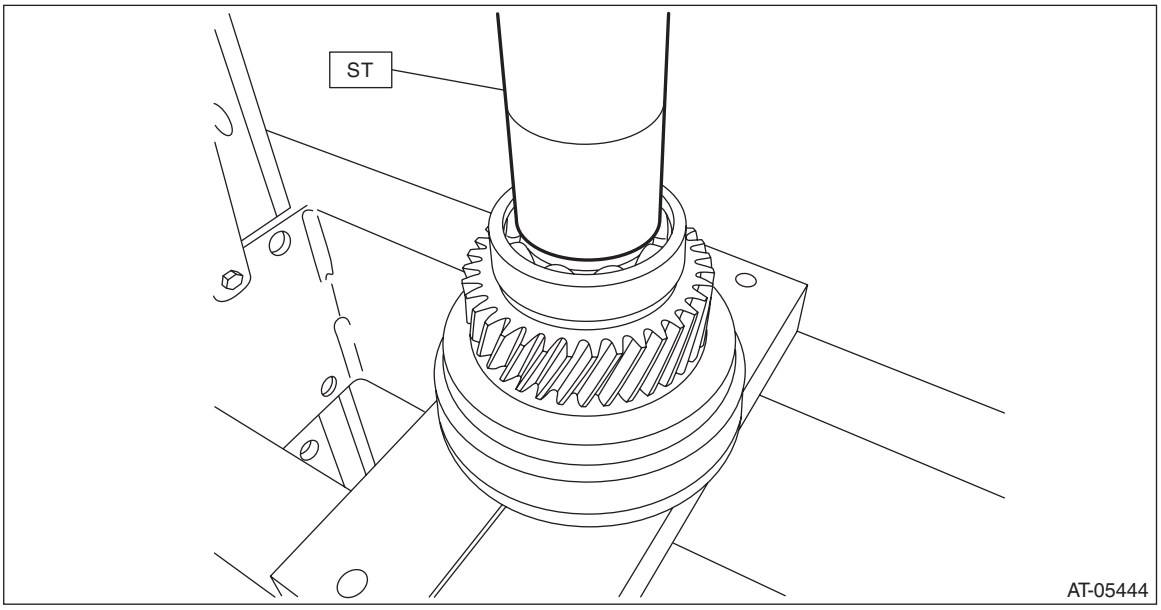

14) Install the front reduction driven gear assembly to converter case cover.

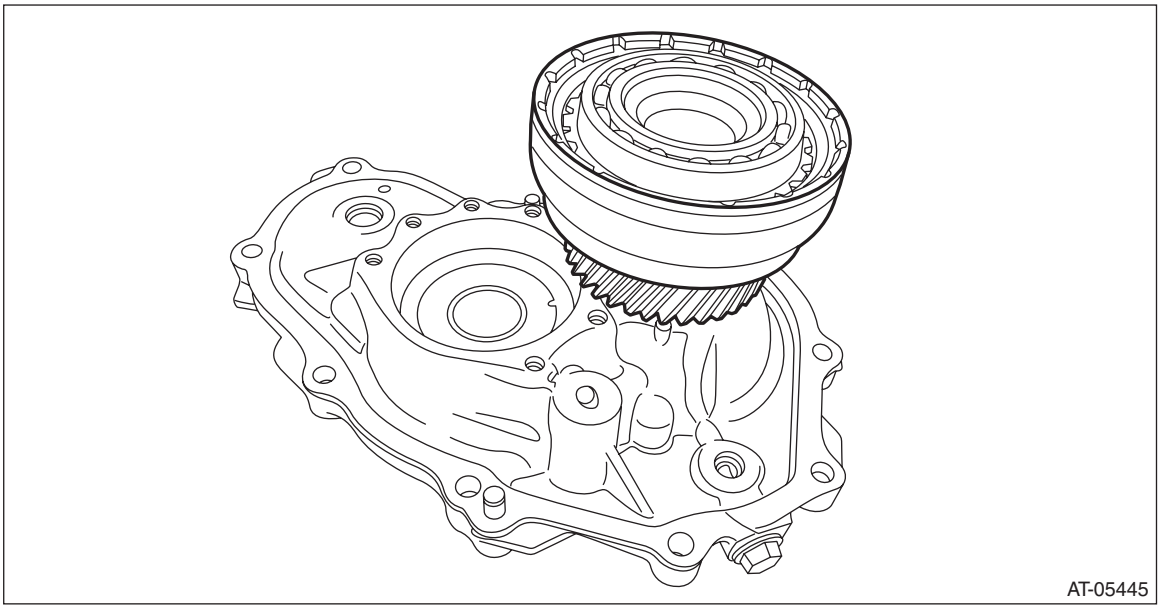

15) Apply compressed air intermittently to check the piston operation.

NOTE:
Hold the arrowed area with a finger.

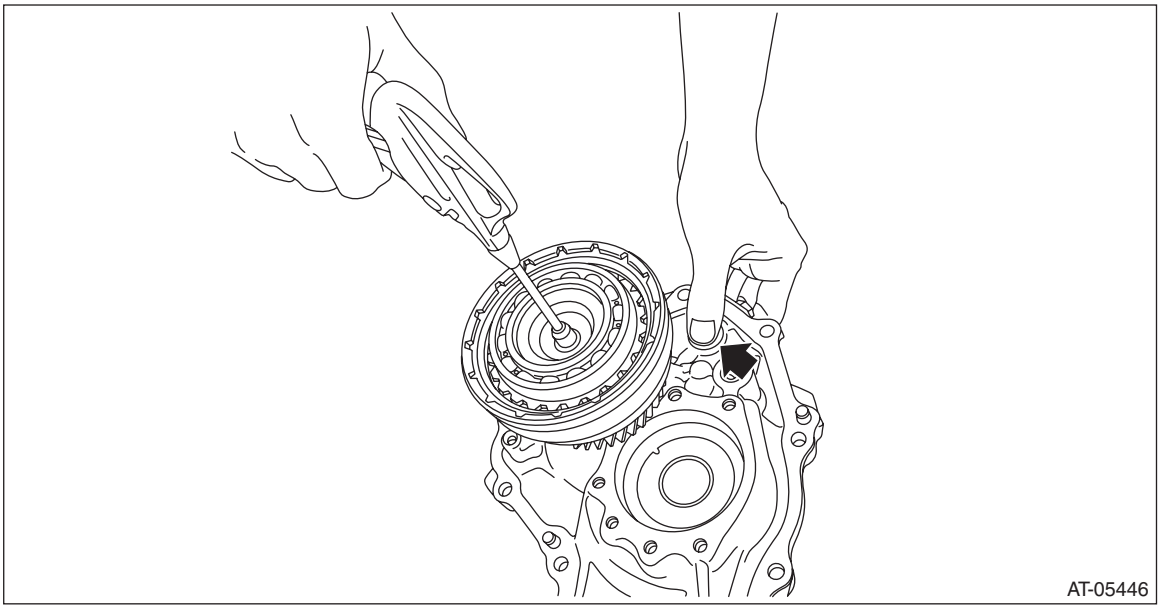

E: INSPECTION

- Check the drive plate for wear and damage.
- Check the driven plate for discoloration (burnt color).
- Check for worn snap ring, fatigue or damaged return spring or deformed piston retainer.
- Replace if its tooth surfaces are broken, damaged or excessively worn.
- Check the bearing for seizure or wear.
- Apply CVTF to bearing and rotate the bearing to check for noise or dragging etc.

F: ADJUSTMENT

1) Using the ST, measure height “A” from the ST upper face to the mating surface of the case.
ST 398643600 GAUGE

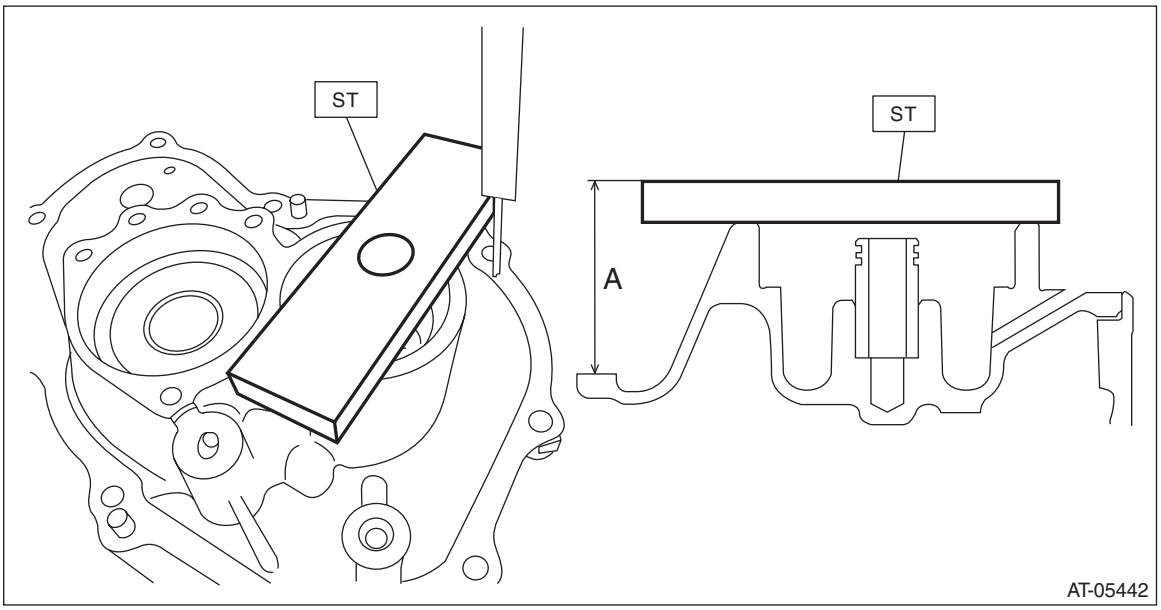

2) Measure depth “B” from the converter case cover upper face to the bearing catch surface.

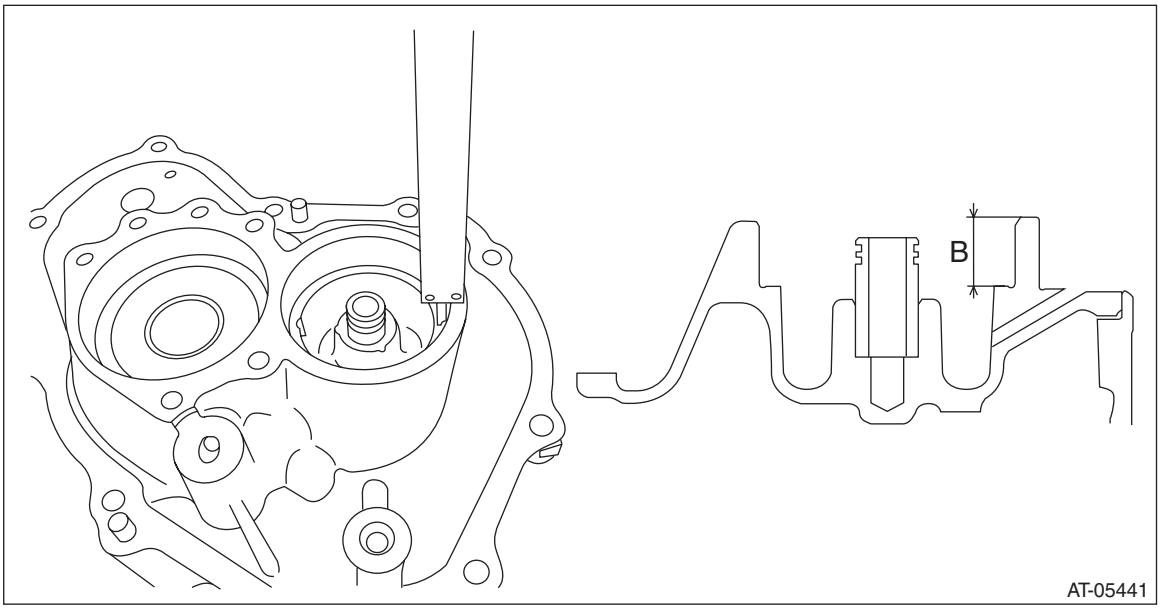

3) Measure depth “C” from the ST upper face to the bearing end face using the ST.
ST 398643600 GAUGE

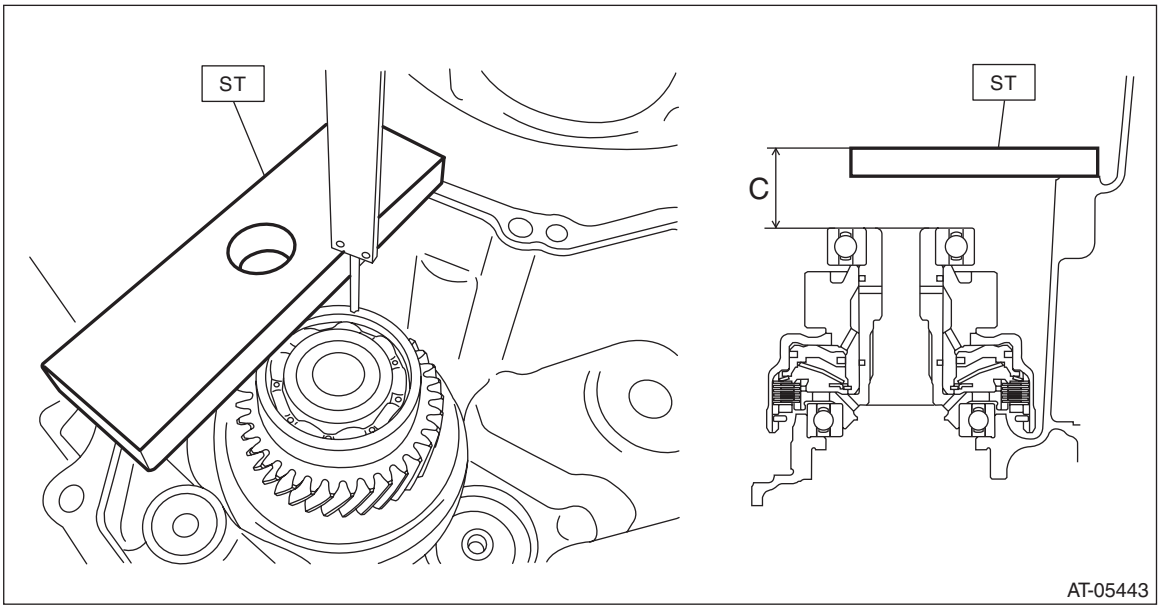

4) Using the following formula, calculate clearance “T” to select a shim.
Formula: T mm = (C – 15) – ((A – 15) – B)
[T in = (C – 0.591) – ((A – 0.591) – B)]
T: Clearance
A: Height from the ST upper face to the converter case mating surface
B: Depth from the converter case cover upper face to the bearing catch surface
C: Depth from the ST upper face to the bearing end face
15 mm (0.591 in): Thickness of ST

Clearance “T” mm (in)	Thickness of shim mm (in)
0.470 — 0.569 (0.019 — 0.021)	0.4 (0.016)
0.570 — 0.669 (0.022 — 0.025)	0.5 (0.020)
0.670 — 0.769 (0.026 — 0.029)	0.6 (0.024)
0.770 — 0.869 (0.030 — 0.033)	0.7 (0.028)
0.870 — 0.980 (0.034 — 0.039)	0.8 (0.031)

5) Select one to two shims so that the total thickness meets the value obtained from above.

Part No.	Thickness of shim mm (in)
31288AA130	0.2 (0.008)
31288AA140	0.3 (0.012)
31288AA150	0.5 (0.020)

49.Converter Case

A: REMOVAL

1) Remove the transmission assembly from the vehicle. <Ref. to CVT-55, REMOVAL, Automatic Transmission Assembly.>
2) Remove the air breather hose. <Ref. to CVT-132, REMOVAL, Air Breather Hose.>
3) Remove the oil pan and control valve body. <Ref. to CVT-111, REMOVAL, Control Valve Body.>
4) Remove the transmission harness. <Ref. to CVT-121, REMOVAL, Transmission Harness.>
5) Remove the secondary pressure sensor. <Ref. to CVT-109, REMOVAL, Secondary Pressure Sensor.>
6) Remove the primary speed sensor. <Ref. to CVT-105, REMOVAL, Primary Speed Sensor.>
7) Remove the extension case. <Ref. to CVT-138, REMOVAL, Extension Case.>
8) Remove the rear drive shaft. <Ref. to CVT-141, REMOVAL, Rear Drive Shaft.>
9) Remove the transfer clutch assembly. <Ref. to CVT-146, REMOVAL, Transfer Clutch.>
10) Remove the transfer reduction driven gear assembly. <Ref. to CVT-158, REMOVAL, Transfer Reduction Driven Gear.>
11) Remove the intermediate case. <Ref. to CVT-165, REMOVAL, Intermediate Case.>
12) Remove the forward clutch assembly. <Ref. to CVT-180, REMOVAL, Forward Clutch Assembly.>
13) Remove the transmission case. <Ref. to CVT-211, REMOVAL, Transmission Case.>
14) Remove the primary pulley, secondary pulley and variator chain. <Ref. to CVT-226, REMOVAL, Primary Pulley and Secondary Pulley.>
15) Remove the drive pinion shaft assembly. <Ref. to CVT-242, REMOVAL, Drive Pinion Shaft Assembly.>
16) Remove the front differential assembly. <Ref. to CVT-263, REMOVAL, Front Differential Assembly.>
17) Remove the converter case cover. <Ref. to CVT-289, REMOVAL, Converter Case Cover.>
18) Remove the front reduction drive gear and front reduction driven gear. <Ref. to CVT-297, REMOVAL, Front Reduction Drive Gear.>

B: INSTALLATION

1) Install the front reduction drive gear and front reduction driven gear. <Ref. to CVT-298, INSTALLATION, Front Reduction Drive Gear.>
2) Install the converter case cover. <Ref. to CVT-291, INSTALLATION, Converter Case Cover.>
3) Install the front differential assembly. <Ref. to CVT-264, INSTALLATION, Front Differential Assembly.>
4) Install the drive pinion shaft assembly. <Ref. to CVT-244, INSTALLATION, Drive Pinion Shaft Assembly.>
5) Install the primary pulley, secondary pulley and steel chain. <Ref. to CVT-230, INSTALLATION, Primary Pulley and Secondary Pulley.>
6) Install the transmission case. <Ref. to CVT-213, INSTALLATION, Transmission Case.>
7) Install the forward clutch assembly. <Ref. to CVT-181, INSTALLATION, Forward Clutch Assembly.>
8) Install the intermediate case. <Ref. to CVT-166, INSTALLATION, Intermediate Case.>
9) Install the transfer reduction driven gear. <Ref. to CVT-158, INSTALLATION, Transfer Reduction Driven Gear.>
10) Install the transfer clutch assembly. <Ref. to CVT-147, INSTALLATION, Transfer Clutch.>
11) Install the rear drive shaft. <Ref. to CVT-141, INSTALLATION, Rear Drive Shaft.>
12) Install the extension case. <Ref. to CVT-138, INSTALLATION, Extension Case.>
13) Install the primary speed sensor. <Ref. to CVT-105, INSTALLATION, Primary Speed Sensor.>
14) Install the secondary pressure sensor. <Ref. to CVT-109, INSTALLATION, Secondary Pressure Sensor.>
15) Install the transmission harness. <Ref. to CVT-123, INSTALLATION, Transmission Harness.>
16) Install the control valve body and oil pan. <Ref. to CVT-115, INSTALLATION, Control Valve Body.>
17) Install the air breather hose. <Ref. to CVT-132, INSTALLATION, Air Breather Hose.>
18) Install the transmission assembly to the vehicle. <Ref. to CVT-70, INSTALLATION, Automatic Transmission Assembly.>

C: DISASSEMBLY

1) Remove the transmission hanger and transmission radio ground cord.
2) Remove the oil drain plug and overflow drain plug. <Ref. to CVT-42, REPLACEMENT, Differential Gear Oil.>
3) Remove all plugs.

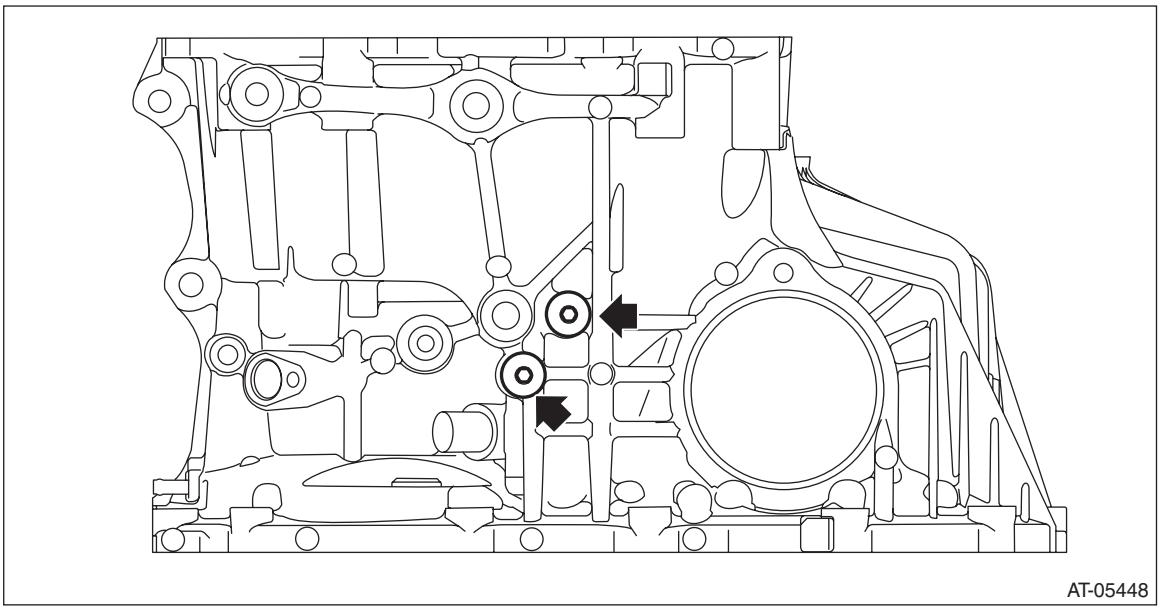

D: ASSEMBLY

1) Install the oil drain plug and overflow drain plug.

NOTE:
Overflow plug of differential gear oil is temporarily attached.
2) Install all plugs.

NOTE:
Use new O-rings.

Tightening torque:
25 N·m (2.5 kgf-m, 18.4 ft-lb)

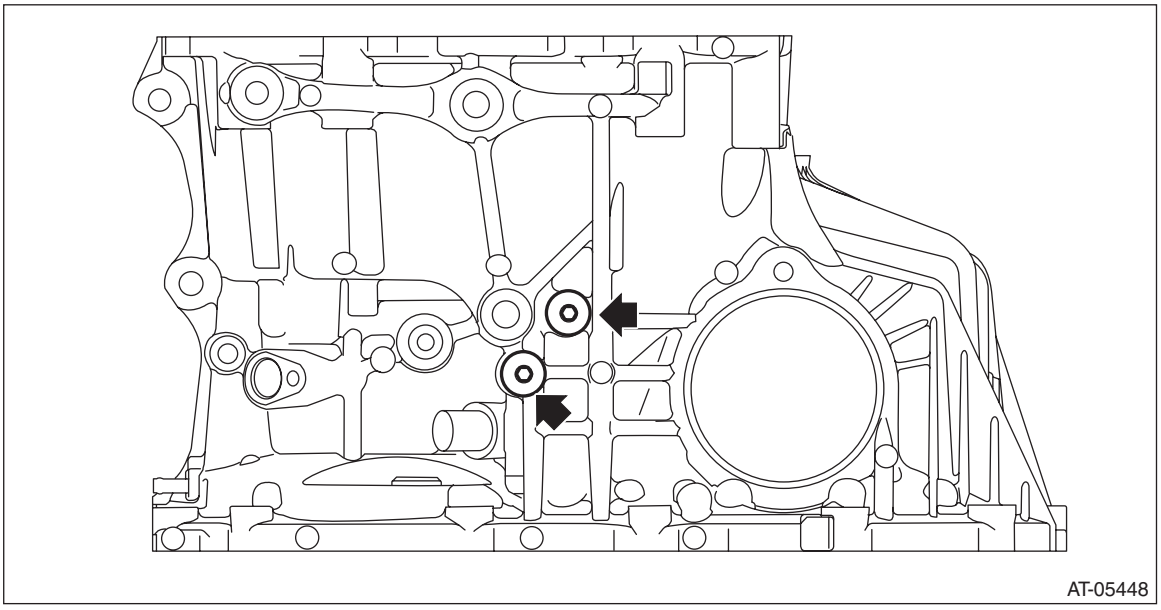

3) Install the transmission hanger and transmission radio ground cord.

Tightening torque:
41 N·m (4.2 kgf-m, 30.2 ft-lb)

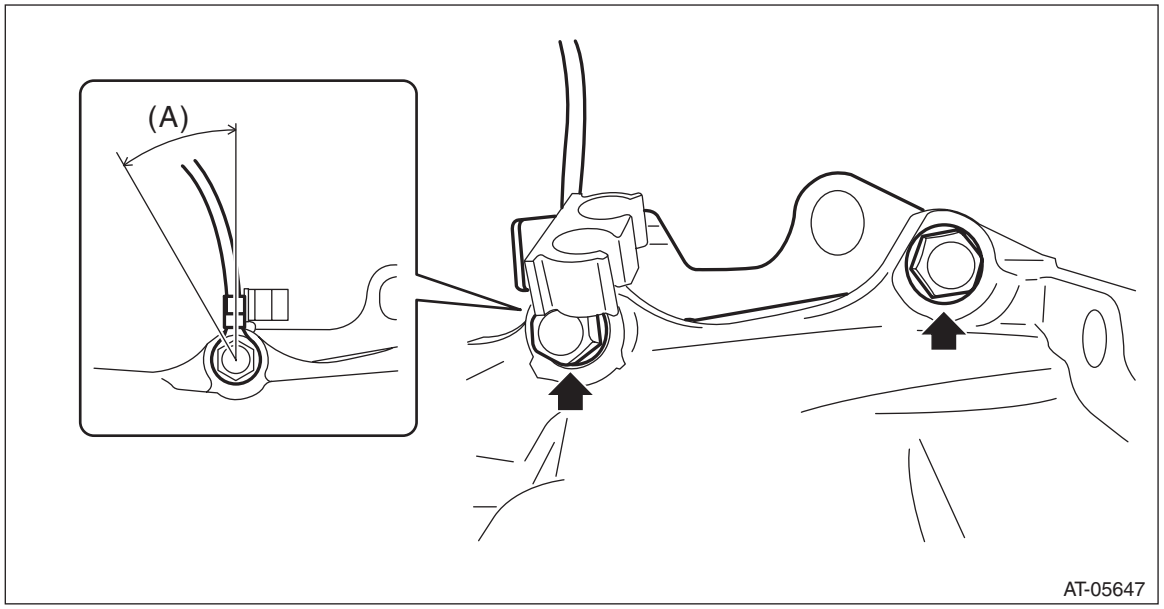

(A) Install within the range of 30° approximately.

E: INSPECTION

- Check for leakage of CVTF from the connection between converter case and transmission case.
- Check there is no damage or cracks on the converter case.

F: ADJUSTMENT

When replacing the converter case cover, select the following shims.

- Select the shim for front reduction drive gear. <Ref. to CVT-302, ADJUSTMENT, Front Reduction Drive Gear.>
- Select the shim for front reduction driven gear. <Ref. to CVT-311, ADJUSTMENT, Front Reduction Driven Gear.>
- Select shims for primary pulley. <Ref. to CVT-236, ADJUSTMENT, Primary Pulley and Secondary Pulley.>

50.Diagnostics with Phenomenon

A: INSPECTION

Symptoms	Faulty parts
Stall speed is low after warming-up, with select lever in “D” or “R” range.	Engine control system
Vehicle does not move despite engine speed rising up, with select lever in “D” or “R” range.	• Engine control system • Select cable • CVTF • Secondary pressure circuit • Pulley, gear and variator chain • Forward/reverse changeover section • TCM • Control valve body • Inhibitor switch
Vehicle does not move by engine stall, with select lever in “D” or “R” range.	• Parking mechanism • Select cable • Bearing • Forward/reverse changeover section
Excessive shock occurs at starting, with select lever in “D” or “R” range.	• Secondary pressure circuit • Pulley, gear and variator chain
Acceleration speed from standstill is insufficient, with select lever in “D” or “R” range.	• Control valve body • Forward/reverse changeover section
Engine speed suddenly rises up during driving, with select lever in “D” or “R” range.	• Control valve body • Secondary pressure circuit • Primary pressure circuit
Vibration occurs during driving, with select lever in “D” or “R” range.	• Secondary pressure circuit • Primary pressure circuit • Forward/reverse changeover section • Pulley and variator chain • Torque converter ASSY • Hydraulic pressure circuit to torque converter • Control valve body
Sudden braking occurs during driving, with select lever in “D” or “R” range.	• Secondary pressure circuit • Primary pressure circuit • Control valve body
During deceleration, lockup clutch does not disengage until just before halting, with select lever in “D” or “R” range.	• Control valve body • Torque converter ASSY
Engine stalls with vehicle at a standstill, with select lever in “D” or “R” range.	• Engine control system • Control valve body
Excessive lockup shock occurs during driving, with select lever in “D” range.	Control valve body
Slipping occurs at lockup, or lockup does not occur during driving, with select lever in “D” range.	• Control valve body • Lockup hydraulic line • Torque converter ASSY
Excessive shift shock occurs when shifting the select lever from “N” range to “D” range, or from “N” range to “R” range.	• Inhibitor switch • Control valve body • Forward/reverse changeover section
Vehicle does not keep at standstill with select lever in “P” range, or parking cannot be released when shifting from “P” range to another range.	• Select cable • Parking mechanism
Select lever does not shift smoothly.	• Select cable • Inhibitor switch • Detent spring • Manual plate

CONTINUOUSLY VARIABLE TRANSMISSION (DIAGNOSTICS)

CVT(diag)

		Page
1.	Basic Diagnostic Procedure	2
2.	Check List for Interview	4
3.	General Description	5
4.	Electrical Component Location	7
5.	Transmission Control Module (TCM) I/O Signal	11
6.	Subaru Select Monitor	15
7.	Read Current Data	16
8.	Read Diagnostic Trouble Code (DTC)	17
9.	Clear Memory Mode	18
10.	Inspection Mode	19
11.	Learning Control	20
12.	AT OIL TEMP Warning Light Display	22
13.	AWD Warning Light Display	25
14.	Diagnostic Procedure for Subaru Select Monitor Communication	28
15.	List of Diagnostic Trouble Code (DTC)	32
16.	Diagnostic Procedure with Diagnostic Trouble Code (DTC)	35
17.	Diagnostic Procedure without Diagnostic Trouble Code (DTC)	89
18.	Diagnostics with Phenomenon	90

1. Basic Diagnostic Procedure

A: PROCEDURE

	Step	Check	Yes	No
1	**CHECK PRE-INSPECTION.** 1) Ask the customer when and how the trouble occurred using the interview check list. <Ref. to CVT(diag)-4, Check List for Interview.> 2) Before performing diagnostics, check the following items which might affect CVT problems. • General inspection <Ref. to CVT(diag)-5, INSPECTION, General Description.> • Disconnection of harness connector • Visual check for harness damage • Oil leakage • Stall speed test <Ref. to CVT-47, Stall Test.> • Secondary pressure test <Ref. to CVT-50, Secondary Pressure (Line Pressure) Test.> • Transfer clutch pressure test <Ref. to CVT-53, Transfer Clutch Pressure Test.> • Time lag test <Ref. to CVT-49, Time Lag Test.> • Road test <Ref. to CVT-46, Road Test.> • Inhibitor switch <Ref. to CVT-95, Inhibitor Switch.>	Is the item that is thought to influence the CVT problem working properly?	Go to step **2**.	Repair the items which may be affecting the CVT trouble.
2	**CHECK AT OIL TEMP LIGHT.** Turn the ignition switch to ON and wait for at least 2 seconds.	Does the AT OIL TEMP light illuminate?	Go to step **3**.	Check the AT OIL TEMP light.
3	**CHECK AT OIL TEMP LIGHT.** Start the engine and wait for 2 seconds or more.	Does the AT OIL TEMP light blink?	Go to step **4**.	Go to step **6**.
4	**CHECK FOR ANY OTHER DTC ON DISPLAY.** Read the DTC. NOTE: If the communication function of Subaru Select Monitor cannot be executed normally, check the communication circuit. <Ref. to CVT(diag)-28, COMMUNICATION FOR INITIALIZING IMPOSSIBLE, Diagnostic Procedure for Subaru Select Monitor Communication.>	Is DTC displayed on Subaru Select Monitor?	Record all DTC. Go to step **5**.	Go to step **6**.
5	**CHECK FREEZE FRAME DATA.** Using the Subaru Select Monitor, check the Freeze Frame Data.	Are freeze frame data recorded?	Record the freeze frame data. Go to step **7**.	Go to step **7**.
6	**PERFORM GENERAL DIAGNOSTICS.** 1) Inspect using “Diagnostic Procedure without Diagnostic Trouble Code (DTC)”. <Ref. to CVT(diag)-89, Diagnostic Procedure without Diagnostic Trouble Code (DTC).> 2) Inspect using “Diagnostics with Phenomenon”. <Ref. to CVT(diag)-90, Diagnostics with Phenomenon.> 3) Perform the Inspection Mode. <Ref. to CVT(diag)-19, Inspection Mode.> 4) Read the DTC.	Is DTC displayed on Subaru Select Monitor?	Go to step **7**.	Finish the diagnosis.

	Step	Check	Yes	No
7	**PERFORM DIAGNOSIS.** 1) Inspect by referring to “Diagnostic Procedure with Diagnostic Trouble Code (DTC)”. <Ref. to CVT(diag)-35, Diagnostic Procedure with Diagnostic Trouble Code (DTC).> NOTE: For the DTC table, refer to “List of Diagnostic Trouble Code (DTC)”. <Ref. to CVT(diag)-32, List of Diagnostic Trouble Code (DTC).> 2) Repair the trouble cause. 3) Perform the Clear Memory Mode. 4) Perform the Inspection Mode. <Ref. to CVT(diag)-19, Inspection Mode.> 5) Read the DTC.	Is DTC displayed on Subaru Select Monitor?	Inspect by referring to “Diagnostic Procedure with Diagnostic Trouble Code (DTC)”. <Ref. to CVT(diag)-35, Diagnostic Procedure with Diagnostic Trouble Code (DTC).>	Finish the diagnosis.

2. Check List for Interview

A: CHECK

Check the following items when a problem has occurred.

NOTE:
Use copies of this page for interviewing customers.

<table>
<tr><td>Customer's name</td><td colspan="3"></td></tr>
<tr><td>Date of purchase</td><td colspan="3"></td></tr>
<tr><td>Date of repair</td><td colspan="3"></td></tr>
<tr><td>Transmission model</td><td>Transmission</td><td colspan="2">V.I.N.</td></tr>
<tr><td>Odometer reading</td><td colspan="3">km (miles)</td></tr>
<tr><td>Frequency</td><td colspan="3">❑ Continuous ❑ Intermittent (times/day)</td></tr>
<tr><td>Weather</td><td colspan="3">❑ Fine ❑ Cloudy ❑ Rainy ❑ Snowy
❑ Others
( )</td></tr>
<tr><td>Place</td><td colspan="3">❑ Highland ❑ Suburbs ❑ Inner city ❑ Uphill ❑ Downhill ❑ Rough road
❑ Others
( )</td></tr>
<tr><td>Ambient air temperature</td><td colspan="3">❑ Hot ❑ Warm ❑ Cool ❑ Cold</td></tr>
<tr><td>Vehicle speed</td><td colspan="3">km/h (MPH)</td></tr>
<tr><td>AT OIL TEMP light</td><td colspan="2">❑ Blinks continuously</td><td>❑ Does not blink</td></tr>
<tr><td>Select lever position</td><td colspan="3">❑ P ❑ R ❑ N ❑ D ❑ Manual mode</td></tr>
<tr><td>Driving condition</td><td>❑ Not affected
❑ At racing
❑ While decelerating</td><td>❑ At starting
❑ When accelerating
❑ While turning (❑ RH/❑ LH)</td><td>❑ While idling
❑ While cruising
(Vehicle speed km/h)
❑ Immediately after starting the engine</td></tr>
<tr><td>Manual mode</td><td colspan="3">❑ ON ❑ OFF</td></tr>
<tr><td rowspan="14">Symptoms</td><td colspan="3">❑ Vehicle does not move (❑ Any position ❑ Particular position)</td></tr>
<tr><td colspan="3">❑ Vehicle does not move (no load racing condition as in N range)</td></tr>
<tr><td colspan="3">❑ Vehicle does not move (engine speed does not increase, felt as stall condition)</td></tr>
<tr><td colspan="3">❑ Noise or vibration
(Describe concretely:)</td></tr>
<tr><td colspan="3">❑ Shock felt at N → D selection (seconds after shifting, when engine cold or after warm-up)</td></tr>
<tr><td colspan="3">❑ Shock felt at N → R selection (seconds after shifting, when engine cold or after warm-up)</td></tr>
<tr><td colspan="3">❑ Shifting is wrong
(Describe concretely:)</td></tr>
<tr><td colspan="3">❑ Shock or judder during driving</td></tr>
<tr><td colspan="3">❑ Fails to accelerate.</td></tr>
<tr><td colspan="3">❑ Engine speed increases abruptly during driving</td></tr>
<tr><td colspan="3">❑ Shock or judder during standing start</td></tr>
<tr><td colspan="3">❑ Select lever does not move</td></tr>
<tr><td colspan="3">❑ Others
( )</td></tr>
</table>

3. General Description

A: CAUTION

1. SUPPLEMENTAL RESTRAINT SYSTEM "AIRBAG"

The airbag system wiring harness is routed near the TCM.

CAUTION:
• All the airbag system wiring harnesses and connectors are colored yellow. Do not use an electric test equipment to check these circuits.
• Be careful not to damage the airbag system wiring harness when performing diagnostics or servicing the TCM.

2. MEASUREMENT

When measuring the voltage and resistance of the ECM, TCM or each sensor, use a tapered pin with a diameter of less than 0.64 mm (0.025 in) in order to avoid poor contact. Do not insert a pin of more than 0.65 mm (0.026 in) diameter.

B: INSPECTION

1. BATTERY

Measure the battery voltage and specific gravity of the electrolyte.

Standard voltage: 12 V or more

Specific gravity: 1.260 or more

2. TRANSMISSION GROUND

Make sure that the ground terminal bolt is tightened securely.

Tightening torque:
16 N·m (1.6 kgf-m, 11.8 ft-lb)

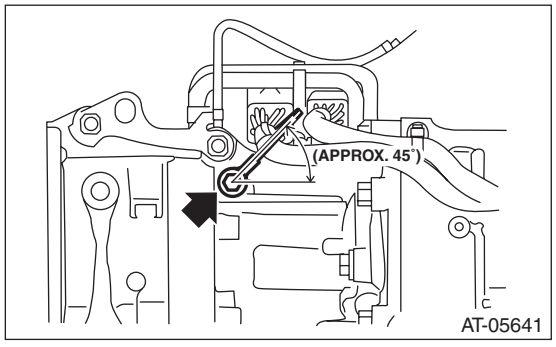

3. OPERATION OF SHIFT SELECT LEVER

Make sure there is no noise, dragging or contact pattern in each select lever range.

WARNING:
Stop the engine while checking operation of the select lever.

C: PREPARATION TOOL

1. SPECIAL TOOL

ILLUSTRATION	TOOL NUMBER	DESCRIPTION	REMARKS
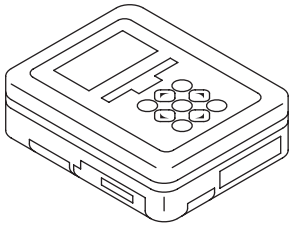 ST1B022XU0	1B022XU0	SUBARU SELECT MONITOR III KIT	Used for troubleshooting the electrical system.

2. GENERAL TOOL

TOOL NAME	REMARKS
Circuit tester	Used for measuring resistance, voltage and current.
Oscilloscope	Used for measuring the sensor.

4. Electrical Component Location

A: LOCATION

1. CONTROL MODULE

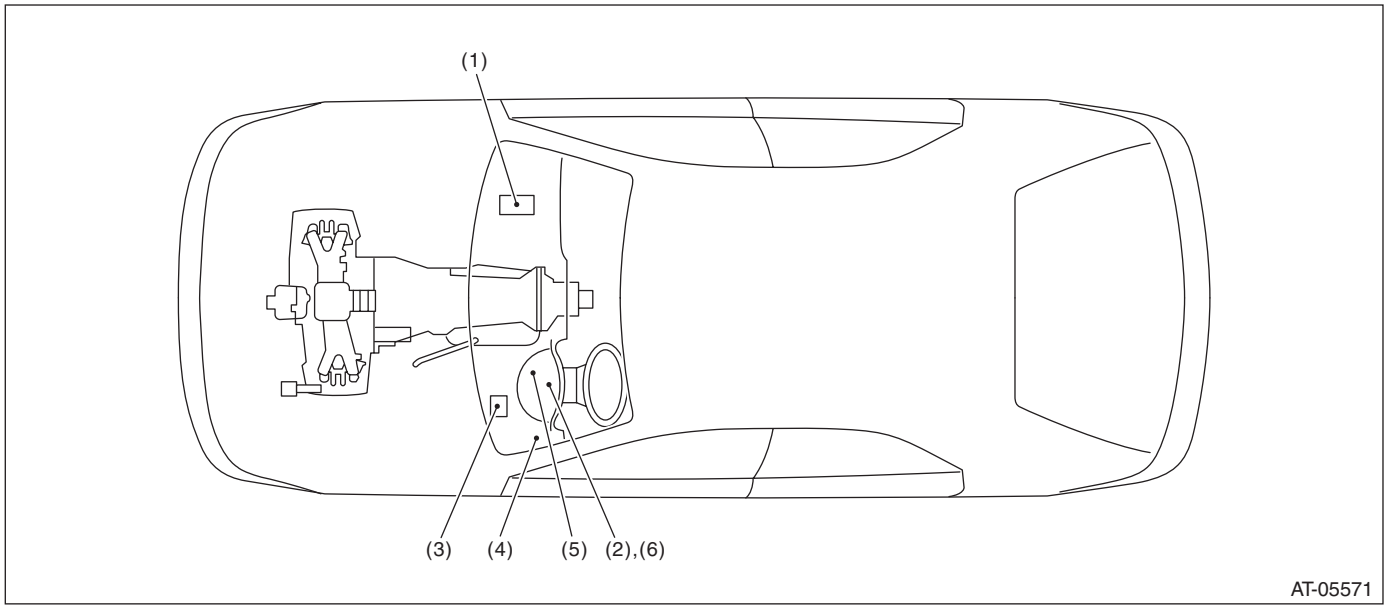

(1)	Engine control module (ECM)	(3)	Transmission control module (TCM)	(5)	Body integrated unit
(2)	AT OIL TEMP light	(4)	Data link connector	(6)	AWD light

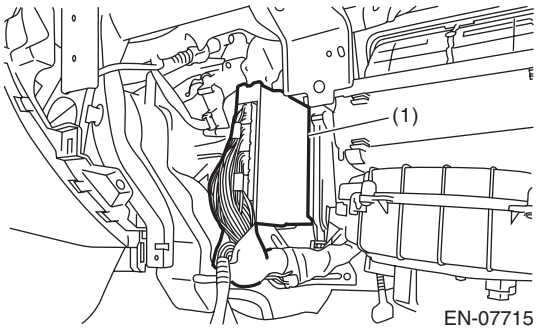
(1)
EN-07715

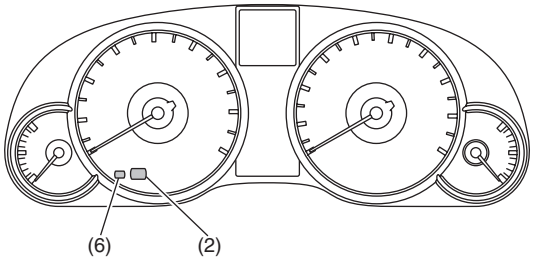
(6)
(2)
AT-06101

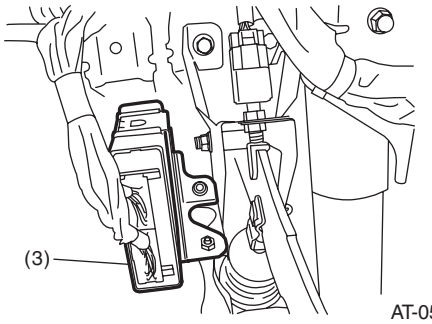
(3)
AT-05684

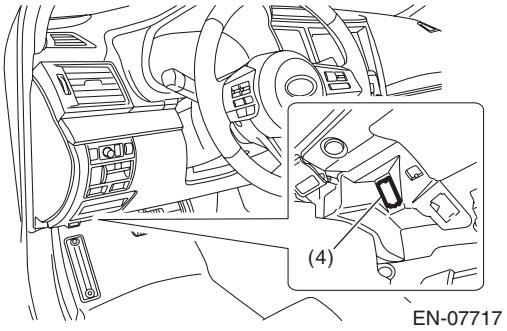
(4)
EN-07717

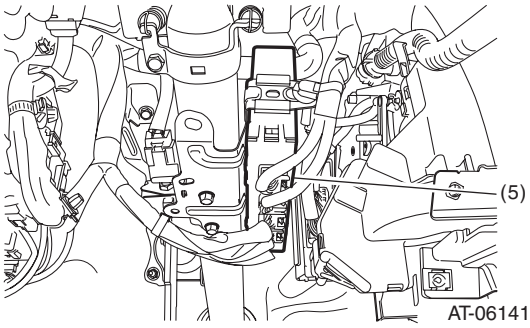
(5)
AT-06141

2. SENSOR

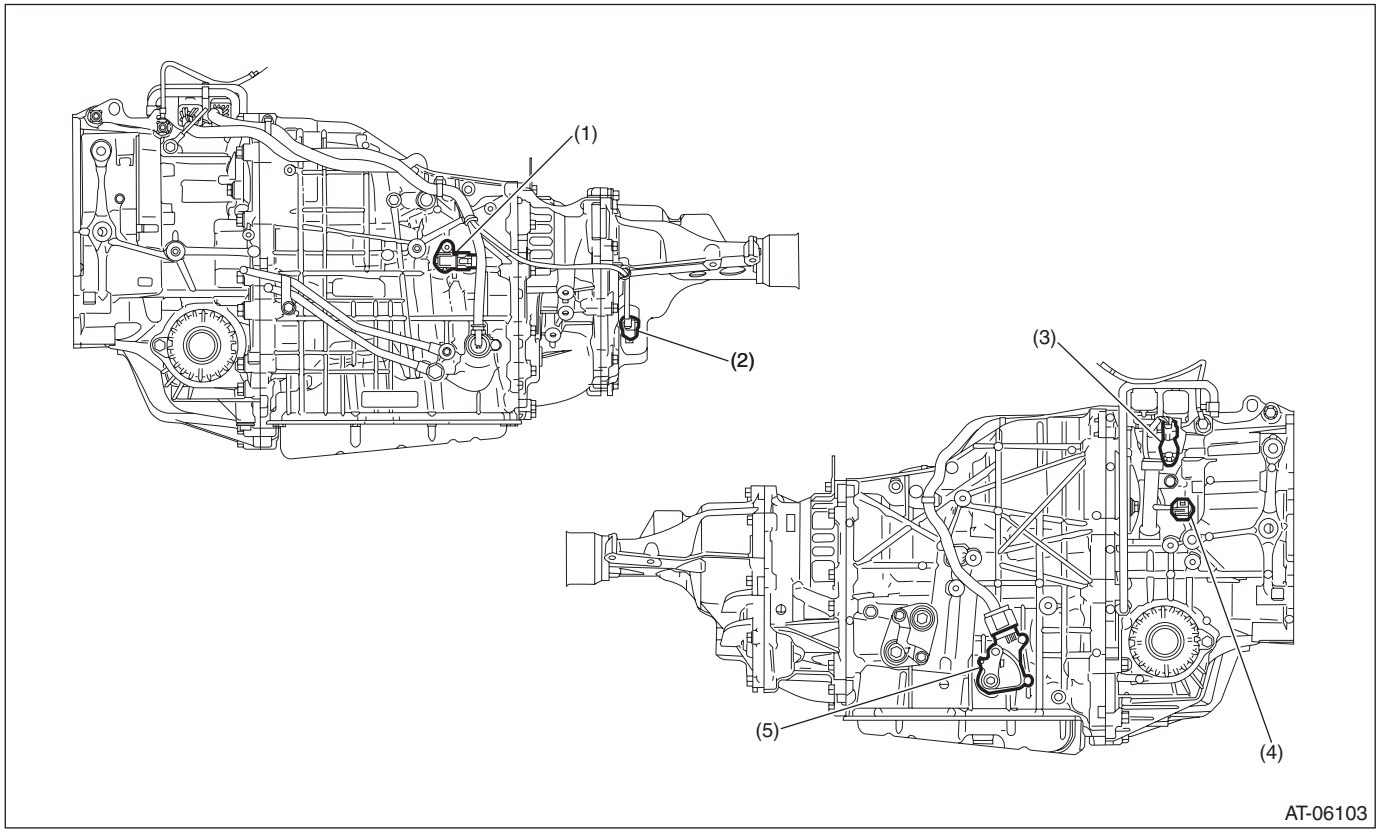

(1) Secondary speed sensor
(2) Front wheel speed sensor
(3) Primary speed sensor
(4) Secondary pressure sensor
(5) Inhibitor switch

3. SOLENOID

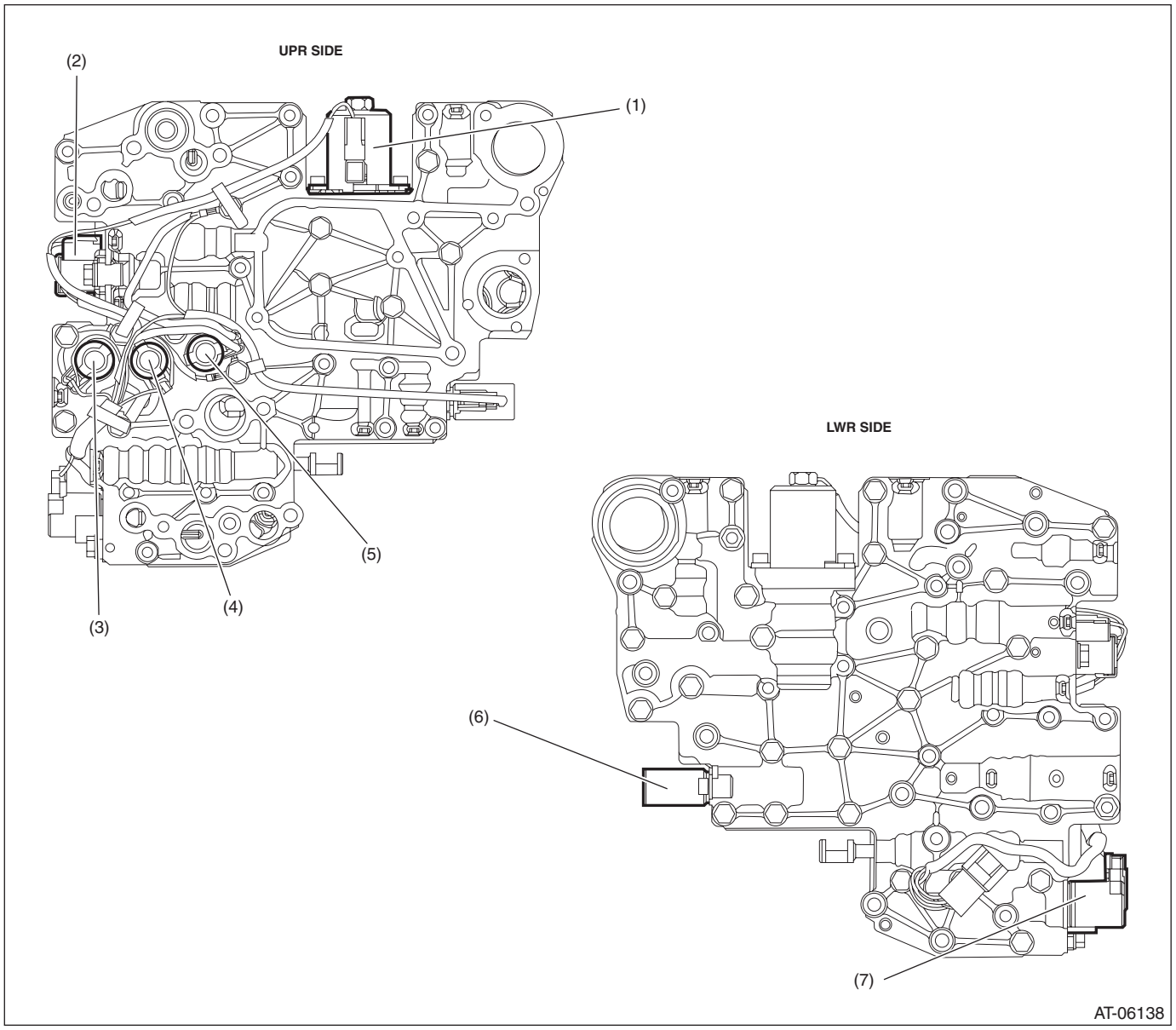

(1) Secondary solenoid
(2) AWD solenoid
(3) Lock-up duty solenoid
(4) Primary DOWN solenoid
(5) Primary UP solenoid
(6) F&R solenoid
(7) Lock-up ON/OFF solenoid

5. Transmission Control Module (TCM) I/O Signal

A: ELECTRICAL SPECIFICATION

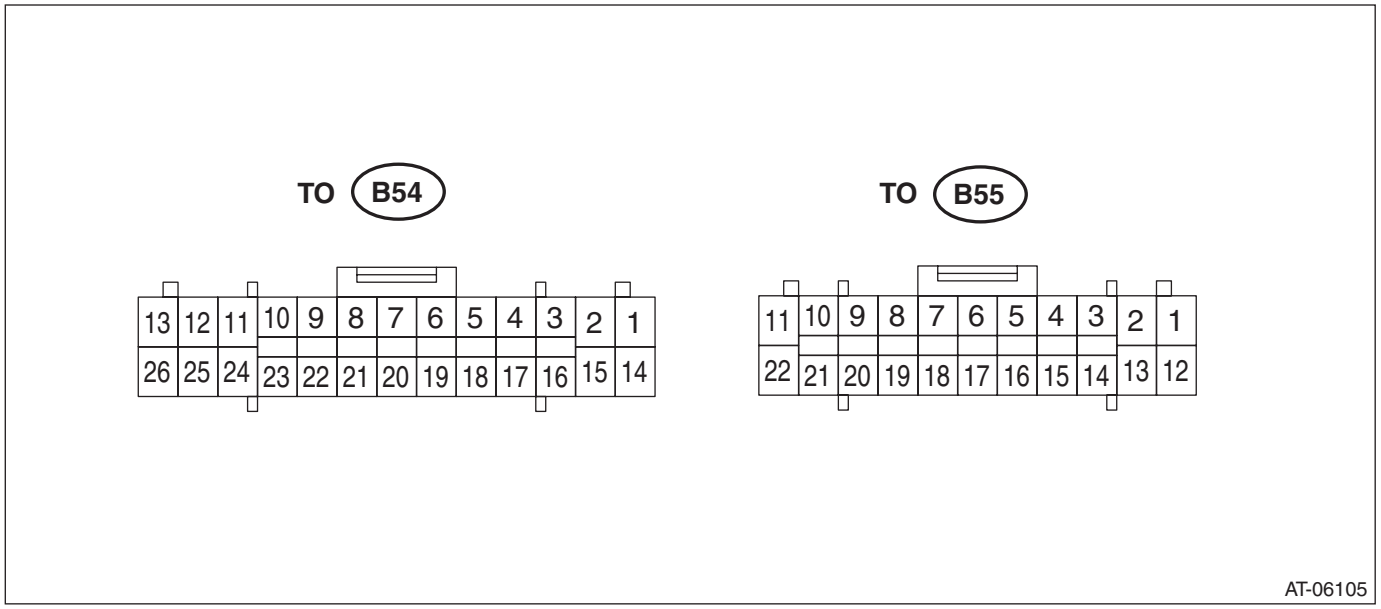

NOTE:
Measure after warming up.

Item	Connector No.	Terminal No.	Measuring conditions	Measured value	Resistance between terminal and chassis ground	Remarks
Backup power supply	B55	1	—	10 — 13 V	—	
Ignition power supply	B55	21	—	10 — 13 V	—	
Main power supply	B55	11	—	10 — 13 V	—	
Main power supply	B55	2	—	10 — 13 V	—	
Main power supply	B55	22	—	10 — 13 V	—	
Manual mode switch	B55	4	Manual mode switch ON	Less than 1 V	—	
			Manual mode switch OFF	8 V or more	—	
Manual mode UP switch	B55	5	Paddle shift UP switch ON	Less than 1 V	—	
			Paddle shift UP switch OFF	8 V or more	—	
Manual mode DOWN switch	B55	16	Paddle shift DOWN switch ON	Less than 1 V	—	
			Paddle shift DOWN switch OFF	8 V or more	—	
Stop light switch	B55	13	Stop light switch ON	8 V or more	—	
			Stop light switch OFF	Less than 1 V	—	
P range switch	B54	5	P range	Less than 1 V	—	
			Except for P range	8 V or more	—	
R range switch	B54	18	R range	Less than 1 V	—	
			Except for R range	8 V or more	—	
N range switch	B54	9	N range	Less than 1 V	—	
			Except for N range	8 V or more	—	
D range switch	B54	22	D range	Less than 1 V	—	
			Except for D range	8 V or more	—	

Item	Connector No.	Terminal No.	Measuring conditions	Measured value	Resistance between terminal and chassis ground	Remarks
ATF temperature sensor	B54	3	ATF temperature at 20°C (68°F)	Approx. 2.6 V	Approx. 2.6 kΩ	
			ATF temperature at 80°C (176°F)	Approx. 0.7 V	Approx. 370 Ω	
ATF temperature sensor GND	B54	16	Always	Approx. 0 V	—	
Secondary pressure sensor power supply output	B54	2	Ignition switch ON	5 V	—	
Secondary pressure sensor	B54	17	Ignition switch ON, engine OFF	Approx. 0.5 V (0 MPa)	—	Value increases with increase of engine load. (0.5 — 4.5 V)
			Ignition switch ON, engine ON	Approx. 1.0 V (1.0 MPa)	—	
Secondary pressure sensor GND	B54	15	Always	Approx. 0 V	—	
Primary speed sensor	B54	6	While driving	0 or 5 V	—	Refer to the waveform (sensor)
Secondary speed sensor	B54	7	While driving	0 or 5 V	—	Refer to the waveform (sensor)
Front wheel speed sensor	B54	20	While driving	0 or 5 V	—	Refer to the waveform (sensor)
Self shut output	B55	20	For three seconds after ignition ON and OFF	Less than 1 V	—	
			Ignition switch OFF	8 V or more		
F&R solenoid	B54	11	Engine ON	Refer to the waveform (solenoid (1))	Approx. 4 — 6 Ω	Resistance value at 20°C (68°F) Value is higher as the temperature increase.
Secondary solenoid	B54	12	Engine ON	Refer to the waveform (solenoid (2))	Approx. 5 — 7 Ω	Resistance value at 20°C (68°F) Value is higher as the temperature increase.
Primary UP solenoid	B54	24	Engine ON, while UP shifting	Refer to the waveform (solenoid (3))	Approx. 10 — 13.5 Ω	Resistance value at 20°C (68°F) Value is higher as the temperature increase.
Primary DOWN solenoid	B54	25	Engine ON, while DOWN shifting	Refer to the waveform (solenoid (4))	Approx. 10 — 13.5 Ω	Resistance value at 20°C (68°F) Value is higher as the temperature increase.

Item	Connector No.	Terminal No.	Measuring conditions	Measured value	Resistance between terminal and chassis ground	Remarks
Lock-up duty solenoid	B54	26	Lock-up ON	Refer to the waveform (solenoid (5))	Approx. 10 — 13.5 Ω	Resistance value at 20°C (68°F) Value is higher as the temperature increase.
AWD solenoid	B54	13	Engine ON, “P” or “N” range	Refer to the waveform (solenoid (6))	Approx. 2 — 4.5 Ω	Resistance value at 20°C (68°F) Value is higher as the temperature increase.
			Engine ON, “D” range, brake ON	Refer to the waveform (solenoid (7))		
Lock-up ON/OFF solenoid	B54	23	Lock-up OFF	Less than 1 V	Approx. 13 — 18.5 Ω	Resistance value at 20°C (68°F) Value is higher as the temperature increase.
			Lock-up ON	Battery voltage or higher		
CAN communication line (+)	B55	18	—	—	—	
CAN communication line (–)	B55	17	—	—	—	
Ground	B54	1	Always	Approx. 0 V	—	
Ground	B54	14	Always	Approx. 0 V	—	
Data link signal (Subaru Select Monitor)	B55	19	Ignition switch ON	8 V or more	—	
			Ignition switch OFF	Less than 1 V		

B: WAVEFORM

1. SENSOR

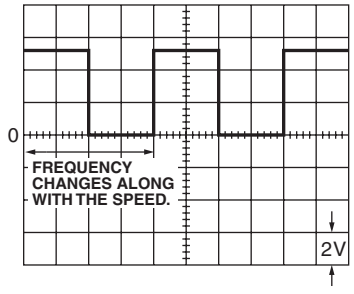

AT-04690

2. SOLENOID

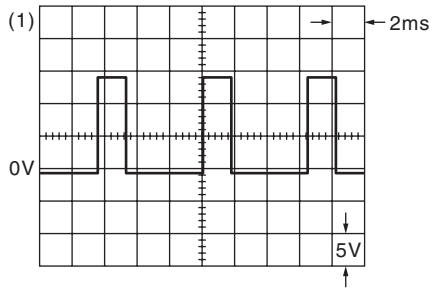

AT-05529

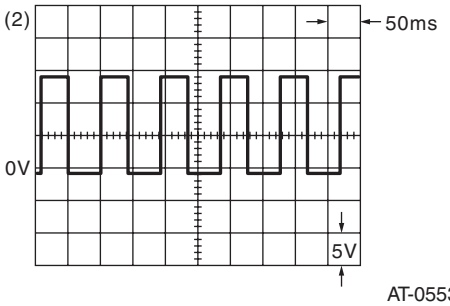

AT-05531

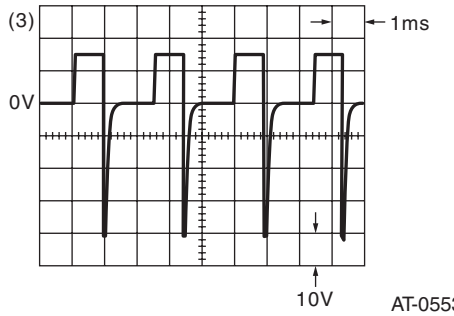

AT-05532

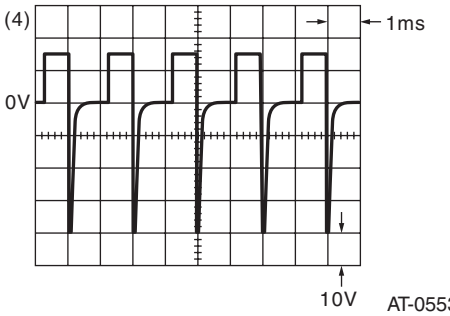

AT-05530

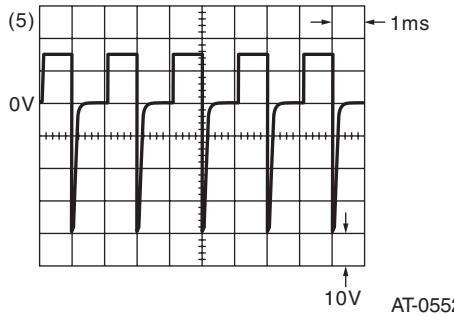

AT-05526

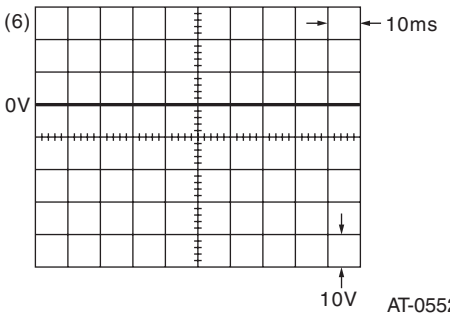

AT-05527

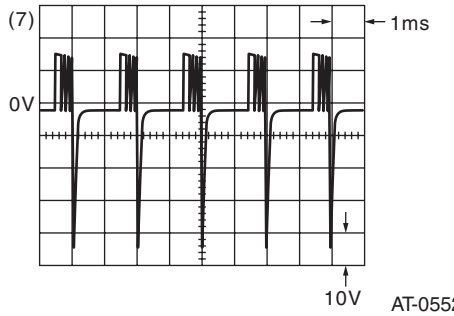

AT-05528

6. Subaru Select Monitor

A: OPERATION

For detailed operation procedures, refer to “PC application help for Subaru Select Monitor”.

7. Read Current Data

A: OPERATION

For detailed operation procedures, refer to “PC application help for Subaru Select Monitor”.

- The support data list is as follows.

Item	Display	Unit of measure
Engine speed signal	Engine Speed	rpm
Battery voltage	Battery Voltage	V
Accelerator position sensor	Accel. Opening Angle	%
Vehicle speed converted from front vehicle speed sensor signal	Front Wheel Speed	km/h or MPH
Lock-up duty solenoid set duty ratio	Lock Up Duty Ratio	%
AWD solenoid set duty ratio	Transfer Duty Ratio	%
Turbine speed signal converted from primary speed sensor signal	Turbine Revolution Speed	rpm
ATF temperature sensor signal	ATF Temp.	°C or °F
Manual mode switch signal	Manual Mode Switch	ON or OFF
Manual mode down switch signal	Down Switch	ON or OFF
Stop light switch signal	Stop Light Switch	ON or OFF
Manual mode up switch signal	Up Switch	ON or OFF
Drive range signal	D Range Signal	ON or OFF
Reverse range signal	R Range Signal	ON or OFF
AT OIL TEMP light 2 Hz blink condition	Diagnosis Lamp	ON or OFF
AT OIL TEMP light ON condition	ATF Temperature Lamp	ON or OFF
Parking range signal	P Range	ON or OFF
Neutral range signal	N Range	ON or OFF
AT learning mode condition	AT learning	Completed or not completed
Secondary speed sensor signal	Secondary Pulley Speed	rpm
Secondary fluid pressure sensor signal	Actual secondary pressure	MPa
Secondary solenoid set current	Sec. Sol. Set Current	mA
Secondary solenoid actual current	Sec. Sol. Actual Current	mA
Gear ratio	Actual Gear Ratio	—
Shift step in manual mode	Shift step in Manu. mode	—
Primary UP solenoid set duty ratio	Primary UP Duty	%
Primary DOWN solenoid set duty ratio	Primary DOWN Duty	%
F&R solenoid set current	Commanded Forward & Reverse Linear Solenoid Current	mA
F&R solenoid actual current	Actual Forward & Reverse Linear Solenoid Current	mA
Primary speed sensor signal	Primary Pulley Speed	rpm
Front vehicle speed sensor signal	Front Wheel Speed	rpm
Lock-up ON/OFF solenoid set	Lock-Up ON/OFF Solenoid	ON or OFF

8. Read Diagnostic Trouble Code (DTC)

A: OPERATION

For detailed operation procedures, refer to “PC application help for Subaru Select Monitor”.

NOTE:
For details concerning DTC, refer to List of Diagnostic Trouble Code (DTC). <Ref. to CVT(diag)-32, List of Diagnostic Trouble Code (DTC).>

9. Clear Memory Mode

A: OPERATION

For detailed operation procedures, refer to “PC application help for Subaru Select Monitor”.

CAUTION:
• If {Clear Memories 2} is executed, learned control memory are cleared.
• If {Clear Memories 2} is executed, perform learning. <Ref. to CVT(diag)-20, Learning Control.>

10.Inspection Mode

A: PROCEDURE

<Ref. to CVT-46, Road Test.>

11.Learning Control

A: GENERAL DESCRIPTION

- Follow the messages displayed on the Subaru Select Monitor when working.
- When the following work is performed, perform learning for the transmission.

Replacement of TCM/Replacement or disassembly of transmission assembly/Replacement of control valve body/Performing “Clear Memories 2”.

B: PROCEDURE

1. PREPARATION FOR LEARNING

1) Warm up or cool down until the ATF temperature displayed on the Subaru Select Monitor is 40 — 65°C (104 — 149°F).
2) After stopping the vehicle, shift the select lever to “P” range.
3) Apply the electronic parking brake.
4) Lift up the vehicle.

CAUTION:
While working, be sure to keep the lower edge of the tires 30 cm or more above the ground as vehicle will vibrate.

5) Connect the Subaru Select Monitor to data link connector.
6) Turn the ignition switch to ON.
7) Turn off all switches causing an electrical load, such as headlights, A/C, seat heater and rear defogger.

2. SIMPLE LEARNING

NOTE:
Simple learning is performed with the vehicle lifted, without actually running the vehicle.

CAUTION:
Do not turn the power of the Subaru Select Monitor OFF during work, and do not disconnect the data link connector.

1) Select {AT related learning & inspecting mode} in the «Transmission Diagnosis» display screen of the Subaru Select Monitor.
2) Select {AT learning mode} in the «AT related learning & inspecting mode» screen of the Subaru Select Monitor.
3) Follow the messages displayed on the Subaru Select Monitor screen when working.

NOTE:
During AT learning in progress, AT OIL TEMP light in the combination meter starts flashing at 2 Hz and the learning operation starts. The following message is displayed on the screen when the AT OIL TEMP light which was flashing at 2 Hz turns off.

4) When «AT learning normally ended.» is displayed, simple AT learning is completed.

NOTE:
- If communication error occurs during learning, retry the “AT learning mode” from the beginning.
- If the message «Execute AT learning again after fixing troubles of the vehicle» appears during learning, select [OK] and display the DTC list. After repairing the locations indicated by the DTC, start the “AT learning mode” over from the beginning.
- When communication error occurs during learning, select lever does not shift occasionally. If select lever does not shift, turn the ignition switch to OFF before operating the select lever.
- If the message «AT learning ended abnormally.» is displayed, start the “AT learning mode” over from the beginning.

Message	Main causes for abnormal termination
«AT learning ended abnormally.»	• Fault is detected during AT learning. • The accelerator pedal is depressed during AT learning. • An unspecified operation was performed during AT learning • ATF temperature becomes out of specification during AT learning. • Battery voltage is low. • Malfunction indicator light illuminates. • Electric parking brake not applied strongly enough • Brake pedal is not fully depressed. • Abnormal idle speed increase, etc.

- For detailed operation procedures, refer to “PC application help for Subaru Select Monitor”.

12.AT OIL TEMP Warning Light Display

A: OPERATION

The AT OIL TEMP light illuminates or blinks, when the ATF temperature is high and malfunction occurs in CVT.

- When normal

AT OIL TEMP light always illuminates when the ignition switch is ON (engine OFF). Light goes off after two seconds from engine ON.

- When ATF temperature is high

AT OIL TEMP light illuminates when the ATF temperature is abnormally high with engine ON.

- When malfunction is detected

AT OIL TEMP light blinks at 2 Hz when the TCM detects the malfunction of CVT with engine ON. In this case, inspect using “Diagnostic Procedure with Diagnostic Trouble Code (DTC)”. <Ref. to CVT(diag)-35, Diagnostic Procedure with Diagnostic Trouble Code (DTC).>

- When AT learning is not finished

AT OIL TEMP light repeats “Blinking at 4 Hz → Turning OFF” every two seconds, when the AT learning is not finished with engine ON. In this case, perform the “Learning”. (During AT learning, the light blinks at 2 Hz or illuminates.) <Ref. to CVT(diag)-20, Learning Control.>

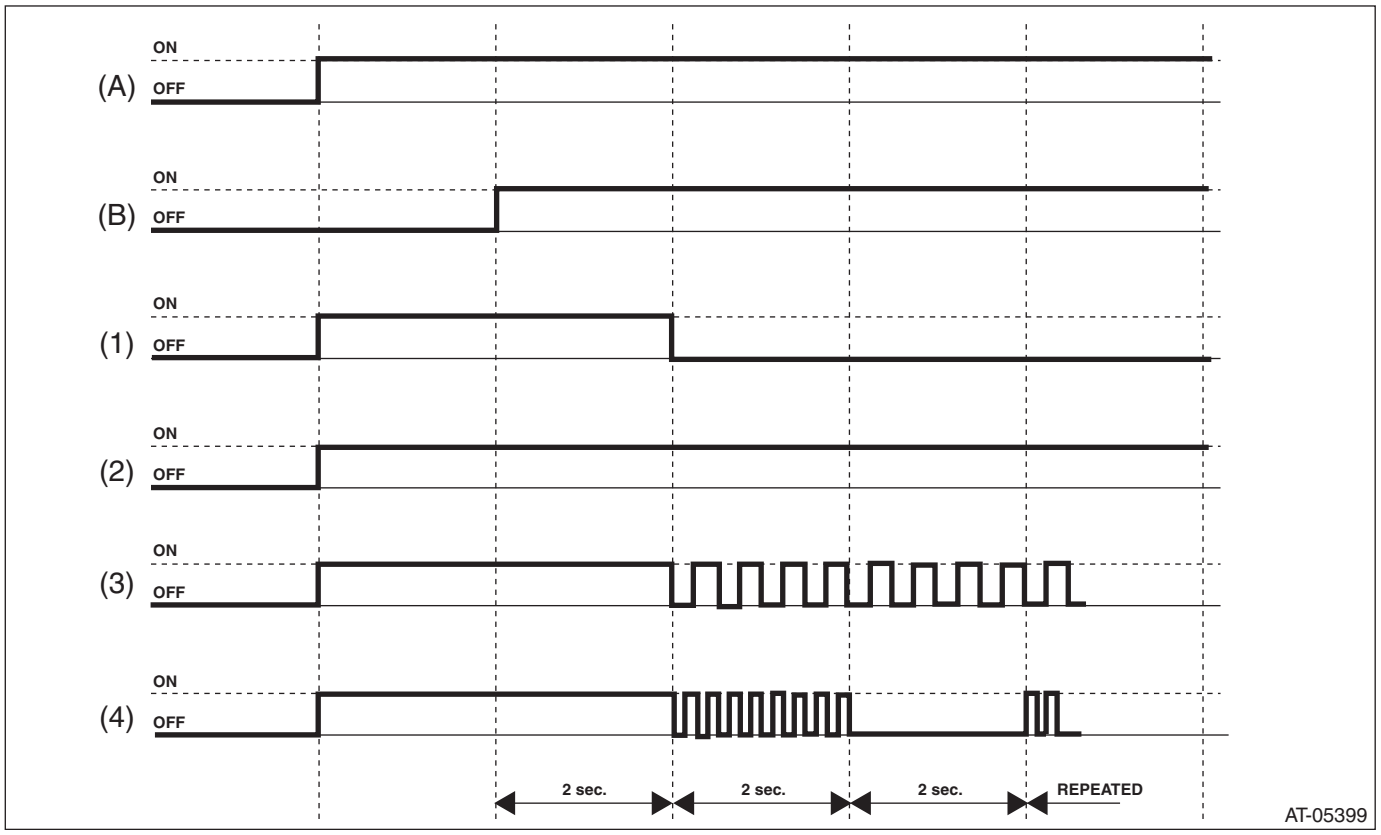

(A) Ignition switch condition
(B) Engine condition
(1) When normal
(2) When ATF temperature is high
(3) When malfunction is detected
(4) When AT learning is not finished

IF the AT OIL TEMP light does not illuminate, or illumination patterns are not as above, check the AT OIL TEMP light circuit. <Ref. to CVT(diag)-23, INSPECTION, AT OIL TEMP Warning Light Display.>

B: INSPECTION

DIAGNOSIS:

- AT OIL TEMP light circuit is open or shorted.
- Combination meter malfunction
- TCM is in special control mode.
- AT learning is not finished.

TROUBLE SYMPTOM:

- When the ignition switch is turned to ON, the AT OIL TEMP light does not illuminate.
- AT OIL TEMP light remains lit after engine start.

WIRING DIAGRAM:

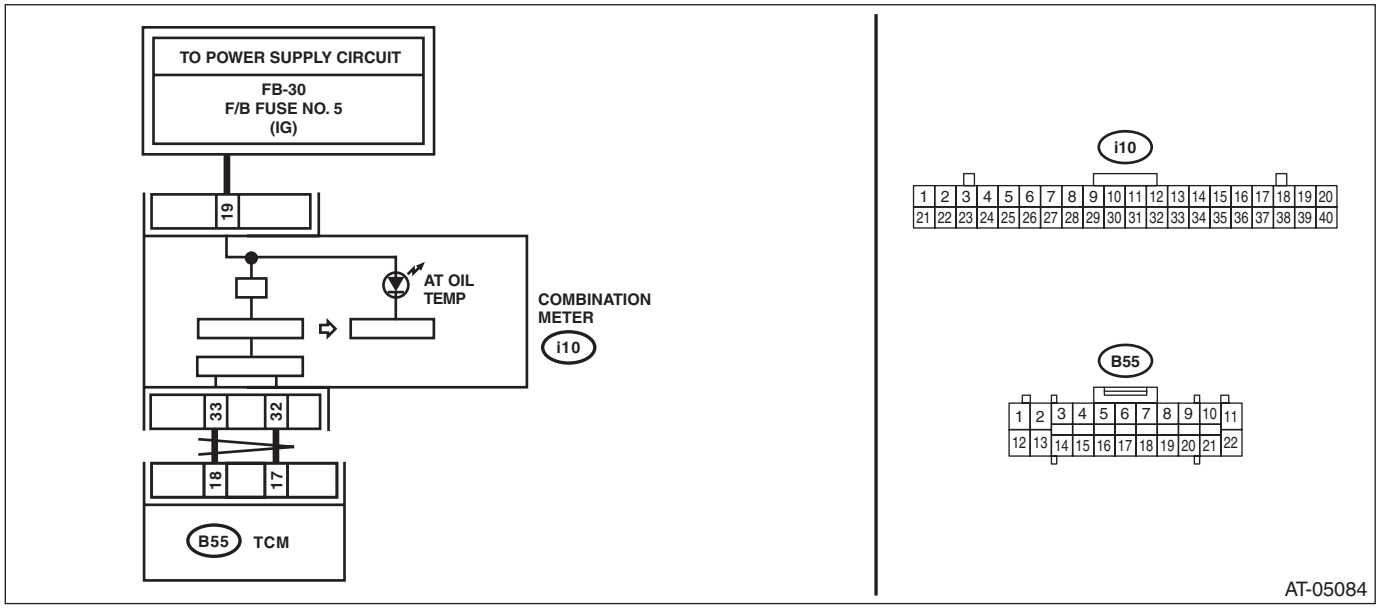

	Step	Check	Yes	No
1	**CHECK AT OIL TEMP LIGHT.** Turn the ignition switch to ON.	Does the AT OIL TEMP light illuminate?	Go to step **2**.	Perform the self-diagnosis of combination meter. <Ref. to IDI-11, INSPECTION, Combination Meter System.>
2	**CHECK AT OIL TEMP LIGHT.** Start the engine.	Does AT OIL TEMP light go off after two seconds from engine start?	Current condition is normal. Go back to Basic Diagnostic Procedure. <Ref. to CVT(diag)-2, Basic Diagnostic Procedure.>	Go to step **3**.
3	**CHECK DTC.** Read the DTC relating the TCM using the Subaru Select Monitor.	Is DTC displayed?	Perform the diagnosis according to DTC.	Go to step **4**.
4	**CHECK TCM.** Read the data of «ATF Temperature Lamp» using the Subaru Select Monitor.	Is “ON” displayed?	Go to step **5**.	Perform the self-diagnosis of combination meter. <Ref. to IDI-11, INSPECTION, Combination Meter System.>
5	**CHECK TCM.** Read the data of «ATF Temp.» using the Subaru Select Monitor.	Is the display 125°C or more?	Go to step **6**.	Check the TCM.

	Step	Check	Yes	No
6	**CHECK ATF TEMPERATURE.** Check the real fluid temperature from the transmission case surface temperature.	Does it clearly differ from the «ATF Temp.» displayed on Subaru Select Monitor?	Perform the diagnosis according to DTC P0712 procedure. If there is no problems, perform the diagnosis according to DTC P0713 procedure.	When ATF temperature can be judged as actually high, perform the diagnosis again after the ATF temperature lowers.

13.AWD Warning Light Display

A: OPERATION

AWD light illuminates or blinks, when the AWD is in special control condition and AWD has malfunction.

- When normal

AWD light always illuminates when the ignition switch is ON (engine OFF). Light goes off after two seconds from engine ON.

- When FF mode is selected

AWD light illuminates, when the AWD ON/OFF switching function is “FF mode” with engine ON.

- When malfunction is detected

AWD light blinks at 2 Hz when any of following malfunctions are detected with engine ON.

1. When tire with different diameter is installed, or air pressure of any of four wheels is excessively low
2. When “Rear differential inspection mode” is judged as NG <Ref. to DI-84, Rear Differential Inspection Mode.>

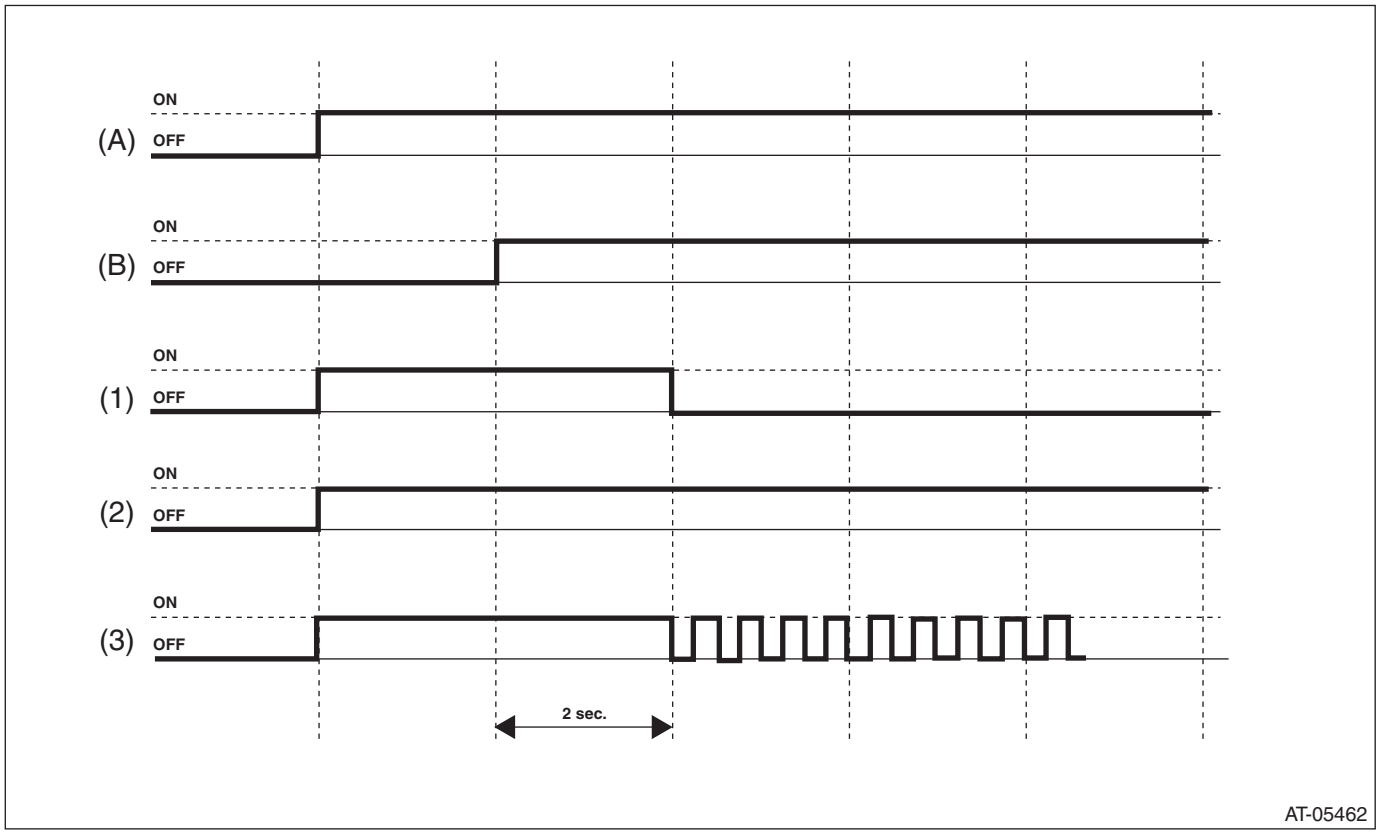

(A) Ignition switch condition (B) Engine condition

(1) When normal (2) When FF mode is selected (3) When malfunction is detected

If the AWD light does not illuminate, or illumination patterns are not as above, check the AWD light circuit. <Ref. to CVT(diag)-26, INSPECTION, AWD Warning Light Display.>

B: INSPECTION

DIAGNOSIS:
- AWD light circuit is open or shorted.
- Combination meter malfunction
- TCM is in AWD special control mode.

TROUBLE SYMPTOM:
- When the ignition switch is turned to ON, the AWD light does not illuminate.
- AWD light remains lit after engine start.
- AWD light is blinking immediately after engine start.

WIRING DIAGRAM:

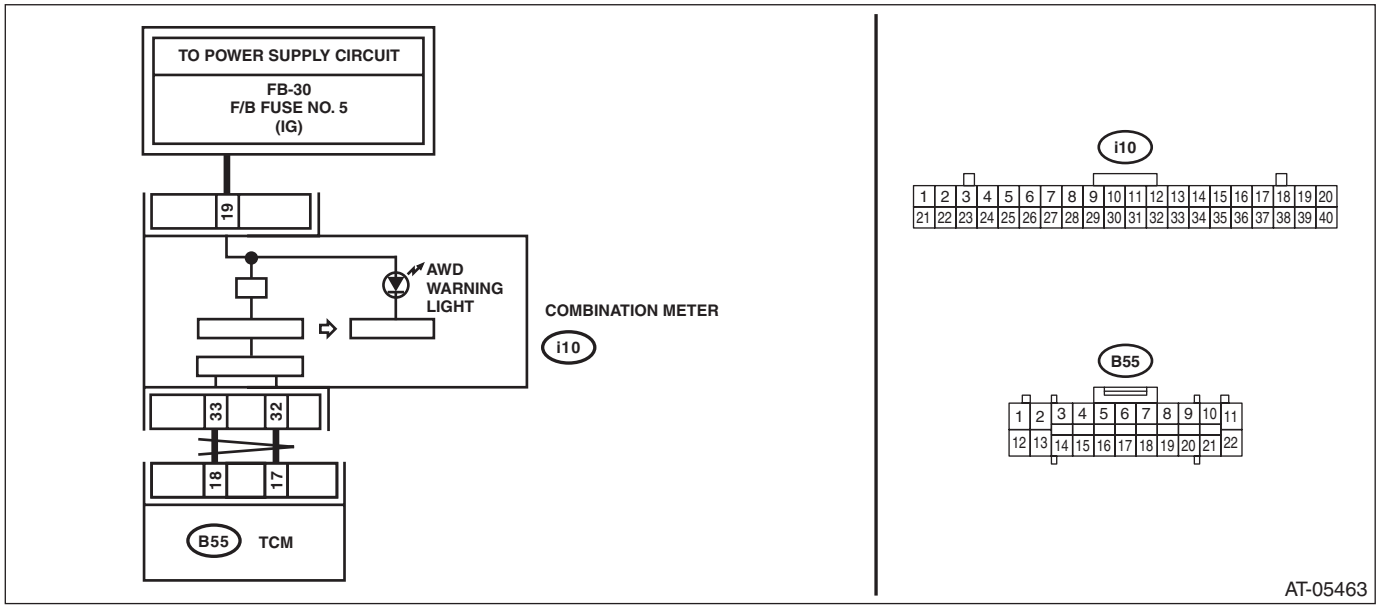

	Step	Check	Yes	No
1	**CHECK AWD LIGHT.** Turn the ignition switch to ON.	Does the AWD light illuminate?	Go to step **2**.	Perform the self-diagnosis of combination meter. <Ref. to IDI-11, INSPECTION, Combination Meter System.>
2	**CHECK AWD LIGHT.** Start the engine.	Does AWD light go off after two seconds from engine start?	Current condition is normal. Go back to Basic Diagnostic Procedure. <Ref. to CVT(diag)-2, Basic Diagnostic Procedure.>	Go to step **3**.
3	**CHECK DTC.** Read the DTC relating the TCM using the Subaru Select Monitor.	Is DTC displayed?	Perform the diagnosis according to DTC.	Go to step **4**.
4	**CHECK AWD LIGHT.** Check the display of AWD light after engine start.	Is AWD light illuminating?	Go to step **6**.	Go to step **5**.
5	**CHECK AWD LIGHT.** Check the display of AWD light after engine start.	Is AWD light blinking at 2 Hz?	Go to step **7**.	Go to step **8**.

	Step	Check	Yes	No
6	**CHECK AWD ON/OFF SWITCHING FUNCTION.** Using the Subaru Select Monitor, select the {AWD ON/OFF switching mode} from «AT related learning & inspecting mode», and check the current mode. <Ref. to CVT-45, AWD ON/OFF Switching Mode.>	Is the message «At present, the vehicle is in AWD. Switch to FF?» displayed?	Go to step **8**.	If the message «At present, the vehicle is in FF. Switch to AWD?» is displayed, select “OK”, and switch to AWD mode.
7	**CHECK REAR DIFFERENTIAL.** Using the Subaru Select Monitor, select the {Rear differential inspection mode} from «AT related learning & inspecting mode», and check. <Ref. to DI-84, Rear Differential Inspection Mode.>	Does AWD light go off after inspection is finished normally?	Current condition is normal. Go back to Basic Diagnostic Procedure. <Ref. to CVT(diag)-2, Basic Diagnostic Procedure.>	Go to step **8**.
8	**CHECK COMBINATION METER.** Perform the self-diagnosis of combination meter. <Ref. to IDI-11, INSPECTION, Combination Meter System.>	Is there any trouble with the combination meter?	Repair the combination meter.	Check the TCM.

14.Diagnostic Procedure for Subaru Select Monitor Communication

A: COMMUNICATION FOR INITIALIZING IMPOSSIBLE

DIAGNOSIS:
Defective harness connector
TROUBLE SYMPTOM:
Subaru Select Monitor communication failure
WIRING DIAGRAM:

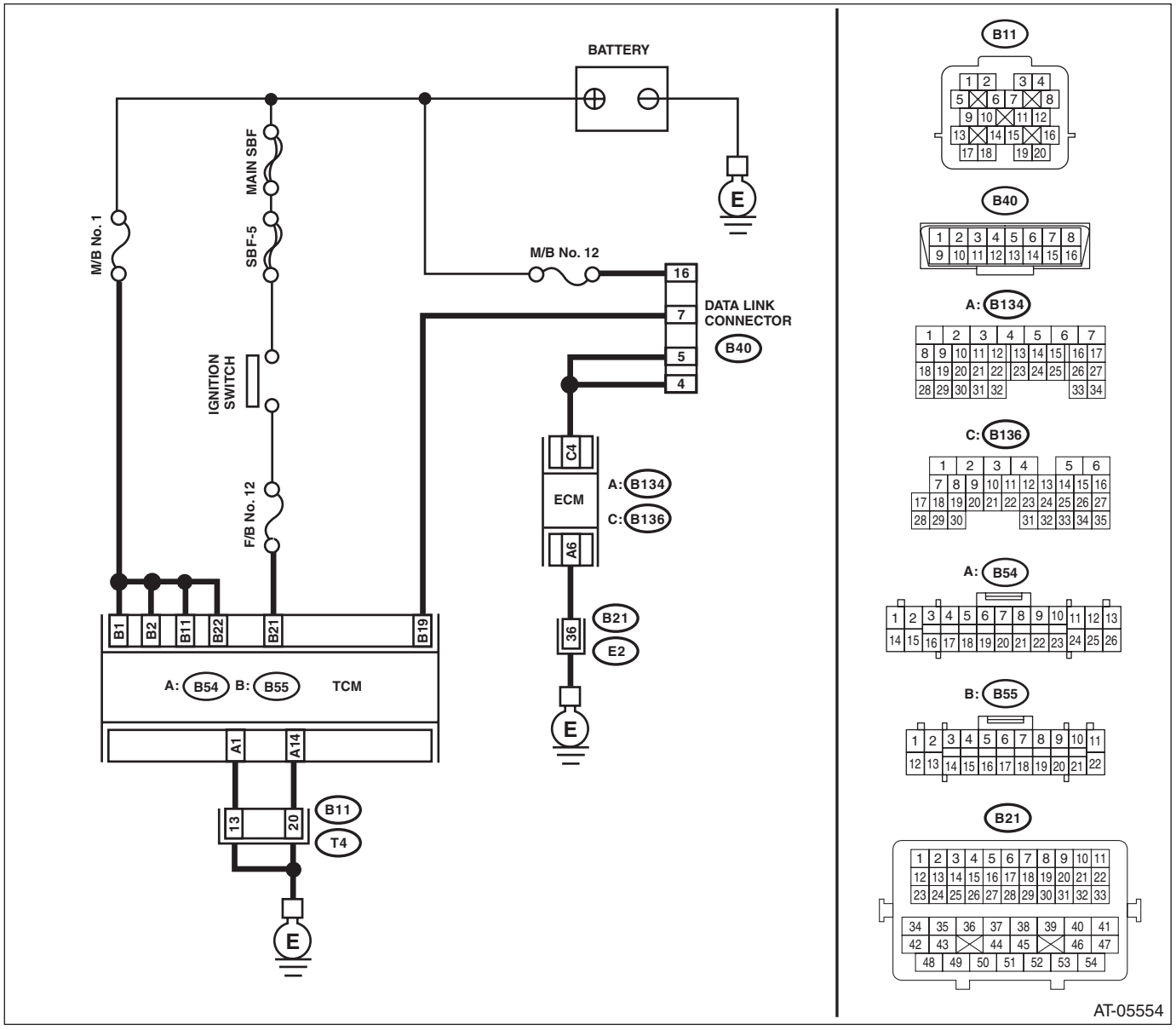

Step		Check	Yes	No
1	**CHECK INSTALLATION OF TCM CONNECTOR.** Turn the ignition switch to OFF.	Is TCM connector connected to TCM?	Go to step **2**.	Connect the TCM connector to TCM.

	Step	Check	Yes	No
2	**CHECK SUBARU SELECT MONITOR POWER SUPPLY CIRCUIT.** Measure the voltage between data link connector and chassis ground. ***Connector & terminal*** ***(B40) No. 16 (+) — Chassis ground (–):***	Is the voltage 10 V or more?	Go to step **3**.	Repair harness connector between the battery and data link connector, and poor contact of the connector.
3	**CHECK SUBARU SELECT MONITOR GROUND CIRCUIT.** 1) Disconnect the ECM connector. 2) Measure the resistance of harness between data link connector and ECM. ***Connector & terminal*** ***(B40) No. 4 — (B136) No. 4:*** ***(B40) No. 5 — (B136) No. 4:***	Is the resistance less than 1 Ω?	Go to step **4**.	Repair the open circuit of harness between data link connector and ECM.
4	**CHECK SUBARU SELECT MONITOR GROUND CIRCUIT.** Measure the resistance of harness between data link connector and chassis ground. ***Connector & terminal*** ***(B40) No. 16 — Chassis ground:***	Is the resistance 1 MΩ or more?	Go to step **5**.	Repair the short circuit of harness between data link connector and ground terminals.
5	**CHECK ENGINE GROUND CIRCUIT.** Check the engine ground circuit.	Is the engine ground circuit normal?	Go to step **6**.	Repair ground circuit of ECM.
6	**CHECK COMMUNICATION OF SUBARU SELECT MONITOR.** 1) Turn the ignition switch to ON. 2) Check the communication with the transmission.	Is the name of system displayed on Subaru Select Monitor?	Go to step **11**.	Go to step **7**.
7	**CHECK COMMUNICATION OF SUBARU SELECT MONITOR.** 1) Turn the ignition switch to OFF. 2) Disconnect the TCM connector. 3) Turn the ignition switch to ON. 4) Check communication with the engine system.	Is the name of system displayed on Subaru Select Monitor?	Go to step **9**.	Go to step **8**.
8	**CHECK OUTPUT SIGNAL OF TCM.** 1) Turn the ignition switch to OFF. 2) Connect the connector to the TCM. 3) Disconnect the control modules connectors which connecting to the data link connector (B40) No. 7, other than the TCM and ECM. **CAUTION:** **When disconnecting the connector from air-bag control module, always follow the precautions on AB section. <Ref. to AB-9, CAUTION, General Description.>** 4) Turn the ignition switch to ON. 5) Check communication with the transmission system.	Is the name of system displayed on Subaru Select Monitor?	Check each control module.	Go to step **9**.

	Step	Check	Yes	No
9	**CHECK HARNESS CONNECTOR BETWEEN EACH CONTROL MODULE AND DATA LINK CONNECTOR.** 1) Turn the ignition switch to OFF. 2) Disconnect the connectors of all control modules connected to the data link connector (B40) No. 7. 3) Measure the resistance between data link connector and chassis ground. ***Connector & terminal*** ***(B40) No. 7 — Chassis ground:***	Is the resistance 1 MΩ or more?	Go to step **10**.	Check harness and connector between each control module and data link connector.
10	**CHECK OUTPUT SIGNAL OF TCM.** 1) Turn the ignition switch to ON. 2) Measure the voltage between data link connector and chassis ground. ***Connector & terminal*** ***(B40) No. 7 (+) — Chassis ground (–):***	Is the voltage 1 V or more?	Check harness and connector between each control module and data link connector.	Go to step **11**.
11	**CHECK HARNESS CONNECTOR BETWEEN TCM AND DATA LINK CONNECTOR.** 1) Disconnect the TCM connector. 2) Measure the resistance between TCM connector and data link connector. ***Connector & terminal*** ***(B40) No. 7 — (B55) No. 19:***	Is the resistance less than 1 Ω?	Go to step **12**.	Check the harness and connector between TCM and data link connector.
12	**CHECK INSTALLATION OF TRANSMISSION HARNESS CONNECTOR.**	Is the transmission harness connector connected to bulkhead harness connector?	Go to step **13**.	Connect the bulkhead harness connector to transmission harness connector.
13	**CHECK POOR CONTACT OF CONNECTORS.**	Is there poor contact of control module power supply and data link connector?	Repair the poor contact.	Go to step **14**.
14	**CHECK TCM POWER SUPPLY.** 1) Disconnect the TCM connector. 2) Turn the ignition switch to ON. 3) Measure the voltage between TCM connector and chassis ground. ***Connector & terminal*** ***(B55) No. 1 (+) — Chassis ground (–):*** ***(B55) No. 2 (+) — Chassis ground (–):*** ***(B55) No. 11 (+) — Chassis ground (–):*** ***(B55) No. 22 (+) — Chassis ground (–):***	Is the voltage 10 — 13 V?	Go to step **16**.	Go to step **15**.
15	**CHECK M/B FUSE (NO. 1).** 1) Turn the ignition switch to OFF. 2) Remove the fuse (No. 1).	Is the fuse (No. 1) blown out?	Replace the fuse. If the replaced fuse blows out easily, repair the short circuit in the harness between the fuse and the TCM.	Repair the open circuit of harness between the fuse and the TCM, or the fuse and battery, and poor contacts of connectors.
16	**CHECK IGNITION POWER SUPPLY CIRCUIT.** 1) Turn the ignition switch to ON. 2) Measure the ignition power supply voltage between TCM connector and chassis ground. ***Connector & terminal*** ***(B55) No. 21 (+) — Chassis ground (–):***	Is the voltage 10 — 13 V?	Go to step **18**.	Go to step **17**.

	Step	Check	Yes	No
17	**CHECK F/B FUSE (NO. 12).** Remove the fuse (No. 12).	Is the fuse (No. 12) blown out?	Replace the fuse. If the replaced fuse blows out easily, repair the short circuit in the harness between the fuse and the TCM.	Repair the open circuit of harness between the fuse and the TCM, or the fuse and battery, and poor contacts of connectors.
18	**CHECK HARNESS CONNECTOR BETWEEN TCM AND TRANSMISSION.** 1) Turn the ignition switch to OFF. 2) Disconnect the TCM and transmission connectors. 3) Measure the resistance of harness between TCM and transmission connector. ***Connector & terminal*** ***(B54) No. 1 — (B11) No. 13:*** ***(B54) No. 14 — (B11) No. 20:***	Is the resistance less than 1 Ω?	Go to step **19**.	Repair the open circuit of harness between TCM and transmission harness connector, and poor contact of connector.
19	**CHECK HARNESS CONNECTOR BETWEEN TRANSMISSION AND TRANSMISSION GROUND.** Measure the resistance of the harness between transmission and transmission ground. ***Connector & terminal*** ***(T4) No. 13 — Transmission ground:*** ***(T4) No. 20 — Transmission ground:***	Is the resistance less than 1 Ω?	Go to step **20**.	Repair the open circuit of the harness between transmission and transmission ground.
20	**CHECK POOR CONTACT OF CONNECTORS.**	Is there poor contact of TCM power supply, ground and data link connector?	Repair the connector.	Check the TCM.

15.List of Diagnostic Trouble Code (DTC)

A: LIST

DTC	Item	Content of diagnosis	Reference
P0705	Transmission Range Sensor Circuit (PRNDL Input)	Inhibitor switch malfunction or short circuit	<Ref. to CVT(diag)-35, DTC P0705 TRANSMISSION RANGE SENSOR CIRCUIT (PRNDL INPUT), Diagnostic Procedure with Diagnostic Trouble Code (DTC).>
P0708	AT Range Switch Not Inputted	Inhibitor switch malfunction or open circuit	<Ref. to CVT(diag)-37, DTC P0708 AT RANGE SWITCH NOT INPUTTED, Diagnostic Procedure with Diagnostic Trouble Code (DTC).>
P0712	Transmission Fluid Temperature Sensor Circuit Low Input	ATF temperature sensor is faulty or input signal circuit is shorted.	<Ref. to CVT(diag)-39, DTC P0712 TRANSMISSION FLUID TEMPERATURE SENSOR CIRCUIT LOW INPUT, Diagnostic Procedure with Diagnostic Trouble Code (DTC).>
P0713	Transmission Fluid Temperature Sensor Circuit High Input	ATF temperature sensor is faulty or input signal circuit is open or shorted.	<Ref. to CVT(diag)-40, DTC P0713 TRANSMISSION FLUID TEMPERATURE SENSOR CIRCUIT HIGH INPUT, Diagnostic Procedure with Diagnostic Trouble Code (DTC).>
P0719	Brake Switch Circuit Low	Brake switch malfunction, open or shorted input signal circuit	<Ref. to CVT(diag)-42, DTC P0719 BRAKE SWITCH CIRCUIT LOW, Diagnostic Procedure with Diagnostic Trouble Code (DTC).>
P0720	Output Speed Sensor Circuit	Front wheel speed sensor is faulty or input signal circuit is open or shorted.	<Ref. to CVT(diag)-44, DTC P0720 OUTPUT SPEED SENSOR CIRCUIT, Diagnostic Procedure with Diagnostic Trouble Code (DTC).>
P0724	Brake Switch Circuit High	Brake switch malfunction, shorted input signal circuit	<Ref. to CVT(diag)-46, DTC P0724 BRAKE SWITCH CIRCUIT HIGH, Diagnostic Procedure with Diagnostic Trouble Code (DTC).>
P0730	Gearshift Control Performance Abnormal	Primary speed sensor, secondary speed sensor, control valve, or chain malfunction	<Ref. to CVT(diag)-47, DTC P0730 GEARSHIFT CONTROL PERFORMANCE ABNORMAL, Diagnostic Procedure with Diagnostic Trouble Code (DTC).>
P0801	Reverse Inhibit Control Circuit	Shift lock solenoid is faulty or output signal circuit is open or shorted.	<Ref. to CVT(diag)-48, DTC P0801 REVERSE INHIBIT CONTROL CIRCUIT, Diagnostic Procedure with Diagnostic Trouble Code (DTC).>
P0841	Secondary Oil Pressure Sensor Performance	Secondary pressure sensor or control valve malfunction	<Ref. to CVT(diag)-49, DTC P0841 SECONDARY OIL PRESSURE SENSOR PERFORMANCE, Diagnostic Procedure with Diagnostic Trouble Code (DTC).>
P0842	Secondary Oil Pressure Sensor Circuit (Low)	Secondary pressure sensor is faulty or input signal circuit is open or shorted.	<Ref. to CVT(diag)-51, DTC P0842 SECONDARY OIL PRESSURE SENSOR CIRCUIT (LOW), Diagnostic Procedure with Diagnostic Trouble Code (DTC).>
P0843	Secondary Oil Pressure Sensor Circuit (High)	Secondary pressure sensor is faulty or input signal circuit is shorted.	<Ref. to CVT(diag)-53, DTC P0843 SECONDARY OIL PRESSURE SENSOR CIRCUIT (HIGH), Diagnostic Procedure with Diagnostic Trouble Code (DTC).>
P0890	AT Self-Shut Relay Diagnosis (Low)	Self-shut relay malfunction, open or shorted input signal circuit	<Ref. to CVT(diag)-55, DTC P0890 AT SELF-SHUT RELAY DIAGNOSIS (LOW), Diagnostic Procedure with Diagnostic Trouble Code (DTC).>
P0951	Manual Switch	Manual mode switch malfunction, open or shorted input signal circuit	<Ref. to CVT(diag)-57, DTC P0951 MANUAL SWITCH, Diagnostic Procedure with Diagnostic Trouble Code (DTC).>
P0962	Secondary Solenoid Circuit (Low)	Secondary solenoid is faulty or output signal circuit is shorted.	<Ref. to CVT(diag)-59, DTC P0962 SECONDARY SOLENOID CIRCUIT (LOW), Diagnostic Procedure with Diagnostic Trouble Code (DTC).>

DTC	Item	Content of diagnosis	Reference
P0963	Secondary Solenoid Circuit (High)	Secondary solenoid is faulty or output signal circuit is open or shorted.	<Ref. to CVT(diag)-61, DTC P0963 SECONDARY SOLENOID CIRCUIT (HIGH), Diagnostic Procedure with Diagnostic Trouble Code (DTC).>
P0965	Forward & Reverse Solenoid Function	F&R solenoid, forward clutch or control valve malfunction	<Ref. to CVT(diag)-63, DTC P0965 FORWARD & REVERSE SOLENOID FUNCTION, Diagnostic Procedure with Diagnostic Trouble Code (DTC).>
P0966	Forward & Reverse Solenoid Circuit (Low)	F&R solenoid is faulty or output signal circuit is shorted.	<Ref. to CVT(diag)-64, DTC P0966 FORWARD & REVERSE SOLENOID CIRCUIT (LOW), Diagnostic Procedure with Diagnostic Trouble Code (DTC).>
P0967	Forward & Reverse Linear Solenoid Circuit (High)	F&R solenoid is faulty or output signal circuit is open or shorted.	<Ref. to CVT(diag)-66, DTC P0967 FORWARD & REVERSE LINEAR SOLENOID CIRCUIT (HIGH), Diagnostic Procedure with Diagnostic Trouble Code (DTC).>
P0970	Transfer Solenoid Circuit (Low)	AWD solenoid is faulty or output signal circuit is shorted.	<Ref. to CVT(diag)-68, DTC P0970 TRANSFER SOLENOID CIRCUIT (LOW), Diagnostic Procedure with Diagnostic Trouble Code (DTC).>
P0971	Transfer Solenoid Circuit (High)	AWD solenoid is faulty or output signal circuit is open or shorted.	<Ref. to CVT(diag)-69, DTC P0971 TRANSFER SOLENOID CIRCUIT (HIGH), Diagnostic Procedure with Diagnostic Trouble Code (DTC).>
P0973	Primary Solenoid System A Circuit (Low)	Primary UP solenoid is faulty or output signal circuit is shorted.	<Ref. to CVT(diag)-71, DTC P0973 PRIMARY SOLENOID SYSTEM A CIRCUIT (LOW), Diagnostic Procedure with Diagnostic Trouble Code (DTC).>
P0974	Primary Solenoid System A Circuit (High)	Primary UP solenoid is faulty or output signal circuit is open or shorted.	<Ref. to CVT(diag)-72, DTC P0974 PRIMARY SOLENOID SYSTEM A CIRCUIT (HIGH), Diagnostic Procedure with Diagnostic Trouble Code (DTC).>
P0976	Primary Solenoid System B Circuit (Low)	Primary DOWN solenoid is faulty or output signal circuit is shorted.	<Ref. to CVT(diag)-74, DTC P0976 PRIMARY SOLENOID SYSTEM B CIRCUIT (LOW), Diagnostic Procedure with Diagnostic Trouble Code (DTC).>
P0977	Primary Solenoid System B Circuit (High)	Primary DOWN solenoid is faulty or output signal circuit is open or shorted.	<Ref. to CVT(diag)-75, DTC P0977 PRIMARY SOLENOID SYSTEM B CIRCUIT (HIGH), Diagnostic Procedure with Diagnostic Trouble Code (DTC).>
P1718	AT CAN Communication Circuit	• CAN communication is open or shorted. • ECM, ABS/VDCCM CAN communication error	<Ref. to CVT(diag)-76, DTC P1718 AT CAN COMMUNICATION CIRCUIT, Diagnostic Procedure with Diagnostic Trouble Code (DTC).>
P1724	AT EEPROM Error	TCM EEPROM malfunction	<Ref. to CVT(diag)-77, DTC P1724 AT EEPROM ERROR, Diagnostic Procedure with Diagnostic Trouble Code (DTC).>
P1725	AT Body System CAN Communication Trouble	Combination meter, A/C, body integrated unit CAN communication error	<Ref. to CVT(diag)-77, DTC P1725 AT BODY SYSTEM CAN COMMUNICATION TROUBLE, Diagnostic Procedure with Diagnostic Trouble Code (DTC).>
P2746	Primary Pulley Revolution Speed Sensor Circuit	Primary speed sensor malfunction, open or shorted input signal circuit	<Ref. to CVT(diag)-78, DTC P2746 PRIMARY PULLEY REVOLUTION SPEED SENSOR CIRCUIT, Diagnostic Procedure with Diagnostic Trouble Code (DTC).>

DTC	Item	Content of diagnosis	Reference
P2750	Sec. Pulley Revolution Speed Sensor Circuit	Secondary speed sensor malfunction, open or shorted input signal circuit	<Ref. to CVT(diag)-80, DTC P2750 SEC. PULLEY REVOLUTION SPEED SENSOR CIRCUIT, Diagnostic Procedure with Diagnostic Trouble Code (DTC).>
P2762	Lock-Up Duty Solenoid Malfunction	Lock-up duty solenoid, lock-up clutch or control valve malfunction	<Ref. to CVT(diag)-82, DTC P2762 LOCK-UP DUTY SOLENOID MALFUNCTION, Diagnostic Procedure with Diagnostic Trouble Code (DTC).>
P2763	Lock-Up Duty Solenoid Circuit (High)	Lock-up duty solenoid is faulty or output signal circuit is open or shorted.	<Ref. to CVT(diag)-83, DTC P2763 LOCK-UP DUTY SOLENOID CIRCUIT (HIGH), Diagnostic Procedure with Diagnostic Trouble Code (DTC).>
P2764	Lock-Up Duty Solenoid Circuit (Low)	Lock-up duty solenoid is faulty or output signal circuit is shorted.	<Ref. to CVT(diag)-85, DTC P2764 LOCK-UP DUTY SOLENOID CIRCUIT (LOW), Diagnostic Procedure with Diagnostic Trouble Code (DTC).>
P2769	Lock-Up ON/OFF Solenoid Circuit (Low)	Lock-up ON/OFF solenoid is faulty or output signal circuit is shorted.	<Ref. to CVT(diag)-86, DTC P2769 LOCK-UP ON/OFF SOLENOID CIRCUIT (LOW), Diagnostic Procedure with Diagnostic Trouble Code (DTC).>
P2770	Lock-Up ON/OFF Solenoid Circuit (High)	Lock-up ON/OFF solenoid is faulty or output signal circuit is open or shorted.	<Ref. to CVT(diag)-87, DTC P2770 LOCK-UP ON/OFF SOLENOID CIRCUIT (HIGH), Diagnostic Procedure with Diagnostic Trouble Code (DTC).>

16.Diagnostic Procedure with Diagnostic Trouble Code (DTC)

A: DTC P0705 TRANSMISSION RANGE SENSOR CIRCUIT (PRNDL INPUT)

DTC DETECTING CONDITION:

- Inhibitor switch is faulty.
- At least 2 range signal is input.

TROUBLE SYMPTOM:

- Shift characteristics are erroneous.
- The range position of the select lever and the position of shift indicator display do not match.

WIRING DIAGRAM:

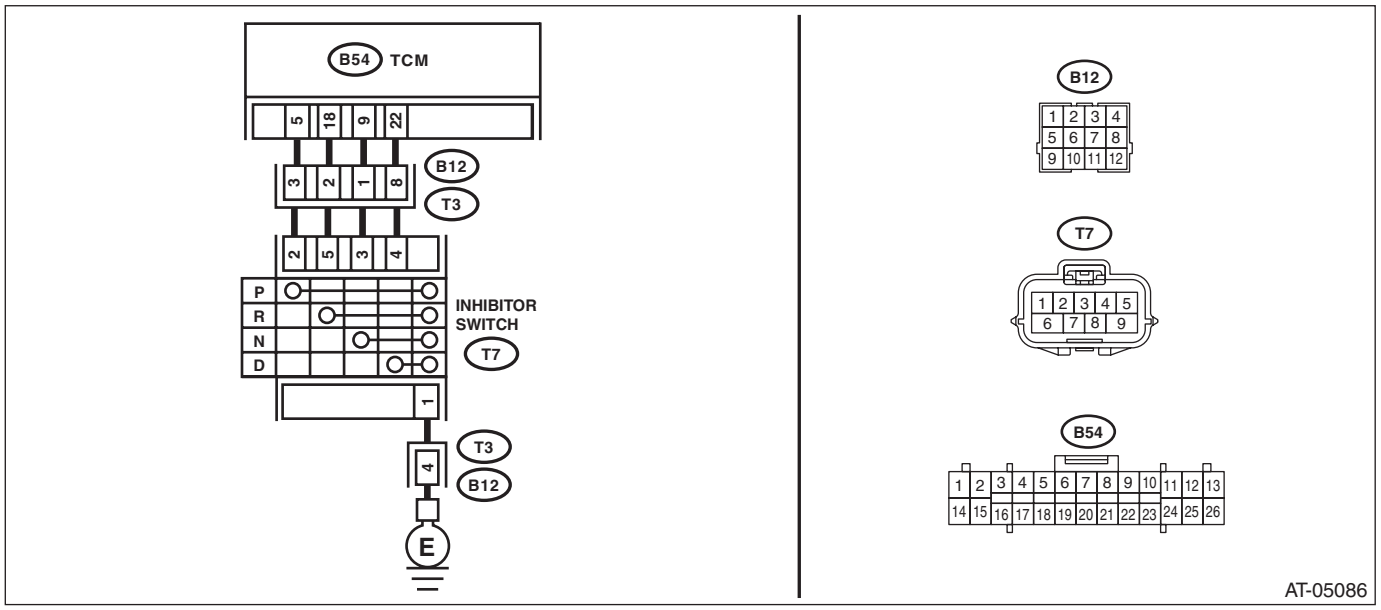

Step		Check	Yes	No
1	**CHECK INPUT SIGNAL FOR TCM.** 1) Turn the ignition switch to ON. 2) Move the select lever to each range, and read the data of «P range» «R Range Signal» «N range» «D Range Signal» using the Subaru Select Monitor.	Is display “OFF” for the range other than corresponding range?	Go to step **5**.	Go to step **2**.
2	**CHECK HARNESS.** 1) Turn the ignition switch to OFF. 2) Disconnect the TCM and transmission connectors. 3) Measure the resistance between TCM connector and chassis ground. ***Connector & terminal*** ***(B54) No. 5 — Chassis ground:*** ***(B54) No. 18 — Chassis ground:*** ***(B54) No. 9 — Chassis ground:*** ***(B54) No. 22 — Chassis ground:***	Is each resistance 1 MΩ or more?	Go to step **3**.	Repair the short circuit of harness.
3	**CHECK HARNESS.** 1) Disconnect the inhibitor switch connector. 2) Measure the resistance between transmission connector and inhibitor switch connector. ***Connector & terminal*** ***(T3) No. 3 — (T7) No. 2:*** ***(T3) No. 2 — (T7) No. 5:*** ***(T3) No. 1 — (T7) No. 3:*** ***(T3) No. 8 — (T7) No. 4:***	Is each resistance 1 MΩ or more?	Go to step **4**.	Repair the short circuit of harness.

	Step	Check	Yes	No
4	**CHECK INHIBITOR SWITCH.** Move the select lever to each range, and measure the resistance between inhibitor switch connector terminals. ***Connector & terminal*** ***(T7) No. 2 — (T7) No. 1:*** ***(T7) No. 5 — (T7) No. 1:*** ***(T7) No. 3 — (T7) No. 1:*** ***(T7) No. 4 — (T7) No. 1:***	Is the resistance other than corresponding range 1 MΩ or more?	Go to step **5**.	Replace the inhibitor switch. <Ref. to CVT-95, Inhibitor Switch.>
5	**CHECK FOR POOR CONTACT.**	Is there poor contact between TCM, inhibitor switch, transmission ground?	Repair the poor contact.	Check the TCM.

B: DTC P0708 AT RANGE SWITCH NOT INPUTTED

DTC DETECTING CONDITION:

- Inhibitor switch is faulty.
- No range signal is input.

TROUBLE SYMPTOM:

- Shift characteristics are erroneous.
- The range position of the select lever and the position of shift indicator display do not match.

WIRING DIAGRAM:

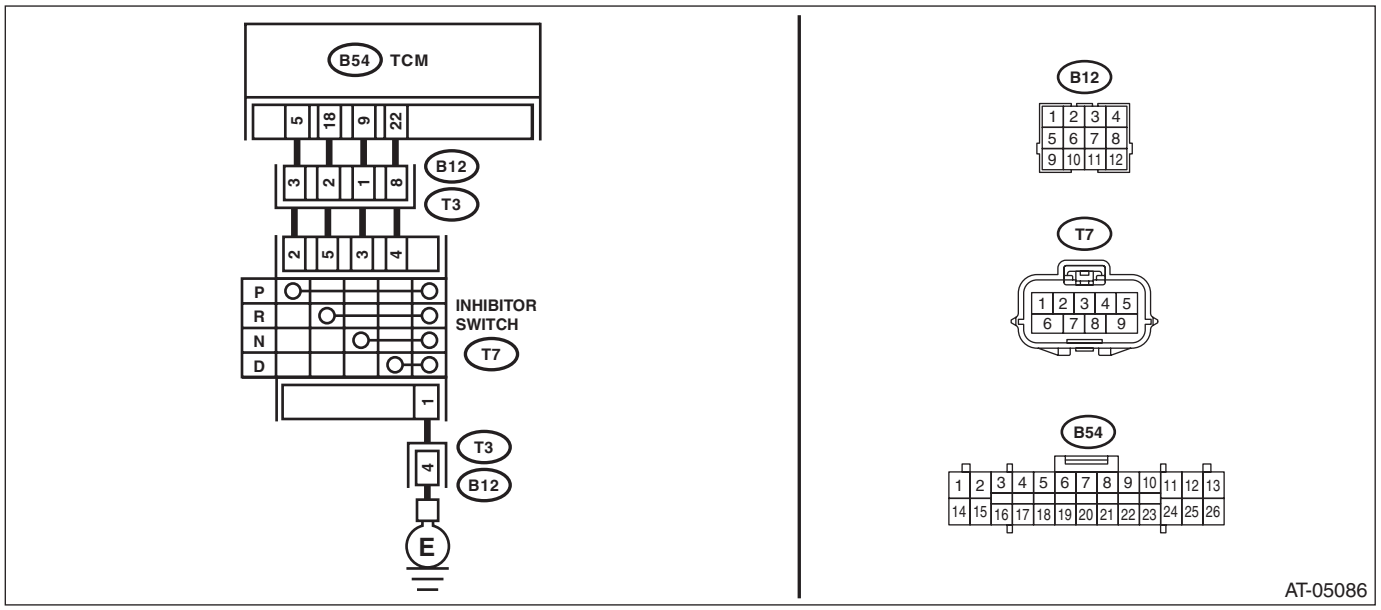

Step		Check	Yes	No
1	**CHECK INPUT SIGNAL FOR TCM.** 1) Turn the ignition switch to ON. 2) Move the select lever to each range, and read the data of «P range» «R Range Signal» «N range» «D Range Signal» using the Subaru Select Monitor.	Is the display of the corresponding range "ON"?	Go to step **7**.	Go to step **2**.
2	**CHECK HARNESS.** 1) Turn the ignition switch to OFF. 2) Disconnect the TCM and transmission connectors. 3) Measure the resistance of harness between TCM connector and transmission connector. ***Connector & terminal*** ***(B54) No. 5 — (B12) No. 3:*** ***(B54) No. 18 — (B12) No. 2:*** ***(B54) No. 9 — (B12) No. 1:*** ***(B54) No. 22 — (B12) No. 8:***	Is each resistance less than 1 Ω?	Go to step **3**.	Repair the open circuit of harness.
3	**CHECK HARNESS.** Measure the resistance of harness between transmission connector and transmission ground. ***Connector & terminal*** ***(B12) No. 4 — Transmission ground:***	Is the resistance less than 1 Ω?	Go to step **4**.	Repair the open circuit of harness.

	Step	Check	Yes	No
4	**CHECK HARNESS.** 1) Disconnect the inhibitor switch connector. 2) Measure the resistance between transmission connector and inhibitor switch connector. ***Connector & terminal*** ***(T3) No. 3 — (T7) No. 2:*** ***(T3) No. 2 — (T7) No. 5:*** ***(T3) No. 1 — (T7) No. 3:*** ***(T3) No. 8 — (T7) No. 4:*** ***(T3) No. 4 — (T7) No. 1:***	Is each resistance less than 1 Ω?	Go to step **5**.	Repair the open circuit of harness.
5	**CHECK INHIBITOR SWITCH.** Move the select lever to each range, and measure the resistance between inhibitor switch connector terminals. ***Connector & terminal*** ***(T7) No. 2 — (T7) No. 1:*** ***(T7) No. 5 — (T7) No. 1:*** ***(T7) No. 3 — (T7) No. 1:*** ***(T7) No. 4 — (T7) No. 1:***	Is the resistance of the corresponding range less than 1 MΩ?	Go to step **6**.	Replace the inhibitor switch. <Ref. to CVT-95, Inhibitor Switch.>
6	**CHECK HARNESS.** 1) Turn the ignition switch to ON. 2) Measure the voltage between each connector and chassis ground. ***Connector & terminal*** ***Transmission connector (B12 side)*** ***(B12) No. 3 (+) — Chassis ground (–):*** ***(B12) No. 2 (+) — Chassis ground (–):*** ***(B12) No. 1 (+) — Chassis ground (–):*** ***(B12) No. 8 (+) — Chassis ground (–):*** ***(B12) No. 4 (+) — Chassis ground (–):*** ***Transmission connector (T7 side)*** ***(T7) No. 2 (+) — Chassis ground (–):*** ***(T7) No. 5 (+) — Chassis ground (–):*** ***(T7) No. 3 (+) — Chassis ground (–):*** ***(T7) No. 4 (+) — Chassis ground (–):*** ***(T7) No. 1 (+) — Chassis ground (–):***	Is each voltage less than 1 V?	Go to step **7**.	Repair the harness which outputs 1 V or more.
7	**CHECK FOR POOR CONTACT.**	Is there poor contact between TCM, inhibitor switch, transmission ground?	Repair the poor contact.	Check the TCM.

C: DTC P0712 TRANSMISSION FLUID TEMPERATURE SENSOR CIRCUIT LOW INPUT

DTC DETECTING CONDITION:
Input signal circuit of ATF temperature sensor is shorted.
TROUBLE SYMPTOM:
- Excessive shift shock
- Shift characteristics malfunction

WIRING DIAGRAM:

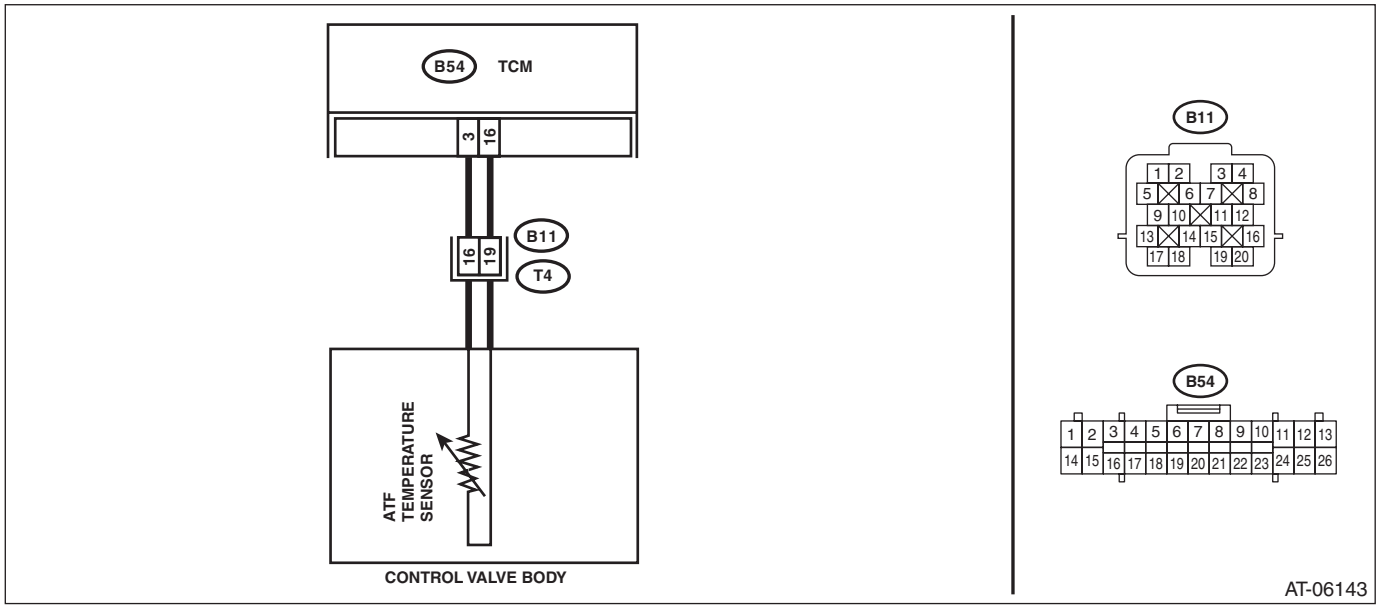

Step		Check	Yes	No
1	**CHECK HARNESS.** 1) Turn the ignition switch to OFF. 2) Disconnect the TCM and transmission connectors. 3) Measure the resistance of harness between TCM connector and chassis ground. ***Connector & terminal*** ***(B54) No. 3 — Chassis ground:*** ***(B54) No. 16 — Chassis ground:***	Is the resistance 1 MΩ or more?	Go to step **2**.	Repair the short circuit of harness.
2	**CHECK HARNESS.** Measure the resistance between TCM connector and transmission body. ***Connector & terminal*** ***(T4) No. 16 — Transmission body:*** ***(T4) No. 19 — Transmission body:***	Is the resistance 1 MΩ or more?	Go to step **3**.	Repair the short circuit of harness.
3	**CHECK HARNESS INSIDE TRANSMISSION.** **CAUTION:** **Start work after ATF cools down.** 1) Remove the transmission oil pan. 2) Check for the harness pinch, damage.	Is the harness normal?	Go to step **4**.	Replace the transmission harness.
4	**CHECK ATF TEMPERATURE SENSOR.** Measure the resistance between transmission connector terminals. ***Connector & terminal*** ***(T4) No. 16 — No. 19:***	Is resistance as follows? Fluid temperature 0°C → Approx. 6.2 kΩ Fluid temperature 20°C → Approx. 2.6 kΩ Fluid temperature 80°C → Approx. 370 Ω	Check the TCM.	Replace the transmission harness.

D: DTC P0713 TRANSMISSION FLUID TEMPERATURE SENSOR CIRCUIT HIGH INPUT

DTC DETECTING CONDITION:
Input signal circuit of ATF temperature sensor is open or shorted.
TROUBLE SYMPTOM:
- Excessive shift shock
- Shift characteristics malfunction

WIRING DIAGRAM:

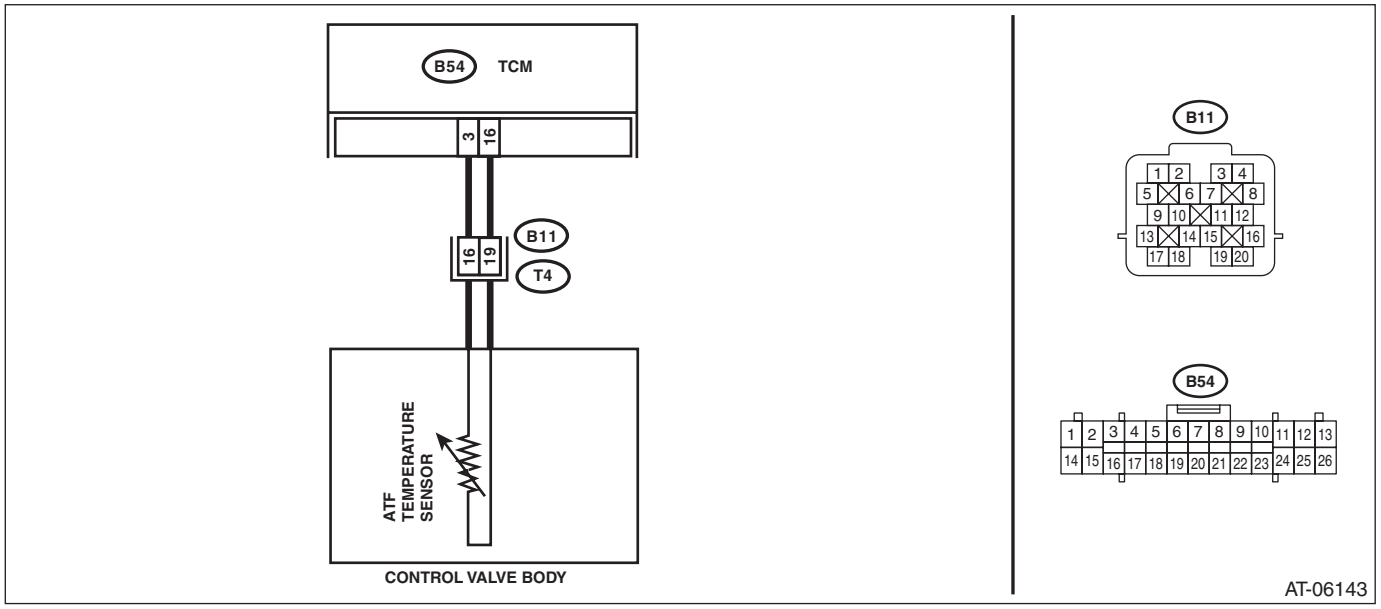

Step		Check	Yes	No
1	**CHECK HARNESS.** 1) Turn the ignition switch to ON. 2) Measure the voltage between TCM connectors. ***Connector & terminal*** ***(B54) No. 3 (+) — (B54) No. 16 (–):***	Is the voltage 5 V or more?	Repair the short circuit of harness.	Go to step **2**.
2	**CHECK HARNESS.** 1) Turn the ignition switch to OFF. 2) Disconnect the TCM and transmission connectors. 3) Measure the resistance between TCM connector and transmission connectors. ***Connector & terminal*** ***(B54) No. 3 — (B11) No. 16:*** ***(B54) No. 16 — (B11) No. 19:***	Is the resistance less than 1 Ω?	Go to step **3**.	Repair the open circuit of harness.
3	**CHECK ATF TEMPERATURE SENSOR.** 1) Turn the ignition switch to OFF. 2) Connect the connectors to TCM and transmission. 3) Start the engine. 4) Warm up until the ATF temperature exceeds 50°C (122°F). 5) Turn the ignition switch to OFF. 6) Disconnect the transmission connector. 7) Measure the resistance between transmission connector terminals. ***Connector & terminal*** ***(T4) No. 16 — No. 19:***	Is the resistance 730 — 1120 Ω?	Go to step **4**.	Go to step **6**.

	Step	Check	Yes	No
4	**CHECK ATF TEMPERATURE SENSOR.** Measure the resistance between transmission connector terminals. ***Connector & terminal*** ***(T4) No. 16 — No. 19:***	Does the resistance value increase gradually while the ATF temperature decreases?	Go to step **5**.	Replace the transmission harness.
5	**CHECK INPUT SIGNAL FOR TCM.** 1) Connect the connector to transmission. 2) Turn the ignition switch to ON. (Do not start engine.) 3) Read the data of «ATF Temp.» using the Subaru Select Monitor.	Does the ATF temperature gradually decrease?	Check for poor contact of the ATF temperature sensor and transmission connector harness, and repair the defective part.	Go to step **6**.
6	**CHECK FOR POOR CONTACT.**	Is there poor contact of ATF temperature sensor circuit?	Repair the poor contact.	Check the TCM.

E: DTC P0719 BRAKE SWITCH CIRCUIT LOW

DTC DETECTING CONDITION:
Brake switch malfunction or input signal circuit of brake switch is open or shorted.
TROUBLE SYMPTOM:
- Gear is not shifted down when climbing a hill or driving down a hill.
- Neutral control does not operate.

WIRING DIAGRAM:

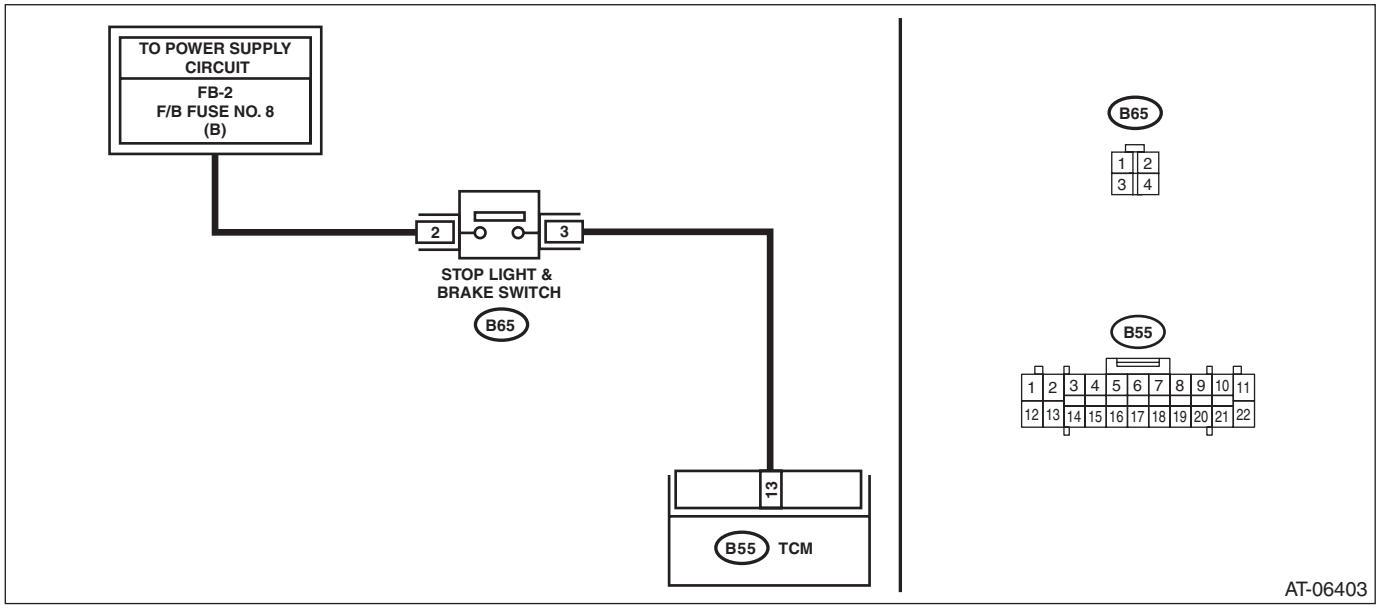

	Step	Check	Yes	No
1	**CHECK FUSE (NO. 8).** 1) Turn the ignition switch to OFF. 2) Remove the fuse (No. 8).	Is the fuse (No. 8) blown out?	Replace the fuse (No. 8). If the new fuse (No. 8) has blown out easily, repair the short circuit of harness between fuse (No. 8) and stop light switch.	Go to step **2**.
2	**CHECK HARNESS.** 1) Turn the ignition switch to OFF. 2) Disconnect the TCM and stop light switch connector. 3) Measure the resistance between TCM connector and stop light switch connector. ***Connector & terminal*** ***(B55) No. 13 — (B65) No. 3:***	Is the resistance less than 1 Ω?	Go to step **3**.	Repair the open circuit of harness.
3	**CHECK HARNESS.** Measure the resistance between TCM connector and fuse (No. 8). ***Connector & terminal*** ***(B65) No. 2 — fuse (No. 8):***	Is the resistance less than 1 Ω?	Go to step **4**.	Repair the open circuit of harness.
4	**CHECK INPUT SIGNAL FOR TCM.** 1) Install the fuse (No. 8). 2) Connect the TCM and stop light switch connector. 3) Depress the brake pedal. 4) Measure the voltage between TCM connector and chassis ground. ***Connector & terminal*** ***(B55) No. 13 (+) — Chassis ground (–):***	Is the voltage 10 V or more?	Go to step **5**.	Replace the stop light switch.

	Step	Check	Yes	No
5	**CHECK INPUT SIGNAL FOR TCM.** With brake pedal depressed, read the data of «Stop Light Switch» using Subaru Select Monitor.	Is “ON” displayed?	Current condition is normal. Check for poor contact in connectors or harnesses, and repair the defective part.	Go to step **6**.
6	**CHECK FOR POOR CONTACT.**	Is there poor contact of input signal of stop light switch?	Repair the poor contact.	Check the TCM.

F: DTC P0720 OUTPUT SPEED SENSOR CIRCUIT

DTC DETECTING CONDITION:

- Input signal circuit of TCM is open or shorted.
- Front wheel speed sensor malfunction

TROUBLE SYMPTOM:

- Excessive shift shock on N → D or N → R.
- Driving performance is poor.
- Neutral control does not operate.

WIRING DIAGRAM:

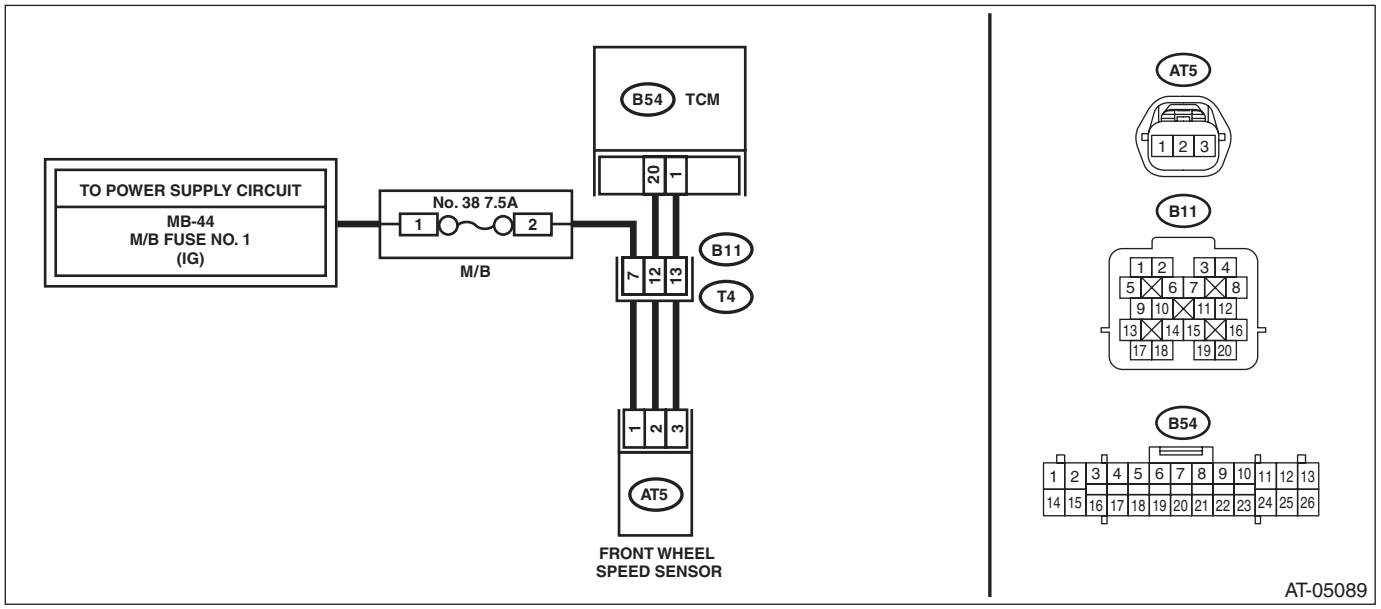

Step		Check	Yes	No
1	**CHECK FUSE.** 1) Turn the ignition switch to OFF. 2) Remove the fuse (No. 38).	Is the fuse OK?	Go to step **2**.	Replace the fuse. If the fuse blows out easily, repair the short circuit of harness.
2	**CHECK HARNESS.** 1) Turn the ignition switch to OFF. 2) Disconnect the TCM and transmission connectors. 3) Measure the resistance between TCM connector and transmission connectors. ***Connector & terminal*** ***(B54) No. 1 — (B11) No. 13:*** ***(B54) No. 20 — (B11) No. 12:*** ***(M/B No. 38) No. 2 — (B11) No. 7:***	Is the resistance less than 1 Ω?	Go to step **3**.	Repair the open circuit of harness.
3	**CHECK HARNESS.** Measure the resistance between TCM connector and chassis ground. ***Connector & terminal*** ***(B11) No. 7 — Chassis ground:*** ***(B11) No. 12 — Chassis ground:***	Is the resistance 1 MΩ or more?	Go to step **4**.	Repair the short circuit of harness.

	Step	Check	Yes	No
4	**CHECK TRANSMISSION HARNESS.** 1) Connect the TCM connector. 2) Turn the ignition switch to ON. 3) Measure the voltage between transmission connector and chassis ground. ***Connector & terminal*** ***(B11) No. 12 (+) — Chassis ground (–):*** NOTE: Delete the TCM memory after completing the CVT control system diagnosis. <Ref. to CVT(diag)-18, Clear Memory Mode.>	Is the voltage approx. 5 V?	Go to step **5**.	Repair the open circuit of harness or poor contact of connector.
5	**CHECK INPUT SIGNAL FOR TCM.** 1) Turn the ignition switch to OFF. 2) Connect the transmission connector. 3) Lift up the vehicle. 4) Start the engine. 5) Slowly increase the speed to 30 km/h (18 MPH). 6) Read the data of «Front Wheel Speed» using Subaru Select Monitor.	Does the value of «Front Wheel Speed» change according to the engine speed?	Current condition is normal. Repair the poor contacts of harnesses of front wheel speed sensor and transmission connector.	Go to step **6**.
6	**CHECK TRANSMISSION HARNESS.** 1) Turn the ignition switch to OFF. 2) Disconnect the transmission connector. 3) Lift up the vehicle. 4) Disconnect the front wheel speed sensor connector. 5) Measure the resistance between transmission connector and front wheel speed sensor connector. ***Connector & terminal*** ***(T4) No. 7 — (AT5) No. 1:*** ***(T4) No. 12 — (AT5) No. 2:*** ***(T4) No. 13 — (AT5) No. 3:***	Is the resistance less than 1 Ω?	Replace the front wheel speed sensor. <Ref. to CVT-107, Front Wheel Speed Sensor.>	Replace the transmission harness.

G: DTC P0724 BRAKE SWITCH CIRCUIT HIGH

DTC DETECTING CONDITION:
Brake switch malfunction or input signal circuit of brake switch is shorted.
TROUBLE SYMPTOM:
- Gear is not shifted down when driving a down hill.
- Neutral control does not operate.

WIRING DIAGRAM:

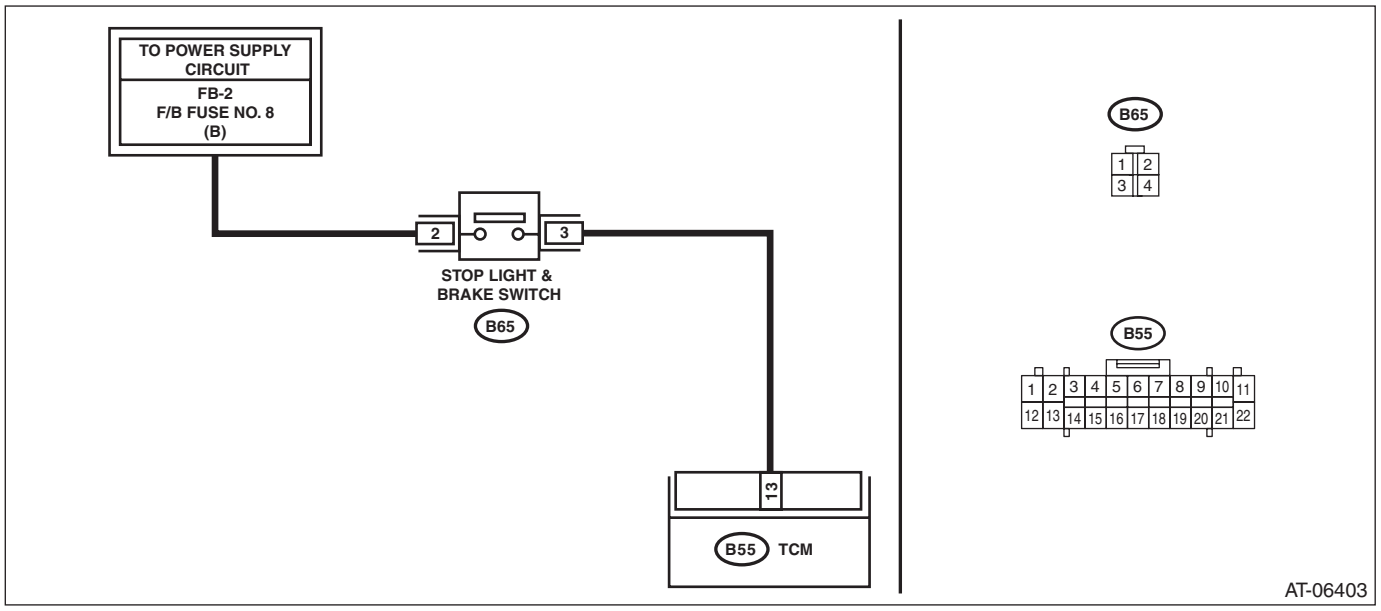

Step		Check	Yes	No
1	**CHECK STOP LIGHT SWITCH.** 1) Turn the ignition switch to OFF. 2) Disconnect the stop light switch connector. 3) Measure the resistance of harness between stop light switch connectors. ***Connector & terminal*** ***(B65) No. 2 — No. 3:***	Is the resistance 1 MΩ or more?	Go to step **2**.	Replace the stop light switch.
2	**CHECK HARNESS.** 1) Disconnect the TCM connector. 2) Turn the ignition switch to ON. 3) Measure the voltage between TCM connector and chassis ground. ***Connector & terminal*** ***(B55) No. 13 (+) — Chassis ground (–):***	Is the voltage 10 V or more?	Repair the short circuit of harness.	Go to step **3**.
3	**CHECK INPUT SIGNAL FOR TCM.** 1) Connect the TCM and stop light switch connector. 2) Turn the ignition switch to ON. 3) Read the data of «Stop Light Switch» using Subaru Select Monitor.	Is “OFF” displayed?	Current condition is normal. Check for poor contact in connectors or harnesses, and repair the defective part.	Go to step **4**.
4	**CHECK FOR POOR CONTACT.**	Is there poor contact of input signal of stop light switch?	Repair the poor contact.	Check the TCM.

H: DTC P0730 GEARSHIFT CONTROL PERFORMANCE ABNORMAL

DTC DETECTING CONDITION:

- Control valve hydraulic circuit malfunction
- Primary UP solenoid, primary DOWN solenoid characteristics malfunction
- CVT chain slippage

TROUBLE SYMPTOM:

- Acceleration is poor during standing start.
- Shift control malfunction
- Engine speed increases abruptly.

	Step	Check	Yes	No
1	**CHECK TRANSMISSION FLUID.** Check the condition of ATF. <Ref. to CVT-40, CONDITION CHECK, CVTF.>	Is the ATF OK?	Go to step **2**.	Check according to the "corrective action" of ATF (CVTF) "CONDITION CHECK". <Ref. to CVT-40, CONDITION CHECK, CVTF.>
2	**CHECK TRANSMISSION FLUID.** Check the amount of ATF. <Ref. to CVT-37, ADJUSTMENT, CVTF.>	Is the ATF amount correct?	Go to step **3**.	Adjust the amount of ATF. <Ref. to CVT-37, ADJUSTMENT, CVTF.>
3	**CHECK INPUT SIGNAL FOR TCM.** 1) Lift up the vehicle. 2) Start the engine. 3) Warm up until the ATF temperature reaches to 40 — 70°C (104 — 158°F). 4) Shift the select lever to "P" range. 5) Stabilize the engine speed at idle. 6) Read the data of «Actual secondary pressure» using Subaru Select Monitor.	Is the «Actual secondary pressure» 0.5 — 1.5 MPa?	Go to step **4**.	Perform the diagnosis according to DTC P0841 procedure.
4	**CHECK INPUT SIGNAL FOR TCM.** Read the data of «Actual Gear Ratio» using Subaru Select Monitor.	Is the «Actual Gear Ratio» 2.0 — 2.4?	Go to step **5**.	Go to step **6**.
5	**CHECK INPUT SIGNAL FOR TCM.** 1) Set the select lever to "D" range. 2) Slowly increase the speed to 40 km/h (24 MPH) and keep the constant speed. 3) Read the data of «Actual Gear Ratio» using Subaru Select Monitor.	Is the «Actual Gear Ratio» 0.5 — 0.8?	Go to step **6**.	Replace the transmission assembly. <Ref. to CVT-55, Automatic Transmission Assembly.>
6	**DRIVING CHECK BY INSPECTION MODE.** 1) Turn the ignition switch to OFF. 2) Perform a drive check based on the "Inspection Mode". <Ref. to CVT(diag)-19, Inspection Mode.>	Does the AT OIL TEMP light blink and is DTC P0730 displayed?	Replace the transmission assembly. <Ref. to CVT-55, Automatic Transmission Assembly.>	If there is shift problems, abrupt increase of engine speed, standing start problems, replace the transmission assembly. <Ref. to CVT-55, Automatic Transmission Assembly.> If it is normal, temporary poor contact occurs.

I: DTC P0801 REVERSE INHIBIT CONTROL CIRCUIT

NOTE:
Refer to “BODY CONTROL SYSTEM” for diagnostic procedure. <Ref. to BC(diag)-31, DTC B1106 SHIFT LOCK CIRCUIT FAILURE, Diagnostic Procedure with Diagnostic Trouble Code (DTC).>

J: DTC P0841 SECONDARY OIL PRESSURE SENSOR PERFORMANCE

DTC DETECTING CONDITION:

- Control valve hydraulic circuit malfunction
- Secondary pressure sensor fault or characteristics malfunction

TROUBLE SYMPTOM:

- Acceleration is poor during standing start.
- Shift control malfunction
- Engine speed increases abruptly.

	Step	Check	Yes	No
1	**CHECK TRANSMISSION FLUID.** Check the condition of ATF. <Ref. to CVT-40, CONDITION CHECK, CVTF.>	Is the ATF OK?	Go to step **2**.	Check according to the "corrective action" of ATF (CVTF) "CONDITION CHECK". <Ref. to CVT-40, CONDITION CHECK, CVTF.>
2	**CHECK TRANSMISSION FLUID.** Check the amount of ATF. <Ref. to CVT-37, ADJUSTMENT, CVTF.>	Is the ATF amount correct?	Go to step **3**.	Adjust the amount of ATF. <Ref. to CVT-37, ADJUSTMENT, CVTF.>
3	**CHECK INPUT SIGNAL FOR TCM.** 1) Lift up the vehicle. 2) Start the engine. 3) Warm up until the ATF temperature reaches to 40 — 70°C (104 — 158°F). 4) Shift the select lever to "P" range. 5) Stabilize the engine speed at idle. 6) Read the data of «Actual secondary pressure» using Subaru Select Monitor.	Is the «Actual secondary pressure» 0.5 — 1.5 MPa?	Go to step **4**.	Go to step **6**.
4	**CHECK INPUT SIGNAL FOR TCM.** 1) Keep the engine speed at 3000 rpm. 2) Read the data of «Actual secondary pressure» using Subaru Select Monitor.	Is the «Actual secondary pressure» higher than step 3 value? Does the value change according to the engine speed, within the range of 1.5 — 2.5 MPa?	Go to step **5**.	Go to step **6**.
5	**CHECK TCM INPUT SIGNAL (STALL TEST).** 1) Apply the electronic parking brake. 2) Set the select lever to "D" range. 3) Depress the brake pedal firmly. 4) Slowly open the accelerator fully, and stabilize the engine speed. 5) Read the data of «Actual secondary pressure» using Subaru Select Monitor.	Is the «Actual secondary pressure» higher than step 4 value? Does the value change according to the engine speed, within the range of 4.5 — 6.0 MPa?	Go to step **7**.	Go to step **6**.
6	**CHECK SECONDARY PRESSURE SENSOR.**	Is the secondary pressure sensor damaged from the standpoint of appearance?	Replace the secondary pressure sensor. <Ref. to CVT-109, Secondary Pressure Sensor.>	Perform the diagnosis according to DTC P0842, P0843 procedure.

	Step	Check	Yes	No
7	**DRIVING CHECK BY INSPECTION MODE.** 1) Turn the ignition switch to OFF. 2) Perform a drive check based on the “Inspection Mode”. <Ref. to CVT(diag)-19, Inspection Mode.>	Does the AT OIL TEMP light blink and is DTC P0841 displayed?	Perform the secondary pressure test. <Ref. to CVT-50, Secondary Pressure (Line Pressure) Test.>	If there is shift problems, abrupt increase of engine speed, standing start problems, replace the transmission assembly. <Ref. to CVT-55, Automatic Transmission Assembly.> If it is normal, temporary poor contact occurs.

K: DTC P0842 SECONDARY OIL PRESSURE SENSOR CIRCUIT (LOW)

DTC DETECTING CONDITION:
Input signal circuit of secondary pressure sensor is open or shorted.
TROUBLE SYMPTOM:
Shift characteristics malfunction
WIRING DIAGRAM:

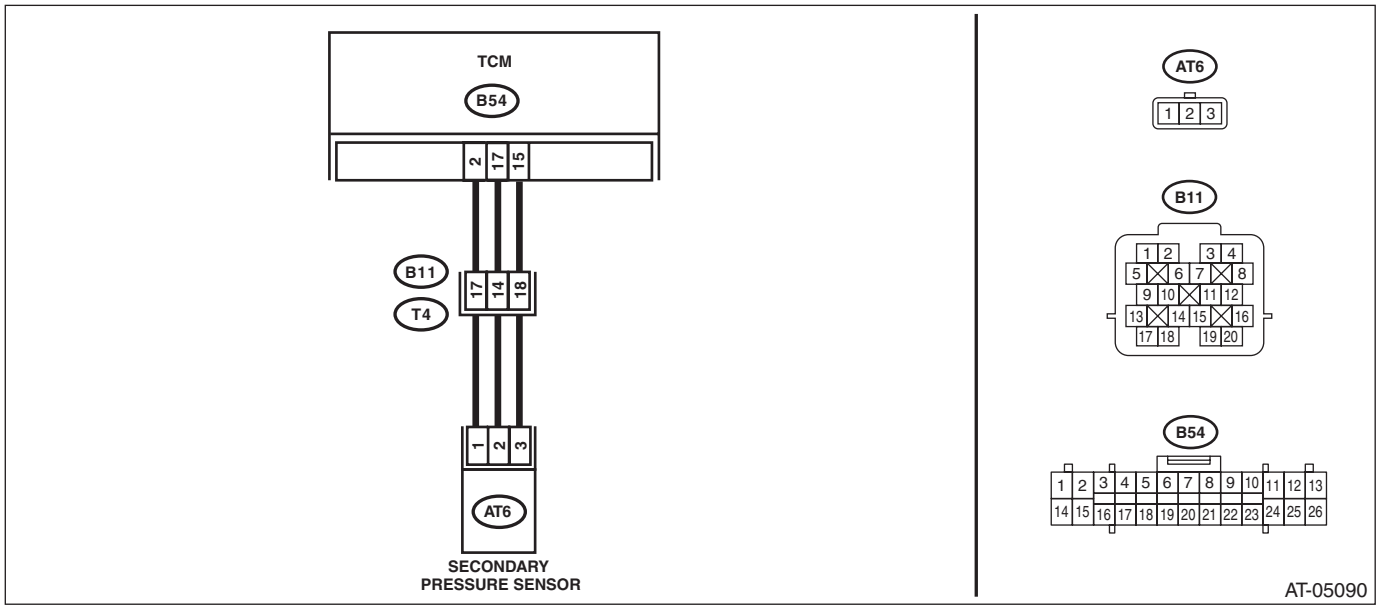

Step		Check	Yes	No
1	**CHECK INPUT SIGNAL FOR TCM.** 1) Start the engine. 2) Warm up until the ATF temperature reaches to 40 — 70°C (104 — 158°F). 3) Shift the select lever to “P” range. 4) Stabilize the engine speed at idle. 5) Read the data of «Actual secondary pressure» using Subaru Select Monitor.	Is the «Actual secondary pressure» 0.5 — 1.5 MPa?	Check for poor contact of connector.	Go to step **2**.
2	**CHECK HARNESS.** 1) Turn the ignition switch to OFF. 2) Disconnect the TCM and transmission connectors. 3) Measure the resistance between TCM connector and transmission connectors. ***Connector & terminal*** ***(B54) No. 2 — (B11) No. 17:*** ***(B54) No. 15 — (B11) No. 18:*** ***(B54) No. 17 — (B11) No. 14:***	Is the resistance less than 1 Ω?	Go to step **3**.	Repair the open circuit of harness.
3	**CHECK HARNESS.** Measure the resistance between TCM connector and chassis ground. ***Connector & terminal*** ***(B54) No. 2 — Chassis ground:*** ***(B54) No. 17 — Chassis ground:***	Is the resistance 1 MΩ or more?	Go to step **4**.	Repair the short circuit of harness.

	Step	Check	Yes	No
4	**CHECK TRANSMISSION HARNESS.** 1) Disconnect the secondary pressure sensor connector. 2) Measure the resistance between transmission connector and secondary pressure sensor connector. ***Connector & terminal*** ***(T4) No. 14 — (AT6) No. 2:*** ***(T4) No. 17 — (AT6) No. 1:*** ***(T4) No. 18 — (AT6) No. 3:***	Is the resistance less than 1 Ω?	Go to step **5**.	Repair the open circuit of harness.
5	**CHECK TRANSMISSION HARNESS.** Measure the resistance between transmission connector and chassis ground. ***Connector & terminal*** ***(T4) No. 14 — Chassis ground:*** ***(T4) No. 17 — Chassis ground:***	Is the resistance 1 MΩ or more?	Go to step **6**.	Repair the short circuit of harness.
6	**CHECK SENSOR POWER SUPPLY.** 1) Connect the connectors of TCM and transmission. 2) Turn the ignition switch to ON. 3) Measure the voltage between secondary pressure sensor connector terminals. ***Connector & terminal*** ***(AT6) No. 1 (+) — (AT6) No. 3 (–):***	Is the voltage 4.5 V or more?	Replace the secondary pressure sensor. <Ref. to CVT-109, Secondary Pressure Sensor.>	Check for poor contact of the connector, and repair the defective part.

L: DTC P0843 SECONDARY OIL PRESSURE SENSOR CIRCUIT (HIGH)

DTC DETECTING CONDITION:
Input signal circuit of secondary pressure sensor is shorted.
TROUBLE SYMPTOM:
Shift characteristics malfunction
WIRING DIAGRAM:

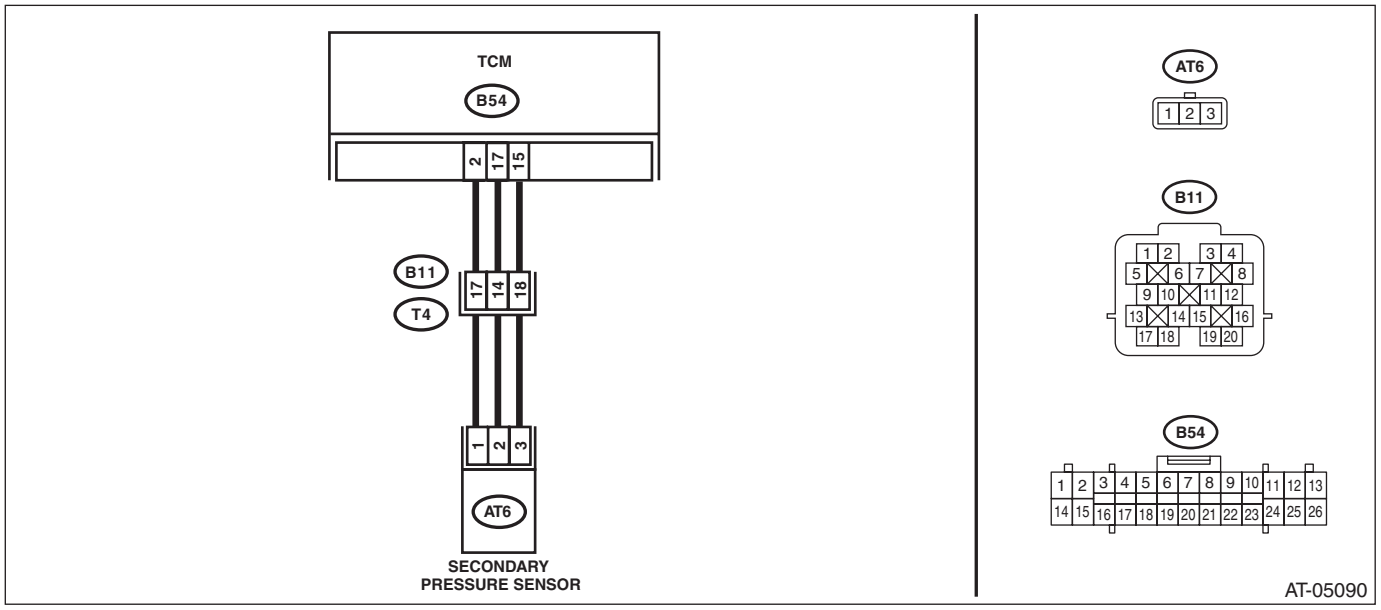

Step		Check	Yes	No
1	**CHECK INPUT SIGNAL FOR TCM.** 1) Start the engine. 2) Warm up until the ATF temperature reaches to 40 — 70°C (104 — 158°F). 3) Shift the select lever to “P” range. 4) Stabilize the engine speed at idle. 5) Read the data of «Actual secondary pressure» using Subaru Select Monitor.	Is the «Actual secondary pressure» 0.5 — 1.5 MPa?	Check for poor contact of connector.	Go to step **2**.
2	**CHECK HARNESS.** 1) Turn the ignition switch to OFF. 2) Disconnect the TCM and transmission connectors. 3) Turn the ignition switch to ON. 4) Measure the voltage between TCM connector and chassis ground. ***Connector & terminal*** ***(B54) No. 2 (+) — Chassis ground (–):*** ***(B54) No. 17 (+) — Chassis ground (–):***	Is the voltage approx. 0 V?	Go to step **3**.	Repair the short circuit of harness.
3	**CHECK HARNESS.** 1) Turn the ignition switch to OFF. 2) Measure the resistance between TCM connector terminals. ***Connector & terminal*** ***(B54) No. 2 — (B54) No. 17:***	Is the resistance less than 1 Ω?	Repair the short circuit of harness.	Go to step **4**.

	Step	Check	Yes	No
4	**CHECK TRANSMISSION HARNESS.** 1) Disconnect the secondary pressure sensor connector. 2) Turn the ignition switch to ON. 3) Measure the voltage between transmission connector and chassis ground. ***Connector & terminal*** ***(T4) No. 14 (+) — Chassis ground (–):*** ***(T4) No. 17 (+) — Chassis ground (–):***	Is the voltage approx. 0 V?	Go to step **5**.	Repair the short circuit of harness.
5	**CHECK TRANSMISSION HARNESS.** 1) Turn the ignition switch to OFF. 2) Measure the resistance between transmission connector terminals. ***Connector & terminal*** ***(T4) No. 14 — (T4) No. 17:***	Is the resistance less than 1 Ω?	Repair the short circuit of harness.	Go to step **6**.
6	**CHECK SENSOR POWER SUPPLY.** 1) Connect the connectors of TCM and transmission. 2) Turn the ignition switch to ON. 3) Measure the voltage between secondary pressure sensor connector terminals. ***Connector & terminal*** ***(AT6) No. 1 (+) — (AT6) No. 3 (–):***	Is the voltage 4.5 V or more?	Replace the secondary pressure sensor. <Ref. to CVT-109, Secondary Pressure Sensor.>	Check for poor contact of the connector, and repair the defective part.

M: DTC P0890 AT SELF-SHUT RELAY DIAGNOSIS (LOW)

DTC DETECTING CONDITION:

- Power supply circuit of TCM is open or shorted.
- Self shut relay malfunction

TROUBLE SYMPTOM:

Gear is not changed.

WIRING DIAGRAM:

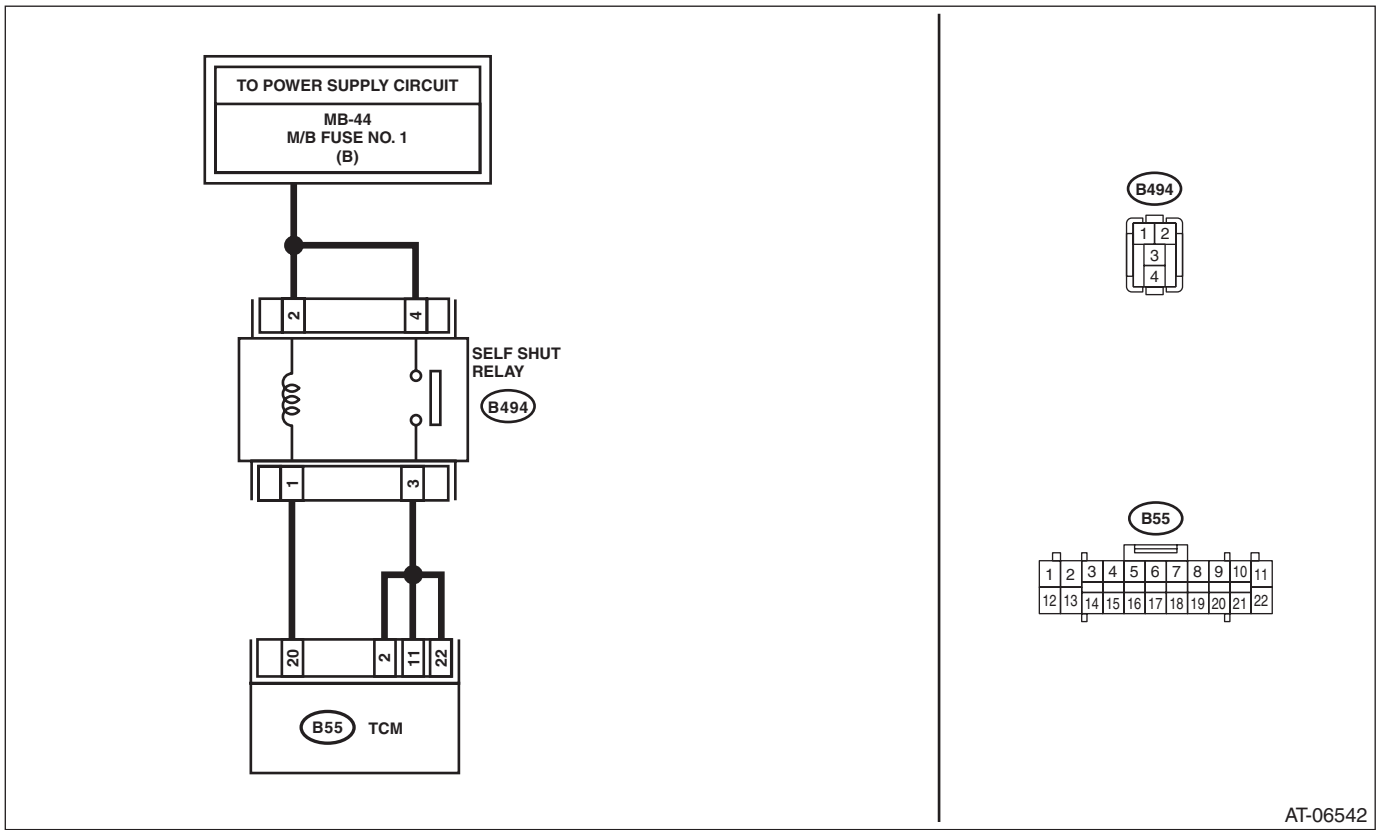

Step		Check	Yes	No
1	**CHECK HARNESS.** 1) Disconnect the TCM and self shut relay connectors. 2) Measure the resistance between TCM connector and self shut relay connector. ***Connector & terminal*** ***(B55) No. 20 — (B494) No. 1:*** ***(B55) No. 2 — (B494) No. 3:*** ***(B55) No. 11 — (B494) No. 3:*** ***(B55) No. 22 — (B494) No. 3:***	Is the resistance less than 1 Ω?	Go to step **2**.	Repair the open circuit of harness.
2	**CHECK HARNESS.** Measure the resistance between TCM connector and chassis ground. ***Connector & terminal*** ***(B55) No. 20 — Chassis ground:*** ***(B55) No. 2 — Chassis ground:*** ***(B55) No. 11 — Chassis ground:*** ***(B55) No. 22 — Chassis ground:***	Is the resistance 1 MΩ or more?	Go to step **3**.	Repair the short circuit of harness.

	Step	Check	Yes	No
3	**CHECK RELAY POWER SUPPLY.** Measure the voltage between self shut relay connector and chassis ground. ***Connector & terminal*** ***(B494) No. 2 (+) — Chassis ground (–):*** ***(B494) No. 4 (+) — Chassis ground (–):***	Is the voltage 10 V or more?	Go to step **4**.	Repair the open or short circuit of harness.
4	**CHECK SELF SHUT RELAY.** Measure the resistance between self shut relay terminals. ***Connector & terminal*** ***(B494) No. 1 — (B494) No. 2:***	Is the resistance 110 — 140 Ω?	Go to step **5**.	Replace the self shut relay.
5	**CHECK SELF SHUT RELAY.** Measure the resistance between self shut relay terminals. ***Connector & terminal*** ***(B494) No. 3 — (B494) No. 4:***	Is the resistance 1 MΩ or more?	Go to step **6**.	Replace the self shut relay.
6	**CHECK INPUT SIGNAL FOR TCM.** 1) Connect the connectors of TCM and self shut relay. 2) Read the data of «Battery voltage» using Subaru Select Monitor.	Is the «Battery voltage» 10 V or more?	Current condition is normal. Check for poor contact in connectors or harnesses, and repair the defective part.	Go to step **7**.
7	**CHECK FOR POOR CONTACT.**	Is there poor contact of the self shut relay circuit?	Repair the poor contact.	Check the TCM.

N: DTC P0951 MANUAL SWITCH

DTC DETECTING CONDITION:
Input signal circuit of manual mode switch is open or shorted.
TROUBLE SYMPTOM:
Manual mode can not be set.
WIRING DIAGRAM:

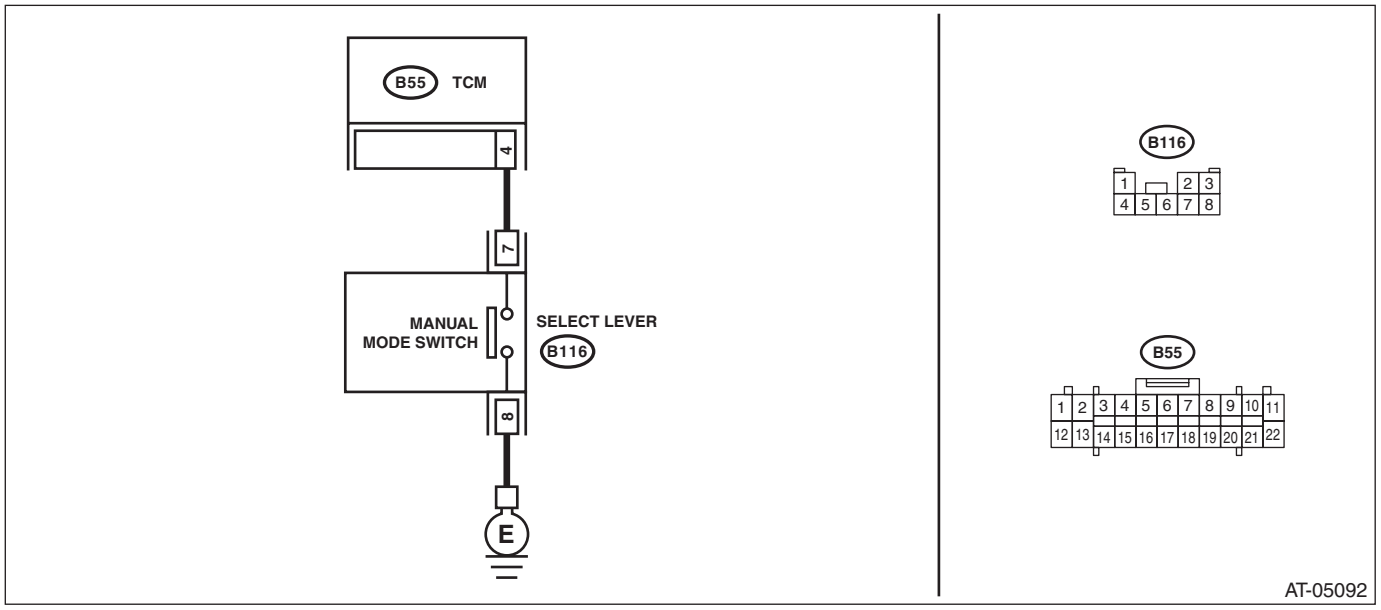

Step		Check	Yes	No
1	**CHECK HARNESS.** 1) Turn the ignition switch to OFF. 2) Disconnect the manual mode switch connector. 3) Measure the resistance between manual mode switch connector and chassis ground. ***Connector & terminal*** ***(B116) No. 8 — Chassis ground:***	Is the resistance less than 1 Ω?	Go to step **2**.	Repair the open circuit of harness.
2	**CHECK MANUAL MODE SWITCH.** Measure the resistance between manual mode switch terminals. ***Connector & terminal*** ***(B116) No. 7 — No. 8:***	Is the resistance 1 MΩ or more?	Go to step **3**.	Replace the select lever assembly. <Ref. to CS-22, Select Lever.>
3	**CHECK MANUAL MODE SWITCH.** 1) Shift the select lever to manual mode. 2) Measure the resistance between manual mode switch terminals. ***Connector & terminal*** ***(B116) No. 7 — No. 8:***	Is the resistance less than 1 Ω?	Go to step **4**.	Replace the select lever assembly. <Ref. to CS-22, Select Lever.>
4	**CHECK HARNESS.** 1) Disconnect the TCM connector. 2) Measure the resistance between TCM connector and manual mode switch connector. ***Connector & terminal*** ***(B116) No. 7 — (B55) No. 4:***	Is the resistance less than 1 Ω?	Go to step **5**.	Repair the open circuit of harness or poor contact of connector.
5	**CHECK HARNESS.** Measure the resistance between manual mode switch connector and chassis ground. ***Connector & terminal*** ***(B116) No. 7 — Chassis ground:***	Is the resistance 1 MΩ or more?	Go to step **6**.	Repair the short circuit of harness.

	Step	Check	Yes	No
6	**CHECK INPUT SIGNAL FOR TCM.** 1) Connect the TCM and manual mode switch connector. 2) Turn the ignition switch to ON. 3) Set the select lever to “D” range. 4) Read the data of «Manual Mode Switch» using the Subaru Select Monitor.	Does «Manual Mode Switch» display “ON” with select lever in manual mode, and “OFF” with select lever in other than manual mode?	Current condition is normal.	Go to step **7**.
7	**CHECK FOR POOR CONTACT.**	Is there poor contact of the manual mode switch circuit?	Repair the poor contact.	Check the TCM.

O: DTC P0962 SECONDARY SOLENOID CIRCUIT (LOW)

DTC DETECTING CONDITION:
Output signal circuit of secondary solenoid is shorted.
TROUBLE SYMPTOM:
- Engine speed increases abruptly, and can not start.
- Engine speed increases abruptly during driving.

WIRING DIAGRAM:

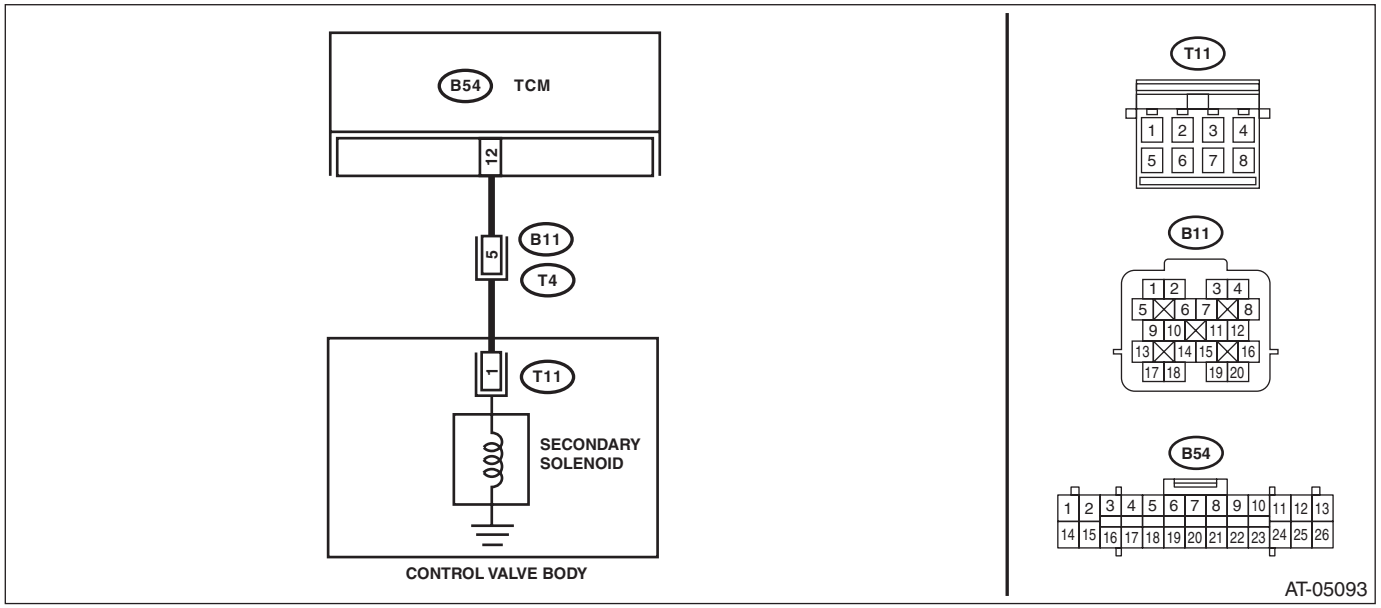

Step		Check	Yes	No
1	**CHECK INPUT SIGNAL FOR TCM.** 1) After driving with warm up condition, park the vehicle while depressing the brake pedal at "N" range. 2) Read the data of «Sec. Sol. Set Current» and «Sec. Sol. Actual Current» using Subaru Select Monitor.	Does the value of «Sec. Sol. Set Current» and «Sec. Sol. Actual Current» almost correspond?	Check for poor contact of connector.	Go to step **2**.
2	**CHECK HARNESS.** 1) Turn the ignition switch to OFF. 2) Disconnect the TCM and transmission connectors. 3) Measure the resistance between TCM connector and chassis ground. ***Connector & terminal*** ***(B54) No. 12 — Chassis ground:***	Is the resistance 1 MΩ or more?	Go to step **3**.	Repair the short circuit of harness.
3	**CHECK SECONDARY SOLENOID.** Measure the resistance between transmission connector and transmission body. ***Connector & terminal*** ***(T4) No. 5 — Transmission body:***	Is the resistance approx. 7 Ω? (when engine cold)	Check for poor contact of the connector, and repair the defective part.	Go to step **4**.
4	**CHECK HARNESS INSIDE TRANSMISSION.** **CAUTION:** **Start work after ATF cools down.** 1) Remove the transmission oil pan. 2) Check for the harness pinch, damage.	Is the harness normal?	Go to step **5**.	Replace the transmission harness.

	Step	Check	Yes	No
5	**CHECK HARNESS INSIDE TRANSMISSION.** 1) Disconnect the control valve body connector. 2) Measure the resistance between transmission connector and transmission body. ***Connector & terminal*** ***(T4) No. 5 — Transmission body:***	Is the resistance 1 MΩ or more?	Replace the control valve body. <Ref. to CVT-111, Control Valve Body.>	Replace the transmission harness.

P: DTC P0963 SECONDARY SOLENOID CIRCUIT (HIGH)

DTC DETECTING CONDITION:

- Output signal circuit of secondary solenoid is open or shorted.
- Secondary solenoid has open circuit inside.

TROUBLE SYMPTOM:

- Engine speed increases abruptly, and can not start.
- Engine speed increases abruptly during driving.

WIRING DIAGRAM:

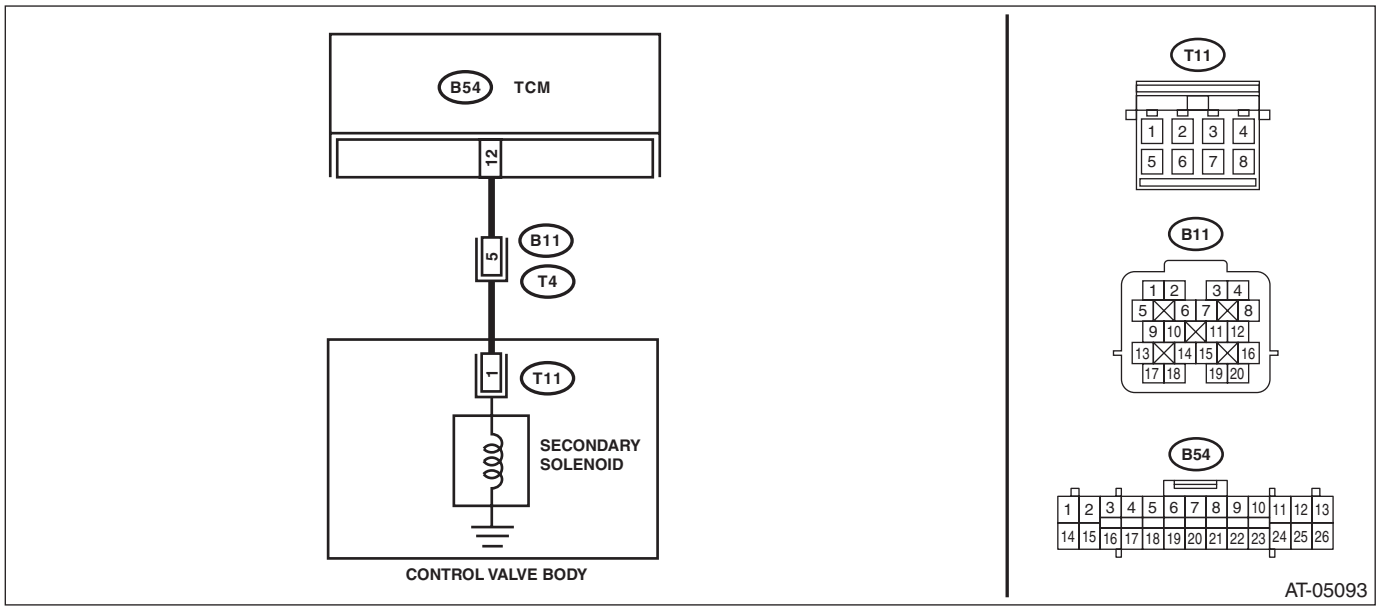

	Step	Check	Yes	No
1	**CHECK INPUT SIGNAL FOR TCM.** 1) After driving with warm up condition, park the vehicle while depressing the brake pedal at "N" range. 2) Read the data of «Sec. Sol. Set Current» and «Sec. Sol. Actual Current» using Subaru Select Monitor.	Does the value of «Sec. Sol. Set Current» and «Sec. Sol. Actual Current» almost correspond?	Check for poor contact of connector.	Go to step **2**.
2	**CHECK HARNESS.** 1) Turn the ignition switch to OFF. 2) Disconnect the TCM and transmission connectors. 3) Measure the resistance between TCM connector and transmission connectors. ***Connector & terminal*** ***(B54) No. 12 — (B11) No. 5:***	Is the resistance less than 1 Ω?	Go to step **3**.	Repair the open circuit of harness.
3	**CHECK HARNESS.** 1) Turn the ignition switch to ON. 2) Measure the voltage between TCM connector and chassis ground. ***Connector & terminal*** ***(B54) No. 12 (+) — Chassis ground (–):***	Is the voltage approx. 0 V?	Go to step **4**.	Repair the short circuit of harness.
4	**CHECK SECONDARY SOLENOID.** Measure the resistance between transmission connector and transmission body. ***Connector & terminal*** ***(T4) No. 5 — Transmission body:***	Is the resistance approx. 7 Ω? (when engine cold)	Check for poor contact of the connector, and repair the defective part.	Go to step **5**.

	Step	Check	Yes	No
5	**CHECK HARNESS INSIDE TRANSMISSION.** **CAUTION:** **Start work after ATF cools down.** 1) Remove the transmission oil pan. 2) Check for the harness pinch, damage.	Is the harness normal?	Go to step **6**.	Replace the transmission harness.
6	**CHECK HARNESS INSIDE TRANSMISSION.** 1) Disconnect the control valve body connector. 2) Turn the ignition switch to ON. 3) Measure the voltage between transmission connector and transmission body. ***Connector & terminal*** ***(T4) No. 5 (+) — Transmission body (–):***	Is the voltage approx. 0 V?	Replace the control valve body. <Ref. to CVT-111, Control Valve Body.>	Replace the transmission harness.

Q: DTC P0965 FORWARD & REVERSE SOLENOID FUNCTION

DTC DETECTING CONDITION:

- Control valve hydraulic circuit malfunction
- F&R solenoid characteristics malfunction
- Clutch slippage caused by forward clutch facing deterioration
- Clutch slippage caused by hydraulic pressure leaks

TROUBLE SYMPTOM:

- Engine speed increases abruptly, and can not accelerate.
- Excessive slippage is felt.

	Step	Check	Yes	No
1	**CHECK TRANSMISSION FLUID.** Check the condition of ATF. <Ref. to CVT-40, CONDITION CHECK, CVTF.>	Is the ATF OK?	Go to step **2**.	Check according to the "corrective action" of ATF (CVTF) "CONDITION CHECK". <Ref. to CVT-40, CONDITION CHECK, CVTF.>
2	**CHECK TRANSMISSION FLUID.** Check the amount of ATF. <Ref. to CVT-37, ADJUSTMENT, CVTF.>	Is the ATF amount correct?	Go to step **3**.	Adjust the amount of ATF. <Ref. to CVT-37, ADJUSTMENT, CVTF.>
3	**CHECK INPUT SIGNAL FOR TCM.** 1) Start the engine. 2) Warm up until the ATF temperature reaches to 40 — 70°C (104 — 158°F). 3) Shift the select lever to "P" range. 4) Stabilize the engine speed at idle. 5) Read the data of «Actual secondary pressure» using Subaru Select Monitor.	Is the «Actual secondary pressure» 0.5 — 1.5 MPa?	Go to step **4**.	Perform the diagnosis according to DTC P0841 procedure.
4	**STALL TEST.** Perform the stall test. <Ref. to CVT-47, Stall Test.>	Is the stall test normal?	Go to step **5**.	If the engine speed increases abruptly, replace the transmission assembly. <Ref. to CVT-55, Automatic Transmission Assembly.>
5	**DRIVING CHECK BY INSPECTION MODE.** 1) Turn the ignition switch to OFF. 2) Perform a drive check based on the "Inspection Mode". <Ref. to CVT(diag)-19, Inspection Mode.>	Does the AT OIL TEMP light blink and is DTC P0965 displayed?	Replace the transmission assembly. <Ref. to CVT-55, Automatic Transmission Assembly.>	If there is abrupt increase of engine speed, standing start problems, replace the transmission assembly. <Ref. to CVT-55, Automatic Transmission Assembly.> If it is normal, temporary poor contact occurs.

R: DTC P0966 FORWARD & REVERSE SOLENOID CIRCUIT (LOW)

DTC DETECTING CONDITION:
Output signal circuit of F&R solenoid is shorted.
TROUBLE SYMPTOM:
Excessive shift shock
WIRING DIAGRAM:

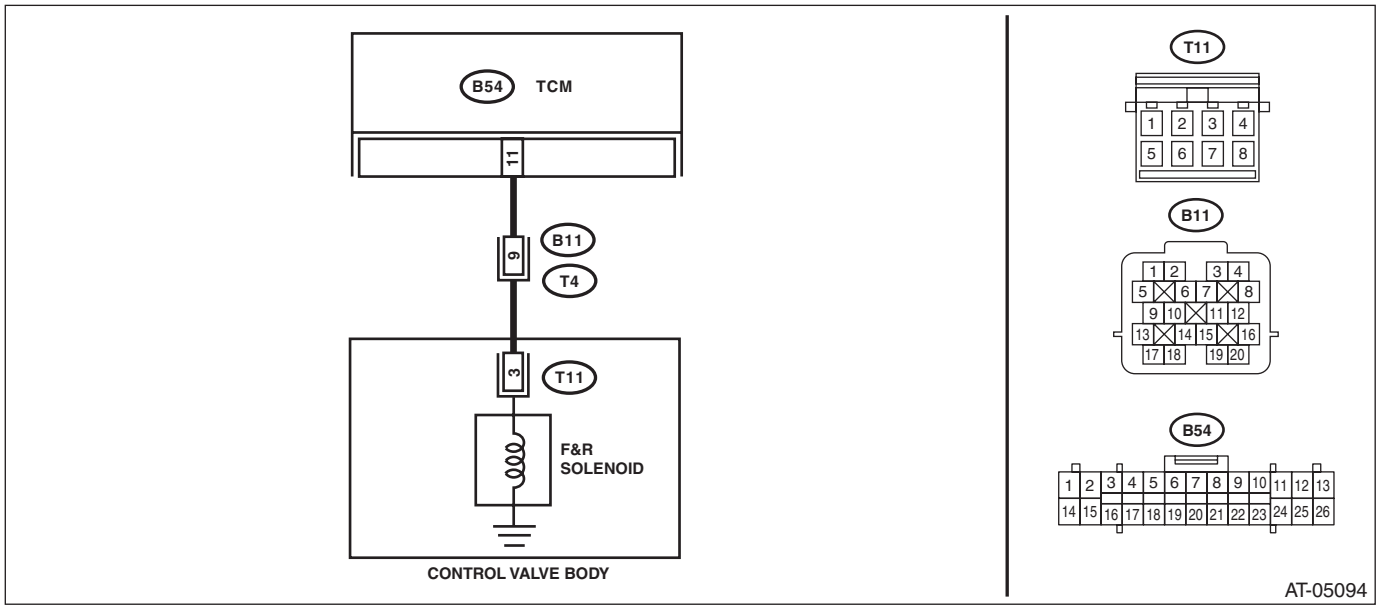

Step		Check	Yes	No
1	**CHECK INPUT SIGNAL FOR TCM.** 1) After driving with warm up condition, park the vehicle while depressing the brake pedal at "D" range. 2) Read the data of «F&R Linear Solenoid Set Current» and «F&R Linear Solenoid Actual Current» using Subaru Select Monitor.	Does the value of «F&R Linear Solenoid Set Current» and «F&R Linear Solenoid Actual Current» almost correspond?	Check for poor contact of connector.	Go to step **2**.
2	**CHECK HARNESS.** 1) Turn the ignition switch to OFF. 2) Disconnect the TCM and transmission connectors. 3) Measure the resistance between TCM connector and chassis ground. ***Connector & terminal*** ***(B54) No. 11 — Chassis ground:***	Is the resistance 1 MΩ or more?	Go to step **3**.	Repair the short circuit of harness.
3	**CHECK F&R SOLENOID.** Measure the resistance between transmission connector and transmission body. ***Connector & terminal*** ***(T4) No. 9 — Transmission body:***	Is the resistance approx. 6 Ω? (when engine cold)	Check for poor contact of the connector, and repair the defective part.	Go to step **4**.
4	**CHECK HARNESS INSIDE TRANSMISSION.** **CAUTION:** **Start work after ATF cools down.** 1) Remove the transmission oil pan. 2) Check for the harness pinch, damage.	Is the harness normal?	Go to step **5**.	Replace the transmission harness.

	Step	Check	Yes	No
5	**CHECK HARNESS INSIDE TRANSMISSION.** 1) Disconnect the control valve body connector. 2) Measure the resistance between transmission connector and transmission body. ***Connector & terminal*** ***(T4) No. 9 — Transmission body:***	Is the resistance 1 MΩ or more?	Replace the control valve body. <Ref. to CVT-111, Control Valve Body.>	Replace the transmission harness.

S: DTC P0967 FORWARD & REVERSE LINEAR SOLENOID CIRCUIT (HIGH)

DTC DETECTING CONDITION:

- Output signal circuit of F&R solenoid is open or shorted.
- F&R solenoid has open circuit inside.

TROUBLE SYMPTOM:

Engine speed increases abruptly, and can not start.

WIRING DIAGRAM:

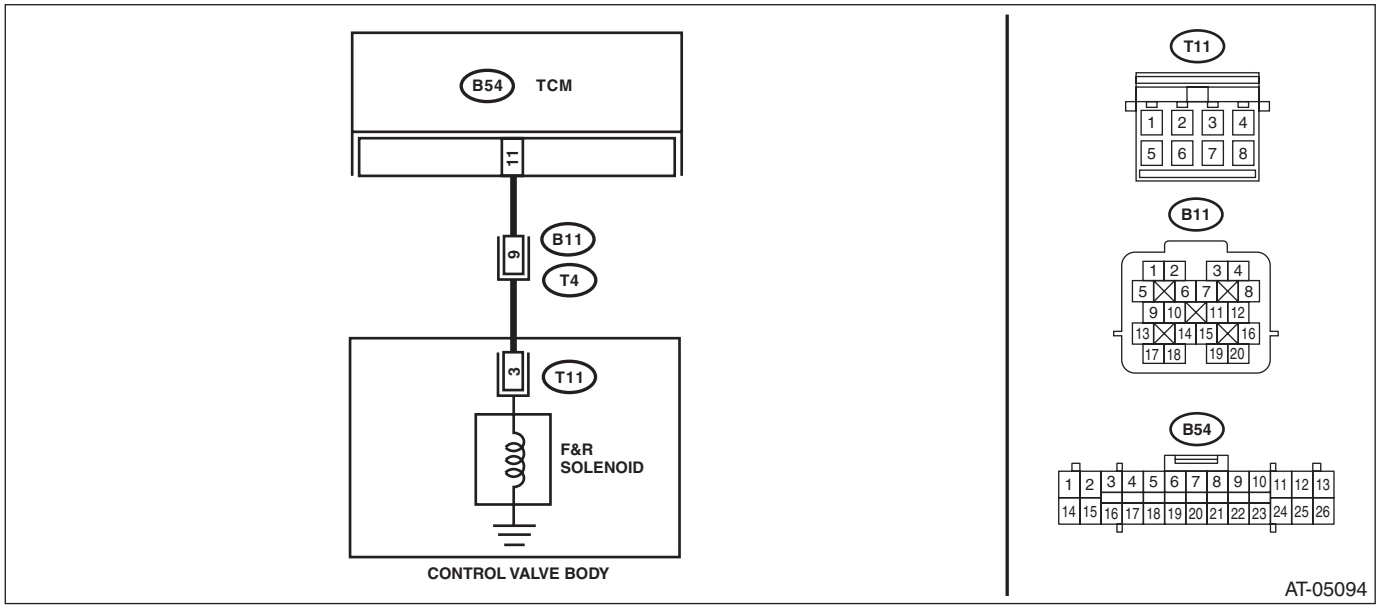

Step		Check	Yes	No
1	**CHECK INPUT SIGNAL FOR TCM.** 1) After driving with warm up condition, park the vehicle while depressing the brake pedal at "D" range. 2) Read the data of «F&R Linear Solenoid Set Current» and «F&R Linear Solenoid Actual Current» using Subaru Select Monitor.	Does the value of «F&R Linear Solenoid Set Current» and «F&R Linear Solenoid Actual Current» almost correspond?	Check for poor contact of connector.	Go to step **2**.
2	**CHECK HARNESS.** 1) Turn the ignition switch to OFF. 2) Disconnect the TCM and transmission connectors. 3) Measure the resistance between TCM connector and transmission connectors. ***Connector & terminal*** ***(B54) No. 11 — (B11) No. 9:***	Is the resistance less than 1 Ω?	Go to step **3**.	Repair the open circuit of harness.
3	**CHECK HARNESS.** 1) Turn the ignition switch to ON. 2) Measure the voltage between TCM connector and chassis ground. ***Connector & terminal*** ***(B54) No. 11 (+) — Chassis ground (–):***	Is the voltage approx. 0 V?	Go to step **4**.	Repair the short circuit of harness.
4	**CHECK F&R SOLENOID.** Measure the resistance between transmission connector and transmission body. ***Connector & terminal*** ***(T4) No. 9 — Transmission body:***	Is the resistance approx. 6 Ω? (when engine cold)	Check for poor contact of the connector, and repair the defective part.	Go to step **5**.

	Step	Check	Yes	No
5	**CHECK HARNESS INSIDE TRANSMISSION.** **CAUTION:** **Start work after ATF cools down.** 1) Remove the transmission oil pan. 2) Check for the harness pinch, damage.	Is the harness normal?	Go to step **6**.	Replace the transmission harness.
6	**CHECK HARNESS INSIDE TRANSMISSION.** 1) Disconnect the control valve body connector. 2) Turn the ignition switch to ON. 3) Measure the voltage between transmission connector and transmission body. ***Connector & terminal*** ***(T4) No. 9 (+) — Transmission body (–):***	Is the voltage approx. 0 V?	Replace the control valve body. <Ref. to CVT-111, Control Valve Body.>	Replace the transmission harness.

T: DTC P0970 TRANSFER SOLENOID CIRCUIT (LOW)

DTC DETECTING CONDITION:
Output signal circuit of AWD solenoid is shorted.
TROUBLE SYMPTOM:
Drivability getting worse.
WIRING DIAGRAM:

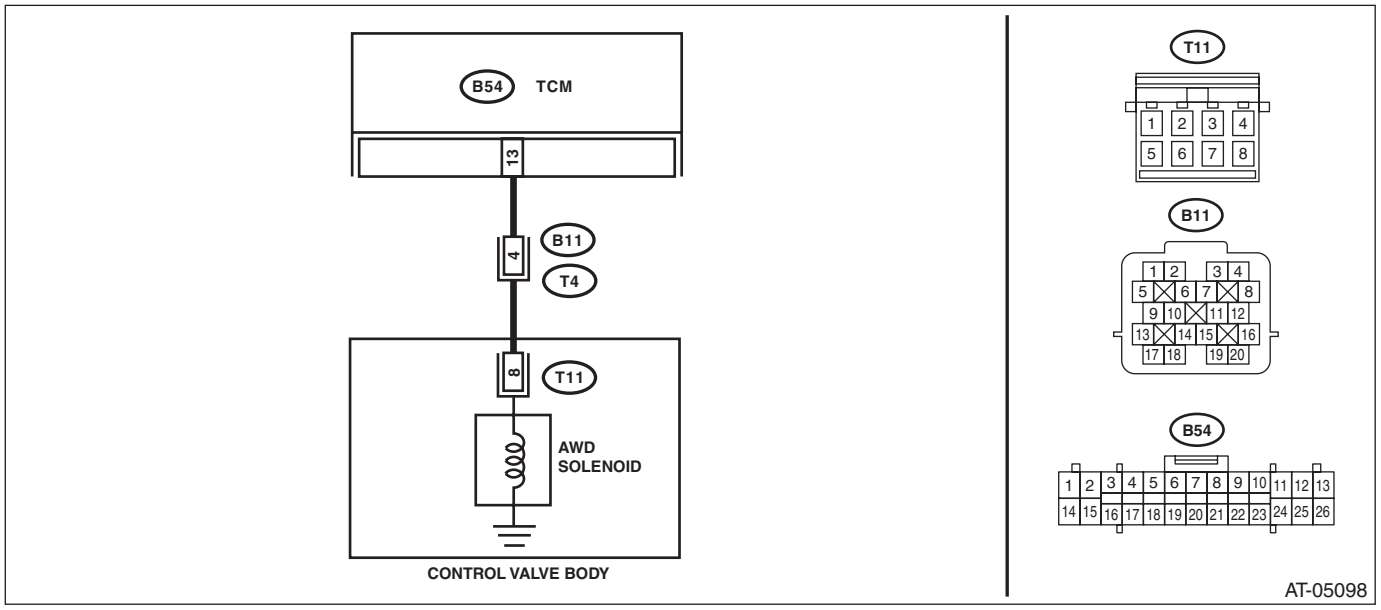

Step		Check	Yes	No
1	**CHECK HARNESS.** 1) Turn the ignition switch to OFF. 2) Disconnect the TCM and transmission connectors. 3) Measure the resistance between TCM connector and chassis ground. ***Connector & terminal*** ***(B54) No. 13 — Chassis ground:***	Is the resistance 1 MΩ or more?	Go to step **2**.	Repair the short circuit of harness.
2	**CHECK AWD SOLENOID.** Measure the resistance between transmission connector and transmission body. ***Connector & terminal*** ***(T4) No. 4 — Transmission body:***	Is the resistance approx. 4 Ω? (when engine cold)	Check for poor contact of the connector, and repair the fault location.	Go to step **3**.
3	**CHECK HARNESS INSIDE TRANSMISSION.** **CAUTION:** **Start work after ATF cools down.** 1) Remove the transmission oil pan. 2) Check for the harness pinch, damage.	Is there any malfunction in harness?	Go to step **4**.	Replace the transmission harness.
4	**CHECK HARNESS INSIDE TRANSMISSION.** 1) Disconnect the control valve body connector. 2) Measure the resistance between transmission connector and transmission body. ***Connector & terminal*** ***(T4) No. 4 — Transmission body:***	Is the resistance 1 MΩ or more?	Replace the control valve body. <Ref. to CVT-111, Control Valve Body.>	Replace the transmission harness.

U: DTC P0971 TRANSFER SOLENOID CIRCUIT (HIGH)

DTC DETECTING CONDITION:

- Output signal circuit of AWD solenoid is open or shorted.
- AWD solenoid has open circuit inside.

TROUBLE SYMPTOM:

- Tight corner braking phenomenon occurs.
- Drivability getting worse.

WIRING DIAGRAM:

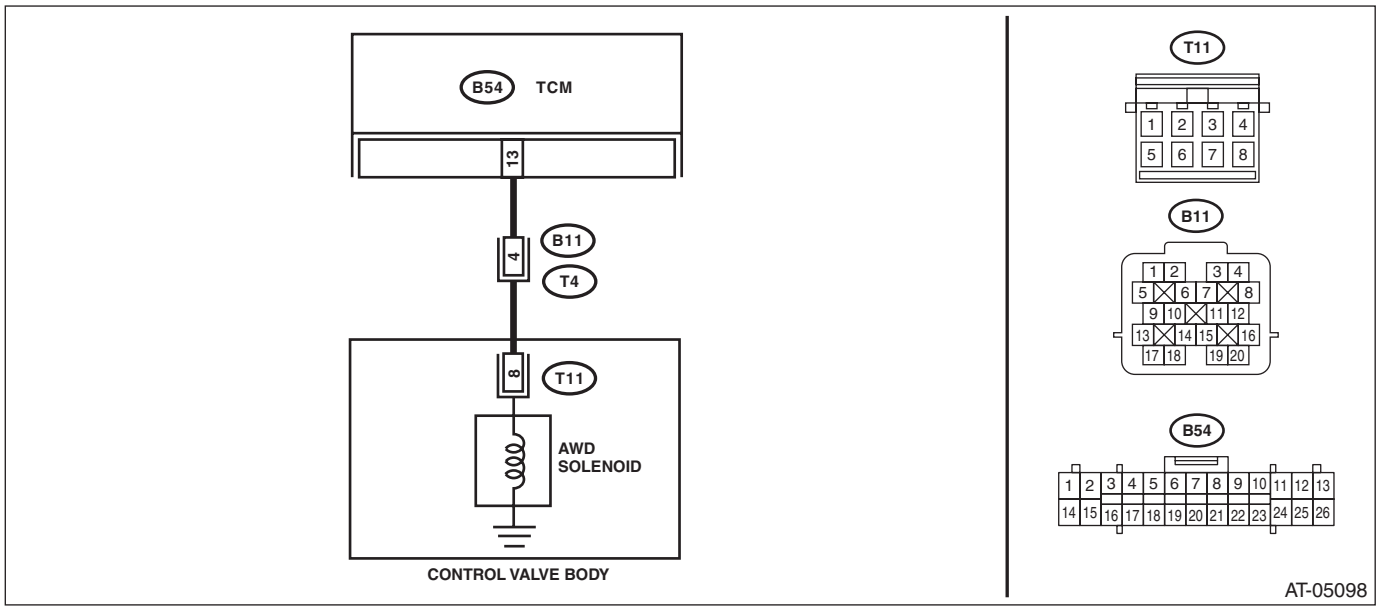

Step		Check	Yes	No
1	**CHECK HARNESS.** 1) Turn the ignition switch to OFF. 2) Disconnect the TCM and transmission connectors. 3) Measure the resistance between TCM connector and transmission connectors. ***Connector & terminal*** ***(B54) No. 13 — (B11) No. 4:***	Is the resistance less than 1 Ω?	Go to step **2**.	Repair the open circuit of harness.
2	**CHECK HARNESS.** 1) Turn the ignition switch to ON. 2) Measure the voltage between TCM connector and chassis ground. ***Connector & terminal*** ***(B54) No. 13 (+) — Chassis ground (–):***	Is the voltage approx. 0 V?	Go to step **3**.	Repair the short circuit of harness.
3	**CHECK AWD SOLENOID.** Measure the resistance between transmission connector and transmission body. ***Connector & terminal*** ***(T4) No. 4 — Transmission body:***	Is the resistance approx. 4 Ω? (when engine cold)	Check for poor contact of the connector, and repair the fault location.	Go to step **4**.
4	**CHECK HARNESS INSIDE TRANSMISSION.** **CAUTION:** **Start work after ATF cools down.** 1) Remove the transmission oil pan. 2) Check for the harness pinch, damage.	Is there any malfunction in harness?	Go to step **5**.	Replace the transmission harness.

	Step	Check	Yes	No
5	**CHECK HARNESS INSIDE TRANSMISSION.** 1) Disconnect the control valve body connector. 2) Turn the ignition switch to ON. 3) Measure the voltage between transmission connector and transmission body. ***Connector & terminal*** ***(T4) No. 4 (+) — Transmission body (–):***	Is the voltage approx. 0 V?	Replace the control valve body. <Ref. to CVT-111, Control Valve Body.>	Replace the transmission harness.

V: DTC P0973 PRIMARY SOLENOID SYSTEM A CIRCUIT (LOW)

DTC DETECTING CONDITION:
Output signal circuit of primary UP solenoid is shorted.
TROUBLE SYMPTOM:
Gear is not changed. (No up-shift)
WIRING DIAGRAM:

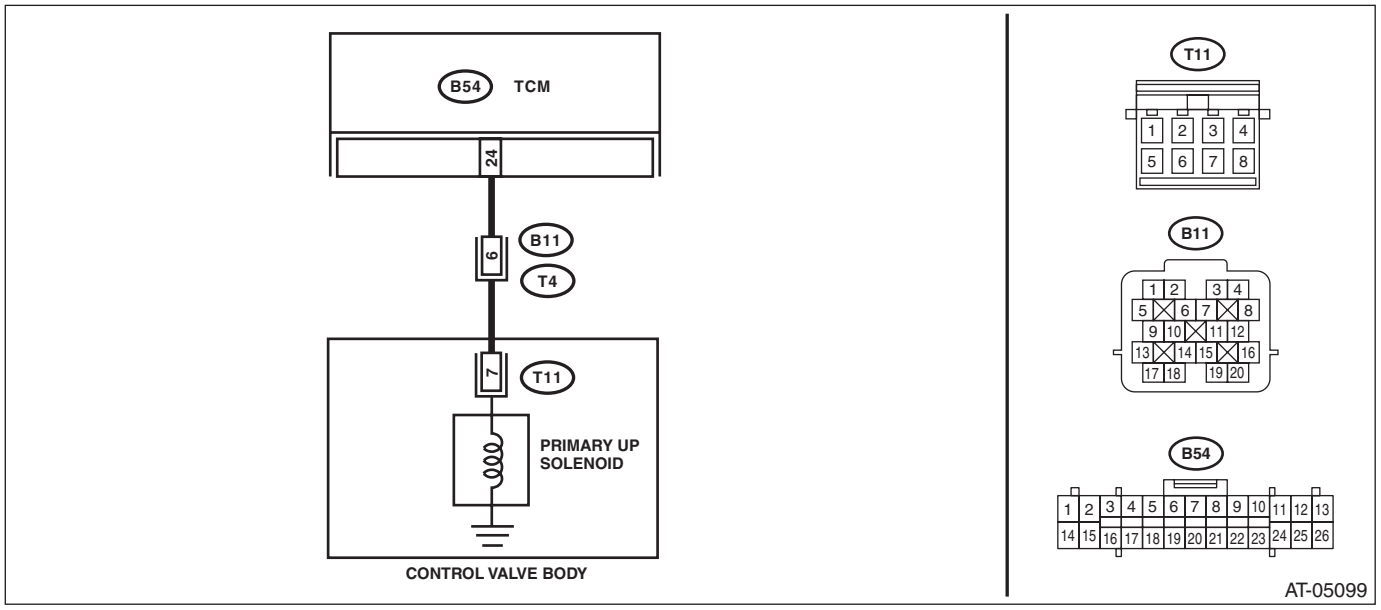

Step		Check	Yes	No
1	**CHECK HARNESS.** 1) Turn the ignition switch to OFF. 2) Disconnect the TCM and transmission connectors. 3) Measure the resistance between TCM connector and chassis ground. ***Connector & terminal*** ***(B54) No. 24 — Chassis ground:***	Is the resistance 1 MΩ or more?	Go to step **2**.	Repair the short circuit of harness.
2	**CHECK PRIMARY UP SOLENOID.** Measure the resistance between transmission connector and transmission body. ***Connector & terminal*** ***(T4) No. 6 — Transmission body:***	Is the resistance approx. 13 Ω? (when engine cold)	Check for poor contact of the connector, and repair the fault location.	Go to step **3**.
3	**CHECK HARNESS INSIDE TRANSMISSION.** **CAUTION:** **Start work after ATF cools down.** 1) Remove the transmission oil pan. 2) Check for the harness pinch, damage.	Is there any malfunction in harness?	Go to step **4**.	Replace the transmission harness.
4	**CHECK HARNESS INSIDE TRANSMISSION.** 1) Disconnect the control valve body connector. 2) Measure the resistance between transmission connector and transmission body. ***Connector & terminal*** ***(T4) No. 6 — Transmission body:***	Is the resistance 1 MΩ or more?	Replace the control valve body. <Ref. to CVT-111, Control Valve Body.>	Replace the transmission harness.

W: DTC P0974 PRIMARY SOLENOID SYSTEM A CIRCUIT (HIGH)

DTC DETECTING CONDITION:
Output signal circuit of primary UP solenoid is open or shorted.
TROUBLE SYMPTOM:
Gear is not changed. (No up-shift)
WIRING DIAGRAM:

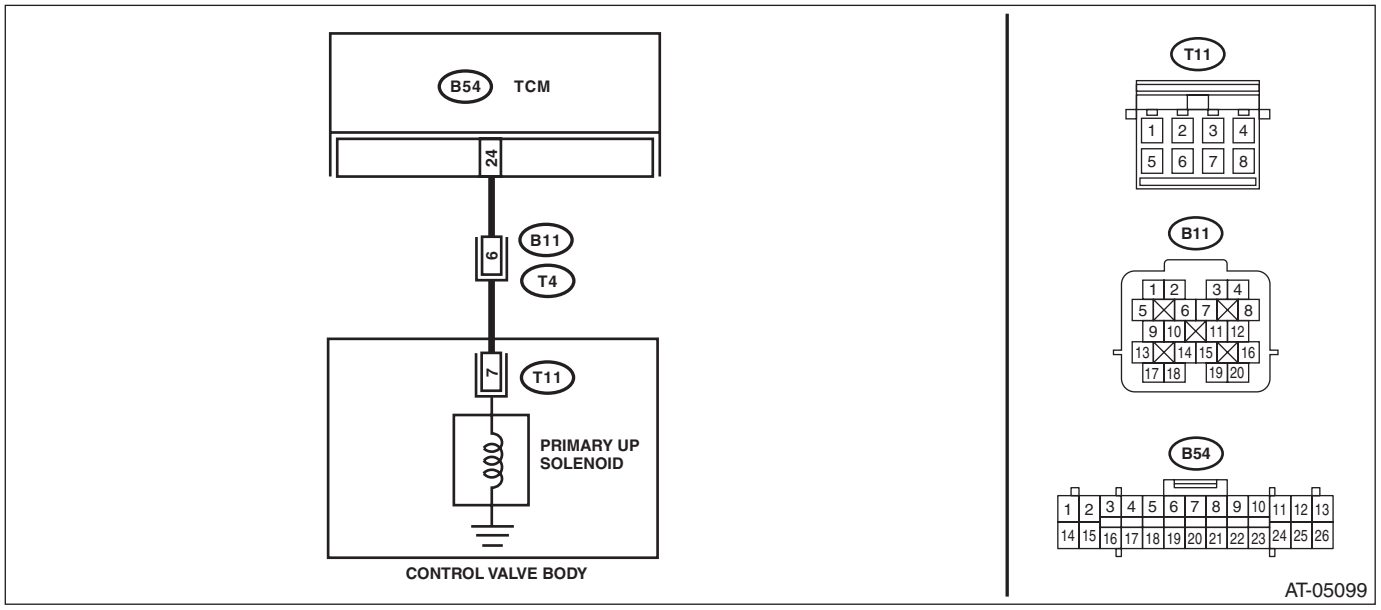

Step		Check	Yes	No
1	**CHECK HARNESS.** 1) Turn the ignition switch to OFF. 2) Disconnect the TCM and transmission connectors. 3) Measure the resistance between TCM connector and transmission connectors. ***Connector & terminal*** ***(B54) No. 24 — (B11) No. 6:***	Is the resistance less than 1 Ω?	Go to step **2**.	Repair the open circuit of harness.
2	**CHECK HARNESS.** 1) Turn the ignition switch to ON. 2) Measure the voltage between TCM connector and chassis ground. ***Connector & terminal*** ***(B54) No. 24 (+) — Chassis ground (–):***	Is the voltage approx. 0 V?	Go to step **3**.	Repair the short circuit of harness.
3	**CHECK PRIMARY UP SOLENOID.** Measure the resistance between transmission connector and transmission body. ***Connector & terminal*** ***(T4) No. 6 — Transmission body:***	Is the resistance approx. 13 Ω? (when engine cold)	Check for poor contact of the connector, and repair the fault location.	Go to step **4**.
4	**CHECK HARNESS INSIDE TRANSMISSION.** **CAUTION:** **Start work after ATF cools down.** 1) Remove the transmission oil pan. 2) Check for the harness pinch, damage.	Is there any malfunction in harness?	Go to step **5**.	Replace the transmission harness.

	Step	Check	Yes	No
5	**CHECK HARNESS INSIDE TRANSMISSION.** 1) Disconnect the control valve body connector. 2) Turn the ignition switch to ON. 3) Measure the voltage between transmission connector and transmission body. ***Connector & terminal*** ***(T4) No. 6 (+) — Transmission body (–):***	Is the voltage approx. 0 V?	Replace the control valve body. <Ref. to CVT-111, Control Valve Body.>	Replace the transmission harness.

X: DTC P0976 PRIMARY SOLENOID SYSTEM B CIRCUIT (LOW)

DTC DETECTING CONDITION:
Output signal circuit of primary DOWN solenoid is shorted.
TROUBLE SYMPTOM:
Gear is not changed. (No down-shift)
WIRING DIAGRAM:

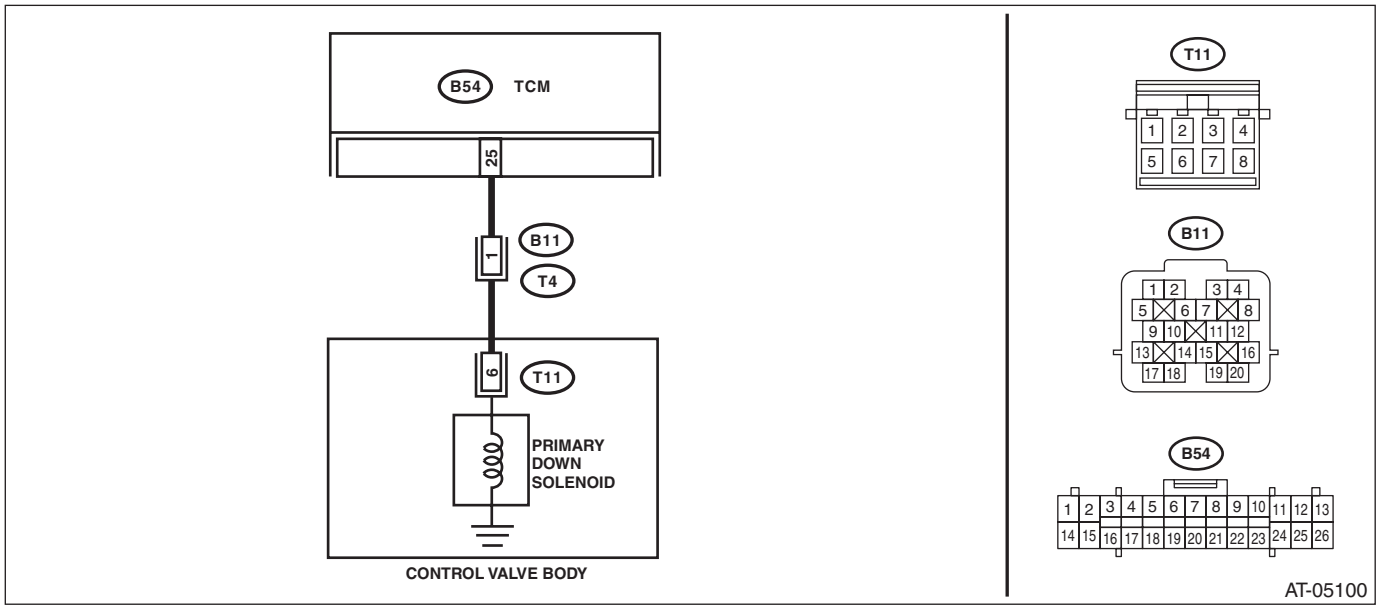

Step		Check	Yes	No
1	**CHECK HARNESS.** 1) Turn the ignition switch to OFF. 2) Disconnect the TCM and transmission connectors. 3) Measure the resistance between TCM connector and chassis ground. ***Connector & terminal*** ***(B54) No. 25 — Chassis ground:***	Is the resistance 1 MΩ or more?	Go to step **2**.	Repair the short circuit of harness.
2	**CHECK PRIMARY DOWN SOLENOID.** Measure the resistance between transmission connector and transmission body. ***Connector & terminal*** ***(T4) No. 1 — Transmission body:***	Is the resistance approx. 13 Ω? (when engine cold)	Check for poor contact of the connector, and repair the fault location.	Go to step **3**.
3	**CHECK HARNESS INSIDE TRANSMISSION.** **CAUTION:** **Start work after ATF cools down.** 1) Remove the transmission oil pan. 2) Check for the harness pinch, damage.	Is there any malfunction in harness?	Go to step **4**.	Replace the transmission harness.
4	**CHECK HARNESS INSIDE TRANSMISSION.** 1) Disconnect the control valve body connector. 2) Measure the resistance between transmission connector and transmission body. ***Connector & terminal*** ***(T4) No. 1 — Transmission body:***	Is the resistance 1 MΩ or more?	Replace the control valve body. <Ref. to CVT-111, Control Valve Body.>	Replace the transmission harness.

Y: DTC P0977 PRIMARY SOLENOID SYSTEM B CIRCUIT (HIGH)

DTC DETECTING CONDITION:
Output signal circuit of primary DOWN solenoid is open or shorted.
TROUBLE SYMPTOM:
Gear is not changed. (No down-shift)
WIRING DIAGRAM:

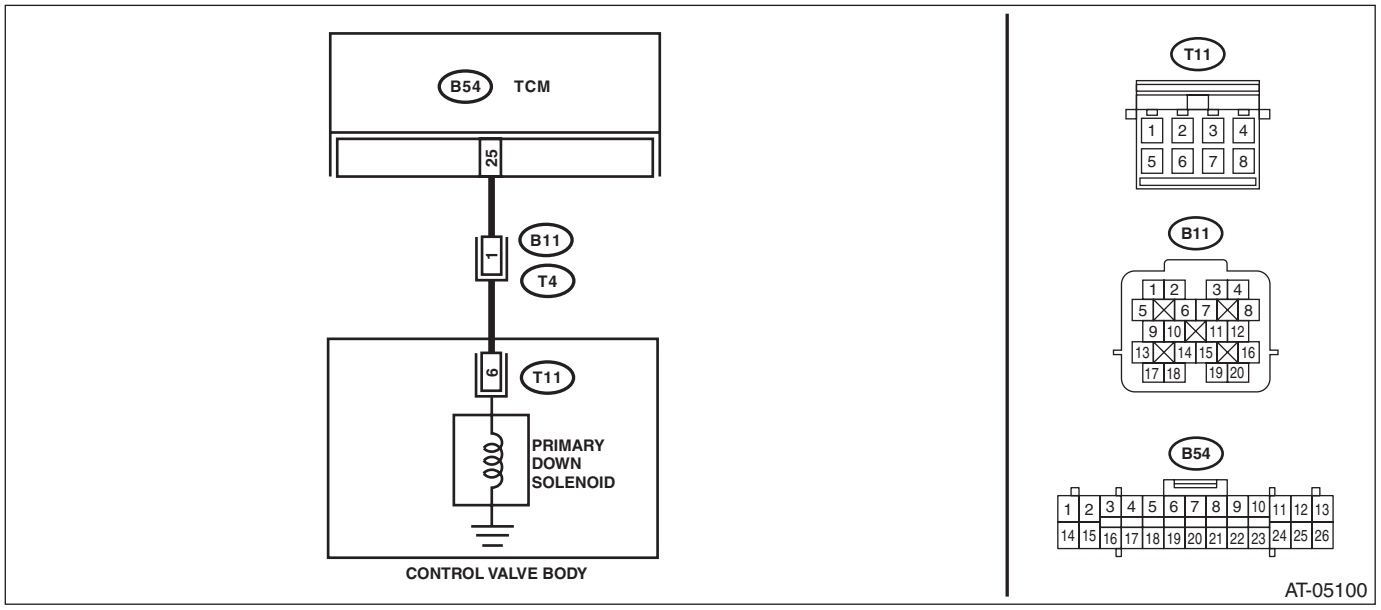

Step		Check	Yes	No
1	**CHECK HARNESS.** 1) Turn the ignition switch to OFF. 2) Disconnect the TCM and transmission connectors. 3) Measure the resistance between TCM connector and transmission connectors. ***Connector & terminal*** ***(B54) No. 25 — (B11) No. 1:***	Is the resistance less than 1 Ω?	Go to step **2**.	Repair the open circuit of harness.
2	**CHECK HARNESS.** 1) Turn the ignition switch to ON. 2) Measure the voltage between TCM connector and chassis ground. ***Connector & terminal*** ***(B54) No. 25 (+) — Chassis ground (–):***	Is the voltage approx. 0 V?	Go to step **3**.	Repair the short circuit of harness.
3	**CHECK PRIMARY DOWN SOLENOID.** Measure the resistance between transmission connector and transmission body. ***Connector & terminal*** ***(T4) No. 1 — Transmission body:***	Is the resistance approx. 13 Ω? (when engine cold)	Check for poor contact of the connector, and repair the fault location.	Go to step **4**.
4	**CHECK HARNESS INSIDE TRANSMISSION.** **CAUTION:** **Start work after ATF cools down.** 1) Remove the transmission oil pan. 2) Check for the harness pinch, damage.	Is there any malfunction in harness?	Go to step **5**.	Replace the transmission harness.

	Step	Check	Yes	No
5	**CHECK HARNESS INSIDE TRANSMISSION.** 1) Disconnect the control valve body connector. 2) Turn the ignition switch to ON. 3) Measure the voltage between transmission connector and transmission body. ***Connector & terminal*** ***(T4) No. 1 (+) — Transmission body (–):***	Is the voltage approx. 0 V?	Replace the control valve body. <Ref. to CVT-111, Control Valve Body.>	Replace the transmission harness.

Z: DTC P1718 AT CAN COMMUNICATION CIRCUIT

NOTE:
Refer to “LAN SYSTEM” for diagnostic procedure. <Ref. to LAN(diag)-2, Basic Diagnostic Procedure.>

AA:DTC P1724 AT EEPROM ERROR

DTC DETECTING CONDITION:

- TCM EEPROM malfunction
- EEPROM writing error during self shut control

TROUBLE SYMPTOM:

- AT learning is not finished.
- Shock occurs when selecting N → D, N → R.

	Step	Check	Yes	No
1	**CHECK TCM CONNECTOR.**	Is the connection of TCM connector correct?	Go to step **2**.	Connect the TCM connector.
2	**CHECK SELF SHUT RELAY.** Turn the ignition switch to ON.	Does the relay operates simultaneously?	Go to step **3**.	Perform the diagnosis according to DTC P0890.
3	**CHECK SELF SHUT RELAY.** Turn the ignition switch to OFF.	Does the relay operate after two or three seconds delay?	Go to step **4**.	Perform the diagnosis according to DTC P0890.
4	**PERFORM AT LEARNING.** 1) Perform the {Clear Memories 2}. 2) Perform the AT learning. <Ref. to CVT(diag)-20, Learning Control.> 3) Start the engine.	Does the AT OIL TEMP light blink after AT learning is finished correctly?	Check the TCM.	Go to step **5**.
5	**CHECK FOR ANY OTHER DTC ON DISPLAY.** 1) Perform the {Clear Memory}. 2) Turn the ignition switch to OFF. 3) Start the engine after 10 seconds. 4) Repeat steps 2) and 3).	Does the AT OIL TEMP light blink and is DTC P1724 displayed?	Check the TCM.	Current condition is normal. Check for poor contact of TCM connector or harness.

AB:DTC P1725 AT BODY SYSTEM CAN COMMUNICATION TROUBLE

NOTE:
Refer to “LAN SYSTEM” for diagnostic procedure. <Ref. to LAN(diag)-2, Basic Diagnostic Procedure.>

AC:DTC P2746 PRIMARY PULLEY REVOLUTION SPEED SENSOR CIRCUIT

DTC DETECTING CONDITION:

- Output signal circuit of primary speed sensor is open or shorted.
- Primary speed sensor malfunction

TROUBLE SYMPTOM:

- Standing start problems
- Shock occurs when engaging the lockup clutch.
- Neutral control does not operate.

WIRING DIAGRAM:

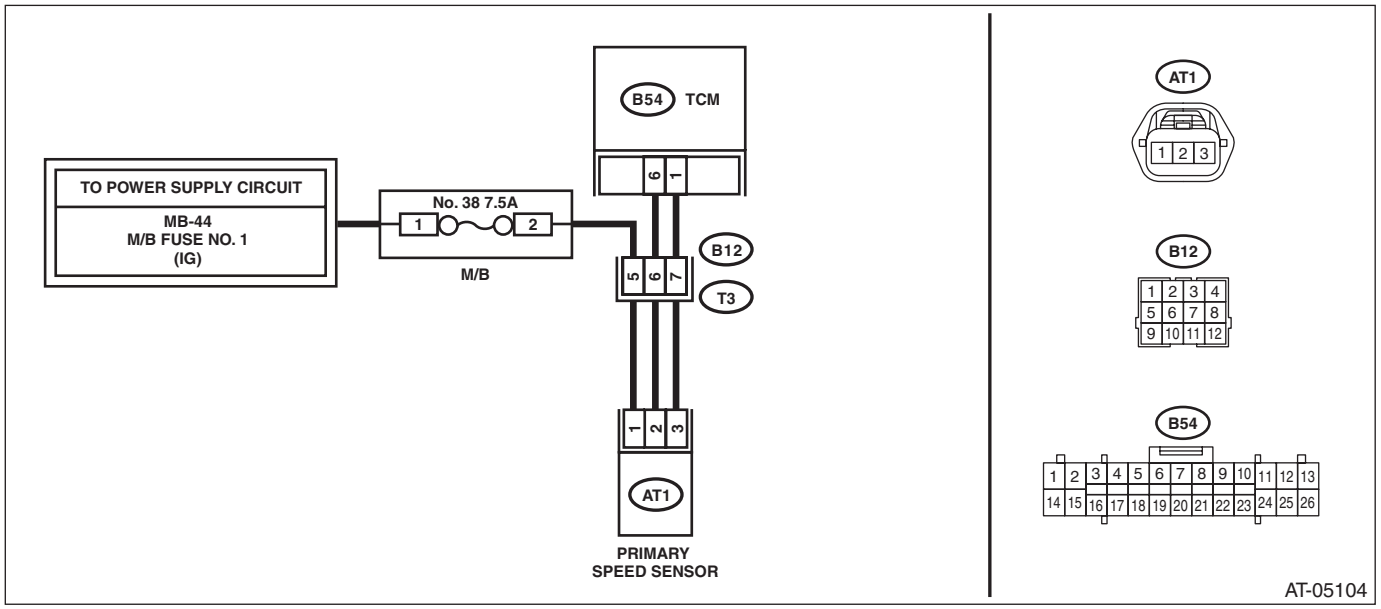

Step		Check	Yes	No
1	**CHECK FUSE.** 1) Turn the ignition switch to OFF. 2) Remove the fuse (No. 38).	Is the fuse OK?	Go to step **2**.	Replace the fuse. If the fuse blows out easily, repair the short circuit of harness.
2	**CHECK HARNESS.** 1) Turn the ignition switch to OFF. 2) Disconnect the TCM and transmission connectors. 3) Measure the resistance between TCM connector and transmission connectors. ***Connector & terminal*** ***(B54) No. 1 — (B12) No. 7:*** ***(B54) No. 6 — (B12) No. 6:*** ***(M/B No. 38) No. 2 — (B12) No. 5:***	Is the resistance less than 1 Ω?	Go to step **3**.	Repair the open circuit of harness.
3	**CHECK HARNESS.** Measure the resistance between TCM connector and chassis ground. ***Connector & terminal*** ***(B12) No. 5 — Chassis ground:*** ***(B12) No. 6 — Chassis ground:***	Is the resistance 1 MΩ or more?	Go to step **4**.	Repair the short circuit of harness.

	Step	Check	Yes	No
4	**CHECK TRANSMISSION HARNESS.** 1) Connect the TCM connector. 2) Turn the ignition switch to ON. 3) Measure the voltage between transmission connector and chassis ground. ***Connector & terminal*** ***(B12) No. 6 (+) — Chassis ground (–):*** NOTE: Delete the TCM memory after completing the CVT control system diagnosis. <Ref. to CVT(diag)-18, Clear Memory Mode.>	Is the voltage approx. 5 V?	Go to step **5**.	Repair the open circuit of harness or poor contact of connector.
5	**CHECK INPUT SIGNAL FOR TCM.** 1) Turn the ignition switch to OFF. 2) Connect the transmission connector. 3) Lift up the vehicle. 4) Start the engine. 5) Slowly increase the speed to 30 km/h (18 MPH). 6) Read the data of «Primary Pulley Speed» using Subaru Select Monitor.	Does the value of «Primary Pulley Speed» change according to the engine speed?	Current condition is normal. Repair the poor contacts of harnesses of primary speed sensor and transmission connector.	Go to step **6**.
6	**CHECK TRANSMISSION HARNESS.** 1) Turn the ignition switch to OFF. 2) Disconnect the transmission connector. 3) Disconnect the primary speed sensor connector. 4) Measure the resistance between transmission connector and primary speed sensor connector. ***Connector & terminal*** ***(T3) No. 5 — (AT1) No. 1:*** ***(T3) No. 6 — (AT1) No. 2:*** ***(T3) No. 7 — (AT1) No. 3:***	Is the resistance less than 1 Ω?	Replace the primary speed sensor. <Ref. to CVT-105, Primary Speed Sensor.>	Replace the transmission harness.

AD:DTC P2750 SEC. PULLEY REVOLUTION SPEED SENSOR CIRCUIT

DTC DETECTING CONDITION:

- Output signal circuit of secondary speed sensor is open or shorted.
- Secondary speed sensor malfunction

TROUBLE SYMPTOM:

- Shock occurs when selecting N → D, N → R.
- Neutral control does not operate.

WIRING DIAGRAM:

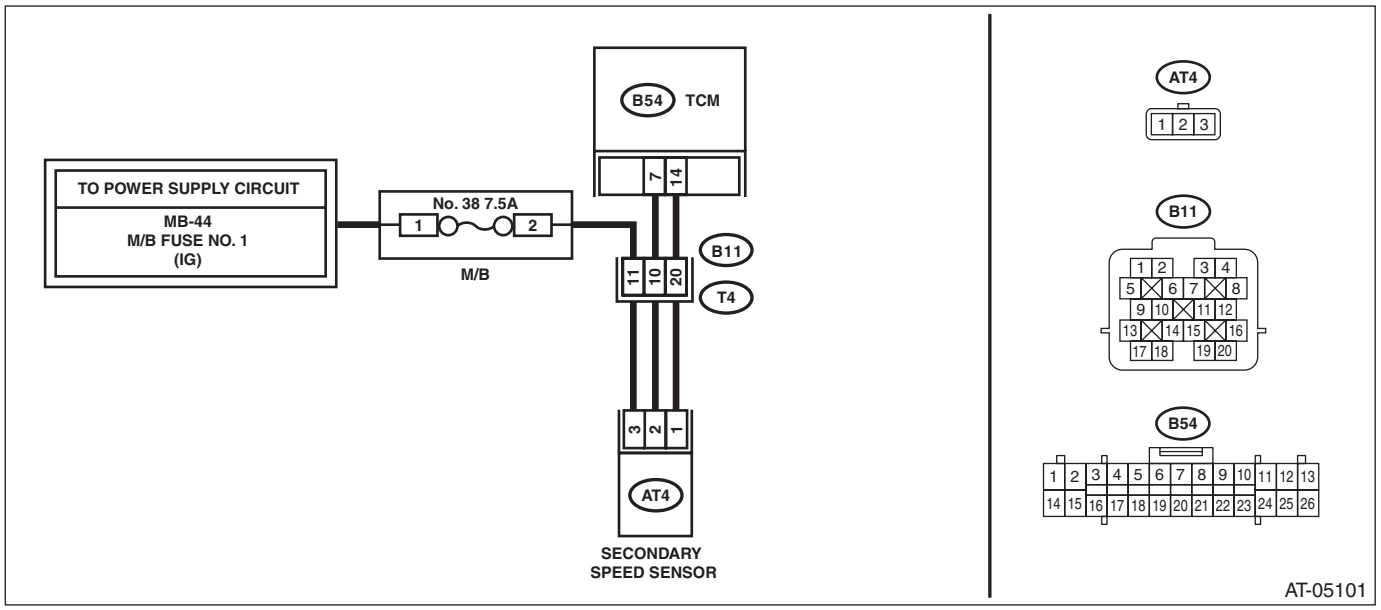

	Step	Check	Yes	No
1	**CHECK FUSE.** 1) Turn the ignition switch to OFF. 2) Remove the fuse (No. 38).	Is the fuse OK?	Go to step **2**.	Replace the fuse. If the fuse blows out easily, repair the short circuit of harness.
2	**CHECK HARNESS.** 1) Turn the ignition switch to OFF. 2) Disconnect the TCM and transmission connectors. 3) Measure the resistance between TCM connector and transmission connectors. ***Connector & terminal*** ***(B54) No. 7 — (B11) No. 10:*** ***(B54) No. 14 — (B11) No. 20:*** ***(M/B No. 38) No. 2 — (B11) No. 11:***	Is the resistance less than 1 Ω?	Go to step **3**.	Repair the open circuit of harness.
3	**CHECK HARNESS.** Measure the resistance between TCM connector and chassis ground. ***Connector & terminal*** ***(B11) No. 10 — Chassis ground:*** ***(B11) No. 11 — Chassis ground:***	Is the resistance 1 MΩ or more?	Go to step **4**.	Repair the short circuit of harness.

	Step	Check	Yes	No
4	**CHECK TRANSMISSION HARNESS.** 1) Connect the TCM connector. 2) Turn the ignition switch to ON. 3) Measure the voltage between transmission connector and chassis ground. ***Connector & terminal*** ***(B11) No. 10 (+) — Chassis ground (–):*** NOTE: Delete the TCM memory after completing the CVT control system diagnosis. <Ref. to CVT(diag)-18, Clear Memory Mode.>	Is the voltage approx. 5 V?	Go to step **5**.	Repair the open circuit of harness or poor contact of connector.
5	**CHECK INPUT SIGNAL FOR TCM.** 1) Turn the ignition switch to OFF. 2) Connect the transmission connector. 3) Lift up the vehicle. 4) Start the engine. 5) Slowly increase the speed to 30 km/h (18 MPH). 6) Read the data of «Secondary Pulley Speed» using Subaru Select Monitor.	Does the value of «Secondary Pulley Speed» change according to the vehicle speed?	Current condition is normal. Repair the poor contacts of harnesses of secondary speed sensor and transmission connector.	Go to step **6**.
6	**CHECK TRANSMISSION HARNESS.** 1) Turn the ignition switch to OFF. 2) Disconnect the transmission connector. 3) Disconnect the secondary speed sensor connector. 4) Measure the resistance between transmission connector and secondary speed sensor connector. ***Connector & terminal*** ***(T4) No. 10 — (AT4) No. 2:*** ***(T4) No. 11 — (AT4) No. 3:*** ***(T4) No. 20 — (AT4) No. 1:***	Is the resistance less than 1 Ω?	Replace the secondary speed sensor. <Ref. to CVT-102, Secondary Speed Sensor.>	Replace the transmission harness.

AE:DTC P2762 LOCK-UP DUTY SOLENOID MALFUNCTION

DTC DETECTING CONDITION:

- Lock up clutch malfunction
- Hydraulic leaks or hydraulic valve stick of lock up system
- Hydraulic leaks or hydraulic valve stick of lock up ON/OFF valve system
- Lock up duty solenoid or lock up ON/OFF solenoid characteristics malfunction

TROUBLE SYMPTOM:

- No lock-up occurs.
- Engine speed increases abruptly during driving.

	Step	Check	Yes	No
1	**CHECK DTC.** Read the DTC relating the ECM using the Subaru Select Monitor.	Is DTC displayed?	Perform the diagnosis according to DTC.	Go to step **2**.
2	**CHECK DTC.** Read the DTC relating the TCM using the Subaru Select Monitor.	Are DTC P0841, P0842, P0843 displayed?	Perform the diagnosis according to DTC.	Go to step **3**.
3	**CHECK TRANSMISSION FLUID.** Check the condition of ATF. <Ref. to CVT-40, CONDITION CHECK, CVTF.>	Is the ATF OK?	Go to step **4**.	Check according to the “corrective action” of ATF (CVTF) “CONDITION CHECK”. <Ref. to CVT-40, CONDITION CHECK, CVTF.>
4	**CHECK TRANSMISSION FLUID.** Check the amount of ATF. <Ref. to CVT-37, ADJUSTMENT, CVTF.>	Is the ATF amount correct?	Go to step **5**.	Adjust the amount of ATF. <Ref. to CVT-37, ADJUSTMENT, CVTF.>
5	**CHECK INPUT SIGNAL FOR TCM.** 1) Lift up the vehicle. 2) Start the engine. 3) Warm up until the ATF temperature reaches to 40 — 70°C (104 — 158°F). 4) Shift the select lever to “P” range. 5) Stabilize the engine speed at idle. 6) Read the data of «Actual secondary pressure» using Subaru Select Monitor.	Is the «Actual secondary pressure» 0.5 — 1.5 MPa?	Go to step **6**.	Perform the diagnosis according to DTC P0841 procedure.
6	**DRIVING CHECK FOR LOCK-UP CONDITION.** 1) Perform the “Clear Memory Mode”. <Ref. to CVT(diag)-18, Clear Memory Mode.> 2) Start the engine after turning the ignition switch OFF. 3) Warm up until the ATF temperature exceeds 50°C. 4) Drive the vehicle for one minute or more keeping the constant speed so that the display shown in the Subaru Select Monitor is as follows: «Lock Up Duty Ratio» is 70% or more, «Lock-Up ON/OFF Solenoid» is ON, «Front Wheel Speed» is 40 km/h or more. 5) Turn the ignition switch to OFF. 6) Start the engine. 7) Perform the procedure in step 4) again. 8) Read the DTC using Subaru Select Monitor.	Does the AT OIL TEMP light blink and is DTC P2762 displayed?	Perform the secondary pressure test. <Ref. to CVT-50, Secondary Pressure (Line Pressure) Test.> When DTC other than P2762 is displayed, perform the diagnosis corresponding to the DTC.	Current condition is normal. Temporary oil pressure malfunction.

AF:DTC P2763 LOCK-UP DUTY SOLENOID CIRCUIT (HIGH)

DTC DETECTING CONDITION:
Output signal circuit of lock-up duty solenoid is open or shorted.
TROUBLE SYMPTOM:
No lock-up occurs.
WIRING DIAGRAM:

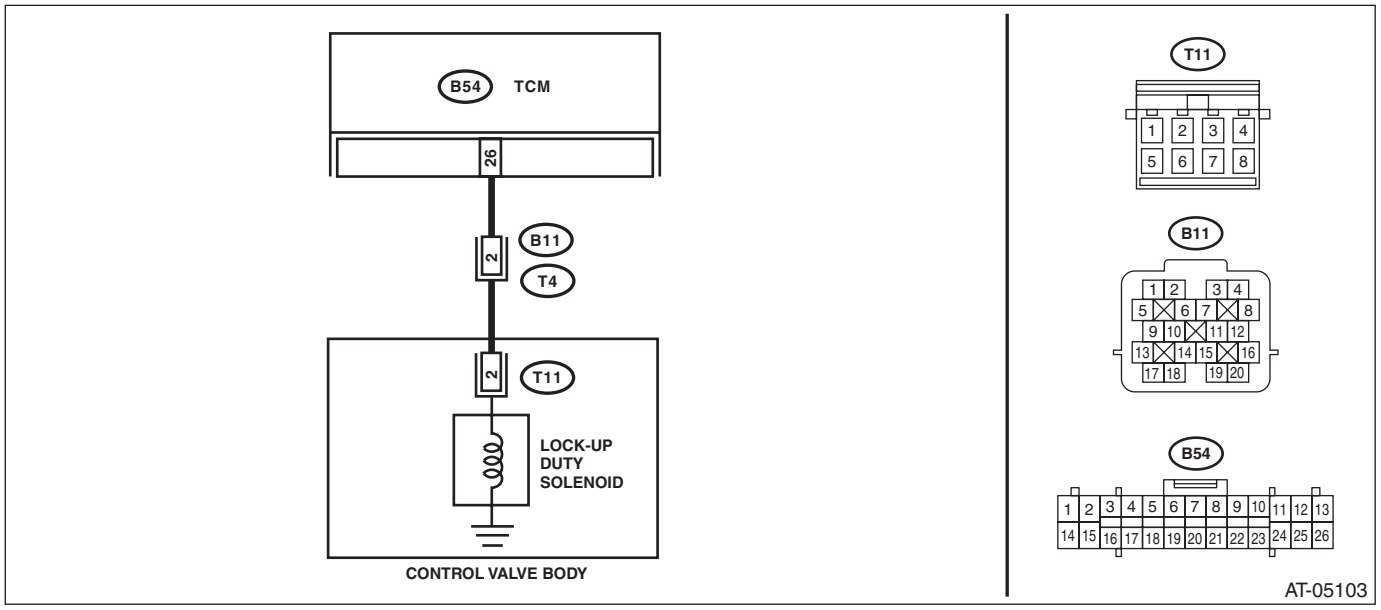

Step		Check	Yes	No
1	**CHECK HARNESS.** 1) Turn the ignition switch to OFF. 2) Disconnect the TCM and transmission connectors. 3) Measure the resistance between TCM connector and transmission connectors. ***Connector & terminal*** ***(B54) No. 26 — (B11) No. 2:***	Is the resistance less than 1 Ω?	Go to step **2**.	Repair the open circuit of harness.
2	**CHECK HARNESS.** 1) Turn the ignition switch to ON. 2) Measure the voltage between TCM connector and chassis ground. ***Connector & terminal*** ***(B54) No. 26 (+) — Chassis ground (–):***	Is the voltage approx. 0 V?	Go to step **3**.	Repair the short circuit of harness.
3	**CHECK LOCK-UP DUTY SOLENOID.** Measure the resistance between transmission connector and transmission body. ***Connector & terminal*** ***(T4) No. 2 — Transmission body:***	Is the resistance approx. 13 Ω? (when engine cold)	Check for poor contact of the connector, and repair the fault location.	Go to step **4**.
4	**CHECK HARNESS INSIDE TRANSMISSION.** **CAUTION:** **Start work after ATF cools down.** 1) Remove the transmission oil pan. 2) Check for the harness pinch, damage.	Is there any malfunction in harness?	Go to step **5**.	Replace the transmission harness.

	Step	Check	Yes	No
5	**CHECK HARNESS INSIDE TRANSMISSION.** 1) Disconnect the control valve body connector. 2) Turn the ignition switch to ON. 3) Measure the voltage between transmission connector and transmission body. ***Connector & terminal*** ***(T4) No. 2 (+) — Transmission body (–):***	Is the voltage approx. 0 V?	Replace the control valve body. <Ref. to CVT-111, Control Valve Body.>	Replace the transmission harness.

AG:DTC P2764 LOCK-UP DUTY SOLENOID CIRCUIT (LOW)

DTC DETECTING CONDITION:
Output signal circuit of lock up duty solenoid is shorted.
TROUBLE SYMPTOM:
No lock-up occurs.
WIRING DIAGRAM:

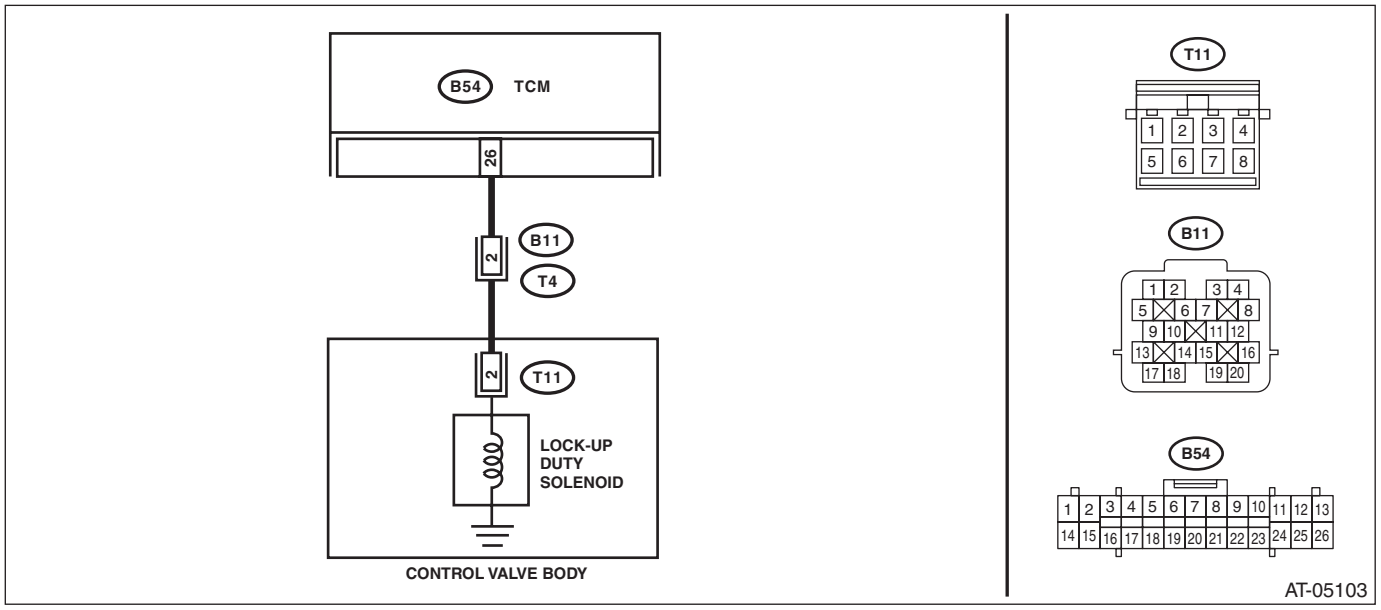

Step		Check	Yes	No
1	**CHECK HARNESS.** 1) Turn the ignition switch to OFF. 2) Disconnect the TCM and transmission connectors. 3) Measure the resistance between TCM connector and chassis ground. ***Connector & terminal*** ***(B54) No. 26 — Chassis ground:***	Is the resistance 1 MΩ or more?	Go to step **2**.	Repair the short circuit of harness.
2	**CHECK LOCK-UP DUTY SOLENOID.** Measure the resistance between transmission connector and transmission body. ***Connector & terminal*** ***(T4) No. 2 — Transmission body:***	Is the resistance approx. 13 Ω? (when engine cold)	Check for poor contact of the connector, and repair the fault location.	Go to step **3**.
3	**CHECK HARNESS INSIDE TRANSMISSION.** **CAUTION:** **Start work after ATF cools down.** 1) Remove the transmission oil pan. 2) Check for the harness pinch, damage.	Is there any malfunction in harness?	Go to step **4**.	Replace the transmission harness.
4	**CHECK HARNESS INSIDE TRANSMISSION.** 1) Disconnect the control valve body connector. 2) Measure the resistance between transmission connector and transmission body. ***Connector & terminal*** ***(T4) No. 2 — Transmission body:***	Is the resistance 1 MΩ or more?	Replace the control valve body. <Ref. to CVT-111, Control Valve Body.>	Replace the transmission harness.

AH:DTC P2769 LOCK-UP ON/OFF SOLENOID CIRCUIT (LOW)

DTC DETECTING CONDITION:
Output signal circuit of lock up ON/OFF solenoid is shorted.
TROUBLE SYMPTOM:
No lock-up occurs.
WIRING DIAGRAM:

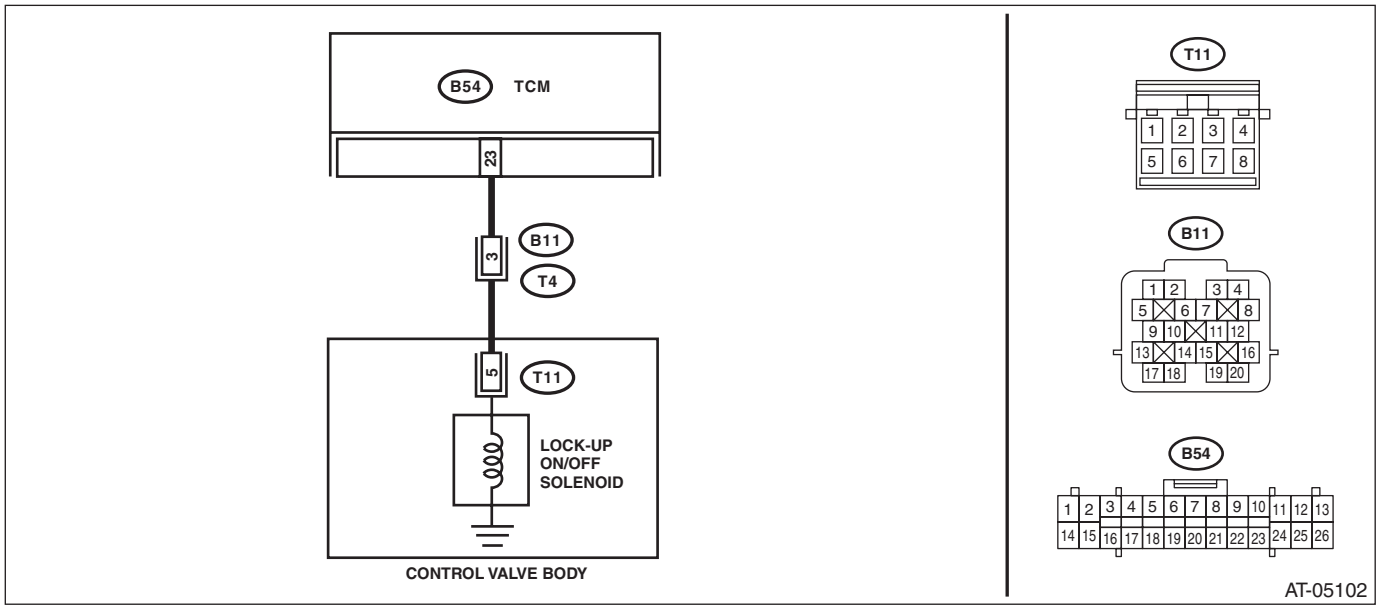

Step		Check	Yes	No
1	**CHECK HARNESS.** 1) Turn the ignition switch to OFF. 2) Disconnect the TCM and transmission connectors. 3) Measure the resistance between TCM connector and chassis ground. ***Connector & terminal*** ***(B54) No. 23 — Chassis ground:***	Is the resistance 1 MΩ or more?	Go to step **2**.	Repair the short circuit of harness.
2	**CHECK LOCK UP ON/OFF SOLENOID.** Measure the resistance between transmission connector and transmission body. ***Connector & terminal*** ***(T4) No. 3 — Transmission body:***	Is the resistance approx. 17 Ω? (when engine cold)	Check for poor contact of the connector, and repair the fault location.	Go to step **3**.
3	**CHECK HARNESS INSIDE TRANSMISSION.** **CAUTION:** **Start work after ATF cools down.** 1) Remove the transmission oil pan. 2) Check for the harness pinch, damage.	Is the harness normal?	Go to step **4**.	Replace the transmission harness.
4	**CHECK HARNESS INSIDE TRANSMISSION.** 1) Disconnect the control valve body connector. 2) Measure the resistance between transmission connector and transmission body. ***Connector & terminal*** ***(T4) No. 3 — Transmission body:***	Is the resistance 1 MΩ or more?	Replace the control valve body. <Ref. to CVT-111, Control Valve Body.>	Replace the transmission harness.

AI: DTC P2770 LOCK-UP ON/OFF SOLENOID CIRCUIT (HIGH)

DTC DETECTING CONDITION:
Output signal circuit of lock up ON/OFF solenoid is open or shorted.
TROUBLE SYMPTOM:
No lock-up occurs.
WIRING DIAGRAM:

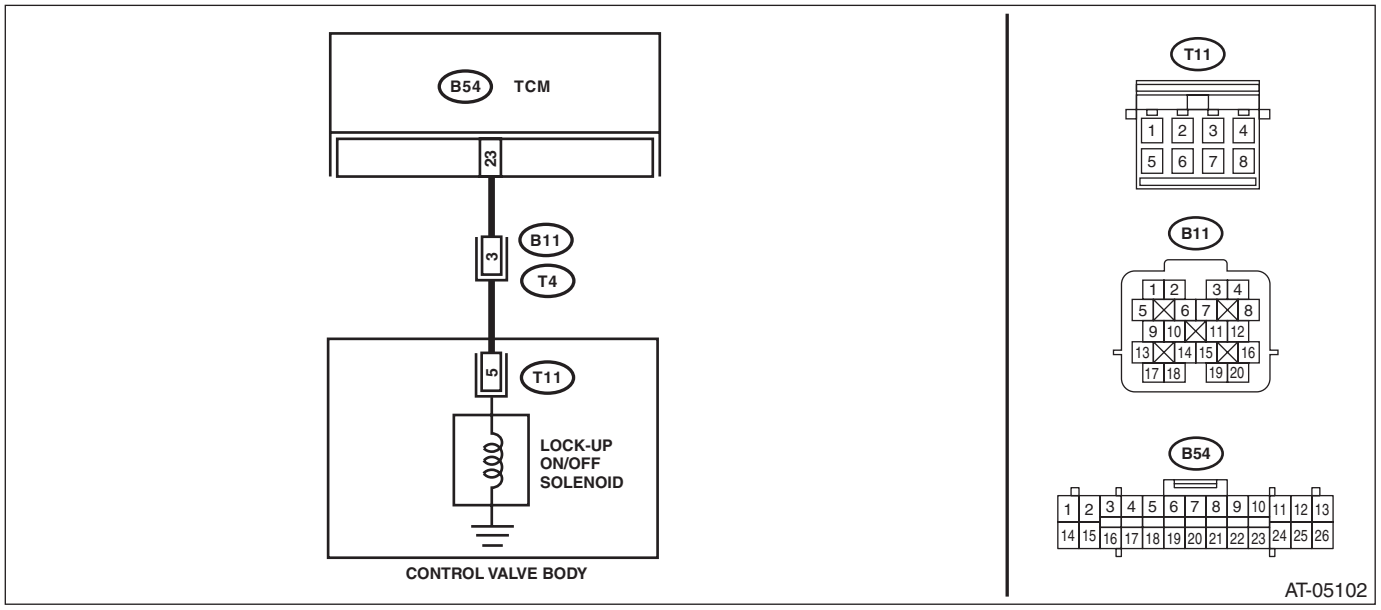

Step		Check	Yes	No
1	**CHECK HARNESS.** 1) Turn the ignition switch to OFF. 2) Disconnect the TCM and transmission connectors. 3) Measure the resistance between TCM connector and transmission connectors. ***Connector & terminal*** ***(B54) No. 23 — (B11) No. 3:***	Is the resistance less than 1 Ω?	Go to step **2**.	Repair the open circuit of harness.
2	**CHECK HARNESS.** 1) Turn the ignition switch to ON. 2) Measure the voltage between TCM connector and chassis ground. ***Connector & terminal*** ***(B54) No. 23 (+) — Chassis ground (–):***	Is the voltage approx. 0 V?	Go to step **3**.	Repair the short circuit of harness.
3	**CHECK LOCK UP ON/OFF SOLENOID.** Measure the resistance between transmission connector and transmission body. ***Connector & terminal*** ***(T4) No. 3 — Transmission body:***	Is the resistance approx. 17 Ω? (when engine cold)	Check for poor contact of the connector, and repair the fault location.	Go to step **4**.
4	**CHECK HARNESS INSIDE TRANSMISSION.** **CAUTION:** **Start work after ATF cools down.** 1) Remove the transmission oil pan. 2) Check for the harness pinch, damage.	Is the harness normal?	Go to step **5**.	Replace the transmission harness.

	Step	Check	Yes	No
5	**CHECK HARNESS INSIDE TRANSMISSION.** 1) Disconnect the control valve body connector. 2) Turn the ignition switch to ON. 3) Measure the voltage between transmission connector and transmission body. ***Connector & terminal*** ***(T4) No. 3 (+) — Transmission body (–):***	Is the voltage approx. 0 V?	Replace the control valve body. <Ref. to CVT-111, Control Valve Body.>	Replace the transmission harness.

17.Diagnostic Procedure without Diagnostic Trouble Code (DTC)

A: CHECK SHIFT INDICATOR

DIAGNOSIS:

- Output signal circuit of shift indicator is open or shorted.
- Combination meter malfunction

TROUBLE SYMPTOM:

- Shift indicator does not display or remains displayed.
- Shift indicator display does not change.

WIRING DIAGRAM:

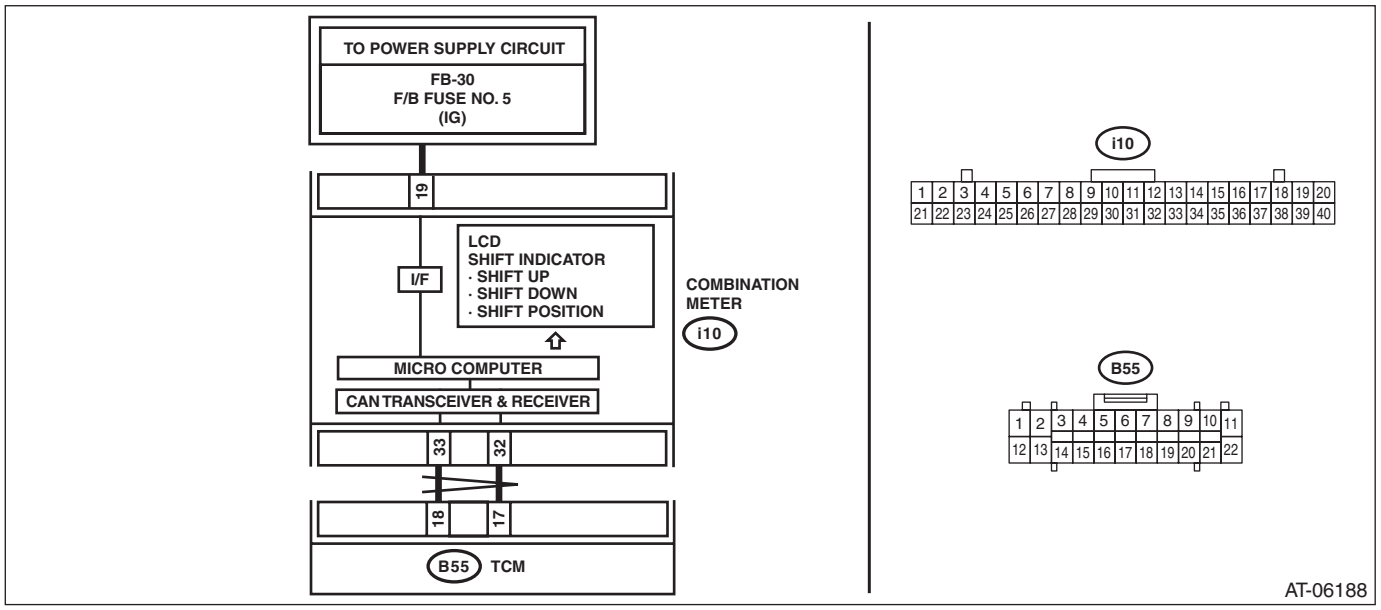

Step		Check	Yes	No
1	**CHECK TCM.** Check the DTC relating the TCM using the Subaru Select Monitor.	Is only DTC P1725 displayed?	Perform the self-diagnosis of combination meter.	Go to step **2**.
2	**CHECK TCM.** Check the DTC relating the TCM using the Subaru Select Monitor.	Are DTCs other than P1725 displayed?	Perform the diagnosis according to DTC.	Go to step **3**.
3	**CHECK COMBINATION METER.** Check the DTC of combination meter.	Is DTC displayed?	Perform the diagnosis according to DTC.	Go to step **4**.
4	**CHECK TCM.** 1) Turn the ignition switch OFF, then turn it ON again. 2) Shift the select lever to manual mode. 3) Read the data of «Shift Step in Manual Mode» using the Subaru Select Monitor.	Is “1” displayed?	Go to step **5**.	Perform the diagnosis according to DTC P0951.
5	**CHECK TCM.** 1) Shift up the select lever. 2) Read the data of «Shift Step in Manual Mode» using the Subaru Select Monitor.	Is “2” displayed?	Currently, shift indicator is normal.	Check the TCM.

18.Diagnostics with Phenomenon

A: INSPECTION

Symptoms	Faulty parts
Engine stalls when driving in “D” or “R” range, or selecting “N” → “D”, “N” → “R”.	• Control valve • Engine control system
While driving in “D” range, vibration occurs immediately before the stop or engine stalls.	• Control valve • Torque converter
Vehicle cannot shift while driving in “D” range.	• Control valve • TCM • Shift mechanism • Power supply system
Excessive shock when selecting “N” → “D”, and “N” → “R”.	• Control valve • TCM • F&R clutch pack • ATF deterioration or lack
Excessive shock at standing start in “D” range.	• Control valve • TCM • F&R clutch pack • ATF deterioration or lack
Engine speed increases abruptly during driving in “D” or “R” range.	• Control valve • Secondary pressure sensor • F&R clutch pack • ATF deterioration or lack
Vehicle can not start when depressing the accelerator pedal in “D” or “R” range, or acceleration is very poor. (without abrupt engine increase)	• Control valve • F&R clutch pack • Shift mechanism • Parking mechanism • Engine control system • Electronic parking brake system • Power supply system
Shift indicator in combination meter displays the position which differs from select lever position.	• Inhibitor switch • Select cable related • Combination meter
Manual mode enters even though the select lever and paddle shift switch is not operated.	• Manual mode switch • Paddle shift switch • Select lever • TCM
Engine speed increases abruptly in “D” or “R” range, vehicle can not start.	• F&R clutch pack • Select cable related
Manual mode can not be set	• Select lever • TCM

AUTOMATIC TRANSMISSION

5AT

		Page
1.	General Description	2
2.	Automatic Transmission Fluid	29
3.	Differential Gear Oil	31
4.	Road Test	32
5.	Stall Test	33
6.	Time Lag Test	34
7.	Line Pressure Test	35
8.	Transfer Clutch Pressure Test	36
9.	Automatic Transmission Assembly	37
10.	Transmission Mounting System	47
11.	Extension Case Oil Seal	48
12.	Differential Side Retainer Oil Seal	49
13.	Inhibitor Switch	50
14.	Front Vehicle Speed Sensor	51
15.	Rear Vehicle Speed Sensor	53
16.	Turbine Speed Sensor 1	54
17.	Control Valve Body	55
18.	Transmission Control Module (TCM)	57
19.	ATF Cooler Pipe and Hose	58
20.	Air Breather Hose	61
21.	Oil Charge Pipe	62
22.	Torque Converter Assembly	63
23.	Drive Plate	64
24.	Extension Case	65
25.	Transfer Clutch	67
26.	Rear Drive Shaft	70
27.	Reduction Driven Gear	71
28.	Center Differential Carrier	74
29.	Parking Pawl	76
30.	Converter Case	78
31.	Oil Pump Cover	80
32.	Drive Pinion Shaft Assembly	84
33.	Front Differential Assembly	89
34.	AT Main Case	94
35.	Transmission Control Device	104
36.	Diagnostics with Phenomenon	106

1. General Description

A: SPECIFICATION

1. TORQUE CONVERTER CLUTCH

Model	3.6 L non-turbo
Type	Symmetric, 3-element, single stage, 2-phase torque converter
Stall torque ratio	1.8
Nominal diameter	246 mm (9.69 in)
Stall speed (at sea level)	2,100 — 2,600 rpm
One-way clutch	Sprague type one-way clutch

2. OIL PUMP

Type	Internal gear fixed displacement pump	
Driving method	Driven by engine	
Number of teeth	Inner rotor	9
	Outer rotor	10

3. TRANSMISSION CONTROL ELEMENT

Type	5-forward, 1-reverse, double-row planetary gears
Multi-plate clutch	3 sets
Multi-plate brake	3 sets
One-way clutch (sprague type)	2 sets

4. TRANSMISSION GEAR RATIO

1st	3.540
2nd	2.264
3rd	1.471
4th	1.000
5th	0.834
Rev.	2.370

5. PLANETARY GEAR AND PLATE

Model	3.6 L non-turbo
Number of front internal gear teeth	106
Number of front carrier teeth	28
Number of front sun gear teeth	50
Number of mid internal gear teeth	78
Number of mid carrier teeth	18
Number of mid sun gear teeth	42
Number of rear internal gear teeth	110
Number of rear carrier teeth	24
Number of rear sun gear teeth	62
Number of front brake drive plates	2
Number of input clutch drive plates	6
Number of high & low reverse clutch drive plates	4
Number of direct clutch drive plates	5
Number of reverse brake drive plates	5
Number of forward brake drive plates	5

6. SELECTOR POSITION

P (Park)	Transmission is in neutral, output member is immovable, engine start is possible
R (Reverse)	Transmission is in reverse.
N (Neutral)	Transmission is in neutral and engine start is possible
D (Drive)	Automatic gear change 1st ←→ 2nd ←→ 3rd ←→ 4th ←→ 5th
M (Manual mode), Paddle shift (+)	Manual gear change 1st → 2nd → 3rd → 4th → 5th
M (Manual mode), Paddle shift (–)	Manual gear change 1st ← 2nd ← 3rd ← 4th ← 5th
Control method	Wire cable type

7. HYDRAULIC CONTROL AND LUBRICATION

Type		Electronic/hydraulic control [5 forward gear changes made by electronic signals of vehicle speed and accelerator (throttle) opening]
Fluid	Recommended materials	SUBARU ATF
	Alternative	IDEMITSU “ATF HP” **CAUTION:** **Be sure to use the recommended or equivalent ATF. Using material except recommended one or substitute would cause trouble.**
Fluid capacity ℓ (US qt, Imp qt)		9.6 — 10.0 (10.1 — 10.6, 8.4 — 8.8)
Lubrication system		Forced feed lubrication with oil pump

8. COOLING AND HARNESS

Cooling system	Liquid-cooler incorporated in radiator
Transmission harness	20 + 8 poles

9. TRANSFER

Transfer type	Variable torque distribution (VTD)
Number of transfer clutch drives & driven plates	3
Reduction gear ratio	1.000 (41/41)

10.FINAL REDUCTION GEAR

Model	3.6 L non-turbo
Front final reduction gear ratio	3.083

11.RECOMMENDED GEAR OIL

Lubrication oil	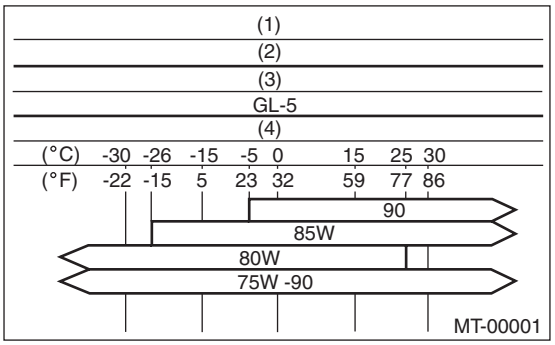 (1) Item (2) Front differential gear oil (3) API standard (4) SAE viscosity No. and applicable temperature
Front differential oil capacity ℓ (US qt, Imp qt)	1.3 — 1.5 (1.4 — 1.6, 1.1 — 1.3)

B: COMPONENT

1. TORQUE CONVERTER CLUTCH & TRANSMISSION ASSEMBLY

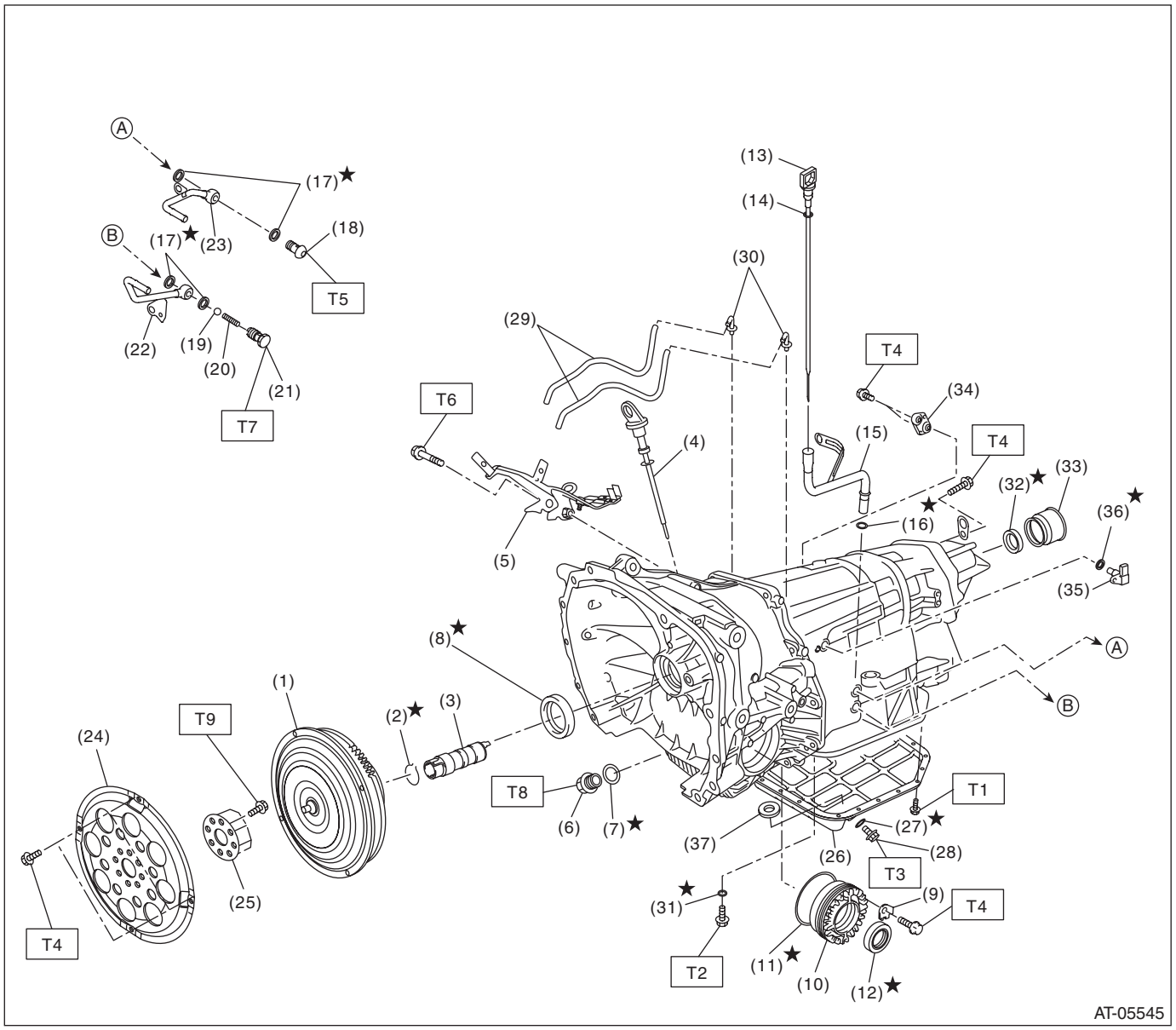

(1) Torque converter ASSY
(2) Circlip
(3) Oil pump shaft
(4) Differential oil level gauge
(5) Transmission hanger COMPL
(6) Drain plug
(7) Gasket
(8) Oil seal
(9) Lock plate
(10) Side retainer
(11) O-ring
(12) Oil seal
(13) ATF level gauge
(14) O-ring
(15) Oil charge pipe
(16) O-ring
(17) Gasket
(18) Union screw
(19) Ball
(20) Spring
(21) Union screw
(22) ATF outlet pipe
(23) ATF inlet pipe
(24) Drive plate
(25) Reinforcement drive plate
(26) Oil pan
(27) Gasket
(28) ATF drain plug
(29) Breather hose
(30) Nipple
(31) O-ring
(32) Oil seal
(33) Dust cover
(34) Floating bracket
(35) Turbine speed sensor 1
(36) O-ring
(37) Magnet

Tightening torque:N·m (kgf-m, ft-lb)

T1: 5 (0.5, 3.7)
T2: 13 (1.3, 9.6)
T3: 20 (2.0, 14.8)
T4: 25 (2.5, 18.4)
T5: 40 (4.1, 29.5)
T6: 41 (4.2, 30.2)
T7: 45 (4.6, 33.2)
T8: 70 (7.1, 51.6)
T9: 90 (9.2, 66.4)

2. OIL PUMP & FRONT BRAKE

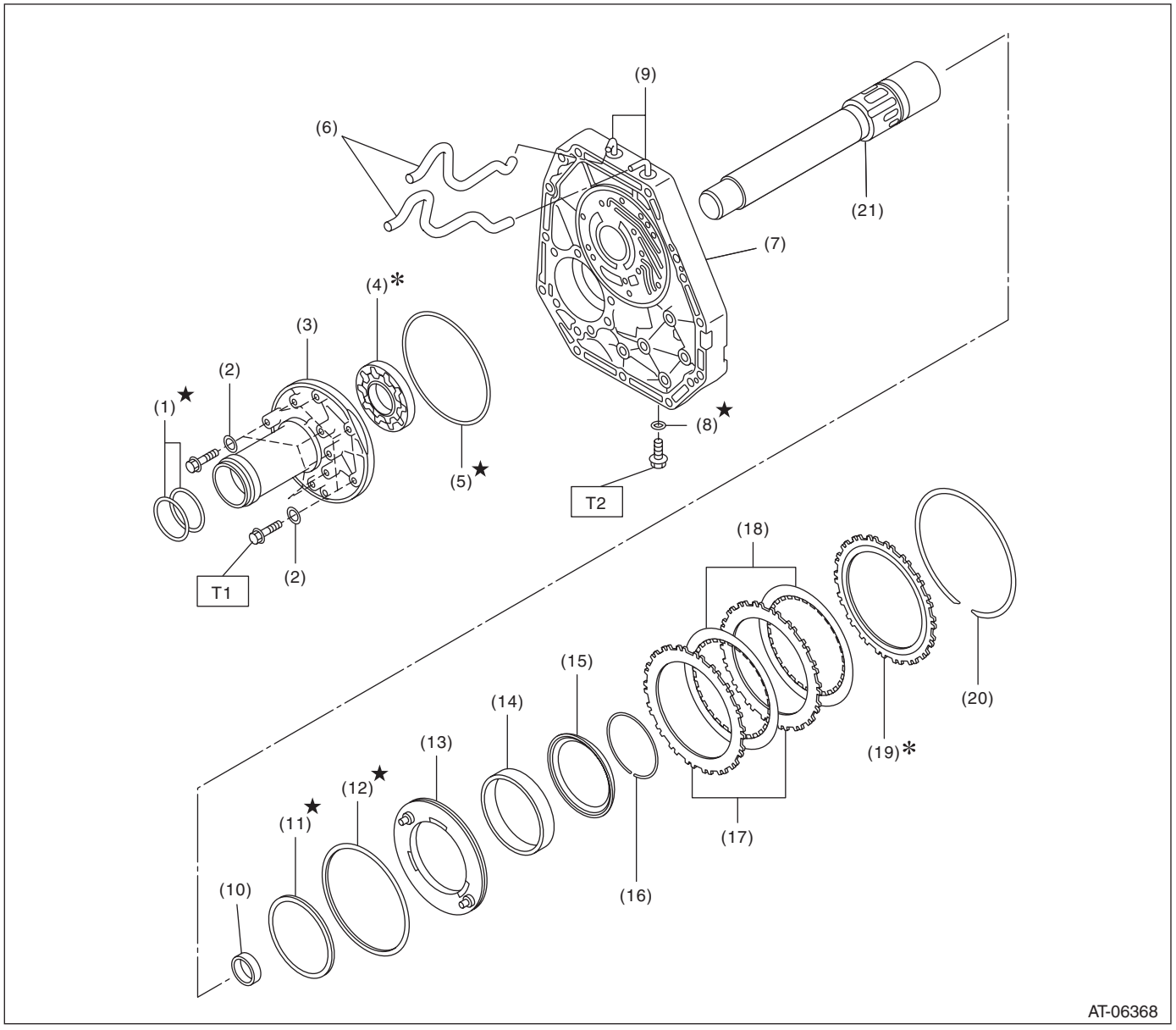

(1) O-ring
(2) Washer
(3) Oil pump housing
(4) Oil pump rotor
(5) O-ring
(6) Air breather hose
(7) Oil pump cover
(8) O-ring
(9) Nipple
(10) Needle bearing
(11) D-ring (inner)
(12) D-ring (outer)
(13) Front brake piston
(14) Return spring
(15) Retainer
(16) Snap ring
(17) Driven plate
(18) Drive plate
(19) Retaining plate
(20) Snap ring
(21) Stator shaft

Tightening torque:N·m (kgf-m, ft-lb)
T1: 10 (1.0, 7.4)
T2: 13 (1.3, 9.6)

3. FRONT PLANETARY CARRIER AND MIDDLE & REAR PLANETARY CARRIER

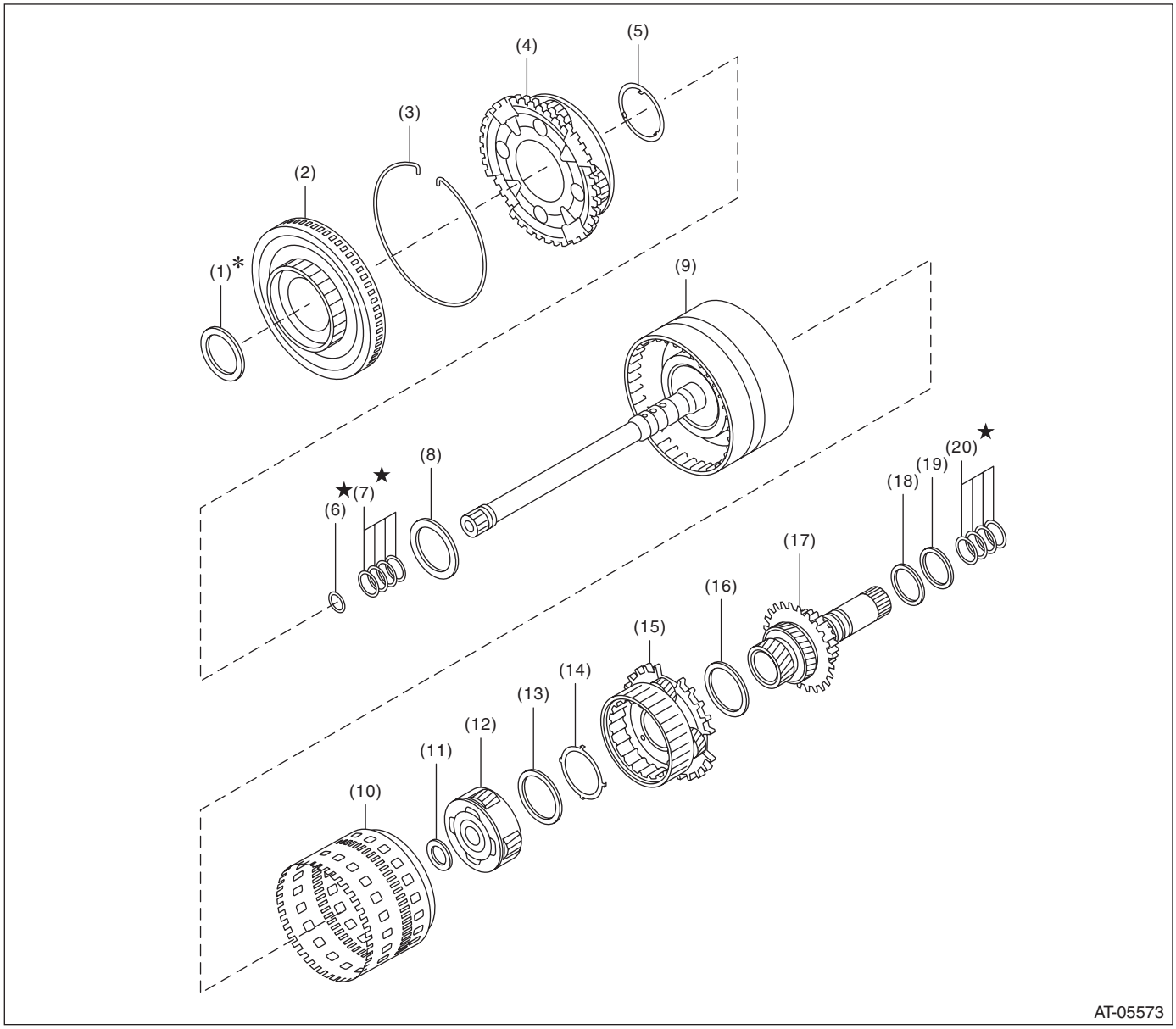

(1) Thrust bearing
(2) Front sun gear ASSY
(3) Snap ring
(4) Front carrier ASSY
(5) Race bearing
(6) O-ring
(7) Seal ring
(8) Thrust bearing
(9) Input clutch ASSY
(10) Rear internal gear ASSY
(11) Thrust bearing
(12) Middle carrier ASSY
(13) Thrust bearing
(14) Race bearing
(15) Rear carrier ASSY
(16) Thrust bearing
(17) Middle & rear sun gear ASSY
(18) Washer
(19) Thrust bearing
(20) Seal ring

4. DIRECT CLUTCH AND HIGH & LOW REVERSE CLUTCH

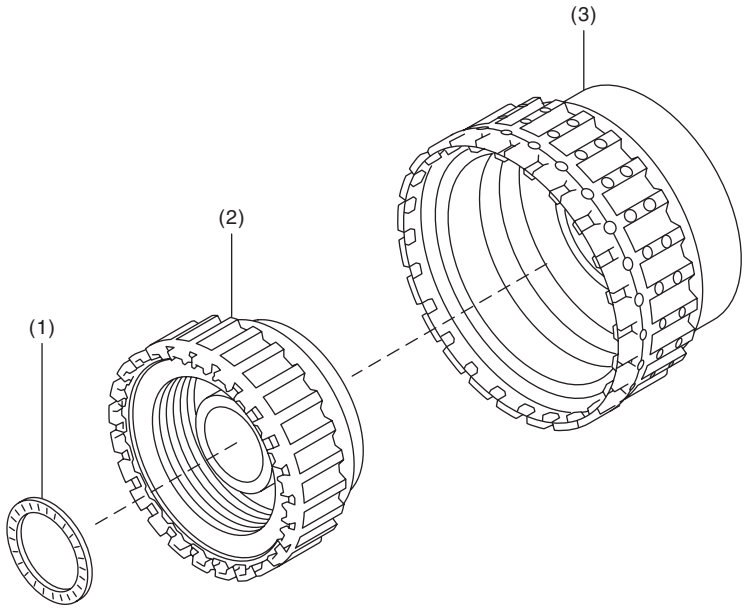

(1) Thrust bearing (2) High & low reverse clutch ASSY (3) Direct clutch ASSY

5. REVERSE BRAKE

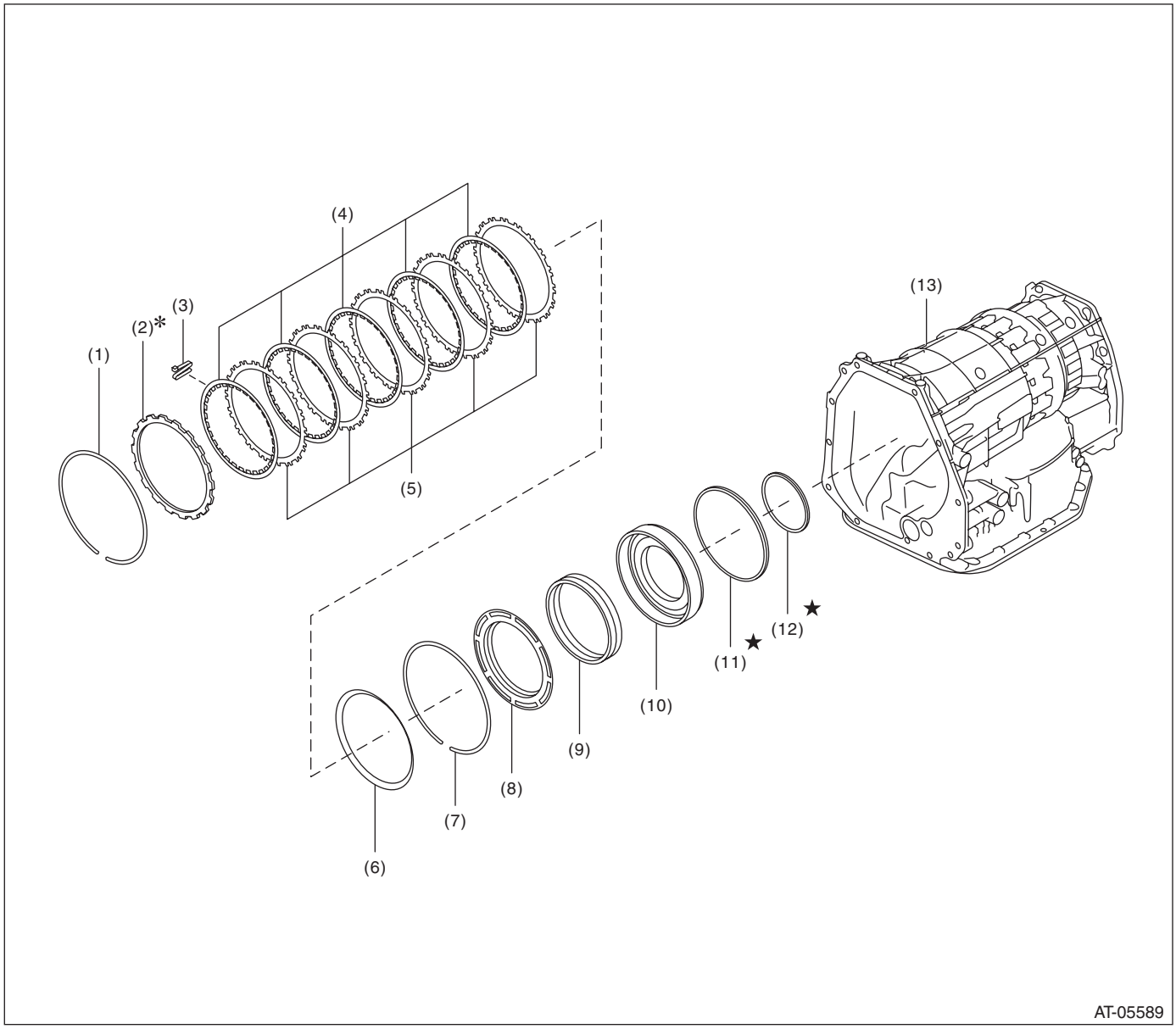

(1) Snap ring
(2) Retaining plate
(3) Leaf spring
(4) Drive plate
(5) Driven plate
(6) Dish plate
(7) Snap ring
(8) Retainer
(9) Return spring
(10) Reverse brake piston
(11) D-ring (Outer)
(12) D-ring (Inner)
(13) AT main case

6. SHORT AT ASSEMBLY

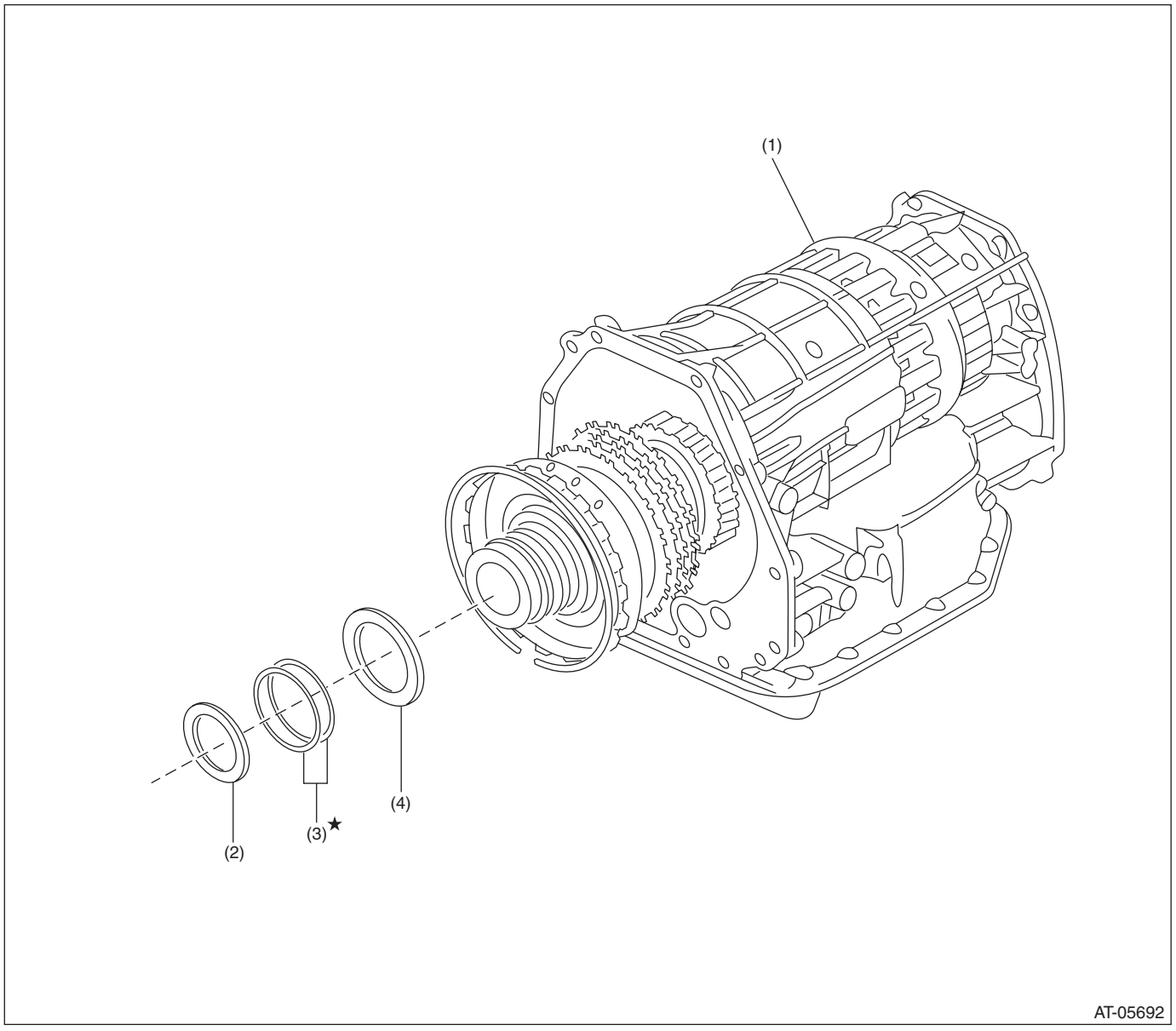

(1) Short AT ASSY (non-disassembly) (3) Seal ring (4) Thrust bearing
(2) Thrust bearing

7. CONTROL VALVE & TRANSMISSION HARNESS

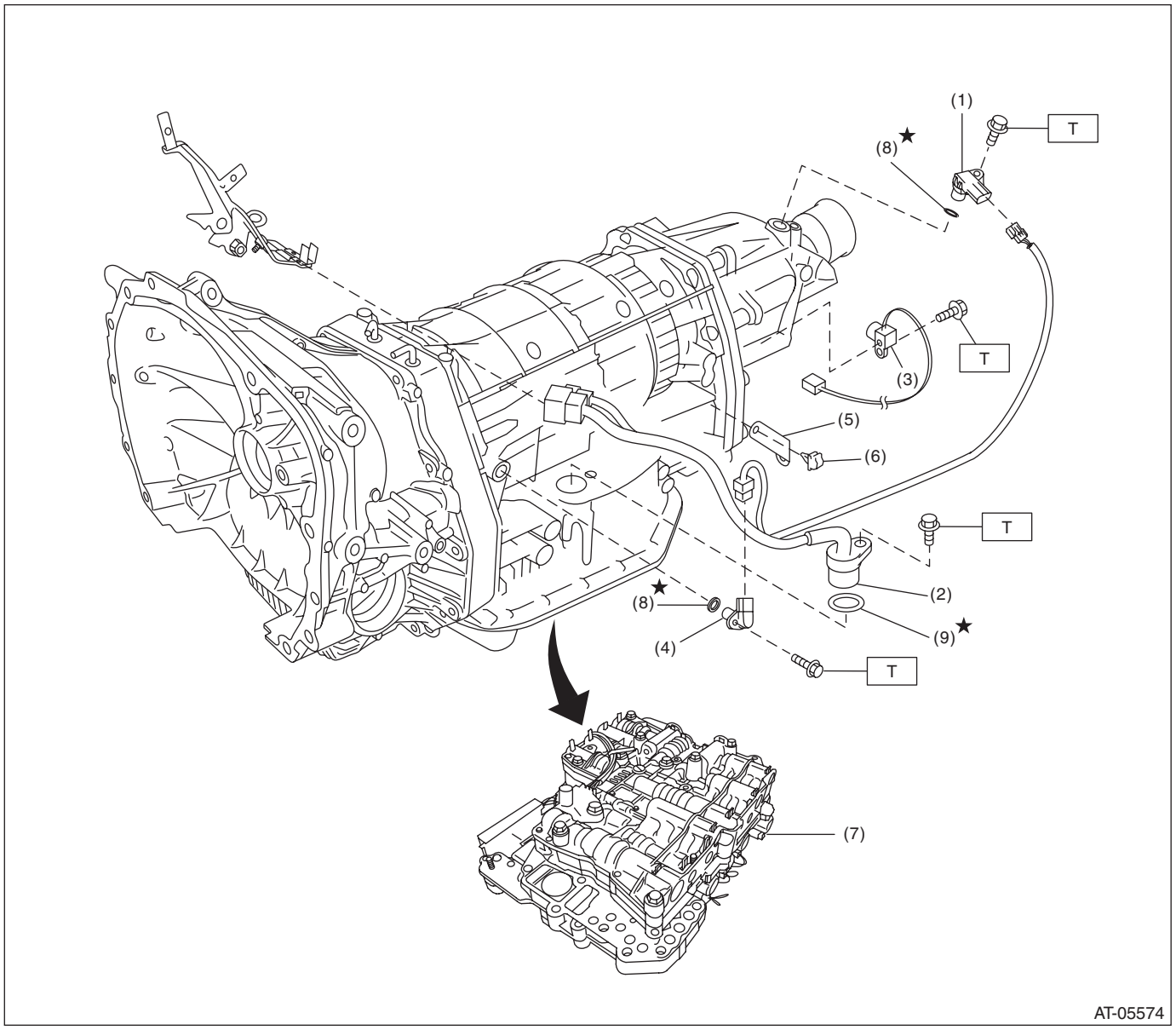

(1) Rear vehicle speed sensor
(2) Transmission harness ASSY
(3) Front vehicle speed sensor
(4) Turbine speed sensor 1
(5) Harness bracket
(6) Clip
(7) Control valve ASSY
(8) O-ring
(9) O-ring

Tightening torque:N·m (kgf-m, ft-lb)
T: 7 (0.7, 5.2)

8. DIFFERENTIAL GEAR

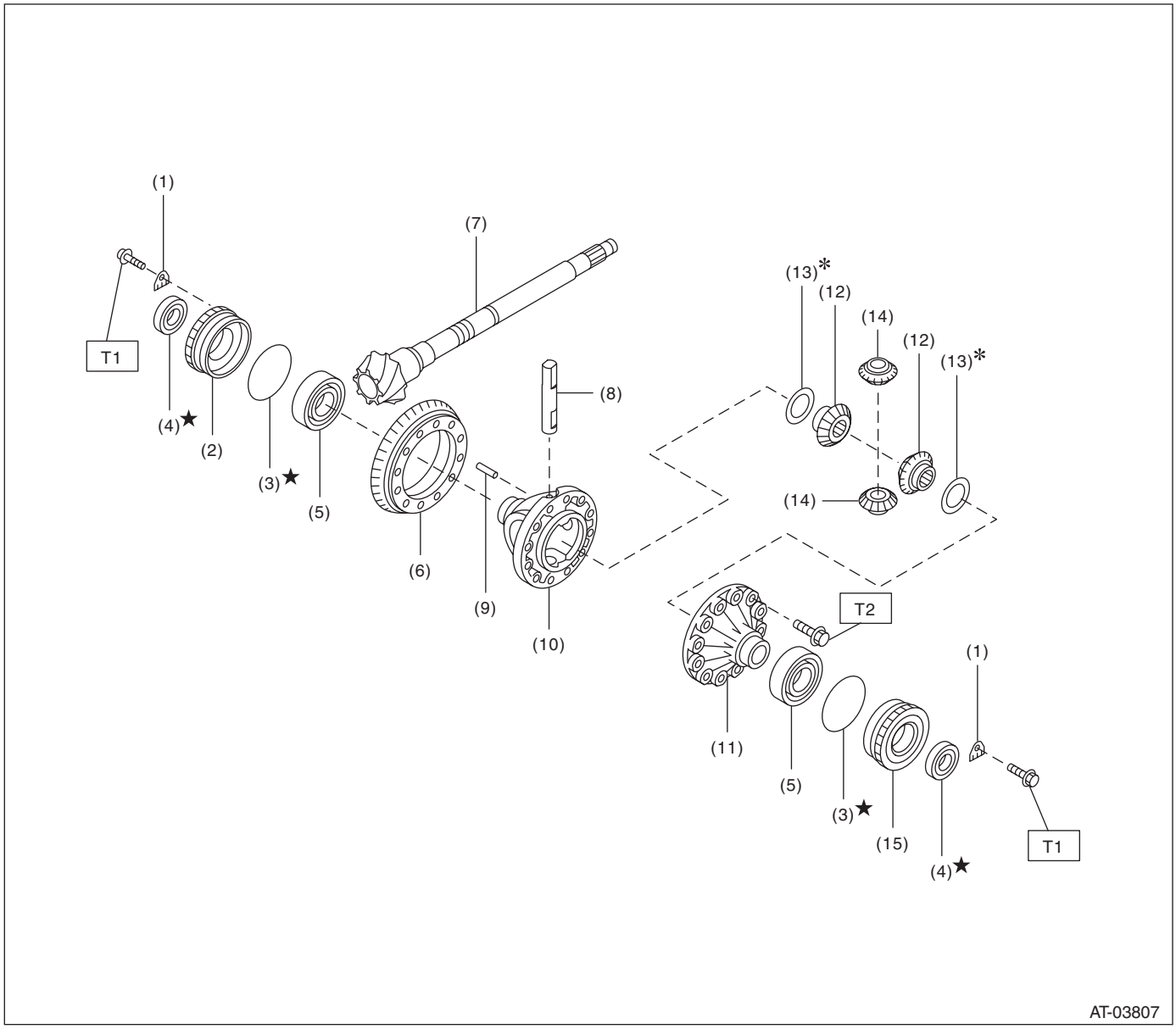

(1) Retainer lock plate
(2) Differential side retainer RH
(3) O-ring
(4) Oil seal
(5) Taper roller bearing
(6) Hypoid driven gear
(7) Drive pinion shaft
(8) Pinion shaft
(9) Straight pin
(10) Differential case RH
(11) Differential case LH
(12) Differential bevel gear
(13) Washer
(14) Differential bevel pinion
(15) Differential side retainer LH

Tightening torque:N·m (kgf-m, ft-lb)
T1: 25 (2.5, 18.4)
T2: 70 (7.1, 51.6)

9. TRANSFER CASE, EXTENSION CASE & REDUCTION GEAR

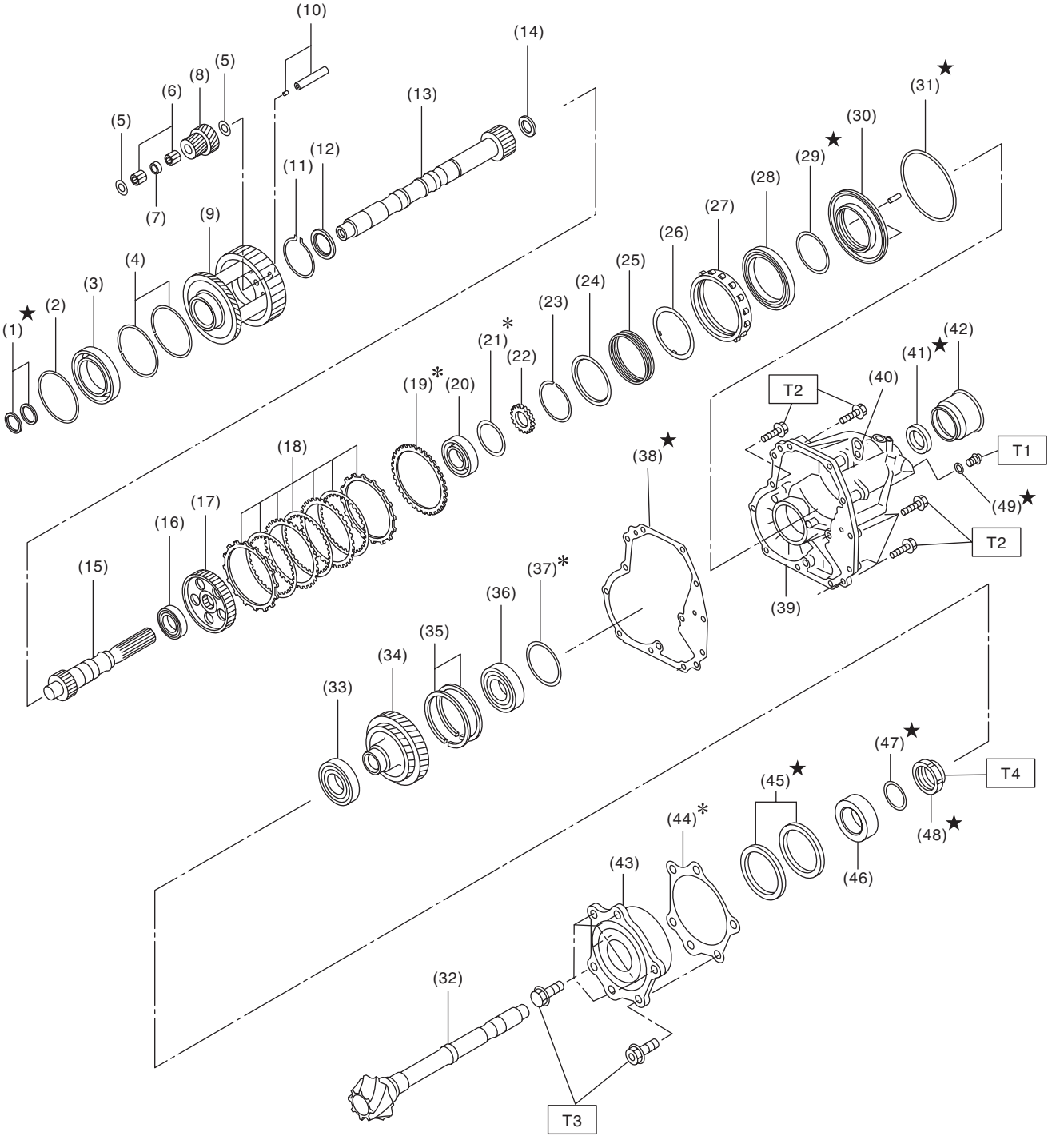

(1) Seal ring
(2) Reduction gear shim
(3) Ball bearing
(4) Snap ring
(5) Planetary pinion washer
(6) Needle bearing
(7) Spacer
(8) Pinion gear
(9) Planetary carrier ASSY
(10) Planetary pinion shaft ASSY
(11) Snap ring
(12) Thrust bearing
(13) Intermediate shaft
(14) Thrust washer
(15) Rear drive shaft
(16) Ball bearing
(17) Transfer clutch hub
(18) Transfer clutch plate
(19) Driven plate No. 3.
(20) Ball bearing
(21) Rear drive shaft shim
(22) Revolution gear
(23) Snap ring
(24) Clutch spring retainer
(25) Return spring
(26) Spring retainer
(27) Pressure plate
(28) Ball bearing
(29) O-ring
(30) Transfer clutch piston
(31) D-ring
(32) Drive pinion shaft
(33) Ball bearing
(34) Reduction driven gear
(35) Snap ring
(36) Ball bearing
(37) Shim
(38) Gasket
(39) Extension case
(40) Transmission hanger
(41) Oil seal
(42) Dust cover
(43) Taper roller bearing
(44) Drive pinion shim
(45) Oil seal
(46) Drive pinion collar
(47) O-ring
(48) Lock nut
(49) O-ring

Tightening torque:N·m (kgf-m, ft-lb)
T1: 13 (1.3, 9.6)
T2: 25 (2.5, 18.4)
T3: 70 (7.1, 51.6)
T4: 116 (11.8, 85.6)

10.TRANSMISSION CONTROL DEVICE & PARKING SUPPORT

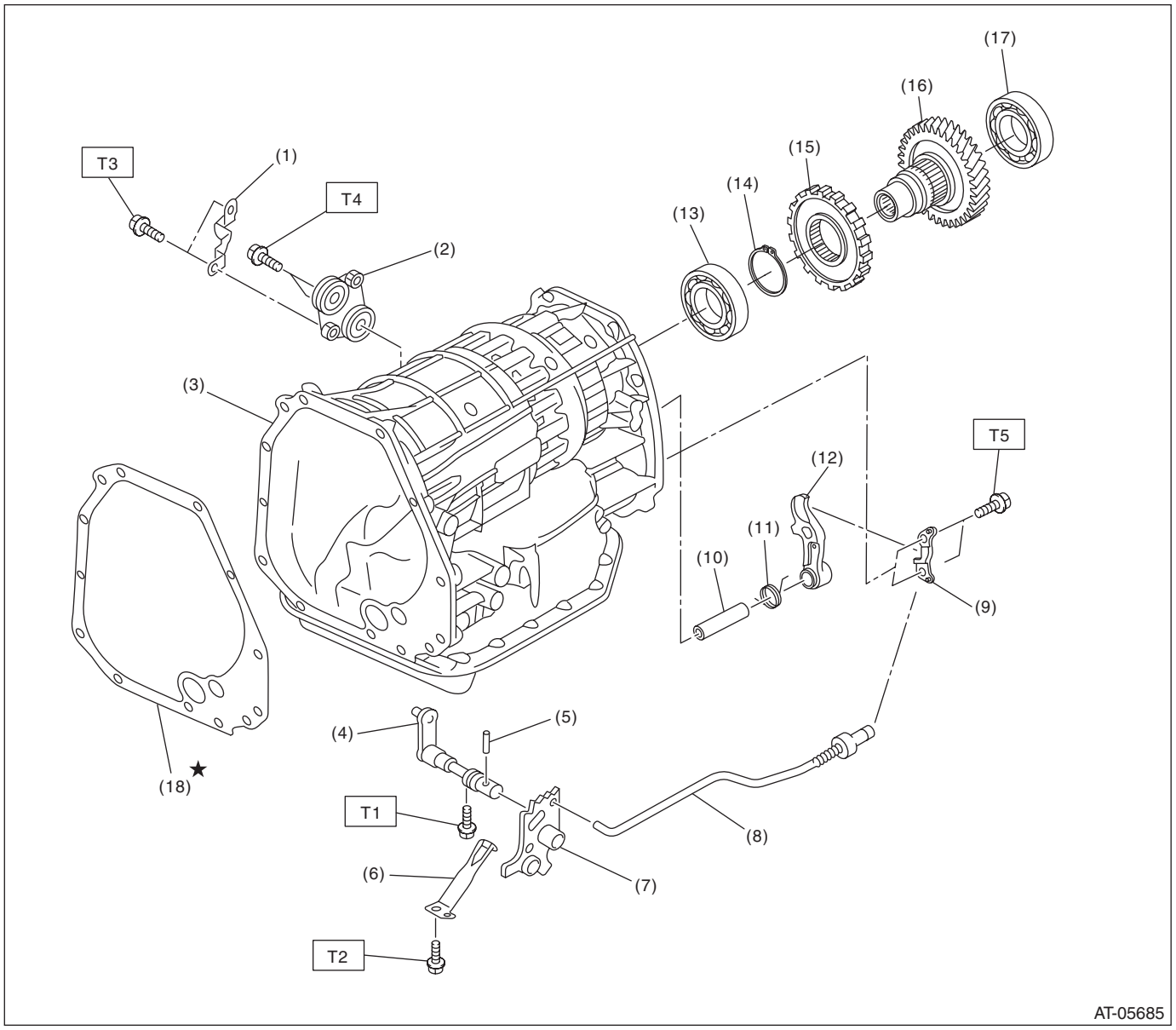

(1)	Bracket	(10)	Parking pawl shaft
(2)	Floating bracket	(11)	Return spring
(3)	AT main case	(12)	Parking pawl
(4)	Range select lever	(13)	Ball bearing
(5)	Straight pin	(14)	Snap ring
(6)	Detent spring	(15)	Parking gear
(7)	Manual plate	(16)	Reduction driven gear
(8)	Parking rod	(17)	Ball bearing
(9)	Parking support actuator	(18)	Gasket

Tightening torque:N·m (kgf-m, ft-lb)

T1: 6 (0.6, 4.4)
T2: 7 (0.7, 5.2)
T3: 18 (1.8, 13.3)
T4: 25 (2.5, 18.4)
T5: <Ref. to 5AT-76, Parking Pawl.>

11.TRANSMISSION CONTROL MODULE

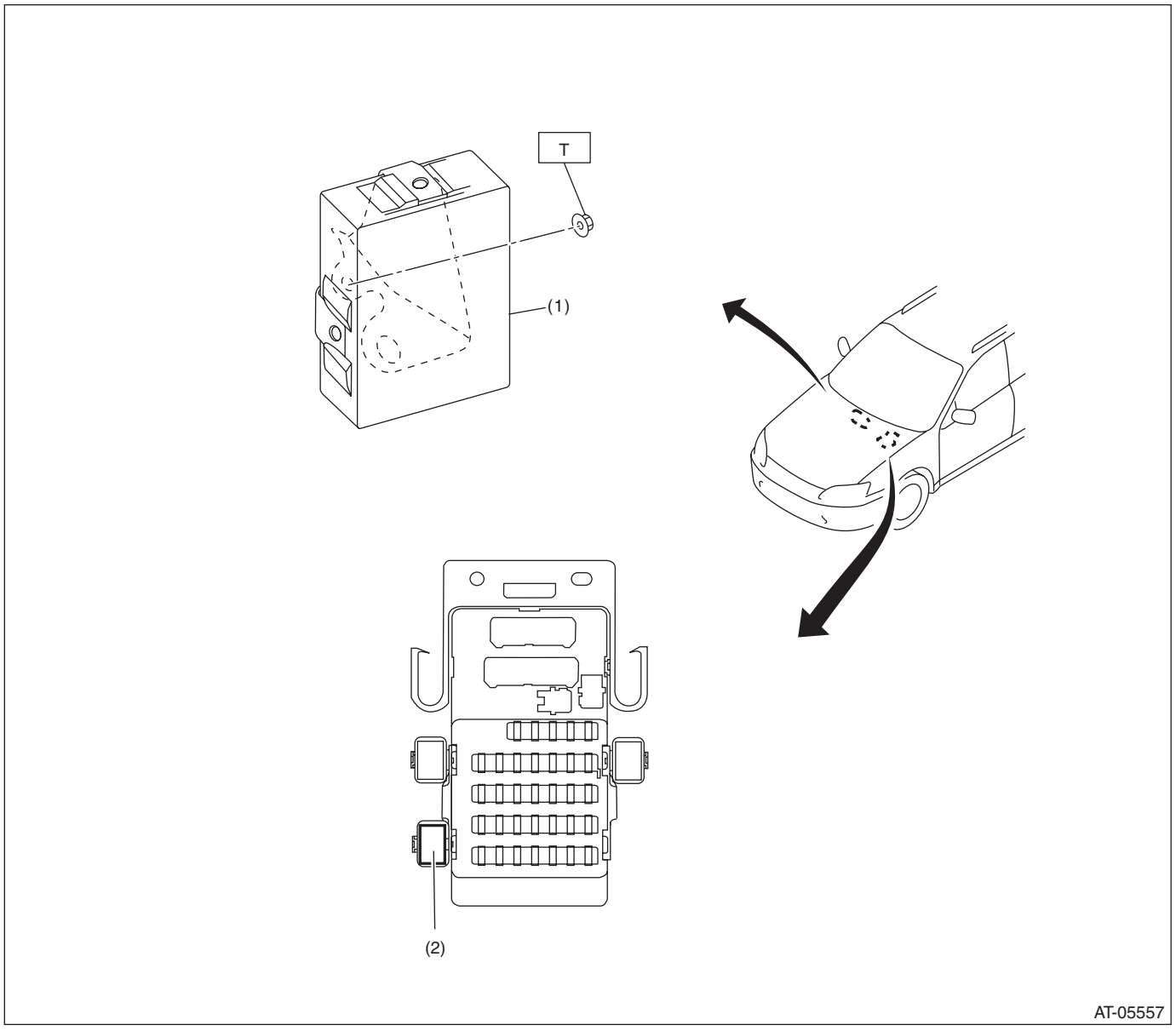

(1) Transmission control module (TCM)
(2) Relay

Tightening torque:N·m (kgf-m, ft-lb)

T: 7.5 (0.8, 5.5)

12.TRANSMISSION MOUNTING

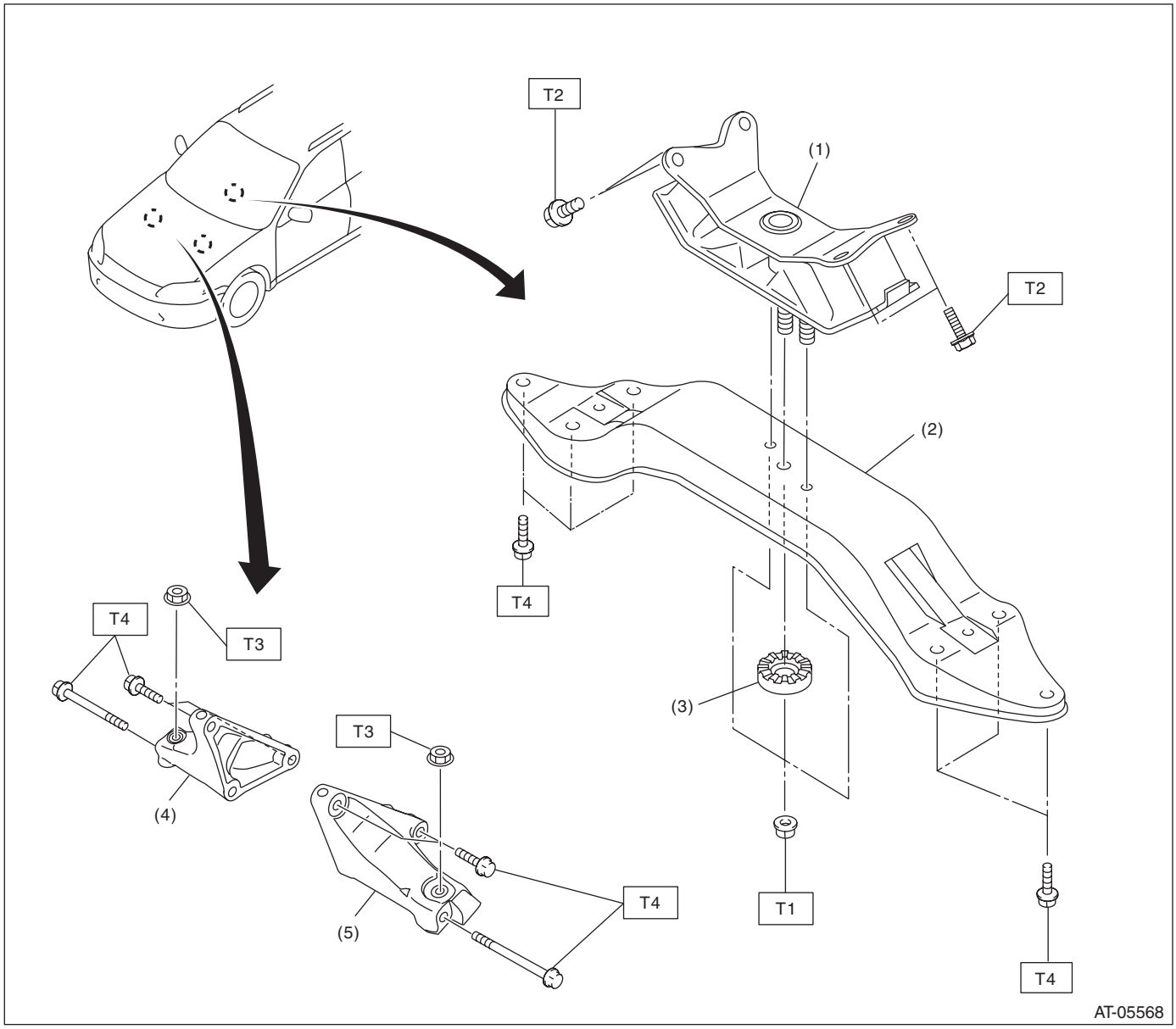

(1)	Rear cushion rubber	(4)	Transmission main mounting bracket (RH)
(2)	Crossmember	(5)	Transmission main mounting bracket (LH)
(3)	Stopper		

Tightening torque:N·m (kgf-m, ft-lb)

T1: 35 (3.6, 25.8)

T2: 40 (4.1, 29.5)

T3: 45 (4.6, 33.2)

T4: 75 (7.6, 55.3)

C: CAUTION

- Wear appropriate work clothing, including a cap, protective goggles and protective shoes when performing any work.
- Remove contamination including dirt and corrosion before removal, installation or disassembly.
- Keep the disassembled parts in order and protect them from dust and dirt.
- Until the oil pan is removed, do not place with the oil pan side facing up to prevent foreign matter from entering the valve body.
- Before removal, installation or disassembly, be sure to clarify the failure. Avoid unnecessary removal, disassembly and replacement.
- When disassembling the case and other light alloy parts, disassemble them by slightly tapping with a plastic hammer. Do not pry apart with screwdrivers or other tools.
- Vehicle components are extremely hot after driving. Be wary of receiving burns from heated parts.
- Use SUBARU genuine gear oil, grease or equivalent. Do not mix them of different grades or manufacturers.
- Be sure to tighten bolts and nuts to the specified torque.
- Place shop jacks or rigid racks at the specified points.
- Apply gear oil onto sliding or revolving surfaces before installation.
- Replace deformed or damaged snap rings with new parts.
- Before installing O-rings or oil seals, apply sufficient amount of ATF fluid to avoid damage and deformation.
- Be careful not to incorrectly install or fail to install O-rings, snap rings and other such parts.
- Before securing a part on a vise, place cushioning material such as wood blocks, aluminum plate, or cloth between the part and the vise.
- Avoid damaging the mating surface of the case.
- Before applying liquid gasket, completely remove the old liquid gasket.
- During disassembly or assembly, be sure to use nylon gloves or paper towels. Do not use cloth gloves or waste cloth.

D: PREPARATION TOOL

1. SPECIAL TOOL

ILLUSTRATION	TOOL NUMBER	DESCRIPTION	REMARKS
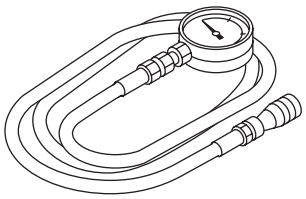 ST-498575400	498575400	OIL PRESSURE GAUGE ASSY	Used for measuring oil pressure.
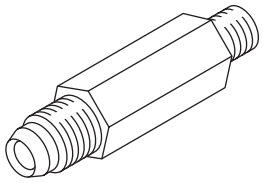 ST-498897200	498897200	OIL PRESSURE ADAPTER	Used together with oil pump cover installed on when measuring line pressure.
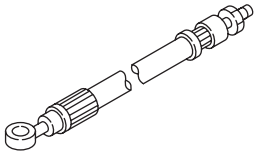 ST-498897800	498897800	OIL PRESSURE ADAPTER SET	Used for measuring the transfer clutch pressure.
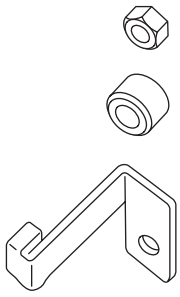 ST-498277200	498277200	STOPPER SET	• Used for removing and installing the automatic transmission assembly. • Used for preventing the torque converter from dropping off.

ILLUSTRATION	TOOL NUMBER	DESCRIPTION	REMARKS
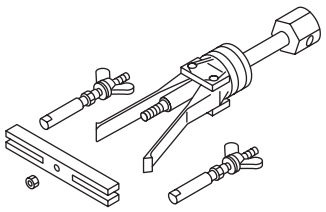 ST-398527700	398527700	PULLER ASSY	• Used for removing the extension oil seal. • Used for removing the front differential side retainer bearing outer race.
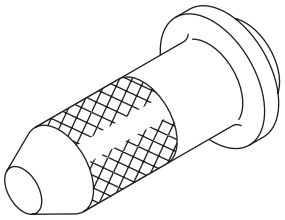 ST-498057300	498057300	INSTALLER	Used for installing the extension oil seal.
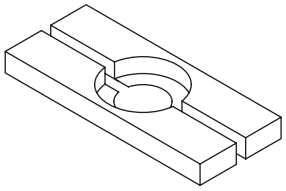 ST-498077000	498077000	REMOVER	• Used for removing the front differential taper roller bearing. • Used for installing the center differential ball bearing.
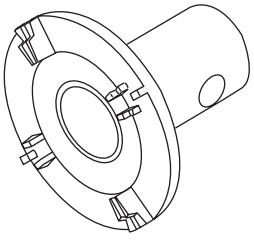 ST18658AA020	18658AA020	WRENCH COMPL RETAINER	• Used for removing and installing the differential side retainer. • WRENCH COMPL RETAINER (18630AA010) can also be used.
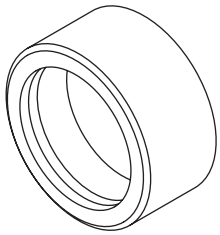 ST-398487700	398487700	DRIFT	Used for installing the front differential taper roller bearing.

ILLUSTRATION	TOOL NUMBER	DESCRIPTION	REMARKS
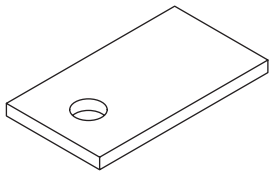 ST-498255400	498255400	PLATE	Used for measuring the backlash of hypoid gear.
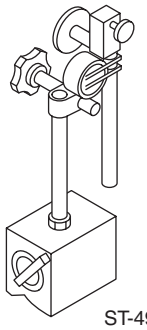 ST-498247001	498247001	MAGNET BASE	• Used for measuring the gear backlash. • Used together with DIAL GAUGE (498247100).
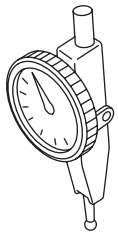 ST-498247100	498247100	DIAL GAUGE	• Used for measuring the gear backlash. • Used together with MAGNET BASE (498247001).
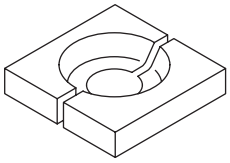 ST-498517000	498517000	REPLACER	Used for removing the drive pinion shaft front roller bearing.
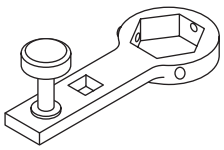 ST-499787700	499787700	WRENCH	• Used for removing and installing the drive pinion shaft lock nut. • Used for adjusting the front differential hypoid gear backlash.

ILLUSTRATION	TOOL NUMBER	DESCRIPTION	REMARKS
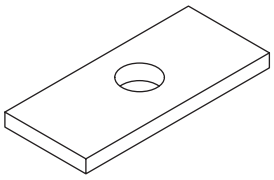 ST-398643600	398643600	GAUGE	Used for measuring total end play, extension end play and drive pinion height.
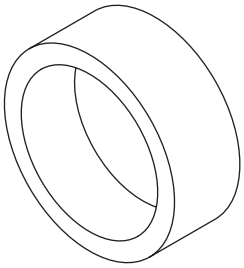 ST-398744300	398744300	PISTON GUIDE	Used for measuring height from mating surface of the main case to pressure plate.
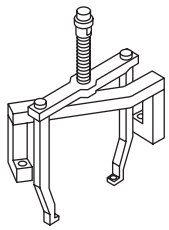 ST-499737100	499737100	PULLER SET	• Used for removing the reduction driven gear assembly. • Used together with GEAR HOLDER (18680AA010) and SUPPORT PULLER (18766AA000).
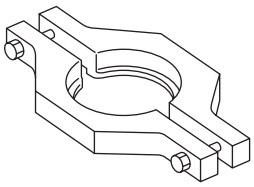 ST-498077600	498077600	REMOVER	Used for removing the center differential ball bearing.
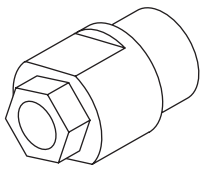 ST18667AA010	18667AA010	HOLDER	• Used for removing and installing the drive pinion lock nut. • Used as a handle to rotate gear when checking tooth contact. • Used for adjusting preload on the front differential side bearing.

ILLUSTRATION	TOOL NUMBER	DESCRIPTION	REMARKS
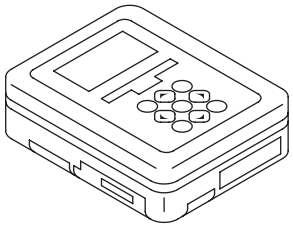 ST1B022XU0	1B022XU0	SUBARU SELECT MONITOR III KIT	Used for troubleshooting the electrical system.
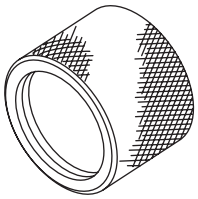 ST18675AA000	18675AA000	DIFFERENTIAL SIDE OIL SEAL INSTALLER	Used for installing the differential side retainer oil seal.
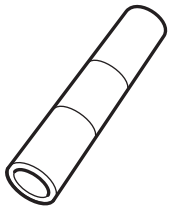 ST18654AA000	18654AA000	INSTALLER	Used for installing the reduction driven gear ball bearing.
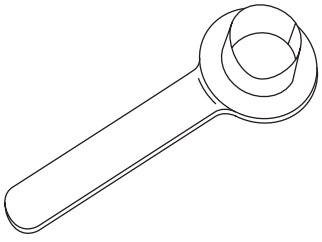 ST28399SA010	28399SA010	OIL SEAL PROTECTOR	Used for protecting oil seal when installing front drive shaft.
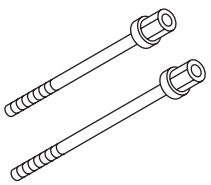 ST18763AA000	18763AA000	COMPRESSOR SHAFT	Used for disassembling and assembling front brake clutch and reverse brake clutch.

ILLUSTRATION	TOOL NUMBER	DESCRIPTION	REMARKS
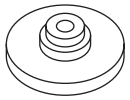 ST18765AA000	18765AA000	COMPRESSOR SUPPORT	Used for disassembling and assembling front brake clutch and reverse brake clutch.
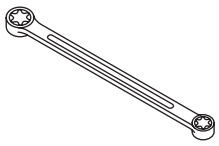 ST18676AA020	18676AA020	TORX® WRENCH	Used for removing and installing the torque converter case.
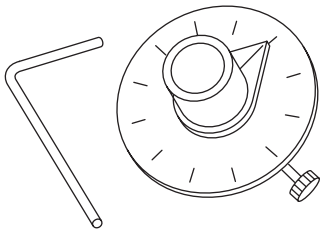 ST18854AA000	18854AA000	ANGLE GAUGE	• Used for tightening parking support. • Used for tightening the drive plate.
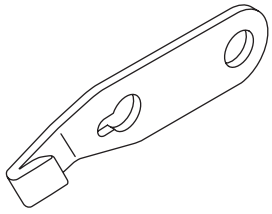 ST-498497100	498497100	CRANKSHAFT STOPPER	Used for stopping the drive plate rotation when removing and installing the drive plate.
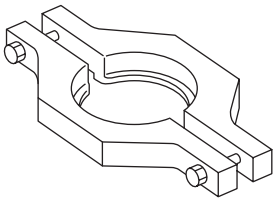 ST-498077300	498077300	REMOVER	Used for removing ball bearing of reduction driven gear.

ILLUSTRATION	TOOL NUMBER	DESCRIPTION	REMARKS
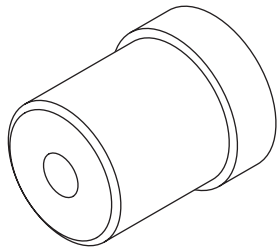 ST-499587100	499587100	OIL SEAL INSTALLER	Used for installing the converter case oil seal.
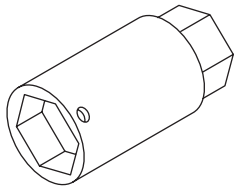 ST-499787500	499787500	ADAPTER	• Used for installing and removing drive pinion shaft lock nut. • Used for adjusting preload on the front differential side bearing.
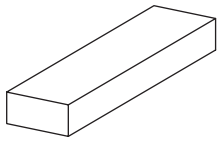 ST-499575400	499575400	GAUGE	Used for adjusting the total end play (selecting the reduction driven gear shim).
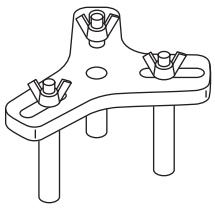 ST18762AA000	18762AA000	COMPRESSOR SPECIAL TOOL	• Used for disassembling and assembling front brake clutch and reverse brake clutch. • Used together with COMPRESSOR SHAFT (18763AA000) and COMPRESSOR SUPPORT (18765AA000).
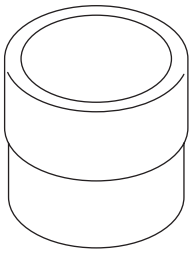 ST-499755602	499755602	PRESS	Used for installing the parking gear.

ILLUSTRATION	TOOL NUMBER	DESCRIPTION	REMARKS
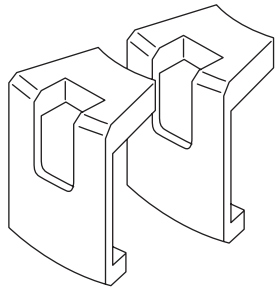 ST18680AA010	18680AA010	GEAR HOLDER	Used for removing the reduction driven gear assembly. (2-piece set)
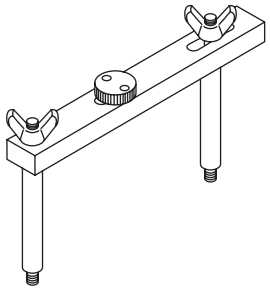 ST18766AA000	18766AA000	SUPPORT PULLER	Used for removing the reduction driven gear assembly.
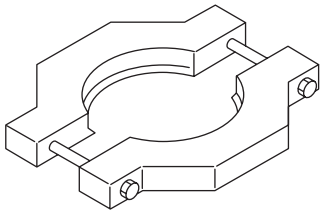 ST18767AA000	18767AA000	REMOVER	Used for removing the parking gear.
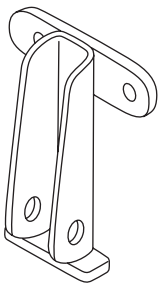 ST41099AJ010	41099AJ010	SPECIAL TOOL H6	• Used for removing and installing transmission. • For H6 engine.
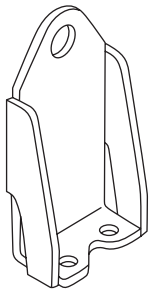 ST18360AA020	18360AA020	HANGER	• Used for removing and installing transmission. • For H6 engine.

ILLUSTRATION	TOOL NUMBER	DESCRIPTION	REMARKS
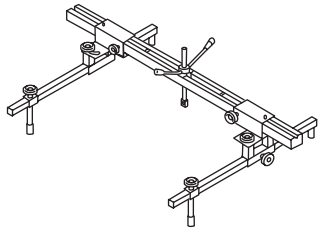 ST99099AJ000	99099AJ000	ENGINE HANGER	• Used for removing and installing transmission. • Used together with CHAIN BALANCER (99099AJ010) and sling chain (general tool).
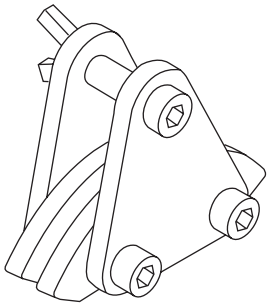 ST99099AJ010	99099AJ010	CHAIN BALANCER	• Used for removing and installing transmission. • Used together with ENGINE HANGER (99099AJ000) and sling chain (general tool). • Used to hang the engine while balancing it with the sling chain inserted in this tool.

2. GENERAL TOOL

TOOL NAME	REMARKS
Depth gauge	Used for measuring the transmission end play.
Thickness gauge	Used for measuring clearance of the clutch, brake and oil pump.
Micrometer	Used for measuring thickness of the drive pinion.
Spring scale	Used for measuring the starting torque of the drive pinion.
Circuit tester	Used for measuring resistance and voltage.
TORX® T70	Used for removing and installing the differential gear oil drain plug.
Snap ring pliers	Used for removing and installing each snap ring.
Sling chain	Used for removing and installing transmission. • Length: 0.8 — 1 m (2.6 — 3.3 ft) • Load capacity: 1.2 t (2646 lb) or more • Diameter: 6 mm (0.24 in) or 6.3 mm (0.25 in) • Chain external width: 23.5 mm (0.93 in) or less • Chain internal width: 8.5 mm (0.33 in) or more
Screw shackle	Used for removing and installing transmission. • Load capacity: 250 kg (551 lb) or more • Use two pieces.

2. Automatic Transmission Fluid

A: INSPECTION

NOTE:
The level of ATF varies with fluid temperature. Pay attention to the ATF temperature when checking ATF level.
1) Raise the ATF temperature by driving a distance of 5 to 10 km (3 to 6 miles). Otherwise, idle the engine to raise ATF temperature to 70 — 80°C (158 — 176°F) on Subaru Select Monitor. <Ref. to 5AT(diag)-18, Read Current Data.>
2) Park the vehicle on a level surface.
3) After selecting all positions (P, R, N, D), set the select lever in "P" range. Idle the engine for 1 to 2 minutes.
4) Remove the oil level gauge and wipe it clean.
5) Reinsert the level gauge all the way. Make sure the level gauge is inserted correctly and in the proper orientation.
6) Remove the oil level gauge again and make sure that the ATF level is between upper and lower marks of the HOT side.

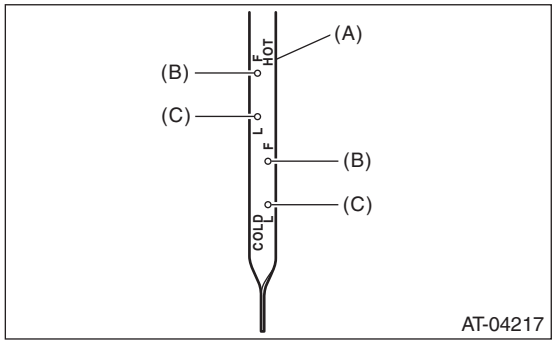

(A) ATF level gauge
(B) Upper level
(C) Lower level

7) If the ATF level is below the lower mark, add recommended ATF until the fluid level is between upper and lower marks.

CAUTION:
• Be careful not to exceed the upper level.
• When the transmission is cold, be careful not to add ATF to the upper level on HOT side. Overfilling of ATF may cause oil splashing.
8) Check the ATF for leaks.
Visually check for leaks in the transmission. If there are leaks, replace the gasket, oil seal, plug or other parts.

B: REPLACEMENT

1) Lift up the vehicle.
2) Remove the ATF drain plug to drain ATF.

CAUTION:
• Directly after the vehicle has been running or the engine has been long idle running, the ATF is hot. Be careful not to burn yourself.
• Be careful not to spill the ATF on the exhaust pipe to prevent it from emitting smoke or causing fire. If ATF is spilled on the exhaust pipe, wipe it off completely.
3) Check the ATF condition. <Ref. to 5AT-30, CONDITION CHECK, Automatic Transmission Fluid.>
4) Tighten the ATF drain plug.

NOTE:
Use a new gasket.

Tightening torque:
20 N·m (2.0 kgf-m, 14.8 ft-lb)

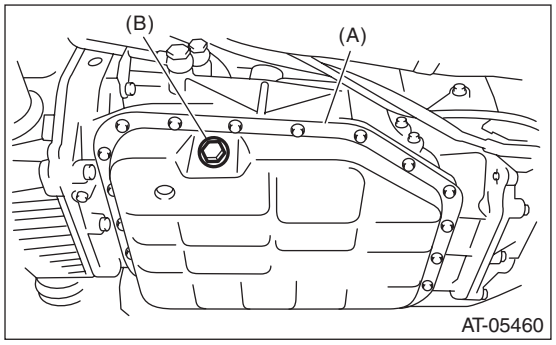

(A) Oil pan
(B) ATF drain plug

5) Lower the vehicle.
6) Pour ATF from the oil charge pipe.

Recommended fluid:
<Ref. to 5AT-3, HYDRAULIC CONTROL AND LUBRICATION, SPECIFICATION, General Description.>

CAUTION:
Be sure to use the recommended or equivalent ATF. Using material except recommended one or substitute would cause trouble.

Capacity:
Fill with the same amount of ATF as drained.

Capacity when transmission is overhauled:
9.6 — 10.0 ℓ (10.1 — 10.6 US qt, 8.4 — 8.8 Imp qt)
7) Check the level and leaks of ATF. <Ref. to 5AT-29, INSPECTION, Automatic Transmission Fluid.>

C: CONDITION CHECK

NOTE:
When replacing ATF, check the inside condition of transmission body by inspecting the drained ATF.

Fluid condition	Trouble and possible cause	Corrective action
Large amount of metallic pieces are found.	Internal metal parts of transmission body are excessively worn.	Replace ATF and check if AT operates correctly.
Is thick and is a varnish-form fluid.	Clutch etc. is burned.	Replace ATF and check the AT body or vehicle for faulty.
Clouded fluid or bubbles are found in fluid.	Water is mixed.	Replace ATF and check the water entering point.

3. Differential Gear Oil

A: INSPECTION

1) Park the vehicle on a level surface.
2) Remove the collector cover.

NOTE:
Follow the steps below when removing the collector cover.
(1) Pull up the two points at the rear (A).
(2) Pull up the two points at the front (B) while moving them forward.

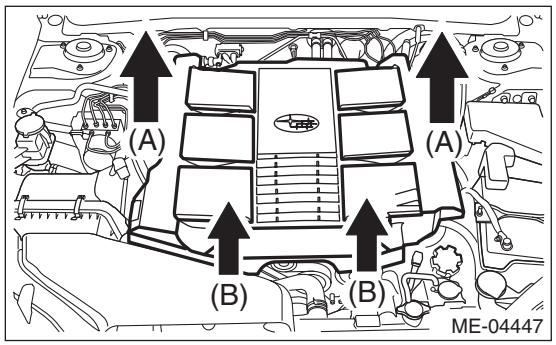

3) Remove the oil level gauge and wipe it clean.
4) Reinsert the level gauge all the way. Make sure the level gauge is inserted correctly and in the proper orientation.
5) Remove the oil level gauge again, and check the level of differential gear oil. If the oil level is below “L” line, add oil to bring the level up to “F” line.

NOTE:
To prevent overfilling the differential gear oil, do not add oil above the “F” line.

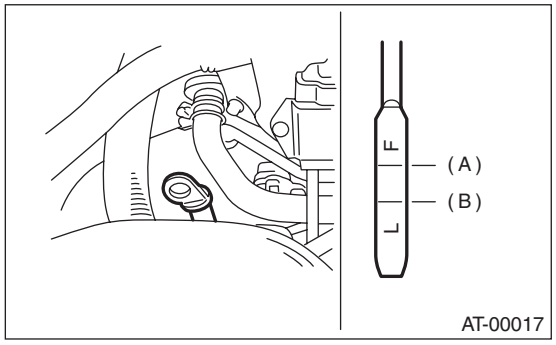

(A) Upper level
(B) Lower level

B: REPLACEMENT

1) Lift up the vehicle.
2) Drain the differential gear oil by removing drain plug using TORX® bit T70.

CAUTION:
• Immediately after the vehicle has been running or after idling for a long time, the differential gear oil will be hot. Be careful not to burn yourself.
• Be careful not to spill differential gear oil on the exhaust pipe to prevent it from emitting smoke or causing a fire. If differential gear oil is spilled on the exhaust pipe, wipe it off completely.
3) Tighten the drain plug using TORX® bit T70.

NOTE:
Use a new gasket.

Tightening torque:
70 N·m (7.1 kgf-m, 51.6 ft-lb)

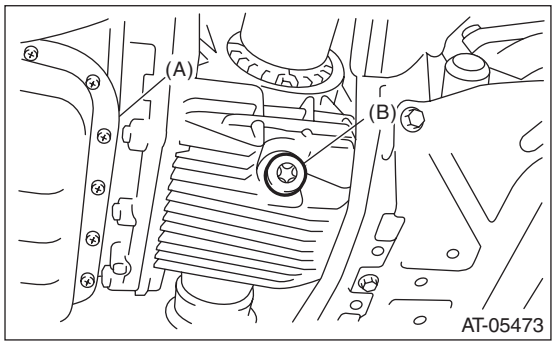

(A) Oil pan
(B) Drain plug

4) Lower the vehicle.
5) Pour gear oil into the level gauge hole.

Recommended gear oil:
<Ref. to 5AT-4, RECOMMENDED GEAR OIL, SPECIFICATION, General Description.>

Gear oil capacity:
1.3 — 1.5 ℓ (1.4 — 1.6 US qt, 1.1 — 1.3 Imp qt)
6) Check the level of differential gear oil. <Ref. to 5AT-31, INSPECTION, Differential Gear Oil.>

4. Road Test

A: INSPECTION

1. GENERAL PRECAUTION

Road tests should be conducted to properly diagnose the condition of automatic transmission.

NOTE:
When performing the test, do not exceed posted speed limit.

2. D RANGE SHIFT FUNCTION

Check shifting between 1st ←→ 2nd ←→ 3rd ←→ 4th ←→ 5th while driving on normal city streets.

3. D RANGE SHIFT SHOCK

Check the shock level when shifting up during normal driving.

4. KICK-DOWN FUNCTION

Check kick-down for each gear. Check the shock level during kick-down at the same time.

5. ENGINE BRAKE OPERATION

- Check the 4th gear engine brake when shifting down from 5th to 4th range while driving in 5th gear of manual mode [50 to 60 km/h (31 to 37 MPH)].
- Check the 3rd gear engine brake when shifting down from 4th to 3rd range while driving in 4th gear of manual mode [50 — 60 km/h (31 — 37 MPH)].
- Check the 2nd gear engine brake when shifting down from 3rd to 2nd range while driving in 3rd gear of manual mode [40 — 50 km/h (25 — 31 MPH)].
- Check the 1st gear engine brake when shifting down from 2nd to 1st range while driving in 2nd gear of manual mode [20 — 30 km/h (12 — 19 MPH)].

6. LOCK-UP FUNCTION

When the accelerator is lightly depressed while driving on a flat road in lock-up range, check that rpm does not change abruptly.

7. P RANGE OPERATION

Stop the vehicle on an uphill grade of 5% or more and shift to the “P” range. Check that the vehicle does not move when the parking brake is released.

8. NOISE AND VIBRATION

Check for noise and vibration while driving and during shifting.

9. OIL LEAKAGE

After the driving test, inspect for oil leaks from the transmission body.

5. Stall Test

A: INSPECTION

NOTE:
The stall test is extremely important in diagnosing the condition of an automatic transmission and engine. The test is necessary to measure the engine stall speeds in “2nd gear of manual mode”.
Purposes of the stall test:
- Operational check of the automatic transmission clutch
- Operational check of the torque converter clutch
- Engine performance check

1) Check that the throttle valve fully opens.
2) Check that the engine oil level is correct.
3) Check that the coolant level is correct.
4) Check that the ATF level is correct.
5) Check that the differential gear oil level is correct.
6) Raise the ATF temperature to 70 to 80°C (158 to 176°F) by driving a distance of 5 to 10 km (3 to 6 miles). Confirm the ATF temperature on Subaru Select Monitor. <Ref. to 5AT(diag)-18, Read Current Data.>
7) Place the wheel chocks at the front and rear of all wheels and apply the parking brake.
8) Move the select lever to ensure it operates properly, then set to “2nd gear of manual mode”.
9) While stepping hard on the brake pedal, gradually step on the accelerator pedal.
10) When the engine speed is stabilized, quickly record the engine speed and release accelerator pedal.
11) Shift the select lever to “N” range, and cool down the engine by idling it for one minute or more.

NOTE:
- Do not perform a stall test for over 5 seconds at a time. (Perform with the throttle from fully closed to fully open to end up reading the stall speed.) Doing so will make the engine oil and ATF deteriorate and the clutch and brake to be adversely affected.
- After performing the stall test, be sure to cool down the engine for at least one minute with the select lever set in “P” or “N” range, and at an idle speed of 1,200 rpm or less.
- If the stall speed is higher than the specified range, attempt to finish the stall test in as short a time as possible, in order to prevent the automatic transmission from sustaining damage.
- Perform the stall test in S mode.
- When depressing the accelerator pedal again after performing the stall test for 5 seconds or more, the electronic throttle control remains closed for approx. 60 seconds.
- When the stall test is performed for 15 seconds or more continuously, the test is completed forcibly to protect the transmission unit.

When depressing the accelerator pedal again, the electronic throttle control remains closed for approx. 60 seconds.

Stall speed (at sea level):
2,100 — 2,600 rpm

Stall speed (at sea level)	Range	Possible faulty parts
Over specified value	2nd gear of manual mode	• Line pressure too low • Forward brake • Direct clutch • 3rd one-way clutch

6. Time Lag Test

A: INSPECTION

NOTE:
When the select lever is shifted while the engine is idling, there will be a certain time elapse or lag before shock is felt. Using this, check the condition of forward brake, reverse brake, 1st one-way clutch and 3rd one-way clutch.

- Perform the test at normal operation fluid temperature of 70 — 80°C (158 — 176°F).
- Be sure to allow one minute or more interval between tests.
- Make three measurements and take the average value.

1) Fully apply the parking brake.
2) Start the engine.
Check the idle speed. (A/C OFF)
3) Shift the select lever from “N” to “D” range. Using a stop watch, measure the time-lag from shifting the lever until the shock is felt.

Time-lag
Standard: 1.2 seconds or less

If “N” → “D” time-lag is longer than specification:
- Line pressure too low
- Forward brake worn
- One-way clutch not operating properly

4) In the same manner, measure the time lag of “N” → “R”.

Time-lag
Standard: 1.5 seconds or less

If “N” → “R” time lag is longer than specification:
- Line pressure too low
- Reverse brake worn

7. Line Pressure Test

A: MEASUREMENT

NOTE:
If the clutch or brake shows a sign of slippage, or shifting interval is not correct, check the line pressure.
- Excessive shock during up-shift may be due to the line pressure being too high.
- In many cases, slippage or inability to operate the vehicle may be due to insufficient oil pressure for the operation of clutch, brake or control valve.

1) Lift up the vehicle.
2) Remove the test plug and install the ST.
ST 498897200 OIL PRESSURE ADAPTER

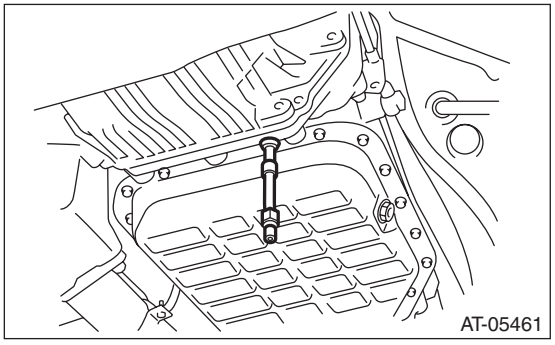

3) Set the ST1 and ST2.
ST1 498897200 OIL PRESSURE ADAPTER
ST2 498575400 OIL PRESSURE GAUGE ASSY
4) Lower the vehicle, and pull ST2, which were set in step 3), into the vehicle.
5) Connect the Subaru Select Monitor to the data link connector and read the current data. <Ref. to 5AT(diag)-18, Read Current Data.>
6) Perform line pressure test in the same manner as the stall test.

NOTE:
- Do not perform the line pressure test for 5 seconds or more at a time. Doing so will make the engine oil and ATF deteriorate and the clutch and brake to be adversely affected.
- After performing the line pressure test, be sure to cool down the engine for at least one minute with the select lever set in “P” or “N” range and with the idle speed at 1,200 rpm or less.

Range of the select lever	Accelerator pedal opening angle	ATF temperature condition	“P/L Solenoid Pressure” displayed on the Subaru Select Monitor kPa	Standard line pressure kPa (kg/cm^2, psi)
2nd gear of manual mode	Full closed	45 — 55°C (113 — 131°F)	350 — 500	Target pressure (displayed on Subaru Select Monitor) –10 — +190 (Target pressure –0.10 — +1.94, Target pressure –1.45 — +27.5)
	Full open		2,000 or more	1,320 — 1,520 (13.46 — 15.50, 191.4 — 220.4)
R	Full open		1,600 or more	1,660 — 1,860 (16.93 — 18.97, 240.7 — 269.7)

7) Remove the ST and install the test plug.

NOTE:
Use new O-rings.

Tightening torque:
13 N·m (1.3 kgf-m, 9.6 ft-lb)

8. Transfer Clutch Pressure Test

A: INSPECTION

1) Lift up the vehicle.
2) Remove the bolts holding the heat shield cover, and move the heat shield cover to the rear.
3) Remove the test plug and install the ST.

CAUTION:
Be careful not to cut yourself on the heat shield cover when removing the test plugs and setting the ST.

ST 498897800 OIL PRESSURE ADAPTER SET

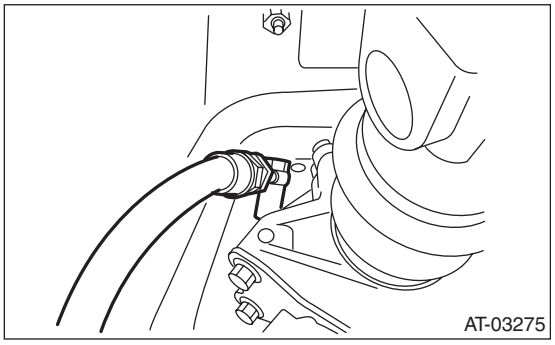

4) Set the ST.

ST 498575400 OIL PRESSURE GAUGE ASSY

5) Lower the vehicle, and pull ST, which were set in step 4), into the vehicle.
6) Connect the Subaru Select Monitor to the data link connector and read the current data. <Ref. to 5AT(diag)-18, Read Current Data.>
7) Perform the transfer clutch pressure test in the same manner as the line pressure test.

NOTE:
• Do not perform the transfer clutch pressure test for 5 seconds or more at a time. Doing so will make the engine oil and ATF deteriorate and the clutch and brake to be adversely affected.
• After performing the transfer clutch pressure test, be sure to cool down the engine for at least one minute with the select lever set in the “P” or “N” range, and at an idle speed of 1,200 rpm or less.
• Adjust the accelerator pedal opening angle in order to obtain the “T/F solenoid target pressure” displayed on the Subaru Select Monitor.

Range of the select lever	Accelerator pedal opening angle	ATF temperature condition	“T/F Solenoid Target Pressure” displayed on the Subaru Select Monitor kPa	Standard transfer clutch pressure kPa (kg/cm^2, psi)
2nd gear of manual mode	Partial throttle	45 — 55°C (113 — 131°F)	400	300 — 500 (3.06 — 5.10, 43.5 — 72.5)
N	Full closed		0	0 — 50 (0 — 0.51, 0 — 7.2)

8) Remove the ST and install the test plug.

NOTE:
Use new O-rings.

Tightening torque:
13 N·m (1.3 kgf-m, 9.6 ft-lb)

9) Install the heat shield cover. <Ref. to EI-168, INSTALLATION, Heat Shield Cover.>

9. Automatic Transmission Assembly

A: REMOVAL

1) Remove the front wheels.
2) Fully open the front hood.
3) Disconnect the ground cable from battery.
4) Remove the collector cover.

NOTE:
Follow the steps below when removing the collector cover.
(1) Pull up the two points at the rear (A).
(2) Pull up the two points at the front (B) while moving them forward.

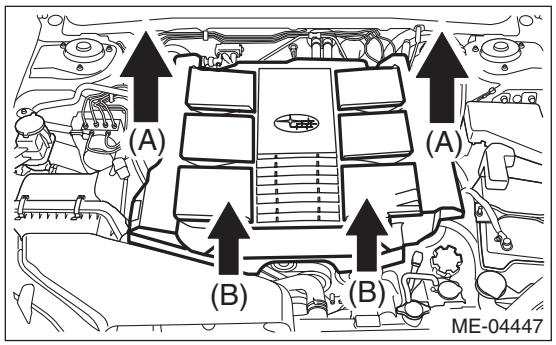

5) Remove the air intake duct. <Ref. to IN(H6DO)-8, REMOVAL, Air Intake Duct.>
6) Remove the 10 clips and detach the grille bracket.

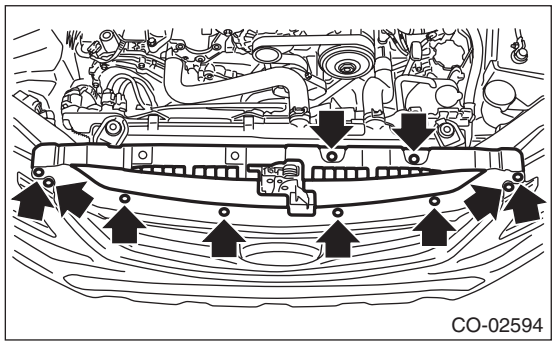

7) Remove the air intake boot. <Ref. to IN(H6DO)-7, REMOVAL, Air Intake Boot.>
8) Disconnect the following connectors.

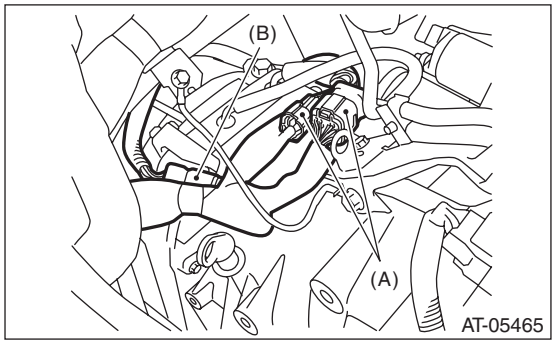

(A) Transmission harness connectors
(B) Front oxygen (A/F) sensor

9) Remove the transmission radio ground terminal.

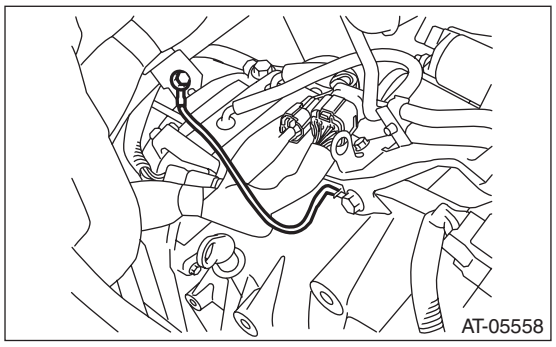

10) Remove the air breather hose. <Ref. to 5AT-61, REMOVAL, Air Breather Hose.>
11) Remove the starter. <Ref. to SC(H4SO)-9, REMOVAL, Starter.>
12) Remove the engine hanger rear.

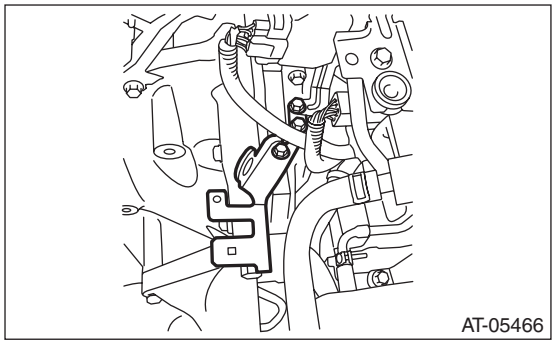

13) Separate the torque converter from drive plate.

CAUTION:
• Be careful not to drop bolts into converter housing.
• Be careful not to damage the mounting bolts.
(1) Remove the service hole plug.
(2) Remove the bolts which hold torque converter to drive plate.
(3) Remove the four bolts by rotating the crank pulley a little at a time.

(4) Make sure the torque converter moves freely by rotating with finger through the starter installation hole.

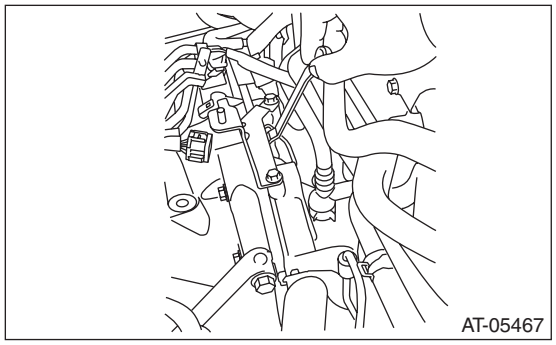

14) Attach the ST to the converter case.
ST 498277200 STOPPER SET

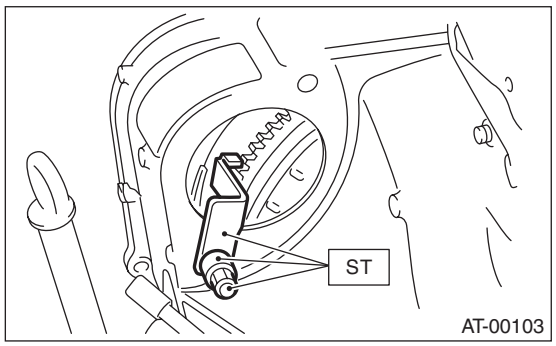

15) Attach the ST to the engine.

Tightening torque:
19 N·m (1.9 kgf-m, 14.0 ft-lb)
ST 18360AA020 HANGER

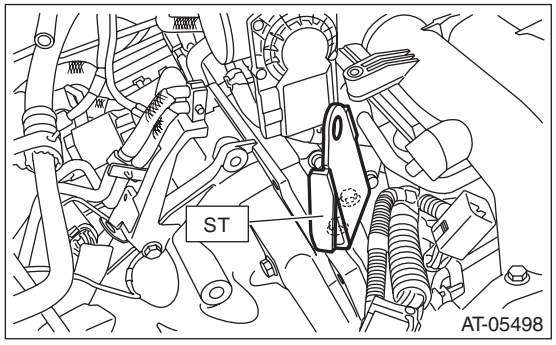

16) Lift up the vehicle.
17) Remove the under cover. <Ref. to EI-35, REMOVAL, Front Under Cover.>
18) Remove the front and rear exhaust pipes. <Ref. to EX(H6DO)-5, REMOVAL, Front Exhaust Pipe.> <Ref. to EX(H6DO)-8, REMOVAL, Rear Exhaust Pipe.>

19) Remove the heat shield cover.

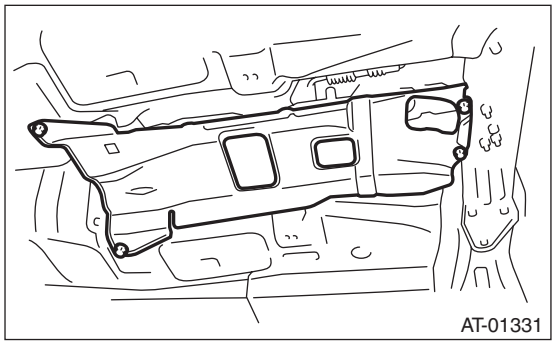

20) Remove the steering shaft universal joint. <Ref. to PS-21, REMOVAL, Universal Joint.>
21) Remove the ATF drain plug to drain ATF.

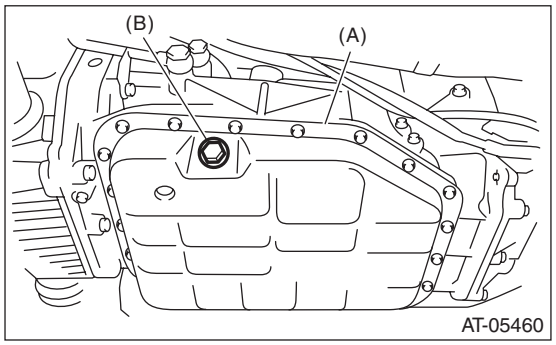

(A) Oil pan
(B) ATF drain plug

22) Remove the oil charge pipe.

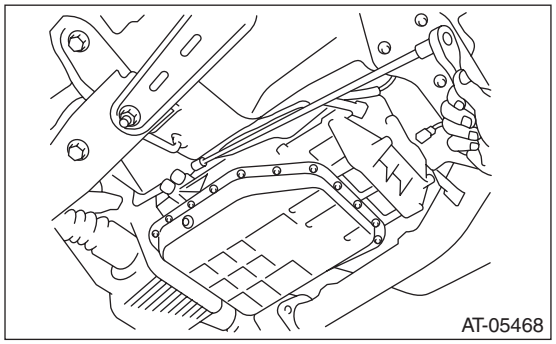

23) Disconnect the connector from turbine speed sensor 1.

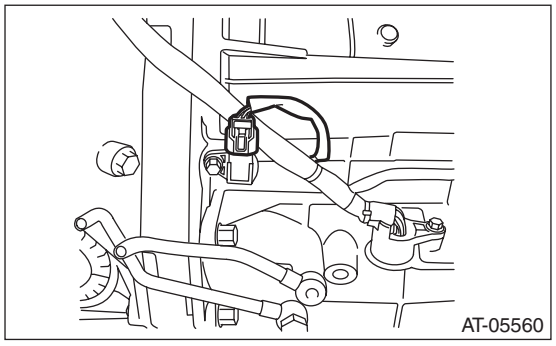

24) Remove the turbine speed sensor 1 mounting bolt and rotate the sensor by 180°.

CAUTION:
Failure to follow this procedure may cause the interference between vehicle body and sensor while removing/installing transmission, and resulting in damage.

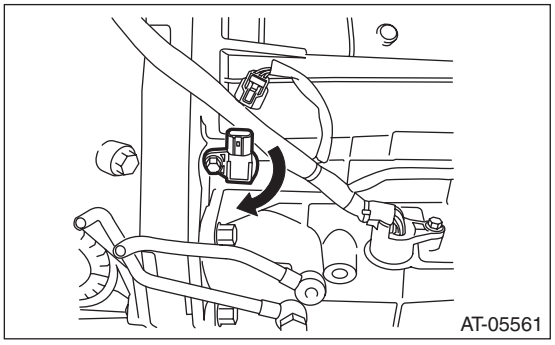

25) Remove the propeller shaft. <Ref. to DS-10, REMOVAL, Propeller Shaft.>
26) Remove the select cable. <Ref. to CS-42, REMOVAL, Select Cable.>
27) Disconnect the ATF AT inlet and outlet hoses from the ATF cooler inlet and outlet pipes.

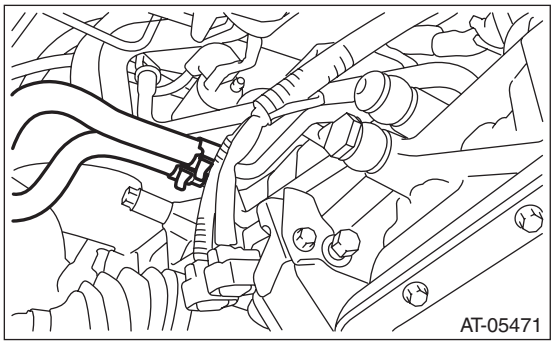

28) Remove the front stabilizer bracket. <Ref. to FS-29, REMOVAL, Front Stabilizer.>
29) Remove the bolts which secure front ball joint to the housing. <Ref. to FS-32, REMOVAL, Front Ball Joint.>
30) Pull out the drive shaft from transmission.
31) Lower the vehicle.

32) Remove the nuts connecting the engine mounting and the transmission main mounting bracket.

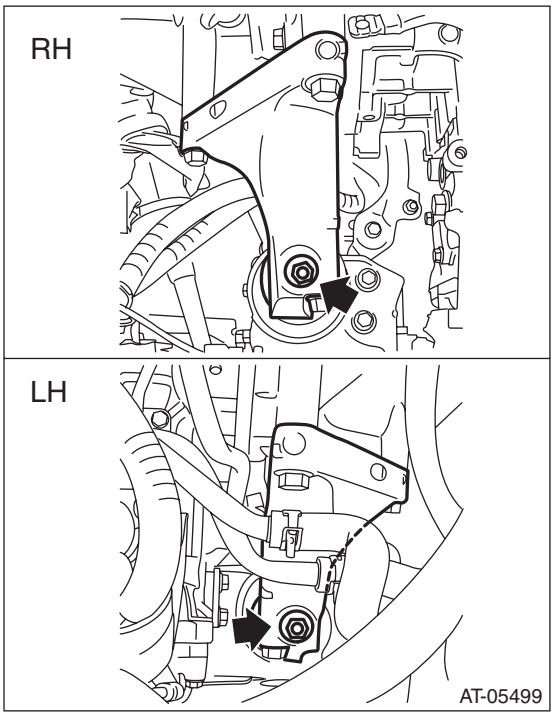

33) Remove the radiator upper brackets.

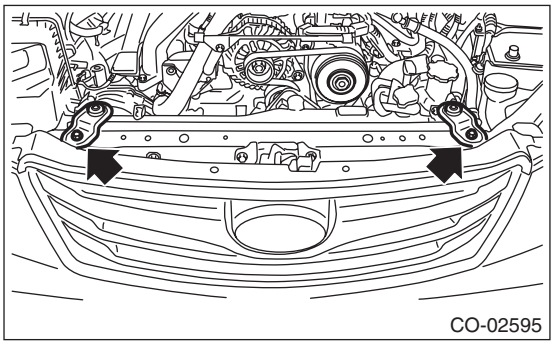

34) Set the ST on the vehicle.

CAUTION:
• Set the ST so that the chain does not contact the sensor and other parts while hanging the engine.
• Set the arms of ST (ENGINE HANGER) at the locations shown in the figure.
ST1 99099AJ000 ENGINE HANGER
ST2 99099AJ010 CHAIN BALANCER

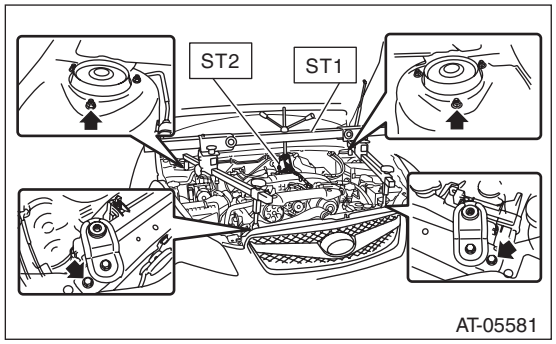

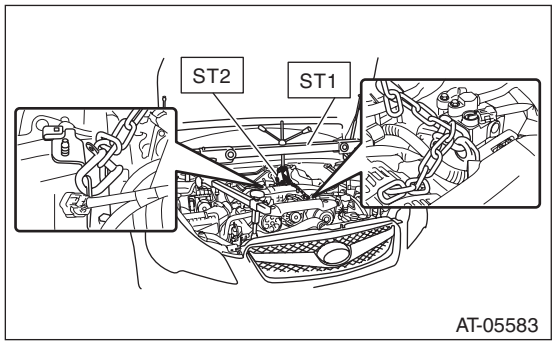

35) Lift up the radiator approximately by 30 mm (1.2 in) and keep the position with cloth or other material placed under the radiator.

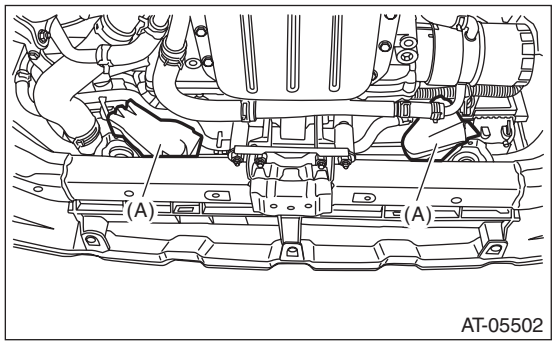

(A) Cloth

36) Lift the engine slightly and remove the engine mounting bolts.

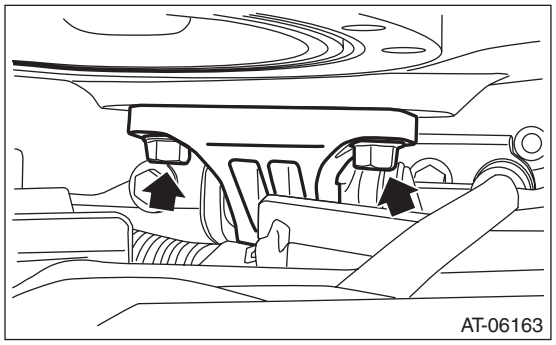

37) Remove the engine mounting nut and bolt to remove the engine mounting.
38) Temporarily attach ST by using two bolts.
ST 41099AJ010 SPECIAL TOOL H6

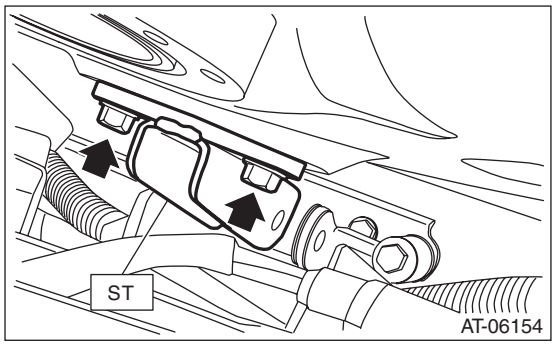

39) Lift up the engine unit high enough to install the bolt and nut to vehicle.

CAUTION:
• Do not lift up higher than enough level to install the ST to avoid damage to the hoses and pipes inside the engine room.
• Do not tighten the nuts excessively, or the engine mounting bracket may be deformed.

NOTE:
• If it is difficult to pull out the stud bolt from transmission mounting bracket, shake the engine unit slightly while lifting up.
40) Tighten the mounting bolts on the engine side.

Tightening torque:
25 N·m (2.5 kgf-m, 18.4 ft-lb)

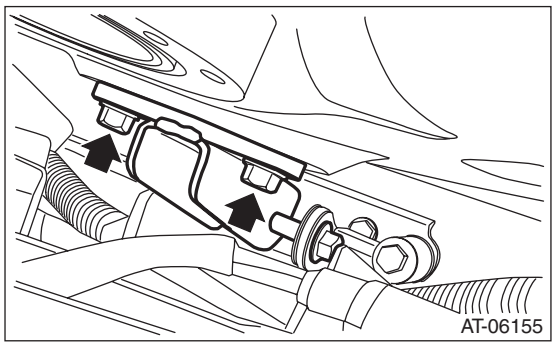

41) Remove the ST (ENGINE HANGER).

42) Remove the transmission main mounting bracket.

NOTE:
First, remove the transmission mounting bracket on the right side of vehicle, and then tilt the engine unit to remove the left transmission mounting bracket.

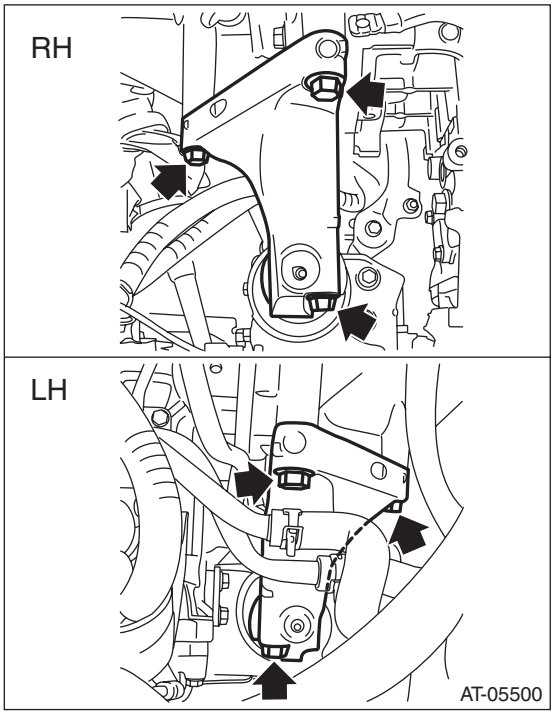

43) Remove the transmission mounting bolt (upper side).

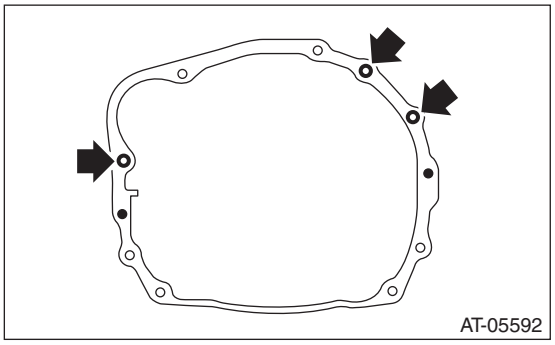

44) Set the ST (ENGINE HANGER) again to loosen the chain sling.
45) Lift up the vehicle.

46) Set the transmission jack under the transmission.

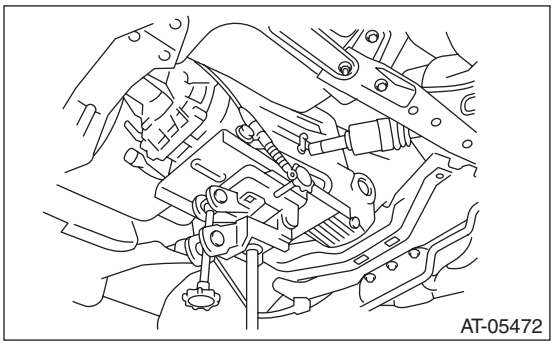

47) Remove the rear crossmember from the vehicle.

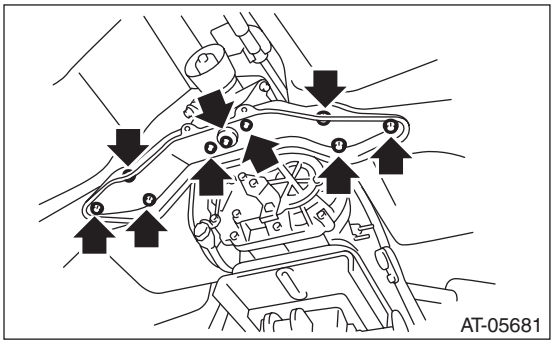

48) Lower the transmission rear end (dust cover rear end).

CAUTION:
When lowering the transmission rear end, be careful not to let the converter case and steering mechanical parts contact each other.

NOTE:
Lower the transmission rear end by approx. 80 mm (3.1 in) (reference).
49) Rotate the handle of ST (ENGINE HANGER) to apply tension to the chain sling.
50) Remove the transmission mounting bolt and nut (lower side).

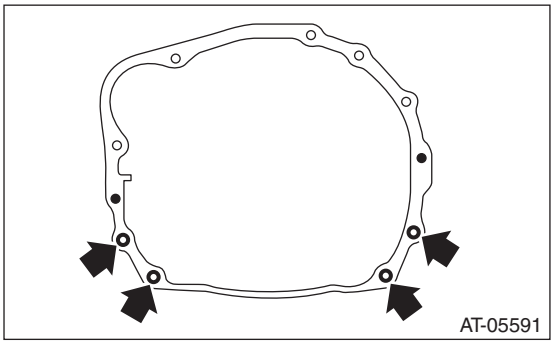

51) Remove the transmission.
52) Remove the cushion rubber from the transmission.

B: INSTALLATION

1) Replace the front differential side retainer oil seal.
(1) Remove the oil seal by using flat tip screwdriver etc.
(2) Using the ST, install the oil seal by lightly tapping with a plastic hammer.

NOTE:
- Use a new oil seal.
- Check the identification marks (L, R) during installation not to mix up the oil seal RH and LH.
- Apply gear oil to the oil seal lips.
- Be sure to replace the differential side retainer oil seal whenever the front drive shaft is removed from the transmission.

ST 18675AA000 DIFFERENTIAL SIDE OIL SEAL INSTALLER

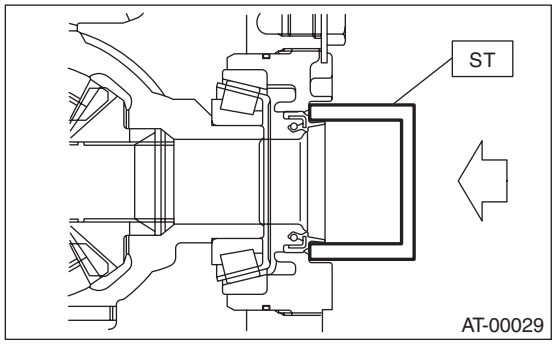

2) Attach the ST to converter case.
ST 498277200 STOPPER SET

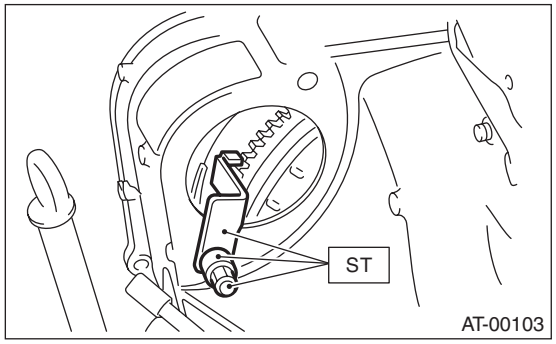

3) Install the cushion rubber on the transmission.

Tightening torque:
40 N·m (4.1 kgf-m, 29.5 ft-lb)

4) Tap the transmission hanger in the rear side of transmission with a rubber hammer to bend it until it is in close contact with the transmission case.

CAUTION:
Do not apply excessive load or impact to the transmission case.

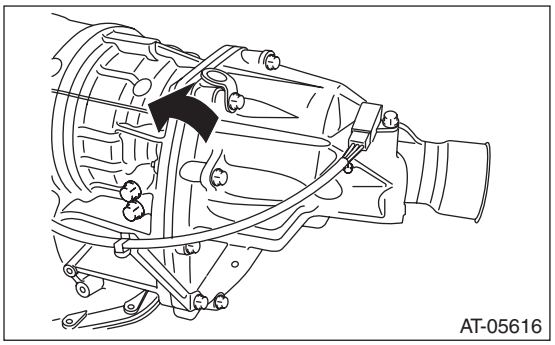

5) While lifting up the transmission gradually using transmission jack, install the transmission to the engine.

CAUTION:
This operation requires at least two persons.

NOTE:
Keep the engine level.

6) Install the engine mounting bolt and nut (lower side).

Tightening torque:
50 N·m (5.1 kgf-m, 36.9 ft-lb)

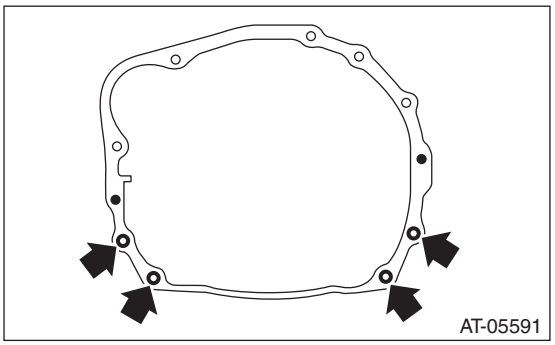

7) Install the transmission rear crossmember.

Tightening torque:
T1: 35 N·m (3.6 kgf-m, 25.8 ft-lb)
T2: 75 N·m (7.6 kgf-m, 55.3 ft-lb)

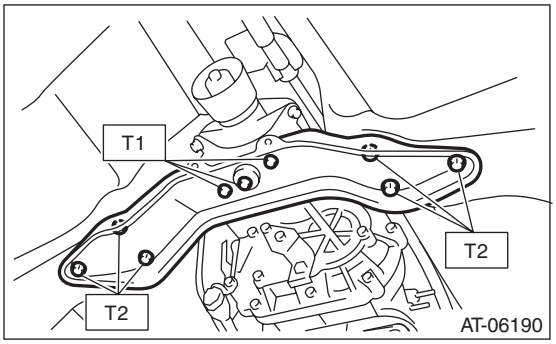

8) Remove the transmission jack.
9) Lower the vehicle.
10) Install the engine mounting bolt (upper side).

Tightening torque:
50 N·m (5.1 kgf-m, 36.9 ft-lb)

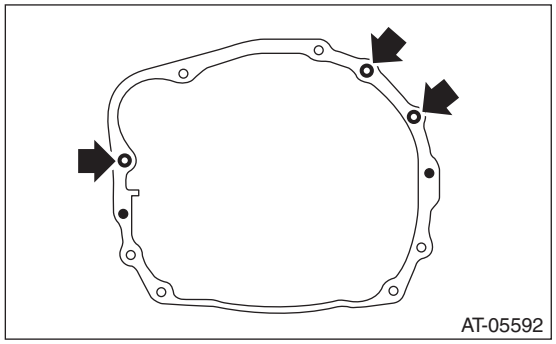

11) Remove the ST (ENGINE HANGER).
12) Install the transmission main mounting bracket.

NOTE:
Install to the left side of vehicle first.

Tightening torque:
75 N·m (7.6 kgf-m, 55.3 ft-lb)

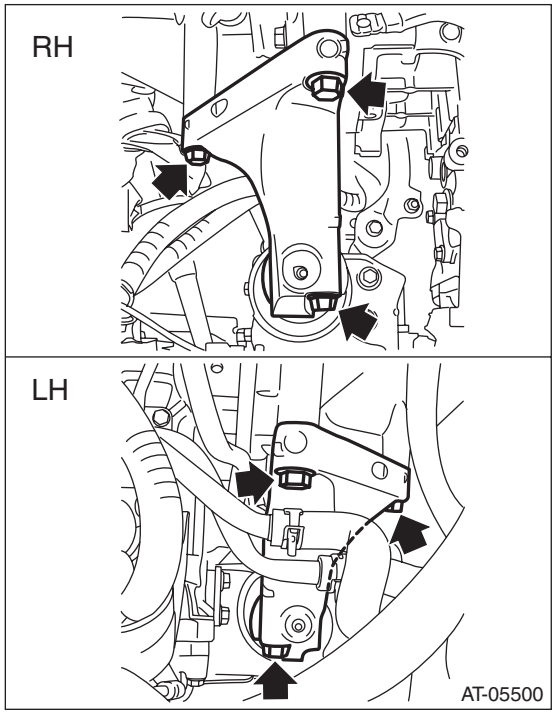

13) Attach the ST (ENGINE HANGER) again.
14) Remove the ST and install the front cushion rubber.

(1) Lift up the radiator approximately by 30 mm and keep the position with cloth or other material placed under the radiator.

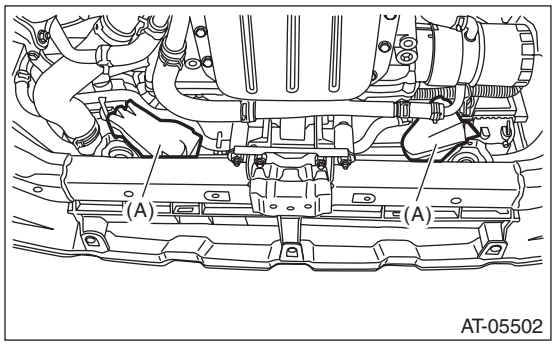

(A) Cloth

(2) Remove the bolts from ST (SPECIAL TOOL H6).

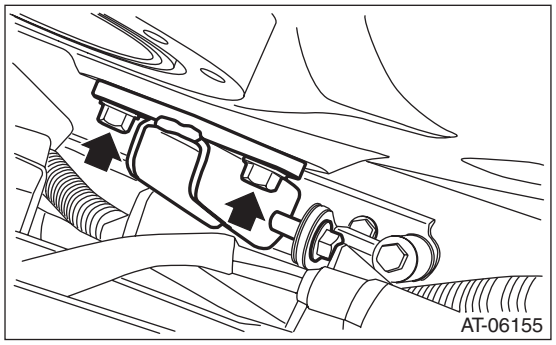

(3) Remove the bolt and nut to remove ST (SPECIAL TOOL H6).
(4) Temporarily attach the front cushion rubber with bolts.

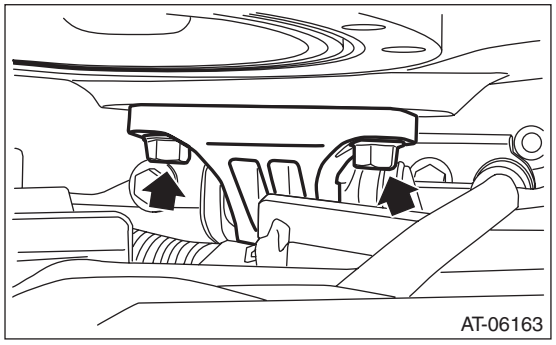

(5) Install the bolt and nut to the front engine mounting.

NOTE:
Always start tightening from the bolts on the engine side.

Tightening torque:
T1: 25 N·m (2.5 kgf-m, 18.4 ft-lb)
T2: 45 N·m (4.6 kgf-m, 33.2 ft-lb)

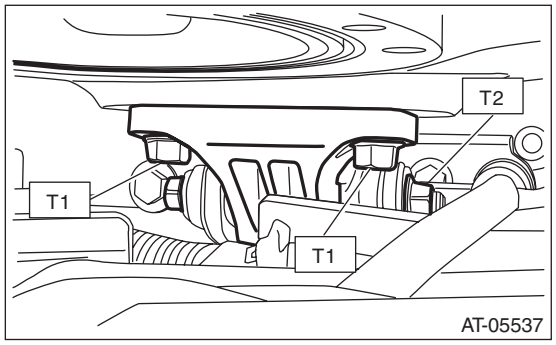

(6) Insert the lower radiator pin into the radiator lower cushion on the vehicle side, and install the radiator upper bracket.

Tightening torque:
12 N·m (1.2 kgf-m, 8.9 ft-lb)

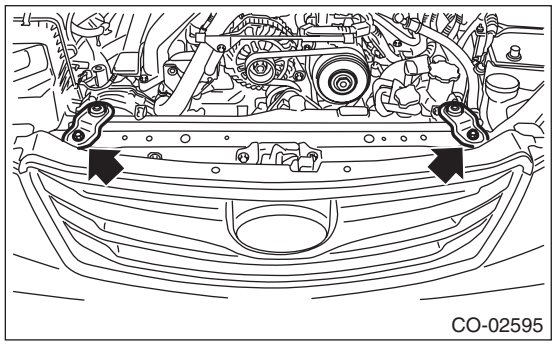

15) Remove the ST from the vehicle.

16) Tighten the nuts connecting the engine mounting and the transmission main mounting bracket.

Tightening torque:
45 N·m (4.6 kgf-m, 33.2 ft-lb)

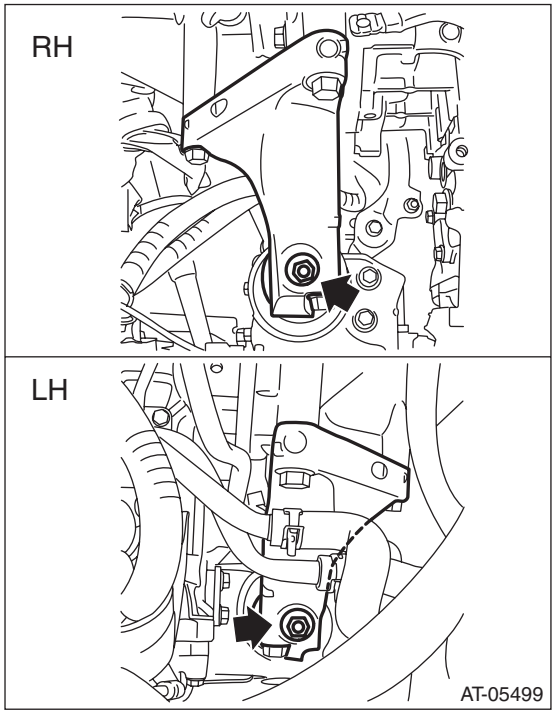

17) Remove the ST from converter case.
18) Install the torque converter to drive plate.

CAUTION:
• Be careful not to drop bolts into the converter housing.
• Be careful not to damage the mounting bolts.
(1) Install the bolts which connect the torque converter and drive plate.
(2) Install all four bolts by rotating the crank pulley a little at a time.
(3) Install the service hole plug.

Tightening torque:
25 N·m (2.5 kgf-m, 18.4 ft-lb)

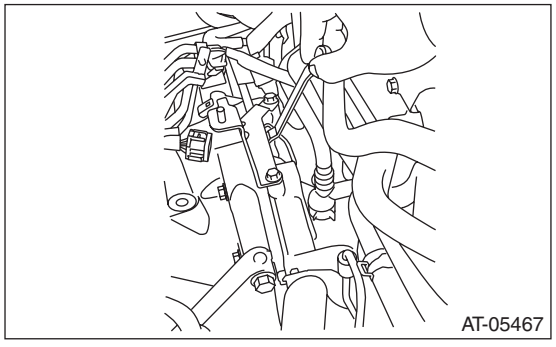

19) Install the starter. <Ref. to SC(H4SO)-10, INSTALLATION, Starter.>
20) Lift up the vehicle.

21) Set the ST to side retainer.
ST 28399SA010 OIL SEAL PROTECTOR

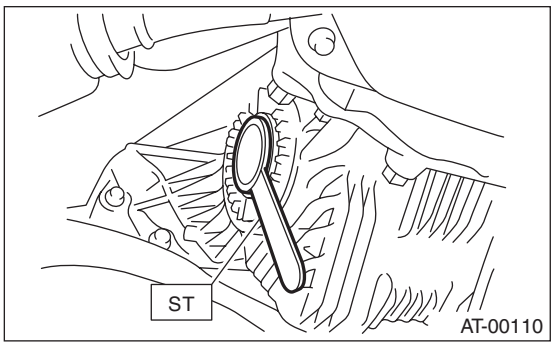

22) Install the front drive shaft into the transmission. <Ref. to DS-49, INSTALLATION, Front Drive Shaft.>
23) Connect the ATF AT inlet and outlet hoses to the ATF cooler inlet and outlet pipes.

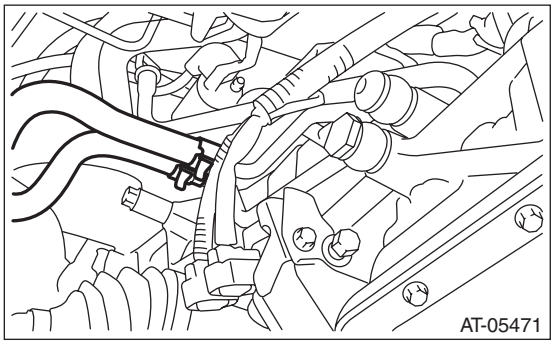

24) Insert the ball joint into housing. <Ref. to FS-33, INSTALLATION, Front Ball Joint.>
25) Install the front stabilizer bracket. <Ref. to FS-31, INSTALLATION, Front Stabilizer.>
26) Install the propeller shaft. <Ref. to DS-11, INSTALLATION, Propeller Shaft.>
27) Install the select cable. <Ref. to CS-46, INSTALLATION, Select Cable.>
28) Rotate the turbine speed sensor 1 by 180° and then restore it to the original position to install. Then, connect the connector.

Tightening torque:
7 N·m (0.7 kgf-m, 5.2 ft-lb)

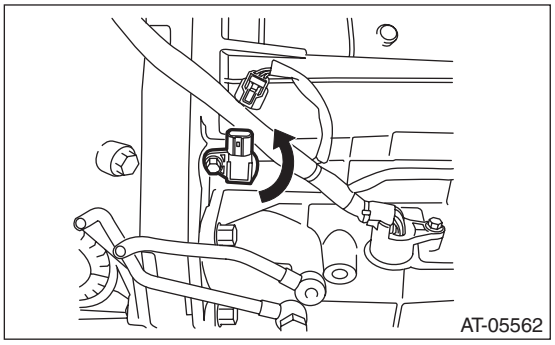

29) Install the oil charge pipe.

NOTE:
Use new bolts and O-rings.

Tightening torque:
38 N·m (3.9 kgf-m, 28.0 ft-lb)

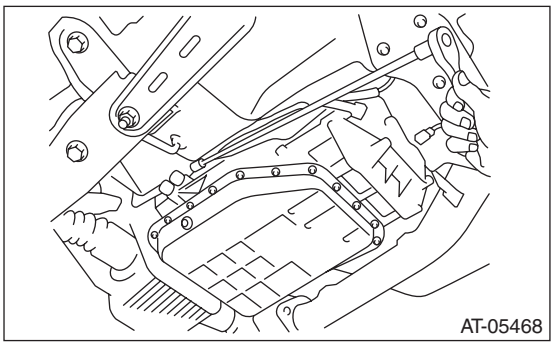

30) Install the steering shaft universal joint. <Ref. to PS-22, INSTALLATION, Universal Joint.>
31) Install the heat shield cover. <Ref. to EI-168, INSTALLATION, Heat Shield Cover.>
32) Install the front and rear exhaust pipe. <Ref. to EX(H6DO)-6, INSTALLATION, Front Exhaust Pipe.> <Ref. to EX(H6DO)-8, INSTALLATION, Rear Exhaust Pipe.>
33) Install the under cover. <Ref. to EI-35, INSTALLATION, Front Under Cover.>
34) Lower the vehicle.
35) Remove the ST and install the engine hanger rear.

Tightening torque:
19 N·m (1.9 kgf-m, 14.0 ft-lb)

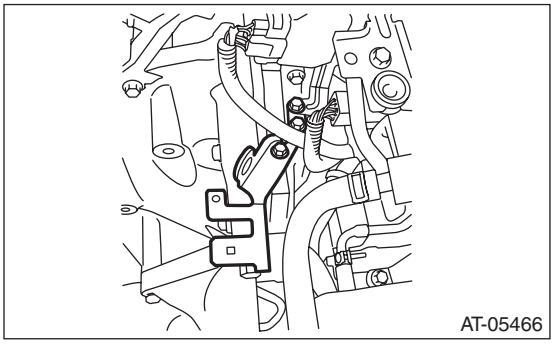

36) Connect the following connectors.

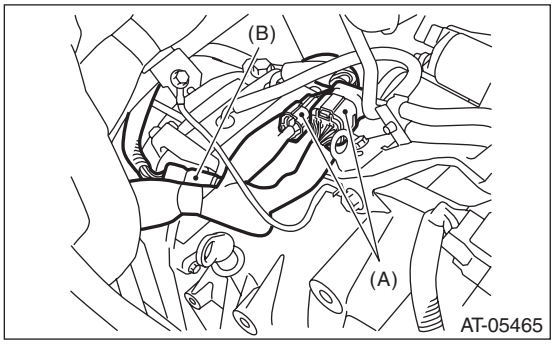

(A) Transmission harness connectors
(B) Front oxygen (A/F) sensor

37) Install the transmission radio ground terminal.

Tightening torque:
13 N·m (1.3 kgf-m, 9.6 ft-lb)

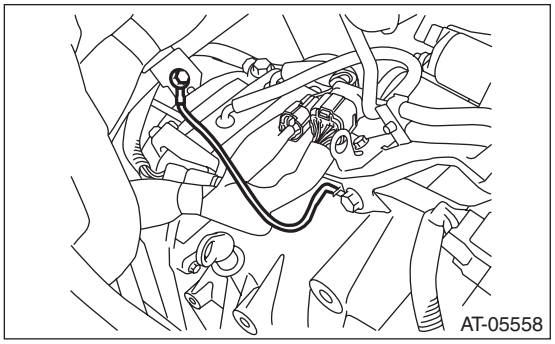

38) Pour ATF from the oil charge pipe. <Ref. to 5AT-29, Automatic Transmission Fluid.>
39) Install the air breather hose. <Ref. to 5AT-61, INSTALLATION, Air Breather Hose.>
40) Install the air intake boot. <Ref. to IN(H6DO)-7, INSTALLATION, Air Intake Boot.>
41) Attach the grille bracket.

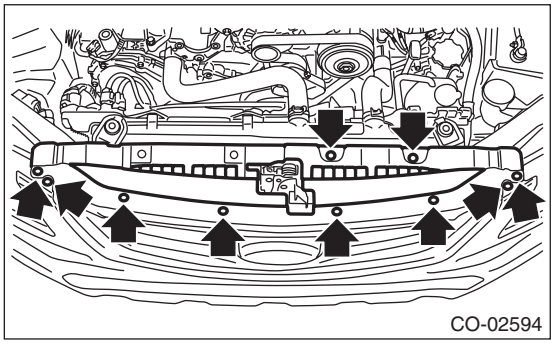

42) Install the air intake duct. <Ref. to IN(H6DO)-8, INSTALLATION, Air Intake Duct.>
43) Install the collector cover.
44) Connect the battery ground terminal.
45) Check the ATF level. <Ref. to 5AT-29, INSPECTION, Automatic Transmission Fluid.>
46) Perform Clear Memory 2 operation. <Ref. to 5AT(diag)-21, Clear Memory Mode.>
47) Perform the diagnosis again. <Ref. to 5AT(diag)-23, Learning Control.>
48) Perform the inspection at the end of repair work, and make sure there is no faulty as below;
- Excessive shift shock
- Oil leakage from the transmission body, etc.
- Occurrence of noise caused by interference etc.

10.Transmission Mounting System

A: REMOVAL

1. TRANSMISSION REAR CROSSMEMBER & REAR CUSHION RUBBER

1) Disconnect the ground cable from battery.
2) Lift up the vehicle.
3) Remove the under cover. <Ref. to EI-35, REMOVAL, Front Under Cover.>
4) Remove the front exhaust pipe. <Ref. to EX(H6DO)-5, REMOVAL, Front Exhaust Pipe.>
5) Remove the heat shield cover.

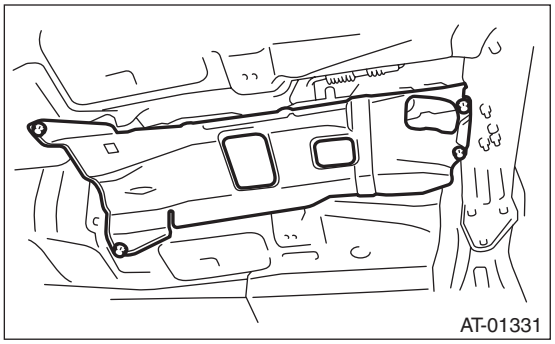
AT-01331

6) Set the transmission jack under transmission. Make sure that the support plate of transmission jack does not touch the oil pan.
7) Remove the transmission rear crossmember.

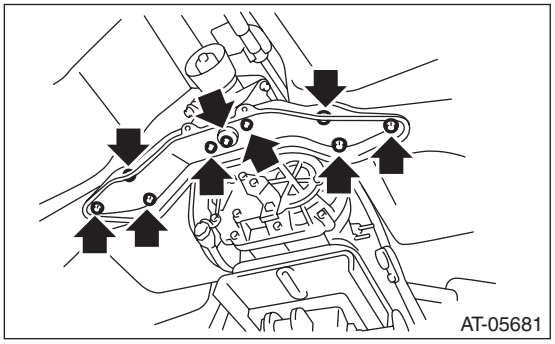
AT-05681

8) Remove the rear cushion rubber.

B: INSTALLATION

1. TRANSMISSION REAR CROSSMEMBER & REAR CUSHION RUBBER

1) Install the rear cushion rubber.

Tightening torque:
40 N·m (4.1 kgf-m, 29.5 ft-lb)
2) Install the crossmember.

Tightening torque:
T1: 35 N·m (3.6 kgf-m, 25.8 ft-lb)
T2: 75 N·m (7.6 kgf-m, 55.3 ft-lb)

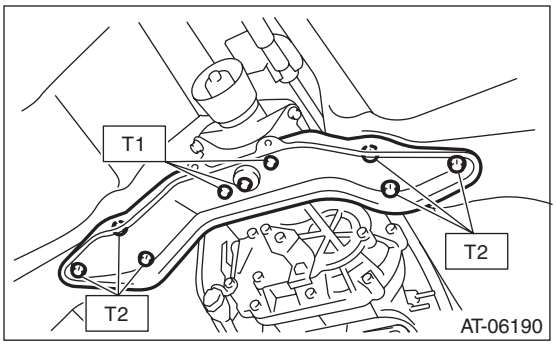

3) Remove the transmission jack.
4) Install the heat shield cover. <Ref. to EI-168, INSTALLATION, Heat Shield Cover.>
5) Install the front exhaust pipe. <Ref. to EX(H6DO)-6, INSTALLATION, Front Exhaust Pipe.>
6) Install the under cover. <Ref. to EI-35, INSTALLATION, Front Under Cover.>
7) Lower the vehicle.
8) Connect the battery ground terminal.

C: INSPECTION

Repair or replace parts if the results of the inspection below are not satisfied.

1. TRANSMISSION REAR CROSSMEMBER & REAR CUSHION RUBBER

Check crossmember for bends or damage. Check that there are no cracks, hardening, or damage on cushion rubbers.

11.Extension Case Oil Seal

A: INSPECTION

Inspect there is no ATF leakage from the joint of transmission and propeller shaft. If a leak is found, replace the oil seal. <Ref. to 5AT-48, REPLACEMENT, Extension Case Oil Seal.>

B: REPLACEMENT

1) Lift up the vehicle.
2) Clean the transmission exterior.
3) Remove the ATF drain plug to drain ATF.

CAUTION:
• Directly after the vehicle has been running or the engine has been long idle running, the ATF is hot. Be careful not to burn yourself.
• Be careful not to spill the ATF on the exhaust pipe to prevent it from emitting smoke or causing fire. If ATF is spilled on the exhaust pipe, wipe it off completely.
4) Tighten the ATF drain plug.

NOTE:
Use a new gasket.

Tightening torque:
20 N·m (2.0 kgf-m, 14.8 ft-lb)

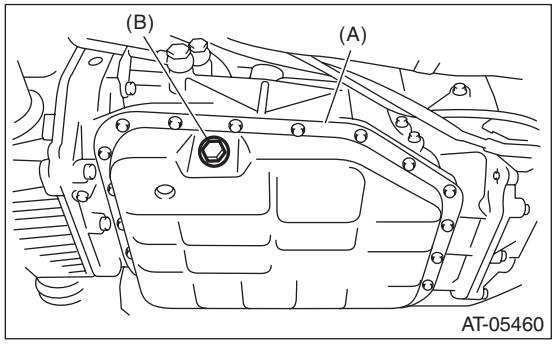

(A) Oil pan
(B) ATF drain plug

5) Remove the rear exhaust pipe. <Ref. to EX(H6DO)-8, REMOVAL, Rear Exhaust Pipe.>
6) Remove the heat shield cover.

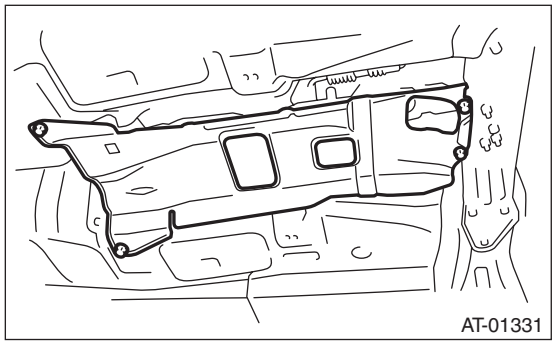

7) Remove the propeller shaft. <Ref. to DS-10, REMOVAL, Propeller Shaft.>
8) Using the ST, remove the oil seal.
ST 398527700 PULLER ASSY
9) Using the ST, install the oil seal.
ST 498057300 INSTALLER
10) Install the propeller shaft. <Ref. to DS-11, INSTALLATION, Propeller Shaft.>
11) Install the heat shield cover. <Ref. to EI-168, INSTALLATION, Heat Shield Cover.>
12) Install the rear exhaust pipe. <Ref. to EX(H6DO)-8, INSTALLATION, Rear Exhaust Pipe.>
13) Lower the vehicle.
14) Pour ATF from the oil charge pipe. <Ref. to 5AT-29, Automatic Transmission Fluid.>
15) Check the level and leaks of the ATF. <Ref. to 5AT-29, INSPECTION, Automatic Transmission Fluid.>

12. Differential Side Retainer Oil Seal

A: INSPECTION

Check for leakage of gear oil from differential side retainer oil seal part. If there is an oil leak, replace the oil seal.

B: REPLACEMENT

1) Disconnect the ground cable from battery.
2) Lift up the vehicle.
3) Remove the under cover. <Ref. to EI-35, REMOVAL, Front Under Cover.>
4) Remove the front exhaust pipe. <Ref. to EX(H6DO)-5, REMOVAL, Front Exhaust Pipe.>
5) Drain the differential gear oil by removing drain plug using TORX® bit T70.

CAUTION:
• Immediately after the vehicle has been running or after idling for a long time, the differential gear oil will be hot. Be careful not to burn yourself.
• Be careful not to spill the differential gear oil on exhaust pipe to prevent it from emitting smoke or fire. If differential gear oil is spilled on the exhaust pipe, wipe it off completely.

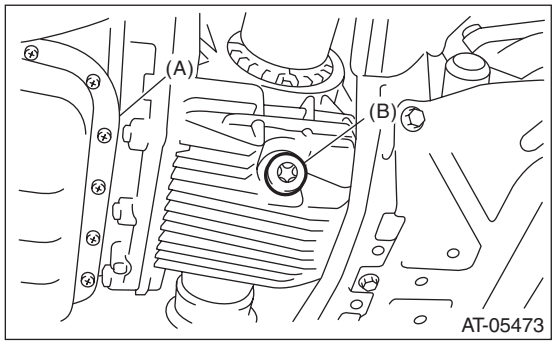

(A) Oil pan
(B) Drain plug

6) Tighten the drain plug.

NOTE:
Use a new gasket.

Tightening torque:
70 N·m (7.1 kgf-m, 51.6 ft-lb)

7) Separate the front drive shaft from the transmission. <Ref. to DS-48, REMOVAL, Front Drive Shaft.>
8) Remove the differential side retainer oil seal using driver wrapped with vinyl tape etc.
9) Using the ST, install the differential side retainer oil seal by lightly tapping with a plastic hammer.

NOTE:
• Use a new oil seal.
• Apply differential gear oil to the oil seal lip.
• Check the identification marks (L, R) during installation not to mix up the oil seal RH and LH.

ST 18675AA000 DIFFERENTIAL SIDE OIL SEAL INSTALLER

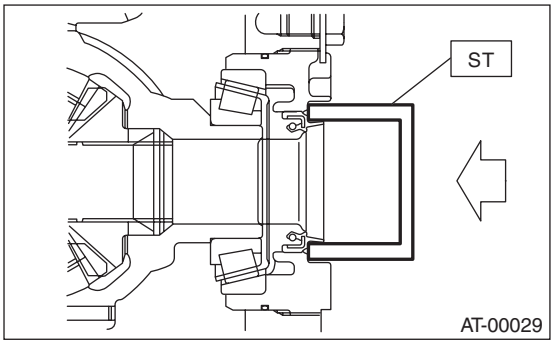

10) Install the front drive shaft. <Ref. to DS-49, INSTALLATION, Front Drive Shaft.>
11) Install the front exhaust pipe. <Ref. to EX(H6DO)-6, INSTALLATION, Front Exhaust Pipe.>
12) Install the under cover. <Ref. to EI-35, INSTALLATION, Front Under Cover.>
13) Lower the vehicle.
14) Connect the battery ground terminal.
15) Pour differential gear oil into the level gauge hole. <Ref. to 5AT-31, Differential Gear Oil.>
16) Check the level of differential gear oil. <Ref. to 5AT-31, INSPECTION, Differential Gear Oil.>

13.Inhibitor Switch

A: INSPECTION

Inhibitor switch cannot be checked, because the inhibitor switch is installed on control valve assembly. When a malfunction occurs, refer to 5AT (diag) section. <Ref. to 5AT(diag)-36, DTC P0705 TRANSMISSION RANGE SENSOR CIRCUIT (PRNDL INPUT), Diagnostic Procedure with Diagnostic Trouble Code (DTC).>

14.Front Vehicle Speed Sensor

A: REMOVAL

1) Remove the transmission assembly from the vehicle. <Ref. to 5AT-37, REMOVAL, Automatic Transmission Assembly.>
2) Disconnect the rear vehicle speed sensor connector.

NOTE:
Secure the transmission harness to the transmission body using wire etc.

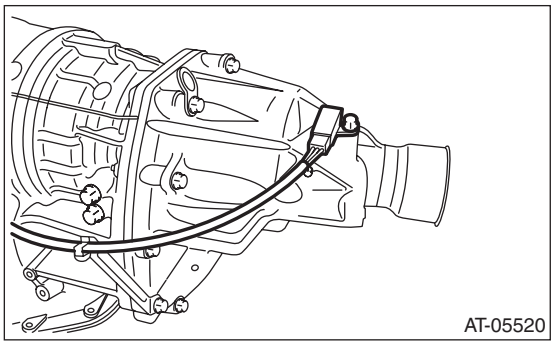
AT-05520

3) Remove the extension case.

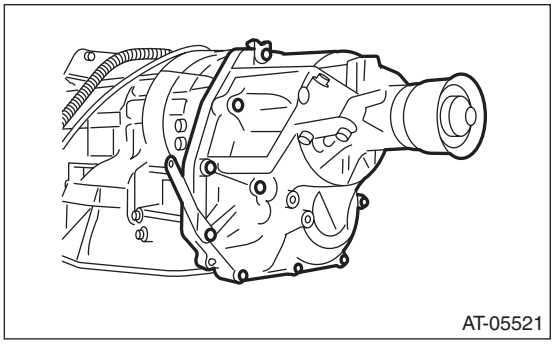
AT-05521

4) Remove the center differential carrier. <Ref. to 5AT-74, REMOVAL, Center Differential Carrier.>
5) Lay along the transmission case, and then remove the oil pan.
6) Remove the old gasket on the oil pan and transmission case completely.
7) Disconnect the front vehicle speed sensor connector.

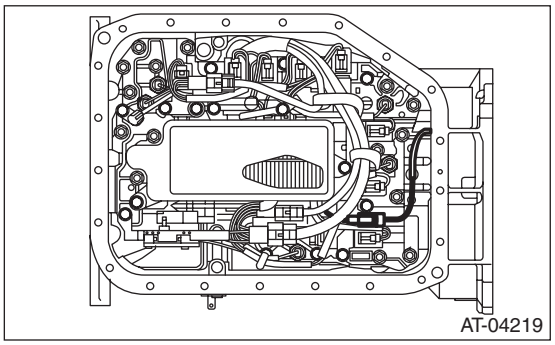
AT-04219

8) Remove the front vehicle speed sensor securing bolt.

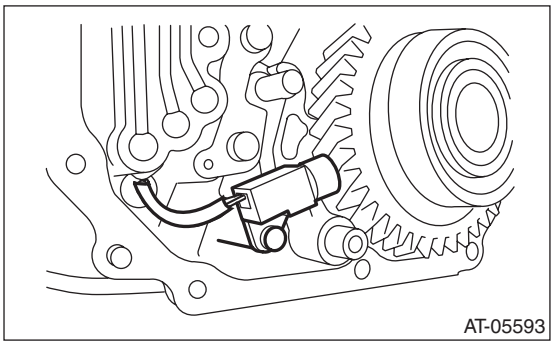
AT-05593

9) Remove the front vehicle speed sensor through the hole of AT transmission main case.

B: INSTALLATION

1) Install the front vehicle speed sensor.

Tightening torque:
7 N·m (0.7 kgf-m, 5.2 ft-lb)

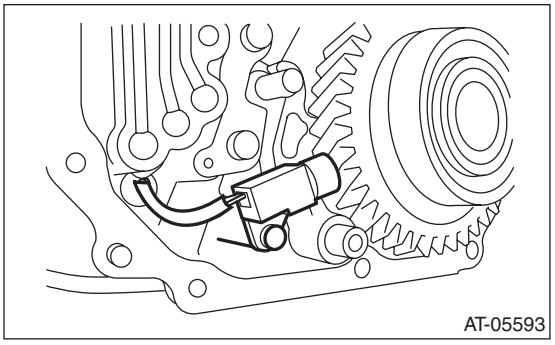
AT-05593

2) Connect the front vehicle speed sensor connector.

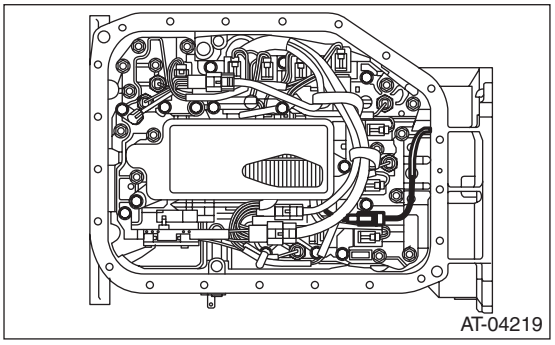
AT-04219

3) Apply proper amount of liquid gasket to the entire oil pan mating surface.

Liquid gasket:
THREE BOND 1217B (Part No. K0877YA020) or equivalent

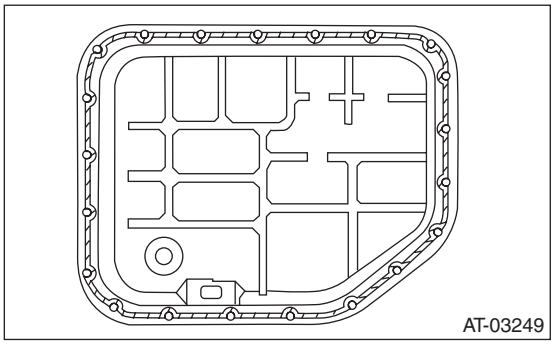

4) Install the oil pan by equally tightening the bolts.

Tightening torque:
5 N·m (0.5 kgf-m, 3.7 ft-lb)

5) Install the center differential carrier. <Ref. to 5AT-74, INSTALLATION, Center Differential Carrier.>
6) Install the extension case.

NOTE:
Use a new gasket.

Tightening torque:
25 N·m (2.5 kgf-m, 18.4 ft-lb)

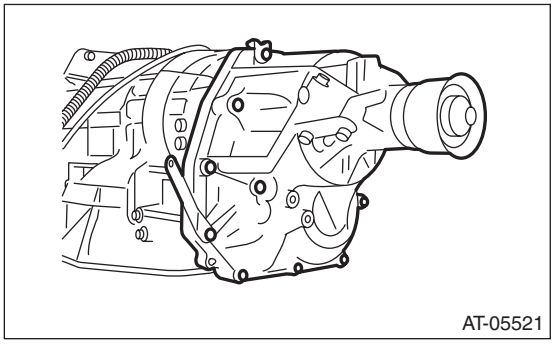

7) Connect the rear vehicle speed sensor connector.

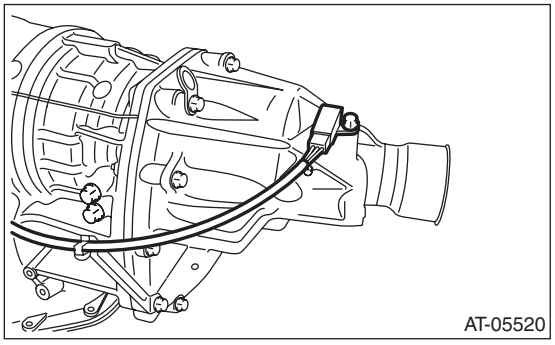

8) Install the transmission assembly to the vehicle. <Ref. to 5AT-42, INSTALLATION, Automatic Transmission Assembly.>
9) Pour ATF from the oil charge pipe. <Ref. to 5AT-29, Automatic Transmission Fluid.>
10) Check the level and leaks of ATF. <Ref. to 5AT-29, INSPECTION, Automatic Transmission Fluid.>

15.Rear Vehicle Speed Sensor

A: REMOVAL

1) Disconnect the ground cable from battery.
2) Lift up the vehicle.
3) Clean the transmission exterior.
4) Remove the bolts which connect the front exhaust pipe and rear exhaust pipe.
5) Remove the bolts holding the heat shield cover, and move the heat shield cover to the rear.
6) Disconnect the rear vehicle speed sensor connector.

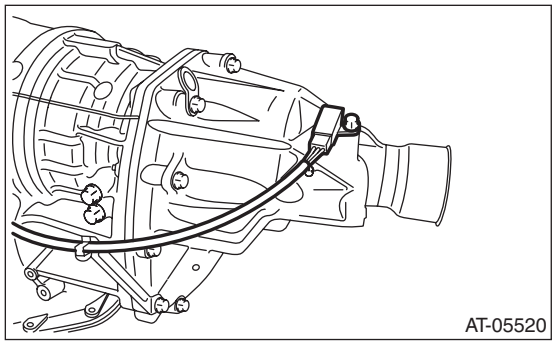

7) Remove the rear vehicle speed sensor.

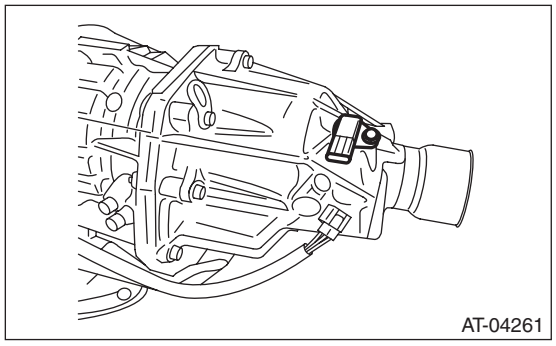

B: INSTALLATION

1) Install the rear vehicle speed sensor.

NOTE:
Use new O-rings.

Tightening torque:
7 N·m (0.7 kgf-m, 5.2 ft-lb)

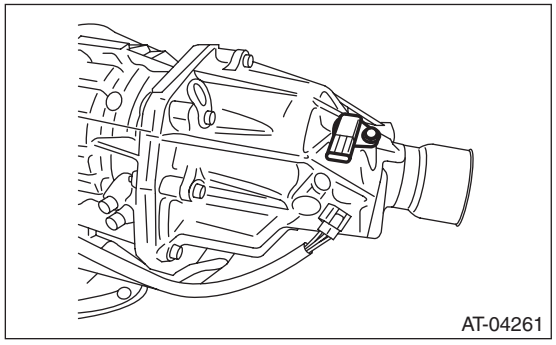

2) Connect the rear vehicle speed sensor connector.

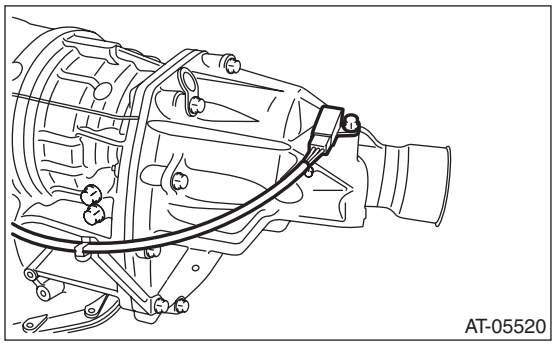

3) Install the heat shield cover. <Ref. to EI-168, INSTALLATION, Heat Shield Cover.>
4) Tighten the bolts which connect the front exhaust pipe and rear exhaust pipe.

Tightening torque:
18 N·m (1.8 kgf-m, 13.3 ft-lb)

5) Lower the vehicle.

16.Turbine Speed Sensor 1

A: REMOVAL

1) Disconnect the ground cable from battery.
2) Lift up the vehicle.
3) Remove the front exhaust pipe. <Ref. to EX(H6DO)-5, REMOVAL, Front Exhaust Pipe.>
4) Disconnect the turbine speed sensor 1 connector.

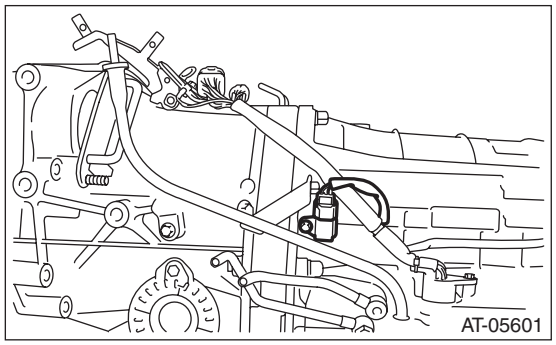

5) Remove the turbine speed sensor 1.

B: INSTALLATION

1) Install the turbine speed sensor 1.

NOTE:
Use new O-rings.

Tightening torque:
7 N·m (0.7 kgf-m, 5.2 ft-lb)

2) Connect the turbine speed sensor 1 connector.

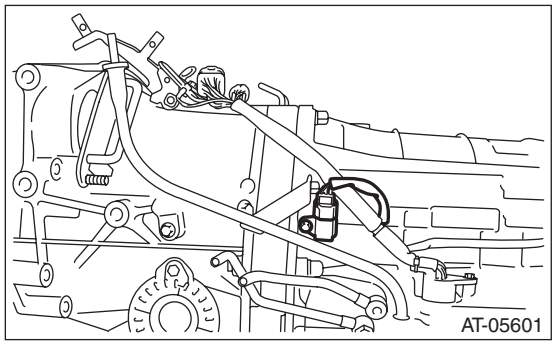

3) Install the front exhaust pipe. <Ref. to EX(H6DO)-6, INSTALLATION, Front Exhaust Pipe.>
4) Lower the vehicle.
5) Connect the battery ground terminal.

17.Control Valve Body

A: REMOVAL

1) Disconnect the ground cable from battery.
2) Lift up the vehicle.
3) Clean the transmission exterior.
4) Remove the ATF drain plug to drain ATF.

CAUTION:
Directly after the vehicle has been running or the engine has been long idle running, the ATF is hot. Be careful not to burn yourself.
5) Tighten the ATF drain plug.

NOTE:
Use a new gasket.

Tightening torque:
20 N·m (2.0 kgf-m, 14.8 ft-lb)
6) Remove the oil pan.

CAUTION:
Be sure to prevent the entering of dust and other foreign matters into oil pan.
7) Remove the magnet.

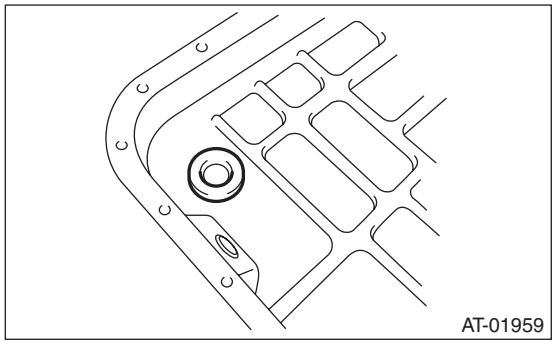

8) Clean the magnet.
9) Completely remove the remaining liquid gasket on the transmission case and oil pan.
10) Disconnect the control valve connector and front vehicle speed sensor connector.

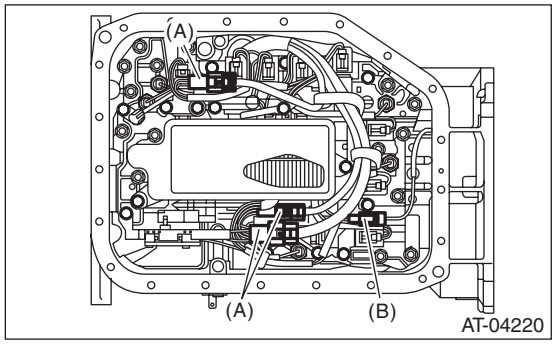

(A) Control valve connector
(B) Front vehicle speed sensor connector

11) Remove the control valve body.

NOTE:
The control valve body is replaced as an assembly only, because it is a non-disassembly part.

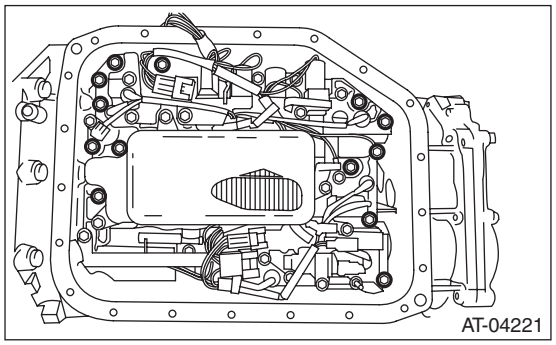

B: INSTALLATION

1) Check the control valve body for dust and other foreign matter.
2) Install the control valve body to transmission by equally tightening the bolts.

Tightening torque:
8 N·m (0.8 kgf-m, 5.9 ft-lb)

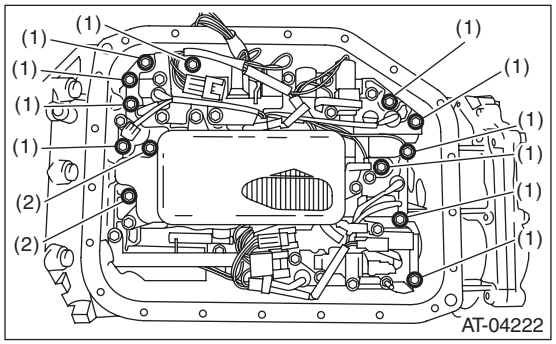

(1) 30 mm (1.18 in)
(2) 40 mm (1.57 in)

3) Connect the control valve connector and front vehicle speed sensor connector.

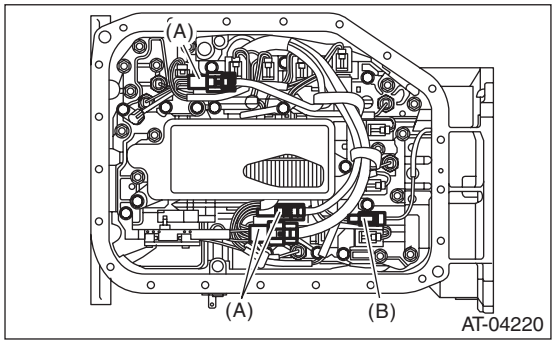

(A) Control valve connector
(B) Front vehicle speed sensor connector

4) Attach the magnet at the specified position of the oil pan.

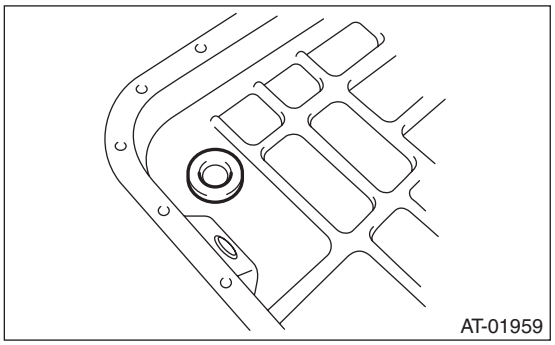

5) Apply liquid gasket to the oil pan.

Liquid gasket:
THREE BOND 1217B (Part No. K0877YA020) or equivalent

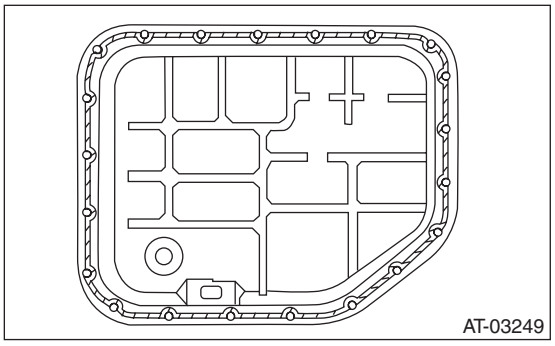

6) Install the oil pan by equally tightening the bolts.

Tightening torque:
5 N·m (0.5 kgf-m, 3.7 ft-lb)

7) Lower the vehicle.
8) Connect the ground cable to battery.
9) Pour ATF through the oil charge pipe. <Ref. to 5AT-29, Automatic Transmission Fluid.>
10) Check the ATF level. <Ref. to 5AT-29, INSPECTION, Automatic Transmission Fluid.>
11) Perform Clear Memory 2 operation. <Ref. to 5AT(diag)-21, Clear Memory Mode.>
12) Perform learning operation. <Ref. to 5AT(diag)-23, Learning Control.>
13) Perform the inspection at the end of repair work, and make sure there is no faulty as below;

- Excessive shift shock
- Oil leakage from the transmission body, etc.
- Occurrence of noise caused by interference etc.

C: INSPECTION

Check each parts for holes, damages or other foreign matters.

18.Transmission Control Module (TCM)

A: REMOVAL

1) Disconnect the ground cable from battery.
2) Remove the instrument panel lower cover. <Ref. to EI-64, REMOVAL, Instrument Panel Lower Cover.>
3) Disconnect the connector from TCM.

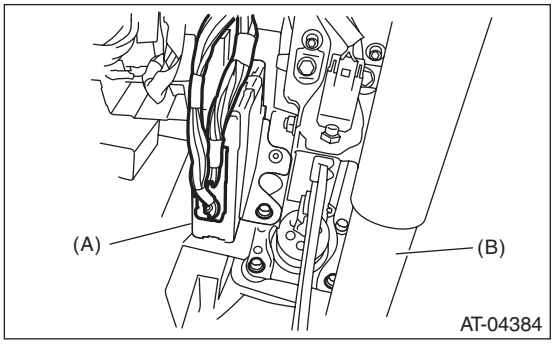

(A) Transmission control module (TCM)
(B) Steering column

4) Remove the TCM.

NOTE:
Replace the TCM and bracket as a set.

B: INSTALLATION

1) Install the TCM to the bracket.

CAUTION:
Do not remove the TCM after installed to the bracket, or the bracket and TCM may be damaged. If installed by mistake, the part must be replaced with a new part.
2) Install the TCM.

Tightening torque:
7.5 N·m (0.8 kgf-m, 5.5 ft-lb)

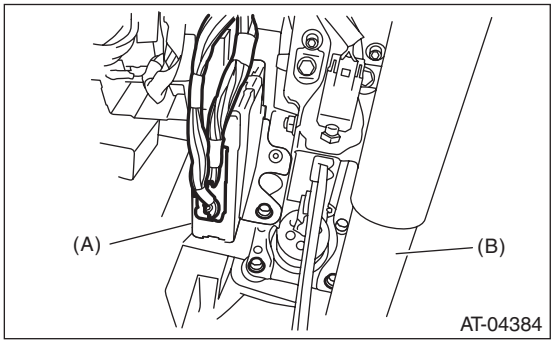

(A) Transmission control module (TCM)
(B) Steering column

3) Connect the connector to TCM.
4) Install the instrument panel lower cover. <Ref. to EI-65, INSTALLATION, Instrument Panel Lower Cover.>
5) Perform Clear Memory 2 operation. <Ref. to 5AT(diag)-21, Clear Memory Mode.>
6) Perform learning operation. <Ref. to 5AT(diag)-23, Learning Control.>

19.ATF Cooler Pipe and Hose

A: REMOVAL

1) Remove the collector cover.

NOTE:
Follow the steps below when removing the collector cover.
(1) Pull up the two points at the rear (A).
(2) Pull up the two points at the front (B) while moving them forward.

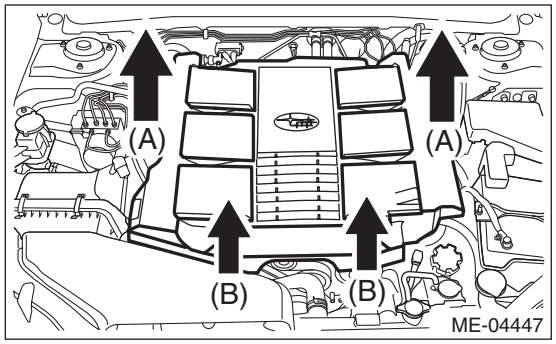

2) Remove the battery.
3) Lift up the vehicle.
4) Remove the under cover. <Ref. to EI-35, REMOVAL, Front Under Cover.>
5) Remove the front exhaust pipe. <Ref. to EX(H6DO)-5, REMOVAL, Front Exhaust Pipe.>
6) Disconnect the ATF radiator inlet and outlet hoses from the radiator.

NOTE:
• Do not use a screwdriver or other pointed tools.
• If it is hard to remove the ATF radiator hose, wrap the hose with cloth to protect it from damage, turn it with pliers, and pull it straight out by hand.

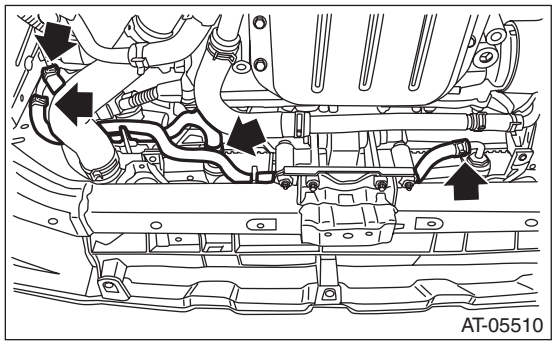

7) Disconnect the ATF AT inlet and outlet hoses from the ATF cooler pipe.

NOTE:
• Do not use a screwdriver or other pointed tools.
• If it is hard to remove the ATF AT hose, wrap the hose with cloth to protect it from damage, turn it with pliers, and pull it straight out by hand.

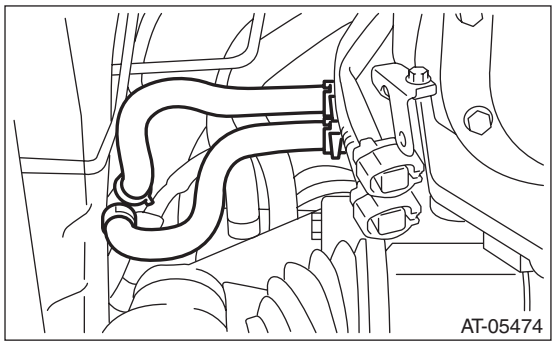

8) Remove the oil charge pipe. <Ref. to 5AT-62, REMOVAL, Oil Charge Pipe.>
9) Remove the ATF cooler inlet pipe and outlet pipe from the transmission.

NOTE:
When disconnecting the ATF cooler outlet pipe, be careful not to lose the ball and spring used together with the retaining screw.

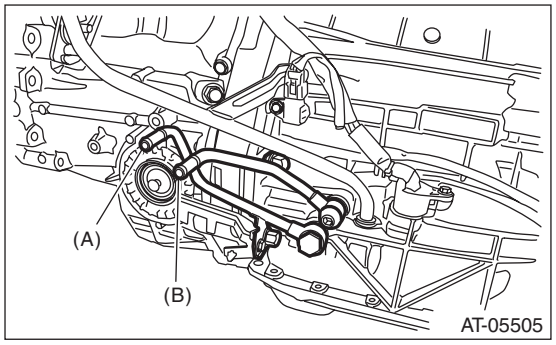

(A) ATF cooler outlet pipe
(B) ATF cooler inlet pipe

10) Lower the vehicle.

11) Remove the ATF cooler pipe assembly mounting bolt.

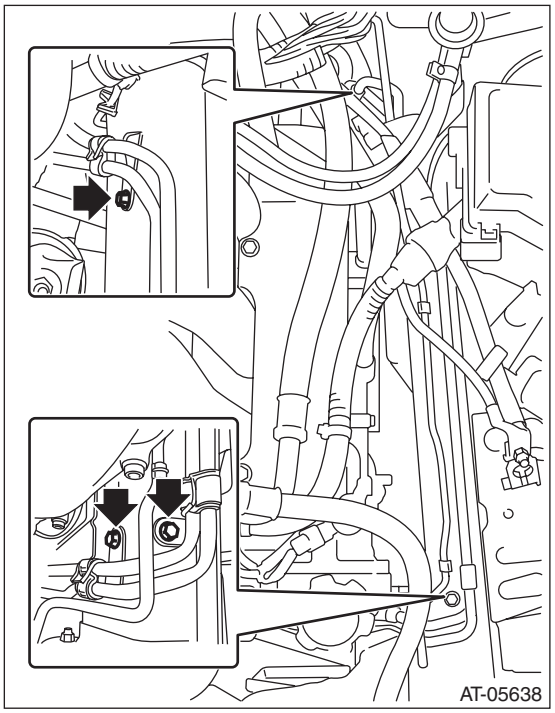

12) Remove the engine coolant reservoir tank. <Ref. to CO(H6DO)-25, REMOVAL, Reservoir Tank.>
13) Detach the A/C pipe from clip.

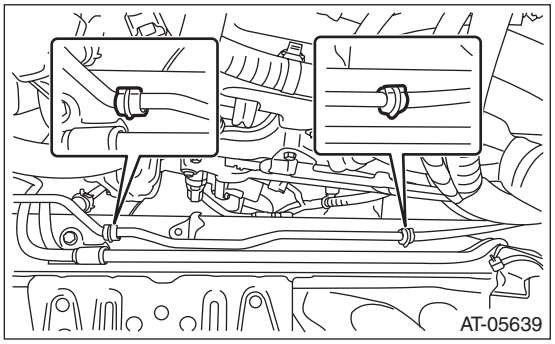

14) Remove the ATF cooler pipe from frame.

CAUTION:
Be careful not to bend A/C pipe.

B: INSTALLATION

1) Install the ATF cooler pipe to frame.

CAUTION:
Be careful not to bend the A/C pipe, when installing the ATF cooler pipe.

Tightening torque:
7.5 N·m (0.8 kgf-m, 5.5 ft-lb)

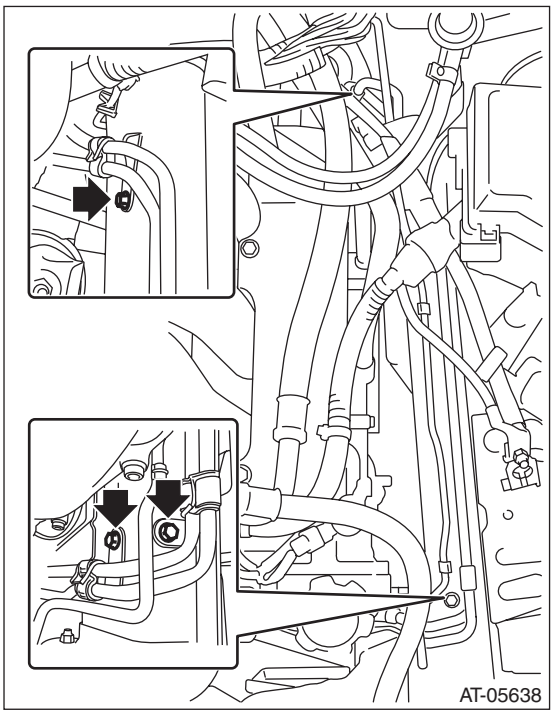

2) Install the A/C pipe to clip.
3) Install the engine coolant reservoir tank. <Ref. to CO(H6DO)-25, INSTALLATION, Reservoir Tank.>
4) Lift up the vehicle.
5) Install the ATF cooler inlet and outlet pipes with new gaskets.

NOTE:
Use a new bolt for the converter case joint.

Tightening torque:
T1: 38 N·m (3.9 kgf-m, 28.0 ft-lb)
T2: 40 N·m (4.1 kgf-m, 29.5 ft-lb)
T3: 45 N·m (4.6 kgf-m, 33.2 ft-lb)

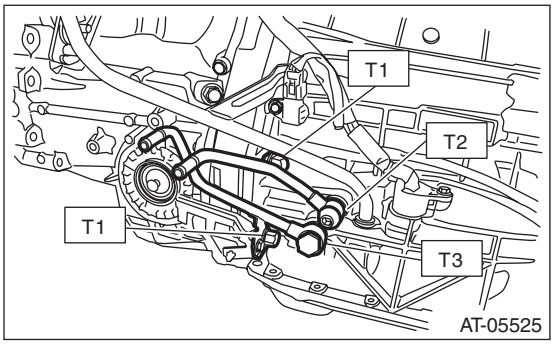

6) Install the oil charge pipe. <Ref. to 5AT-62, INSTALLATION, Oil Charge Pipe.>

7) Connect the ATF AT inlet and outlet hoses to the ATF cooler pipe on the transmission side.

NOTE:
• Use a new ATF AT hose.
• Install so that the ATF AT hose is not folded over, excessively bent or twisted.
• Insert the ATF AT hose into the specified position.

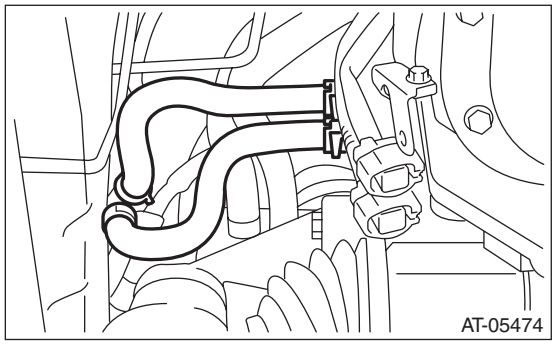

8) Connect the ATF radiator inlet and outlet hoses to the ATF cooler pipe on radiator side.

NOTE:
• Use a new ATF radiator hose.
• Install so that the ATF radiator hose is not folded over, excessively bent or twisted.
• Insert the ATF radiator hose into the specified position.

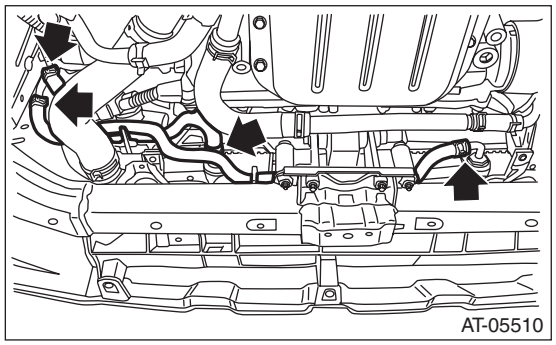

9) Install the front exhaust pipe. <Ref. to EX(H6DO)-6, INSTALLATION, Front Exhaust Pipe.>
10) Install the under cover. <Ref. to EI-35, INSTALLATION, Front Under Cover.>
11) Lower the vehicle.
12) Install the battery.
13) Check the ATF level. <Ref. to 5AT-29, INSPECTION, Automatic Transmission Fluid.>

NOTE:
Make sure there are no ATF leaks in joints between the transmission, radiator, ATF cooler pipes, and ATF cooler hoses.
14) Install the collector cover.

C: INSPECTION

Repair or replace each faulty ATF hose, ATF cooler pipes, clamps, and washers found in the inspection below.
1) Check for ATF leaks in joints between the transmission, radiator, ATF cooler pipes, and ATF hoses.
2) Check the clamp for deformation.
3) Lightly bend the ATF hose and check for cracks on the surface or other damages.
4) Pinch the ATF hose with your fingers and check for poor elasticity.
5) Check for peeling, cracks, and deformation at the tip of the ATF hose.

20.Air Breather Hose

A: REMOVAL

1) Remove the collector cover.

NOTE:
Follow the steps below when removing the collector cover.
(1) Pull up the two points at the rear (A).
(2) Pull up the two points at the front (B) while moving them forward.

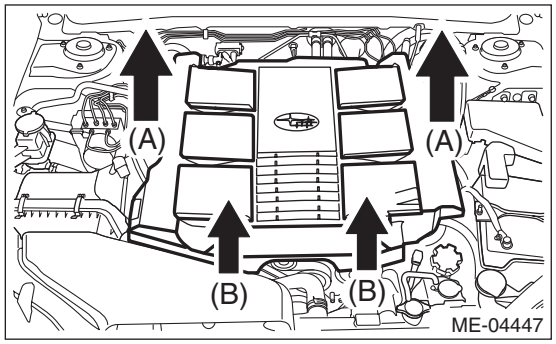

2) Remove the air intake boot. <Ref. to IN(H6DO)-7, REMOVAL, Air Intake Boot.>
3) Remove the air breather hose.

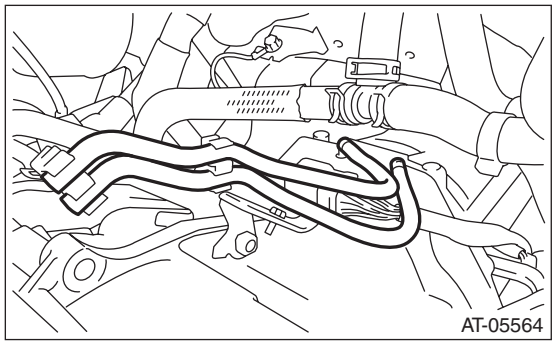

B: INSTALLATION

1) Install the air breather hose.

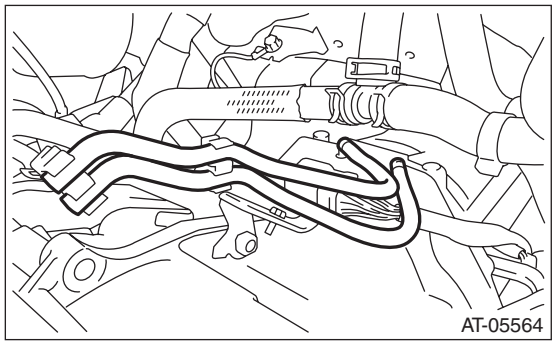

2) Install the air intake boot. <Ref. to IN(H6DO)-7, INSTALLATION, Air Intake Boot.>
3) Install the collector cover.

C: INSPECTION

Make sure the air breather hose is not cracked or clogged.

21.Oil Charge Pipe

A: REMOVAL

1) Disconnect the ground cable from battery.
2) Lift up the vehicle.
3) Remove the under cover. <Ref. to EI-35, REMOVAL, Front Under Cover.>
4) Remove the front exhaust pipe. <Ref. to EX(H6DO)-5, REMOVAL, Front Exhaust Pipe.>
5) Disconnect the connector from turbine speed sensor 1.
6) Remove the oil charge pipe, and then remove the O-ring from flange side.

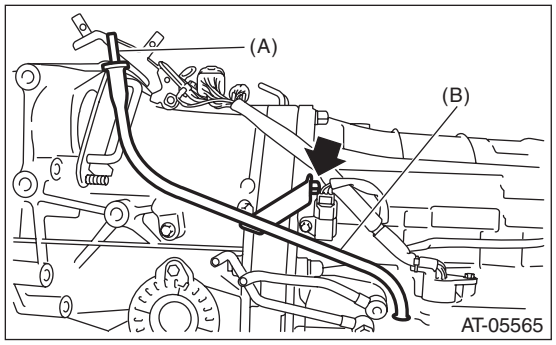

(A) ATF level gauge
(B) Oil charge pipe

B: INSTALLATION

1) Install the oil charge pipe.

NOTE:
Use new gaskets and O-rings.

Tightening torque:
38 N·m (3.9 kgf-m, 28.0 ft-lb)

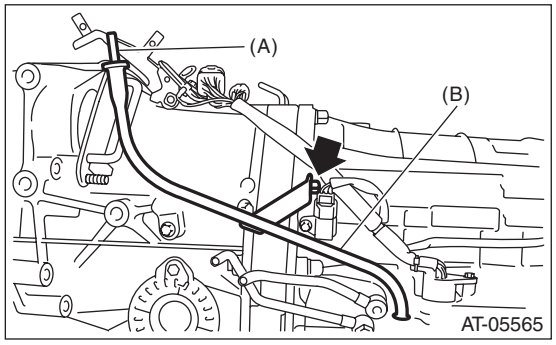

(A) ATF level gauge
(B) Oil charge pipe

2) Connect the connector to the turbine speed sensor 1.
3) Install the front exhaust pipe. <Ref. to EX(H6DO)-6, INSTALLATION, Front Exhaust Pipe.>
4) Install the under cover. <Ref. to EI-35, INSTALLATION, Front Under Cover.>
5) Lower the vehicle.
6) Connect the ground cable to battery.

C: INSPECTION

- Make sure the oil charge pipe is not deformed or damaged.
- Check that there are no ATF leaks from the O-ring.

22.Torque Converter Assembly

A: REMOVAL

1) Remove the transmission assembly from vehicle body. <Ref. to 5AT-37, REMOVAL, Automatic Transmission Assembly.>
2) Pull out the torque converter and oil pump shaft horizontally.

NOTE:
• Be sure not to scratch the inside of bushing in oil pump shaft.
• Be careful that the oil pump shaft may drawn out simultaneously.

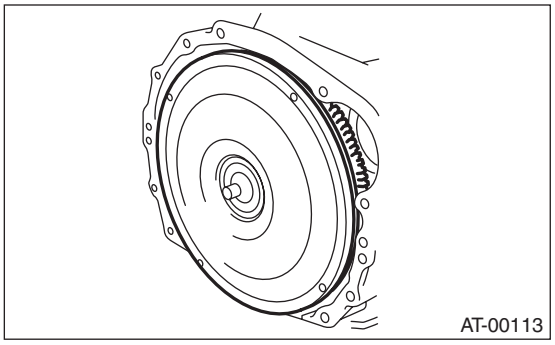

3) Remove the oil pump shaft from torque converter as necessary.

B: INSTALLATION

1) When the oil pump shaft is removed, install the shaft to torque converter.

NOTE:
• Use a new circlip.
• Make sure the circlip is firmly inserted.
2) Install the oil pump shaft to torque converter, and then make sure that the clip is secured on groove.
3) Apply ATF to the revolving and sliding surface of the oil pump shaft.
4) Holding the torque converter assembly by hand, lightly rotate it to engage with the oil pump rotor.
5) Check the protruding dimension of the torque converter assembly.

Dimension A:
8 mm (0.31 in) or less

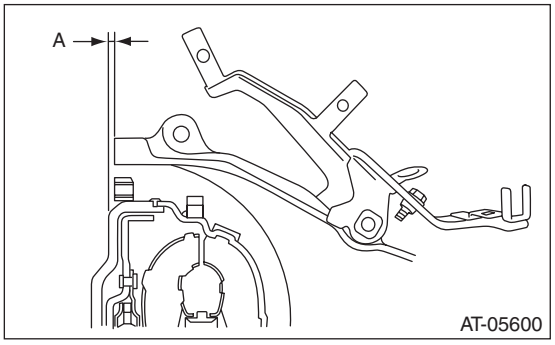

6) Install the transmission assembly to the vehicle. <Ref. to 5AT-42, INSTALLATION, Automatic Transmission Assembly.>

C: INSPECTION

Make sure the ring gear and protrusion of torque converter end are not deformed or damaged.

23.Drive Plate

A: REMOVAL

1) Remove the transmission assembly from the vehicle. <Ref. to 5AT-37, REMOVAL, Automatic Transmission Assembly.>
2) Use the ST to lock the crankshaft, and remove the drive plate.
ST 498497100 CRANKSHAFT STOPPER

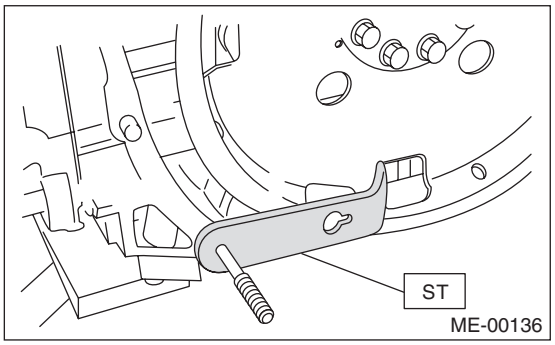

B: INSTALLATION

1) Temporarily tighten the drive plate.
2) Using the ST, lock the crankshaft.
ST 498497100 CRANKSHAFT STOPPER

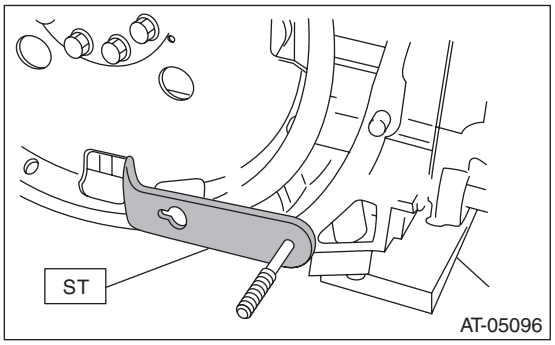

3) Tighten the drive plate mounting bolt.

NOTE:
Tighten the drive plate mounting bolts gradually. Each bolt should be tightened in a crisscross order.

Tightening torque:
90 N·m (9.2 kgf-m, 66.4 ft-lb)

4) Install the transmission assembly to the vehicle. <Ref. to 5AT-42, INSTALLATION, Automatic Transmission Assembly.>

24.Extension Case

A: REMOVAL

1) Remove the transmission assembly. <Ref. to 5AT-37, REMOVAL, Automatic Transmission Assembly.>
2) Disconnect the rear vehicle speed sensor connector.

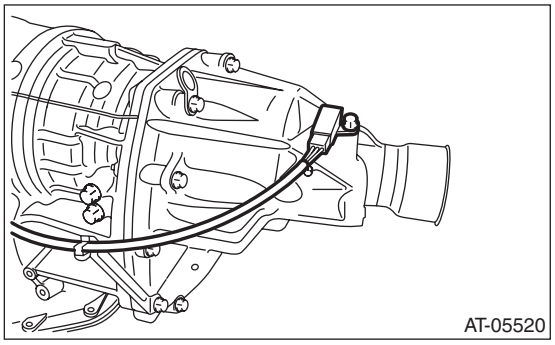

3) Remove the rear vehicle speed sensor.

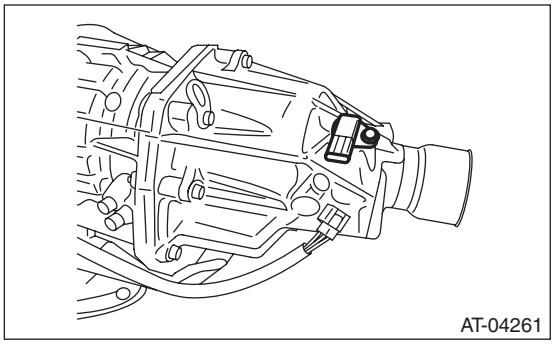

4) Remove the extension case.

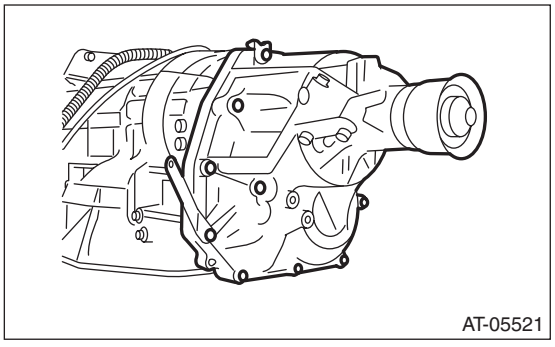

B: INSTALLATION

1) Attach the selected reduction driven gear shim to end surface of reduction driven gear with vaseline. <Ref. to 5AT-72, ADJUSTMENT, Reduction Driven Gear.>
2) Install the extension case.

NOTE:
Use a new gasket.

Tightening torque:
25 N·m (2.5 kgf-m, 18.4 ft-lb)

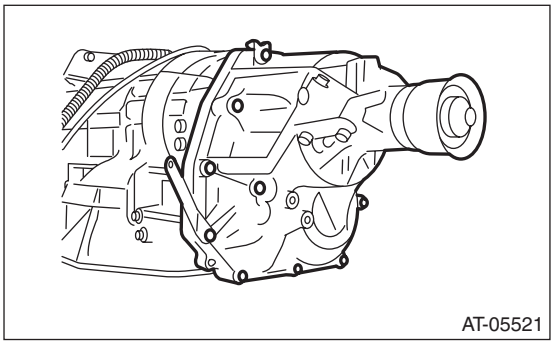

3) Install the rear vehicle speed sensor.

NOTE:
Use new O-rings.

Tightening torque:
7 N·m (0.7 kgf-m, 5.2 ft-lb)

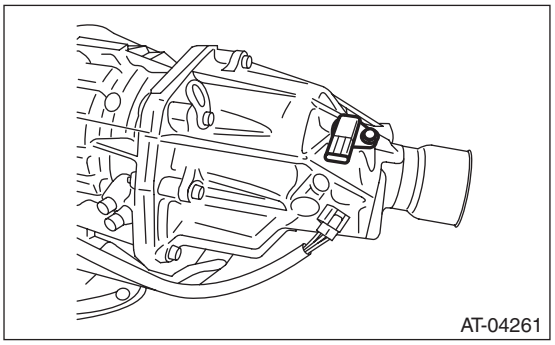

4) Connect the rear vehicle speed sensor connector.

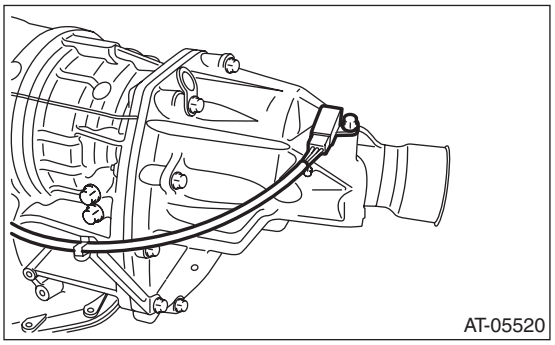

5) Install the transmission assembly. <Ref. to 5AT-42, INSTALLATION, Automatic Transmission Assembly.>

C: DISASSEMBLY

1) Take out the transfer clutch and rear drive shaft by lightly tapping the end of rear drive shaft.

NOTE:
Be careful not to damage the oil seal of the extension.

2) Remove the snap ring using the ST and press.
ST 18762AA000 COMPRESSOR SPECIAL TOOL

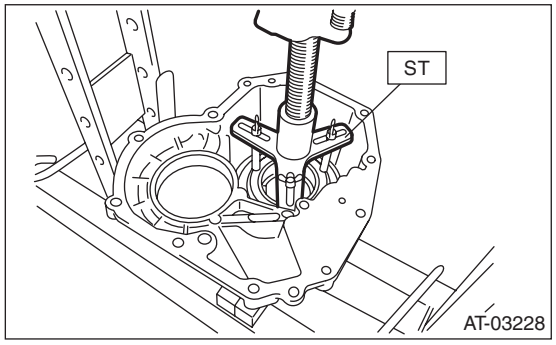

3) Supply compressed air to remove the clutch piston.

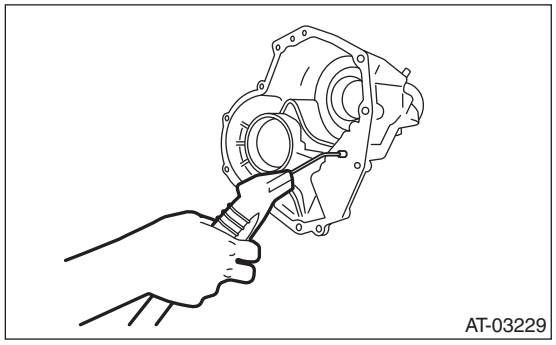

4) Remove the dust cover from extension case.
5) Remove the oil seal from the extension case.

D: ASSEMBLY

1) Press-fit the oil seal using the ST and press.

NOTE:
Use a new oil seal.
ST 498057300 INSTALLER

2) Press-fit the dust cover.
3) Insert the transfer clutch assembly, spring retainer, return spring and clutch spring retainer.

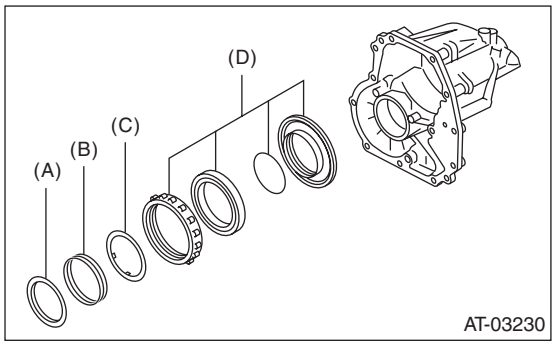

(A) Clutch spring retainer
(B) Return spring
(C) Spring retainer
(D) Transfer clutch piston ASSY

4) Using the ST and compressor, install the snap ring.
ST 18762AA000 COMPRESSOR SPECIAL TOOL

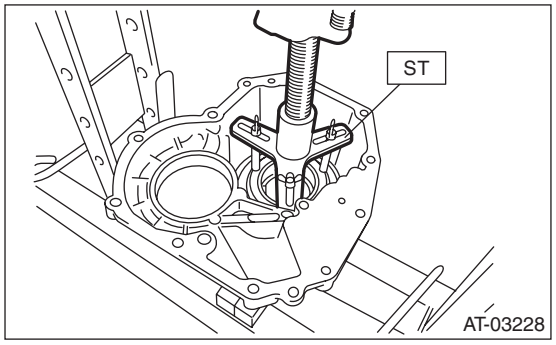

5) Install the transfer clutch. <Ref. to 5AT-67, INSTALLATION, Transfer Clutch.>
6) Install the rear drive shaft.

E: INSPECTION

- Use compressed air to make sure the extension case routes are not clogged or leaking.
- Inspect the extension end play, and adjust it to within the standard value. <Ref. to 5AT-67, ADJUSTMENT, Transfer Clutch.>

25.Transfer Clutch

A: REMOVAL

1) Remove the transmission assembly from vehicle body. <Ref. to 5AT-37, REMOVAL, Automatic Transmission Assembly.>
2) Remove the extension case, and then remove the transfer clutch. <Ref. to 5AT-65, REMOVAL, Extension Case.> <Ref. to 5AT-66, DISASSEMBLY, Extension Case.>

B: INSTALLATION

1) Select the rear drive shaft shim. <Ref. to 5AT-67, ADJUSTMENT, Transfer Clutch.>
2) Select driven plate No. 3 <Ref. to 5AT-67, ADJUSTMENT, Transfer Clutch.>
3) Install the extension case. <Ref. to 5AT-65, INSTALLATION, Extension Case.>
4) Install the transmission assembly to the vehicle. <Ref. to 5AT-42, INSTALLATION, Automatic Transmission Assembly.>

C: INSPECTION

- Inspect the drive plate facing for wear and damage.
- Make sure the snap ring is not worn and the return spring has no permanent distortion, damage, or deformation.
- Check that the D-ring is not damaged.
- Inspect the extension end play, and adjust it to within the standard value. <Ref. to 5AT-67, ADJUSTMENT, Transfer Clutch.>

D: ADJUSTMENT

1. REAR DRIVE SHAFT SHIM SELECTION

1) Insert the rear drive shaft into the reduction drive gear and center differential assembly.

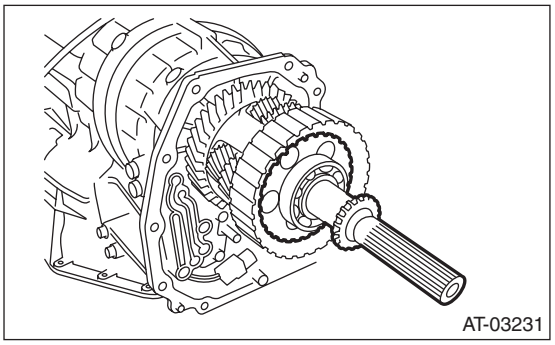
AT-03231

2) Using the ST, measure the depth “A”, which is from mating surface of extension case to ball bearing outer ring contact surface.
ST 398643600 GAUGE

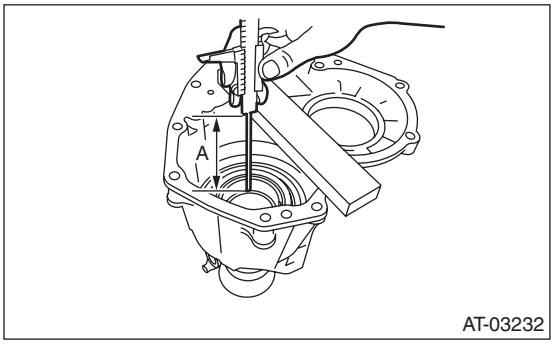

AT-03232

3) Using the ST, measure the height “B” from the AT main case mating surface to the ball bearing outer ring contact surface.
ST 398643600 GAUGE

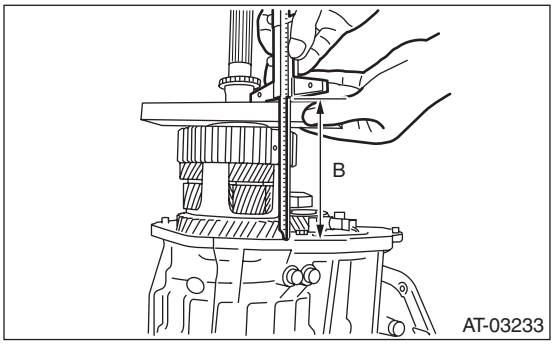

AT-03233

4) Calculation formula:
When clearances are 0.05 mm (0.0020 in):
T (mm) = A – B + 0.23
[T (in) = A – B + 0.0091]
When clearances are 0.25 mm (0.0098 in):
T (mm) = A – B + 0.03
[T (in) = A – B + 0.0012]
A: Depth from end of extension case to ball bearing outer ring contact surface
B: Height from end of AT main case contact surface to the ball bearing outer ring contact surface
T: Shim thickness

Specification:
0.05 — 0.25 mm (0.0020 — 0.0098 in)

NOTE:
Calculation formula for "T" above is applied when measuring with the ST (398643600 GAUGE). When not using the ST,
When clearances are 0.05 mm (0.0020 in):
T (mm) = (A – α) – ((B – β) – 0.28) – 0.05
[T (in) = (A – α) – ((B – β) – 0.011) – 0.0020]
When clearances are 0.25 mm (0.0098 in):
T (mm) = (A – α) – ((B – β) – 0.28) – 0.25
[T (in) = (A – α) – ((B – β) – 0.011) – 0.0098]
is applied.
T: Shim thickness
A: Depth from end of extension case to ball bearing outer ring contact surface
B: Height from end of AT main case contact surface to the ball bearing outer ring contact surface
α: Thickness of collar used when measuring "A"
β: Thickness of collar used when measuring "B"
0.28 (0.011): Gasket thickness (Unit mm (in))
5) Select the rear drive shaft shim so that the clearance is within the specified range.

Rear drive shaft shim	
Part No.	Thickness mm (in)
33281AA040	0.2 (0.008)
33281AA050	0.5 (0.020)
33281AA060	0.3 (0.012)

2. SELECTION OF DRIVEN PLATE NO. 3

1) Install the drive plate and driven plate to the center differential carrier.
2) Measure the depth "A" from the mating surface of the extension case to the transfer clutch piston.

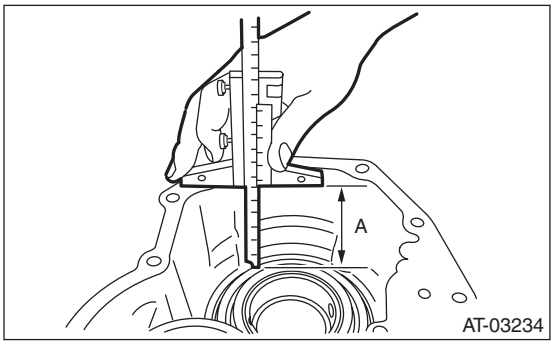

3) Using the ST, measure the height "B" from the AT main case mating surface to the end of ST.
ST 398744300 PISTON GUIDE

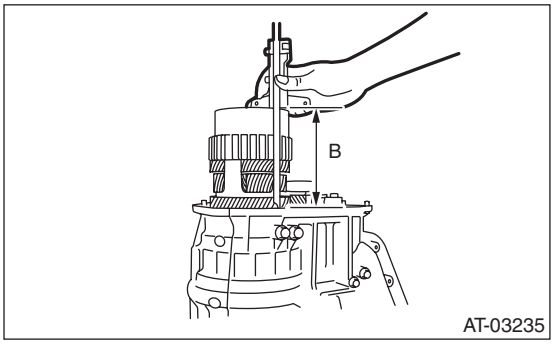

4) Calculation formula:
When clearances are 0.2 mm (0.008 in):
T (mm) = A – (B – 50) + 0.08
[T (in) = A – (B – 1.97) + 0.0031]
When clearances are 0.6 mm (0.024 in):
T (mm) = A – (B – 50) – 0.32
[T (in) = A – (B – 1.97) – 0.0126]
T: Thickness of driven plate No. 3
A: Depth from mating surface of the extension case to the transfer clutch piston.
B: Height from AT main case mating surface to end of ST
50 mm (1.97 in): Thickness of ST

Specification:
0.2 — 0.6 mm (0.008 — 0.024 in)

NOTE:
Calculation formula for "T" above is applied when measuring with the ST (398744300 PISTON GUIDE). When not using the ST,
When clearances are 0.2 mm (0.008 in):
T (mm) = A – (B – α – 0.28) – 0.2
[T (in) = A – (B – α – 0.011) – 0.008]
When clearances are 0.6 mm (0.024 in):
T (mm) = A – (B – α – 0.28) – 0.6
[T (in) = A – (B – α – 0.011) – 0.024]
is applied.
T: Thickness of driven plate No. 3
A: Depth from mating surface of the extension case to the transfer clutch piston.
B: Height from the AT main case mating surface to the contact face of the tool that was used as the substitute of the ST.
α: Thickness of tool used when measuring "B"
0.28 (0.011): Gasket thickness (Unit mm (in))
If it is out of specification, select the driven plate No. 3 to adjust within the specification.
5) Select the driven plate No. 3 so that the clearance is within the specified range.

Driven plate No. 3.	
Part No.	Thickness mm (in)
31589AA041	1.6 (0.063)
31589AA050	2.0 (0.079)
31589AA060	2.4 (0.094)
31589AA070	2.8 (0.110)

26.Rear Drive Shaft

A: REMOVAL

1) Remove the transmission assembly from the vehicle. <Ref. to 5AT-37, REMOVAL, Automatic Transmission Assembly.>
2) Remove the rear vehicle speed sensor, and then remove the extension case. <Ref. to 5AT-65, REMOVAL, Extension Case.>
3) Pull out the rear drive shaft from center differential assembly.

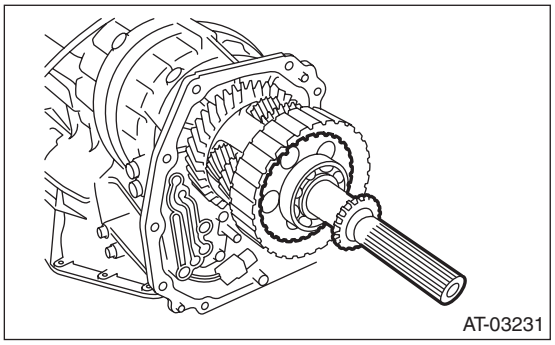

4) Remove the drive plate and driven plate.

B: INSTALLATION

1) Select shims. <Ref. to 5AT-67, ADJUSTMENT, Transfer Clutch.>
2) Install the drive plate and driven plate.
3) Insert the rear drive shaft into the center differential assembly.
4) Combine the extension case, and then install the rear vehicle speed sensor. <Ref. to 5AT-65, INSTALLATION, Extension Case.>
5) Install the transmission assembly to the vehicle. <Ref. to 5AT-42, INSTALLATION, Automatic Transmission Assembly.>

C: DISASSEMBLY

1) Using a press, remove the revolution gear.

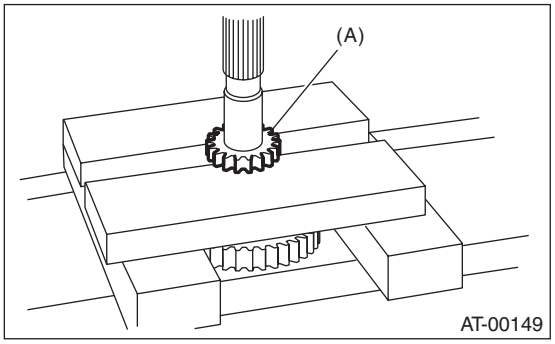

(A) Revolution gear

2) Using a press, remove the front and rear side ball bearings and clutch hub.

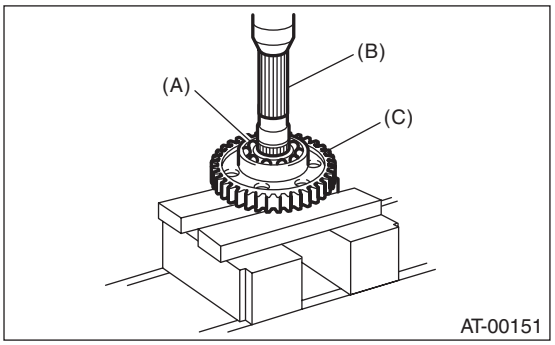

(A) Rear ball bearing
(B) Rear drive shaft
(C) Clutch hub

D: ASSEMBLY

Assemble in the reverse order of disassembly.

NOTE:
- Use new ball bearings and revolution gear.
- Make sure the clutch hub is facing the correct direction.

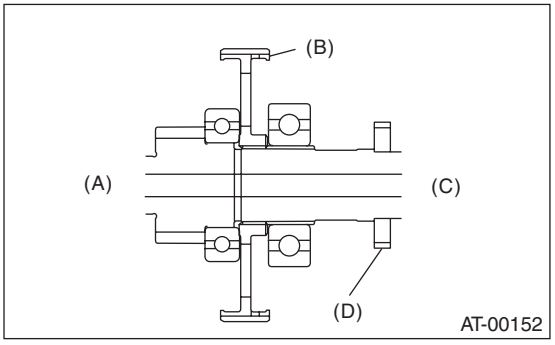

(A) Front side
(B) Clutch hub
(C) Rear side
(D) Revolution gear

E: INSPECTION

- Check each parts for holes, damages or other foreign matters.
- Inspect the extension end play, and adjust it to within the standard value. <Ref. to 5AT-67, ADJUSTMENT, Transfer Clutch.>

27.Reduction Driven Gear

A: REMOVAL

1) Remove the transmission assembly from vehicle body. <Ref. to 5AT-37, REMOVAL, Automatic Transmission Assembly.>
2) Remove the rear vehicle speed sensor, and separate the extension case from transmission case. <Ref. to 5AT-65, REMOVAL, Extension Case.>
3) Remove the center differential carrier. <Ref. to 5AT-74, REMOVAL, Center Differential Carrier.>
4) Set the range select lever to the “P” range.
5) Using ST1, ST2 and ST3, pull out the reduction driven gear.
ST1 499737100 PULLER SET
ST2 18680AA010 GEAR HOLDER
ST3 18766AA000 SUPPORT PULLER

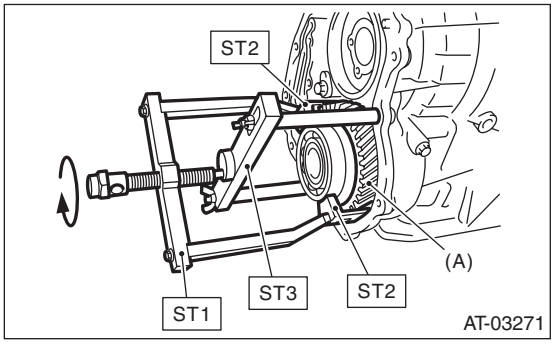

(A) Reduction driven gear

B: INSTALLATION

1) Set the range select lever to the “P” range.
2) Use a plastic hammer to install reduction driven gear assembly.
3) Select the reduction gear shims. <Ref. to 5AT-72, ADJUSTMENT, Reduction Driven Gear.>
4) Join the transmission case and the extension case, and then install the rear vehicle speed sensor. <Ref. to 5AT-65, INSTALLATION, Extension Case.>
5) Install the transmission assembly to the vehicle. <Ref. to 5AT-42, INSTALLATION, Automatic Transmission Assembly.>

C: DISASSEMBLY

1) Remove the ball bearing from reduction driven gear using ST.
ST 498077300 REMOVER

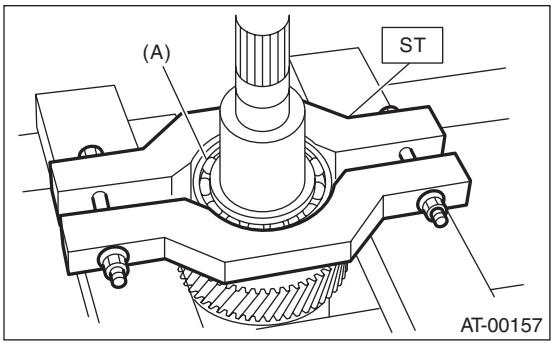

(A) Ball bearing

2) Remove the ball bearing on the reverse side with the same procedure as step 1).
ST 498077300 REMOVER

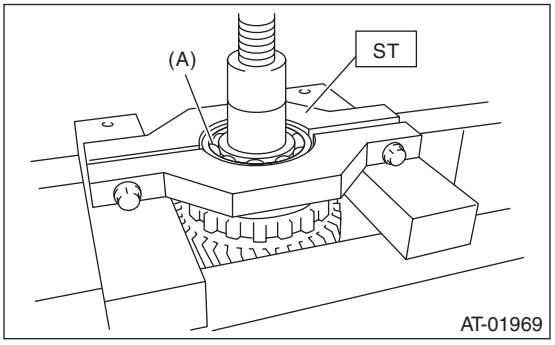

(A) Ball bearing

3) Remove the snap ring of the parking gear.

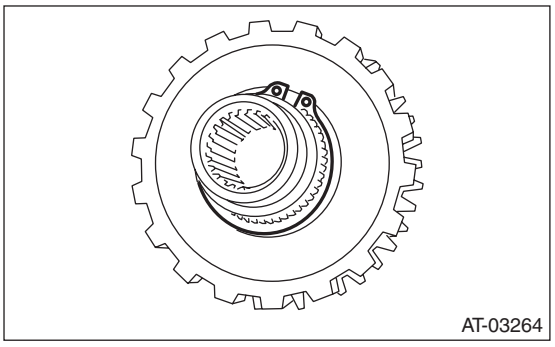

4) Using the ST, remove the parking gear.
ST 18767AA000 REMOVER

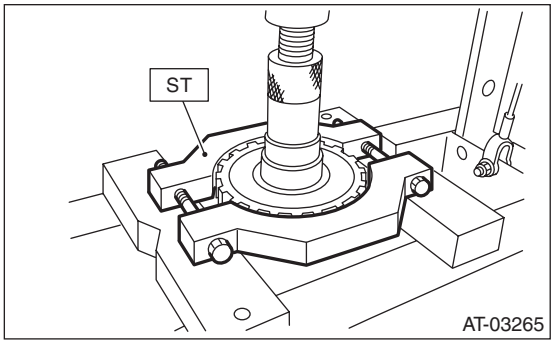

D: ASSEMBLY

1) Using the ST, install the parking gear.
ST 499755602 PRESS

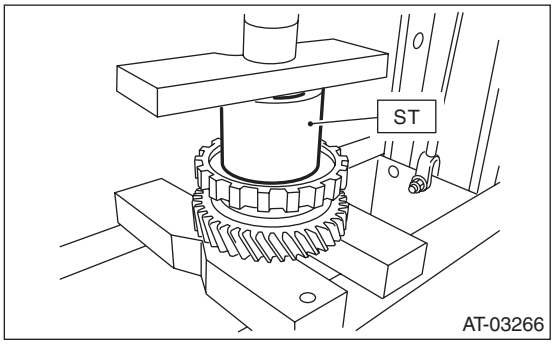

2) Install the snap ring.

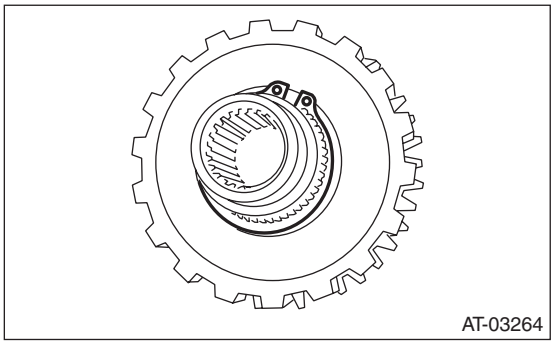

3) Install the ball bearing to the reduction driven gear using a press.

NOTE:
Use a new ball bearing.
ST 18654AA000 INSTALLER

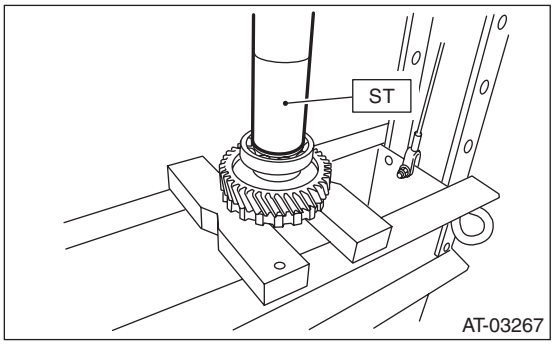

4) Install the ball bearing on the reverse side with the same procedure as step 3).
ST 18654AA000 INSTALLER

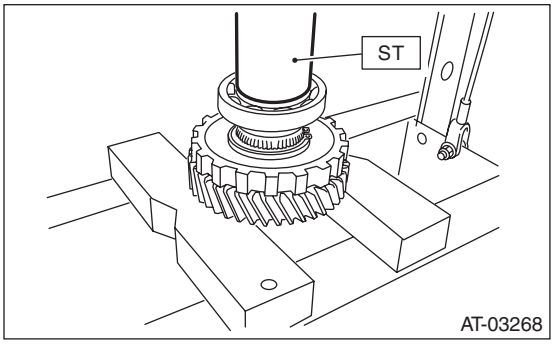

E: INSPECTION

Check the ball bearing and gear for break or damage.

F: ADJUSTMENT

1) Using the ST, measure the height “A” from the AT main case mating surface to the ball bearing outer ring contact surface.
ST 499575400 GAUGE

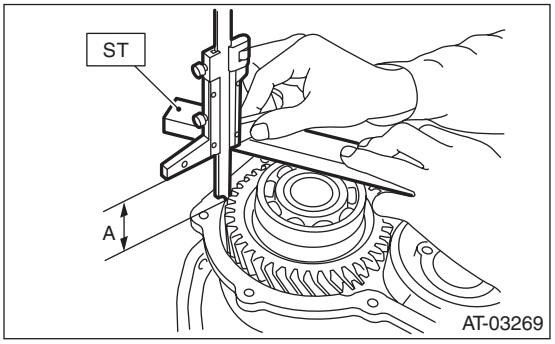

2) Using the ST, measure the depth “B”, which is from mating surface of extension case to ball bearing outer ring contact surface.
ST 499575400 GAUGE

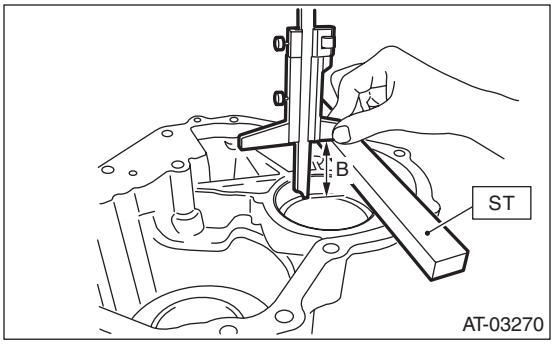

3) Calculation formula:
When clearances are 0.05 mm (0.0020 in):
T (mm) = B – A + 0.23
[T (in) = B – A + 0.0091]
When clearances are 0.25 mm (0.0098 in):
T (mm) = B – A + 0.03
[T (in) = B – A + 0.0012]
T: Shim clearance
A: Height from the mating surface of the AT main case to the ball bearing outer ring end surface
B: Depth from mating surface of extension case to ball bearing outer ring contact surface

Specification:
0.05 — 0.25 mm (0.0020 — 0.0098 in)

4) Select the reduction gear shim so that the clearance is within the specified range.

Reduction gear shim	
Part No.	Thickness mm (in)
31288AA030	0.2 (0.008)
31288AA050	0.5 (0.020)
31288AA060	0.3 (0.012)

28.Center Differential Carrier

A: REMOVAL

1) Remove the transmission assembly from the vehicle. <Ref. to 5AT-37, REMOVAL, Automatic Transmission Assembly.>
2) Remove the rear vehicle speed sensor, and separate the extension case from transmission case. <Ref. to 5AT-65, REMOVAL, Extension Case.>
3) Extract the rear drive shaft. <Ref. to 5AT-70, REMOVAL, Rear Drive Shaft.>
4) Pull out the center differential carrier assembly.

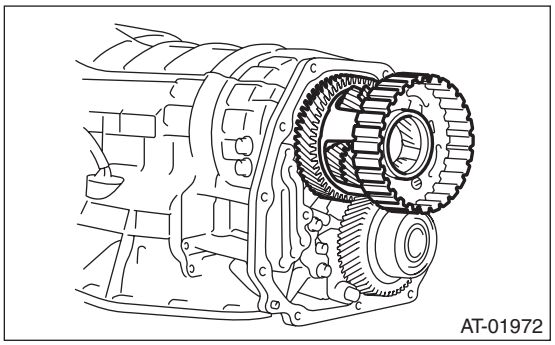

5) Remove the shim from the transmission case.

B: INSTALLATION

1) Install the center differential assembly with the shim(s).

NOTE:
Press-fit it to the bottom of bearing shoulder completely.

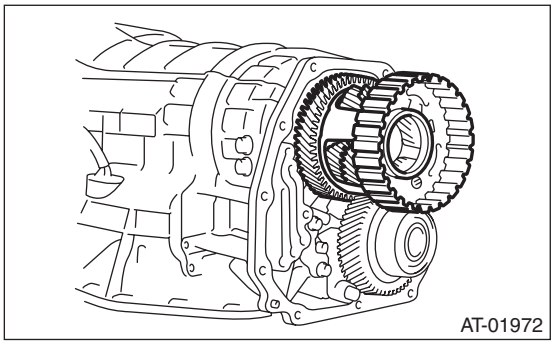

2) Insert the rear drive shaft. <Ref. to 5AT-70, INSTALLATION, Rear Drive Shaft.>
3) Join the transmission case and the extension case, and then install the rear vehicle speed sensor. <Ref. to 5AT-65, INSTALLATION, Extension Case.>
4) Install the transmission assembly to the vehicle. <Ref. to 5AT-42, INSTALLATION, Automatic Transmission Assembly.>

C: DISASSEMBLY

1) Remove the seal ring.

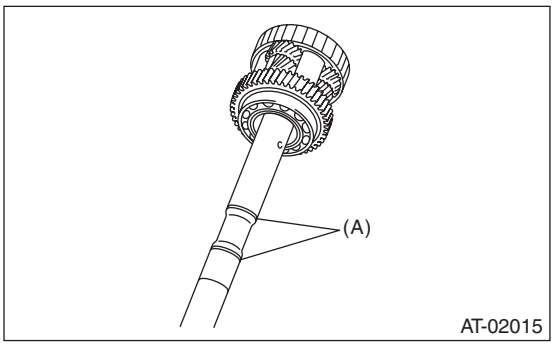

(A) Seal ring

2) Remove the ball bearing using the ST and the press.
ST 498077600 REMOVER

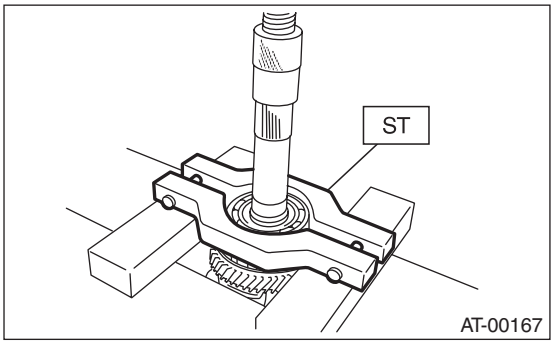

3) Remove the snap ring, and pull out the pinion shaft from center differential assembly.

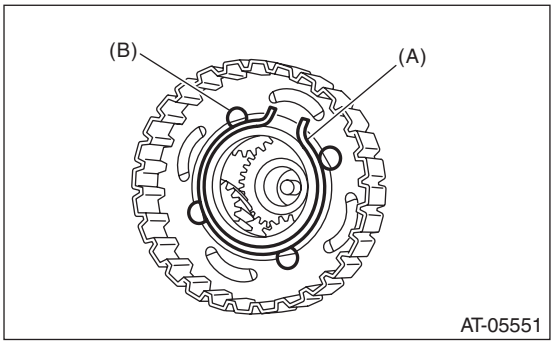

(A) Snap ring
(B) Pinion shaft

4) Remove the pinion gear and washers from center differential assembly.

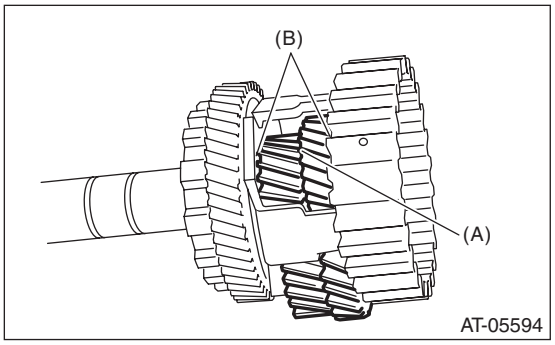

(A) Pinion gear
(B) Washer

5) Pull out the intermediate shaft and thrust bearing.

D: ASSEMBLY

1) Install the thrust bearing onto intermediate shaft.
2) Insert the intermediate shaft into the center differential assembly.
3) Install the pinion gears and washers.
4) Insert the pinion shaft into the center differential assembly.

NOTE:
• Insert the pinion shaft with the side with the plug side facing the front side (gear side).
• After inserting the pinion shaft, adjust its position so that the cutout portion on the front side is on the inner side.

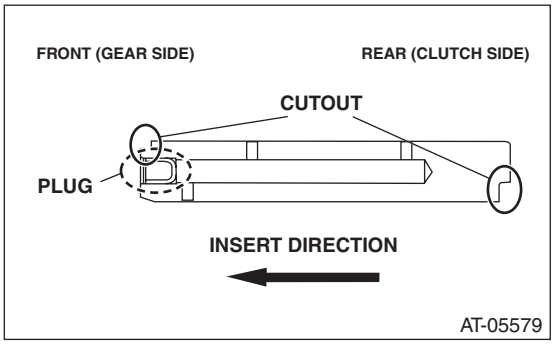

5) Install the snap ring.

6) Using a press, press-fit the ball bearing into the center differential assembly.

NOTE:
Use a new ball bearing.
ST 498077000 REMOVER

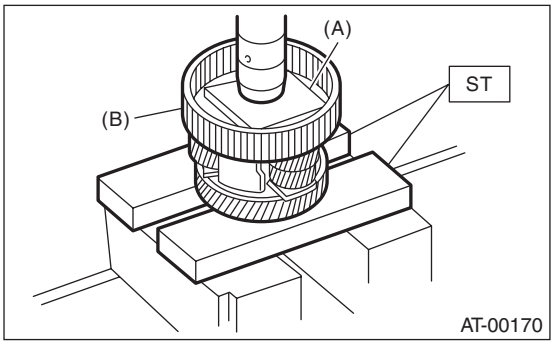

(A) Plate
(B) Center differential carrier

7) Apply vaseline onto the seal ring outer surface and shaft grooves.
8) Install a new seal ring.

E: INSPECTION

• Check each parts for holes, damages or other foreign matters.
• Inspect the extension end play, and adjust it to within the standard value. <Ref. to 5AT-67, ADJUSTMENT, Transfer Clutch.>

29.Parking Pawl

A: REMOVAL

1) Remove the transmission assembly from vehicle body. <Ref. to 5AT-37, REMOVAL, Automatic Transmission Assembly.>
2) Remove the extension case. <Ref. to 5AT-65, REMOVAL, Extension Case.>
3) Remove the center differential carrier. <Ref. to 5AT-74, REMOVAL, Center Differential Carrier.>
4) Remove the front vehicle speed sensor. <Ref. to 5AT-51, REMOVAL, Front Vehicle Speed Sensor.>
5) Remove the parking support actuator.

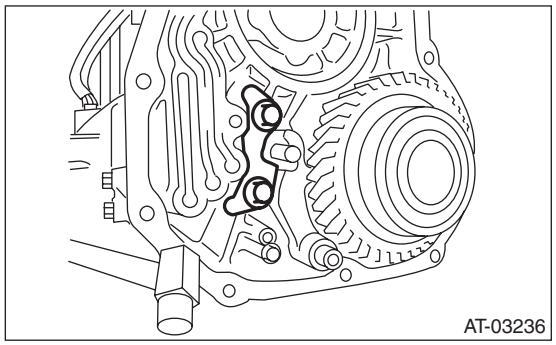

6) Remove the parking pawl, parking pawl shaft and return spring.

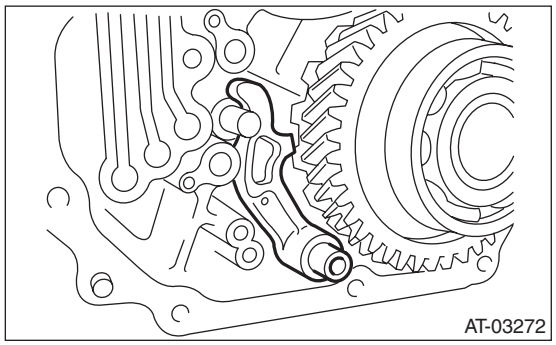

B: INSTALLATION

1) Set the transmission to the N range.
2) Install the parking pawl, parking pawl shaft and return spring.

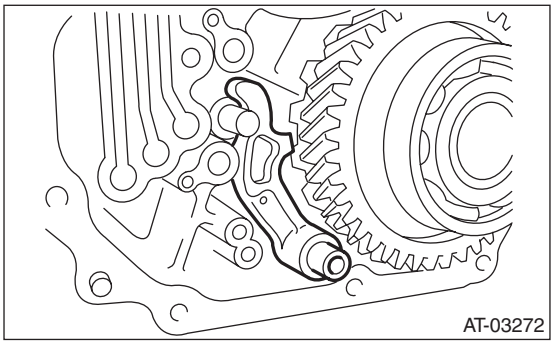

3) Install the parking support actuator.

Tightening torque:
10 N·m (1.0 kgf-m, 7.4 ft-lb)

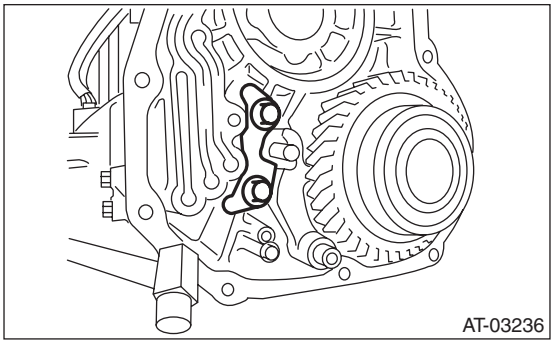

4) Using the ST, tighten the bolts which tightened in step 3) with specified angle.

NOTE:
Do not use extension as much as possible.

Tightening angle:
17°±2°

ST 18854AA000 ANGLE GAUGE

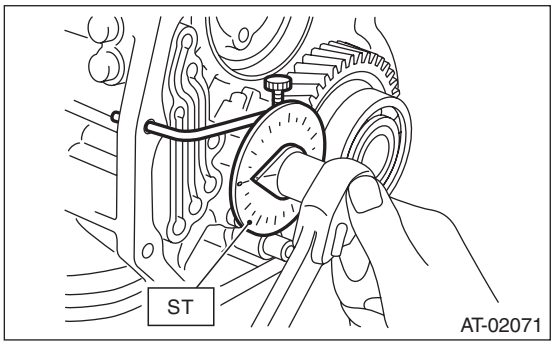

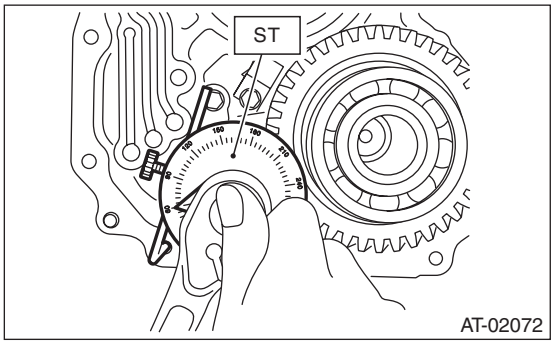

5) Make sure that the return spring is sticking out of the parking pole hole.

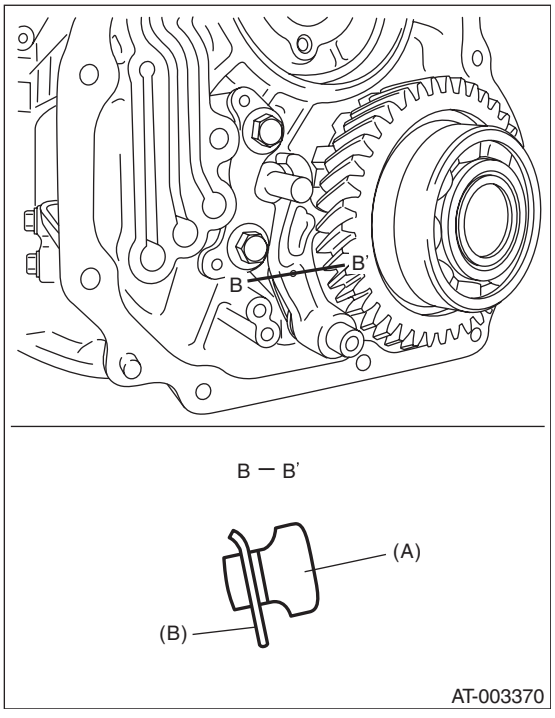

(A) Parking pawl
(B) Return spring

6) Install the front vehicle speed sensor. <Ref. to 5AT-51, INSTALLATION, Front Vehicle Speed Sensor.>
7) Install the center differential carrier. <Ref. to 5AT-74, INSTALLATION, Center Differential Carrier.>
8) Install the extension case. <Ref. to 5AT-65, INSTALLATION, Extension Case.>
9) Install the transmission assembly to the vehicle. <Ref. to 5AT-42, INSTALLATION, Automatic Transmission Assembly.>

C: INSPECTION

Make sure that the tab of parking pawl on reduction driven gear is not worn or otherwise damaged.

30.Converter Case

A: REMOVAL

1) Remove the transmission assembly from the vehicle. <Ref. to 5AT-37, REMOVAL, Automatic Transmission Assembly.>
2) Remove the torque converter assembly. <Ref. to 5AT-63, REMOVAL, Torque Converter Assembly.>
3) Remove the transmission harness connector from stay.
4) Remove the turbine speed sensor 1. <Ref. to 5AT-54, REMOVAL, Turbine Speed Sensor 1.>
5) Remove the air breather hose. <Ref. to 5AT-61, REMOVAL, Air Breather Hose.>
6) Remove the transmission hanger COMPL.
7) Remove the ATF cooler inlet pipe and outlet pipe. <Ref. to 5AT-58, REMOVAL, ATF Cooler Pipe and Hose.>
8) Remove the converter case attachment bolts.
9) Lay along the transmission body, and then remove the oil pan.
10) Remove the three converter case mounting bolts (TORX®).
ST 18676AA020 TORX® WRENCH

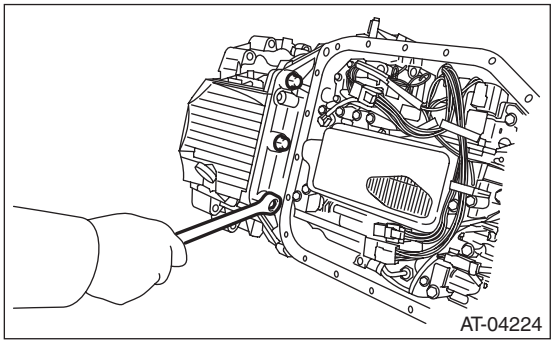

11) Separate the converter case by lightly tapping with plastic hammer.
12) Remove the front differential assembly. <Ref. to 5AT-89, REMOVAL, Front Differential Assembly.>
13) Remove the oil seal from converter case.

B: INSTALLATION

1) Check the appearance of each component and clean them.
2) Press-fit the oil seal to the converter case using ST.

NOTE:
Use a new oil seal.
ST 499587100 OIL SEAL INSTALLER

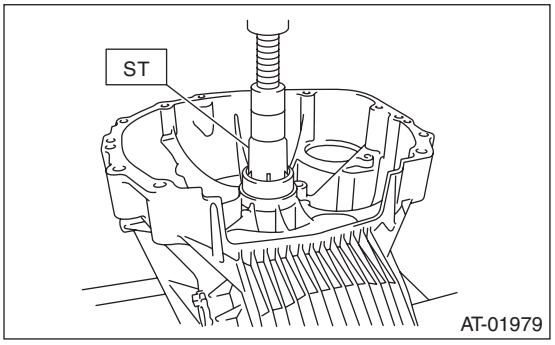

3) Install the front differential assembly and left and right side retainers to the case. <Ref. to 5AT-89, INSTALLATION, Front Differential Assembly.>
4) Remove the oil pump cover from the AT main case, and then adjust and check the backlash and tooth contact of the front differential. <Ref. to 5AT-80, REMOVAL, Oil Pump Cover.> <Ref. to 5AT-92, ADJUSTMENT, Front Differential Assembly.> <Ref. to 5AT-86, ADJUSTMENT, Drive Pinion Shaft Assembly.>
5) Apply proper amount of liquid gasket to the entire matching surface of converter case.

Liquid gasket:
THREE BOND 1215 (Part No. 004403007) or equivalent

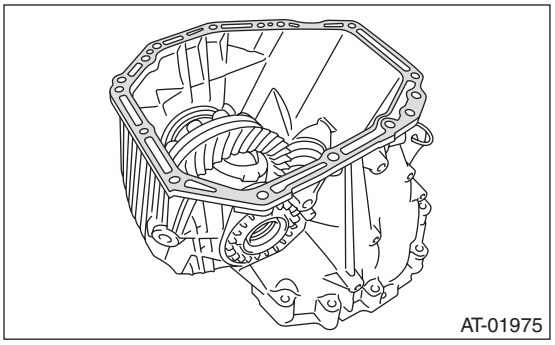

6) Install the converter case assembly without damaging bushing and oil seal.

NOTE:
Use a new bolt for the oil charge pipe and ATF cooler pipe portions

Tightening torque:
Oil charge pipe and ATF cooler pipe portions
38 N·m (3.9 kgf-m, 28.0 ft-lb)
Other than above
41 N·m (4.2 kgf-m, 30.2 ft-lb)

7) Install the three converter case mounting bolts (TORX®).

Tightening torque:
41 N·m (4.2 kgf-m, 30.2 ft-lb)

ST 18676AA020 TORX® WRENCH

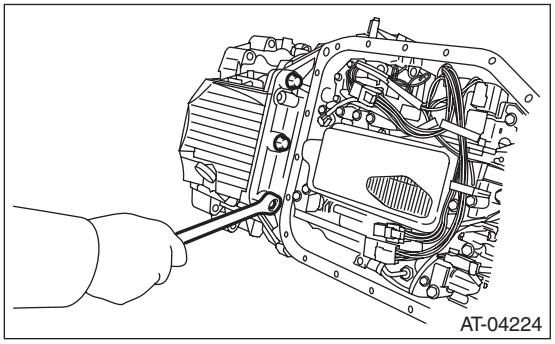

8) Apply proper amount of liquid gasket to the entire oil pan mating surface, and then install it.

Liquid gasket:
THREE BOND 1217B (Part No. K0877YA020) or equivalent

Tightening torque:
5 N·m (0.5 kgf-m, 3.7 ft-lb)

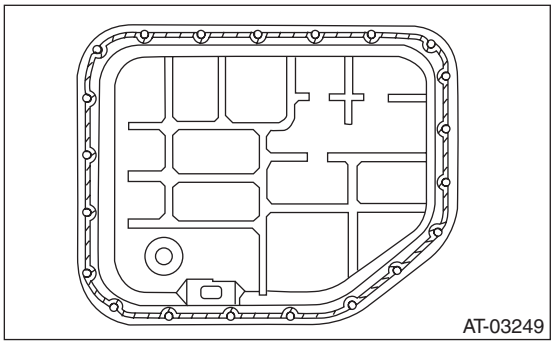

9) Install the turbine speed sensor 1. <Ref. to 5AT-54, INSTALLATION, Turbine Speed Sensor 1.>
10) Install the ATF cooler pipe. <Ref. to 5AT-59, INSTALLATION, ATF Cooler Pipe and Hose.>
11) Install the transmission hanger COMPL.

Tightening torque:
41 N·m (4.2 kgf-m, 30.2 ft-lb)

12) Install the transmission harness connector to the stay.
13) Install the air breather hose. <Ref. to 5AT-61, INSTALLATION, Air Breather Hose.>
14) Install the torque converter assembly. <Ref. to 5AT-63, INSTALLATION, Torque Converter Assembly.>
15) Install the transmission assembly to the vehicle. <Ref. to 5AT-42, INSTALLATION, Automatic Transmission Assembly.>

C: INSPECTION

Measure the backlash, and then adjust it to be within specification. <Ref. to 5AT-86, ADJUSTMENT, Drive Pinion Shaft Assembly.>

31.Oil Pump Cover

A: REMOVAL

1) Remove the transmission assembly from the vehicle. <Ref. to 5AT-37, REMOVAL, Automatic Transmission Assembly.>
2) Pull out the torque converter assembly. <Ref. to 5AT-63, REMOVAL, Torque Converter Assembly.>
3) Remove the transmission harness connector from stay.
4) Remove the ATF cooler inlet pipe and outlet pipe. <Ref. to 5AT-58, REMOVAL, ATF Cooler Pipe and Hose.>
5) Separate the converter case and transmission case. <Ref. to 5AT-78, REMOVAL, Converter Case.>
6) Remove the oil pump cover mounting bolt, and then separate the oil pump cover from the AT main case by lightly tapping with plastic hammer.

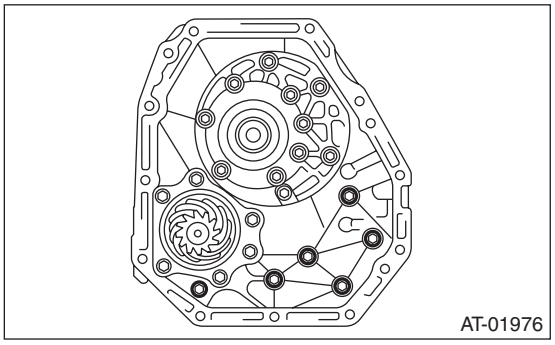

B: INSTALLATION

1) Secure the oil pump cover.

NOTE:
Use a new gasket.

Tightening torque:
41 N·m (4.2 kgf-m, 30.2 ft-lb)

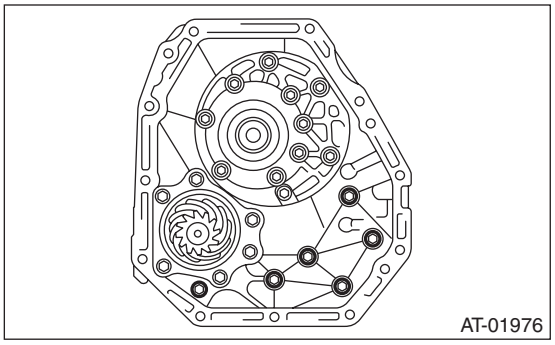

2) Install the converter case assembly to the transmission case assembly. <Ref. to 5AT-63, INSTALLATION, Torque Converter Assembly.>
3) Install the transmission harness connector to the stay.
4) Install the ATF cooler pipe. <Ref. to 5AT-59, INSTALLATION, ATF Cooler Pipe and Hose.>
5) Install the torque converter assembly. <Ref. to 5AT-63, INSTALLATION, Torque Converter Assembly.>
6) Install the transmission assembly to the vehicle. <Ref. to 5AT-42, INSTALLATION, Automatic Transmission Assembly.>

C: DISASSEMBLY

1. FRONT BRAKE

1) Remove the snap ring.

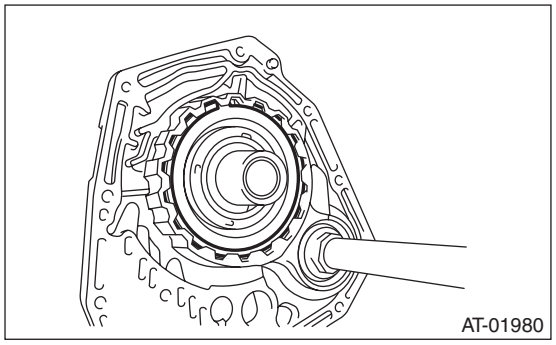

2) Remove the retaining plate, drive plate and driven plate.
3) Using the ST1, ST2 and ST3, remove the snap ring.

ST1	18762AA000	COMPRESSOR SPECIAL TOOL
ST2	18765AA000	COMPRESSOR SUPPORT
ST3	18763AA000	COMPRESSOR SHAFT

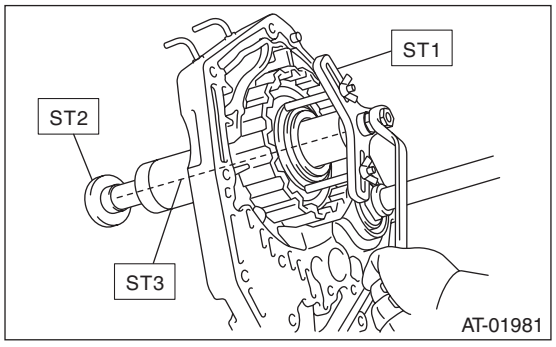

4) Remove the retainer and return spring.
5) Remove the front brake piston using compressed air.

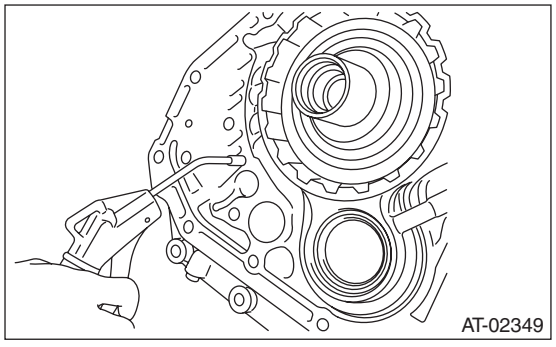

6) Remove the D-ring from front brake piston.

2. OIL PUMP

1) Take out the oil pump housing.

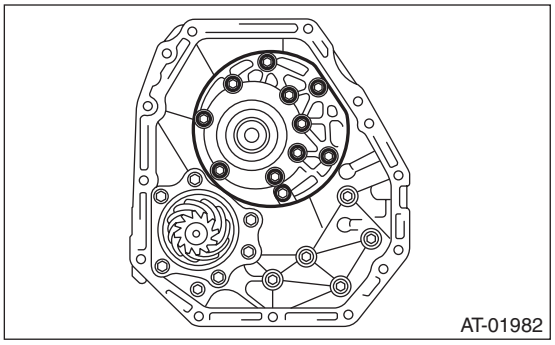

2) Take out the oil pump body.

D: ASSEMBLY

1. FRONT BRAKE

1) Apply ATF to D-ring, and then install it to the front brake piston.

NOTE:
Use a new D-ring.

2) Install the front brake piston to oil pump cover.

NOTE:
Install by aligning the "▲" mark on front brake piston surface with the oil pump cover rib.

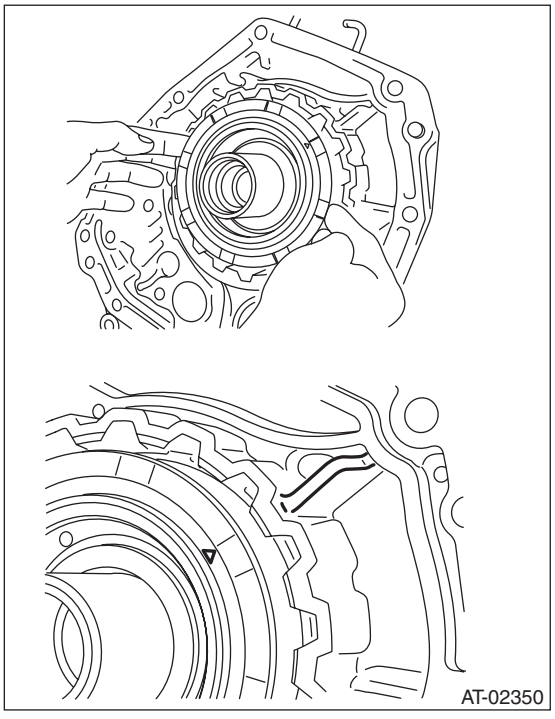

3) Install the retainer and return spring.

4) Install the front brake piston assembly using ST1, ST2 and ST3.

ST1	18762AA000	COMPRESSOR SPECIAL TOOL
ST2	18765AA000	COMPRESSOR SUPPORT
ST3	18763AA000	COMPRESSOR SHAFT

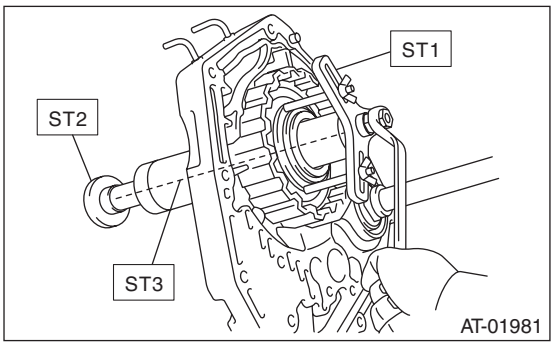

5) Install the genuine driven plate instead of retaining plate, and temporarily assemble the drive plate and driven plate.
Part No. 31536AA290 Driven plate

6) Install the snap ring.

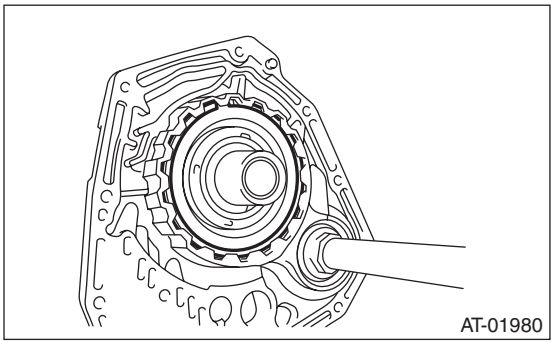

7) Measure the clearance between the retaining plate and snap ring. If the value exceeds the specification, replace the drive plate and driven plate as a set and select the retaining plate so that the value is within the specification.

NOTE:
The thickness of the genuine drive plate is 2.8±0.05 mm (0.11±0.002 in).

Front brake clearance specification:
0.7 — 1.1 mm (0.028 — 0.043 in)

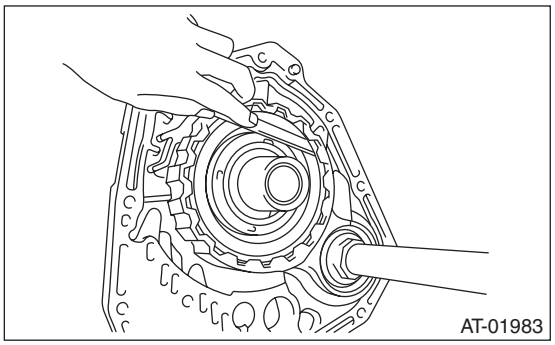

Front brake retaining plate	
Part No.	Thickness mm (in)
31567AB130	3.4 (0.134)
31567AB140	3.6 (0.142)
31567AB150	3.8 (0.150)
31567AB160	4.0 (0.157)

8) Remove the snap ring, replace the driven plate used in measurement of clearance with the retaining plate, and then reassemble.

2. OIL PUMP

1) Apply ATF to oil pump assembly, and then install it to oil pump housing.
2) Install the O-ring to oil pump cover.

NOTE:
Use new O-rings.
3) Install the oil pump housing to the oil pump cover.

Tightening torque:
10 N·m (1.0 kgf-m, 7.4 ft-lb)

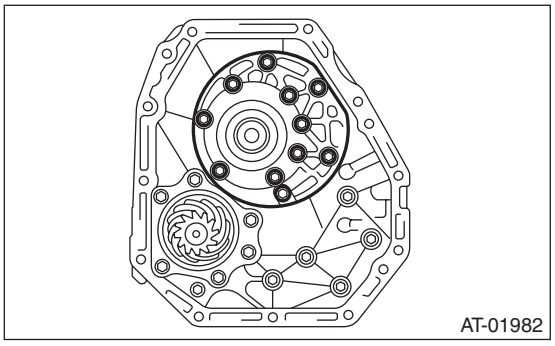

E: INSPECTION

1. FRONT BRAKE

Check the following items.
- Drive plate facing for wear or damage
- Snap ring for wear, return spring for damage, and retainer for damage
- Piston for damage
- D-ring for damage

2. OIL PUMP

Check the following items.
- Oil pump cover and oil seal for breakage or damage
- Oil pump body for scratch or damage

1) Check the seal ring and oil seal for breaks and damage.
2) Check other parts for dents or faults.
3) Oil pump rotor assembly selection
   (1) Tip clearance
   Install the inner rotor and outer rotor to oil pump housing. With rotor gears facing each other, measure the crest-to-crest clearance.

Tip clearance:
0.02 — 0.15 mm (0.0008 — 0.0059 in)

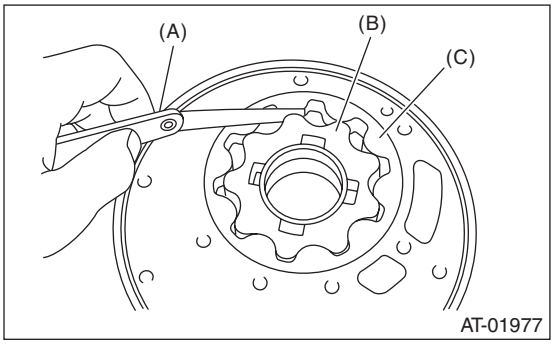

(A) Thickness gauge
(B) Inner rotor
(C) Outer rotor

(2) Side clearance
Set a depth gauge to oil pump housing, then measure the oil pump housing-to-rotor clearance.

Side clearance:
0.02 — 0.045 mm (0.0008 — 0.0018 in)

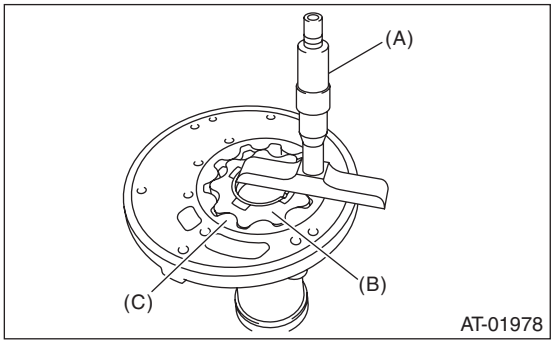

(A) Depth gauge
(B) Inner rotor
(C) Outer rotor

(3) If the tip and/or side clearance are not within the specification, replace the rotor assembly.

Oil pump rotor assembly	
Part No.	Thickness mm (in)
15008AA130	11.37 — 11.38 (0.4476 — 0.4480)
15008AA140	11.38 — 11.39 (0.4480 — 0.4484)
15008AA150	11.39 — 11.40 (0.4484 — 0.4488)

Check the total end play and adjust it to be within specifications. <Ref. to 5AT-103, ADJUSTMENT, AT Main Case.>

32.Drive Pinion Shaft Assembly

A: REMOVAL

1) Remove the transmission assembly from the vehicle. <Ref. to 5AT-37, REMOVAL, Automatic Transmission Assembly.>
2) Pull out the torque converter assembly. <Ref. to 5AT-63, REMOVAL, Torque Converter Assembly.>
3) Remove the transmission harness connector from stay.
4) Remove the ATF cooler inlet pipe and outlet pipe. <Ref. to 5AT-58, REMOVAL, ATF Cooler Pipe and Hose.>
5) Separate the converter case and transmission case. <Ref. to 5AT-78, REMOVAL, Converter Case.>
6) Remove the drive pinion shaft mounting bolts, and then remove the drive pinion shaft assembly from oil pump cover.

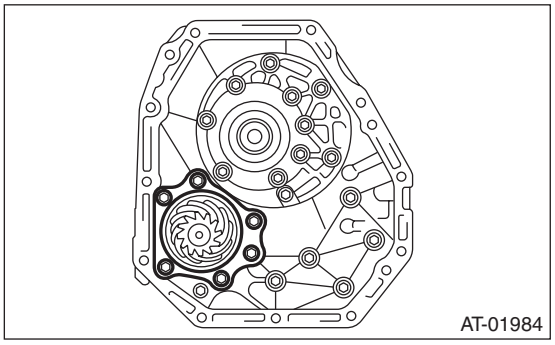

7) Remove the oil pump cover from AT main case. <Ref. to 5AT-80, Oil Pump Cover.>

B: INSTALLATION

1) Assemble the drive pinion assembly to oil pump cover.

NOTE:
Be careful not to bend the shim.

Tightening torque:
70 N·m (7.1 kgf-m, 51.6 ft-lb)

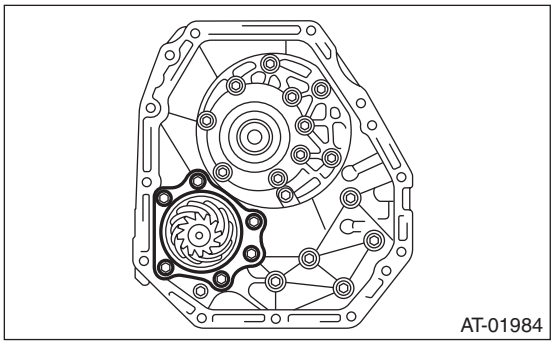

2) Adjust the tooth contact between drive pinion shaft assembly and the front differential side gear. <Ref. to 5AT-86, ADJUSTMENT, Drive Pinion Shaft Assembly.>
3) Join the converter case with the transmission case. <Ref. to 5AT-78, INSTALLATION, Converter Case.>
4) Install the transmission harness connector to the stay.
5) Install the ATF cooler pipe. <Ref. to 5AT-59, INSTALLATION, ATF Cooler Pipe and Hose.>
6) Install the torque converter assembly. <Ref. to 5AT-63, INSTALLATION, Torque Converter Assembly.>
7) Install the transmission assembly to the vehicle. <Ref. to 5AT-42, INSTALLATION, Automatic Transmission Assembly.>

C: DISASSEMBLY

1) Flatten the lock nut tab, and then remove the lock nut while holding the rear spline part of the shaft using ST1 and ST2. Pull out the drive pinion collar.

ST1	18667AA010	HOLDER
ST2	499787700	WRENCH
ST3	499787500	ADAPTER

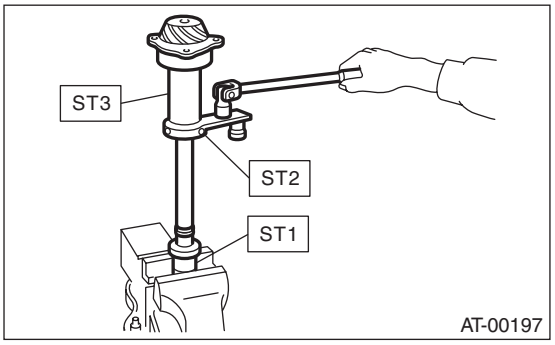

2) Remove the O-ring.
3) Separate the roller bearing and outer race from shaft using a press.

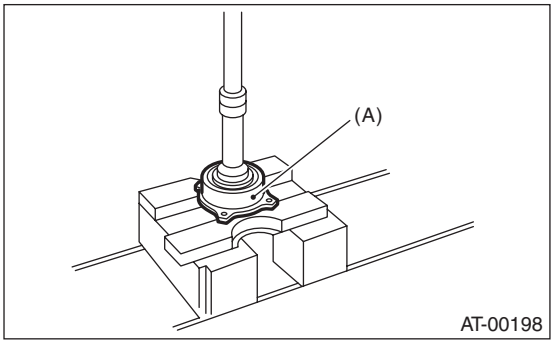

(A) Outer race

4) Separate the front roller bearing from the shaft using a press and the ST.
ST 498517000 REPLACER

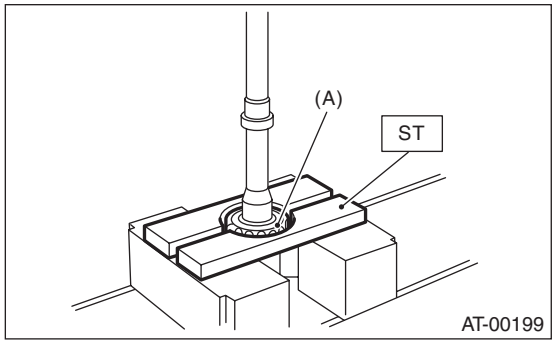

(A) Front roller bearing

D: ASSEMBLY

1) Measure the dimension “A” of drive pinion shaft.
ST 398643600 GAUGE

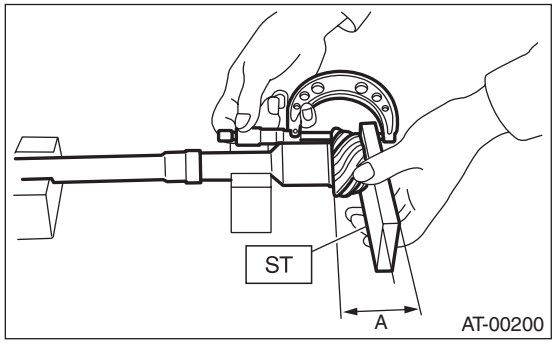

2) Using a press, press-fit the new roller bearing into the specified position.

NOTE:
If excessive force is applied to roller bearing, the roller bearing will not turn easily.

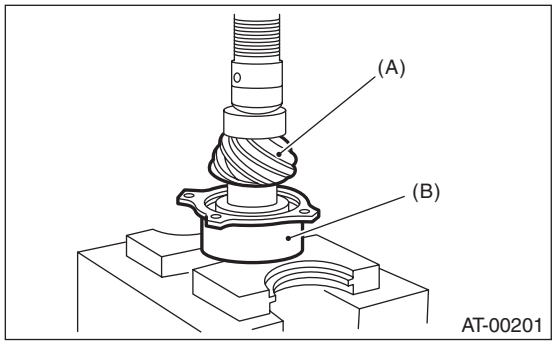

(A) Drive pinion shaft
(B) Roller bearing

3) After fitting a new O-ring to the shaft, attach the drive pinion collar to the shaft.

4) Tighten the new lock nuts using ST1, ST2 and ST3.
Calculate the tightening torque using following formula.
T2 = L2/(L1 + L2) × T1
T1: 116 N·m (11.8 kgf-m, 85.6 ft-lb)
[Required torque setting]
T2: Tightening torque
L1: ST2 length 0.072 m (2.83 in)
L2: Torque wrench length
Example:

Torque wrench length m (in)	Tightening torque N·m (kgf-m, ft-lb)
0.4 (15.75)	98 (10.0, 72.3)
0.45 (17.72)	100 (10.2, 73.8)
0.5 (19.69)	101 (10.3, 74.5)
0.55 (21.65)	102 (10.4, 75.2)

ST1 18667AA010 HOLDER
ST2 499787700 WRENCH
ST3 499787500 ADAPTER

NOTE:
Attach ST2 to torque wrench as straight as possible.

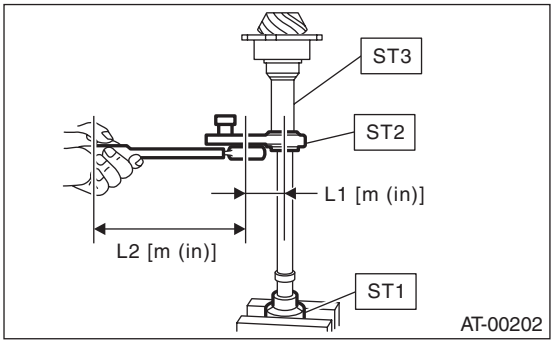

5) Measure the starting torque of the bearing. Make sure the starting torque is within the specified range. If the torque is not within specified range, replace the roller bearing.

Starting torque:
7.6 — 38.1 N (0.775 — 3.88 kgf, 1.7 — 8.6 lbf)

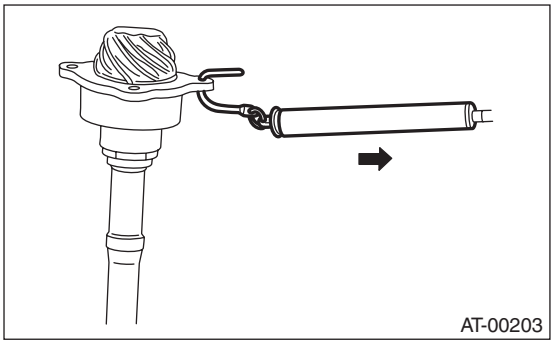

6) Crimp the locknut in 2 locations.

7) Measure the dimension “B” of the drive pinion shaft.
ST 398643600 GAUGE

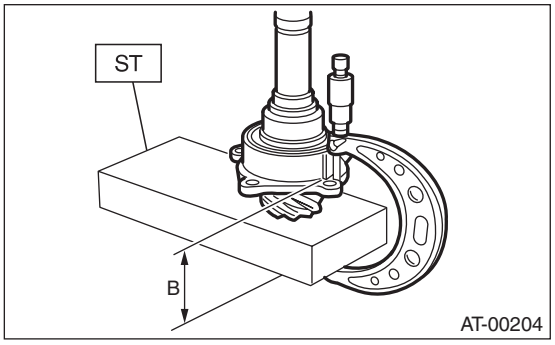

8) Calculate the thickness “t” mm (in) of the drive pinion shim.
t = 6.5±0.0625 (0.256±0.0025) – (B – A)
9) Select three or less shims from following table.

Drive pinion shim	
Part No.	Thickness mm (in)
31451AA180	0.150 (0.0059)
31451AA190	0.175 (0.0069)
31451AA200	0.200 (0.0079)
31451AA210	0.225 (0.0089)
31451AA220	0.250 (0.0098)
31451AA230	0.275 (0.0108)

E: INSPECTION

• Make sure that all component parts are free of scratches, holes and other faults.
• Adjust the tooth alignment. <Ref. to 5AT-86, ADJUSTMENT, Drive Pinion Shaft Assembly.>

F: ADJUSTMENT

1) Assemble the drive pinion shaft assembly to oil pump cover.
2) Remove the liquid gasket from the mating surface completely.
3) Install the converter case to oil pump cover, and secure them with tightening four bolts evenly.

NOTE:
Use an old gasket or aluminum washer to prevent damaging the mating surface of the housing.

Tightening torque:
41 N·m (4.2 kgf-m, 30.2 ft-lb)

4) Rotate the drive pinion a few times using ST1 and ST2.
ST1 18667AA010 HOLDER
ST2 499787700 WRENCH

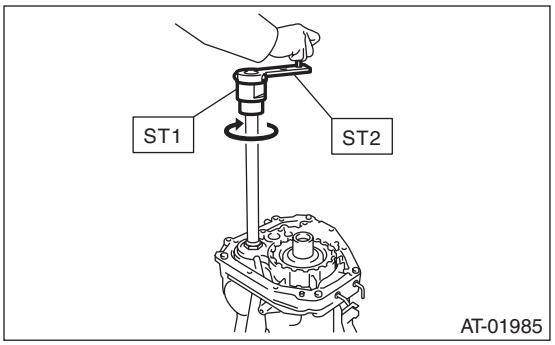

5) Adjust the drive pinion and hypoid driven gear backlash. <Ref. to 5AT-92, ADJUSTMENT, Front Differential Assembly.>
6) Apply lead-free red dye evenly on the surface of three to four teeth of the hypoid driven gear. Rotate the drive pinion in the leftward and rightward for several times. Remove the oil pump cover, and check the tooth contact pattern.
If the teeth contact is inappropriate, adjust the backlash or thickness of the shim. <Ref. to 5AT-92, ADJUSTMENT, Front Differential Assembly.>
• Correct tooth contact
Check item: Tooth contact surface is slightly shifted toward the toe side under a no-load condition. (When driving, it moves towards the heel side.

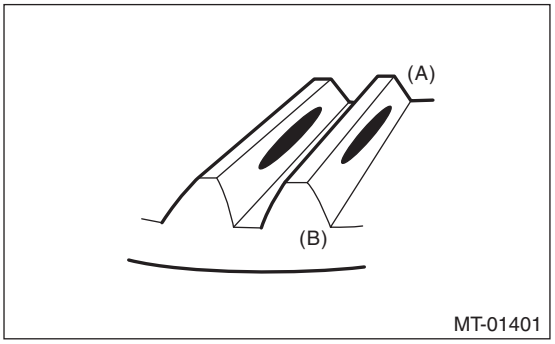

(A) Toe side
(B) Heel side

- Face contact

Check item: Backlash is too large.

Contact pattern

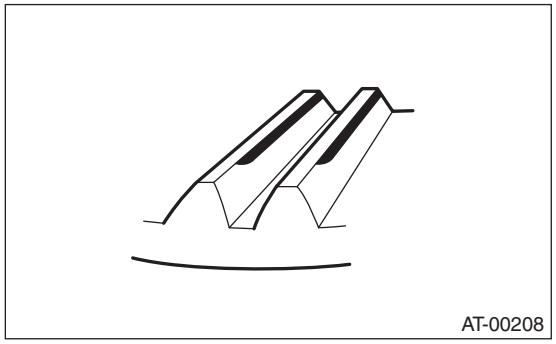

Adjustment: Increase the thickness of the shim according to the procedures for moving the drive pinion closer to the driven gear.

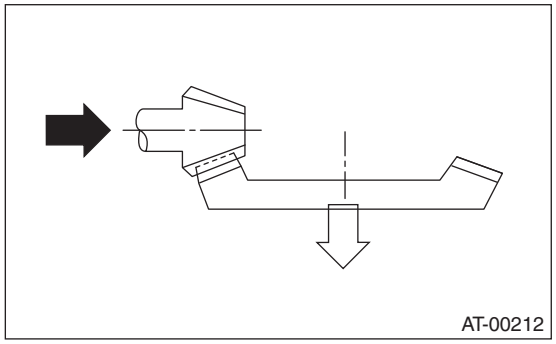

- Flank contact

Check item: Backlash is too small.

Contact pattern

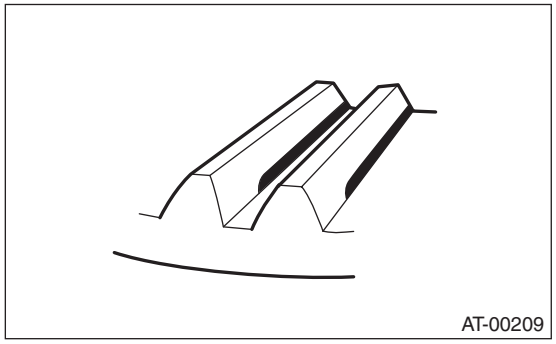

Adjustment: Reduce the thickness of the shim according to the procedure for moving the drive pinion away from the driven gear.

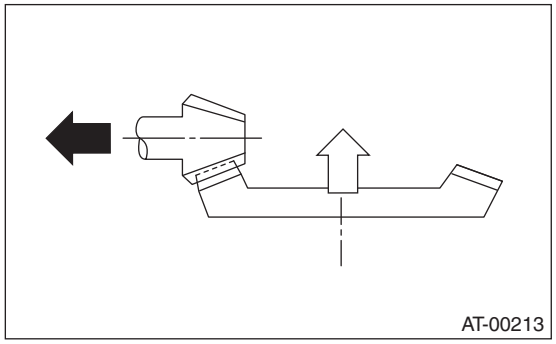

- Toe contact (inside contact)

Check item: Teeth contact area is too small.

Contact pattern

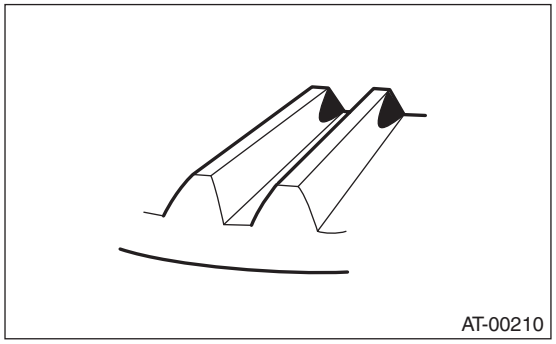

Adjustment: Reduce the thickness of the shim according to the procedure for moving the drive pinion away from the driven gear.

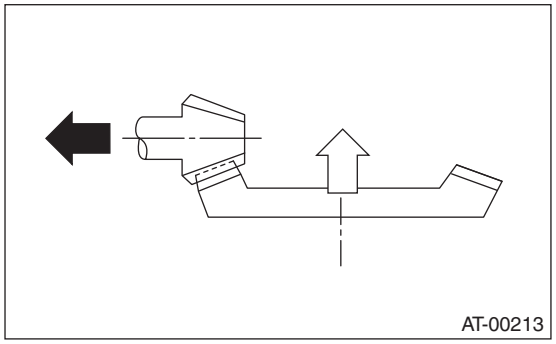

- Heel contact (outside end contact)

Check item: Teeth contact area is too small.

Contact pattern

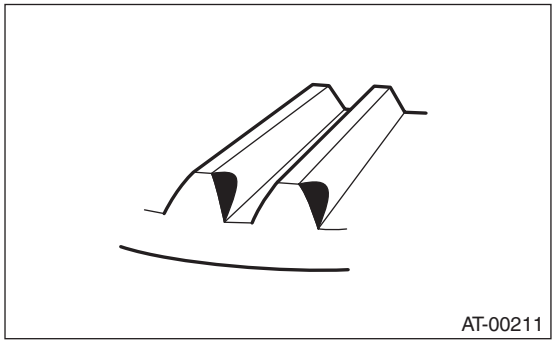

Adjustment: Increase the thickness of the shim according to the procedures for moving the drive pinion closer to the driven gear.

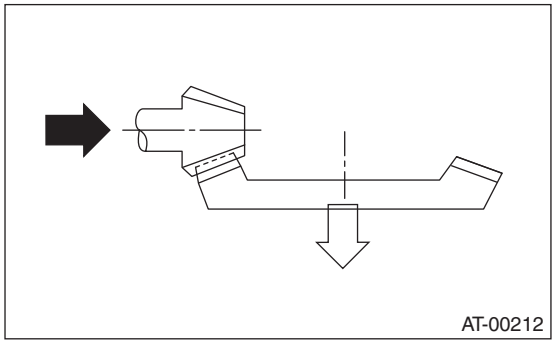

7) If tooth contact is correct, mark the retainer position and loosen it. After fitting a new O-ring and oil seal, screw in the retainer to the marked position. Tighten the lock plate with specified torque.

Tightening torque:
25 N·m (2.5 kgf-m, 18.4 ft-lb)

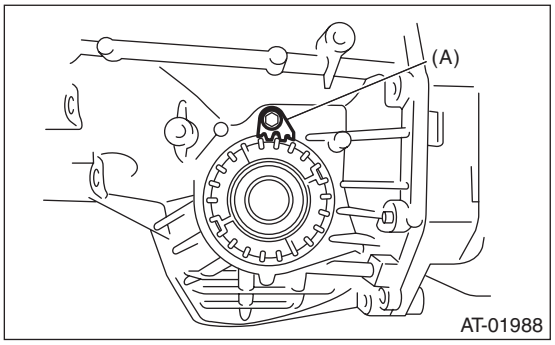

(A) Lock plate

33.Front Differential Assembly

A: REMOVAL

1) Remove the transmission assembly from the vehicle. <Ref. to 5AT-37, REMOVAL, Automatic Transmission Assembly.>
2) Pull out the torque converter assembly. <Ref. to 5AT-63, REMOVAL, Torque Converter Assembly.>
3) Remove the transmission harness connector from stay.
4) Remove the ATF cooler inlet pipe and outlet pipe. <Ref. to 5AT-58, REMOVAL, ATF Cooler Pipe and Hose.>
5) Separate the converter case from the transmission case. <Ref. to 5AT-78, REMOVAL, Converter Case.>
6) Remove the differential side retainers using ST.

NOTE:
Hold the differential case assembly by hand to avoid damaging the differential side retainer mounting hole of the converter case.

ST 18630AA010 WRENCH COMPL RETAINER

7) Remove the front differential assembly while being careful not to damage the attachment part of the retainer.

B: INSTALLATION

1) When installing the front differential assembly to the case, be careful not to damage the inside of case (particularly, the differential side retainer mating surface).

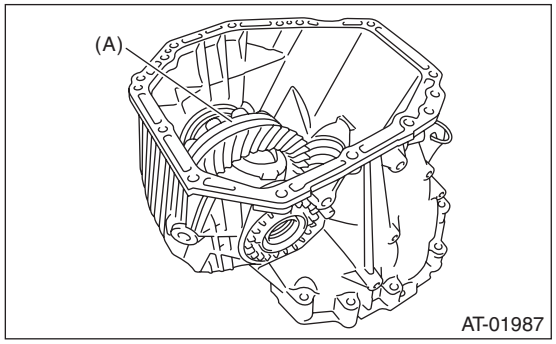

(A) Front differential ASSY

2) Install the O-ring to left and right side retainers.
3) Using the ST, install the side retainer. <Ref. to 5AT-92, ADJUSTMENT, Front Differential Assembly.>

ST 18630AA010 WRENCH COMPL RETAINER

4) Adjust the backlash of the front differential. <Ref. to 5AT-92, ADJUSTMENT, Front Differential Assembly.>
5) Install the lock plate.

Tightening torque:
25 N·m (2.5 kgf-m, 18.4 ft-lb)

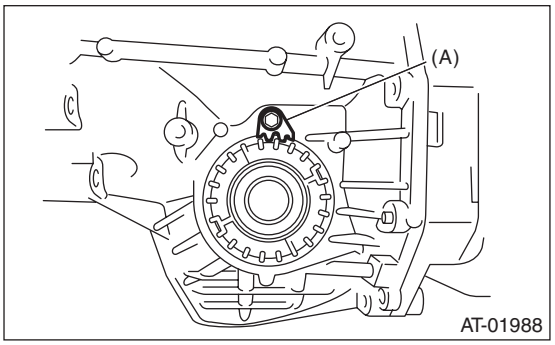

(A) Lock plate

6) Install the converter case to the transmission case. <Ref. to 5AT-78, INSTALLATION, Converter Case.>
7) Install the transmission harness connector to the stay.
8) Install the ATF cooler pipe. <Ref. to 5AT-59, INSTALLATION, ATF Cooler Pipe and Hose.>
9) Install the torque converter assembly. <Ref. to 5AT-63, INSTALLATION, Torque Converter Assembly.>
10) Install the transmission assembly to the vehicle. <Ref. to 5AT-42, INSTALLATION, Automatic Transmission Assembly.>

C: DISASSEMBLY

1. DIFFERENTIAL CASE ASSEMBLY

1) Remove the taper roller bearing using the ST and the press.
ST 498077000 REMOVER

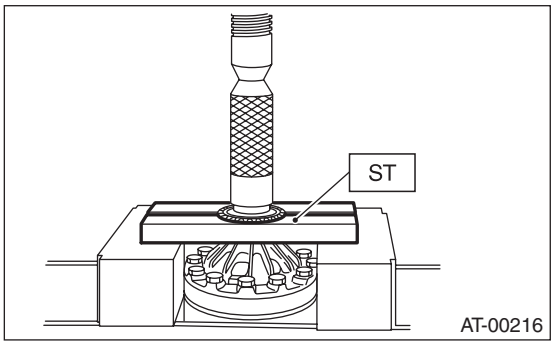

2) Secure the case in a vise, remove the hypoid driven gear tightening bolts, and then separate the hypoid driven gear into case (RH) and case (LH).

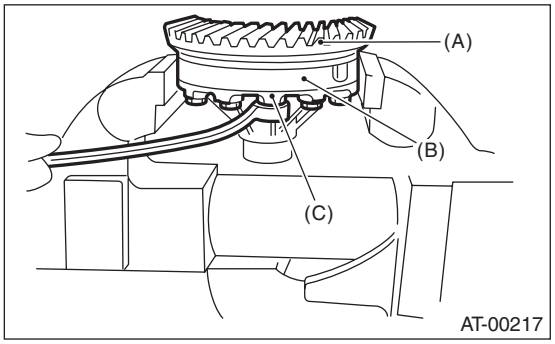

(A) Hypoid driven gear
(B) Differential case (RH)
(C) Differential case (LH)

3) Pull out the straight pin and shaft, and then remove the differential bevel gear, washer and differential bevel pinion.

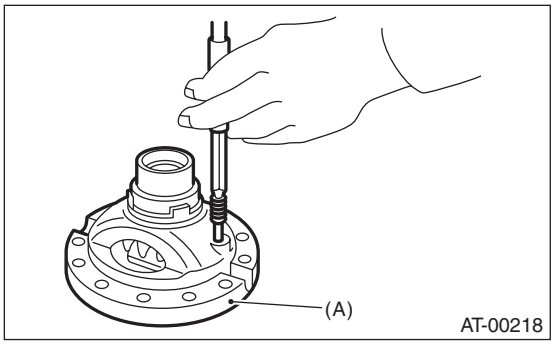

(A) Differential case (RH)

2. SIDE RETAINER

NOTE:
After adjusting the drive pinion backlash and tooth contact, remove and install the oil seal and O-ring.
1) Remove the O-ring.

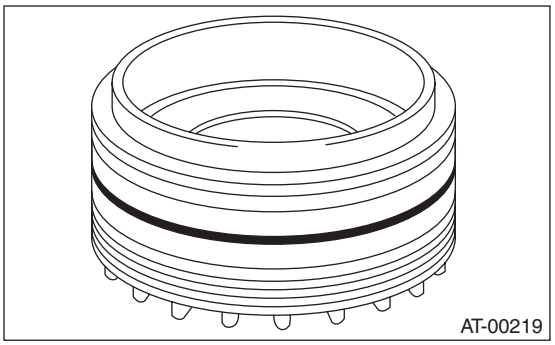

2) Remove the oil seal.

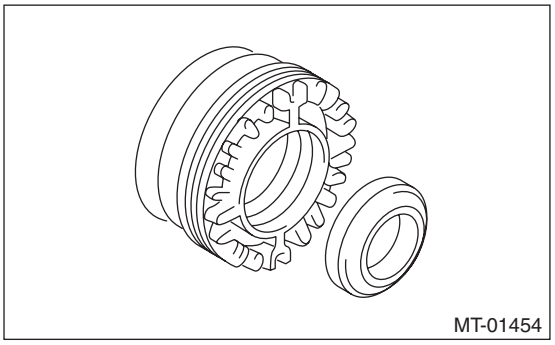

3) Remove the bearing outer race.
(1) Remove the split pin, and then remove the claw.
ST 398527700 PULLER ASSY

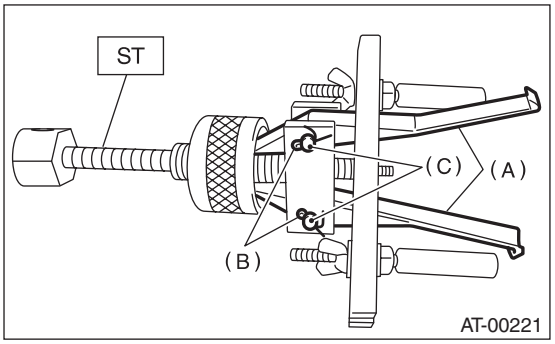

(A) Claw
(B) Split pin
(C) Pin

(2) Attach two claws to the outer race, and set the ST to side retainer.

ST 398527700 PULLER ASSY

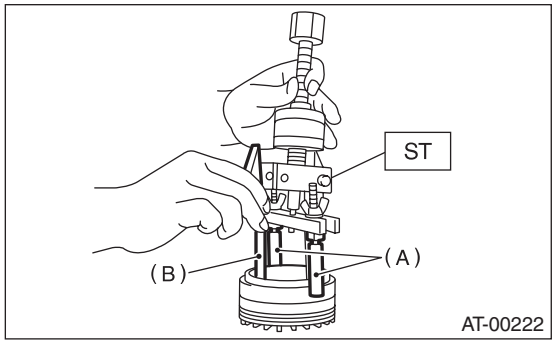

(A) Shaft
(B) Claw

(3) Restore the removed claws to original position, and install the pin and split pin.
(4) Hold the shaft of ST to avoid removing from side retainer, and then remove the bearing outer race.

NOTE:
Replace the bearing inner and outer races as a single unit.

ST 398527700 PULLER ASSY

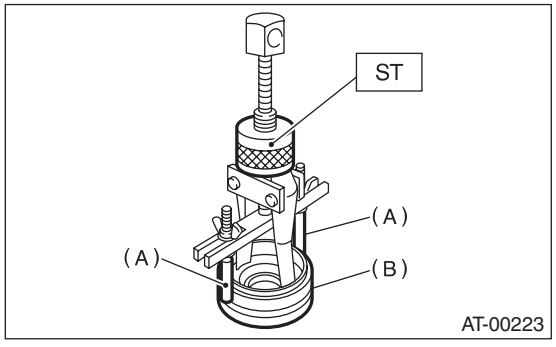

(A) Shaft
(B) Side retainer

D: ASSEMBLY

1. DIFFERENTIAL CASE ASSEMBLY

1) Install the washer, differential bevel gear and differential bevel pinion in the differential case (RH). Insert the pinion shaft.
2) Attach the straight pin in the reverse direction.

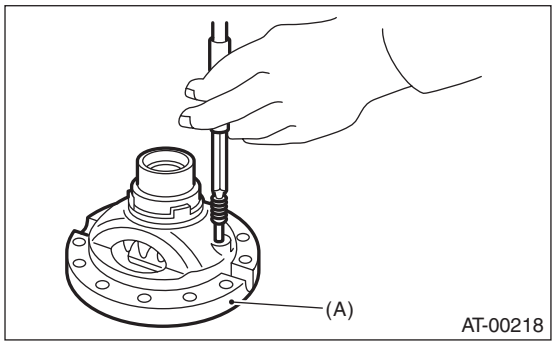

(A) Differential case (RH)

3) Install the washer and differential bevel gear to differential case (LH). Put the differential case (LH) on the differential case (RH), and assemble the two differential cases.
4) Install the hypoid driven gear and secure by tightening the bolt.

Tightening torque:
70 N·m (7.1 kgf-m, 51.6 ft-lb)

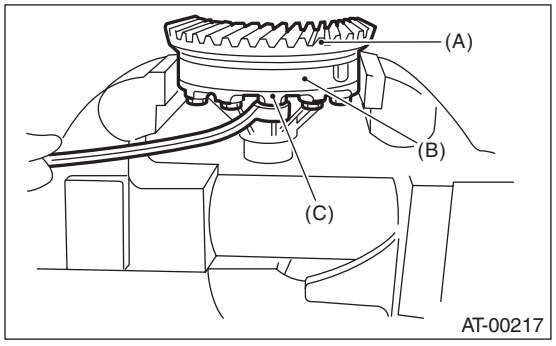

(A) Hypoid driven gear
(B) Differential case (RH)
(C) Differential case (LH)

5) Measurement of backlash (Selection of washer)
(1) Install the SUBARU genuine axle shaft to differential case.
Part No. 38415AA070 Axle shaft
(2) Measure the gear backlash using ST1 and ST2, and then insert the ST2 through the access window of differential case.

NOTE:
• Measure the backlash by applying a differential bevel pinion tooth between two differential bevel gear teeth.
• When measuring, fix the differential bevel pinion gear in place with a screwdriver covered with waste cloth, or a similar tool.

Standard:
0.13 — 0.18 mm (0.0051 — 0.0071 in)
ST1 498247001 MAGNET BASE
ST2 498247100 DIAL GAUGE

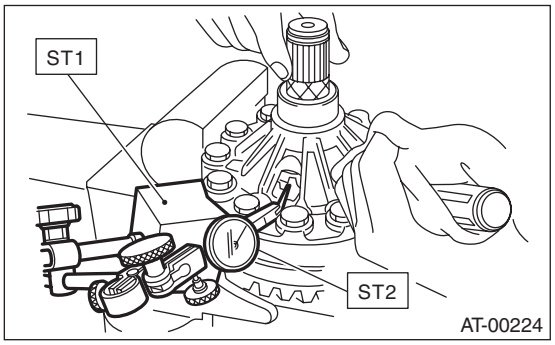

(3) If the backlash is not within specification, select a washer from the table below.

Washer	
Part No.	Thickness mm (in)
803038021	0.95 (0.037)
803038022	1.00 (0.039)
803038023	1.05 (0.041)

6) Using the ST, install the taper roller bearing.
ST 398487700 DRIFT

2. SIDE RETAINER

NOTE:
Install the oil seal and O-ring of side retainer after the adjustment of backlash and tooth contact.
1) Install the bearing outer race to side retainer.
2) Using the ST, install the oil seal.

NOTE:
• Use a new oil seal.
• Apply gear oil to the oil seal lips, and install the oil seal while being careful not to deform the lip.
• Check the identification marks (L, R) during installation not to mix up the oil seal RH and LH.
ST 18675AA000 DIFFERENTIAL SIDE OIL SEAL INSTALLER

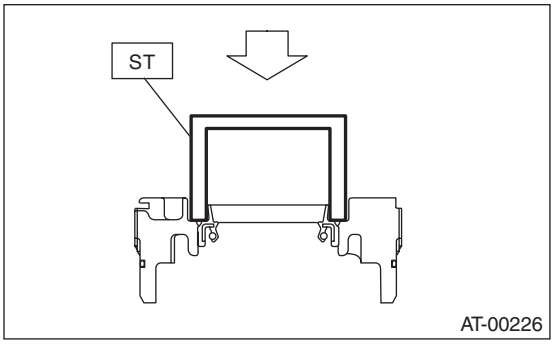

3) Install a new O-ring.

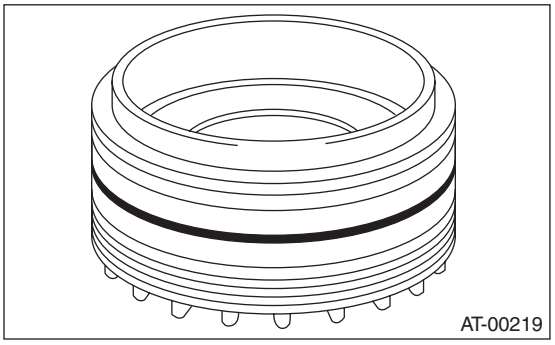

E: INSPECTION

• Check each component for scratches, damage or other faults.
• Measure the backlash, and then adjust it to be within specification. <Ref. to 5AT-92, ADJUSTMENT, Front Differential Assembly.>

F: ADJUSTMENT

1) Using the ST, screw-in the retainer until resistance is felt.

NOTE:
Screw-in the retainer RH side slightly deeper than the retainer LH.
ST 18658AA020 WRENCH COMPL RETAINER
2) Remove the oil pump cover.
3) Remove the liquid gasket from the mating surface completely.
4) Install the oil pump cover to converter case, and secure them with tightening four bolts evenly.

NOTE:
Use an old gasket or aluminum washer to prevent damaging the mating surface of the housing.

Tightening torque:
41 N·m (4.2 kgf-m, 30.2 ft-lb)

5) Rotate the drive pinion ten times or more using ST1 and ST2.
ST1 18667AA010 HOLDER
ST2 499787700 WRENCH

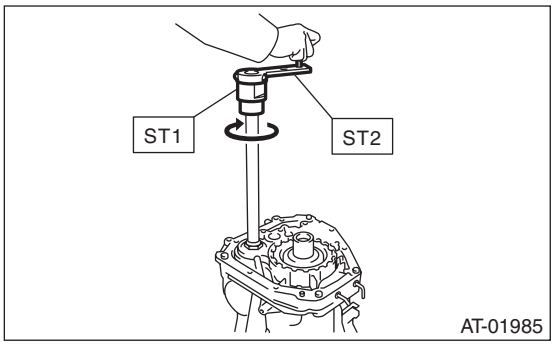

6) Tighten the LH retainer by rotating the shaft until resistance is felt. Then loosen the retainer RH. Keep tightening the retainer LH, and loosening the retainer RH until the pinion shaft no longer be turned. This is the “zero” state.

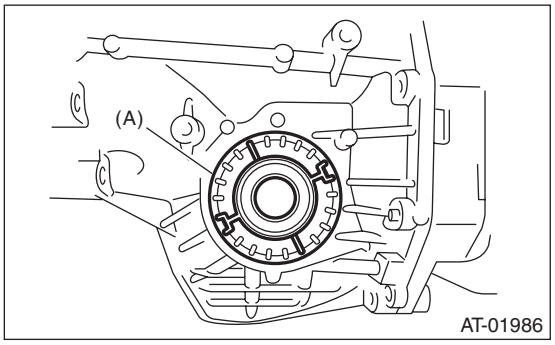

(A) Retainer

7) After the “zero” state is established, loosen the retainer LH by 3 notches and secure it with the lock plate. Then loosen the retainer RH and retighten until it stops. Rotate the drive pinion 2 or 3 times. Tighten the retainer RH further 1-3/4 notches. This sets the preload. Finally, secure the retainer with its lock plate.

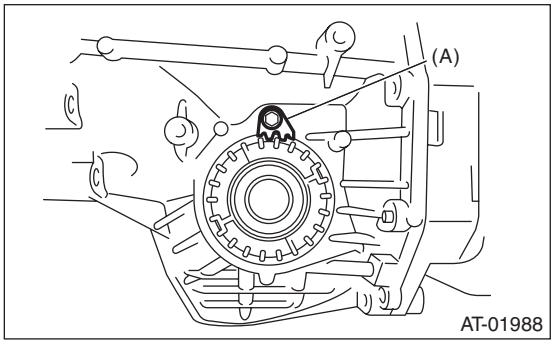

(A) Lock plate

NOTE:
Turning the retainer by one tooth changes the backlash approx. 0.05 mm (0.0020 in).

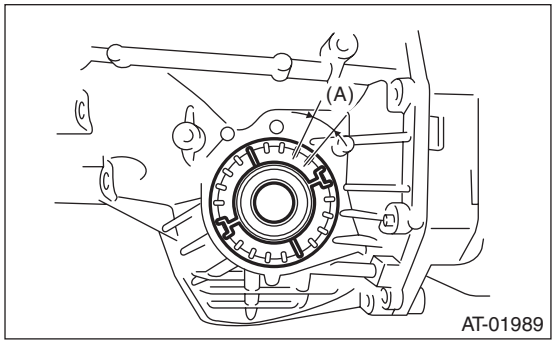

(A) 0.05 mm (0.0020 in)

8) Install the SUBARU genuine axle shaft to the left and right sides of the front differential.
9) Turn the drive pinion a few times with ST1 and check to see if the backlash is within the specified value, using ST2, ST3, ST4 and ST5.

NOTE:
Secure the ST1 and stator shaft with the tie-wrap.

Backlash:
0.13 — 0.18 mm (0.0051 — 0.0071 in)
ST1 499787700 WRENCH
ST2 498247001 MAGNET BASE
ST3 498247100 DIAL GAUGE
ST4 499787500 ADAPTER
ST5 498255400 PLATE

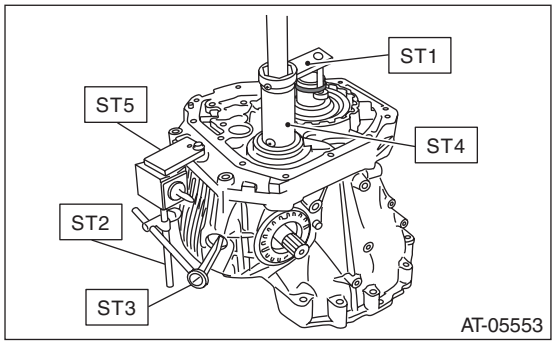

10) Adjust the teeth contact of the front differential and drive shaft. <Ref. to 5AT-86, ADJUSTMENT, Drive Pinion Shaft Assembly.>

34.AT Main Case

A: REMOVAL

1) Remove the transmission assembly from the vehicle. <Ref. to 5AT-37, REMOVAL, Automatic Transmission Assembly.>
2) Pull out the torque converter assembly. <Ref. to 5AT-63, REMOVAL, Torque Converter Assembly.>
3) Remove the transmission harness connector from stay.
4) Remove the ATF cooler inlet pipe and outlet pipe. <Ref. to 5AT-58, REMOVAL, ATF Cooler Pipe and Hose.>
5) Remove the extension case. <Ref. to 5AT-65, REMOVAL, Extension Case.>
6) Remove the center differential carrier. <Ref. to 5AT-74, REMOVAL, Center Differential Carrier.>
7) Remove the reduction driven gear. <Ref. to 5AT-71, REMOVAL, Reduction Driven Gear.>
8) Separate the converter case from the transmission case. <Ref. to 5AT-78, REMOVAL, Converter Case.>
9) Remove the control valve body. <Ref. to 5AT-55, REMOVAL, Control Valve Body.>
10) Remove the oil pump cover. <Ref. to 5AT-80, REMOVAL, Oil Pump Cover.>

NOTE:
The input clutch pack assembly and front sun gear assembly are also removed together.

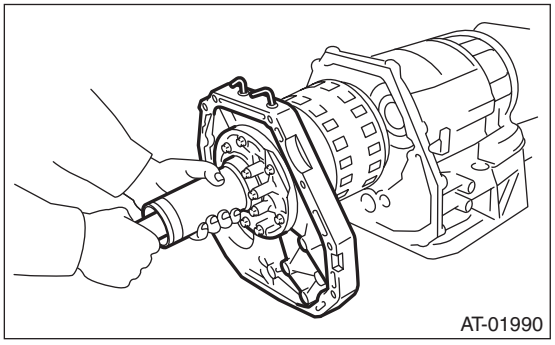
AT-01990

11) Remove the needle bearing of the middle carrier assembly.

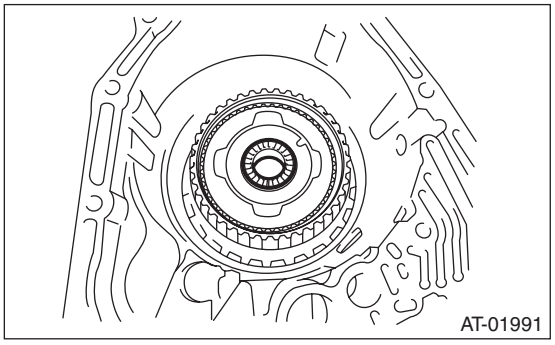
AT-01991

12) Remove the middle carrier assembly.

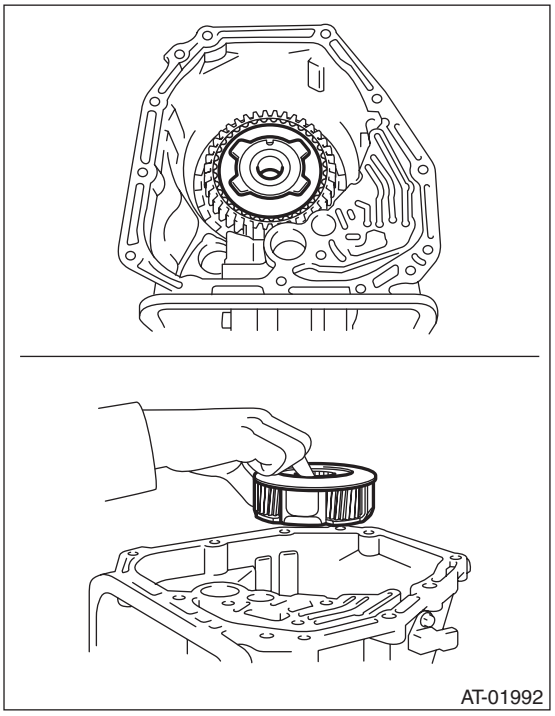
AT-01992

13) Remove the rear carrier assembly.

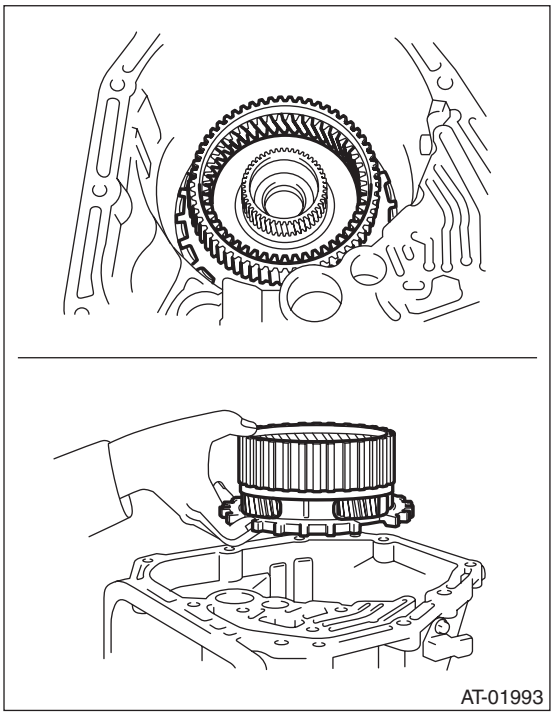
AT-01993

14) Remove the middle & rear sun gear assembly.

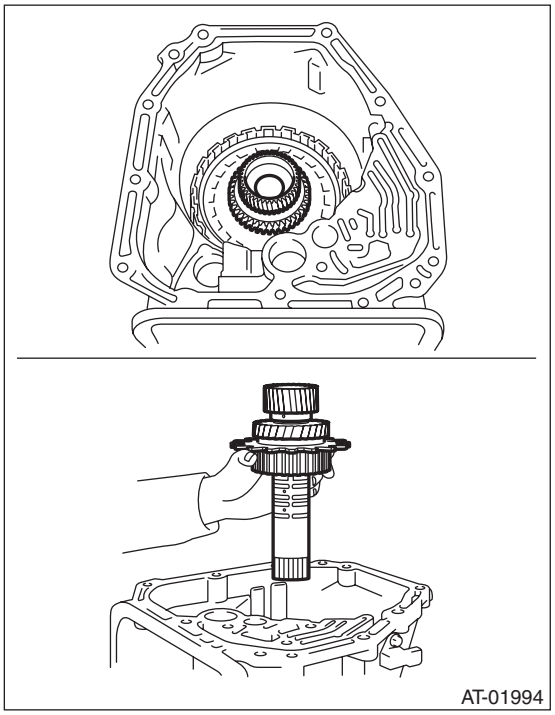

15) Remove the thrust needle bearing of high & low reverse clutch.

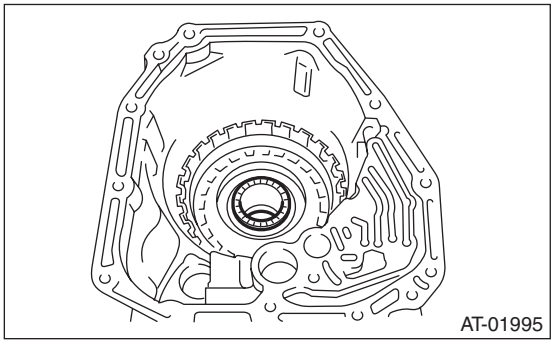

16) Remove the high & low reverse clutch assembly.

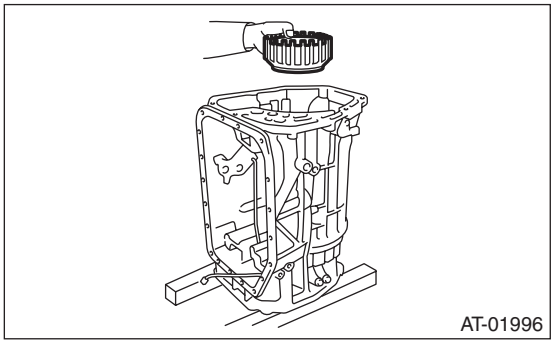

17) Remove the direct clutch assembly.

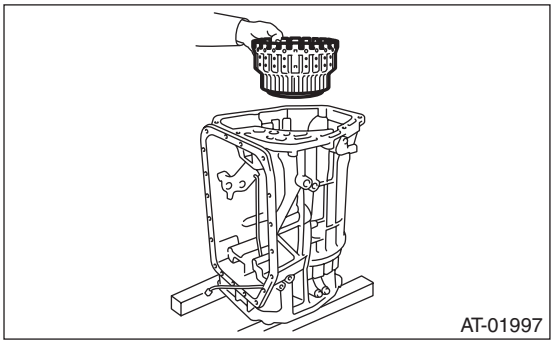

18) Remove the snap ring of reverse brake.

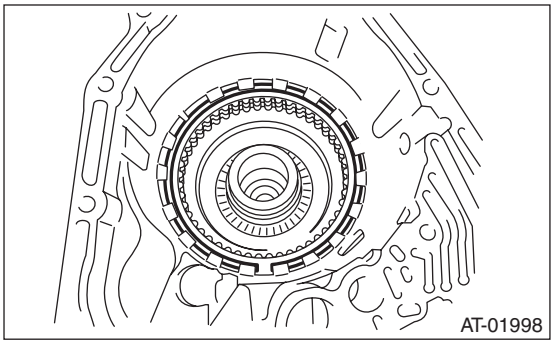

19) Remove the retaining plate.
20) Remove the leaf spring.

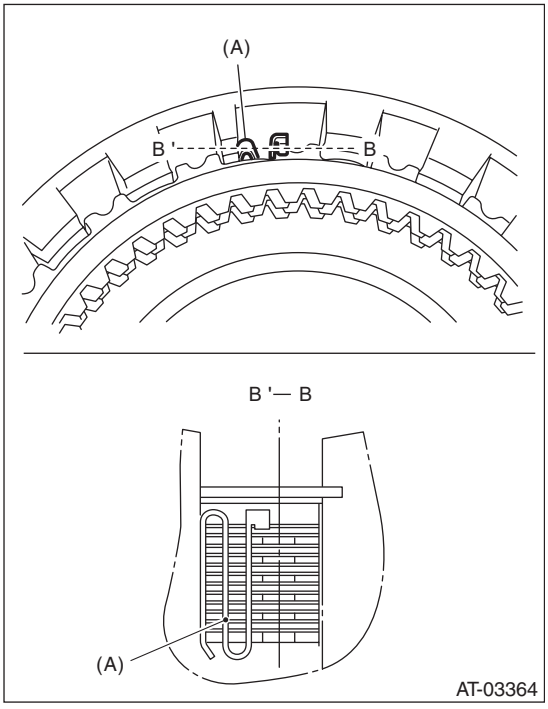

(A) Leaf spring

21) Take out the drive plate, driven plate and dish plate.

22) Remove the snap ring of the reverse brake spring retainer.

ST1	18762AA000	COMPRESSOR SPECIAL TOOL
ST2	18765AA000	COMPRESSOR SUPPORT
ST3	18763AA000	COMPRESSOR SHAFT

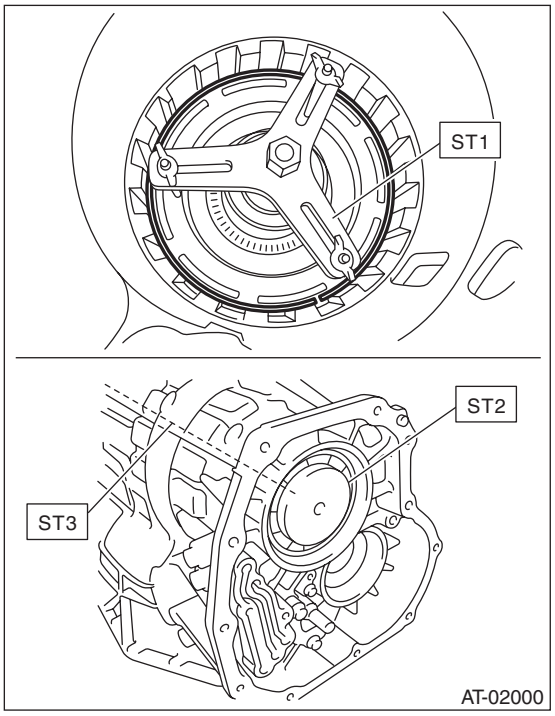

23) Remove the spring retainer.

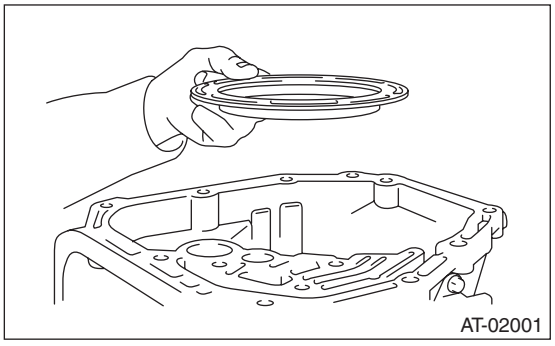

24) Remove the return spring.

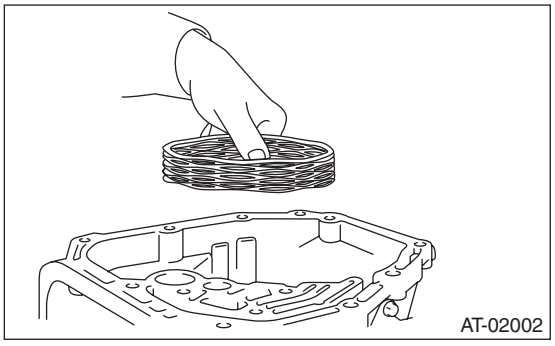

25) Apply compressed air.

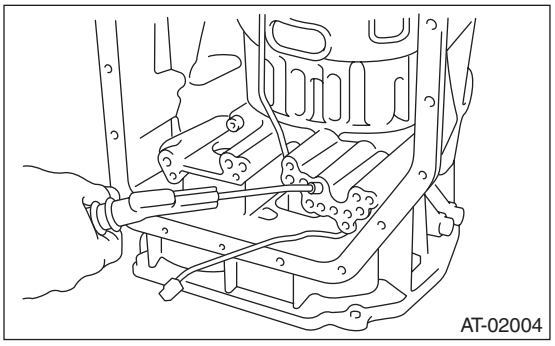

26) Remove the reverse brake piston.

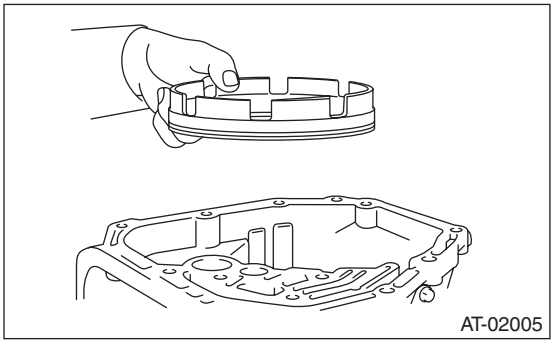

27) Remove the thrust bearing and seal ring.

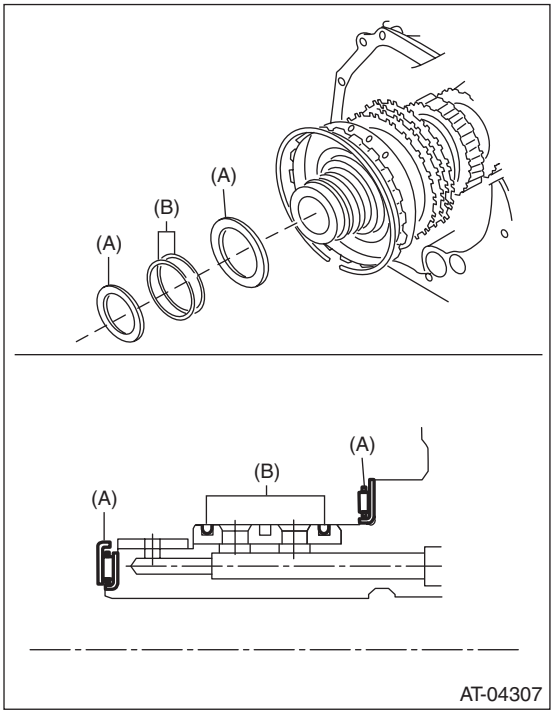

(A) Thrust bearing
(B) Seal ring

B: INSTALLATION

1) Apply ATF to the new seal ring.
2) Install the thrust bearing and new seal ring to the drum support.

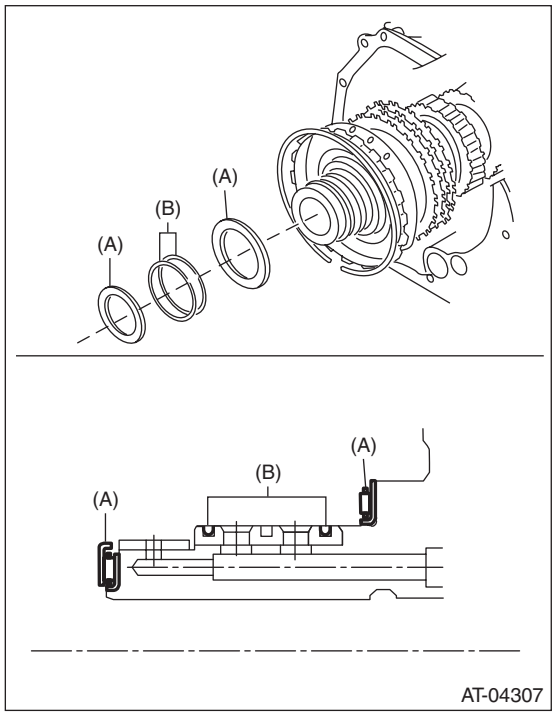

(A) Thrust bearing
(B) Seal ring

3) Install the reverse brake piston.

NOTE:
Apply ATF onto the piston sliding surface.

ST1	18762AA000	COMPRESSOR SPECIAL TOOL
ST2	18765AA000	COMPRESSOR SUPPORT
ST3	18763AA000	COMPRESSOR SHAFT

4) Install the return spring.

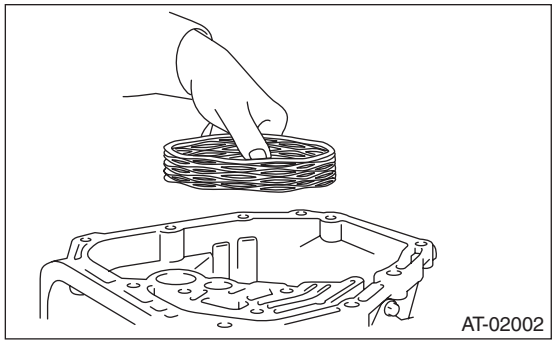

5) Install the spring retainer and snap ring.

ST1	18762AA000	COMPRESSOR SPECIAL TOOL
ST2	18765AA000	COMPRESSOR SUPPORT
ST3	18763AA000	COMPRESSOR SHAFT

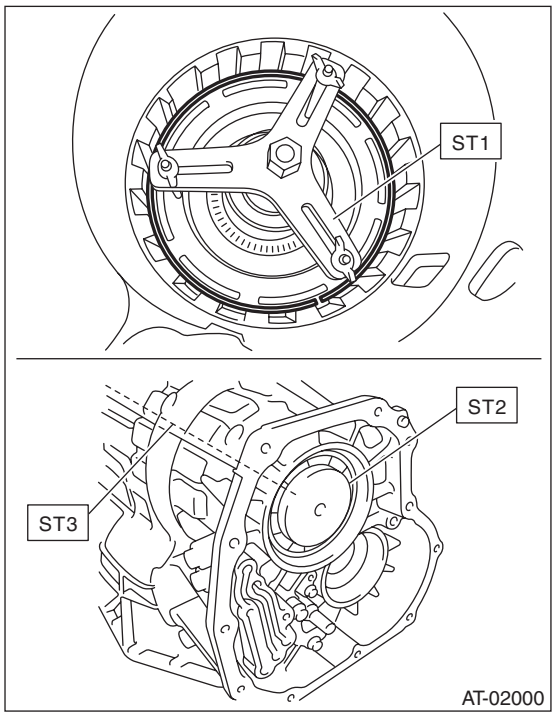

6) Install the dish plate.

NOTE:
When installing, make sure that the identification mark is facing the rear side of transmission.
7) Install the drive plate and driven plate.

NOTE:
When the reverse brake is disassembled, use a new drive plate and driven plate set.

8) Install the leaf spring.

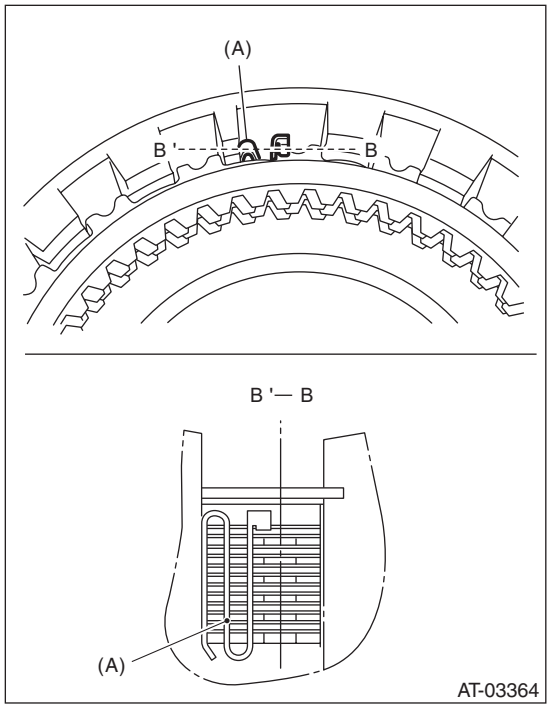

(A) Leaf spring

9) Install the retaining plate.
10) Install the snap ring of the reverse brake.

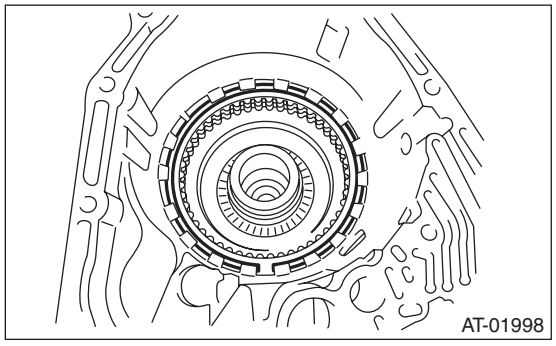

11) Apply compressed air intermittently to check for operation.

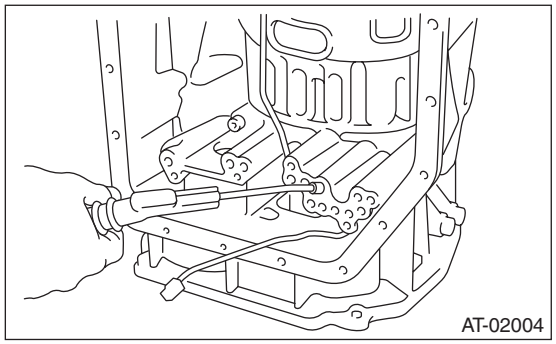

12) Check the piston stroke.

(1) Check the amount of drive plate compression “A” described in the wave clutch set of repair parts.

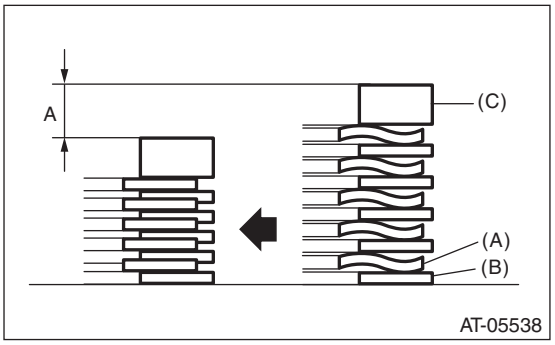

A Amount of drive plate compression

(A) Drive plate
(B) Driven plate
(C) Retaining plate

(2) Measure the clearance “B” between the retaining plate and snap ring using a thickness gauge.

NOTE:
• Set shims of the same thickness on both sides so that the retaining plate will not tilt.
• Do not push the shim down with force to a point where the waves on the drive plate will become crushed.

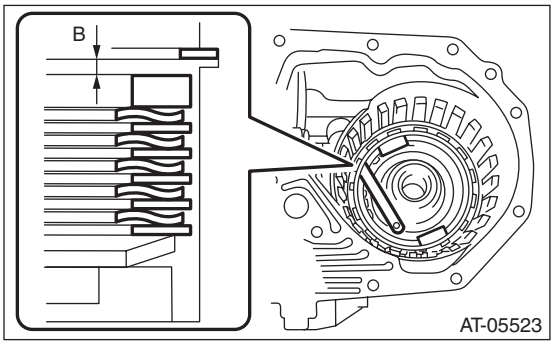

B Clearance between retaining plate and snap ring

(3) Select and install a retaining plate so that the value calculated from the dimensions A and B is within the standard.
T = A + B
T: Piston stroke
A: Amount of drive plate compression
B: Clearance between retaining plate and snap ring

Initial standard:
2.0 — 2.4 mm (0.08 — 0.09 in)

Retaining plate	
Part No.	Thickness mm (in)
31567AB100	4.2 (0.165)
31567AB170	4.4 (0.173)
31567AB180	4.6 (0.181)
31567AB190	4.8 (0.189)
31567AB200	5.0 (0.197)

13) Install the direct clutch assembly.

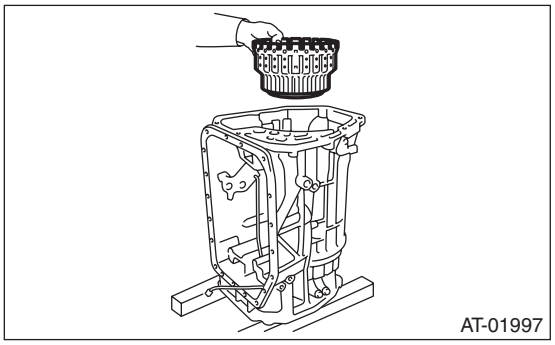
AT-01997

14) Install the high & low reverse clutch assembly.

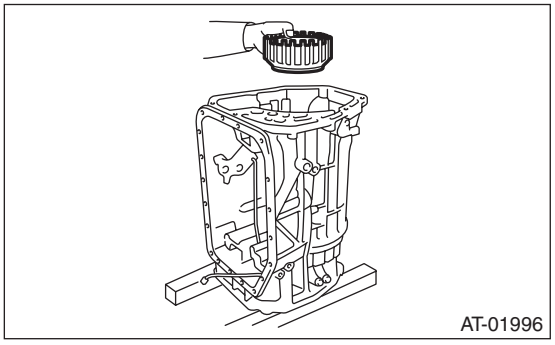
AT-01996

15) Install the thrust needle bearing of the high & low reverse clutch.

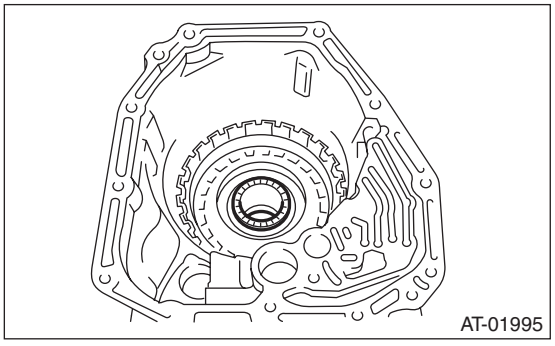
AT-01995

16) Install the middle & rear sun gear assembly.

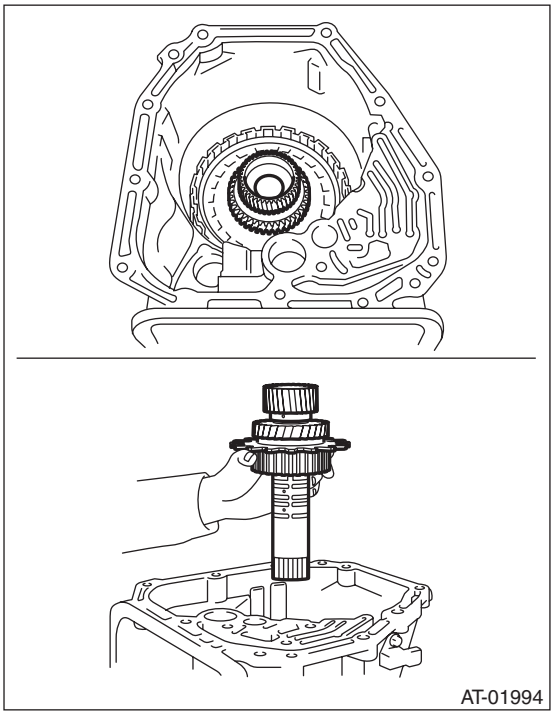
AT-01994

17) Install the rear carrier assembly.

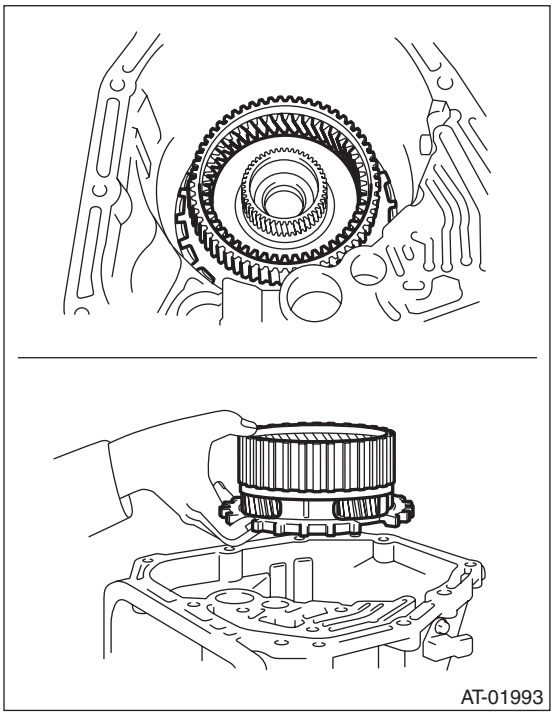
AT-01993

18) Install the middle carrier assembly.

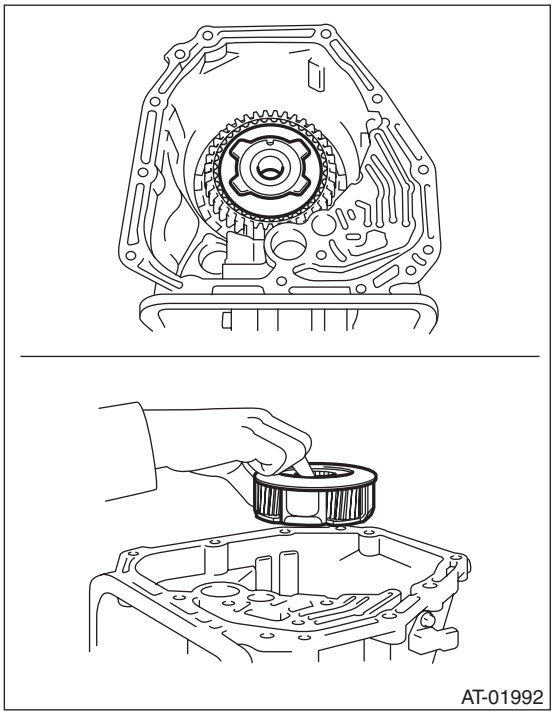

19) Install the thrust needle bearing of middle carrier assembly.

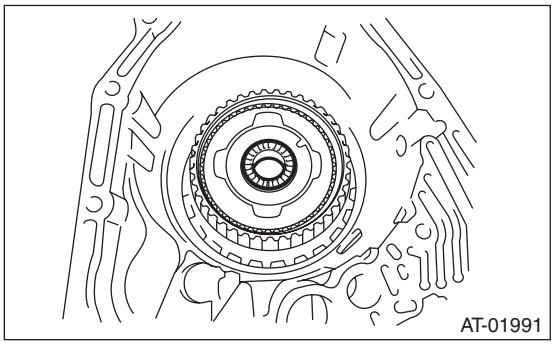

20) Measure the total end play, and select the bearing. <Ref. to 5AT-103, ADJUSTMENT, AT Main Case.>

21) Install the input clutch pack assembly to oil pump cover.

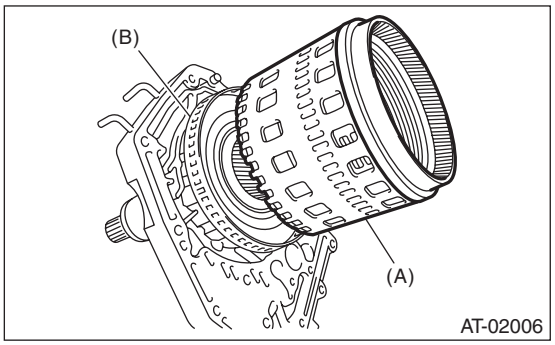

(A) Input clutch pack ASSY
(B) Front sun gear ASSY

22) Turn the transmission sideways.

23) Install the oil pump cover.
(1) Apply ATF to the O-ring of input clutch shaft.
(2) Install the oil pump cover to AT main case while supporting the input clutch shaft and oil pump housing with your hand.

NOTE:
Use a new gasket.

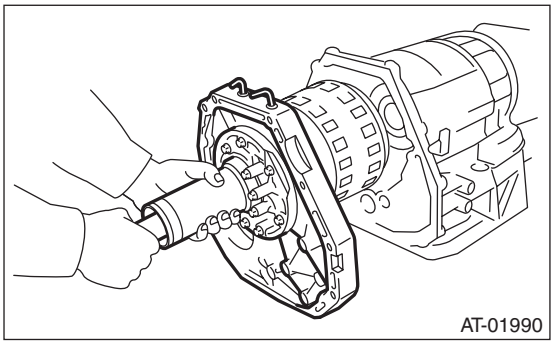

(3) Protect the input clutch shaft with a cloth, and rotate to engage the spline of the input clutch and rear carrier using pliers.

NOTE:
Work with pressing the oil pump cover.

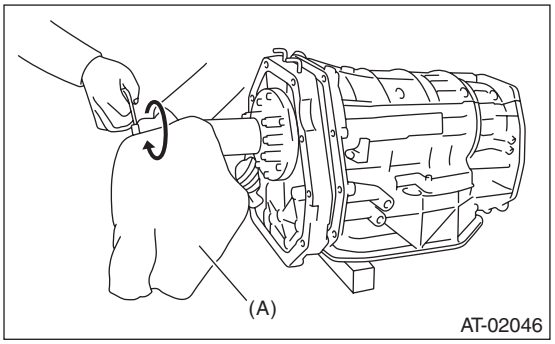

(A) Cloth

(4) Combine the oil pump cover with transmission main case.

Tightening torque:
41 N·m (4.2 kgf-m, 30.2 ft-lb)

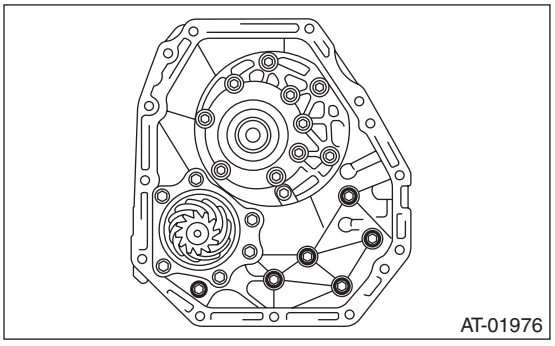

24) Install the center differential carrier. <Ref. to 5AT-74, INSTALLATION, Center Differential Carrier.>

25) Install the reduction driven gear. <Ref. to 5AT-71, INSTALLATION, Reduction Driven Gear.>
26) Install the extension case. <Ref. to 5AT-65, INSTALLATION, Extension Case.>
27) Install the control valve body. <Ref. to 5AT-55, INSTALLATION, Control Valve Body.>
28) Install the converter case assembly to the transmission case assembly. <Ref. to 5AT-78, INSTALLATION, Converter Case.>
29) Install the ATF cooler pipe. <Ref. to 5AT-59, INSTALLATION, ATF Cooler Pipe and Hose.>
30) Install the torque converter assembly. <Ref. to 5AT-63, INSTALLATION, Torque Converter Assembly.>
31) Install the transmission assembly to the vehicle. <Ref. to 5AT-42, INSTALLATION, Automatic Transmission Assembly.>
32) Perform Clear Memory 2 operation. <Ref. to 5AT(diag)-21, Clear Memory Mode.>
33) Perform the diagnosis again. <Ref. to 5AT(diag)-23, Learning Control.>
34) Perform the inspection at the end of repair work, and make sure there is no faulty as below;

- Excessive shift shock
- Oil leakage from the transmission body, etc.
- Occurrence of noise caused by interference etc.

C: DISASSEMBLY

1. INPUT CLUTCH PACK ASSEMBLY

1) Remove the front sun gear.

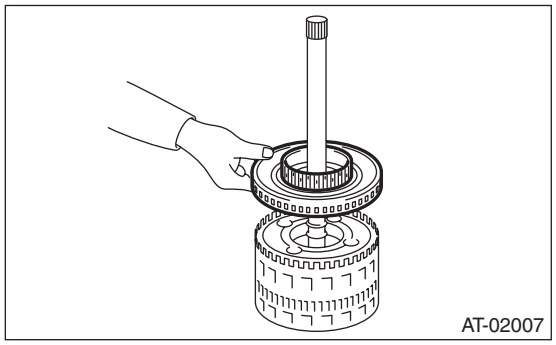
AT-02007

2) Remove the thrust bearing.
3) Remove the snap ring, and then remove the front carrier.

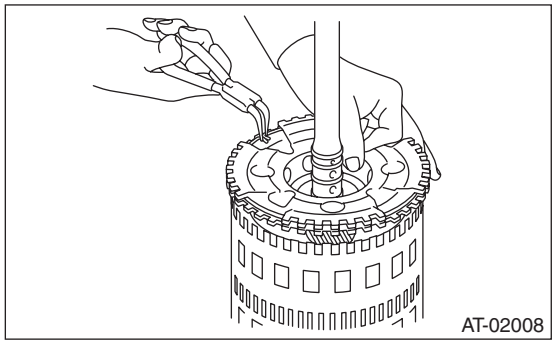
AT-02008

4) Remove the input clutch assembly from rear internal gear.

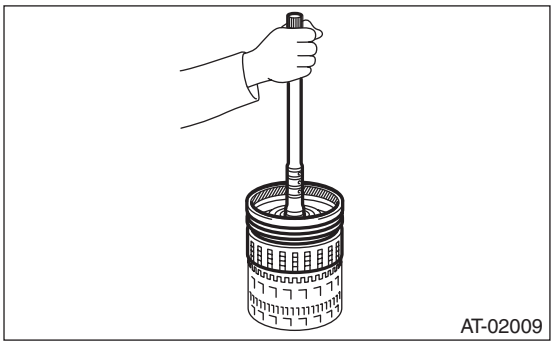
AT-02009

D: ASSEMBLY

1. INPUT CLUTCH PACK ASSEMBLY

1) Assemble the input clutch assembly to rear internal gear.

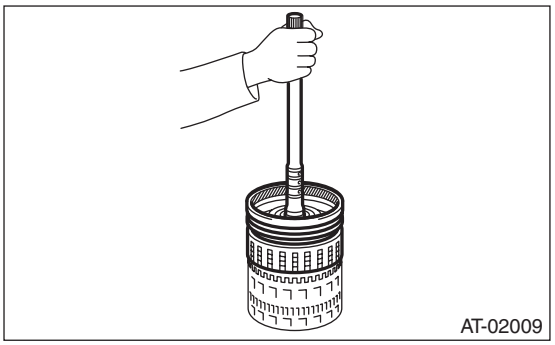
AT-02009

2) Install the front carrier, and then install the snap ring.

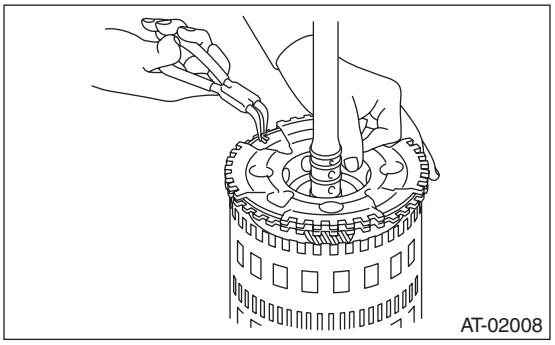
AT-02008

3) Install the thrust bearing.
4) Install the front sun gear.

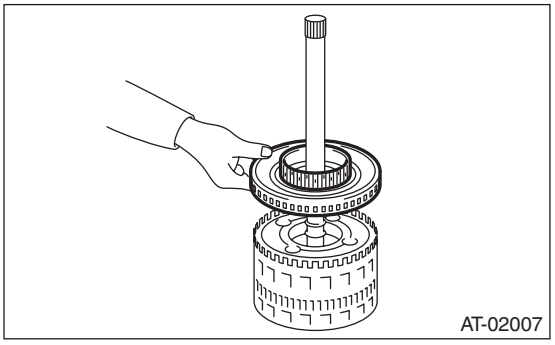
AT-02007

E: INSPECTION

1. FRONT, MIDDLE & REAR PLANETARY CARRIER ASSEMBLY

Check the following items.
• Visually inspect the tooth surface of planetary gear, and replace with new part if damaged, broken or excessively worn.
• Inspect the planetary carrier body for damage or breakage.

2. INPUT CLUTCH

• Check the clearance of the input clutch. Measure the clearance “L” between snap ring and retaining plate using a thickness gauge. If it is out of specification, replace the entire input clutch assembly.
• Check for damage on the drive plate, driven plate and snap ring, and replace the entire input clutch assembly if damaged.

Standard:
0.7 — 1.1 mm (0.028 — 0.043 in)

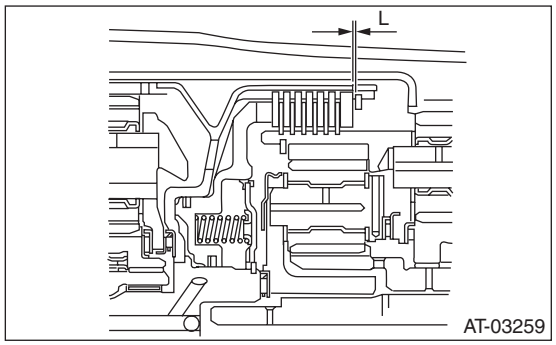

3. HIGH & LOW REVERSE CLUTCH ASSEMBLY

• Check the clearance of the high & low reverse clutch.
Measure the clearance “L” between snap ring and retaining plate using a thickness gauge. If it is out of specification, replace the entire high & low reverse clutch assembly.
• Check for damage on the drive plate, driven plate and snap ring, and replace the entire high & low reverse clutch assembly if damaged.

Standard:
1.8 — 2.2 mm (0.071 — 0.087 in)

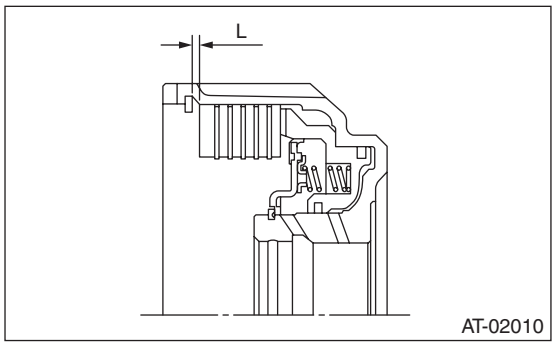

4. DIRECT CLUTCH ASSEMBLY

• Check the clearance of direct clutch.
Measure the clearance “L” between snap ring and retaining plate using a thickness gauge. If it is out of specification, replace the entire direct clutch assembly.
• Check for damage on the drive plate, driven plate and snap ring, and replace the entire direct clutch assembly if damaged.

Standard:
0.6 — 1.0 mm (0.024 — 0.039 in)

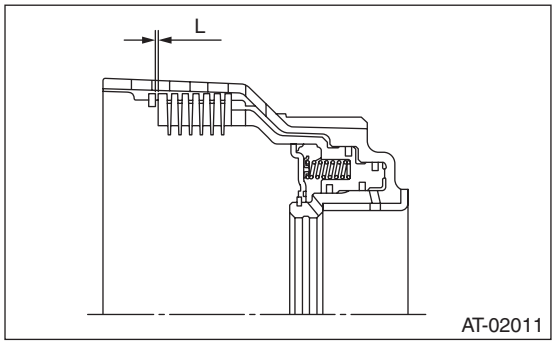

5. REVERSE BRAKE

Check the following items.
• Snap ring for wear, return spring for breakage, and spring retainer for deformation
• Lip seal and D-ring for damage
• Piston operation
• Piston stroke

F: ADJUSTMENT

1) Using the ST, measure the height “A” from the AT main case mating surface to the convex surface of oil pump cover.
ST 499575400 GAUGE

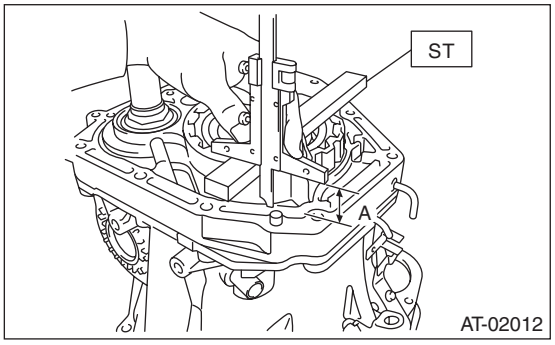

2) Using the ST, measure the depth “B” from the convex surface of oil pump cover to thrust bearing transferring surface.
ST 499575400 GAUGE

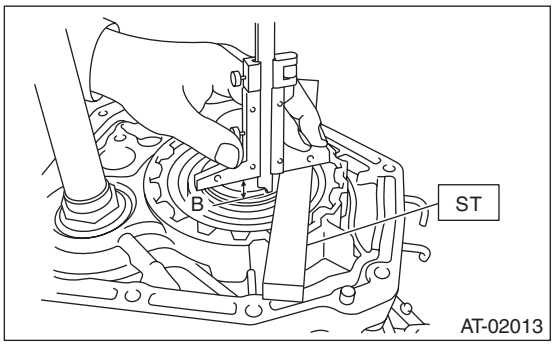

3) Calculate the measured value from step 1) and 2), and then set the calculated value as “C”.
Calculation formula: C = A – B
4) Using the ST, measure the depth “D” from the AT main case mating surface to the thrust bearing transferring surface of front sun gear.
ST 499575400 GAUGE

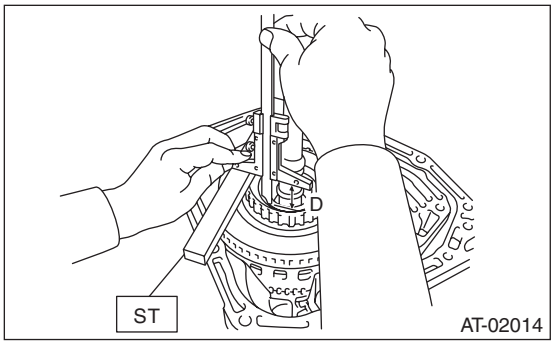

5) Set the value as “E” which subtract the thickness of ST (499575400 GAUGE) from the measured value on step 4).
Calculation: E (mm) = D – 15
[E (in) = D – 0.59]
6) Calculation formula:
When clearances are 0.25 mm (0.0098 in):
T (mm) = E – C + 0.03
[T (in) = E – C + 0.0012]
When clearances are 0.55 mm (0.0217 in):
T (mm) = E – C + 0.27
[T (in) = E – C + 0.0106]
T: Thrust bearing thickness
C: Distance from oil pump cover mating surface to rear end of oil pump cover
E: Depth from mating surface of AT main case to bearing surface of front sun gear

Specification:
0.25 — 0.55 mm (0.0098 — 0.0217 in)

NOTE:
Calculation formula for “T” above is applied when measuring with the ST (499575400 GAUGE). In the calculation without using ST, substitute the thickness of collar used to calculate the value “E” on step 5).
7) Select the thrust bearing so that the clearance is within the specified range.

Thrust bearing	
Part No.	Thickness mm (in)
806548020	3.2 (0.126)
806548030	3.4 (0.134)
806548040	3.6 (0.142)
806548050	3.8 (0.150)
806548060	4.0 (0.157)
806548070	4.2 (0.165)

35.Transmission Control Device

A: REMOVAL

1) Remove the transmission assembly from the vehicle. <Ref. to 5AT-37, REMOVAL, Automatic Transmission Assembly.>
2) Pull out the torque converter assembly. <Ref. to 5AT-63, REMOVAL, Torque Converter Assembly.>
3) Lift up the lever on the rear side of transmission harness connector, and then disconnect it from the stay.
4) Wrap vinyl tape around the nipple attached to the air breather hose.
5) Remove the transmission hanger COMPL.
6) Remove the control valve body assembly. <Ref. to 5AT-55, REMOVAL, Control Valve Body.>
7) Pull out the straight pin of manual plate.

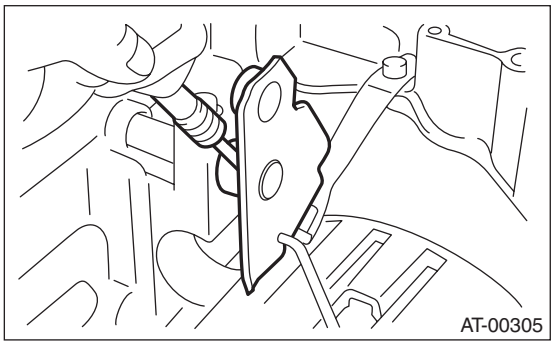

8) Remove the bolts securing range select lever, and then remove the select lever, manual plate and parking rod.

NOTE:
Be careful not to damage the lips of press-fitted oil seal in the case.

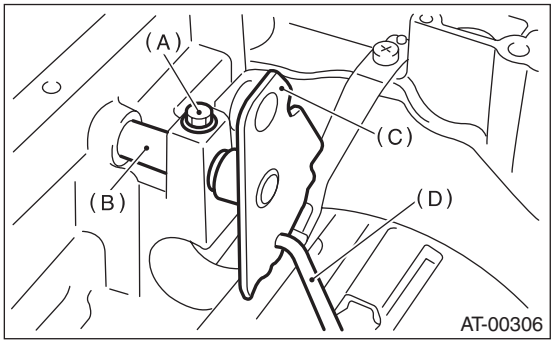

(A) Bolt
(B) Range select lever
(C) Manual plate
(D) Parking rod

9) Remove the detent spring.

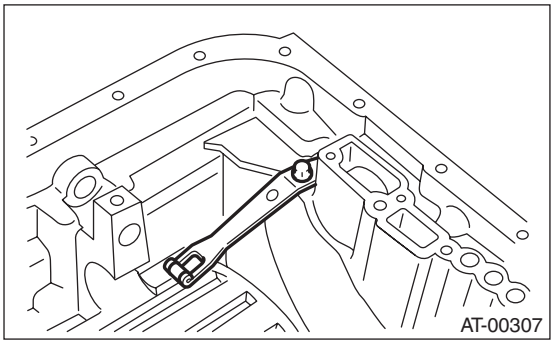

B: INSTALLATION

1) Install the detent spring to the transmission case.

Tightening torque:
7 N·m (0.7 kgf-m, 5.2 ft-lb)

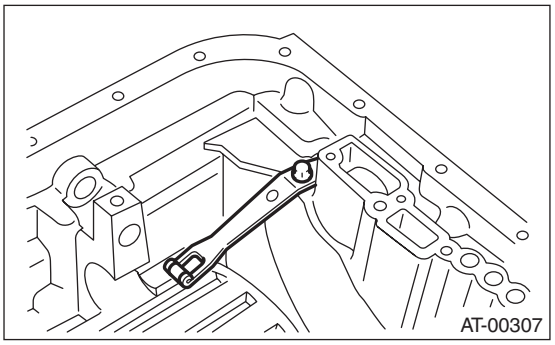

2) Insert the range select lever, and tighten the bolts.

Tightening torque:
6 N·m (0.6 kgf-m, 4.4 ft-lb)

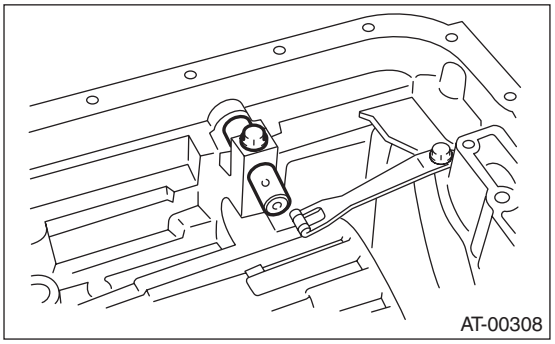

3) Insert the manual plate and parking rod.

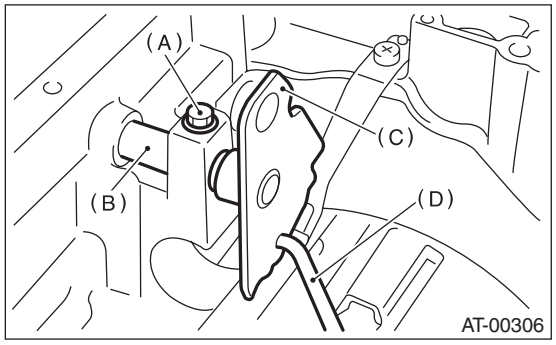

(A) Bolt
(B) Range select lever
(C) Manual plate
(D) Parking rod

4) Insert the straight pin to the manual plate.

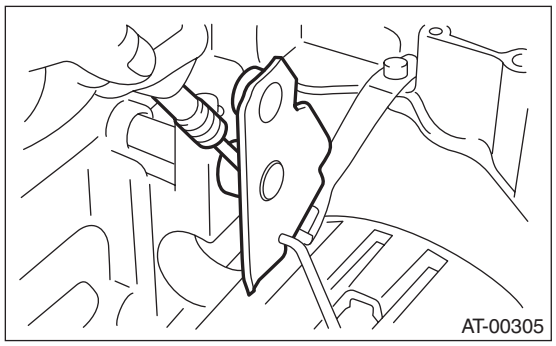

5) Install the oil pan and the control valve body assembly. <Ref. to 5AT-55, INSTALLATION, Control Valve Body.>
6) Install the transmission hanger COMPL.

Tightening torque:
41 N·m (4.2 kgf-m, 30.2 ft-lb)

7) Insert the transmission connector to the stay.
8) Install the air breather hose. <Ref. to 5AT-61, INSTALLATION, Air Breather Hose.>
9) Install the torque converter assembly. <Ref. to 5AT-63, INSTALLATION, Torque Converter Assembly.>
10) Install the transmission assembly to the vehicle. <Ref. to 5AT-42, INSTALLATION, Automatic Transmission Assembly.>

C: INSPECTION

Make sure the manual lever and detent spring are not worn or otherwise damaged.

36.Diagnostics with Phenomenon

A: INSPECTION

Symptoms	Faulty parts
Engine does not start when the select lever is in “N” and “P” range.	• Select cable • Inhibitor switch • TCM
Engine starts when the select lever is in a range other than “N” or “P” range.	• Select cable • Inhibitor switch • TCM
The vehicle is not switched to parting mode when the select lever is in “P” range.	• Inhibitor switch • Select cable • Parking mechanism
Parking mode is not canceled even if the select lever is shifted from “P” range to another range.	• Inhibitor switch • Select cable • Parking mechanism
Excessive shock when the select lever is shifted from “N” range to “D” range or from “N” range to “R” range.	• ATF • Turbine speed sensor • Line pressure solenoid • Line pressure circuit
Engine stalls when the select lever is shifted from “N” range to “D” range or from “N” range to “R” range.	• ATF • Turbine speed sensor • Line pressure circuit • Lock-up solenoid • Lock-up pressure circuit • Engine speed signal • TCM
Excessive shift shock while driving with the select lever in “D” range.	• ATF • Vehicle speed sensor • Turbine speed sensor • Line pressure circuit • Engine speed signal • TCM
Excessive shock at lock-up or lock-up does not occur when the select lever is in “D” range.	• Vehicle speed sensor • Turbine speed sensor • Line pressure circuit • Lock-up solenoid • Lock-up pressure circuit • Engine speed signal • TCM
Cannot drive in all ranges.	• ATF • Select cable • Inhibitor switch • Line pressure solenoid • Line pressure circuit • Engine speed signal • TCM • Gear and clutch
The vehicle can run when the select lever is in “P” and “N” range.	• Inhibitor switch • Select cable
Excessively poor acceleration when the select lever is in “D” range.	• ATF • Line pressure solenoid • Line pressure circuit • Vehicle speed sensor • Engine speed signal • TCM • Gear and clutch

Symptoms	Faulty parts
Noise emitted from transmission	• ATF • Gear, clutch and bearing • Control valve

AUTOMATIC TRANSMISSION (DIAGNOSTICS)

5AT(diag)

		Page
1.	Basic Diagnostic Procedure	2
2.	Check List for Interview	4
3.	General Description	5
4.	Electrical Component Location	7
5.	Transmission Control Module (TCM) I/O Signal	13
6.	Subaru Select Monitor	17
7.	Read Current Data	18
8.	Read Diagnostic Trouble Code (DTC)	20
9.	Clear Memory Mode	21
10.	Inspection Mode	22
11.	Learning Control	23
12.	AT OIL TEMP Warning Light Display	25
13.	AWD Warning Light Display	28
14.	Diagnostic Procedure for Subaru Select Monitor Communication	30
15.	List of Diagnostic Trouble Code (DTC)	33
16.	Diagnostic Procedure with Diagnostic Trouble Code (DTC)	36
17.	Diagnostic Procedure without Diagnostic Trouble Code (DTC)	97
18.	Diagnostics with Phenomenon	98

1. Basic Diagnostic Procedure

A: PROCEDURE

	Step	Check	Yes	No
1	**CHECK PRE-INSPECTION.** 1) Ask the customer when and how the trouble occurred using the interview check list. <Ref. to 5AT(diag)-4, Check List for Interview.> 2) Check the following items which may be affecting the AT trouble. • General inspection <Ref. to 5AT(diag)-5, INSPECTION, General Description.> • Oil leakage • Stall speed test <Ref. to 5AT-33, Stall Test.> • Line pressure test <Ref. to 5AT-35, Line Pressure Test.> • Transfer clutch pressure test <Ref. to 5AT-36, Transfer Clutch Pressure Test.> • Time lag test <Ref. to 5AT-34, Time Lag Test.> • Road test <Ref. to 5AT-32, Road Test.> • Inhibitor switch <Ref. to 5AT-50, Inhibitor Switch.>	Is the item that might influence the AT problem normal?	Go to step **2**.	Repair or replace items which might affect the AT problem.
2	**CHECK AT OIL TEMP LIGHT.** Turn the ignition switch to ON and wait for at least 2 seconds.	Does the AT OIL TEMP light illuminate?	Go to step **3**.	Check the AT OIL TEMP light.
3	**CHECK AT OIL TEMP LIGHT.** Start the engine and wait for 2 seconds or more.	Does the AT OIL TEMP light blink?	Go to step **4**.	Go to step **6**.
4	**CHECK DTC.** Read the DTC. <Ref. to 5AT(diag)-20, OPERATION, Read Diagnostic Trouble Code (DTC).> NOTE: If the communication function of Subaru Select Monitor cannot be executed normally, check the communication circuit. <Ref. to 5AT(diag)-30, COMMUNICATION FOR INITIALIZING IMPOSSIBLE, Diagnostic Procedure for Subaru Select Monitor Communication.>	Is DTC displayed on Subaru Select Monitor?	Record all DTC. Go to step **5**.	Go to step **6**. NOTE: When the AT OIL TEMP light blinks, check if the learning has completed.
5	**CHECK FREEZE FRAME DATA.** Using the Subaru Select Monitor, check the Freeze Frame Data.	Are freeze frame data recorded?	Record the freeze frame data. Go to step **7**.	Go to step **7**.
6	**PERFORM GENERAL DIAGNOSTICS.** 1) Inspect using “Diagnostic Procedure without Diagnostic Trouble Code (DTC)”. <Ref. to 5AT(diag)-97, Diagnostic Procedure without Diagnostic Trouble Code (DTC).> 2) Perform the Clear Memory Mode. 3) Perform the Inspection Mode. <Ref. to 5AT(diag)-22, Inspection Mode.> 4) Read the DTC.	Is DTC displayed on Subaru Select Monitor?	Go to step **7**.	Finish the diagnosis.

	Step	Check	Yes	No
7	**PERFORM DIAGNOSIS.** 1) Inspect by referring to “Diagnostic Procedure with Diagnostic Trouble Code (DTC)”. <Ref. to 5AT(diag)-36, Diagnostic Procedure with Diagnostic Trouble Code (DTC).> NOTE: For the DTC table, refer to “List of Diagnostic Trouble Code (DTC)”. <Ref. to 5AT(diag)-33, List of Diagnostic Trouble Code (DTC).> 2) Repair the trouble cause. 3) Perform the Clear Memory Mode. 4) Perform the Inspection Mode. <Ref. to 5AT(diag)-22, Inspection Mode.> 5) Read the DTC.	Is DTC displayed on Subaru Select Monitor?	Inspect again using Diagnostic Procedure with Diagnostic Trouble Code (DTC). <Ref. to 5AT(diag)-36, Diagnostic Procedure with Diagnostic Trouble Code (DTC).>	Finish the diagnosis.

2. Check List for Interview

A: CHECK

Check the following items when a problem has occurred.

NOTE:
Use copies of this page for interviewing customers.

Customer's name			
Date of purchase			
Date of repair			
Transmission model	Transmission	V.I.N.	
Odometer reading	km (miles)		
Symptoms	❑ No up-shift		
	❑ No down-shift		
	❑ No kick down		
	❑ Vehicle does not move (❑ Any position ❑ Particular position)		
	❑ Lock-up malfunction		
	❑ Noise or vibration		
	❑ Shift shock or slip		
	❑ Select lever does not move		
	❑ Others ( )		
Frequency	❑ Continuous ❑ Intermittent (times a day)		
Weather	❑ Fine ❑ Cloudy ❑ Rainy ❑ Snowy ❑ Others ( )		
Place	❑ Highland ❑ Suburbs ❑ Inner city ❑ Uphill ❑ Rough road ❑ Others ( )		
Ambient air temperature	❑ Hot ❑ Warm ❑ Cool ❑ Cold		
Vehicle speed	km/h (MPH)		
AT OIL TEMP light	❑ Blinks continuously	❑ Does not blink	
Select lever position	❑ P ❑ R ❑ N ❑ D ❑ Manual mode		
Driving condition	❑ Not affected ❑ At racing ❑ While decelerating	❑ At starting ❑ When accelerating ❑ While turning (❑ RH/❑ LH)	❑ While idling ❑ While cruising
Manual mode	❑ ON ❑ OFF		

3. General Description

A: CAUTION

1. SUPPLEMENTAL RESTRAINT SYSTEM "AIRBAG"

The airbag system wiring harness is routed near the TCM.

CAUTION:
• All the airbag system wiring harnesses and connectors are colored yellow. Do not use an electric test equipment to check these circuits.
• Be careful not to damage the airbag system wiring harness when performing diagnostics or servicing the TCM.

2. MEASUREMENT

When measuring the voltage and resistance of the ECM, TCM or each sensor, use a tapered pin with a diameter of less than 0.64 mm (0.025 in) in order to avoid poor contact. Do not insert a pin of more than 0.65 mm (0.026 in) diameter.

B: INSPECTION

1. BATTERY

Measure the battery voltage and specific gravity of the electrolyte.

Standard voltage:
12 V or more

Specific gravity:
1.260 or more

2. TRANSMISSION GROUND

Make sure that the ground terminal bolt is tightened securely.

Tightening torque:
7 N·m (0.7 kgf-m, 5.2 ft-lb)

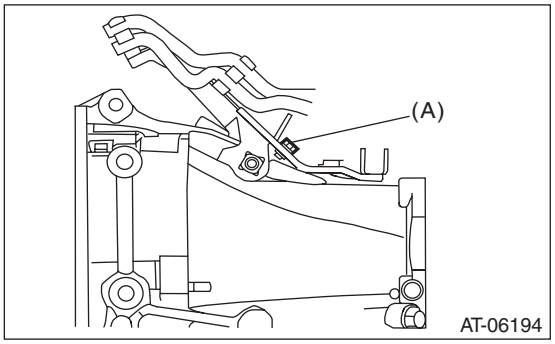

(A) Ground bolt

3. ATF LEVEL

Make sure that ATF level is the specified amount. <Ref. to 5AT-29, INSPECTION, Automatic Transmission Fluid.>

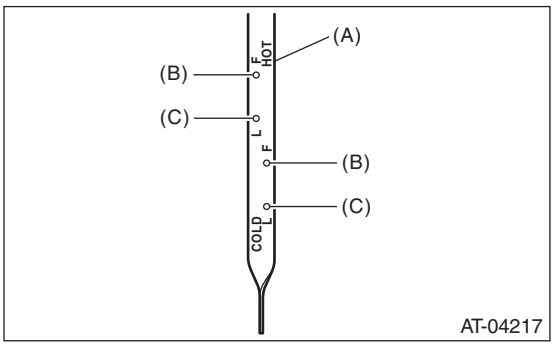

(A) Oil level gauge
(B) Upper level
(C) Lower level

4. FRONT DIFFERENTIAL OIL LEVEL

Make sure the front differential oil level is the specified amount. <Ref. to 5AT-31, INSPECTION, Differential Gear Oil.>

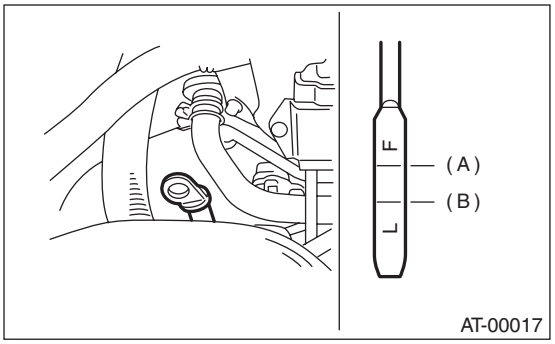

(A) Upper level
(B) Lower level

5. OPERATION OF SHIFT SELECT LEVER

Make sure there is no noise, dragging or contact pattern in each select lever range.

WARNING:
Stop the engine while checking operation of the select lever.

C: PREPARATION TOOL

1. SPECIAL TOOL

ILLUSTRATION	TOOL NUMBER	DESCRIPTION	REMARKS
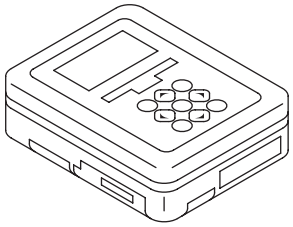 ST1B022XU0	1B022XU0	SUBARU SELECT MONITOR III KIT	Used for troubleshooting the electrical system.

2. GENERAL TOOL

TOOL NAME	REMARKS
Circuit tester	Used for measuring resistance, voltage and current.
Oscilloscope	Used for measuring the sensor.

4. Electrical Component Location

A: LOCATION

1. CONTROL MODULE

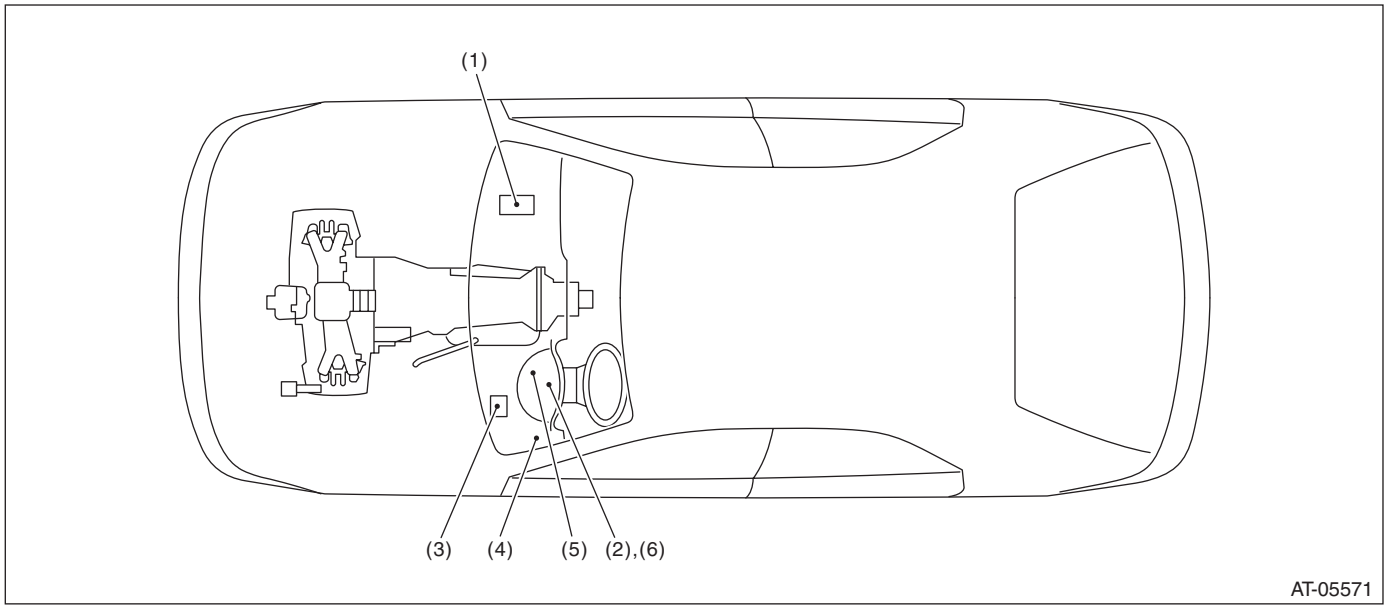

(1)	Engine control module (ECM)	(3)	Transmission control module (TCM)	(5)	Body integrated unit
(2)	AT OIL TEMP light	(4)	Data link connector	(6)	AWD light

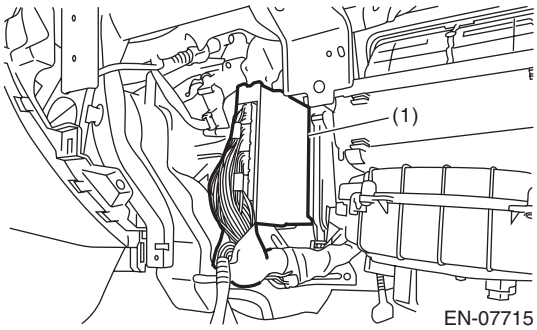
(1)
EN-07715

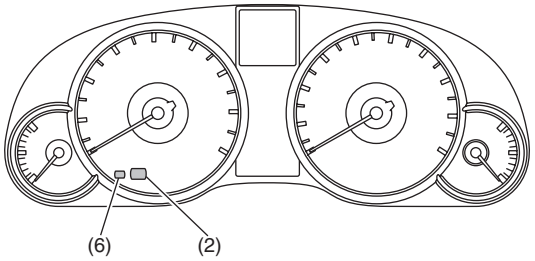
(6)
(2)
AT-06101

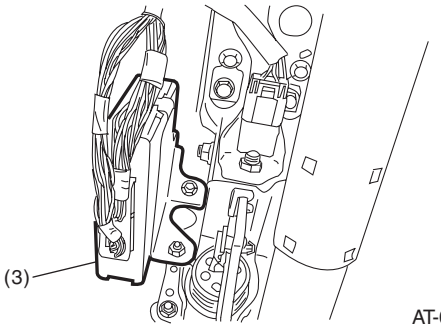
(3)
AT-06149

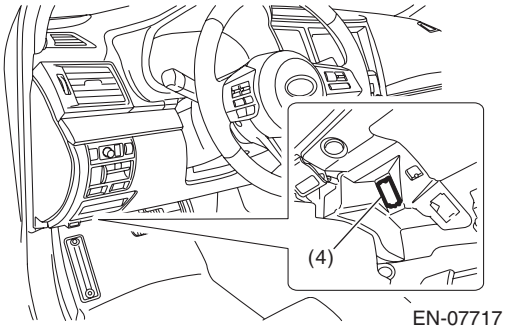
(4)
EN-07717

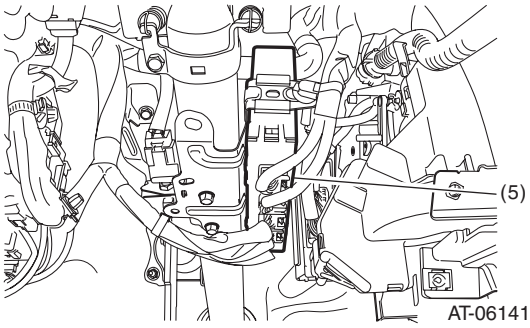
(5)
AT-06141

2. SENSOR

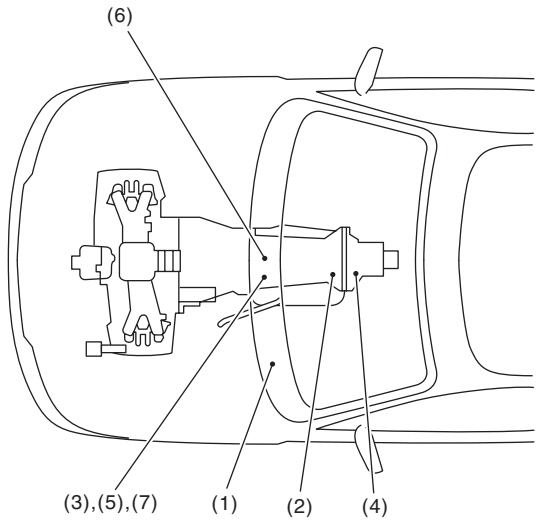

AT-05683

(1) Accelerator pedal position sensor
(2) Front vehicle speed sensor
(3) Inhibitor switch
(4) Rear vehicle speed sensor
(5) Turbine speed sensor 1
(6) ATF temperature sensor
(7) Turbine speed sensor 2

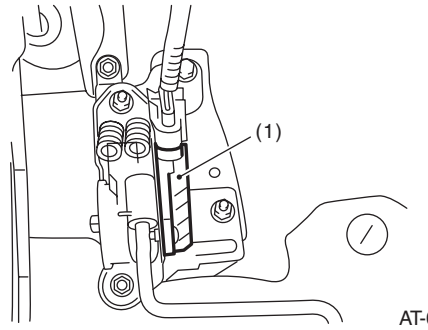

AT-00375

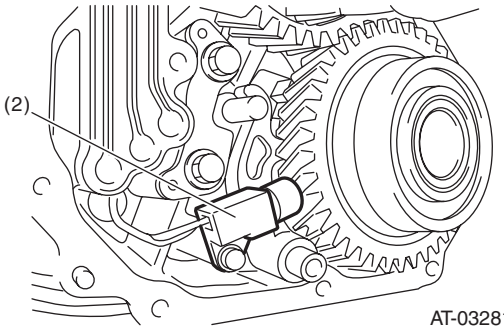

AT-03281

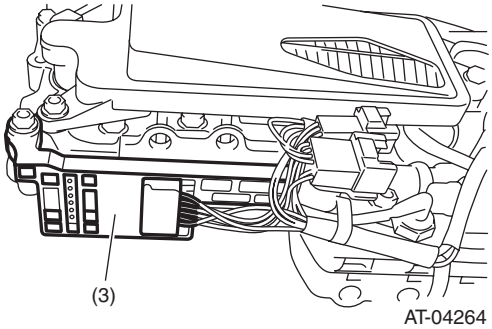

AT-04264

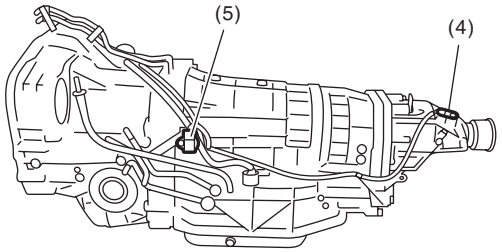

AT-03282

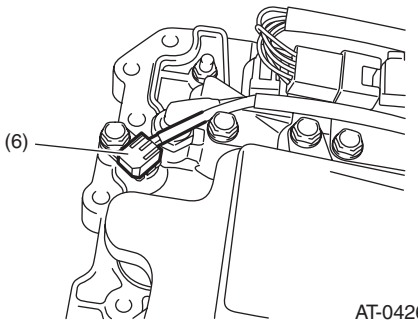

AT-04265

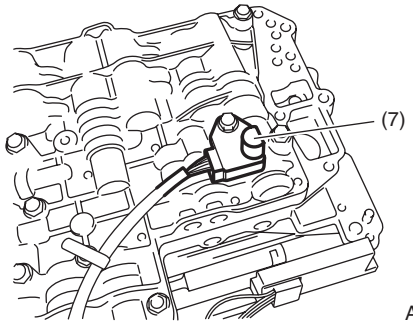

AT-04266

3. SOLENOID

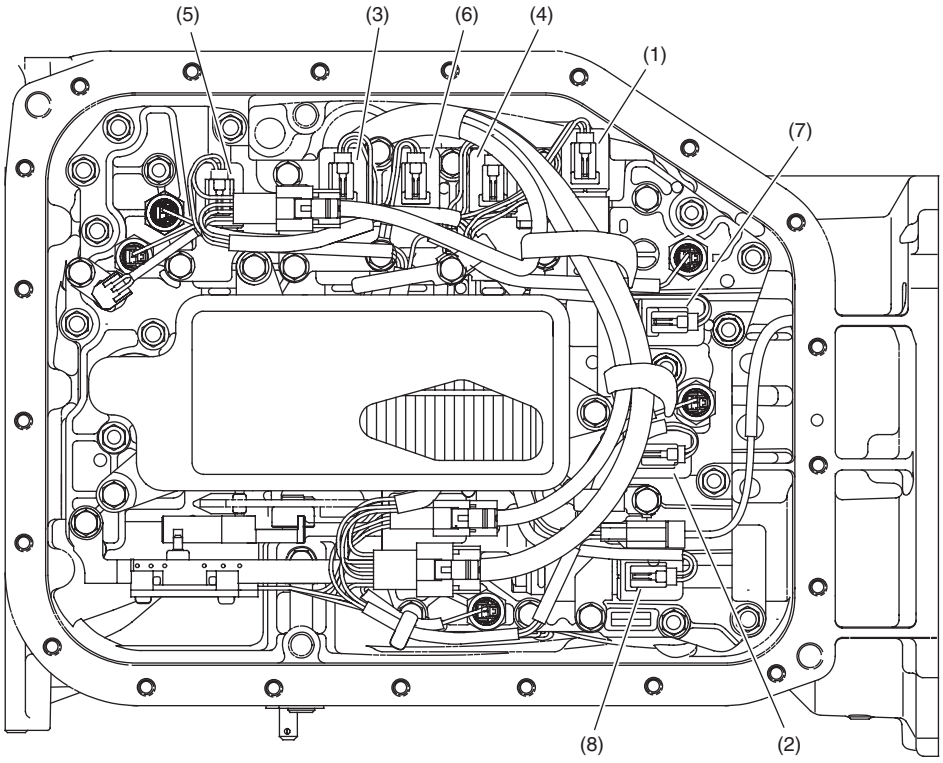

(1) High & low reverse clutch solenoid
(2) Direct clutch solenoid
(3) Front brake solenoid
(4) Input clutch solenoid
(5) Line pressure solenoid
(6) Lock-up solenoid
(7) Transfer solenoid
(8) Forward brake solenoid

4. OIL PRESSURE SWITCH

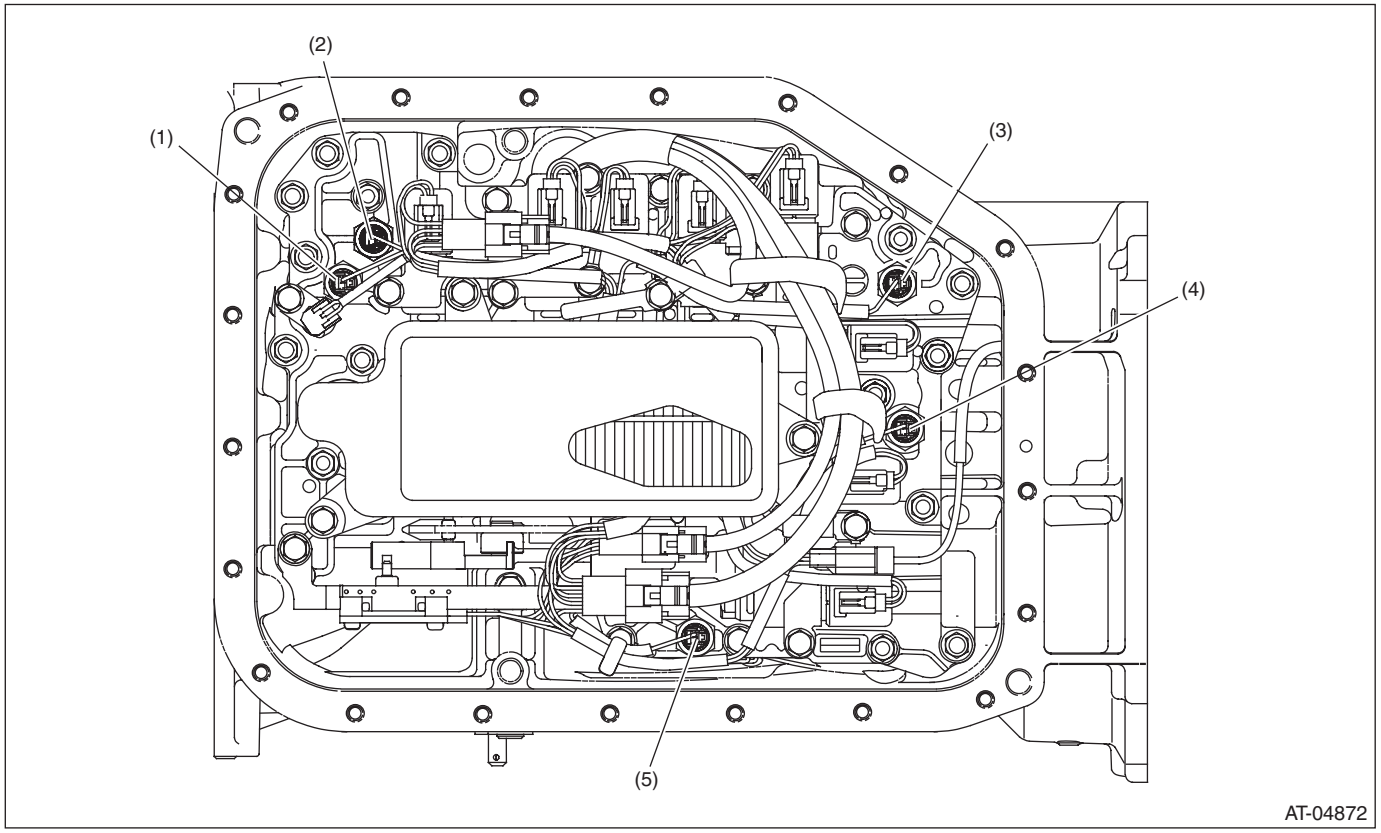

(1) Front brake oil pressure switch
(2) Input clutch oil pressure switch
(3) High & low reverse clutch oil pressure switch
(4) Direct clutch oil pressure switch
(5) Forward brake oil pressure switch

5. Transmission Control Module (TCM) I/O Signal

A: ELECTRICAL SPECIFICATION

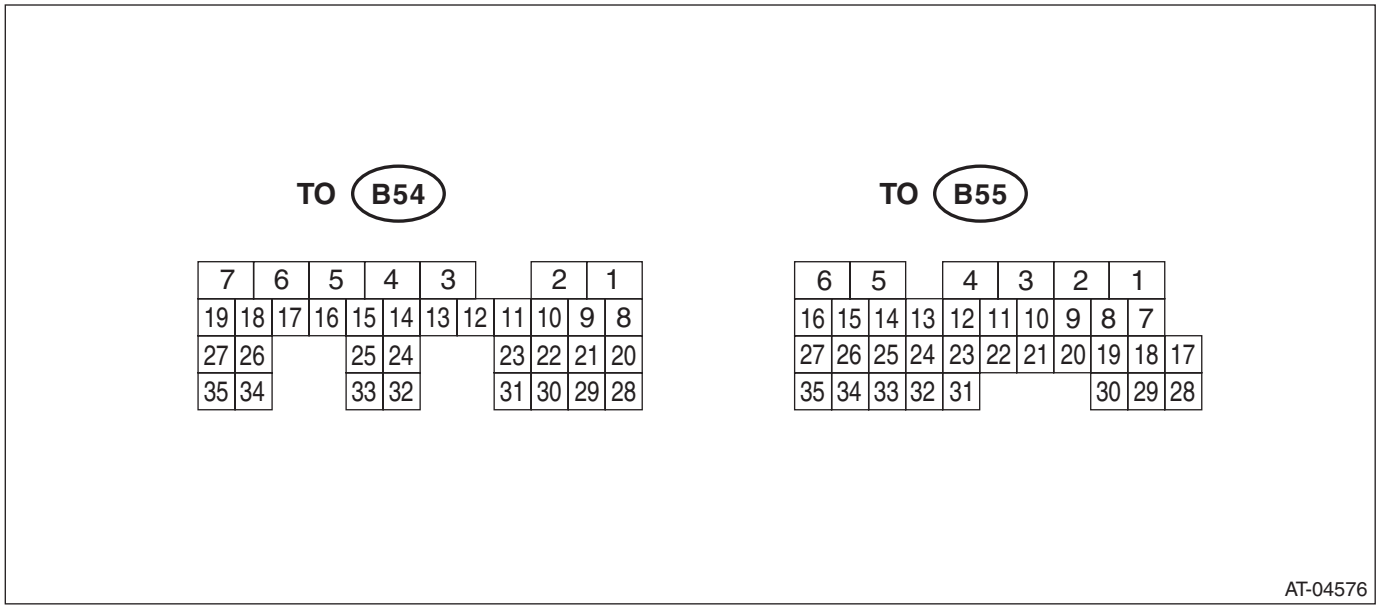

NOTE:
Measure after warming up.

Item	Connector No.	Terminal No.	Measuring conditions	Measured value	Resistance between terminal and chassis ground	Remarks
P/L solenoid output	B55	6	Engine ON, "P" range, accelerator OFF, brake ON	3.5 — 7.5 V	3 — 9 Ω (ATF temperature 20°C (68°F))	Drive frequency: 300 Hz
I/C oil pressure switch input	B55	20	While driving at 1st — 3rd of manual mode	6 V or more		
			While driving at 4th or 5th of manual mode	Less than 1.5 V		
Power GND1	B55	12	Always	Approx. 0 V	—	
CAN communication line (+)	B54	21	—	—	—	
CAN communication line (–)	B54	20	—	—	—	
ATF temperature sensor input	B55	17	Ignition switch ON ATF oil temperature 20°C (68°F)	3.5 — 4.3 V	2.5 — 7.0 kΩ	Measure the resistance with the connector disconnected.
			Ignition switch ON ATF oil temperature 80°C (176°F)	1 — 2.2 V	0.3 — 0.8 kΩ	
Backup power supply	B54	24	Ignition switch ON	8 V or more	—	
			Ignition switch OFF			
I/C solenoid output	B55	3	While driving at 1st — 3rd of manual mode	5 V or more	3 — 9 Ω (ATF temperature 20°C (68°F))	Drive frequency: 300 Hz
			While driving at 4th or 5th of manual mode	Less than 1.5 V		

Item	Connector No.	Terminal No.	Measuring conditions	Measured value	Resistance between terminal and chassis ground	Remarks
H & LR/C solenoid output	B55	5	While driving at 2nd of manual mode	5 V or more	3 — 9 Ω (ATF temperature 20°C (68°F))	Drive frequency: 300 Hz
			While driving at 1st, 3rd — 5th of manual mode	Less than 1.5 V		
Power GND2	B55	13	Always	Approx. 0 V	—	
Analog GND	B55	18	Always	Approx. 0 V	—	
Fr/B solenoid output	B55	4	While driving at other than 4th of manual mode	5 V or more	3 — 9 Ω (ATF temperature 20°C (68°F))	Drive frequency: 300 Hz
			While driving at 4th of manual mode	Less than 1.5 V		
L/U solenoid output	B55	7	When lock-up	3 V or more	3 — 9 Ω (ATF temperature 20°C (68°F))	Drive frequency: 300 Hz
			When not lock-up	Less than 1 V		
D/C solenoid output	B55	1	While driving at 1st or 5th of manual mode	5 V or more	3 — 9 Ω (ATF temperature 20°C (68°F))	Drive frequency: 300 Hz
			While driving at 2nd-4th of manual mode	Less than 1.5 V		
D/C oil pressure switch input	B55	22	While driving at 1st or 5th of manual mode	6 V or more		
			While driving at 2nd-4th of manual mode	Less than 1.5 V		
Data link signal (Subaru Select Monitor communication line)	B54	8	Ignition switch ON	8 V or more	—	
			Ignition switch OFF	Less than 1 V		
Sensor GND (analog)	B55	16	Always	Approx. 0 V	—	
H&LR/C oil pressure switch input	B55	14	While driving at 2nd of manual mode	6 V or more	—	
			While driving at 3rd-5th of manual mode	Less than 1.5 V		
Fwd/B solenoid output	B55	19	While driving at 1st or 2nd of manual mode	5 V or more		Drive frequency: 300 Hz
			While driving at 3rd-5th of manual mode	Less than 1.5 V		
Fwd/B oil pressure switch input	B55	21	While driving at 1st or 2nd of manual mode	Less than 1.5 V		
			While driving at 3rd-5th of manual mode	6 V or more		
Front vehicle speed sensor input	B55	24	While driving at 2nd and 20 km/h (12 MPH) of manual mode	Approx. 500 — 700 rpm	—	Use the Subaru Select Monitor.
			While driving at 4th and 80 km/h (50 MPH) of manual mode	Approx. 2,000 — 2,500 rpm		Use the Subaru Select Monitor.
Inhibitor switch 1 input	B55	8	Ignition switch ON, “P” range	Less than 0.5 V	—	
			Ignition switch ON, “N” range	5 V or more		

Item	Connector No.	Terminal No.	Measuring conditions	Measured value	Resistance between terminal and chassis ground	Remarks
Inhibitor switch 2 input	B55	9	Ignition switch ON, “P” range	5 V or more	—	
			Ignition switch ON, “D” range	Less than 0.5 V		
Ignition power supply	B55	27	Ignition switch ON	8 V or more	—	
			Ignition switch OFF	Less than 1 V		
Rear vehicle speed sensor input	B55	23	While driving at 2nd and 20 km/h (12 MPH) of manual mode	Approx. 500 — 700 rpm	—	Use the Subaru Select Monitor.
			While driving at 4th and 80 km/h (50 MPH) of manual mode	Approx. 2,000 — 2,500 rpm		Use the Subaru Select Monitor.
Fr/B oil pressure switch input	B55	15	While driving at other than 4th of manual mode	Less than 1.5 V	—	
			While driving at 4th of manual mode	6 V or more		
Turbine speed sensor 1 input	B55	26	2nd of manual mode, turbine speed sensor is 2,000 rpm (Read from Subaru Select Monitor)	Approx. 0 rpm	—	Use the Subaru Select Monitor.
			4th of manual mode, turbine speed sensor is 2,000 rpm (Read from Subaru Select Monitor)	Approx. 1,900 — 2,100 rpm		Use the Subaru Select Monitor.
Inhibitor switch 3 input	B55	10	Ignition switch ON, “R” range	5 V or more	—	
			Ignition switch ON, “D” range	Less than 0.5 V		
Control GND1	B54	23	Ignition switch ON	Approx. 0 V		
			Ignition switch OFF			
Control GND2	B54	22	Ignition switch ON	Approx. 0 V		
			Ignition switch OFF			
Inhibitor switch 4 input	B55	11	Ignition switch ON, “P” range	Less than 0.5 V	—	
			Ignition switch ON, “D” range	5 V or more		
Back-up light relay output	B54	13	Ignition switch ON, “R” range	Less than 1 V	90 — 110 Ω (ATF temperature 25°C (77°F))	
			Ignition switch ON, other than “R” range	8 V or more		
AWD solenoid output	B55	2	Engine ON, “P” range or “N” range, accelerator OFF	Less than 1 V	3 — 9 Ω (ATF temperature 20°C (68°F))	Drive frequency: 300 Hz
			Engine ON, “D” range, accelerator OFF, brake ON	2 V or more		

Item	Connector No.	Terminal No.	Measuring conditions	Measured value	Resistance between terminal and chassis ground	Remarks
Turbine speed sensor 2 input	B55	25	2nd gear of manual mode, turbine speed sensor is 2,000 rpm (Read from Subaru Select Monitor)	Approx. 1,200 — 1,500 rpm	—	Use the Subaru Select Monitor.
			4th of manual mode, turbine speed sensor is 2,000 rpm (Read from Subaru Select Monitor)	Approx. 1,900 — 2,100 rpm	—	Use the Subaru Select Monitor.
PN signal output	B54	11	Ignition switch ON, Other than “P” range or “N” range	8 V or more	—	
			Ignition switch ON, “P” range or “N” range	Less than 1 V	—	
Ignition power supply 1	B54	26	Ignition switch ON	8 V or more	—	
			Ignition switch OFF	Less than 1 V	—	
Ignition power supply 2	B54	19	Ignition switch ON	8 V or more	—	
			Ignition switch OFF	Less than 1 V	—	
Ignition power supply 3	B54	18	Ignition switch ON	8 V or more	—	
			Ignition switch OFF	Less than 1 V	—	
Ignition power supply 4	B54	25	Ignition switch ON	8 V or more	—	
			Ignition switch OFF	Less than 1 V	—	
Paddle shift DOWN switch	B54	4	Ignition switch ON, Paddle shift DOWN switch ON	Less than 1 V	—	
			Ignition switch ON, Paddle shift DOWN switch OFF	8 V or more	—	
Paddle shift UP switch	B54	5	Ignition switch ON, Paddle shift UP switch ON	Less than 1 V	—	
			Ignition switch ON, Paddle shift UP switch OFF	8 V or more	—	
Manual mode switch	B54	6	Ignition switch ON, Manual mode switch ON	Less than 1 V	—	
			Ignition switch ON, Manual mode switch OFF	8 V or more	—	

6. Subaru Select Monitor

A: OPERATION

For detailed operation procedures, refer to “PC application help for Subaru Select Monitor”.

7. Read Current Data

A: OPERATION

For detailed operation procedures, refer to “PC application help for Subaru Select Monitor”.

- The support data list is as follows.

Item	Display	Unit of measure
Engine speed signal	Engine Speed	rpm
Battery voltage	Battery Voltage	V
Accelerator position sensor	Accel. Opening Angle	%
Front vehicle speed sensor signal	Front Wheel Speed	km/h
Gear position	Gear Position	—
Turbine speed sensor signal	Turbine Revolution Speed	rpm
Rear vehicle speed sensor signal	Rear Wheel Speed	km/h
ATF temperature sensor signal	ATF Temp.	°C
Turbine speed sensor 1 signal	AT Turbine Speed 1	rpm
Turbine speed sensor 2 signal	AT Turbine Speed 2	rpm
High & low reverse clutch solenoid set current	H&LR/C Solenoid Current	A
Direct clutch solenoid set current	D/C Solenoid Current	A
Front brake solenoid set current	F/B Solenoid Current	A
Input clutch solenoid set current	I/C Solenoid Current	A
Line pressure solenoid set current	P/L Solenoid Current	A
Lock-up solenoid set current	L/U Solenoid Current	A
Transfer solenoid set current	AWD Sol. Current	A
High & low reverse clutch solenoid pressure	H&LR/C Solenoid Pressure	kPa
Direct clutch solenoid pressure	D/C Solenoid Pressure	kPa
Front brake solenoid pressure	F/B Solenoid Pressure	kPa
Input clutch solenoid pressure	I/C Solenoid Pressure	kPa
Line pressure solenoid pressure	P/L Solenoid Pressure	kPa
Lock-up solenoid pressure	L/U Solenoid Pressure	kPa
Transfer solenoid pressure	AWD Solenoid Pressure	kPa
Forward brake set current	Fwd/B solenoid current	A
Forward brake solenoid target hydraulic pressure	Fwd/B solenoid target pressure	kPa
Ignition switch	Ignition Switch	ON input or OFF input
Manual mode signal	Tiptronic Mode Switch	ON or OFF
Cruise control set signal	Cruise Control Signal	ON or OFF
Down shift signal	Down Switch	ON or OFF
Stop light switch signal	Stop Light Switch	ON or OFF
Up shift signal	Up Switch	ON or OFF
Drive range signal	D Range Signal	ON or OFF
Reverse range signal	R Range Signal	ON or OFF
Diagnosis light output signal	Diagnosis Lamp	ON or OFF
ATF temperature light signal	ATF Temperature Lamp	ON or OFF
Parking range signal	P Range	ON or OFF
P/N range output signal	P/N Signal	ON or OFF
Neutral range signal	N Range	ON or OFF
Inhibitor switch 1 input signal	Inhibitor SW 1	High or Low
Inhibitor switch 2 input signal	Inhibitor SW 2	High or Low
Inhibitor switch 3 input signal	Inhibitor SW 3	High or Low
Inhibitor switch 4 input signal	Inhibitor SW 4	High or Low
Back-up light relay output signal	Back Lamp Relay	ON or OFF
High & low reverse clutch fluid pressure switch input signal	H&LR/C Fluid Pressure	ON or OFF

Item	Display	Unit of measure
Direct clutch fluid pressure switch input signal	D/C Fluid Pressure	ON or OFF
Front brake fluid pressure switch input signal	F/B Fluid Pressure	ON or OFF
Input clutch fluid pressure switch input signal	I/C Fluid Pressure	ON or OFF
Forward brake fluid pressure switch input signal	Fwd/B hydraulic pressure SW	ON or OFF
AT learning mode	AT learning	Completed or not completed

8. Read Diagnostic Trouble Code (DTC)

A: OPERATION

For detailed operation procedures, refer to “PC application help for Subaru Select Monitor”.

NOTE:
For details concerning DTC, refer to List of Diagnostic Trouble Code (DTC). <Ref. to 5AT(diag)-33, List of Diagnostic Trouble Code (DTC).>

9. Clear Memory Mode

A: OPERATION

For detailed operation procedures, refer to “PC application help for Subaru Select Monitor”.

NOTE:
• If {Clear Memories 2} is executed, DTCs and learned control memory are cleared.
• If {Clear Memories 2} is executed, perform learning. <Ref. to 5AT(diag)-23, Learning Control.>

10.Inspection Mode

A: PROCEDURE

CAUTION:
Observe the traffic law when driving on public roads.

1) Shift the select lever to “D” range, and then drive the vehicle with changing the gear from 1st to 5th.
2) When driving the vehicle at 5th speed of “D” range, set the gear to manual mode and drive the vehicle by downshifting using “–” of the paddle shift switch from 5th → 4th, 4th → 3rd, 3rd → 2nd, and 2nd → 1st.

NOTE:
At shifting down, drive the vehicle at least 10 seconds in each speed.

3) Shift the select lever to “R” range and drive the vehicle for 2 seconds or more.

11.Learning Control

A: GENERAL DESCRIPTION

- Follow the messages displayed on the Subaru Select Monitor when working.
- When the following work is performed, perform learning for the transmission.

Replacement of TCM/Replacement or disassembly of transmission assembly/Replacement of control valve body/Performing “Clear Memories 2”.

B: PROCEDURE

1. PREPARATION FOR LEARNING

1) Warm up or cool down the vehicle until the ATF temperature displayed on the Subaru Select Monitor is 60 — 80°C (140 — 176°F).
2) Shift the select lever to “P” range.
3) Apply the electronic parking brake.
4) Lift up the vehicle.

CAUTION:
While working, be sure to keep the lower edge of the tires 30 cm or more above the ground as vehicle will vibrate.

5) Connect the Subaru Select Monitor to data link connector.
6) Turn the ignition switch to ON.
7) Turn off all switches causing an electrical load, such as headlights, A/C, seat heater and rear defogger, etc.

2. SIMPLE LEARNING

NOTE:
Simple learning is performed with the vehicle lifted, without actually running the vehicle.

CAUTION:
Do not turn the power of the Subaru Select Monitor OFF during work, and do not disconnect the data link connector.

1) Select {AT related learning & inspecting mode} in the «Transmission Diagnosis» display screen of the Subaru Select Monitor.
2) Select {AT learning mode} in the «AT related learning & inspecting mode» screen of the Subaru Select Monitor.
3) Follow the messages displayed on the Subaru Select Monitor screen when working.

NOTE:
For the messages “SHIFT control system learning in progress” and “AWD control system learning in progress”, AT OIL TEMP light in the combination meter blinks at a cycle of 2 Hz before learning operation starts. When AT OIL TEMP light in the combination meter goes off, the following message is displayed on the screen. When operation ends abnormally during the learning, AT OIL TEMP light blinks at a cycle of 4 Hz.
4) When “AT learning normally ended.” is displayed, simple AT learning is completed.

NOTE:
- If communication error occurs during learning, retry the “AT learning mode” from the beginning.
- If the message “Execute AT learning again after fixing troubles of the vehicle” is displayed during learning, select [OK] to display the List of Diagnostics Trouble Code. After repairing the locations indicated by the DTC, start the “AT learning mode” over from the beginning.
- If the message “AT learning ended abnormally.” is displayed, start the “AT learning mode” over from the beginning.

Message	Main reasons for abnormal termination
“AT learning ended abnormally.”	• Fault is detected during AT learning. • The accelerator pedal is depressed during AT learning. • An unspecified operation was performed during AT learning • Brake pedal is not fully depressed. • Electric parking brake not applied strongly enough • Abnormal idle speed increase, etc.

- For detailed operation procedures, refer to “PC application help for Subaru Select Monitor”.

3. DRIVING CHECK

Drive the vehicle to check that there is no malfunction such as shifting shock.
When shifting shock is felt, perform learning again.
When reducing of shifting shock is not felt, check that other parts are normal.

12.AT OIL TEMP Warning Light Display

A: OPERATION

When any on-board diagnostics item is malfunctioning, or the learning has not yet completed, AT OIL TEMP light blinks. Blinking continues from the engine start to the ignition switch OFF. The malfunctioning part or unit can be determined by a DTC. Problems which occurred previously can also be identified through the memory function. If the AT OIL TEMP light does not blink although a problem is occurring, the problem can be determined by checking the performance characteristics of each sensor using the Subaru Select Monitor. If the learning has not yet completed, “AT learning not completed” is displayed when the Subaru Select Monitor is connected while AT OIL TEMP light is blinking. The AT OIL TEMP light blinking will go off, when the learning is performed. Indicator light signal patterns are as shown in the figure.

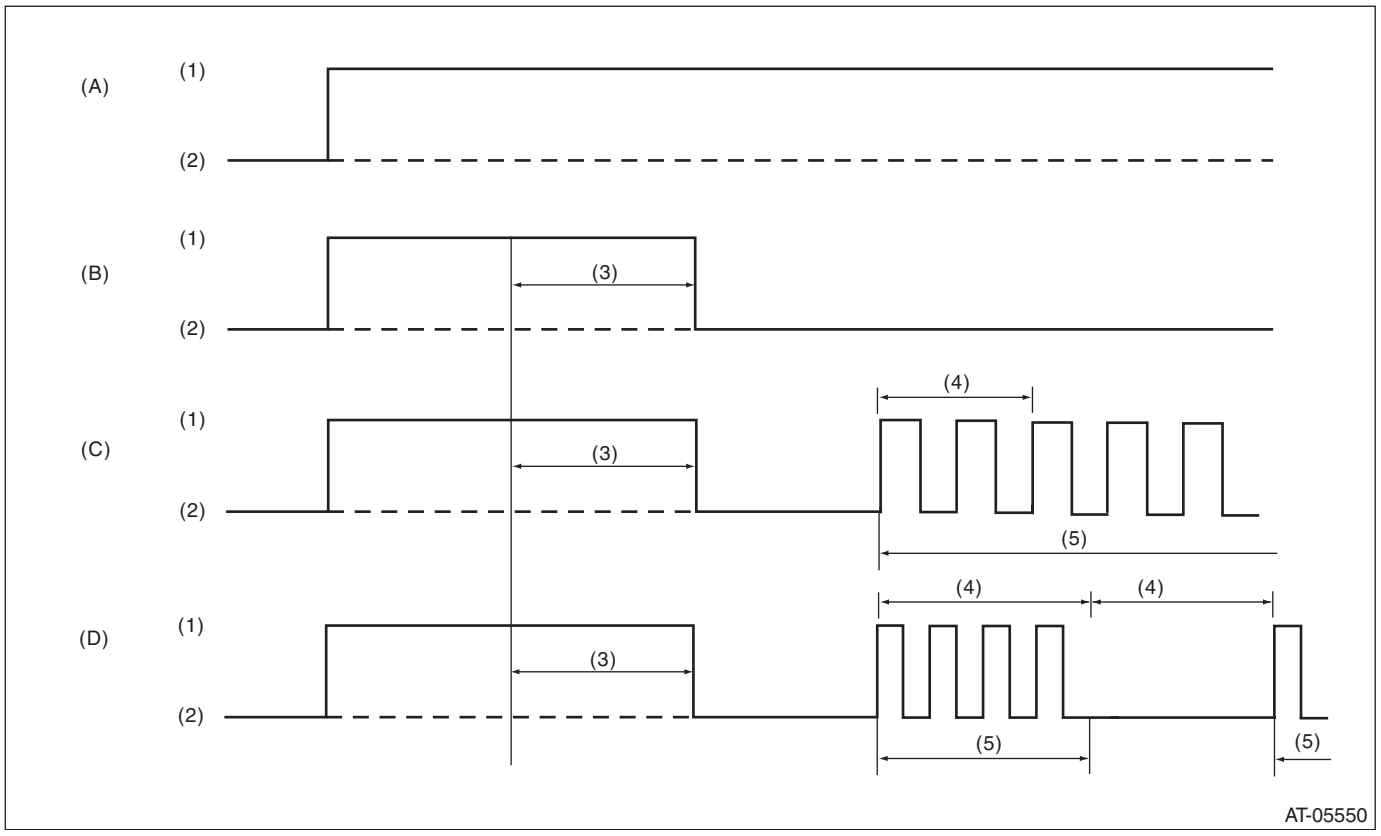

(A)	Ignition switch (engine OFF)	(B)	Normal (engine ON)	(C)	Faulty (engine ON)
(D)	Learning not completed (engine ON)				
(1)	ON	(3)	2 sec.	(5)	Blink
(2)	OFF	(4)	1 sec.		

When the AT OIL TEMP light does not operate normally, check the AT OIL TEMP light circuit. <Ref. to 5AT(diag)-26, INSPECTION, AT OIL TEMP Warning Light Display.>

B: INSPECTION

DIAGNOSIS:
- AT OIL TEMP light circuit is open or shorted.
- Combination meter malfunction

TROUBLE SYMPTOM:
- When the ignition switch is turned to ON, the AT OIL TEMP light does not illuminate.
- AT OIL TEMP light remains lit after engine start.

WIRING DIAGRAM:

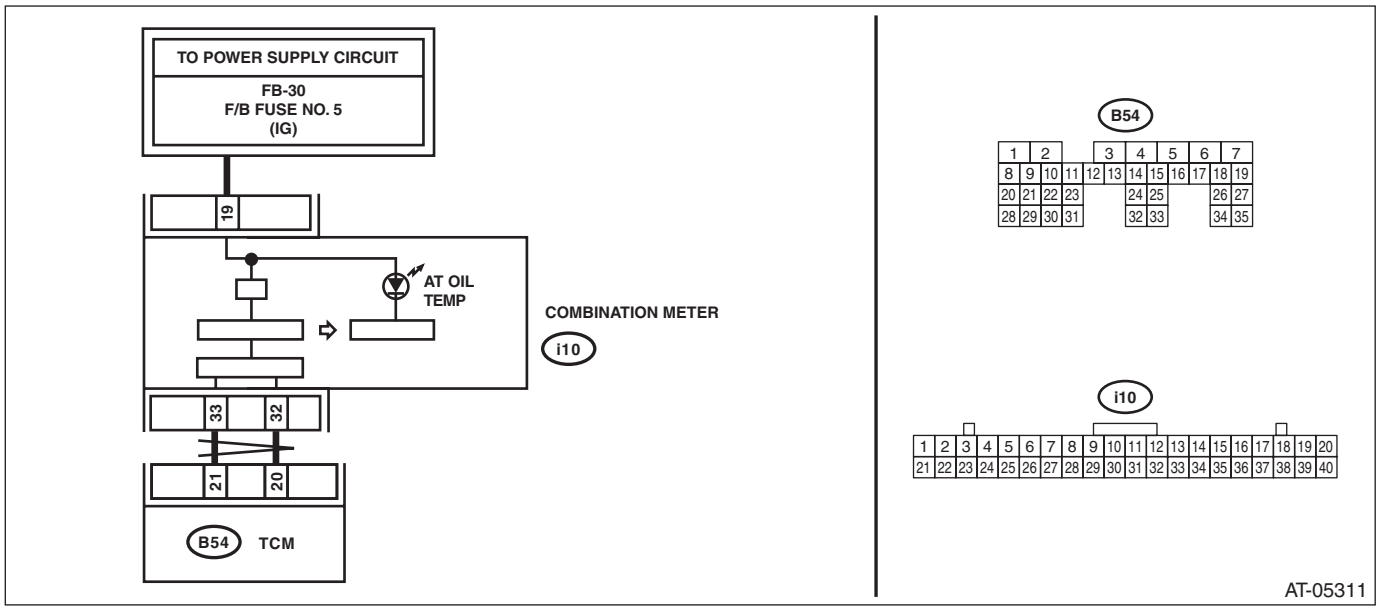

	Step	Check	Yes	No
1	**CHECK AT OIL TEMP LIGHT.** Turn the ignition switch to ON.	Does the AT OIL TEMP light illuminate?	Go to step **2**.	Perform self diagnosis of the combination meter.
2	**CHECK AT OIL TEMP LIGHT.** After the ignition switch is ON, wait for 2 seconds or more.	Does the AT OIL TEMP light illuminate?	Go to step **3**.	Go to step **4**.
3	**CHECK AT OIL TEMP LIGHT.** Start the engine.	Does the AT OIL TEMP light go off?	Normal. Go back to "Basic Diagnostic Procedure". <Ref. to 5AT(diag)-2, Basic Diagnostic Procedure.>	Go to step **6**.
4	**CHECK SUBARU SELECT MONITOR COMMUNICATION.** Connect the Subaru Select Monitor to data link connector.	Is the communication between Subaru Select Monitor and TCM normal?	Go to step **5**.	Check the power supply ground circuit of TCM and Subaru Select Monitor communication. <Ref. to 5AT(diag)-30, Diagnostic Procedure for Subaru Select Monitor Communication.>
5	**CHECK DTC.** Read the DTC relating the TCM using the Subaru Select Monitor.	Is DTC displayed?	Perform the diagnosis according to DTC.	Go to step **6**.
6	**CHECK TCM.** Read the data of "ATF Temperature Lamp" using the Subaru Select Monitor.	Is "ON" displayed?	Go to step **7**.	Perform self diagnosis of the combination meter.

Step		Check	Yes	No
7	**CHECK TCM.** Read the data of ATF temperature using Subaru Select Monitor.	Is the display 130°C or more?	Go to step **8**.	Replace the TCM. <Ref. to 5AT-57, Transmission Control Module (TCM).>
8	**CHECK ATF TEMPERATURE.** Check the real fluid temperature from the transmission case surface temperature.	Is the temperature lower than "ATF temperature" displayed on Subaru Select Monitor?	Perform the diagnosis according to DTC P0713.	When ATF temperature can be judged as actually high, perform the diagnosis again after the ATF temperature lowers.

13.AWD Warning Light Display

A: OPERATION

AWD warning light illuminates or blinks at start, or when AWD is faulty.

- Normal

AWD light always illuminates when the ignition switch is ON (engine OFF). Light goes off after two seconds from engine ON.

- Faulty

AWD warning light blinks at 2 Hz, when tires with different diameters are installed, or when the vehicle is driven with air pressure of any of the four tires significantly low.

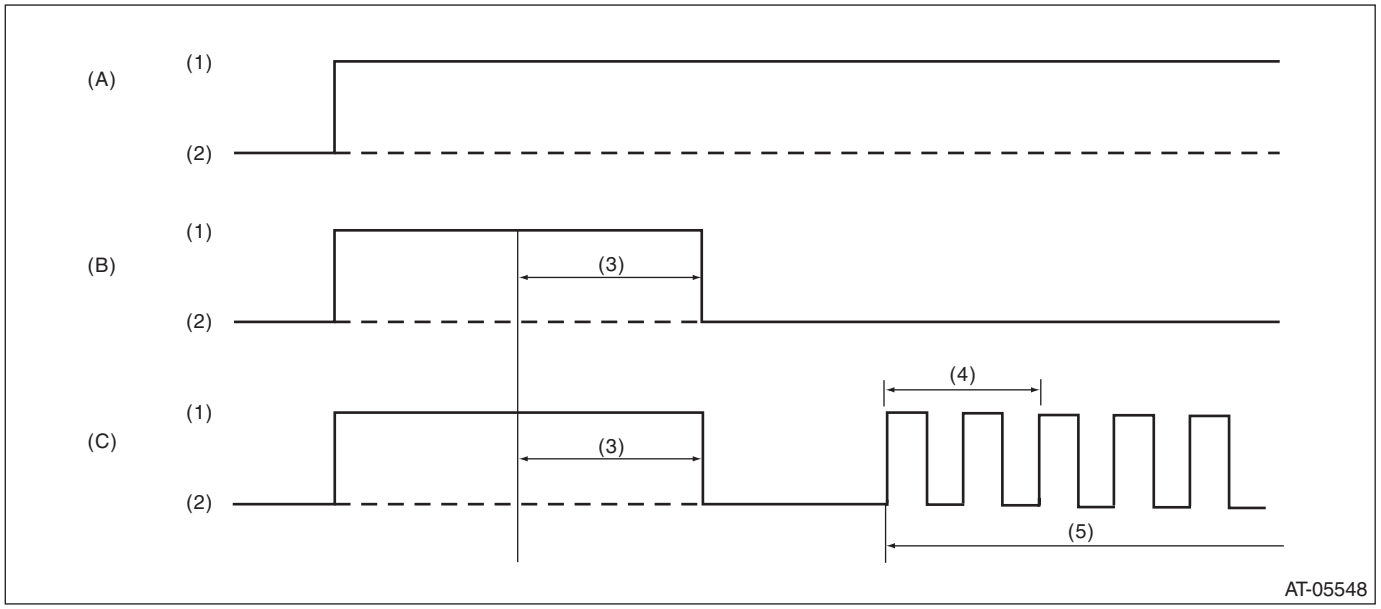

(A)	Ignition switch (engine OFF)	(B)	Normal (engine ON)	(C)	Faulty (engine ON)
(1)	ON	(3)	2 sec.	(5)	Blink
(2)	OFF	(4)	1 sec.		

If the AWD light does not illuminate, or illumination patterns are not as above, check the AWD light circuit. <Ref. to 5AT(diag)-29, INSPECTION, AWD Warning Light Display.>

B: INSPECTION

DIAGNOSIS:
- AWD light circuit is open or shorted.
- Combination meter malfunction
- TCM malfunction

TROUBLE SYMPTOM:
- When the ignition switch is turned to ON, the AWD light does not illuminate.
- AWD light remains lit after engine start.

WIRING DIAGRAM:

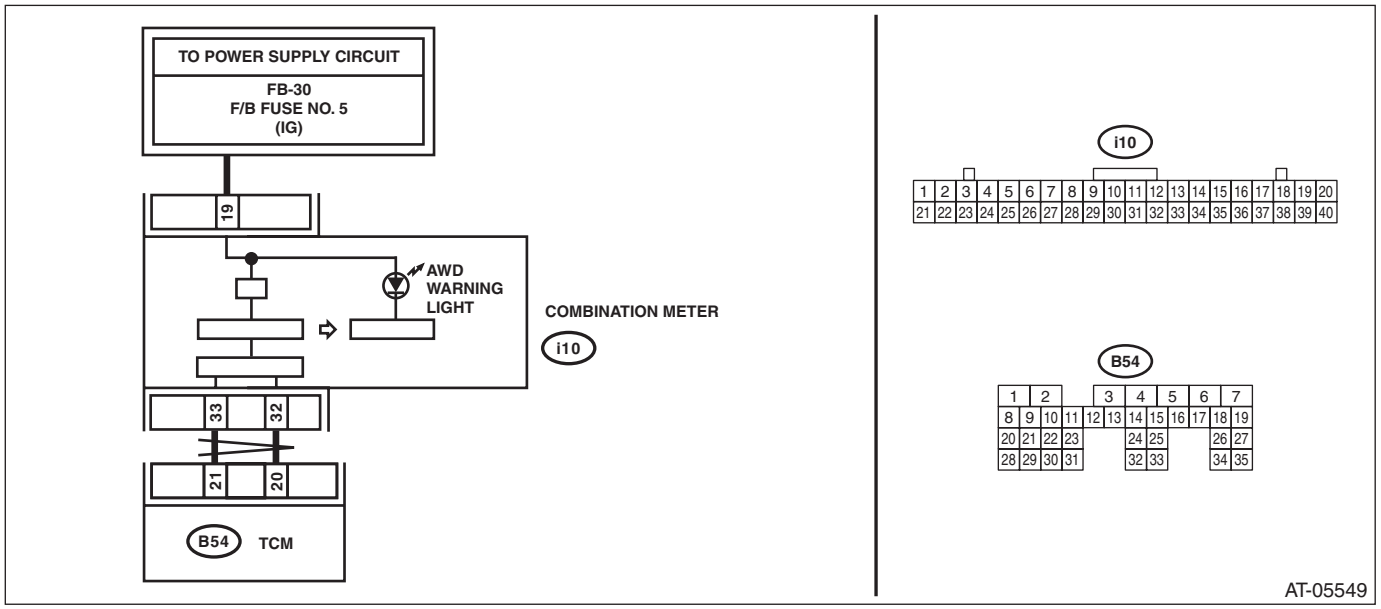

	Step	Check	Yes	No
1	**CHECK AWD LIGHT.** Turn the ignition switch to ON.	Does the AWD light illuminate?	Go to step **2**.	Perform self diagnosis of the combination meter. <Ref. to IDI-11, INSPECTION, Combination Meter System.>
2	**CHECK AWD LIGHT.** Start the engine.	Does AWD light go off after two seconds from engine start?	Current condition is normal. Go back to “Basic Diagnostic Procedure”. <Ref. to 5AT(diag)-2, Basic Diagnostic Procedure.>	Go to step **3**.
3	**CHECK COMBINATION METER.** Perform self diagnosis of the combination meter. <Ref. to IDI-11, INSPECTION, Combination Meter System.>	Is there any trouble with the combination meter?	Repair the combination meter.	Replace the TCM. <Ref. to 5AT-57, Transmission Control Module (TCM).>

14.Diagnostic Procedure for Subaru Select Monitor Communication

A: COMMUNICATION FOR INITIALIZING IMPOSSIBLE

DIAGNOSIS:
Defective harness connector
TROUBLE SYMPTOM:
Subaru Select Monitor communication failure
WIRING DIAGRAM:

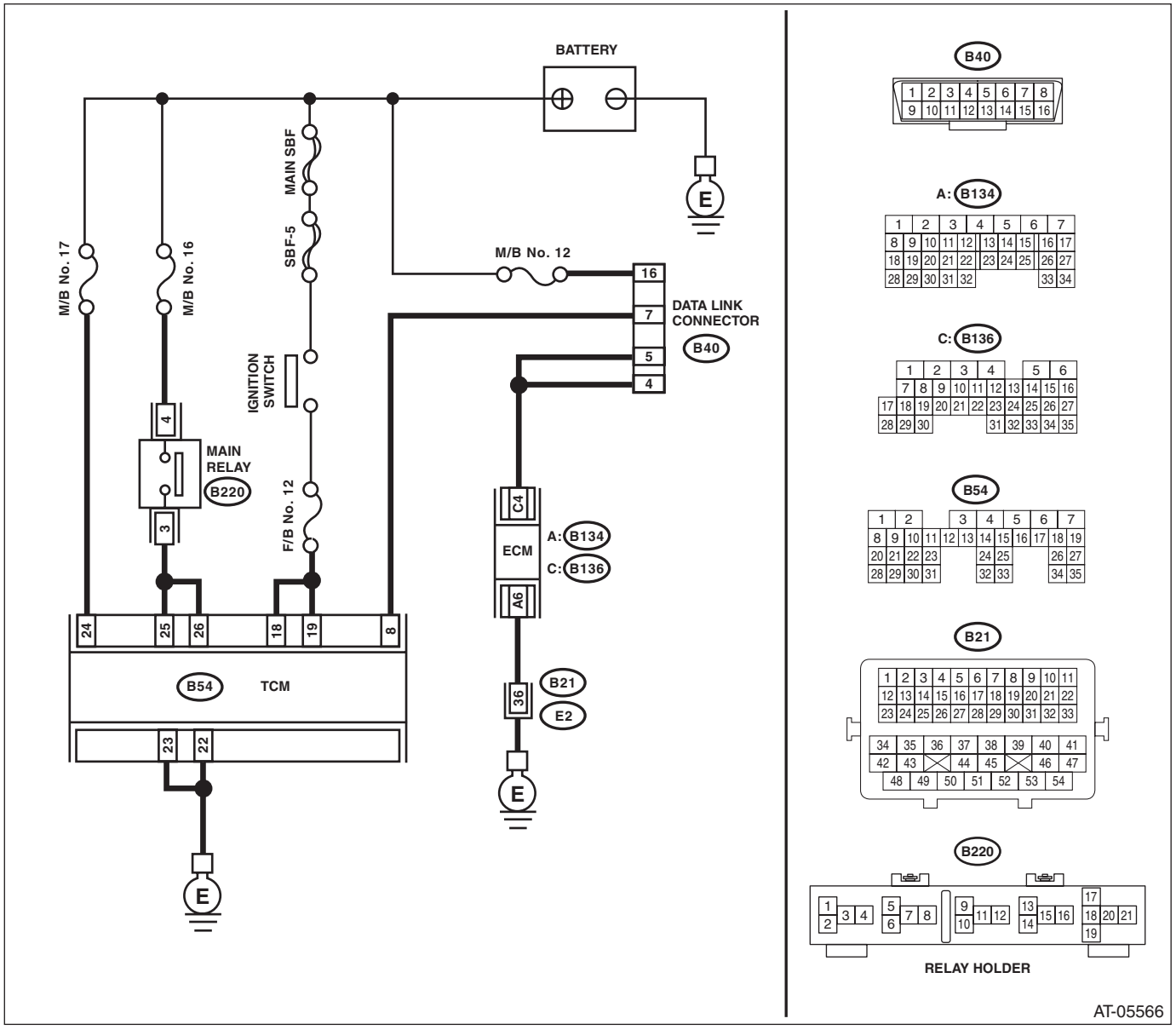

Step		Check	Yes	No
1	**CHECK INSTALLATION OF TCM CONNECTOR.** Turn the ignition switch to OFF.	Is TCM connector connected to TCM?	Go to step **2**.	Connect the TCM connector to TCM.

	Step	Check	Yes	No
2	**CHECK SUBARU SELECT MONITOR POWER SUPPLY CIRCUIT.** Measure the voltage between data link connector and chassis ground. ***Connector & terminal*** ***(B40) No. 16 (+) — Chassis ground (–):***	Is the voltage 10 V or more?	Go to step **3**.	Repair harness connector between the battery and data link connector, and poor contact of the connector.
3	**CHECK SUBARU SELECT MONITOR GROUND CIRCUIT.** Measure the resistance of harness between data link connector and chassis ground. ***Connector & terminal*** ***(B40) No. 4 — Chassis ground:*** ***(B40) No. 5 — Chassis ground:***	Is the resistance less than 1 Ω?	Go to step **4**.	Repair the open circuit of harness between data link connector and ground terminal, and poor contact of connector.
4	**CHECK COMMUNICATION OF SUBARU SELECT MONITOR.** 1) Turn the ignition switch to ON. 2) Check communication with the transmission system.	Is the name of system displayed on Subaru Select Monitor?	Go to step **9**.	Go to step **5**.
5	**CHECK COMMUNICATION OF SUBARU SELECT MONITOR.** 1) Turn the ignition switch to OFF. 2) Disconnect the TCM connector. 3) Turn the ignition switch to ON. 4) Check communication with the engine system.	Is the name of system displayed on Subaru Select Monitor?	Go to step **7**.	Go to step **6**.
6	**CHECK COMMUNICATION OF SUBARU SELECT MONITOR.** 1) Turn the ignition switch to OFF. 2) Connect the TCM connector. 3) Disconnect the connector from ECM. 4) Turn the ignition switch to ON. 5) Check communication with the transmission system.	Is the name of system displayed on Subaru Select Monitor?	Inspect the ECM.	Go to step **7**.
7	**CHECK HARNESS CONNECTOR BETWEEN EACH CONTROL MODULE AND DATA LINK CONNECTOR.** 1) Turn the ignition switch to OFF. 2) Disconnect the TCM and ECM connector. 3) Measure the resistance between TCM connector and chassis ground. ***Connector & terminal*** ***(B40) No. 7 — Chassis ground:***	Is the resistance 1 MΩ or more?	Go to step **8**.	Check harness and connector between each control module and data link connector.
8	**CHECK OUTPUT SIGNAL OF TCM.** 1) Turn the ignition switch to ON. 2) Measure the voltage between TCM and chassis ground. ***Connector & terminal*** ***(B40) No. 7 (+) — Chassis ground (–):***	Is the voltage 1 V or more?	Check harness and connector between each control module and data link connector.	Go to step **9**.
9	**CHECK HARNESS CONNECTOR BETWEEN TCM AND DATA LINK CONNECTOR.** Measure the resistance between TCM connector and data link connector. ***Connector & terminal*** ***(B54) No. 8 — (B40) No. 7:***	Is the resistance less than 1 Ω?	Go to step **10**.	Check the harness and connector between TCM and data link connector.

	Step	Check	Yes	No
10	**CHECK INSTALLATION OF TRANSMISSION HARNESS CONNECTOR.**	Is the transmission harness connector connected to bulkhead harness connector?	Go to step **11**.	Connect the bulkhead harness connector to transmission harness connector.
11	**CHECK POOR CONTACT OF CONNECTORS.**	Is there poor contact of control module power supply and data link connector?	Repair the poor contact.	Go to step **12**.
12	**CHECK POWER SUPPLY OF TCM.** 1) Disconnect the connector from TCM. 2) Turn the ignition switch to ON. 3) Measure the voltage between TCM connector and chassis ground. ***Connector & terminal*** ***(B54) No. 24 (+) — Chassis ground (–):*** ***(B54) No. 25 (+) — Chassis ground (–):*** ***(B54) No. 26 (+) — Chassis ground (–):***	Is the voltage 10 — 13 V?	Go to step **15**.	Go to step **13**.
13	**CHECK M/B FUSE.** 1) Turn the ignition switch to OFF. 2) Remove the fuse (No. 16 and No. 17).	Is the fuse blown out?	Replace the fuse.	Go to step **14**.
14	**CHECK HARNESS.** Measure the resistance between TCM connector and chassis ground. ***Connector & terminal*** ***(B54) No. 24 — Chassis ground:*** ***(B54) No. 25 — Chassis ground:*** ***(B54) No. 26 — Chassis ground:***	Is the resistance 10 Ω or less?	Replace the fuse. If the replaced fuse has blown out easily, repair short circuit of harness between fuse and TCM.	Go to step **15**.
15	**CHECK IGNITION POWER SUPPLY CIRCUIT.** 1) Turn the ignition switch to ON. 2) Measure the ignition power supply voltage between TCM connector and chassis ground. ***Connector & terminal*** ***(B54) No. 18 (+) — Chassis ground (–):*** ***(B54) No. 19 (+) — Chassis ground (–):***	Is the voltage 10 — 13 V?	Go to step **17**.	Go to step **16**.
16	**CHECK F/B FUSE.** Remove the fuse (No. 12).	Is the fuse blown out?	Replace the fuse. If the replaced fuse has blown out easily, repair short circuit of harness between fuse and TCM.	Go to step **17**.
17	**CHECK HARNESS CONNECTOR BETWEEN TCM AND TRANSMISSION.** 1) Turn the ignition switch to OFF. 2) Disconnect the connector from TCM. 3) Measure the resistance of the harness between TCM and transmission ground. ***Connector & terminal*** ***(B54) No. 22 — Transmission ground:*** ***(B54) No. 23 — Transmission ground:***	Is the resistance 1 MΩ or more?	Repair the short circuit of harness between TCM and transmission harness connector, and poor contact of connector.	Go to step **18**.
18	**CHECK POOR CONTACT OF CONNECTORS.**	Is there poor contact of TCM power supply, ground and data link connector?	Repair the connector.	Replace the TCM. <Ref. to 5AT-57, Transmission Control Module (TCM).>

15.List of Diagnostic Trouble Code (DTC)

A: LIST

DTC	Item	Content of diagnosis	Reference
P0705	Transmission Range Sensor Circuit (PRNDL Input)	Inhibitor switch malfunction, open or short circuit	<Ref. to 5AT(diag)-36, DTC P0705 TRANSMISSION RANGE SENSOR CIRCUIT (PRNDL INPUT), Diagnostic Procedure with Diagnostic Trouble Code (DTC).>
P0712	Transmission Fluid Temperature Sensor Circuit Low Input	ATF temperature sensor 1 is faulty or input signal circuit is open.	<Ref. to 5AT(diag)-40, DTC P0712 TRANSMISSION FLUID TEMPERATURE SENSOR CIRCUIT LOW INPUT, Diagnostic Procedure with Diagnostic Trouble Code (DTC).>
P0713	Transmission Fluid Temperature Sensor Circuit High Input	ATF temperature sensor 1 is faulty or input signal circuit is shorted.	<Ref. to 5AT(diag)-42, DTC P0713 TRANSMISSION FLUID TEMPERATURE SENSOR CIRCUIT HIGH INPUT, Diagnostic Procedure with Diagnostic Trouble Code (DTC).>
P0715	Input/Turbine Speed Sensor Circuit	Turbine speed sensor 1 malfunction, open or shorted input signal circuit	<Ref. to 5AT(diag)-44, DTC P0715 INPUT/TURBINE SPEED SENSOR CIRCUIT, Diagnostic Procedure with Diagnostic Trouble Code (DTC).>
P0719	Brake Switch Circuit Low	Brake switch malfunction, open input signal circuit, body integrated unit malfunction, or CAN communication error	<Ref. to 5AT(diag)-46, DTC P0719 BRAKE SWITCH CIRCUIT LOW, Diagnostic Procedure with Diagnostic Trouble Code (DTC).>
P0720	Output Speed Sensor Circuit	Front vehicle speed sensor malfunction, open or shorted input signal circuit, ground, power supply	<Ref. to 5AT(diag)-48, DTC P0720 OUTPUT SPEED SENSOR CIRCUIT, Diagnostic Procedure with Diagnostic Trouble Code (DTC).>
P0724	Brake Switch Circuit High	Brake switch malfunction, shorted input signal circuit, body integrated unit malfunction, or CAN communication error	<Ref. to 5AT(diag)-51, DTC P0724 BRAKE SWITCH CIRCUIT HIGH, Diagnostic Procedure with Diagnostic Trouble Code (DTC).>
P0731	Gear 1 Incorrect Ratio	Vehicle speed sensor, turbine speed sensor, control valve, or gear shift clutch malfunction	<Ref. to 5AT(diag)-52, DTC P0731 GEAR 1 INCORRECT RATIO, Diagnostic Procedure with Diagnostic Trouble Code (DTC).>
P0732	Gear 2 Incorrect Ratio	Vehicle speed sensor, turbine speed sensor, control valve, or gear shift clutch malfunction	<Ref. to 5AT(diag)-52, DTC P0732 GEAR 2 INCORRECT RATIO, Diagnostic Procedure with Diagnostic Trouble Code (DTC).>
P0733	Gear 3 Incorrect Ratio	Vehicle speed sensor, turbine speed sensor or gear shift clutch malfunction	<Ref. to 5AT(diag)-52, DTC P0733 GEAR 3 INCORRECT RATIO, Diagnostic Procedure with Diagnostic Trouble Code (DTC).>
P0734	Gear 4 Incorrect Ratio	Vehicle speed sensor, turbine speed sensor or gear shift clutch malfunction	<Ref. to 5AT(diag)-52, DTC P0734 GEAR 4 INCORRECT RATIO, Diagnostic Procedure with Diagnostic Trouble Code (DTC).>
P0735	Gear 5 Incorrect Ratio	Vehicle speed sensor, turbine speed sensor or gear shift clutch malfunction	<Ref. to 5AT(diag)-52, DTC P0735 GEAR 5 INCORRECT RATIO, Diagnostic Procedure with Diagnostic Trouble Code (DTC).>
P0736	Reverse Incorrect Ratio	Vehicle speed sensor, turbine speed sensor or gear shift clutch malfunction	<Ref. to 5AT(diag)-53, DTC P0736 REVERSE INCORRECT RATIO, Diagnostic Procedure with Diagnostic Trouble Code (DTC).>
P0741	Torque Converter Clutch Circuit Performance or Stuck Off	Lock-up clutch is faulty or valve is stuck.	<Ref. to 5AT(diag)-54, DTC P0741 TORQUE CONVERTER CLUTCH CIRCUIT PERFORMANCE OR STUCK OFF, Diagnostic Procedure with Diagnostic Trouble Code (DTC).>
P0743	Torque Converter Clutch Circuit Electrical	L/U solenoid circuit or L/U solenoid unit malfunction	<Ref. to 5AT(diag)-55, DTC P0743 TORQUE CONVERTER CLUTCH CIRCUIT ELECTRICAL, Diagnostic Procedure with Diagnostic Trouble Code (DTC).>

DTC	Item	Content of diagnosis	Reference
P0748	Pressure Control Solenoid “A” Electrical	Line pressure solenoid circuit or line pressure solenoid unit malfunction	<Ref. to 5AT(diag)-57, DTC P0748 PRESSURE CONTROL SOLENOID “A” ELECTRICAL, Diagnostic Procedure with Diagnostic Trouble Code (DTC).>
P0751	Shift Solenoid “A” Performance or Stuck Off	Fr/B solenoid malfunction	<Ref. to 5AT(diag)-59, DTC P0751 SHIFT SOLENOID “A” PERFORMANCE OR STUCK OFF, Diagnostic Procedure with Diagnostic Trouble Code (DTC).>
P0753	Shift Solenoid “A” Electrical	Fr/B solenoid circuit or Fr/B solenoid unit malfunction	<Ref. to 5AT(diag)-61, DTC P0753 SHIFT SOLENOID “A” ELECTRICAL, Diagnostic Procedure with Diagnostic Trouble Code (DTC).>
P0756	Shift Solenoid “B” Performance or Stuck Off	I/C solenoid malfunction	<Ref. to 5AT(diag)-63, DTC P0756 SHIFT SOLENOID “B” PERFORMANCE OR STUCK OFF, Diagnostic Procedure with Diagnostic Trouble Code (DTC).>
P0758	Shift Solenoid “B” Electrical	I/C solenoid circuit or I/C solenoid unit malfunction	<Ref. to 5AT(diag)-65, DTC P0758 SHIFT SOLENOID “B” ELECTRICAL, Diagnostic Procedure with Diagnostic Trouble Code (DTC).>
P0761	Shift Solenoid “C” Performance or Stuck Off	H&LR/C solenoid malfunction	<Ref. to 5AT(diag)-67, DTC P0761 SHIFT SOLENOID “C” PERFORMANCE OR STUCK OFF, Diagnostic Procedure with Diagnostic Trouble Code (DTC).>
P0763	Shift Solenoid “C” Electrical	H&LR/C solenoid circuit or H&LR/C solenoid unit malfunction	<Ref. to 5AT(diag)-69, DTC P0763 SHIFT SOLENOID “C” ELECTRICAL, Diagnostic Procedure with Diagnostic Trouble Code (DTC).>
P0766	Shift Solenoid “D” Performance or Stuck Off	D/C solenoid malfunction	<Ref. to 5AT(diag)-71, DTC P0766 SHIFT SOLENOID “D” PERFORMANCE OR STUCK OFF, Diagnostic Procedure with Diagnostic Trouble Code (DTC).>
P0768	Shift Solenoid “D” Electrical	D/C solenoid circuit or D/C solenoid unit malfunction	<Ref. to 5AT(diag)-73, DTC P0768 SHIFT SOLENOID “D” ELECTRICAL, Diagnostic Procedure with Diagnostic Trouble Code (DTC).>
P0771	Shift Solenoid “E” Performance or Stuck Off	Fwd/B solenoid malfunction	<Ref. to 5AT(diag)-75, DTC P0771 SHIFT SOLENOID “E” PERFORMANCE OR STUCK OFF, Diagnostic Procedure with Diagnostic Trouble Code (DTC).>
P0773	Shift Solenoid “E” Electrical	Fwd/B solenoid circuit or Fwd/B solenoid unit malfunction	<Ref. to 5AT(diag)-77, DTC P0773 SHIFT SOLENOID “E” ELECTRICAL, Diagnostic Procedure with Diagnostic Trouble Code (DTC).>
P0801	Reverse Inhibit Control Circuit	Shift lock solenoid is faulty or output signal circuit is open or shorted.	<Ref. to 5AT(diag)-79, DTC P0801 REVERSE INHIBIT CONTROL CIRCUIT, Diagnostic Procedure with Diagnostic Trouble Code (DTC).>
P0817	Starter Disable Circuit	• Open or short in PN signal output circuit • ECM power supply malfunction • TCM+B fuse is blown.	<Ref. to 5AT(diag)-81, DTC P0817 STARTER DISABLE CIRCUIT, Diagnostic Procedure with Diagnostic Trouble Code (DTC).>
P0957	Backup Light Relay Circuit Low	Open or shorted back-up light relay output circuit or relay OFF malfunction	<Ref. to 5AT(diag)-83, DTC P0957 BACKUP LIGHT RELAY CIRCUIT LOW, Diagnostic Procedure with Diagnostic Trouble Code (DTC).>
P0958	Backup Light Relay Circuit High	Shorted back-up light relay output circuit or relay ON malfunction	<Ref. to 5AT(diag)-85, DTC P0958 BACKUP LIGHT RELAY CIRCUIT HIGH, Diagnostic Procedure with Diagnostic Trouble Code (DTC).>
P1706	AT Vehicle Speed Sensor Circuit Malfunction (Rear wheel)	Rear vehicle speed sensor malfunction, open or shorted input circuit, ground, power supply	<Ref. to 5AT(diag)-87, DTC P1706 AT VEHICLE SPEED SENSOR CIRCUIT MALFUNCTION (REAR WHEEL), Diagnostic Procedure with Diagnostic Trouble Code (DTC).>

DTC	Item	Content of diagnosis	Reference
P1707	AT AWD Solenoid Valve Circuit Malfunction	AWD solenoid circuit or AWD solenoid unit malfunction	<Ref. to 5AT(diag)-89, DTC P1707 AT AWD SOLENOID VALVE CIRCUIT MALFUNCTION, Diagnostic Procedure with Diagnostic Trouble Code (DTC).>
P1710	Torque Converter Turbine 2 Speed Signal Circuit Malfunction	Turbine speed sensor 2 malfunction, open or shorted input circuit, ground, power supply	<Ref. to 5AT(diag)-91, DTC P1710 TORQUE CONVERTER TURBINE 2 SPEED SIGNAL CIRCUIT MALFUNCTION, Diagnostic Procedure with Diagnostic Trouble Code (DTC).>
P1718	AT CAN Communication Circuit	Open CAN communication bus off, shorted ECM, ABS/VDCCM, body integrated unit malfunction	<Ref. to 5AT(diag)-92, DTC P1718 AT CAN COMMUNICATION CIRCUIT, Diagnostic Procedure with Diagnostic Trouble Code (DTC).>
P1724	AT EEPROM Error	TCM EEPROM malfunction	<Ref. to 5AT(diag)-93, DTC P1724 AT EEPROM ERROR, Diagnostic Procedure with Diagnostic Trouble Code (DTC).>
P1817	Sports Mode Switch Circuit (Manual Switch)	Open or shorted manual mode switch or switch malfunction	<Ref. to 5AT(diag)-94, DTC P1817 SPORTS MODE SWITCH CIRCUIT (MANUAL SWITCH), Diagnostic Procedure with Diagnostic Trouble Code (DTC).>
P1840	Transmission Fluid Pressure Sensor Switch A Circuit	Open or shorted Fr/B fluid pressure switch or switch malfunction	<Ref. to 5AT(diag)-96, DTC P1840 TRANSMISSION FLUID PRESSURE SENSOR SWITCH A CIRCUIT, Diagnostic Procedure with Diagnostic Trouble Code (DTC).>
P1841	Transmission Fluid Pressure Sensor Switch B Circuit	Open or shorted Fwd/B fluid pressure switch or switch malfunction	<Ref. to 5AT(diag)-96, DTC P1841 TRANSMISSION FLUID PRESSURE SENSOR SWITCH B CIRCUIT, Diagnostic Procedure with Diagnostic Trouble Code (DTC).>
P1842	Transmission Fluid Pressure Sensor Switch C Circuit	Open or shorted I/O fluid pressure switch or switch malfunction	<Ref. to 5AT(diag)-96, DTC P1842 TRANSMISSION FLUID PRESSURE SENSOR SWITCH C CIRCUIT, Diagnostic Procedure with Diagnostic Trouble Code (DTC).>
P1843	Transmission Fluid Pressure Sensor Switch D Circuit	Open or shorted D/C fluid pressure switch or switch malfunction	<Ref. to 5AT(diag)-96, DTC P1843 TRANSMISSION FLUID PRESSURE SENSOR SWITCH D CIRCUIT, Diagnostic Procedure with Diagnostic Trouble Code (DTC).>
P1844	Transmission Fluid Pressure Sensor Switch E Circuit	Open or shorted H&LR/C fluid pressure switch or switch malfunction	<Ref. to 5AT(diag)-96, DTC P1844 TRANSMISSION FLUID PRESSURE SENSOR SWITCH E CIRCUIT, Diagnostic Procedure with Diagnostic Trouble Code (DTC).>

16.Diagnostic Procedure with Diagnostic Trouble Code (DTC)

A: DTC P0705 TRANSMISSION RANGE SENSOR CIRCUIT (PRNDL INPUT)

DTC DETECTING CONDITION:

The inhibitor switch is open or short.

TROUBLE SYMPTOM:

- Shift characteristics are erroneous.
- Shift indicator does not match with select lever.
- Shift indicator does not illuminate.
- N-D, N-R shock occur.

WIRING DIAGRAM:

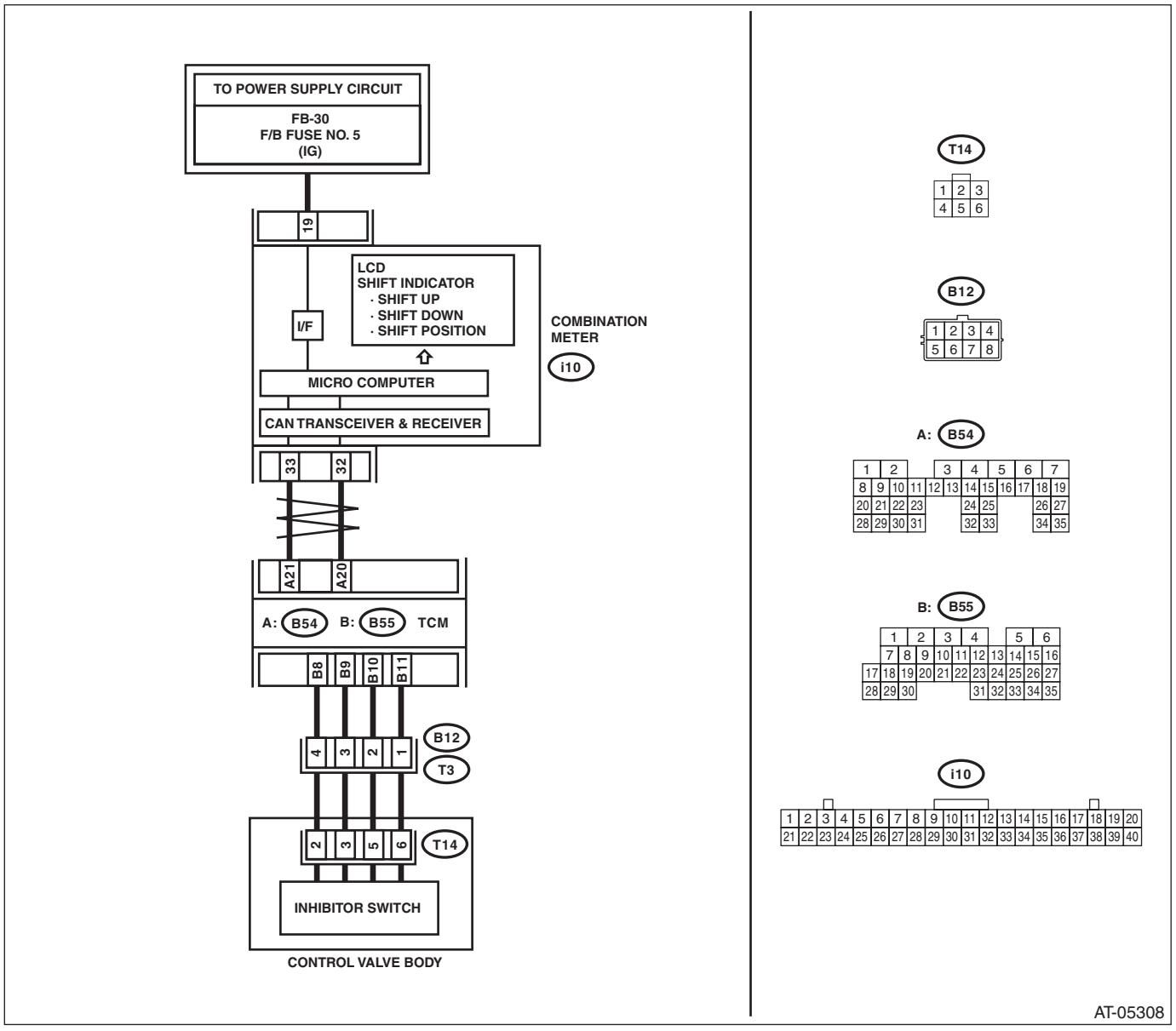

Step		Check	Yes	No
1	**CHECK DTC OF TCM.**	Is DTC of AT CAN communication circuit displayed?	Perform the diagnosis according to DTC.	Go to step **2**.

Step		Check	Yes	No
2	**CHECK INHIBITOR SWITCH.** Using Subaru Select Monitor, read the data of "Inhibitor SW 1 — 4" for each range. ○=High AT-05083	Is the display as in the table of step 2?	Go to step **9**.	Go to step **3**.
3	**CHECK INHIBITOR SWITCH.** Using Subaru Select Monitor, read the data of "Inhibitor SW 1" for "P" and "D" ranges.	Is the display "High" for both "P" and "D"?	Go to step **4**.	Go to step **7**.
4	**CHECK INHIBITOR SWITCH.** Using Subaru Select Monitor, read the data of "Inhibitor SW 2" for "R" and "D" ranges.	Is the display "High" for both "R" and "D"?	Go to step **5**.	Go to step **7**.
5	**CHECK INHIBITOR SWITCH.** Using Subaru Select Monitor, read the data of "Inhibitor SW 3" for "N" and "D" ranges.	Is the display "High" for both "N" and "D"?	Go to step **6**.	Go to step **7**.
6	**CHECK INHIBITOR SWITCH.** Using Subaru Select Monitor, read the data of "Inhibitor SW 4" for "P" and "N" ranges.	Is the display "High" for both "P" and "N"?	Go to step **8**.	Go to step **7**.
7	**CHECK HARNESS CONNECTOR BETWEEN TCM AND TRANSMISSION.** 1) Turn the ignition switch to OFF. 2) Disconnect the connectors from TCM and transmission. 3) Measure the resistance of harness between TCM connector and transmission connector. ***Connector & terminal*** ***(B55) No. 8 — (B12) No. 4:*** ***(B55) No. 9 — (B12) No. 3:*** ***(B55) No. 10 — (B12) No. 2:*** ***(B55) No. 11 — (B12) No. 1:***	Is the resistance less than 1 Ω?	Go to step **8**.	Repair the open circuit of harness between TCM and transmission connector.
8	**CHECK HARNESS CONNECTOR BETWEEN TCM AND TRANSMISSION.** 1) Turn the ignition switch to OFF. 2) Disconnect the connectors from TCM and transmission. 3) Measure the resistance between TCM connector and chassis ground. ***Connector & terminal*** ***(B55) No. 8 — Chassis ground:*** ***(B55) No. 9 — Chassis ground:*** ***(B55) No. 10 — Chassis ground:*** ***(B55) No. 11 — Chassis ground:***	Is the resistance 1 MΩ or more?	Go to step **9**.	Repair the short circuit of harness between TCM and transmission connector.

	SW1	SW2	SW3	SW4
P	○			○
R		○		
N			○	○
D	○	○	○	

	Step	Check	Yes	No
9	**CHECK INPUT SIGNAL CIRCUIT FOR TCM.** 1) Turn the ignition switch to OFF. 2) Disconnect the transmission connector (B12). 3) Connect the TCM connector. 4) Turn the ignition switch to ON. 5) Measure the voltage between TCM terminals. ***Connector & terminal*** ***(B55) No. 8 (+) — (B54) No. 23 (–):*** ***(B55) No. 9 (+) — (B54) No. 23 (–):*** ***(B55) No. 10 (+) — (B54) No. 23 (–):*** ***(B55) No. 11 (+) — (B54) No. 23 (–):***	Is the voltage of "Inhibitor SW 1 — 4" 8 V or more?	Go to step **11**.	Go to step **10**.
10	**CHECK TCM I/O SIGNAL.** Check the power supply and ground I/O signals. <Ref. to 5AT(diag)-13, ELECTRICAL SPECIFICATION, Transmission Control Module (TCM) I/O Signal.>	Is TCM I/O signal OK?	Replace the TCM. <Ref. to 5AT-57, Transmission Control Module (TCM).>	Repair the open or short circuit for power supply and ground.
11	**CHECK INPUT SIGNAL FOR TCM.** 1) Connect all connectors. 2) Lift up the vehicle. 3) Start the engine. 4) Using Subaru Select Monitor, read the data of "Front Wheel Speed" and "AT Turbine Speed 2". <Ref. to 5AT(diag)-18, Read Current Data.> NOTE: The speed difference between front and rear wheels lights the ABS warning light or the VDC warning light, but this does not indicate a malfunction. If the warning light is illuminated, clear the memory of ABS or VDC after completing AT control diagnosis. <Ref. to VDC(diag)-25, Clear Memory Mode.>	Does the speedometer indication increase as "Front Wheel Speed" and "AT Turbine Speed 2" values increase?	Go to step **12**.	Replace the control valve body. <Ref. to 5AT-55, Control Valve Body.>
12	**CHECK INPUT SIGNAL FOR TCM.** 1) Drive at 4th of manual mode. NOTE: Turbine speed sensor 1 signal can be measured only on 4th speed. 2) Using Subaru Select Monitor, read the data of "Rear Wheel Speed" and "AT Turbine Speed 1". <Ref. to 5AT(diag)-18, Read Current Data.> NOTE: The speed difference between front and rear wheels lights the ABS warning light or the VDC warning light, but this does not indicate a malfunction. If the warning light is illuminated, clear the memory of ABS or VDC after completing AT control diagnosis. <Ref. to VDC(diag)-25, Clear Memory Mode.>	Does the speedometer indication increase as "Rear Wheel Speed" and "AT Turbine Speed 1" values increase?	Go to step **13**.	Repair the open circuit of harness or poor contact of connector between TCM and rear vehicle speed sensor and turbine speed sensor 1.

	Step	Check	Yes	No
13	**CHECK HARNESS CONNECTOR BETWEEN TRANSMISSION AND CONTROL VALVE BODY.** 1) Turn the ignition switch to OFF. 2) Disconnect the connector from transmission. 3) Remove the transmission connector from bracket. 4) Lift up the vehicle. 5) Drain the ATF. **CAUTION:** **Do not drain ATF until it cools down.** 6) Remove the oil pan. 7) Disconnect the connector from control valve body connector. 8) Measure the resistance between transmission connector and control valve body connector. ***Connector & terminal*** ***(T3) No. 4 — (T14) No. 2:*** ***(T3) No. 3 — (T14) No. 3:*** ***(T3) No. 2 — (T14) No. 5:*** ***(T3) No. 1 — (T14) No. 6:***	Is the resistance less than 1 Ω?	Go to step **14**.	Repair the open circuit of harness between control valve body connector and transmission connector.
14	**CHECK HARNESS CONNECTOR BETWEEN TRANSMISSION AND CONTROL VALVE BODY.** Measure the resistance between transmission ground and control valve body connector. ***Connector & terminal*** ***(T14) No. 2 — Transmission ground:*** ***(T14) No. 3 — Transmission ground:*** ***(T14) No. 5 — Transmission ground:*** ***(T14) No. 6 — Transmission ground:***	Is the resistance 1 MΩ or more?	Go to step **15**.	Repair the short circuit of harness between control valve body connector and transmission connector.
15	**CHECK FOR POOR CONTACT.**	Is there any poor contact of "Inhibitor SW 1 — 4" monitor circuit?	Repair the poor contact.	Replace the control valve body. <Ref. to 5AT-55, Control Valve Body.>

B: DTC P0712 TRANSMISSION FLUID TEMPERATURE SENSOR CIRCUIT LOW INPUT

DTC DETECTING CONDITION:
Input signal circuit to ATF temperature sensor is open.
TROUBLE SYMPTOM:
Excessive shift shock
WIRING DIAGRAM:

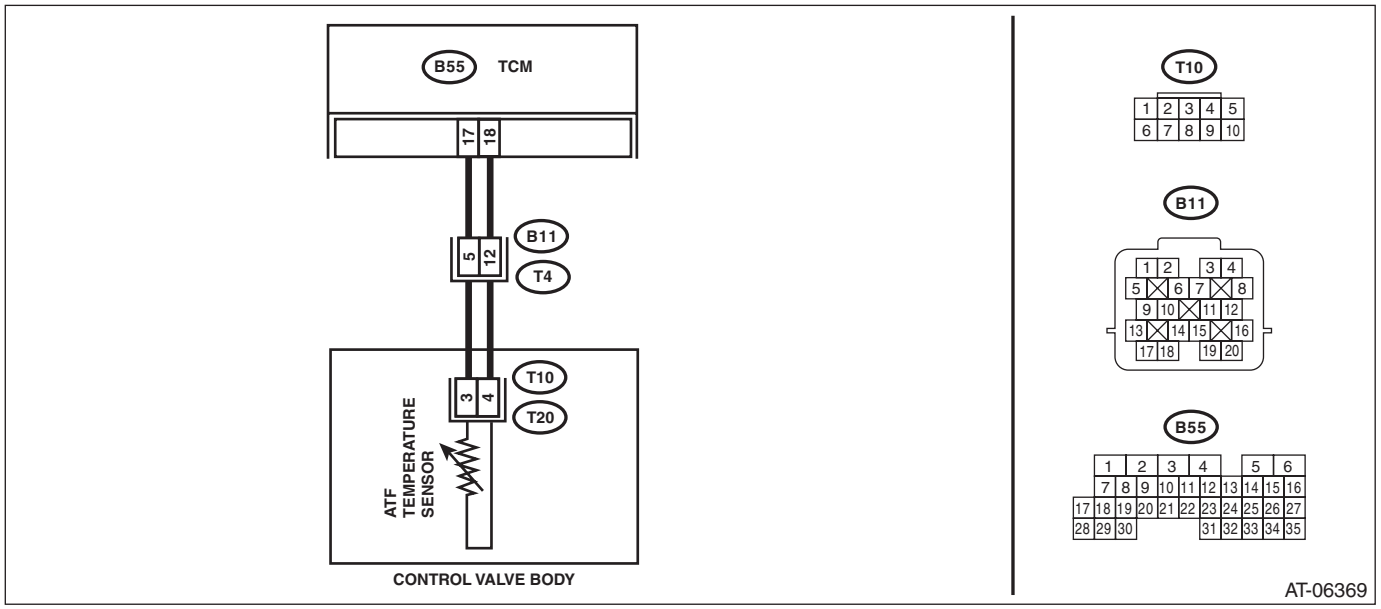

	Step	Check	Yes	No
1	**CHECK HARNESS CONNECTOR BETWEEN TCM AND TRANSMISSION.** 1) Turn the ignition switch to OFF. 2) Disconnect the connectors from TCM and transmission. 3) Measure the resistance of harness between TCM connector and transmission connector. ***Connector & terminal*** ***(B55) No. 17 — (B11) No. 5:*** ***(B55) No. 18 — (B11) No. 12:***	Is the resistance less than 1 Ω?	Go to step **2**.	Repair the open circuit of harness between TCM and transmission connector.
2	**CHECK ATF TEMPERATURE SENSOR.** 1) Turn the ignition switch to OFF. 2) Connect the connectors to transmission and TCM. 3) Start the engine. 4) Warm up the transmission until the ATF temperature exceeds 80°C (176°F). 5) Disconnect the connector from transmission. 6) Measure the resistance between transmission connector terminals. ***Connector & terminal*** ***(T4) No. 5 — (T4) No. 12:***	Is the resistance 300 — 800 Ω?	Go to step **3**.	Go to step **5**.
3	**CHECK ATF TEMPERATURE SENSOR.** Measure the resistance between transmission connector terminals. ***Connector & terminal*** ***(T4) No. 5 — (T4) No. 12:***	Does the resistance value increase while the ATF temperature decreases?	Go to step **4**.	Go to step **5**.

	Step	Check	Yes	No
4	**CHECK INPUT SIGNAL FOR TCM.** 1) Connect the connector. 2) Turn the ignition switch to ON. 3) Read the data of "ATF Temp." using Subaru Select Monitor.	Does the ATF temperature gradually decrease?	Check for poor contact of the harness between the ATF temperature sensor and transmission connector, and repair the defective part.	Go to step **6**.
5	**CHECK HARNESS CONNECTOR BETWEEN TRANSMISSION AND CONTROL VALVE BODY.** 1) Turn the ignition switch to OFF. 2) Disconnect the connector from transmission. 3) Remove the transmission connector from bracket. 4) Lift up the vehicle. 5) Drain the ATF. **CAUTION:** **Do not drain ATF until it cools down.** 6) Remove the oil pan. 7) Disconnect the control valve body connector. 8) Measure the resistance between transmission connector and control valve body connector. ***Connector & terminal*** ***(T4) No. 5 — (T10) No. 3:*** ***(T4) No. 12 — (T10) No. 4:***	Is the resistance less than 1 Ω?	Replace the control valve body. <Ref. to 5AT-55, Control Valve Body.>	Repair the open circuit of harness between transmission connector and control valve body connector.
6	**CHECK FOR POOR CONTACT.**	Is there poor contact of ATF temperature sensor circuit?	Repair the poor contact.	Replace the TCM. <Ref. to 5AT-57, Transmission Control Module (TCM).>

C: DTC P0713 TRANSMISSION FLUID TEMPERATURE SENSOR CIRCUIT HIGH INPUT

DTC DETECTING CONDITION:
Input signal circuit to ATF temperature sensor is shorted.
TROUBLE SYMPTOM:
Excessive shift shock
WIRING DIAGRAM:

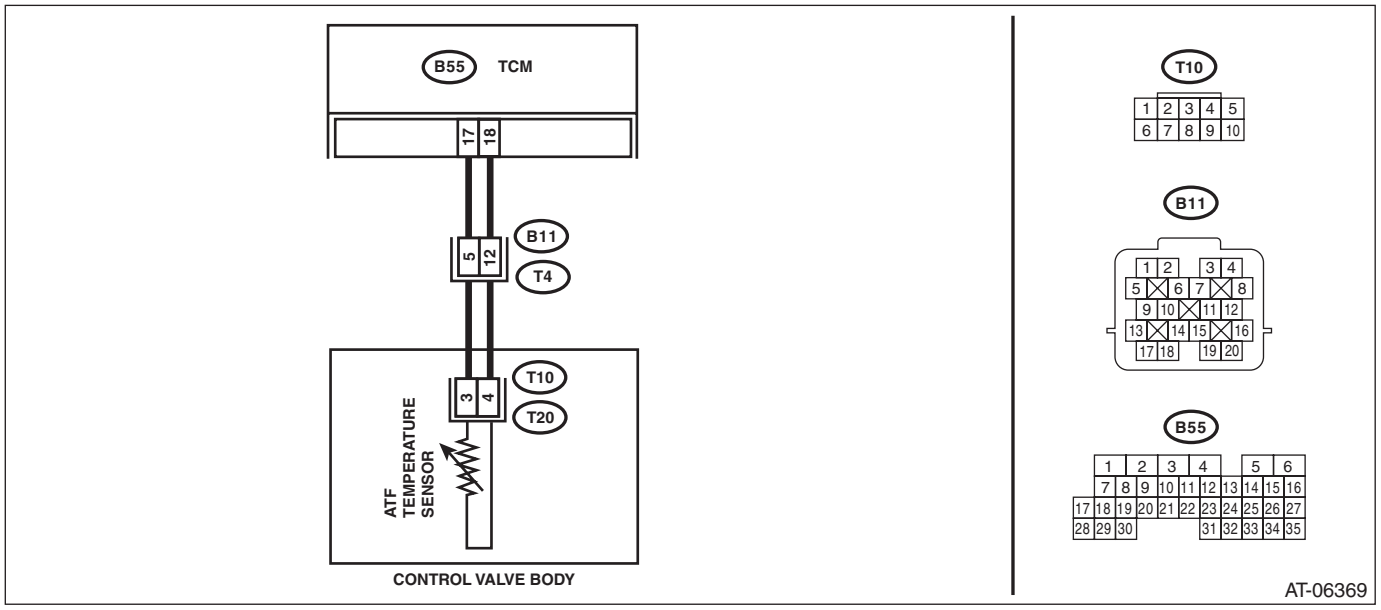

	Step	Check	Yes	No
1	**CHECK HARNESS CONNECTOR BETWEEN TCM AND TRANSMISSION.** 1) Turn the ignition switch to OFF. 2) Disconnect the connectors from TCM and transmission. 3) Measure the resistance of harness between TCM connector and chassis ground. ***Connector & terminal*** ***(B55) No. 17 — Chassis ground:*** ***(B55) No. 18 — Chassis ground:***	Is the resistance 1 MΩ or more?	Go to step **2**.	Repair the short circuit of harness between TCM and transmission connector.
2	**CHECK ATF TEMPERATURE SENSOR.** 1) Turn the ignition switch to OFF. 2) Connect the connectors to transmission and TCM. 3) Start the engine. 4) Warm up the transmission until the ATF temperature exceeds 80°C (176°F). 5) Disconnect the connector from transmission. 6) Measure the resistance between transmission connector terminals. ***Connector & terminal*** ***(T4) No. 5 — (T4) No. 12:***	Is the resistance 300 — 800 Ω?	Go to step **3**.	Go to step **5**.
3	**CHECK ATF TEMPERATURE SENSOR.** Measure the resistance between transmission connector terminals. ***Connector & terminal*** ***(T4) No. 5 — (T4) No. 12:***	Does the resistance value increase while the ATF temperature decreases?	Go to step **4**.	Go to step **5**.

	Step	Check	Yes	No
4	**CHECK INPUT SIGNAL FOR TCM.** 1) Connect the connector. 2) Turn the ignition switch to ON. 3) Read the data of “ATF Temp.” using Subaru Select Monitor.	Does the ATF temperature gradually decrease?	Check for poor contact of the harness between the ATF temperature sensor and transmission connector, and repair the defective part.	Go to step **6**.
5	**CHECK HARNESS CONNECTOR BETWEEN TRANSMISSION AND CONTROL VALVE BODY.** 1) Turn the ignition switch to OFF. 2) Disconnect the connector from transmission. 3) Remove the transmission connector from bracket. 4) Lift up the vehicle. 5) Drain the ATF. **CAUTION:** **Do not drain ATF until it cools down.** 6) Remove the oil pan. 7) Disconnect the control valve body connector. 8) Measure the resistance between chassis ground and control valve body connector. ***Connector & terminal*** ***(T10) No. 3 — Chassis ground:*** ***(T10) No. 4 — Chassis ground:***	Is the resistance 1 MΩ or more?	Replace the control valve body. <Ref. to 5AT-55, Control Valve Body.>	Repair the short circuit of harness between transmission connector and control valve body connector.
6	**CHECK FOR POOR CONTACT.**	Is there poor contact of ATF temperature sensor circuit?	Repair the poor contact.	Replace the TCM. <Ref. to 5AT-57, Transmission Control Module (TCM).>

D: DTC P0715 INPUT/TURBINE SPEED SENSOR CIRCUIT

DTC DETECTING CONDITION:
Input signal circuit of TCM is open or shorted.
TROUBLE SYMPTOM:
- Excessive shift shock
- Does not shift to 5th.

WIRING DIAGRAM:

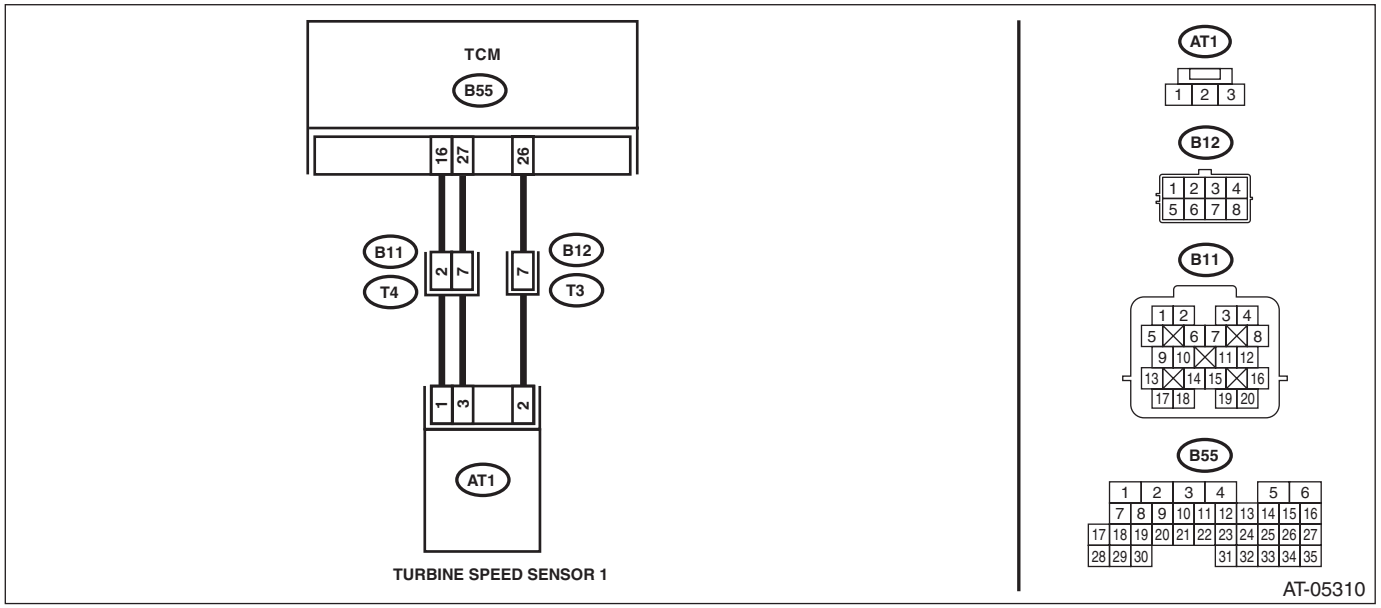

	Step	Check	Yes	No
1	**CHECK TCM I/O SIGNAL.** Check the power supply and ground I/O signals. <Ref. to 5AT(diag)-13, ELECTRICAL SPECIFICATION, Transmission Control Module (TCM) I/O Signal.>	Is TCM I/O signal OK?	Go to step **2**.	Repair the open or short circuit for power supply and ground.
2	**CHECK TCM AND TRANSMISSION HARNESS CONNECTOR.** 1) Disconnect the connectors from TCM and transmission. 2) Measure the resistance of harness between TCM connector and transmission connector. ***Connector & terminal*** ***(B55) No. 16 — (B11) No. 2:*** ***(B55) No. 26 — (B12) No. 7:*** ***(B55) No. 27 — (B11) No. 7:***	Is the resistance less than 1 Ω?	Go to step **3**.	Repair the open circuit of harness between TCM and transmission connector.
3	**CHECK TCM AND TRANSMISSION HARNESS CONNECTOR.** Measure the resistance of harness between TCM connector and chassis ground. ***Connector & terminal*** ***(B55) No. 16 — Chassis ground:*** ***(B55) No. 26 — Chassis ground:*** ***(B55) No. 27 — Chassis ground:***	Is the resistance 1 MΩ or more?	Go to step **4**.	Repair the short circuit of harness between TCM and transmission connector.
4	**CHECK TCM POWER SUPPLY OUTPUT.** 1) Connect the connector to TCM. (Transmission connector is disconnected) 2) Turn the ignition switch to ON. 3) Measure the voltage between transmission connector and chassis ground. ***Connector & terminal*** ***(B12) No. 7 (+) — Chassis ground (–):***	Is the voltage 10 — 13 V?	Go to step **5**.	Replace the TCM. <Ref. to 5AT-57, Transmission Control Module (TCM).>

	Step	Check	Yes	No
5	**CHECK INPUT CIRCUIT OF TCM TURBINE SPEED SENSOR.** Measure the voltage between TCM connector terminals. ***Connector & terminal*** ***(B12) No. 7 (+) — (B11) No. 2 (–):***	Is the voltage 4 — 6 V?	Go to step **6**.	Replace the TCM. <Ref. to 5AT-57, Transmission Control Module (TCM).>
6	**CHECK HARNESS ASSEMBLY (TURBINE SPEED SENSOR GROUND).** Check the installing condition of ground connecting harness of harness assembly (used for both of turbine speed sensor 1, rear vehicle speed sensor).	Is the ground connecting harness installed to transmission body correctly, or the harness and terminals not damaged?	Go to step **7**.	When poor installation of ground occurs, install it securely. Replace the transmission assembly if the harness or terminal is damaged. <Ref. to 5AT-37, Automatic Transmission Assembly.>
7	**CHECK HARNESS ASSEMBLY.** 1) Turn the ignition switch to OFF. 2) Disconnect the connector from transmission. 3) Disconnect the connector from turbine speed sensor 1. 4) Measure the resistance between transmission connector and turbine speed sensor 1 connector. ***Connector & terminal*** ***(T3) No. 7 — (AT1) No. 2:*** ***(T4) No. 7 — (AT1) No. 3:*** ***(T4) No. 2 — (AT1) No. 1:***	Is the resistance less than 1 Ω?	Go to step **8**.	Repair the open circuit of the harness or poor contact of the connector between the transmission connector and turbine speed sensor 1 connector.
8	**CHECK HARNESS ASSEMBLY.** Measure the resistance between transmission connector and chassis ground. ***Connector & terminal*** ***(T3) No. 7 — Chassis ground:*** ***(T4) No. 7 — Chassis ground:*** ***(T4) No. 2 — Chassis ground:***	Is the resistance 1 MΩ or more?	Go to step **9**.	Repair the short circuit of the harness between the transmission connector and turbine speed sensor 1 connector.
9	**CHECK INPUT SIGNAL FOR TCM.** 1) Connect all connectors. 2) Lift up the vehicle. 3) Start the engine. 4) Drive at 4th of manual mode. NOTE: Turbine speed sensor 1 signal can be measured only on 4th speed. 5) Using Subaru Select Monitor, read the data of “AT Turbine Speed 1” and “AT Turbine Speed 2”. <Ref. to 5AT(diag)-18, Read Current Data.> NOTE: The speed difference between front and rear wheels lights the ABS warning light or the VDC warning light, but this does not indicate a malfunction. If the warning light is illuminated, clear the memory of ABS or VDC after completing AT control diagnosis. <Ref. to VDC(diag)-25, Clear Memory Mode.>	Are the values of “AT Turbine Speed 1” and “AT Turbine Speed 2” almost the same?	Check for poor contact of the harness of the turbine speed sensor 1 circuit, and repair the faulty part.	Replace the turbine speed sensor 1. <Ref. to 5AT-54, Turbine Speed Sensor 1.>

E: DTC P0719 BRAKE SWITCH CIRCUIT LOW

DTC DETECTING CONDITION:
Brake switch malfunction, open input signal circuit
TROUBLE SYMPTOM:
Brake down control does not operate in manual mode.
WIRING DIAGRAM:

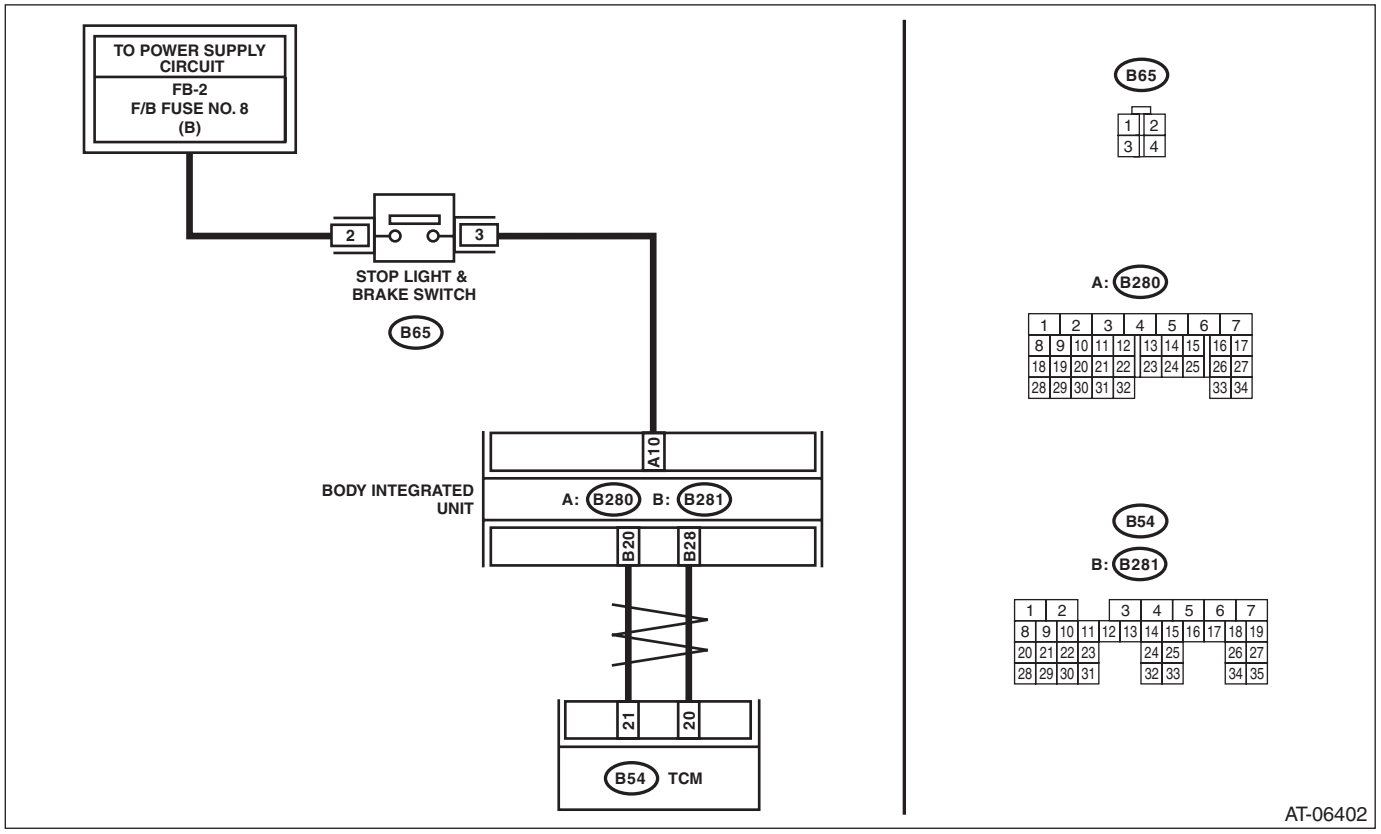

Step		Check	Yes	No
1	**CHECK DTC.**	Is any of following DTC displayed? / AT CAN Communication Circuit / Output Speed Sensor Circuit / AT Vehicle Speed Sensor Circuit Malfunction (Rear Wheel) / VDC Brake SW Circuit	Perform the diagnosis according to DTC.	Go to step **2**.
2	**CHECK BODY INTEGRATED UNIT.** 1) Turn the ignition switch to OFF. 2) Connect the Subaru Select Monitor to data link connector. 3) Turn the ignition switch to ON. 4) Run the Subaru Select Monitor. 5) Depress the brake pedal. 6) Read the data of “Stop Light Switch” using Subaru Select Monitor. <Ref. to BC(diag)-12, Read Current Data.>	Is “ON” displayed?	Go to step **3**.	Go to step **4**.
3	**CHECK TCM.** Read the data of “Stop Light Switch” using Subaru Select Monitor. <Ref. to 5AT(diag)-18, Read Current Data.>	Is “ON” displayed?	A temporary poor contact of connector or harness may be the cause. Check the poor contact.	Replace the TCM. <Ref. to 5AT-57, Transmission Control Module (TCM).>

	Step	Check	Yes	No
4	**CHECK BODY INTEGRATED UNIT INPUT SIGNAL.** 1) Disconnect the connector from body integrated unit. 2) Depress the brake pedal. 3) Measure the voltage between body integrated unit connector and chassis ground. ***Connector & terminal*** ***(B280) No. 10 (+) — Chassis ground (–):***	Is the voltage 10 V or more?	Go to step **7**.	Go to step **5**.
5	**CHECK HARNESS CONNECTOR BETWEEN BODY INTEGRATED UNIT AND STOP LIGHT SWITCH.** 1) Turn the ignition switch to OFF. 2) Disconnect the connector from stop light switch. 3) Measure the resistance of harness between body integrated unit connector and stop light switch connector. ***Connector & terminal*** ***(B280) No. 10 — (B65) No. 3:***	Is the resistance less than 1 Ω?	Go to step **6**.	Repair the open circuit of the harness between the body integrated unit and stop light switch connector.
6	**CHECK HARNESS CONNECTOR BETWEEN BODY INTEGRATED UNIT AND STOP LIGHT SWITCH.** Measure the resistance of harness between body integrated unit connector and stop light switch connector. ***Connector & terminal*** ***(B280) No. 10 — Chassis ground:***	Is the resistance 1 MΩ or more?	Go to step **7**.	Repair the short circuit of the harness between the body integrated unit and stop light switch connector.
7	**CHECK FOR POOR CONTACT.**	Is there poor contact of input signal of brake switch?	Repair the poor contact.	Check body integrated unit.

F: DTC P0720 OUTPUT SPEED SENSOR CIRCUIT

DTC DETECTING CONDITION:

- AT vehicle speed signal is abnormal.
- The harness connector between TCM and vehicle speed sensor is open or shorted.

TROUBLE SYMPTOM:

- Shifting quality malfunction
- Driving performance is poor.

WIRING DIAGRAM:

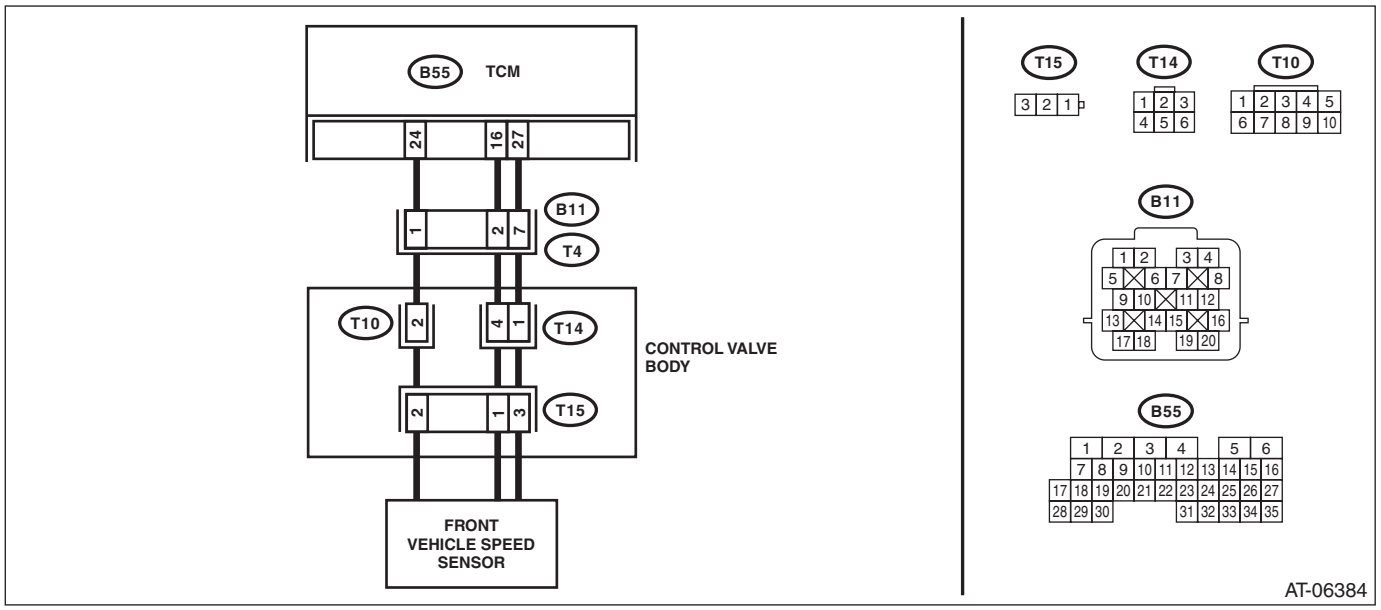

	Step	Check	Yes	No
1	**CHECK TCM I/O SIGNAL.** Check the power supply and ground I/O signals. <Ref. to 5AT(diag)-13, ELECTRICAL SPECIFICATION, Transmission Control Module (TCM) I/O Signal.>	Is TCM I/O signal OK?	Go to step **2**.	Repair the open or short circuit for power supply and ground.
2	**CHECK TCM AND TRANSMISSION HARNESS CONNECTOR.** 1) Disconnect the connectors from TCM and transmission. 2) Measure the resistance of harness between TCM connector and transmission connector. ***Connector & terminal*** ***(B55) No. 16 — (B11) No. 2:*** ***(B55) No. 24 — (B11) No. 1:*** ***(B55) No. 27 — (B11) No. 7:***	Is the resistance less than 1 Ω?	Go to step **3**.	Repair the open circuit of harness between TCM and transmission connector.
3	**CHECK TCM AND TRANSMISSION HARNESS CONNECTOR.** Measure the resistance of harness between TCM connector and chassis ground. ***Connector & terminal*** ***(B55) No. 24 — Chassis ground:***	Is the resistance 1 MΩ or more?	Go to step **4**.	Repair the short circuit of harness between TCM and transmission connector.
4	**CHECK TCM POWER SUPPLY OUTPUT.** 1) Connect the connector to TCM. (Transmission connector is disconnected) 2) Turn the ignition switch to ON. 3) Measure the voltage between transmission connector and chassis ground. ***Connector & terminal*** ***(B11) No. 7 (+) — Chassis ground (–):***	Is the voltage 10 — 13 V?	Go to step **5**.	Replace the TCM. <Ref. to 5AT-57, Transmission Control Module (TCM).>

	Step	Check	Yes	No
5	**CHECK INPUT CIRCUIT OF TCM TURBINE SPEED SENSOR.** Measure the voltage variation between TCM connector terminals. ***Connector & terminal*** ***(B11) No. 1 (+) — (B11) No. 2 (–):***	Is the voltage 4 — 6 V?	Go to step **6**.	Replace the TCM. <Ref. to 5AT-57, Transmission Control Module (TCM).>
6	**CHECK INPUT SIGNAL FOR TCM.** 1) Connect all connectors. 2) Lift up the vehicle. 3) Start the engine. 4) Read the data of "Front Wheel Speed" using Subaru Select Monitor. <Ref. to 5AT(diag)-18, Read Current Data.> NOTE: The speed difference between front and rear wheels lights the ABS warning light or the VDC warning light, but this does not indicate a malfunction. If the warning light is illuminated, clear the memory of ABS or VDC after completing AT control diagnosis. <Ref. to VDC(diag)-25, Clear Memory Mode.>	Does the speedometer indication increase as "Front Wheel Speed" data increases?	Check the harness of the front vehicle speed sensor circuit, and repair the defective part.	Go to step **7**.
7	**CHECK HARNESS CONNECTOR BETWEEN TRANSMISSION AND CONTROL VALVE BODY.** 1) Turn the ignition switch to OFF. 2) Disconnect the connector from transmission. 3) Remove the transmission connector from bracket. 4) Lift up the vehicle. 5) Drain the ATF. **CAUTION:** **Do not drain ATF until it cools down.** 6) Remove the oil pan. 7) Disconnect the control valve body connector. 8) Measure the resistance between transmission connector and control valve body connector. ***Connector & terminal*** ***(T4) No. 1 — (T10) No. 2:***	Is the resistance less than 1 Ω?	Go to step **8**.	Repair the open circuit of harness between control valve body connector and transmission connector.
8	**CHECK HARNESS CONNECTOR BETWEEN TRANSMISSION AND CONTROL VALVE BODY.** Measure the resistance between transmission ground and control valve body connector. ***Connector & terminal*** ***(T10) No. 2 — Transmission ground:***	Is the resistance 1 MΩ or more?	Go to step **9**.	Repair the short circuit of harness between control valve body connector and transmission ground.
9	**CHECK HARNESS CONNECTOR BETWEEN CONTROL VALVE BODY AND FRONT VEHICLE SPEED SENSOR.** 1) Disconnect the connector from the front vehicle speed sensor. 2) Measure the resistance of the harness between the control valve body connector and front vehicle speed sensor connector. ***Connector & terminal*** ***(T10) No. 2 — (T15) No. 2:*** ***(T14) No. 1 — (T15) No. 3:*** ***(T14) No. 4 — (T15) No. 1:***	Is the resistance less than 1 Ω?	Go to step **10**.	Replace the control valve body. <Ref. to 5AT-55, Control Valve Body.>

Step		Check	Yes	No
10	**CHECK HARNESS CONNECTOR BETWEEN CONTROL VALVE BODY AND FRONT VEHICLE SPEED SENSOR.** Measure the resistance of harness between control valve body connector and transmission ground. ***Connector & terminal*** ***(T10) No. 2 — Transmission ground:***	Is the resistance 1 MΩ or more?	Replace the front vehicle speed sensor.	Replace the control valve body. <Ref. to 5AT-55, Control Valve Body.>

G: DTC P0724 BRAKE SWITCH CIRCUIT HIGH

DTC DETECTING CONDITION:
Brake switch malfunction, open input signal circuit
TROUBLE SYMPTOM:
Gear is not shifted down when climbing a hill.
WIRING DIAGRAM:

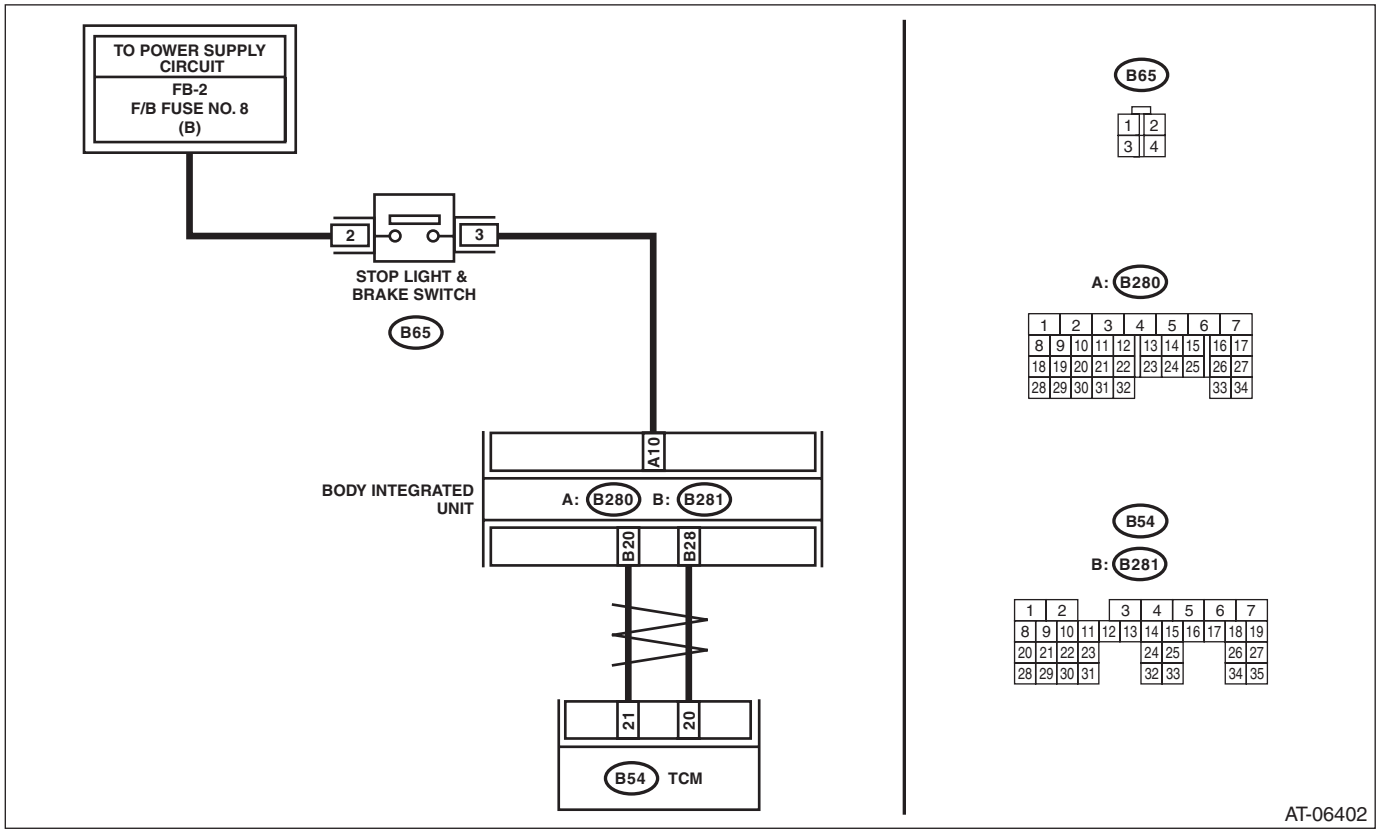

Step		Check	Yes	No
1	**CHECK DTC.**	Is any of following DTC detected? / AT CAN Communication Circuit / Output Speed Sensor Circuit / AT Vehicle Speed Sensor Circuit Malfunction (Rear Wheel) / VDC Brake SW Circuit	Perform the diagnosis according to DTC.	Go to step **2**.
2	**CHECK BODY INTEGRATED UNIT.** 1) Turn the ignition switch to OFF. 2) Connect the Subaru Select Monitor to data link connector. 3) Turn the ignition switch to ON. 4) Run the Subaru Select Monitor. 5) Read the data of “Stop Light Switch” using Subaru Select Monitor. <Ref. to BC(diag)-12, Read Current Data.>	Is “OFF” displayed?	Go to step **3**.	Go to step **4**.
3	**CHECK TCM.** Read the data of “Stop Light Switch” using Subaru Select Monitor. <Ref. to 5AT(diag)-18, Read Current Data.>	Is “OFF” displayed?	A temporary poor contact of connector or harness may be the cause. Check the poor contact.	Replace the TCM. <Ref. to 5AT-57, Transmission Control Module (TCM).>

	Step	Check	Yes	No
4	**CHECK BODY INTEGRATED UNIT INPUT SIGNAL.** 1) Disconnect the connector from body integrated unit. 2) Measure the voltage between body integrated unit connector and chassis ground. ***Connector & terminal*** ***(B280) No. 10 (+) — Chassis ground (–):***	Is the voltage 10 V or more?	Go to step **5**.	Go to step **7**.
5	**CHECK STOP LIGHT SWITCH.** 1) Turn the ignition switch to OFF. 2) Disconnect the connector from stop light switch. 3) Measure the resistance of harness between stop light switch connectors. ***Connector & terminal*** ***(B65) No. 3 — (B65) No. 2:***	Is the resistance 1 MΩ or more?	Go to step **6**.	Replace the stop light switch.
6	**CHECK HARNESS CONNECTOR BETWEEN BODY INTEGRATED UNIT AND STOP LIGHT SWITCH.** 1) Turn the ignition switch to ON. 2) Measure the voltage of harness between body integrated unit connector and chassis ground. ***Connector & terminal*** ***(B280) No. 10 (+) — Chassis ground (–):***	Is the voltage less than 1 V?	Go to step **7**.	Repair the short circuit of the harness between the body integrated unit and stop light switch connector.
7	**CHECK FOR POOR CONTACT.**	Is there poor contact of input signal of brake switch?	Repair the poor contact.	Check body integrated unit.

H: DTC P0731 GEAR 1 INCORRECT RATIO

NOTE:
Refer to DTC P0736 for diagnostic procedure. <Ref. to 5AT(diag)-53, DTC P0736 REVERSE INCORRECT RATIO, Diagnostic Procedure with Diagnostic Trouble Code (DTC).>

I: DTC P0732 GEAR 2 INCORRECT RATIO

NOTE:
Refer to DTC P0736 for diagnostic procedure. <Ref. to 5AT(diag)-53, DTC P0736 REVERSE INCORRECT RATIO, Diagnostic Procedure with Diagnostic Trouble Code (DTC).>

J: DTC P0733 GEAR 3 INCORRECT RATIO

NOTE:
Refer to DTC P0736 for diagnostic procedure. <Ref. to 5AT(diag)-53, DTC P0736 REVERSE INCORRECT RATIO, Diagnostic Procedure with Diagnostic Trouble Code (DTC).>

K: DTC P0734 GEAR 4 INCORRECT RATIO

NOTE:
Refer to DTC P0736 for diagnostic procedure. <Ref. to 5AT(diag)-53, DTC P0736 REVERSE INCORRECT RATIO, Diagnostic Procedure with Diagnostic Trouble Code (DTC).>

L: DTC P0735 GEAR 5 INCORRECT RATIO

NOTE:
Refer to DTC P0736 for diagnostic procedure. <Ref. to 5AT(diag)-53, DTC P0736 REVERSE INCORRECT RATIO, Diagnostic Procedure with Diagnostic Trouble Code (DTC).>

M: DTC P0736 REVERSE INCORRECT RATIO

DTC DETECTING CONDITION:
Target gear ratio and actual gear ratio do not match.
TROUBLE SYMPTOM:
- Shift point is too high or too low.
- Excessive shift shock
- Gear is not changed.
- The vehicle does not move in “D” or “R” range with the engine running at high speed.

	Step	Check	Yes	No
1	**CHECK DTC.**	Is any of the following DTCs displayed? P0751, P0753, P0756, P0758, P0761, P0763, P0766, P0768, P0771, P0773	Perform the diagnosis according to DTC.	Go to step **2**.
2	**CHECK DTC.**	Is DTC P1718 displayed?	Perform the diagnosis according to DTC.	Go to step **3**.
3	**CHECK AT TURBINE SPEED SENSOR CIRCUIT.** Perform diagnosis according to DTC P0715. <Ref. to 5AT(diag)-44, DTC P0715 INPUT/ TURBINE SPEED SENSOR CIRCUIT, Diagnostic Procedure with Diagnostic Trouble Code (DTC).>	Is there any trouble?	Check the turbine speed sensor 1 circuit.	Go to step **4**.
4	**CHECK AT TURBINE SPEED SENSOR CIRCUIT.** Perform diagnosis according to DTC P1710. <Ref. to 5AT(diag)-91, DTC P1710 TORQUE CONVERTER TURBINE 2 SPEED SIGNAL CIRCUIT MALFUNCTION, Diagnostic Procedure with Diagnostic Trouble Code (DTC).>	Is there any trouble?	Check the turbine speed sensor 2 circuit.	Go to step **5**.
5	**CHECK AT VEHICLE SPEED SENSOR CIRCUIT.** Perform diagnosis according to DTC P0720. <Ref. to 5AT(diag)-48, DTC P0720 OUTPUT SPEED SENSOR CIRCUIT, Diagnostic Procedure with Diagnostic Trouble Code (DTC).>	Is there any trouble?	Check for poor contact of the front vehicle speed sensor circuit harness and repair the fault location.	Go to step **6**.
6	**CHECK AT VEHICLE SPEED SENSOR CIRCUIT.** Perform diagnosis according to DTC P1706. <Ref. to 5AT(diag)-87, DTC P1706 AT VEHICLE SPEED SENSOR CIRCUIT MALFUNCTION (REAR WHEEL), Diagnostic Procedure with Diagnostic Trouble Code (DTC).>	Is there any trouble?	Check for poor contact of the rear vehicle speed sensor circuit harness and repair the fault location.	Go to step **7**.
7	**CHECK TRANSMISSION RANGE SENSOR CIRCUIT (PRNDL INPUT).** Perform diagnosis according to DTC P0705. <Ref. to 5AT(diag)-36, DTC P0705 TRANSMISSION RANGE SENSOR CIRCUIT (PRNDL INPUT), Diagnostic Procedure with Diagnostic Trouble Code (DTC).>	Is there any trouble?	Check the inhibitor switch circuit.	There are malfunctions in TCM, TCM connector poor contact, or transmission assembly mechanical malfunction.

N: DTC P0741 TORQUE CONVERTER CLUTCH CIRCUIT PERFORMANCE OR STUCK OFF

DTC DETECTING CONDITION:

- Lock up clutch malfunction
- Defective torque converter assembly
- Defective control valve
- Defective turbine speed sensor 1 or 2

TROUBLE SYMPTOM:

No lock-up occurs. (After engine is warmed up)

Step		Check	Yes	No
1	**CHECK DTC OF TCM.**	Is any DTC of the followings detected? P0715, P0720, P0753, P0758, P0763, P0768, P0773, P0751, P0756, P0761, P0766, P0771, P1710, P1718	Perform the diagnosis according to each DTC.	Go to step **2**.
2	**DRIVING CHECK FOR LOCK-UP CONDITION.** 1) Perform the Clear Memory Mode. 2) While keeping “Accel. Opening Angle” displayed on Subaru Select Monitor, drive at 85 km/h or more. 3) Check that “L/U Solenoid Current” is 0.6 A or more by using Subaru Select Monitor. 4) Read the data of “Engine Speed” and “Turbine Revolution Speed” using Subaru Select Monitor.	Is the difference between “Engine Speed” and “Turbine Revolution Speed” within 100 rpm?	Temporary poor contact or open circuit occurs. Recheck that the harness connector has no faulty.	Replace the transmission assembly when the difference is 100 rpm or more, or DTC P0741 is displayed. When DTC other than P0741 is displayed, perform the diagnosis corresponding to the DTC.

O: DTC P0743 TORQUE CONVERTER CLUTCH CIRCUIT ELECTRICAL

DTC DETECTING CONDITION:
The output signal circuit of lock up solenoid is open or shorted.
TROUBLE SYMPTOM:
No lock-up occurs. (After engine is warmed up)
WIRING DIAGRAM:

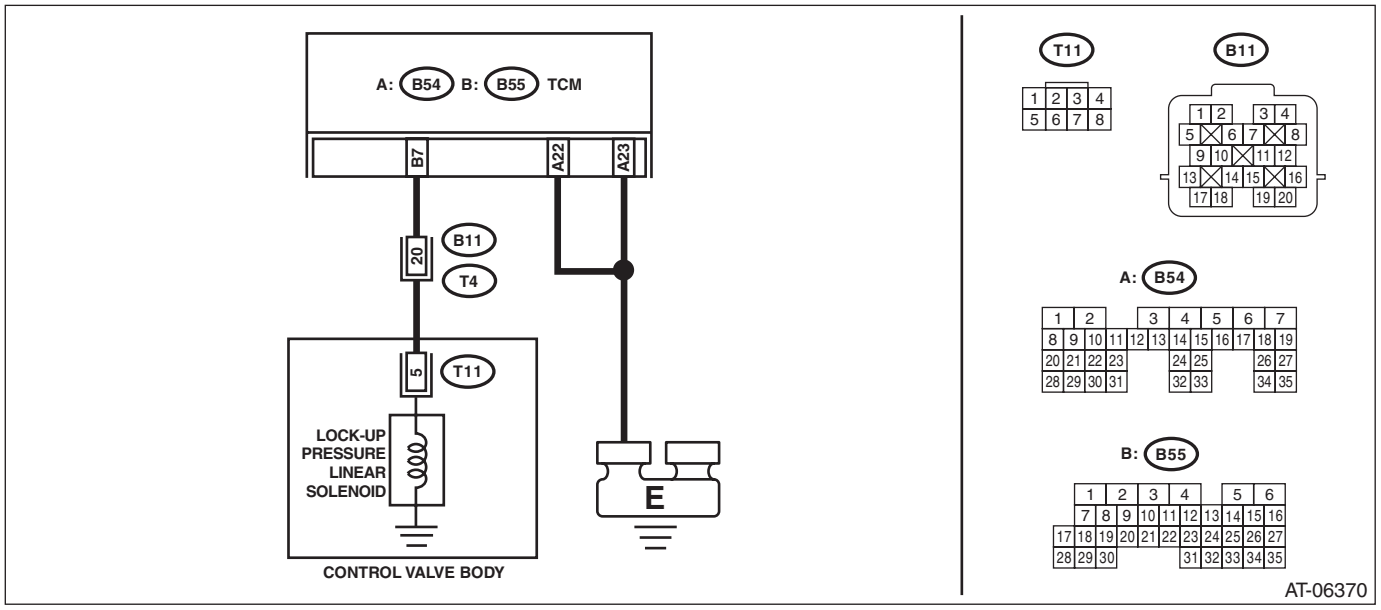

Step		Check	Yes	No
1	**CHECK HARNESS CONNECTOR BETWEEN TCM AND TRANSMISSION.** 1) Turn the ignition switch to OFF. 2) Disconnect the connectors from TCM and transmission. 3) Measure the resistance of harness between TCM connector and transmission connector. ***Connector & terminal*** ***(B54) No. 22 — Chassis ground:*** ***(B54) No. 23 — Chassis ground:*** ***(B55) No. 7 — (B11) No. 20:***	Is the resistance less than 1 Ω?	Go to step **2**.	Repair the open circuit of harness between TCM and transmission connector.
2	**CHECK HARNESS CONNECTOR BETWEEN TCM AND CHASSIS GROUND.** Measure the resistance of harness between TCM connector and chassis ground. ***Connector & terminal*** ***(B55) No. 7 — Chassis ground:***	Is the resistance 1 MΩ or more?	Go to step **3**.	Repair the short circuit of harness between TCM and transmission connector.

	Step	Check	Yes	No
3	**CHECK HARNESS CONNECTOR BETWEEN TRANSMISSION AND CONTROL VALVE BODY.** 1) Turn the ignition switch to OFF. 2) Disconnect the connector from transmission. 3) Remove the transmission connector from bracket. 4) Lift up the vehicle. 5) Drain the ATF. NOTE: Do not drain ATF until it cools down. 6) Remove the oil pan. 7) Disconnect the control valve body connector. 8) Measure the resistance between transmission connector and control valve body connector. ***Connector & terminal*** ***(T4) No. 20 — (T11) No. 5:***	Is the resistance less than 1 Ω?	Go to step **4**.	Repair the open circuit of harness between transmission connector and control valve body connector.
4	**CHECK HARNESS CONNECTOR BETWEEN TRANSMISSION AND CONTROL VALVE BODY.** Measure the resistance between transmission ground and control valve body connector. ***Connector & terminal*** ***(T11) No. 5 — Transmission ground:***	Is the resistance 1 MΩ or more?	Repair the open circuit of harness between control valve body connector and transmission ground.	Go to step **5**.
5	**CHECK LOCK-UP SOLENOID.** Measure the resistance between transmission ground and control valve body connector. ***Connector & terminal*** ***(T11) No. 5 — Transmission ground:***	Is the resistance 3 — 9 Ω?	Go to step **6**.	Replace the control valve body. <Ref. to 5AT-55, Control Valve Body.>
6	**CHECK FOR POOR CONTACT.** Check the TCM connector, transmission connector and control valve body connector.	Is there poor contact, loosing terminal, entering foreign matter, or damaging connector body?	Repair the poor contact.	Go to step **7**.
7	**CHECK AFTER REPAIR.** 1) Perform the Clear Memory Mode. 2) Drive for a while and read DTC.	Is DTC displayed?	Replace the TCM. <Ref. to 5AT-57, Transmission Control Module (TCM).>	Temporary poor contact or open circuit occurs. Recheck that the harness connector has no faulty.

P: DTC P0748 PRESSURE CONTROL SOLENOID "A" ELECTRICAL

DTC DETECTING CONDITION:
Output signal circuit of line pressure solenoid is open or shorted.
TROUBLE SYMPTOM:
Excessive shift shock
WIRING DIAGRAM:

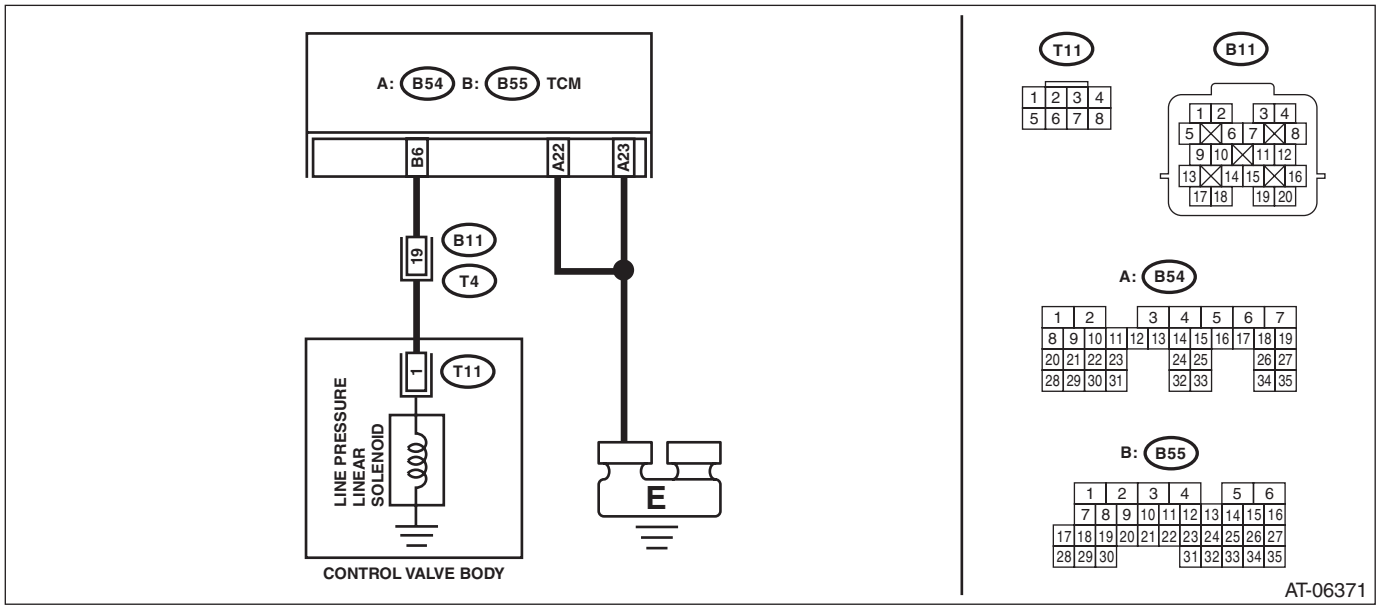

Step		Check	Yes	No
1	**CHECK HARNESS CONNECTOR BETWEEN TCM AND TRANSMISSION.** 1) Turn the ignition switch to OFF. 2) Disconnect the connectors from TCM and transmission. 3) Measure the resistance of harness between TCM connector and transmission connector. ***Connector & terminal*** ***(B54) No. 22 — Chassis ground:*** ***(B54) No. 23 — Chassis ground:*** ***(B55) No. 6 — (B11) No. 19:***	Is the resistance less than 1 Ω?	Go to step **2**.	Repair the open circuit of harness between TCM and transmission connector.
2	**CHECK HARNESS CONNECTOR BETWEEN TCM AND CHASSIS GROUND.** Measure the resistance between TCM connector and chassis ground. ***Connector & terminal*** ***(B55) No. 6 — Chassis ground:***	Is the resistance 1 MΩ or more?	Go to step **3**.	Repair the short circuit of harness between TCM and transmission connector.

	Step	Check	Yes	No
3	**CHECK HARNESS CONNECTOR BETWEEN TRANSMISSION AND CONTROL VALVE BODY.** 1) Turn the ignition switch to OFF. 2) Disconnect the connector from transmission. 3) Remove the transmission connector from bracket. 4) Lift up the vehicle. 5) Drain the ATF. **CAUTION:** **Do not drain ATF until it cools down.** 6) Remove the oil pan. 7) Disconnect the control valve body connector. 8) Measure the resistance between transmission connector and control valve body connector. ***Connector & terminal*** ***(T4) No. 19 — (T11) No. 1:***	Is the resistance less than 1 Ω?	Go to step **4**.	Repair the open circuit of harness between transmission connector and control valve body connector.
4	**CHECK HARNESS CONNECTOR BETWEEN TRANSMISSION AND CONTROL VALVE BODY.** Measure the resistance between transmission ground and control valve body connector. ***Connector & terminal*** ***(T11) No. 1 — Transmission ground:***	Is the resistance 1 MΩ or more?	Repair the open circuit of harness between control valve body connector and transmission ground.	Go to step **5**.
5	**CHECK LINE PRESSURE SOLENOID.** Measure the resistance between transmission ground and control valve body connector. ***Connector & terminal*** ***(T11) No. 1 — Transmission ground:***	Is the resistance 3 — 9 Ω?	Go to step **6**.	Replace the control valve body. <Ref. to 5AT-55, Control Valve Body.>
6	**CHECK FOR POOR CONTACT.** Check the TCM connector, transmission connector and control valve body connector.	Is there poor contact, loosing terminal, entering foreign matter, or damaging connector body?	Repair the poor contact.	Go to step **7**.
7	**CHECK AFTER REPAIR.** 1) Perform the Clear Memory Mode. 2) Drive for a while and read DTC.	Is DTC displayed?	Replace the TCM. <Ref. to 5AT-57, Transmission Control Module (TCM).>	Temporary poor contact or open circuit occurs. Recheck that the harness connector has no faulty.

Q: DTC P0751 SHIFT SOLENOID "A" PERFORMANCE OR STUCK OFF

DTC DETECTING CONDITION:
Output signal of front brake solenoid does not match with oil pressure.
TROUBLE SYMPTOM:
Locked to 1st gear.
WIRING DIAGRAM:

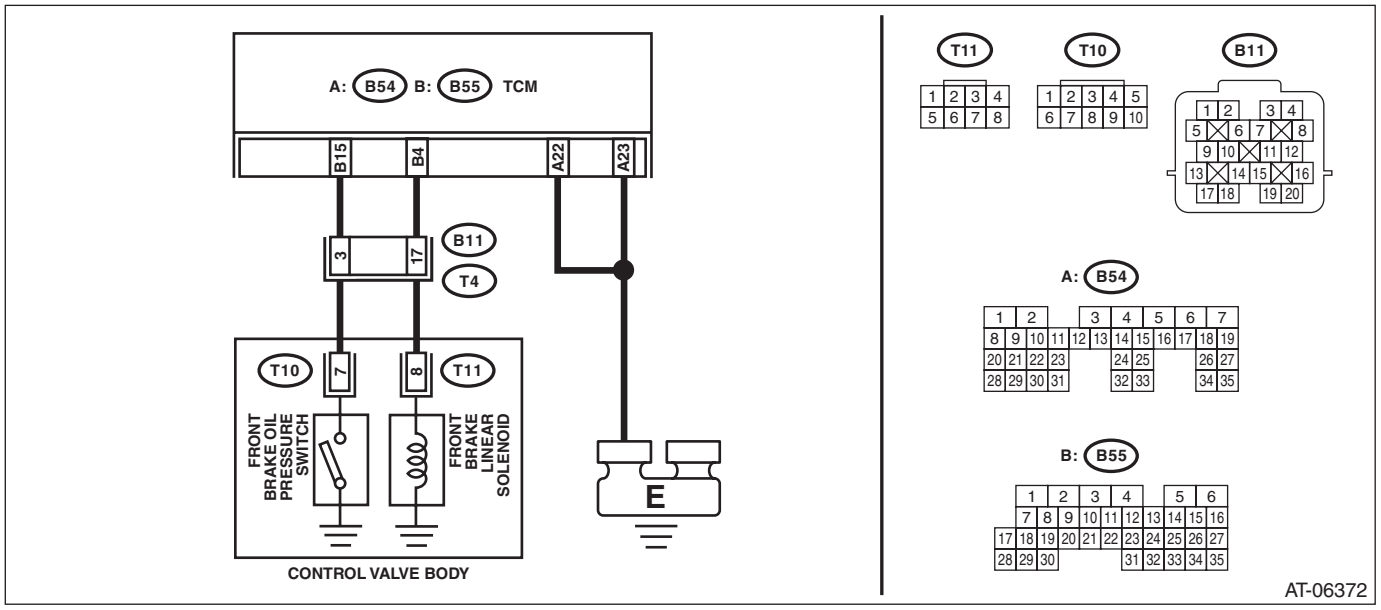

Step		Check	Yes	No
1	**CHECK HARNESS CONNECTOR BETWEEN TCM AND TRANSMISSION.** 1) Turn the ignition switch to OFF. 2) Disconnect the connectors from TCM and transmission. 3) Measure the resistance of harness between TCM connector and transmission connector. ***Connector & terminal*** ***(B54) No. 22 — Chassis ground:*** ***(B54) No. 23 — Chassis ground:*** ***(B55) No. 4 — (B11) No. 17:*** ***(B55) No. 15 — (B11) No. 3:***	Is the resistance less than 1 Ω?	Go to step **2**.	Repair the open circuit of harness between TCM and transmission connector.
2	**CHECK HARNESS CONNECTOR BETWEEN TCM AND CHASSIS GROUND.** Measure the resistance of harness between TCM connector and chassis ground. ***Connector & terminal*** ***(B55) No. 4 — Chassis ground:***	Is the resistance 1 MΩ or more?	Go to step **3**.	Repair the short circuit of harness between TCM and transmission connector.
3	**CHECK INPUT SIGNAL FOR TCM.** 1) Connect all connectors. 2) Turn the ignition switch to ON. 3) Read the data of "F/B Fluid Pressure" using Subaru Select Monitor.	Is "OFF" displayed?	Go to step **4**.	Go to step **6**.
4	**CHECK INPUT SIGNAL FOR TCM.** 1) Turn the ignition switch to OFF. 2) Start the engine. 3) Shift to 1st speed while checking the current gear position using Subaru Select Monitor. 4) Read the data of "F/B Fluid Pressure" using Subaru Select Monitor.	Is "ON" displayed?	Check for poor contact of harness in the solenoid output and oil pressure SW input, and repair the defective part.	Go to step **5**.

	Step	Check	Yes	No
5	**CHECK HARNESS CONNECTOR BETWEEN TRANSMISSION AND CONTROL VALVE BODY.** 1) Turn the ignition switch to OFF. 2) Disconnect the connector from transmission. 3) Remove the transmission connector from bracket. 4) Lift up the vehicle. 5) Drain the ATF. **CAUTION:** **Do not drain ATF until it cools down.** 6) Remove the oil pan. 7) Disconnect the control valve body connector. 8) Measure the resistance between transmission connector and control valve body connector. ***Connector & terminal*** ***(B11) No. 3 — (T10) No. 7:*** ***(B11) No. 17 — (T11) No. 8:***	Is the resistance less than 1 Ω?	Replace the control valve body. <Ref. to 5AT-55, Control Valve Body.>	Replace the transmission harness assembly.
6	**CHECK HARNESS CONNECTOR BETWEEN TRANSMISSION AND CONTROL VALVE BODY.** 1) Turn the ignition switch to OFF. 2) Disconnect the connector from transmission. 3) Remove the transmission connector from bracket. 4) Lift up the vehicle. 5) Drain the ATF. **CAUTION:** **Do not drain ATF until it cools down.** 6) Remove the oil pan. 7) Disconnect the control valve body connector. 8) Measure the resistance between transmission ground and control valve body connector. ***Connector & terminal*** ***(T10) No. 7 — Transmission ground:***	Is the resistance 1 MΩ or more?	Replace the control valve body. <Ref. to 5AT-55, Control Valve Body.>	Replace the transmission harness assembly.

R: DTC P0753 SHIFT SOLENOID "A" ELECTRICAL

DTC DETECTING CONDITION:
Output signal circuit of front brake solenoid is open or shorted.
TROUBLE SYMPTOM:
Locked to 1st gear.
WIRING DIAGRAM:

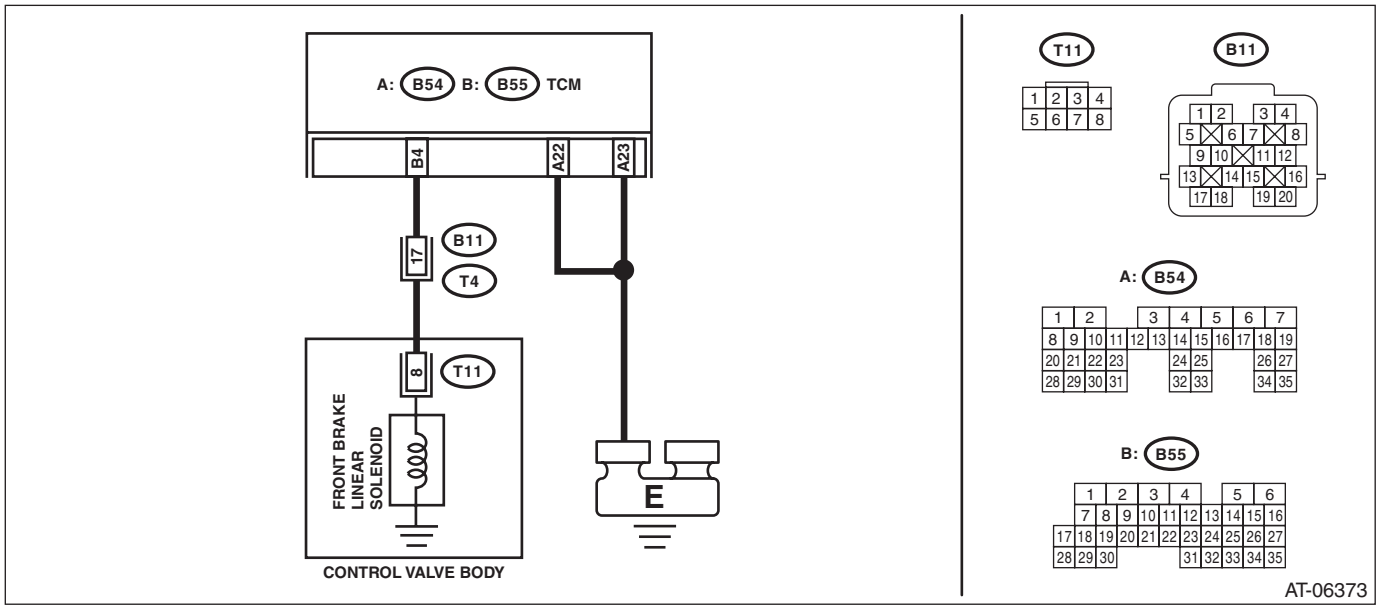

Step		Check	Yes	No
1	**CHECK HARNESS CONNECTOR BETWEEN TCM AND TRANSMISSION.** 1) Turn the ignition switch to OFF. 2) Disconnect the connectors from TCM and transmission. 3) Measure the resistance of harness between TCM connector and transmission connector. ***Connector & terminal*** ***(B54) No. 22 — Chassis ground:*** ***(B54) No. 23 — Chassis ground:*** ***(B55) No. 4 — (B11) No. 17:***	Is the resistance less than 1 Ω?	Go to step **2**.	Repair the open circuit of harness between TCM and transmission connector.
2	**CHECK HARNESS CONNECTOR BETWEEN TCM AND CHASSIS GROUND.** Measure the resistance of harness between TCM connector and chassis ground. ***Connector & terminal*** ***(B55) No. 4 — Chassis ground:***	Is the resistance 1 MΩ or more?	Go to step **3**.	Repair the short circuit of harness between TCM and transmission connector.

	Step	Check	Yes	No
3	**CHECK HARNESS CONNECTOR BETWEEN TRANSMISSION AND CONTROL VALVE BODY.** 1) Turn the ignition switch to OFF. 2) Disconnect the connector from transmission. 3) Remove the transmission connector from bracket. 4) Lift up the vehicle. 5) Drain the ATF. **CAUTION:** **Do not drain ATF until it cools down.** 6) Remove the oil pan. 7) Disconnect the control valve body connector. 8) Measure the resistance between transmission connector and control valve body connector. ***Connector & terminal*** ***(T4) No. 17 — (T11) No. 8:***	Is the resistance less than 1 Ω?	Go to step **4**.	Repair the open circuit of harness between transmission connector and control valve body connector.
4	**CHECK HARNESS CONNECTOR BETWEEN TRANSMISSION AND CONTROL VALVE BODY.** Measure the resistance between transmission ground and control valve body connector. ***Connector & terminal*** ***(T11) No. 8 — Transmission ground:***	Is the resistance 1 MΩ or more?	Repair the open circuit of harness between control valve body connector and transmission ground.	Go to step **5**.
5	**CHECK FRONT BRAKE SOLENOID.** Measure the resistance between transmission ground and control valve body connector. ***Connector & terminal*** ***(T11) No. 8 — Transmission ground:***	Is the resistance 3 — 9 Ω?	Go to step **6**.	Replace the control valve body. <Ref. to 5AT-55, Control Valve Body.>
6	**CHECK FOR POOR CONTACT.** Check the TCM connector, transmission connector and control valve body connector.	Is there poor contact, loosing terminal, entering foreign matter, or damaging connector body?	Repair the poor contact.	Go to step **7**.
7	**CHECK AFTER REPAIR.** 1) Perform the Clear Memory Mode. 2) Drive for a while and read DTC.	Is DTC displayed?	Replace the TCM. <Ref. to 5AT-57, Transmission Control Module (TCM).>	Temporary poor contact or open circuit occurs. Recheck that the harness connector has no faulty.

S: DTC P0756 SHIFT SOLENOID "B" PERFORMANCE OR STUCK OFF

DTC DETECTING CONDITION:
Output signal value of input clutch solenoid and oil pressure does not match.
TROUBLE SYMPTOM:
Locked to 1st or 4th gear.
WIRING DIAGRAM:

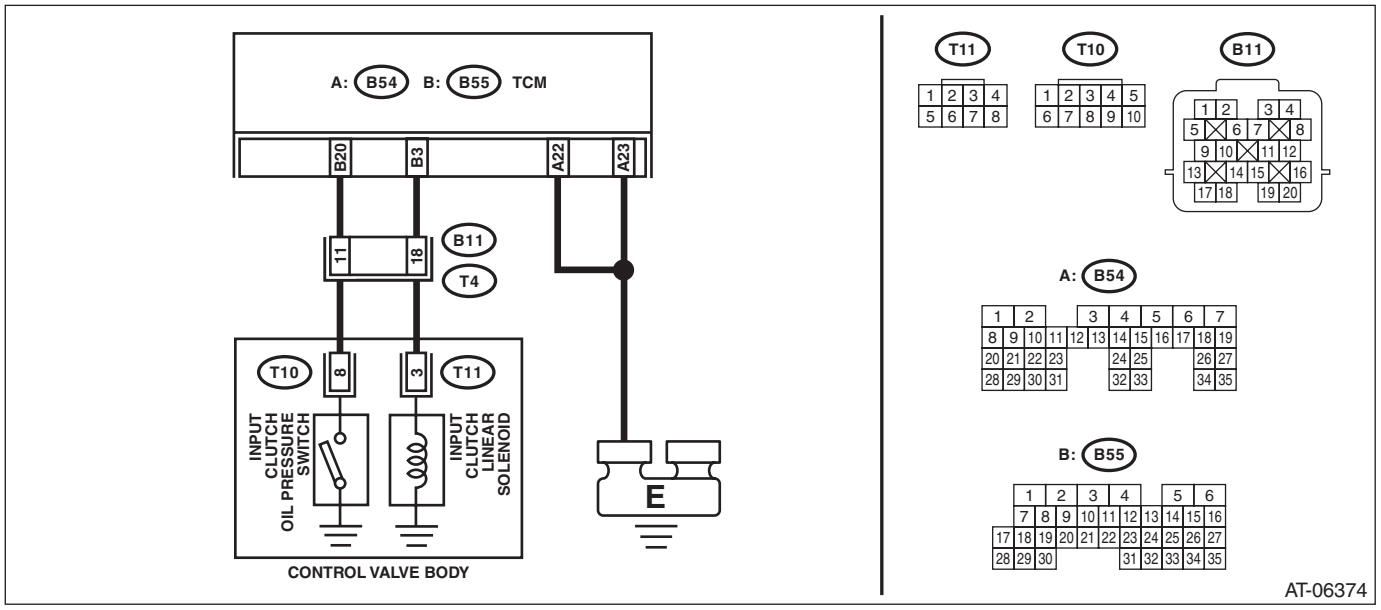

Step		Check	Yes	No
1	**CHECK HARNESS CONNECTOR BETWEEN TCM AND TRANSMISSION.** 1) Turn the ignition switch to OFF. 2) Disconnect the connectors from TCM and transmission. 3) Measure the resistance of harness between TCM connector and transmission connector. ***Connector & terminal*** ***(B54) No. 22 — Chassis ground:*** ***(B54) No. 23 — Chassis ground:*** ***(B55) No. 3 — (B11) No. 18:*** ***(B55) No. 20 — (B11) No. 11:***	Is the resistance less than 1 Ω?	Go to step **2**.	Repair the open circuit of harness between TCM and transmission connector.
2	**CHECK HARNESS CONNECTOR BETWEEN TCM AND CHASSIS GROUND.** Measure the resistance of harness between TCM connector and chassis ground. ***Connector & terminal*** ***(B55) No. 20 — Chassis ground:***	Is the resistance 1 MΩ or more?	Go to step **3**.	Repair the short circuit of harness between TCM and transmission connector.
3	**CHECK INPUT SIGNAL FOR TCM.** 1) Connect all connectors. 2) Turn the ignition switch to ON. 3) Read the data of "I/C Fluid Pressure" using Subaru Select Monitor.	Is "OFF" displayed?	Go to step **4**.	Go to step **6**.
4	**CHECK INPUT SIGNAL FOR TCM.** 1) Turn the ignition switch to OFF. 2) Start the engine. 3) Drive the vehicle on 4th speed of manual mode with checking current gear position using Subaru Select Monitor. 4) Read the data of "I/C Fluid Pressure" using Subaru Select Monitor.	Is "ON" displayed?	Check for poor contact of harness in the solenoid output and oil pressure SW input, and repair the defective part.	Go to step **5**.

	Step	Check	Yes	No
5	**CHECK HARNESS CONNECTOR BETWEEN TRANSMISSION AND CONTROL VALVE BODY.** 1) Turn the ignition switch to OFF. 2) Disconnect the connector from transmission. 3) Remove the transmission connector from bracket. 4) Lift up the vehicle. 5) Drain the ATF. **CAUTION:** **Do not drain ATF until it cools down.** 6) Remove the oil pan. 7) Disconnect the control valve body connector. 8) Measure the resistance between transmission connector and control valve body connector. ***Connector & terminal*** ***(T4) No. 11 — (T10) No. 8:*** ***(T4) No. 18 — (T11) No. 3:***	Is the resistance less than 1 Ω?	Replace the control valve body. <Ref. to 5AT-55, Control Valve Body.>	Replace the transmission harness assembly.
6	**CHECK HARNESS CONNECTOR BETWEEN TRANSMISSION AND CONTROL VALVE BODY.** 1) Turn the ignition switch to OFF. 2) Disconnect the connector from transmission. 3) Remove the transmission connector from bracket. 4) Lift up the vehicle. 5) Drain the ATF. **CAUTION:** **Do not drain ATF until it cools down.** 6) Remove the oil pan. 7) Disconnect the control valve body connector. 8) Measure the resistance between transmission ground and control valve body connector. ***Connector & terminal*** ***(T10) No. 8 — Transmission ground:***	Is the resistance 1 MΩ or more?	Replace the control valve body. <Ref. to 5AT-55, Control Valve Body.>	Replace the transmission harness assembly.

T: DTC P0758 SHIFT SOLENOID "B" ELECTRICAL

DTC DETECTING CONDITION:
Output signal circuit of input clutch solenoid is open or shorted.
TROUBLE SYMPTOM:
Locked to 1st or 4th gear.
WIRING DIAGRAM:

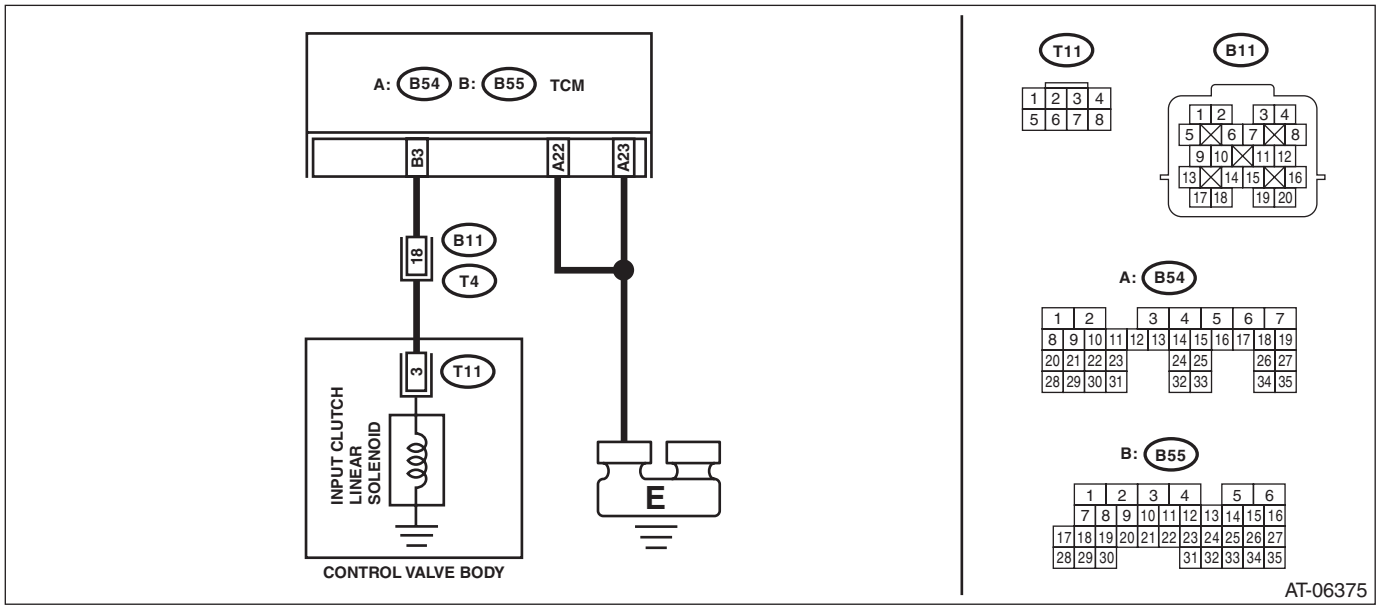

Step		Check	Yes	No
1	**CHECK HARNESS CONNECTOR BETWEEN TCM AND TRANSMISSION.** 1) Turn the ignition switch to OFF. 2) Disconnect the connectors from TCM and transmission. 3) Measure the resistance of harness between TCM connector and transmission connector. ***Connector & terminal*** ***(B54) No. 22 — Chassis ground:*** ***(B54) No. 23 — Chassis ground:*** ***(B55) No. 3 — (B11) No. 18:***	Is the resistance less than 1 Ω?	Go to step **2**.	Repair the open circuit of harness between TCM and transmission connector.
2	**CHECK HARNESS CONNECTOR BETWEEN TCM AND CHASSIS GROUND.** Measure the resistance of harness between TCM connector and body harness. ***Connector & terminal*** ***(B55) No. 3 — Chassis ground:***	Is the resistance 1 MΩ or more?	Go to step **3**.	Repair the short circuit of harness between TCM and transmission connector.

	Step	Check	Yes	No
3	**CHECK HARNESS CONNECTOR BETWEEN TRANSMISSION AND CONTROL VALVE BODY.** 1) Turn the ignition switch to OFF. 2) Disconnect the connector from transmission. 3) Remove the transmission connector from bracket. 4) Lift up the vehicle. 5) Drain the ATF. **CAUTION:** **Do not drain ATF until it cools down.** 6) Remove the oil pan. 7) Disconnect the control valve body connector. 8) Measure the resistance between transmission connector and control valve body connector. ***Connector & terminal*** ***(T4) No. 18 — (T11) No. 3:***	Is the resistance less than 1 Ω?	Go to step **4**.	Repair the open circuit of harness between transmission connector and control valve body connector.
4	**CHECK HARNESS CONNECTOR BETWEEN TRANSMISSION AND CONTROL VALVE BODY.** Measure the resistance between transmission ground and control valve body connector. ***Connector & terminal*** ***(T11) No. 3 — Transmission ground:***	Is the resistance 1 MΩ or more?	Repair the open circuit of harness between control valve body connector and transmission ground.	Go to step **5**.
5	**CHECK INPUT CLUTCH SOLENOID.** Measure the resistance between transmission ground and control valve body connector. ***Connector & terminal*** ***(T11) No. 3 — Transmission ground:***	Is the resistance 3 — 9 Ω?	Go to step **6**.	Replace the control valve body. <Ref. to 5AT-55, Control Valve Body.>
6	**CHECK FOR POOR CONTACT.** Check the TCM connector, transmission connector and control valve body connector.	Is there poor contact, loosing terminal, entering foreign matter, or damaging connector body?	Repair the poor contact.	Go to step **7**.
7	**CHECK AFTER REPAIR.** 1) Perform the Clear Memory Mode. 2) Drive for a while and read DTC.	Is DTC displayed?	Replace the TCM. <Ref. to 5AT-57, Transmission Control Module (TCM).>	Temporary poor contact or open circuit occurs. Recheck that the harness connector has no faulty.

U: DTC P0761 SHIFT SOLENOID "C" PERFORMANCE OR STUCK OFF

DTC DETECTING CONDITION:
Output signal value of high & low reverse clutch solenoid and oil pressure does not match.
TROUBLE SYMPTOM:
Locked to 1st gear.
WIRING DIAGRAM:

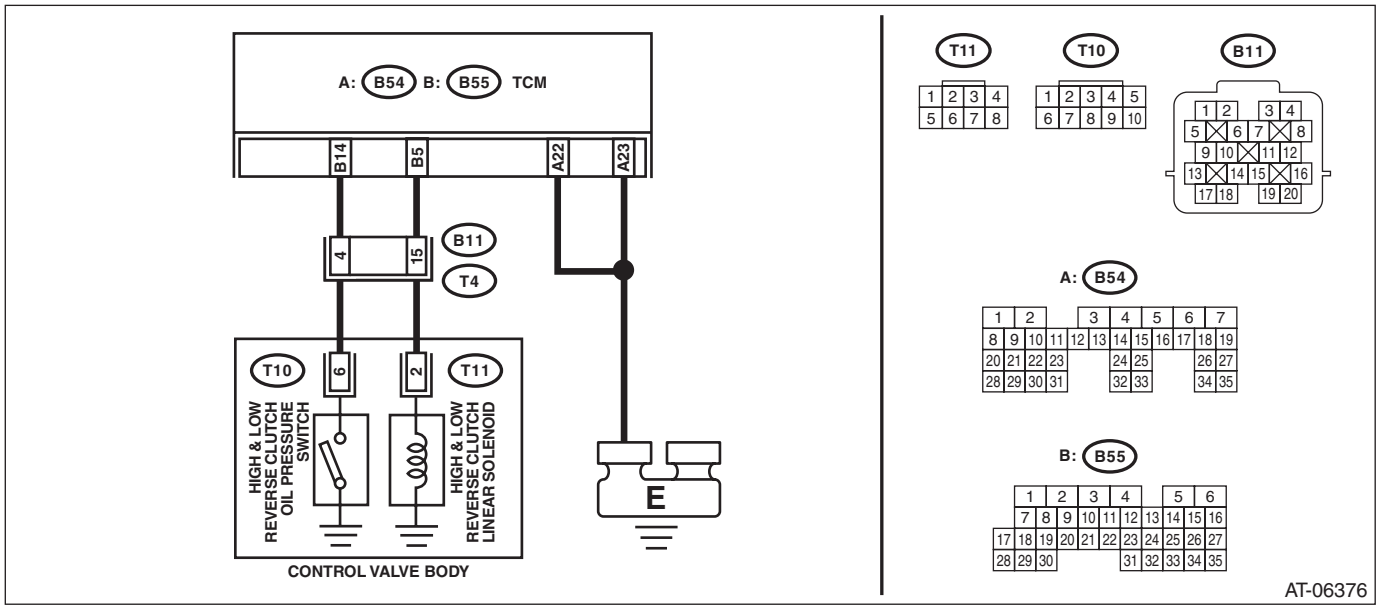

Step		Check	Yes	No
1	**CHECK HARNESS CONNECTOR BETWEEN TCM AND TRANSMISSION.** 1) Turn the ignition switch to OFF. 2) Disconnect the connectors from TCM and transmission. 3) Measure the resistance of harness between TCM connector and transmission connector. ***Connector & terminal*** ***(B54) No. 22 — Chassis ground:*** ***(B54) No. 23 — Chassis ground:*** ***(B55) No. 5 — (B11) No. 15:*** ***(B55) No. 14 — (B11) No. 4:***	Is the resistance less than 1 Ω?	Go to step **2**.	Repair the open circuit of harness between TCM and transmission connector.
2	**CHECK HARNESS CONNECTOR BETWEEN TCM AND CHASSIS GROUND.** Measure the resistance of harness between TCM connector and chassis ground. ***Connector & terminal*** ***(B55) No. 14 — Chassis ground:***	Is the resistance 1 MΩ or more?	Go to step **3**.	Repair the short circuit of harness between TCM and transmission connector.
3	**CHECK INPUT SIGNAL FOR TCM.** 1) Connect all connectors. 2) Turn the ignition switch to ON. 3) Read the data of "H&LR/C Oil Pressure Switch" using Subaru Select Monitor.	Is "OFF" displayed?	Go to step **4**.	Go to step **6**.
4	**CHECK INPUT SIGNAL FOR TCM.** 1) Turn the ignition switch to OFF. 2) Start the engine. 3) Set the select lever to "N" range while depressing the brake pedal. 4) Read the data of "H&LR/C Oil Pressure Switch" using Subaru Select Monitor.	Does the display show "OFF"?	Check for poor contact of harness in the solenoid output and oil pressure SW input, and repair the defective part.	Go to step **5**.

	Step	Check	Yes	No
5	**CHECK HARNESS CONNECTOR BETWEEN TRANSMISSION AND CONTROL VALVE BODY.** 1) Turn the ignition switch to OFF. 2) Disconnect the connector from transmission. 3) Remove the transmission connector from bracket. 4) Lift up the vehicle. 5) Drain the ATF. **CAUTION:** **Do not drain ATF until it cools down.** 6) Remove the oil pan. 7) Disconnect the control valve body connector. 8) Measure the resistance between transmission connector and control valve body connector. ***Connector & terminal*** ***(T4) No. 4 — (T10) No. 6:*** ***(T4) No. 15 — (T11) No. 2:***	Is the resistance less than 1 Ω?	Replace the control valve body. <Ref. to 5AT-55, Control Valve Body.>	Replace the transmission harness assembly.
6	**CHECK HARNESS CONNECTOR BETWEEN TRANSMISSION AND CONTROL VALVE BODY.** 1) Turn the ignition switch to OFF. 2) Disconnect the connector from transmission. 3) Remove the transmission connector from bracket. 4) Lift up the vehicle. 5) Drain the ATF. **CAUTION:** **Do not drain ATF until it cools down.** 6) Remove the oil pan. 7) Disconnect the control valve body connector. 8) Measure the resistance between transmission ground and control valve body connector. ***Connector & terminal*** ***(T10) No. 6 — Transmission ground:***	Is the resistance 1 MΩ or more?	Replace the control valve body. <Ref. to 5AT-55, Control Valve Body.>	Replace the transmission harness assembly.

V: DTC P0763 SHIFT SOLENOID "C" ELECTRICAL

DTC DETECTING CONDITION:
Output signal circuit of high & low reverse clutch solenoid is open or shorted.
TROUBLE SYMPTOM:
Locked to 1st gear.
WIRING DIAGRAM:

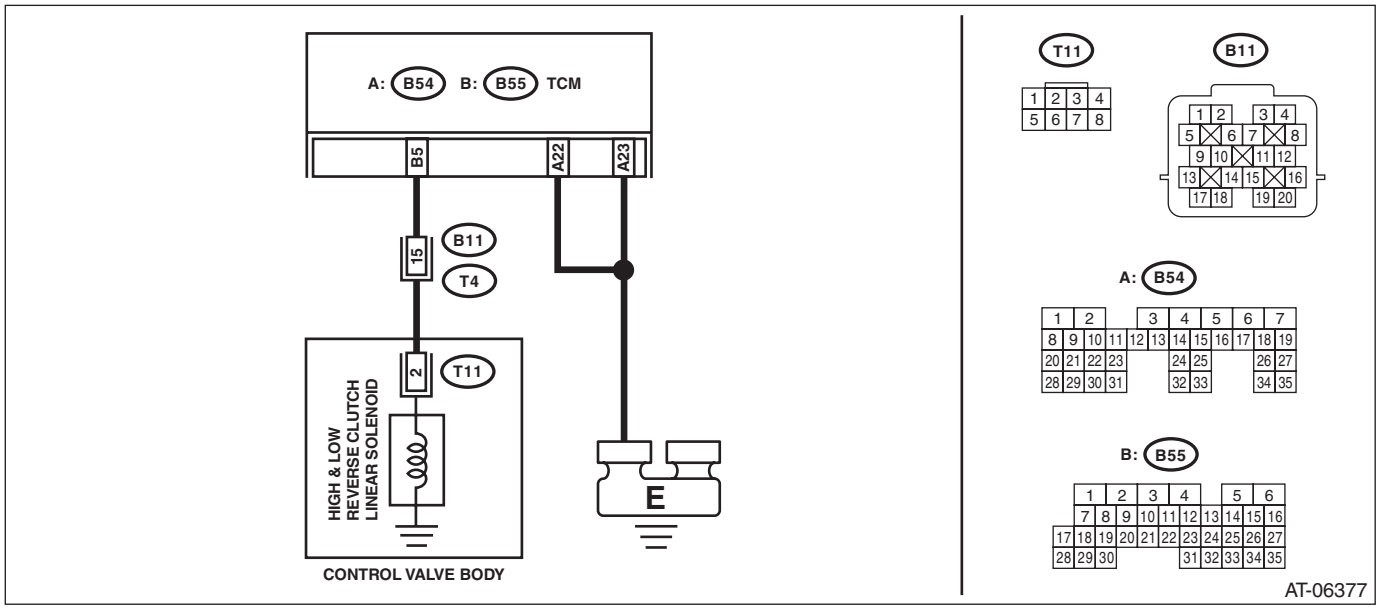

Step		Check	Yes	No
1	**CHECK HARNESS CONNECTOR BETWEEN TCM AND TRANSMISSION.** 1) Turn the ignition switch to OFF. 2) Disconnect the connectors from TCM and transmission. 3) Measure the resistance of harness between TCM connector and transmission connector. ***Connector & terminal*** ***(B54) No. 22 — Chassis ground:*** ***(B54) No. 23 — Chassis ground:*** ***(B55) No. 5 — (B11) No. 15:***	Is the resistance less than 1 Ω?	Go to step **2**.	Repair the open circuit of harness between TCM and transmission connector.
2	**CHECK HARNESS CONNECTOR BETWEEN TCM AND CHASSIS GROUND.** Measure the resistance of harness between TCM connector and chassis ground. ***Connector & terminal*** ***(B55) No. 5 — Chassis ground:***	Is the resistance 1 MΩ or more?	Go to step **3**.	Repair the short circuit of harness between TCM and transmission connector.

	Step	Check	Yes	No
3	**CHECK HARNESS CONNECTOR BETWEEN TRANSMISSION AND CONTROL VALVE BODY.** 1) Turn the ignition switch to OFF. 2) Disconnect the connector from transmission. 3) Remove the transmission connector from bracket. 4) Lift up the vehicle. 5) Drain the ATF. **CAUTION:** **Do not drain ATF until it cools down.** 6) Remove the oil pan. 7) Disconnect the control valve body connector. 8) Measure the resistance between transmission connector and control valve body connector. ***Connector & terminal*** ***(T4) No. 15 — (T11) No. 2:***	Is the resistance less than 1 Ω?	Go to step **4**.	Repair the open circuit of harness between transmission connector and control valve body connector.
4	**CHECK HARNESS CONNECTOR BETWEEN TRANSMISSION AND CONTROL VALVE BODY.** Measure the resistance between transmission ground and control valve body connector. ***Connector & terminal*** ***(T11) No. 2 — Transmission ground:***	Is the resistance 1 MΩ or more?	Repair the open circuit of harness between control valve body connector and transmission ground.	Go to step **5**.
5	**CHECK HIGH & LOW REVERSE CLUTCH SOLENOID.** Measure the resistance between transmission ground and control valve body connector. ***Connector & terminal*** ***(T11) No. 2 — Transmission ground:***	Is the resistance 3 — 9 Ω?	Go to step **6**.	Replace the control valve body. <Ref. to 5AT-55, Control Valve Body.>
6	**CHECK FOR POOR CONTACT.** Check the TCM connector, transmission connector and control valve body connector.	Is there poor contact, loosing terminal, entering foreign matter, or damaging connector body?	Repair the poor contact.	Go to step **7**.
7	**CHECK AFTER REPAIR.** 1) Perform the Clear Memory Mode. 2) Drive for a while and read DTC.	Is DTC displayed?	Replace the TCM. <Ref. to 5AT-57, Transmission Control Module (TCM).>	Temporary poor contact or open circuit occurs. Recheck that the harness connector has no faulty.

W: DTC P0766 SHIFT SOLENOID "D" PERFORMANCE OR STUCK OFF

DTC DETECTING CONDITION:
Output signal value of direct clutch solenoid and oil pressure does not match.
TROUBLE SYMPTOM:
Locked to 1st or 4th gear.
WIRING DIAGRAM:

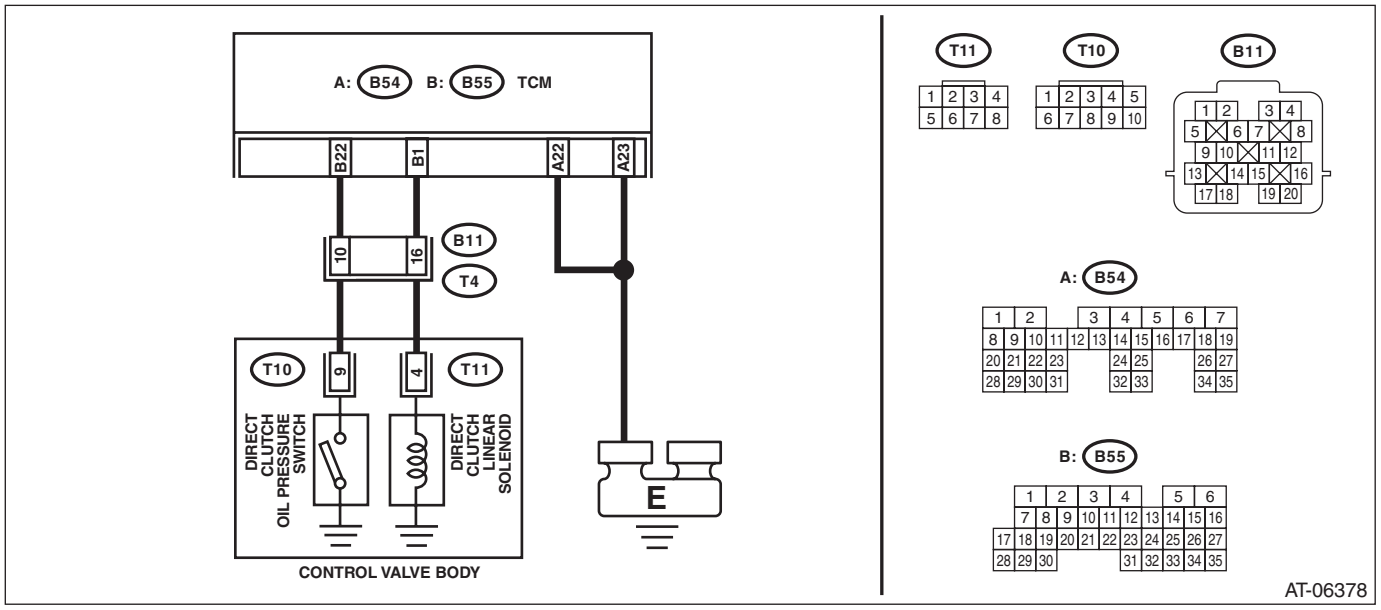

Step		Check	Yes	No
1	**CHECK HARNESS CONNECTOR BETWEEN TCM AND TRANSMISSION.** 1) Turn the ignition switch to OFF. 2) Disconnect the connectors from TCM and transmission. 3) Measure the resistance of harness between TCM connector and transmission connector. ***Connector & terminal*** ***(B54) No. 22 — Chassis ground:*** ***(B54) No. 23 — Chassis ground:*** ***(B55) No. 1 — (B11) No. 16:*** ***(B55) No. 22 — (B11) No. 10:***	Is the resistance less than 1 Ω?	Go to step **2**.	Repair the open circuit of harness between TCM and transmission connector.
2	**CHECK HARNESS CONNECTOR BETWEEN TCM AND BODY HARNESS.** Measure the resistance of harness between TCM connector and body harness. ***Connector & terminal*** ***(B55) No. 22 — Chassis ground:***	Is the resistance 1 MΩ or more?	Go to step **3**.	Repair the short circuit of harness between TCM and transmission connector.
3	**CHECK INPUT SIGNAL FOR TCM.** 1) Connect all connectors. 2) Turn the ignition switch to ON. 3) Read the data of "D/C Fluid Pressure" using Subaru Select Monitor.	Is "OFF" displayed?	Go to step **4**.	Go to step **6**.
4	**CHECK INPUT SIGNAL FOR TCM.** 1) Turn the ignition switch to OFF. 2) Start the engine. 3) Shift to 2nd speed of manual mode and depress the brake with checking current gear position using Subaru Select Monitor. 4) Read the data of "D/C Fluid Pressure" using Subaru Select Monitor.	Is "ON" displayed?	Check for poor contact of harness in the solenoid output and oil pressure SW input, and repair the defective part.	Go to step **5**.

	Step	Check	Yes	No
5	**CHECK HARNESS CONNECTOR BETWEEN TRANSMISSION AND CONTROL VALVE BODY.** 1) Turn the ignition switch to OFF. 2) Disconnect the connector from transmission. 3) Remove the transmission connector from bracket. 4) Lift up the vehicle. 5) Drain the ATF. **CAUTION:** **Do not drain ATF until it cools down.** 6) Remove the oil pan. 7) Disconnect the control valve body connector. 8) Measure the resistance between transmission connector and control valve body connector. ***Connector & terminal*** ***(T4) No. 10 — (T10) No. 9:*** ***(T4) No. 16 — (T11) No. 4:***	Is the resistance less than 1 Ω?	Replace the control valve body. <Ref. to 5AT-55, Control Valve Body.>	Replace the transmission harness assembly.
6	**CHECK HARNESS CONNECTOR BETWEEN TRANSMISSION AND CONTROL VALVE BODY.** 1) Turn the ignition switch to OFF. 2) Disconnect the connector from transmission. 3) Remove the transmission connector from bracket. 4) Lift up the vehicle. 5) Drain the ATF. **CAUTION:** **Do not drain ATF until it cools down.** 6) Remove the oil pan. 7) Disconnect the control valve body connector. 8) Measure the resistance between transmission ground and control valve body connector. ***Connector & terminal*** ***(T10) No. 9 — Transmission ground:***	Is the resistance 1 MΩ or more?	Replace the control valve body. <Ref. to 5AT-55, Control Valve Body.>	Replace the transmission harness assembly.

X: DTC P0768 SHIFT SOLENOID "D" ELECTRICAL

DTC DETECTING CONDITION:
The output signal circuit of direct clutch solenoid is open or shorted.
TROUBLE SYMPTOM:
Locked to 1st or 4th gear.
WIRING DIAGRAM:

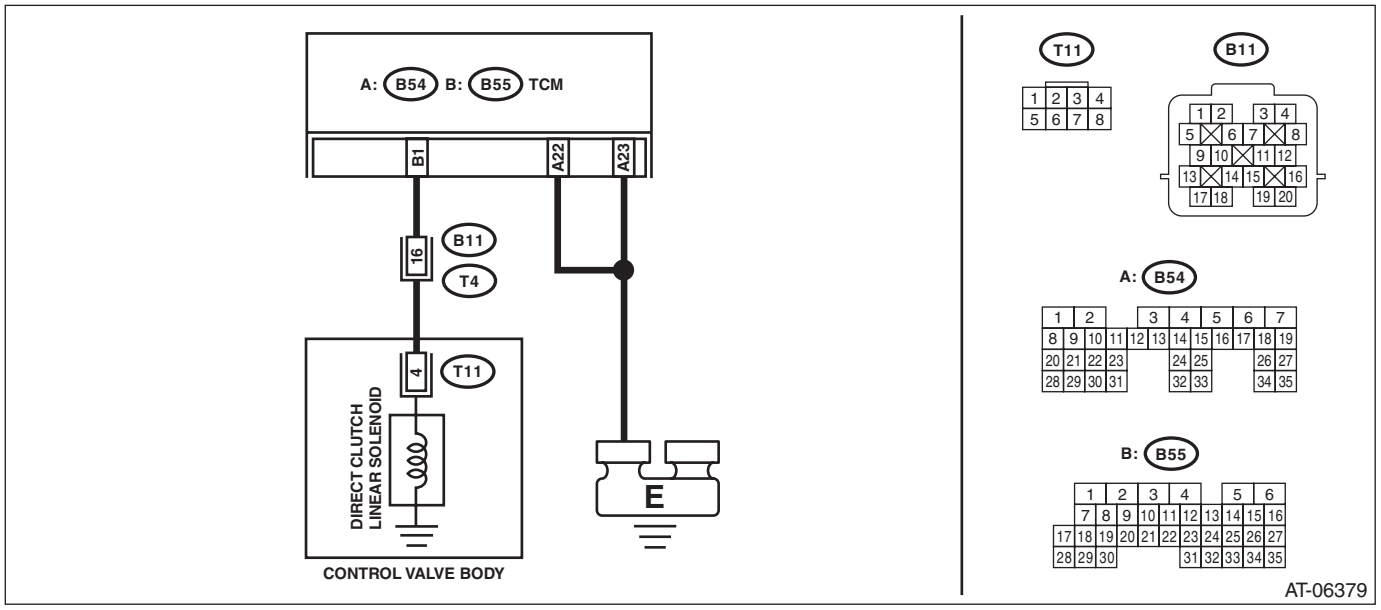

Step		Check	Yes	No
1	**CHECK HARNESS CONNECTOR BETWEEN TCM AND TRANSMISSION.** 1) Turn the ignition switch to OFF. 2) Disconnect the connectors from TCM and transmission. 3) Measure the resistance of harness between TCM connector and transmission connector. ***Connector & terminal*** ***(B54) No. 22 — Chassis ground:*** ***(B54) No. 23 — Chassis ground:*** ***(B55) No. 1 — (B11) No. 16:***	Is the resistance less than 1 Ω?	Go to step **2**.	Repair the open circuit of harness between TCM and transmission connector.
2	**CHECK HARNESS CONNECTOR BETWEEN TCM AND CHASSIS GROUND.** Measure the resistance of harness between TCM connector and chassis ground. ***Connector & terminal*** ***(B55) No. 1 — Chassis ground:***	Is the resistance 1 MΩ or more?	Go to step **3**.	Repair the short circuit of harness between TCM and transmission connector.

	Step	Check	Yes	No
3	**CHECK HARNESS CONNECTOR BETWEEN TRANSMISSION AND CONTROL VALVE BODY.** 1) Turn the ignition switch to OFF. 2) Disconnect the connector from transmission. 3) Remove the transmission connector from bracket. 4) Lift up the vehicle. 5) Drain the ATF. **CAUTION:** **Do not drain ATF until it cools down.** 6) Remove the oil pan. 7) Disconnect the control valve body connector. 8) Measure the resistance between transmission connector and control valve body connector. ***Connector & terminal*** ***(T4) No. 16 — (T11) No. 4:***	Is the resistance less than 1 Ω?	Go to step **4**.	Repair the open circuit of harness between transmission connector and control valve body connector.
4	**CHECK HARNESS CONNECTOR BETWEEN TRANSMISSION AND CONTROL VALVE BODY.** Measure the resistance between transmission ground and control valve body connector. ***Connector & terminal*** ***(T11) No. 4 — Transmission ground:***	Is the resistance 1 MΩ or more?	Repair the open circuit of harness between control valve body connector and transmission ground.	Go to step **5**.
5	**CHECK DIRECT CLUTCH SOLENOID.** Measure the resistance between transmission ground and control valve body connector. ***Connector & terminal*** ***(T11) No. 4 — Transmission ground:***	Is the resistance 3 — 9 Ω?	Go to step **6**.	Replace the control valve body. <Ref. to 5AT-55, Control Valve Body.>
6	**CHECK FOR POOR CONTACT.** Check the TCM connector, transmission connector and control valve body connector.	Is there poor contact, loosing terminal, entering foreign matter, or damaging connector body?	Repair the poor contact.	Go to step **7**.
7	**CHECK AFTER REPAIR.** 1) Perform the Clear Memory Mode. 2) Drive for a while and read DTC.	Is DTC displayed?	Replace the TCM. <Ref. to 5AT-57, Transmission Control Module (TCM).>	Temporary poor contact or open circuit occurs. Recheck that the harness connector has no faulty.

Y: DTC P0771 SHIFT SOLENOID "E" PERFORMANCE OR STUCK OFF

DTC DETECTING CONDITION:
Output signal of forward brake solenoid does not match the oil pressure.
TROUBLE SYMPTOM:
Locked to 2nd, 3rd or 4th gear.
WIRING DIAGRAM:

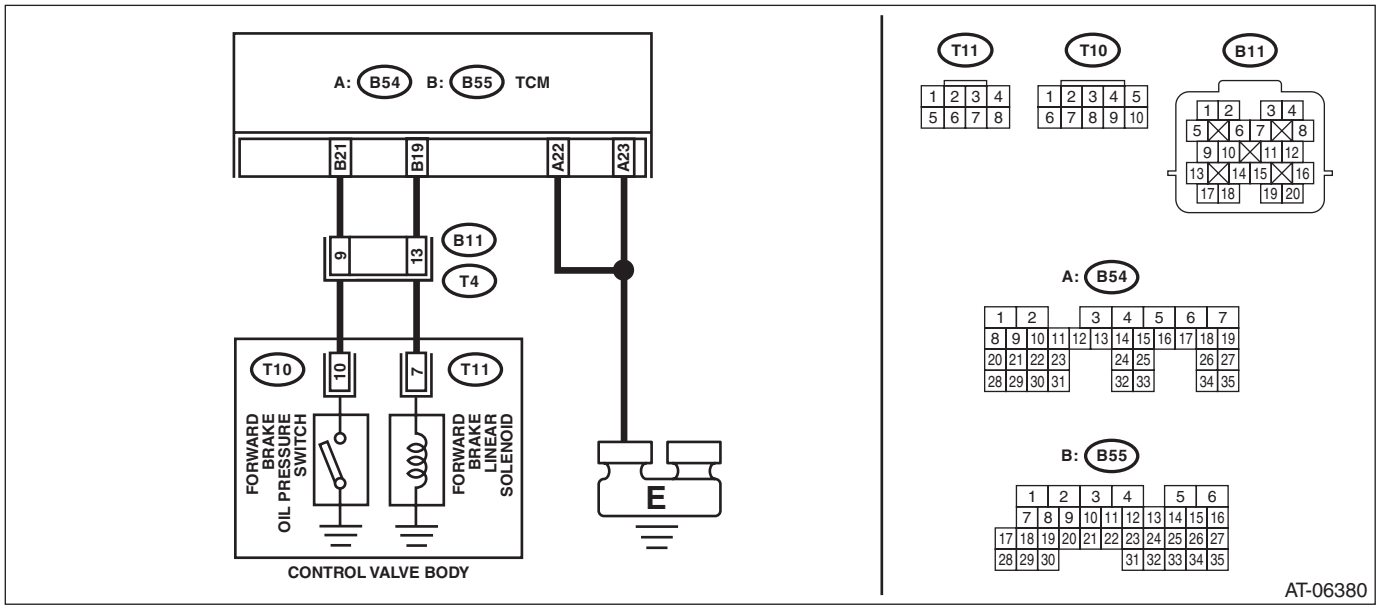

Step		Check	Yes	No
1	**CHECK HARNESS CONNECTOR BETWEEN TCM AND TRANSMISSION.** 1) Turn the ignition switch to OFF. 2) Disconnect the connectors from TCM and transmission. 3) Measure the resistance of harness between TCM connector and transmission connector. ***Connector & terminal*** ***(B54) No. 22 — Chassis ground:*** ***(B54) No. 23 — Chassis ground:*** ***(B55) No. 19 — (B11) No. 13:*** ***(B55) No. 21 — (B11) No. 9:***	Is the resistance less than 1 Ω?	Go to step **2**.	Repair the open circuit of harness between TCM and transmission connector.
2	**CHECK HARNESS CONNECTOR BETWEEN TCM AND CHASSIS GROUND.** Measure the resistance between TCM connector and chassis ground. ***Connector & terminal*** ***(B55) No. 21 — Chassis ground:***	Is the resistance 1 MΩ or more?	Go to step **3**.	Repair the short circuit of harness between TCM and transmission connector.
3	**CHECK INPUT SIGNAL FOR TCM.** 1) Connect all connectors. 2) Turn the ignition switch to ON. 3) Read the data of "Fwd/B hydraulic pressure SW" using Subaru Select Monitor.	Is "OFF" displayed?	Go to step **4**.	Go to step **6**.
4	**CHECK INPUT SIGNAL FOR TCM.** 1) Turn the ignition switch to OFF. 2) Start the engine. 3) Drive the vehicle on 2nd speed of manual mode at 15 km/h (9 MPH) with checking current gear position using Subaru Select Monitor. 4) Read the data of "Fwd/B hydraulic pressure SW" using Subaru Select Monitor.	Is "ON" displayed?	Check for poor contact of harness in the solenoid output and oil pressure SW input, and repair the defective part.	Go to step **5**.

	Step	Check	Yes	No
5	**CHECK HARNESS CONNECTOR BETWEEN TRANSMISSION AND CONTROL VALVE BODY.** 1) Turn the ignition switch to OFF. 2) Disconnect the connector from transmission. 3) Remove the transmission connector from bracket. 4) Lift up the vehicle. 5) Drain the ATF. **CAUTION:** **Do not drain ATF until it cools down.** 6) Remove the oil pan. 7) Disconnect the control valve body connector. 8) Measure the resistance between transmission connector and control valve body connector. ***Connector & terminal*** ***(T4) No. 9 — (T10) No. 10:*** ***(T4) No. 13 — (T11) No. 7:***	Is the resistance less than 1 Ω?	Replace the control valve body. <Ref. to 5AT-55, Control Valve Body.>	Replace the transmission harness assembly.
6	**CHECK HARNESS CONNECTOR BETWEEN TRANSMISSION AND CONTROL VALVE BODY.** 1) Turn the ignition switch to OFF. 2) Disconnect the connector from transmission. 3) Remove the transmission connector from bracket. 4) Lift up the vehicle. 5) Drain the ATF. **CAUTION:** **Do not drain ATF until it cools down.** 6) Remove the oil pan. 7) Disconnect the control valve body connector. 8) Measure the resistance between transmission ground and control valve body connector. ***Connector & terminal*** ***(T10) No. 10 — Transmission ground:***	Is the resistance 1 MΩ or more?	Replace the control valve body. <Ref. to 5AT-55, Control Valve Body.>	Replace the transmission harness assembly.

Z: DTC P0773 SHIFT SOLENOID "E" ELECTRICAL

DTC DETECTING CONDITION:
Output signal circuit of forward brake solenoid is open or shorted.
TROUBLE SYMPTOM:
Locked to 2nd, 3rd or 4th gear.
WIRING DIAGRAM:

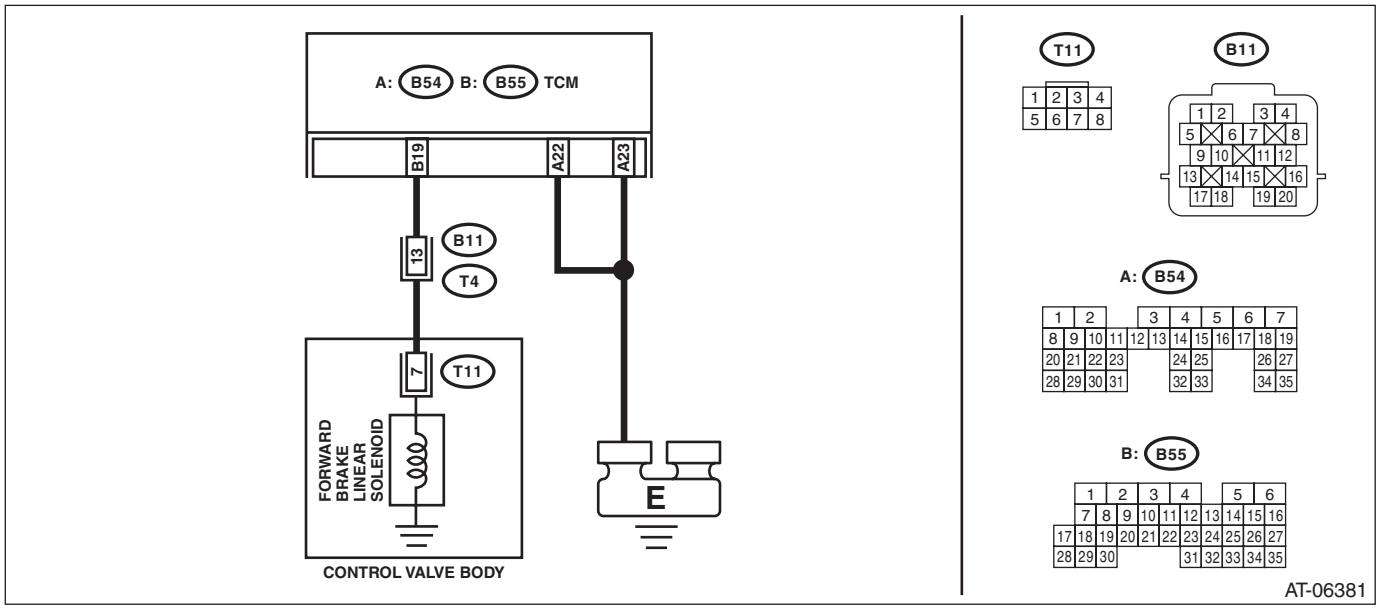

Step		Check	Yes	No
1	**CHECK HARNESS CONNECTOR BETWEEN TCM AND TRANSMISSION.** 1) Turn the ignition switch to OFF. 2) Disconnect the connectors from TCM and transmission. 3) Measure the resistance of harness between TCM connector and transmission connector. ***Connector & terminal*** ***(B54) No. 22 — Chassis ground:*** ***(B54) No. 23 — Chassis ground:*** ***(B55) No. 19 — (B11) No. 13:***	Is the resistance less than 1 Ω?	Go to step **2**.	Repair the open circuit of harness between TCM and transmission connector.
2	**CHECK HARNESS CONNECTOR BETWEEN TCM AND BODY HARNESS.** Measure the resistance of harness between TCM connector and body harness. ***Connector & terminal*** ***(B55) No. 19 — Chassis ground:***	Is the resistance 1 MΩ or more?	Go to step **3**.	Repair the short circuit of harness between TCM and transmission connector.

	Step	Check	Yes	No
3	**CHECK HARNESS CONNECTOR BETWEEN TRANSMISSION AND CONTROL VALVE BODY.** 1) Turn the ignition switch to OFF. 2) Disconnect the connector from transmission. 3) Remove the transmission connector from bracket. 4) Lift up the vehicle. 5) Drain the ATF. **CAUTION:** **Do not drain ATF until it cools down.** 6) Remove the oil pan. 7) Disconnect the control valve body connector. 8) Measure the resistance between transmission connector and control valve body connector. ***Connector & terminal*** ***(T4) No. 13 — (T11) No. 7:***	Is the resistance less than 1 Ω?	Go to step **4**.	Repair the open circuit of harness between transmission connector and control valve body connector.
4	**CHECK HARNESS CONNECTOR BETWEEN TRANSMISSION AND CONTROL VALVE BODY.** Measure the resistance between transmission ground and control valve body connector. ***Connector & terminal*** ***(T11) No. 7 — Transmission ground:***	Is the resistance 1 MΩ or more?	Repair the open circuit of harness between control valve body connector and transmission ground.	Go to step **5**.
5	**CHECK FORWARD BRAKE SOLENOID.** Measure the resistance between transmission ground and control valve body connector. ***Connector & terminal*** ***(T11) No. 7 — Transmission ground:***	Is the resistance 5 — 17 Ω?	Go to step **6**.	Replace the control valve body. <Ref. to 5AT-55, Control Valve Body.>
6	**CHECK FOR POOR CONTACT.** Check the TCM connector, transmission connector and control valve body connector.	Is there poor contact, loosing terminal, entering foreign matter, or damaging connector body?	Repair the poor contact.	Go to step **7**.
7	**CHECK AFTER REPAIR.** 1) Perform the Clear Memory Mode. 2) Drive for a while and read DTC.	Is DTC displayed?	Replace the TCM. <Ref. to 5AT-57, Transmission Control Module (TCM).>	Temporary poor contact or open circuit occurs. Recheck that the harness connector has no faulty.

AA:DTC P0801 REVERSE INHIBIT CONTROL CIRCUIT

DTC DETECTING CONDITION:
Shift lock solenoid malfunction, open or short reverse inhibitor control circuit

TROUBLE SYMPTOM:
- Gear is shifted from “N” range to “R” range during driving at 20 km/h (12 MPH) or more.
- Gear cannot be shifted from “N” range to “R” range though the vehicle is parked.

WIRING DIAGRAM:

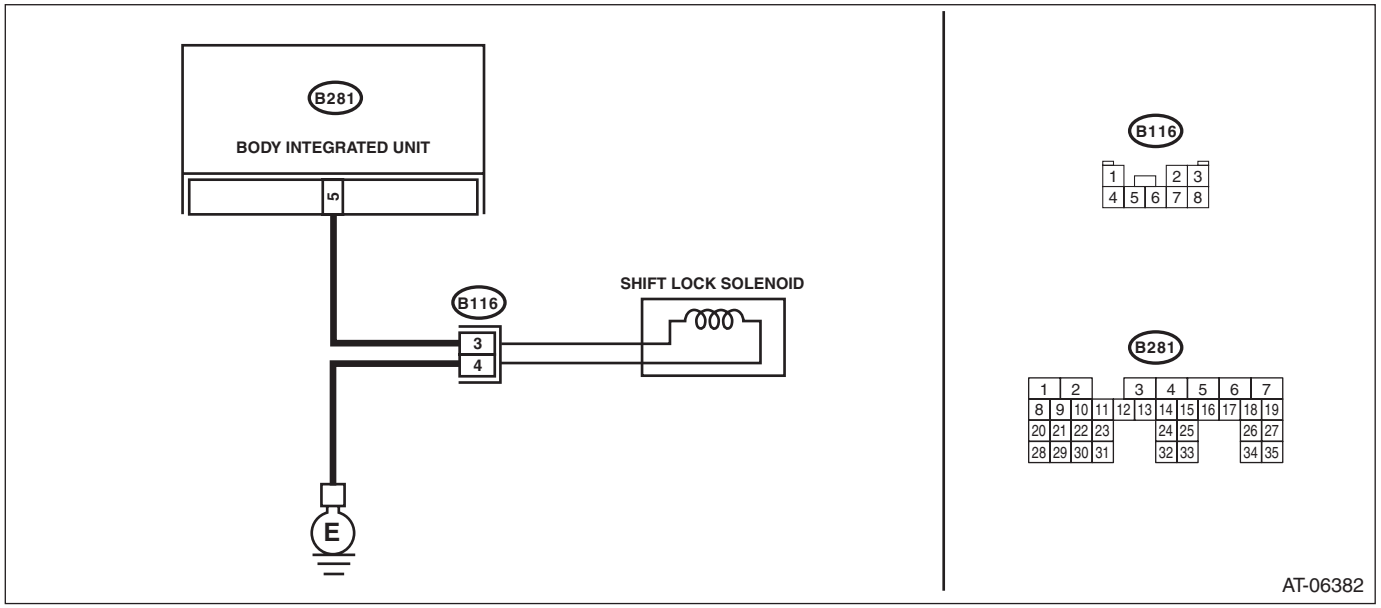

	Step	Check	Yes	No
1	**CHECK SHIFT LOCK SOLENOID.** 1) Forcibly activate the body integrated unit to check the operation of shift lock solenoid. <Ref. to BC(diag)-20, Function Check.> 2) Move the shift lever without depressing the brake pedal.	Does the shift lever move?	Go to step **2**.	Go to step **3**.
2	**CHECK OUTPUT SIGNAL OF BODY INTEGRATED UNIT.** 1) Display the following items using Subaru Select Monitor. <Ref. to BC(diag)-12, Read Current Data.> • Key-lock warning SW • Shift position • PSW • Stop light switch 2) With the brake pedal depressed, shift the select lever to “P” range.	Do the units of measure of items displayed change?	Go to step **3**.	Check the circuits of the items whose values do not change.
3	**CHECK HARNESS CONNECTOR BETWEEN BODY INTEGRATED UNIT AND SHIFT LOCK SOLENOID.** Measure the harness resistance between the body integrated unit and chassis ground. ***Connector & terminal*** ***(B281) No. 5 — Chassis ground:***	Is the resistance 1 MΩ or more?	Go to step **4**.	Repair the short circuit of harness between body integrated unit and shift lock solenoid connector.

	Step	Check	Yes	No
4	**CHECK HARNESS BETWEEN SHIFT LOCK SOLENOID AND CHASSIS GROUND TERMINAL.** Measure the resistance of harness between shift lock solenoid connector and chassis ground. ***Connector & terminal*** ***(B116) No. 4 — Chassis ground:***	Is the resistance less than 1 Ω?	Go to step **5**.	Repair the open circuit of the harness between the shift lock solenoid connector and chassis ground terminal.
5	**CHECK SHIFT LOCK SOLENOID.** Measure the resistance between the shift lock solenoid connector terminals. ***Connector & terminal*** ***(B116) No. 3 — No. 4:***	Is the resistance 12 — 18 Ω?	Go to step **6**.	Replace the shift lock solenoid.
6	**CHECK OUTPUT SIGNAL OF BODY INTEGRATED UNIT.** 1) Connect all connectors. 2) Turn the ignition switch to ON. 3) Set the select lever to “D” range. 4) Measure the voltage between body integrated unit and chassis ground. ***Connector & terminal*** ***(B281) No. 5 (+) — Chassis ground (–):***	Is the voltage 10.5 V or more?	Go to step **7**.	Go to step **8**.
7	**CHECK OUTPUT SIGNAL OF BODY INTEGRATED UNIT.** 1) Lift up the vehicle. 2) Start the engine. 3) Shift the select lever to “D” range and slowly increase vehicle speed to over 20 km/h (12 MPH). NOTE: The speed difference between front and rear wheels lights the ABS warning light or the VDC warning light, but this does not indicate a malfunction. If the warning light is illuminated, clear the memory of ABS or VDC after completing AT control diagnosis. <Ref. to VDC(diag)-25, Clear Memory Mode.> 4) Measure the voltage between body integrated unit and chassis ground. ***Connector & terminal*** ***(B281) No. 5 (+) — Chassis ground (–):***	Is the voltage less than 1 V?	Check the harnesses or connectors in reverse inhibitor control circuit, and repair the defective part.	Go to step **8**.
8	**CHECK FOR POOR CONTACT.**	Is there poor contact of the reverse inhibitor control circuit?	Repair the poor contact.	Replace the body integrated unit. <Ref. to SL-71, Body Integrated Unit.>

AB:DTC P0817 STARTER DISABLE CIRCUIT

DTC DETECTING CONDITION:
Open or short in P/N signal output circuit
TROUBLE SYMPTOM:
- Engine can be started on other than “P” or “N” range.
- Engine can not be started on “P” or “N” range.

WIRING DIAGRAM:

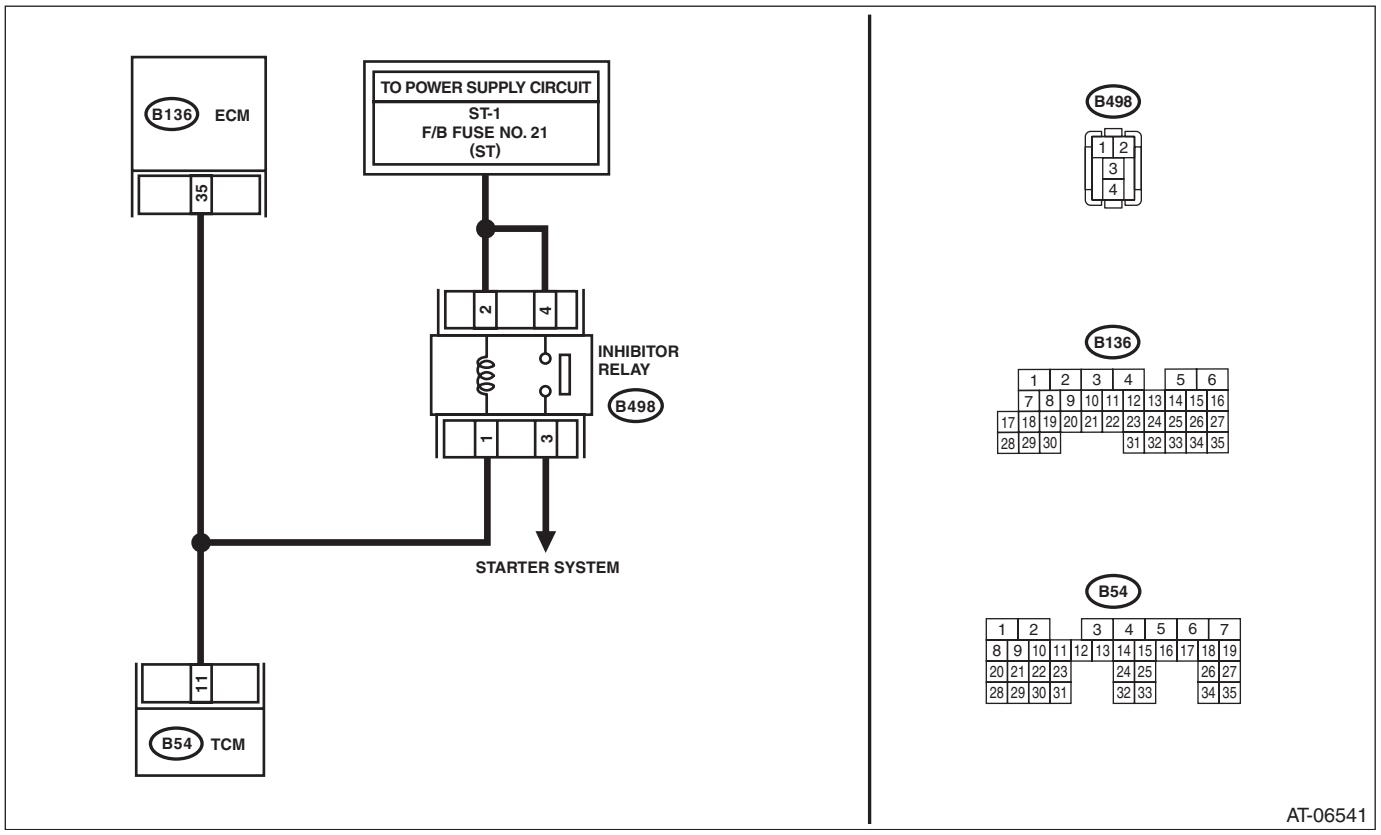

	Step	Check	Yes	No
1	**CHECK DTC OF TCM.**	Is DTC of Transmission Range Sensor Circuit (PRNDL Input) detected?	Perform the diagnosis according to DTC.	Go to step **2**.
2	**CHECK ECM.**	Is the communication between Subaru Select Monitor and ECM normal?	Go to step **3**.	Perform the diagnosis according to DTC of ECM.
3	**CHECK FUSE (NO. 21).** 1) Turn the ignition switch to OFF. 2) Remove the fuse.	Is the fuse (No. 21) blown out?	Replace the fuse (No. 21). If the replaced fuse (No. 21) has blown out easily, repair the short circuit of harness between fuse (No. 21) and inhibitor relay.	Go to step **4**.

	Step	Check	Yes	No
4	**CHECK HARNESS CONNECTOR BETWEEN TCM AND ECM.** 1) Turn the ignition switch to OFF. 2) Disconnect the connectors from TCM, ECM and inhibitor relay. 3) Measure the resistance of harness between TCM connector and ECM connector. ***Connector & terminal*** ***(B54) No. 11 — (B136) No. 35***	Is the resistance less than 1 Ω?	Go to step **5**.	Repair the open circuit of harness between TCM and ECM connector, or poor contact of connector.
5	**CHECK HARNESS CONNECTOR BETWEEN TCM AND INHIBITOR RELAY.** Measure the resistance of the harness between TCM connector and inhibitor relay. ***Connector & terminal*** ***(B54) No. 11 — (B498) No. 1:***	Is the resistance less than 1 Ω?	Go to step **6**.	Repair the open circuit of harness between TCM and inhibitor relay, or poor contact of connector.
6	**CHECK HARNESS CONNECTOR BETWEEN TCM AND CHASSIS GROUND.** Measure the resistance of harness between TCM connector and chassis ground. ***Connector & terminal*** ***(B54) No. 11 — Chassis ground:***	Is the resistance 1 MΩ or more?	Go to step **7**.	Repair the short circuit of the harness between TCM and chassis ground.
7	**CHECK OUTPUT SIGNAL OF TCM.** 1) Connect the TCM, ECM, and inhibitor relay connector. 2) Turn the ignition switch to ON. 3) Shift the select lever to “P” range. 4) Measure the voltage between TCM connector and chassis ground. ***Connector & terminal*** ***(B54) No. 11 (+) — Chassis ground (–):***	Is the voltage 1 V or less?	Go to step **8**.	Replace the TCM. <Ref. to 5AT-57, Transmission Control Module (TCM).>
8	**CHECK OUTPUT SIGNAL OF TCM.** 1) Set the select lever to “D” range. 2) Measure the voltage between TCM connector and chassis ground. ***Connector & terminal*** ***(B54) No. 11 (+) — Chassis ground (–):***	Is the voltage 8 V or more?	Go to step **9**.	Replace the TCM. <Ref. to 5AT-57, Transmission Control Module (TCM).>
9	**CHECK FOR POOR CONTACT.**	Is there any open or poor contact of connector (loosing terminal, entering foreign matter, damaging connector body)?	Repair the poor contact.	Check the neutral switch circuit of ECM.

AC:DTC P0957 BACKUP LIGHT RELAY CIRCUIT LOW

DTC DETECTING CONDITION:
Output circuit of the back-up light relay is open or shorted
TROUBLE SYMPTOM:
Back-up light does not illuminate in “R” range.
WIRING DIAGRAM:

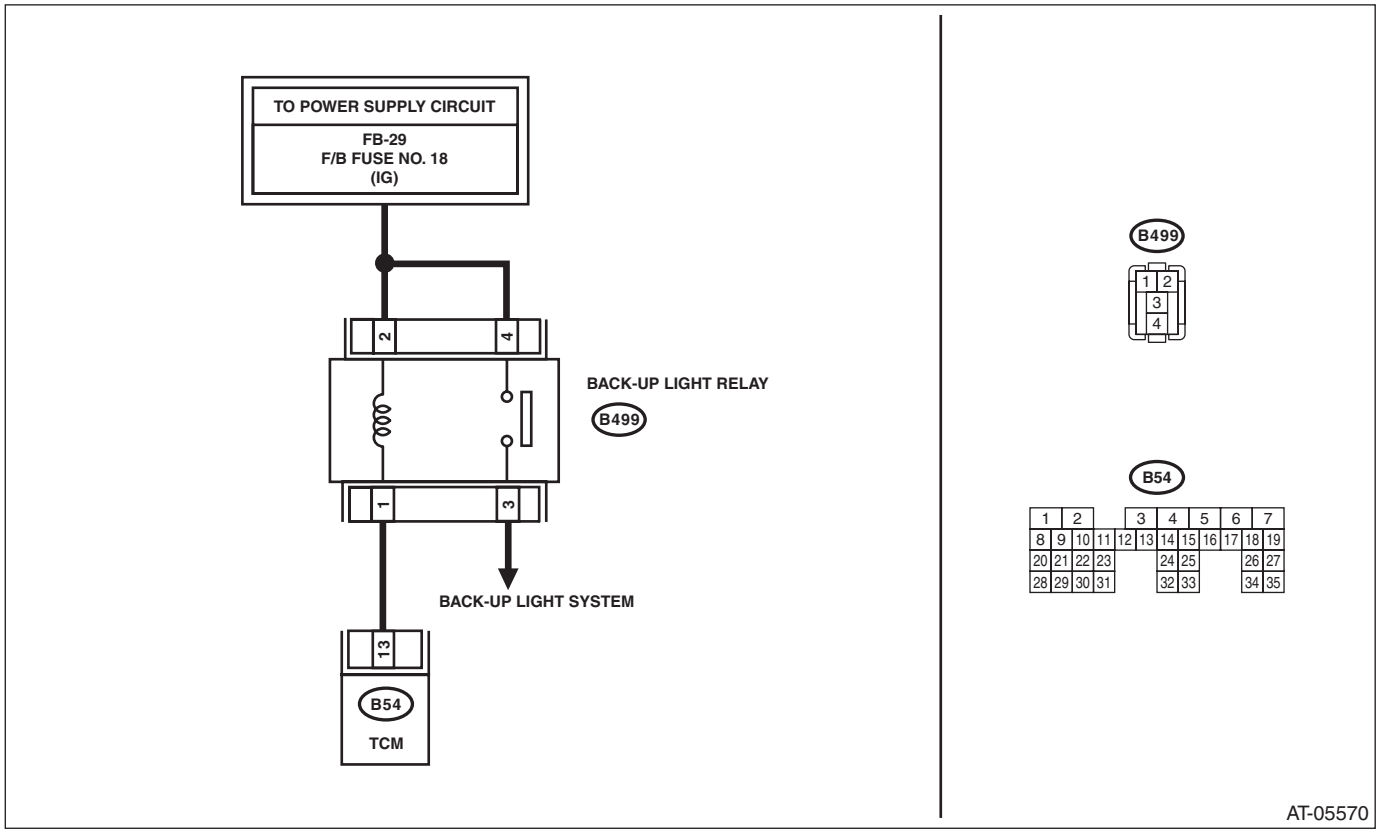

	Step	Check	Yes	No
1	**CHECK DTC OF TCM.**	Is DTC of Transmission Range Sensor Circuit (PRNDL Input) detected?	Perform the diagnosis according to DTC.	Go to step **2**.
2	**CHECK HARNESS CONNECTOR BETWEEN TCM AND BACK-UP LIGHT RELAY.** 1) Turn the ignition switch to OFF. 2) Disconnect the connector from TCM and back-up light relay. 3) Measure the resistance of harness between TCM connector and back-up light relay connector. ***Connector & terminal*** ***(B54) No. 13 — (B499) No. 1:***	Is the resistance less than 1 Ω?	Go to step **3**.	Repair the open circuit of the harness or poor contact of the connector between TCM and back-up light relay connector.
3	**CHECK HARNESS CONNECTOR BETWEEN TCM AND CHASSIS GROUND.** Measure the resistance of harness between TCM connector and chassis ground. ***Connector & terminal*** ***(B54) No. 13 — Chassis ground:***	Is the resistance 1 MΩ or more?	Go to step **4**.	Repair the short circuit of the harness between TCM and back-up light relay connector.

	Step	Check	Yes	No
4	**CHECK OUTPUT SIGNAL OF TCM.** 1) Turn the ignition switch to ON. 2) Shift the select lever to “P” range. 3) Measure the voltage between TCM connector and chassis ground. ***Connector & terminal*** ***(B54) No. 13 (+) — Chassis ground (–):***	Is the voltage 8 V or more?	Go to step **5**.	Replace the TCM. <Ref. to 5AT-57, Transmission Control Module (TCM).>
5	**CHECK OUTPUT SIGNAL OF TCM.** 1) Set the select lever to “R” range. 2) Measure the voltage between TCM connector and chassis ground. ***Connector & terminal*** ***(B54) No. 13 (+) — Chassis ground (–):***	Is the voltage 1 V or less?	Go to step **6**.	Replace the TCM. <Ref. to 5AT-57, Transmission Control Module (TCM).>
6	**CHECK INPUT VOLTAGE FOR BACK-UP LIGHT RELAY.** Measure the voltage between back-up light relay and chassis ground.	Is the voltage 10 — 13 V?	Replace the back-up light relay.	Check open or short circuit of harness between fuse (No. 18) and back-up light relay.

AD:DTC P0958 BACKUP LIGHT RELAY CIRCUIT HIGH

DTC DETECTING CONDITION:
Output circuit of the back-up light relay is open or shorted
TROUBLE SYMPTOM:
Back-up light does not illuminate in “R” range.
WIRING DIAGRAM:

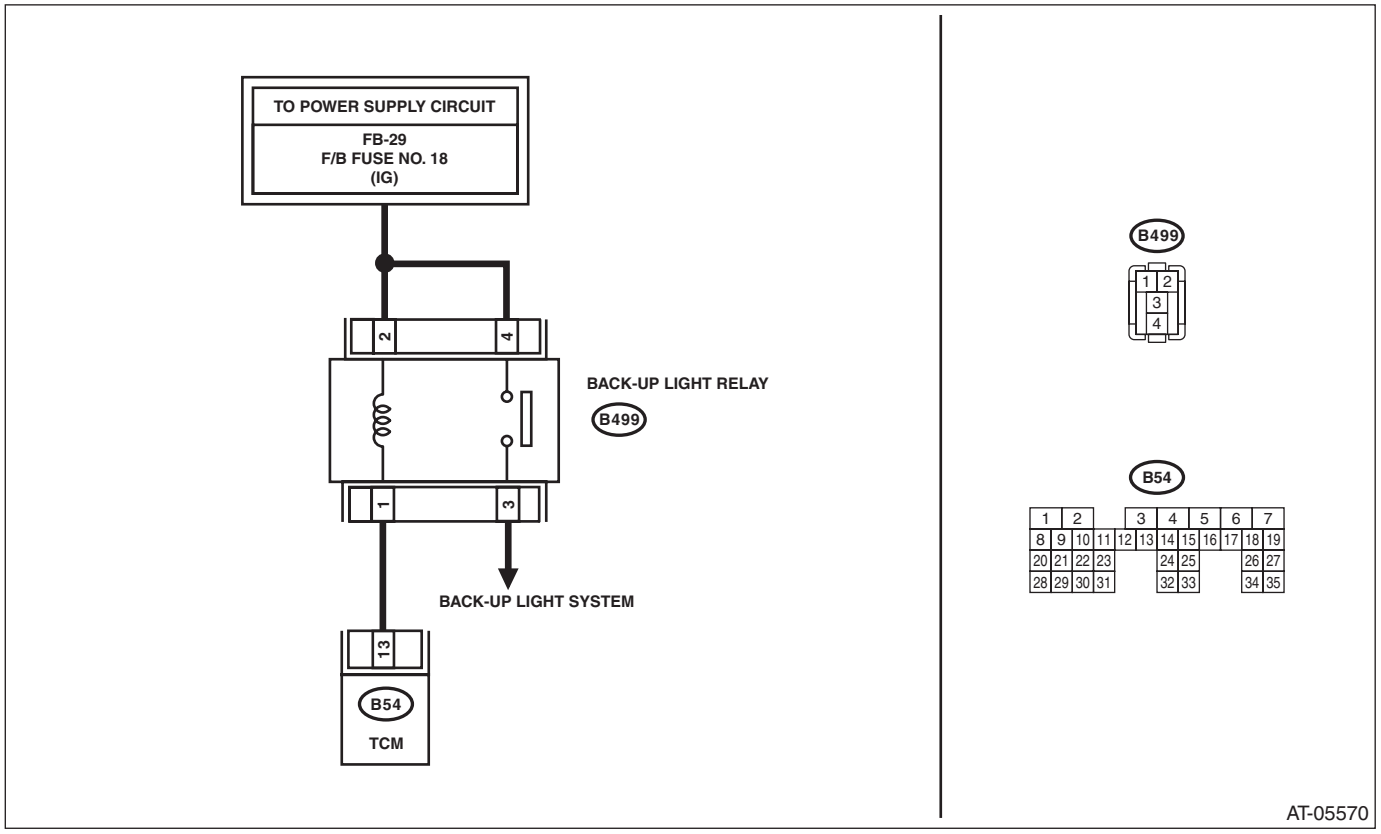

	Step	Check	Yes	No
1	**CHECK DTC OF TCM.**	Is DTC of Transmission Range Sensor Circuit (PRNDL Input) detected?	Perform the diagnosis according to DTC.	Go to step **2**.
2	**CHECK HARNESS CONNECTOR BETWEEN TCM AND BACK-UP LIGHT RELAY.** 1) Turn the ignition switch to OFF. 2) Disconnect the connector from TCM and back-up light relay. 3) Measure the resistance of harness between TCM connector and back-up light relay connector. ***Connector & terminal*** ***(B54) No. 13 — (B499) No. 1:***	Is the resistance less than 1 Ω?	Go to step **3**.	Repair the open circuit of the harness or poor contact of the connector between TCM and back-up light relay connector.
3	**CHECK HARNESS CONNECTOR BETWEEN TCM AND CHASSIS GROUND.** Measure the resistance of harness between TCM connector and chassis ground. ***Connector & terminal*** ***(B54) No. 13 — Chassis ground:***	Is the resistance 1 MΩ or more?	Go to step **4**.	Repair the short circuit of the harness between TCM and back-up light relay connector.

	Step	Check	Yes	No
4	**CHECK OUTPUT SIGNAL OF TCM.** 1) Turn the ignition switch to ON. 2) Shift the select lever to “P” range. 3) Measure the voltage between TCM connector and chassis ground. ***Connector & terminal*** ***(B54) No. 13 (+) — Chassis ground (–):***	Is the voltage 8 V or more?	Go to step **5**.	Replace the TCM. <Ref. to 5AT-57, Transmission Control Module (TCM).>
5	**CHECK OUTPUT SIGNAL OF TCM.** 1) Set the select lever to “R” range. 2) Measure the voltage between TCM connector and chassis ground. ***Connector & terminal*** ***(B54) No. 13 (+) — Chassis ground (–):***	Is the voltage 1 V or less?	Go to step **6**.	Replace the TCM. <Ref. to 5AT-57, Transmission Control Module (TCM).>
6	**CHECK INPUT VOLTAGE FOR BACK-UP LIGHT RELAY.** Measure the voltage between back-up light relay and chassis ground.	Is the voltage 10 — 13 V?	Replace the back-up light relay.	Check open or short circuit of harness between fuse (No. 18) and back-up light relay.

AE:DTC P1706 AT VEHICLE SPEED SENSOR CIRCUIT MALFUNCTION (REAR WHEEL)

DTC DETECTING CONDITION:
Input signal circuit of TCM is open or shorted.
TROUBLE SYMPTOM:
Shifting quality malfunction
WIRING DIAGRAM:

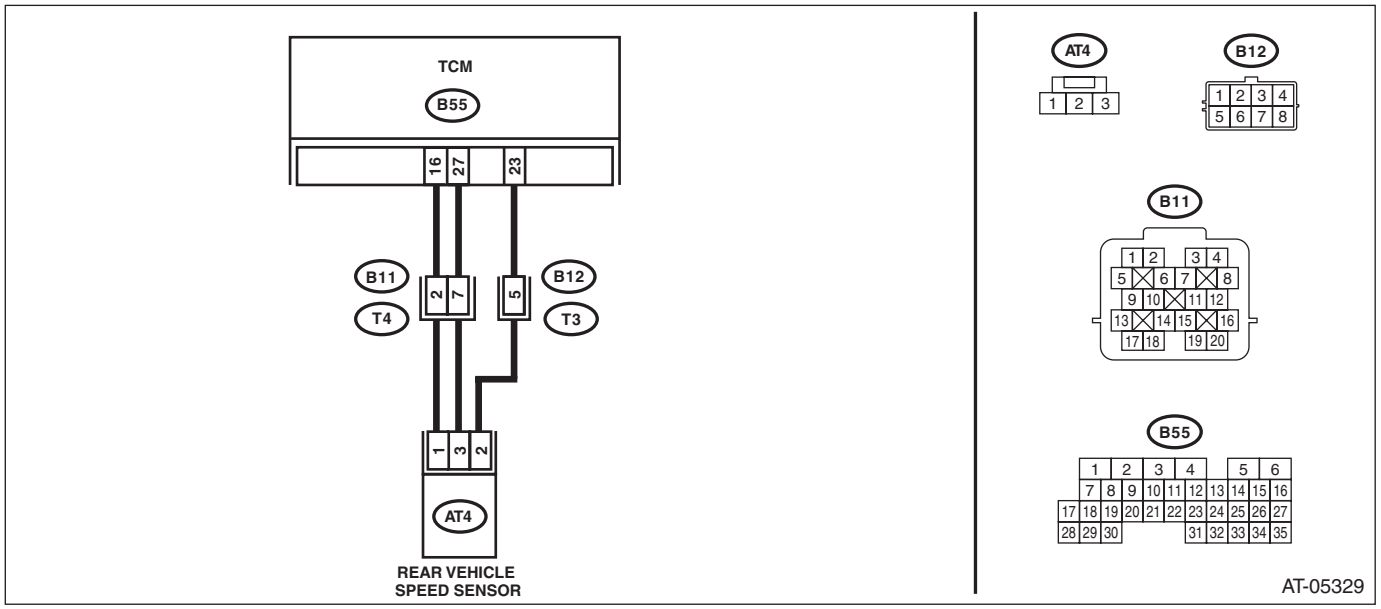

	Step	Check	Yes	No
1	**CHECK TCM I/O SIGNAL.** Check the power supply and ground I/O signals. <Ref. to 5AT(diag)-13, ELECTRICAL SPECIFICATION, Transmission Control Module (TCM) I/O Signal.>	Is TCM I/O signal OK?	Go to step **2**.	Repair the open or short circuit for power supply and ground.
2	**CHECK TCM AND TRANSMISSION HARNESS CONNECTOR.** 1) Disconnect the connectors from TCM and transmission. 2) Measure the resistance of harness between TCM connector and transmission connector. ***Connector & terminal*** ***(B55) No. 16 — (B11) No. 2:*** ***(B55) No. 23 — (B12) No. 5:*** ***(B55) No. 27 — (B11) No. 7:***	Is the resistance less than 1 Ω?	Go to step **3**.	Repair the open circuit of harness between TCM and transmission connector.
3	**CHECK TCM AND TRANSMISSION HARNESS CONNECTOR.** Measure the resistance of harness between TCM connector and chassis ground. ***Connector & terminal*** ***(B55) No. 16 — Chassis ground:*** ***(B55) No. 23 — Chassis ground:*** ***(B55) No. 27 — Chassis ground:***	Is the resistance 1 MΩ or more?	Go to step **4**.	Repair the short circuit of harness between TCM and transmission connector.

	Step	Check	Yes	No
4	**CHECK TCM POWER SUPPLY OUTPUT.** 1) Connect the connector to TCM. (Transmission connector is disconnected) 2) Turn the ignition switch to ON. 3) Measure the voltage between transmission connector and chassis ground. ***Connector & terminal*** ***(B11) No. 7 (+) — Chassis ground (–):***	Is the voltage 10 — 13 V?	Go to step **5**.	Replace the TCM. <Ref. to 5AT-57, Transmission Control Module (TCM).>
5	**CHECK INPUT CIRCUIT OF TCM TURBINE SPEED SENSOR.** Measure the voltage variation between TCM connector terminals. ***Connector & terminal*** ***(B12) No. 5 (+) — (B11) No. 2 (–):***	Is the voltage 4 — 6 V?	Go to step **7**.	Go to step **6**.
6	**CHECK HARNESS ASSEMBLY (TURBINE SPEED SENSOR GROUND).** Check the installing condition of ground connecting harness (used for both of turbine speed sensor 1, rear vehicle speed sensor).	Is the ground connecting harness installed to transmission body correctly, or the harness and connector terminals not damaged?	Go to step **7**.	When the poor installation of ground connecting harness, install it securely. Replace the transmission assembly when the harness is damaged. <Ref. to 5AT-37, Automatic Transmission Assembly.>
7	**CHECK INPUT SIGNAL FOR TCM.** 1) Connect all connectors. 2) Lift up the vehicle. 3) Start the engine. 4) Read the data of “Rear Wheel Speed” using Subaru Select Monitor. <Ref. to 5AT(diag)-18, Read Current Data.> NOTE: The speed difference between front and rear wheels lights the ABS warning light or the VDC warning light, but this does not indicate a malfunction. If the warning light is illuminated, clear the memory of ABS or VDC after completing AT control diagnosis. <Ref. to VDC(diag)-25, Clear Memory Mode.>	Does the speedometer indication in the combination meter change according to “Rear Wheel Speed” data?	Check for poor contact of rear vehicle speed sensor circuit harness, and repair the defective part.	Replace the transmission harness assembly.

AF:DTC P1707 AT AWD SOLENOID VALVE CIRCUIT MALFUNCTION

DTC DETECTING CONDITION:

Output signal circuit of transfer solenoid is open or shorted.

TROUBLE SYMPTOM:

- Tight corner braking phenomenon occurs.
- Drivability getting worse.

WIRING DIAGRAM:

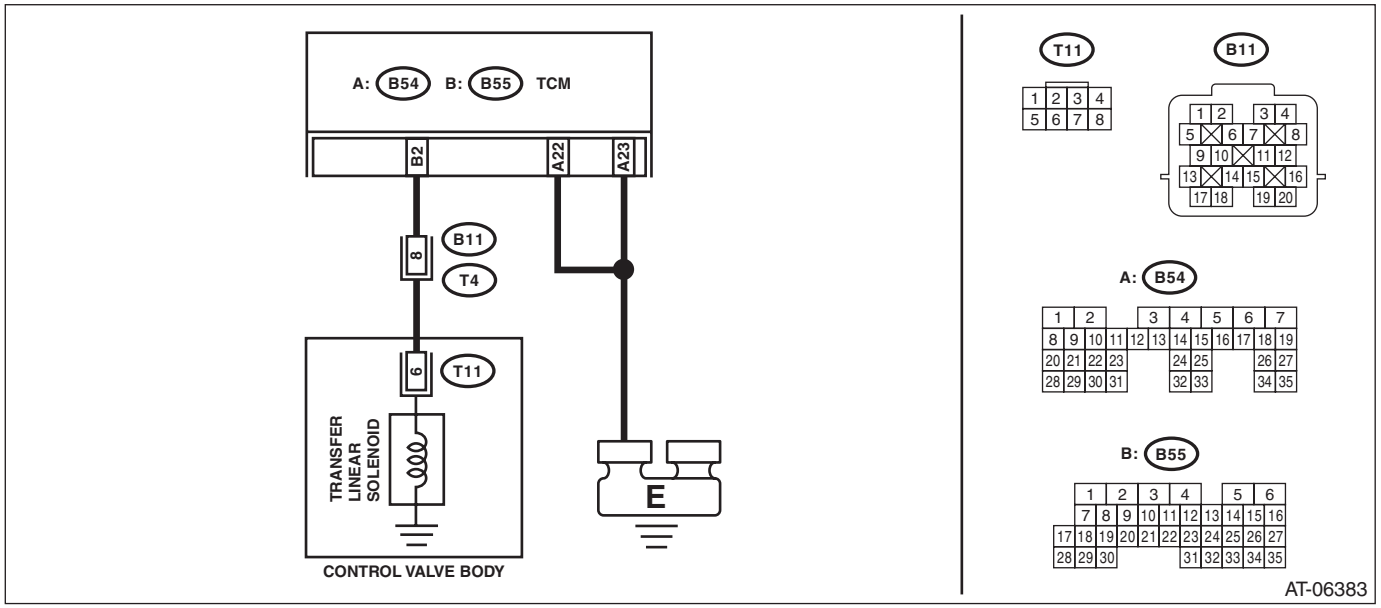

Step		Check	Yes	No
1	**CHECK HARNESS CONNECTOR BETWEEN TCM AND TRANSMISSION.** 1) Turn the ignition switch to OFF. 2) Disconnect the connectors from TCM and transmission. 3) Measure the resistance of harness between TCM connector and transmission connector. ***Connector & terminal*** ***(B54) No. 22 — Chassis ground:*** ***(B54) No. 23 — Chassis ground:*** ***(B55) No. 2 — (B11) No. 8:***	Is the resistance less than 1 Ω?	Go to step **2**.	Repair the open circuit of harness between TCM and transmission connector.
2	**CHECK HARNESS CONNECTOR BETWEEN TCM AND CHASSIS GROUND.** Measure the resistance of harness between TCM connector and chassis ground. ***Connector & terminal*** ***(B54) No. 23 — Chassis ground:***	Is the resistance 1 MΩ or more?	Go to step **3**.	Repair the short circuit of harness between TCM and transmission connector.

	Step	Check	Yes	No
3	**CHECK HARNESS CONNECTOR BETWEEN TRANSMISSION AND CONTROL VALVE BODY.** 1) Turn the ignition switch to OFF. 2) Disconnect the connector from transmission. 3) Remove the transmission connector from bracket. 4) Lift up the vehicle. 5) Drain the ATF. **CAUTION:** **Do not drain ATF until it cools down.** 6) Remove the oil pan. 7) Disconnect the control valve body connector. 8) Measure the resistance between transmission connector and control valve body connector. ***Connector & terminal*** ***(T4) No. 8 — (T11) No. 6:***	Is the resistance less than 1 Ω?	Go to step **4**.	Repair the open circuit of harness between transmission connector and control valve body connector.
4	**CHECK HARNESS CONNECTOR BETWEEN TRANSMISSION AND CONTROL VALVE BODY.** Measure the resistance between transmission ground and control valve body connector. ***Connector & terminal*** ***(T11) No. 6 — Transmission ground:***	Is the resistance 1 MΩ or more?	Repair the open circuit of harness between control valve body connector and transmission ground.	Go to step **5**.
5	**CHECK TRANSFER SOLENOID.** Measure the resistance between transmission ground and control valve body connector. ***Connector & terminal*** ***(T11) No. 6 — Transmission ground:***	Is the resistance 3 — 9 Ω?	Go to step **6**.	Replace the control valve body. <Ref. to 5AT-55, Control Valve Body.>
6	**CHECK FOR POOR CONTACT.** Check the TCM connector, transmission connector and control valve body connector.	Is there poor contact, loosing terminal, entering foreign matter, or damaging connector body?	Repair the poor contact.	Go to step **7**.
7	**CHECK AFTER REPAIR.** 1) Perform the Clear Memory Mode. 2) Drive for a while and read DTC.	Is DTC displayed?	Replace the TCM. <Ref. to 5AT-57, Transmission Control Module (TCM).>	Temporary poor contact or open circuit occurs. Recheck that the harness connector has no faulty.

AG:DTC P1710 TORQUE CONVERTER TURBINE 2 SPEED SIGNAL CIRCUIT MALFUNCTION

DTC DETECTING CONDITION:

Input signal circuit of TCM is open or shorted.

TROUBLE SYMPTOM:

- Excessive shift shock
- Does not shift to 5th.

WIRING DIAGRAM:

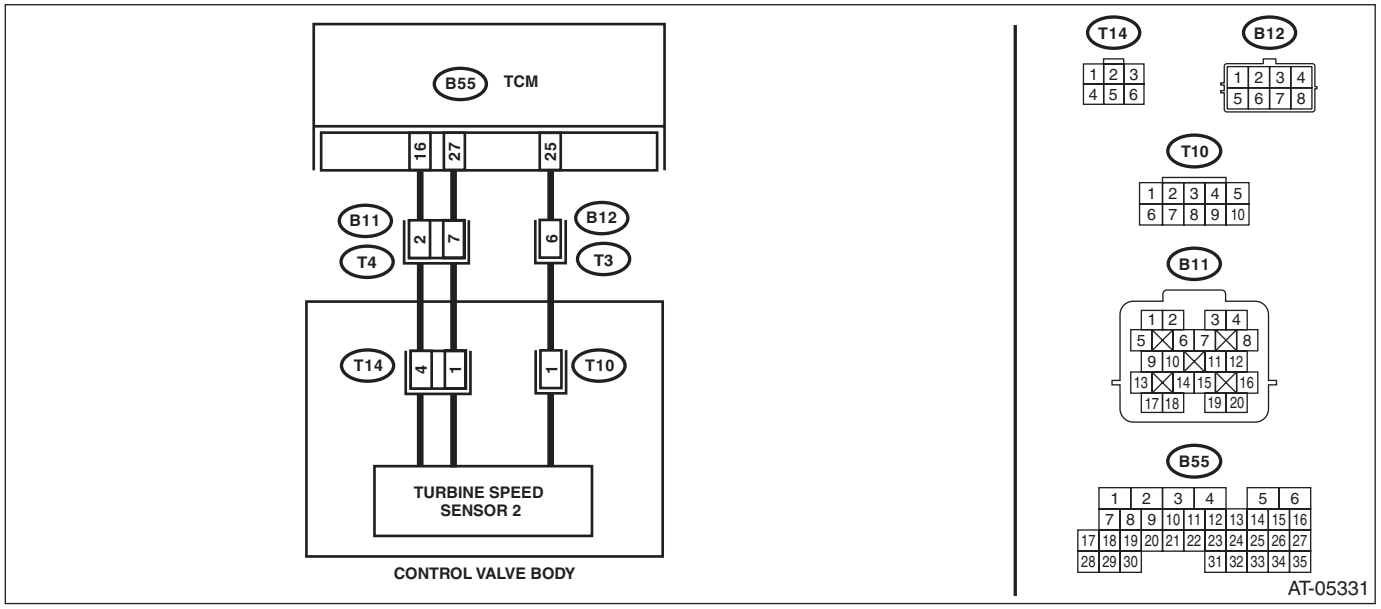

	Step	Check	Yes	No
1	**CHECK TCM I/O SIGNAL.** Check the power supply and ground I/O signals. <Ref. to 5AT(diag)-13, ELECTRICAL SPECIFICATION, Transmission Control Module (TCM) I/O Signal.>	Is TCM I/O signal OK?	Go to step **2**.	Repair the open or short circuit for power supply and ground.
2	**CHECK TCM AND TRANSMISSION HARNESS CONNECTOR.** 1) Disconnect the connectors from TCM and transmission. 2) Measure the resistance of harness between TCM connector and transmission connector. ***Connector & terminal*** ***(B55) No. 16 — (B11) No. 2:*** ***(B55) No. 25 — (B12) No. 6:*** ***(B55) No. 27 — (B11) No. 7:***	Is the resistance less than 1 Ω?	Go to step **3**.	Repair the open circuit of harness between TCM and transmission connector.
3	**CHECK TCM AND TRANSMISSION HARNESS CONNECTOR.** Measure the resistance of harness between TCM connector and chassis ground. ***Connector & terminal*** ***(B55) No. 25 — Chassis ground:***	Is the resistance 1 MΩ or more?	Go to step **4**.	Repair the short circuit of harness between TCM and transmission connector.
4	**CHECK TCM POWER SUPPLY OUTPUT.** 1) Connect the connector to TCM. (Transmission connector is disconnected) 2) Turn the ignition switch to ON. 3) Measure the voltage between transmission connector and chassis ground. ***Connector & terminal*** ***(B11) No. 7 (+) — Chassis ground (–):***	Is the voltage 10 — 13 V?	Go to step **5**.	Replace the TCM. <Ref. to 5AT-57, Transmission Control Module (TCM).>

	Step	Check	Yes	No
5	**CHECK INPUT CIRCUIT OF TCM TURBINE SPEED SENSOR 2.** Measure the voltage between TCM connector terminals. ***Connector & terminal*** ***(B12) No. 6 (+) — (B11) No. 2 (–):***	Is the voltage 4 — 6 V?	Go to step **6**.	Replace the TCM. <Ref. to 5AT-57, Transmission Control Module (TCM).>
6	**CHECK INPUT SIGNAL FOR TCM.** 1) Connect all connectors. 2) Lift up the vehicle. 3) Start the engine. 4) Drive at 1st of manual mode. 5) Using Subaru Select Monitor, read the data of "AT Turbine Speed 2". <Ref. to 5AT(diag)-18, Read Current Data.> NOTE: The speed difference between front and rear wheels lights the ABS warning light or the VDC warning light, but this does not indicate a malfunction. If the warning light is illuminated, clear the memory of ABS or VDC after completing AT control diagnosis. <Ref. to VDC(diag)-25, Clear Memory Mode.>	Does the speedometer indication in the combination meter change according to "AT Turbine Speed 2" data?	Check for poor contact of the turbine speed sensor 2 and transmission connector harness, and repair the fault location.	Go to step **7**.
7	**CHECK HARNESS CONNECTOR BETWEEN TRANSMISSION AND CONTROL VALVE BODY.** 1) Turn the ignition switch to OFF. 2) Disconnect the connector from transmission. 3) Remove the transmission connector from bracket. 4) Lift up the vehicle. 5) Drain the ATF. **CAUTION:** **Do not drain ATF until it cools down.** 6) Remove the oil pan. 7) Disconnect the control valve body connector. 8) Measure the resistance between transmission connector and control valve body connector. ***Connector & terminal*** ***(T3) No. 6 — (T10) No. 1:***	Is the resistance less than 1 Ω?	Go to step **8**.	Repair the open circuit of harness between transmission connector and control valve body connector.
8	**CHECK HARNESS CONNECTOR BETWEEN TRANSMISSION AND CONTROL VALVE BODY.** Measure the resistance between transmission ground and control valve body connector. ***Connector & terminal*** ***(T10) No. 1 — Transmission ground:***	Is the resistance 1 MΩ or more?	Replace the control valve body. <Ref. to 5AT-55, Control Valve Body.>	Repair the short circuit of harness between control valve body connector and transmission ground.

AH:DTC P1718 AT CAN COMMUNICATION CIRCUIT

NOTE:
Refer to "LAN SYSTEM" for diagnostic procedure. <Ref. to LAN(diag)-2, Basic Diagnostic Procedure.>

AI: DTC P1724 AT EEPROM ERROR

DTC DETECTING CONDITION:
TCM EEPROM malfunction
TROUBLE SYMPTOM:
- AT learning is not finished.
- Shock occurs when selecting N → D, N → R.

Step		Check	Yes	No
1	**CHECK BATTERY.** 1) Turn the ignition switch to ON. 2) Read the data of "Battery voltage" using Subaru Select Monitor.	Is the "Battery voltage" 10 V or more?	Go to step **2**.	Check the battery.
2	**CHECK DTC.** 1) Turn the ignition switch to OFF. 2) Turn the ignition switch to ON after one minute.	Is DTC P1724 displayed as a temporary code?	Replace the TCM. <Ref. to 5AT-57, Transmission Control Module (TCM).>	Current condition is normal. Check for poor contact of TCM connector or harness.

AJ:DTC P1817 SPORTS MODE SWITCH CIRCUIT (MANUAL SWITCH)

DTC DETECTING CONDITION:
Input signal circuit of manual mode switch is open or shorted.
TROUBLE SYMPTOM:
- Manual mode can not be set.
- Shift indicator displays when shifting “N” → “D”.

WIRING DIAGRAM:

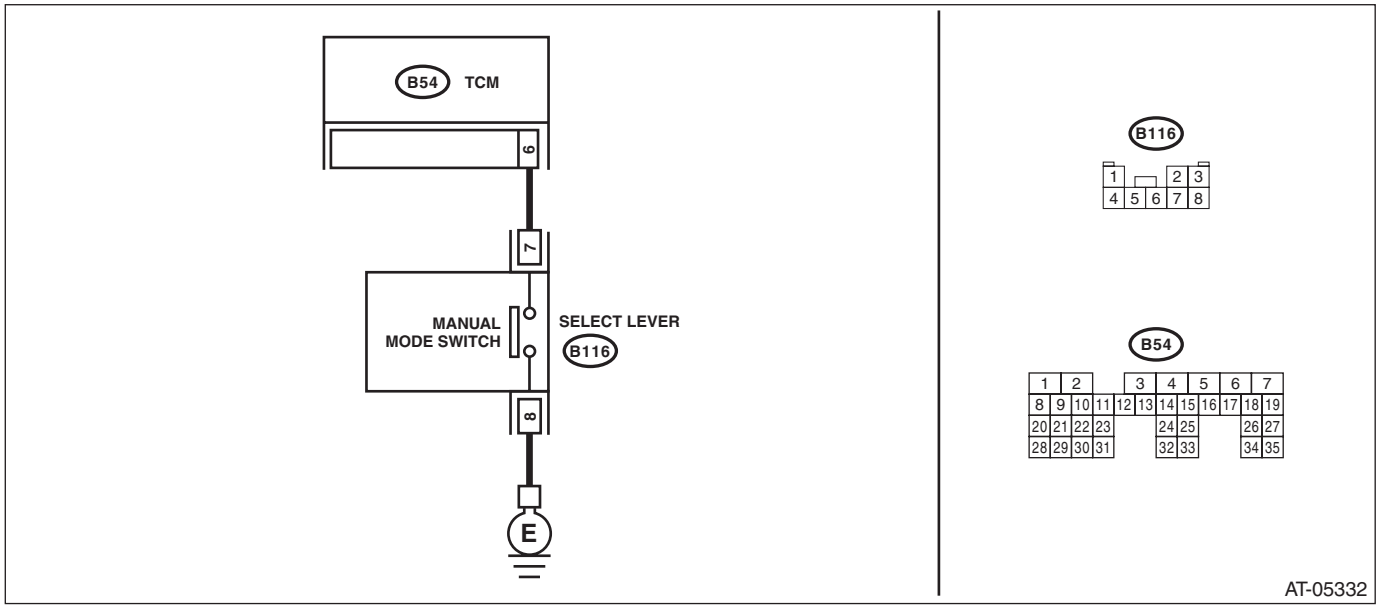

	Step	Check	Yes	No
1	**CHECK GROUND CIRCUIT OF MANUAL MODE SWITCH.** 1) Turn the ignition switch to OFF. 2) Disconnect the connector from manual mode switch. 3) Measure the resistance of the harness between the manual mode switch connector and chassis ground. ***Connector & terminal*** ***(B116) No. 8 — Chassis ground:***	Is the resistance less than 1 Ω?	Go to step **2**.	Repair the open circuit of the harness between the manual mode switch and chassis ground.
2	**CHECK MANUAL MODE SWITCH.** Measure the resistance between manual mode switch terminals. ***Connector & terminal*** ***(B116) No. 7 — No. 8:***	Is the resistance 1 MΩ or more?	Go to step **3**.	Replace the select lever assembly. <Ref. to CS-22, Select Lever.>
3	**CHECK MANUAL MODE SWITCH.** 1) Shift the select lever to manual mode. 2) Measure the resistance between manual mode switch terminals. ***Connector & terminal*** ***(B116) No. 7 — No. 8:***	Is the resistance less than 1 Ω?	Go to step **4**.	Replace the select lever assembly. <Ref. to CS-22, Select Lever.>
4	**CHECK HARNESS CONNECTOR BETWEEN TCM AND MANUAL MODE SWITCH.** 1) Disconnect the connector from TCM. 2) Measure the resistance of harness between TCM connector and manual mode switch connector. ***Connector & terminal*** ***(B116) No. 7 — (B54) No. 6:***	Is the resistance less than 1 Ω?	Go to step **5**.	Repair the open circuit of the harness or poor contact of the connector between TCM and manual mode switch connector.

	Step	Check	Yes	No
5	**CHECK HARNESS CONNECTOR BETWEEN TCM AND MANUAL MODE SWITCH.** 1) Disconnect the connector from TCM. 2) Measure the resistance of the harness between the manual mode switch connector and chassis ground. ***Connector & terminal*** ***(B116) No. 7 — Chassis ground:***	Is the resistance 1 MΩ or more?	Go to step **6**.	Repair the short circuit of the harness between TCM and manual mode switch connector.
6	**CHECK INPUT SIGNAL FOR TCM.** 1) Connect the connector to TCM and manual mode switch. 2) Turn the ignition switch to ON. 3) Shift the select lever to normal mode. 4) Measure the voltage of signal to TCM. ***Connector & terminal*** ***(B54) No. 6 (+) — Chassis ground (–):***	Is the voltage 10 V or more?	Go to step **7**.	Replace the TCM. <Ref. to 5AT-57, Transmission Control Module (TCM).>
7	**CHECK FOR POOR CONTACT.**	Is there poor contact of the manual mode switch circuit?	Repair the poor contact.	Replace the TCM. <Ref. to 5AT-57, Transmission Control Module (TCM).>

AK:DTC P1840 TRANSMISSION FLUID PRESSURE SENSOR SWITCH A CIRCUIT

DTC DETECTING CONDITION:
Front brake oil pressure switch malfunction
TROUBLE SYMPTOM:
Excessive shift shock

NOTE:
Refer to DTC P0751 for diagnostic procedure. <Ref. to 5AT(diag)-59, DTC P0751 SHIFT SOLENOID “A” PERFORMANCE OR STUCK OFF, Diagnostic Procedure with Diagnostic Trouble Code (DTC).>

AL:DTC P1841 TRANSMISSION FLUID PRESSURE SENSOR SWITCH B CIRCUIT

DTC DETECTING CONDITION:
Forward brake oil pressure switch malfunction.
TROUBLE SYMPTOM:
Excessive shift shock

NOTE:
Refer to DTC P0771 for diagnostic procedure. <Ref. to 5AT(diag)-75, DTC P0771 SHIFT SOLENOID “E” PERFORMANCE OR STUCK OFF, Diagnostic Procedure with Diagnostic Trouble Code (DTC).>

AM:DTC P1842 TRANSMISSION FLUID PRESSURE SENSOR SWITCH C CIRCUIT

DTC DETECTING CONDITION:
Input clutch oil pressure switch is malfunction.
TROUBLE SYMPTOM:
Excessive shift shock

NOTE:
Refer to DTC P0756 for diagnostic procedure. <Ref. to 5AT(diag)-63, DTC P0756 SHIFT SOLENOID “B” PERFORMANCE OR STUCK OFF, Diagnostic Procedure with Diagnostic Trouble Code (DTC).>

AN:DTC P1843 TRANSMISSION FLUID PRESSURE SENSOR SWITCH D CIRCUIT

DTC DETECTING CONDITION:
Direct clutch oil pressure switch malfunction.
TROUBLE SYMPTOM:
Excessive shift shock

NOTE:
Refer to DTC P0766 for diagnostic procedure. <Ref. to 5AT(diag)-71, DTC P0766 SHIFT SOLENOID “D” PERFORMANCE OR STUCK OFF, Diagnostic Procedure with Diagnostic Trouble Code (DTC).>

AO:DTC P1844 TRANSMISSION FLUID PRESSURE SENSOR SWITCH E CIRCUIT

DTC DETECTING CONDITION:
High & low reverse clutch oil pressure switch malfunction.
TROUBLE SYMPTOM:
Excessive shift shock

NOTE:
Refer to DTC P0761 for diagnostic procedure. <Ref. to 5AT(diag)-67, DTC P0761 SHIFT SOLENOID “C” PERFORMANCE OR STUCK OFF, Diagnostic Procedure with Diagnostic Trouble Code (DTC).>

17.Diagnostic Procedure without Diagnostic Trouble Code (DTC)

A: CHECK SHIFT INDICATOR

DIAGNOSIS:

- Output signal circuit of shift indicator is open or shorted.
- Combination meter malfunction

TROUBLE SYMPTOM:

- Shift indicator does not display or remains displayed.
- Shift indicator display does not change.

WIRING DIAGRAM:

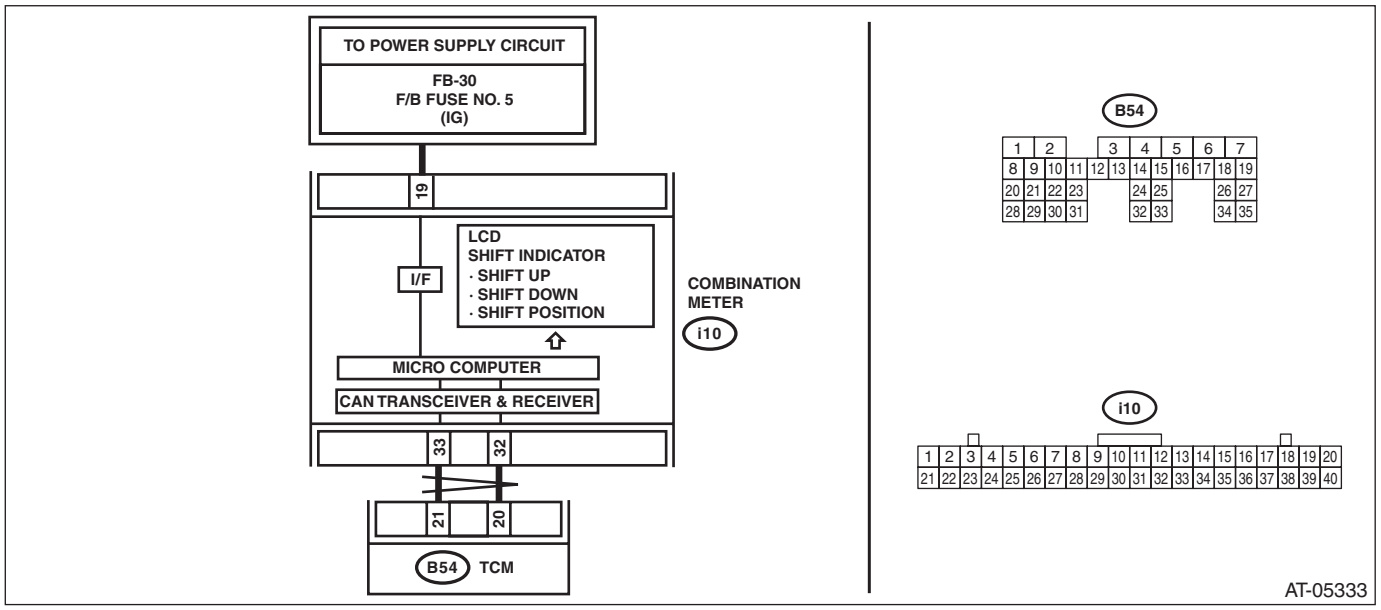

Step		Check	Yes	No
1	**CHECK TCM.** Check the DTC relating the TCM using the Subaru Select Monitor.	Is DTC displayed?	Perform the diagnosis according to DTC.	Go to step **2**.
2	**CHECK COMBINATION METER.** Check the DTC of combination meter.	Is DTC displayed?	Perform the diagnosis according to DTC.	Go to step **3**.
3	**CHECK TCM.** 1) Turn the ignition switch to OFF. 2) Connect the Subaru Select Monitor to data link connector. 3) Turn the ignition switch to ON. 4) Run the Subaru Select Monitor. 5) Shift the select lever to manual mode. 6) Read the data of “Gear Position” using Subaru Select Monitor.	Is the gear position “1”?	Go to step **4**.	Replace the TCM. <Ref. to 5AT-57, Transmission Control Module (TCM).>
4	**CHECK TCM.** 1) Shift up the select lever. 2) Read the data of “Gear Position” using Subaru Select Monitor.	Is the gear position “2”?	Replace the combination meter assembly. <Ref. to IDI-21, Combination Meter.>	Replace the TCM. <Ref. to 5AT-57, Transmission Control Module (TCM).>

18.Diagnostics with Phenomenon

A: INSPECTION

Symptoms	Faulty parts
Shifting vehicle speed is low on “D” range.	• Front and rear vehicle speed sensors • Accelerator pedal position sensor • Throttle position sensor • ATF temperature sensor • CAN communication signal
Shifting vehicle speed is high on “D” range.	• Front and rear vehicle speed sensors • Accelerator pedal position sensor • Throttle position sensor • CAN communication signal • Brake switch signal • ATF temperature sensor
Excessive shift shock (“N” → “D” range)	• Engine idle speed • Engine speed signal • Accelerator pedal position sensor • Throttle position sensor • Control cable adjustment • ATF temperature sensor • Oil pressure switch 1 and front brake solenoid valve • CAN communication signal • Fluid level and condition • TCM power supply
Excessive shift shock on 1st of “D” range → 2nd of “D” range or “1st of manual mode” → “2nd of manual mode”.	• Accelerator pedal position sensor • Throttle position sensor • Control cable adjustment • Oil pressure switch 4 and direct clutch solenoid valve • CAN communication signal • Engine speed signal • Turbine speed sensor 1 and turbine speed sensor 2 • Front and rear vehicle speed sensors • Fluid level and condition
Excessive shift shock on 2nd of “D” range → 3rd of “D” range or “2nd of manual mode” → “3rd of manual mode”.	• Accelerator pedal position sensor • Throttle position sensor • Control cable adjustment • Oil pressure switch 5 and high & low reverse clutch solenoid valve • CAN communication signal • Engine speed signal • Turbine speed sensor 1 and turbine speed sensor 2 • Front and rear vehicle speed sensors • Fluid level and condition
Excessive shift shock on 3rd of “D” range → 4th of “D” range or “3rd of manual mode” → “4th of manual mode”.	• Accelerator pedal position sensor • Throttle position sensor • Control cable adjustment • Oil pressure switch 3 and input clutch solenoid valve • CAN communication signal • Engine speed signal • Turbine speed sensor 1 and turbine speed sensor 2 • Front and rear vehicle speed sensors • Fluid level and condition

Symptoms	Faulty parts
Excessive shift shock on 4th of “D” range → 5th of “D” range or “4th of manual mode” → “5th of manual mode”.	• Accelerator pedal position sensor • Throttle position sensor • Control cable adjustment • Oil pressure switch 1 and front brake solenoid valve • CAN communication signal • Engine speed signal • Turbine speed sensor 1 and turbine speed sensor 2 • Front and rear vehicle speed sensors • Fluid level and condition
Excessive shock at kick down.	• Accelerator pedal position sensor • Throttle position sensor • Control cable adjustment • CAN communication signal • Engine speed signal • Turbine speed sensor 1 and turbine speed sensor 2 • Front and rear vehicle speed sensors • Fluid level and condition
Excessive shock at shift up.	• Accelerator pedal position sensor • Throttle position sensor • Control cable adjustment • Engine speed signal • CAN communication signal • Turbine speed sensor 1 and turbine speed sensor 2 • Front and rear vehicle speed sensors • Fluid level and condition
Excessive shock at lock up.	• Accelerator pedal position sensor • Throttle position sensor • Control cable adjustment • Engine speed signal • CAN communication signal • Turbine speed sensor 1 and turbine speed sensor 2 • Lock up solenoid valve • Front and rear vehicle speed sensors • Fluid level and condition
Excessive shock at engine brake.	• Accelerator pedal position sensor • Throttle position sensor • Control cable adjustment • CAN communication signal • Fluid level and condition • Line pressure • Forward brake solenoid valve
Judder is occurred at lock up.	• Fluid level and condition • Engine speed signal • Turbine speed sensor 1 and turbine speed sensor 2 • Front and rear vehicle speed sensors • Accelerator pedal position sensor • Throttle position sensor • Lock up solenoid valve • ATF temperature sensor
Noise at “R”, “N” and “D” range.	• Fluid level and condition • Engine speed signal • ATF temperature sensor
Hold at “D” range or 1st on manual mode.	• Fluid level and condition • Front and rear vehicle speed sensors • Direct clutch solenoid valve • Line pressure • Up switch signal • CAN communication signal • Accelerator pedal position sensor

Symptoms	Faulty parts
Hold at “D” range or 2nd on manual mode.	• Fluid level and condition • Front and rear vehicle speed sensors • Forward brake solenoid valve • Line pressure • Up switch signal • Down switch signal • CAN communication signal • Accelerator pedal position sensor
Hold at “D” range or 3rd on manual mode.	• Fluid level and condition • Front and rear vehicle speed sensors • Line pressure • Up switch signal • Down switch signal • CAN communication signal • Accelerator pedal position sensor
Hold at “D” range or 4th on manual mode.	• Fluid level and condition • Front and rear vehicle speed sensors • Oil pressure switch 3 and input clutch solenoid valve • Oil pressure switch 4 and direct clutch solenoid valve • Oil pressure switch 5 and high & low reverse clutch solenoid valve • Forward brake solenoid valve • Front brake solenoid valve • Line pressure • Up switch signal • Down switch signal • CAN communication signal • Accelerator pedal position sensor • TCM power supply
Hold at “D” range or 5th on manual mode.	• Fluid level and condition • Front and rear vehicle speed sensors • Oil pressure switch 1 and front brake solenoid valve • Line pressure • Down switch signal • CAN communication signal • Accelerator pedal position sensor
Gear does not shift 1st of “D” range → 2nd of “D” range or “1st of manual mode” → “2nd of manual mode”.	• Fluid level and condition • Front and rear vehicle speed sensors • Oil pressure switch 4 and direct clutch solenoid valve • Line pressure • Up switch signal • CAN communication signal • Accelerator pedal position sensor
Gear does not shift 2nd of “D” range → 3rd of “D” range or “2nd of manual mode” → “3rd of manual mode”.	• Fluid level and condition • Front and rear vehicle speed sensors • Oil pressure switch 5 and high & low reverse clutch solenoid valve • Line pressure • Up switch signal • CAN communication signal • Accelerator pedal position sensor
Gear does not shift 3rd of “D” range → 4th of “D” range or “3rd of manual mode” → “4th of manual mode”.	• Fluid level and condition • Front and rear vehicle speed sensors • Oil pressure switch 3 and input clutch solenoid valve • Oil pressure switch 1 and front brake solenoid valve • Line pressure • Up switch signal • CAN communication signal • Accelerator pedal position sensor

Symptoms	Faulty parts
Gear does not shift 4th of “D” range → 5th of “D” range or “4th of manual mode” → “5th of manual mode”.	• Fluid level and condition • Front and rear vehicle speed sensors • Oil pressure switch 1 and front brake solenoid valve • Oil pressure switch 4 and direct clutch solenoid valve • Turbine speed sensor 1 and turbine speed sensor 2 • ATF temperature sensor • Line pressure • Up switch signal • CAN communication signal • Accelerator pedal position sensor
Gear does not shift down to 4th on “D” range or manual mode.	• Fluid level and condition • Front and rear vehicle speed sensors • Oil pressure switch 1 and front brake solenoid valve • Oil pressure switch 4 and direct clutch solenoid valve • Line pressure • Down switch signal • CAN communication signal • Accelerator pedal position sensor
Gear does not shift down to 3rd on “D” range or manual mode.	• Fluid level and condition • Front and rear vehicle speed sensors • Oil pressure switch 3 and input clutch solenoid valve • Oil pressure switch 1 and front brake solenoid valve • Line pressure • Down switch signal • CAN communication signal • Accelerator pedal position sensor • TCM power supply
Gear does not shift down to 2nd on “D” range or manual mode.	• Fluid level and condition • Front and rear vehicle speed sensors • Oil pressure switch 5 and high & low reverse clutch solenoid • Line pressure • Down switch signal • CAN communication signal • Accelerator pedal position sensor
Gear does not shift down to 1st on “D” range or manual mode.	• Fluid level and condition • Front and rear vehicle speed sensors • Oil pressure switch 4 and direct clutch solenoid valve • Line pressure • Down switch signal • CAN communication signal • Accelerator pedal position sensor
No lock-up occurs.	• Fluid level and condition • Line pressure • Engine speed signal • Turbine speed sensor 1 and turbine speed sensor 2 • Lock up solenoid valve • CAN communication signal • ATF temperature sensor • Accelerator pedal position sensor • Brake switch signal • Range signal
No shift shock occurred when shifting 1st of “D” range → 2nd of “D” range or “1st of manual mode” → “2nd of manual mode”. Or clutch slipping occurred.	• Fluid level and condition • Front and rear vehicle speed sensors • Oil pressure switch 4 and direct clutch solenoid valve • Line pressure • CAN communication signal

Symptoms	Faulty parts
No shift shock occurred when shifting 2nd of “D” range → 3rd of “D” range or “2nd of manual mode” → “3rd of manual mode”. Or clutch slipping occurred.	• Fluid level and condition • Front and rear vehicle speed sensors • Oil pressure switch 5 and high & low reverse clutch solenoid valve • Line pressure • CAN communication signal
No shift shock occurred when shifting 3rd of “D” range → 4th of “D” range or “3rd of manual mode” → “4th of manual mode”. Or clutch slipping occurred.	• Fluid level and condition • Front and rear vehicle speed sensors • Oil pressure switch 3 and input clutch solenoid valve • Oil pressure switch 1 and front brake solenoid valve • Line pressure • CAN communication signal
No shift shock occurred when shifting 4th of “D” range → 5th of “D” range or “4th of manual mode” → “5th of manual mode”. Or clutch slipping occurred.	• Fluid level and condition • Front and rear vehicle speed sensors • Oil pressure switch 1 and front brake solenoid valve • Oil pressure switch 4 and direct clutch solenoid valve • Line pressure • Accelerator pedal position sensor • Throttle position sensor
Engine skids when shifting 5th of “D” range → 4th of “D” range or “5th of manual mode” → “4th of manual mode”. Or slipping occurred.	• Fluid level and condition • Front and rear vehicle speed sensors • Oil pressure switch 1 and front brake solenoid valve • Oil pressure switch 4 and direct clutch solenoid valve • Line pressure • Accelerator pedal position sensor • Throttle position sensor
Engine skids when shifting 4th of “D” range → 3rd of “D” range or “4th of manual mode” → “3rd of manual mode”. Or slipping occurred.	• Fluid level and condition • Front and rear vehicle speed sensors • Oil pressure switch 3 and input clutch solenoid valve • Oil pressure switch 1 and front brake solenoid valve • Line pressure • Accelerator pedal position sensor • Throttle position sensor
Engine skids when shifting 3rd of “D” range → 2nd of “D” range or “3rd of manual mode” → “2nd of manual mode”. Or slipping occurred.	• Fluid level and condition • Front and rear vehicle speed sensors • Oil pressure switch 5 and high & low reverse clutch solenoid valve • Oil pressure switch 4 and direct clutch solenoid valve • Line pressure • Accelerator pedal position sensor • Throttle position sensor
Engine skids when shifting 2nd of “D” range → 1st of “D” range or “2nd of manual mode” → “1st of manual mode”. Or slipping occurred.	• Fluid level and condition • Front and rear vehicle speed sensors • Oil pressure switch 4 and direct clutch solenoid valve • Line pressure • Accelerator pedal position sensor • Throttle position sensor
Engine brake does not function at 5th → 4th of manual mode.	• Inhibitor switch • Fluid level and condition • Control cable adjustment • Manual mode switch • Oil pressure switch 1 • Down switch signal
Engine brake does not function at 4th → 3rd of manual mode.	• Inhibitor switch • Fluid level and condition • Control cable adjustment • Manual mode switch • Oil pressure switch 1 and oil pressure switch 3 • Down switch signal

Symptoms	Faulty parts
Engine brake does not function at 3rd → 2nd of manual mode.	• Inhibitor switch • Fluid level and condition • Control cable adjustment • Manual mode switch • Oil pressure switch 5 • Forward brake solenoid valve
Engine brake does not function at 2nd → 1st of manual mode.	• Inhibitor switch • Fluid level and condition • Control cable adjustment • Manual mode switch • Oil pressure switch 4 • Forward brake solenoid valve
Excessive acceleration failure on “D” range.	• Fluid level and condition • Line pressure • Accelerator pedal position sensor • Throttle position sensor • CAN communication signal • Inhibitor switch • Control cable adjustment • Front and rear vehicle speed sensors
Excessive acceleration failure in “R” range.	• Fluid level and condition • Line pressure • Accelerator pedal position sensor • Throttle position sensor • Oil pressure switch 5 and high & low reverse clutch solenoid valve • CAN communication signal • Inhibitor switch • Control cable adjustment • Front and rear vehicle speed sensors
Engine skids when start driving (1st) the vehicle. Or slipping occurred.	• Fluid level and condition • Line pressure • Accelerator pedal position sensor • Throttle position sensor • CAN communication signal
Engine skids when driving at 2nd. Or slipping occurred.	• Fluid level and condition • Line pressure • Accelerator pedal position sensor • Throttle position sensor • CAN communication signal • Oil pressure switch 4 and direct clutch solenoid valve
Engine skids when driving at 3rd. Or slipping occurred.	• Fluid level and condition • Line pressure • Accelerator pedal position sensor • Throttle position sensor • CAN communication signal • Oil pressure switch 5 and high & low reverse clutch solenoid valve
Engine skids when driving at 4th. Or slipping occurred.	• Fluid level and condition • Line pressure • Accelerator pedal position sensor • Throttle position sensor • CAN communication signal • Oil pressure switch 3 and input clutch solenoid valve

Symptoms	Faulty parts
Engine skids when driving at 5th. Or slipping occurred.	• Fluid level and condition • Line pressure • Accelerator pedal position sensor • Throttle position sensor • CAN communication signal • Oil pressure switch 1 and front brake solenoid valve
Slip at lock up.	• Fluid level and condition • Line pressure • Engine speed signal • Turbine speed sensor 1 and turbine speed sensor 2 • Lock up solenoid valve • CAN communication signal
Maximum vehicle speed is low.	• Fluid level and condition • Line pressure • Accelerator pedal position sensor • Throttle position sensor • CAN communication signal • Direct clutch solenoid valve • Front and rear vehicle speed sensors
There is completely no creep.	• Fluid level and condition • Engine speed signal • CAN communication signal • Oil pressure switch 4 and direct clutch solenoid valve • Line pressure
Excessive large creep.	• Engine speed signal • CAN communication signal • Oil pressure switch 4
Vehicle cannot be parking condition on “P” range. Parking condition is not released though shifting to other ranges.	• Inhibitor switch • Control cable adjustment
Vehicle can drive on “P” range.	• Inhibitor switch • Fluid level and condition • Control cable adjustment • Line pressure
Vehicle can drive on “N” range.	• Inhibitor switch • Fluid level and condition • Control cable adjustment • Line pressure
Vehicle cannot drive at any range.	• Fluid level and condition • Line pressure • Inhibitor switch • Control cable adjustment • Loosing or damaging of propeller shaft. • Loosing or damaging of drive shaft.
Vehicle cannot drive on “D” range.	• Fluid level and condition • Line pressure • Inhibitor switch • Control cable adjustment • Loosing or damaging of propeller shaft. • Loosing or damaging of drive shaft.
Vehicle cannot drive on “R” range.	• Fluid level and condition • Line pressure • Inhibitor switch • Control cable adjustment • Loosing or damaging of propeller shaft. • Loosing or damaging of drive shaft.

Symptoms	Faulty parts
Engine cannot start on “N” or “P” range.	• Starter • Control cable adjustment • Inhibitor switch • CAN communication line • TCM
Engine start other than “N” or “P” range.	• Starter • Control cable adjustment • Inhibitor switch • TCM
Engine stalls.	• Fluid level and condition • Engine speed signal • Turbine speed sensor 1 and turbine speed sensor 2 • Lock up solenoid valve • Line pressure
Engine stalls when shifting to “N” → “D” and “R” range.	• Fluid level and condition • Engine speed signal • Turbine speed sensor 1 and turbine speed sensor 2 • Lock up solenoid valve • Line pressure

MANUAL TRANSMISSION AND DIFFERENTIAL

6MT

		Page
1.	General Description	2
2.	Transmission Gear Oil	24
3.	Manual Transmission Assembly	25
4.	Transmission Mounting System	33
5.	Oil Seal	35
6.	Differential Side Retainer Oil Seal	36
7.	Switches and Harness	37
8.	Preparation for Overhaul	39
9.	Transfer Case and Extension Case Assembly	40
10.	Transfer Drive Gear	45
11.	Transfer Driven Gear	47
12.	Center Differential	49
13.	Shift Link Assembly	50
14.	Transmission Case	57
15.	Main Shaft Assembly for Single-Range	60
16.	Drive Pinion Shaft Assembly	67
17.	Front Differential Assembly	77
18.	Reverse Idler Gear	85
19.	Shifter Fork and Rod	90
20.	General Diagnostic Table	95

1. General Description

A: SPECIFICATION

1. MANUAL TRANSMISSION AND DIFFERENTIAL

Model			2.5 L non-turbo		2.5 L turbo
			Except for OUTBACK	OUTBACK	
Type			6-forward speeds and 1-reverse		
Transmission gear ratio		1st	3.454		
		2nd	1.947		
		3rd	1.296		
		4th	0.972		
		5th	0.825		0.780
		6th	0.695		0.666
		Rev.	3.636		
Front reduction gear	Final	Type of gear	Hypoid		
		Gear ratio	4.111	4.444	4.111
Rear reduction gear	Transfer	Type of gear	Helical		
		Gear ratio	1.000		
	Final	Type of gear	Hypoid		
		Gear ratio	4.111	4.444	4.111
Front differential	Type and number of gear		Straight bevel gear (bevel pinion: 2, bevel gear: 2)		
Center differential	Type and number of gear		Straight bevel gear (bevel pinion: 2, bevel gear: 2, viscous coupling)		
Transmission gear oil			GL-5		
Transmission gear oil capacity		Single-range model	3.7 ℓ (3.9 US qt, 3.3 Imp qt)		

2. TRANSMISSION GEAR OIL

Recommended oil:
GL-5 (75W-90) or equivalent

B: COMPONENT

1. TRANSMISSION CASE

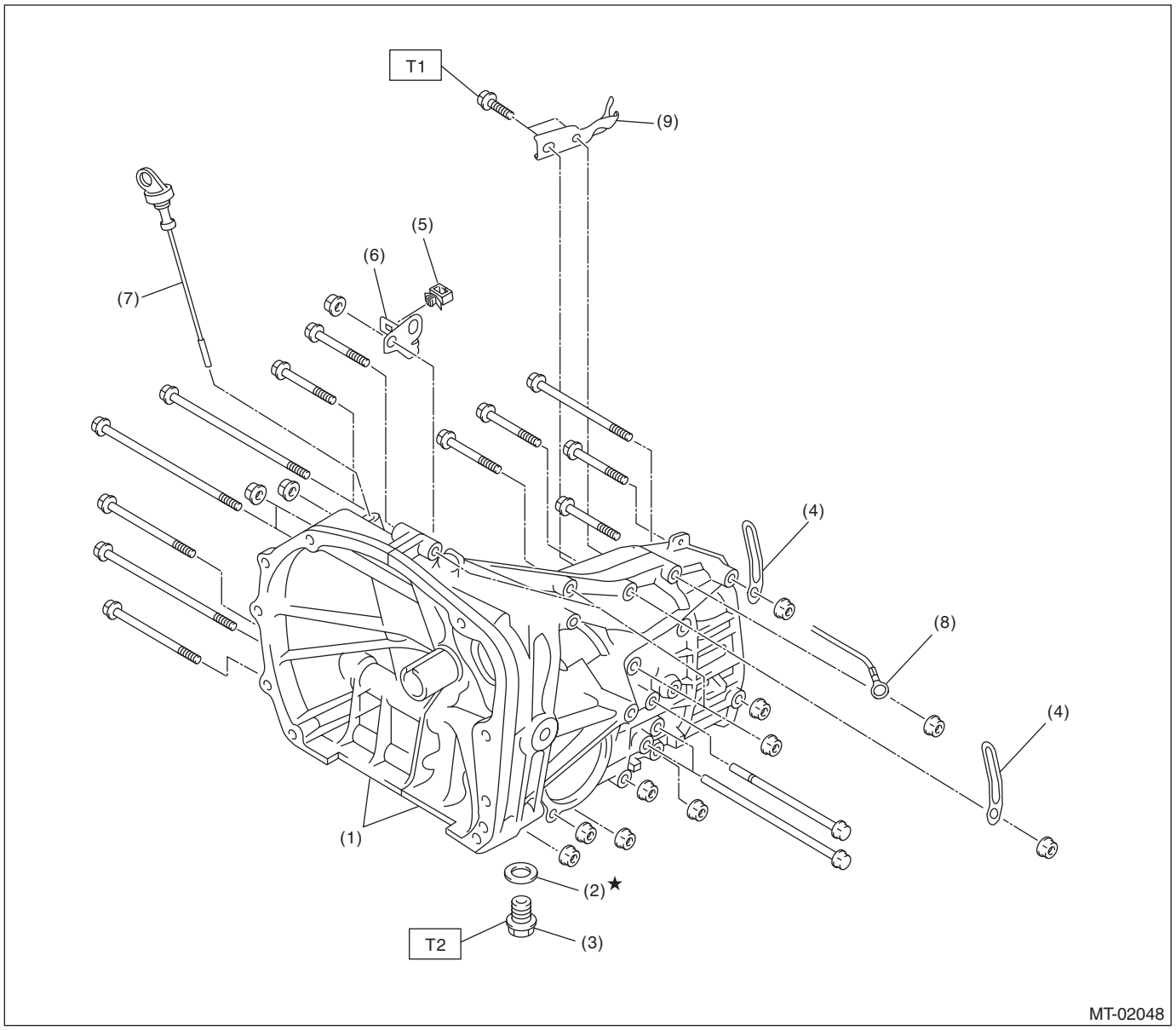

(1)	Transmission case ASSY	(6)	Harness bracket
(2)	Gasket	(7)	Oil level gauge
(3)	Drain plug	(8)	Transmission radio ground cord
(4)	Harness clip	(9)	Select bracket
(5)	Clamp		

Tightening torque:N·m (kgf-m, ft-lb)

T1: 18 (1.8, 13.3)

T2: 44 (4.5, 32.5) (Aluminum gasket, silver)

70 (7.1, 51.6) (Copper gasket, brown)

70 (7.1, 51.6) (Metal gasket, black)

Transmission case tightening torque

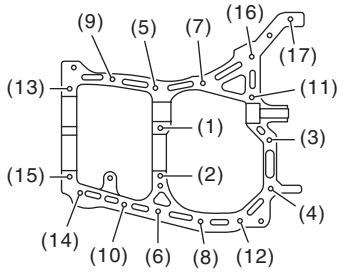

MT-00003

Bolt No.	Bolt size mm	Tightening torque: N·m (kgf-m, ft-lb)
(5) — (15)	8	25 (2.5, 18.4)
(1) — (4) (16), (17)	10	40 (4.1, 29.5)

2. DRIVE PINION ASSEMBLY

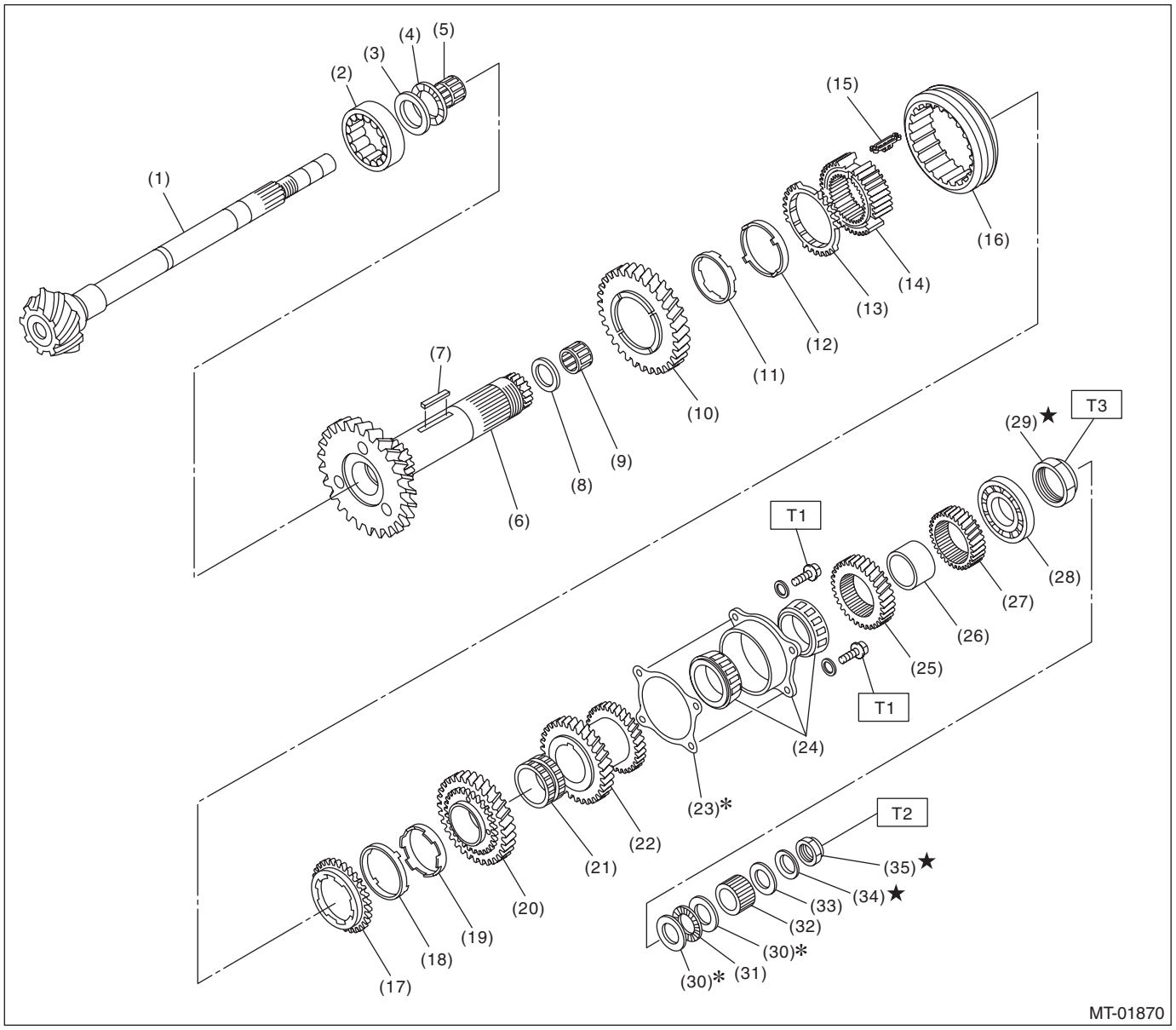

(1) Drive pinion shaft
(2) Roller bearing
(3) Washer
(4) Thrust bearing
(5) Needle bearing
(6) Driven shaft
(7) Key
(8) Drive pinion collar
(9) Needle bearing
(10) 1st driven gear
(11) Inner baulk ring
(12) 1st synchro cone
(13) Outer baulk ring
(14) 1st-2nd synchronizer hub
(15) 1st-2nd shifting insert key
(16) 1st-2nd coupling sleeve
(17) Outer baulk ring
(18) 2nd synchro cone
(19) Inner baulk ring
(20) 2nd driven gear
(21) 2nd driven gear bushing
(22) 3rd-4th driven gear
(23) Drive pinion shim
(24) Double taper roller bearing
(25) 5th driven gear
(26) Drive pinion spacer
(27) 6th driven gear
(28) Ball bearing
(29) Lock nut
(30) Adjusting washer
(31) Thrust bearing
(32) Differential bevel gear sleeve
(33) Adjusting washer
(34) Lock washer
(35) Lock nut

Tightening torque:N·m (kgf-m, ft-lb)
T1: 30 (3.1, 22.1)
T2: 126 (12.8, 92.9)
T3: 440 (44.9, 324.5)

3. MAIN SHAFT FOR SINGLE-RANGE

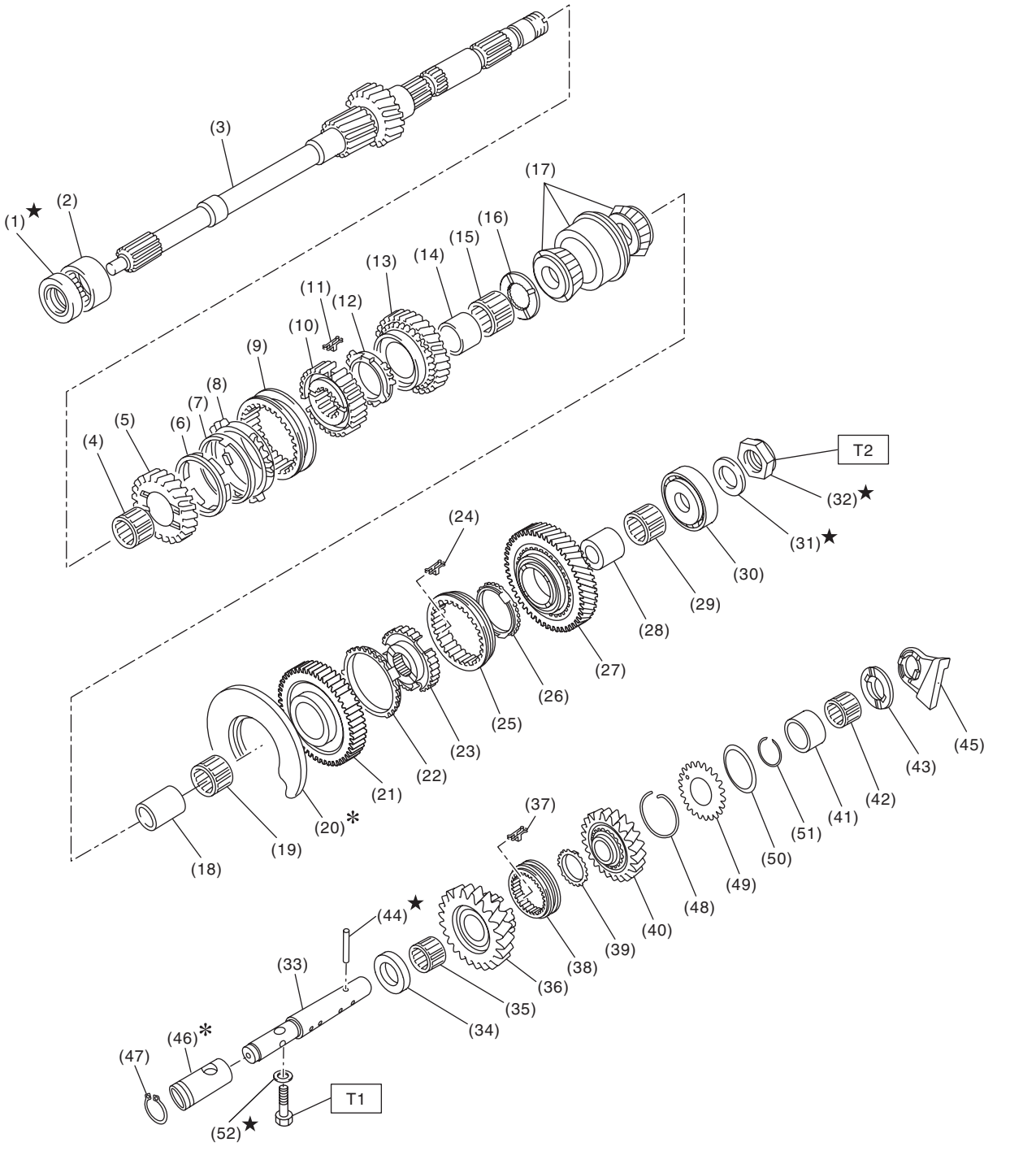

MT-02298

(1) Oil seal
(2) Needle bearing
(3) Transmission main shaft
(4) Needle bearing
(5) 3rd drive gear
(6) Inner baulk ring
(7) 3rd synchro cone
(8) Outer baulk ring
(9) 3rd-4th coupling sleeve
(10) 3rd-4th synchronizer hub
(11) 3rd-4th shifting insert key
(12) 4th baulk ring
(13) 4th drive gear
(14) 4th needle bearing race
(15) Needle bearing
(16) 4th gear thrust washer
(17) Double taper roller bearing
(18) 5th needle bearing race
(19) Needle bearing
(20) Main shaft rear plate
(21) 5th drive gear
(22) 5th baulk ring
(23) 5th-6th synchronizer hub
(24) 5th-6th shifting insert key
(25) 5th-6th coupling sleeve
(26) 6th baulk ring
(27) 6th drive gear
(28) 6th needle bearing race
(29) Needle bearing
(30) Ball bearing
(31) Lock washer
(32) Lock nut
(33) Reverse idler gear shaft
(34) Washer
(35) Needle bearing
(36) Reverse idler gear No. 2
(37) Reverse shifting insert key
(38) Reverse coupling sleeve
(39) Baulk ring
(40) Reverse idler gear
(41) Reverse idler gear collar
(42) Needle bearing
(43) Washer
(44) Straight pin
(45) Oil case guide
(46) Reverse idler gear bushing
(47) Snap ring
(48) Reverse idler spring
(49) Reverse idler sub gear
(50) Friction plate
(51) Snap ring
(52) Gasket

Tightening torque:N·m (kgf-m, ft-lb)
T1: 25 (2.5, 18.4)
T2: 160 (16.3, 118.0)

4. SHIFTER FORK AND SHIFTER ROD

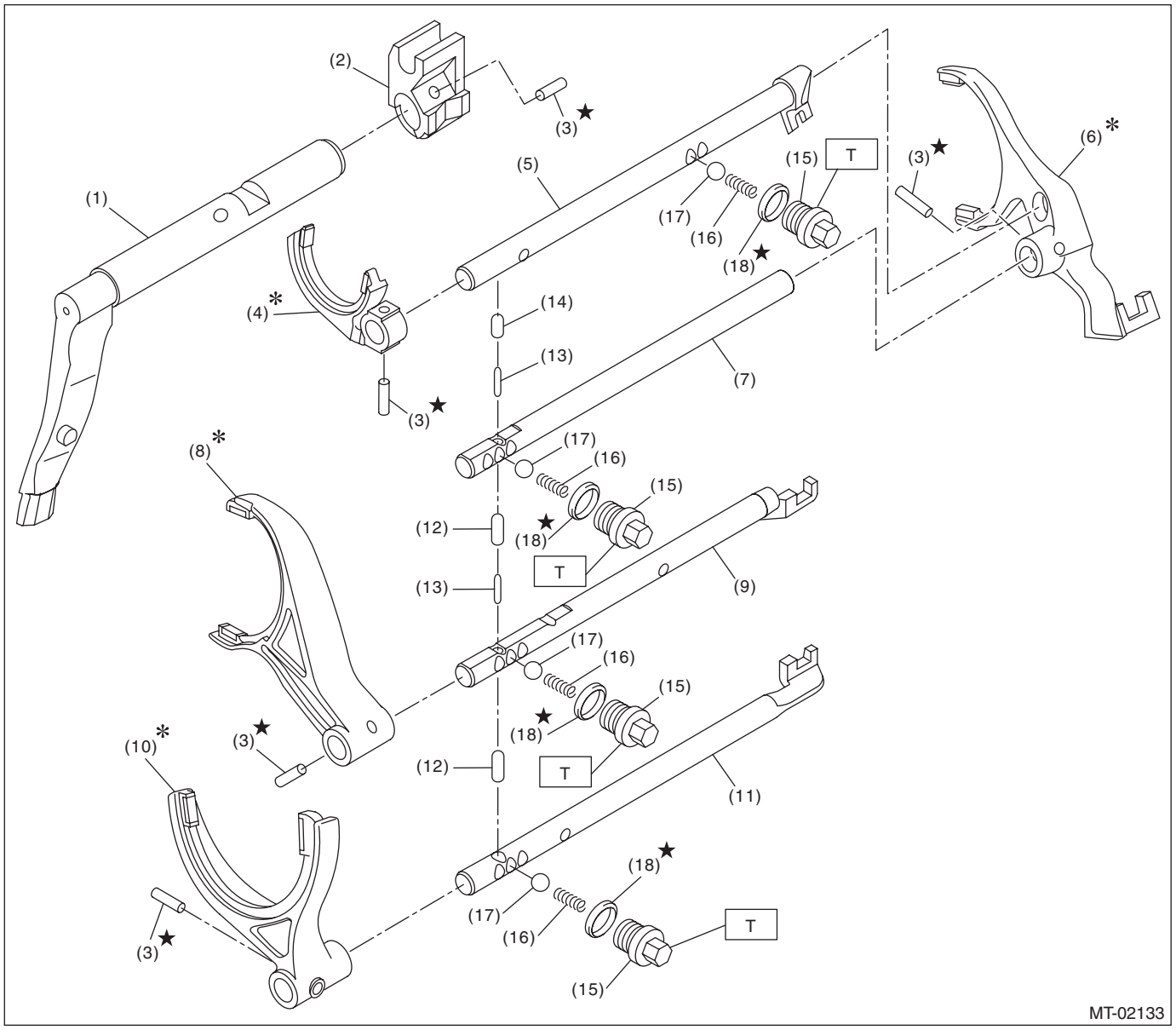

(1) Shifter arm
(2) Selector arm
(3) Spring pin
(4) Reverse shifter fork
(5) Reverse fork rod
(6) 5th-6th shifter fork
(7) 5th-6th fork rod
(8) 3rd-4th shifter fork
(9) 3rd-4th fork rod
(10) 1st-2nd shifter fork
(11) 1st-2nd fork rod
(12) Interlock plunger
(13) Interlock plunger
(14) Interlock plunger
(15) Checking ball plug
(16) Checking ball spring
(17) Check ball
(18) Gasket

Tightening torque:N·m (kgf-m, ft-lb)
T: 20 (2.0, 14.8)

5. TRANSFER CASE AND EXTENSION

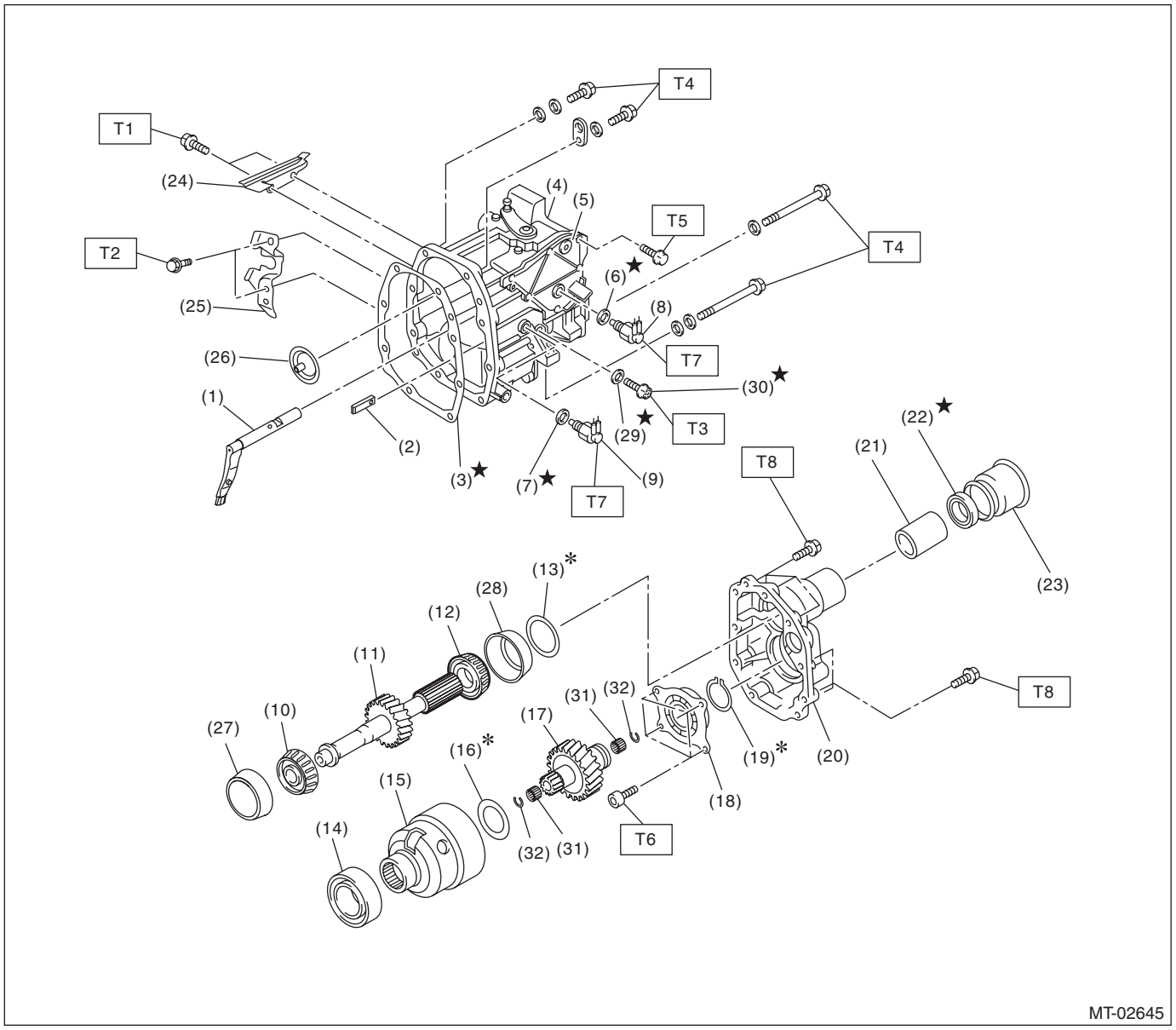

MT-02645

(1) Shifter arm
(2) Interlock plate
(3) Gasket
(4) Transfer case
(5) Transmission cover
(6) Gasket
(7) Gasket
(8) Neutral position switch
(9) Back-up light switch
(10) Roller bearing
(11) Transfer driven gear
(12) Roller bearing
(13) Adjusting washer
(14) Ball bearing
(15) Center differential
(16) Adjusting washer
(17) Transfer drive gear
(18) Ball bearing
(19) Snap ring
(20) Extension case
(21) Bushing
(22) Oil seal
(23) Dust cover
(24) Dust cover (OUTBACK model)
(25) Shift bracket
(26) Oil guide
(27) Outer race
(28) Outer race
(29) Gasket
(30) Precoat bolt
(31) Needle bearing
(32) Snap ring

Tightening torque:N·m (kgf-m, ft-lb)
T1: x***15 (1.5, 11.1)***
T2: 18 (1.8, 13.3)
T3: T3:
T4: 24.5 (2.5, 18.1)
T5: 25 (2.5, 18.4)
T6: 26 (2.7, 19.2)
T7: 32.3 (3.3, 23.8)
T8: 40 (4.1, 29.5)

6. SHIFT LINK ASSEMBLY

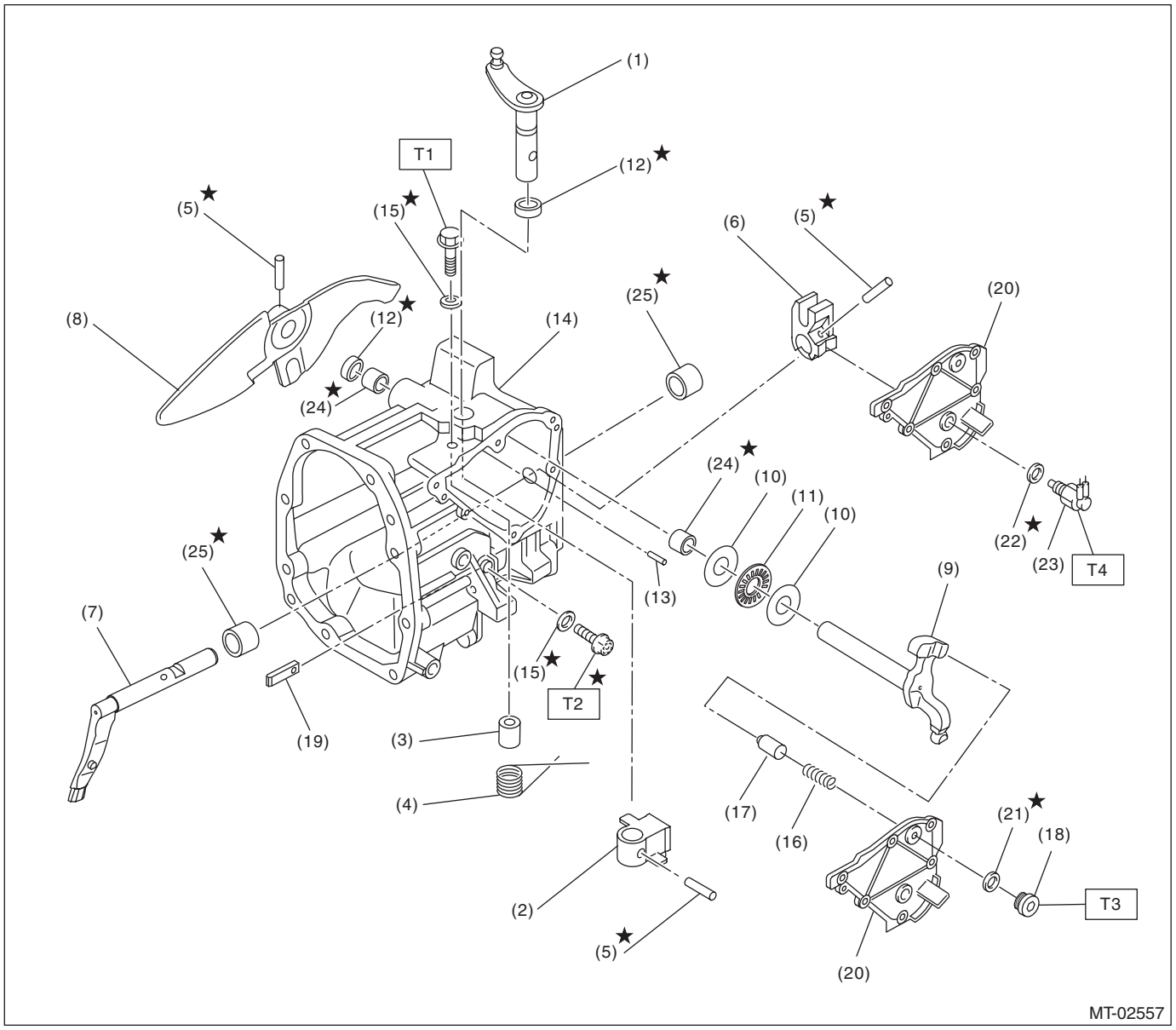

(1) Selector lever COMPL
(2) Selector arm No. 2
(3) Shifter arm collar
(4) Neutral set spring
(5) Spring pin
(6) Selector arm
(7) Shifter arm
(8) Shift lever COMPL
(9) Shifter arm No. 2
(10) Washer
(11) Thrust bearing
(12) Oil seal
(13) Straight pin
(14) Transfer case
(15) Gasket
(16) Checking ball spring
(17) Plunger
(18) Seal bolt
(19) Interlock plate
(20) Transmission cover
(21) Seal ring
(22) Gasket
(23) Neutral position switch
(24) Needle bearing
(25) Roller bearing

Tightening torque:N·m (kgf-m, ft-lb)
T1: 6.4 (0.7, 4.7)
T2: 20 (2.0, 14.8)
T3: 25 (2.5, 18.4)
T4: 32.3 (3.3, 23.8)

7. FRONT DIFFERENTIAL

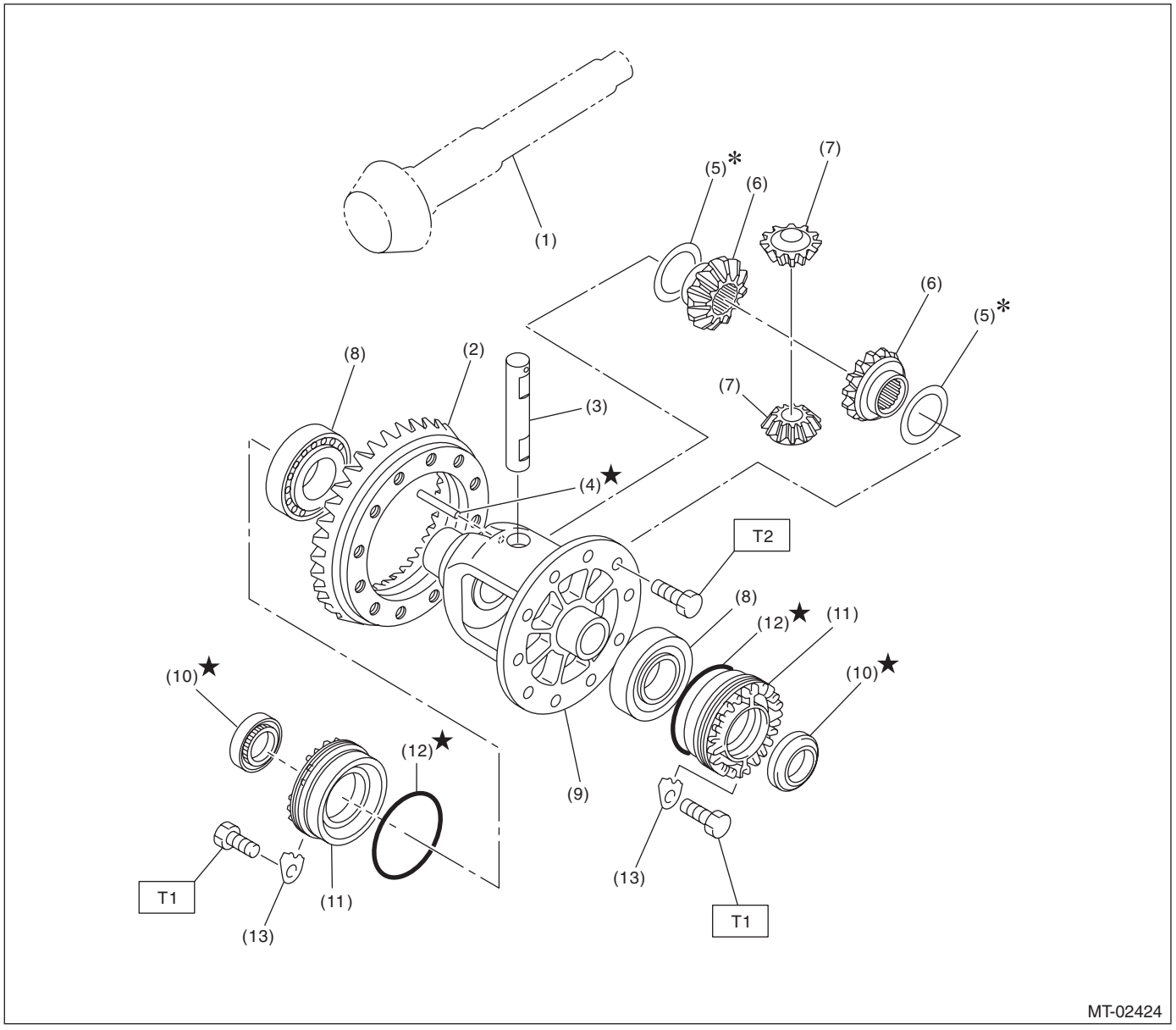

(1) Drive pinion shaft
(2) Hypoid driven gear
(3) Pinion shaft
(4) Straight pin
(5) Washer
(6) Differential bevel gear
(7) Differential bevel pinion
(8) Roller bearing
(9) Differential case
(10) Oil seal
(11) Differential side retainer
(12) O-ring
(13) Retainer lock plate

Tightening torque:N·m (kgf-m, ft-lb)
T1: 25 (2.5, 18.4)
T2: 62 (6.3, 45.7)

8. TRANSMISSION MOUNTING

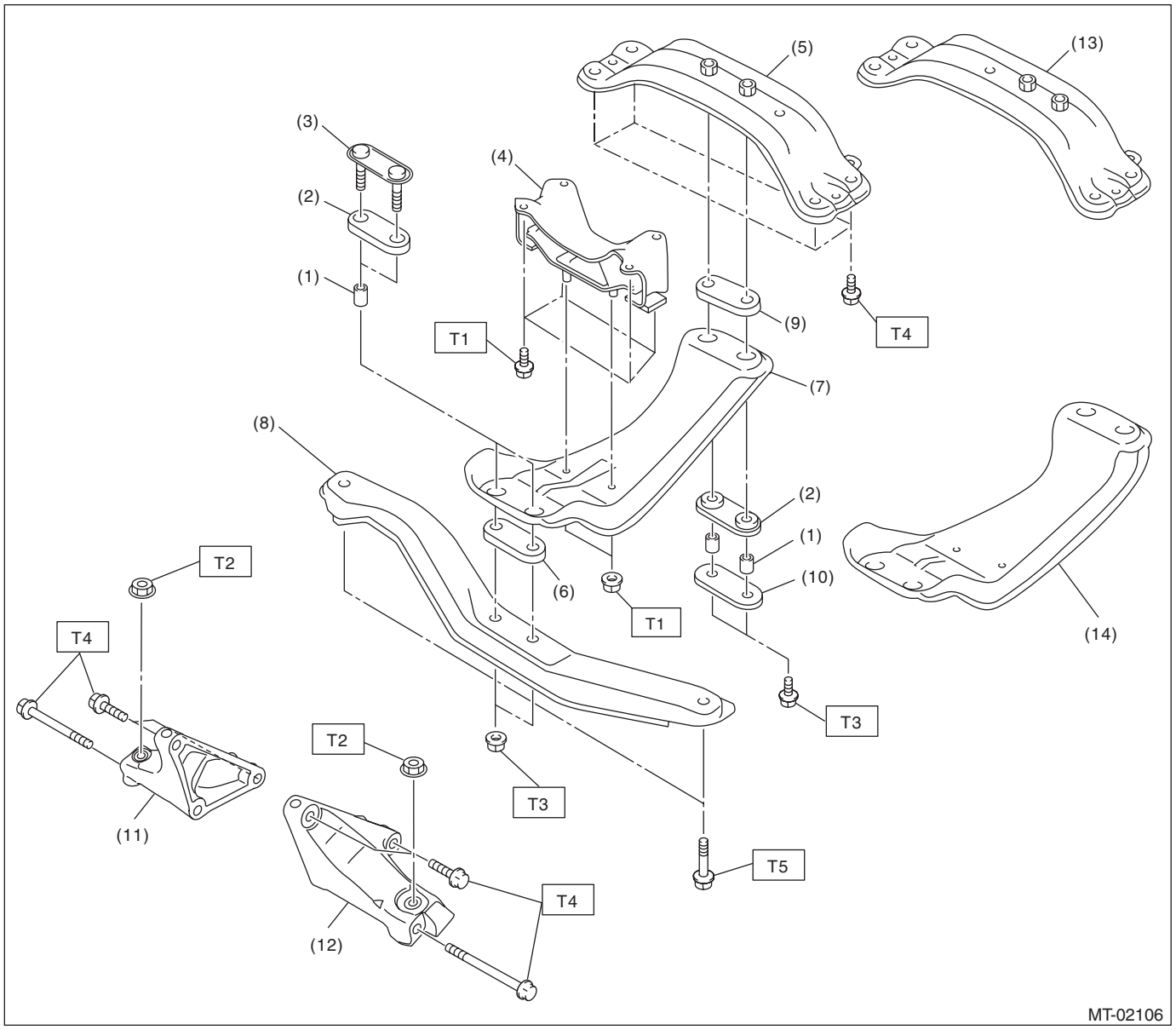

(1)	Spacer	(8)	Front crossmember	***Tightening torque:N·m (kgf-m, ft-lb)***
(2)	Lower cushion rubber	(9)	Rear cushion rubber	***T1: 35 (3.6, 25.8)***
(3)	Front plate	(10)	Rear plate	***T2: 45 (4.6, 33.2)***
(4)	Transmission cushion rubber	(11)	Transmission main mounting bracket (RH)	***T3: 70 (7.1, 51.6)***
(5)	Rear crossmember (turbo model)	(12)	Transmission main mounting bracket (LH)	***T4: 75 (7.6, 55.3)***
(6)	Upper cushion rubber	(13)	Rear crossmember (non-turbo model)	***T5: 140 (14.3, 103.3)***
(7)	Center crossmember (turbo model)	(14)	Center crossmember (non-turbo model)	

C: CAUTION

• Wear appropriate work clothing, including a cap, protective goggles and protective shoes when performing any work.
• Remove contamination including dirt and corrosion before removal, installation or disassembly.
• Keep the disassembled parts in order and protect them from dust and dirt.
• Before removal, installation or disassembly, be sure to clarify the failure. Avoid unnecessary removal, installation, disassembly and replacement.
• When disassembling the case and other light alloy parts, use a plastic hammer to force it apart. Do not pry apart with screwdrivers or other tools.
• Vehicle components are extremely hot after driving. Be wary of receiving burns from heated parts.
• Use SUBARU genuine gear oil, grease or equivalent. Do not mix gear oil, grease, etc. of different grades or manufacturers.
• Be sure to tighten fasteners including bolts and nuts to the specified torque.
• Place shop jacks or rigid racks at the specified points.
• Apply gear oil onto sliding or revolving surfaces before installation.
• Replace deformed or damaged snap rings with new parts.
• Before installing O-rings or oil seals, apply sufficient amount of gear oil to avoid damage and deformation.
• Be careful not to incorrectly install or fail to install O-rings, snap rings and other such parts.
• Before securing a part on a vise, place cushioning material such as wood blocks, aluminum plate, or cloth between the part and the vise.
• Avoid damaging the mating surface of the case.
• Before applying liquid gasket, completely remove the old liquid gasket.

D: PREPARATION TOOL

1. SPECIAL TOOL

ILLUSTRATION	TOOL NUMBER	DESCRIPTION	REMARKS
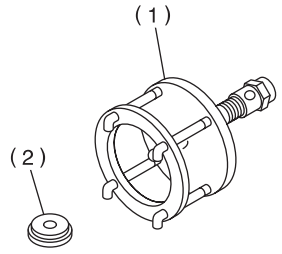 ST-899524100	899524100	PULLER SET	Used for removing the front differential roller bearing. (1) Puller (2) Cap
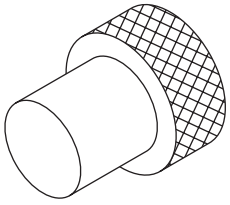 ST-399780104	399780104	WEIGHT	Used for adjusting preload on the front differential roller bearing.
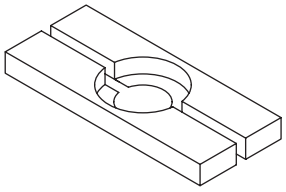 ST-498077000	498077000	REMOVER	• Used for removing the roller bearing of the drive pinion shaft. • Used for removing the transfer driven gear taper roller bearing.
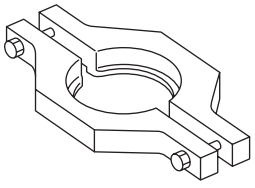 ST-498077600	498077600	CENTER DIFFERENTIAL BEARING REMOVER	Used for removing the center differential ball bearing.

ILLUSTRATION	TOOL NUMBER	DESCRIPTION	REMARKS
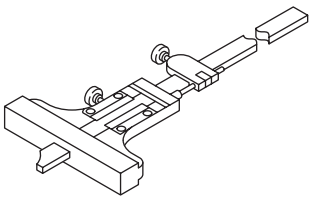 ST-498147001	498147001	DEPTH GAUGE	Used for adjusting the extension end play and main shaft end play.
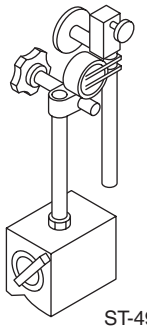 ST-498247001	498247001	MAGNET BASE	• Used for measuring the backlash of bevel pinion gear and hypoid gear. • Used together with DIAL GAUGE (498247100).
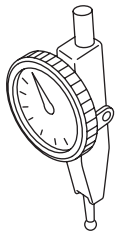 ST-498247100	498247100	DIAL GAUGE	• Used for measuring the backlash of bevel pinion gear and hypoid gear. • Used together with MAGNET BASE (498247001).
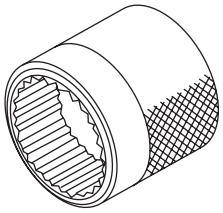 ST18667AA020	18667AA020	HOLDER	• Used for removing and installing the drive pinion shaft lock nut. • Used for measuring the backlash of hypoid gear. • Used for adjusting preload on the front differential roller bearing.
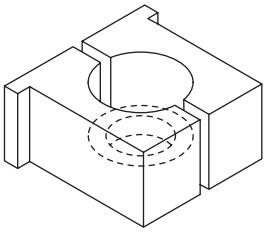 ST-498937000	498937000	TRANSMISSION HOLDER	Used for removing and installing the main shaft lock nut.

ILLUSTRATION	TOOL NUMBER	DESCRIPTION	REMARKS
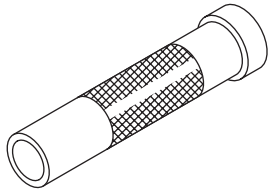 ST-499277100	499277100	BUSHING 1-2 INSTALLER	• Used for installing the drive pinion shaft washer. • Used for installing the front differential roller bearing outer race.
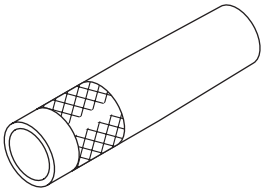 ST-499277200	499277200	INSTALLER	• Used for installing the 2nd driven gear bushing, roller bearings, 3rd-4th driven gear, 5th driven gear and the 6th driven gear. • Used for installing the drive pinion shaft washer.
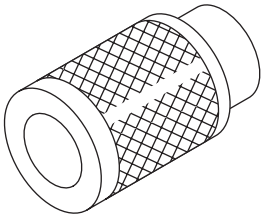 ST-499757002	499757002	INSTALLER	Used for installing the roller bearing (transfer case side) of transfer driven gear.
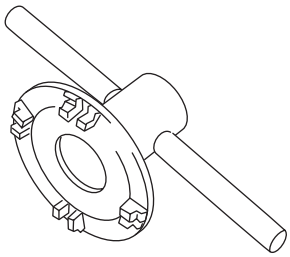 ST18630AA010	18630AA010	WRENCH COMPL RETAINER	• Used for removing and installing the differential side retainer. • Used for adjusting preload on the front differential roller bearing. • WRENCH COMPL RETAINER (18630AA020) can also be used.
ST18722AA000	18722AA000	REMOVER	Used for removing the 5th drive gear and 6th drive gear.

ILLUSTRATION	TOOL NUMBER	DESCRIPTION	REMARKS
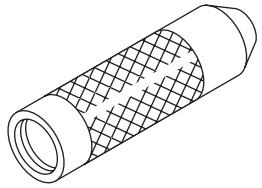 ST-499877000	499877000	RACE 4-5 INSTALLER	• Used for installing the 4th, 5th and 6th drive gear needle bearing races and the main shaft double taper roller bearings. • Used together with REMOVER (899714110).
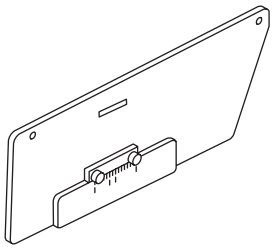 ST-499917500	499917500	DRIVE PINION GAUGE ASSY	Used for adjusting the drive pinion shaft shim.
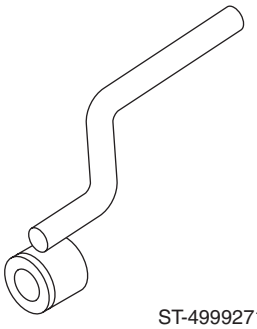 ST-499927100	499927100	HANDLE	Used for backlash measurement of the hypoid gear and preload adjustment of the front differential roller bearing.
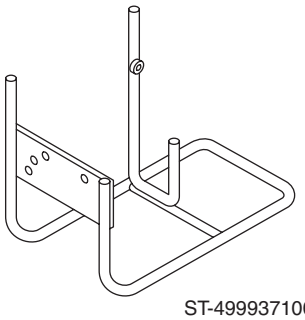 ST-499937100	499937100	TRANSMISSION STAND	Used for disassembling and assembling the transmission.
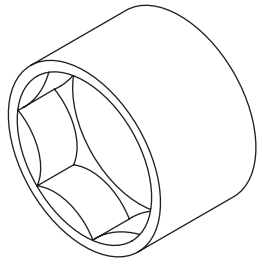 ST-499987003	499987003	SOCKET WRENCH (35)	Used for removing and installing the main shaft lock nut.

ILLUSTRATION	TOOL NUMBER	DESCRIPTION	REMARKS
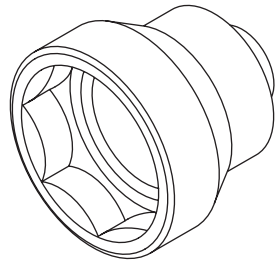 ST-499987300	499987300	SOCKET WRENCH (50)	Used for removing and installing the driven shaft lock nut.
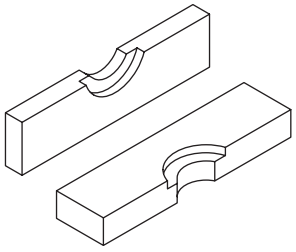 ST-899714110	899714110	REMOVER	Used for removing and installing the parts of main shaft and driven shaft.
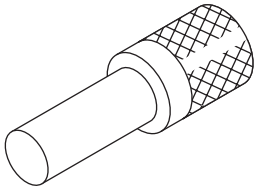 ST-899864100	899864100	REMOVER	• Used for removing the parts of the main shaft. • Used for removing the transfer driven gear roller bearing (transfer case side) and for installing it (extension case side). • Used for removing the transfer drive gear ball bearing.
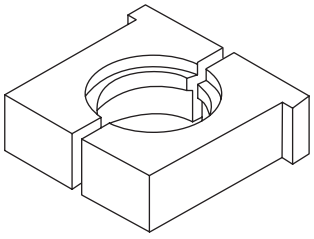 ST18680AA020	18680AA020	HOLDER	• Used for removing and installing the drive pinion shaft lock nut. • Used for removing and installing the driven shaft lock nut.
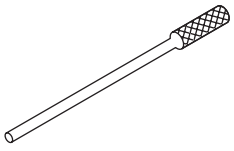 ST-899904100	899904100	STRAIGHT PIN REMOVER	Used for removing and installing the straight pin.

ILLUSTRATION	TOOL NUMBER	DESCRIPTION	REMARKS
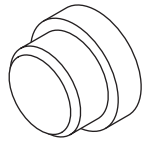 ST-398497701	398497701	ADAPTER	• Used for installing the front differential roller bearing. • Used together with BUSHING 1-2 INSTALLER (499277100).
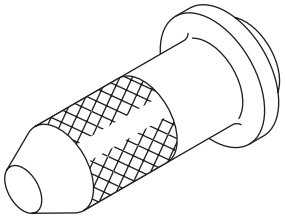 ST-498057300	498057300	INSTALLER	Used for installing the extension case oil seal.
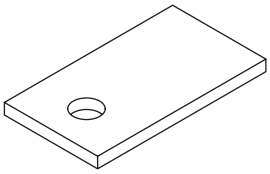 ST-498255400	498255400	PLATE	Used for measuring the hypoid gear backlash.
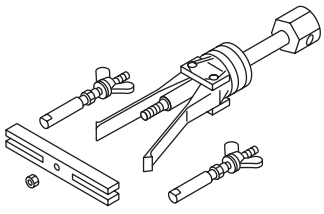 ST-398527700	398527700	PULLER ASSY	• Used for removing the extension case oil seal. • Used for removing the front differential side retainer bearing outer race. • Used for removing the front differential side retainer oil seal.
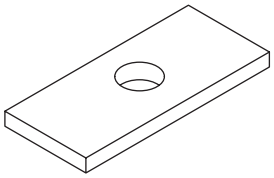 ST-398643600	398643600	GAUGE	Used for adjusting the extension end play.

ILLUSTRATION	TOOL NUMBER	DESCRIPTION	REMARKS
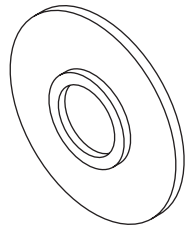 ST-398177700	398177700	INSTALLER	• Used for installing the transfer drive gear ball bearing. • Used for installing the roller bearing of transfer driven gear (extension case side). • Used for installing the 4th drive gear needle bearing race.
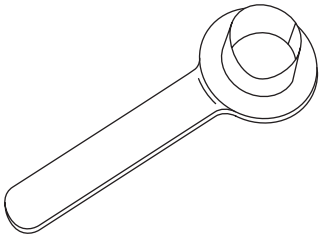 ST28399SA010	28399SA010	OIL SEAL PROTECTOR	Used for protecting the oil seal from damage when inserting the front drive shaft.
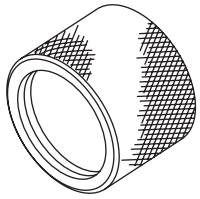 ST18675AA000	18675AA000	DIFFERENTIAL SIDE OIL SEAL INSTALLER	Used for installing the front differential side retainer oil seal.
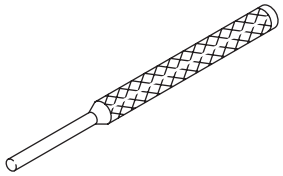 ST-398791700	398791700	SPRING PIN REMOVER 2	Used for installing and removing the spring pin.
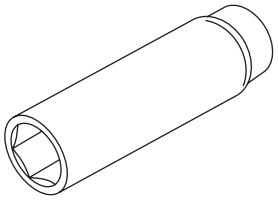 ST18662AA010	18662AA010	SOCKET (27)	Used for removing and installing the drive pinion shaft lock nut.

ILLUSTRATION	TOOL NUMBER	DESCRIPTION	REMARKS
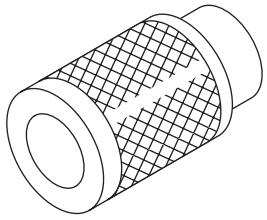 ST-899754112	899754112	PRESS	• Used for removing driven shaft parts. • Used to install the main shaft ball bearing.
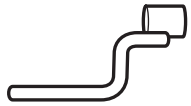 ST18631AA000	18631AA000	HANDLE	Used for installing transfer case assembly and extension case assembly.
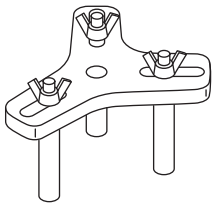 ST18762AA000	18762AA000	COMPRESSOR SPECIAL TOOL	Used for removing the 1st driven gear.
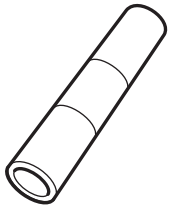 ST18654AA000	18654AA000	INSTALLER	Used for installing the 2nd driven gear bushing.
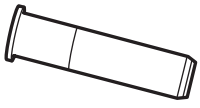 ST18657AA000	18657AA000	INSTALLER	Used for installing the transfer case oil seal.

ILLUSTRATION	TOOL NUMBER	DESCRIPTION	REMARKS
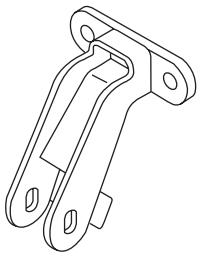 ST41099AJ000	41099AJ000	SPECIAL TOOL H4	Used for removing and installing transmission.
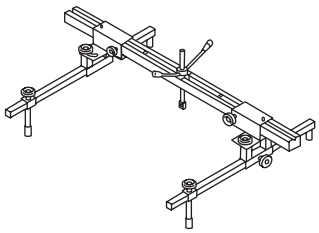 ST99099AJ000	99099AJ000	ENGINE HANGER	• Used for removing and installing transmission. • Used together with CHAIN BALANCER (99099AJ010) and sling chain (general tool).
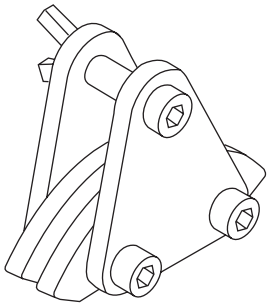 ST99099AJ010	99099AJ010	CHAIN BALANCER	• Used for removing and installing transmission. (Weight of 350 kg (772 lb) is supported) • Used together with ENGINE HANGER (99099AJ000) and sling chain (general tool). • Used to hang the engine while balancing it with the sling chain inserted in this tool.
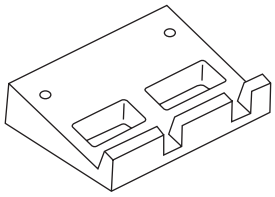 ST-498267200	498267200	CYLINDER HEAD TABLE	Used for installing and removing the roller bearing of the transfer case.
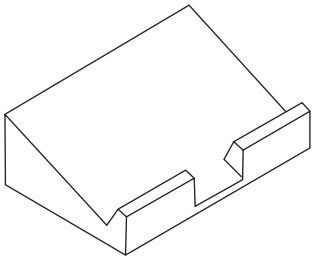 ST-498267300	498267300	CYLINDER HEAD TABLE	Used for installing and removing the roller bearing of the transfer case.

ILLUSTRATION	TOOL NUMBER	DESCRIPTION	REMARKS
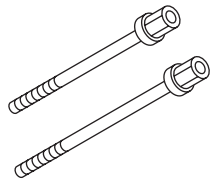 ST18763AA000	18763AA000	COMPRESSOR SHAFT	Used for installing and removing the needle bearing of the transfer case.
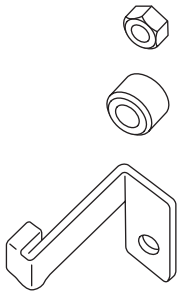 ST-498277200	498277200	STOPPER SET	• Used for installing the needle bearing of the transfer case. • Use only the spacer.

2. GENERAL TOOL

TOOL NAME	REMARKS
Circuit tester	Used for measuring resistance.
TORX® bit T70	Used for installing and removing the drain plug.
Spring pin remover	Used for removing and installing the spring pin. (3 — 3.3 mm)
Socket driver (TORX® 45 size, tamper resistant type)	Used for removing and installing interlock plate.
Sling chain	Used for removing and installing transmission. • Length: 0.8 — 1 m (2.6 — 3.3 ft) • Load capacity: 1.2 t (2646 lb) or more • Diameter: 6 mm (0.24 in) or 6.3 mm (0.25 in) • Chain external width: 23.5 mm (0.93 in) or less • Chain internal width: 8.5 mm (0.33 in) or more
Screw shackle	Used for removing and installing transmission. • Load capacity: 250 kg (551 lb) or more • Use two pieces.

2. Transmission Gear Oil

A: INSPECTION

1) Park the vehicle on a level surface.
2) Turn the ignition switch to OFF, and wait until the engine cools.
3) Remove the collector cover. (turbo model)
4) Remove the oil level gauge and wipe it clean.
5) Reinsert the oil level gauge all the way. Be sure that the oil level gauge is correctly inserted in the proper direction.
6) Pull out the oil level gauge again, and check the oil level. If it is below the lower level, add oil through the oil level gauge hole to bring the level up to the upper level.

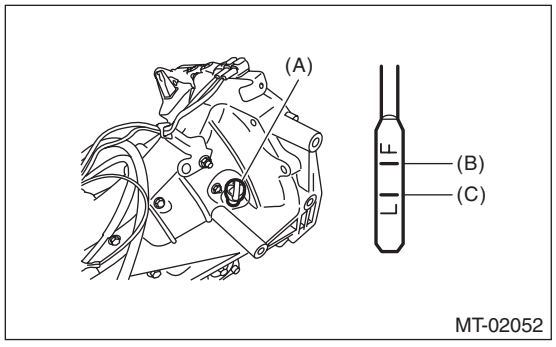

(A) Oil level gauge
(B) Upper level
(C) Lower level

B: REPLACEMENT

1) Pull out the oil level gauge.
2) Lift up the vehicle.
3) Using the TORX® bit T70, remove the drain plug, and drain the transmission gear oil completely.

CAUTION:
• Immediately after the vehicle has been running or after idling for a long time, the transmission gear oil will be hot. Be careful not to receive burns.
• Be careful not to spill the transmission gear oil on the exhaust pipe, to prevent emission of smoke or causing a fire. If gear oil is spilt, wipe it off completely.

4) Tighten the drain plug using TORX® bit T70.

NOTE:
Use a new gasket.

Tightening torque:
44 N·m (4.5 kgf-m, 32.5 ft-lb) (Aluminum gasket silver)
70 N·m (7.1 kgf-m, 51.6 ft-lb) (Copper gasket brown)
70 N·m (7.1 kgf-m, 51.6 ft-lb) (Metal gasket black)

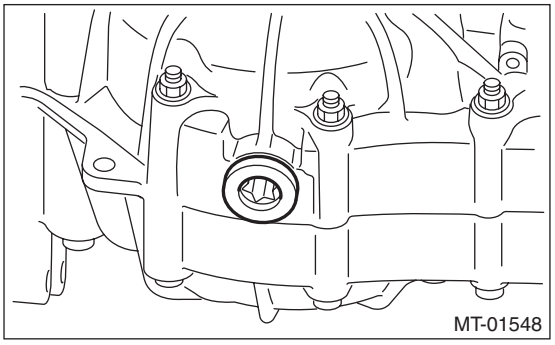

5) Lower the vehicle.
6) Pour gear oil through the oil level gauge hole.

Recommended gear oil:
GL-5 (75W-90) or equivalent

Gear oil capacity:
3.7 ℓ (3.9 US qt, 3.3 Imp qt)

7) Measure the transmission gear oil amount, and check that it is within the specification.
8) Install the collector cover. (turbo model)

3. Manual Transmission Assembly

A: REMOVAL

1) Set the vehicle on a lift.
2) Remove the front wheels.
3) Open the front hood completely.
4) Remove the collector cover. (turbo model)
5) Remove the air intake duct. <Ref. to IN(H4SO)-9, REMOVAL, Air Intake Duct.> <Ref. to IN(H4DOTC)-12, REMOVAL, Air Intake Duct.>
6) Remove the 10 clips and detach the grille bracket.

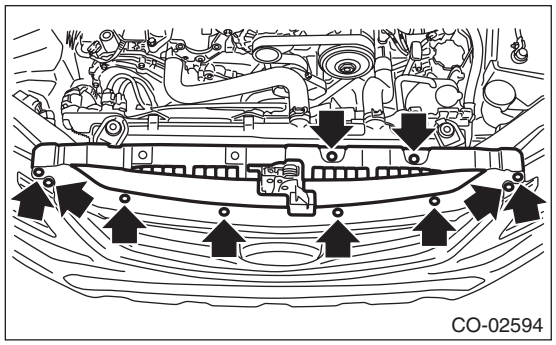
CO-02594

7) Disconnect the ground cable from battery.
8) Remove the air intake boot assembly. (non-turbo model) <Ref. to IN(H4SO)-8, REMOVAL, Air Intake Boot.>
9) Remove the intercooler and the intercooler stay. (turbo model) <Ref. to IN(H4DOTC)-17, REMOVAL, Intercooler.>
10) Disconnect the engine harness connector.

- Non-turbo model

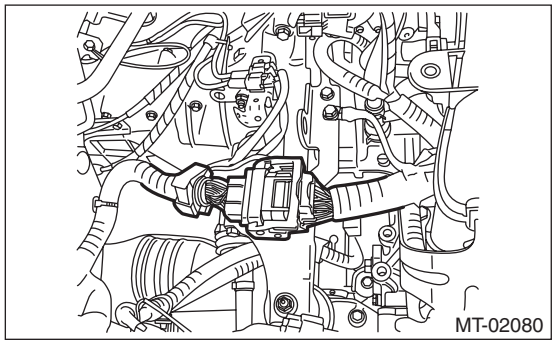
MT-02080

- Turbo model

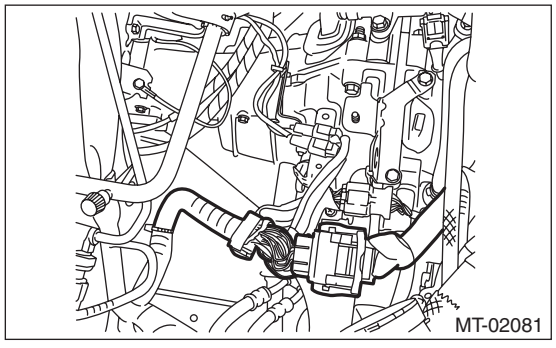
MT-02081

11) Disconnect the connector back-up light switch & neutral position switch.

- Non-turbo model

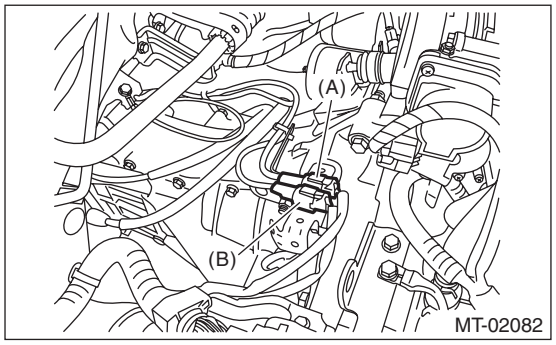

MT-02082

(A) Neutral position switch connector (Brown)
(B) Back-up light switch connector (Gray)

- Turbo model

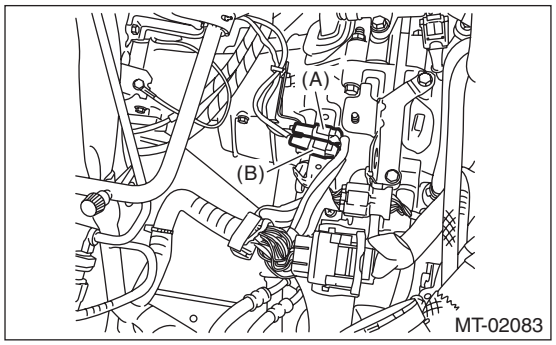

MT-02083

(A) Neutral position switch connector (Brown)
(B) Back-up light switch connector (Gray)

12) Disconnect the transmission radio ground terminal.

- Non-turbo model

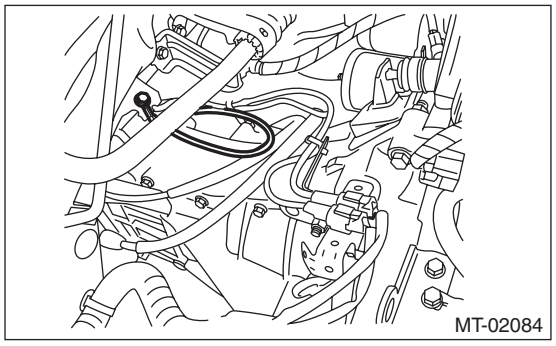
MT-02084

• Turbo model

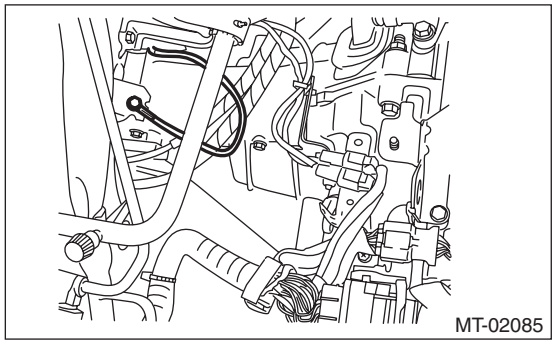
MT-02085

13) Remove the throttle body. (non-turbo model) <Ref. to FU(H4SO)-15, REMOVAL, Throttle Body.>
14) Remove the starter. <Ref. to SC(H4SO)-9, REMOVAL, Starter.>
15) Remove the operating cylinder from the transmission, and suspend on a wire.

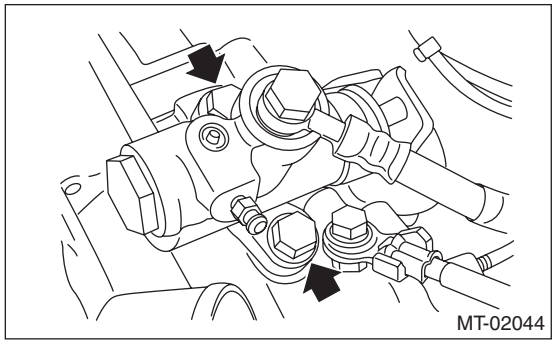
MT-02044

16) Lift up the vehicle.
17) Remove the front under cover. <Ref. to EI-35, REMOVAL, Front Under Cover.>
18) Drain transmission gear oil completely. <Ref. to 6MT-24, REPLACEMENT, Transmission Gear Oil.>
19) Remove the front, center and rear exhaust pipes. (non-turbo model) <Ref. to EX(H4SO)-5, REMOVAL, Front Exhaust Pipe.> <Ref. to EX(H4SO)-8, REMOVAL, Center Exhaust Pipe.> <Ref. to EX(H4SO)-9, REMOVAL, Rear Exhaust Pipe.>
20) Remove the center and rear exhaust pipes. (turbo model) <Ref. to EX(H4DOTC)-12, REMOVAL, Center Exhaust Pipe.> <Ref. to EX(H4DOTC)-15, REMOVAL, Rear Exhaust Pipe.>

CAUTION:
When removing the exhaust pipes, make sure that each exhaust pipe does not drop off.

21) Remove the heat shield cover.

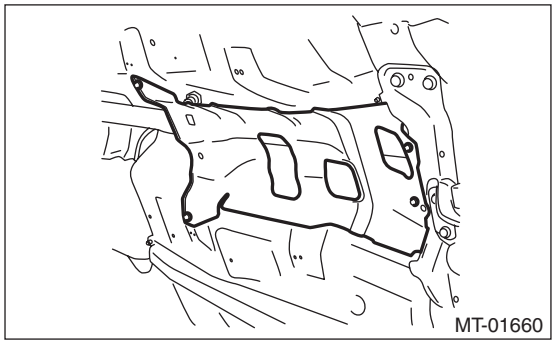
MT-01660

22) Remove the steering shaft universal joint. <Ref. to PS-21, REMOVAL, Universal Joint.>
23) Remove the propeller shaft. <Ref. to DS-10, REMOVAL, Propeller Shaft.>
24) Remove the MT gear shift cable and MT gear select cable from MT gear shift lever. <Ref. to CS-57, REMOVAL, MT Gear Shift Lever.>

CAUTION:
• Do not bend MT gear shift cable and MT gear select cable at a sharp angle.
• Disconnect the MT gear shift cable and MT gear select cable at the MT gear shift lever side.
• Always use new MT gear select cable if the cable is removed from selector lever COMPL of transmission side.

25) Disconnect the stabilizer link from the front arm. <Ref. to FS-29, REMOVAL, Front Stabilizer.>
26) Remove the bolt securing the ball joint of the front arm to the housing, then separate the front arms and the housing. <Ref. to FS-32, REMOVAL, Front Ball Joint.>
27) Separate the front drive shafts on both sides from the transmission. <Ref. to DS-48, REMOVAL, Front Drive Shaft.>
28) Lower the vehicle.
29) Remove the engine hanger rear, and install the engine hanger rear for turbo model. (non-turbo model)

Tightening torque:
16 N·m (1.6 kgf-m, 11.8 ft-lb)

Part No. 10004AA180 Engine hanger rear

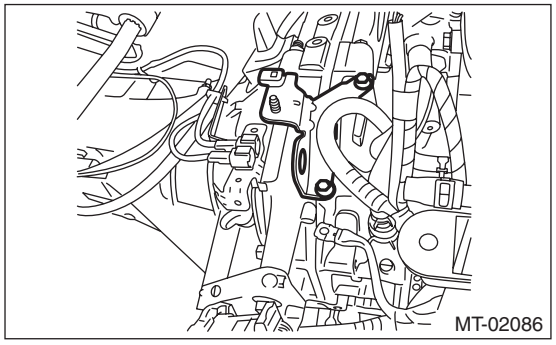
MT-02086

30) Remove the nuts connecting the engine mounting and the transmission main mounting bracket.

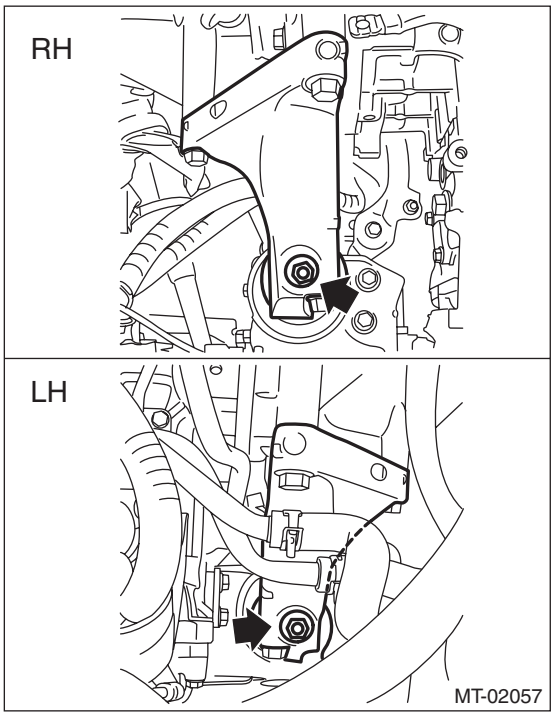

31) Set the ST on the vehicle.

CAUTION:
• Set the chain so that it does not contact the sensors.
• Set the arms of ST (ENGINE HANGER) at the locations shown in the figure.

ST1 99099AJ000 ENGINE HANGER
ST2 99099AJ010 CHAIN BALANCER

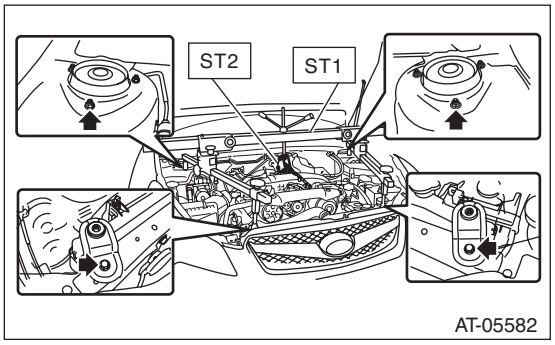

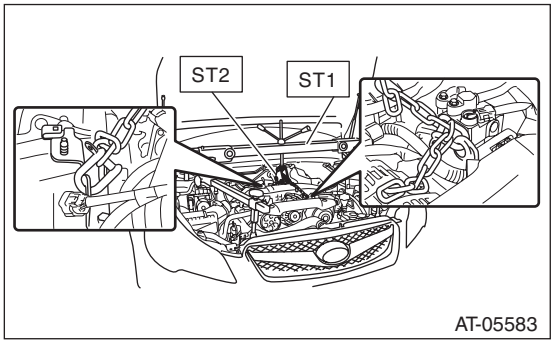

32) Remove the stopper rod.

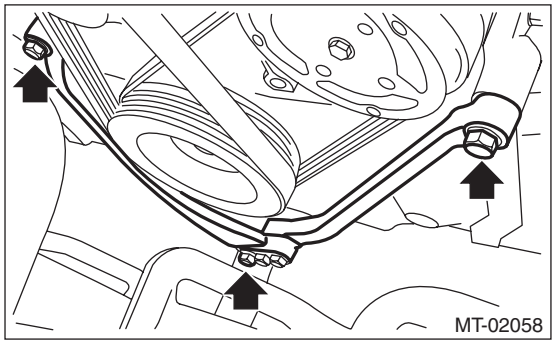

33) Lift the engine slightly and remove the bolts of front cushion rubber.
34) Remove the nut and bolt of the front cushion rubber, then remove the front cushion rubber.

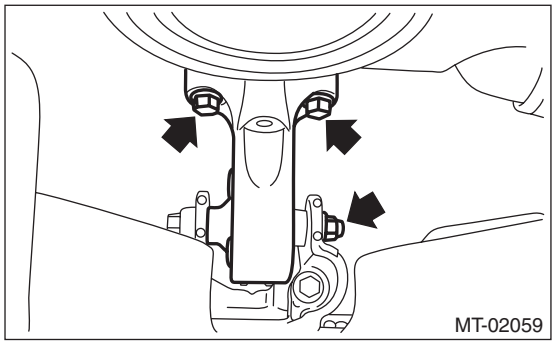

35) Temporarily attach ST by using two bolts.
ST 41099AJ000 SPECIAL TOOL H4

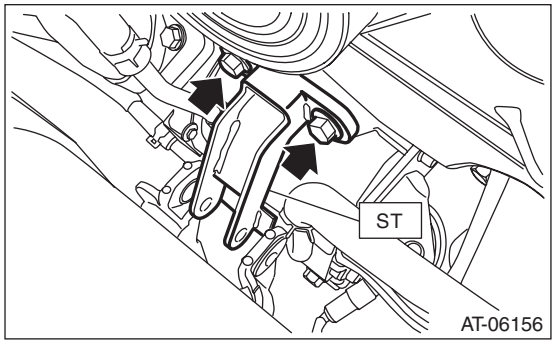

36) Lift up the engine unit high enough to install the bolt and nut to vehicle.

CAUTION:
• Do not lift up higher than enough level to install the ST to avoid damage to the hoses and pipes inside the engine room.
• Do not tighten the bolts and nuts excessively, or the engine mounting bracket may be deformed.

NOTE:
If it is difficult to pull out the stud bolt from transmission mounting bracket, slightly shake the engine unit while lifting up.

37) Tighten the mounting bolts on the engine side.

Tightening torque:
25 N·m (2.6 kgf-m, 18.4 ft-lb)

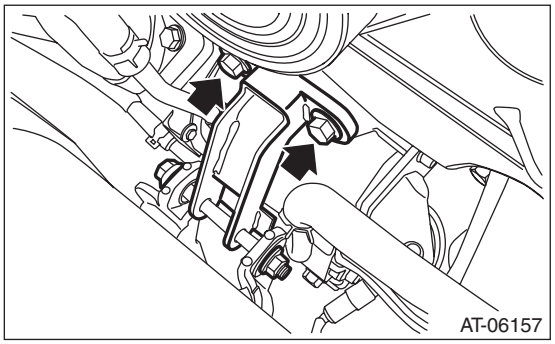

38) Remove the ST (ENGINE HANGER).
39) Remove the transmission main mounting bracket.

NOTE:
First, remove the transmission mounting bracket on the right side of vehicle, and then tilt the engine unit to remove the left transmission mounting bracket.

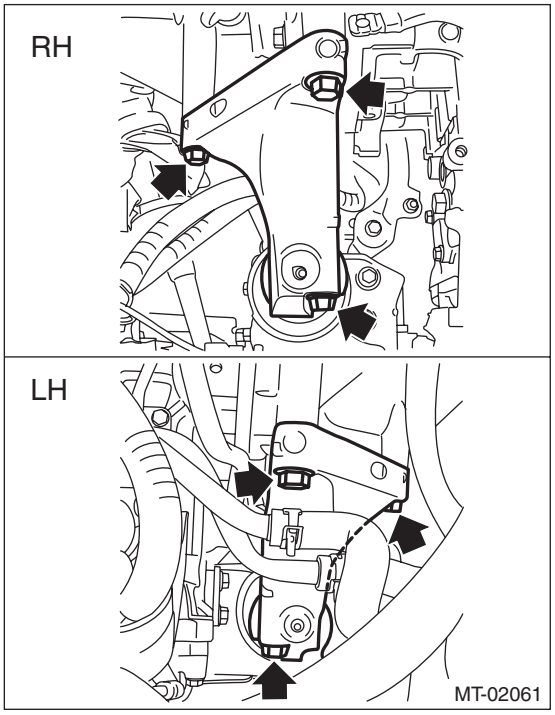

40) Remove the two mounting bolts on the upper side of the transmission.

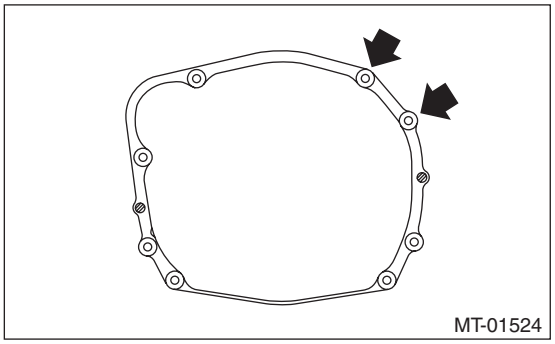

41) Set the ST (ENGINE HANGER) again to loosen the chain sling.
42) Lift up the vehicle.
43) Place the transmission jack under the transmission.

CAUTION:
Always support the transmission case with a transmission jack.

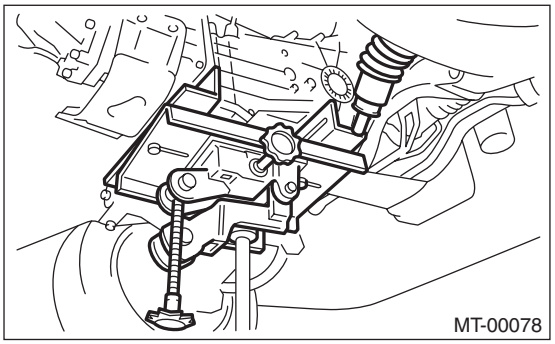

44) Remove the bolts and nuts which hold lower side of transmission to engine.

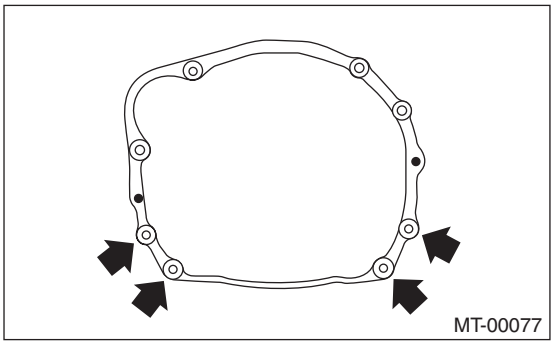

45) Remove the front crossmember and rear crossmember from the vehicle.

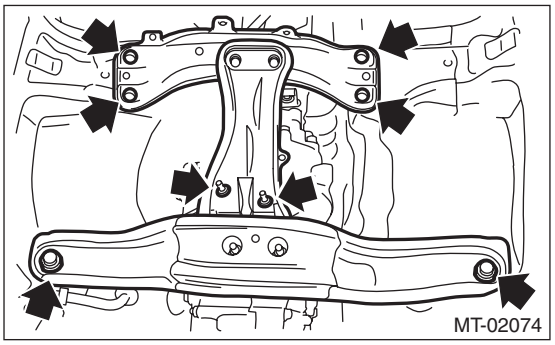

46) Lower the transmission rear end (dust cover rear end).

CAUTION:
When lowering the transmission rear end, be careful not to let the converter case and steering mechanical parts contact each other.

NOTE:
Lower the transmission rear end by approx. 80 mm (3.1 in) (reference).
47) Rotate the handle of ST (ENGINE HANGER) to apply tension to the chain sling.

48) Remove the transmission assembly.

NOTE:
• Move the transmission jack towards the rear until the main shaft is withdrawn from the clutch disc.
• Remove it while moving the transmission jack up and down so that the engine and transmission remain directly aligned.

49) Remove the transmission cushion rubber.

B: INSTALLATION

1) Replace the differential side retainer oil seal. <Ref. to 6MT-36, REPLACEMENT, Differential Side Retainer Oil Seal.>

NOTE:
Be sure to replace the differential side retainer oil seal after removing the front drive shaft.

ST 18675AA000 DIFFERENTIAL SIDE OIL SEAL INSTALLER

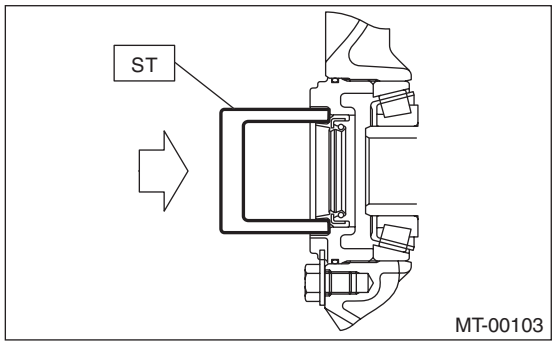

2) Install the transmission cushion rubber to the transmission assembly, and tighten bolt (A).

3) Install the transmission cushion rubber to the center crossmember, and tighten the nut (B).

Tightening torque:
Bolt (A)
35 N·m (3.6 kgf-m, 25.8 ft-lb)
Nut (B)
35 N·m (3.6 kgf-m, 25.8 ft-lb)

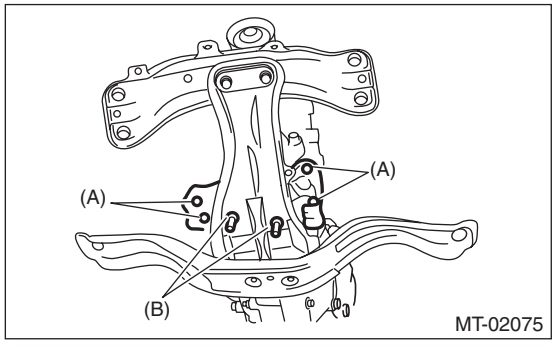

4) Tap the transmission hanger in the rear side of transmission with a rubber hammer to bend it until it is in close contact with the transmission case.

CAUTION:
Do not apply excessive load or impact to the transmission case.

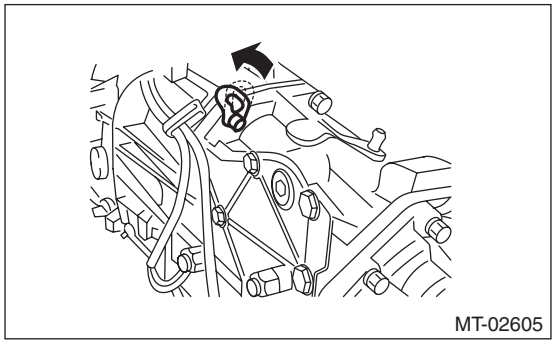

5) Install the transmission onto the engine.

CAUTION:
This operation requires at least two persons.

NOTE:
Keep the engine level.
(1) Lift up the transmission gradually using a transmission jack.
(2) Engage at the spline section.

NOTE:
Be careful not to hit the main shaft against the clutch housing cover.

6) Temporarily tighten the bolts and nuts which hold lower side of transmission to engine.

7) Install the front crossmember and rear crossmember.

Tightening torque:
T1: 75 N·m (7.6 kgf-m, 55.3 ft-lb)
T2: 140 N·m (14.3 kgf-m, 103.3 ft-lb)

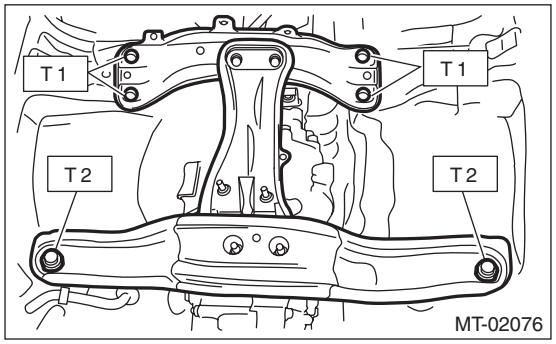

8) Take out the transmission jack.

9) Tighten the bolts and nuts which hold the lower side of transmission to the engine.

Tightening torque:
50 N·m (5.1 kgf-m, 36.9 ft-lb)

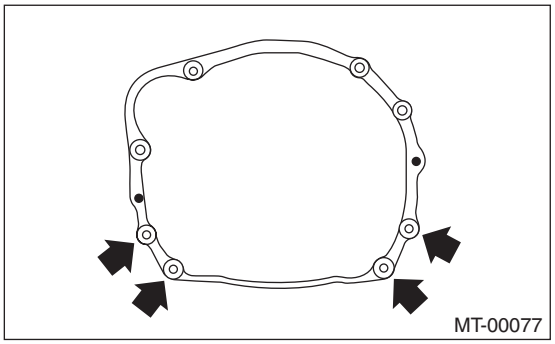

10) Lower the vehicle.
11) Install the two mounting bolts on the upper side of the transmission.

Tightening torque:
50 N·m (5.1 kgf-m, 36.9 ft-lb)

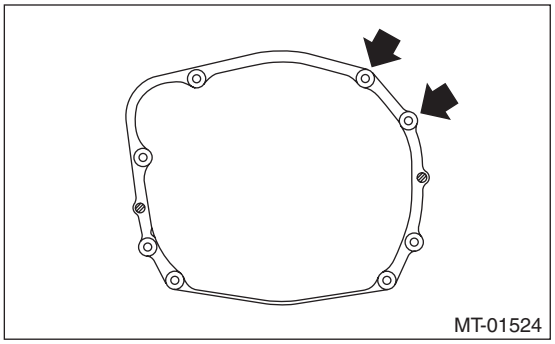

12) Remove the ST (ENGINE HANGER).
13) Install the transmission main mounting bracket.

NOTE:
Incline the engine, and install the transmission main mounting bracket for the left side of the vehicle first.

Tightening torque:
75 N·m (7.6 kgf-m, 55.3 ft-lb)

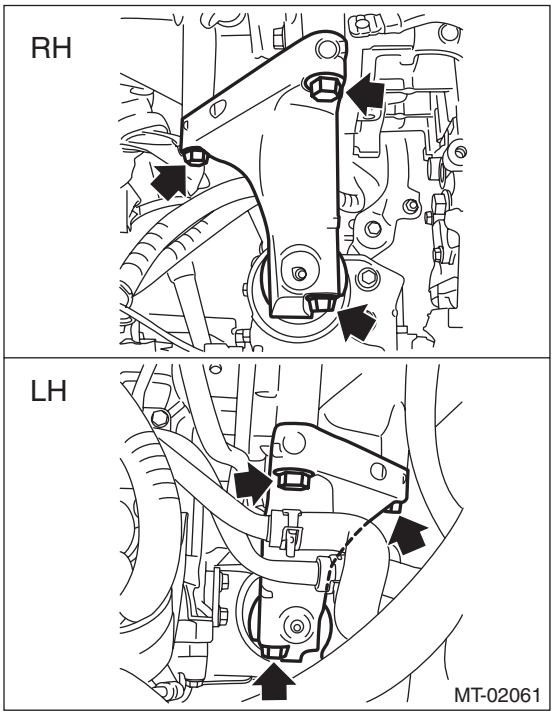

14) Attach the ST (ENGINE HANGER) again.
15) Remove the bolts from ST (SPECIAL TOOL H4).

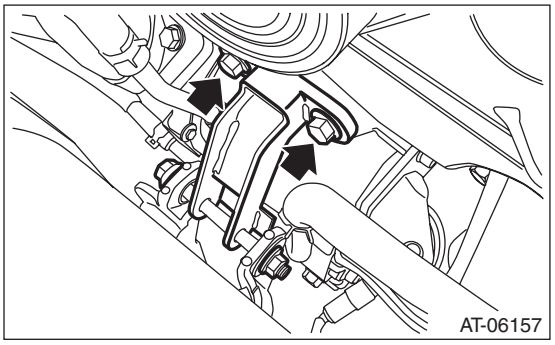

16) Remove the bolt and nut to remove ST (SPECIAL TOOL H4).
17) Temporarily attach the front cushion rubber with bolts.

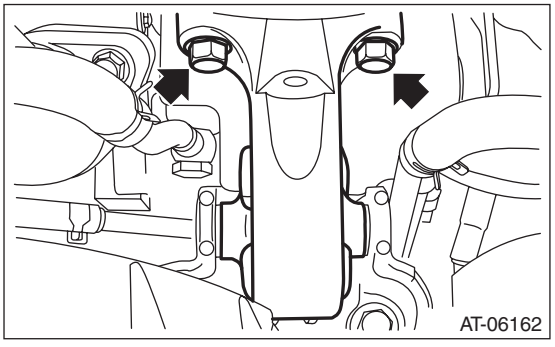

18) Install the bolt and nut to the front cushion rubber.

19) Tighten the bolts and nuts of front cushion rubber.

NOTE:
Always start tightening from the bolts on the engine side.

Tightening torque:
T1: 25 N·m (2.5 kgf-m, 18.4 ft-lb)
T2: 45 N·m (4.6 kgf-m, 33.2 ft-lb)

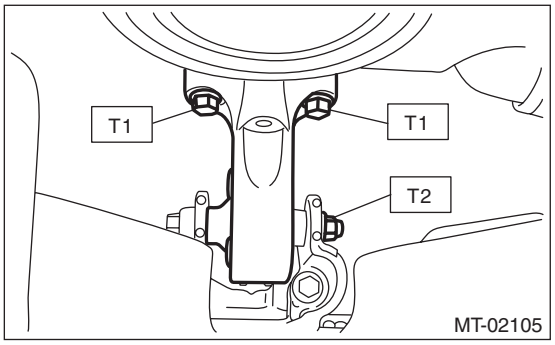

20) Remove the ST (ENGINE HANGER) from the vehicle.
21) Install the stopper rod.

Tightening torque:
36 N·m (3.7 kgf-m, 26.6 ft-lb)

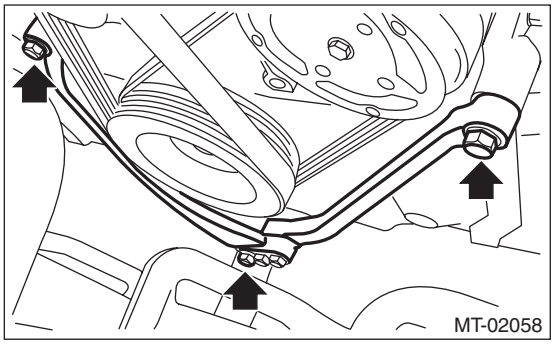

22) Tighten the nuts connecting the engine mount and the transmission main mounting bracket.

Tightening torque:
45 N·m (4.6 kgf-m, 33.2 ft-lb)

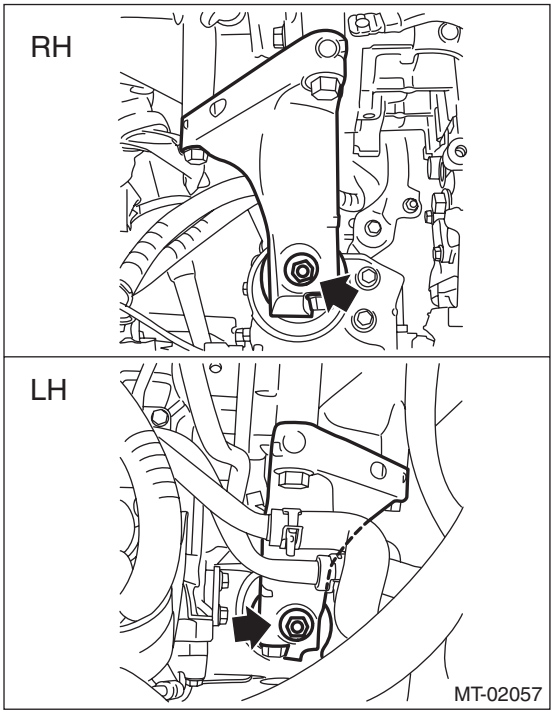

23) Remove the engine hanger rear for turbo model and install the engine hanger rear for non-turbo model. (non-turbo model)

Tightening torque:
16 N·m (1.6 kgf-m, 11.8 ft-lb)
24) Install the starter. <Ref. to SC(H4SO)-10, INSTALLATION, Starter.>
25) Install the operating cylinder.

Tightening torque:
37 N·m (3.8 kgf-m, 27.3 ft-lb)

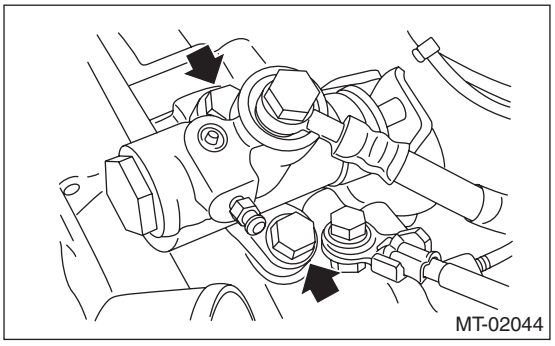

26) Lift up the vehicle.
27) Install the front drive shaft into the transmission. <Ref. to DS-49, INSTALLATION, Front Drive Shaft.>
28) Insert the front arm ball joint into the housing lower part. <Ref. to FS-33, INSTALLATION, Front Ball Joint.>

29) Attach the stabilizer link to the front arm. <Ref. to FS-31, INSTALLATION, Front Stabilizer.>
30) Install the MT gear shift cable and MT gear select cable to MT gear shift lever. <Ref. to CS-60, INSTALLATION, MT Gear Shift Lever.>

CAUTION:
• Do not bend MT gear shift cable and MT gear select cable at a sharp angle.
• Always use new MT gear select cable if the cable is removed from selector lever COMPL of transmission side.

31) Install the propeller shaft. <Ref. to DS-11, INSTALLATION, Propeller Shaft.>
32) Install the steering shaft universal joint. <Ref. to PS-22, INSTALLATION, Universal Joint.>
33) Install the heat shield cover. <Ref. to EI-168, INSTALLATION, Heat Shield Cover.>
34) Install the front, center and rear exhaust pipe. (non-turbo model) <Ref. to EX(H4SO)-6, INSTALLATION, Front Exhaust Pipe.> <Ref. to EX(H4SO)-8, INSTALLATION, Center Exhaust Pipe.> <Ref. to EX(H4SO)-9, INSTALLATION, Rear Exhaust Pipe.>
35) Install the center and rear exhaust pipe. (turbo model) <Ref. to EX(H4DOTC)-13, INSTALLATION, Center Exhaust Pipe.> <Ref. to EX(H4DOTC)-15, INSTALLATION, Rear Exhaust Pipe.>
36) Install the front under cover. <Ref. to EI-35, INSTALLATION, Front Under Cover.>
37) Lower the vehicle.
38) Install the throttle body. (non-turbo model) <Ref. to SC(H4SO)-10, INSTALLATION, Starter.>
39) Connect the following connectors.
(1) Transmission radio ground terminal

Tightening torque:
13 N·m (1.3 kgf-m, 9.6 ft-lb)

(2) Neutral position switch connector (Brown)
(3) Back-up light switch connector (Gray)
(4) Engine harness connectors

40) Fill transmission gear oil through the transmission oil level gauge hole. <Ref. to 6MT-24, Transmission Gear Oil.>
41) Install the air intake boot assembly. (non-turbo model) <Ref. to IN(H4SO)-8, INSTALLATION, Air Intake Boot.>
42) Install the intercooler and the intercooler stay. (turbo model) <Ref. to IN(H4DOTC)-18, INSTALLATION, Intercooler.>
43) Attach the grille bracket.

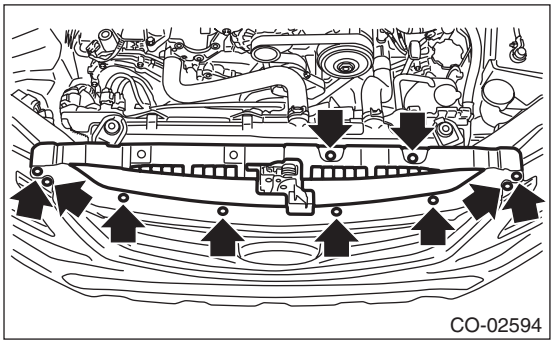

44) Install the air intake duct. <Ref. to IN(H4SO)-9, INSTALLATION, Air Intake Duct.> <Ref. to IN(H4DOTC)-12, INSTALLATION, Air Intake Duct.>
45) Install the collector cover. (turbo model)
46) Install the front wheels.
47) Connect the battery ground terminal.

4. Transmission Mounting System

A: REMOVAL

1. CROSSMEMBER AND CUSHION RUBBER

1) Disconnect the ground cable from battery.
2) Lift up the vehicle.
3) Remove the front under cover. <Ref. to EI-35, REMOVAL, Front Under Cover.>
4) Remove the front and center exhaust pipes. (non-turbo model) <Ref. to EX(H4SO)-5, REMOVAL, Front Exhaust Pipe.> <Ref. to EX(H4SO)-8, REMOVAL, Center Exhaust Pipe.>
5) Remove the center exhaust pipe. (turbo model) <Ref. to EX(H4DOTC)-12, REMOVAL, Center Exhaust Pipe.>
6) Remove the heat shield cover.

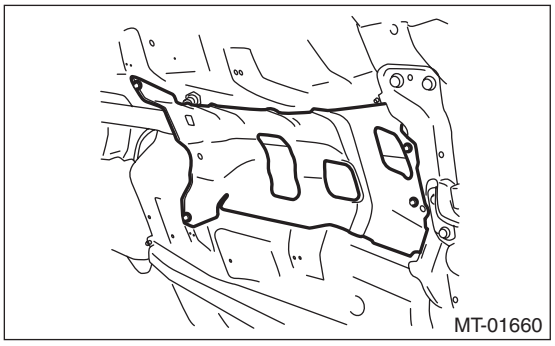
MT-01660

7) Set the transmission jack.

CAUTION:
Always support the transmission case with a transmission jack.

8) Remove the front crossmember and the rear crossmember.

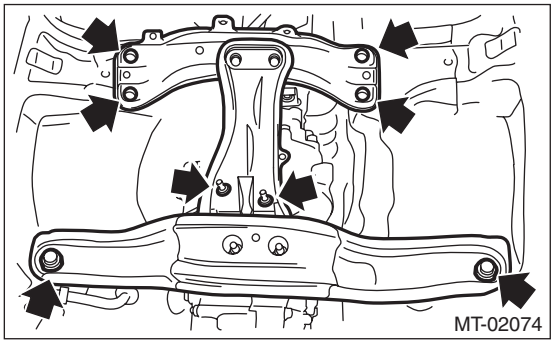
MT-02074

9) Remove the transmission cushion rubber.

B: INSTALLATION

1. CROSSMEMBER AND CUSHION RUBBER

1) Install the transmission cushion rubber to the transmission, and tighten the bolt (A).
2) Attach the transmission cushion rubber to the center crossmember, and tighten nut (B).

Tightening torque:
Bolt (A)
35 N·m (3.6 kgf-m, 25.8 ft-lb)
Nut (B)
35 N·m (3.6 kgf-m, 25.8 ft-lb)

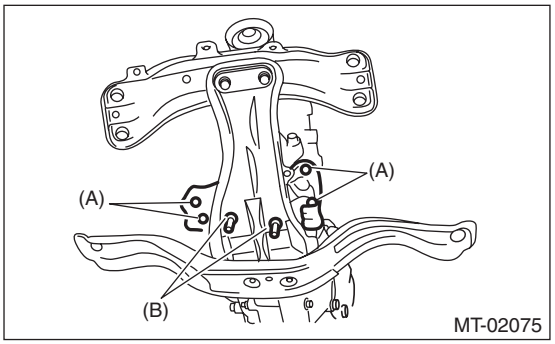

MT-02075

3) Install the front crossmember and rear crossmember.

Tightening torque:
T1: 75 N·m (7.6 kgf-m, 55.3 ft-lb)
T2: 140 N·m (14.3 kgf-m, 103.3 ft-lb)

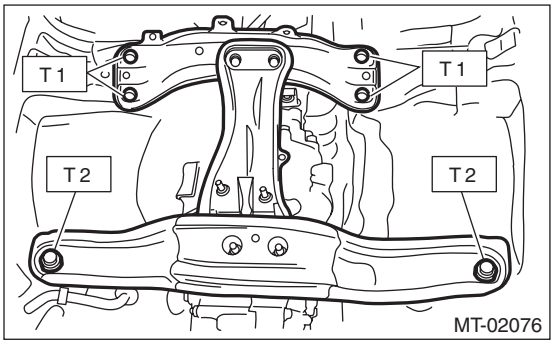

MT-02076

4) Remove the transmission jack.
5) Install the heat shield cover. <Ref. to EI-168, INSTALLATION, Heat Shield Cover.>
6) Install the front and center exhaust pipe. (non-turbo model) <Ref. to EX(H4SO)-6, INSTALLATION, Front Exhaust Pipe.> <Ref. to EX(H4SO)-8, INSTALLATION, Center Exhaust Pipe.>
7) Install the center exhaust pipe. (turbo model) <Ref. to EX(H4DOTC)-13, INSTALLATION, Center Exhaust Pipe.>
8) Install the front under cover. <Ref. to EI-35, INSTALLATION, Front Under Cover.>
9) Lower the vehicle.
10) Connect the ground cable to battery.

C: INSPECTION

Perform the following inspection procedures and repair or replace faulty parts.

1. CROSSMEMBER AND CUSHION RUBBER

Check crossmember for bends or damage. Check that the cushion rubber is not stiff, cracked, or otherwise damaged.

5. Oil Seal

A: INSPECTION

Check for transmission gear oil leaks at oil seal area. If there is an oil leak, replace the oil seal with new one and check the propeller shaft.

B: REPLACEMENT

1) Remove the collector cover. (turbo model)
2) Lift up the vehicle.
3) Remove the front under cover. <Ref. to EI-35, REMOVAL, Front Under Cover.>
4) Clean the transmission exterior.
5) Using the TORX® bit T70, remove the drain plug, and drain the transmission gear oil completely.
6) Tighten the drain plug using TORX® bit T70.

NOTE:
Use a new gasket.

Tightening torque:
44 N·m (4.5 kgf-m, 32.5 ft-lb) (Aluminum gasket silver)
70 N·m (7.1 kgf-m, 51.6 ft-lb) (Copper gasket brown)
70 N·m (7.1 kgf-m, 51.6 ft-lb) (Metal gasket black)

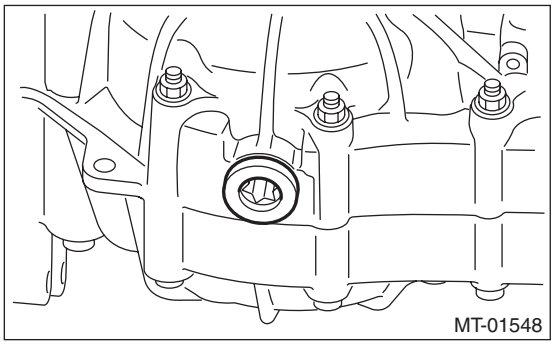
MT-01548

7) Remove the center exhaust pipe. (non-turbo model) <Ref. to EX(H4SO)-8, REMOVAL, Center Exhaust Pipe.>
8) Remove the center exhaust pipe. (turbo model) <Ref. to EX(H4DOTC)-12, REMOVAL, Center Exhaust Pipe.>
9) Remove the heat shield cover.

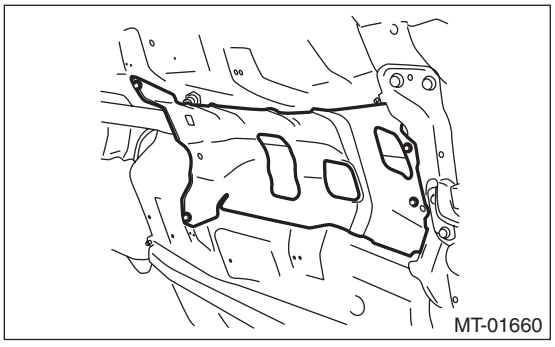
MT-01660

10) Remove the propeller shaft. <Ref. to DS-10, REMOVAL, Propeller Shaft.>
11) Using the ST, remove the oil seal.
ST 398527700 PULLER ASSY

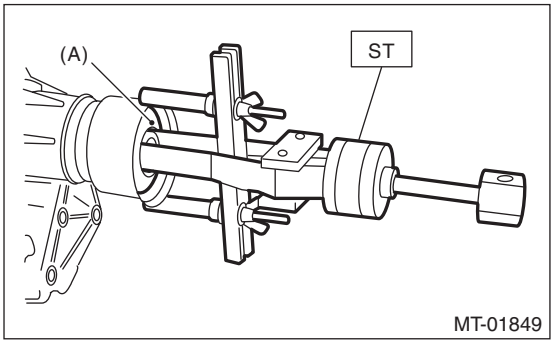

MT-01849

(A) Oil seal

12) Using the ST, install the oil seal.
ST 498057300 INSTALLER

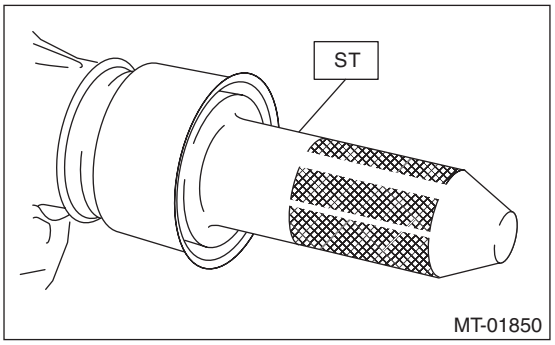

MT-01850

13) Apply transmission gear oil to the oil seal lips.
14) Install the propeller shaft. <Ref. to DS-11, INSTALLATION, Propeller Shaft.>
15) Install the heat shield cover. <Ref. to EI-168, INSTALLATION, Heat Shield Cover.>
16) Install the center exhaust pipe. (non-turbo model) <Ref. to EX(H4SO)-8, INSTALLATION, Center Exhaust Pipe.>
17) Install the center exhaust pipe. (turbo model) <Ref. to EX(H4DOTC)-13, INSTALLATION, Center Exhaust Pipe.>
18) Install the front under cover. <Ref. to EI-35, INSTALLATION, Front Under Cover.>
19) Lower the vehicle.
20) Pour in transmission gear oil and check the oil level. <Ref. to 6MT-24, Transmission Gear Oil.>
21) Install the collector cover. (turbo model)

6. Differential Side Retainer Oil Seal

A: INSPECTION

Check for leakage of transmission gear oil from the differential side retainer oil seal. If there is oil leakage, replace the oil seal with the new part and check the drive shaft.

B: REPLACEMENT

1) Remove the collector cover. (turbo model)
2) Lift up the vehicle.
3) Remove the front under cover. <Ref. to EI-35, REMOVAL, Front Under Cover.>
4) Using the TORX® bit T70, remove the drain plug, and drain the transmission gear oil completely.

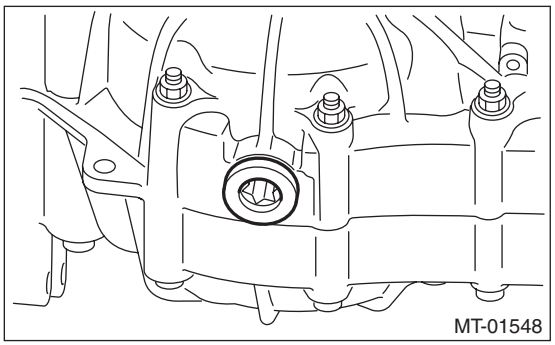

5) Tighten the drain plug using TORX® bit T70.

NOTE:
Use a new gasket.

Tightening torque:
44 N·m (4.5 kgf-m, 32.5 ft-lb) (Aluminum gasket silver)
70 N·m (7.1 kgf-m, 51.6 ft-lb) (Copper gasket brown)
70 N·m (7.1 kgf-m, 51.6 ft-lb) (Metal gasket black)

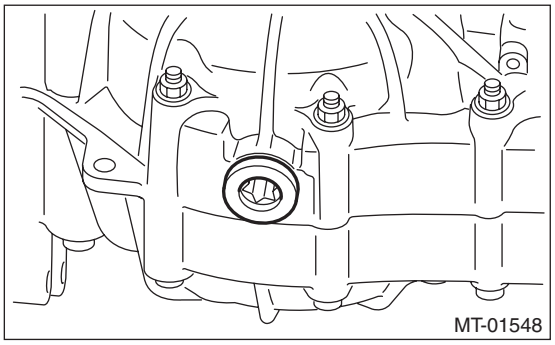

6) Remove the center exhaust pipe. (non-turbo model) <Ref. to EX(H4SO)-8, REMOVAL, Center Exhaust Pipe.>
7) Remove the center exhaust pipe. (turbo model) <Ref. to EX(H4DOTC)-12, REMOVAL, Center Exhaust Pipe.>
8) Separate the front drive shaft from the transmission. <Ref. to DS-48, REMOVAL, Front Drive Shaft.>
9) Remove the differential side retainer oil seal.

NOTE:
Use the ST 398527700 PULLER ASSY to remove the oil seal. If removing the oil seal with a flat tip screwdriver, be careful not to scratch the differential side retainer.
10) Using the ST, install the differential side retainer oil seal by lightly tapping with a plastic hammer.

NOTE:
• Apply transmission gear oil to the oil seal lips, and install the oil seal while being careful not to deform the lip.
• Check the identification marks (L, R) during installation not to mix up the oil seal RH and LH.
• Use a new oil seal.

ST 18675AA000 DIFFERENTIAL SIDE OIL SEAL INSTALLER

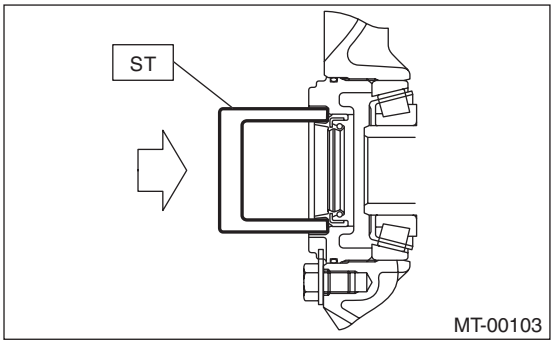

11) Install the front drive shaft. <Ref. to DS-49, INSTALLATION, Front Drive Shaft.>
12) Install the center exhaust pipe. (non-turbo model) <Ref. to EX(H4SO)-8, INSTALLATION, Center Exhaust Pipe.>
13) Install the center exhaust pipe. (turbo model) <Ref. to EX(H4DOTC)-13, INSTALLATION, Center Exhaust Pipe.>
14) Install the front under cover. <Ref. to EI-35, INSTALLATION, Front Under Cover.>
15) Lower the vehicle.
16) Add the transmission gear oil through the oil level gauge hole. <Ref. to 6MT-24, Transmission Gear Oil.>
17) Install the collector cover. (turbo model)

7. Switches and Harness

A: REMOVAL

1. BACK-UP LIGHT AND NEUTRAL POSITION SWITCH

1) Disconnect the ground cable from battery.
2) Remove the collector cover. (turbo model)
3) Remove the air intake boot assembly. (non-turbo model) <Ref. to IN(H4SO)-8, REMOVAL, Air Intake Boot.>
4) Remove the intercooler. (turbo model) <Ref. to IN(H4DOTC)-17, REMOVAL, Intercooler.>
5) Disconnect the connector back-up light switch & neutral position switch.

- Non-turbo model

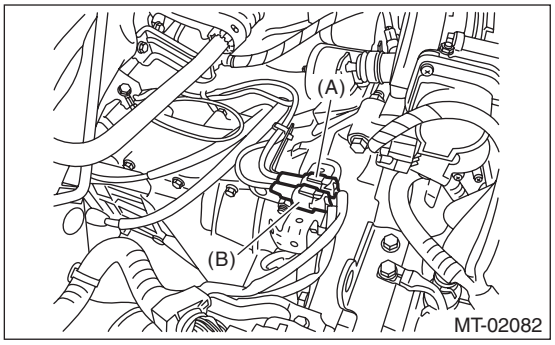

(A) Neutral position switch connector (Brown)
(B) Back-up light switch connector (Gray)

- Turbo model

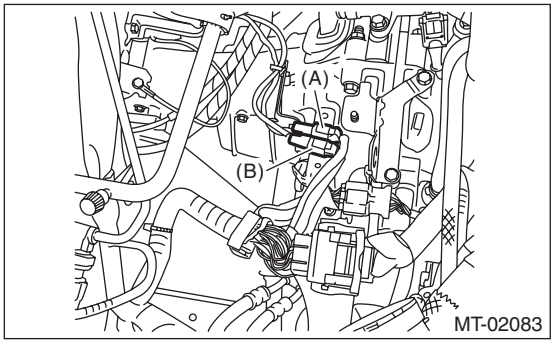

(A) Neutral position switch connector (Brown)
(B) Back-up light switch connector (Gray)

6) Lift up the vehicle.
7) Remove the back-up light switch & neutral position switch with the harness.

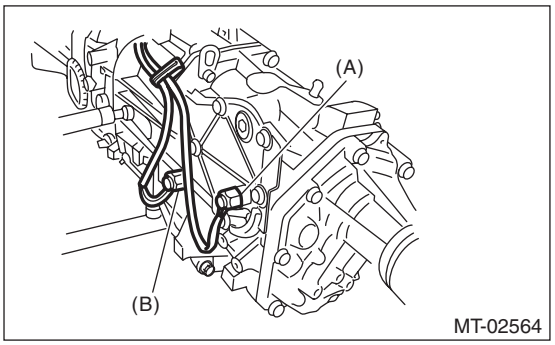

(A) Neutral position switch
(B) Back-up light switch

B: INSTALLATION

1. BACK-UP LIGHT SWITCH & NEUTRAL POSITION SWITCH

1) Install the back-up light switch & neutral position switch with the harness.

NOTE:
Use a new gasket.

Tightening torque:
32.3 N·m (3.3 kgf-m, 23.8 ft-lb)

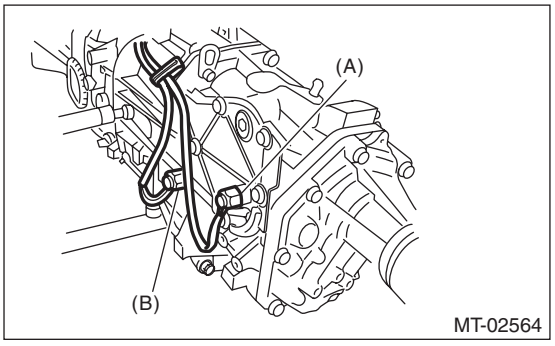

(A) Neutral position switch
(B) Back-up light switch

2) Lower the vehicle.
3) Connect the connectors of back-up light switch & neutral position switch.
4) Install the air intake boot assembly. (non-turbo model) <Ref. to IN(H4SO)-8, INSTALLATION, Air Intake Boot.>
5) Install the intercooler. (turbo model) <Ref. to IN(H4DOTC)-18, INSTALLATION, Intercooler.>
6) Install the collector cover. (turbo model)
7) Connect the battery ground terminal.

C: INSPECTION

1. BACK-UP LIGHT SWITCH

Check the back-up light switch. <Ref. to LI-13, INSPECTION, Back-up Light System.>

2. NEUTRAL POSITION SWITCH

1) Turn the ignition switch to OFF.
2) Disconnect the connector of neutral position switch.
3) Measure the resistance between neutral position switch terminals.

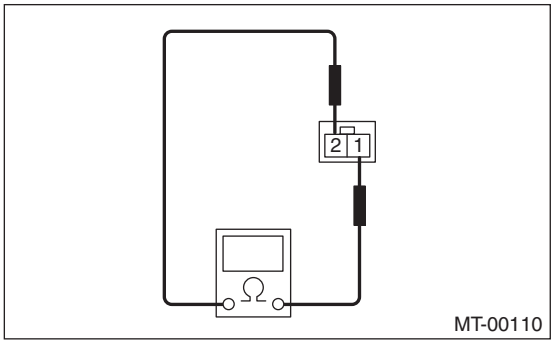

Gear shift position	Terminal No.	Specified resistance
Neutral position	1 and 2	Less than 1 Ω
Other positions		1 MΩ or more

4) Replace faulty parts.

8. Preparation for Overhaul

A: PROCEDURE

1) Clean oil, grease, dirt and dust from the transmission.
2) When gear oil remains in the transmission, using the TORX® bit T70, remove the drain plug, and drain the transmission gear oil completely.
3) Tighten the drain plug using TORX® bit T70.

NOTE:
Use a new gasket.

Tightening torque:
44 N·m (4.5 kgf-m, 32.5 ft-lb) (Aluminum gasket silver)
70 N·m (7.1 kgf-m, 51.6 ft-lb) (Copper gasket brown)
70 N·m (7.1 kgf-m, 51.6 ft-lb) (Metal gasket black)

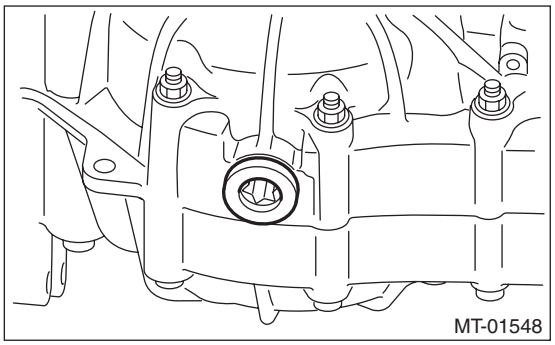

4) Attach the transmission to the ST.
ST 499937100 TRANSMISSION STAND

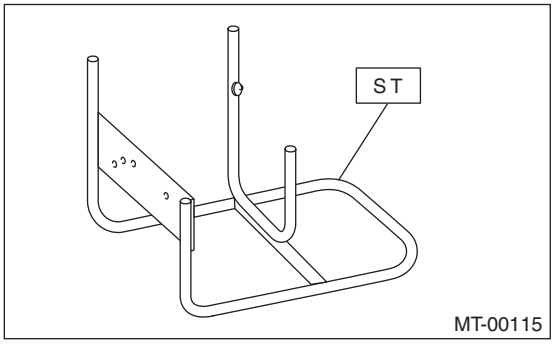

5) Apply oil to rotating parts before assembly.
6) All disassembled parts, if to be reused, should be reinstalled in the original positions and directions.
7) Gaskets, lock washers and lock nuts must be replaced with new ones.
8) Apply liquid gasket to the specified areas to prevent leakage.

9. Transfer Case and Extension Case Assembly

A: REMOVAL

1) Remove the manual transmission assembly from the vehicle. <Ref. to 6MT-25, REMOVAL, Manual Transmission Assembly.>
2) Remove the back-up light switch and the neutral position switch. <Ref. to 6MT-37, REMOVAL, Switches and Harness.>
3) Remove the transfer case together with the extension case assembly.
(1) Remove the transmission cover.

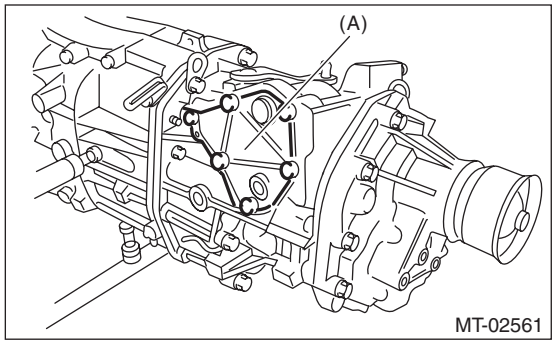

(A) Transmission cover

(2) Set and hold the selector lever COMPL to the 1st-2nd side, and remove the transfer case and extension case assembly as a unit.

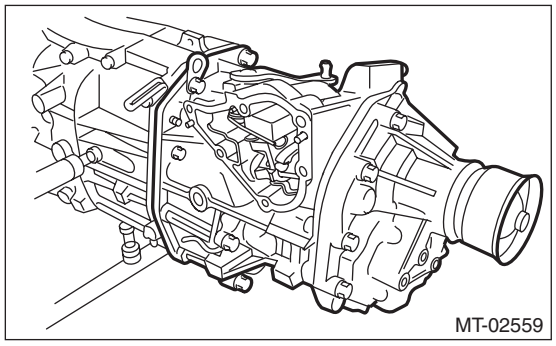

4) Use the ST to push out the spring pin and remove the shift lever COMPL from shifter arm No. 2.
ST 398791700 SPRING PIN REMOVER 2

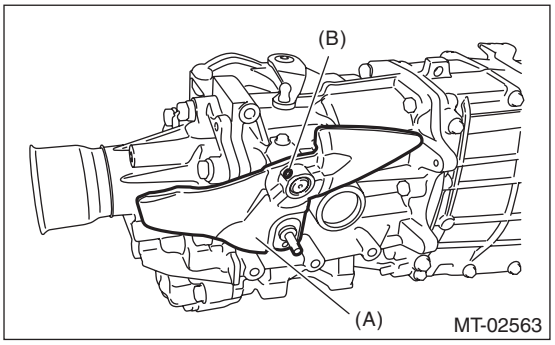

(A) Shift lever COMPL
(B) Spring pin

5) Remove the extension case assembly.

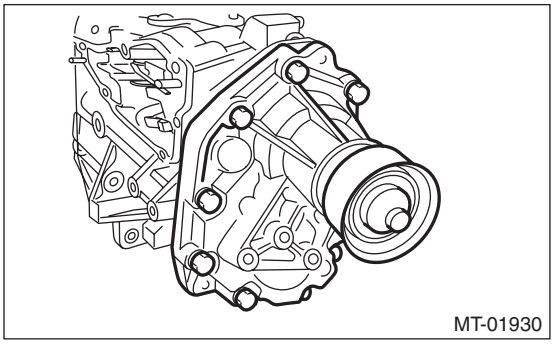

B: INSTALLATION

1) Install the center differential and transfer driven gear into the transfer case.

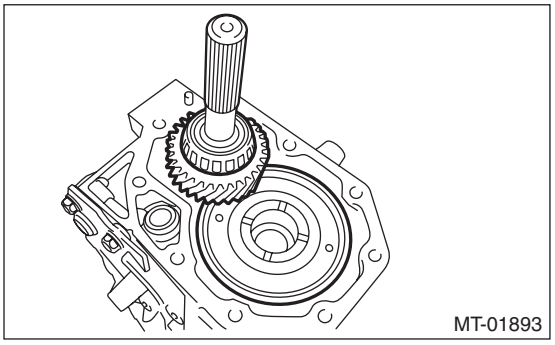

2) Remove the bearing outer race and thrust washer from the extension case.

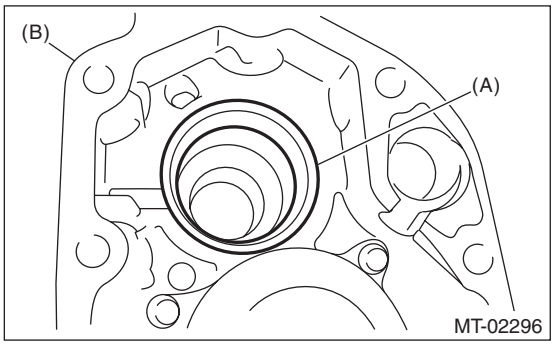

(A) Bearing outer race
(B) Extension case

3) Install the bearing outer race to transfer driven gear.
4) While pressing the bearing outer race horizontally, rotate the driven shaft for ten turns.
5) Measure the height "W" between transfer case and taper roller bearing on the transfer driven gear.

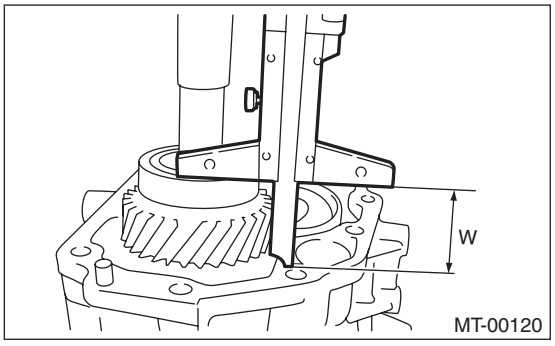

6) Measure depth "X" of bearing insertion part of the extension case.

NOTE:
Measure with bearing outer race and thrust washer removed.

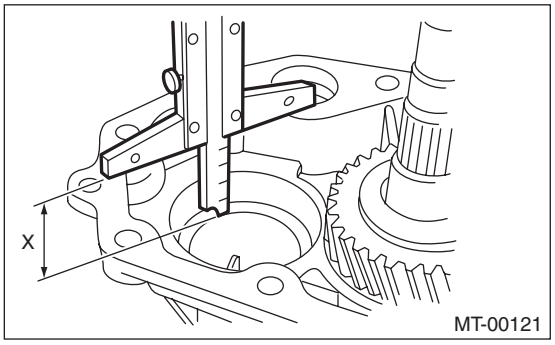

7) Calculate the thrust washer thickness "t" using the following calculation.
t = X – W + (0.15 — 0.20 mm (0.006 — 0.008 in))

8) Select the washer with the nearest value in the following table.

NOTE:
Be sure that it is always within the preload.

Preload of the taper roller bearing (amount of standard protrusion):
0.15 — 0.20 mm (0.006 — 0.008 in)

Thrust washer (50 × 61 × t)	
Part No.	Thickness mm (in)
803050060	0.50 (0.0197)
803050061	0.55 (0.0217)
803050062	0.60 (0.0236)
803050063	0.65 (0.0256)
803050064	0.70 (0.0276)
803050065	0.75 (0.0295)
803050066	0.80 (0.0315)
803050067	0.85 (0.0335)
803050068	0.90 (0.0354)
803050069	0.95 (0.0374)
803050070	1.00 (0.0394)
803050071	1.05 (0.0413)
803050072	1.10 (0.0433)
803050073	1.15 (0.0453)
803050074	1.20 (0.0472)
803050075	1.25 (0.0492)
803050076	1.30 (0.0512)
803050077	1.35 (0.0531)
803050078	1.40 (0.0551)
803050079	1.45 (0.0571)

9) Install the thrust washer to extension case.
10) Replace the bearing outer race attached to the transfer driven gear with the extension case.
11) Measure the depth "S" between transfer case and center differential.
ST 398643600 GAUGE

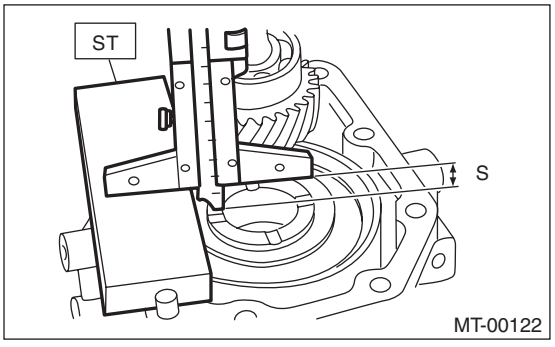

12) Measure the height "T" between the extension case and transfer drive gear.
ST 398643600 GAUGE

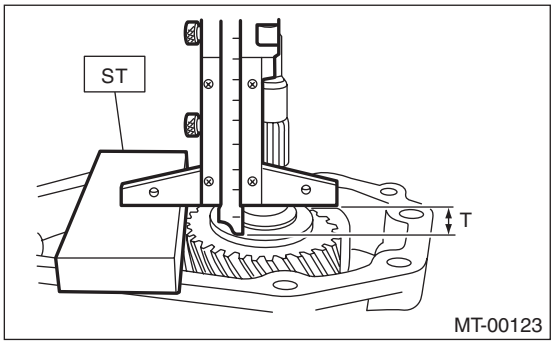

13) Calculate the thrust washer thickness "U" using the following calculation.
U = S + T – 30 mm (1.18 in) [Thickness of ST]

NOTE:
Thickness of ST: 15 mm (0.59 in)
14) Select a suitable washer in the following table.

Standard clearance:
0.15 — 0.35 mm (0.0059 — 0.0138 in)

Thrust washer	
Part No.	Thickness mm (in)
803036050	0.9 (0.035)
803036054	1.0 (0.039)
803036051	1.1 (0.043)
803036055	1.2 (0.047)
803036052	1.3 (0.051)
803036056	1.4 (0.055)
803036053	1.5 (0.059)
803036057	1.6 (0.063)
803036058	1.7 (0.067)
803036080	1.8 (0.071)
803036081	1.9 (0.075)

15) Install the selected thrust washer to center differential.
16) Apply a proper amount of liquid gasket to the transfer case mating surface.

Liquid gasket:
THREE BOND 1215 (Part No. 004403007) or equivalent

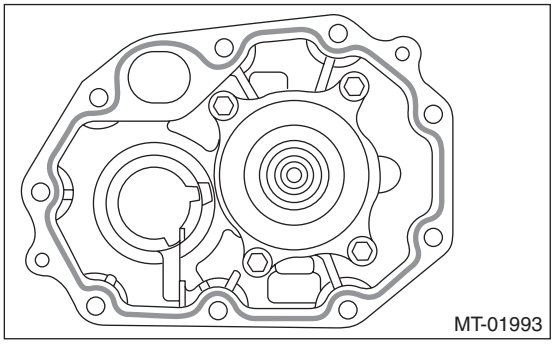

17) Install the extension case assembly to the transfer case.

Tightening torque:
40 N·m (4.1 kgf-m, 29.5 ft-lb)

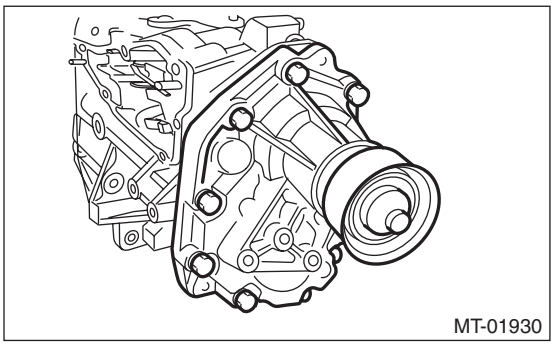

18) Install the gasket, and install the transfer case along with the extension case assembly to the transmission case.

NOTE:
Use a new gasket.
(1) Insert the axle shaft and hold, then move the ST (HANDLE) to align the spline position to install.
ST 18631AA000 HANDLE
Part No. 38415AA100 Axle shaft

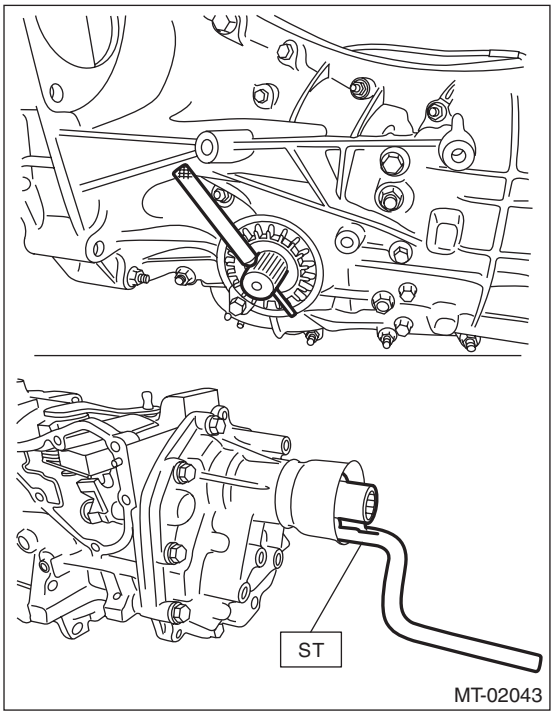

NOTE:
Push the transfer case assembly until the knock pin protrudes slightly from the transfer case.

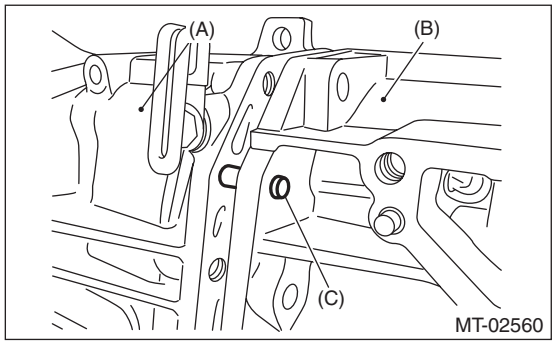

(A) Transmission case
(B) Transfer case
(C) Knock pin

(2) Set and hold the selector lever to the 1st-2nd side, and install the transfer case assembly so that the shifter arm edge and fork rod does not contact.

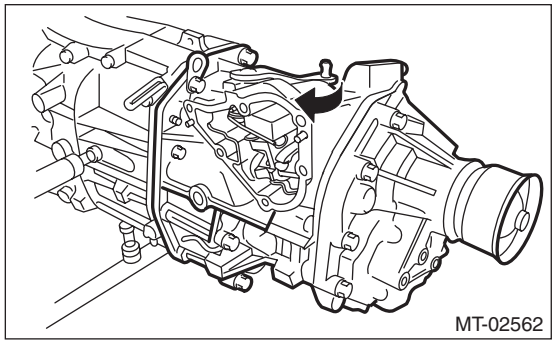

19) Temporarily tighten the transfer case assembly.
20) Install the shift lever COMPL to the shifter arm No. 2, then insert the remover or similar tool instead of spring pin.

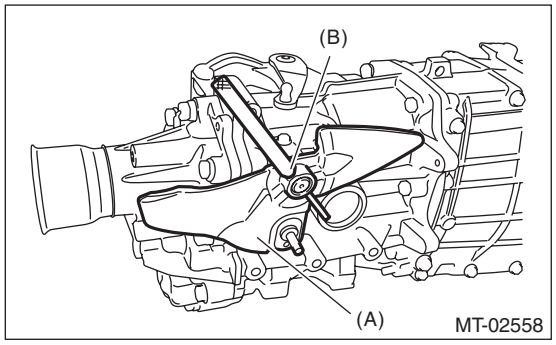

(A) Shift lever COMPL
(B) Remover

21) Operate the selector lever and shift lever COMPL to confirm the correct shifting into each gear is possible.

22) Tighten the transfer case assembly to the specified torque.

Tightening torque:
24.5 N·m (2.5 kgf-m, 18.1 ft-lb)

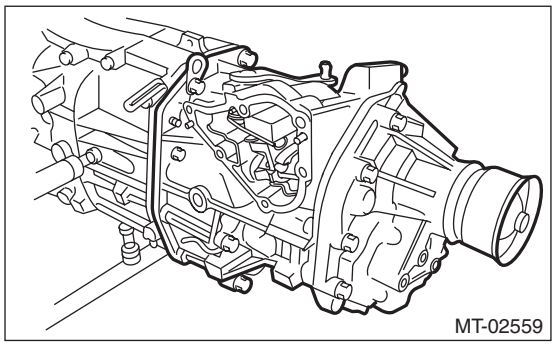

23) Install the shift lever COMPL to the shifter arm No. 2, then fix it using a spring pin.

NOTE:
Use new spring pin.

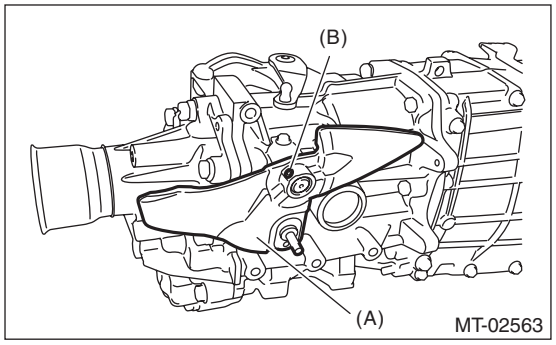

(A) Shift lever COMPL
(B) Spring pin

24) Install the transmission cover. <Ref. to 6MT-53, INSTALLATION, Shift Link Assembly.>

C: DISASSEMBLY

1. TRANSFER CASE

1) Remove the interlock plate.

NOTE:
Do not remove the interlock plate mounting bolt if the parts are assembled as a transmission assembly. Do not attempt to replace the interlock plate unless necessary. Do not reuse the bolts and gaskets once they are removed.

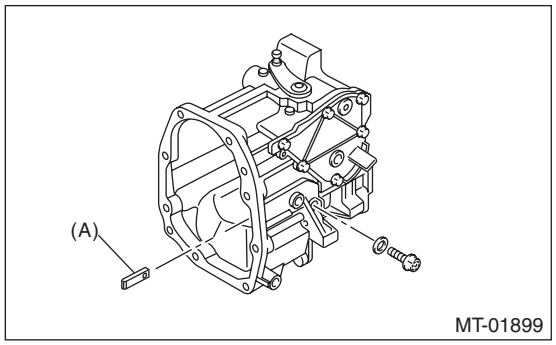

(A) Interlock plate

2) Remove the shift link assembly. <Ref. to 6MT-50, REMOVAL, Shift Link Assembly.>

2. EXTENSION CASE

1) Remove the transfer drive gear assembly. <Ref. to 6MT-45, REMOVAL, Transfer Drive Gear.>
2) Remove the oil seal from the extension case. <Ref. to 6MT-35, Oil Seal.>

D: ASSEMBLY

1. TRANSFER CASE

1) Install the shift link assembly to the transfer case. <Ref. to 6MT-53, INSTALLATION, Shift Link Assembly.>
2) Install the interlock plate to the transfer case.

NOTE:
- Use a new bolt and gasket.
- Before installing the interlock plate, clean the screw threads.

Tightening torque:
20 N·m (2.0 kgf-m, 14.8 ft-lb)

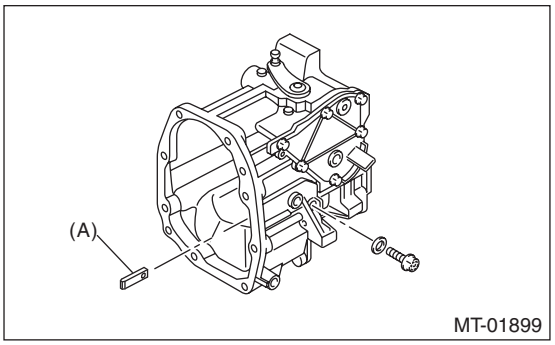

(A) Interlock plate

2. EXTENSION CASE

1) Using the ST, install the oil seal to the extension case. <Ref. to 6MT-35, Oil Seal.>

NOTE:
Use a new oil seal.
2) Install the transfer drive gear to the extension case. <Ref. to 6MT-45, INSTALLATION, Transfer Drive Gear.>

10.Transfer Drive Gear

A: REMOVAL

1) Remove the manual transmission assembly from the vehicle. <Ref. to 6MT-25, REMOVAL, Manual Transmission Assembly.>
2) Remove the back-up light switch neutral position switch. <Ref. to 6MT-37, REMOVAL, Switches and Harness.>
3) Remove the transfer case together with the extension case assembly. <Ref. to 6MT-40, REMOVAL, Transfer Case and Extension Case Assembly.>
4) Remove the extension case assembly.
5) Remove the transfer driven gear. <Ref. to 6MT-47, REMOVAL, Transfer Driven Gear.>
6) Remove the transfer drive gear.

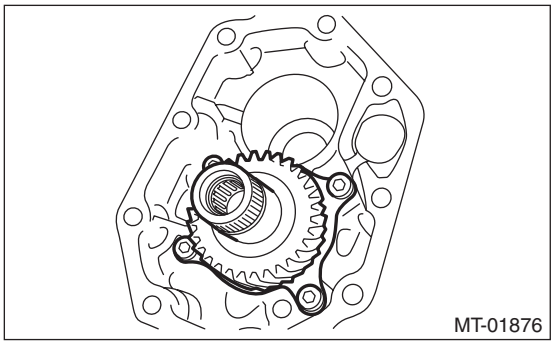
MT-01876

B: INSTALLATION

1) Install the transfer drive gear.

Tightening torque:
26 N·m (2.7 kgf-m, 19.2 ft-lb)

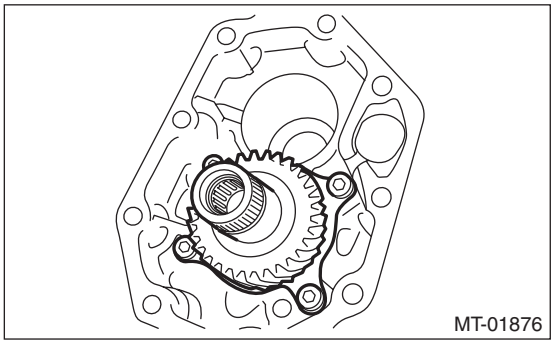
MT-01876

2) Install the transfer driven gear. <Ref. to 6MT-47, INSTALLATION, Transfer Driven Gear.>
3) Install the extension case assembly.
4) Install the transfer case and the extension case assembly. <Ref. to 6MT-40, INSTALLATION, Transfer Case and Extension Case Assembly.>
5) Install the back-up light switch neutral position switch. <Ref. to 6MT-37, INSTALLATION, Switches and Harness.>
6) Install the manual transmission assembly to the vehicle. <Ref. to 6MT-29, INSTALLATION, Manual Transmission Assembly.>

C: DISASSEMBLY

1) Remove the snap ring.

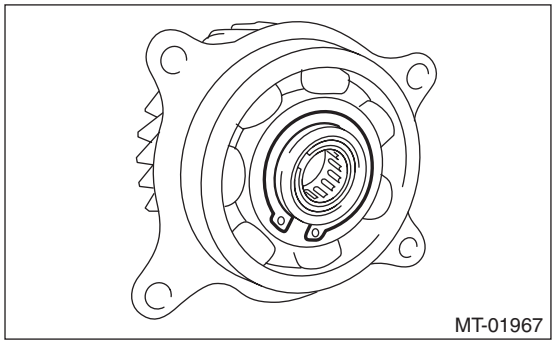
MT-01967

2) Remove the ball bearing.
ST 899864110 REMOVER

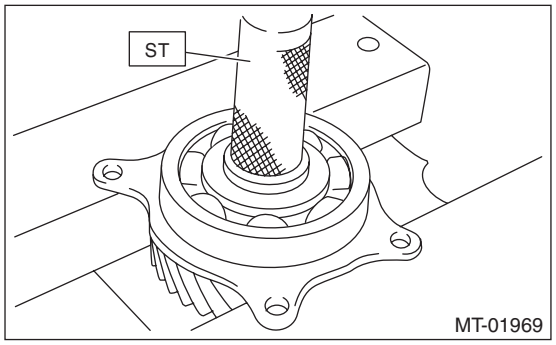

MT-01969

3) Remove the snap ring from transfer drive gear, and remove the needle bearing.

D: ASSEMBLY

1) Install the needle bearing and snap ring to the transfer drive gear.
2) Set the ST to the bearing inner race, then install the transfer drive shaft.

CAUTION:
Do not apply a load in excess of 10 kN (1 ton, 1.1 US ton, 1.0 Imp ton).
ST 398177700 INSTALLER

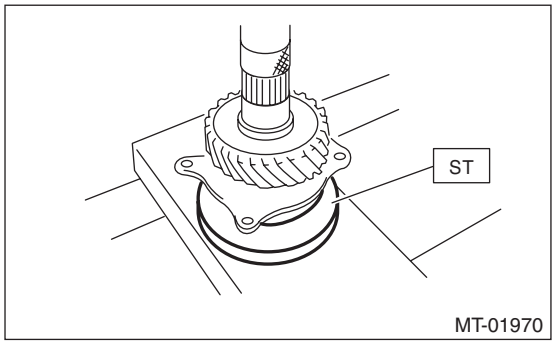

MT-01970

3) Install the snap ring on the transfer drive shaft.

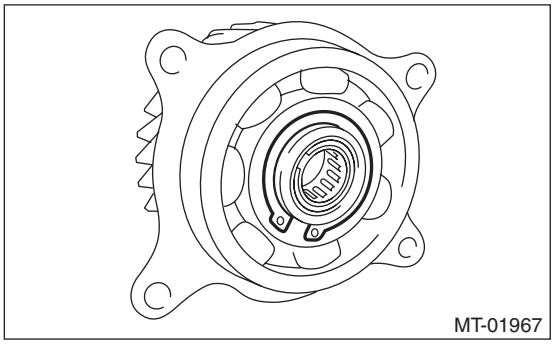

4) Inspect the clearance between the snap ring and the ball bearing. <Ref. to 6MT-46, INSPECTION, Transfer Drive Gear.>

E: INSPECTION

1) Bearing
Replace the bearings in the following cases.
- In case of broken or rusty bearings
- In case of wear or damage
- When the bearings fail to turn smoothly or emit noise in rotation after gear oil lubrication.

2) Drive gear
If the drive gear tooth surface and shaft are excessively broken or damaged, replace the drive gear.
3) Measure the clearance between snap ring and inner race of ball bearing with a thickness gauge.

Clearance:
0.01 — 0.15 mm (0.0004 — 0.0059 in)

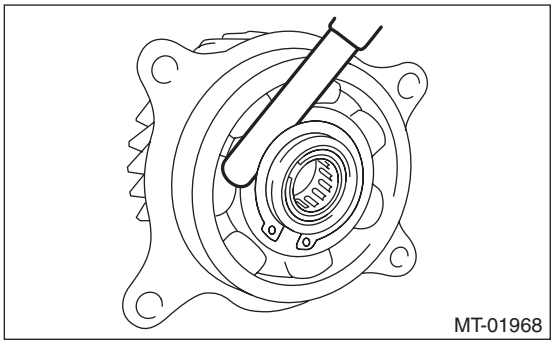

If the measurement is not within specification, select a suitable snap ring and replace it.

Snap ring (Outer-30)	
Part number	Thickness mm (in)
805030041	1.53 (0.0602)
805030042	1.65 (0.0650)
805030043	1.77 (0.0697)

11.Transfer Driven Gear

A: REMOVAL

1) Remove the manual transmission assembly from the vehicle. <Ref. to 6MT-25, REMOVAL, Manual Transmission Assembly.>
2) Remove the back-up light switch neutral position switch. <Ref. to 6MT-37, REMOVAL, Switches and Harness.>
3) Remove the transfer case together with the extension case assembly. <Ref. to 6MT-40, REMOVAL, Transfer Case and Extension Case Assembly.>
4) Remove the extension case assembly.
5) Remove the transfer driven gear.

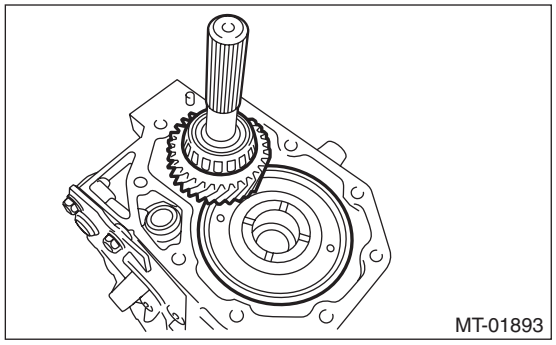

6) Remove bearing outer races from the extension case and transfer case.

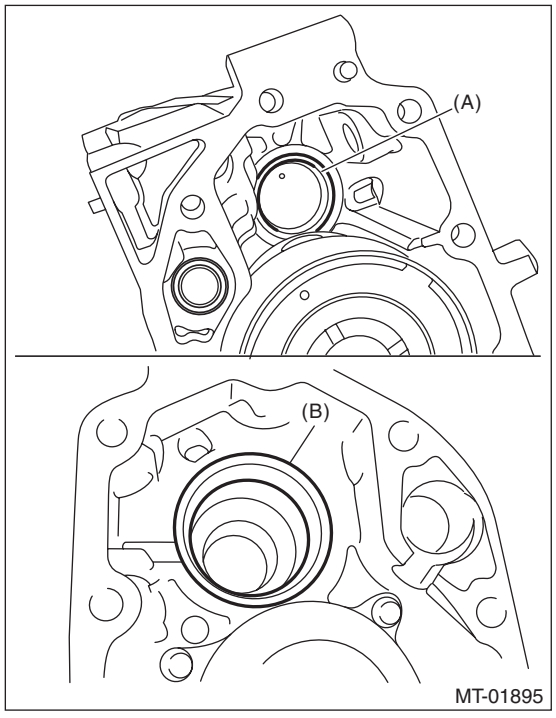

(A) Bearing outer race (Transfer case side)
(B) Bearing outer race (Extension case side)

B: INSTALLATION

1) Select a thrust washer. <Ref. to 6MT-40, INSTALLATION, Transfer Case and Extension Case Assembly.>
2) Install the bearing outer races to extension case and transfer case.

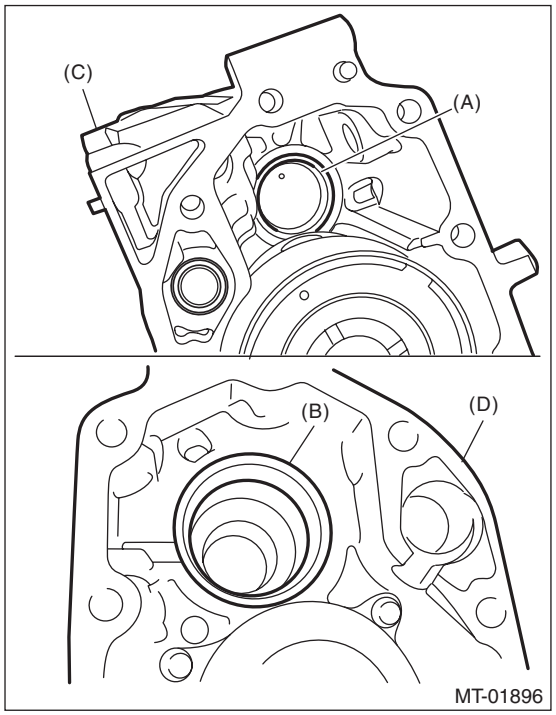

(A) Bearing outer race
(B) Bearing outer race
(C) Transfer case
(D) Extension case

3) Install the transfer driven gear.

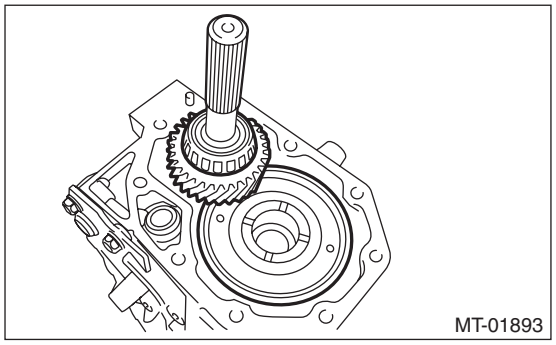

4) Install the transfer case and the extension case assembly. <Ref. to 6MT-40, INSTALLATION, Transfer Case and Extension Case Assembly.>
5) Install the back-up light switch and the neutral position switch. <Ref. to 6MT-37, INSTALLATION, Switches and Harness.>
6) Install the manual transmission assembly to the vehicle. <Ref. to 6MT-29, INSTALLATION, Manual Transmission Assembly.>

C: DISASSEMBLY

1) Using the ST, remove the roller bearing (extension case side).
ST 498077000 REMOVER

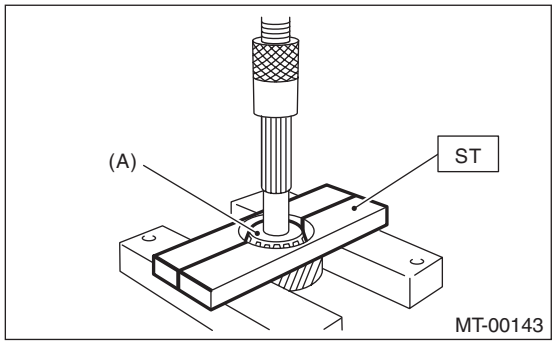

(A) Roller bearing

2) Using ST1 and ST2, remove the roller bearing (transfer case side).
ST1 498077000 REMOVER
ST2 899864100 REMOVER

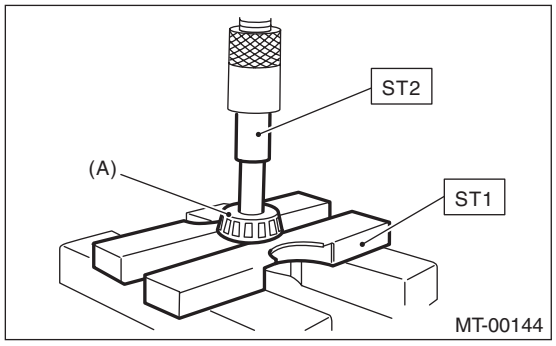

(A) Roller bearing

D: ASSEMBLY

1) Using the ST, install the roller bearing (extension case side).

CAUTION:
Do not apply a load in excess of 10 kN (1 ton, 1.1 US ton, 1.0 Imp ton).
ST1 398177700 INSTALLER
ST2 899864100 REMOVER

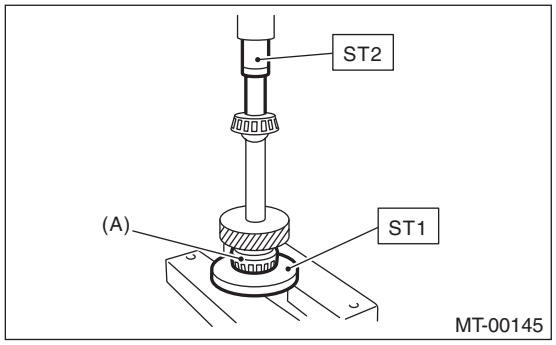

(A) Roller bearing

2) Using ST, install the roller bearing (transfer case side).

CAUTION:
Do not apply a load in excess of 10 kN (1 ton, 1.1 US ton, 1.0 Imp ton).
ST 499757002 INSTALLER

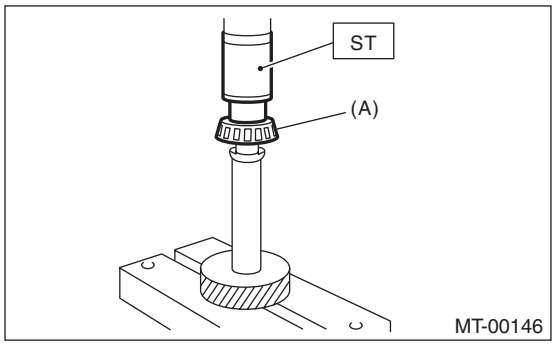

(A) Roller bearing

E: INSPECTION

1) Bearing
Replace the bearings in the following cases.
- In case of broken or rusty bearings
- In case of wear or damage
- When the bearings fail to turn smoothly or emit noise in rotation after gear oil lubrication.

2) Driven gear
If the tooth face of driven gear and the shaft are excessively broken or damaged, replace the driven gear.

12.Center Differential

A: REMOVAL

1) Remove the manual transmission assembly from the vehicle. <Ref. to 6MT-25, REMOVAL, Manual Transmission Assembly.>
2) Remove the back-up light switch neutral position switch. <Ref. to 6MT-37, REMOVAL, Switches and Harness.>
3) Remove the transfer case together with the extension case assembly. <Ref. to 6MT-40, REMOVAL, Transfer Case and Extension Case Assembly.>
4) Remove the extension case assembly. <Ref. to 6MT-40, REMOVAL, Transfer Case and Extension Case Assembly.>
5) Remove the transfer driven gear. <Ref. to 6MT-47, REMOVAL, Transfer Driven Gear.>
6) Remove the center differential.

B: INSTALLATION

1) Install the center differential into transfer case.
2) Install the transfer driven gear. <Ref. to 6MT-47, INSTALLATION, Transfer Driven Gear.>
3) Install the extension case assembly. <Ref. to 6MT-40, INSTALLATION, Transfer Case and Extension Case Assembly.>
4) Install the transfer case together with the extension case assembly. <Ref. to 6MT-40, INSTALLATION, Transfer Case and Extension Case Assembly.>
5) Install the back-up light switch neutral position switch. <Ref. to 6MT-37, INSTALLATION, Switches and Harness.>
6) Install the manual transmission assembly to the vehicle. <Ref. to 6MT-29, INSTALLATION, Manual Transmission Assembly.>

C: DISASSEMBLY

Remove the ball bearing using ST.

NOTE:
• Center differential is a non-disassembled part which should not be disassembled.
• Do not reuse the ball bearing.

ST 498077600 CENTER DIFFERENTIAL BEARING REMOVER

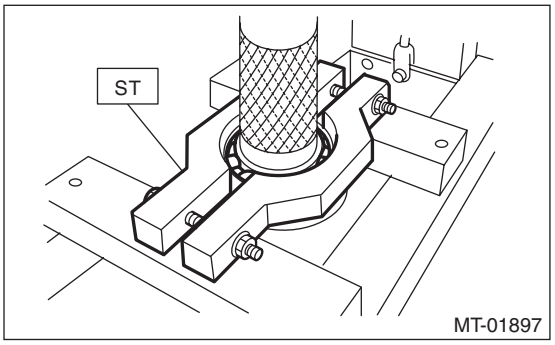

D: ASSEMBLY

Install the ball bearing to the center differential assembly.

CAUTION:
Do not apply a load in excess of 10 kN (1 ton, 1.1 US ton, 1.0 Imp ton).

NOTE:
Use a new ball bearing.

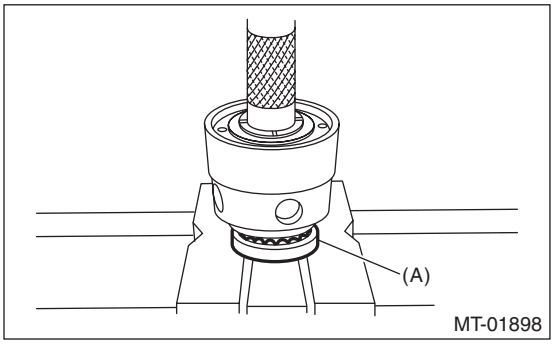

(A) Ball bearing

E: INSPECTION

1) Bearing
Replace the bearings in the following cases.
• In case of broken or rusty bearings
• In case of wear or damage
• When the bearings fail to turn smoothly or emit noise in rotation after gear oil lubrication.
• When bearing has other defects.
2) Center differential
If there is wear or damage, replace the center differential case assembly.

13.Shift Link Assembly

A: REMOVAL

1) Remove the manual transmission assembly from the vehicle. <Ref. to 6MT-25, REMOVAL, Manual Transmission Assembly.>
2) Remove the back-up light switch and the neutral position switch. <Ref. to 6MT-37, REMOVAL, Switches and Harness.>
3) Remove the transfer case together with the extension case assembly. <Ref. to 6MT-40, REMOVAL, Transfer Case and Extension Case Assembly.>
4) Remove the extension case assembly.
5) Remove the center differential and transfer driven gear as a unit.
6) Pull out the straight pin.

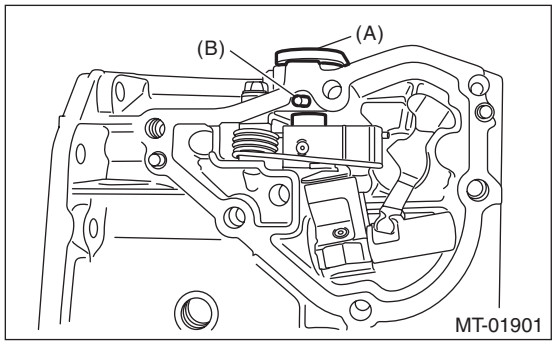

(A) Selector lever COMPL
(B) Straight pin

7) Use the ST to remove the spring pin, and remove the selector lever COMPL.
ST 398791700 SPRING PIN REMOVER 2

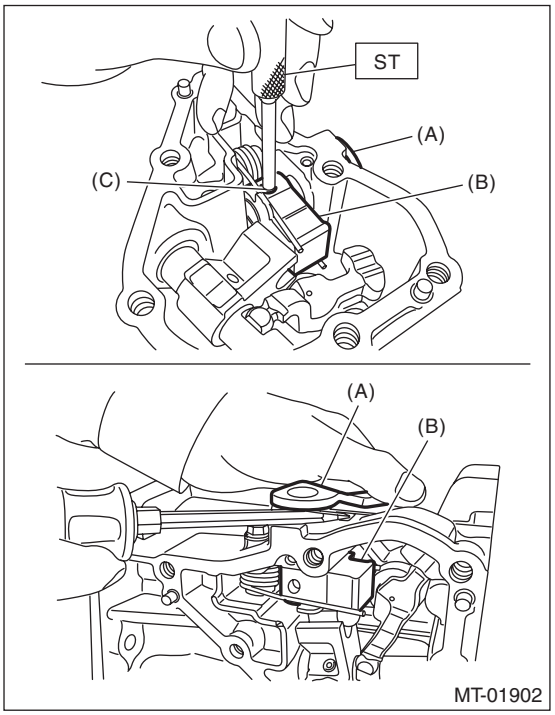

(A) Selector lever COMPL
(B) Selector arm No. 2
(C) Spring pin

8) Pull out the selector arm No. 2 from neutral set spring.

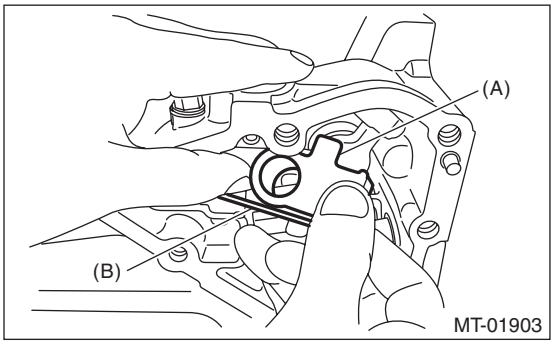

(A) Selector arm No. 2
(B) Neutral set spring

9) Remove the shifter arm collar and neutral set spring from transfer case.

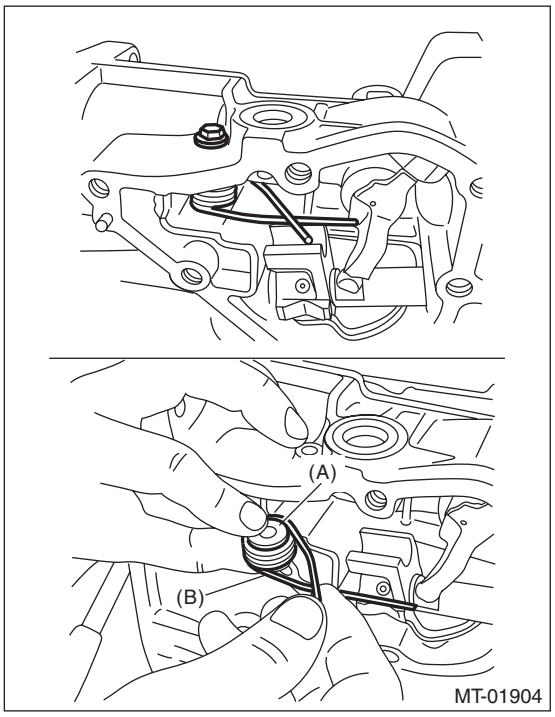

(A) Shifter arm collar
(B) Neutral set spring

10) Remove the shifter arm No. 2, washers and thrust bearing from transfer case.

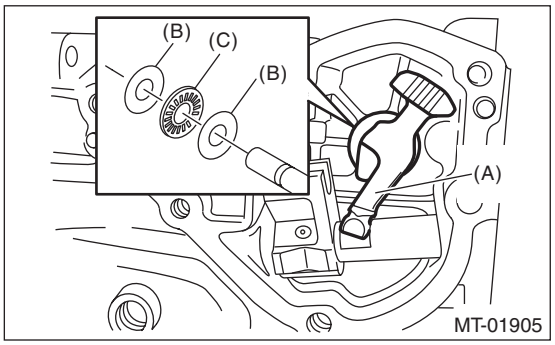

(A) Shifter arm No. 2
(B) Washer
(C) Thrust bearing

11) Use the ST to remove the spring pin, and remove the shifter arm and selector arm.
ST 398791700 SPRING PIN REMOVER 2

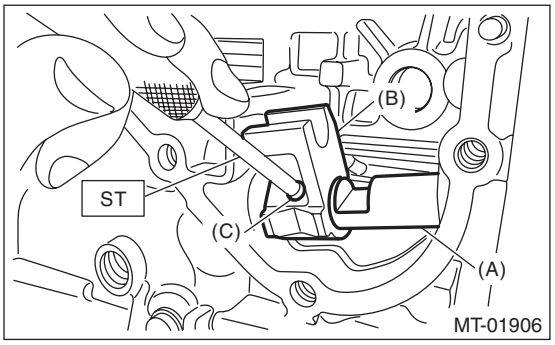

(A) Shifter arm
(B) Selector arm
(C) Spring pin

12) Remove the oil seal from the transfer case by using a screwdriver wrapped with vinyl tape etc.

NOTE:
The illustration shows the oil seal of selector lever COMPL. Perform the same procedures for removing the shifter arm No. 2.

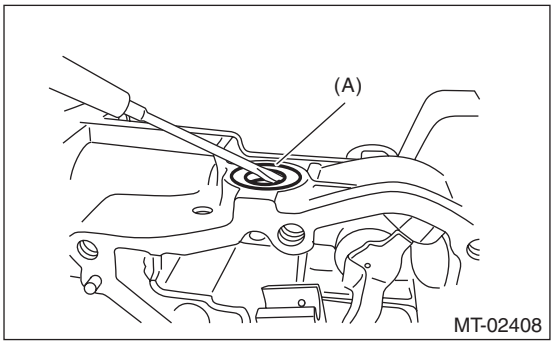

(A) Oil seal

13) Remove the needle bearing from the transfer case by using a tube with the diameter of 20 mm (0.79 in) or 21 mm (0.83 in) and the ST.
ST 18763AA000 COMPRESSOR SHAFT

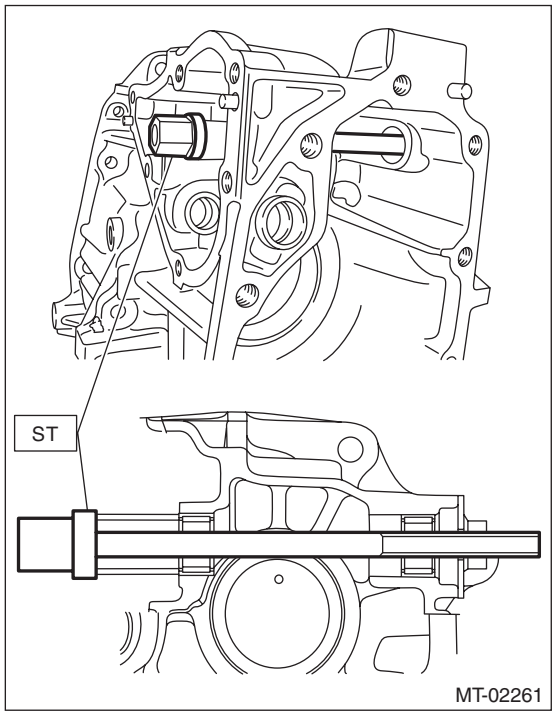

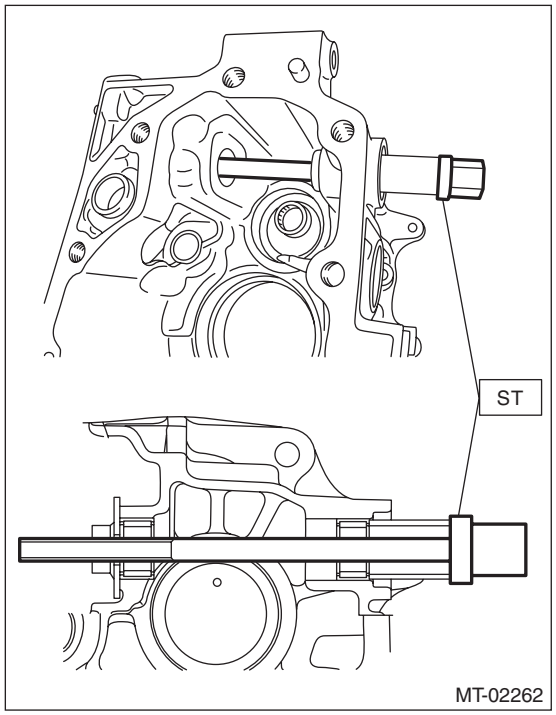

14) Set ST1, ST2 and transfer case to a press.

NOTE:
- Set the ST2 under ST1.
- Set the transfer case so that the hole for shifter arm is positioned vertically.

ST1 498267300 CYLINDER HEAD TABLE
ST2 498267200 CYLINDER HEAD TABLE

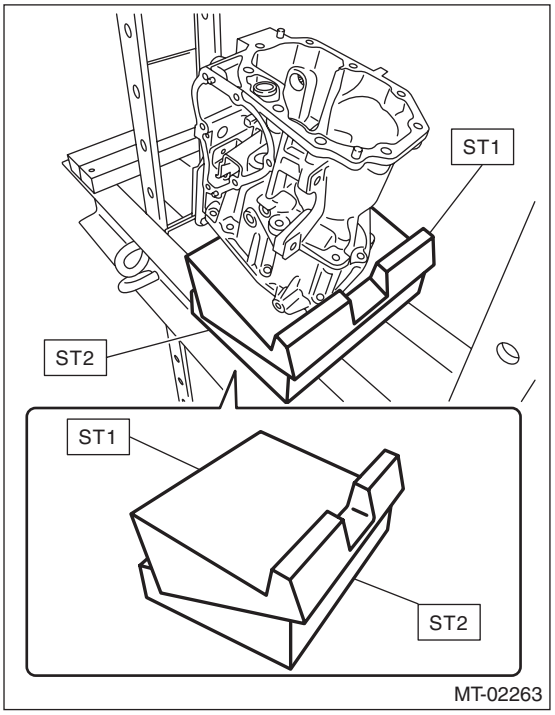

15) Remove the roller bearing by using a round bar with the diameter of 22 mm (0.87 in) or 23 mm (0.91 in).

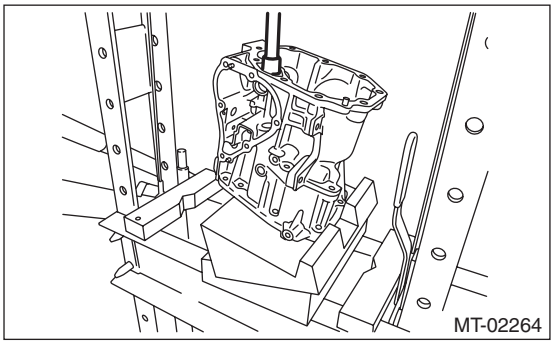

16) Flip over the transfer case, and set an iron plate between transfer case and ST.

NOTE:
- Insert the iron plate which is thicker than the exposed length of the transfer case knock pin between the ST and transfer case.
- Set the iron plate so that the transfer case knock pin does not ride on the iron plate.

17) Remove the roller bearing by using a tube with the diameter of 22 mm (0.87 in) or 23 mm (0.91 in).

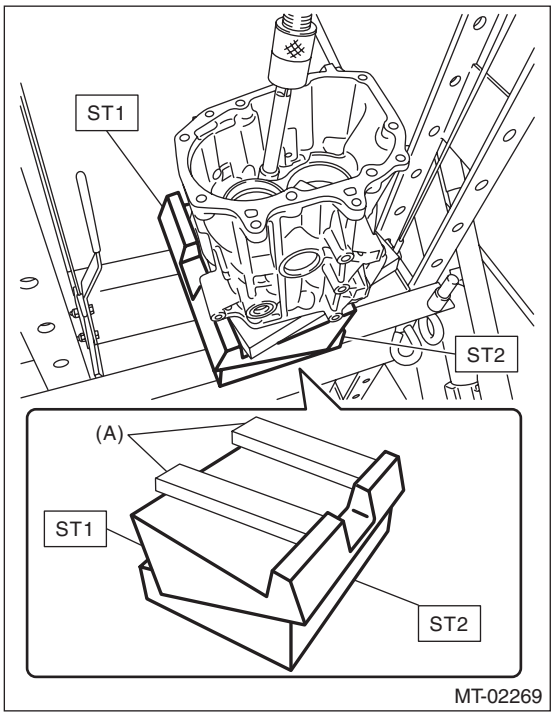

(A) Iron plate

18) Remove the plunger and check ball spring from transmission cover.

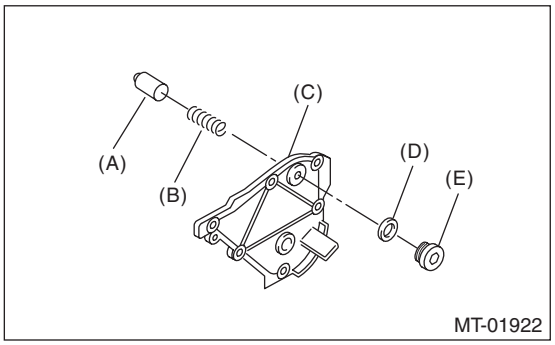

(A) Plunger
(B) Checking ball spring
(C) Transmission cover
(D) Seal ring
(E) Seal bolt

B: INSTALLATION

1) Install the plunger and check ball spring to transmission cover.

NOTE:
Use a new seal ring.

Tightening torque:
25 N·m (2.5 kgf-m, 18.4 ft-lb)

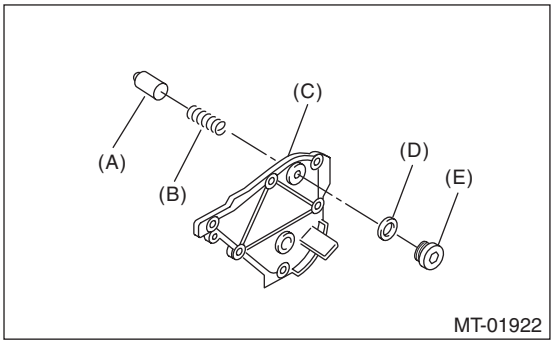

(A) Plunger
(B) Checking ball spring
(C) Transmission cover
(D) Seal ring
(E) Seal bolt

2) Using the ST, install the needle bearing to the transfer case.

NOTE:
- Use a new needle bearing.
- If the press-fit depth exceeds the service limit, replace with a new needle bearing.

ST1 18763AA000 COMPRESSOR SHAFT
ST2 498277200 STOPPER SET

Press-fit depth of needle bearing:
A: 8.5±0.2 mm (0.33±0.01 in) from the end of transfer case

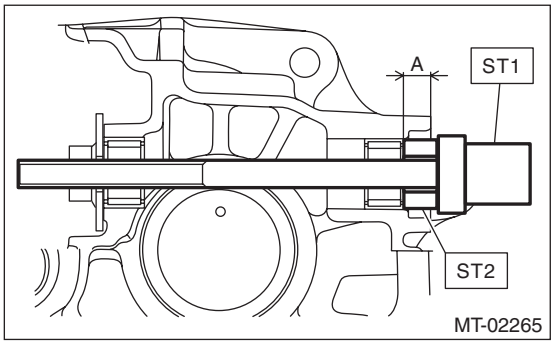

B: 0.2±0.2 mm (0.01±0.01 in) from the end of transfer case

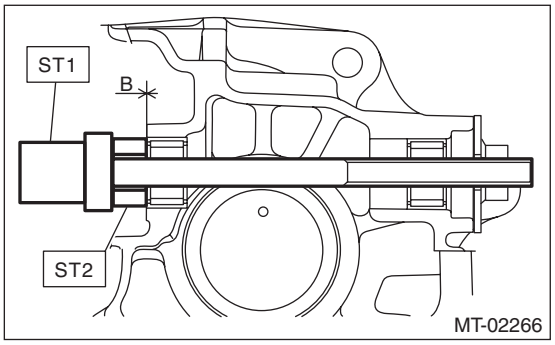

3) Set ST1, ST2 and transfer case to a press.

NOTE:
• Set the ST2 under ST1.
• Set the transfer case so that the hole for shifter arm is positioned vertically.
ST1 498267300 CYLINDER HEAD TABLE
ST2 498267200 CYLINDER HEAD TABLE

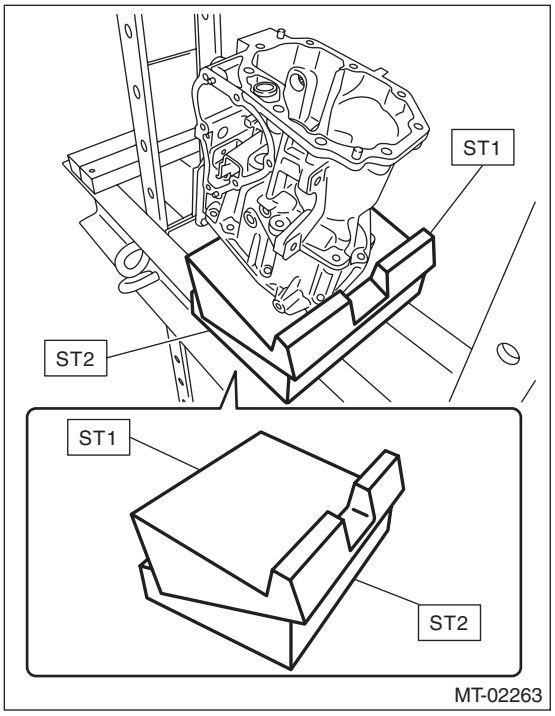

4) Using the ST, install the roller bearing to the transfer case.

NOTE:
• Use a new bearing.
• Gradually perform the press-fit operation while measuring the press-fit depth.
• If the press-fit depth exceeds the service limit, replace with a new bearing.
ST 899864100 REMOVER

Press-fit depth of roller bearing:
A: 5.1±0.2 mm (0.20±0.01 in) from the finished surface of transfer case

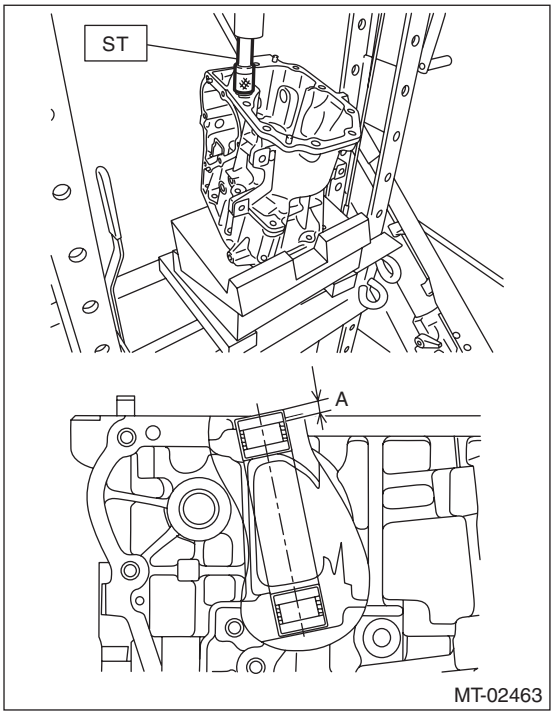

5) Flip over the transfer case, and set an iron plate between transfer case and ST.

NOTE:
• Insert the iron plate which is thicker than the exposed length of the transfer case knock pin between the ST and transfer case.
• Set the parts while taking care that the transfer case knock pin and the roller bearing do not ride over the iron plate.

6) Using the ST, install the roller bearing to the transfer case.

NOTE:
• Use a new bearing.
• Gradually perform the press-fit operation while measuring the press-fit depth.
• If the press-fit depth exceeds the service limit, replace with a new bearing.
ST 899864100 REMOVER

Press-fit depth of roller bearing:
A: 0±0.2 mm (0±0.01 in) from the end of transfer case

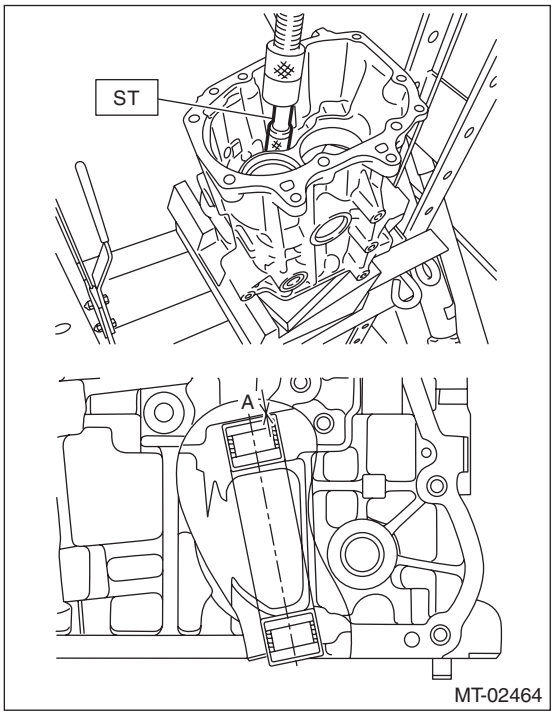

7) Using the ST, install the oil seal to the transfer case.

NOTE:
• Use a new oil seal.
• The illustration shows the oil seal of selector lever COMPL. Perform the same procedures for installing the shifter arm No. 2.
• Apply transmission gear oil to the oil seal lips.
ST 18657AA000 INSTALLER

Press-fit depth of oil seal:
1±0.2 mm (0.04±0.01 in) from the end of transfer case

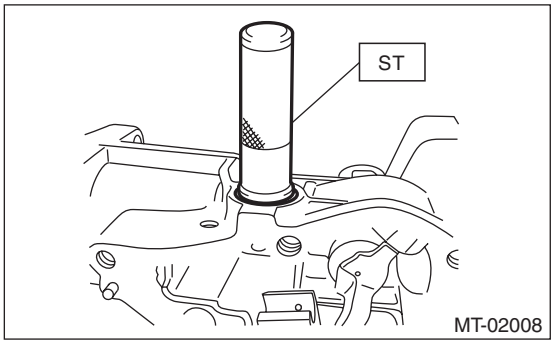

8) Insert the shifter arm into the selector arm, and fix with a spring pin.

NOTE:
Use new spring pin.
ST 398791700 SPRING PIN REMOVER 2

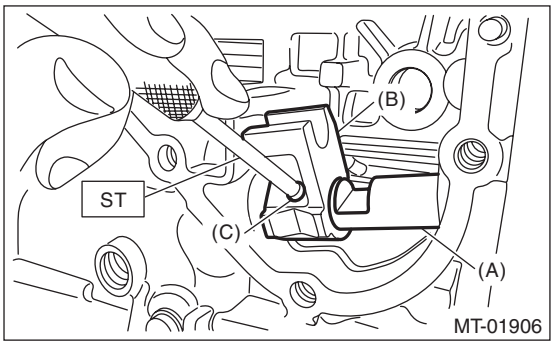

(A) Shifter arm
(B) Selector arm
(C) Spring pin

9) Install the shifter arm No. 2, washers and thrust bearing to transfer case.

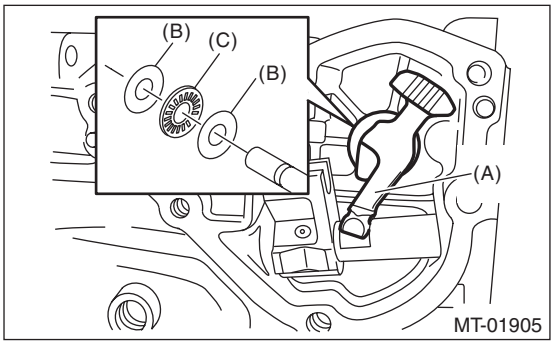

(A) Shifter arm No. 2
(B) Washer
(C) Thrust bearing

10) Install the shifter arm collar and neutral set spring to transfer case.

NOTE:
Use a new gasket.

Tightening torque:
6.4 N·m (0.7 kgf-m, 4.7 ft-lb)

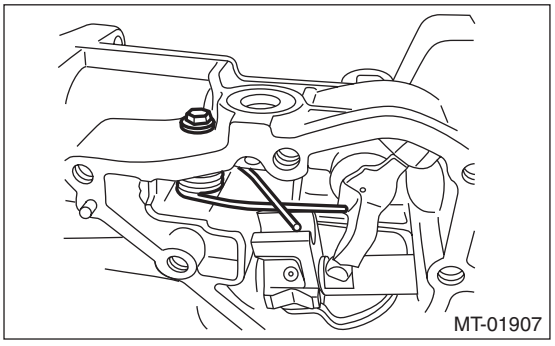

11) Install the selector arm No. 2 to neutral set spring.

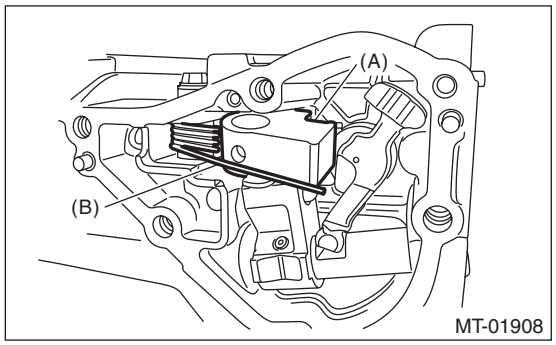

(A) Selector arm No. 2
(B) Neutral set spring

12) Insert the selector lever COMPL into the selector arm No. 2, and fix with a spring pin.

NOTE:
Use new spring pin.
ST 398791700 SPRING PIN REMOVER 2

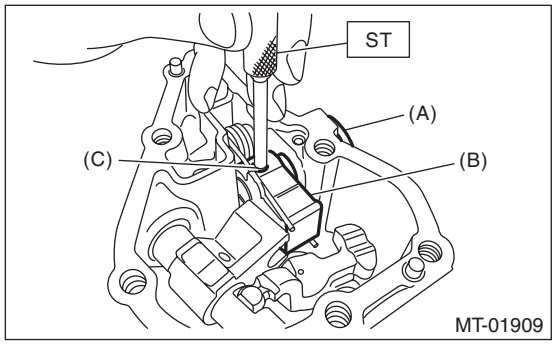

(A) Selector lever COMPL
(B) Selector arm No. 2
(C) Spring pin

13) Insert a new straight pin.

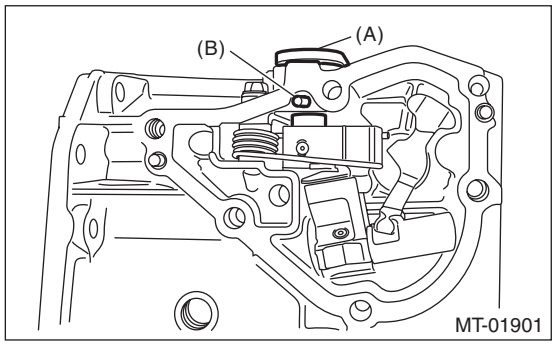

(A) Selector lever COMPL
(B) Straight pin

14) Apply liquid gasket seamlessly to the mating surface of transmission cover.

Liquid gasket:
THREE BOND 1215 (Part No. 004403007) or equivalent

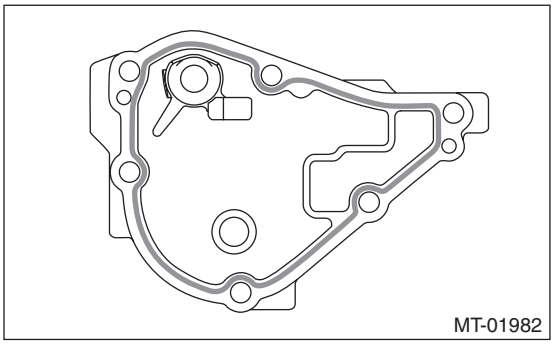

15) Install the transmission cover to transfer case.

Tightening torque:
25 N·m (2.5 kgf-m, 18.4 ft-lb)

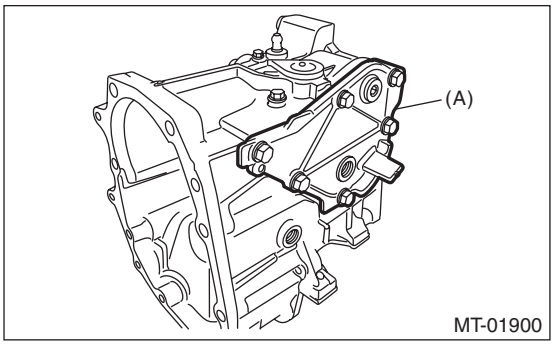

(A) Transmission cover

16) Install the center differential and transfer driven gear as a unit.
17) Attach the extension assembly to the transfer case. <Ref. to 6MT-40, INSTALLATION, Transfer Case and Extension Case Assembly.>
18) Install the transfer case and the extension case assembly. <Ref. to 6MT-40, INSTALLATION, Transfer Case and Extension Case Assembly.>
19) Install the back-up light switch and the neutral position switch. <Ref. to 6MT-37, INSTALLATION, Switches and Harness.>
20) Install the manual transmission assembly to the vehicle. <Ref. to 6MT-29, INSTALLATION, Manual Transmission Assembly.>

14.Transmission Case

A: REMOVAL

1) Remove the manual transmission assembly from the vehicle. <Ref. to 6MT-25, REMOVAL, Manual Transmission Assembly.>
2) Remove the clutch release lever. <Ref. to CL-15, REMOVAL, Release Bearing and Lever.>
3) Remove the transfer case together with the extension case assembly. <Ref. to 6MT-40, REMOVAL, Transfer Case and Extension Case Assembly.>
4) Remove the bearing mounting bolt.

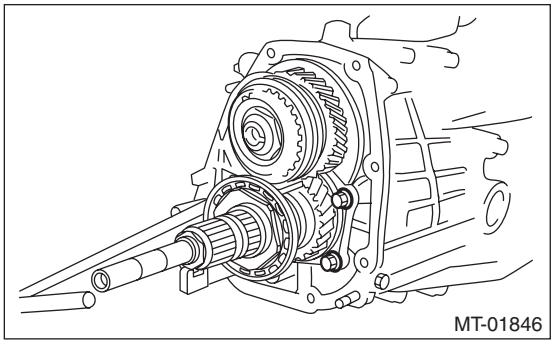
MT-01846

5) Remove the main shaft rear plate.

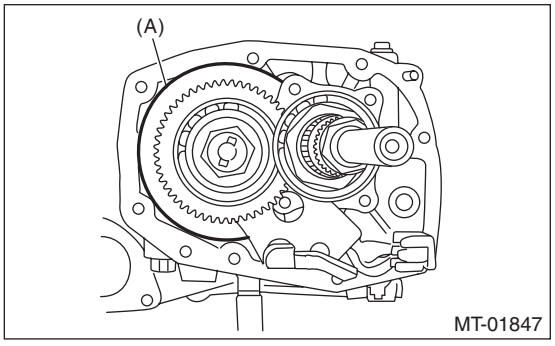

MT-01847

(A) Main shaft rear plate

6) Separate the transmission case into the right and left cases by loosening the coupling bolts and nuts.

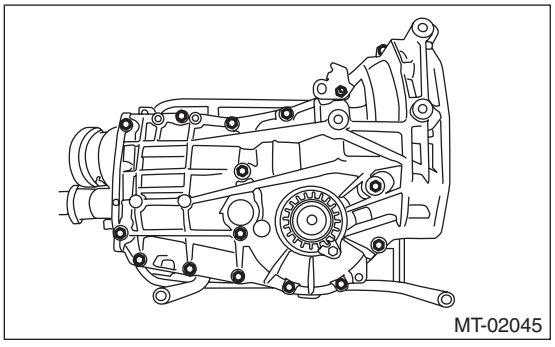
MT-02045

7) Remove the drive pinion shaft assembly from the left side of the transmission case.

NOTE:
Use a hammer handle, etc. to remove if too tight.

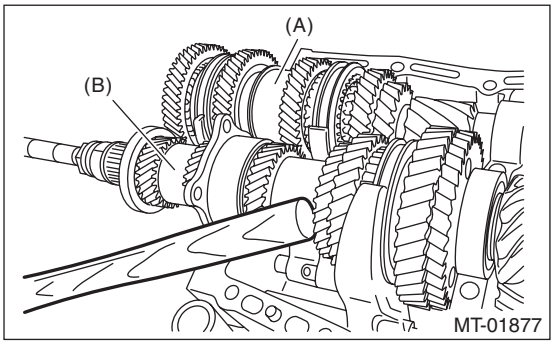

MT-01877

(A) Main shaft ASSY for single-range
(B) Drive pinion shaft ASSY

8) Remove the main shaft assembly for single-range.
9) Remove the front differential assembly.

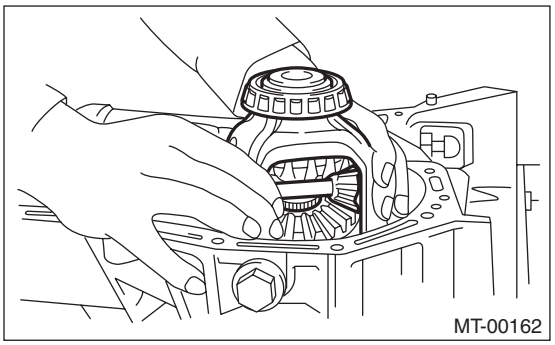
MT-00162

10) Remove the differential side retainers and bearing outer races on the right and left sides. <Ref. to 6MT-77, REMOVAL, Front Differential Assembly.>

NOTE:
Do not confuse the right and left roller bearing outer races.
11) Remove the reverse idler gear. <Ref. to 6MT-90, REMOVAL, Shifter Fork and Rod.>
12) Remove the shifter fork and rod. <Ref. to 6MT-90, REMOVAL, Shifter Fork and Rod.>

B: INSTALLATION

1) Wipe off grease, oil and dust on the mating surfaces of transmission cases with cleaning solvent.
2) Install the shifter fork and rod. <Ref. to 6MT-91, INSTALLATION, Shifter Fork and Rod.>
3) Select the drive pinion shim. <Ref. to 6MT-67, INSTALLATION, Drive Pinion Shaft Assembly.>
4) Install the differential side retainer, from which the bearing outer race and O-ring have already been removed, to the transmission case LH side.
5) Install the front differential assembly.
6) Install the main shaft assembly for single-range. Install the transmission case knock pin into the knock pin hole of needle bearing.
7) Install the drive pinion shaft assembly. Install the transmission case knock pin into the roller bearing knock pin hole.
8) Apply liquid gasket, then join the right side and left side of the case together.

Liquid gasket:
THREE BOND 1215 (Part No. 004403007) or equivalent

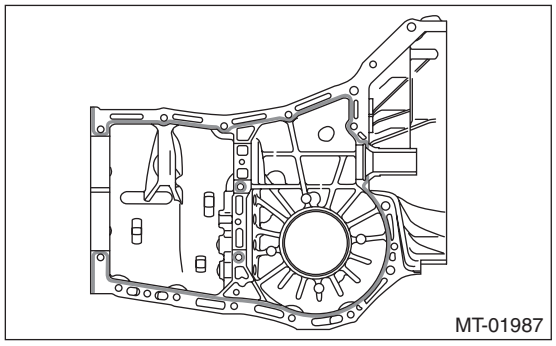

9) With brackets and clips as shown in the figure, tighten the seventeen bolts.

NOTE:
Match the cases together so that the drive pinion shims are not caught between the cases.

Tightening torque:
8 mm bolt
25 N·m (2.5 kgf-m, 18.4 ft-lb)
★ ***10 mm bolt***
40 N·m (4.1 kgf-m, 29.5 ft-lb)

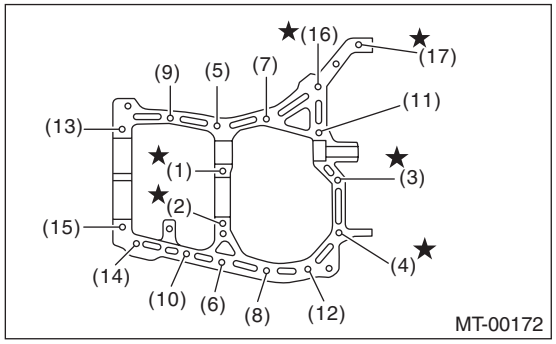

10) Tighten the taper roller bearing mounting bolts.

Tightening torque:
30 N·m (3.1 kgf-m, 22.1 ft-lb)

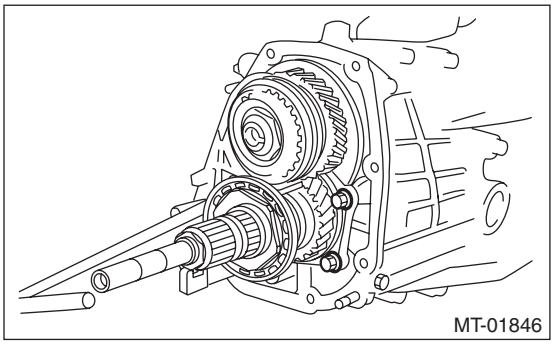

11) Perform backlash adjustment of the hypoid gear and preload measurement of the roller bearing.

NOTE:
Attach the ST on drive pinion assembly.
ST 18667AA020 HOLDER

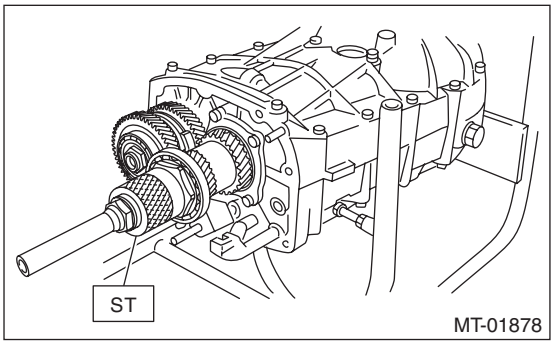

12) Place the transmission with the left side of case facing downward, and put ST1 on bearing race.
13) Screw the retainer assembly from the bottom into left case using ST2. Fit the ST3 on transmission main shaft. Shift the gear into 4th or 5th, and turn the shaft several times. Screw in the retainer while rotating the ST3 until a slight resistance is felt on ST2.
This is the contact point of the hypoid gear and the drive pinion shaft. Repeat the above sequence several times to ensure the contact point.
ST1 399780104 WEIGHT
ST2 18630AA010 WRENCH COMPL RETAINER
ST3 499927100 HANDLE

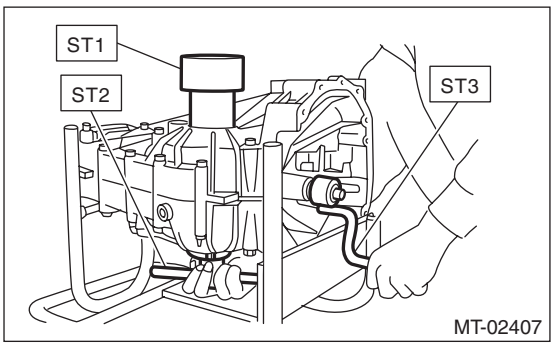

14) Remove the weight, and screw in the retainer without the O-ring on the upper side, and stop at the point where a slight resistance is felt.

NOTE:
In this condition, the backlash between hypoid gear and drive pinion shaft is zero.

ST 18630AA010 WRENCH COMPL RETAINER

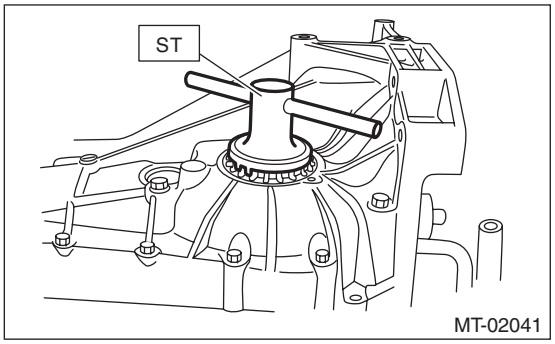

15) Loosen the retainer on the lower side by 3 notches, and turn the retainer on the upper side by the same amount in order to apply backlash.
16) Rotate the retainer of the upper side additionally by 1 notch in order to apply preload on taper roller bearing.
17) Temporarily attach both the upper and lower lock plates, and put marks both the retainer and lock plate for later readjustment.

NOTE:
If it is hard to install the lock plates, reverse the sides and install them.

18) Turn the transmission main shaft several times while tapping around the retainer lightly with plastic hammer.
19) Inspect and adjust backlash and tooth contact of the hypoid gear. <Ref. to 6MT-81, INSPECTION, Front Differential Assembly.>
20) After checking the tooth contact of the hypoid gears, remove the lock plate. Then loosen the retainer until the O-ring groove appears. Fit the O-ring into the groove and tighten the retainer into the position before it was loosened.
Install the lock plate.

NOTE:
- When loosening the retainer, record the number of the turns made.
- Perform this operation for both upper and lower retainers.
- Use new O-rings.

Tightening torque:
T: 25 N·m (2.5 kgf-m, 18.4 ft-lb)

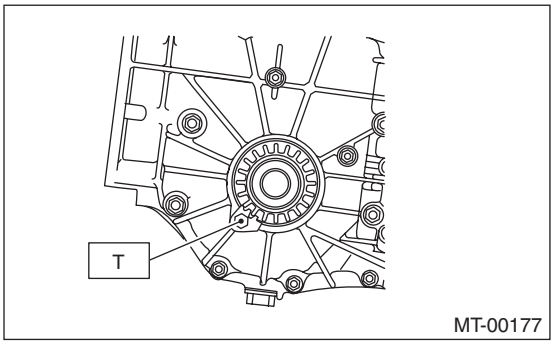

21) Select a main shaft rear plate. <Ref. to 6MT-66, ADJUSTMENT, Main Shaft Assembly for Single-Range.>
22) Install the clutch release lever and bearing. <Ref. to CL-16, INSTALLATION, Release Bearing and Lever.>
23) Install the transfer case together with the extension case assembly. <Ref. to 6MT-40, INSTALLATION, Transfer Case and Extension Case Assembly.>
24) Install the manual transmission assembly to the vehicle. <Ref. to 6MT-29, INSTALLATION, Manual Transmission Assembly.>

C: INSPECTION

Check the transmission case for cracks, damage, or oil leaks.

15.Main Shaft Assembly for Single-Range

A: REMOVAL

1) Remove the manual transmission assembly from the vehicle. <Ref. to 6MT-25, REMOVAL, Manual Transmission Assembly.>
2) Remove the transfer case together with the extension case assembly. <Ref. to 6MT-40, REMOVAL, Transfer Case and Extension Case Assembly.>
3) Remove the transmission case. <Ref. to 6MT-57, REMOVAL, Transmission Case.>
4) Remove the drive pinion shaft assembly. <Ref. to 6MT-67, REMOVAL, Drive Pinion Shaft Assembly.>
5) Remove the main shaft assembly for single-range.

B: INSTALLATION

1) Install the needle bearing and oil seal to the front of the transmission single-range main shaft assembly.

NOTE:
• Wrap the clutch connection (splined section) with vinyl tape to prevent damage to the oil seal.
• Apply NICHIMOLY N-130 to the sealing lip of the oil seal.
• Use a new oil seal.

2) Rotate the reverse idler sub gear by two teeth from free status to make it engage with the reverse gear of the main shaft and install the main shaft assembly.
(1) When the reverse idler sub gear is at free status, put alignment marks on reverse idler sub gear and reverse idler gear.
(2) Rotate the reverse idler sub gear in the arrow direction by two teeth from the alignment mark and secure it with a wire.

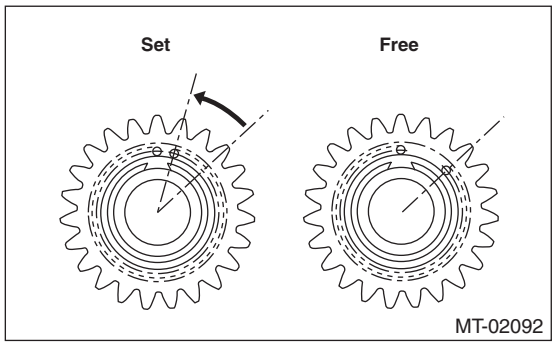

(3) After installing the main shaft assembly, check that the reverse idler gear and reverse idler sub gear are misaligned by two teeth and remove the wire.

CAUTION:
Make sure to remove the wire.

3) Align the transmission case knock pin into the knock pin hole of the needle bearing outer race.

NOTE:
• Align the end face of the seal with surface (A) when installing the oil seal.

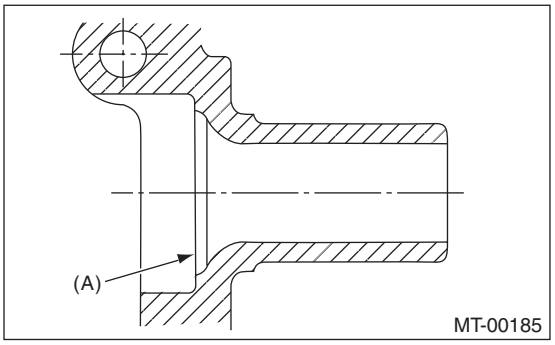

• Face the cutout portion of the snap ring for the double taper roller bearing to the drive pinion shaft assembly.

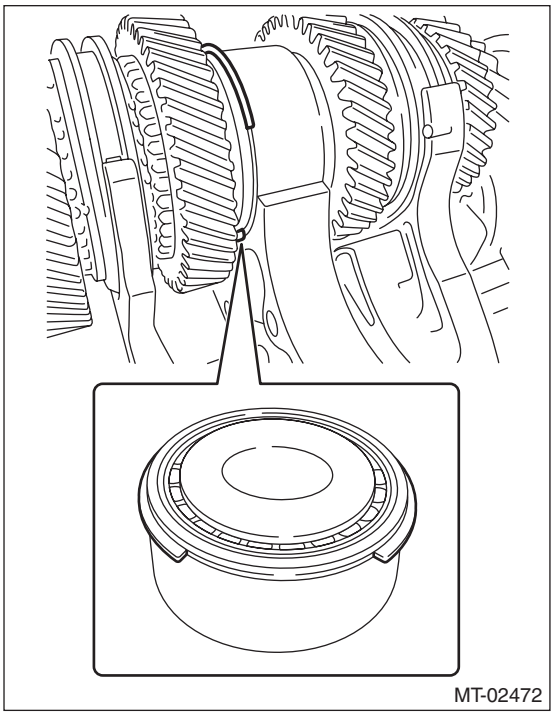

4) Install the drive pinion shaft assembly. <Ref. to 6MT-67, INSTALLATION, Drive Pinion Shaft Assembly.>
5) Install the transmission case. <Ref. to 6MT-58, INSTALLATION, Transmission Case.>
6) Install the transfer case together with the extension case assembly. <Ref. to 6MT-40, INSTALLATION, Transfer Case and Extension Case Assembly.>
7) Install the manual transmission assembly to the vehicle. <Ref. to 6MT-29, INSTALLATION, Manual Transmission Assembly.>

C: DISASSEMBLY

NOTE:
• When replacing the sleeve & hub, replace them as a set.
• Do not disassemble the sleeve & hub; the aligning position is pre-matched.
• If it is necessary to disassemble, mark the engaging points on the splines beforehand.

1) Put vinyl tape around main shaft spline to protect the oil seal from damage. Then pull out the oil seal and needle bearing by hand.
2) Flatten the tab of the lock nut.
3) Remove the lock nut from transmission main shaft assembly for single-range.
ST1 498937000 TRANSMISSION HOLDER
ST2 499987003 SOCKET WRENCH (35)

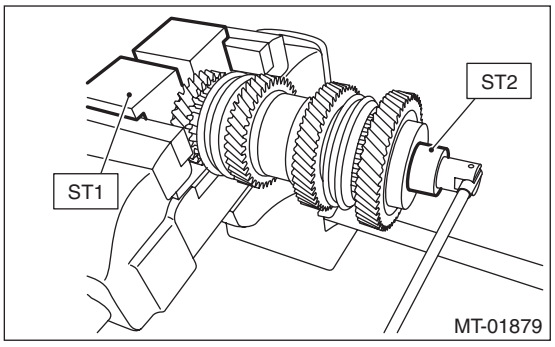

4) Remove the 6th drive gear and ball bearing using the ST1, ST2 and a press.
ST1 899864100 REMOVER
ST2 18722AA000 REMOVER

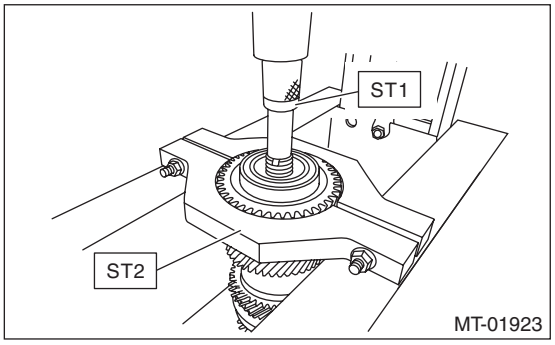

5) Remove the needle bearing, 6th baulk ring and 5th-6th coupling sleeve.
6) Remove the 5th drive gear, 6th needle bearing race, 5th baulk ring, 5th-6th synchronizer hub and needle bearing using the ST1, ST2 and a press.
ST1 899864100 REMOVER
ST2 18722AA000 REMOVER

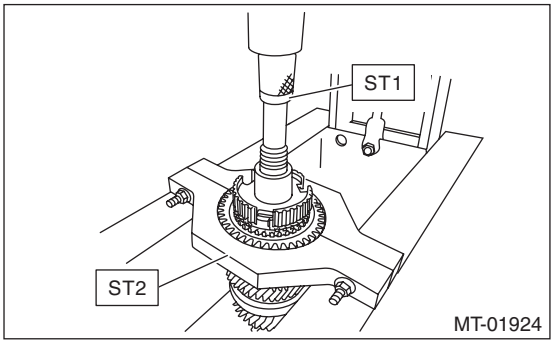

7) Shift the 3rd-4th coupling sleeve into 3rd, then remove the 4th drive gear, taper roller bearing and 5th needle bearing race using the ST1, ST2 and a press.
ST1 899864100 REMOVER
ST2 899714110 REMOVER

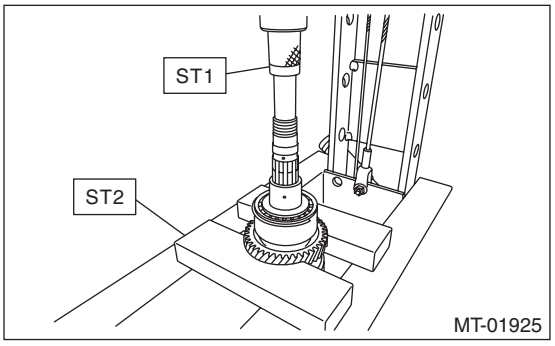

8) Remove the 4th gear thrust washer, 4th baulk ring, needle bearing and 3rd-4th coupling sleeve.
9) Remove the 3rd drive gear, 4th needle bearing race, 3rd-4th synchronizer hub, inner baulk ring, 3rd synchro cone, outer baulk ring and needle bearing using the ST1, ST2 and a press.
ST1 899864100 REMOVER
ST2 899714110 REMOVER

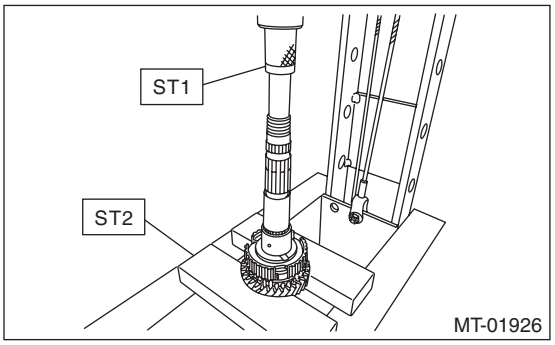

D: ASSEMBLY

1) When the sleeve & hub assemblies have been disassembled, reassemble by aligning the alignment marks.

NOTE:
Position the open ends of the spring 120° apart.

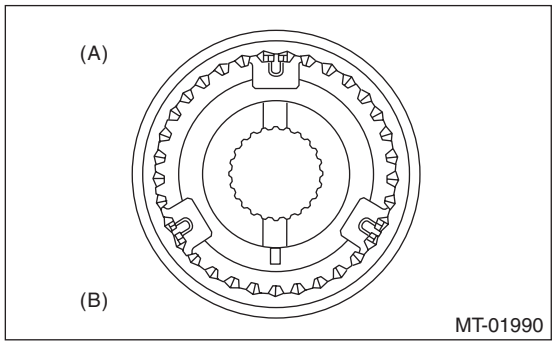

(A) 3rd-4th hub ASSY
(B) 3rd gear side

2) Install the needle bearing, 3rd drive gear, outer baulk ring, 3rd synchro cone, inner baulk ring and 3rd-4th synchronizer hub on the transmission main shaft.

NOTE:
Align the groove in baulk ring with the shifting insert.

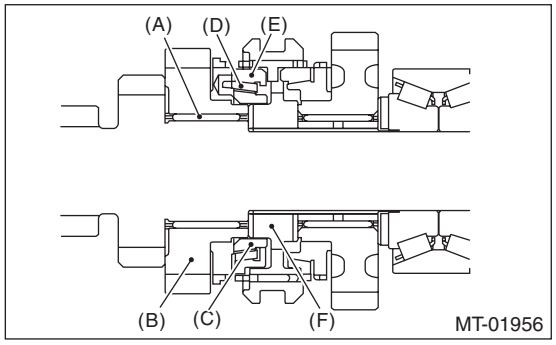

(A) 3rd needle bearing
(B) 3rd drive gear
(C) Inner baulk ring
(D) 3rd synchro cone
(E) Outer baulk ring
(F) 3rd-4th synchronizer hub

3) Install the 4th needle bearing race onto transmission main shaft using ST1, ST2, ST3 and a press.

CAUTION:
Do not apply a load in excess of 10 kN (1 ton, 1.1 US ton, 1.0 Imp ton).

ST1 899714110 REMOVER
ST2 499877000 RACE 4-5 INSTALLER
ST3 398177700 INSTALLER

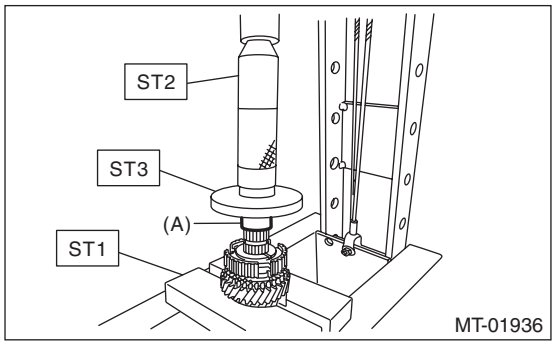

(A) 4th needle bearing race

4) Install the 3rd-4th coupling sleeve, 4th baulk ring, needle bearing, 4th drive gear and 4th gear thrust washer to the transmission main shaft.

NOTE:
• Align the 4th baulk ring and 3rd-4th synchronizer hub with the key groove.
• Install the 3rd-4th coupling sleeve with the groove side facing the 3rd drive gear.

• Install the 4th gear thrust washer with the groove side facing the 4th drive gear.

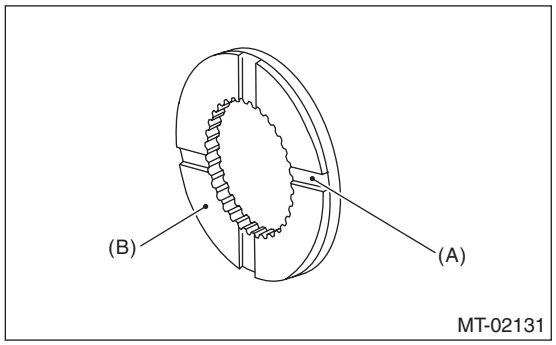

(A) Groove
(B) Face this surface to the 4th gear side.

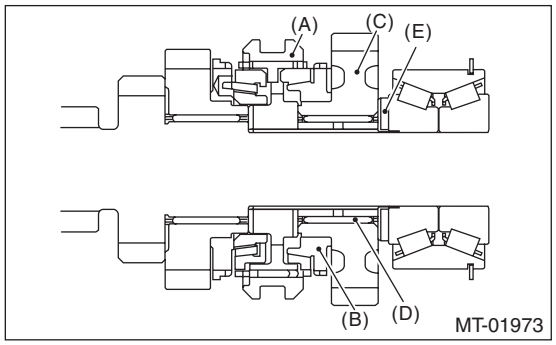

(A) 3rd-4th coupling sleeve
(B) 4th baulk ring
(C) 4th drive gear
(D) Needle bearing
(E) 4th gear thrust washer

5) Install the double taper roller bearing into the rear section of transmission main shaft using ST1, ST2 and a press.

CAUTION:
Do not apply a load in excess of 10 kN (1 ton, 1.1 US ton, 1.0 Imp ton).

NOTE:
Install the double taper roller bearing with snap ring side facing the 5th drive gear side.
ST1 899714110 REMOVER
ST2 499877000 RACE 4-5 INSTALLER

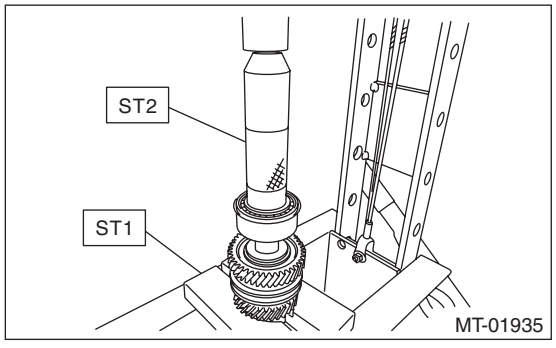

6) Install the 5th needle bearing race into the rear section of transmission main shaft using ST1, ST2 and a press.

CAUTION:
Do not apply a load in excess of 10 kN (1 ton, 1.1 US ton, 1.0 Imp ton).
ST1 899714110 REMOVER
ST2 499877000 RACE 4-5 INSTALLER

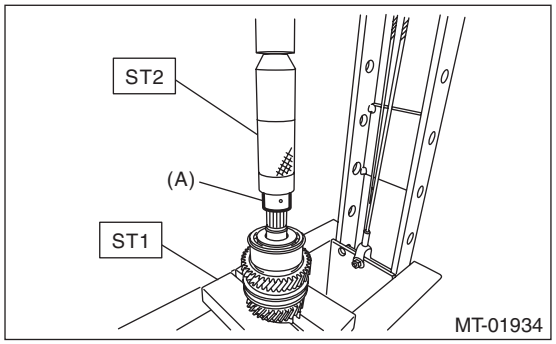

(A) 5th needle bearing race

7) Install the needle bearing, 5th drive gear, 5th baulk ring, and 5th-6th synchronizer hub on the transmission main shaft.

NOTE:
• Align the protruded section of 5th baulk ring with concave section of 5th-6th synchronizer hub.
• Install the 5th-6th synchronizer hub with the groove side facing the 5th drive gear.

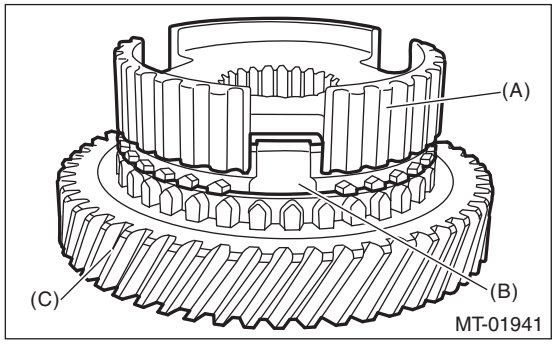

(A) 5th-6th synchronizer hub
(B) 5th baulk ring
(C) 5th drive gear

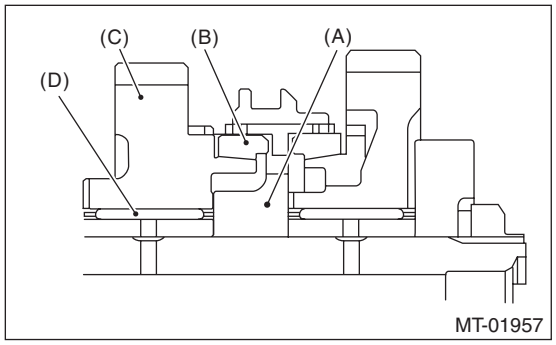

(A) 5th-6th synchronizer hub
(B) 5th baulk ring
(C) 5th drive gear
(D) 5th needle bearing (cage: black)

8) Install the 6th needle bearing race onto transmission main shaft using ST1, ST2 and a press.

CAUTION:
Do not apply a load in excess of 10 kN (1 ton, 1.1 US ton, 1.0 Imp ton).
ST1 899714110 REMOVER
ST2 499877000 RACE 4-5 INSTALLER

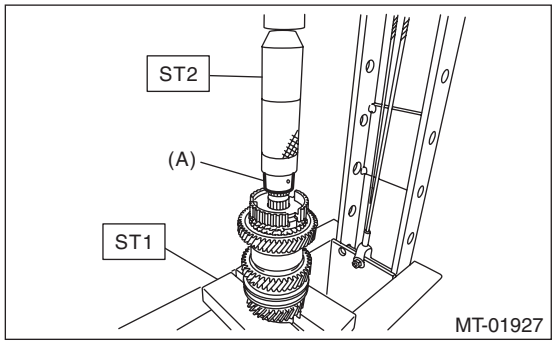

(A) 6th needle bearing race

9) Install the 5th-6th coupling sleeve, 6th baulk ring, 6th drive gear and needle bearing on the transmission main shaft.

NOTE:
Install the 5th-6th coupling sleeve with the short flange side facing the 5th drive gear.

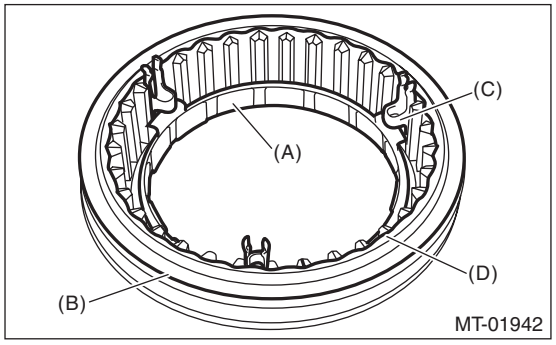

(A) 6th baulk ring
(B) 5th-6th coupling sleeve
(C) 5th-6th shifting insert key
(D) Face this side to 5th gear (short flange side)

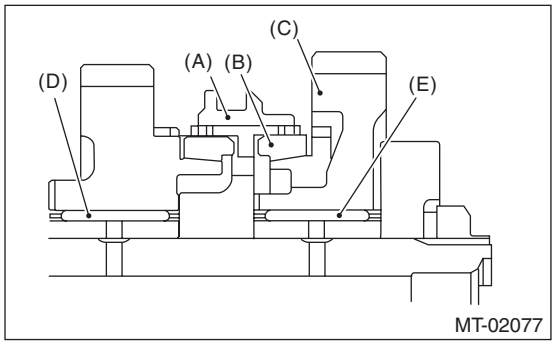

(A) 5th-6th coupling sleeve
(B) 6th baulk ring
(C) 6th drive gear
(D) 5th needle bearing (cage: black)
(E) 6th needle bearing (cage: silver)

10) Install the ball bearing onto transmission main shaft using ST2 and a press.

CAUTION:
Do not apply a load in excess of 10 kN (1 ton, 1.1 US ton, 1.0 Imp ton).

NOTE:
Install the ball bearing with the side which does not have lock nut mounting dent facing 6th drive gear.
ST1 899714110 REMOVER
ST2 899754112 PRESS

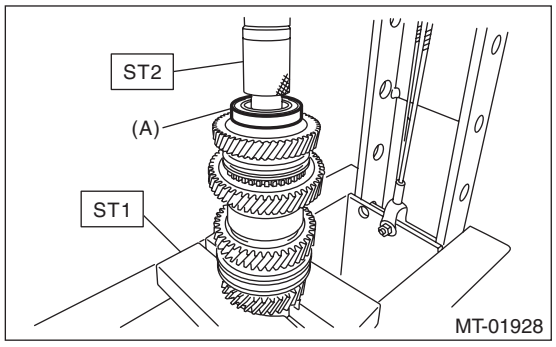

(A) Ball bearing

11) Tighten the lock nuts to the specified torque using ST1 and ST2.

NOTE:
Lock nuts and lock washers must be replaced with new parts.

Tightening torque:
160 N·m (16.3 kgf-m, 118.0 ft-lb)
ST1 499987003 SOCKET WRENCH (35)
ST2 498937000 TRANSMISSION HOLDER

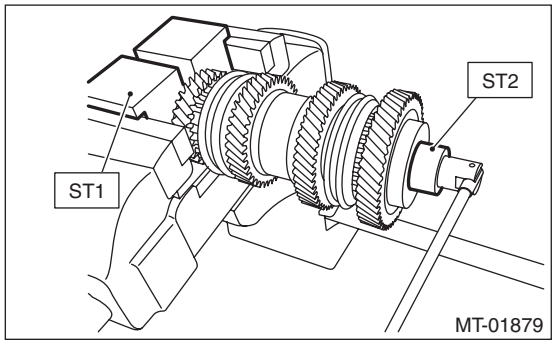

12) Crimp lock nuts in two locations after tightening.

E: INSPECTION

Disassembled parts should be washed with cleaning solvent first, then inspected carefully.
1) Bearing
Replace the bearings in the following cases.
• When the bearing balls, outer races and inner races are broken or rusty.
• When the bearing is worn.
• When the bearings fail to turn smoothly or emit noise in rotation after gear oil lubrication.
• When bearing has other defects.
2) Bushing (each gear)
Replace the bushing in following cases.
• When the sliding surface is damaged or abnormally worn.
• When the inner wall is abnormally worn.
3) Gear
Replace gears in the following cases.
• Replace the gear with new part if its tooth surfaces are broken, damaged or excessively worn.
• Correct or replace if the cone that contacts the baulk ring is rough or damaged.
• Repair or replace if the inner surface or end face is damaged.
4) Baulk ring
Replace the baulk ring in the following cases.
• When the inner surface or end face is damaged.
• When the ring inner surface is abnormally or partially worn down.
• When the contact surface of the synchronizer ring insert section is cracked or abnormally worn.
• If the gap between the end faces of the ring and the gear splined part is excessively small, check the clearance (A) while pressing the ring against the cone.

Clearance (A):
0.5 mm (0.020 in) or more

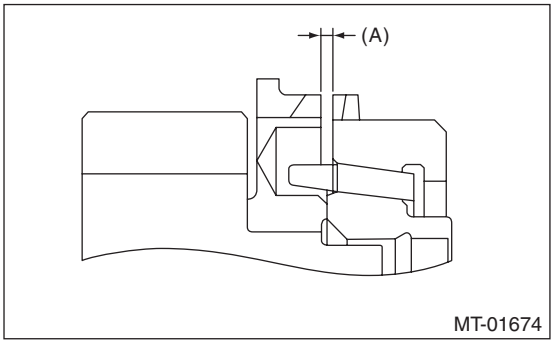

• Apply gear oil to the corn of the gear and while press-fitting the synchronizer ring, check there is no rotation in the circumferential direction.

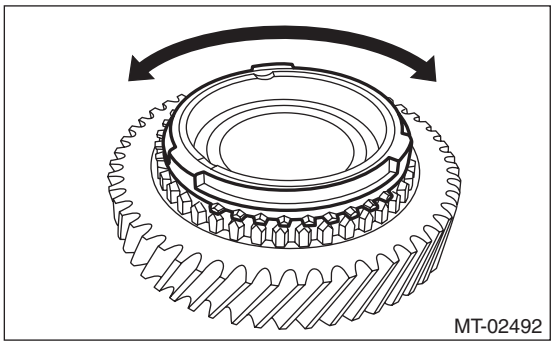

5) Shifting insert key
Replace the insert key if deformed, excessively worn or defective in any way.

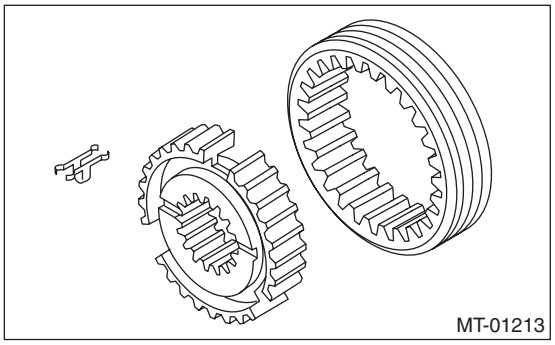

6) Coupling sleeve and synchronizer hub
• Check the slipping condition of the coupling sleeve.
• Check the splines on the coupling sleeve and synchronizer hub for wear.
7) Oil seal
Replace the oil seal if the lip is deformed, hardened, worn or defective in any way.
8) Gearshift mechanism
Repair or replace the gearshift mechanism if excessively worn, bent or defective in any way.

F: ADJUSTMENT

Selection of main shaft rear plate:
Measure the protrusion amount (A) of ball bearing from transmission main case surface, and select a suitable plate in the following table.

NOTE:
Before measuring, tap the end of main shaft with a plastic hammer lightly in order to make the clearance zero between the main case surface and moving flange of bearing.
ST 498147001 DEPTH GAUGE

Dimension (A) mm (in)	Part No.	Mark
4.00 — 4.13 (0.1575 — 0.1626)	32294AA041	1
3.87 — 4.00 (0.1524 — 0.1575)	32294AA051	2

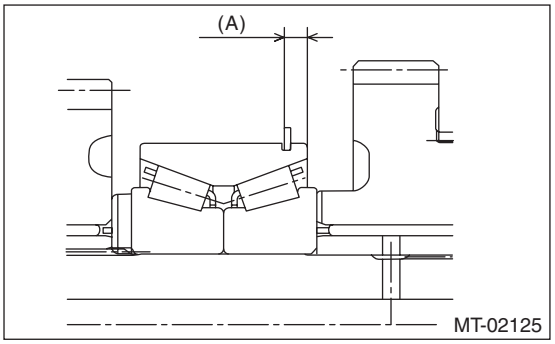

16.Drive Pinion Shaft Assembly

A: REMOVAL

1) Remove the manual transmission assembly from the vehicle. <Ref. to 6MT-25, REMOVAL, Manual Transmission Assembly.>
2) Remove the transfer case together with the extension case assembly. <Ref. to 6MT-40, REMOVAL, Transfer Case and Extension Case Assembly.>
3) Remove the transmission case. <Ref. to 6MT-57, REMOVAL, Transmission Case.>
4) Remove the drive pinion shaft assembly.

NOTE:
Use a hammer handle, etc. to remove if too tight.

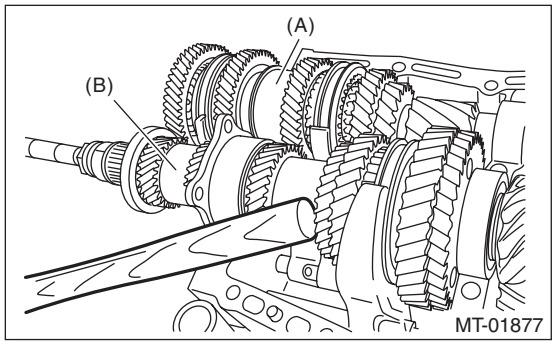

(A) Main shaft ASSY for single-range
(B) Drive pinion shaft ASSY

B: INSTALLATION

1) Remove the front differential assembly.
2) Hypoid gear set match mark/No.: The number (A) on top of the drive pinion, and the number on the hypoid driven gear are set numbers for the two gears. Use a pair having the same numbers.
The figure (B) below shows a number for shim adjustment. If no number is shown, the value is zero.

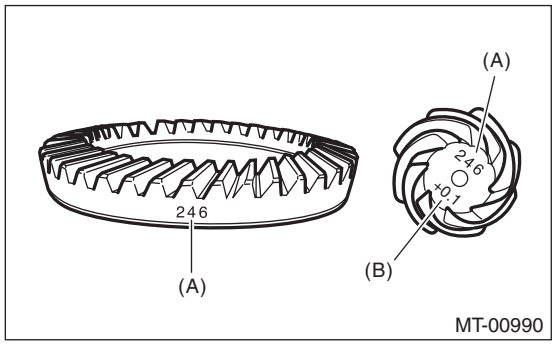

(A) Set number
(B) Number for shim adjustment

3) Place the drive pinion shaft assembly on transmission main case RH without shim and tighten the bearing mounting bolts.
4) Check and adjust the ST.

NOTE:
• Loosen the two bolts and adjust so that the scale indicates 0.5 correctly when the plate end and the scale end are on the same level.
• Tighten the two bolts.

ST 499917500 DRIVE PINION GAUGE ASSY

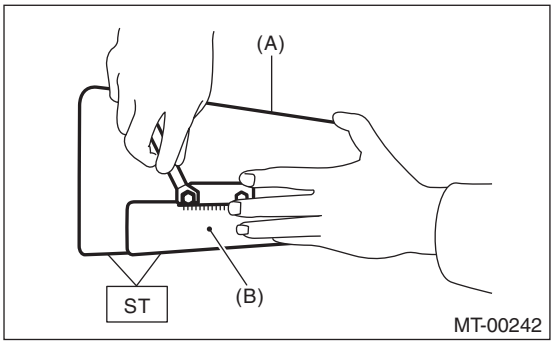

(A) Plate
(B) Scale

5) Position the ST by inserting the knock pin of ST into the knock hole of transmission case.

ST 499917500 DRIVE PINION GAUGE ASSY

6) Slide the drive pinion gauge scale with finger tip and read the value at the point where it matches with the end face of drive pinion.

ST 499917500 DRIVE PINION GAUGE ASSY

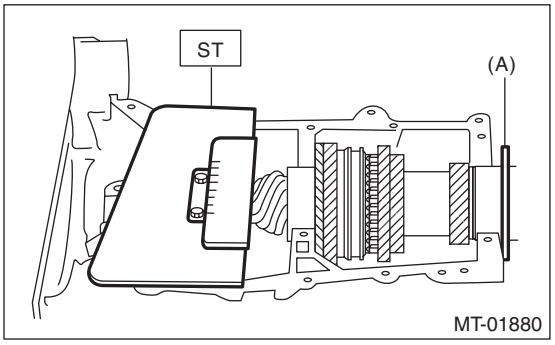

(A) Adjust the clearance to zero without shim.

7) The thickness of shim shall be determined by adding the value indicated on drive pinion to the value indicated on the ST. (Add if the number on drive pinion is prefixed by +, and subtract if the number is prefixed by –.)

ST 499917500 DRIVE PINION GAUGE ASSY

8) Select one to three shims in the following table for the value determined as described above, and take the shim(s) which thickness is closest to the said value.

NOTE:
Install the shim with it's cut in facing the shifter fork & rod side.

Drive pinion shim	
Part No.	Thickness mm (in)
32295AA031	0.150 (0.0059)
32295AA041	0.175 (0.0069)
32295AA051	0.200 (0.0079)
32295AA061	0.225 (0.0089)
32295AA071	0.250 (0.0098)
32295AA081	0.275 (0.0108)
32295AA091	0.300 (0.0118)
32295AA101	0.500 (0.0197)

9) Install the front differential assembly. <Ref. to 6MT-77, INSTALLATION, Front Differential Assembly.>
10) Fit the transmission case knock pin to the knock pin hole of the roller bearing and install the drive pinion shaft assembly.
11) Install the main shaft assembly for single-range. <Ref. to 6MT-60, INSTALLATION, Main Shaft Assembly for Single-Range.>
12) Check each shifter fork. <Ref. to 6MT-92, INSPECTION, Shifter Fork and Rod.>
13) Install the transmission case. <Ref. to 6MT-58, INSTALLATION, Transmission Case.>
14) Install the transfer case together with the extension case assembly. <Ref. to 6MT-40, INSTALLATION, Transfer Case and Extension Case Assembly.>
15) Install the manual transmission assembly to the vehicle. <Ref. to 6MT-29, INSTALLATION, Manual Transmission Assembly.>

C: DISASSEMBLY

NOTE:
• Attach a cloth to the end of driven shaft (on the frictional side of the thrust needle bearing) to prevent damage during disassembly or reassembly.
• If necessary, use a new gear and hub assembly as a set, when replacing the gear or hub. Because these must engage at the specified point, avoid disassembly as much as possible. If it must be disassembled, mark the engaging point on the spline beforehand.
1) Flatten the tab of the lock nut. Remove the lock nut with ST1, ST2 and ST3.
ST1 18680AA020 HOLDER
ST2 18667AA020 HOLDER
ST3 18662AA010 SOCKET WRENCH (27)

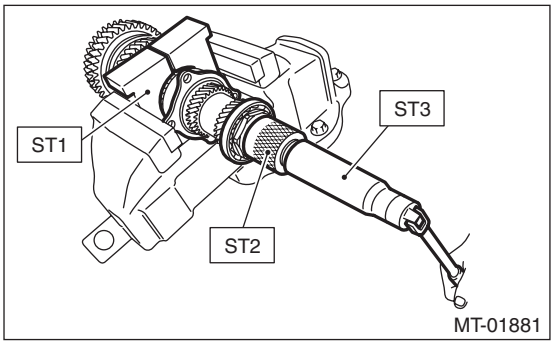

2) Draw out the drive pinion from driven shaft. Remove the differential bevel gear sleeve, adjusting washer No. 1, adjusting washer No. 2, thrust bearing, needle bearing and drive pinion collar.

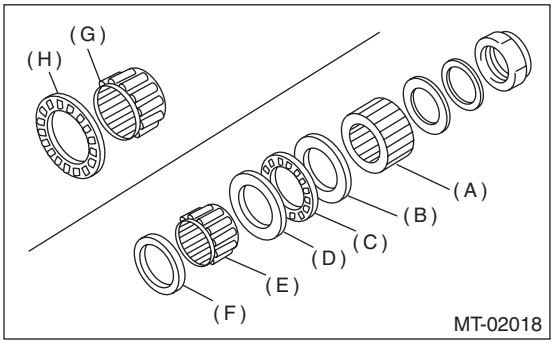

(A) Differential bevel gear sleeve
(B) Adjusting washer No. 1 (25 × 36 × t)
(C) Thrust bearing (25 × 36 × 2)
(D) Adjusting washer No. 2 (25 × 36 × t)
(E) Needle bearing (25 × 30 × 20)
(F) Drive pinion collar
(G) Needle bearing (30 × 37 × 23)
(H) Thrust bearing (33 × 50 × 3)

3) Remove the roller bearing and washer using ST and a press.

NOTE:
Do not reuse the roller bearing.
ST 498077000 REMOVER

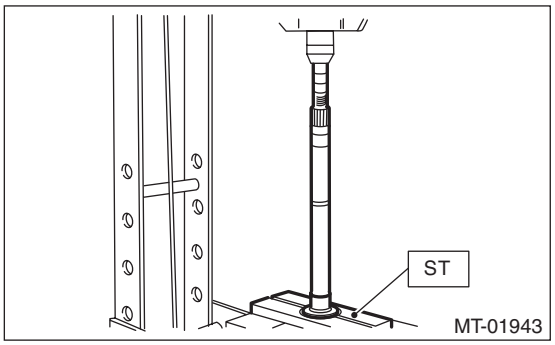

4) Flatten the tab of the lock nut. Remove the lock nut using ST1 and ST2.
ST1 499987300 SOCKET WRENCH (50)
ST2 18680AA020 HOLDER

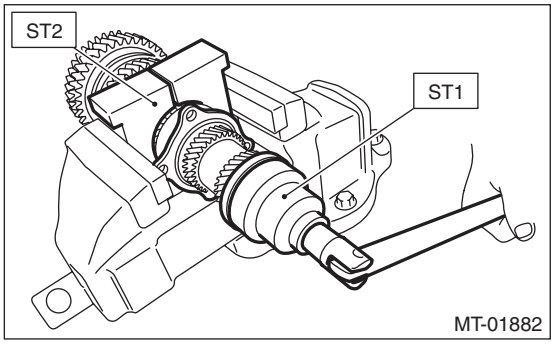

5) Remove the ball bearing, 6th driven gear and drive pinion spacer using the ST1, ST2 and a press.
ST1 899754112 PRESS
ST2 899714110 REMOVER

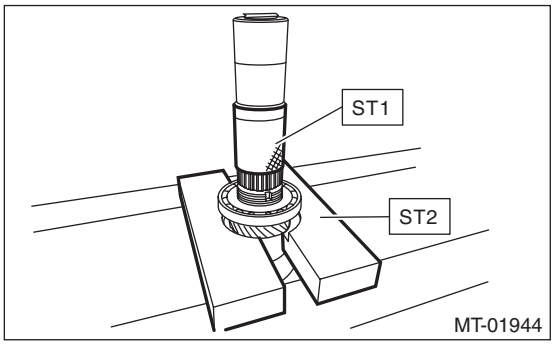

6) Remove the taper roller bearing and 3rd-4th driven gear using ST1, ST2 and a press.
ST1 899754112 PRESS
ST2 899714110 REMOVER

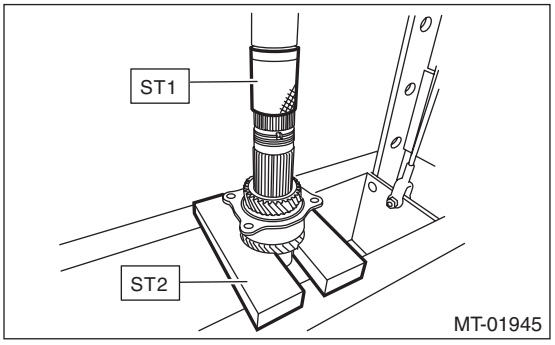

7) Remove the key.
8) Remove the 2nd driven gear, inner baulk ring, synchro cone, outer baulk ring and 1st-2nd coupling sleeve.
9) Remove the 1st driven gear, inner baulk ring, synchro cone, outer baulk ring, 2nd gear bushing and 1st-2nd synchronizer hub using ST and a press.
ST 18762AA000 COMPRESSOR SPECIAL TOOL

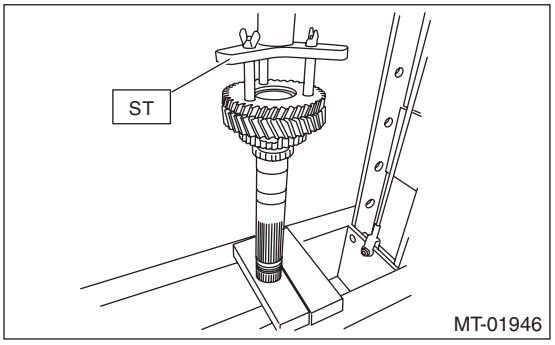

D: ASSEMBLY

1) Install the sleeve and the gear and hub assembly by matching the alignment marks.

NOTE:
• Position the open ends of the spring 120° apart.
• Use the new gear & hub assembly, if replacing the gear or hub.

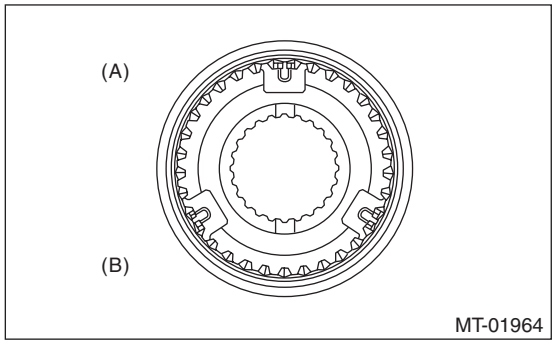

(A) 1st-2nd sleeve & hub ASSY
(B) 1st gear side

2) Install the 1st driven gear, inner baulk ring, synchro cone and outer baulk ring and 1st-2nd synchronizer hub onto driven shaft.

NOTE:
• Install the gear & hub assembly in the proper position while paying attention to the installing direction.
• Align the baulk ring and gear & hub assembly with the key groove.

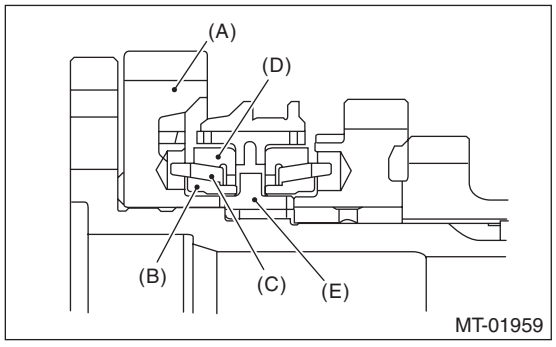

(A) 1st driven gear
(B) Inner baulk ring
(C) Synchro cone
(D) Outer baulk ring
(E) 1st-2nd synchronizer hub

3) Install the 2nd driven gear bushing onto driven shaft using ST and a press.

CAUTION:
Do not apply a load in excess of 10 kN (1 ton, 1.1 US ton, 1.0 Imp ton).

NOTE:
• Attach a cloth to the end of the driven shaft to prevent damage.
• When press fitting, align the oil holes of the shaft and bushing
ST 18654AA000 INSTALLER

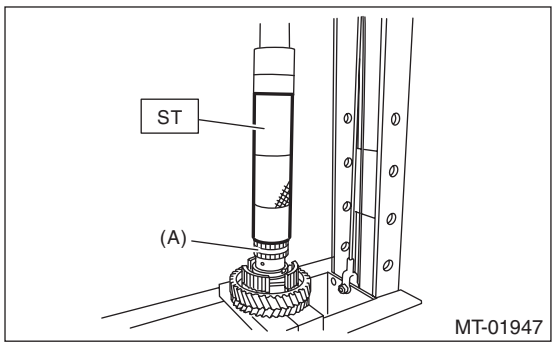

(A) 2nd driven gear bushing

4) Attach the 1st-2nd coupling sleeve and 1st-2nd shifting insert key to the driven shaft.

NOTE:
• Install the 1st-2nd coupling sleeve with the long flange side facing the 1st driven gear.
• Install the 1st-2nd shifting insert keys at 120° interval positions.

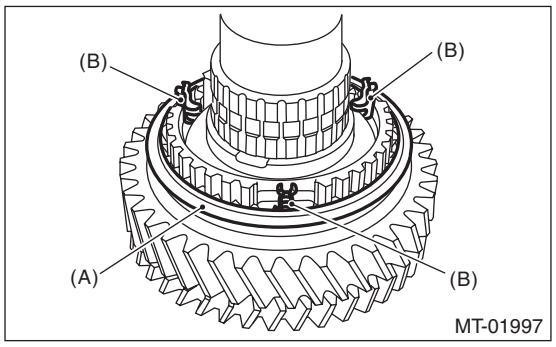

(A) 1st-2nd coupling sleeve
(B) 1st-2nd shifting insert key (three positions)

5) Install the outer baulk ring, synchro cone, inner baulk ring and 2nd driven gear to driven shaft.

NOTE:
Align the groove in baulk ring with the insert.

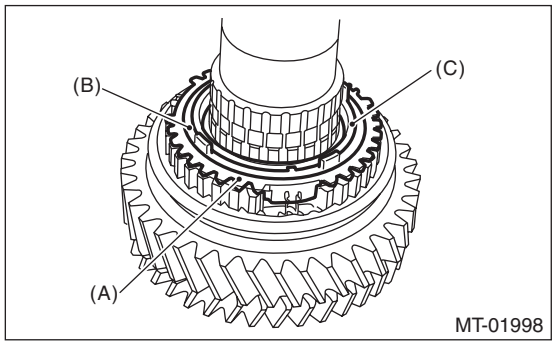

(A) Outer baulk ring
(B) Synchro cone
(C) Inner baulk ring

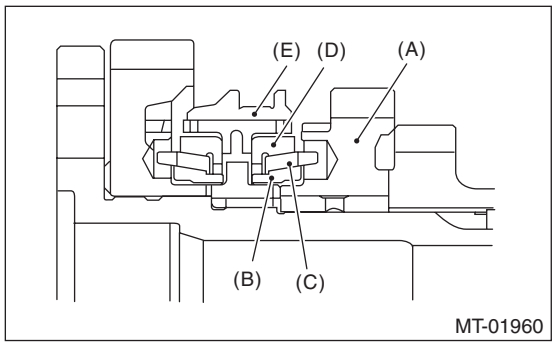

(A) 2nd driven gear
(B) Inner baulk ring
(C) Synchro cone
(D) Outer baulk ring
(E) 1st-2nd coupling sleeve

6) After installing key on driven shaft, install the 3rd-4th driven gear using a ST and a press.

CAUTION:
Do not apply a load in excess of 10 kN (1 ton, 1.1 US ton, 1.0 Imp ton).
ST 499277200 INSTALLER

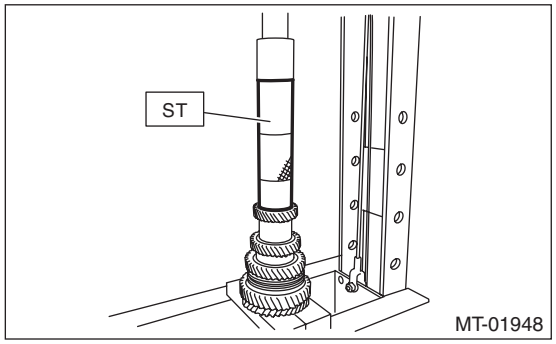

7) Install a set of roller bearings onto the driven shaft using ST and a press.

CAUTION:
Do not apply a load in excess of 10 kN (1 ton, 1.1 US ton, 1.0 Imp ton).
ST 499277200 INSTALLER

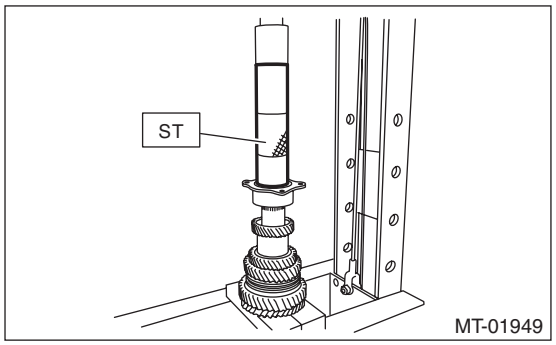

8) Install the 5th driven gear onto driven shaft using ST and a press.

CAUTION:
Do not apply a load in excess of 10 kN (1 ton, 1.1 US ton, 1.0 Imp ton).

NOTE:
Install the 5th driven gear with the groove side facing the 6th driven gear.
ST 499277200 INSTALLER

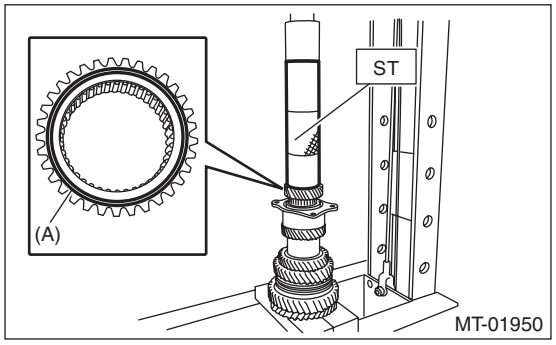

(A) Install with the groove side facing the 6th driven gear.

9) Install the drive pinion spacer to driven shaft, then install the 6th driven gear to driven shaft using the ST and a press.

CAUTION:
Do not apply a load in excess of 10 kN (1 ton, 1.1 US ton, 1.0 Imp ton).

NOTE:
Install the 6th driven gear with the stepped side facing the 5th driven gear.
ST 499277200 INSTALLER

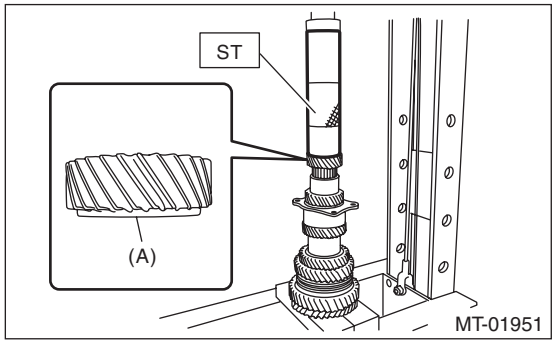

(A) Install with the stepped side facing the 5th driven gear.

10) Install the ball bearing onto driven shaft using ST and a press.

CAUTION:
Do not apply a load in excess of 10 kN (1 ton, 1.1 US ton, 1.0 Imp ton).
ST 499277200 INSTALLER

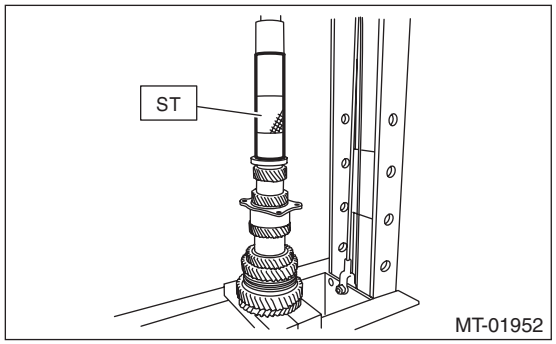

11) Tighten the lock nuts to the specified torque using ST1 and ST2.

NOTE:
Use a new lock nut.

Tightening torque:
440 N·m (44.9 kgf-m, 324.5 ft-lb)
ST1 499987300 SOCKET WRENCH (50)
ST2 18680AA020 HOLDER

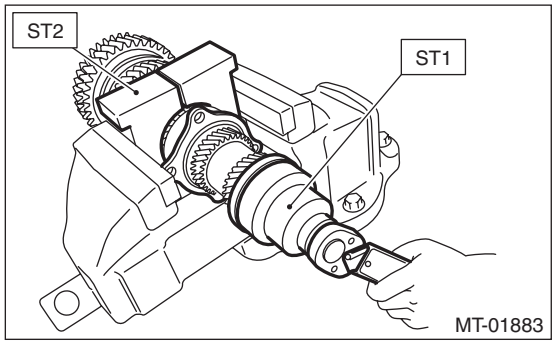

12) Using a spring scale, check that starting torque of the roller bearing is 0.1 to 1.5 N (0.01 to 0.15 kgf, 0.02 to 0.34 lbf).

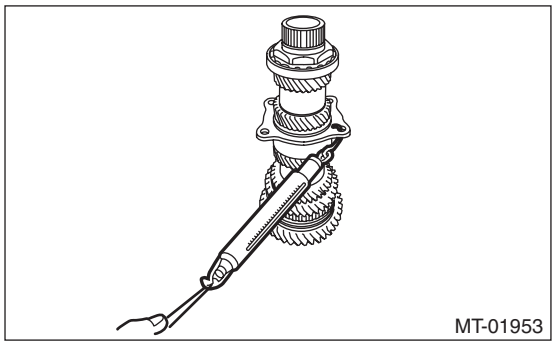

13) Crimp the locknut in 2 locations.
14) Install the roller bearing onto drive pinion.

NOTE:
When installing the roller bearing, direct the knock pin hole of outer race toward rear.

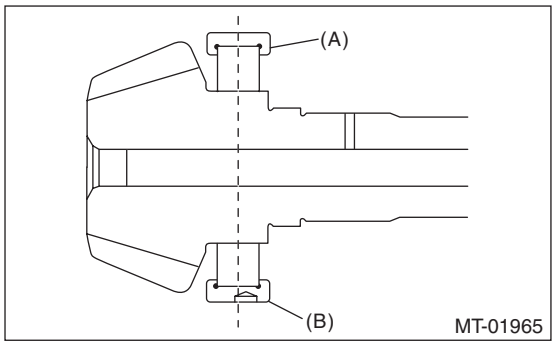

(A) Roller bearing
(B) Knock pin hole

15) Install the washer using ST1, ST2 and a press.

CAUTION:
Do not apply a load in excess of 10 kN (1 ton, 1.1 US ton, 1.0 Imp ton).
ST1 499277100 BUSHING 1-2 INSTALLER
ST2 499277200 INSTALLER

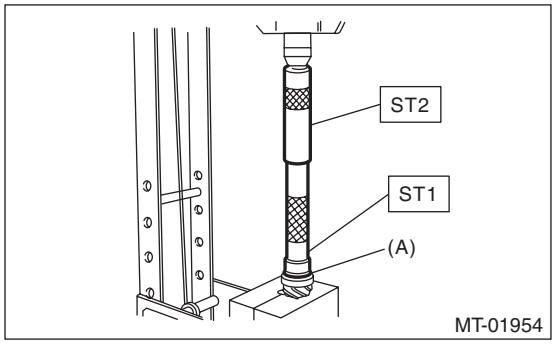

(A) Washer

16) Install the thrust bearing and needle bearing. Install the driven shaft assembly.

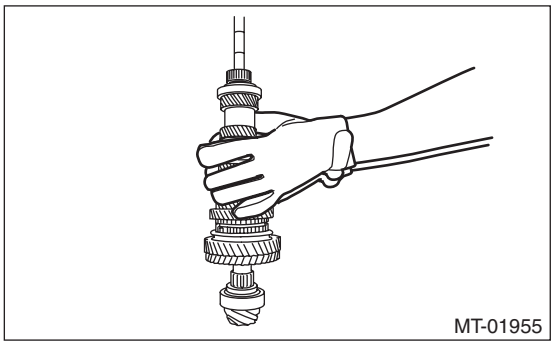

17) Install the drive pinion collar, needle bearing, adjusting washer No. 2, thrust bearing, adjusting washer No. 1 and differential bevel gear sleeve in this order.

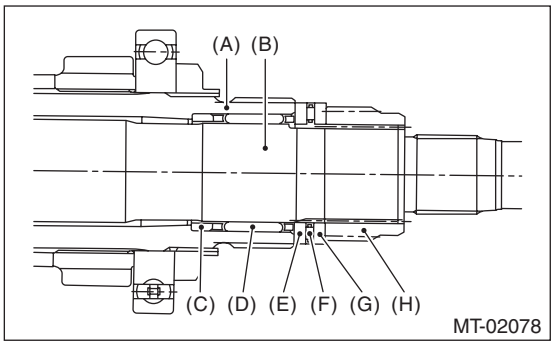

(A) Driven shaft
(B) Drive pinion shaft
(C) Drive pinion collar
(D) Needle bearing (25 × 30 × 20)
(E) Adjusting washer No. 2 (25 × 36 × t)
(F) Thrust bearing (25 × 36 × 2)
(G) Adjusting washer No. 1 (25 × 36 × t)
(H) Differential bevel gear sleeve

18) Adjust the thrust bearing preload. <Ref. to 6MT-74, THRUST BEARING PRELOAD, ADJUSTMENT, Drive Pinion Shaft Assembly.>

E: INSPECTION

Disassembled parts should be washed with cleaning solvent first, then inspected carefully.
1) Bearing
Replace the bearings in the following cases.
• When the bearing balls, outer races and inner races are broken or rusty.
• When the bearing is worn.
• When the bearings fail to turn smoothly or emit noise in rotation after gear oil lubrication.
• The ball bearing on the rear side of the drive pinion shaft should be checked for smooth rotation before the drive pinion assembly is disassembled. In this case, because a preload is working on the bearing, its rotation feels like it is slightly dragging unlike other bearings.

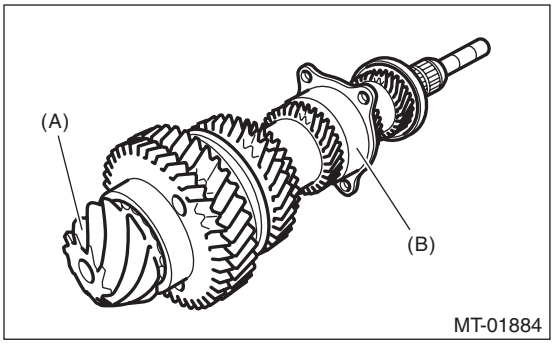

(A) Drive pinion shaft
(B) Ball bearing

• When bearing has other defects.
2) Bushing (each gear)
Replace the bushing in following cases.
• When the sliding surface is damaged or abnormally worn.
• When the inner wall is abnormally worn.
3) Gear
Replace gears in the following cases.
• Replace the gear with new part if its tooth surfaces are broken, damaged or excessively worn.
• Correct or replace if the cone that contacts the baulk ring is rough or damaged.
• Correct or replace if the inner surface or end face is damaged.
4) Baulk ring, synchro cone
Replace the baulk ring and synchro cone in the following cases.
• When the inner surface or end face is damaged.
• When the baulk ring inner surface is abnormally or partially worn down.
• If the gap between the end faces of the baulk ring and the gear splined part is excessively small, check the clearance (A) while pressing the ring against the cone.

Clearance (A):
0.5 mm (0.020 in) or more

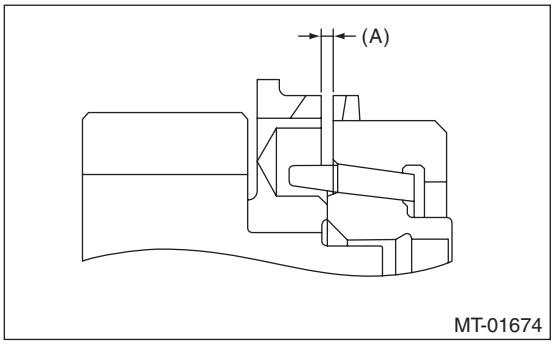

• When the contact surface of the synchronizer ring insert section is scratched or abnormally worn.
• Apply gear oil to the corn of the gear and while press-fitting the synchronizer ring, check there is no rotation in the circumferential direction.

5) Coupling sleeve and synchronizer hub
• Check the slipping condition of the coupling sleeve.
• Check the splines on the coupling sleeve and synchronizer hub for wear.

6) Shifting insert key
Replace the shifting insert key if deformed, excessively worn or defective in any way.

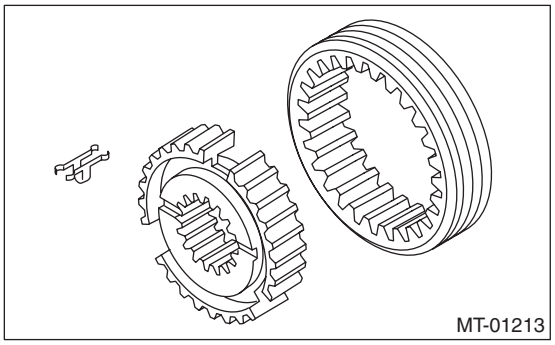

F: ADJUSTMENT

1. THRUST BEARING PRELOAD

1) Select a suitable adjusting washer No. 1 so that dimension (H) will be zero in a visual check. Position the washer (20 × 31 × 4) and lock washer (20 × 31 × 2.3) and attach the lock nut.

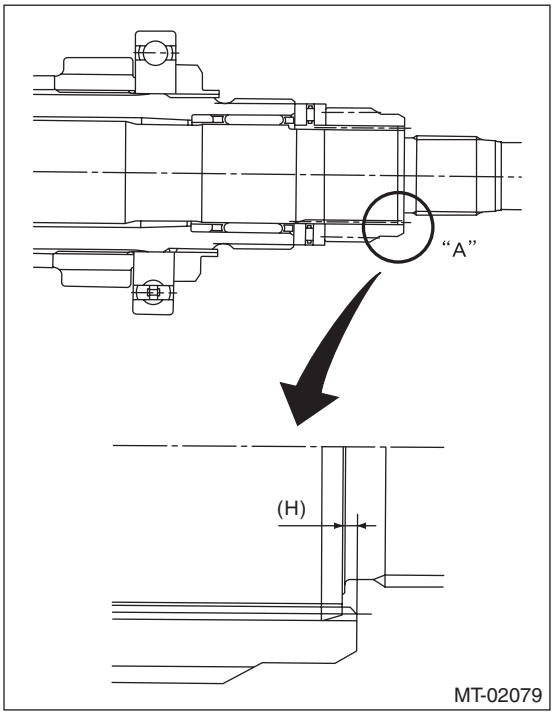

2) Using the ST1, ST2 and ST3, tighten the lock nut to the specified torque.

NOTE:
• Use new lock nuts and lock washers.
• Make sure the lock washer is installed in the proper direction.

Tightening torque:
126 N·m (12.8 kgf-m, 92.9 ft-lb)
ST1 18680AA020 HOLDER
ST2 18667AA020 HOLDER
ST3 18662AA010 SOCKET (27)

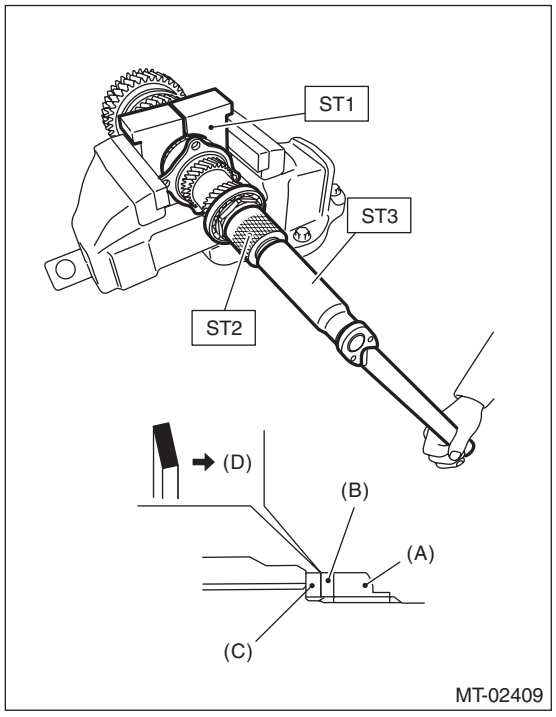

(A) Nut
(B) Lock washer
(C) Washer
(D) Nut side

3) After removing the ST2 used in step 2), measure the starting torque using torque driver.

Starting torque:
0.3 — 0.8 N·m (0.03 — 0.08 kgf-m, 0.2 — 0.6 ft-lb)
ST1 18680AA020 HOLDER
ST3 18662AA010 SOCKET (27)

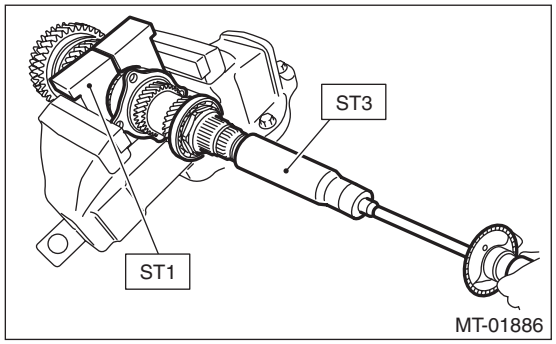

4) If the starting torque is not within the specified limit, select new adjusting washer No. 1 and re-check starting torque.

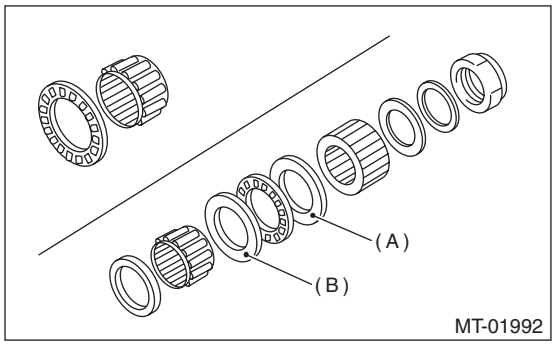

(A) Adjusting washer No. 1
(B) Adjusting washer No. 2

Adjusting washer No. 1	
Part No.	Thickness mm (in)
803025071	2.925 (0.1152)
803025072	2.950 (0.1161)
803025073	2.975 (0.1171)
803025074	3.000 (0.1181)
803025075	3.025 (0.1191)
803025076	3.050 (0.1201)
803025077	3.075 (0.1211)

5) If the specified starting torque cannot be obtained by the selection of adjusting washer No. 1, select adjusting washer No. 2 from the list below. Repeat steps 1) through 4) to adjust starting torque.

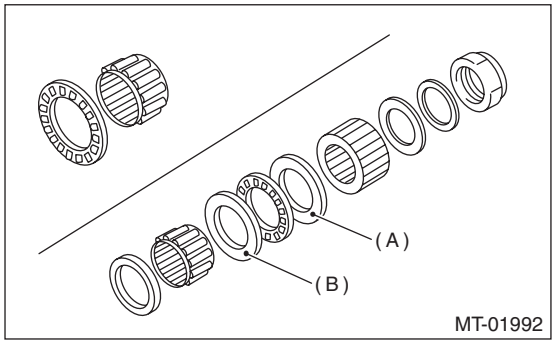

(A) Adjusting washer No. 1
(B) Adjusting washer No. 2

Starting torque	Dimension H	Adjusting washer No. 2
Low	Small	Select thicker one.
High	Large	Select thinner one.

Adjusting washer No. 2	
Part No.	Thickness mm (in)
803025070	2.850 (0.1122)
803025074	3.000 (0.1181)
803025078	3.150 (0.1240)

6) Recheck that the starting torque is within the specified range, then crimp the lock nut at four positions.

17.Front Differential Assembly

A: REMOVAL

1) Remove the manual transmission assembly from the vehicle. <Ref. to 6MT-25, REMOVAL, Manual Transmission Assembly.>
2) Remove the transfer case together with the extension case assembly. <Ref. to 6MT-40, REMOVAL, Transfer Case and Extension Case Assembly.>
3) Remove the transmission case. <Ref. to 6MT-57, REMOVAL, Transmission Case.>
4) Remove the drive pinion shaft assembly. <Ref. to 6MT-67, REMOVAL, Drive Pinion Shaft Assembly.>
5) Remove the main shaft assembly for single-range. <Ref. to 6MT-60, REMOVAL, Main Shaft Assembly for Single-Range.>
6) Remove the front differential assembly.

NOTE:
• Do not confuse the right and left roller bearing outer races.
• Be careful not to damage the oil seal of retainer.

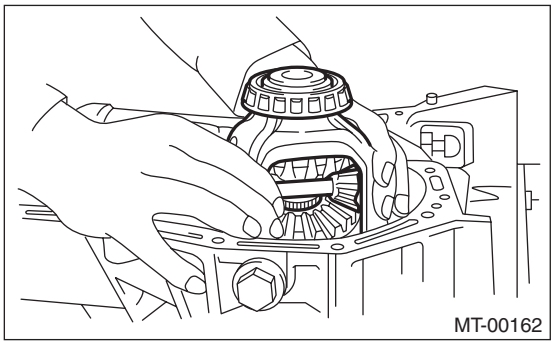

7) Remove the differential side retainers using ST.
ST 18658AA020 WRENCH COMPL RETAINER

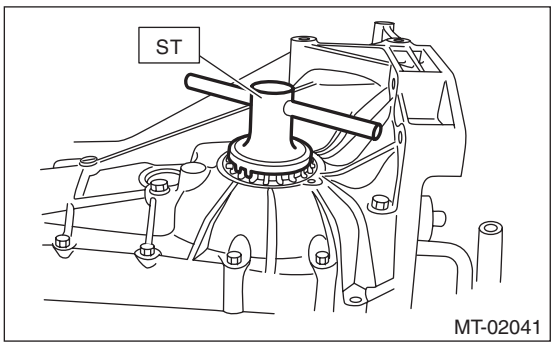

8) Remove the bearing outer race from the transmission case.
ST 398527700 PULLER ASSY

B: INSTALLATION

1) Install the differential side retainers using ST.
ST 18658AA020 WRENCH COMPL RETAINER
2) Install the bearing outer race to the transmission case.
3) Install the front differential assembly.

NOTE:
Be careful not to fold the sealing lip of oil seal.

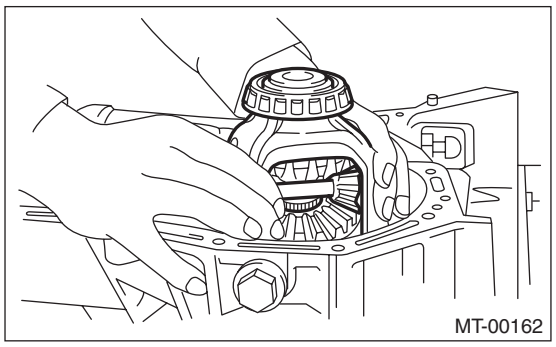

4) Install the main shaft assembly for single-range. <Ref. to 6MT-60, INSTALLATION, Main Shaft Assembly for Single-Range.>
5) Install the drive pinion shaft assembly. <Ref. to 6MT-67, INSTALLATION, Drive Pinion Shaft Assembly.>
6) Install the transmission case. <Ref. to 6MT-58, INSTALLATION, Transmission Case.>
7) Install the transfer case together with the extension case assembly. <Ref. to 6MT-40, INSTALLATION, Transfer Case and Extension Case Assembly.>
8) Install the manual transmission assembly to the vehicle. <Ref. to 6MT-29, INSTALLATION, Manual Transmission Assembly.>

C: DISASSEMBLY

1. DIFFERENTIAL CASE ASSY

1) Loosen the twelve bolts and remove hypoid driven gear.

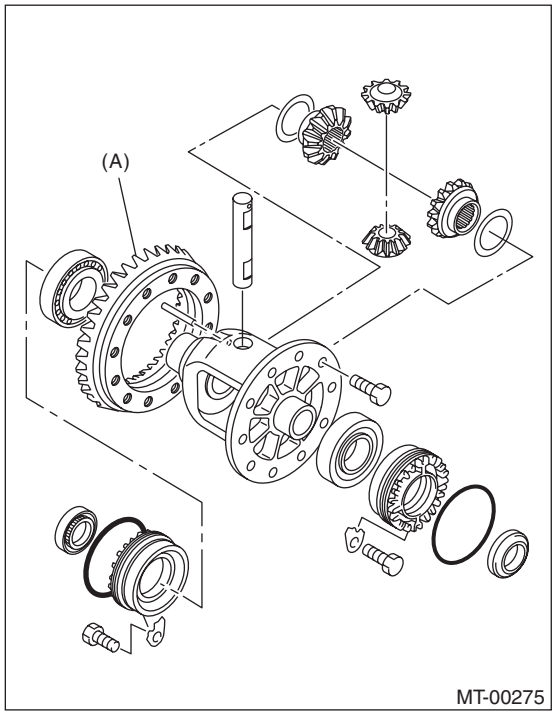

(A) Hypoid driven gear

2) Drive out the straight pin from differential assembly toward hypoid driven gear side.
ST 899904100 STRAIGHT PIN REMOVER

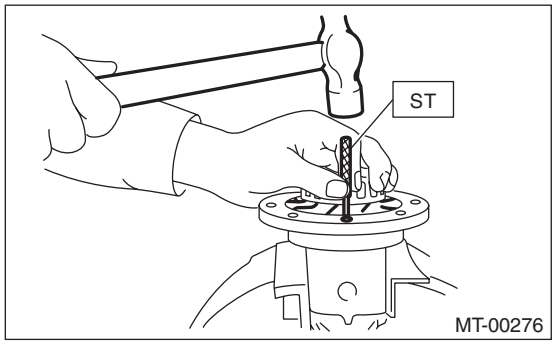

3) Pull out the pinion shaft, and remove the differential bevel pinion, differential bevel gear and washer.

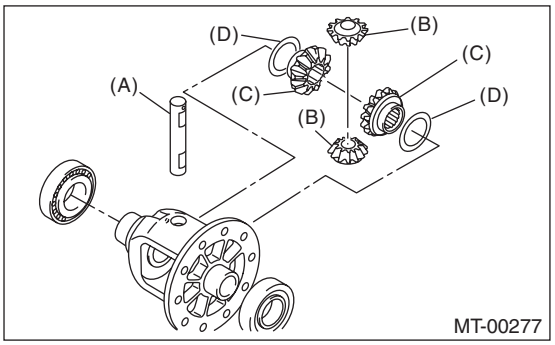

(A) Pinion shaft
(B) Differential bevel pinion
(C) Differential bevel gear
(D) Washer

4) Using the ST, remove the roller bearing.
ST 899524100 PULLER SET

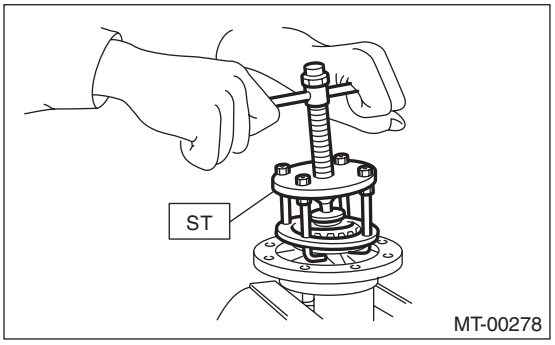

2. SIDE RETAINER

1) Remove the O-ring.

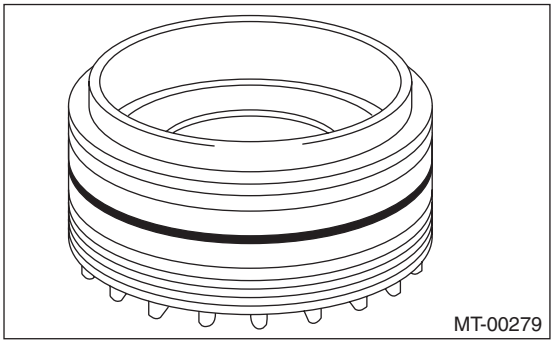

2) Remove the oil seal.

NOTE:
• Remove it by using flat tip screwdriver.
• Do not reuse the oil seal. Replace the oil seal with a new part.

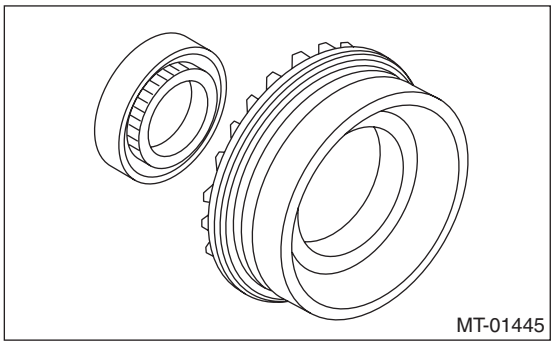

D: ASSEMBLY

1. DIFFERENTIAL CASE ASSY

1) Install the differential bevel gear and differential bevel pinion together with washer, and insert the pinion shaft.

NOTE:
Face the chamfered side of washer toward gear.

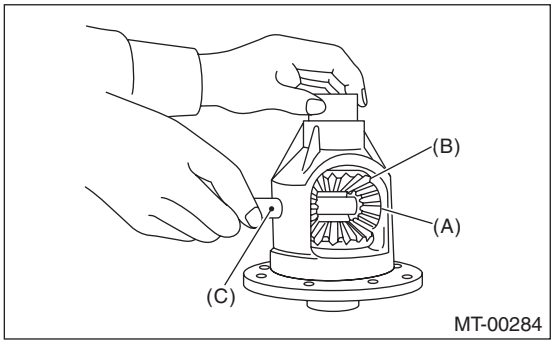

(A) Differential bevel pinion
(B) Differential bevel gear
(C) Pinion shaft

2) Measure the backlash between the differential bevel gear and differential bevel pinion. If backlash is out of specifications, install a suitable washer to adjust. <Ref. to 6MT-81, BEVEL PINION GEAR BACKLASH, INSPECTION, Front Differential Assembly.>

NOTE:
Be sure the pinion gear teeth contacts adjacent gear teeth during measurement.

Standard backlash
0.13 — 0.18 mm (0.0051 — 0.0071 in)

ST1 498247001 MAGNET BASE
ST2 498247100 DIAL GAUGE

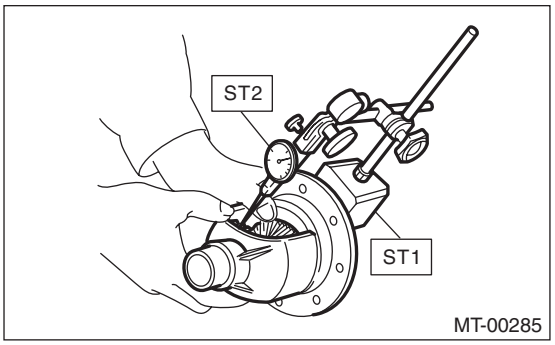

3) Align the pinion shaft and differential case with each hole, and drive the straight pin into the holes from the hypoid driven gear side using the ST.

NOTE:
Use a new straight pin.

ST 899904100 STRAIGHT PIN REMOVER

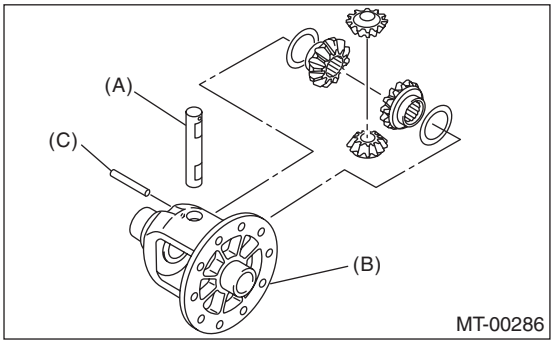

(A) Pinion shaft
(B) Differential case
(C) Straight pin

4) Install the roller bearing to differential case.

CAUTION:
Do not apply a load in excess of 10 kN (1 ton, 1.1 US ton, 1.0 Imp ton).

NOTE:
Be careful because the roller bearing outer races are used as a set.
ST1 499277100 BUSHING 1-2 INSTALLER
ST2 398497701 ADAPTER

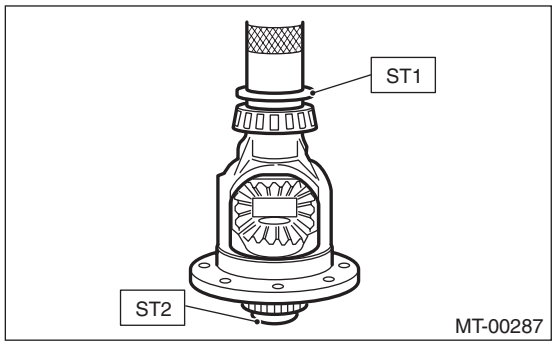

5) Install the hypoid driven gear to the differential case using twelve bolts.

Tightening torque:
T: 62 N·m (6.3 kgf-m, 45.7 ft-lb)

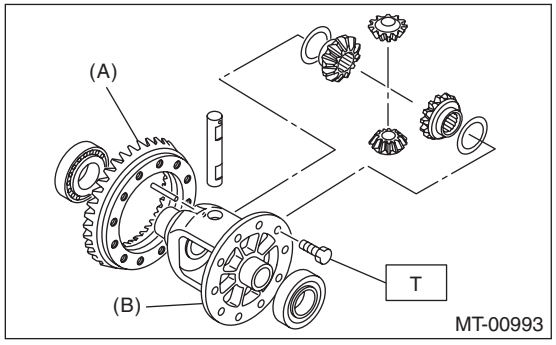

(A) Hypoid driven gear
(B) Differential case

2. SIDE RETAINER

1) Using the ST, install the oil seal by lightly tapping with a plastic hammer.

NOTE:
- Use a new oil seal.
- Apply transmission gear oil to the oil seal lips, and install the oil seal while being careful not to deform the lip.
- Check the identification marks (L, R), attach the oil seal RH and LH.

ST 18675AA000 DIFFERENTIAL SIDE OIL SEAL INSTALLER

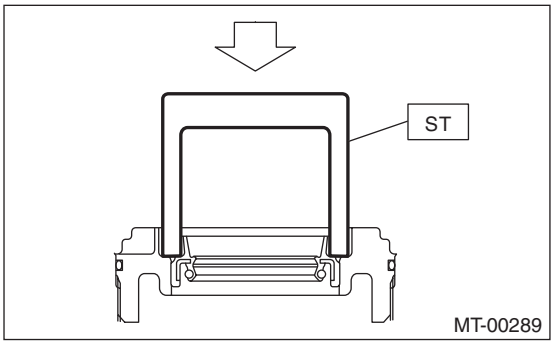

2) Install the O-ring.

NOTE:
- Use new O-rings.
- Apply gear oil to O-ring.
- Do not stretch or damage the O-ring.

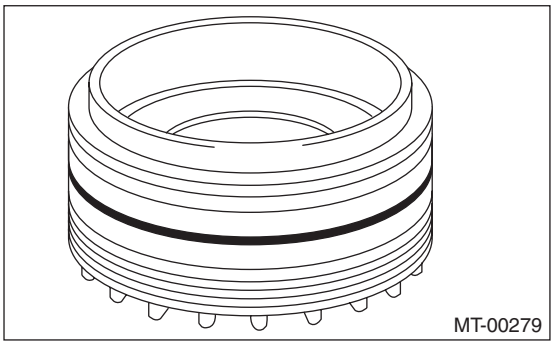

E: INSPECTION

Repair or replace the differential gear in the following cases:
• When the hypoid drive gear and drive pinion shaft tooth surfaces are damaged, excessively worn, or seized.
• When the roller bearing on the drive pinion shaft has a worn or damaged roller path.
• When there is damage, wear or seizure of the differential bevel pinion, differential bevel gear, washer, pinion shaft or straight pin.
• When the differential case sliding surfaces are worn or damaged.

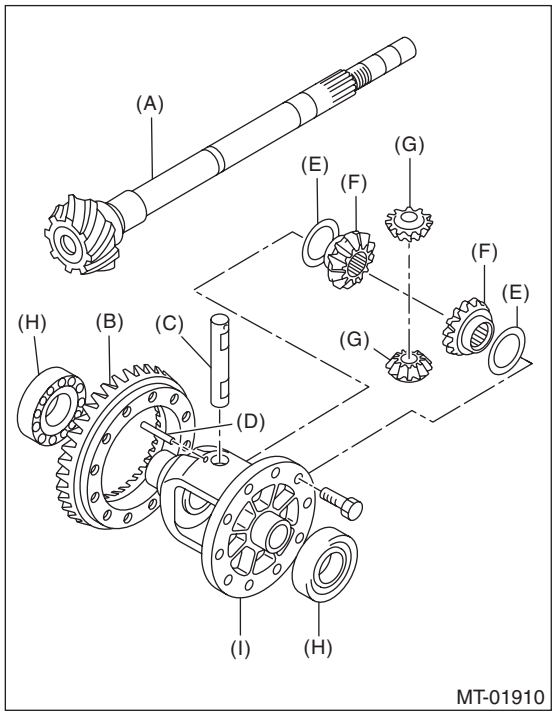

(A) Drive pinion shaft
(B) Hypoid driven gear
(C) Pinion shaft
(D) Straight pin
(E) Washer
(F) Differential bevel gear
(G) Differential bevel pinion
(H) Roller bearing
(I) Differential case

1. BEVEL PINION GEAR BACKLASH

Measure the backlash between the differential bevel gear and differential bevel pinion. If backlash is out of specifications, install a suitable washer to adjust. <Ref. to 6MT-82, ADJUSTMENT, Front Differential Assembly.>

Standard backlash
0.13 — 0.18 mm (0.0051 — 0.0071 in)
ST1 498247001 MAGNET BASE
ST2 498247100 DIAL GAUGE

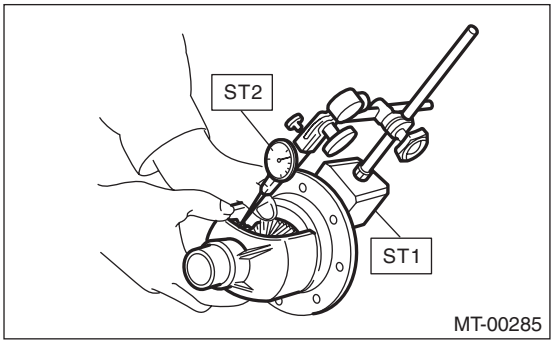

2. HYPOID GEAR BACKLASH

1) Set the ST1, ST2 and ST3. Insert the needle through drain plug hole so that the needle comes in contact with the tooth surface on the right corner, and check the backlash.
ST1 498247001 MAGNET BASE
ST2 498247100 DIAL GAUGE
ST3 498255400 PLATE

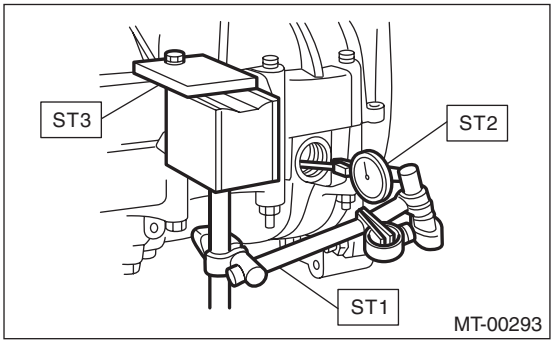

2) Secure the drive pinion shaft using the ST, install SUBARU genuine axle shafts to both sides, rotate in the both directions so that the gauge contacts the tooth surface, and read the dial gauge.

NOTE:
If the backlash is outside the specified range, adjust it by turning the side retainer in the right side case.

Backlash
0.13 — 0.18 mm (0.0051 — 0.0071 in)
ST 18667AA020 HOLDER
Part No. 38415AA100 Axle shaft

3. TOOTH CONTACT OF HYPOID GEAR

Check tooth contact of hypoid gear as follows: Apply a thin uniform coat of red lead on both teeth surfaces on 3 or 4 teeth of the hypoid gear. Move the hypoid gear back and forth by turning the transmission main shaft until a definite contact pattern is developed on the hypoid gear, and judge whether face contact is correct. When the contact pattern is not correct, adjust. <Ref. to 6MT-82, ADJUSTMENT, Front Differential Assembly.>

- Tooth contact is correct.

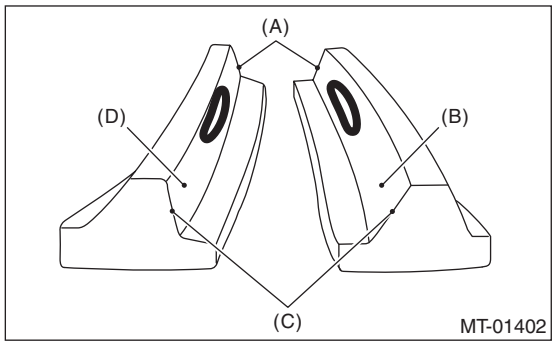

(A) Toe
(B) Coast side
(C) Heel
(D) Drive side

F: ADJUSTMENT

1. BEVEL PINION GEAR BACKLASH

1) Disassemble the front differential assembly. <Ref. to 6MT-78, DISASSEMBLY, Front Differential Assembly.>
2) Select a suitable washer for the differential bevel gear from the table and install.

Washer	
Part No.	Thickness mm (in)
803038021	0.925 — 0.950 (0.0364 — 0.0374)
803038022	0.975 — 1.000 (0.0384 — 0.0394)
803038023	1.025 — 1.050 (0.0404 — 0.0413)

3) Adjust until the standard value is obtained.

Backlash:
Standard
0.13 — 0.18 mm (0.0051 — 0.0071 in)

2. HYPOID GEAR BACKLASH

Adjust the backlash by turning the side retainer in the RH side case.

ST 18658AA020 WRENCH COMPL RETAINER

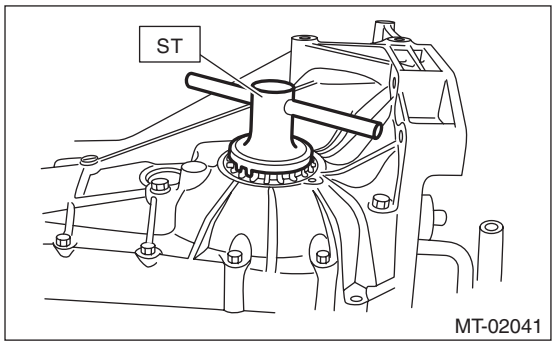

NOTE:
Each time the side retainer rotates by one notch (A), the backlash changes by 0.05 mm (0.0020 in).

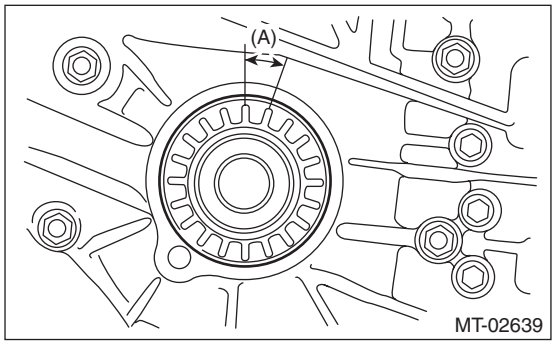

3. TOOTH CONTACT OF HYPOID GEAR

1) Adjust until correct teeth contact is obtained.
2) Check tooth contact, and perform the adjustment as follows.

- Tooth contact

Check item: Tooth contact surface is slightly shifted toward the toe side under a no-load condition. (When driving, it moves towards the heel side.

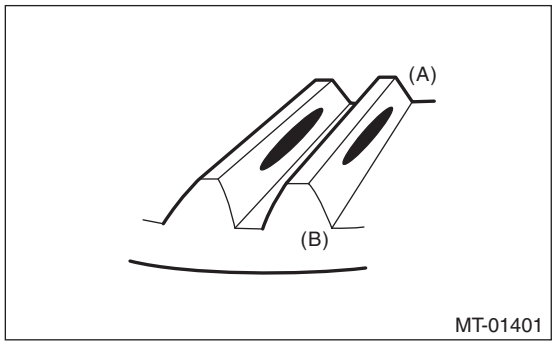

(A) Toe side
(B) Heel side

- Face contact

Check item: Backlash is too large.
Contact pattern

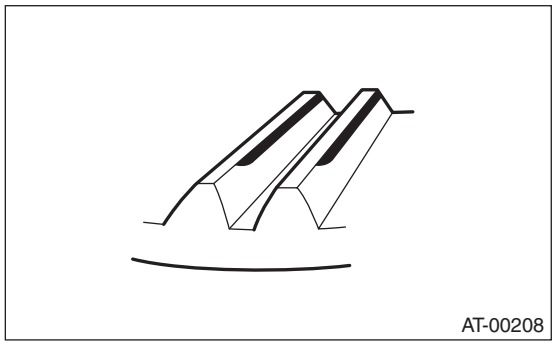

Corrective action: Tighten the side retainer to move the driven gear closer to the drive pinion.

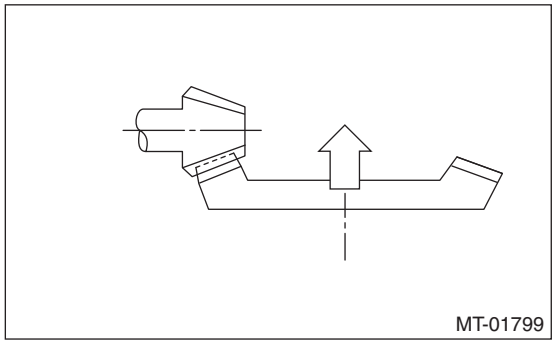

- Flank contact

Check item: Backlash is too small.
Contact pattern

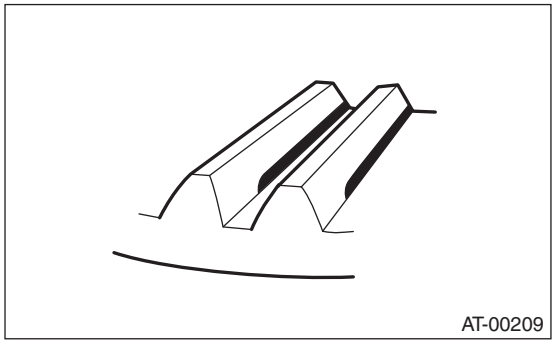

Corrective action: Loosen the side retainer to move the driven gear away from the drive pinion.

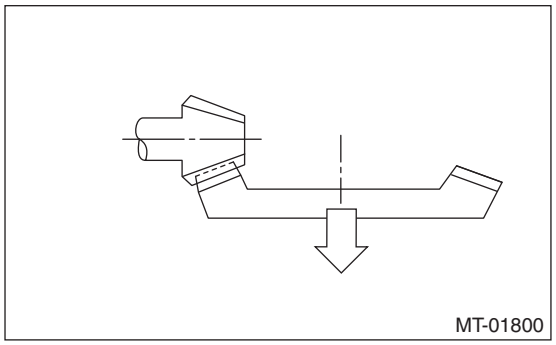

- Toe contact (inside contact)

Check item: Teeth contact area is too small.
Contact pattern

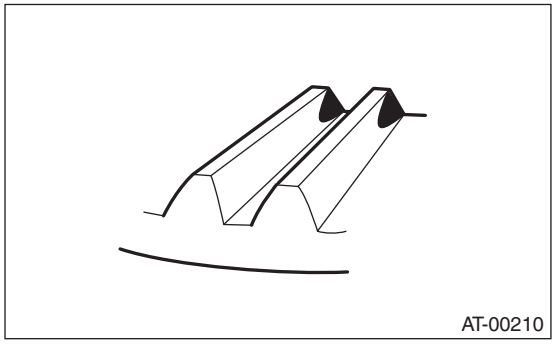

Corrective action: Increase thickness of the drive pinion shim according to the procedures for moving the drive pinion shaft away from the driven gear. Also tighten the side retainer to move the driven gear closer to the drive pinion shaft.

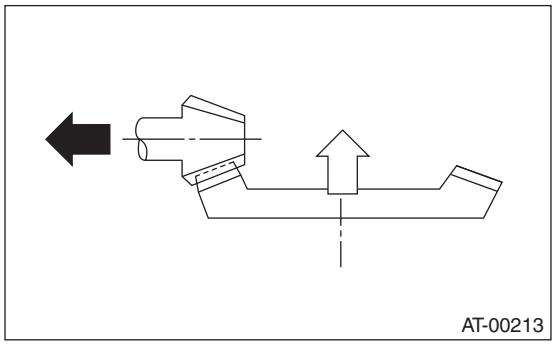

- Heel contact (outside end contact)

Check item: Teeth contact area is too small.

Contact pattern

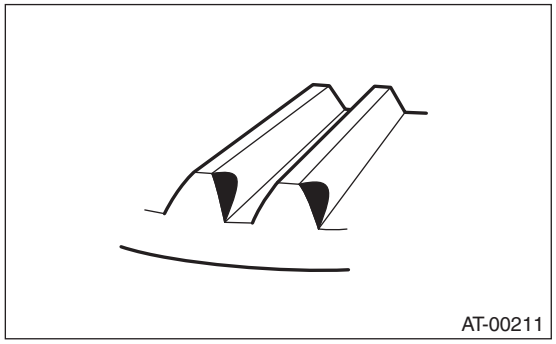

Corrective action: Reduce thickness of the drive pinion shim according to the procedures for moving the drive pinion shaft closer to driven gear. Also loosen the side retainer to move the driven gear away from the drive pinion.

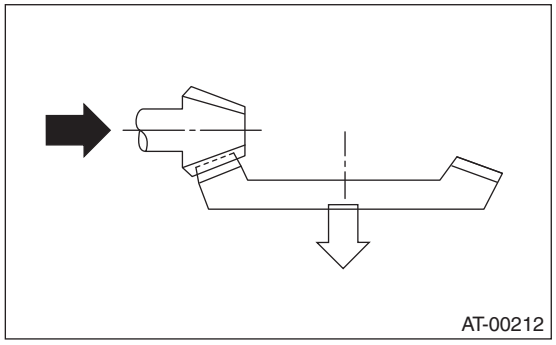

18.Reverse Idler Gear

A: REMOVAL

1) Remove the manual transmission assembly from the vehicle. <Ref. to 6MT-25, REMOVAL, Manual Transmission Assembly.>
2) Remove the back-up light switch neutral position switch. <Ref. to 6MT-37, REMOVAL, Switches and Harness.>
3) Remove the transfer case together with the extension case assembly. <Ref. to 6MT-40, REMOVAL, Transfer Case and Extension Case Assembly.>
4) Remove the transmission case. <Ref. to 6MT-57, REMOVAL, Transmission Case.>
5) Remove the drive pinion shaft assembly. <Ref. to 6MT-67, REMOVAL, Drive Pinion Shaft Assembly.>
6) Remove the main shaft assembly for single-range. <Ref. to 6MT-60, REMOVAL, Main Shaft Assembly for Single-Range.>
7) Remove the front differential assembly. <Ref. to 6MT-77, REMOVAL, Front Differential Assembly.>
8) Remove the shifter forks and rods. <Ref. to 6MT-90, REMOVAL, Shifter Fork and Rod.>
9) Remove the snap ring and bolt. Remove the reverse idler gear bushing and drive out the spring pin by tapping it.

NOTE:
When driving out the spring pin, rotate the reverse idler gear shaft to prevent it from contacting the case and remove the spring pin into the case inside.

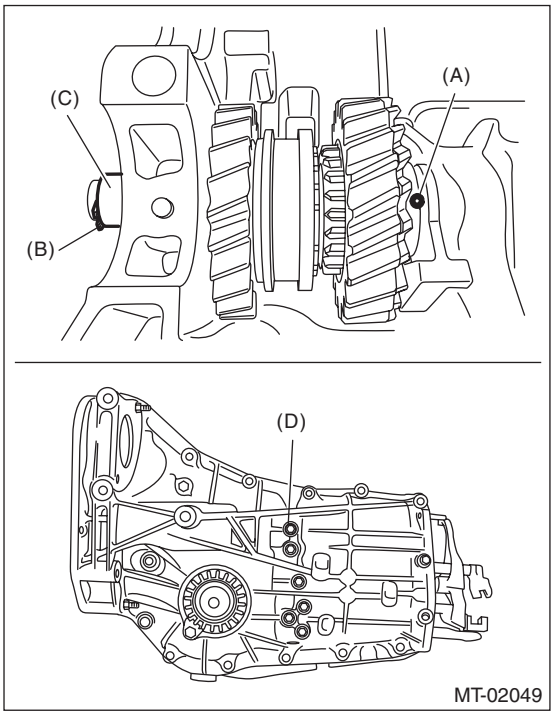

(A) Spring pin
(B) Snap ring
(C) Reverse idler gear bushing
(D) Bolt

10) Pull out the reverse idler gear shaft toward the rear side and remove all parts.

NOTE:
When pulling out the reverse idler gear shaft, remove the reverse idler gear assembly as a unit while supporting it from the bottom by hand to prevent the parts to scatter in the transmission case.

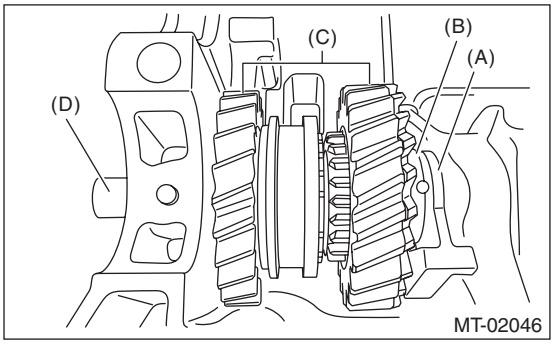

(A) Oil case guide
(B) Washer
(C) Reverse idler gear ASSY
(D) Reverse idler gear shaft

B: INSTALLATION

NOTE:
Rotate the reverse idler sub gear by two teeth from free status in the direction of the arrow to make it engage with the reverse gear of the main shaft and install the main shaft assembly.

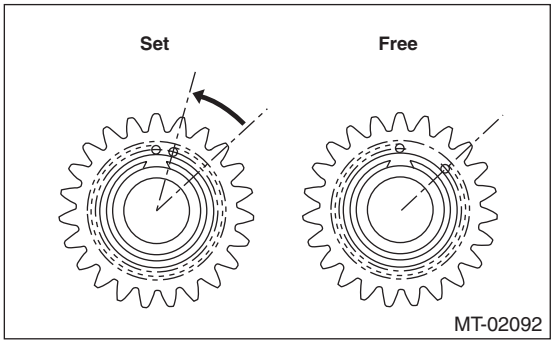

1) Insert the reverse idler gear shaft into the transmission case, then install the oil case guide, washer and reverse idler gear assembly as a single unit.

NOTE:
• Be sure to install the reverse idler gear shaft from rear side.

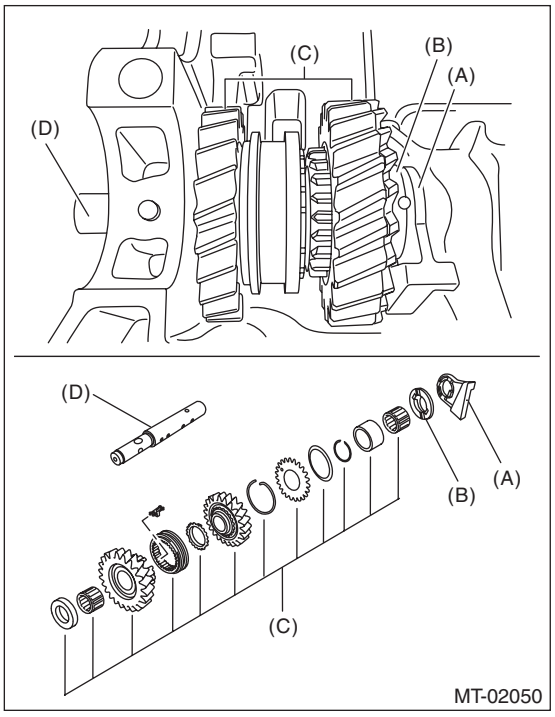

(A) Oil case guide
(B) Washer
(C) Reverse idler gear ASSY
(D) Reverse idler gear shaft

• Direction of the reverse idler gear shaft cutout can be either LH side or RH side of the transmission case.

2) Insert the reverse idler gear bushing into reverse idler gear shaft, install the snap ring, and then drive in the spring pin to fix.

NOTE:
• Use new spring pin.

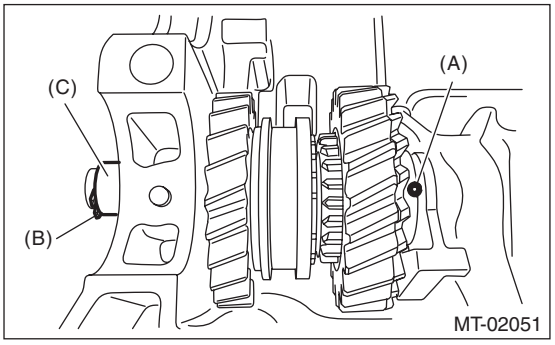

(A) Spring pin
(B) Snap ring
(C) Reverse idler gear bushing

• After installation of snap ring, rotate the snap ring 360° to confirm that it is fitted in the groove completely.

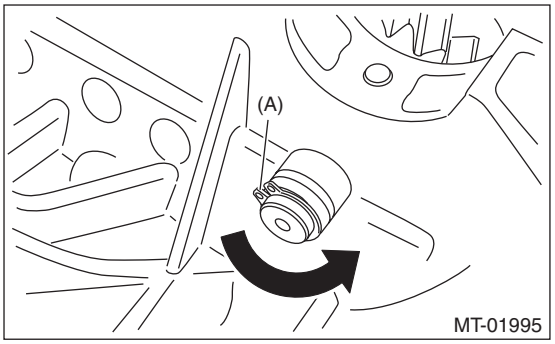

(A) Snap ring

3) Install the reverse idler gear shaft securing bolt.

NOTE:
Use a new gasket.

Tightening torque:
25 N·m (2.5 kgf-m, 18.4 ft-lb)

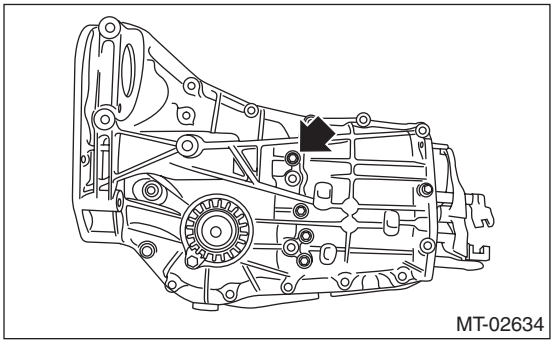

4) Check and adjust clearance between the reverse idler gear No. 2 and transmission case wall, and the reverse idler gear and reverse idler gear washer. <Ref. to 6MT-88, INSPECTION, Reverse Idler Gear.> <Ref. to 6MT-89, ADJUSTMENT, Reverse Idler Gear.>
5) Install the shifter forks and rods. <Ref. to 6MT-91, INSTALLATION, Shifter Fork and Rod.>
6) Install the front differential assembly. <Ref. to 6MT-77, INSTALLATION, Front Differential Assembly.>
7) Install the main shaft assembly for single-range. <Ref. to 6MT-60, INSTALLATION, Main Shaft Assembly for Single-Range.>
8) Install the drive pinion shaft assembly. <Ref. to 6MT-67, INSTALLATION, Drive Pinion Shaft Assembly.>
9) Install the transmission case. <Ref. to 6MT-58, INSTALLATION, Transmission Case.>
10) Install the transfer case together with the extension case assembly. <Ref. to 6MT-40, INSTALLATION, Transfer Case and Extension Case Assembly.>
11) Install the back-up light switch and the neutral position switch. <Ref. to 6MT-37, INSTALLATION, Switches and Harness.>
12) Install the manual transmission assembly to the vehicle. <Ref. to 6MT-29, INSTALLATION, Manual Transmission Assembly.>

C: DISASSEMBLY

1) Remove the snap ring from the reverse idler gear assembly.

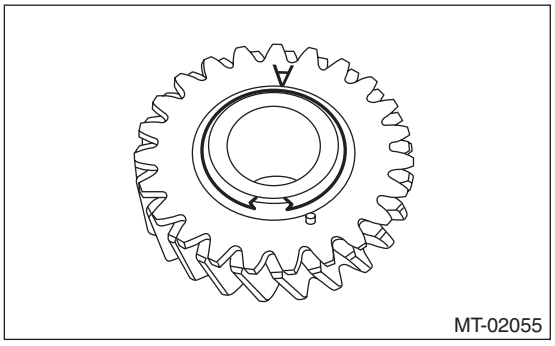

2) Remove the friction plate, reverse idler sub gear and reverse idler spring.

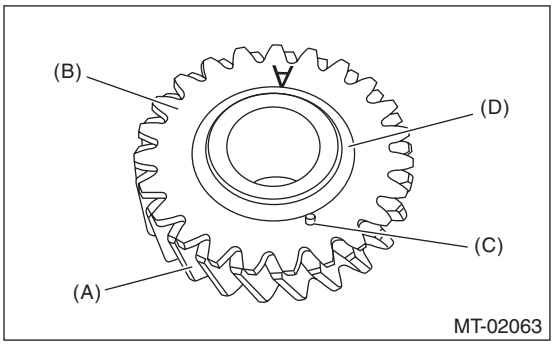

(A) Reverse idler gear
(B) Reverse idler sub gear
(C) Reverse idler spring
(D) Friction plate

D: ASSEMBLY

1) Insert the reverse idler spring into the holes on reverse idler gear and reverse idler sub gear to install.

NOTE:
Install the reverse idler sub gear with the side with the mark on it facing outside.

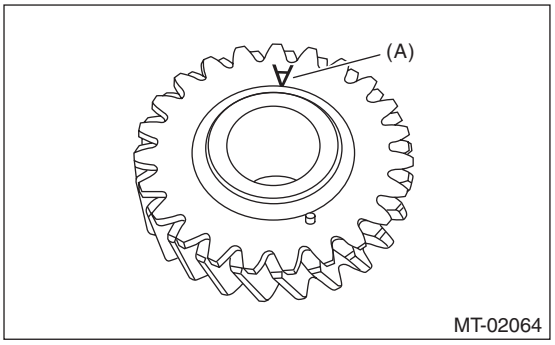

(A) Side with the mark facing outside

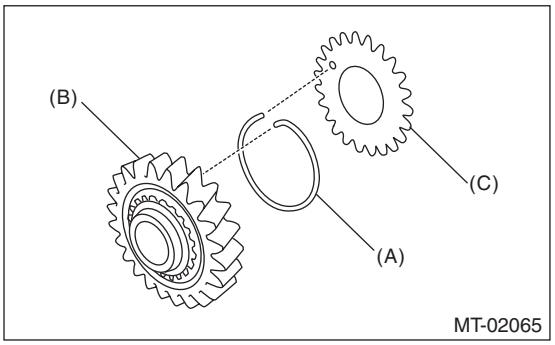

(A) Reverse idler spring
(B) Reverse idler gear
(C) Reverse idler sub gear

2) Install the friction plate, and then secure with the snap ring.

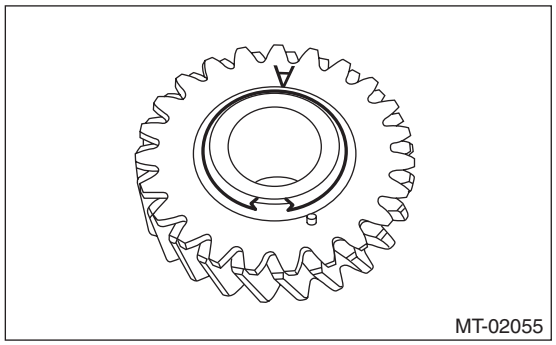

E: INSPECTION

1) Move the reverse shifter rod toward the reverse side. Check the clearance between the reverse idler gear and reverse coupling sleeve. If out of specification, select the appropriate reverse shifter fork and adjust.

Clearance (a):
0.50 — 0.85 mm (0.020 — 0.033 in)

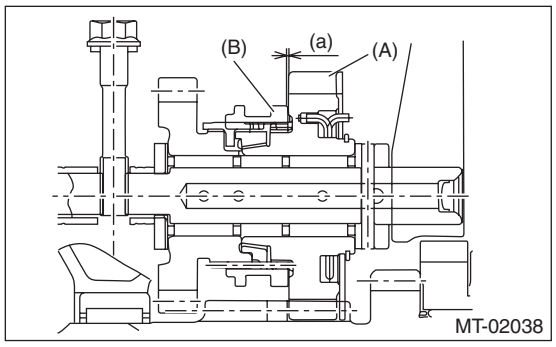

(A) Reverse idler gear
(B) Reverse coupling sleeve

2) After installing a suitable reverse shifter fork, shift into neutral. Check the clearance between the reverse idler gear and reverse idler gear washer. If out of specification, select the appropriate reverse idler gear bushing and adjust.

NOTE:
In clearance check, be sure to insert a thickness gauge vertically.

Clearance (a):
0.1 — 0.3 mm (0.004 — 0.012 in)

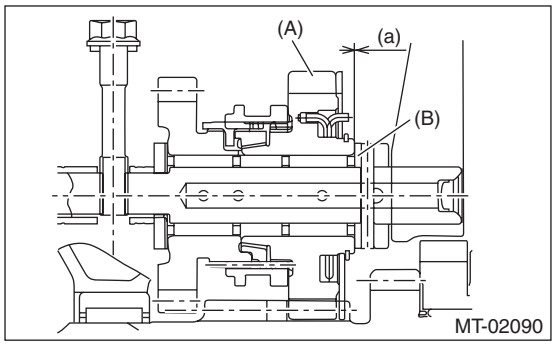

(A) Reverse idler gear
(B) Reverse idler gear washer

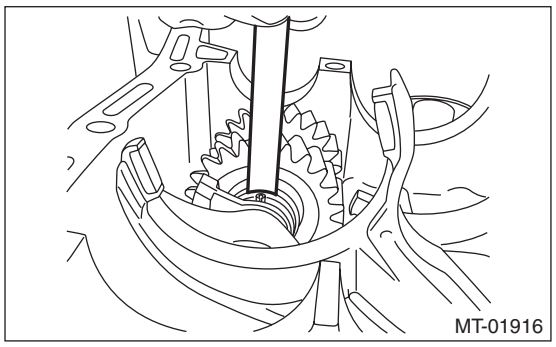

3) Check the reverse idler gear and shaft for damage. Replace if it is damaged.

F: ADJUSTMENT

1) Select the appropriate reverse shifter fork from the table below, and adjust until the clearance between the reverse idler gear and reverse coupling sleeve is within specification.

Clearance (a):
0.50 — 0.85 mm (0.020 — 0.033 in)

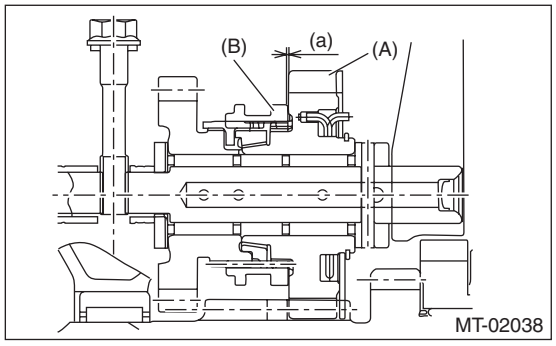

(A) Reverse idler gear
(B) Reverse coupling sleeve

Reverse shifter fork		
Part number	Mark	Content
32941AA020	2	Approaches reverse idler gear by 0.3 mm (0.012 in).
32941AA030	No mark	Standard
32941AA040	1	Approaches reverse idler gear No. 2 by 0.3 mm (0.012 in).

2) Select the appropriate reverse idler gear bushing from the table below, and adjust until the clearance between the reverse idler gear and reverse idler gear washer is within specification.

NOTE:
In clearance check, be sure to insert a thickness gauge vertically.

Clearance (a):
0.1 — 0.3 mm (0.004 — 0.012 in)

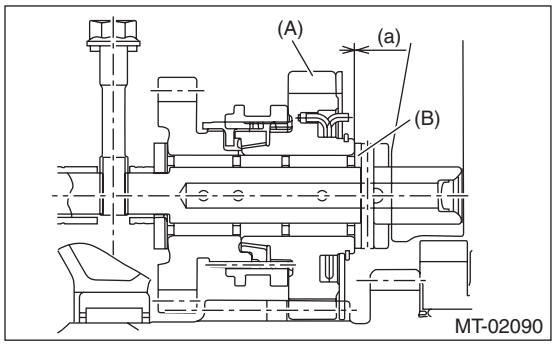

(A) Reverse idler gear
(B) Reverse idler gear washer

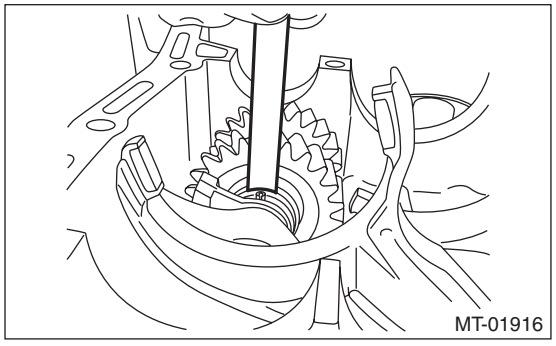

Reverse idler gear bushing		
Part number	Length mm (in)	Groove for identification
32289AA010	38.0 (1.496)	No
32289AA020	38.1 (1.500)	1
32289AA030	38.2 (1.504)	2
32289AA040	38.3 (1.508)	3
32289AA050	38.4 (1.512)	4
32289AA060	38.5 (1.516)	5
32289AA070	38.6 (1.520)	6

19.Shifter Fork and Rod

A: REMOVAL

1) Remove the manual transmission assembly from the vehicle. <Ref. to 6MT-25, REMOVAL, Manual Transmission Assembly.>
2) Remove the back-up light switch and the neutral position switch. <Ref. to 6MT-37, REMOVAL, Switches and Harness.>
3) Remove the transfer case together with the extension case assembly. <Ref. to 6MT-40, REMOVAL, Transfer Case and Extension Case Assembly.>
4) Remove the transmission case. <Ref. to 6MT-57, REMOVAL, Transmission Case.>
5) Remove the drive pinion shaft assembly. <Ref. to 6MT-67, REMOVAL, Drive Pinion Shaft Assembly.>
6) Remove the main shaft assembly for single-range. <Ref. to 6MT-60, REMOVAL, Main Shaft Assembly for Single-Range.>
7) Remove the front differential assembly. <Ref. to 6MT-77, REMOVAL, Front Differential Assembly.>
8) Remove the check ball plugs, gasket, check ball springs and check balls.

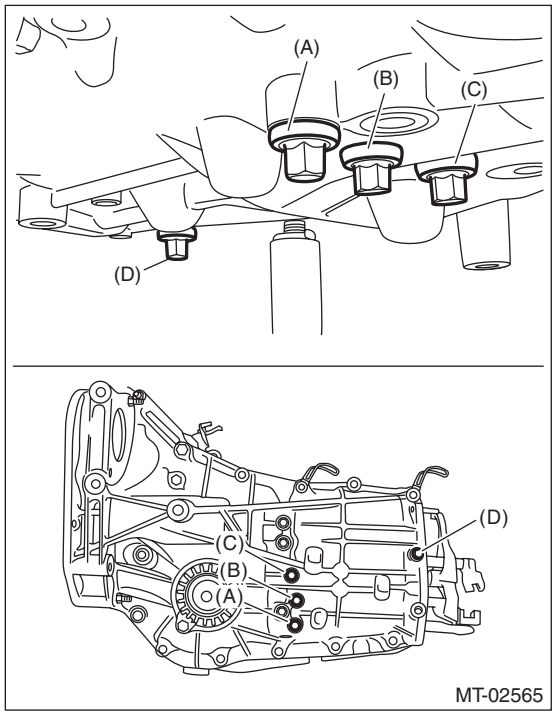

(A) 1st-2nd
(B) 3rd-4th
(C) 5th-6th
(D) Rev.

9) Use the ST to push out the spring pin of 5th-6th shifter fork and reverse shifter fork, and remove the 5th-6th shifter fork, reverse shifter fork, 5th-6th fork rod and reverse fork rod.

NOTE:
Tap out the reverse shifter fork spring pin, after setting the gear into reverse position. In the neutral position, removing is impossible because the clearance between transmission case is narrow.
ST 398791700 SPRING PIN REMOVER 2

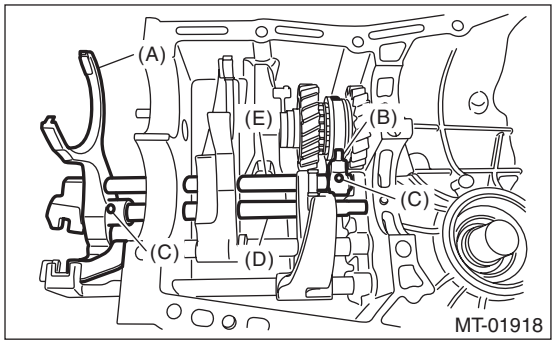

(A) 5th-6th shifter fork
(B) Reverse shifter fork
(C) Spring pin
(D) 5th-6th fork rod
(E) Reverse fork rod

10) Drive out the spring pin tapping by the ST, and remove the 3rd-4th shifter fork and fork rod.

NOTE:
When removing the rod, keep other rods in neutral.
ST 398791700 SPRING PIN REMOVER 2

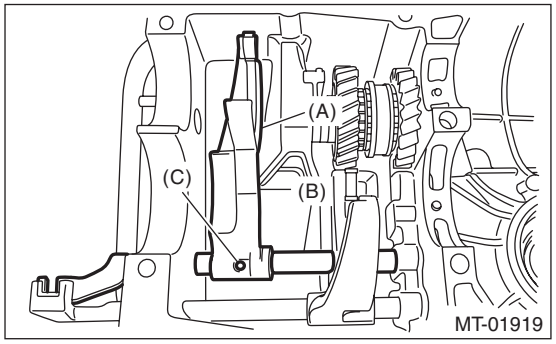

(A) 3rd-4th shifter fork
(B) 3rd-4th fork rod
(C) Spring pin

11) Drive out the spring pin tapping by the ST, and remove the 1st-2nd shifter fork and fork rod.
ST 398791700 SPRING PIN REMOVER 2

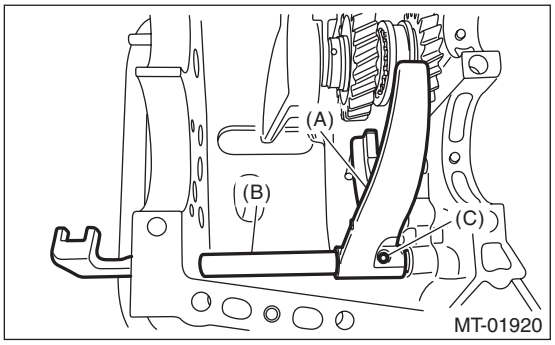

(A) 1st-2nd shifter fork
(B) 1st-2nd fork rod
(C) Spring pin

B: INSTALLATION

1) Install the 1st-2nd fork rod to the 1st-2nd shifter fork through the hole on the rear of the transmission case.
2) Align the holes in the rod and the fork, and drive the spring pin into these holes using the ST to fix.

NOTE:
Use new spring pin.
ST 398791700 SPRING PIN REMOVER 2

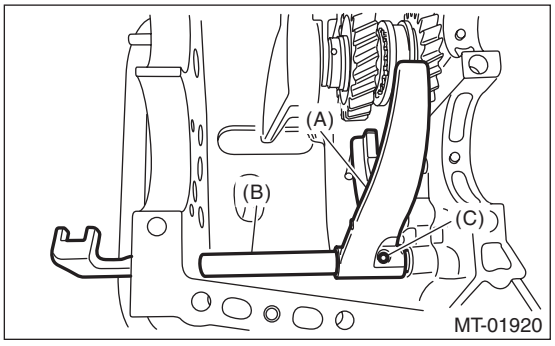

(A) 1st-2nd shifter fork
(B) 1st-2nd fork rod
(C) Spring pin

3) Install the 3rd-4th fork rod to the 3rd-4th shifter fork through the hole on the rear of the transmission case.

4) Align the holes in the rod and the fork, and drive the spring pin into these holes using the ST to fix.

NOTE:
- Use new spring pin.
- Set other rods to neutral.
- Check that the positions of interlock plunger is correct.

ST 398791700 SPRING PIN REMOVER 2

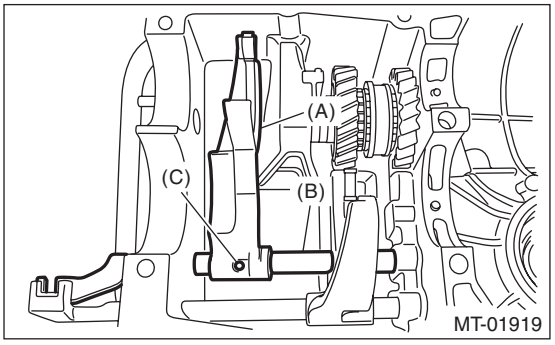

(A) 3rd-4th shifter fork
(B) 3rd-4th fork rod
(C) Spring pin

5) Install the 5th-6th fork rod into 5th-6th shifter fork, then insert through the hole on the rear of transmission case. Align the hole of the 5th-6th shifter fork with the hole on the transmission case, then insert the reverse fork rod to install the reverse shifter fork.
6) Align the holes in the rod and the fork, and drive the spring pin into these holes using the ST to fix.

NOTE:
- Use new spring pin.
- Set other rods to neutral.
- Check that the positions of interlock plunger is correct.

ST 398791700 SPRING PIN REMOVER 2

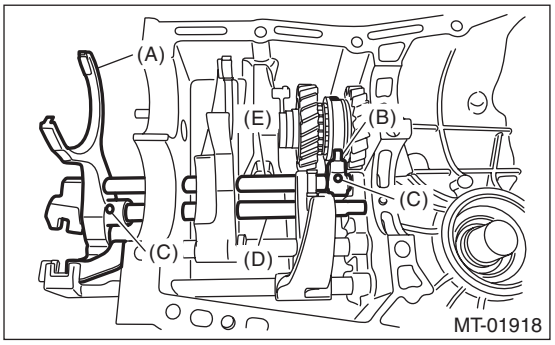

(A) 5th-6th shifter fork
(B) Reverse shifter fork
(C) Spring pin
(D) 5th-6th fork rod
(E) Reverse fork rod

7) Install the check ball plugs, gaskets, check ball springs and check balls.

NOTE:
Use a new gasket.

Tightening torque:
20 N·m (2.0 kgf-m, 14.8 ft-lb)

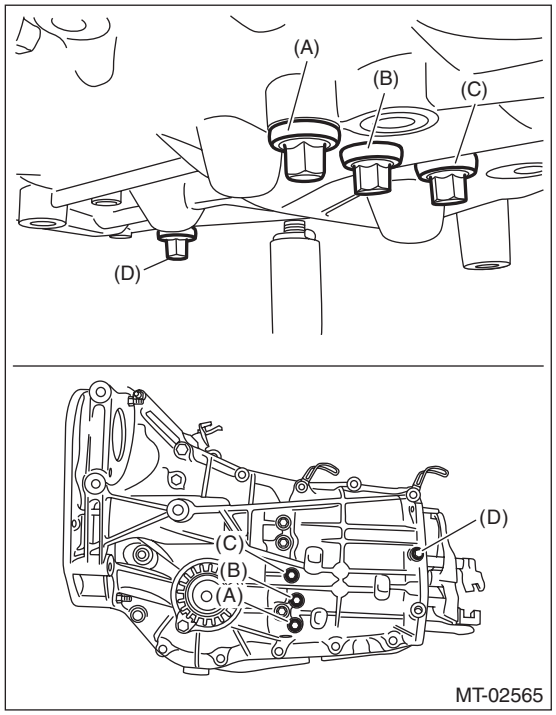

(A) 1st-2nd
(B) 3rd-4th
(C) 5th-6th
(D) Rev.

8) Install the front differential assembly. <Ref. to 6MT-77, INSTALLATION, Front Differential Assembly.>
9) Install the main shaft assembly for single-range. <Ref. to 6MT-60, INSTALLATION, Main Shaft Assembly for Single-Range.>
10) Install the drive pinion shaft assembly. <Ref. to 6MT-67, INSTALLATION, Drive Pinion Shaft Assembly.>
11) Install the transmission case. <Ref. to 6MT-58, INSTALLATION, Transmission Case.>
12) Install the transfer case together with the extension case assembly. <Ref. to 6MT-40, INSTALLATION, Transfer Case and Extension Case Assembly.>
13) Install the back-up light switch and the neutral position switch. <Ref. to 6MT-37, INSTALLATION, Switches and Harness.>
14) Install the manual transmission assembly to the vehicle. <Ref. to 6MT-29, INSTALLATION, Manual Transmission Assembly.>

C: INSPECTION

1) Check the fork and rod for damage. Replace if it is damaged.
2) Gearshift mechanism
Repair or replace the gearshift mechanism if excessively worn, bent or defective in any way.
3) Inspect the clearance between 2nd driven gear and coupling sleeve. If any clearance is not within specifications, replace the shifter fork as required.

Clearance (a):
9.4 — 10.0 mm (0.370 — 0.394 in)

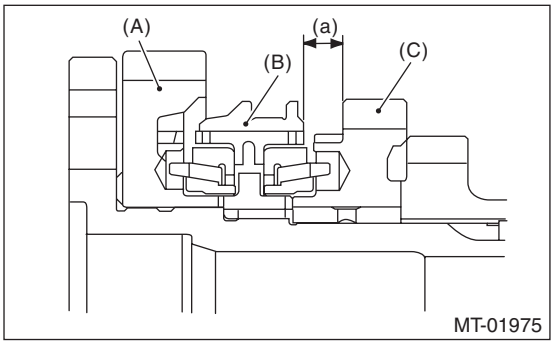

(A) 1st driven gear
(B) Coupling sleeve
(C) 2nd driven gear

1st-2nd shifter fork		
Part No.	Mark	Description
32804AA120	1	Approaches 1st gear by 0.2 mm (0.008 in).
32804AA130	No mark	Standard
32804AA140	3	Approaches 2nd gear by 0.2 mm (0.008 in)

4) Inspect the clearance between the 3rd, 4th drive gear and the coupling sleeve. If any clearance is not within specifications, replace the shifter fork as required.

Clearance (a):
7.4 mm (0.291 in)

Clearance (b):
9.3 mm (0.366 in)

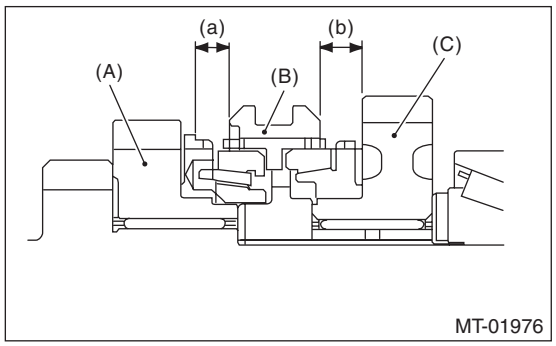

(A) 3rd drive gear
(B) Coupling sleeve
(C) 4th drive gear

3rd-4th shifter fork		
Part No.	Mark	Description
32810AA061	1	Approaches 4th gear by 0.2 mm (0.008 in).
32810AA071	No mark	Standard
32810AA101	3	Approaches 3rd gear by 0.2 mm (0.008 in)

5) Inspect the clearance between 5th, 6th drive gear and coupling sleeve. If any clearance is not within specifications, replace the shifter fork as required.

Clearance (a):
8.8 mm (0.346 in)

Clearance (b):
9.4 mm (0.370 in)

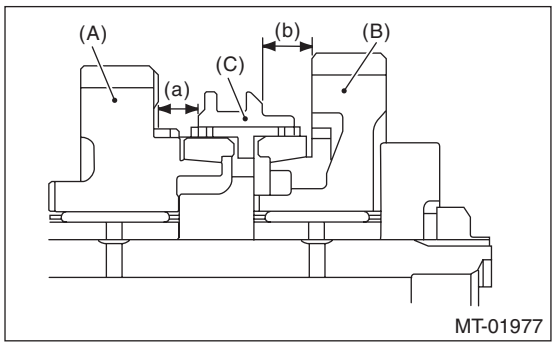

(A) 5th drive gear
(B) Coupling sleeve
(C) 6th drive gear

5th-6th shifter fork		
Part No.	Mark	Description
32940AA020	1	Approaches 5th gear by 0.2 mm (0.008 in).
32940AA030	No mark	Standard
32940AA040	2	Approaches 6th gear by 0.2 mm (0.008 in).

6) Check the clearance between the reverse idler gear and reverse coupling sleeve. If any clearance is not within specifications, replace the shifter fork as required.

Clearance (a):
0.50 — 0.85 mm (0.020 — 0.033 in)

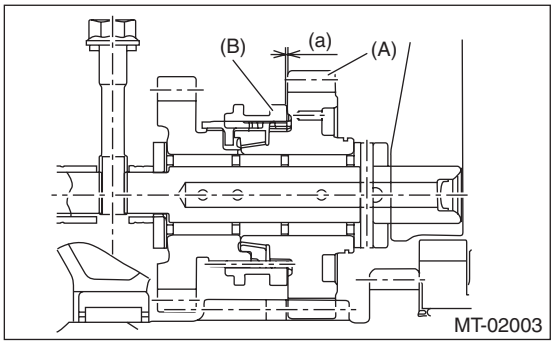

(A) Reverse idler gear
(B) Reverse coupling sleeve

Reverse shifter fork		
Part No.	Mark	Description
32941AA020	2	Approaches reverse idler gear by 0.3 mm (0.012 in).
32941AA030	No mark	Standard
32941AA040	1	Approaches reverse idler gear No. 2 by 0.3 mm (0.012 in).

7) Inspect the rod end clearances (A) and (B). If any clearance is not within specifications, replace the rod or fork as required.

Clearance (A):
1st-2nd — 3rd-4th
0.1 — 0.9 mm (0.004 — 0.035 in)

Clearance (B):
3rd-4th — 5th-6th
0.2 — 1.0 mm (0.008 — 0.039 in)

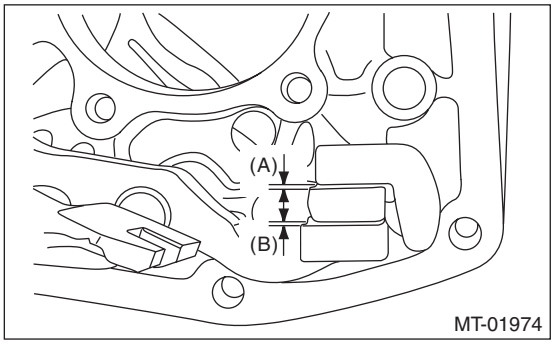

20.General Diagnostic Table

A: INSPECTION

1. MANUAL TRANSMISSION

Symptoms	Possible cause	Corrective action
1. Gears are difficult to intermesh. NOTE: The cause for difficulty in shifting gears can be classified into two types: One is a defective gear shift system and the other is defective transmission. However, if the operation is heavy and engagement of the gears is difficult, a defective clutch disengagement may also be responsible. Check whether the clutch is correctly functioning, before checking the gear shift system and transmission.	(a) Worn, damaged or burred chamfer at internal spline of the sleeve	Replace.
	(b) Gear spline wear, damage, dents	Replace.
	(c) Worn or scratched bushings	Replace.
	(d) Incorrect contact or wear between synchronizer ring and gear cone	Repair or replace.
2. Gear slip-out • Gear slips out when coasting on rough road. • Gear slips out during acceleration.	(a) Loose engine mounting bolts	Tighten or replace.
	(b) Worn fork shifter or broken check ball spring	Replace.
	(c) Worn or damaged ball bearing	Replace.
	(d) Excessive clearance between splines of synchronizer hub and synchronizer sleeve	Replace.
	(e) Synchronizer hub tooth step wear	Replace.
	(f) Worn 1st driven gear and driven shaft	Replace.
	(g) Worn 2nd driven gear and bushing	Replace.
	(h) Worn 3rd drive gear and needle bearing	Replace.
	(i) Worn 4th drive gear and needle bearing	Replace.
	(j) Worn 5th drive gear and needle bearing	Replace.
	(k) Worn 6th drive gear and needle bearing	Replace.
	(l) Worn reverse idler gear and needle bearing	Replace.
3. Noise emitted from transmission NOTE: If a noise is heard when the vehicle is parked with its engine idling and if a noise ceases when the clutch is disengaged, it may be considered that the noise is coming from the transmission.	(a) Insufficient or improper lubrication	Lubricate with recommended oil or replace.
	(b) Worn or damaged gears and bearings NOTE: If the trouble is only wear of the gear teeth surfaces, only a high whirring noise will occur at high speeds, but if any part is broken, rhythmical clicking sounds will be heard even at low speeds.	Replace.

2. DIFFERENTIAL

Symptoms	Possible cause	Corrective action
1. Broken differential (case, gear, bearing, etc.) NOTE: Noise will occur, and eventually the differential will not be able to operate due to broken pieces obstructing the gear revolution.	(a) Insufficient or improper oil	Disassemble the differential and replace broken components. At the same time check other components for any trouble, and replace if necessary.
	(b) Use of vehicle under severe conditions such as excessive load or improper use of the clutch	Readjust the preload and backlash of the bearing, and the contact surface of gear.
	(c) Improper adjustment of taper roller bearing	Adjust.
	(d) Improper adjustment of the drive pinion and the hypoid driven gear	Adjust.
	(e) Excessive backlash of a vehicle under severe operating conditions due to worn differential side gear, washer or differential pinion.	Add recommended oil to the specified level. Do not use vehicle under severe operating conditions.
	(f) Loose hypoid driven gear clamping bolts	Tighten.
2. Differential and hypoid gear noises Troubles of the differential and hypoid gear always appear as noise problems. Therefore noise is the first indication of trouble. However, noises from the engine, muffler, tire, exhaust gas, bearing, body, etc. are easily mistaken for the differential noise. Pay special attention to the hypoid gear noise because it is easily confused with other gear noises. There are the following four kinds of noises. • Gear noise when driving: If noise increases as the vehicle speed increases, it may be due to insufficient gear oil, incorrect gear engagement, damaged gears, etc. • Gear noise when coasting: Damaged gears due to misadjusted bearings and incorrect shim adjustment. • Bearing noise when driving or coasting: Cracked, broken or damaged bearings • Noise mainly when turning: Noise from differential side gear, differential pinion or differential pinion shaft, etc.	(a) Insufficient oil	Add recommended oil to the specified level.
	(b) Improper adjustment of hypoid driven gear and drive pinion	Check the tooth contact.
	(c) Worn teeth of hypoid driven gear and drive pinion	Replace as a set. Readjust the bearing preload.
	(d) Loose roller bearing	Readjust the backlash of the hypoid driven gear to drive pinion, and check the tooth contact.
	(e) Distorted hypoid driven gear or differential case	Replace.
	(f) Worn washer and differential pinion shaft	Replace.

CLUTCH SYSTEM

CL

Page

1. General Description 2
2. Clutch Disc and Cover 11
3. Flywheel 14
4. Release Bearing and Lever 15
5. Operating Cylinder 18
6. Master Cylinder 20
7. Clutch Pipe and Hose 22
8. Clutch Fluid 24
9. Clutch Fluid Air Bleeding 25
10. Clutch Pedal 26
11. Clutch Switch 31
12. General Diagnostic Table 34

1. General Description

A: SPECIFICATION

Model			2.5 L non-turbo	2.5 L turbo
Transmission type			6MT	
Clutch cover	Type		Push type	
	Diaphragm set load N (kgf, lbf)		5,688 (580, 1,279)	7,450 (760, 1,675)
Clutch disc	Facing material		Woven (Non-asbestos)	
	O.D. × I.D. × thickness mm (in)	Flywheel side	230 × 155 × 3.2 (9.06 × 6.10 × 0.126)	
		Clutch cover side	230 × 155 × 3.5 (9.06 × 6.10 × 0.138)	
	Spline outer diameter mm (in)		25.2 (0.992), (Number of teeth: 24)	
	Depth of rivet head mm (in)	Flywheel side	1.35 — 1.95 (0.053 — 0.077)	
		Clutch cover side	1.65 — 2.25 (0.065 — 0.089)	
		Limit of sinking	0.3 (0.012)	
	Deflection limit mm (in)		0.7 (0.028) at R = 110 (4.33)	
Clutch release lever ratio			1.6	
Release bearing			Grease-packed self-aligning	
Clutch pedal	Full stroke mm (in)		130 — 135 (5.12 — 5.31)	135 — 140 (5.31 — 5.51)
	Free play mm (in)		4 — 11 (0.16 — 0.43)	
Flywheel	Type		Flexible	

B: COMPONENT

1. CLUTCH ASSEMBLY

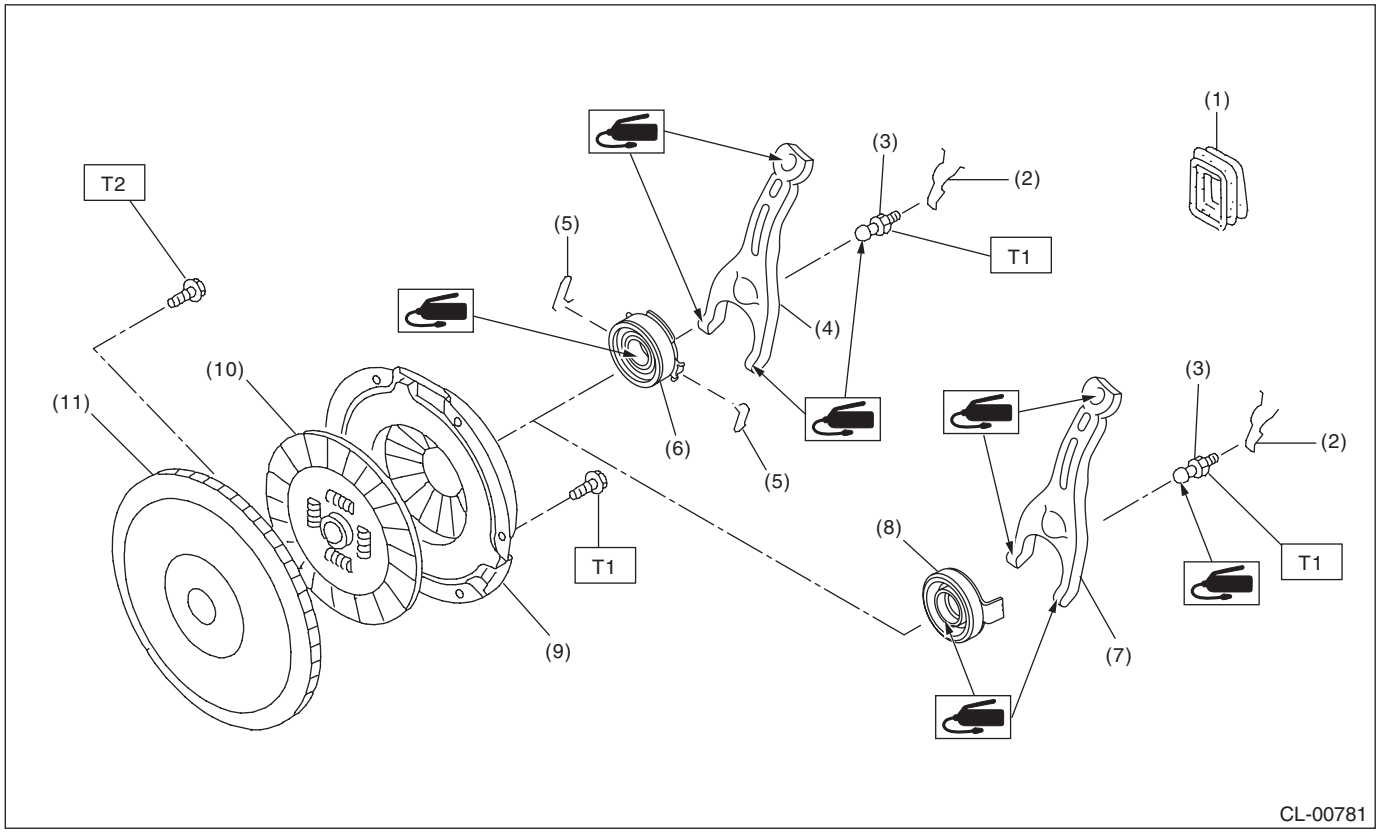

(1)	Dust cover	(6)	Release bearing (non-turbo model)	(11)	Flexible flywheel
(2)	Lever spring	(7)	Release lever (turbo model)		
(3)	Pivot	(8)	Release bearing (turbo model)	***Tightening torque:N·m (kgf-m, ft-lb)***	
(4)	Release lever (non-turbo model)	(9)	Clutch cover	***T1: 16 (1.6, 11.8)***	
(5)	Clip (non-turbo model)	(10)	Clutch disc	***T2: 75 (7.6, 55.3)***	

2. CLUTCH PIPE AND HOSE

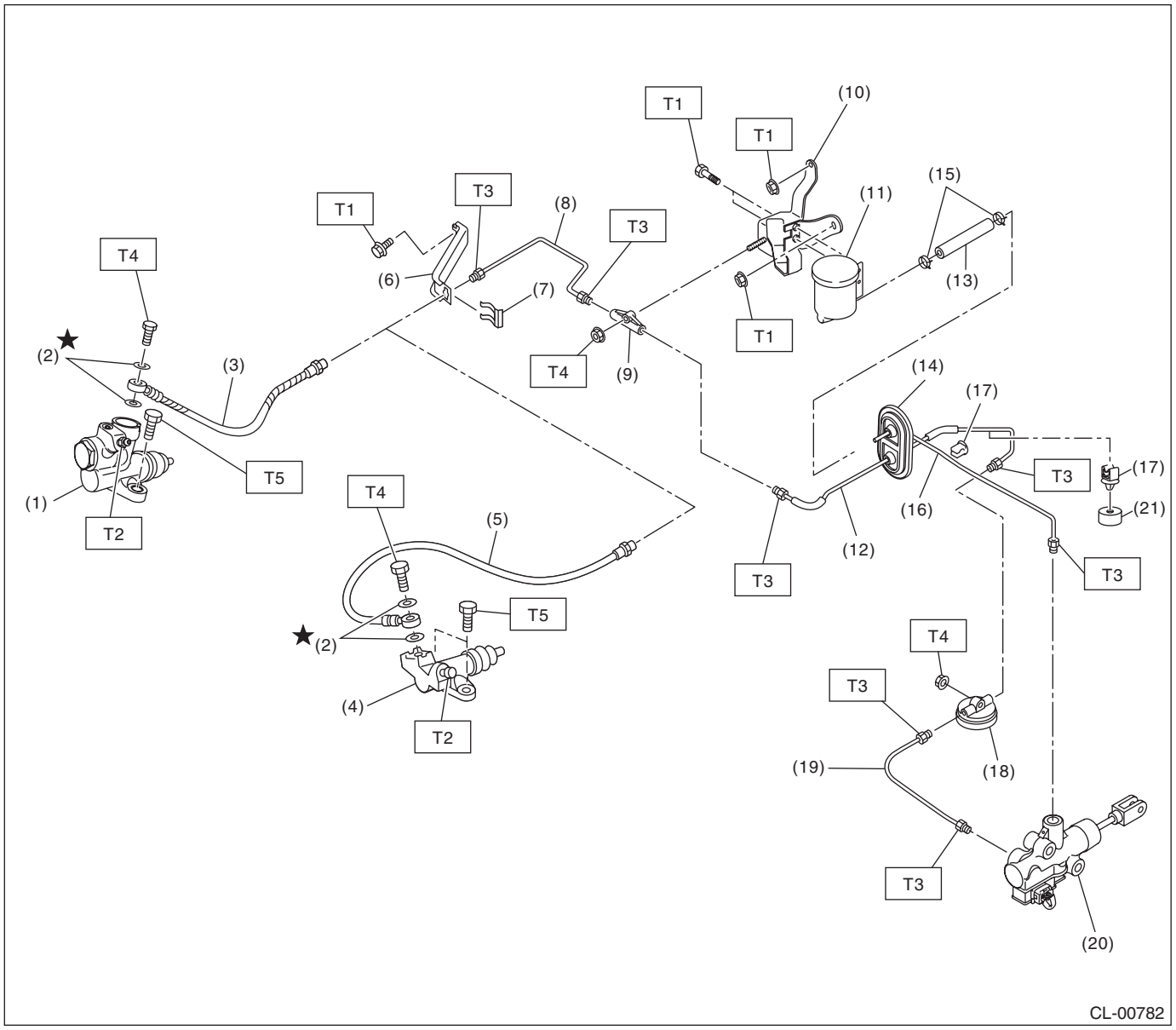

(1)	Operating cylinder (turbo model)	(11)	Reservoir tank	(21)	Mass damper
(2)	Washer	(12)	Clutch pipe		
(3)	Clutch hose (turbo model)	(13)	Reservoir tank hose	***Tightening torque:N·m (kgf-m, ft-lb)***	
(4)	Operating cylinder (non-turbo model)	(14)	Clutch pipe grommet	***T1: 7.5 (0.8, 5.5)***	
(5)	Clutch hose (non-turbo model)	(15)	Clamp	***T2: 7.8 (0.8, 5.8)***	
(6)	Clutch hose bracket	(16)	Clutch pipe	***T3: 15 (1.5, 11.1)***	
(7)	Clamp	(17)	Clamp	***T4: 18 (1.8, 13.3)***	
(8)	Clutch pipe	(18)	Clutch damper	***T5: 37 (3.8, 27.3)***	
(9)	Connector	(19)	Clutch pipe		
(10)	Reservoir tank bracket	(20)	Master cylinder ASSY		

3. MASTER CYLINDER

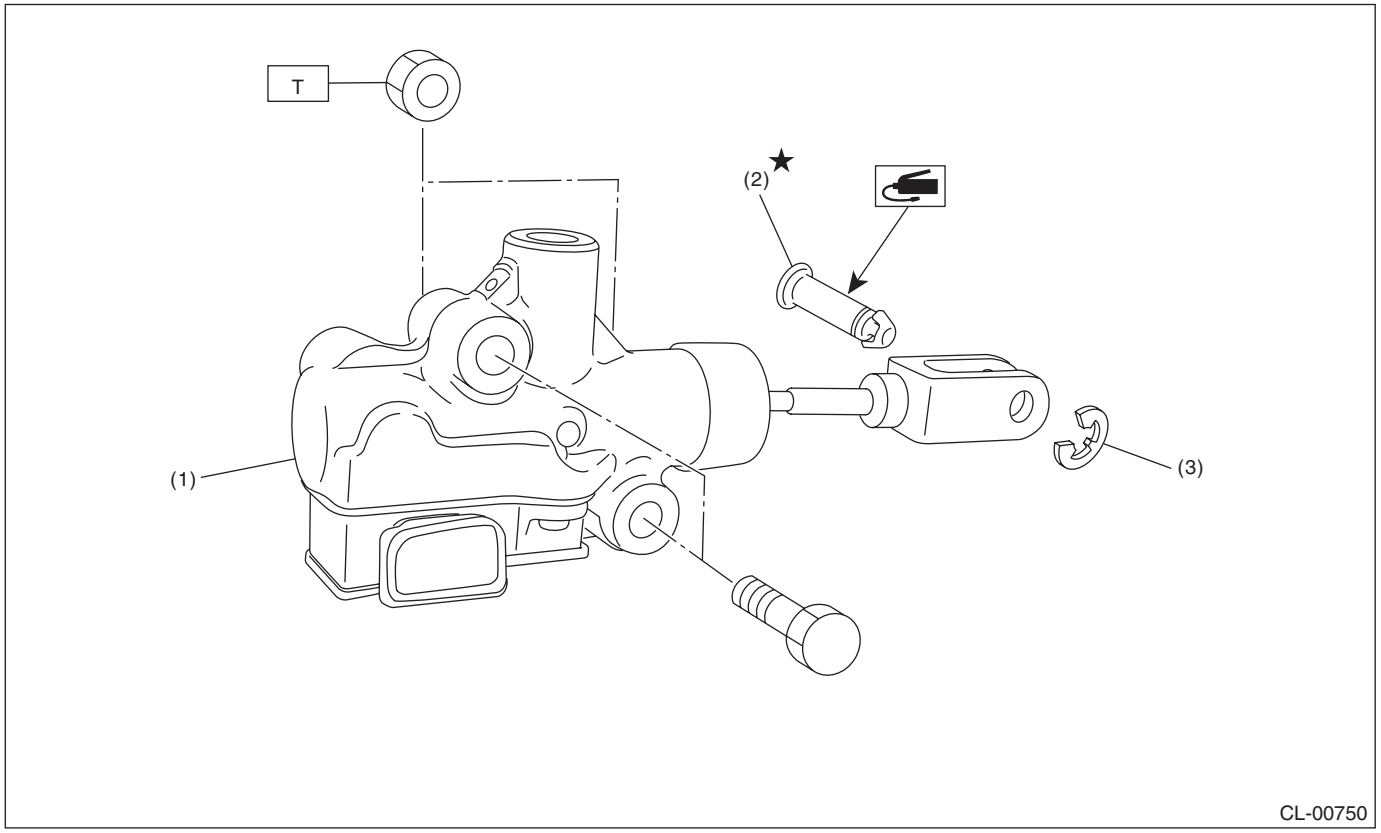

(1) Master cylinder ASSY
(2) Clevis pin
(3) Clip

Tightening torque:N·m (kgf-m, ft-lb)
T: 18 (1.8, 13.3)

4. OPERATING CYLINDER

- Non-turbo model

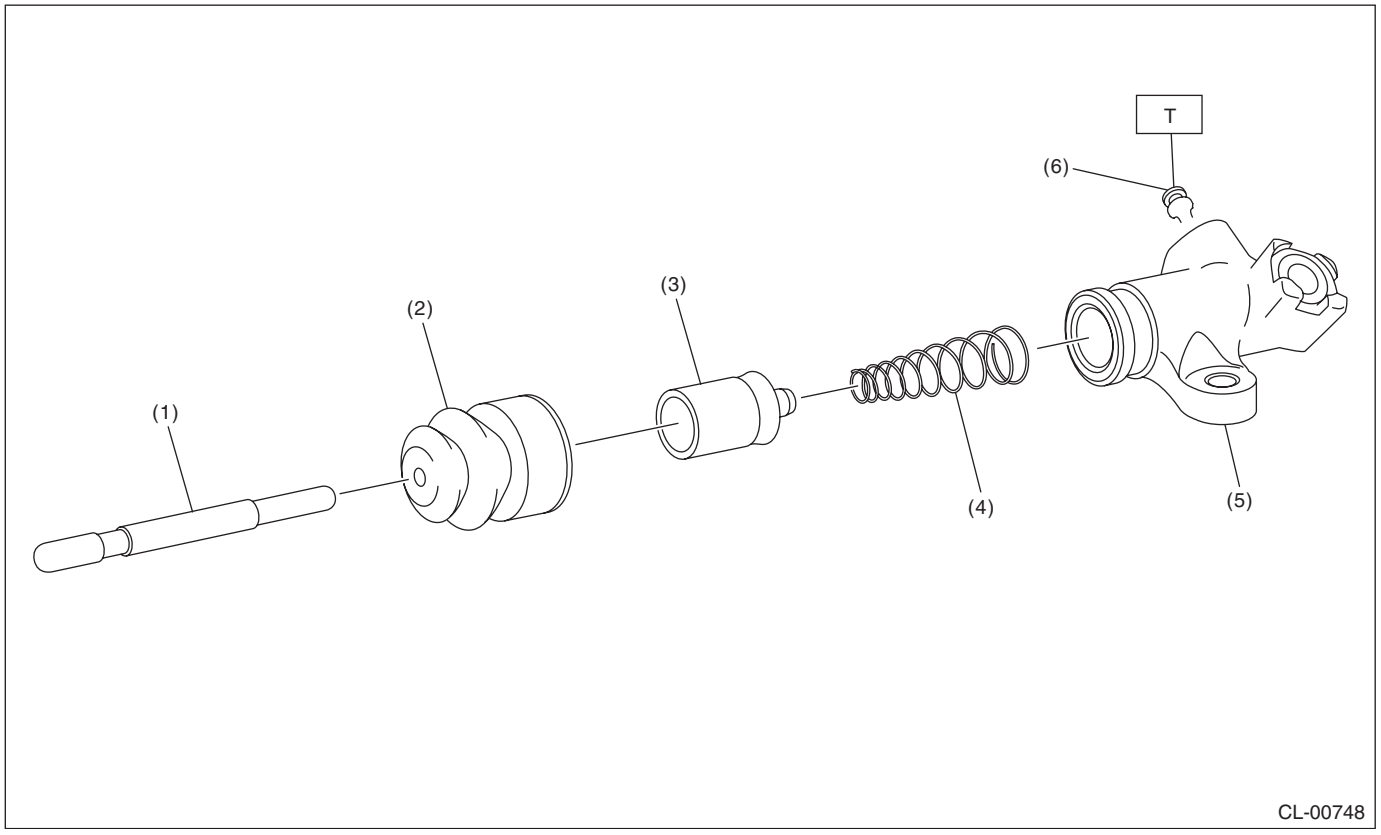

(1) Push rod
(2) Boot
(3) Piston
(4) Piston spring
(5) Operating cylinder
(6) Breather screw

Tightening torque:N·m (kgf-m, ft-lb)
T: 7.8 (0.8, 5.8)

- Turbo model

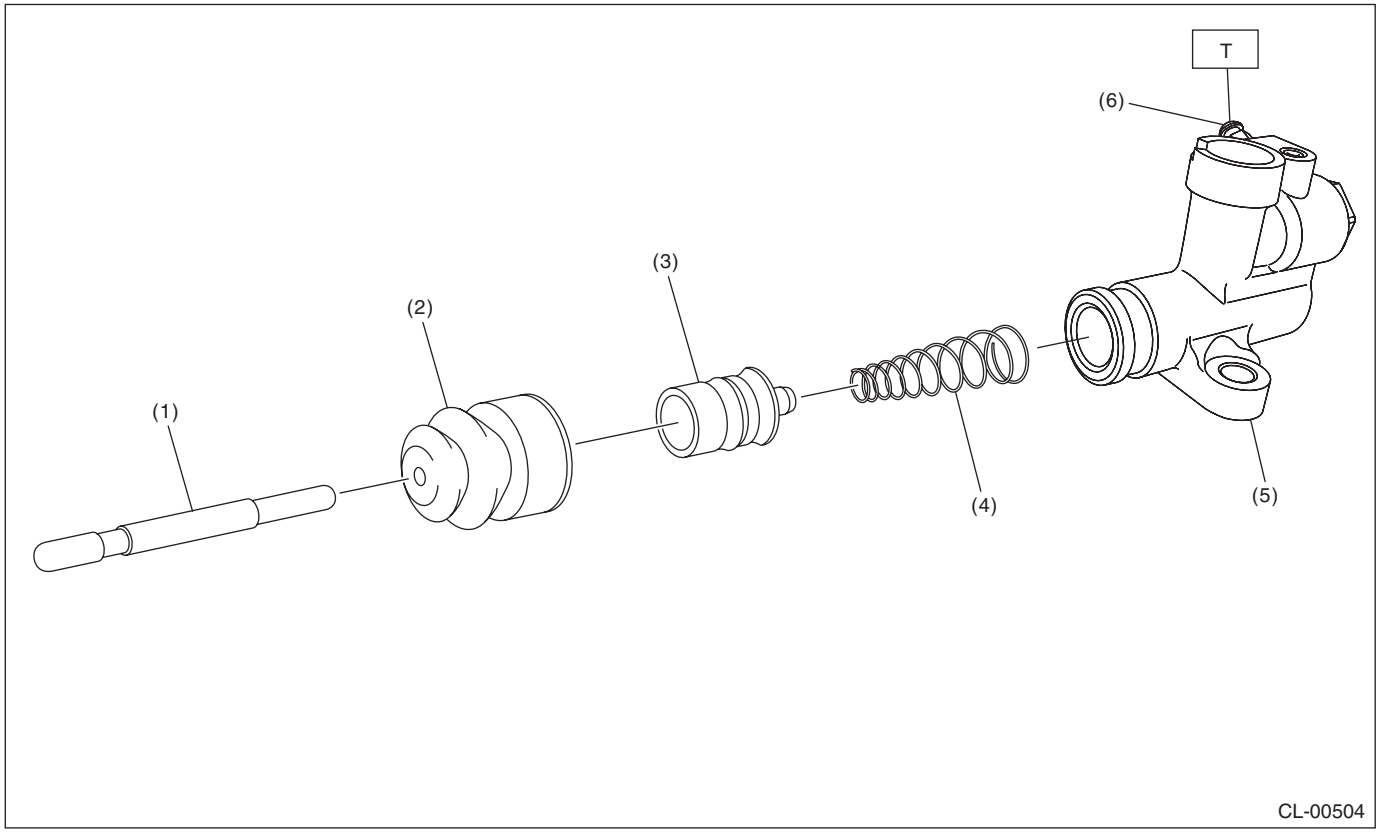

(1) Push rod
(2) Boot
(3) Piston
(4) Piston spring
(5) Operating cylinder
(6) Breather screw

Tightening torque:N·m (kgf-m, ft-lb)
T: 7.8 (0.8, 5.8)

5. CLUTCH PEDAL ASSEMBLY

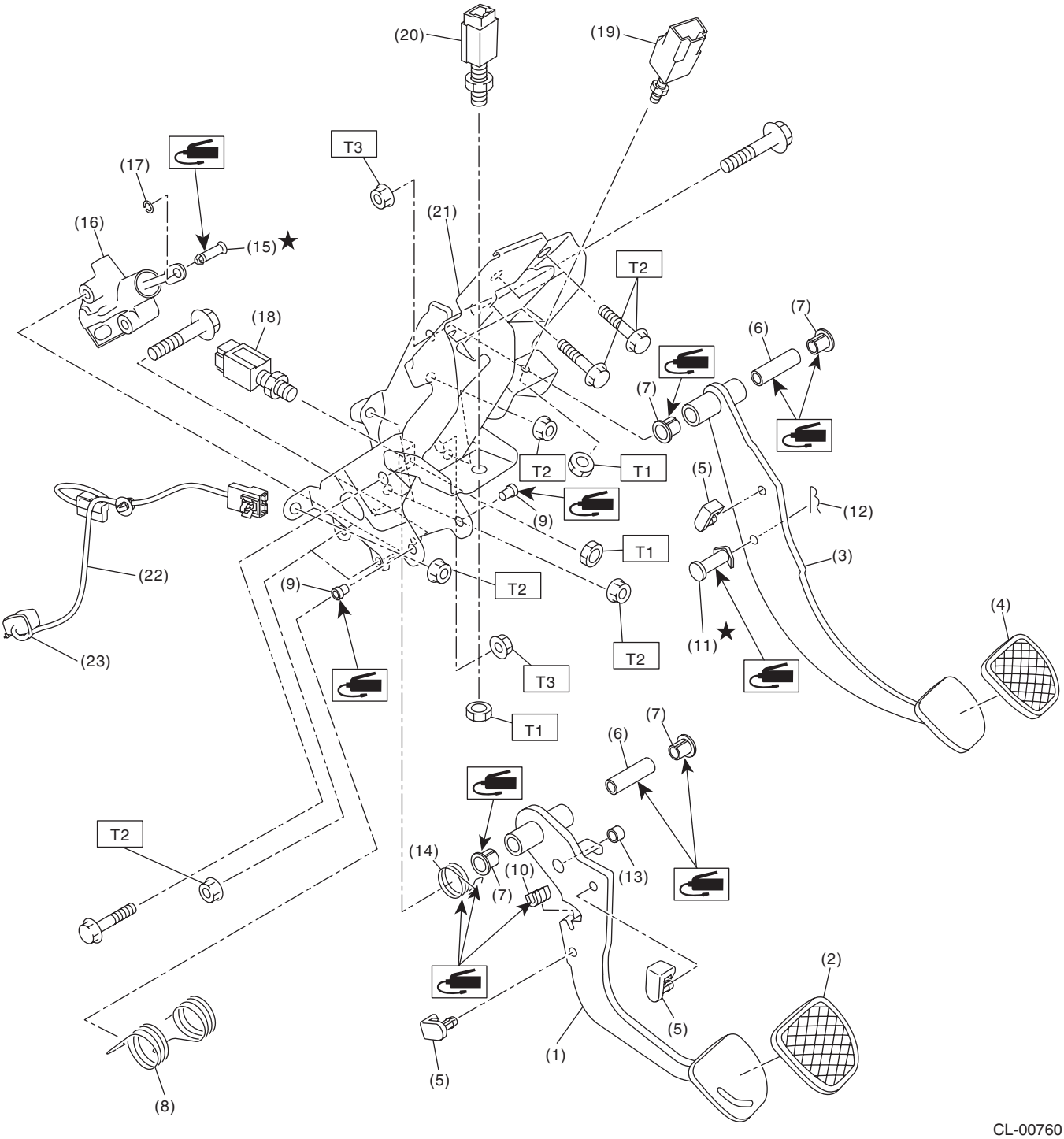

(1) Clutch pedal
(2) Clutch pedal pad
(3) Brake pedal
(4) Brake pedal pad
(5) Stopper
(6) Spacer
(7) Bushing
(8) Torsion spring
(9) Assist bushing
(10) Torsion spring bushing
(11) Clevis pin
(12) Snap pin
(13) Bushing A
(14) Assist spring (turbo model)
(15) Clevis pin
(16) Master cylinder ASSY
(17) Clip
(18) Clutch start switch
(19) Stop & brake switch
(20) Clutch switch
(21) Pedal bracket
(22) Sensor harness
(23) Band

Tightening torque:N·m (kgf-m, ft-lb)
T1: 8 (0.8, 5.9)
T2: 18 (1.8, 13.3)
T3: 30 (3.1, 22.1)

C: CAUTION

- Wear appropriate work clothing, including a cap, protective goggles and protective shoes when performing any work.
- Remove contamination including dirt and corrosion before removal, installation or disassembly.
- Keep the disassembled parts in order and protect them from dust and dirt.
- Before removal, installation or disassembly, be sure to clarify the failure. Avoid unnecessary removal, installation, disassembly and replacement.
- Vehicle components are extremely hot after driving. Be wary of receiving burns from heated parts.
- Use SUBARU genuine fluid, grease etc. or equivalent. Do not mix fluid, grease, etc. of different grades or manufacturers.
- Be sure to tighten fasteners including bolts and nuts to the specified torque.
- Place shop jacks or rigid racks at the specified points.
- Apply grease onto sliding or revolving surfaces before installation.
- Before installing O-rings or snap rings, apply sufficient amount of fluid to avoid damage and deformation.
- Before securing a part in a vise, place cushioning material such as wood blocks, aluminum plate or cloth between the part and the vise.
- Keep fluids away from the vehicle body. If any fluid contacts the vehicle body, immediately flush the area with water.

D: PREPARATION TOOL

1. SPECIAL TOOL

ILLUSTRATION	TOOL NUMBER	DESCRIPTION	REMARKS
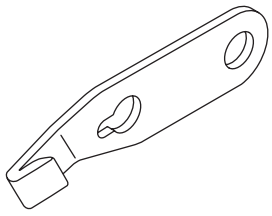 ST-498497100	498497100	CRANKSHAFT STOPPER	Used for stopping rotation of the flywheel.
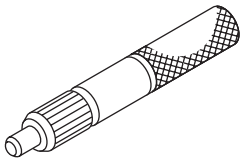 ST-499747100	499747100	CLUTCH DISC GUIDE	Used for installing the clutch disc to the flywheel.

2. GENERAL TOOL

TOOL NAME	REMARKS
Circuit tester	Used for measuring resistance, voltage and ampere.
Dial gauge	Used for measuring clutch disc run-out.
Depth gauge	Used for measuring clutch disc wear.

2. Clutch Disc and Cover

A: REMOVAL

1) Remove the transmission assembly from vehicle body. <Ref. to 6MT-25, REMOVAL, Manual Transmission Assembly.>
2) Attach the ST to the flywheel.
ST 499747100 CLUTCH DISC GUIDE

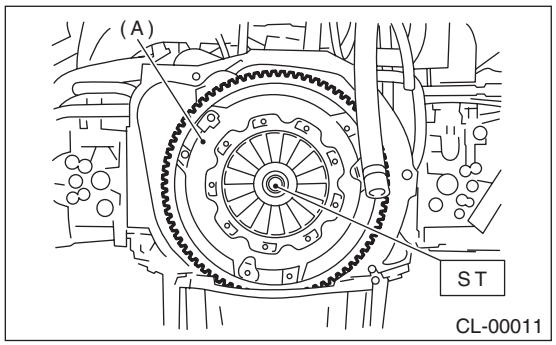

(A) Clutch cover

3) Remove the clutch cover and clutch disc.

NOTE:
• Take care not to allow oil to touch the clutch disc face.
• Do not disassemble the clutch cover or clutch disc.

B: INSTALLATION

1) Insert the ST into the clutch disc and attach to the flywheel by inserting the ST end into pilot bearing.

NOTE:
When installing the clutch disc, be careful to attach in the correct direction.
ST 499747100 CLUTCH DISC GUIDE

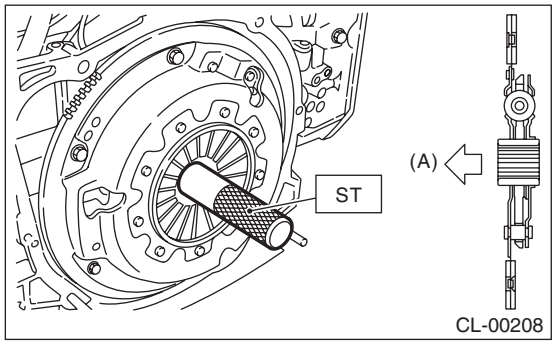

(A) Flywheel side

2) Install the clutch cover to the flywheel and tighten the bolts to the specified torque.

NOTE:
• When installing a clutch cover to the flywheel, position the clutch cover so that the spacing between the unbalance marks (paint mark) on the flywheel and clutch cover is 120° or more apart. (The unbalance mark indicates the direction of residual unbalance.)
• Note the front and rear of the clutch disc when installing.
• Temporarily tighten the bolts by hand. Each bolt should be tightened to the specified torque in a crisscross order.

Tightening torque:
16 N·m (1.6 kgf-m, 11.8 ft-lb)

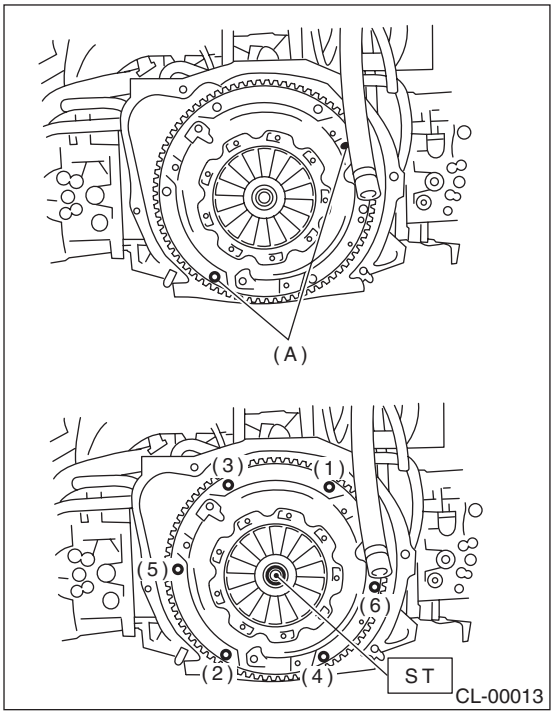

(A) Unbalance mark (paint)

3) Remove the ST.
4) Install the transmission assembly. <Ref. to 6MT-29, INSTALLATION, Manual Transmission Assembly.>
5) When the clutch disc has been replaced, perform the clutch sensor calibration mode. <Ref. to PB(diag)-20, CLUTCH SENSOR CALIBRATION MODE, OPERATION, Subaru Select Monitor.>

NOTE:
If necessary, perform the clutch meet position setting. <Ref. to PB(diag)-20, CLUTCH ENGAGEMENT POSITION SETTING, OPERATION, Subaru Select Monitor.>

C: INSPECTION

1. CLUTCH DISC

1) Facing wear
Measure the depth from the facing surface to the rivet head. Replace if the face is worn locally or worn down to less than the specified value.

Depth to rivet head:
Limit of sinking
0.3 mm (0.012 in)

NOTE:
Do not wash the clutch disc with any type of cleaning fluid.

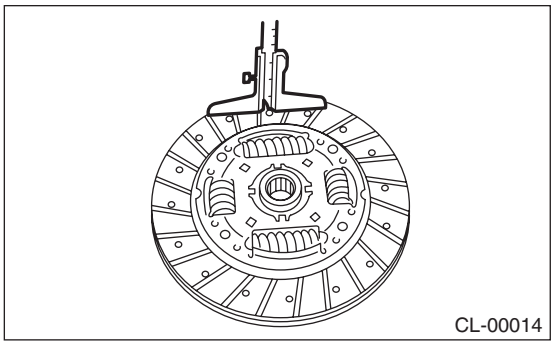

2) Hardened facing
Replace the clutch disc.
3) Oil soakage on facing
Replace the clutch disc and inspect the transmission front oil seal, transmission case mating surface, engine rear oil seal and other locations for oil leakage.

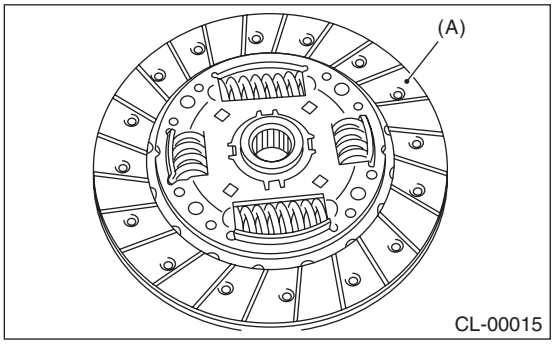

(A) Clutch facing

4) Deflection on facing
If deflection exceeds the specified value at the outer circumference of the facing, replace the clutch disc.

Limit for deflection:
0.7 mm (0.028 in) at R = 110 mm (4.33 in)
ST 499747100 CLUTCH DISC GUIDE

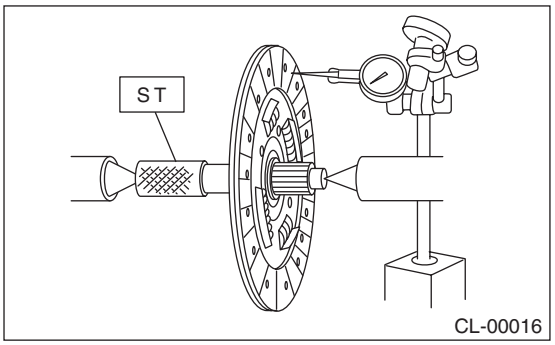

5) If there is spline wear, loose rivets, failed damper springs, etc., replace the clutch disc.

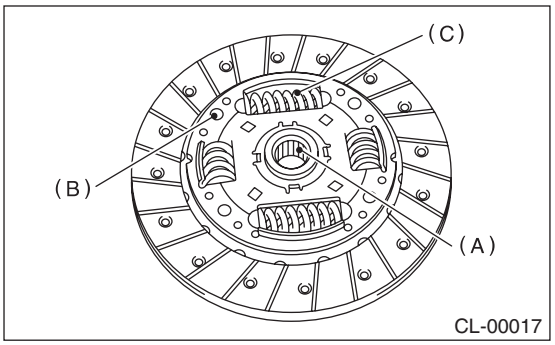

(A) Spline
(B) Rivet
(C) Damper spring

2. CLUTCH COVER

NOTE:
Visually check the following items without disassembling, and replace or repair if defective.
1) Loose thrust rivet
2) Damaged or worn bearing contact area at the center of diaphragm spring

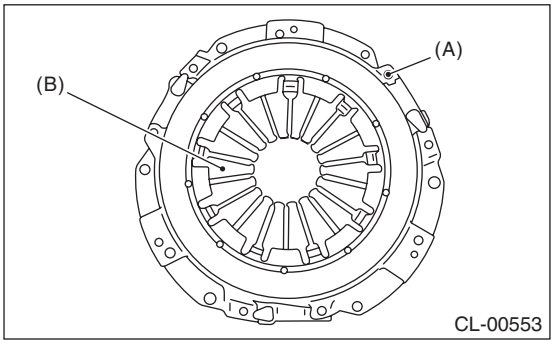

(A) Thrust rivet
(B) Diaphragm spring

3) Damaged and worn disc contact surface of the pressure plate
4) Loose strap plate installation area
5) Worn sliding area of diaphragm spring

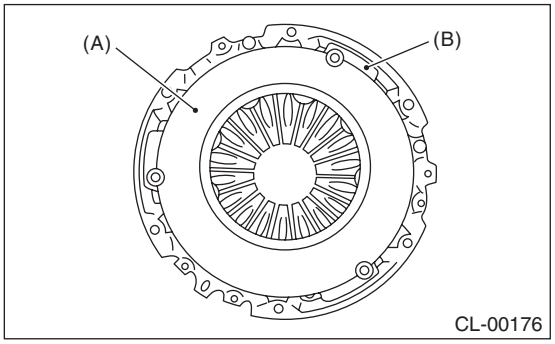

(A) Pressure plate
(B) Strap plate

3. Flywheel

A: REMOVAL

1) Remove the transmission assembly. <Ref. to 6MT-25, REMOVAL, Manual Transmission Assembly.>
2) Remove the clutch cover and clutch disc. <Ref. to CL-11, REMOVAL, Clutch Disc and Cover.>
3) Using the ST, remove the flywheel.
ST 498497100 CRANKSHAFT STOPPER

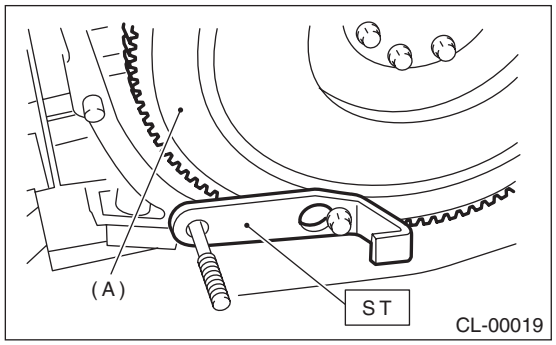

(A) Flywheel

B: INSTALLATION

1) Temporarily tighten the flywheel, and attach the ST.
ST 498497100 CRANKSHAFT STOPPER

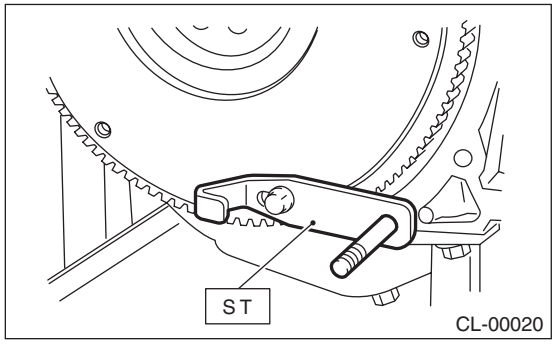

2) Tighten the flywheel mounting bolts to the specified torque.

NOTE:
Tighten the flywheel attachment bolts gradually. Each bolt should be tightened to the specified torque in crisscross order.

Tightening torque:
75 N·m (7.6 kgf-m, 55.3 ft-lb)

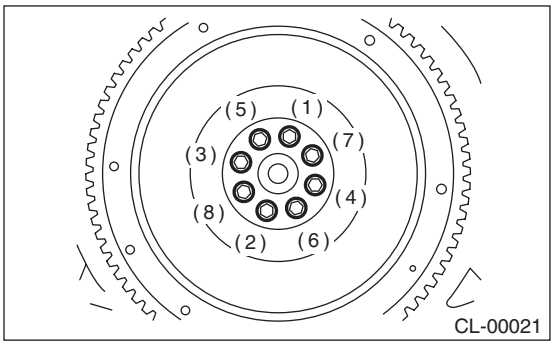

3) Install the clutch disc and cover. <Ref. to CL-11, INSTALLATION, Clutch Disc and Cover.>
4) Install the transmission assembly. <Ref. to 6MT-29, INSTALLATION, Manual Transmission Assembly.>

C: INSPECTION

CAUTION:
Because the center bearing is grease-sealed and is a non-lubrication type, do not wash with gasoline or solvents.
1) If there is damage or defectiveness in the facing sliding surface or ring gear, replace the flywheel.

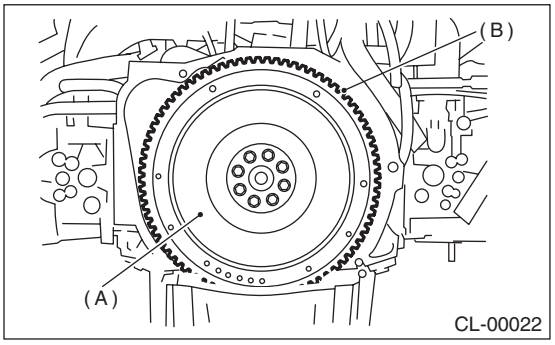

(A) Flywheel
(B) Ring gear

2) Smoothness of rotation
Rotate the ball bearing while applying pressure in the thrust direction.
3) If noise or excessive play is noted, replace the flywheel.

4. Release Bearing and Lever

A: REMOVAL

1) Remove the transmission assembly from vehicle body. <Ref. to 6MT-25, REMOVAL, Manual Transmission Assembly.>
2) Remove the two clips from the clutch release lever. (non-turbo model)

CAUTION:
Be careful not to deform the clips.

3) Remove the release bearing. (non-turbo model)
4) Remove the dust cover.

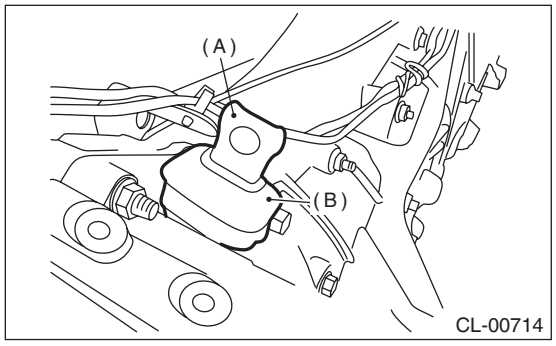

(A) Release lever
(B) Dust cover

5) Remove the lever spring from the pivot with a screwdriver by accessing it through the clutch housing release lever hole. Then remove the release lever. (non-turbo model)

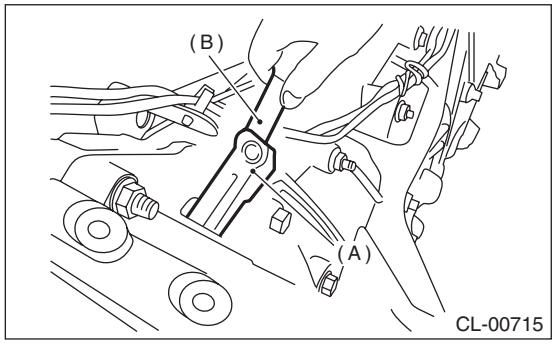

(A) Release lever
(B) Screwdriver

6) Remove the lever spring from the pivot with a screwdriver by accessing it through the clutch housing release lever hole. Then remove the release lever and release bearing as a unit. (turbo model)

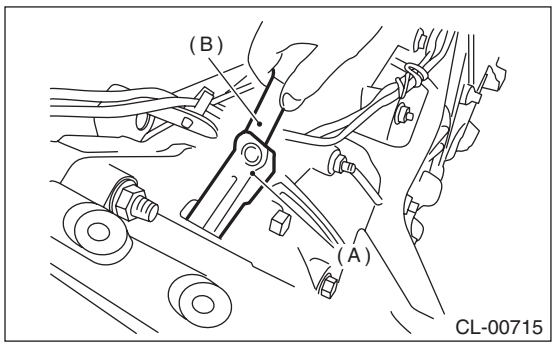

(A) Release lever
(B) Screwdriver

B: INSTALLATION

NOTE:
Apply the specified grease to lubricate to the following points before installation.
- Contact surface of lever and pivot
- Contact surface of lever and bearing
- Transmission main shaft spline

Grease
NICHIMOLY N-130 or equivalent

1) Temporarily assemble the release bearing to the release lever. (turbo model)
2) While pushing the release lever to the pivot and twisting it to both sides, fit the lever spring onto the raised portion of the pivot. (non-turbo model)

NOTE:
Observing from the main case hole, check that the lever spring is installed securely.

3) Install the release bearing by inserting the release lever into the clutch housing release lever hole. Then, fit the lever spring onto the raised portion of the pivot by pushing the release lever to the pivot and twisting it to both sides. (turbo model)
4) Install the release bearing and fasten it with two clips. (non-turbo model)
5) Install the dust cover.

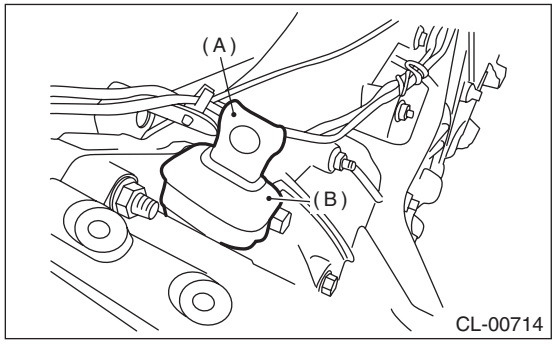

(A) Release lever
(B) Dust cover

6) Check the bearing for smooth movement by operating the release lever.
7) Apply grease to the contact point of the release lever and operating cylinder.

Grease
NICHIMOLY N-130 or equivalent

8) Install the transmission assembly. <Ref. to 6MT-29, INSTALLATION, Manual Transmission Assembly.>

C: INSPECTION

1. RELEASE BEARING

CAUTION:
Because this bearing is grease-sealed and is a non-lubrication type, do not wash with gasoline or solvents when servicing the clutch.

1) Check the bearing for smooth movement by applying force to the bearing in the radial direction.

Radial direction stroke:
1.6 mm (0.063 in)

- Non-turbo model

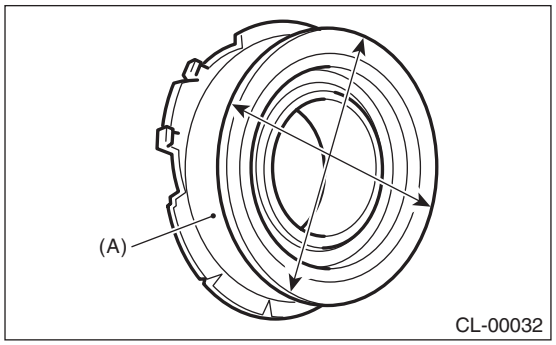

(A) Bearing case

- Turbo model

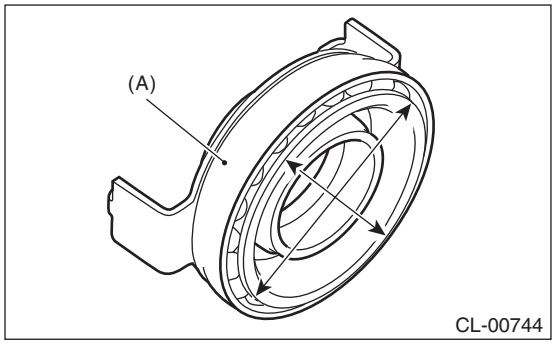

(A) Bearing case

2) While applying force to the bearing in the rotational direction, check the bearing for smooth rotation.

- Non-turbo model

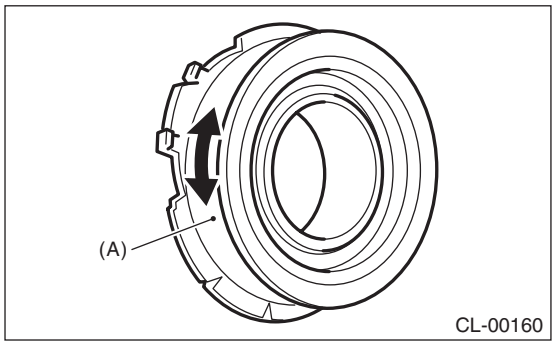

(A) Bearing case

- Turbo model

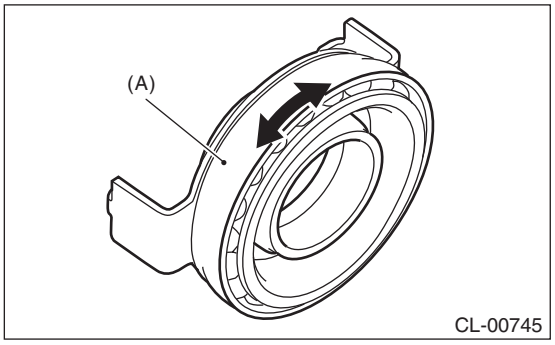

(A) Bearing case

3) Check for wear or damage at the bearing case surface in contact with the lever.

2. RELEASE LEVER

Check the pivot portion of the lever and the contact area with the release bearing case for wear.

- Non-turbo model

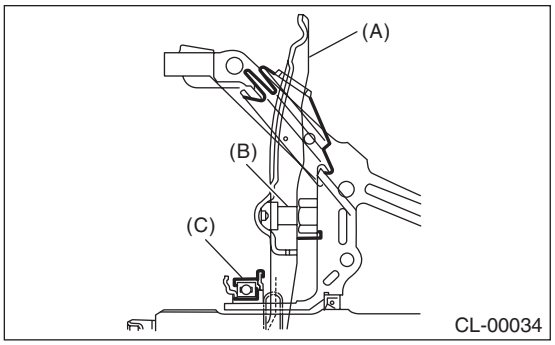

(A) Release lever
(B) Pivot
(C) Release bearing

- Turbo model

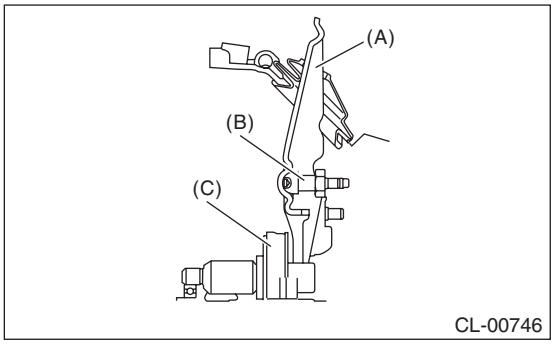

(A) Release lever
(B) Pivot
(C) Release bearing

5. Operating Cylinder

A: REMOVAL

NOTE:
The illustration below is suitable for every model. Perform the same procedures for the other models.
1) Remove the collector cover. (turbo model)
2) Remove the air intake boot assembly. (non-turbo model) <Ref. to IN(H4SO)-8, REMOVAL, Air Intake Boot.>
3) Remove the intercooler. (turbo model) <Ref. to IN(H4DOTC)-17, REMOVAL, Intercooler.>
4) Disconnect the clutch hose from the operating cylinder.

CAUTION:
• Cover the hose joint to prevent the clutch fluid from flowing out.
• Do not loosen or remove the cap bolt at the rear end of operating cylinder. (turbo model)

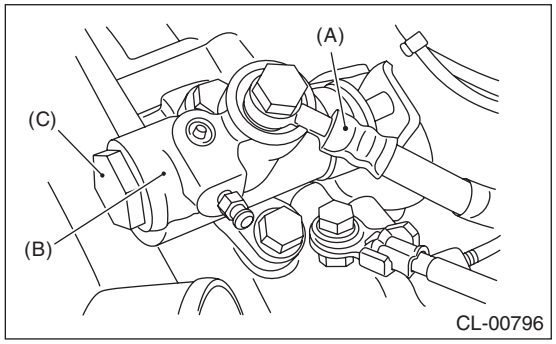

(A) Clutch hose
(B) Operating cylinder
(C) Cap bolt

5) Remove the operating cylinder from the transmission.

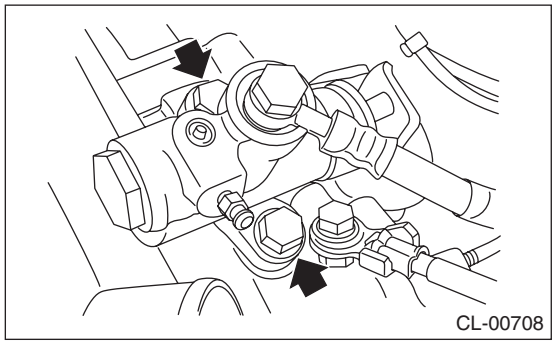

B: INSTALLATION

NOTE:
• The illustration below is suitable for every model. Perform the same procedures for the other models.
• Use a new gasket.
• Be sure to install the clutch hose with the mark side facing upward.
• Be careful not to twist the clutch hose during installation.
• Before installing the operating cylinder, apply grease to the contact point of the release lever and operating cylinder.

Grease
NICHIMOLY N-130 or equivalent
1) Install in the reverse order of removal.

Tightening torque:
T1: 18 N·m (1.8 kgf-m, 13.3 ft-lb)
T2: 37 N·m (3.8 kgf-m, 27.3 ft-lb)

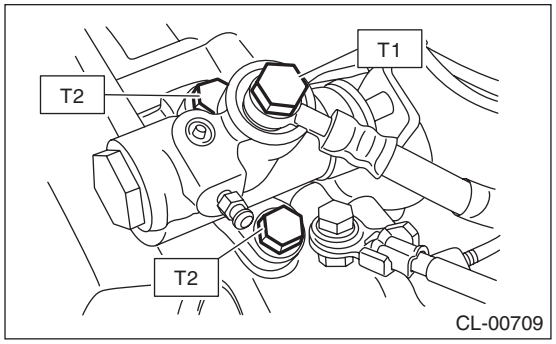

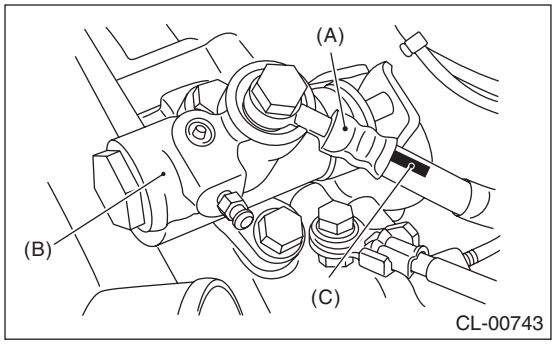

(A) Clutch hose
(B) Operating cylinder
(C) Mark

2) After bleeding air from the operating cylinder, ensure that the clutch operates properly. <Ref. to CL-25, PROCEDURE, Clutch Fluid Air Bleeding.>
3) When the operating cylinder has been replaced or removed, perform the clutch sensor calibration mode. <Ref. to PB(diag)-20, CLUTCH SENSOR CALIBRATION MODE, OPERATION, Subaru Select Monitor.>

NOTE:
If necessary, perform the clutch meet position setting. <Ref. to PB(diag)-20, CLUTCH ENGAGEMENT POSITION SETTING, OPERATION, Subaru Select Monitor.>

C: DISASSEMBLY

NOTE:
The illustration shows a representing model. Perform the same procedures for the other models.
1) Remove the boot and push rod.

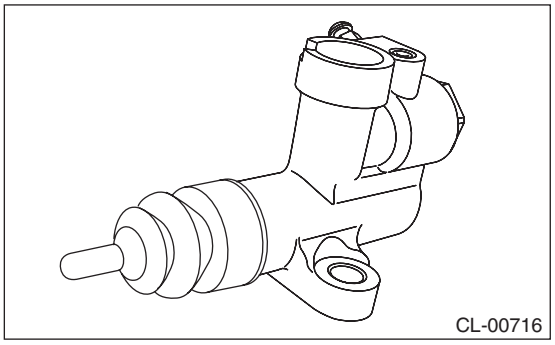

2) Apply compressed air through clutch hose attachment hole.

NOTE:
Face the piston hole down and place a piece of wood underneath to prevent the piston from popping out.
3) Separate the piston and piston spring.

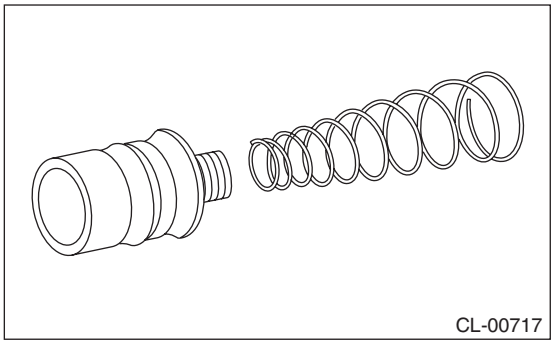

D: ASSEMBLY

NOTE:
• The illustration shows a representing model. Perform the same procedures for the other models.
• During assembly, apply hydraulic oil to all parts.

Recommended clutch fluid:
New FMVSS No. 116 DOT3

1) Install the piston spring onto the piston.

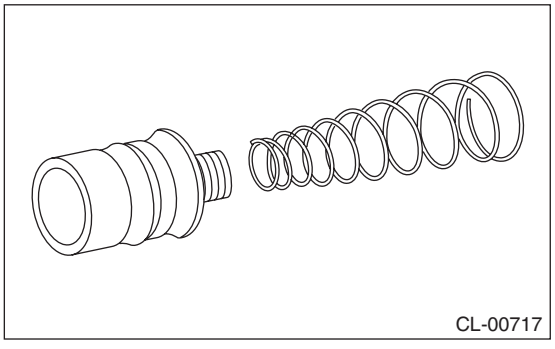

2) Insert piston to the operating cylinder.
3) Install push rod to the boot.
4) Install boot and push rod to the operating cylinder.

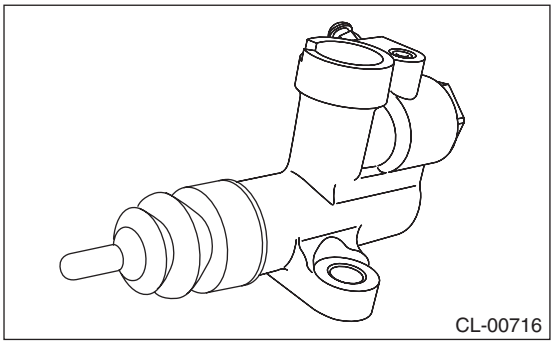

E: INSPECTION

1) Check that the operating cylinder is not damaged. Replace the operating cylinder if it is damaged.
2) Check the clutch fluid leakage on the operating cylinder or the boot for damage. Replace the operating cylinder if clutch fluid leaks or boot damages are noted.

6. Master Cylinder

A: REMOVAL

1) Disconnect the ground cable from battery.
2) Remove the collector cover. (turbo model)
3) Thoroughly drain the clutch fluid from the reservoir tank.
4) Remove the instrument panel lower cover. <Ref. to EI-64, REMOVAL, Instrument Panel Lower Cover.>
5) Remove the pedal assembly. <Ref. to CL-26, REMOVAL, Clutch Pedal.>
6) Remove the clip and clevis pin, and then separate the push rod of the master cylinder from clutch pedal.

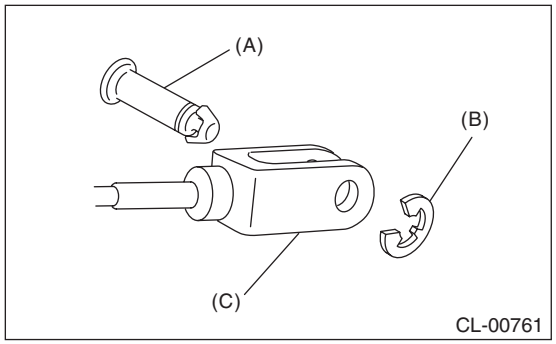

(A) Clevis pin
(B) Clip
(C) Push rod

7) Disconnect the clutch stroke sensor connector.
8) Remove the clutch pipe from the master cylinder.

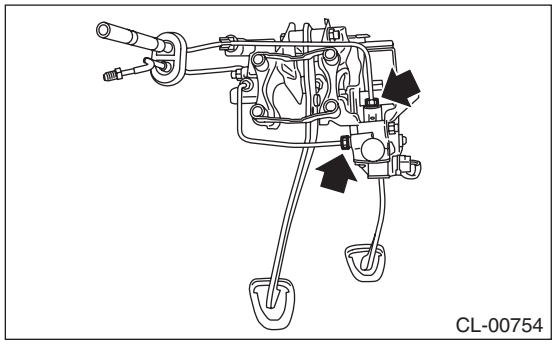

9) Remove the master cylinder from the pedal bracket.

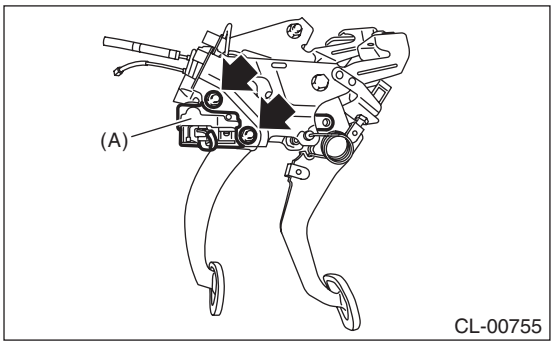

(A) Master cylinder

B: INSTALLATION

1) Install the master cylinder to the pedal assembly.

Tightening torque:
18 N·m (1.8 kgf-m, 13.3 ft-lb)

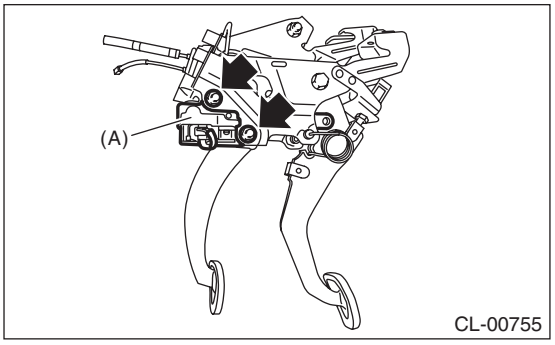

(A) Master cylinder

2) Connect the clutch pipes to the master cylinder.

Tightening torque:
15 N·m (1.5 kgf-m, 11.1 ft-lb)

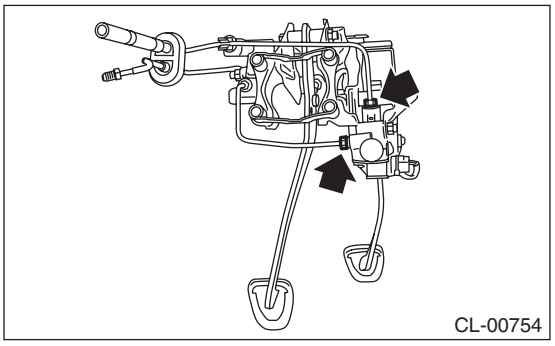

3) Connect the clutch stroke sensor connector.

4) Connect the push rod of the master cylinder to the clutch pedal, and install the clevis pin and clip.

CAUTION:
Always use a new clevis pin.

NOTE:
Apply grease to the clevis pin.

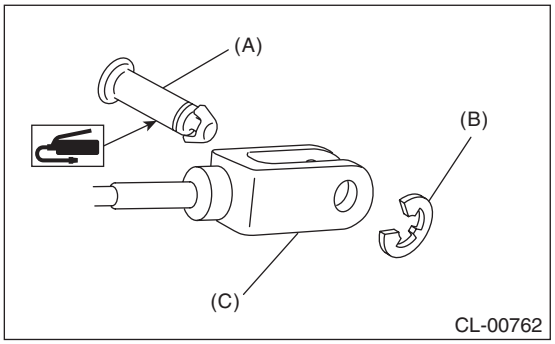

(A) Clevis pin
(B) Clip
(C) Push rod

5) Install the pedal assembly. <Ref. to CL-26, INSTALLATION, Clutch Pedal.>
6) Install the instrument panel lower cover. <Ref. to EI-65, INSTALLATION, Instrument Panel Lower Cover.>
7) Connect the battery ground terminal.
8) Fill the recommended clutch fluid. <Ref. to CL-24, Clutch Fluid.>
9) After bleeding air from the clutch system, ensure that the clutch operates properly. <Ref. to CL-25, Clutch Fluid Air Bleeding.>
10) Install the collector cover. (turbo model)
11) When the clutch master cylinder assembly has been replaced, perform the clutch sensor calibration mode. <Ref. to PB(diag)-20, CLUTCH SENSOR CALIBRATION MODE, OPERATION, Subaru Select Monitor.>

NOTE:
If necessary, perform the clutch meet position setting. <Ref. to PB(diag)-20, CLUTCH ENGAGEMENT POSITION SETTING, OPERATION, Subaru Select Monitor.>

C: INSPECTION

If any damage, deformation, wear, swelling, rust or other faults are found on the master cylinder assembly, reservoir tank, clutch damper, clutch pipe and clutch hose, replace the faulty part.

7. Clutch Pipe and Hose

A: REMOVAL

1) Disconnect the ground cable from battery.
2) Remove the collector cover. (turbo model)
3) Remove the air intake boot assembly. (non-turbo model) <Ref. to IN(H4SO)-8, REMOVAL, Air Intake Boot.>
4) Remove the intercooler. (turbo model) <Ref. to IN(H4DOTC)-17, REMOVAL, Intercooler.>
5) Thoroughly drain the clutch fluid from the reservoir tank.
6) Disconnect the clutch pipe from the clutch hose and connector. Disconnect the reservoir tank hose from the reservoir tank.

CAUTION:
Be careful not to spill the clutch fluid. Clutch fluid spilled on the vehicle body will harm the paint surface; wash it off with water and wipe clean quickly if spilled.

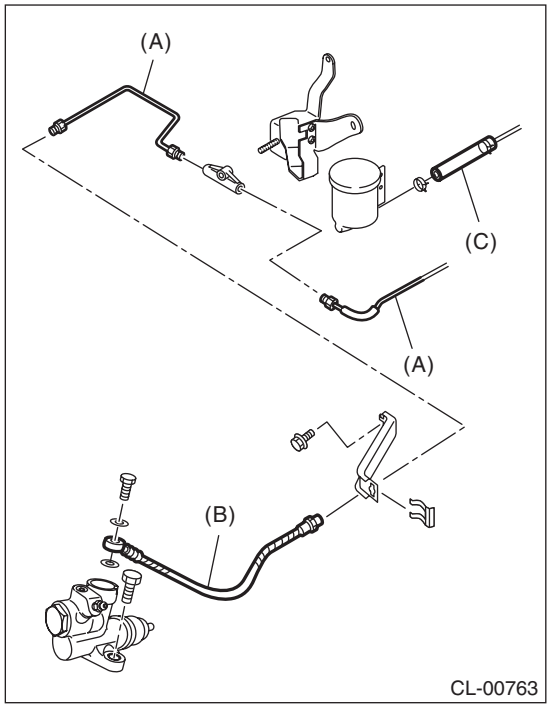

(A) Clutch pipe
(B) Clutch hose
(C) Reservoir tank hose

7) Pull out the clamp, then remove the clutch hose from the clutch bracket.

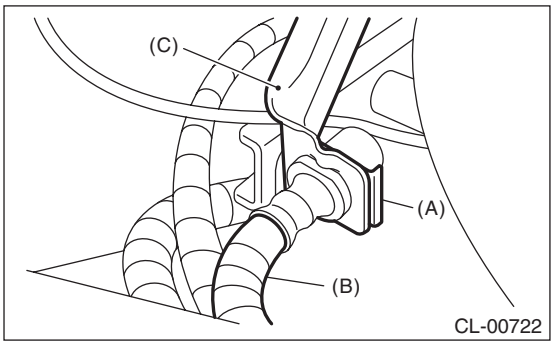

(A) Clamp
(B) Clutch hose
(C) Clutch bracket

8) Disconnect the clutch hose from operating cylinder.
9) Remove the clutch bracket.
10) Remove the instrument panel lower cover. <Ref. to EI-64, REMOVAL, Instrument Panel Lower Cover.>
11) Remove the pedal assembly. <Ref. to CL-26, REMOVAL, Clutch Pedal.>
12) Remove the clutch pipe from the reservoir tank hose, mass damper, clutch damper, master cylinder and clutch pipe grommet.

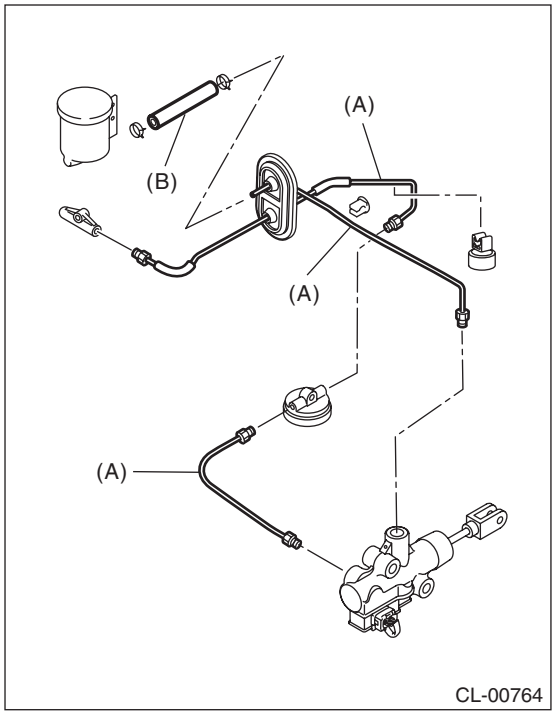

(A) Clutch pipe
(B) Reservoir tank hose

B: INSTALLATION

Install in the reverse order of removal.

NOTE:
After bleeding air from the clutch fluid, ensure that the clutch operates properly. <Ref. to CL-25, Clutch Fluid Air Bleeding.>

Tightening torque:
T: 15 N·m (1.5 kgf-m, 11.1 ft-lb)

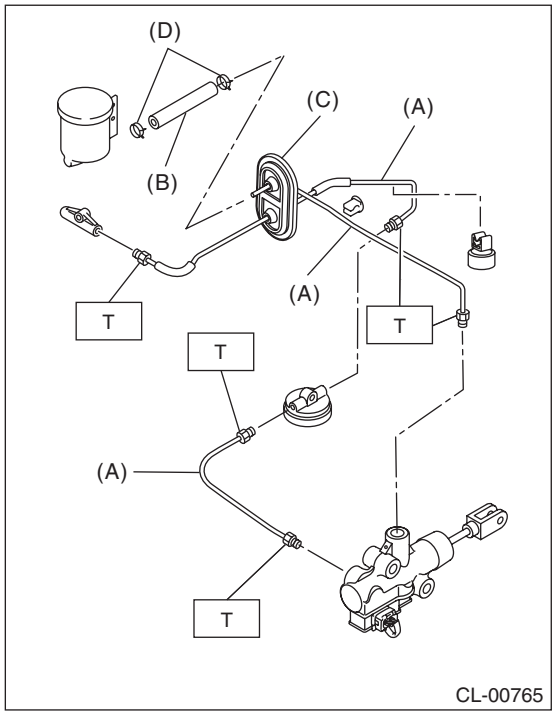

(A) Clutch pipe
(B) Reservoir tank hose
(C) Clutch pipe grommet
(D) Clamp

Tightening torque:
T1: 7.5 N·m (0.8 kgf-m, 5.5 ft-lb)
T2: 15 N·m (1.5 kgf-m, 11.1 ft-lb)
T3: 18 N·m (1.8 kgf-m, 13.3 ft-lb)

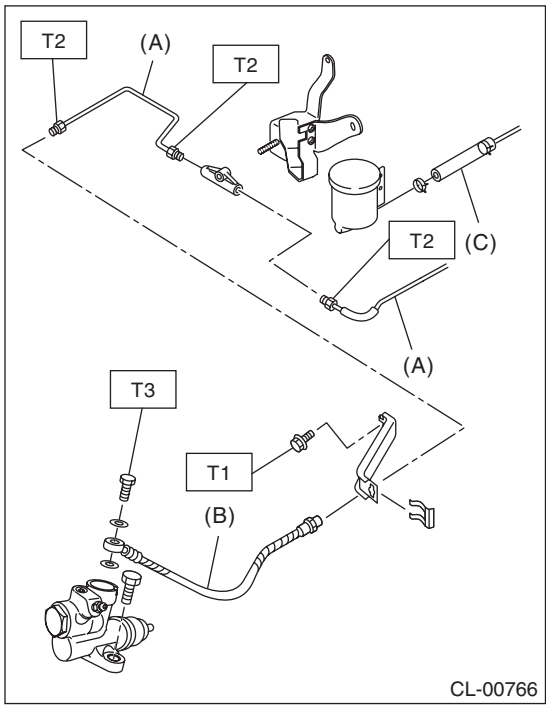

(A) Clutch pipe
(B) Clutch hose
(C) Reservoir tank hose

C: INSPECTION

Check the clutch pipe, reservoir tank hose and clutch hose for crack, breaks or damage. Check the joint for clutch fluid leakage. If crack, breakage, damage or leakage is found, repair or replace the faulty clutch pipe, reservoir tank hose or clutch hose.

8. Clutch Fluid

A: INSPECTION

1) Park the vehicle on a level surface.
2) Check the clutch fluid level using the scale on the outside of the reservoir tank. If the clutch fluid level is below “MIN”, fill the clutch fluid up to “MAX” level, and make sure that there is no leakage.

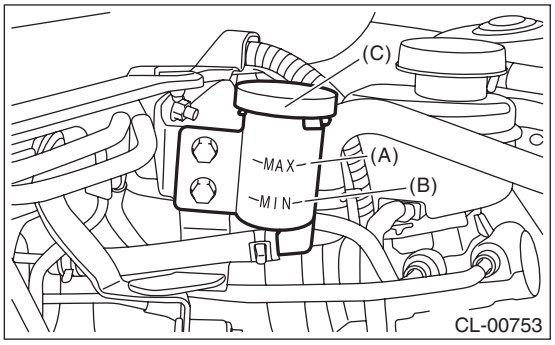

(A) MAX. level
(B) MIN. level
(C) Reservoir tank

B: REPLACEMENT

CAUTION:
• Use new FMVSS No. 116 DOT3.
• Cover the air breather with cloth to prevent clutch fluid from being splashed on surrounding parts when loosening the breather.
• Avoid mixing clutch fluid of different brands to prevent fluid performance from degrading.
• Be careful not to allow dirt or dust to enter the reservoir tank.

NOTE:
• During bleeding operation, keep the clutch reservoir tank filled with clutch fluid to prevent entry of air.
• Clutch pedal must be operated very slowly.
• Bleed air from the oil line with help of a co-worker.
• The amount of clutch fluid required is approximately 70 m ℓ (2.4 US fl oz, 2.5 Imp fl oz) for total clutch system.
1) Remove the collector cover. (turbo model)
2) Remove the air intake boot assembly. (non-turbo model) <Ref. to IN(H4SO)-8, REMOVAL, Air Intake Boot.>
3) Remove the intercooler. (turbo model) <Ref. to IN(H4DOTC)-17, REMOVAL, Intercooler.>
4) Thoroughly drain the clutch fluid from the reservoir tank.
5) Refill the reservoir tank with recommended clutch fluid.

Recommended clutch fluid:
New FMVSS No. 116 DOT3
6) Bleed air from the clutch fluid. <Ref. to CL-25, Clutch Fluid Air Bleeding.>
7) Install the air intake boot assembly. (non-turbo model) <Ref. to IN(H4SO)-8, INSTALLATION, Air Intake Boot.>
8) Install the intercooler. (turbo model) <Ref. to IN(H4DOTC)-18, INSTALLATION, Intercooler.>
9) Install the collector cover. (turbo model)

9. Clutch Fluid Air Bleeding

A: PROCEDURE

NOTE:
• The illustration below is suitable for every model. Perform the same procedures for the other models.
• Bleed air from the oil line with help of a co-worker.
1) Remove the collector cover.
2) Remove the air intake boot assembly. (non-turbo model) <Ref. to IN(H4SO)-8, REMOVAL, Air Intake Boot.>
3) Remove the intercooler. (turbo model) <Ref. to IN(H4DOTC)-17, REMOVAL, Intercooler.>
4) Fit one end of a vinyl tube into the air breather of the operating cylinder, and put the other end into a clutch fluid container.

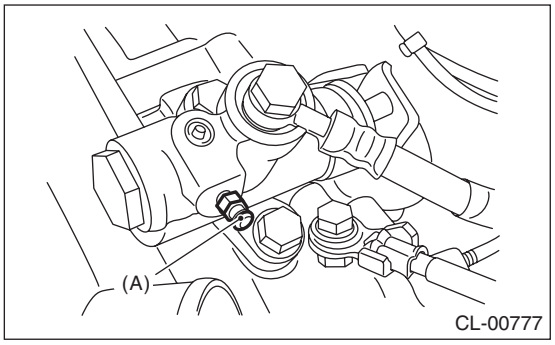

(A) Air breather

5) Slowly depress the clutch pedal several times and keep it depressed. Open the air breather to discharge air together with the clutch fluid. Release the air breather for 1 or 2 seconds. Next, close the air breather, and slowly release the clutch pedal.

CAUTION:
Cover the air breather with cloth to prevent clutch fluid from being splashed on surrounding parts when loosening the breather.

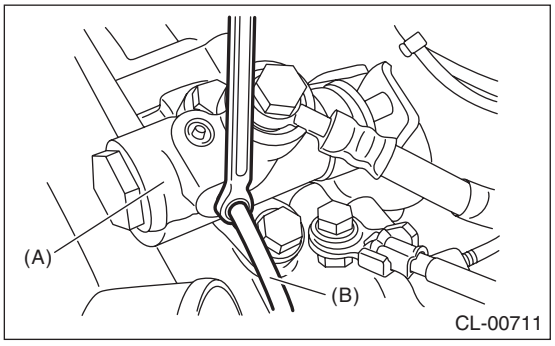

(A) Operating cylinder
(B) Vinyl tube

6) Repeat procedure 5), until there are no more air bubbles appearing from the air breather.
7) Tighten the air breather.

Tightening torque:
T: 7.8 N·m (0.8 kgf-m, 5.8 ft-lb)

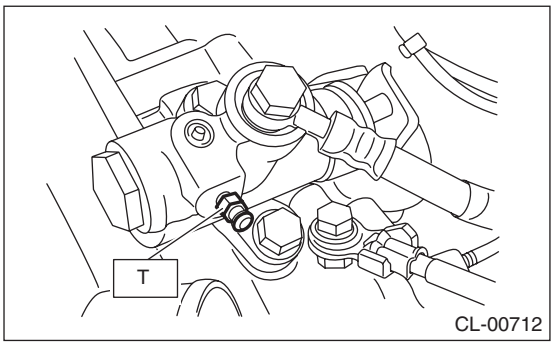

8) After stepping on the clutch pedal, make sure that there are no leaks evident in the entire clutch system.
9) After bleeding the air from clutch system, ensure that the clutch operates properly.
10) Install the air intake boot assembly. (non-turbo model) <Ref. to IN(H4SO)-8, INSTALLATION, Air Intake Boot.>
11) Install the intercooler. (turbo model) <Ref. to IN(H4DOTC)-18, INSTALLATION, Intercooler.>
12) Install the collector cover. (turbo model)

10.Clutch Pedal

A: REMOVAL

1) Disconnect the ground cable from battery.
2) Remove the collector cover. (turbo model)
3) Remove the air intake boot assembly. (non-turbo model) <Ref. to IN(H4SO)-8, INSTALLATION, Air Intake Boot.>
4) Remove the intercooler. (turbo model) <Ref. to IN(H4DOTC)-17, REMOVAL, Intercooler.>
5) Drain the clutch fluid from the reservoir tank.
6) Disconnect the clutch pipe from the connector.

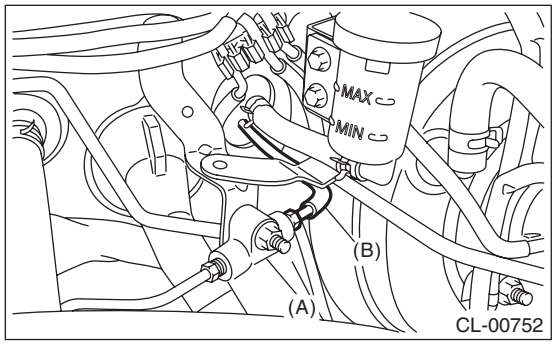

(A) Connector
(B) Clutch pipe

7) Disconnect the reservoir tank hose from the reservoir tank.

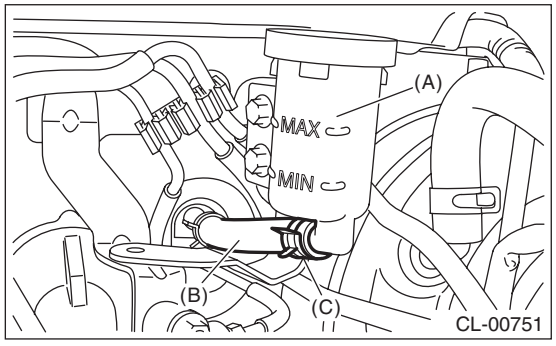

(A) Reservoir tank
(B) Reservoir tank hose
(C) Clamp

8) Remove the instrument panel lower cover. <Ref. to EI-64, REMOVAL, Instrument Panel Lower Cover.>
9) Remove the body integrated unit. <Ref. to SL-71, REMOVAL, Body Integrated Unit.>
10) Disconnect the connector from clutch switch.
11) Disconnect the connector from the brake switch.
12) Remove the snap pin and clevis pin connecting the operating rod and brake pedal.
13) Remove the pedal assembly.

NOTE:
Place vinyl, etc. in order not to drop the clutch fluid to the floor carpet.

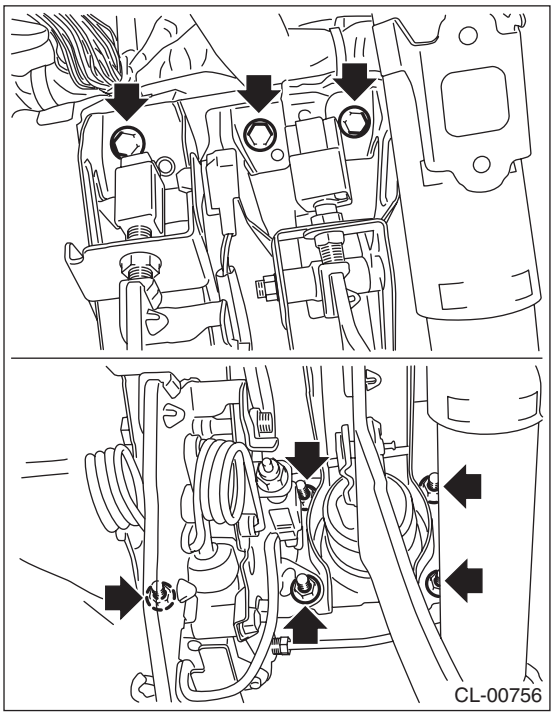

B: INSTALLATION

1) Install in the reverse order of removal.

CAUTION:
Always use a new clevis pin.

Tightening torque:
T: 18 N·m (1.8 kgf-m, 13.3 ft-lb)
2) Fill the recommended clutch fluid. <Ref. to CL-24, Clutch Fluid.>
3) Bleed air from the clutch system. <Ref. to CL-25, PROCEDURE, Clutch Fluid Air Bleeding.>
4) Adjust the clutch pedal. <Ref. to CL-29, ADJUSTMENT, Clutch Pedal.>
5) When the clutch pedal has been replaced, perform the clutch sensor calibration mode. <Ref. to PB(diag)-20, CLUTCH SENSOR CALIBRATION MODE, OPERATION, Subaru Select Monitor.>

NOTE:
If necessary, perform the clutch meet position setting. <Ref. to PB(diag)-20, CLUTCH ENGAGEMENT POSITION SETTING, OPERATION, Subaru Select Monitor.>
6) Install the collector cover.

C: DISASSEMBLY

1) Disconnect the clutch pipe from the master cylinder.

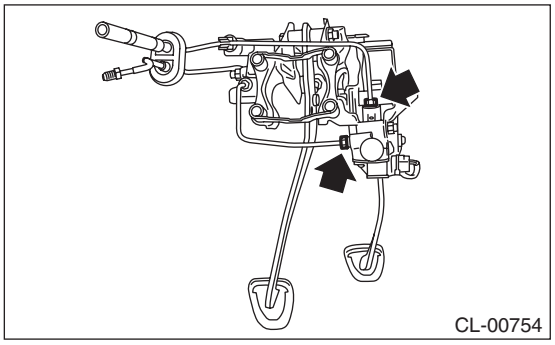

2) Remove the clutch damper mounting nut from the pedal assembly, and disconnect the clutch pipe from the clamp.

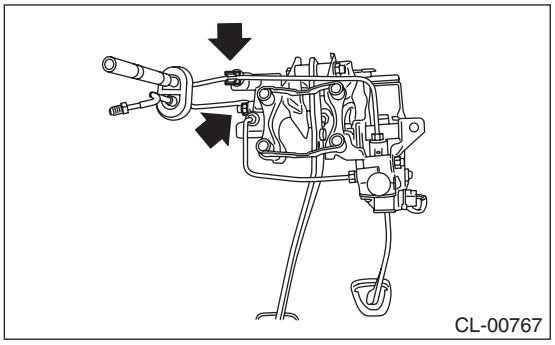

3) Remove the clutch switches.
4) Remove the clip and pull out the clevis pin.

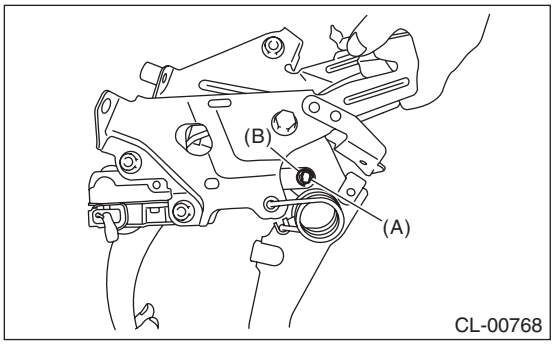

(A) Clevis pin
(B) Clip

5) Disconnect the connector from the clutch stroke sensor, and then remove the sensor harness.

6) Remove the master cylinder from the pedal assembly.

NOTE:
Secure the push rod with a tape, etc. to prevent it from falling off.

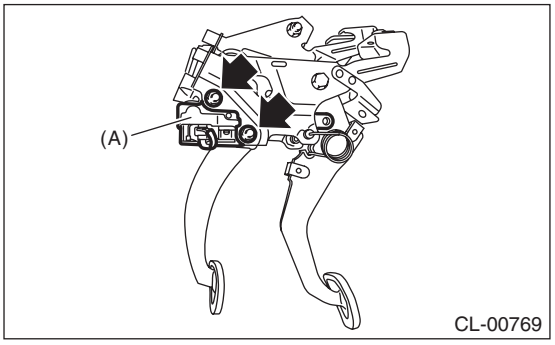

(A) Master cylinder

7) Remove the torsion spring and assist bushing from the pedal assembly.

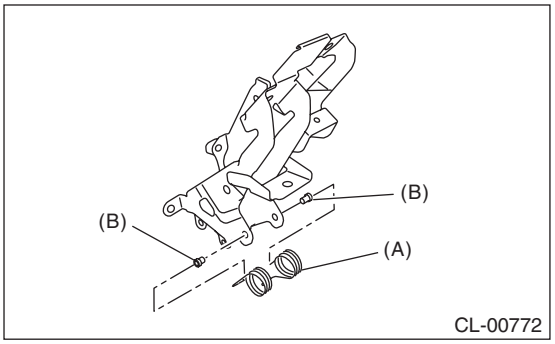

(A) Torsion spring
(B) Assist bushing

8) Remove the clutch pedal from the pedal bracket.

NOTE:
Before removing the clutch pedal mounting bolt, remove the hook of the assist spring from the pedal bracket. (turbo model)

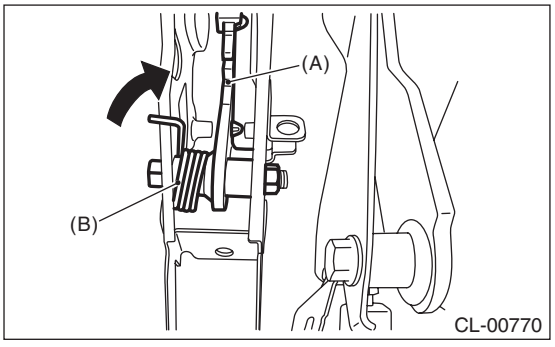

(A) Clutch pedal
(B) Assist spring (turbo model)

9) Remove the assist spring (turbo model), bushing, spacer, bushing A, stopper, torsion spring bushing and clutch pedal pad from the clutch pedal.

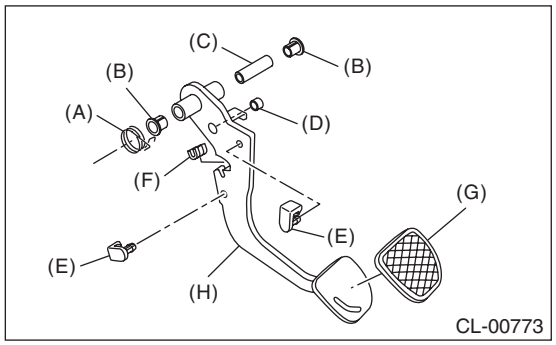

(A) Assist spring (turbo model)
(B) Bushing
(C) Spacer
(D) Bushing A
(E) Stopper
(F) Torsion spring bushing
(G) Clutch pedal pad
(H) Clutch pedal

D: ASSEMBLY

1) Clean the holes in the sliding surface between the clutch pedal and pedal bushing, and apply grease.
2) Attach the pedal pad, stopper, assist spring (turbo model), bushing A, torsion spring bushing, spacer and bushing to the clutch pedal.

NOTE:
Before installing the spacer, clean the inside of the pedal bushings and apply grease.
3) Attach the clutch pedal to the pedal bracket.

NOTE:
• Before installing the assist spring, apply grease to the coil part of the assist spring. (turbo model)
• Hang hook of the assist spring on the pedal bracket. (turbo model)

Tightening torque:
T: 30 N·m (3.1 kgf-m, 22.1 ft-lb)

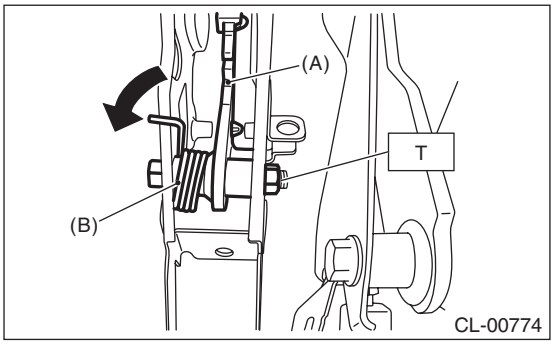

(A) Clutch pedal
(B) Assist spring (turbo model)

4) Install the assist bushing and torsion spring to the pedal assembly.

NOTE:
Before installing the torsion spring, apply grease to the assist bushing and torsion spring bushing.
5) Install the master cylinder to the pedal assembly.

NOTE:
Secure the push rod with a tape, etc. to prevent it from falling off.

Tightening torque:
T: 18 N·m (1.8 kgf-m, 13.3 ft-lb)

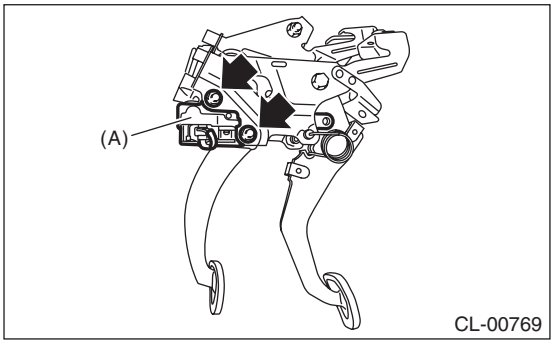

(A) Master cylinder

6) Secure the clevis pin with mounting clip.

CAUTION:
Always use a new clevis pin.

NOTE:
Before installing the clevis pin, apply grease.

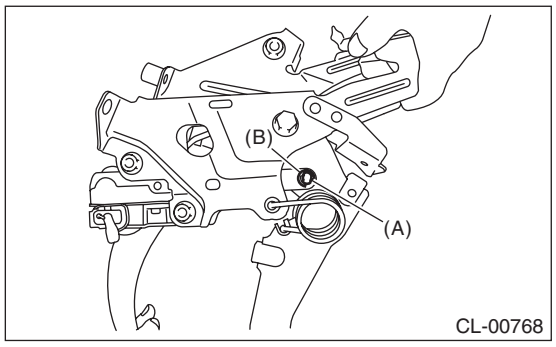

(A) Clevis pin
(B) Clip

7) Attach the sensor harness, and connect the connector to the clutch stroke sensor.
8) Install the clutch switch.
9) Install the clutch damper to the pedal assembly, and connect the clutch pipe to the master cylinder.

Tightening torque:
T1: 15 N·m (1.5 kgf-m, 11.1 ft-lb)
T2: 18 N·m (1.8 kgf-m, 13.3 ft-lb)

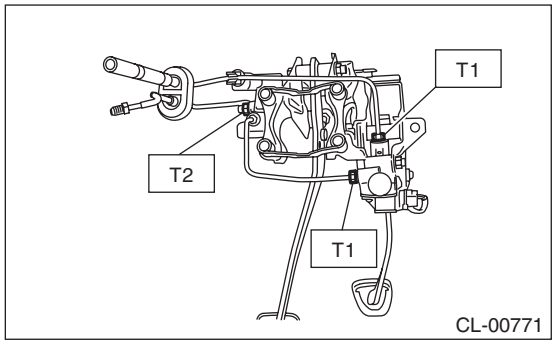

E: INSPECTION

1. CLUTCH PEDAL

Move the clutch pedal in the lateral direction with a force of approximately 10 N (1 kgf, 2 lbf) to check that the clutch pedal deflection is within the service limit.

CAUTION:
If the deflection exceeds the service limit, replace with a new clutch pedal assembly.

Deflection of the clutch pedal:
Service limit
4.0 mm (0.157 in) or less

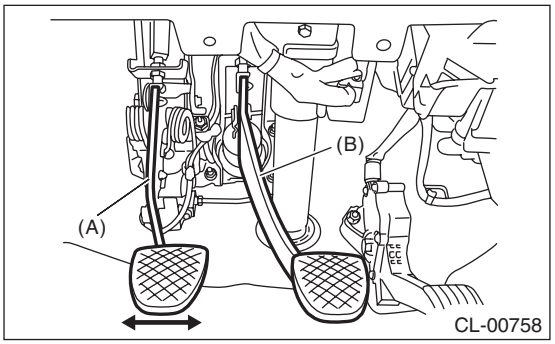

(A) Clutch pedal
(B) Brake pedal

F: ADJUSTMENT

1) If the full stroke of the clutch pedal is not within the specified value, loosen the lock nuts of the clutch switch and adjust the full stroke of the clutch pedal with the clutch switch.

CAUTION:
When adjusting the full stroke of clutch pedal, do not turn the clutch switch.

Clutch pedal full stroke A:
130 — 135 mm (5.12 — 5.31 in) (non-turbo model)
135 — 140 mm (5.31 — 5.51 in) (turbo model)

Tightening torque:
T: 8 N·m (0.8 kgf-m, 5.9 ft-lb)

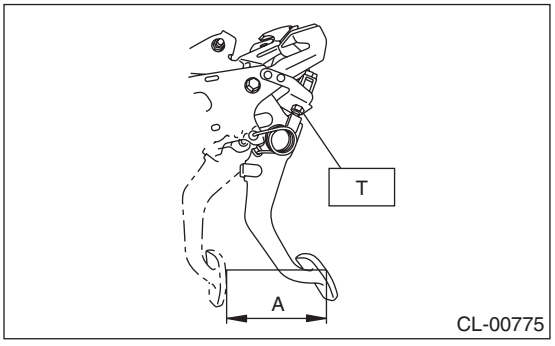

2) Depress and release the clutch pedal two or three times to ensure that the clutch pedal and release lever operate smoothly. If the clutch pedal and release lever do not operate smoothly, bleed air from the clutch hydraulic system. <Ref. to CL-25, Clutch Fluid Air Bleeding.>
3) Measure the clutch pedal full stroke length again to ensure that it is within specifications. If it is not within specifications, repeat adjustment procedures again from the beginning.

Clutch pedal full stroke:
130 — 135 mm (5.12 — 5.31 in) (non-turbo model)
135 — 140 mm (5.31 — 5.51 in) (turbo model)

4) Push the release lever until the operating cylinder push rod retracts. Make sure that the clutch fluid level in the reservoir tank increases. If the clutch fluid level increases, the hydraulic clutch is properly adjusted; If the clutch fluid level does not increase or the push rod does not retract, replace the master cylinder with a new part. <Ref. to CL-20, Master Cylinder.>

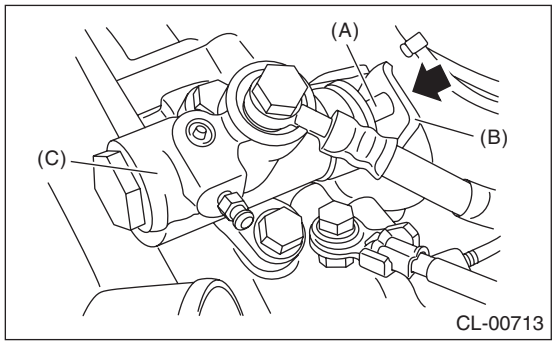

(A) Push rod
(B) Release lever
(C) Operating cylinder

5) Push the release lever until the operating cylinder push rod retracts. Check that the clutch fluid level in the reservoir tank increases.

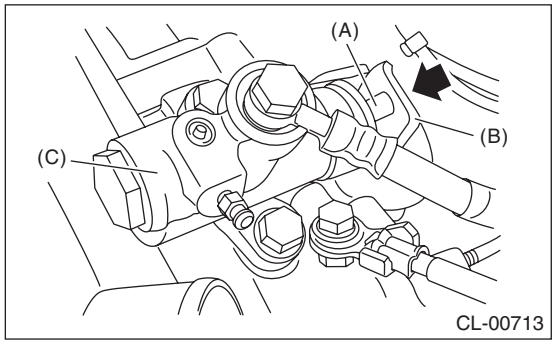

(A) Push rod
(B) Release lever
(C) Operating cylinder

6) If the clutch fluid level increases, hydraulic clutch play is correct.
7) If the clutch fluid level does not increase or push rod does not retract, readjust the clutch pedal.
8) Check the clutch fluid level using the scale on the outside of the reservoir tank. If the clutch fluid level is below “MIN”, fill the clutch fluid up to “MAX” level.

Recommended clutch fluid:
New FMVSS No. 116 DOT3

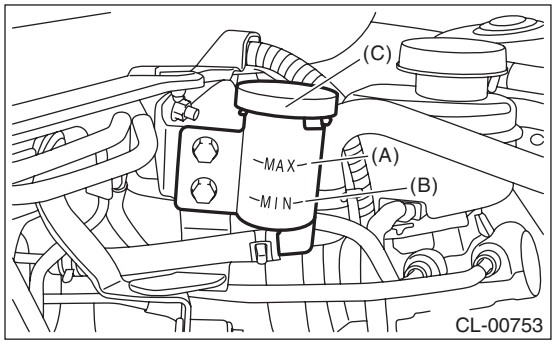

(A) MAX. level
(B) MIN. level
(C) Reservoir tank

11.Clutch Switch

A: REMOVAL

1) Disconnect the ground cable from battery.
2) Remove the instrument panel lower cover. <Ref. to EI-64, REMOVAL, Instrument Panel Lower Cover.>
3) Disconnect the connector from clutch switch.
4) Remove the clutch switches.

B: INSTALLATION

1. CLUTCH SWITCH

1) Move the clevis pin of push rod to left and right, retain it at the position where it moves smoothly, and measure the clutch pedal stroke.

Clutch pedal full stroke A:
130 — 135 mm (5.12 — 5.31 in) (non-turbo model)
135 — 140 mm (5.31 — 5.51 in) (turbo model)

Tightening torque:
T: 8 N·m (0.8 kgf-m, 5.9 ft-lb)

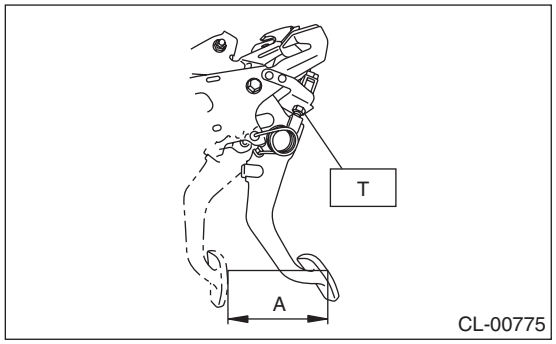

2) If the clutch pedal stroke is out of specification, adjust the stroke. <Ref. to CL-29, ADJUSTMENT, Clutch Pedal.>
3) Connect the connector to the clutch switch.

2. CLUTCH START SWITCH

1) Fully depress the clutch pedal and hold it.
2) Install so that gap (A) of the clutch pedal plate and clutch start switch is 2.9 mm (0.11 in), and tighten the lock nut.

Tightening torque:
8 N·m (0.8 kgf-m, 5.9 ft-lb)

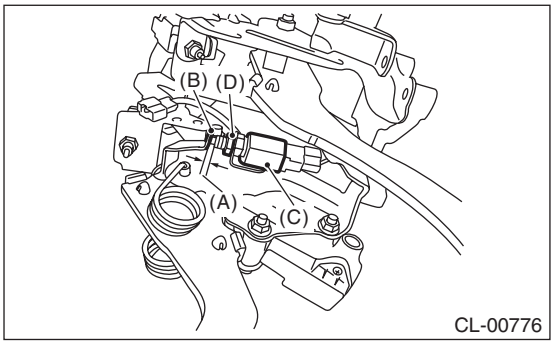

(A) 2.9 mm (0.11 in)
(B) Clutch pedal plate
(C) Clutch start switch
(D) Lock nut

3) Connect the connector to the clutch start switch.
4) Make sure that engine does not start with clutch pedal not depressed.
5) Make sure that engine starts with clutch pedal fully depressed.

C: INSPECTION

1. CLUTCH START SWITCH

1) Perform the following inspections. If the clutch start switch does not operate normally, adjust the switch, and check it again. <Ref. to CL-33, ADJUSTMENT, Clutch Switch.>
• Make sure that engine does not start with clutch pedal not depressed.
• Make sure that engine starts with clutch pedal fully depressed.
2) When the clutch start switch does not operate normally even if it is adjusted, check the clutch start switch for continuity.
(1) Remove the clutch start switch. <Ref. to CL-31, REMOVAL, Clutch Switch.>

(2) Measure the resistance between terminal 1 and 2 of the switch. If the resistance is not at the standard value, replace the switch.

Condition	Terminal No.	Specified resistance
ON	No. 1 — No. 2	Less than 1 Ω
OFF	No. 1 — No. 2	1 MΩ or more

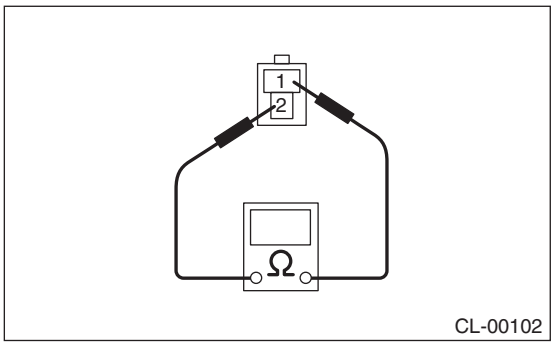

(3) Check that the switch is turned on and off in Dimension L.

Dimension L:
4 — 5.5 mm (0.16 — 0.22 in)

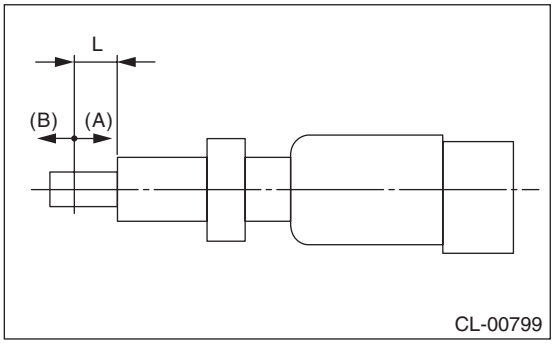

(A) ON
(B) OFF

2. CLUTCH SWITCH

1) Check the clutch switch for continuity.
(1) Disconnect the connector of clutch switch.
(2) Measure the resistance between terminal 1 and 2 of the switch. If the resistance is not within the specification, check the clutch stroke and installation condition, and check the clutch switch again.

Condition	Terminal No.	Specified resistance
When clutch pedal is depressed	No. 1 — No. 2	1 MΩ or more
When the clutch pedal is not depressed	No. 1 — No. 2	Less than 1 Ω

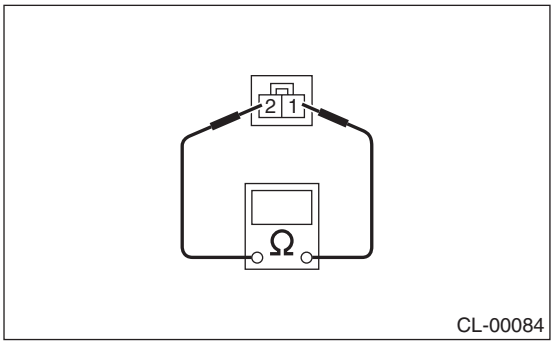

2) When the clutch switch does not operate normally even if the clutch stroke and installation condition are normal, check the clutch switch for continuity.
(1) Remove the clutch switches. <Ref. to CL-31, REMOVAL, Clutch Switch.>
(2) Measure the resistance between terminal 1 and 2 of the switch. If the resistance is not at the standard value, replace the switch.

Condition	Terminal No.	Specified resistance
ON	No. 1 — No. 2	Less than 1 Ω
OFF	No. 1 — No. 2	1 MΩ or more

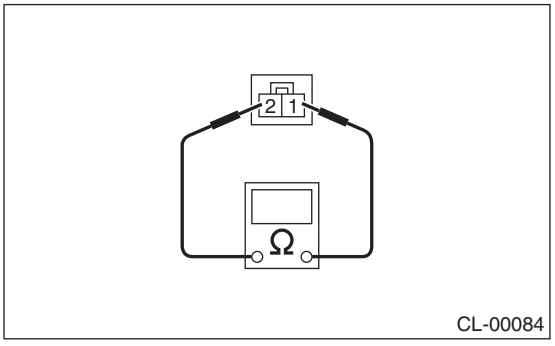

(3) Check that the switch is turned on and off in Dimension L.

Dimension L:
5 — 6.5 mm (0.2 — 0.26 in)

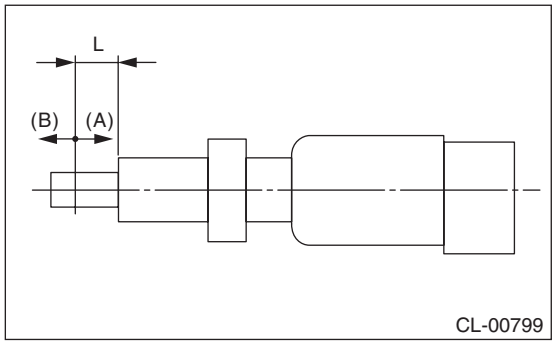

(A) ON
(B) OFF

D: ADJUSTMENT

1) Loosen the lock nut of the clutch start switch.
2) Fully depress the clutch pedal and hold it.
3) Adjust the gap (A) of the clutch pedal plate and the clutch start switch to be 2.9 mm (0.11 in).

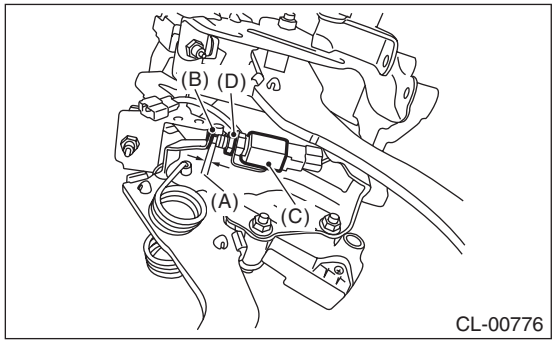

(A) 2.9 mm (0.11 in)
(B) Clutch pedal plate
(C) Clutch start switch
(D) Lock nut

4) Tighten the lock nut.

Tightening torque:
8 N·m (0.8 kgf-m, 5.9 ft-lb)

12.General Diagnostic Table

A: INSPECTION

1. CLUTCH

Symptoms	Possible cause	Corrective action
1. Clutch slippage. It is hard to perceive clutch slippage in the early stage, but pay attention to the following symptoms. • Engine speeds up when shifting. • High-speed driving is not possible; especially rapid acceleration is not possible and vehicle speed does not increase in proportion to the increase in engine speed. • Power drops particularly when ascending a slope, and there is a burning smell of the clutch plate. • Method of testing: Park the vehicle and fully apply the parking brake. Disengage the clutch and shift the transmission gear into the 1st. Gradually increase the engine speed while gradually allowing the clutch to engage. The clutch function is satisfactory if the engine stalls. However, the clutch is slipping if the vehicle does not move forward and the engine does not stall.	(a) Oil on the clutch face	Replace.
	(b) Worn clutch face	Replace.
	(c) Deteriorated diaphragm spring	Replace.
	(d) Warped pressure plate or flywheel	Repair or replace.
	(e) Defective release bearing holder	Repair or replace.
2. Clutch drags. As a symptom of this trouble, a harsh scratching noise occurs and control becomes difficult when shifting gears. The symptom becomes more apparent when shifting into the 1st gear. However, because most trouble of this sort is due to a defective synchronization mechanism, perform the following tests. • Method of testing: <Ref. to CL-35, DIAGNOSTIC DIAGRAM OF CLUTCH DRAG, INSPECTION, General Diagnostic Table.> The problem is caused by insufficient disengagement of the clutch if an abnormal noise occurs during this test.	(a) Worn or rusty clutch disc hub spline	Replace the clutch disc.
	(b) Excessive deflection of clutch disc face	Repair or replace.
	(c) Crankshaft pilot needle bearing sticking	Replace.
	(d) Cracked clutch disc face	Replace.
	(e) Stuck clutch disc (smeared by oil or water)	Replace.
3. Clutch chatters. Clutch chattering is an unpleasant vibration to the whole vehicle when the vehicle is just started with clutch partially engaged.	(a) Adhesion of oil on the clutch face	Replace the clutch disc.
	(b) Weak or broken damper spring	Replace the clutch disc.
	(c) Poor contact of the disc surface or excessively worn disc	Replace the faulty clutch disc.
	(d) Warped pressure plate or flywheel	Repair or replace.
	(e) Loose disc rivets	Replace the clutch disc.
	(f) Loose engine mounting	Retighten or replace mounting.
4. Noisy clutch Examine whether the noise is generated when the clutch is disengaged, engaged, or partially engaged.	(a) Broken, worn or insufficiently lubricated release bearing	Replace the release bearing.
	(b) Insufficient lubrication of the pilot bearing	Replace the pilot bearing.
	(c) Loose clutch disc hub	Replace the clutch disc.
	(d) Loose damper spring retainer	Replace the clutch disc.
	(e) Deteriorated or broken damper spring	Replace the clutch disc.

Symptoms	Possible cause	Corrective action
5. Clutch grabs suddenly. When starting the vehicle with the clutch partially engaged, the clutch engages suddenly and the vehicle jumps instead of making a smooth start.	(a) Grease or oil on facing	Replace the clutch disc.
	(b) Deteriorated cushioning spring	Replace the clutch disc.
	(c) Worn or rusted spline of clutch disc or main shaft	Take off rust, apply grease or replace clutch disc or main shaft.
	(d) Deteriorated or broken damper spring	Replace the clutch disc.
	(e) Loose engine mounting	Retighten or replace mounting.
	(f) Deteriorated diaphragm spring	Replace.

2. CLUTCH PEDAL

Symptoms	Corrective action
Insufficient clutch pedal play	Adjust the pedal play.
Excessive wear and damage of pedal shaft or busing	Replace the busing or shaft with a new part.

3. DIAGNOSTIC DIAGRAM OF CLUTCH DRAG

	Step	Check	Yes	No
1	**CHECK GEAR NOISE.** 1) Start the engine. 2) While idling the engine, step on the clutch pedal and quickly shift from neutral to reverse.	Is there any abnormal noise from the transmission gear?	Go to step **2**.	Clutch is normal.
2	**CHECK GEAR NOISE.** Step on the clutch pedal at idle and shift from neutral to reverse within 0.5 — 1.0 second.	Is there any abnormal noise from the transmission gear?	Go to step **3**.	Defective transmission or excessive clutch drag torque. Inspect pilot bearing, clutch disc, transmission and clutch disc hub spline.
3	**CHECK GEAR NOISE.** 1) Step on the clutch pedal at idle and shift from neutral to reverse within 0.5 — 1.0 second. 2) While stepping on the clutch pedal, shift from neutral to reverse, reverse to neutral several times.	Is there any abnormal noise from the transmission gear?	Inadequate clutch disengage. Inspect the clutch disc, clutch cover, clutch release, and clutch pedal free play.	Clutch and flywheel seizure. Inspect the clutch disc and the spline of the clutch disc hub.

CHASSIS SECTION

This service manual has been prepared to provide SUBARU service personnel with the necessary information and data for the correct maintenance and repair of SUBARU vehicles.
This manual includes the procedures for maintenance, disassembling, reassembling, inspection and adjustment of components and diagnostics for guidance of experienced mechanics.
Please peruse and utilize this manual fully to ensure complete repair work for satisfying our customers by keeping their vehicle in optimum condition. When replacement of parts during repair work is needed, be sure to use SUBARU genuine parts.

All information, illustration and specifications contained in this manual are based on the latest product information available at the time of publication approval.

FRONT SUSPENSION	FS
REAR SUSPENSION	RS
WHEEL AND TIRE SYSTEM	WT
TIRE PRESSURE MONITORING SYSTEM (DIAGNOSTICS)	TPM(diag)
DIFFERENTIALS	DI
TRANSFER CASE	TC
DRIVE SHAFT SYSTEM	DS
VEHICLE DYNAMICS CONTROL (VDC)	VDC
VEHICLE DYNAMICS CONTROL (VDC) (DIAGNOSTICS)	VDC(diag)
BRAKE	BR
PARKING BRAKE	PB
PARKING BRAKE (DIAGNOSTICS)	PB(diag)
POWER ASSISTED SYSTEM (POWER STEERING)	PS

FUJI HEAVY INDUSTRIES LTD.

FRONT SUSPENSION

FS

Page

1. General Description 2
2. Wheel Alignment 9
3. Cradle 20
4. Front Stabilizer 29
5. Front Ball Joint 32
6. Front Arm 35
7. Front Strut 41
8. General Diagnostic Table 46

1. General Description

A: SPECIFICATION

Tire size			P205/60R16 P215/50R17	P225/50R17 225/45R18	P225/60R17 P215/70R16
Front	Wheel arch height (Tolerance: $^{+12\ mm}_{-24\ mm}$ ($^{+0.47\ in}_{-0.94\ in}$)) mm (in)		403 (15.9)	395 (15.6)	469 (18.5)
	Camber (Tolerance: ±0°45′ Differences between RH and LH: 45′ or less)		–0°30′	–0°15′	0°00′
	Caster (Referential Value)		5°55′	6°00′	5°05′
	Steering angle (Tolerance: ±1.5°)	Inner wheel	37.6°	37.4°	38.4°
		Outer wheel	33.3°	33.0°	34.1°
	Toe-in mm (in)		1±3 (0.04±0.12) Toe angle (sum of both wheels): 0°05′±0°15′		
	Kingpin angle (Referential Value)		14°00′	14°15′	12°20′
Rear	Wheel arch height (Tolerance: $^{+12\ mm}_{-24\ mm}$ ($^{+0.47\ in}_{-0.94\ in}$)) mm (in)		392 (15.4)	387 (15.2)	474 (18.7)
	Camber (Tolerance: ±0°45′ Differences between RH and LH: 45′ or less)		–1°00′	–1°10′	0°00′
	Toe-in mm (in)		*2		*1
	Thrust angle (Tolerance: ±0°30′)		0°		

*1: OUTBACK model
2±3 mm (0.08 — 0.12 in) Toe angle (sum of both wheels): 0°10′±0°15′

*2: Except for OUTBACK model
0±3 mm (0±0.12 in) Toe angle (sum of both wheels): 0°±0°15′

NOTE:
• Front and rear toe-in and front camber can be adjusted. Adjust if the toe-in or camber tolerance exceeds specifications.
• Other items indicated in the specifications is not equipped with adjustment mechanisms. If other items exceed specifications, check the suspension parts and connections for deformation. If defective, replace with new parts.

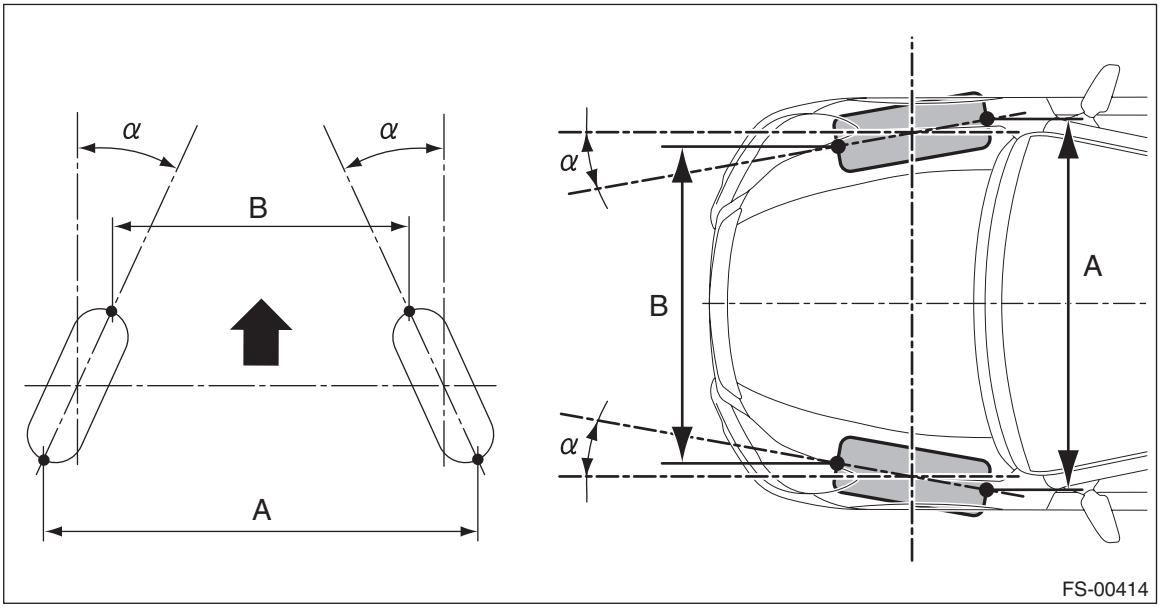

A – B = Positive: Toe-in, Negative: Toe-out

α = Individual toe angles

B: COMPONENT

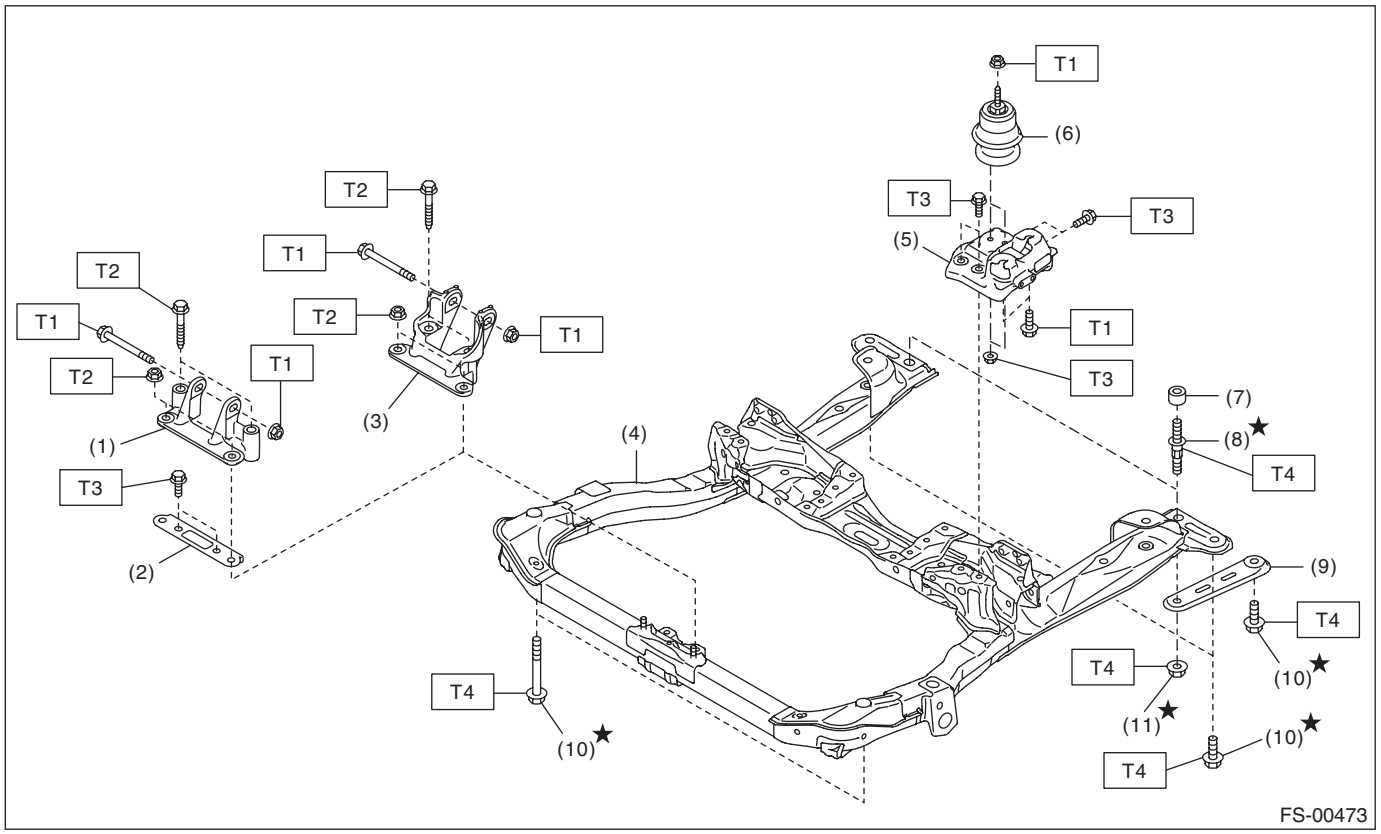

(1)	Front mounting bracket (H6 model)	(7)	Stopper (OUTBACK model only)	***Tightening torque:N·m (kgf-m, ft-lb)***
(2)	Bracket	(8)	Stud bolt	***T1: 45 (4.59, 33.2)***
(3)	Front mounting bracket (H4 model)	(9)	Stiffener	***T2: 60 (6.12, 44.3)***
(4)	Cradle	(10)	Bolt	***T3: 65 (6.63, 47.9)***
(5)	Main mounting bracket	(11)	Self-locking nut	***T4: 75 (7.65, 55.3)***
(6)	Main cushion rubber			

FRONT SUSPENSION

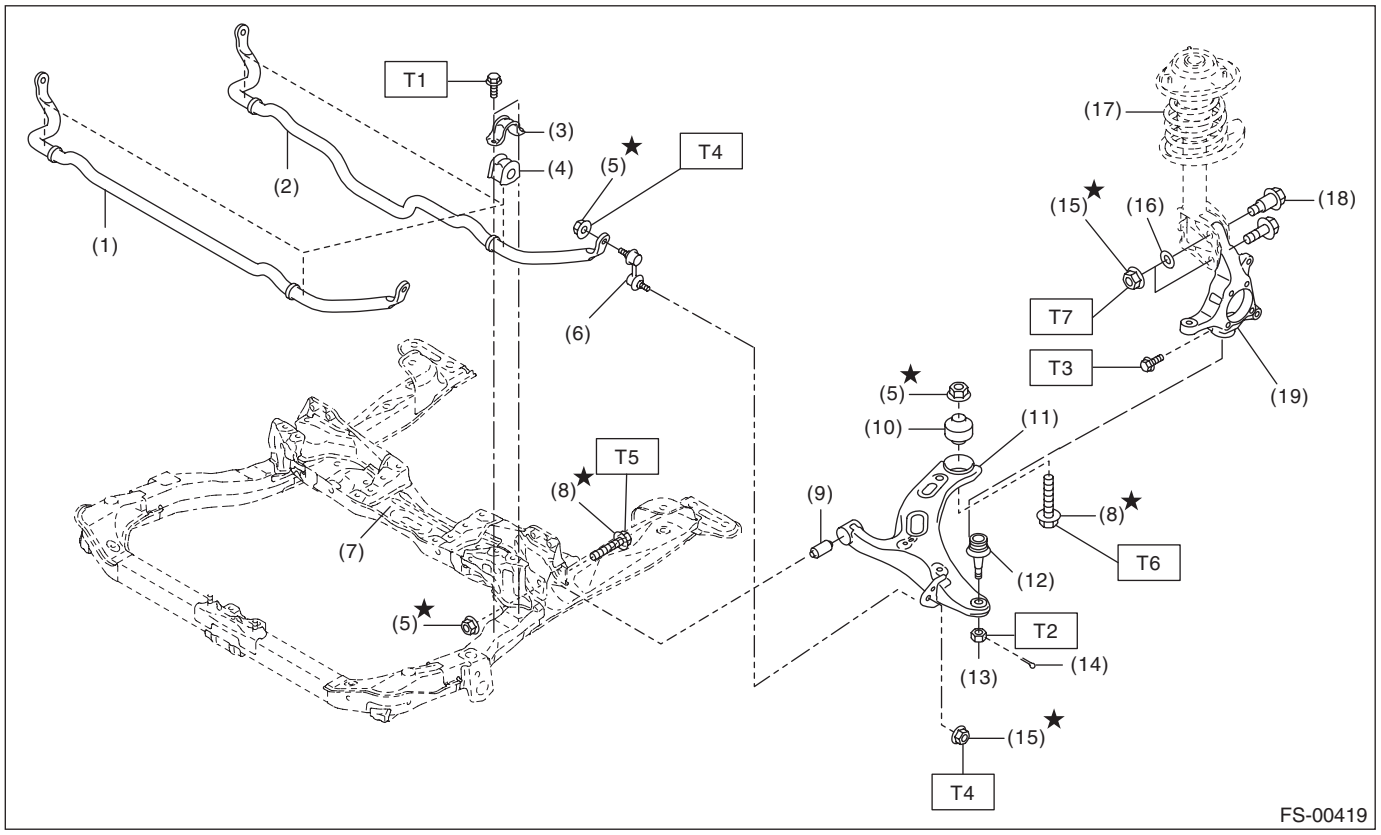

(1) Stabilizer (H6 model)
(2) Stabilizer (H4 model)
(3) Stabilizer bracket
(4) Stabilizer bushing
(5) Self-locking nut
(6) Stabilizer link
(7) Cradle
(8) Bolt
(9) Front bushing
(10) Rear bushing
(11) Front arm
(12) Ball joint
(13) Castle nut
(14) Cotter pin
(15) Flange nut
(16) Adjusting washer
(17) Front strut ASSY
(18) Adjusting bolt
(19) Front axle housing

Tightening torque:N·m (kgf-m, ft-lb)
T1: 25 (2.55, 18.4)
T2: 39 (3.98, 28.8)
T3: 50 (5.10, 36.9)
T4: 60 (6.12, 44.3)
T5: 95 (9.69, 70.1)
T6: 140 (14.28, 103.3)
T7: 155 (15.81, 114.3)

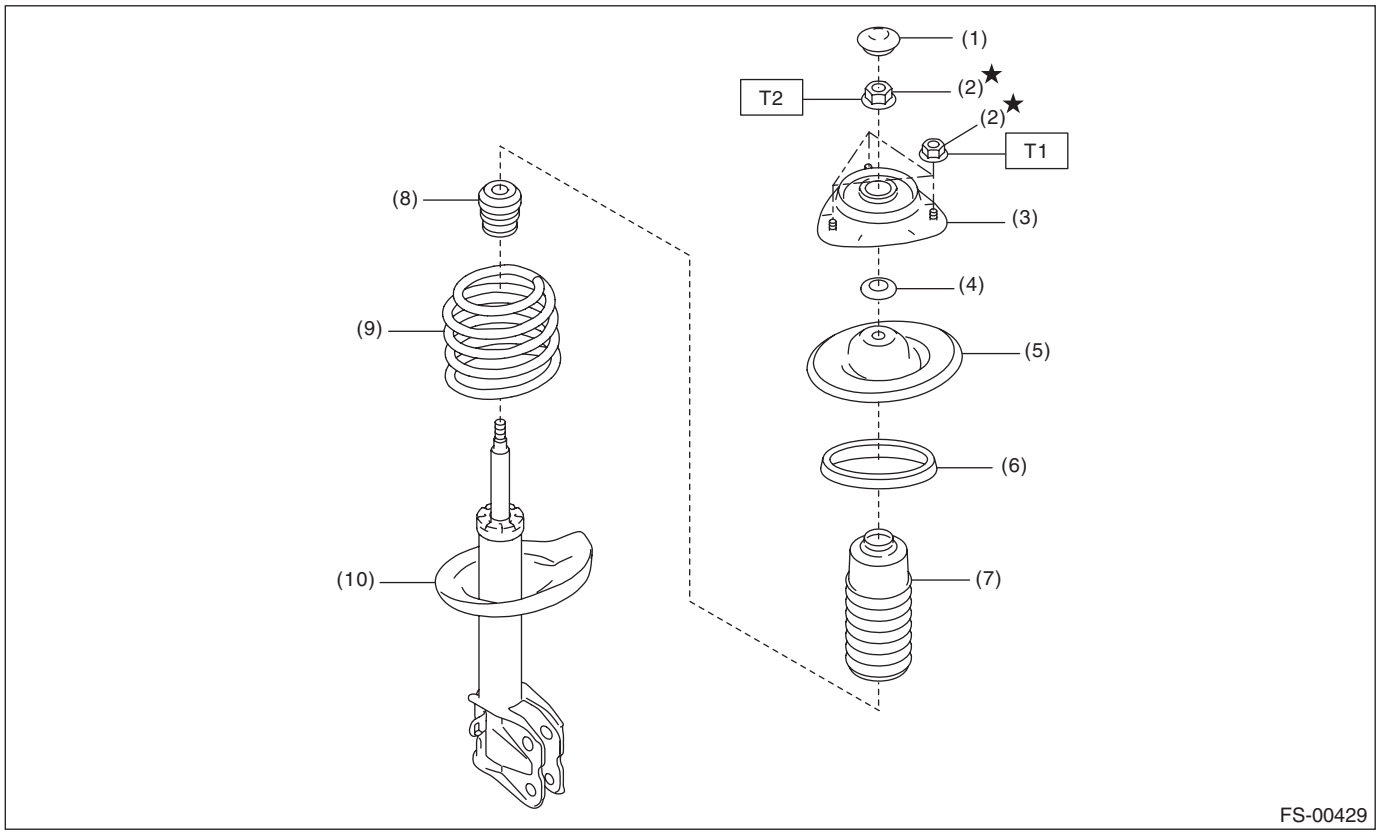

(1)	Dust seal	(6)	Rubber seat (OUTBACK model only)	***Tightening torque:N·m (kgf-m, ft-lb)***
(2)	Self-locking nut	(7)	Dust cover	***T1: 20 (2.04, 14.8)***
(3)	Strut mount	(8)	Helper (except for Bilstein strut)	***T2: 55 (5.61, 40.6)***
(4)	Spacer	(9)	Coil spring	
(5)	Upper spring seat	(10)	Strut	

C: CAUTION

- Wear appropriate work clothing, including a helmet, protective goggles and protective shoes when performing any work.
- Before removal, installation or disassembly, be sure to clarify the failure. Avoid unnecessary removal, installation, disassembly and replacement.
- Use SUBARU genuine grease etc. or equivalent. Do not mix grease etc. of different grades or manufacturers.
- Before securing a part on a vise, place cushioning material such as wood blocks, aluminum plate, or cloth between the part and the vise.
- Be sure to tighten fasteners including bolts and nuts to the specified torque.
- Place shop jacks or rigid racks at the specified points.

D: PREPARATION TOOL

1. SPECIAL TOOL

ILLUSTRATION	TOOL NUMBER	DESCRIPTION	REMARKS
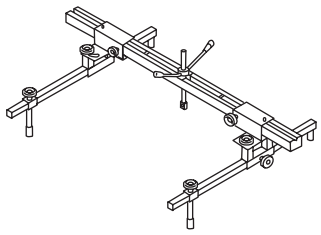 ST99099AJ000	99099AJ000	ENGINE HANGER	• Used for hanging power unit. • Used together with CHAIN BALANCER (99099AJ010).
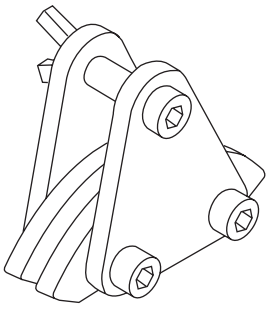 ST99099AJ010	99099AJ010	CHAIN BALANCER	• Used for hanging power unit. • Used together with ENGINE HANGER (99099AJ000).
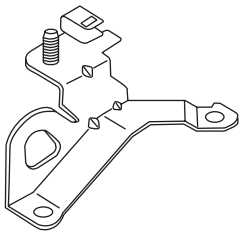 ST10004AA180	10004AA180 (SUBARU genuine part)	HANGER CP ENGINE RR	• Used for hanging power unit. • For H4 non-turbo model. • SUBARU genuine part
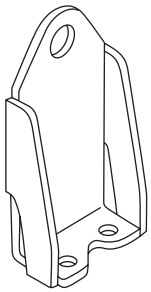 ST18360AA020	18360AA020	HANGER	• Used for hanging power unit. • For H6 model.

ILLUSTRATION	TOOL NUMBER	DESCRIPTION	REMARKS
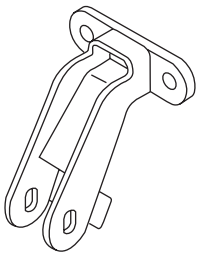 ST41099AJ000	41099AJ000	SPECIAL TOOL H4	Used for removing and installing front stabilizer. (for turbo model)
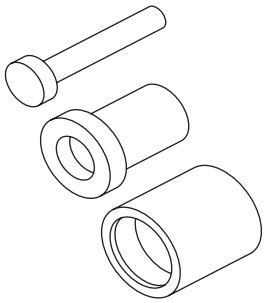 ST-927680000	927680000	INSTALLER & REMOVER SET	Used for replacing front arm front bushing.
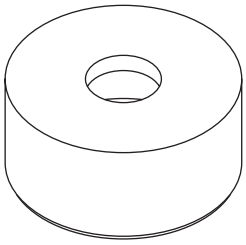 ST20299AG000	20299AG000	REMOVER	• Used for replacing front arm rear bushing. • Used together with BASE (20299AG010).
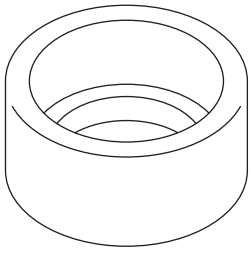 ST20299AG010	20299AG010	BASE	• Used for replacing front arm rear bushing. • Used together with REMOVER (20299AG000).
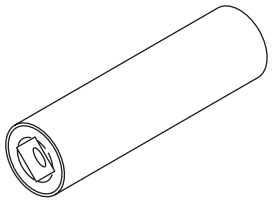 ST20299AG020	20299AG020	STUD BOLT SOCKET	Used for removing and installing the stud bolt for front arm installing portion.

ILLUSTRATION	TOOL NUMBER	DESCRIPTION	REMARKS
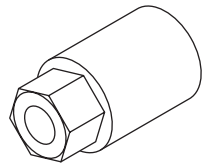 ST20399AG000	20399AG000	STRUT MOUNT SOCKET	Used for disassembling and assembling strut mount.

2. GENERAL TOOL

TOOL NAME	REMARKS
Alignment gauge	Used for measuring wheel alignment.
Alignment gauge adapter	Used for measuring wheel alignment.
Turning radius gauge	Used for measuring wheel alignment.
Toe-in gauge	Used for toe-in measurement.
Chain sling	• Used for hanging power unit. • Diameter: 6 mm (0.24 in) or 6.3 mm (0.25 in) • Length: 0.8 — 1 m (2.6 — 3.3 ft) • Chain inner width: 8.5 mm (0.33 in) or more • Chain external width: 23.5 mm (0.93 in) or less • Load capacity: 1.2 t (2646 lb) or more
Shackle	• Two units used for hanging power unit. • Attached to both end of chain sling and connected to engine hook. • Load capacity: 250 kg (551 lb) or more
Sling belt	• Used to remove and install the cradle. • Width: 35 — 40 mm (1.38 — 1.57 in) • Length: 2 m (6.6 ft) • Load capacity: 1 t (2205 lb) or more
Shackle	• Used to remove and install the cradle. • Load capacity: 500 kg (1103 lb) or more
Tie-rod end puller	Used for disconnecting tie-rod end.
Dial gauge	Used for damper strut measurement.
Coil spring compressor	Used for strut assembly/disassembly.

2. Wheel Alignment

A: INSPECTION

Check the following items before performing the wheel alignment measurement.

- Tire inflation pressure
- Uneven wear of RH and LH tires, or difference of sizes
- Tire runout
- Excessive play and wear of ball joint
- Excessive play and wear of tie-rod end
- Excessive play of wheel bearing
- Right and left wheel base imbalance
- Deformation and excessive play of steering link
- Deformation and excessive play of suspension parts

Check, adjust and measure the wheel alignment in accordance with the following procedures.

1	Wheel arch height (front and rear wheels)	Inspection: <Ref. to FS-12, REAR WHEEL TOE-IN, INSPECTION, Wheel Alignment.>
↓		
2	Camber (front and rear wheels)	Inspection: <Ref. to FS-11, CAMBER, INSPECTION, Wheel Alignment.> Adjustment: <Ref. to FS-14, FRONT CAMBER, ADJUSTMENT, Wheel Alignment.>
↓		
3	Caster (front wheel)	Inspection: <Ref. to FS-11, CASTER, INSPECTION, Wheel Alignment.>
↓		
4	Steering angle	Inspection: <Ref. to FS-12, FRONT WHEEL TOE-IN, INSPECTION, Wheel Alignment.> Adjustment: <Ref. to FS-15, STEERING ANGLE, ADJUSTMENT, Wheel Alignment.>
↓		
5	Front wheel toe-in	Inspection: <Ref. to FS-12, STEERING ANGLE, INSPECTION, Wheel Alignment.> Adjustment: <Ref. to FS-16, FRONT WHEEL TOE-IN, ADJUSTMENT, Wheel Alignment.>
↓		
6	Rear wheel toe-in	Inspection: <Ref. to FS-10, WHEEL ARCH HEIGHT, INSPECTION, Wheel Alignment.> Adjustment: <Ref. to FS-17, REAR WHEEL TOE-IN, ADJUSTMENT, Wheel Alignment.>
↓		
7	Thrust angle	Inspection: <Ref. to FS-13, THRUST ANGLE, INSPECTION, Wheel Alignment.> Adjustment: <Ref. to FS-18, THRUST ANGLE, ADJUSTMENT, Wheel Alignment.>

1. WHEEL ARCH HEIGHT

1) Park the vehicle on a level surface.
2) Empty the vehicle so that it is at “curb weight”. (Empty the luggage compartment, load the spare tire, jack and service tools, and fill up the fuel tank.)
3) Set the steering wheel in a straight-ahead position, and stabilize the suspension by moving the vehicle in a straight line for 5 m (16 ft) or more.
4) Suspend a thread from the wheel arch (point “A” in the figure below) and affix at a position directly above the center of wheel.
5) Measure the distance between the point “A” and the center of wheel.

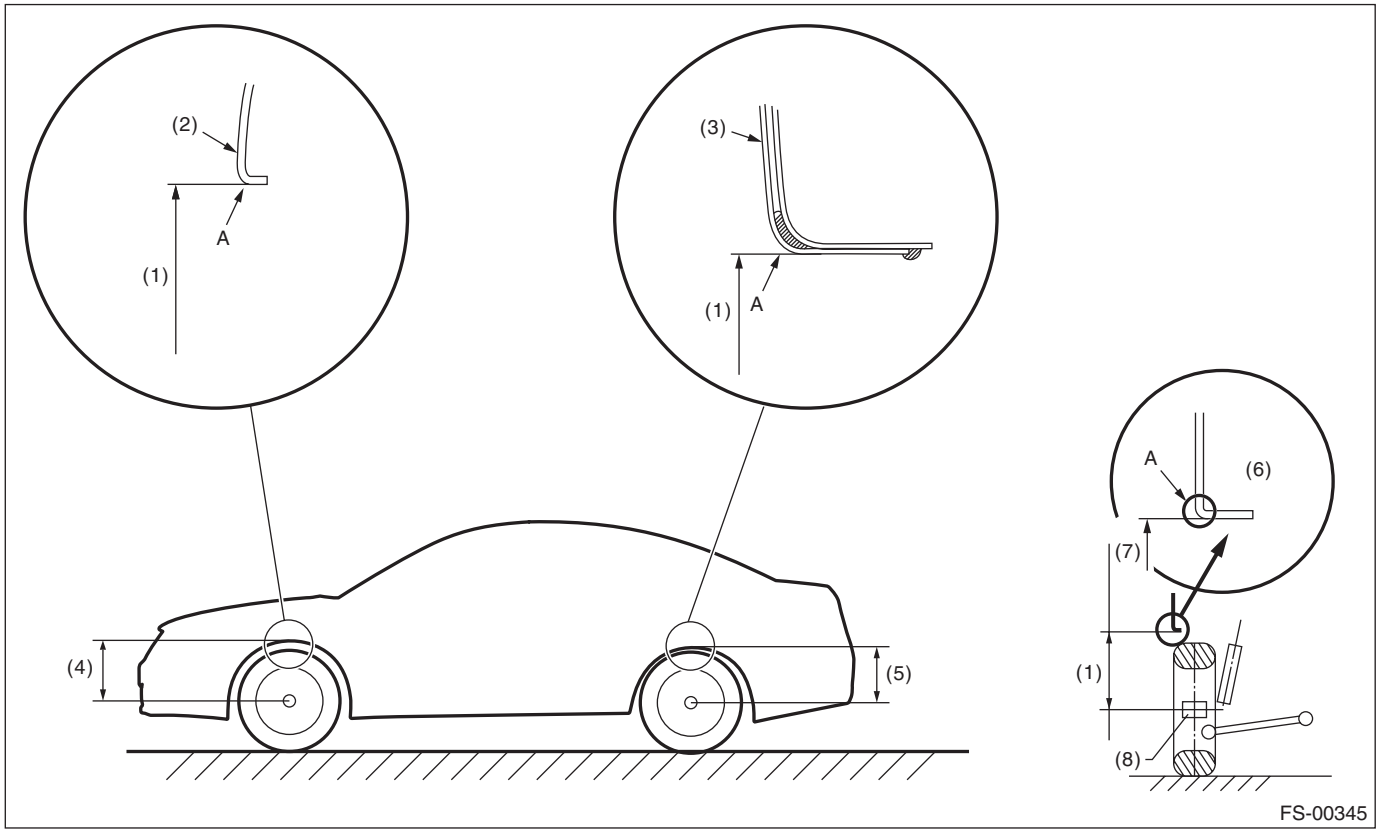

(1) Wheel arch height
(2) Front fender
(3) Rear quarter
(4) Front wheel arch height
(5) Rear wheel arch height
(6) Flange bend line
(7) Point of measurement
(8) End of spindle

Wheel arch height specification mm (in) (Tolerance: $^{+12\ mm}_{-24\ mm}$ ($^{+0.47\ in}_{-0.94\ in}$))			
Tire size	P205/60R16 P215/50R17	P225/50R17 225/45R18	P225/60R17 P215/70R16
Front	403 (15.9)	395 (15.6)	469 (18.5)
Rear	392 (15.4)	387 (15.2)	474 (18.7)

2. CAMBER

1) Place the front wheel on the turning radius gauge.

NOTE:
Make sure the ground contact surfaces of the front and rear wheels are at the same height.

2) Set the adapter into the center of wheel, and then set the wheel alignment gauge.

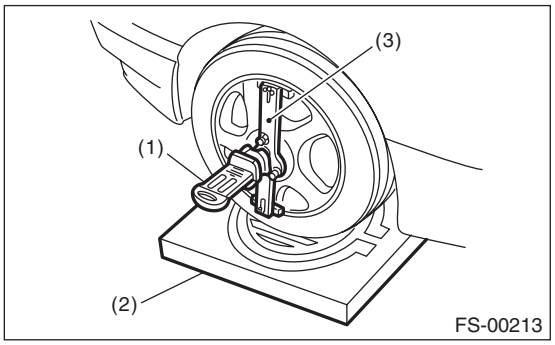

(1) Alignment gauge
(2) Turning radius gauge
(3) Adapter

3) Measure the camber angle in accordance with the operation manual for wheel alignment gauge.

Model	Camber (Difference between RH and LH 45′ or less)
P205/60R16 P215/50R17	–0°30′±0°45′
P225/50R17 225/45R18	–0°15′±0°45′
P225/60R17 P215/70R16	0°00′±0°45′

3. CASTER

1) Place the front wheel on the turning radius gauge. Make sure the ground contact surfaces of the front and rear wheels are at the same height.

2) Set the adapter into the center of wheel, and then set the wheel alignment gauge.

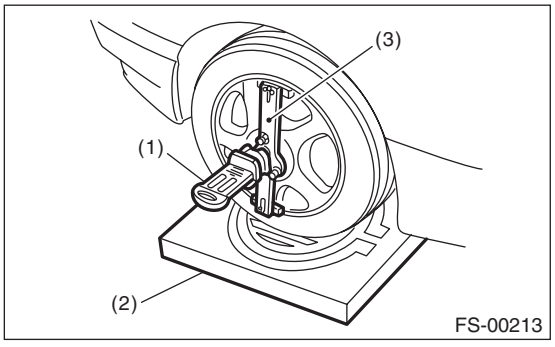

(1) Alignment gauge
(2) Turning radius gauge
(3) Adapter

3) Measure the caster angle in accordance with the operation manual for wheel alignment gauge.

Model	Caster
P205/60R16 P215/50R17	5°55′
P225/50R17 225/45R18	6°00′
P225/60R17 P215/70R16	5°05′

4. STEERING ANGLE

1) Place the vehicle on turning radius gauge.
2) While depressing the brake pedal, turn the steering wheel fully to the left and right.
3) With the steering wheel held at each fully turned position, measure both the inner and outer wheel steering angles.

Model	Inner wheel	Outer wheel
P205/60R16 P215/50R17	37.6°±1.5°	33.3°±1.5°
P225/50R17 225/45R18	37.4°±1.5°	33.0°±1.5°
P225/60R17 P215/70R16	38.4°±1.5°	34.1°±1.5°

5. FRONT WHEEL TOE-IN

Toe-in: Inspection value
1±3 mm (0.04±0.12 in)

1) Set the toe-in gauge in the position at wheel axis center height behind the right and left front tires.
2) Place a mark at the center of both left and right tires, and measure distance “A” between the marks.
3) Move the vehicle forward to rotate the tires 180°.

NOTE:
Be sure to rotate the tires in the forward direction.

4) Measure the distance “B” between the left and right marks. Find toe-in using the following calculation:

A – B = Toe-in

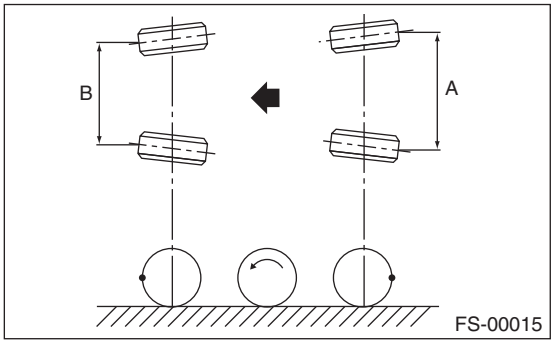

6. REAR WHEEL TOE-IN

Refer to the FRONT WHEEL TOE-IN for rear toe-in inspection procedures. <Ref. to FS-12, STEERING ANGLE, INSPECTION, Wheel Alignment.>

Toe-in: Inspection value
Other than OUTBACK model: 0±3 mm (0±0.12 in)
OUTBACK model: 2±3 mm (0.08±0.12 in)

7. THRUST ANGLE

1) Park the vehicle on a level surface.
2) Move the vehicle 3 to 4 meters (10 to 13 feet) straight forward.
3) Draw the center of loci for both the front and rear axles.
4) Measure distance “L” between the center lines of the axle loci.

Thrust angle: Inspection value
0°±30′
Less than 30′ when “L” is 23 mm (0.9 in) or less

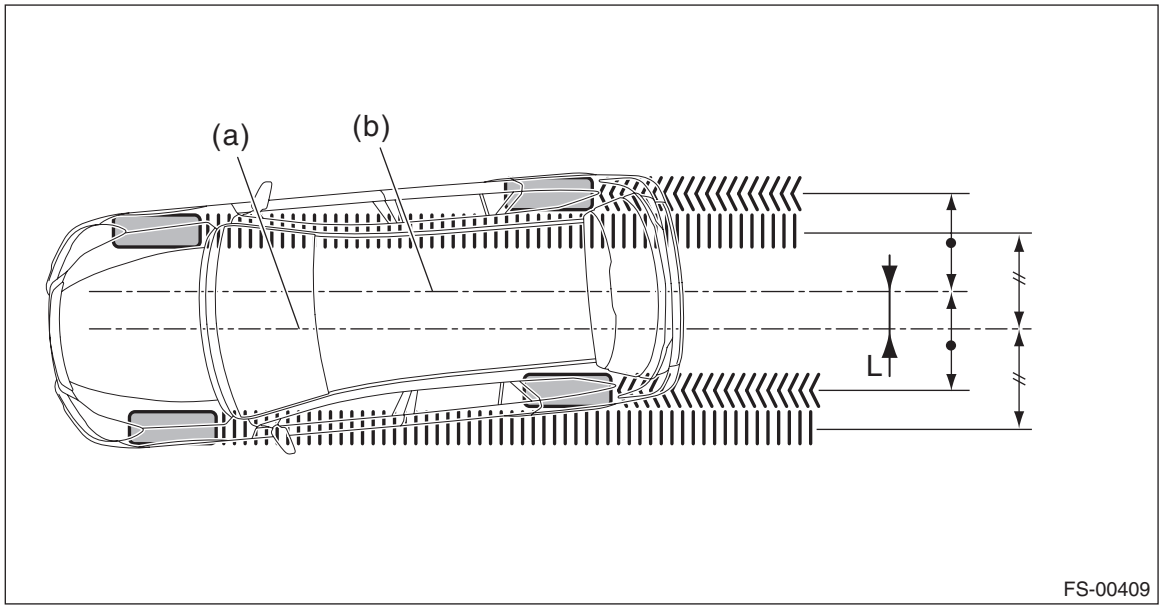

(a) Center line of loci (front axle) (b) Center line of loci (rear axle)

B: ADJUSTMENT

1. FRONT CAMBER

1) Adjust the camber angle to the following value.

Model	Camber (Difference between RH and LH 45′ or less)
P205/60R16 P215/50R17	–0°30′±0°45′
P225/50R17 225/45R18	–0°15′±0°45′
P225/60R17 P215/70R16	0°00′±0°45′

2) Loosen the two flange nuts located at the front lower section of the strut.

NOTE:
When the adjusting bolt needs to be loosened or tightened, hold its head with a wrench and turn the flange nut.

3) Turn the camber adjusting bolt so that the camber is set at specification.

NOTE:
Moving the adjusting bolt by one scale changes the camber by approximately 0°15′.

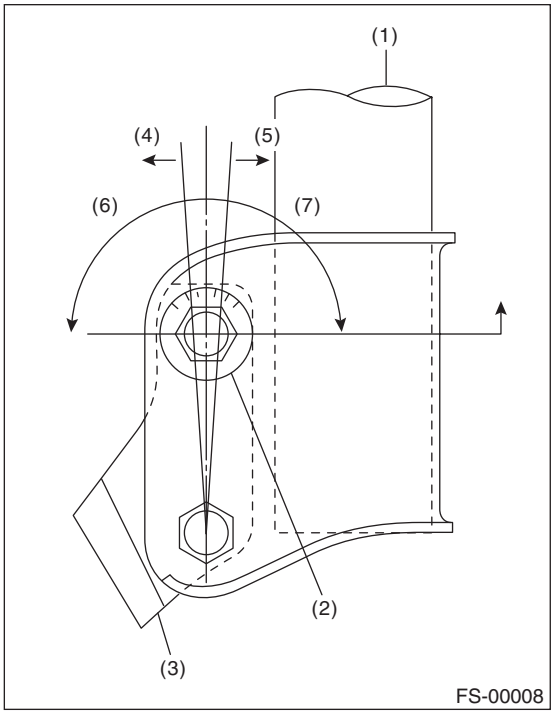

(1) Strut
(2) Adjusting bolt
(3) Front axle housing
(4) Outer
(5) Inner
(6) Camber is increased.
(7) Camber is decreased.

To increase camber.	
Rotate the left side counterclockwise.	Rotate the right side clockwise.
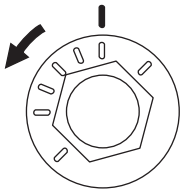 FS-00352	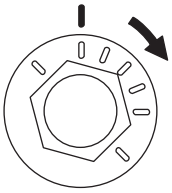 FS-00353

To decrease camber.	
Rotate the left side clockwise.	Rotate the right side counterclockwise.
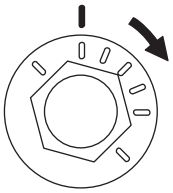 FS-00353	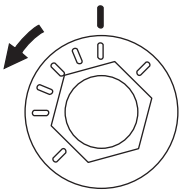 FS-00352

4) Tighten two new flange nuts.

Tightening torque:
155 N·m (15.81 kgf-m, 114.3 ft-lb)

2. STEERING ANGLE

1) Adjust the steering angle of both inner and outer wheels.
(1) Loosen the steering tie-rod lock nut (a), and rotate the tie-rod.

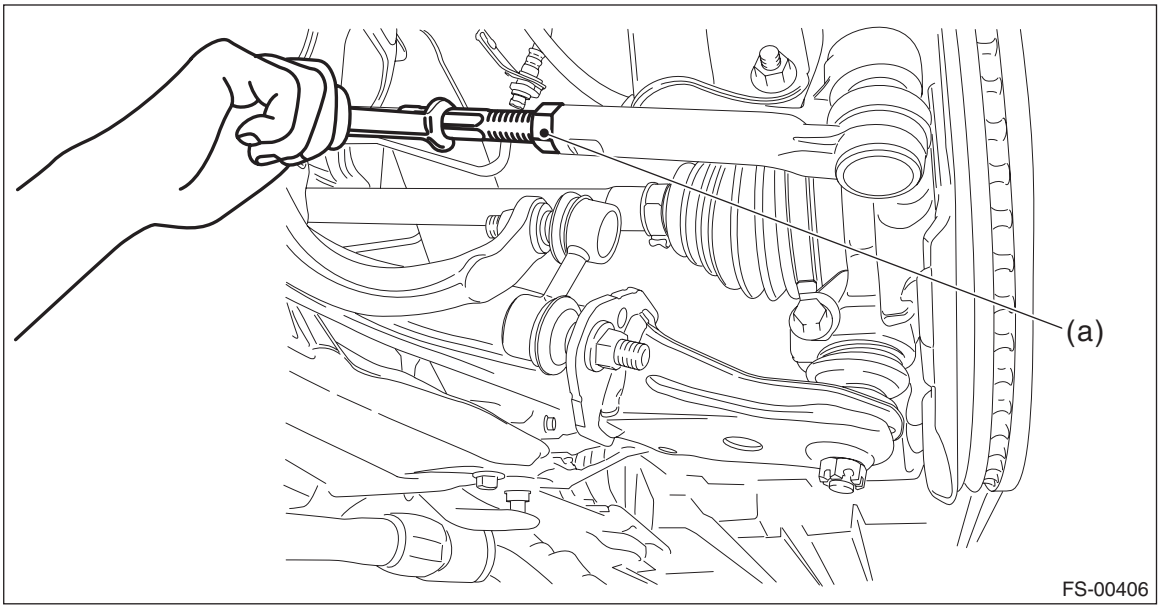

(2) Turn the tie-rod to adjust the steering angle of both inner and outer wheels.

(3) Tighten the steering tie-rod lock nut (a).

Tightening torque:
85 N·m (8.67 kgf-m, 62.7 ft-lb)

NOTE:
Check and correct the tie-rod boot if twisted.
2) Check the toe-in. <Ref. to FS-12, STEERING ANGLE, INSPECTION, Wheel Alignment.>

3. FRONT WHEEL TOE-IN

When adjusting the toe-in, adjust it to the following value. <Ref. to FS-15, STEERING ANGLE, ADJUSTMENT, Wheel Alignment.>

Toe-in: Adjustment value
1±2 mm (0.04±0.08 in)

1) Check that the left and right wheel steering angles are within specification.
2) Loosen the left and right side steering tie-rod lock nuts (a).
3) Turn the left and right tie-rods by equal amounts until the toe-in is at the specification.

NOTE:
Both the left and right tie-rods are right-hand threaded. To increase toe-in, turn both tie-rods clockwise by equal amount (viewing from the inside of vehicle).
4) Tighten the tie-rod lock nut.

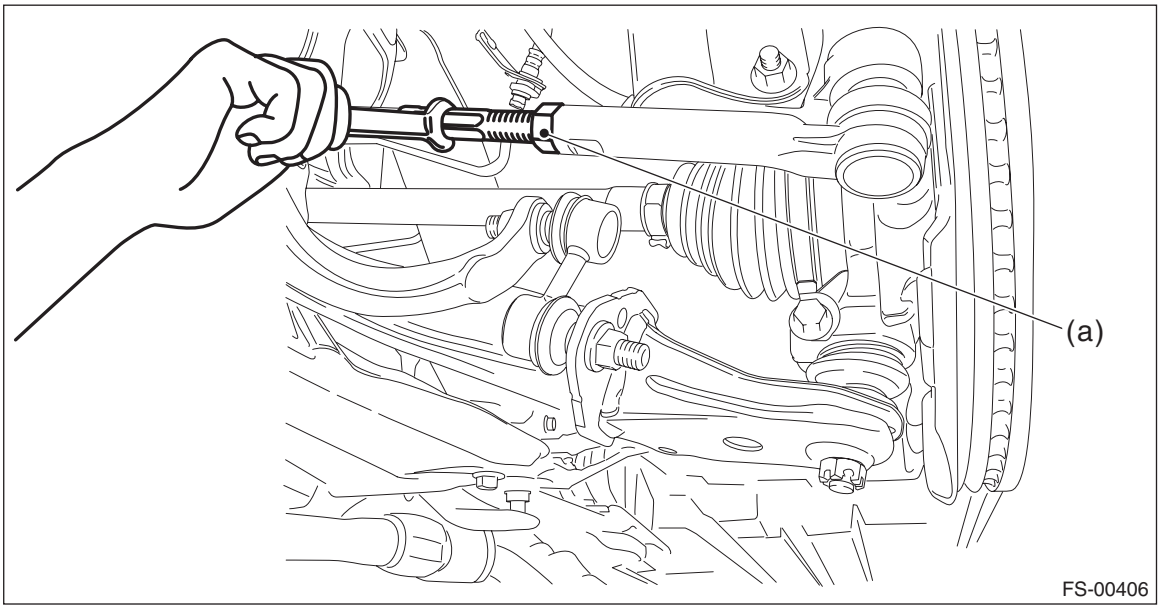

Tightening torque:
85 N·m (8.67 kgf-m, 62.7 ft-lb)

5) Check and correct the tie-rod boot if twisted.

4. REAR WHEEL TOE-IN

When adjusting, adjust it to the following value.

Toe-in: Adjustment value
Other than OUTBACK model: 0±2 mm (0±0.08 in)
OUTBACK model: 2±2 mm (0.08±0.08 in)

1) Loosen the self-locking nut for the front lateral link.

NOTE:
When loosening or tightening the adjusting bolt, hold the bolt head and turn the self-locking nut.

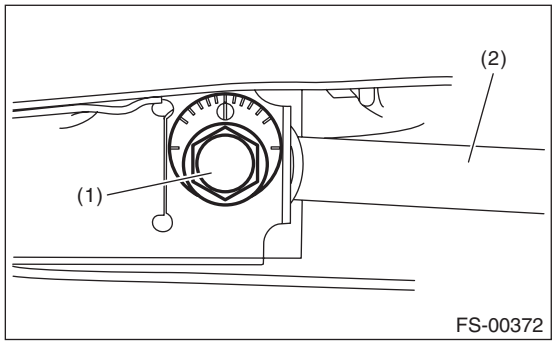

(1) Adjusting bolt
(2) Lateral link

2) Turn the adjusting bolt until toe-in is within the specification.

NOTE:
When the left and right wheels are adjusted for toe-in at the same time, the movement of one scale graduation changes toe-in by approx. 1.3 mm (0.05 in).

To increase toe-in.	
Rotate the left side clockwise.	Rotate the right side counterclockwise.
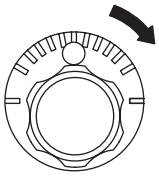 FS-00018	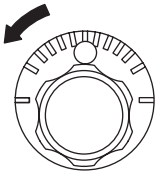 FS-00019

To decrease toe-in.	
Rotate the left side counterclockwise.	Rotate the right side clockwise.
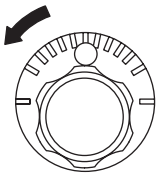 FS-00019	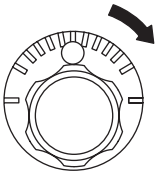 FS-00018

3) Attach and tighten a new self-locking nut.

Tightening torque:
120 N·m (12.24 kgf-m, 88.5 ft-lb)

5. THRUST ANGLE

When adjusting, adjust it to the following value.

Thrust angle: Adjustment value
0°±20′
Less than 20′ when "L" is 15 mm (0.6 in) or less

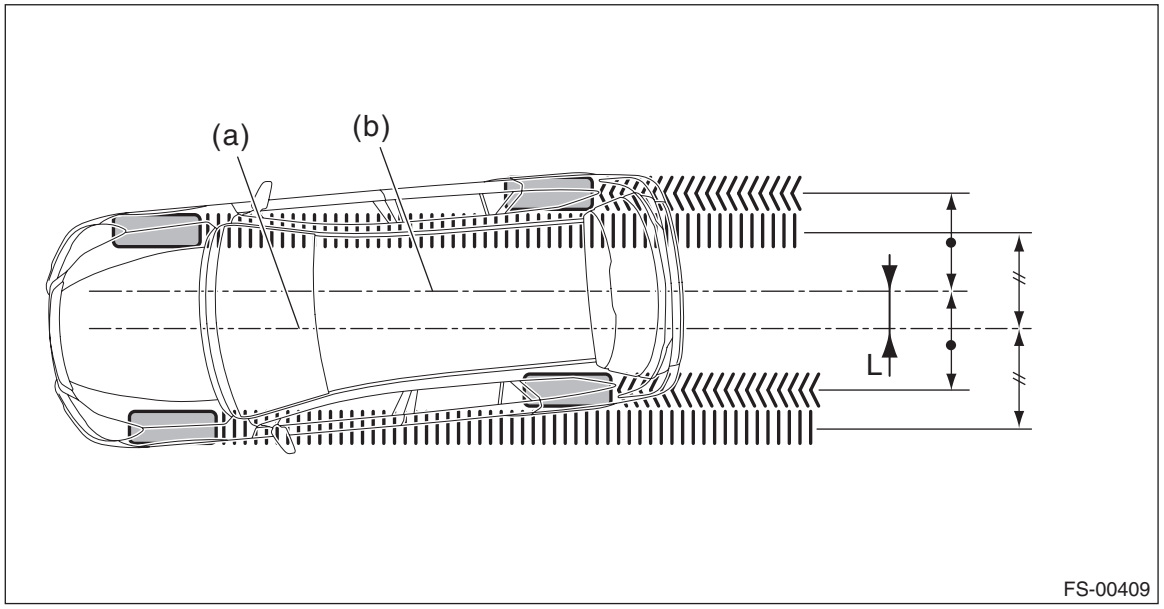

(a) Center line of loci (front axle) (b) Center line of loci (rear axle)

1) Make thrust angle adjustments by turning the toe-in adjusting bolts of the rear suspension equally in the same direction.
2) When one rear wheel is adjusted in a toe-in direction, adjust the other rear wheel equally in toe-out direction, in order to make the thrust angle adjustment.

3) When the left and right adjusting bolts are turned by one graduation, the thrust angle will change approx. 15′. (“L” is approx. 11 mm (0.43 in)).

NOTE:
Thrust angle is a mean value of left and right wheel toe angles in relation to the vehicle body center line. Vehicle is driven straight in the thrust angle direction while slanting in the oblique direction depending on the degree of the mean thrust angle.

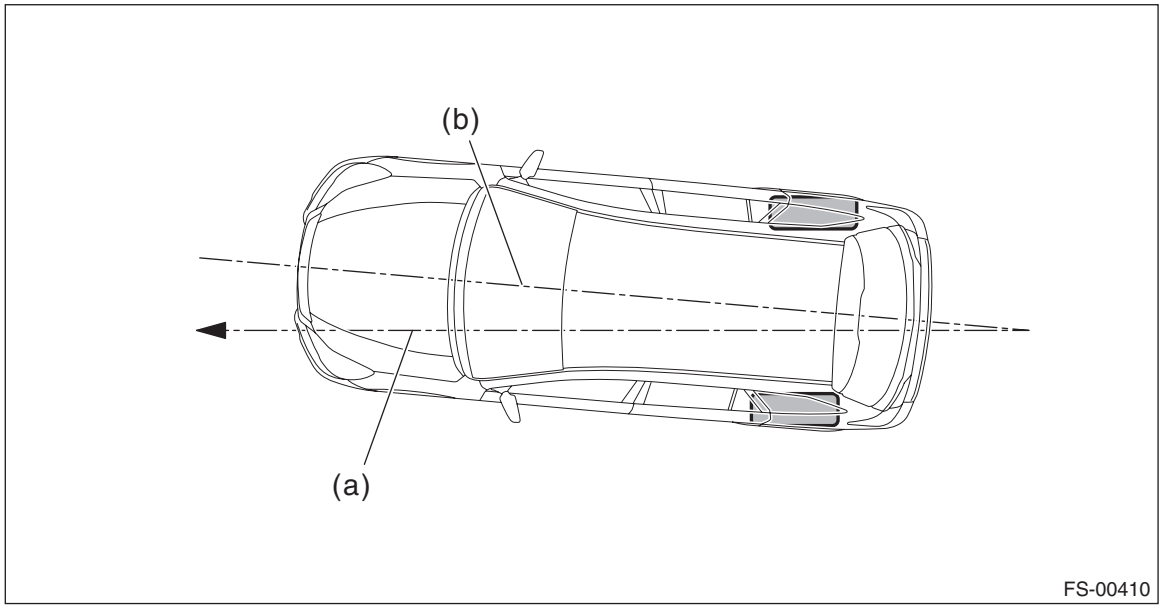

(a) Thrust angle (b) Body center line

Thrust angle

$\gamma = (\alpha - \beta)/2$

α: Rear RH wheel toe-in angle
β: Rear LH wheel toe-in angle
Substitute only the positive toe-in values from each wheel into α and β in the calculation.

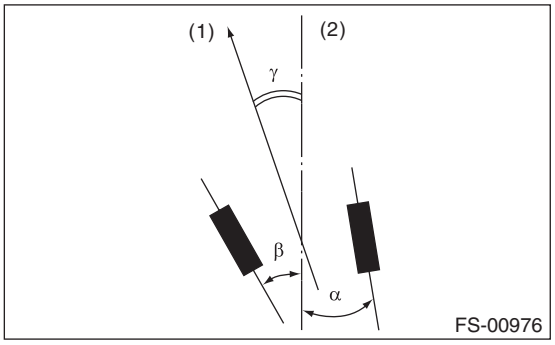

(1) Front
(2) Body center line

3. Cradle

A: REMOVAL

1) Set the vehicle on a lift.
2) Adjust the tilt position of the steering column to the lowest position and lock the tilt lever.

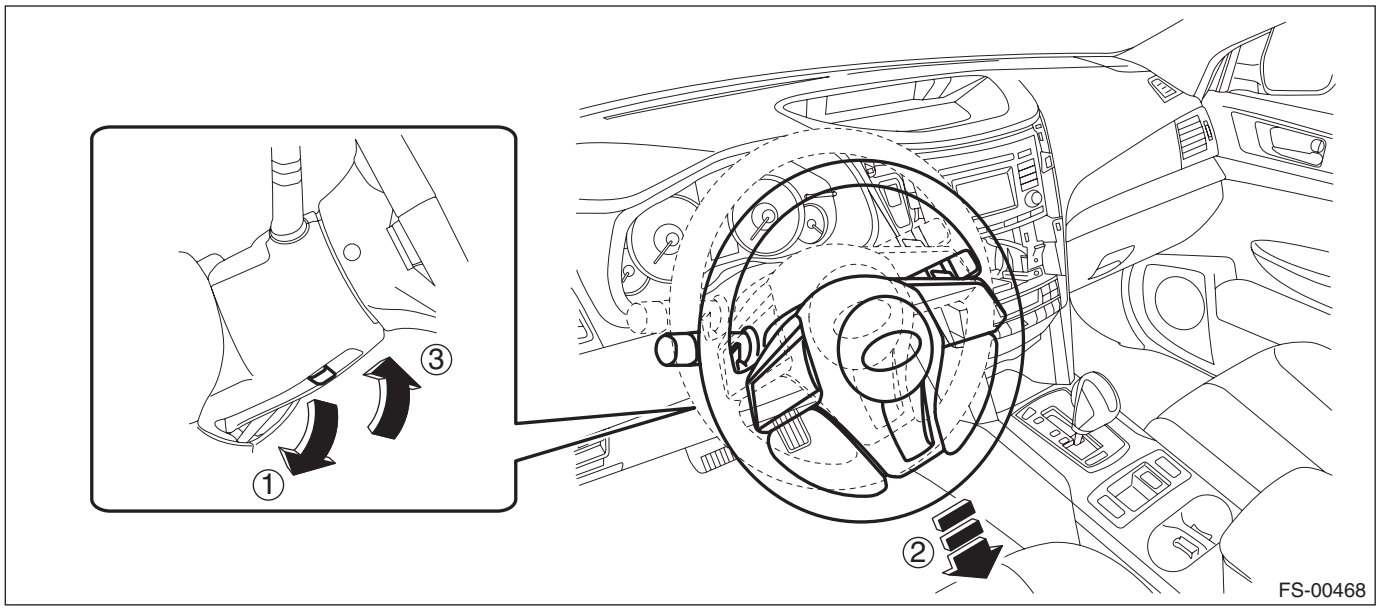

3) Prevent the steering wheel from turning using the seat belt.

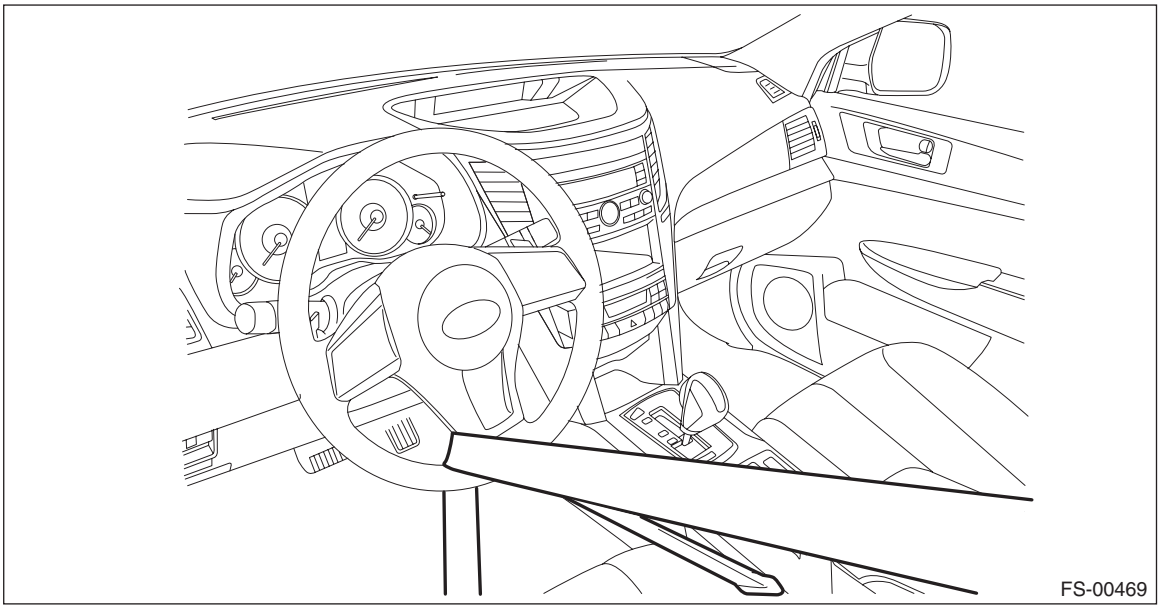

4) Remove the front wheels.
5) Disconnect the ground cable from battery.
6) Remove the air intake duct. <Ref. to IN(H4SO)-9, REMOVAL, Air Intake Duct.>
7) Remove the air intake boot assembly. (non-turbo model)
- H4 model: <Ref. to IN(H4SO)-8, REMOVAL, Air Intake Boot.>
- H6 model: <Ref. to IN(H6DO)-7, REMOVAL, Air Intake Boot.>

8) Remove the intercooler and the intercooler stay. (turbo model) <Ref. to IN(H4DOTC)-17, REMOVAL, Intercooler.>

9) Remove the clips and remove the grille bracket.

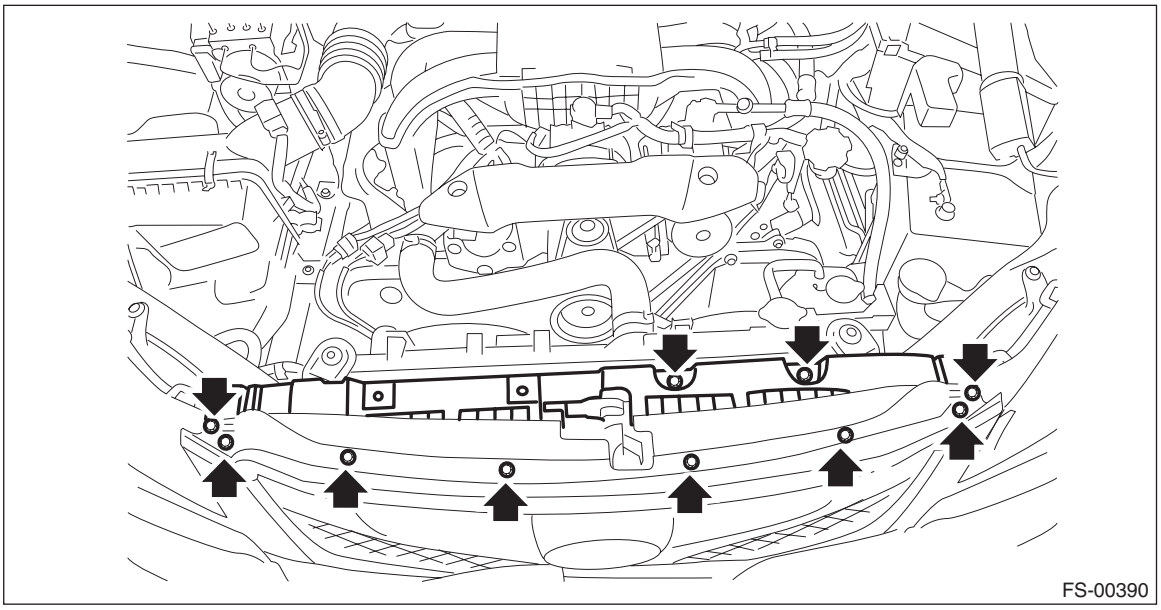

10) Remove the power steering hose bracket and power steering hose.

CAUTION:
Plug the removed hose and pipe to prevent foreign matter from entering.

(1) Remove the hose clamp, and disconnect the power steering hose (a).
(2) Remove the bolt, and remove the power steering hose bracket (b).
(3) Remove the bolt, and disconnect the hose (c) from the power steering pump.

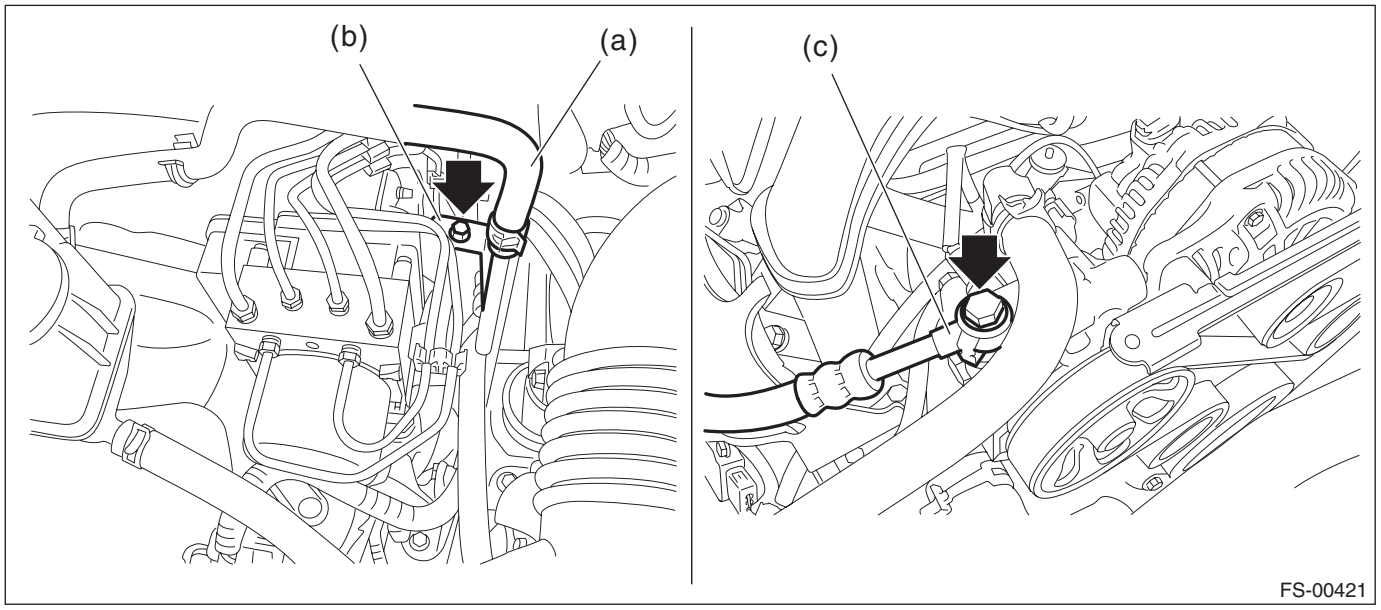

11) Remove the throttle body from the intake manifold.

NOTE:
Do not disconnect the inlet and outlet hoses of engine coolant.

12) Replace the engine hanger installed on the engine with the SUBARU genuine engine hanger (H4 non-turbo model) or ST (H6 model).

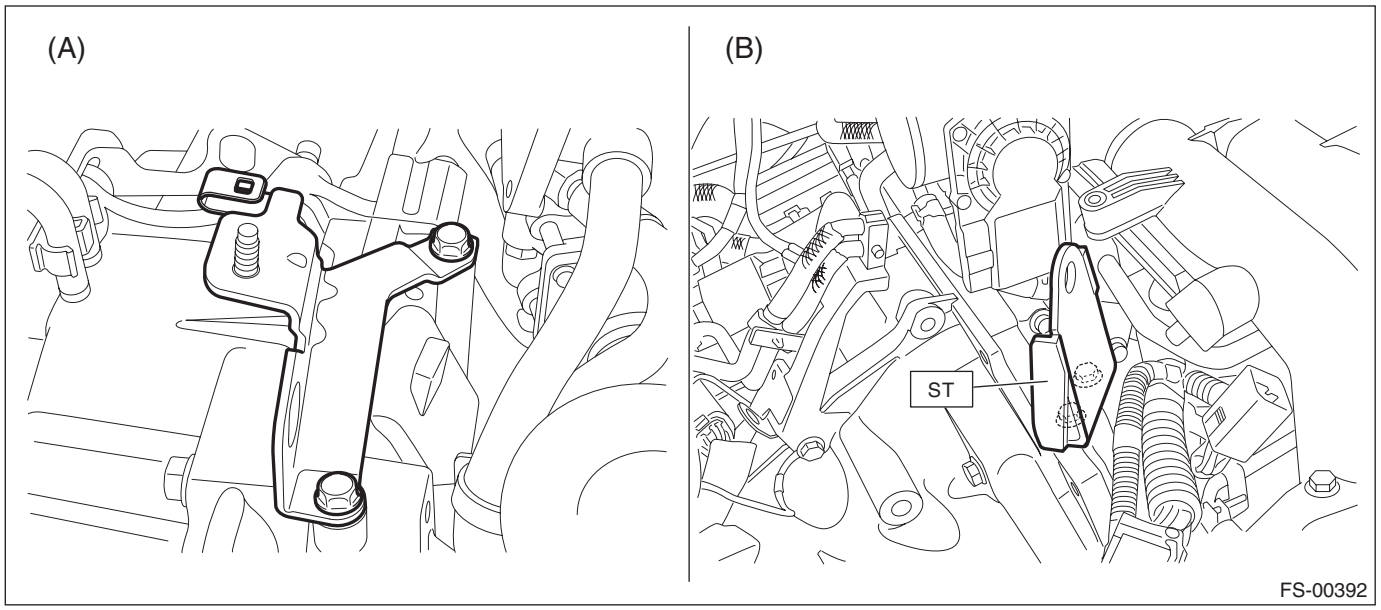

(A) H4 non-turbo model (SUBARU genuine part): HANGER CP ENGINE RR (10004AA180)
(B) H6 model (ST): HANGER (18360AA020)

Tightening torque:
16 N·m (1.63 kgf-m, 11.8 ft-lb)

13) Suspend the engine using ST, chain sling, and shackle.
(1) Set the ST on the vehicle.

CAUTION:
Set the arms of ST (ENGINE HANGER) at the locations shown in the figure.

PREPARATION TOOL:
ST1: ENGINE HANGER (99099AJ000)
ST2: CHAIN BALANCER (99099AJ010)

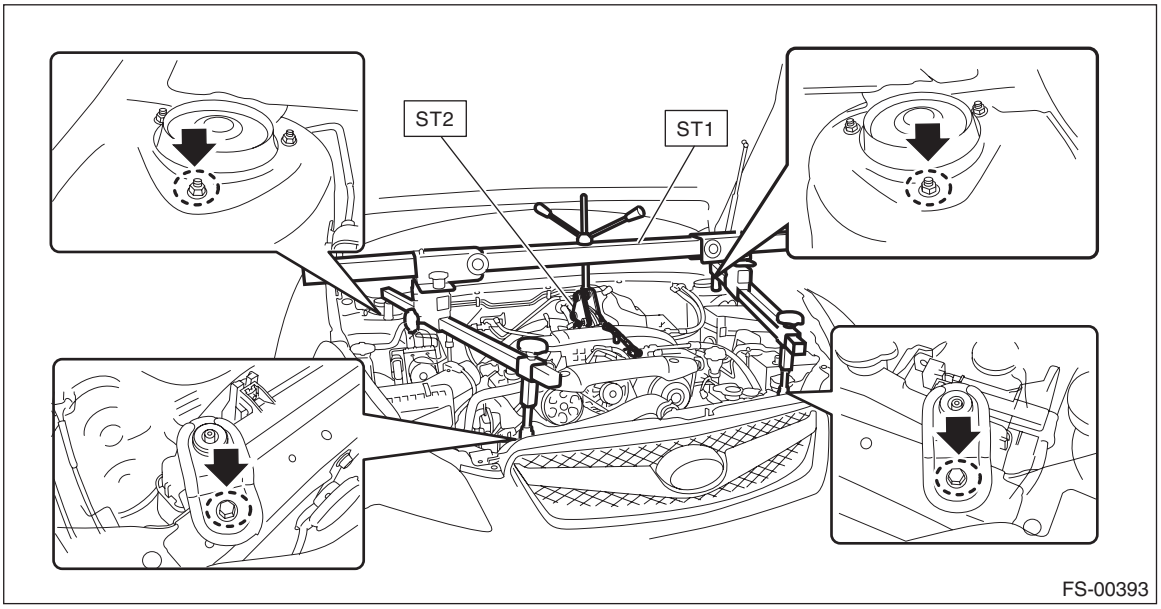

(2) Attach the shackle to the both ends of chain sling.

(3) Pass the chain sling through the CHAIN BALANCER and secure the both ends to the hooks on the engine.

CAUTION:

- **Set the chain sling so that it does not contact the engine parts.**

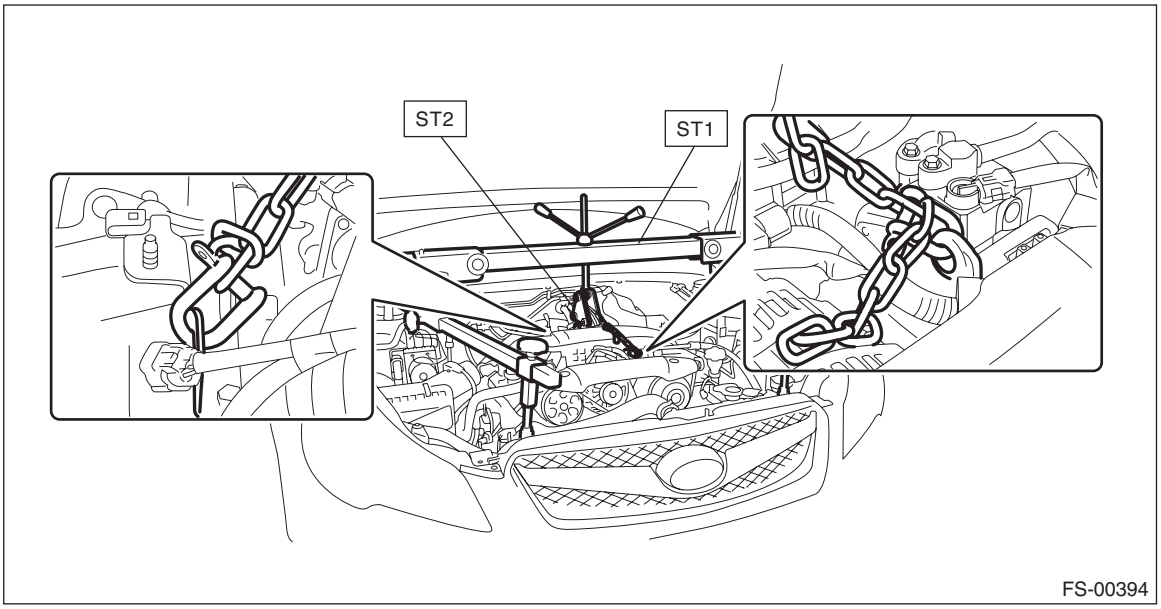

- **Be sure to use chain slings that satisfy the following requirements:**
  - **Length: 0.8 — 1 m (2.6 — 3.3 ft)**
  - **Load capacity: 1.2 t (2646 lb) or more**
  - **Wire diameter: 6 mm (0.24 in) or 6.3 mm (0.25 in)**
  - **Internal width: 8.5 mm (0.33 in) or more**
  - **External width: 23.5 mm (0.93 in) or less**

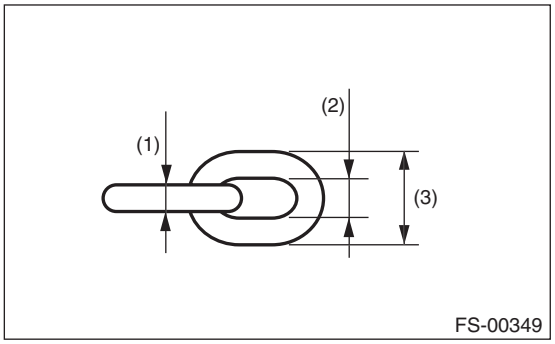

(1) Wire diameter: 6 mm (0.24 in) or 6.3 mm (0.25 in)
(2) Internal width: 8.5 mm (0.33 in) or more
(3) External width: 23.5 mm (0.93 in) or less

- **Use a shackle with the load capacity of 250 kg (551 lb) or more.**

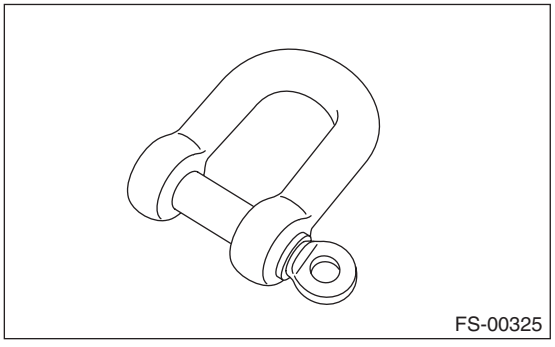

14) Remove the nuts connecting the main mount and the transmission mounting bracket.

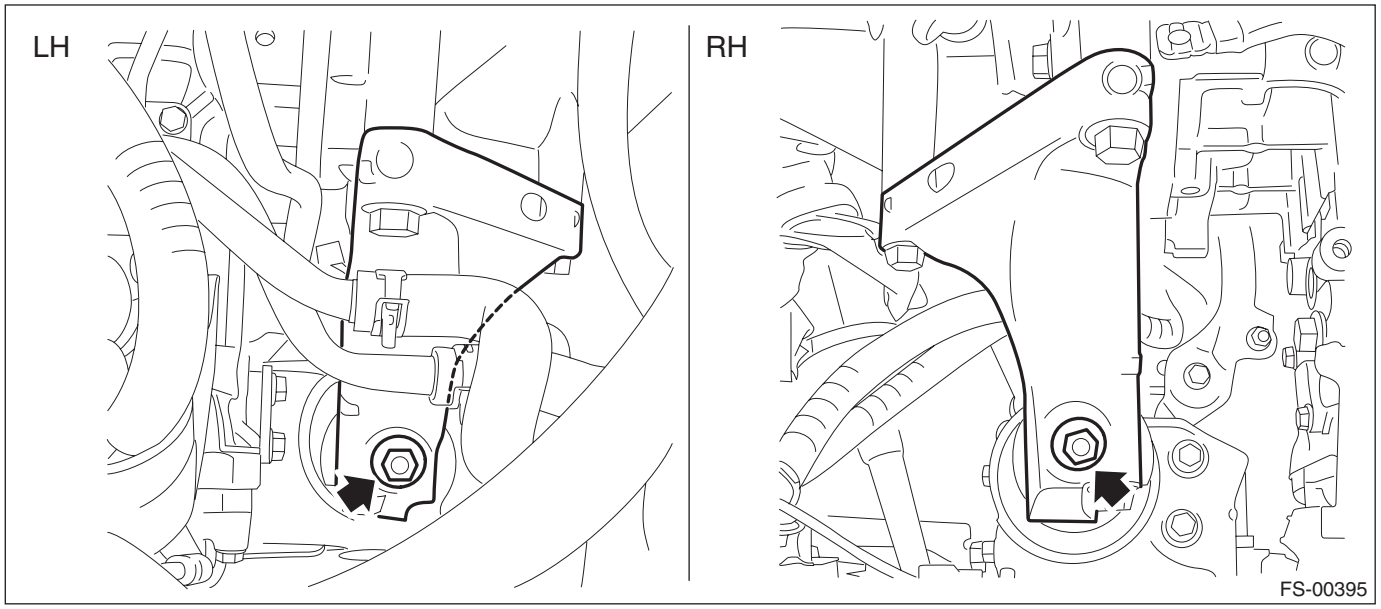

15) Remove the universal joint. <Ref. to PS-21, REMOVAL, Universal Joint.>

CAUTION:
To prevent damage to the universal joint and error of handling force, make sure to remove the universal joint.

16) Remove the front exhaust pipe.
- H4 turbo model: <Ref. to EX(H4DOTC)-5, REMOVAL, Front Exhaust Pipe.>
- H4 non-turbo model: <Ref. to EX(H4SO)-5, REMOVAL, Front Exhaust Pipe.>
- H6 model: <Ref. to EX(H6DO)-5, REMOVAL, Front Exhaust Pipe.>

17) Remove the bolt, and disconnect the left and right front arms.

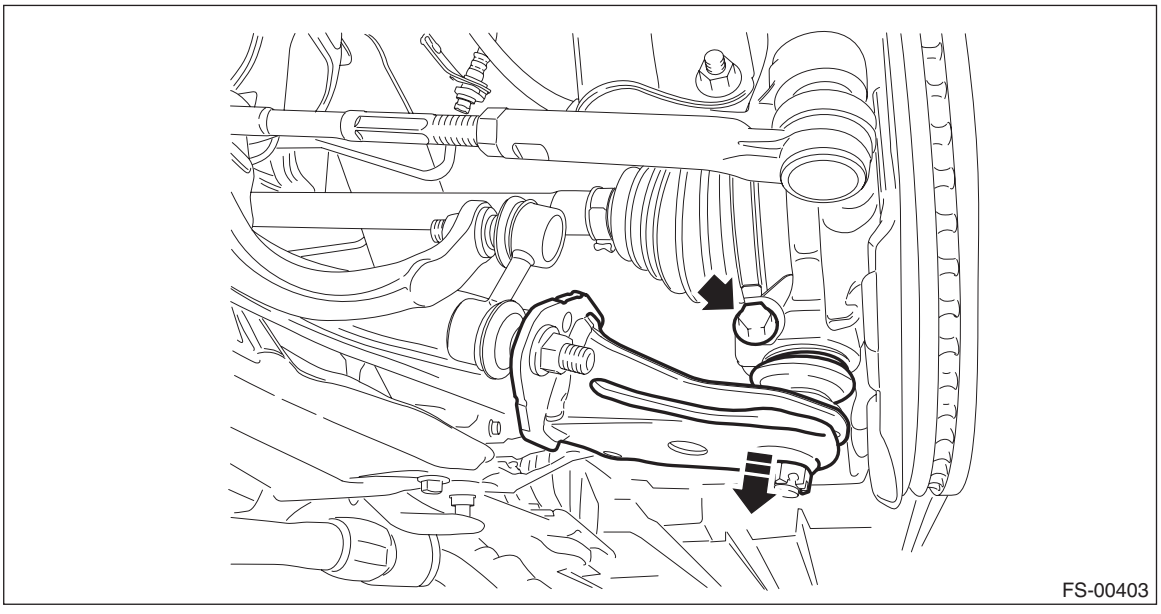

18) Disconnect the left and right tie-rod ends.
(1) Pull out the cotter pin.
(2) Remove the castle nut.
(3) Extract the tie-rod end from the front axle housing.

PREPARATION TOOL:
Tie-rod end puller

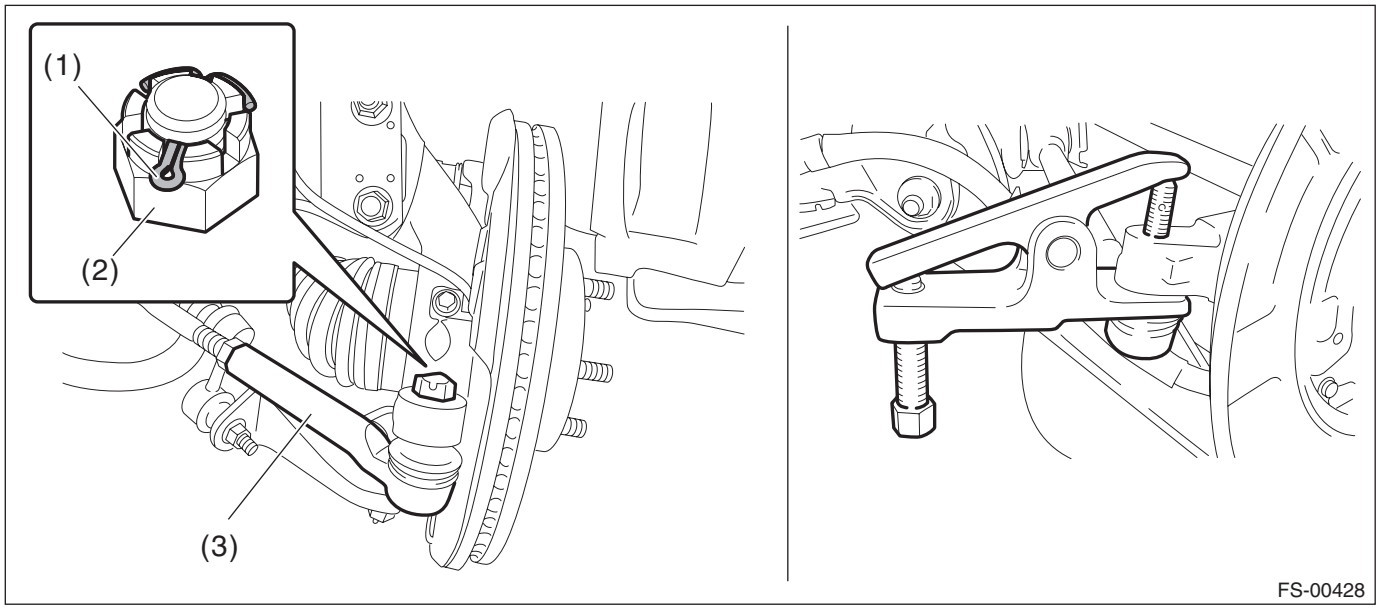

19) Attach the sling belt so that it wraps around the both frames using the shackle.

CAUTION:
• Be sure to attach the sling belt to ensure safety in operation.
• Use a sling belt with the length of 2 m (6.6 ft), the width of 35 — 40 mm (1.38 — 1.57 in) and the load capacity of 1 t (2205 lb) or more.

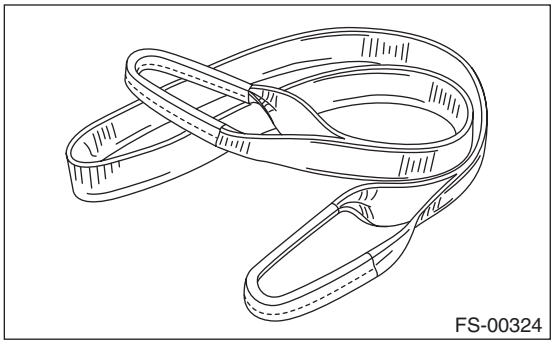

- **Use a shackle with the load capacity of 0.5 t (1103 lb) or more.**

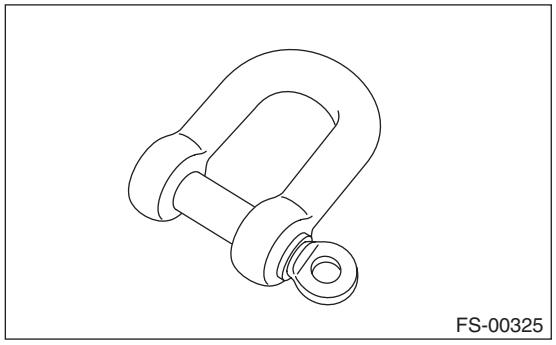
FS-00325

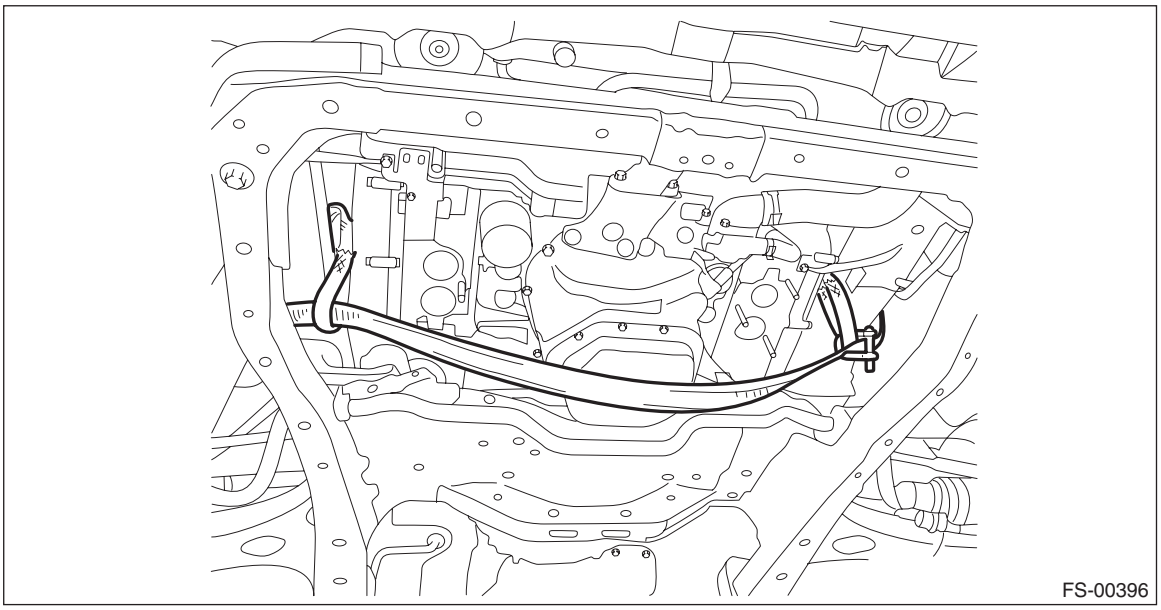
FS-00396

20) Remove the cradle from the vehicle.

CAUTION:
The cradle is heavy. Remove it carefully by paying attention to the balance.

(1) Support the cradle with the transmission jack.

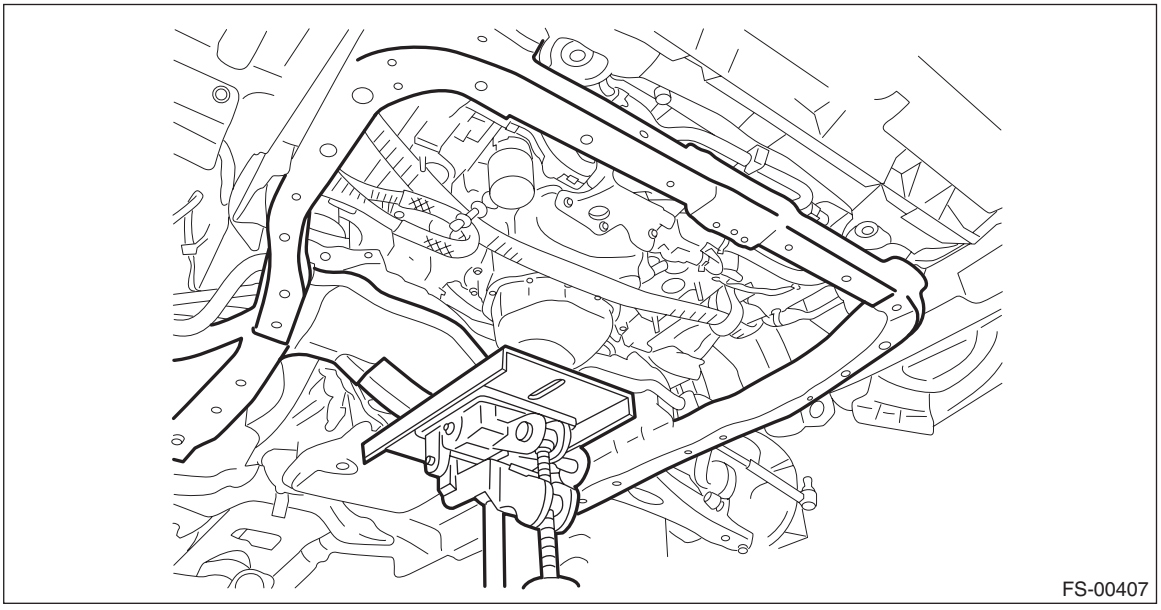
FS-00407

(2) Remove the bolt from the front cushion rubber, and remove the bolt securing the front of the cradle.

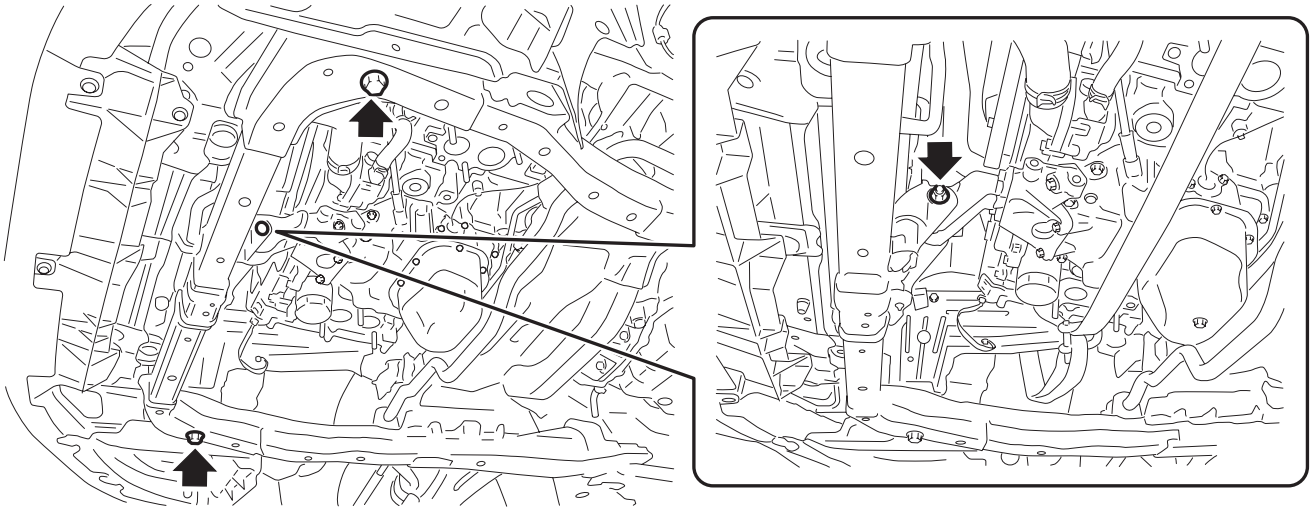
FS-00397

(3) Remove the left and right bolts and nuts.

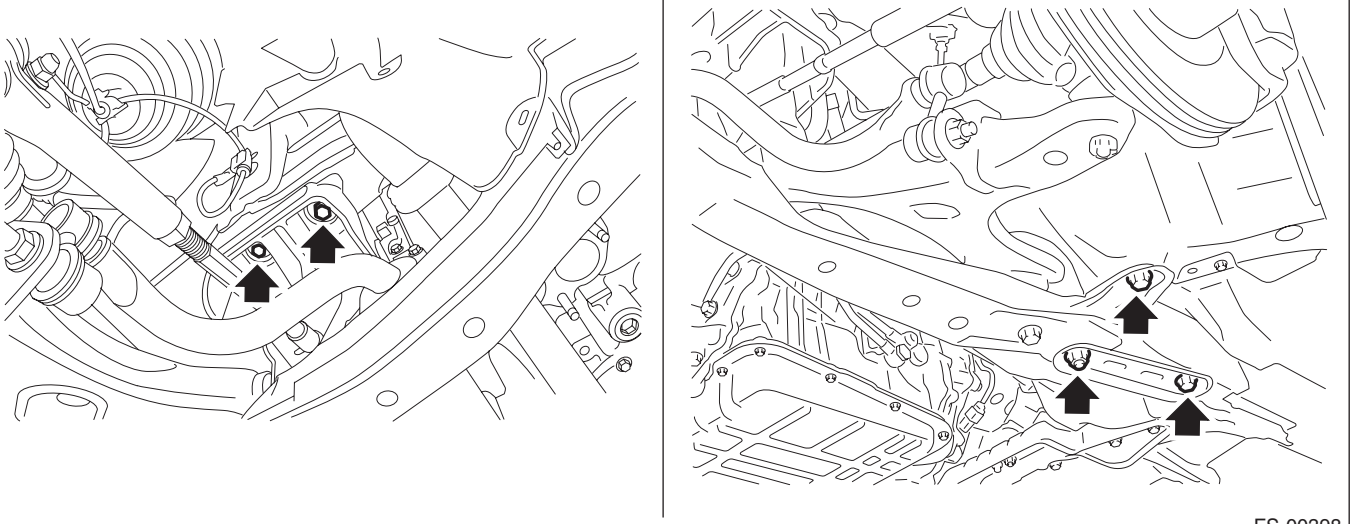
FS-00398

(4) Remove the cradle from the vehicle.

21) To remove the stud bolt, use the ST.

CAUTION:
Do not remove the stud bolt unless necessary. Always replace the parts with new parts when removed.

PREPARATION TOOL:
ST: STUD BOLT SOCKET (20299AG020)

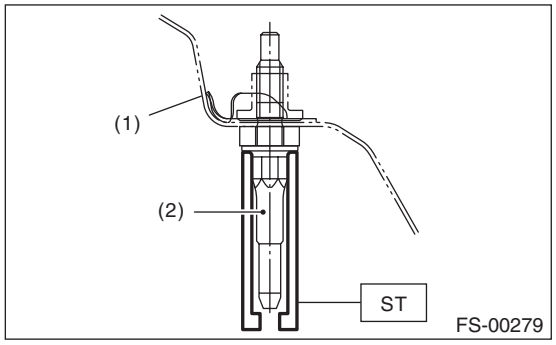

(1) Vehicle body
(2) Stud bolt

B: INSTALLATION

1) Install each part in the reverse order of removal.

CAUTION:
• Use a new bolt and self-locking nut. For parts which are not reusable, refer to "COMPONENT". <Ref. to FS-3, COMPONENT, General Description.>
• Perform installation of the universal joint when the tilt position of the steering column is at the lowest position.
• Tighten the bolts of the universal joint in the order of gearbox side and column shaft side.
• Be sure to follow the tightening order and tightening torque of universal joint to avoid the steering effort from becoming heavy.

NOTE:
Replace the gasket of the throttle body with a new gasket.

Tightening torque:
Front suspension-related parts: <Ref. to FS-3, COMPONENT, General Description.>
Steering gearbox-related parts: <Ref. to PS-6, STEERING GEARBOX, COMPONENT, General Description.>

2) Inspect the wheel alignment and adjust if necessary.
• Inspection: <Ref. to FS-9, INSPECTION, Wheel Alignment.>
• Adjustment: <Ref. to FS-14, ADJUSTMENT, Wheel Alignment.>

4. Front Stabilizer

A: REMOVAL

1) Lift up the vehicle, and then remove the left and right front wheels.
2) Remove the front under cover. <Ref. to EI-35, REMOVAL, Front Under Cover.>
3) Remove the center exhaust pipe. (turbo model) <Ref. to EX(H4DOTC)-12, REMOVAL, Center Exhaust Pipe.>
4) Remove the front stabilizer.
   (1) Remove the left and right stabilizer links.

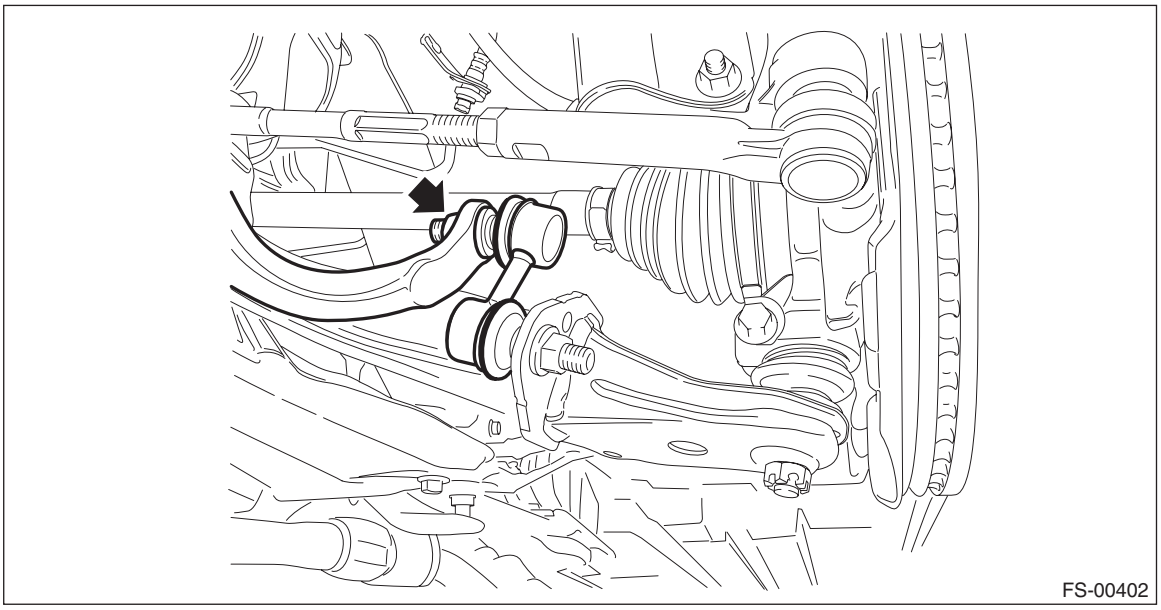

   (2) Remove the left and right stabilizer brackets.

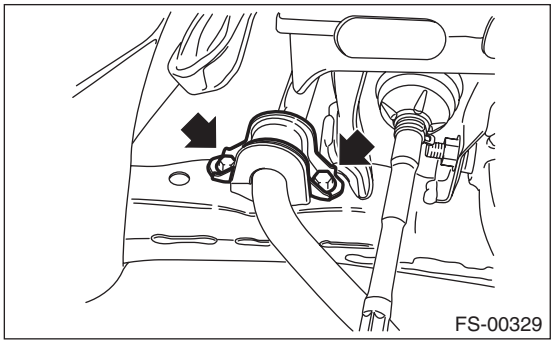

(3) Disconnect the left and right tie-rod ends.
a) Pull out the cotter pin.
b) Remove the castle nut.
c) Extract the tie-rod end from the front axle housing.

PREPARATION TOOL:
Tie-rod end puller

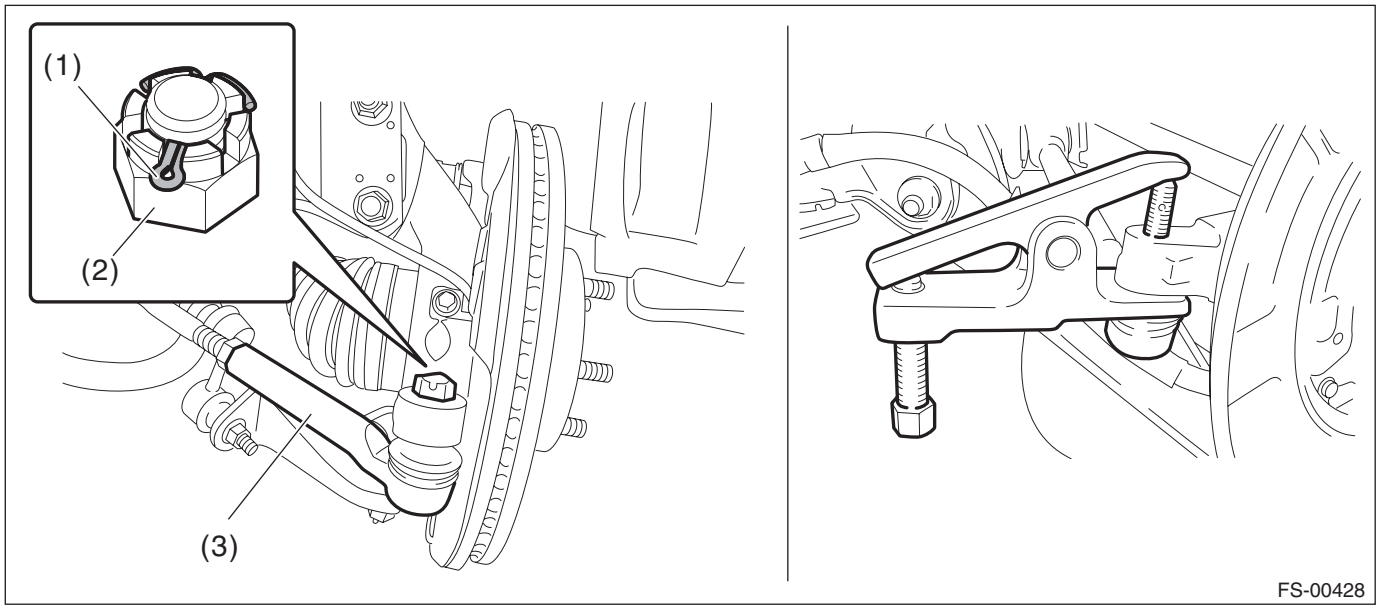

(1) Cotter pin (2) Castle nut (3) Tie-rod end

(4) Suspend the engine and replace the front cushion mount with ST. (turbo model) <Ref. to 5AT-37, REMOVAL, Automatic Transmission Assembly.>

PREPARATION TOOL:
ST: SPECIAL TOOL - H4 (41099AJ000)

NOTE:
For turbo model, it is required to secure space for operation to hang the engine and remove the stabilizer.

(5) Turn the front stabilizer by approximately 180° toward the front of the vehicle and pull out the front stabilizer from the right side of the vehicle.

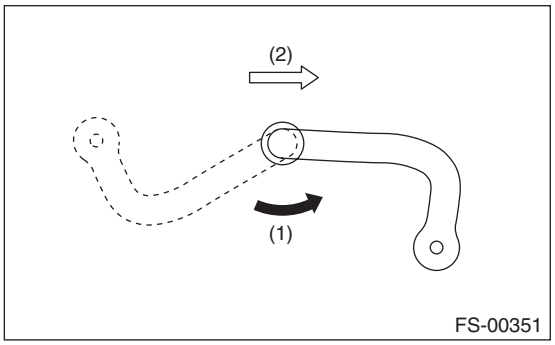

(1) Turn toward the front of the vehicle.
(2) Front side of vehicle

B: INSTALLATION

1) Before installation, inspect the following items and replace any faulty part with a new one.
- Check the bushing for abnormal cracks, fatigue or damage.
- Check the stabilizer link for damage.

2) Install each part in the reverse order of removal.

CAUTION:
The stabilizer bracket has a set orientation. Install it with the arrow mark facing the front side (1) of the vehicle.

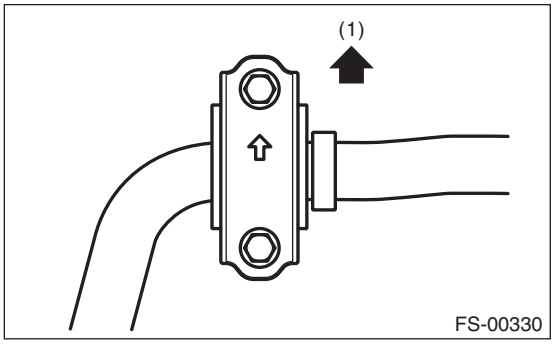

Tightening torque:
Stabilizer bracket: 25 N·m (2.55 kgf-m, 18.4 ft-lb)
Stabilizer link: 60 N·m (6.12 kgf-m, 44.3 ft-lb)

5. Front Ball Joint

A: REMOVAL

1) Lift up the vehicle, and then remove the front wheels.
2) Remove the left and right stabilizer brackets.

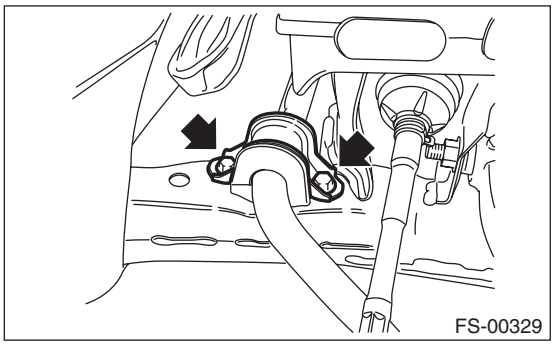

3) Remove the ball joint.
   (1) Extract the cotter pin (a) from the ball stud.
   (2) Remove the castle nut (b).
   (3) Extract the ball stud from the front arm.
   (4) Remove the bolt securing the ball joint to the front axle housing.

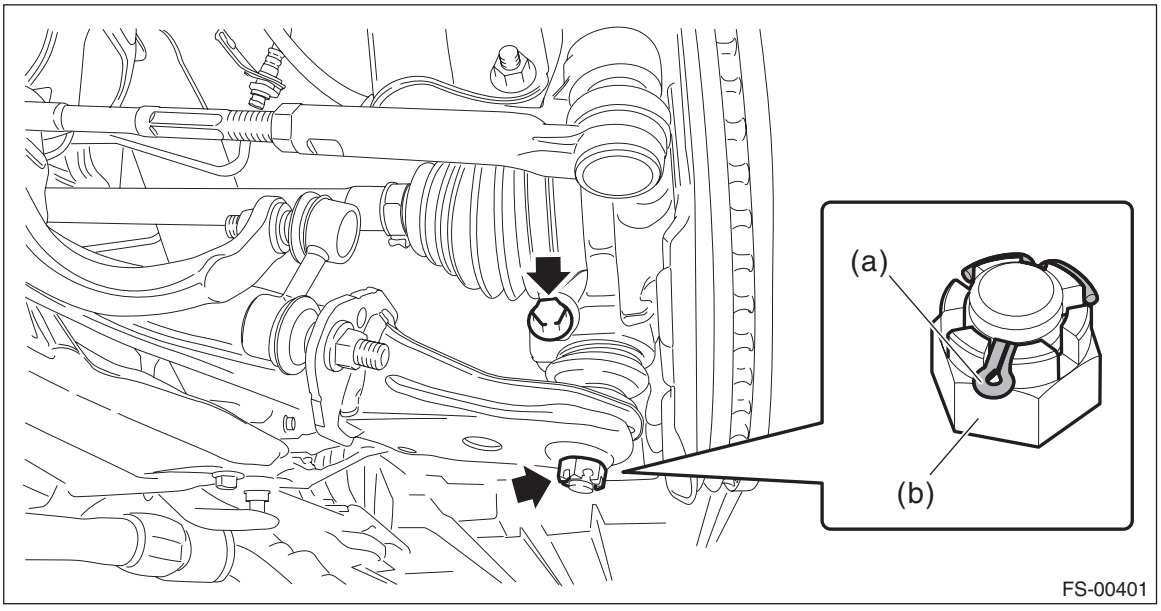

   (5) Extract the ball joint from the front axle housing.

B: INSTALLATION

1) Install the ball joint to the front axle housing.

CAUTION:
- **Do not apply grease to the tapered portion of ball stud.**
- **Before tightening, make sure the lower side of front axle housing and stepped section of ball joint are in contact.**

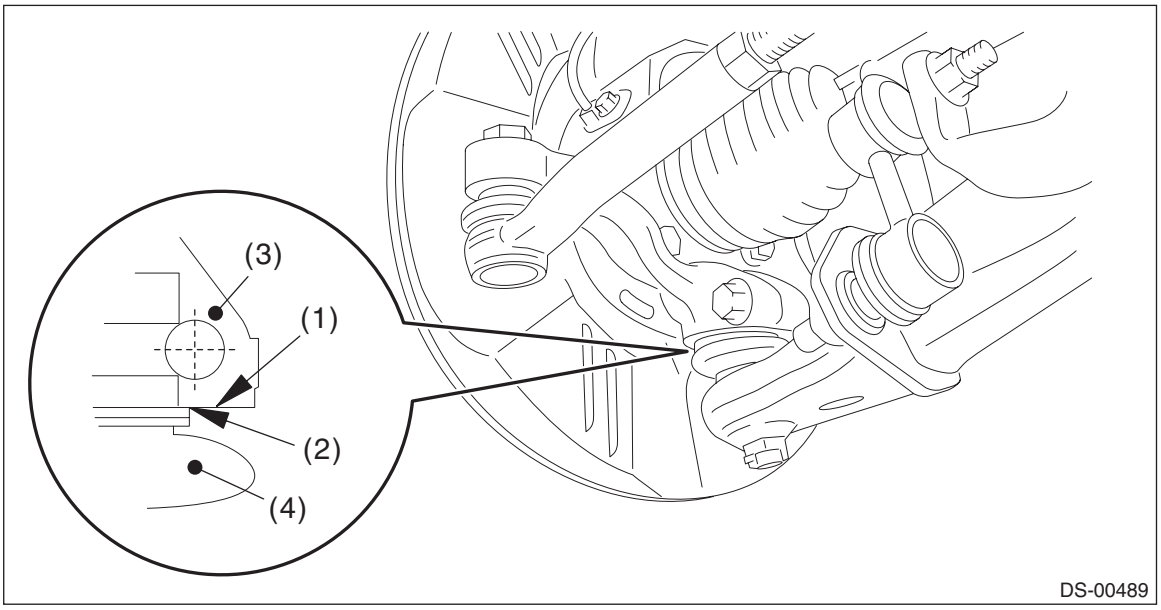

(1) Lower side of front axle housing
(2) Raised section of ball joint
(3) Front axle housing
(4) Ball joint

Tightening torque:
50 N·m (5.1 kgf-m, 36.9 ft-lb)

2) Install the ball joint into front arm.
(1) Connect the ball joint to the front arm.

Tightening torque:
39 N·m (3.98 kgf-m, 28.8 ft-lb)

(2) Retighten the castle nut further up to 60° until the hole in the ball stud is aligned with a slot in castle nut.
(3) Insert a new cotter pin and bend it around the castle nut.

3) Install the stabilizer bracket.

NOTE:
The stabilizer bracket has a set orientation. Install it with the arrow mark facing the upper side of the vehicle.

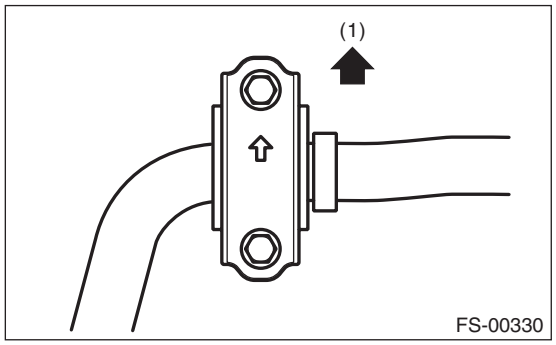

(1) Front side of vehicle

Tightening torque:
25 N·m (2.55 kgf-m, 18.4 ft-lb)

4) Install the front wheels.

C: INSPECTION

1) Measure the play of the ball joint using the following procedures. Replace with a new part if the play exceeds specification.

(1) With 686 N (70 kgf, 154 lbf) loaded in direction shown in the figure, measure the length ℓ_1.

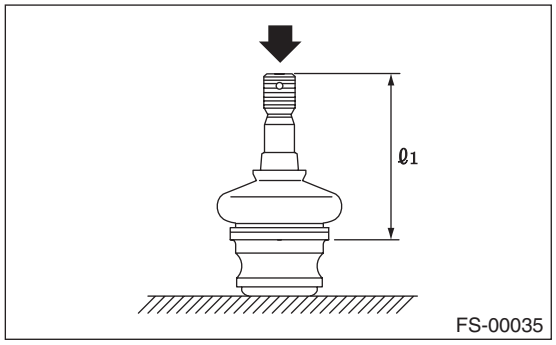

(2) With 686 N (70 kgf, 154 lbf) loaded in direction shown in the figure, measure the length ℓ_2.

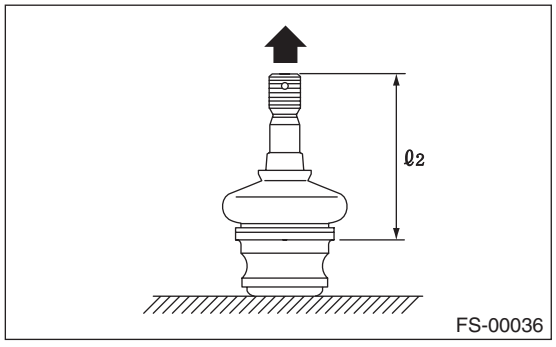

(3) Determine free play using the following formula.
$S = \ell_2 - \ell_1$

(4) Replace with a new part if the play exceeds specification.

Front ball joint
Replacement standard S: Less than 0.3 mm (0.012 in)

2) If the play is within specification, visually check the dust cover.
3) If the dust cover is damaged, replace with a new ball joint.

6. Front Arm

A: REMOVAL

1) Lift up the vehicle, and then remove the front wheels.
2) Remove the front arm.
   (1) Remove the nut and disconnect the front stabilizer link.
   (2) Remove the bolt, and then remove the ball joint for the front arm.

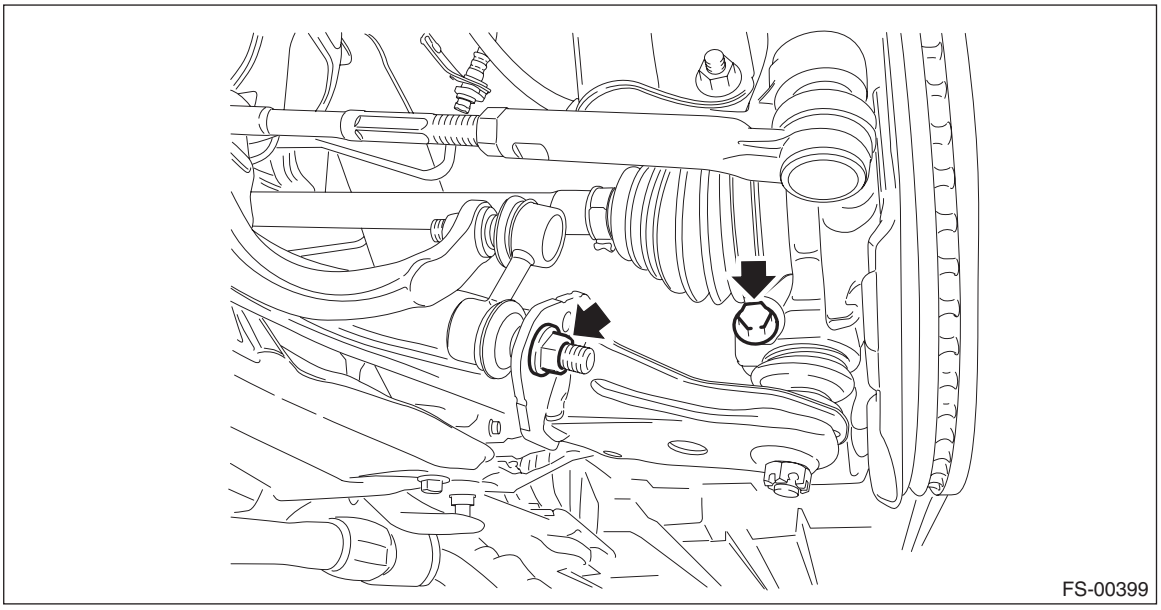

   (3) Remove the bolts, then remove the front arm.

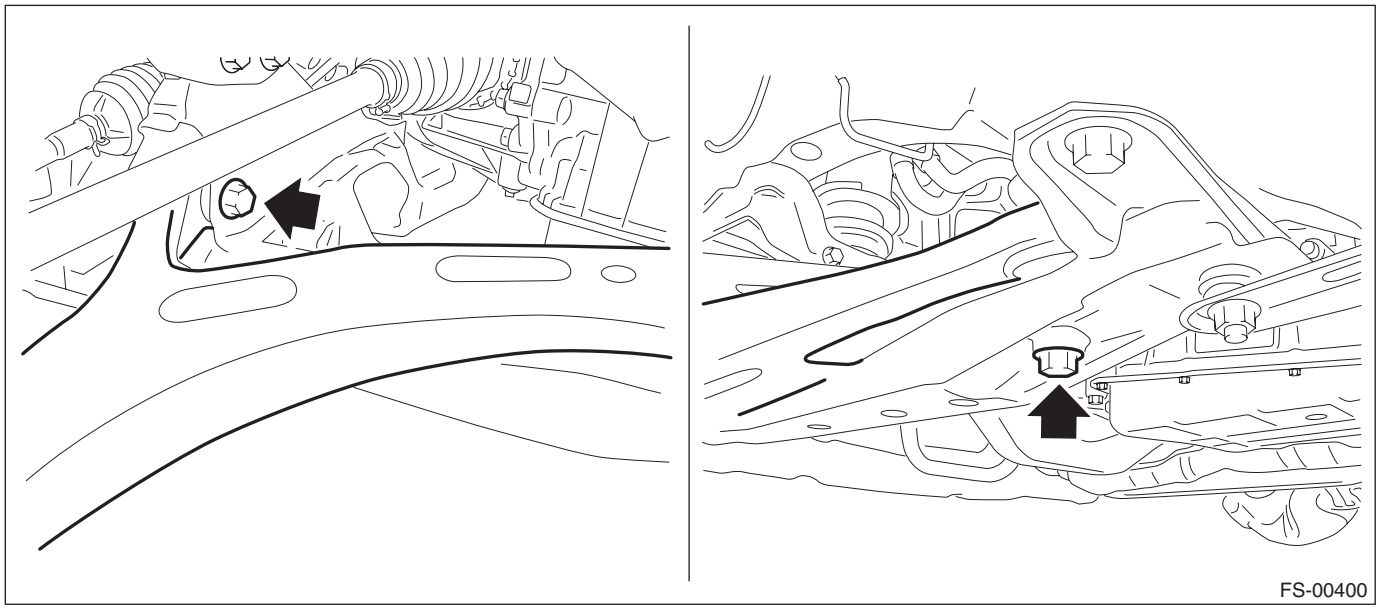

B: INSTALLATION

1) Before installation, inspect the following items and replace any faulty part with a new one.
- Check the front arm for damage or cracks, and replace if defective.
- Visually check the bushing for abnormal cracks, fatigue or damage.
- Visually check the dust cover on the ball joint for damage.

2) Using new self-locking nuts, temporary tighten the front arm.
3) Install the ball joint to the front axle housing.

CAUTION:
Before tightening, make sure the lower side of front axle housing and stepped section of ball joint are in contact.

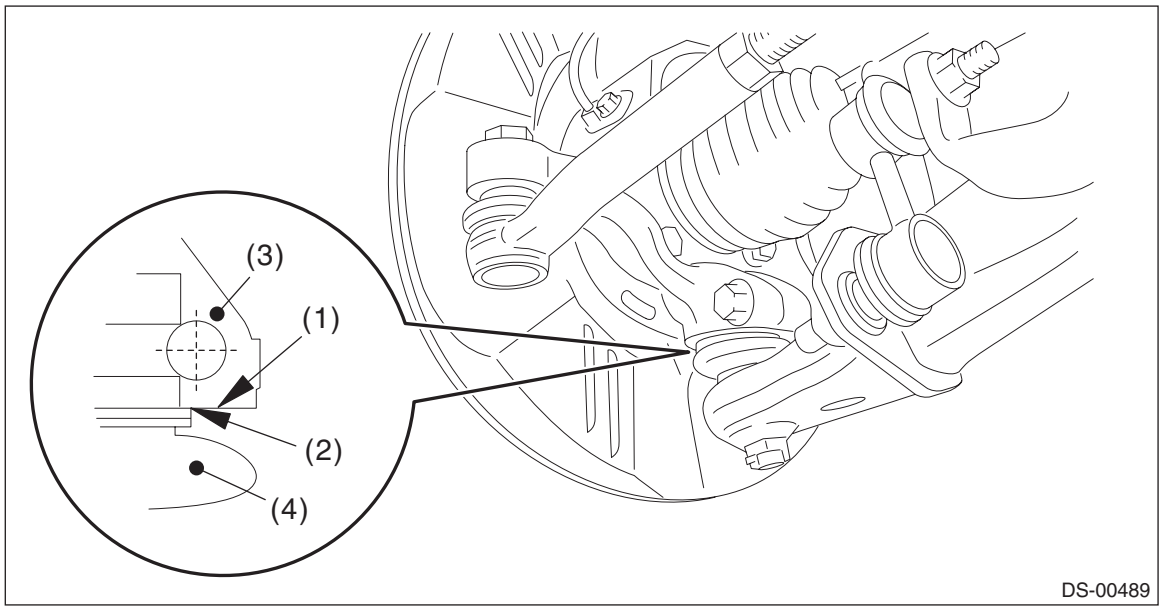

(1) Lower side of front axle housing
(2) Raised section of ball joint
(3) Front axle housing
(4) Ball joint

Tightening torque:
50 N·m (5.1 kgf-m, 36.9 ft-lb)

4) Install the stabilizer link.

Tightening torque:
60 N·m (6.1 kgf-m, 44.3 ft-lb)

5) Install the front wheels.
6) Unload the vehicle from lift, and tighten the bolt which secures the front arm to cradle with wheels in full contact with the ground and the vehicle at curb weight.

Tightening torque:
Front bushing side: 95 N·m (9.7 kgf-m, 70.1 ft-lb)
Rear bushing side: 140 N·m (14.3 kgf-m, 103.3 ft-lb)

7) Inspect the wheel alignment and adjust if necessary.
- Inspection: <Ref. to FS-9, INSPECTION, Wheel Alignment.>
- Adjustment: <Ref. to FS-14, ADJUSTMENT, Wheel Alignment.>

C: DISASSEMBLY

1. FRONT BUSHING

1) Put an alignment mark on the front arm based on the gap of bushing intermediate plate for front bushing.

CAUTION:
Always put an alignment mark for aligning the position on bushing installation.

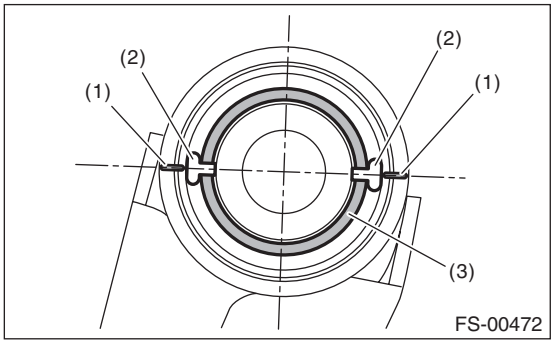

(1) Put an alignment mark.
(2) Gap of bushing intermediate plate
(3) Bushing intermediate plate

2) Using the ST and a press, remove the front bushing.

PREPARATION TOOL:
ST: INSTALLER & REMOVER SET (927680000)

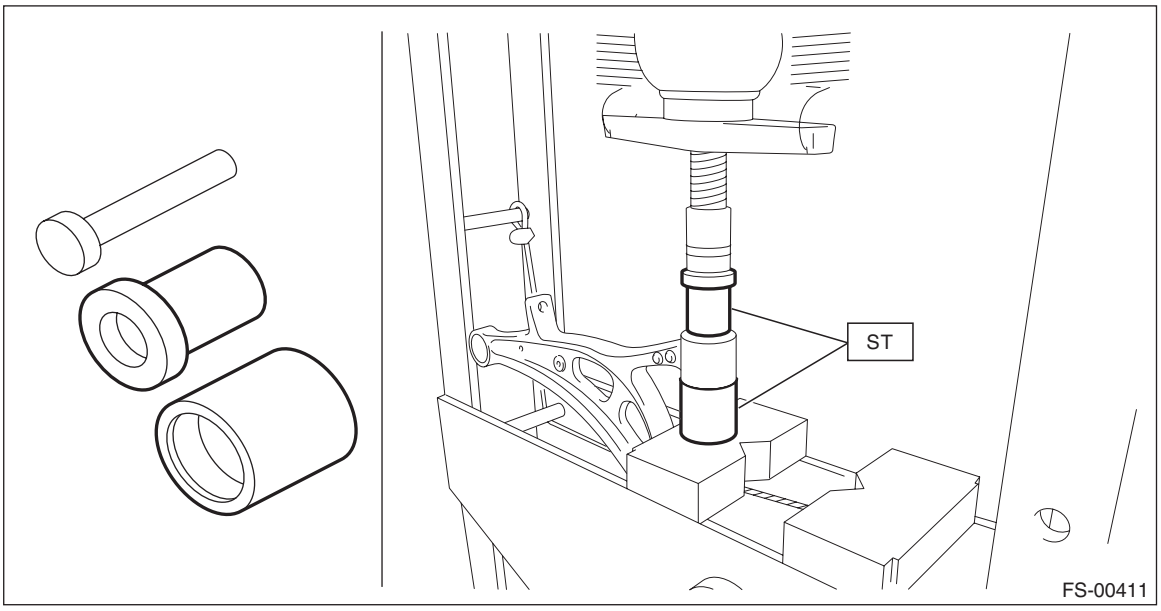

2. REAR BUSHING

1) Put an alignment mark on the front arm based on the center of rear bushing recess portion.

CAUTION:
Always put an alignment mark for aligning the position on bushing installation.

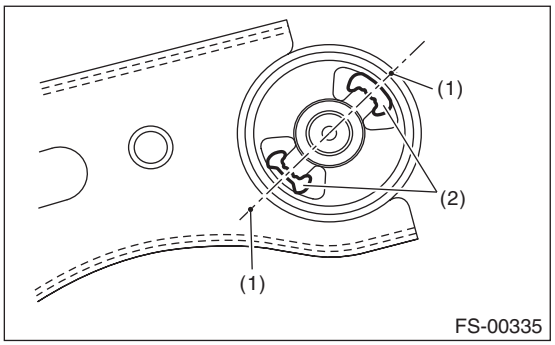

(1) Put an alignment mark.
(2) Recess section

2) Using the ST and a press, remove the rear bushing.

PREPARATION TOOL:
ST1: REMOVER (20299AG000)
ST2: BASE (20299AG010)

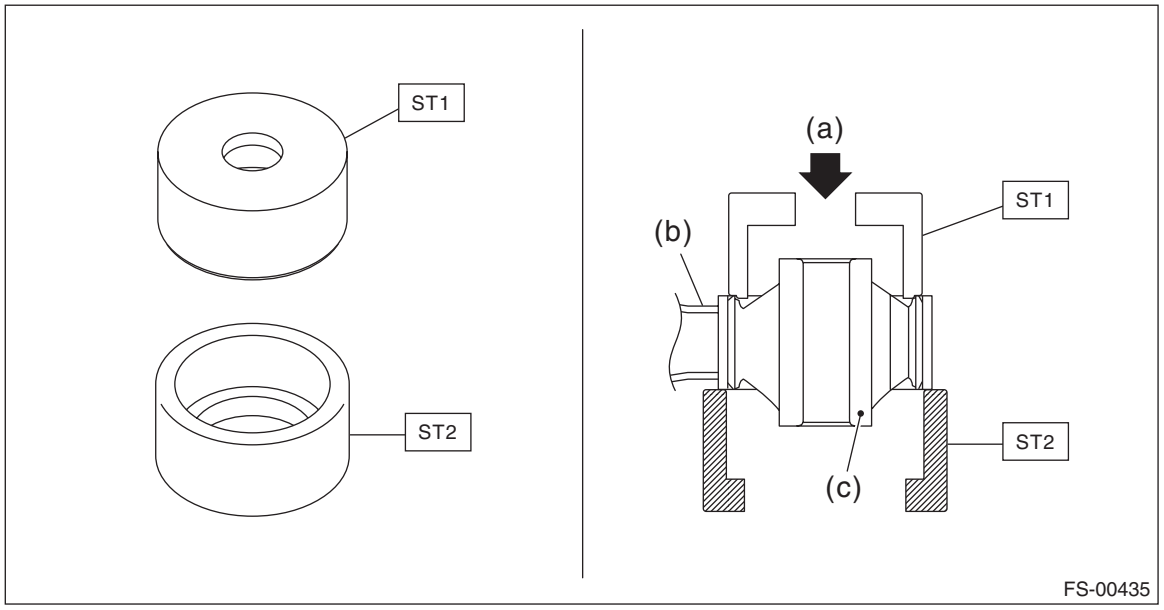

(a) Press (b) Front arm (c) Rear bushing

D: ASSEMBLY

1. FRONT BUSHING

1) Before assembly, inspect the following items and replace any faulty part with a new one.
- Check the front arm for damage or cracks, and replace if defective.
- Visually check the bushing for abnormal cracks, fatigue or damage.
- Visually check the dust cover on the ball joint for damage.

2) Align the gap of bushing intermediate plate for front bushing with the alignment mark of the front arm.
3) Using the ST and a press, install the front bushing.

PREPARATION TOOL:
ST: INSTALLER & REMOVER SET (927680000)

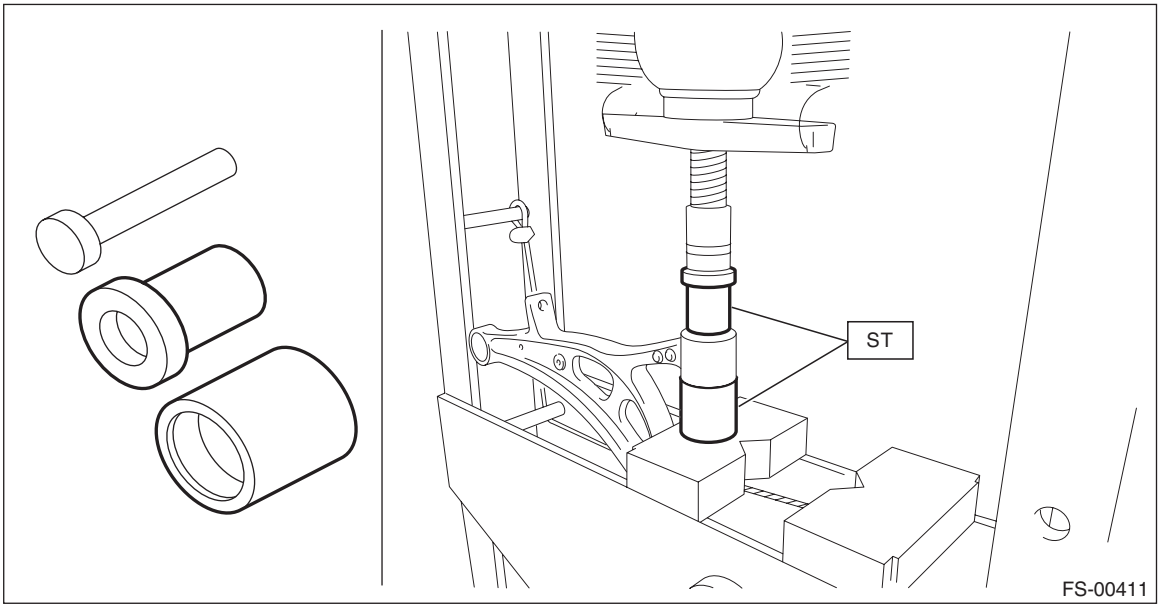

2. REAR BUSHING

1) Before installation, inspect the following items and replace any faulty part with a new one.
- Check the front arm for damage or cracks, and replace if defective.
- Visually check the bushing for abnormal cracks, fatigue or damage.
- Visually check the dust cover on the ball joint for damage.

2) Align the center of recess portion with the alignment mark on the front arm, with the protrusion (A) of recess portion facing the front side of vehicle.

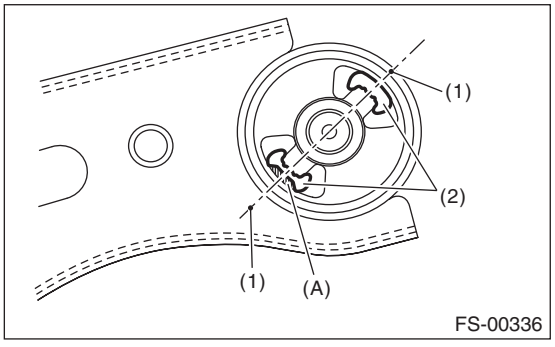

(1) Alignment mark
(2) Recess section

3) Using the ST and a press, install the rear bushing.

CAUTION:
Align the upper face of front arm and the end of bushing during installation.

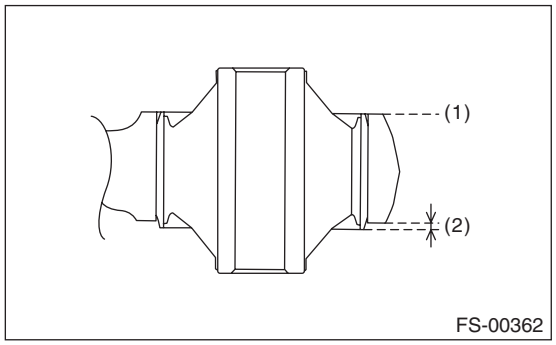

(1) Aligned
(2) Not aligned

PREPARATION TOOL:
ST1: REMOVER (20299AG000)
ST2: BASE (20299AG010)

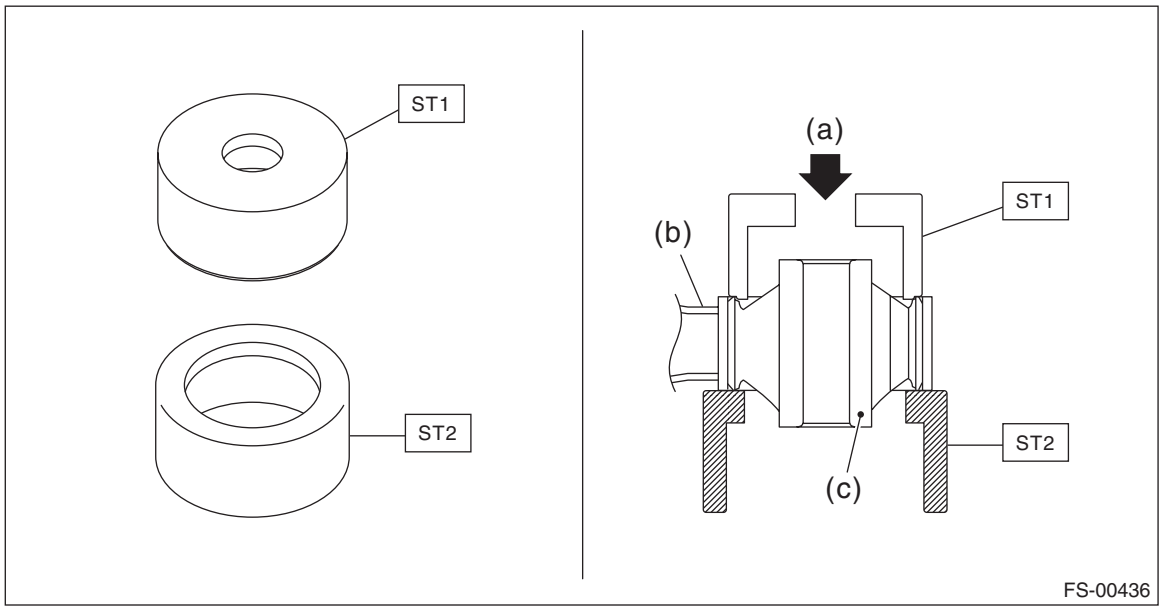

(a) Press
(b) Front arm
(c) Rear bushing

7. Front Strut

A: REMOVAL

1) Lift up the vehicle, and then remove the front wheels.
2) Remove the front strut.
   (1) Place an alignment mark on the camber adjusting bolt and strut.
   (2) Remove the brake hose bracket.

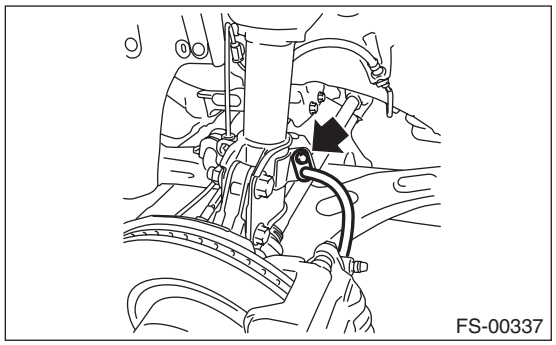

   (3) Remove the ABS wheel speed sensor harness.

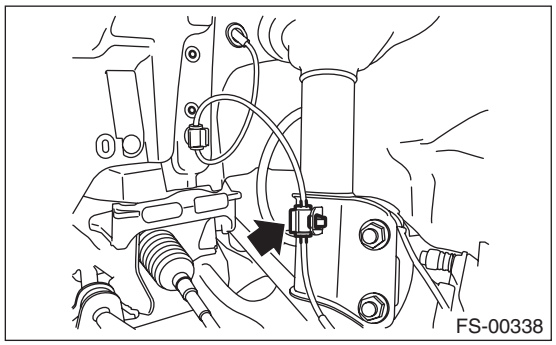

   (4) Remove the two bolts securing the front axle housing to the strut.

NOTE:
While holding the head of the adjusting bolt, loosen the flange nut.

   (5) Remove the three nuts securing strut mount to body.

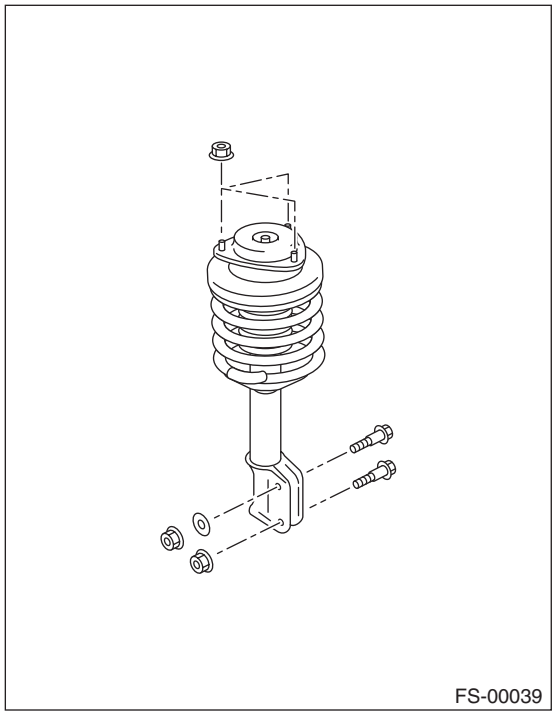

B: INSTALLATION

1) Install the strut mount at the upper side of strut to body, and tighten it with new self-locking nuts.

Tightening torque:
20 N·m (2.04 kgf-m, 14.8 ft-lb)

2) Align alignment marks on the camber adjusting bolt and strut.
Using new self-locking nuts, install the strut to the front axle housing.

NOTE:
While holding the head of adjusting bolt, tighten the self-locking nut.

Tightening torque:
155 N·m (15.81 kgf-m, 114.3 ft-lb)

3) Secure the ABS wheel speed sensor harness to the strut.
4) Install the brake hose bracket.

Tightening torque:
33 N·m (3.36 kgf-m, 24.3 ft-lb)

5) Install the front wheels.
6) Inspect the wheel alignment and adjust if necessary.
- Inspection: <Ref. to FS-9, INSPECTION, Wheel Alignment.>
- Adjustment: <Ref. to FS-14, ADJUSTMENT, Wheel Alignment.>

C: DISASSEMBLY

1) Using a coil spring compressor, compress the coil spring.
2) Using the ST, remove the self-locking nut.

PREPARATION TOOL:
ST: STRUT MOUNT SOCKET (20399AG000)

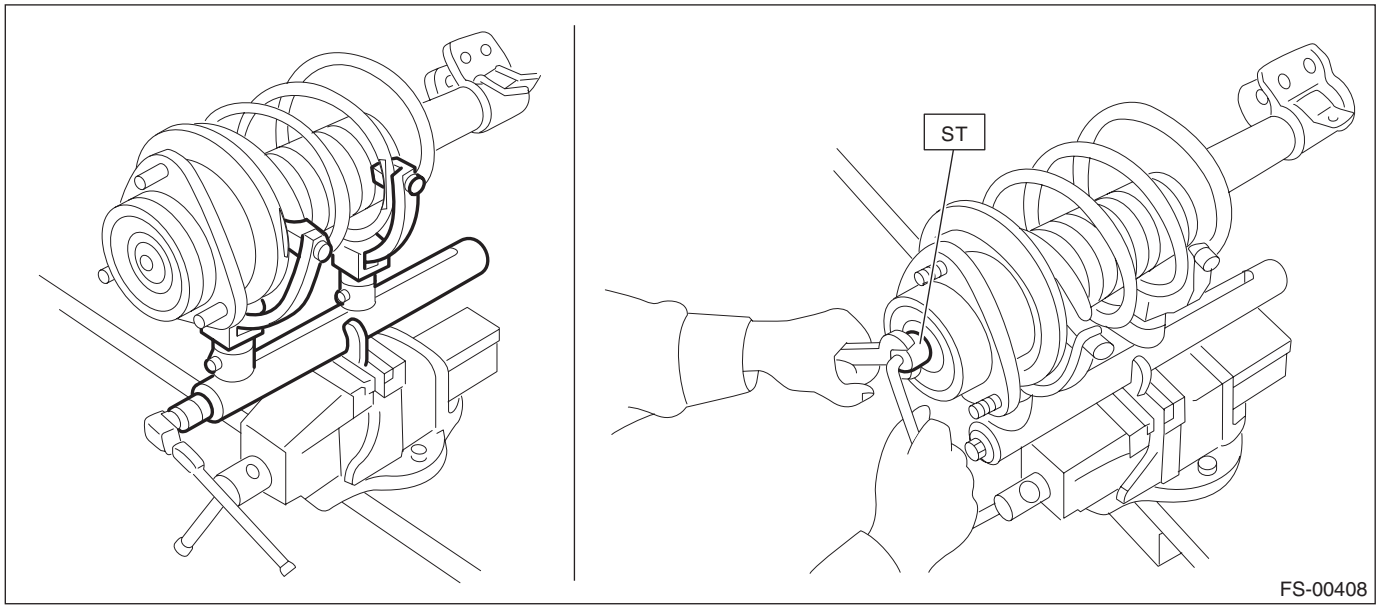

3) Remove the strut mount, spacer and upper spring seat from the strut.
4) Gradually decrease the compression force of compressor, and remove the coil spring.
5) Remove the dust cover and helper.

D: ASSEMBLY

1) Before assembly, check each part. <Ref. to FS-45, INSPECTION, Front Strut.>
2) Using a coil spring compressor, compress the coil spring.

NOTE:
Make sure that the vertical install direction of the coil spring is as shown in the figure.

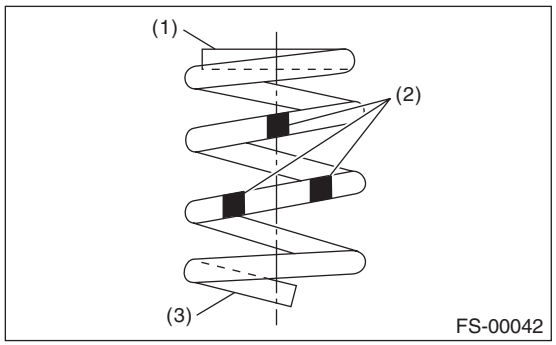

(1) Diameter is small (upper part)
(2) Identification paint
(3) Diameter is large (bottom part)

3) Set the coil spring correctly so that its end face seats well in the spring seat as shown in the figure.

CAUTION:
Install the coil spring so that the end of spring is between the marks on the spring seat.

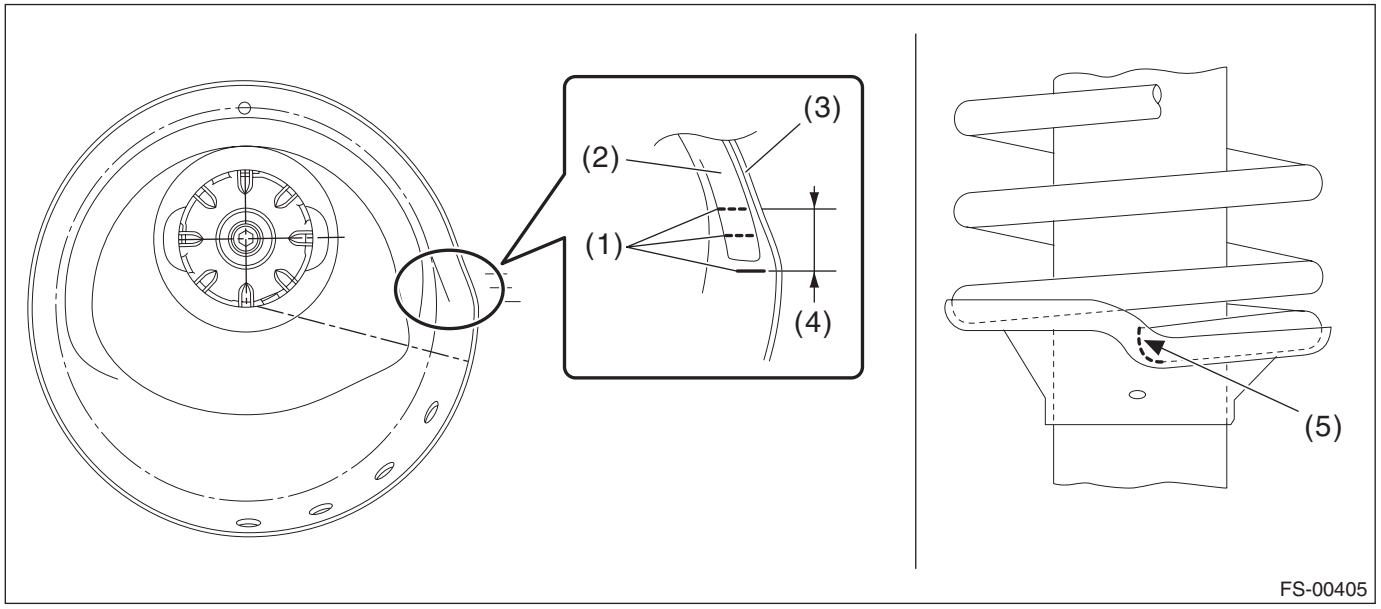

(1) Mark
(2) Spring
(3) Spring seat
(4) Install the spring within this area
(5) Coil spring end face

4) Install the dust cover and helper to the piston rod.

5) Pull the piston rod fully upward, and install the spring seat.

NOTE:
Position the upper spring seat as shown in the figure.

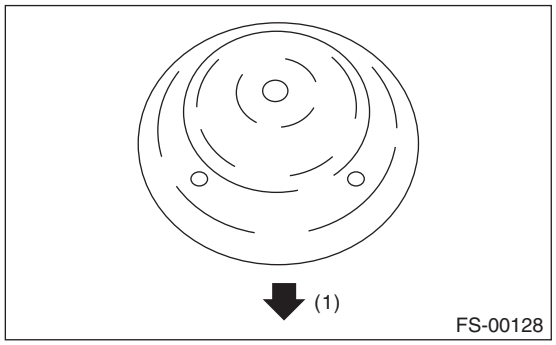

(1) Outside of body

6) Install the spacer and strut mount to the piston rod, and temporarily tighten a new self-locking nut.
7) Using a hexagon wrench to prevent strut rod from turning, tighten the new self-locking nut with ST.

PREPARATION TOOL:
ST: STRUT MOUNT SOCKET (20399AG000)

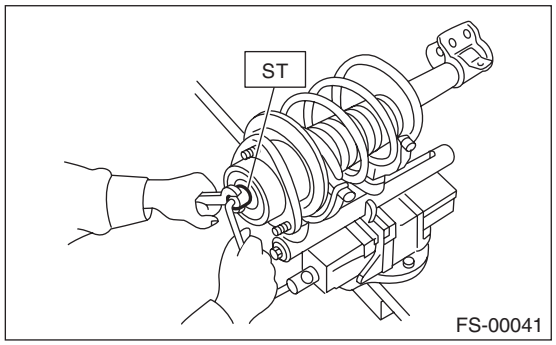

Tightening torque:
55 N·m (5.61 kgf-m, 40.6 ft-lb)

8) Loosen the coil spring compressor carefully.

E: INSPECTION

Check the removed part for wear, damage and cracks, and then repair or replace it if defective.

1. STRUT

1) Check for oil leaks.
2) Move the piston rod up and down to check that it operates smoothly without any hitch.
3) Check the piston rod for play as follows:
1. Fix the outer shell in place and fully extend the rod.
2. Set the dial gauge on the end of the rod L [10 mm (0.39 in)].
3. While applying a force of W [20 N (2 kgf, 4 lbf)] to the threaded part, read the dial gauge indication P_1.
4. Apply a force of 20 N (2 kgf, 4 lbf) from the opposite direction of "W", and then read the dial gauge indication P_2.

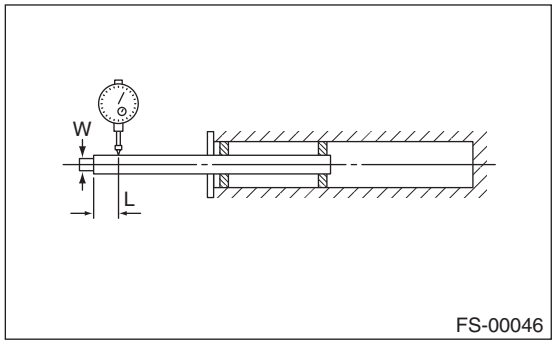

Play limit (P_1 + P_2): 0.8 mm (0.031 in)

4) Replace the strut if faulty is found in the inspection or limit value is exceeded.

2. STRUT MOUNT

Check the rubber part for deformation, cracks or deterioration, and then replace it with a new part if defective.

3. DUST COVER

If cracks or damage are found, replace it with a new part.

4. COIL SPRING

If a permanent strain is found, replace it with a new part.

5. HELPER

If major cracks or damage are found, replace it with a new part.

F: DISPOSAL

CAUTION:
- **Before handling struts, be sure to wear goggles to protect eyes from gas, oil and cutting powder.**
- **Do not disassemble the strut damper or throw into flames.**
- **When discarding gas filled struts, drill holes in them to purge the gas.**

1) Place the strut on a level surface with the piston rod fully expanded.
2) Using a 2 — 3 mm (0.08 — 0.12 in) dia. drill, make holes in areas shown in the figure.

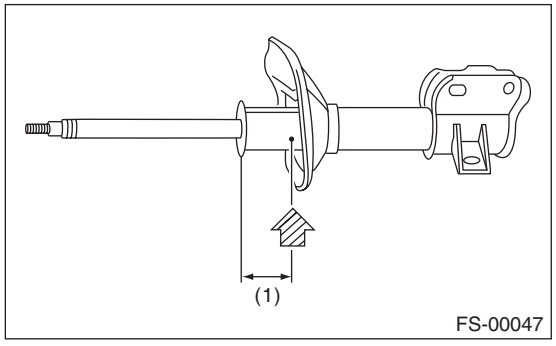

(1) 40 mm (1.57 in)

8. General Diagnostic Table

A: INSPECTION

1. IMPROPER VEHICLE POSTURE OR IMPROPER WHEEL ARCH HEIGHT

Possible cause	Corrective action
(1) Permanent distortion or damage of the coil spring	Replace.
(2) Rough operation of strut or shock absorber	Replace.
(3) Improper installation of strut or shock absorber	Replace with appropriate parts.
(4) Installation of the wrong coil spring	Replace with appropriate parts.

2. POOR RIDE COMFORT

1) Large rebound shock.
2) Rocking of the vehicle continues too long after running over bump and hump.
3) Excessive shock in bumping.

Possible cause	Corrective action
(1) Damaged coil spring	Replace.
(2) Overinflation of tires	Adjust.
(3) Improper wheel arch height	Replace the coil springs with new parts.
(4) Fault in operation of strut or shock absorber	Replace.
(5) Damage or deformation of strut mount or shock absorber mount	Replace.
(6) Unsuitable length (maximum or minimum) of strut or shock absorber	Replace with appropriate parts.
(7) Abnormal deformation or loss of bushing	Replace.
(8) Deformation or damage of helper in strut assembly or shock absorber	Replace.
(9) Oil leakage from the strut or shock absorber	Replace.

3. NOISE

Possible cause	Corrective action
(1) Wear or damage of strut or shock absorber component parts	Replace.
(2) Loosening of the suspension link installing bolt	Tighten to the specified torque.
(3) Deformation or loss of bushing	Replace.
(4) Unsuitable length (maximum or minimum) of strut or shock absorber	Replace with appropriate parts.
(5) Damaged coil spring	Replace.
(6) Wear or damage of the ball joint	Replace.
(7) Deformation of the stabilizer clamp	Replace.

REAR SUSPENSION

RS

Page

1. General Description 2
2. Wheel Alignment 9
3. Rear Stabilizer 10
4. Rear Trailing Link 11
5. Rear Sub Frame 16
6. Upper Arm 19
7. Rear Shock Absorber 20
8. Front Lateral Link 22
9. Rear Lateral Link 25
10. General Diagnostic Table 27

1. General Description

A: SPECIFICATION

Refer to “SPECIFICATIONS” in “FRONT SUSPENSION” section for rear suspension specifications. <Ref. to FS-2, SPECIFICATION, General Description.>

NOTE:
• Front toe-in, rear toe-in and front camber can be adjusted. Adjust if the value of toe-in or camber exceeds the tolerance range of the specification chart.
• Other items except for front toe-in, rear toe-in and front camber that are described in the specification chart cannot be adjusted. If other items exceed the tolerance range of the specification chart, check the suspension parts and connections for deformation. If defective, replace with new parts.

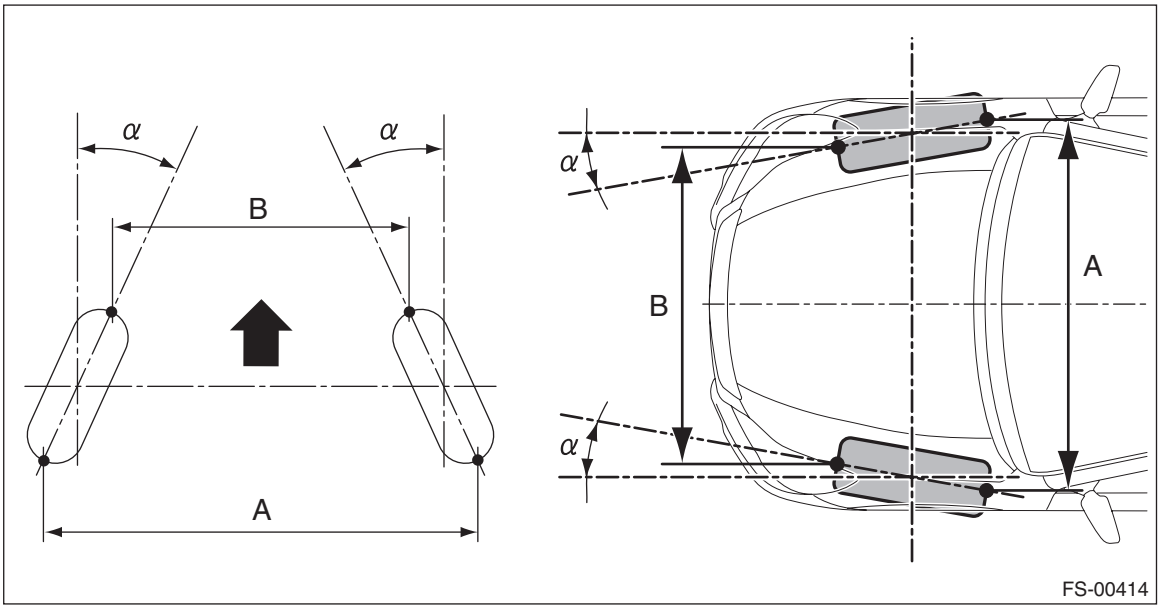

A – B = Positive: Toe-in, Negative: Toe-out

α = Individual toe angles

B: COMPONENT

1. REAR SUSPENSION

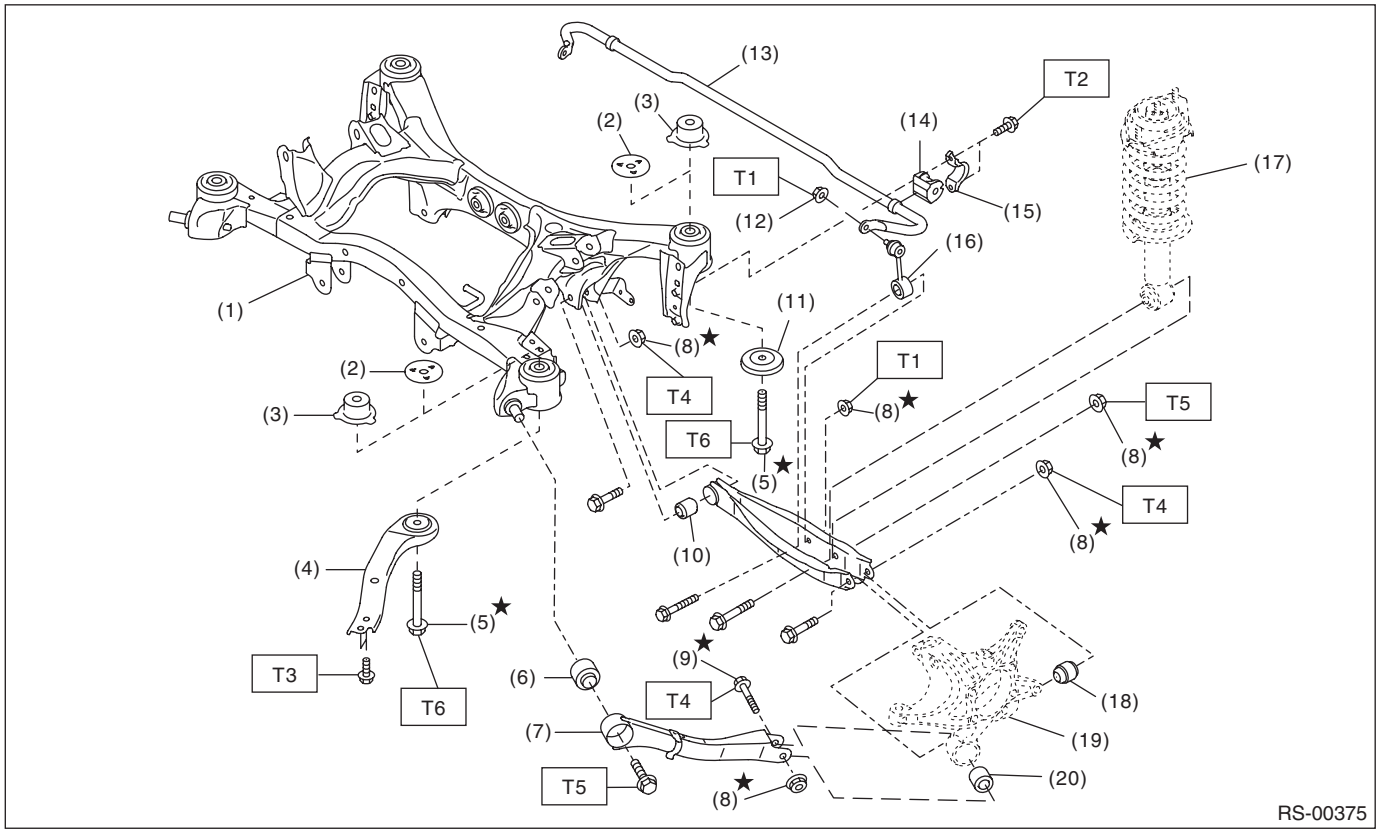

(1)	Rear sub frame ASSY	(11)	Rear sub frame stopper lower	***Tightening torque:N·m (kgf-m, ft-lb)***
(2)	Rear sub frame stopper upper (except for OUTBACK model)	(12)	Flange nut	***T1: 33 (3.36, 24.3)***
(3)	Rear sub frame stopper upper (OUTBACK model)	(13)	Rear stabilizer	***T2: 38 (3.87, 28.0)***
(4)	Front sub frame support plate	(14)	Stabilizer bushing	***T3: 70 (7.14, 51.6)***
(5)	Flange bolt A	(15)	Stabilizer clamp	***T4: 80 (8.16, 59)***
(6)	Trailing link bushing	(16)	Stabilizer link	***T5: 120 (12.24, 88.5)***
(7)	Trailing link	(17)	Rear shock absorber ASSY	***T6: 145 (14.79, 106.9)***
(8)	Self-locking nut	(18)	Rear axle housing bushing	
(9)	Flange bolt B	(19)	Rear axle housing	
(10)	Rear lateral link bushing	(20)	Trailing link rear bushing	

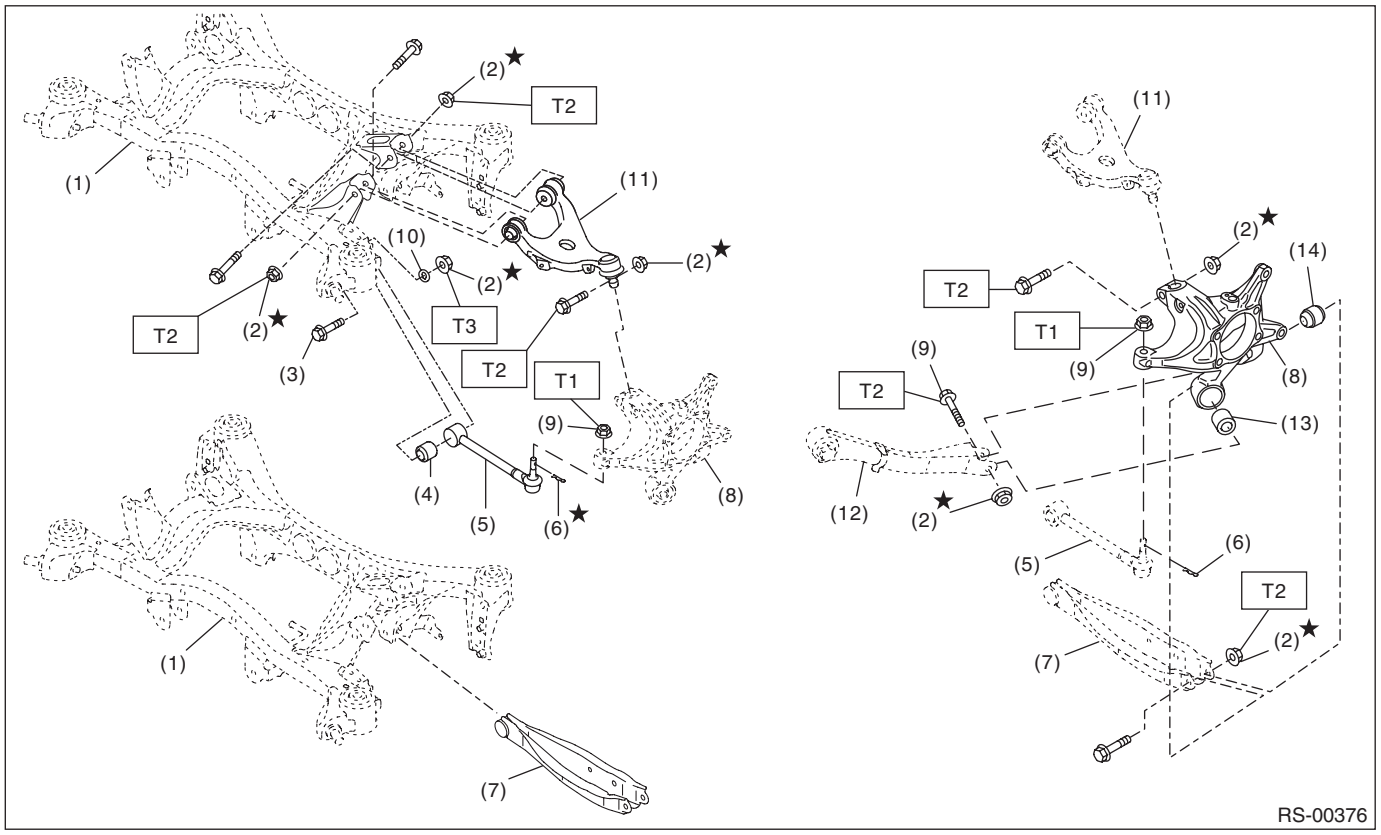

(1)	Rear sub frame ASSY	(8)	Rear axle housing
(2)	Self-locking nut	(9)	Flange nut
(3)	Adjusting bolt	(10)	Adjusting washer
(4)	Front lateral link bushing	(11)	Upper arm
(5)	Front lateral link	(12)	Trailing link
(6)	Snap pin	(13)	Trailing link bushing
(7)	Rear lateral link	(14)	Rear axle housing bushing

Tightening torque:N·m (kgf-m, ft-lb)

T1: 60 (6.12, 44.3)

T2: 80 (8.16, 59)

T3: 120 (12.24, 88.5)

2. REAR STRUT

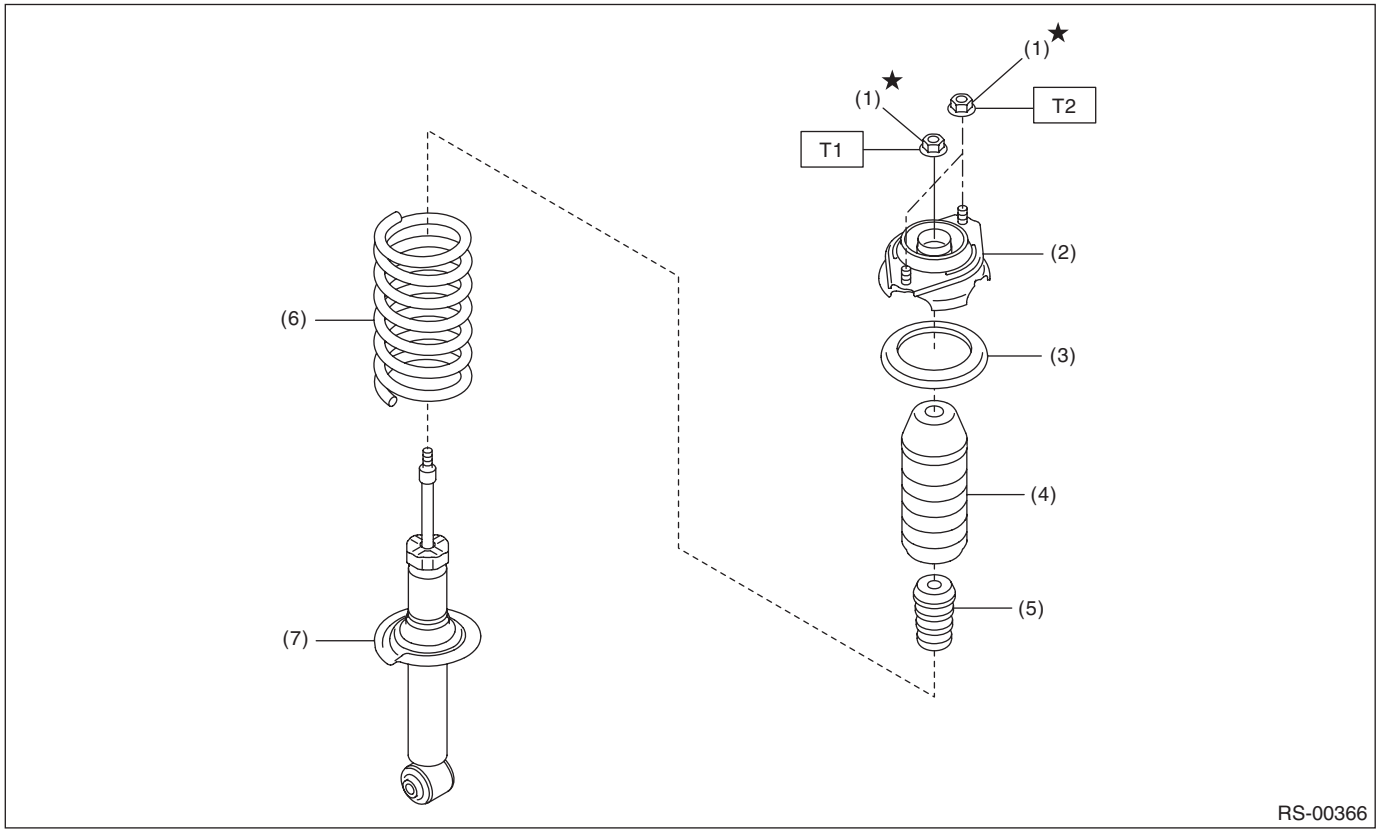

(1) Self-locking nut
(2) Upper rubber sheet
(3) Mount
(4) Dust cover
(5) Helper
(6) Coil spring
(7) Shock absorber

Tightening torque:N·m (kgf-m, ft-lb)
T1: 25 (2.55, 18.4)
T2: 30 (3.06, 22.1)

C: CAUTION

Please clearly understand and adhere to the following general precautions. They must be strictly followed to avoid minor or serious injury to the person doing the work or people in the area.

1. EACH PROCEDURE

• Wear appropriate work clothing, including a helmet, protective goggles and protective shoes when performing any work.
• Before disposing of shock absorbers, be sure to bleed the gas out completely. Also, do not expose to flames or fire.
• Before removal, installation or disassembly, be sure to clarify the failure. Avoid unnecessary removal, installation, disassembly and replacement.
• Use SUBARU genuine grease etc. or equivalent. Do not mix grease etc. of different grades or manufacturers.
• Before securing a part on a vise, place cushioning material such as wood blocks, aluminum plate, or cloth between the part and the vise.
• Be sure to tighten fasteners including bolts and nuts to the specified torque.
• Place shop jacks or rigid racks at the specified points.

2. OIL

When handling oil, adhere to the following to prevent unexpected accident.
• Prepare container and waste cloths when performing work which oil could possibly spill. If oil spills, wipe it off immediately to prevent from penetrating into floor or flowing outside, for environmental protection.
• Follow all government regulations concerning disposal of refuse when disposing.

D: PREPARATION TOOL

1. SPECIAL TOOL

ILLUSTRATION	TOOL NUMBER	DESCRIPTION	REMARKS
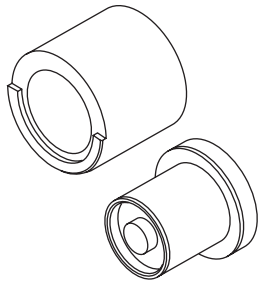 ST20099AE000	20099AE000	INSTALLER & REMOVER	Used for replacing the front lateral link bushing.
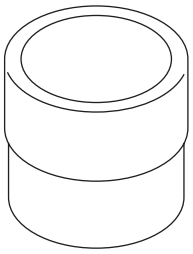 ST-499755602	499755602	PRESS	Used for replacing the rear trailing link bushing.
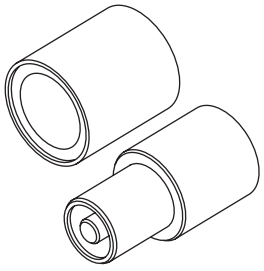 ST20099AE010	20099AE010	INSTALLER & REMOVER	Used for replacing the rear lateral link bushing.
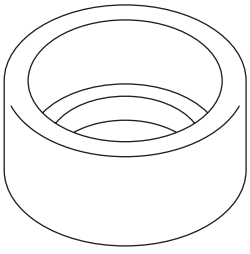 ST20299AG010	20299AG010	BASE	Used for replacing the rear trailing link bushing.

ILLUSTRATION	TOOL NUMBER	DESCRIPTION	REMARKS
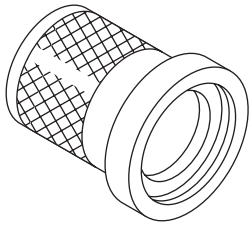 ST-899874100	899874100	INSTALLER	Used for replacing the rear trailing link bushing.
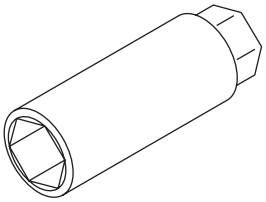 ST20399FG000	20399FG000	STRUT MOUNT SOCKET	• Used for removing and installing shock mount. • Used for checking torque of shock mount center nut.
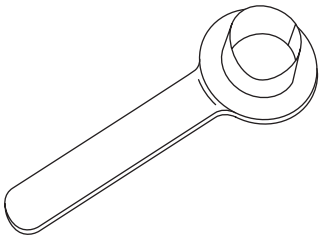 ST28099PA090	28099PA090	OIL SEAL PROTECTOR	• Used for installing the rear drive shaft to the rear differential. • For oil seal protection
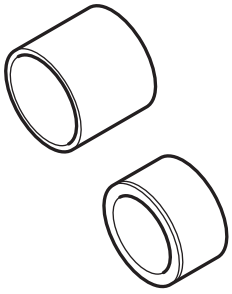 ST20099PA010	20099PA010	INSTALLER & REMOVER	• Used for replacing the bushing of the rear housing. • Used together with BUSHING REMOVER (20099FG000).
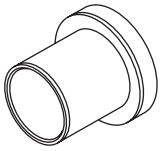 ST20099FG000	20099FG000	BUSHING REMOVER	• Used for replacing the bushing of the rear housing. • Used together with base part of INSTALLER & REMOVER (20099PA010).

2. GENERAL TOOL

TOOL NAME	REMARKS
Alignment tester	Used for measuring wheel alignment.
Toe-in gauge	Used for toe-in measurement.
Jack	Used for removing and installing suspension.
Bearing puller	Used for removing bushings.
Tie-rod end puller	Used for disconnecting the lateral link assembly - front.
Coil spring compressor	Used for disassembling and assembling shock absorber.

2. Wheel Alignment

A: INSPECTION

NOTE:
Measure and adjust the front and rear wheel alignment at a time. Refer to “Wheel Alignment” in FS section for measurement and adjustment of wheel alignment.

- Inspection: <Ref. to FS-9, INSPECTION, Wheel Alignment.>
- Adjustment: <Ref. to FS-14, ADJUSTMENT, Wheel Alignment.>

3. Rear Stabilizer

A: REMOVAL

1) Lift up the vehicle, and then remove the rear wheels.
2) Remove the rear stabilizer.
   (1) Remove left and right stabilizer links.
   (2) Detach the stabilizer clamp and remove the rear stabilizer.

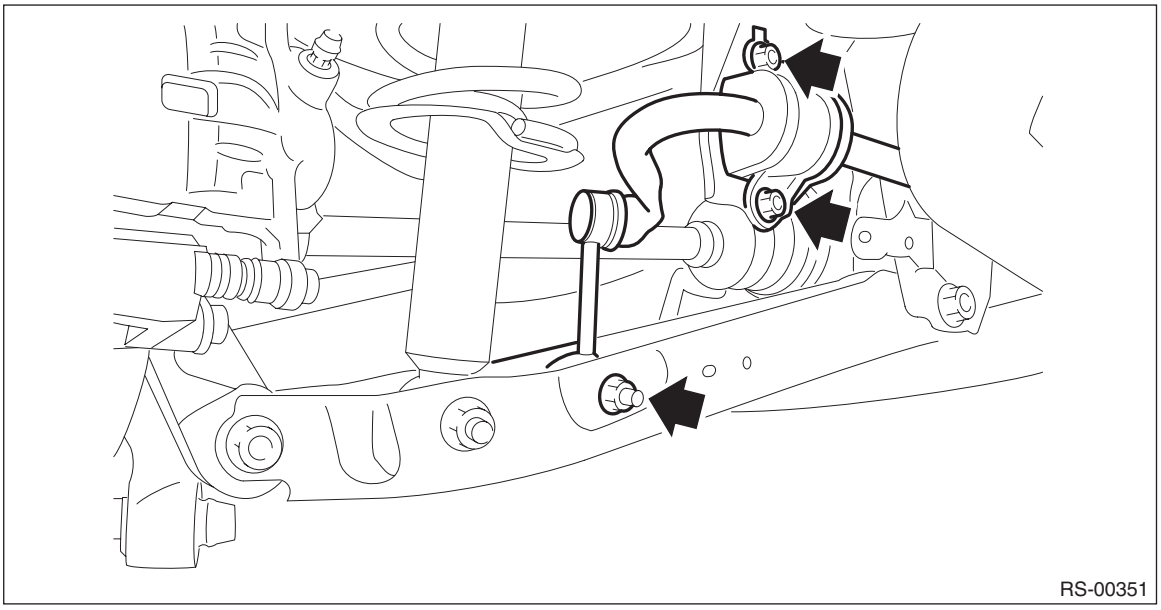

B: INSTALLATION

CAUTION:
- **Be sure to use a new flange nut and self-locking nut.**
- **Always tighten the bushing in the state where the vehicle is at curb weight and the wheels are in full contact with the ground.**
- **Perform installation with Anti-Walk Ring (c) and stabilizer bushing (b) fitted 6 mm (6.24 in) apart.**

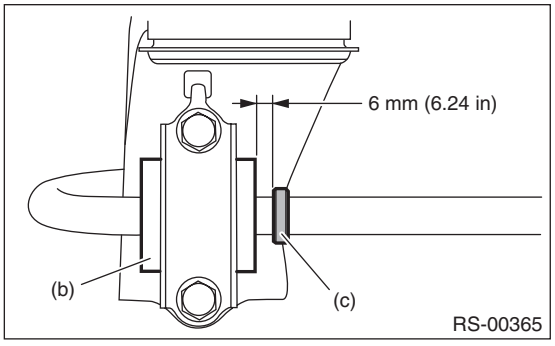

1) Before installation, inspect the following items and replace any faulty part with a new one.
- Check the bushing for abnormal cracks, fatigue or damage.
- Check the stabilizer link for damage.

2) Install each part in the reverse order of removal.

Tightening torque:
Stabilizer link: 33 N·m (3.36 kgf-m, 24.3 ft-lb)
Stabilizer clamp: 38 N·m (3.87 kgf-m, 28.0 ft-lb)

4. Rear Trailing Link

A: REMOVAL

1) Lift up the vehicle, and then remove the rear wheels.
2) Remove the trailing link.
   (1) Remove the bracket, and remove the parking brake cable from the guide (a).
   (2) Remove the bolts and nuts, and then remove the trailing link.

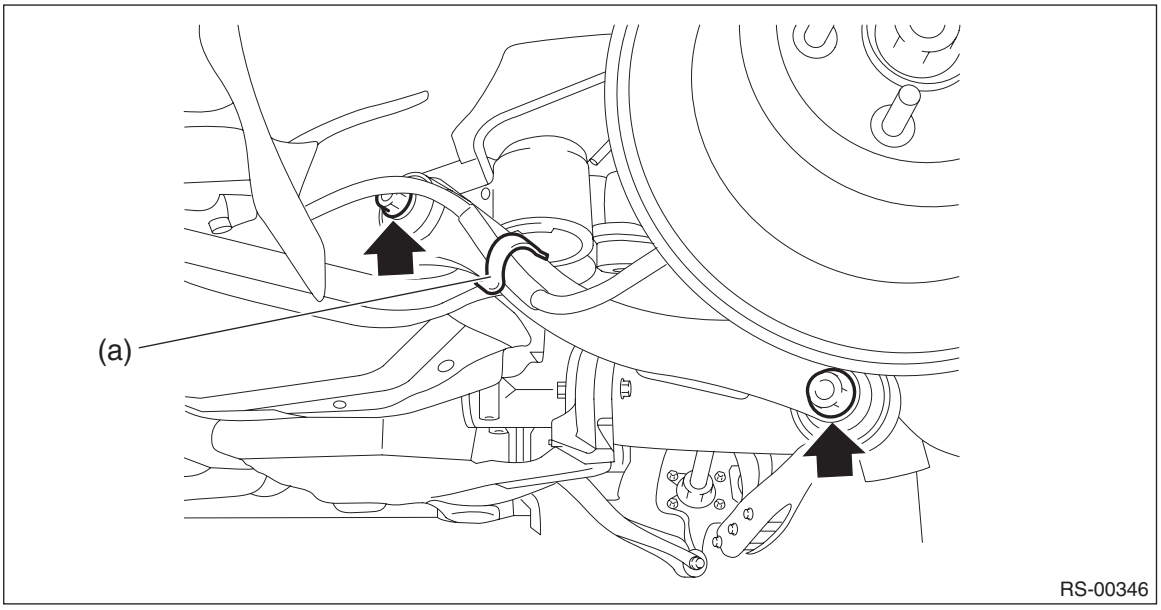

B: INSTALLATION

CAUTION:
- **Be sure to use a new self-locking nut.**
- **Always tighten the bushing in the state where the vehicle is at curb weight and the wheels are in full contact with the ground.**

Install each part in the reverse order of removal.

Tightening torque:
Trailing link — rear sub frame: 120 N·m (12.24 kgf-m, 88.5 ft-lb)
Trailing link — rear axle housing: 80 N·m (8.16 kgf-m, 59 ft-lb)

C: DISASSEMBLY

1. TRAILING LINK BUSHING

Using the ST, push out the bushing.

PREPARATION TOOL:
ST-A: INSTALLER (899874100)
ST-B: PRESS (499755602)

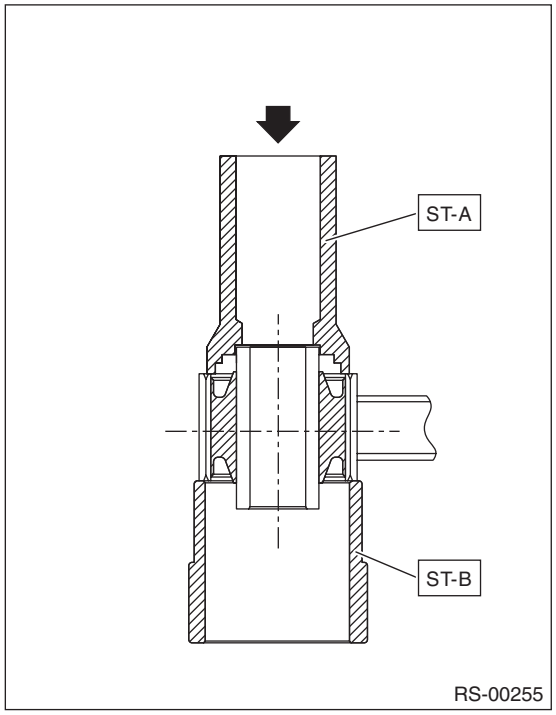

2. REAR AXLE HOUSING BUSHING

1) Remove the rear axle housing. <Ref. to DS-30, REMOVAL, Rear Axle.>
2) Using the ST and a hydraulic press, push out the bushing.

PREPARATION TOOL:
ST1: BUSHING REMOVER (20099FG000)
ST2: INSTALLER & REMOVER (BASE) (20099PA010)

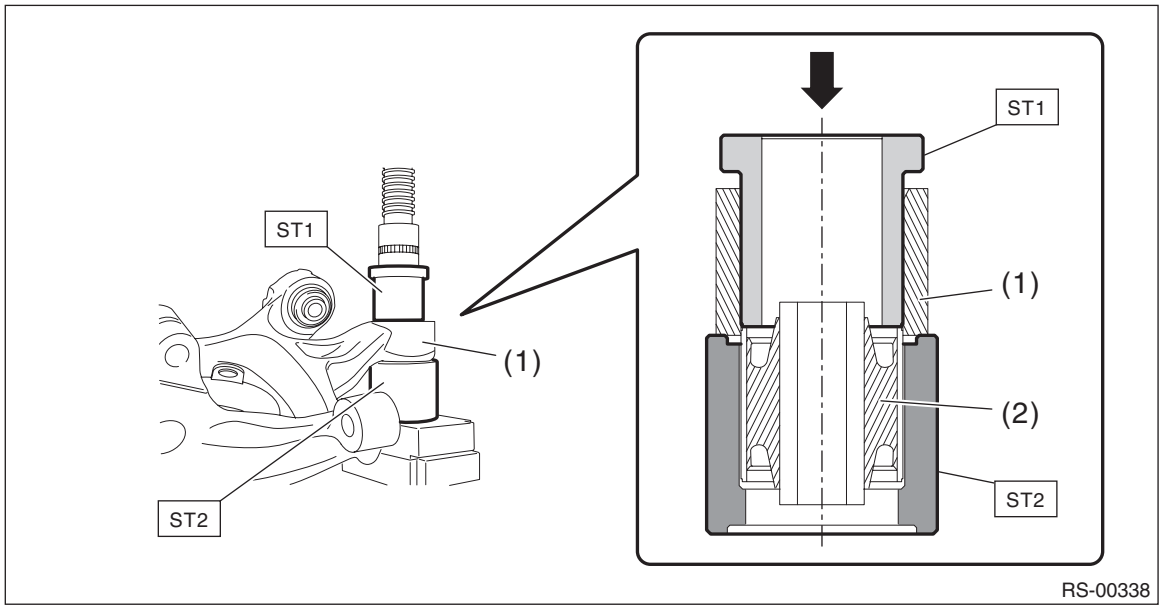

(1) Rear axle housing (2) Bushing

D: ASSEMBLY

1. TRAILING LINK BUSHING

1) Before assembly, inspect the following items and replace any faulty part with a new one.
- Perform visual check for damage or bend on the trailing link.
- Visually check the bushing for abnormal cracks, fatigue or damage.

2) Using the ST-A and ST-B, press-fit the bushing.

CAUTION:
Make sure to press the bushing straight in.

PREPARATION TOOL:
ST-A: INSTALLER (899874100)
ST-B: PRESS (499755602)

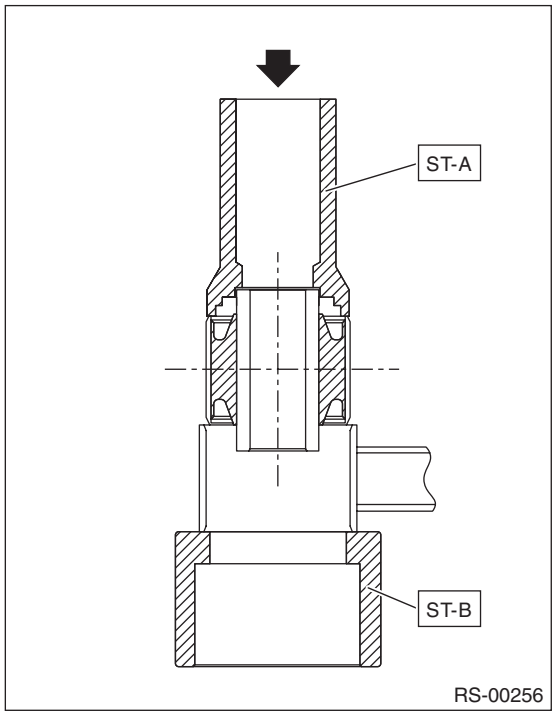

2. REAR AXLE HOUSING BUSHING

1) Before assembly, inspect the following items and replace any faulty part with a new one.
- Perform visual check for damage or bend on the trailing link.
- Visually check the bushing for abnormal cracks, fatigue or damage.

2) Press-fit the bushing using ST and the hydraulic press.

CAUTION:
Make sure to press the bushing straight in.

PREPARATION TOOL:
ST1: BUSHING REMOVER (20099FG000)
ST2: INSTALLER & REMOVER (BASE) (20099PA010)

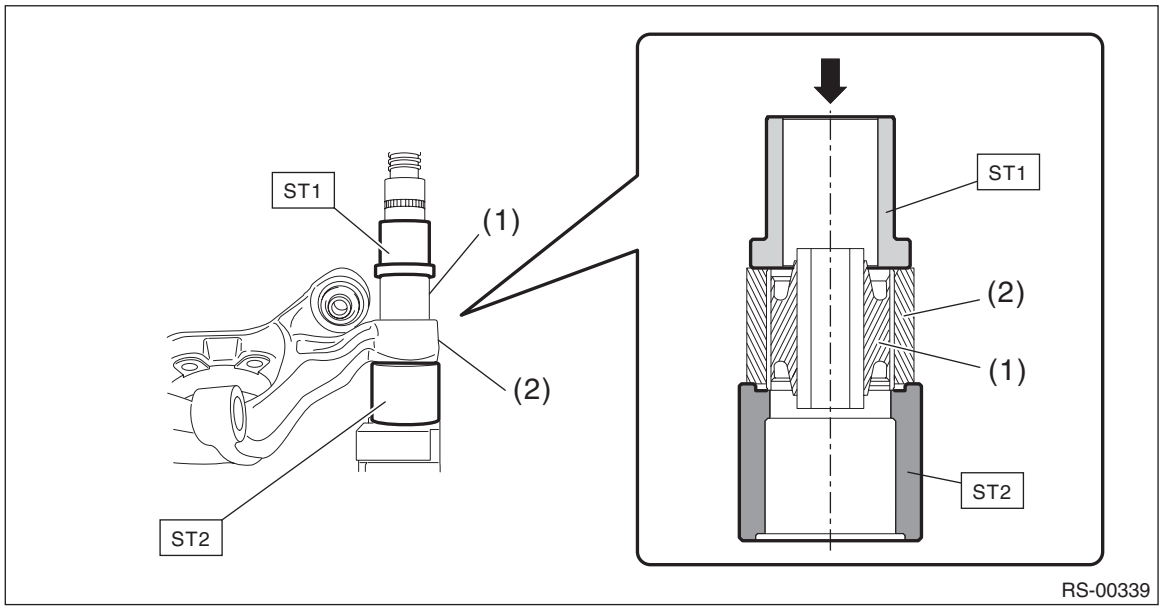

(1) Bushing (2) Rear axle housing

5. Rear Sub Frame

A: REMOVAL

1) Disconnect the ground cable from battery.
2) Lift up the vehicle, and then remove the rear wheels.
3) Remove the propeller shaft. <Ref. to DS-10, REMOVAL, Propeller Shaft.>
4) Remove the rear disc brake caliper from the rear axle housing.
   (1) Remove the bolt from the brake hose bracket.
   (2) Remove the mounting bolts, and then remove the rear disc brake caliper.

   (3) Prepare wiring harnesses etc. to be discarded, and suspend the rear disc brake caliper from the shock absorber with the harnesses.

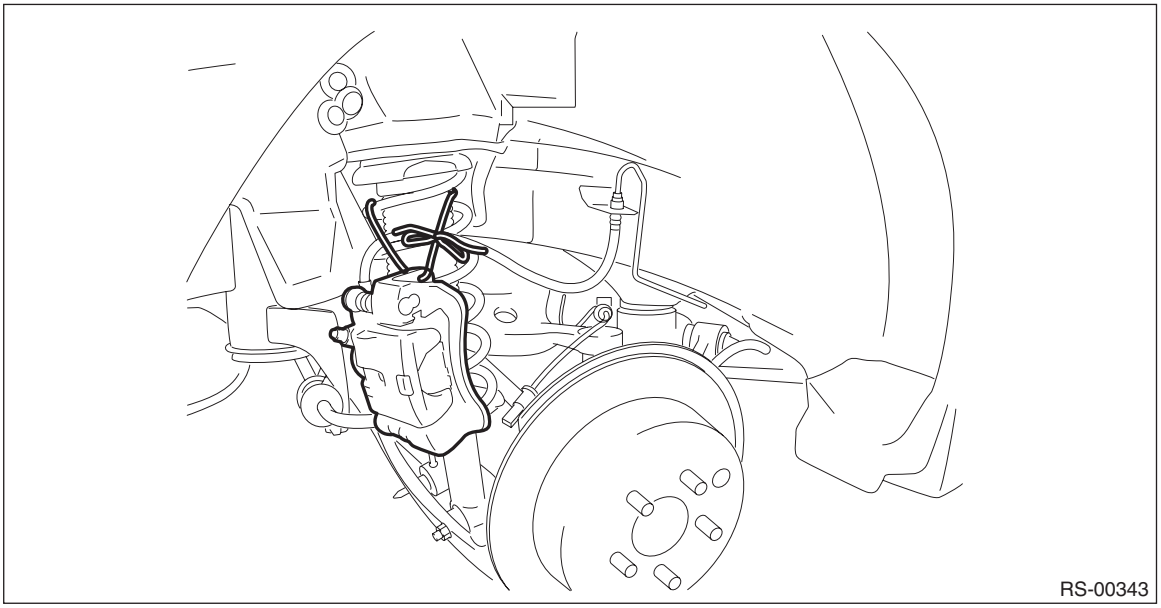

5) Remove the rear parking brake cable from the parking brake assembly. <Ref. to PB-10, REMOVAL, Parking Brake Assembly (Rear Disc Brake).>

6) Remove the rear ABS wheel speed sensor from the rear axle housing.

CAUTION:
- **Be careful not to damage the sensor.**
- **Do not apply excessive force to the sensor harness.**
- **Leave the sensor harness clamp (white arrow) on the vehicle side.**

(1) Remove the bolts, and remove the rear ABS wheel speed sensor.
(2) Remove the rear ABS wheel speed sensor bracket from the upper arm.

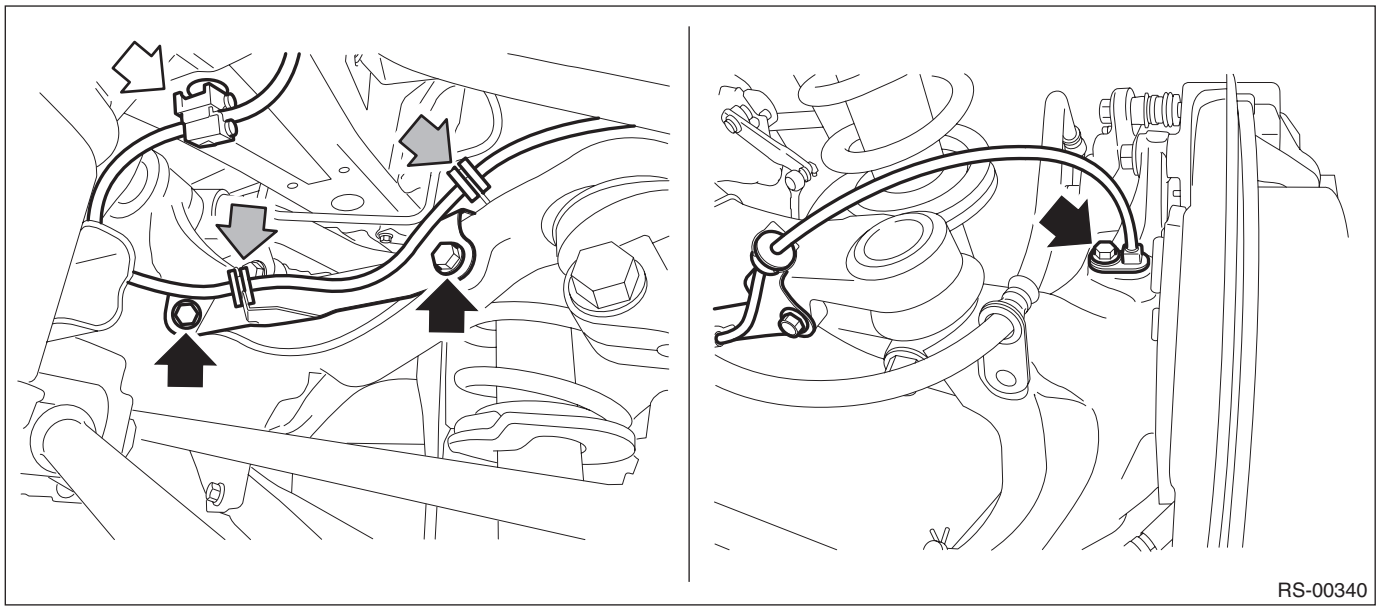
RS-00340

7) Remove the rear sub frame assembly.
(1) Remove the shock absorber lower bolt.

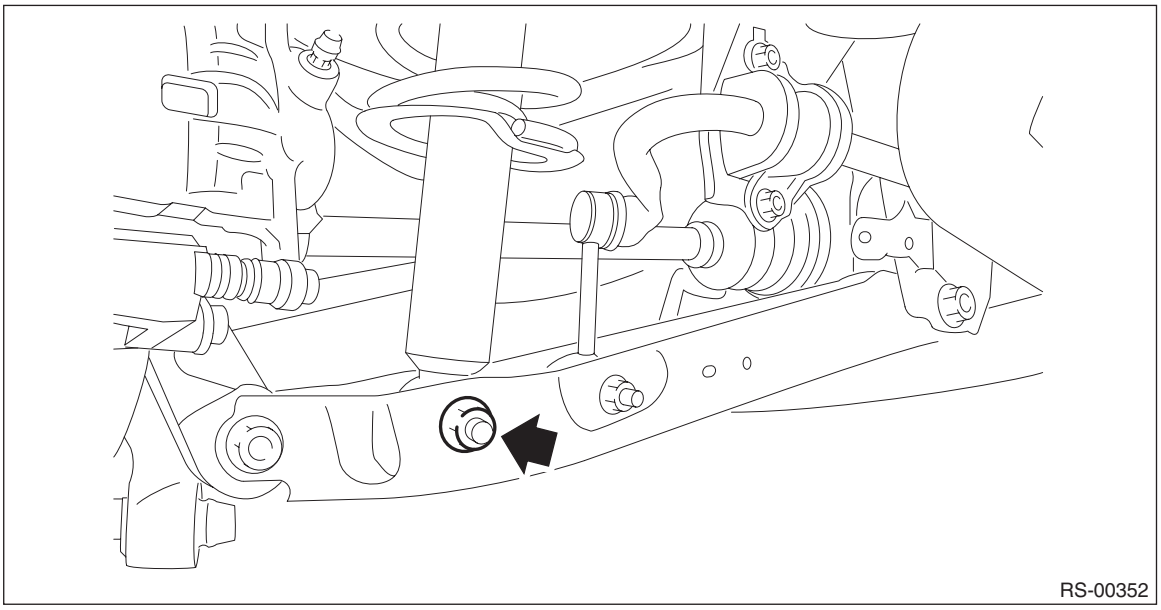
RS-00352

(2) Support the sub frame assembly using a transmission jack.

(3) Remove the bolts, then remove the rear sub frame assembly.

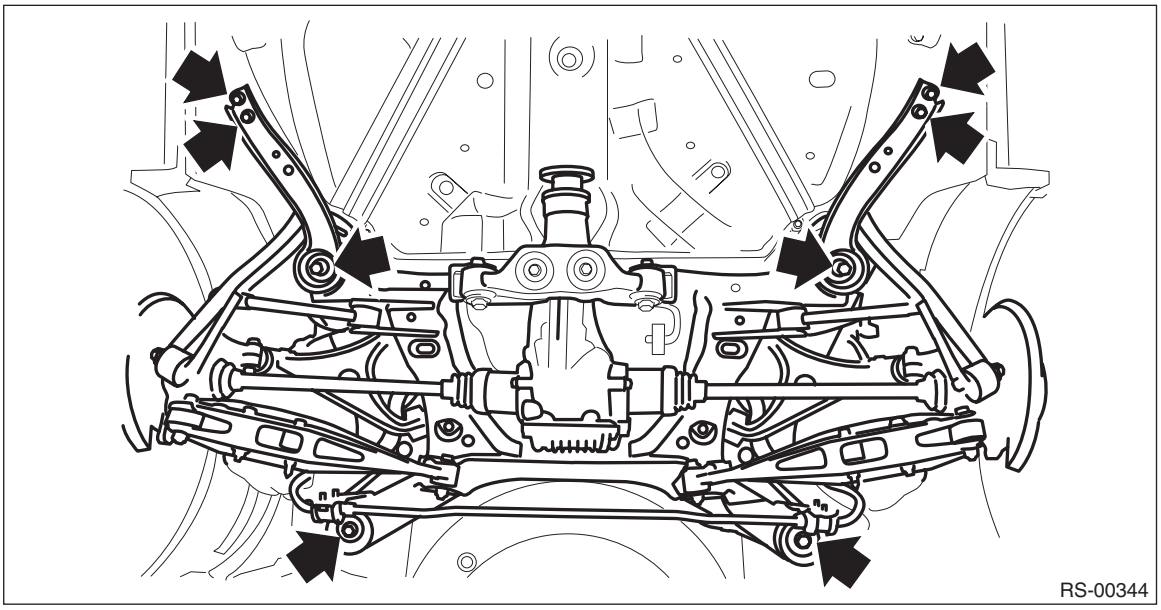

8) As necessary, remove each part from the rear sub frame assembly.

B: INSTALLATION

CAUTION:
- **Be sure to use a new self-locking nut.**
- **Always tighten the bushing in the state where the vehicle is at curb weight and the wheels are in full contact with the ground.**

1) Check the removed parts for wear, damage and crack, and repair or replace them if faulty.
2) Install each part in the reverse order of removal.

Tightening torque:
Refer to "COMPONENT" of "General Description" for the tightening torque. <Ref. to RS-3, COMPONENT, General Description.>

3) Bleed air from brake system.
4) Inspect the wheel alignment and adjust if necessary. <Ref. to FS-9, INSPECTION, Wheel Alignment.>

C: INSPECTION

Check the removed parts for wear, damage and crack, and repair or replace them if faulty.

6. Upper Arm

A: REMOVAL

1) Remove the rear sub frame assembly. <Ref. to RS-16, REMOVAL, Rear Sub Frame.>
2) Remove the bolts, then remove the upper arm from the rear sub frame assembly.

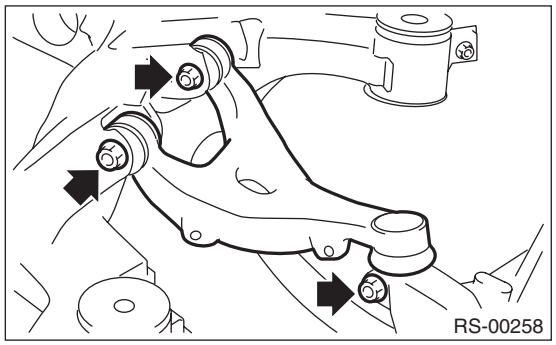

B: INSTALLATION

CAUTION:
- **Use a new self-locking nut.**
- **Always tighten the bushing when the arm is positioned in the state where the vehicle is at curb weight and the wheels are in full contact with the ground.**

1) Before installation, inspect the following items and replace any faulty part with a new one.
- Visually check the upper arm for damage and deformation.
- Visually check the bushing for abnormal cracks, fatigue or damage.
- Visually check the dust cover on the ball joint for abnormal cracks, fatigue or damage.

2) Install each part in the reverse order of removal.
3) Inspect the wheel alignment and adjust if necessary. <Ref. to FS-9, INSPECTION, Wheel Alignment.>

Tightening torque:
Upper arm — rear sub frame: 80 N·m (8.16 kgf-m, 59.0 ft-lb)
Upper arm — rear housing: 80 N·m (8.16 kgf-m, 59.0 ft-lb)
Rear ABS vehicle speed sensor bracket: 7.5 N·m (0.76 kgf-m, 5.5 ft-lb)

7. Rear Shock Absorber

A: REMOVAL

1) Remove the trunk trim panel assembly-side (sedan model) or rear floor mat (OUTBACK model).
- Sedan model: <Ref. to EI-127, TRUNK ROOM TRIM, REMOVAL, Trunk Room Trim.>
- OUTBACK model

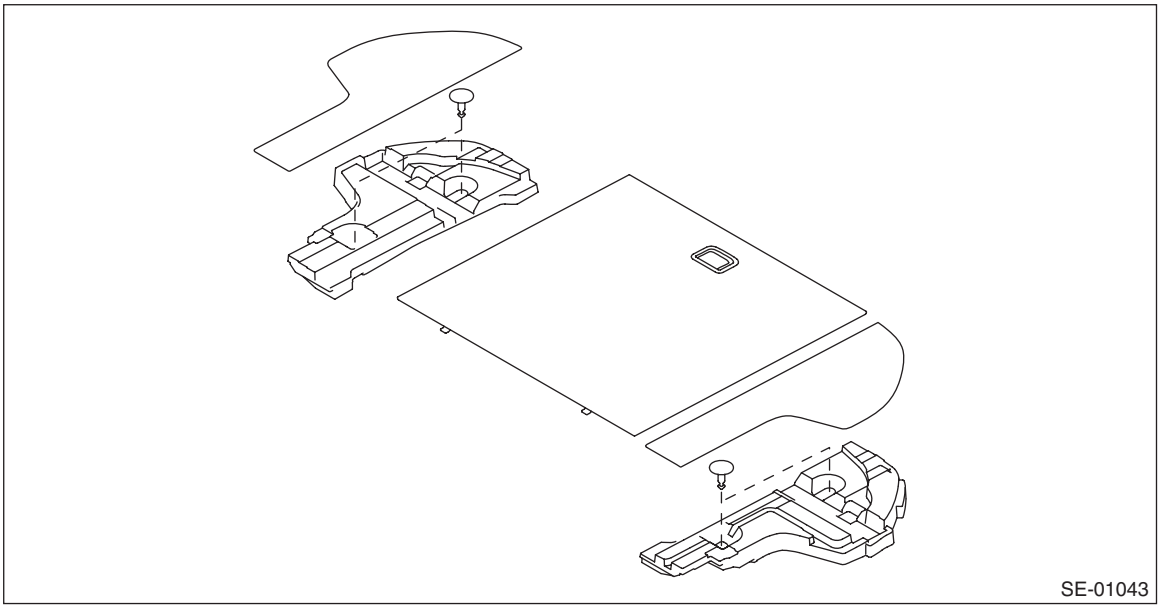

2) Lift up the vehicle, and then remove the rear wheels.
3) Remove the bolts and nuts and lower the rear lateral link.
   (1) Remove the nut and disconnect the rear stabilizer link.
   (2) Remove the shock absorber lower bolt.
   (3) Disconnect the rear lateral link.

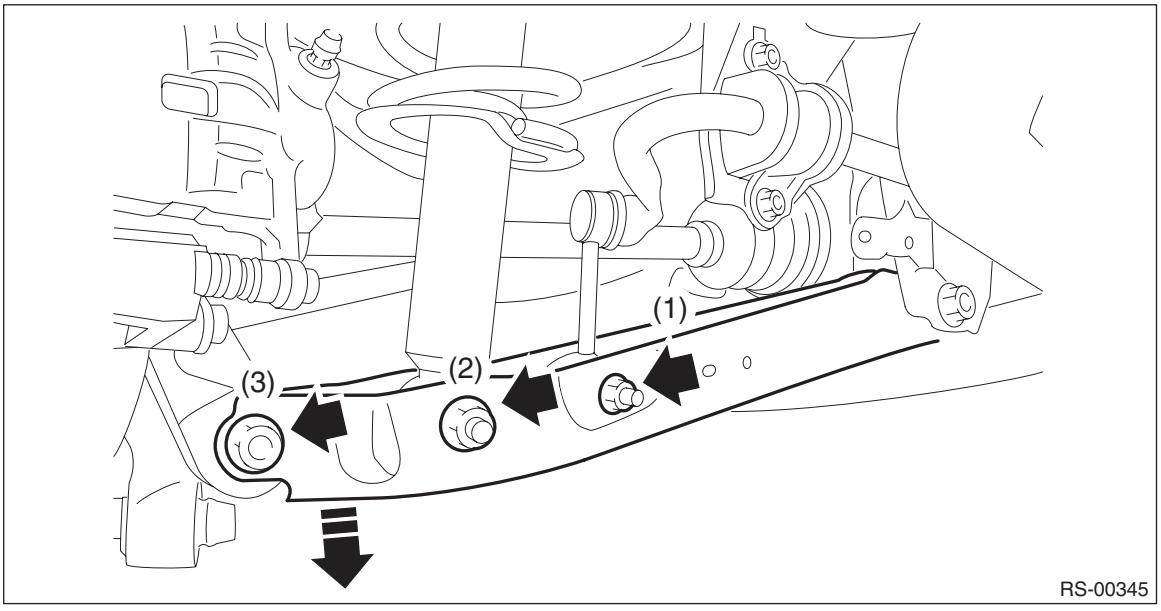

4) Remove the shock absorber mount nut.

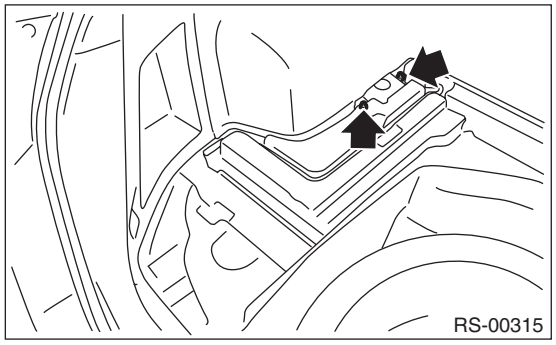

5) Remove the shock absorber.

B: INSTALLATION

CAUTION:
• Be sure to use a new self-locking nut.
• Always tighten the bushing in the state where the vehicle is at curb weight and the wheels are in full contact with the ground.

1) Install each part in the reverse order of removal.

Tightening torque:
Refer to "COMPONENT" of "General Description" for the tightening torque. <Ref. to RS-3, COMPONENT, General Description.>

2) Check the wheel alignment and adjust it if necessary. <Ref. to FS-9, INSPECTION, Wheel Alignment.>

C: DISASSEMBLY

Refer to "Front Strut" for disassembly procedure. <Ref. to FS-42, DISASSEMBLY, Front Strut.>

D: ASSEMBLY

Refer to "Front Strut" for assembly procedures. <Ref. to FS-43, ASSEMBLY, Front Strut.>

E: INSPECTION

Refer to "Front Strut" for inspection procedures. <Ref. to FS-45, INSPECTION, Front Strut.>

F: DISPOSAL

CAUTION:
• Before handling the shock absorber, be sure to wear goggles to protect eyes from gas, oil and cutting powder.
• Do not disassemble the shock absorber or place it into a fire.
• Drill a hole into shock absorbers in case of discarding shock absorbers filled with gas.

1) Place the shock absorber on a level surface with the piston rod fully expanded.
2) Make a hole into the specified position 30 mm (1.18 in) deep using a drill with 2 — 3 mm (0.08 — 0.12 in) diameter.

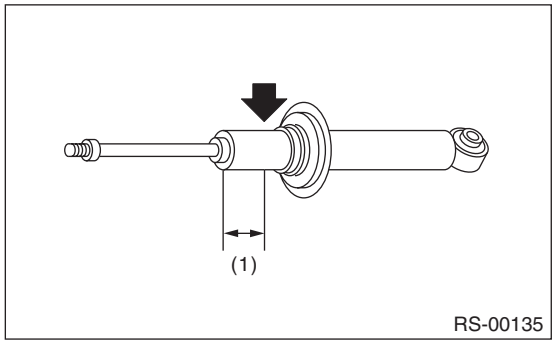

(1) 40 mm (1.57 in)

8. Front Lateral Link

A: REMOVAL

1) Lift up the vehicle, and then remove the rear wheels.
2) Remove the trailing link.
   (1) Remove the bracket, and remove the parking brake cable from the guide (a).
   (2) Remove the bolts and nuts, and then remove the trailing link.

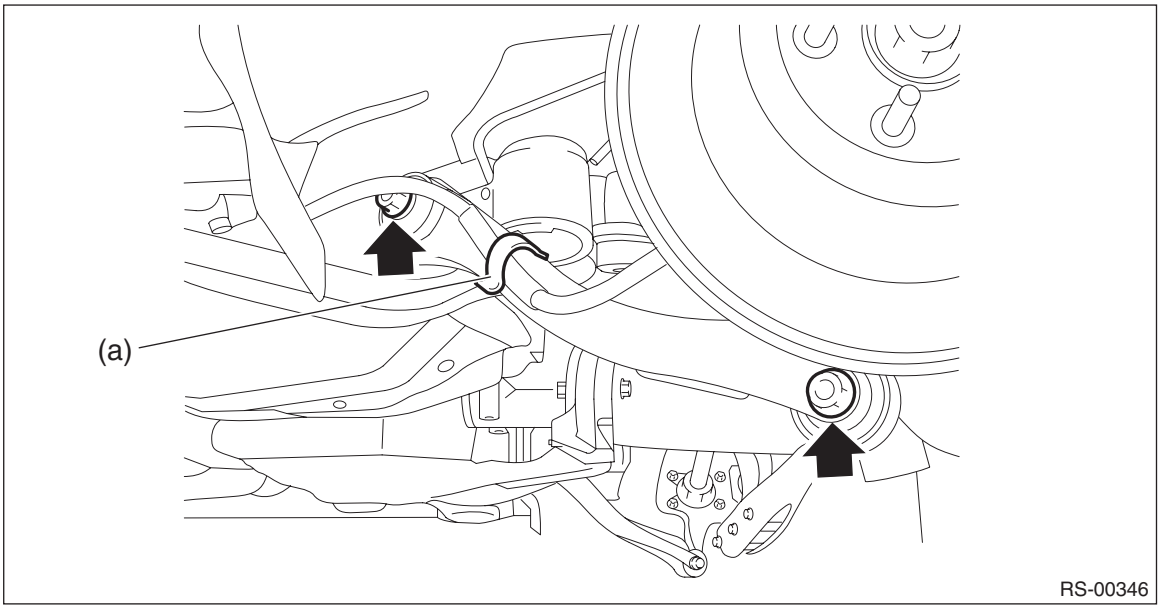

3) Remove the front lateral link.
   (1) Remove the snap pin (a) and nut (b).
   (2) Using a puller, remove the ball joint.

PREPARATION TOOL:
Tie-rod end puller

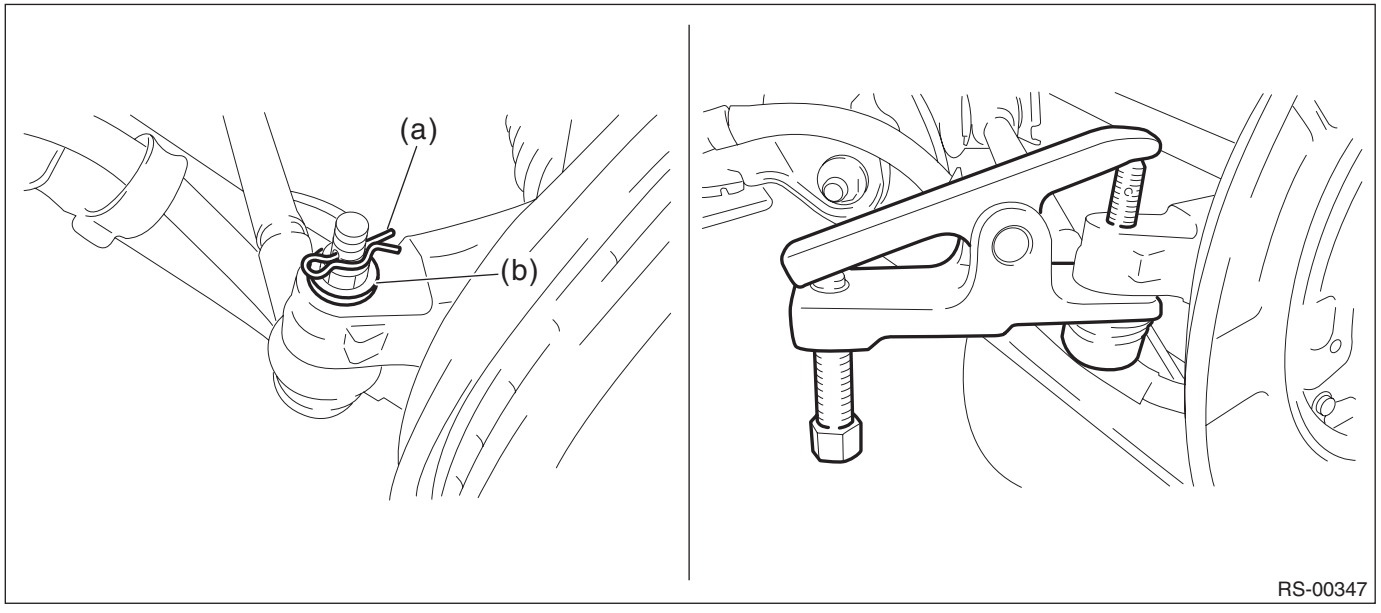

   (3) Scribe an alignment mark on the front lateral link adjusting bolt and rear sub frame.

(4) Remove the adjusting bolt, and remove the front lateral link.

CAUTION:
When removing the adjusting bolt, make sure to fix the bolt head in place when loosening the nut.

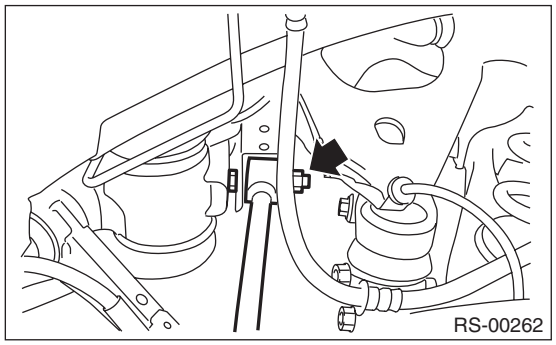

B: INSTALLATION

CAUTION:
- **Be sure to use a new self-locking nut.**
- **Always tighten the bushing in the state where the vehicle is at curb weight and the wheels are in full contact with the ground.**

1) Before installation, inspect the following items and replace any faulty part with a new one.
- Visually check the front lateral link for damage and deformation.
- Visually check the bushing for abnormal cracks, fatigue or damage.
- Visually check the dust cover on the ball joint for abnormal cracks, fatigue or damage.

2) Install each part in the reverse order of removal.

Tightening torque:
Front lateral link — sub frame: 120 N·m (12.24 kgf-m, 88.5 ft-lb)
Front lateral link — rear axle housing: 60 N·m (6.12 kgf-m, 44.3 ft-lb)

3) Inspect the wheel alignment and adjust if necessary. <Ref. to FS-9, INSPECTION, Wheel Alignment.>

C: DISASSEMBLY

Using the ST, push out the bushing.

PREPARATION TOOL:
ST-A & ST-B: INSTALLER & REMOVER (20299AE000)

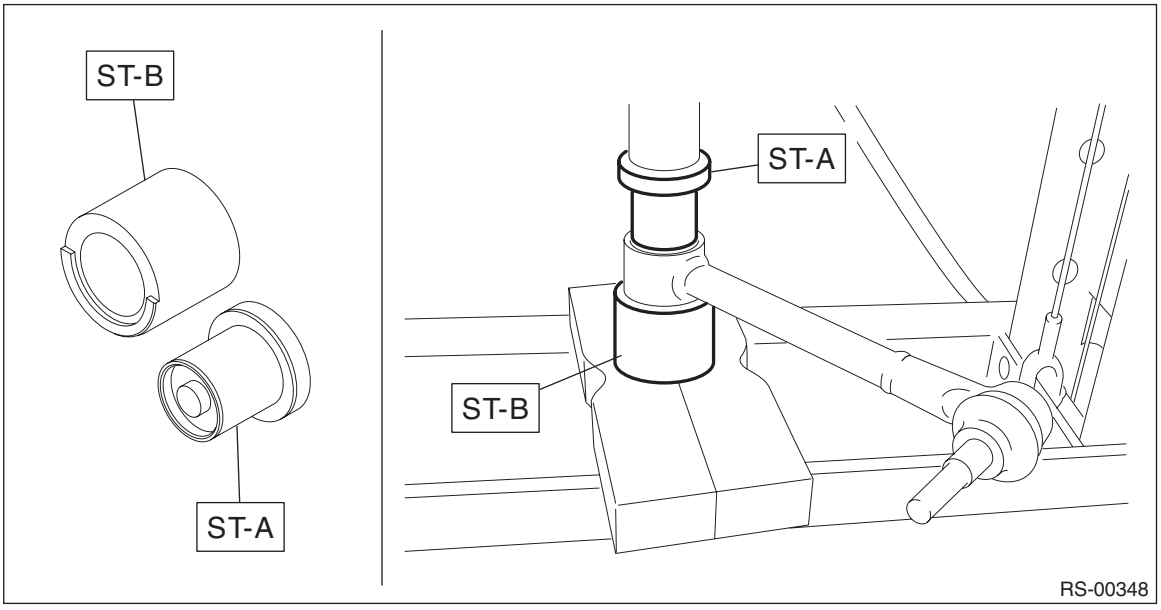

D: ASSEMBLY

1) Before assembly, inspect the following items and replace any faulty part with a new one.
- Visually check the front lateral link for damage and deformation.
- Visually check the bushing for abnormal cracks, fatigue or damage.
- Visually check the dust cover on the ball joint for damage.

2) Using the ST, press the bushing into place.

CAUTION:
Make sure to press the bushing straight in.

PREPARATION TOOL:
ST-A & ST-B: INSTALLER & REMOVER (20299AE000)

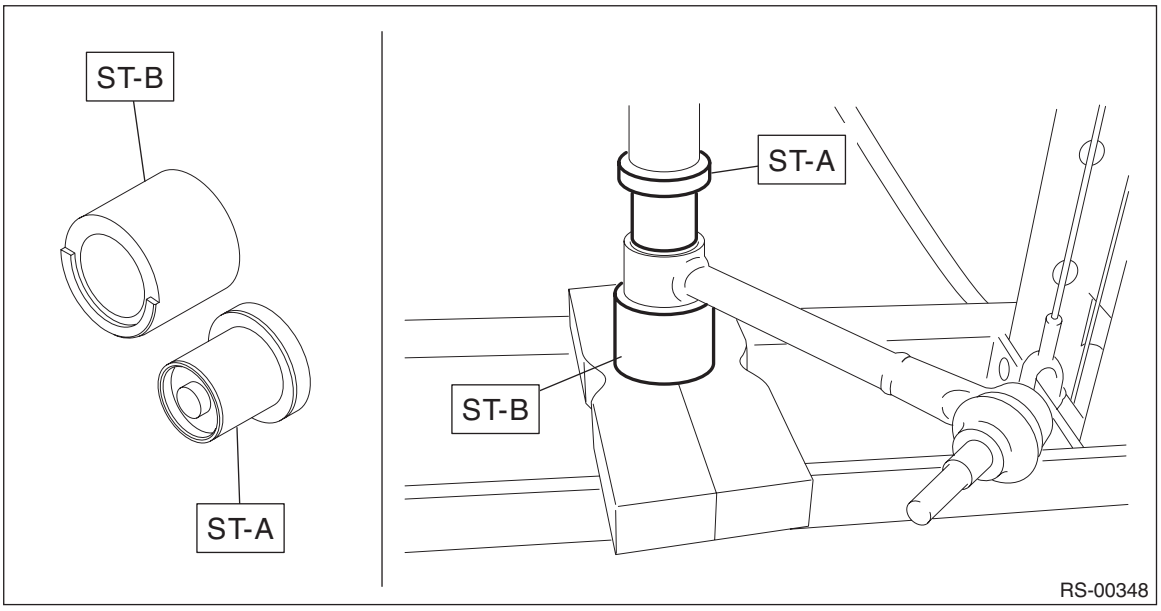

9. Rear Lateral Link

A: REMOVAL

1) Lift up the vehicle, and then remove the rear wheels.
2) Remove the bolts and nuts and lower the rear lateral link.
   (1) Remove the nut and disconnect the rear stabilizer link.
   (2) Remove the shock absorber lower bolt.
   (3) Disconnect the rear lateral link.

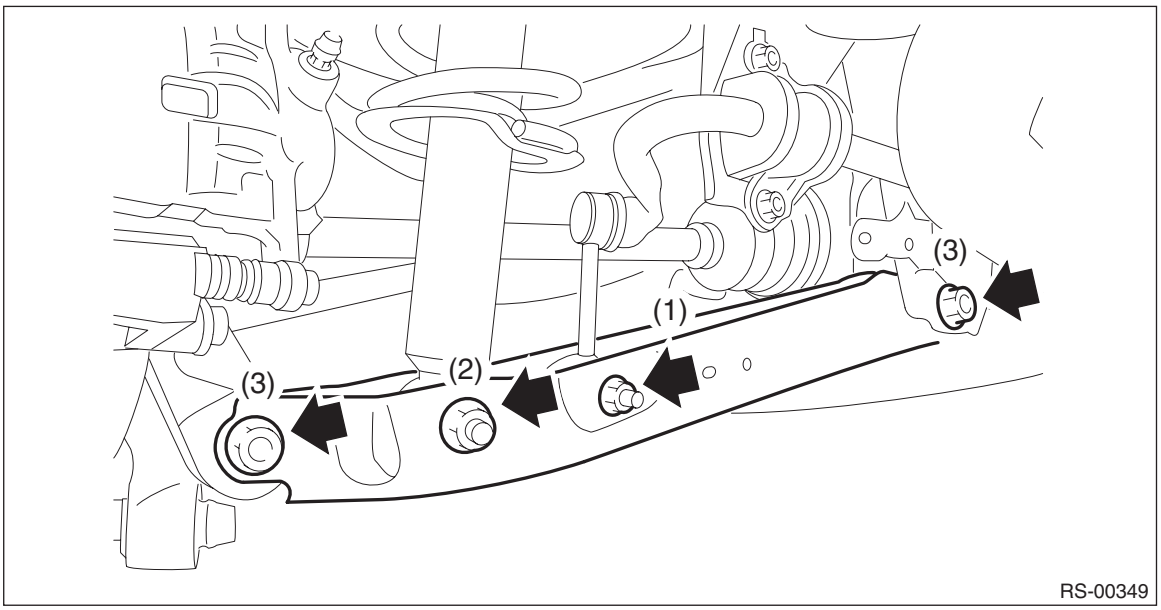

B: INSTALLATION

CAUTION:
- **Be sure to use a new self-locking nut.**
- **Always tighten the bushing in the state where the vehicle is at curb weight and the wheels are in full contact with the ground.**

1) Before installation, inspect the following items and replace any faulty part with a new one.
- Visually check the rear lateral link for damage and deformation.
- Visually check the bushing for abnormal cracks, fatigue or damage.

2) Install each part in the reverse order of removal.

Tightening torque:
Rear lateral link: 80 N·m (8.16 kgf-m, 59.0 ft-lb)
Shock absorber: 80 N·m (8.16 kgf-m, 59.0 ft-lb)
Stabilizer link: 33 N·m (3.36 kgf-m, 24.3 ft-lb)

3) Inspect the wheel alignment and adjust if necessary. <Ref. to FS-9, INSPECTION, Wheel Alignment.>

C: DISASSEMBLY

Using the ST, push out the bushing.

PREPARATION TOOL:
ST-A & ST-B: INSTALLER & REMOVER (20299AE010)

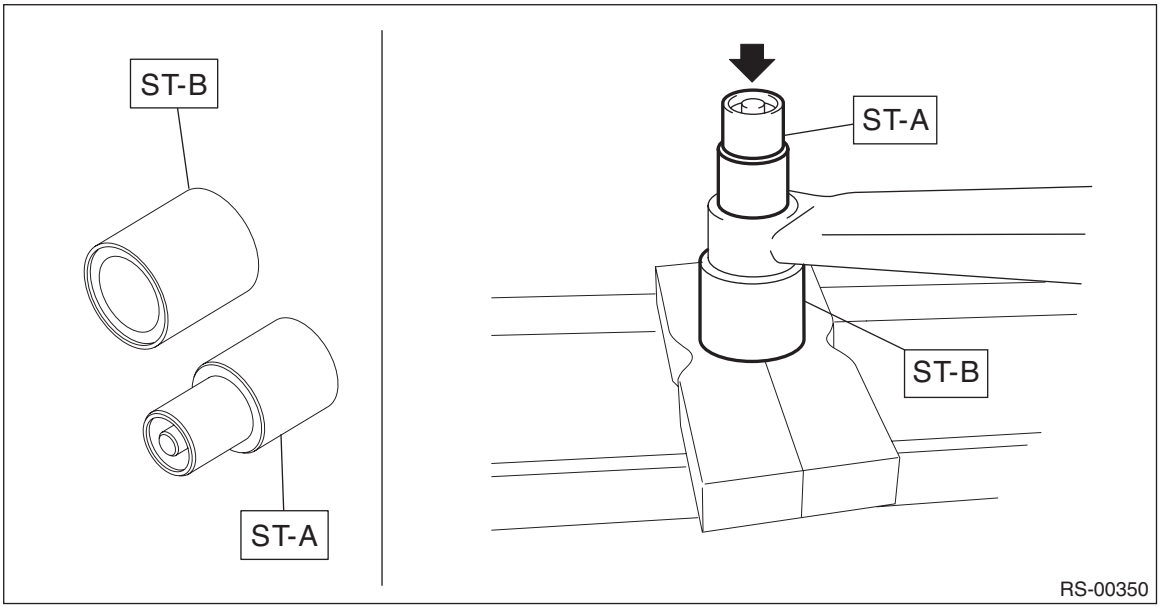

D: ASSEMBLY

1) Before assembly, inspect the following items and replace any faulty part with a new one.
- Visually check the rear lateral link for damage and deformation.
- Visually check the bushing for abnormal cracks, fatigue or damage.

2) Using the ST, press the bushing into place.

PREPARATION TOOL:
ST-A & ST-B: INSTALLER & REMOVER (20299AE010)

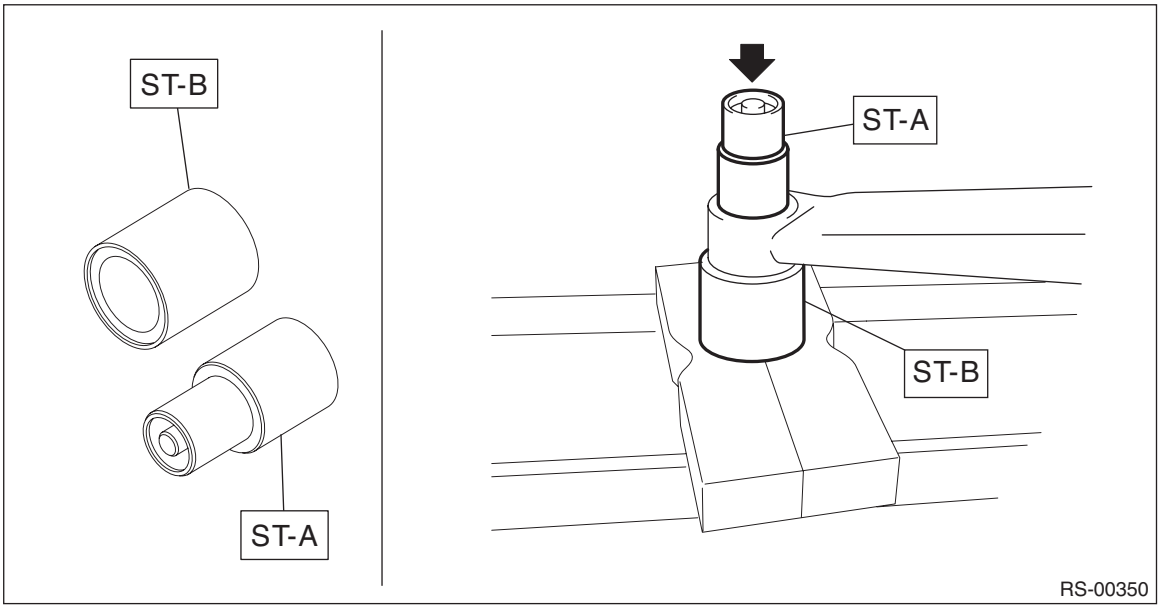

10.General Diagnostic Table

A: INSPECTION

1. IMPROPER VEHICLE POSTURE OR IMPROPER WHEEL ARCH HEIGHT

Possible cause	Corrective action
(1) Permanent distortion or damaged coil spring	Replace.
(2) Rough operation of shock absorber	Replace.
(3) Installation of the wrong shock absorber	Replace with proper parts.
(4) Installation of the wrong coil spring	Replace with proper parts.

2. POOR RIDE COMFORT

1) Large rebound shock
2) Rocking of the vehicle continues too long after running over bump and hump.
3) Excessive shock in bumping

Possible cause	Corrective action
(1) Damaged coil spring	Replace.
(2) Overinflation of tires	Adjust.
(3) Improper wheel arch height	Replace the coil springs with new parts.
(4) Defective operation of shock absorber	Replace.
(5) Damage or deformation of shock absorber mount	Replace.
(6) Unsuitable length (maximum or minimum) of shock absorber	Replace with appropriate parts.
(7) Deformation or loss of bushing	Replace.
(8) Deformation or damage of helper in shock absorber	Replace.
(9) Oil leakage from the shock absorber	Replace.

3. NOISE

Possible cause	Corrective action
(1) Wear or damage of shock absorber component parts	Replace.
(2) Loosening of the suspension link or arm installing bolt	Tighten to the specified torque.
(3) Deformation or loss of bushing	Replace.
(4) Unsuitable length (maximum or minimum) of shock absorber	Replace with appropriate parts.
(5) Damaged coil spring	Replace.
(6) Wear or damage of the ball joint	Replace.
(7) Deformation of the stabilizer clamp	Replace.

WHEEL AND TIRE SYSTEM

WT

Page

1. General Description 2
2. Tire and Wheel 4
3. “T-type” Tire 7
4. Tire Pressure Monitoring System 8
5. General Diagnostic Table 12

1. General Description

A: SPECIFICATION

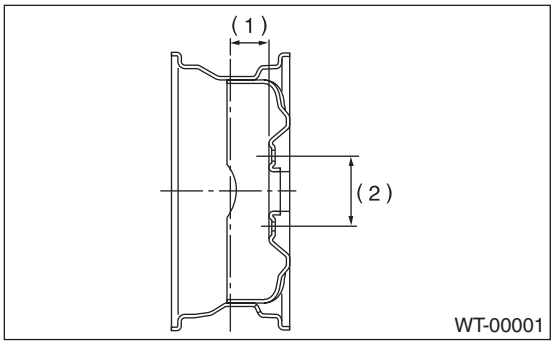

(1) Offset
(2) P.C.D.

Tire size	Wheel size	Offset mm (in)	P.C.D. mm (in)	Tire inflation pressure kPa (kgf/cm^2, psi)	
				Front wheel	Rear wheel
P205/60R16 91V	16 × 6 1/2JJ 16 × 6 1/2J	48 (1.89)	100 (3.94)	230 (2.3, 33)	220 (2.2, 32)
P215/50R17 90V	17 × 7 1/2J				
P225/50R17 93V	17 × 7 1/2J				
P215/70R16 99S	16 × 6 1/2JJ			220 (2.2, 32)	210 (2.1, 31)
P225/60R17 98T	17 × 7J				
225/45R18 91W	18 × 7 1/2J	55 (2.17)		230 (2.3, 33)	220 (2.2, 32)
T135/80R16 101M	16 × 4T	20 (0.79)		–	420 (4.2, 60)
T135/70R17 102M	17 × 4T				
T145/80R17 97M					

NOTE:
Size and inflation pressure of the standard equipment tire and spare tire for emergency are described on the “Tire inflation pressure” label attached to the body side of the driver’s door.

1. SERVICE DATA

Part	Axial runout	Radial runout
Steel wheel	1.5 mm (0.059 in)	
Aluminum wheel	1.0 mm (0.039 in)	

Wheel balancing	Standard	Service limit
Dynamic unbalance	5 g (0.18 oz) or less	

B: COMPONENT

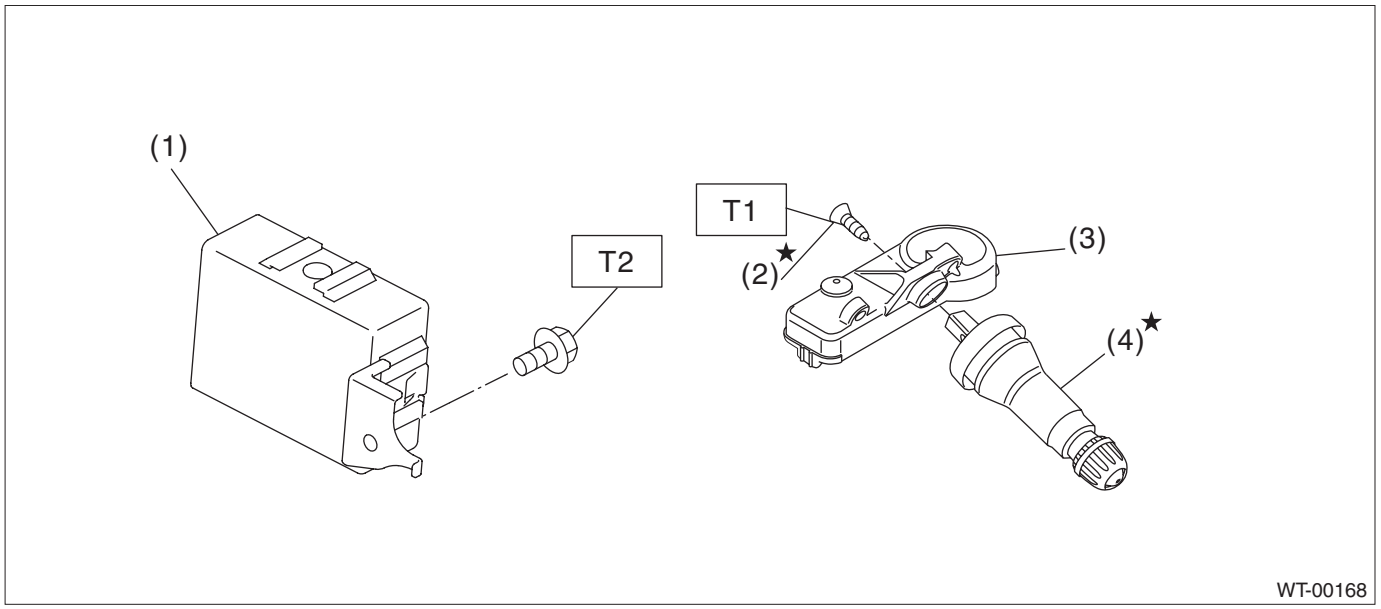

(1) TPMS & keyless entry control module
(2) Screw
(3) Transmitter (snap in type)
(4) Valve

Tightening torque:N·m (kgf-m, ft-lb)

T1: 1.4 (0.14, 1.0)
T2: 7.5 (0.76, 5.5)

C: PREPARATION TOOL

1. GENERAL TOOL

TOOL NAME	REMARKS
Air pressure gauge	Used for measuring tire air pressure.
Dial gauge	Used for measuring wheel runout.
Wheel balancer	Used for adjusting wheel balance.

2. Tire and Wheel

A: REMOVAL

1) Remove the hubcap.
2) Lift up the vehicle.
3) Remove the wheel nut.
4) Remove the wheels.

CAUTION:
When removing the wheels, be careful not to damage the hub bolts.

B: INSTALLATION

1) Install the wheels to vehicle.
2) Tighten the wheel nuts to the specified torque.

Tightening torque:
120 N·m (12.24 kgf-m, 88.5 ft-lb)

C: INSPECTION

1. TIRE

CAUTION:
When replacing a tire, make sure to use only tires of the same size, construction and load range as originally installed.

1) Tire size and tire inflation pressure check <Ref. to WT-2, SPECIFICATION, General Description.>
2) Cracks, damage and wear check
3) Tire runout check
   (1) Lift up the vehicle.
   (2) Slowly rotate the wheel to check rim “runout” using a dial gauge.

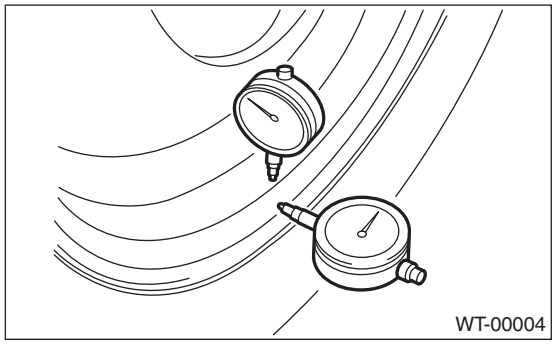

- Aluminum wheel

Axial runout limit	Radial runout limit
1.0 mm (0.039 in)	

- Steel wheel

Axial runout limit	Radial runout limit
1.5 mm (0.059 in)	

   (3) If the rim runout exceeds service limit, replace the wheel.

2. TIRE ROTATION

NOTE:
Rotate tires periodically (12,500 km/7,500 miles) in order to prolong life and to prevent uneven wear.
Rotate tires as shown in the figure depending on whether or not the direction of the tire rotation is specified.

- When the direction of tire rotation is not specified

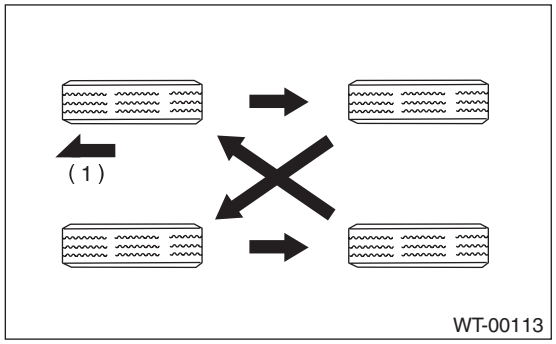

(1) Front side of vehicle

- When the direction of tire rotation is specified

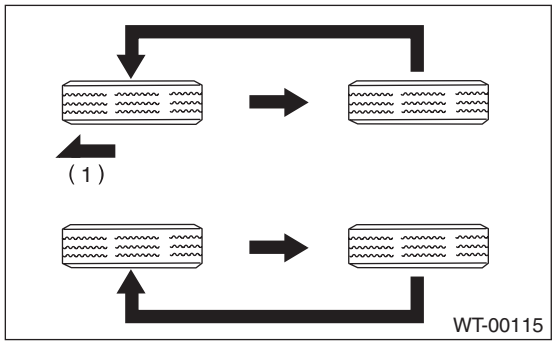

(1) Front side of vehicle

3. WHEEL BALANCING

1) Using the wheel balancer, measure wheel balance.
2) Adjust the wheel balancing.

NOTE:
- Unbalance after adjusting the wheel balancing should be 5 g (0.18 oz) or less.
- When using the adhesive type weight, degrease the surface where the adhesive type weight will be applied securely.
- After applying the adhesive type weight, apply a force to the weight and attain full adhesion.
- Using the knock-on type weight, check the size of the knock-on part.

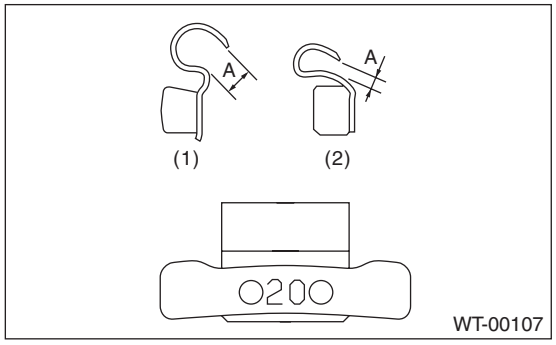

(1) Knock-on type weight for aluminum wheel
(2) Knock-on type weight for steel wheel

Service limit A:
Knock-on type weight for steel wheel: 2.0 mm (0.079 in)
Knock-on type weight for aluminum wheel: 5.0 mm (0.197 in)

3. "T-type" Tire

A: NOTE

"T-type" tire for temporary use is prepared as a spare tire.

CAUTION:
- **The "T-type" tire is only for temporary use. Replace with a conventional tire as soon as possible.**
- **Do not use tire chains for "T-type" tires. Doing so can damage the vehicle and the tires because the tires are too small in size to attach chains to.**
- **Do not drive at a speed greater than 80 km/h (50 MPH).**
- **Drive at as low a speed as possible and avoid bumps on the road.**

B: REPLACEMENT

Refer to "Tire & Wheel" for removal and installation of the "T-type" tire. <Ref. to WT-4, Tire and Wheel.>

C: INSPECTION

Refer to "Tire & Wheel" for inspection of the "T-type" tire. <Ref. to WT-4, TIRE, INSPECTION, Tire and Wheel.>

4. Tire Pressure Monitoring System

A: REMOVAL

1. TRANSMITTER (TIRE INFLATION PRESSURE SENSOR)

1) Remove the wheels from the vehicle. <Ref. to WT-4, REMOVAL, Tire and Wheel.>
2) Remove the tires from wheels.

CAUTION:
Use a tire changer when removing the tire from the wheel.
3) Loosen the screw to remove the transmitter from the valve stem.

CAUTION:
Do not reuse the valve and screw.
Replace the valve and screw with a new part even when reusing transmitter.

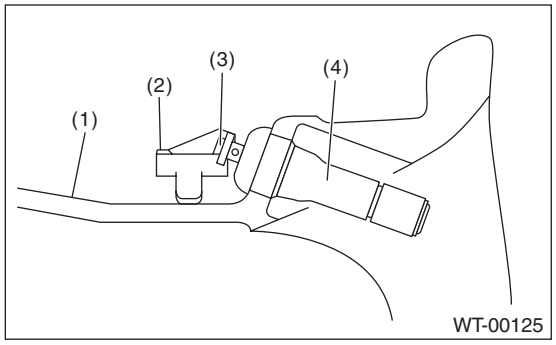

(1) Wheel
(2) Transmitter
(3) Screw
(4) Valve

4) Remove the valve from the wheel.

2. TPMS & KEYLESS CONTROL MODULE

NOTE:
TPMS control module is integrated with the keyless entry control module.

Sedan model

1) Disconnect the ground cable from battery.
2) Remove the rear shelf trim. <Ref. to EI-120, REMOVAL, Rear Shelf Trim.>
3) Remove the TPMS & keyless control module.
   (1) Disconnect the connector.
   (2) Remove the bolt and then remove the TPMS & keyless control module.

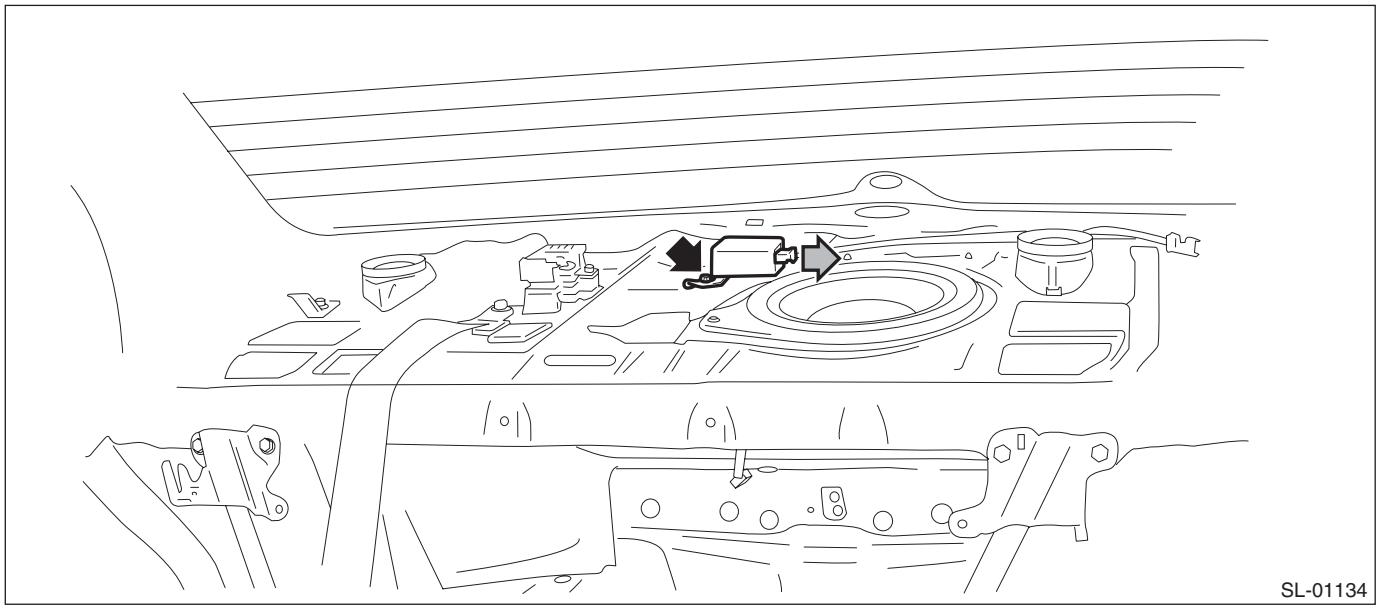

OUTBACK model

1) Disconnect the ground cable from battery.
2) Remove the rear quarter trim LH. <Ref. to EI-110, REMOVAL, Rear Quarter Trim.>
3) Remove the TPMS & keyless control module.
   (1) Disconnect the connector.
   (2) Remove the bolt and then remove the TPMS & keyless control module.

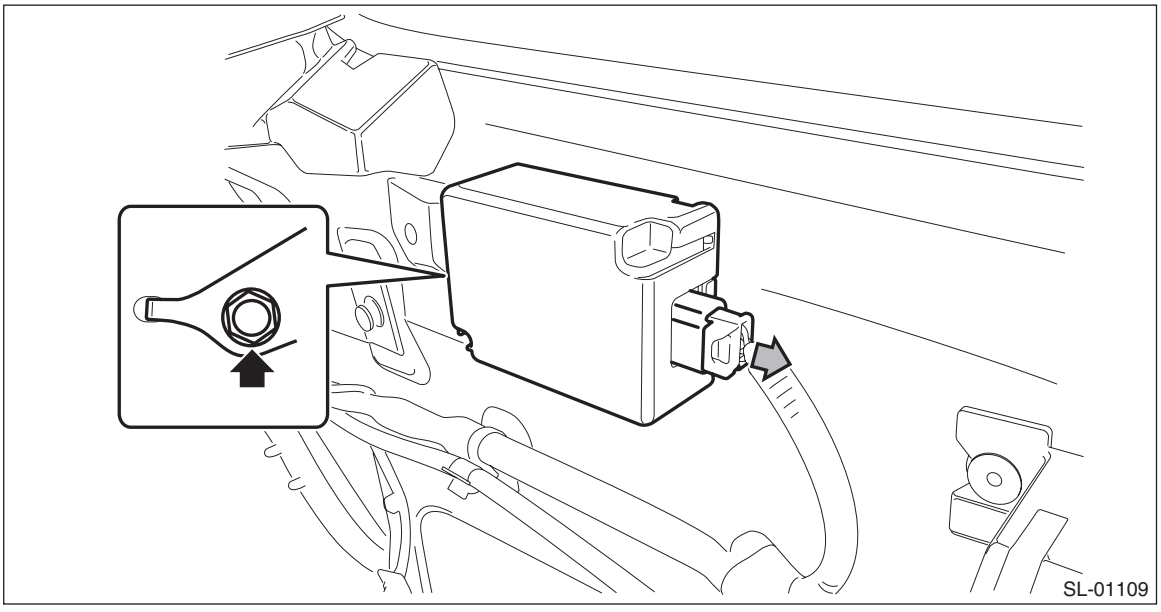

B: INSTALLATION

1. TRANSMITTER (TIRE INFLATION PRESSURE SENSOR)

CAUTION:
Use the new transmitter assembly or replace the new valve and screw, when installing.

1) Replace the valve and screw with a new part when reusing transmitter.

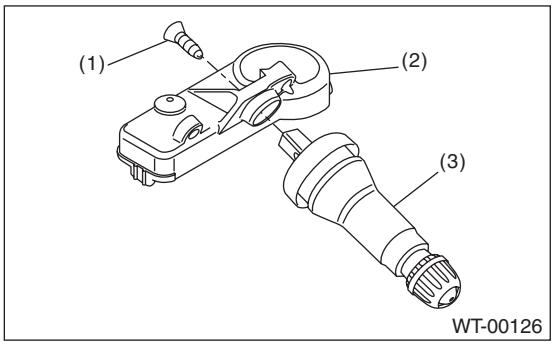

(1) Screw
(2) Transmitter
(3) Valve

Tightening torque:
1.4 N·m (0.14 kgf-m, 1.0 ft-lb)

2) Install the transmitter to the wheel by aligning it with valve hole.

NOTE:
When using the jig that pulls the valve cap by hooking its neck part, use another short-type cap.

3) Install the tires to wheels.

CAUTION:
- **Use a tire changer when installing tire to wheel.**
- **To prevent damaging the transmitter, set the tire changer boom in the position as shown in the figure.**

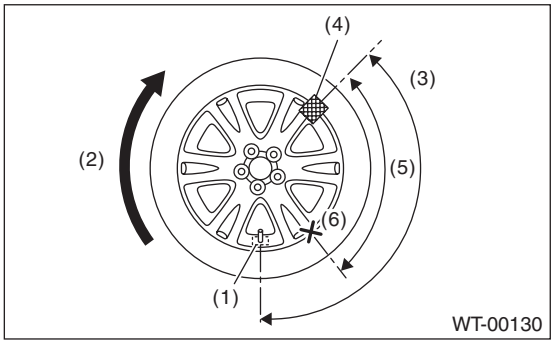

(1) Transmitter
(2) Direction of turn table rotation
(3) 135°
(4) Tire changer boom
(5) 90°
(6) Starting point for fitting the bead to the rim

4) Install the wheels to vehicle. <Ref. to WT-4, INSTALLATION, Tire and Wheel.>
5) Register the transmitter ID to the TPMS & keyless control module. <Ref. to TPM(diag)-12, Register Transmitter (ID).>

2. TPMS & KEYLESS CONTROL MODULE

Install each part in the reverse order of removal.

Tightening torque:
7.5 N·m (0.76 kgf-m, 5.5 ft-lb)

C: ADJUSTMENT

Re-register the transmitter ID when transmitter has been replaced. <Ref. to TPM(diag)-12, Register Transmitter (ID).>

5. General Diagnostic Table

A: INSPECTION

Symptoms	Possible cause	Corrective action
Wheel is out of balance.	Improperly inflated tire.	Adjust the tire pressure.
	Uneven wear	Check the tire referring to Abnormal tire wear in this table, carry out the procedure and replace the tire.
	Front wheel alignment	Check or adjust the front wheel alignment. • Inspection: <Ref. to FS-9, INSPECTION, Wheel Alignment.> • Adjustment: <Ref. to FS-14, ADJUSTMENT, Wheel Alignment.>
	Rear wheel alignment	Check or adjust the rear wheel alignment. • Inspection: <Ref. to FS-9, INSPECTION, Wheel Alignment.> • Adjustment: <Ref. to FS-14, ADJUSTMENT, Wheel Alignment.>
	Front strut	Check the front strut. <Ref. to FS-45, INSPECTION, Front Strut.>
	Rear shock absorber	Check the rear shock absorber. <Ref. to RS-21, INSPECTION, Rear Shock Absorber.>
	Front axle	Check the front axle. <Ref. to DS-29, INSPECTION, Front Hub Unit Bearing.>
	Front hub unit bearing	Check the front hub unit bearing. <Ref. to DS-29, INSPECTION, Front Hub Unit Bearing.>
	Rear hub unit bearing	Check the rear hub unit bearing. <Ref. to DS-47, INSPECTION, Rear Hub Unit Bearing.>
Vehicle is abnormally out of balance.	Improperly inflated tire.	Adjust the tire pressure.
	Uneven wear	Check the tire referring to Abnormal tire wear in this table, carry out the procedure and replace the tire.
	Front stabilizer	Inspect the front stabilizer.
	Front wheel alignment	Check or adjust the front wheel alignment. • Inspection: <Ref. to FS-9, INSPECTION, Wheel Alignment.> • Adjustment: <Ref. to FS-14, ADJUSTMENT, Wheel Alignment.>
	Rear wheel alignment	Check or adjust the rear wheel alignment. • Inspection: <Ref. to FS-9, INSPECTION, Wheel Alignment.> • Adjustment: <Ref. to FS-14, ADJUSTMENT, Wheel Alignment.>
Abnormal wheel vibration	Improperly inflated tire.	Adjust the tire pressure.
	Uneven wear	Check the tire referring to Abnormal tire wear in this table, carry out the procedure and replace the tire.
	Improper wheel balancing	Check the wheel balance. <Ref. to WT-6, WHEEL BALANCING, INSPECTION, Tire and Wheel.>
	Front axle	Check the front axle. <Ref. to DS-29, INSPECTION, Front Hub Unit Bearing.>
	Front hub unit bearing	Check the front hub unit bearing. <Ref. to DS-29, INSPECTION, Front Hub Unit Bearing.>
	Rear hub unit bearing	Check the rear hub unit bearing. <Ref. to DS-47, INSPECTION, Rear Hub Unit Bearing.>

Symptoms	Possible cause	Corrective action
Abnormal tire wear	Improperly inflated tire.	Adjust the tire pressure.
	Improper wheel balancing	Check the wheel balance. <Ref. to WT-6, WHEEL BALANCING, INSPECTION, Tire and Wheel.>
	Front wheel alignment	Check or adjust the front wheel alignment. • Inspection: <Ref. to FS-9, INSPECTION, Wheel Alignment.> • Adjustment: <Ref. to FS-14, ADJUSTMENT, Wheel Alignment.>
	Rear wheel alignment	Check or adjust the rear wheel alignment. • Inspection: <Ref. to FS-9, INSPECTION, Wheel Alignment.> • Adjustment: <Ref. to FS-14, ADJUSTMENT, Wheel Alignment.>

TIRE PRESSURE MONITORING SYSTEM (DIAGNOSTICS)

TPM(diag)

		Page
1.	Basic Diagnostic Procedure	2
2.	General Description	3
3.	Electrical Component Location	5
4.	Control Module I/O Signal	6
5.	Subaru Select Monitor	7
6.	Read Diagnostic Trouble Code (DTC)	9
7.	Clear Memory Mode	10
8.	Read Current Data	11
9.	Register Transmitter (ID)	12
10.	Display Transmitter (ID)	13
11.	Inspection Mode	14
12.	Tire Pressure Warning Light / Trouble Indicator Light Illumination Pattern	15
13.	List of Diagnostic Trouble Code (DTC)	20
14.	Diagnostic Procedure with Diagnostic Trouble Code (DTC)	22
15.	General Diagnostic Table	32

1. Basic Diagnostic Procedure

A: PROCEDURE

CAUTION:
Before removal or installation, be sure to remove any foreign matter (dust, moisture, oil, etc.) from the TPMS & keyless entry control module connector.

NOTE:
To check harness for open or short circuits, shake the suspected trouble spot or connector.

	Step	Check	Yes	No
1	**CHECK PRE-INSPECTION.** 1) Check with the user regarding when the warning light lit or started blinking. 2) Before performing diagnostics, check all components which may adversely affect the tire pressure monitor system. <Ref. to TPM(diag)-3, INSPECTION, General Description.>	Is the component that might affect the tire pressure monitor system normal?	Go to step **2**.	Repair or replace each component.
2	**CHECK DIAGNOSTIC TROUBLE CODE (DTC).** 1) Turn the ignition switch to OFF. 2) Connect the Subaru Select Monitor to data link connector. 3) Turn the ignition switch to ON and run the Subaru Select Monitor. NOTE: If the communication function of the Subaru Select Monitor cannot be executed normally, check the communication circuit. <Ref. to TPM(diag)-7, COMMUNICATION FOR INITIALIZING IMPOSSIBLE, INSPECTION, Subaru Select Monitor.> 4) Read the DTC. <Ref. to TPM(diag)-9, OPERATION, Read Diagnostic Trouble Code (DTC).>	Is DTC displayed?	Go to step **4**.	Go to step **3**.
3	**PERFORM GENERAL DIAGNOSTICS.** 1) Perform the inspection by referring to “General Diagnostic Table”. <Ref. to TPM(diag)-32, General Diagnostic Table.> 2) Perform the Clear Memory Mode. <Ref. to TPM(diag)-10, OPERATION, Clear Memory Mode.> 3) Perform the Inspection Mode. <Ref. to TPM(diag)-14, Inspection Mode.> 4) Read the DTC. <Ref. to TPM(diag)-9, OPERATION, Read Diagnostic Trouble Code (DTC).> Check the DTC is not displayed.	Does the tire pressure warning light illuminates for about 2 seconds and then foes off after turning on the ignition switch, and then go out?	Finish the diagnosis.	Check the tire inflation pressure warning light. <Ref. to TPM(diag)-15, Tire Pressure Warning Light / Trouble Indicator Light Illumination Pattern.>
4	**PERFORM DIAGNOSIS.** 1) Refer to “List of Diagnostic Trouble Code (DTC)”. 2) Correct the cause of trouble. 3) Perform the Clear Memory Mode. <Ref. to TPM(diag)-10, OPERATION, Clear Memory Mode.> 4) Perform the drive test. Drive the vehicle at 40 km/h (25 MPH) or faster for at least 10 minutes. 5) Read the DTC. <Ref. to TPM(diag)-9, OPERATION, Read Diagnostic Trouble Code (DTC).>	Is DTC displayed?	Repeat steps 1 to 4 until DTC is not shown.	Finish the diagnosis.

2. General Description

A: CAUTION

1. SUPPLEMENTAL RESTRAINT SYSTEM "AIRBAG"

Airbag system wiring harness is routed near the TPM control module.

CAUTION:
• Do not use electrical test equipment on any of the airbag system wiring harness circuits.
• Be careful not to damage the wiring harness of the airbag system when servicing the TPMS & keyless entry control module.

2. TPMS & KEYLESS ENTRY CONTROL MODULE

• If a transmitter is replaced, the ID of the new transmitter must be registered. <Ref. to TPM(diag)-12, OPERATION, Register Transmitter (ID).>
• When adjusting tire inflation pressure indoors in winter, there is a big temperature difference between the indoor facilities and outside. Once the car is outside where the temperature is lower, the air pressure in the tires will drop, causing the tire inflation pressure warning light to illuminate, even if the pressure in the tires was adjusted to standard values indoors. To avoid this, it is necessary to adjust the tire inflation pressure to the high side in consideration of the difference in temperature between inside and outside according to the following table.

a. Sedan model

Temperature °C (°F)	Indoor temperature	15.5 (60)		
	Outdoor temperature	–1 (30)	–12 (10)	–23 (–10)
Tire inflation pressure kPa (psi)	Front	250 (36)	265 (38)	280 (40)
	Rear	240 (35)	255 (37)	270 (39)

b. OUTBACK model

Temperature °C (°F)	Indoor temperature	15.5 (60)		
	Outdoor temperature	–1 (30)	–12 (10)	–23 (–10)
Tire inflation pressure kPa (psi)	Front	240 (35)	255 (37)	270 (39)
	Rear	230 (33)	245 (35)	255 (37)

B: INSPECTION

Before performing diagnosis, check the following item which might affect the quality of the tire pressure monitoring system.

1. TIRE

• Inspect that the tire pressure is within the specification while the tire is cool. (Refer to Tire Caution Label.)
• Check the tires for damage or the insertion of foreign matters.

2. BATTERY

Check that amount of battery fluid, gravity and voltage are within the specifications.

Standard voltage: 12 V or more

Specific gravity: 1.260 or more

C: PREPARATION TOOL

1. SPECIAL TOOL

ILLUSTRATION	TOOL NUMBER	DESCRIPTION	REMARKS
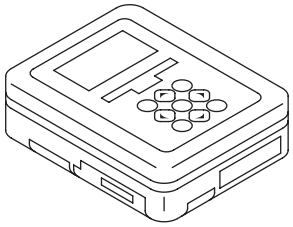 ST1B022XU0	1B022XU0	SUBARU SELECT MONITOR III KIT	Used for troubleshooting the electrical system.

2. GENERAL TOOL

TOOL NAME	REMARKS
Circuit tester	Used for measuring resistance, voltage and current.
Transmitter registration tool	Used to register the transmitter ID. Manufacturer: Kent-Moore Item number: J45295

3. Electrical Component Location

A: LOCATION

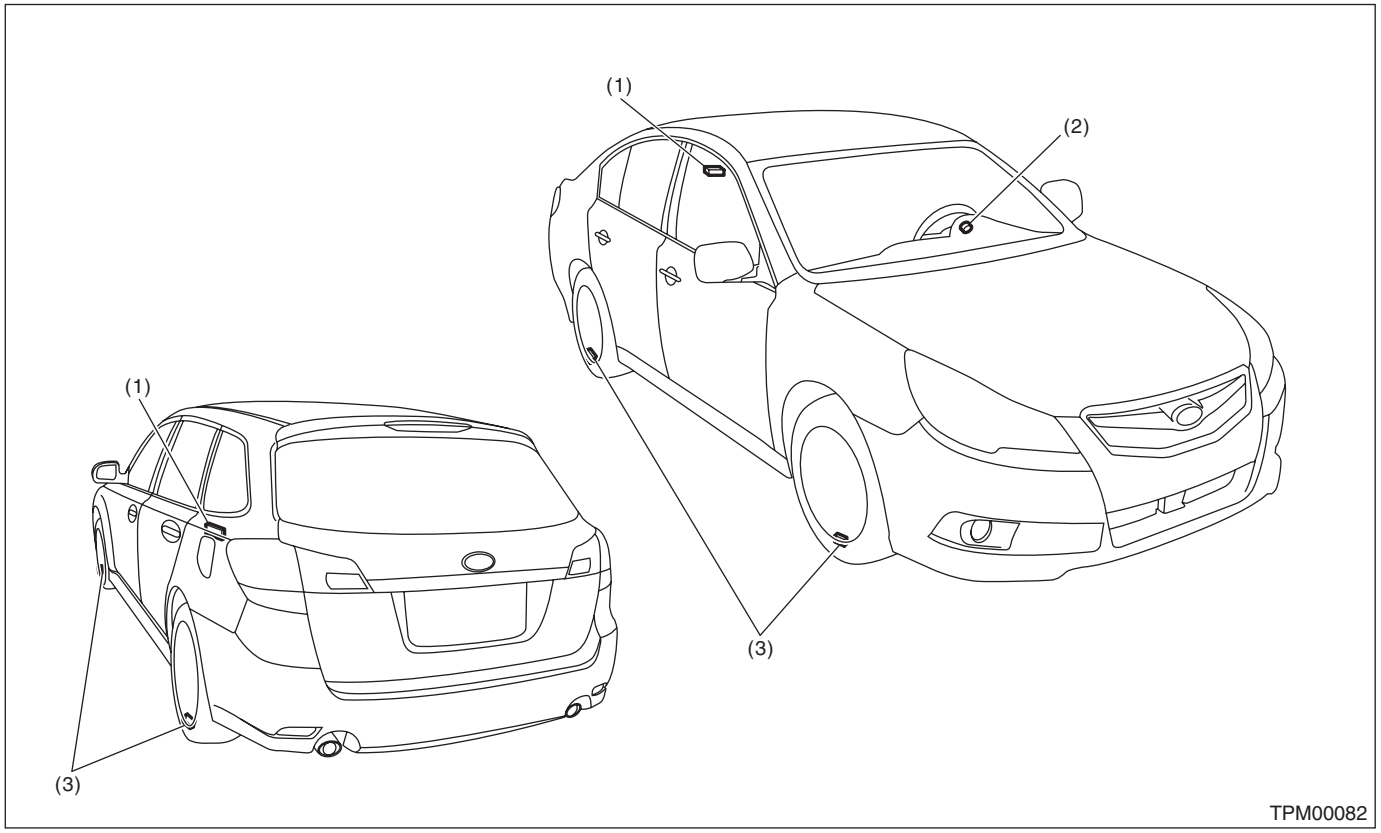

(1) TPMS & keyless entry control module
(2) Tire pressure warning light
(3) Snap-in type transmitter

• Sedan model

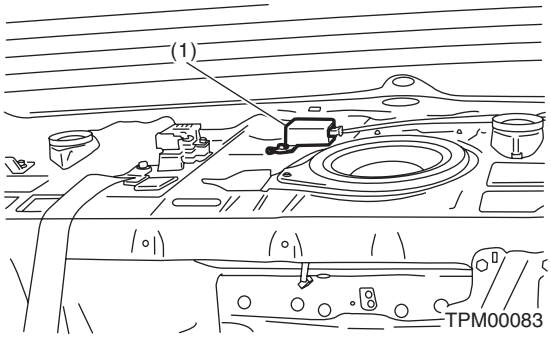

• OUTBACK model

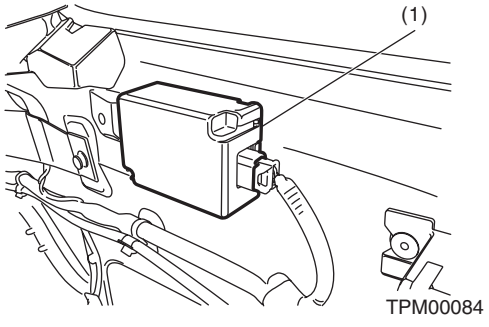

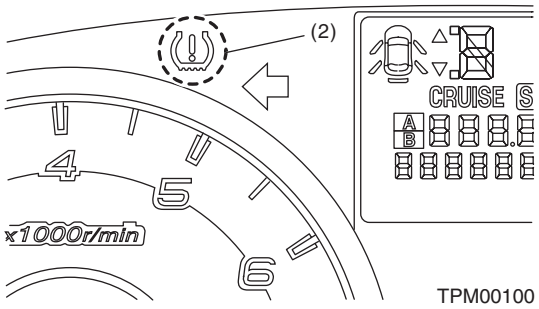

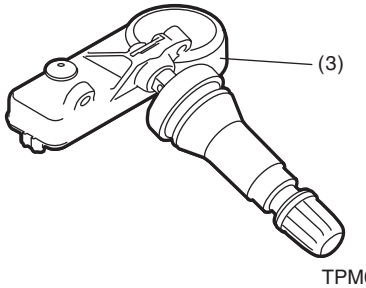

4. Control Module I/O Signal

A: ELECTRICAL SPECIFICATION

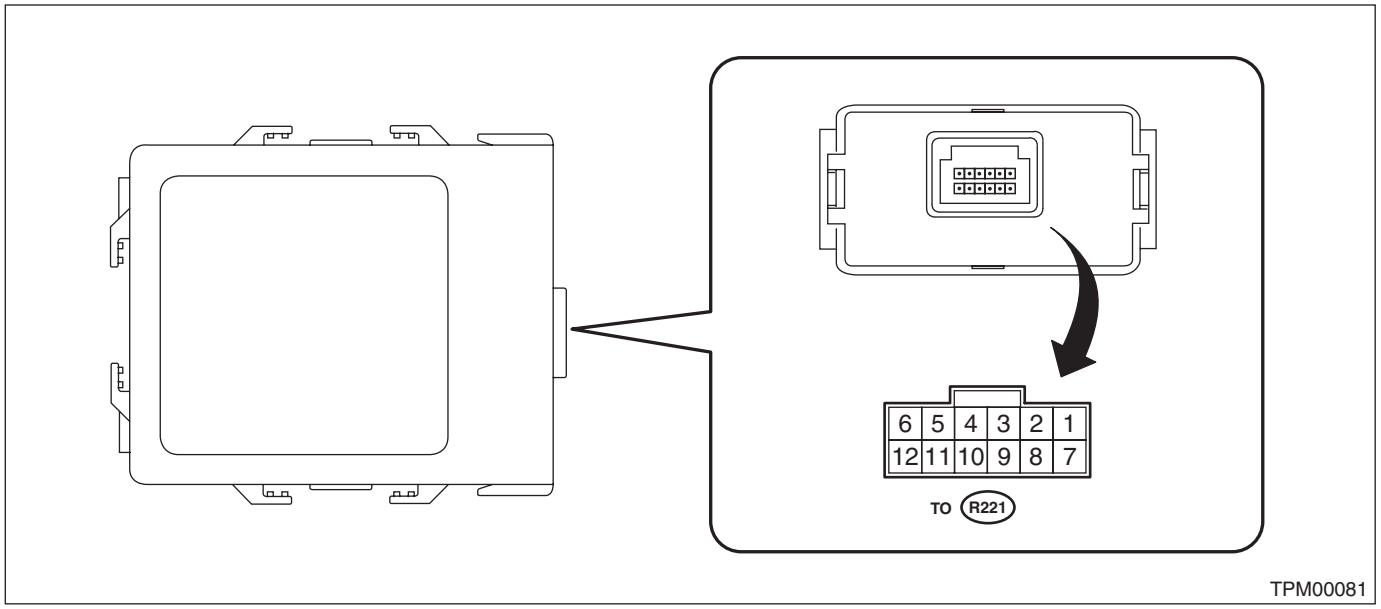

Terminal No.	Content	Measured value and measuring conditions	Remarks
1	—	—	—
2	Tire pressure warning light output	Illuminate when malfunction occurs, or tire pressure decreases	System failure: blinks 25 times → illuminates Tire pressure decreases: turns on
3	Speed sensor signal	While driving (Pulse signal)	Change according to vehicle speed
4	Ignition power supply	IG switch ON (Battery voltage)	—
5	Ground	0 V (Always)	—
6	Battery power supply	Battery voltage (Always)	—
7	—	—	—
8	—	—	—
9	—	—	—
10	—	—	—
11	Body integrated unit	—	—
12	Select monitor communication	Serial communication	—

B: WIRING DIAGRAM

<Ref. to WI-248, WIRING DIAGRAM, Tire Pressure Monitoring System.>

5. Subaru Select Monitor

A: OPERATION

For the operation procedure, refer to the “PC application help for Subaru Select Monitor”.

NOTE:
If TPMS & keyless entry control module and Subaru Select Monitor cannot communicate, check the communication circuit. <Ref. to TPM(diag)-7, INSPECTION, Subaru Select Monitor.>

B: INSPECTION

1. COMMUNICATION FOR INITIALIZING IMPOSSIBLE

DETECTING CONDITION:
Defective harness connector
TROUBLE SYMPTOM:
Communication is impossible between the TPMS & keyless entry control module and the Subaru Select Monitor.
WIRING DIAGRAM:

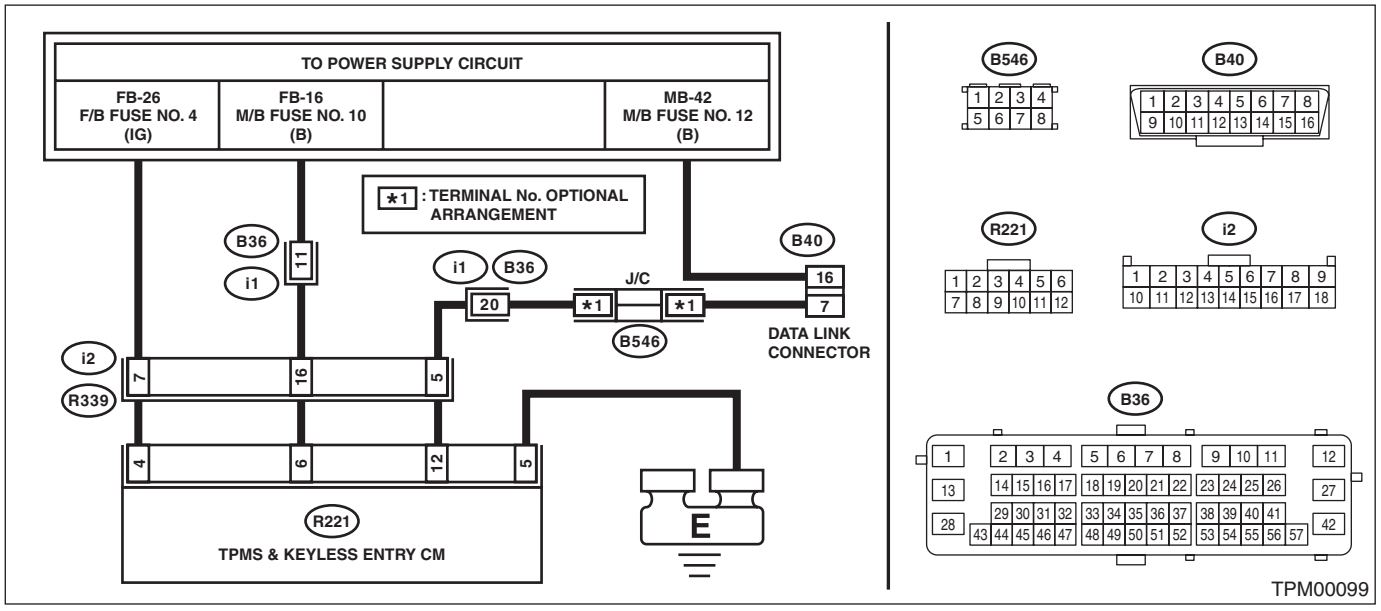

	Step	Check	Yes	No
1	**CHECK IGNITION SWITCH.**	Is the ignition switch ON?	Go to step **2**.	Turn the ignition switch to ON, and select TPM mode using Subaru Select Monitor.
2	**CHECK BATTERY.**	Is the voltage 11 V or more?	Go to step **3**.	Charge or replace the battery.
3	**CHECK BATTERY TERMINAL.**	Is there poor contact at battery terminal?	Repair or tighten the battery terminal.	Go to step **4**.
4	**CHECK SUBARU SELECT MONITOR COMMUNICATION.** 1) Turn the ignition switch to ON. 2) Using the Subaru Select Monitor, check whether communication to other systems can be executed normally.	Is the system name displayed on Subaru Select Monitor?	Go to step **8**.	Go to step **5**.

	Step	Check	Yes	No
5	**CHECK SUBARU SELECT MONITOR COMMUNICATION.** 1) Turn the ignition switch to OFF. 2) Disconnect the TPMS & keyless entry control module connector. 3) Turn the ignition switch to ON. 4) Check whether communication to other systems can be executed normally.	Is the system name displayed on Subaru Select Monitor?	Replace the TPMS & keyless entry control module.	Go to step **6**.
6	**CHECK HARNESS CONNECTOR BETWEEN EACH CONTROL MODULE AND DATA LINK CONNECTOR.** 1) Turn the ignition switch to OFF. 2) Disconnect the TPMS & keyless entry control module. 3) Measure the resistance between data link connector and chassis ground. ***Connector & terminal*** ***(B40) No. 7 — Chassis ground:***	Is the resistance 1 MΩ or more?	Go to step **7**.	Repair the harness and connector between each control module and data link connector.
7	**CHECK OUTPUT SIGNAL TO TPMS & KEYLESS ENTRY CONTROL MODULE.** 1) Turn the ignition switch to ON. 2) Measure the voltage between TPMS & keyless entry control module and chassis ground. ***Connector & terminal*** ***(B40) No. 7 (+) — Chassis ground (–):***	Is the voltage less than 1 V?	Go to step **8**.	Repair the harness and connector between each control module and data link connector.
8	**CHECK HARNESS CONNECTOR BETWEEN TPMS & KEYLESS ENTRY CONTROL MODULE AND DATA LINK CONNECTOR.** 1) Turn the ignition switch to OFF. 2) Measure the resistance between the TPMS & keyless entry control module connector and the data link connector. ***Connector & terminal*** ***(R221) No. 12 — (B40) No. 7:***	Is the resistance less than 0.5 Ω?	Go to step **9**.	Repair the harness and connector between TPMS & keyless entry control module and data link connector.
9	**CHECK TPMS & KEYLESS ENTRY CONTROL MODULE CONNECTOR.**	Is the connector inserted into the TPMS & keyless entry control module until it locks?	Go to step **10**.	Insert the connector into the TPMS & keyless entry control module.
10	**CHECK POWER SUPPLY CIRCUIT.** 1) Turn the ignition switch to ON. 2) Measure the ignition power supply voltage between TPMS & keyless entry control module connector and chassis ground. ***Connector & terminal*** ***(R221) No. 4 (+) — Chassis ground (–):***	Is the voltage 10 — 15 V?	Go to step **11**.	Repair open circuit of the harness between TPMS & keyless entry control module and battery.
11	**CHECK HARNESS CONNECTOR BETWEEN TPMS & KEYLESS ENTRY CONTROL MODULE AND CHASSIS GROUND.** 1) Turn the ignition switch to OFF. 2) Disconnect the connector from the TPMS & keyless entry control module. 3) Measure the resistance of harness between TPMS & keyless entry control module and chassis ground. ***Connector & terminal*** ***(R221) No. 5 — Chassis ground:***	Is the resistance less than 0.5 Ω?	Go to step **12**.	Repair open circuit of the harness of the TPMS & keyless entry control module.
12	**CHECK POOR CONTACT OF CONNECTOR.**	Is there poor contact of TPMS & keyless entry control module power supply, ground circuit and data link connector?	Repair the connector.	Replace the TPMS & keyless entry control module.

6. Read Diagnostic Trouble Code (DTC)

A: OPERATION

For operation procedures, refer to the “PC application help for Subaru Select Monitor”.

NOTE:
• For details concerning DTCs, refer to List of Diagnostic Trouble Code (DTC). <Ref. to TPM(diag)-20, List of Diagnostic Trouble Code (DTC).>
• All DTCs detected will be displayed.
• If a particular DTC is not properly stored in memory (due to a voltage drop of the TPMS & keyless entry control module power supply, etc.) when a problem occurs, a DTC suffixed with a question mark will appears on the Subaru Select Monitor display. This shows it may be an unreliable reading.
• When DTC is not displayed, check the indicator circuit and communication circuit. <Ref. to TPM(diag)-15, Tire Pressure Warning Light / Trouble Indicator Light Illumination Pattern.>

7. Clear Memory Mode

A: OPERATION

For the operation procedure, refer to the “PC application help for Subaru Select Monitor”.

8. Read Current Data

A: OPERATION

For the operation procedure, refer to the “PC application help for Subaru Select Monitor”.

B: LIST

Display	Contents to be displayed	Unit of measure
Tire 1 FN code	LEARN, LOW BAT, OFF, WAKE, RE ME, NORMAL	LEARN: Transmitted transmitter ID using the transmitter registration tool LOW BAT: Transmitter battery voltage running low OFF: Transmitter function stops (no data transmission) RE ME: Tire air changes ±8.4 kPa WAKE: When data transmission is started from a stopped state. NORMAL: Conditions other than above
Tire 2 FN code		
Tire 3 FN code		
Tire 4 FN code		
Tire 1 air pressure	Value converted to tire pressure from data delivered from transmitter is displayed. (The figure may differ from the actual measured values.)	kPa, psig, mmHg, inHg
Tire 2 air pressure		kPa, psig, mmHg, inHg
Tire 3 air pressure		kPa, psig, mmHg, inHg
Tire 4 air pressure		kPa, psig, mmHg, inHg
Vehicle Speed	Vehicle speed signal which is input in control module	km/h, MPH
Pressure warning	Threshold where tire pressure warning light illuminates	kPa, psig, mmHg, inHg
Return pressure	Threshold where tire pressure warning light goes out	kPa, psig, mmHg, inHg

9. Register Transmitter (ID)

A: OPERATION

Perform the registration procedure of the transmitter in the following cases:
- Transmitter replaced.
- TPMS & keyless entry control module replaced.

NOTE:
- If registration of the transmitter ID is not possible after two attempts, replace the TPMS & keyless entry control module.
- During the registration, turn the ignition switch to OFF and end the Subaru Select Monitor. Or if the registration is not performed for 5 minutes or more, the registration mode is cancelled.
- When rotating tires, there is no affect on the performance or functions of the tire pressure monitoring control module even if the transmitter (ID) is not registered, however, the tire position displayed on the Subaru Select Monitor will be incorrect.

1) Adjust all tire pressures to the specifications.
2) Connect Subaru Select Monitor and select the {Each System Check} on the «Main Menu».
3) On «System Selection Menu» display, select {Tire pressure monitor}.
4) After the {Tire pressure monitor} is displayed, select [OK].
5) On «Tire pressure monitor diagnosis» display, select {Transmitter ID regist confirm}.
6) {ID registration mode When execute Registered ID is deleted. Continue?} is displayed, select [OK].
7) Contact the transmitter registration tool to the side wall area near the air valve on the front left tire, and press the switch. The transmitter ID is sent to the TPMS & keyless entry control module. (At that time, the tire pressure warning light blinks to confirm that the registration has started.)

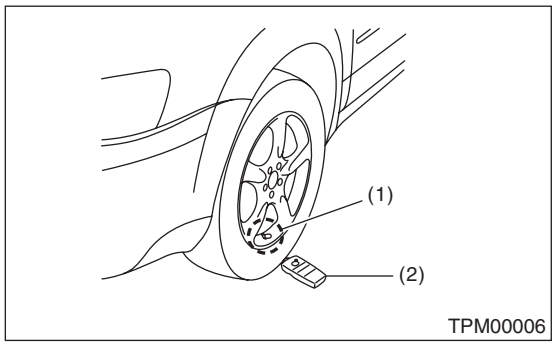

(1) Air valve (transmitter)
(2) Transmitter registration tool

NOTE:
- The registration order of transmitter ID is not specified.
- The transmitter registration tool is used by touching the side wall area near the transmitter.
- When registration of each tire is completed, {ID registration completed} is displayed on the Select Monitor screen.
- If registration procedure stop in the halfway (turning ignition switch to OFF, wrong registration order, etc), proceed from step 5).

8) When ID registration is completed, the tire pressure warning light remains lit for approximately 2 seconds, to end the registration. Switch to the screen displaying the transmitter ID on the Subaru Select Monitor display. <Ref. to TPM(diag)-13, Display Transmitter (ID).>
9) Check the transmitter ID that was registered, then perform a driving test. <Ref. to TPM(diag)-14, Inspection Mode.>

10.Display Transmitter (ID)

A: OPERATION

For the operation procedure, refer to the “PC application help for Subaru Select Monitor”.

11.Inspection Mode

A: PROCEDURE

Reproduce the malfunction occurrence condition as much as possible. Drive the vehicle at 40 km/h (25 MPH) or faster for at least ten minutes.

12. Tire Pressure Warning Light / Trouble Indicator Light Illumination Pattern

A: INSPECTION

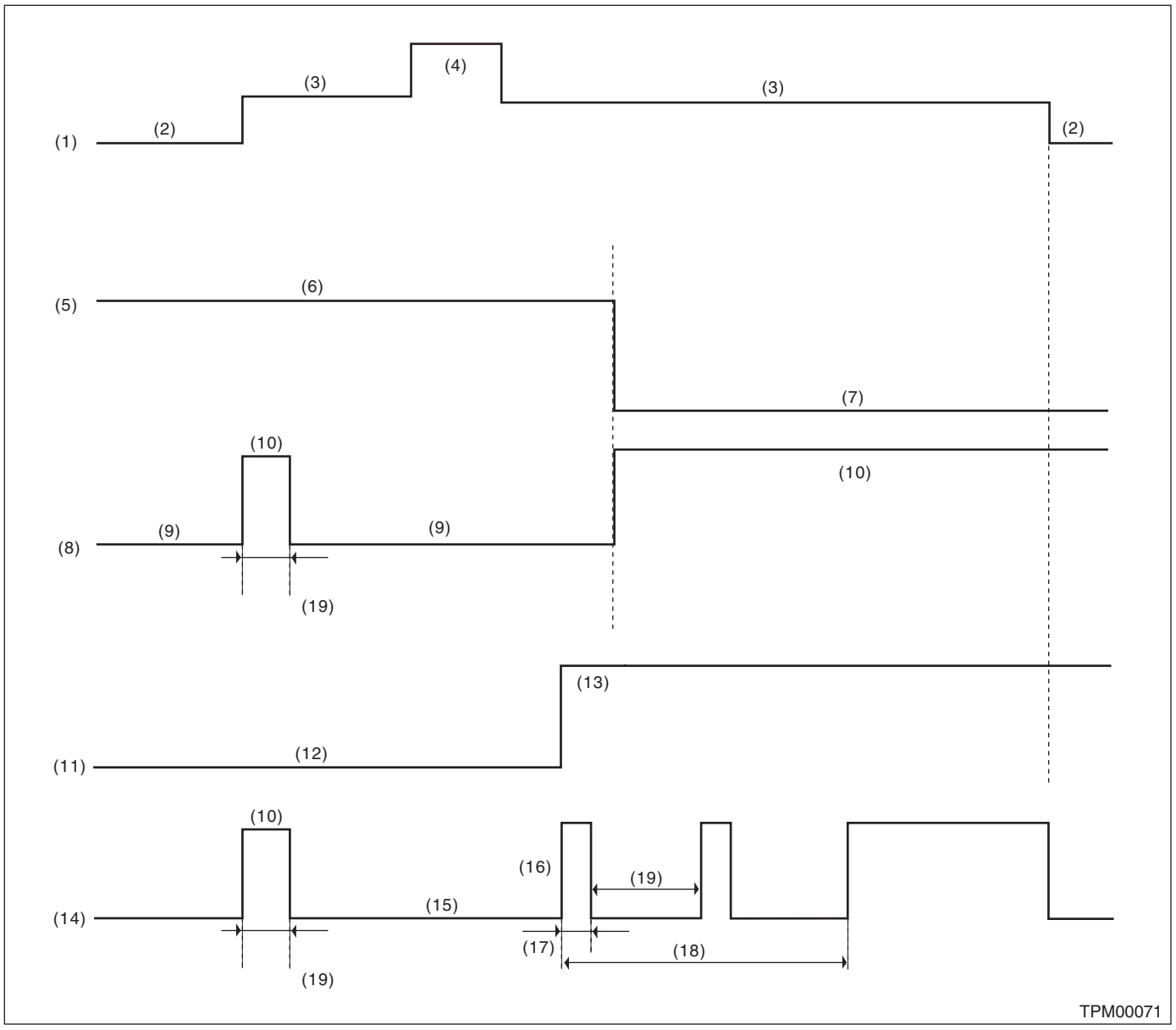

(1) Ignition switch
(2) OFF
(3) ON
(4) Start
(5) Tire inflation pressure condition
(6) Meet the specification
(7) Less than standard value (For the pressure warning level, refer to "CURRENT DATA".) <Ref. to TPM(diag)-11, LIST, Read Current Data.>
(8) Tire inflation pressure warning light (pressure condition)
(9) Light OFF
(10) Light ON
(11) System status
(12) Normal
(13) Malfunction
(14) Tire inflation pressure warning light (system condition)
(15) Light OFF
(16) Blink
(17) 1 second
(18) Blinks 25 times
(19) 2 seconds

Tire Pressure Warning Light / Trouble Indicator Light Illumination Pattern

1) When the tire pressure warning light does not illuminate in accordance with this illumination pattern, there must be an electrical malfunction.
2) If the tire pressure warning light does not go off, check the TPMS & keyless entry control module/warning light circuit and the combination meter circuit. <Ref. to TPM(diag)-17, TIRE PRESSURE WARNING LIGHT DOES NOT COME OFF, Tire Pressure Warning Light / Trouble Indicator Light Illumination Pattern.>

NOTE:
If the problem is fixed while driving at approximately 40 km/h (25 MPH) after the tire pressure warning light blinks/lights, the warning light goes out and the tire pressure monitor system operates normally. (If there is a decrease in tire pressure, or a malfunction of the system, the malfunction history is displayed.)

B: TIRE PRESSURE WARNING LIGHT DOES NOT COME ON

DETECTING CONDITION:
Defective combination meter
TROUBLE SYMPTOM:
When the ignition switch is turned to ON, the tire pressure warning light does not turn on (for approx. 2 seconds).

Step		Check	Yes	No
1	**CHECK DIAGNOSTIC TROUBLE CODE (DTC).** Connect the Subaru Select Monitor, and read the Diagnostic Trouble Code. <Ref. to TPM(diag)-9, OPERATION, Read Diagnostic Trouble Code (DTC).>	Is diagnostics code (DTC) displayed?	Perform the diagnosis according to the DTC. <Ref. to TPM(diag)-20, List of Diagnostic Trouble Code (DTC).>	Replace the combination meter. <Ref. to IDI-21, REMOVAL, Combination Meter.>

C: TIRE PRESSURE WARNING LIGHT DOES NOT COME OFF

DETECTING CONDITION:
- Defective combination meter
- Tires pressure drop
- Transmitter ID not registered

TROUBLE SYMPTOM:
Tire pressure warning light remains illuminating after engine starts.

Step		Check	Yes	No
1	**CHECK DTC.** Connect the Subaru Select Monitor, and read the Diagnostic Trouble Code. <Ref. to TPM(diag)-9, OPERATION, Read Diagnostic Trouble Code (DTC).>	Is a DTC displayed?	Perform the diagnosis according to the DTC. <Ref. to TPM(diag)-20, List of Diagnostic Trouble Code (DTC).>	Go to step **2**.
2	**CHECK TRANSMITTER (ID).** Display the transmitter ID of the tire pressure monitor system.	Is the transmitter ID registered?	Go to step **3**.	Register the transmitter ID. <Ref. to TPM(diag)-12, OPERATION, Register Transmitter (ID).>
3	**CHECK TRANSMITTER DATA OUTPUT.** 1) Select data display of the tire pressure monitoring. 2) Start the engine and check the tire pressure warning light output.	Is the warning light output ON?	Replace the TPMS & keyless entry control module.	Replace the combination meter. <Ref. to IDI-21, REMOVAL, Combination Meter.>

D: TIRE PRESSURE WARNING LIGHT IS 25 TIMES BLINKING AND TURN ON

DETECTING CONDITION:

- Defective TPMS & keyless entry control module
- Defective harness
- Transmitter is faulty.

TROUBLE SYMPTOM:

Every time the engine starts, tire pressure warning light blinks 25 times and then illuminates.

WIRING DIAGRAM:

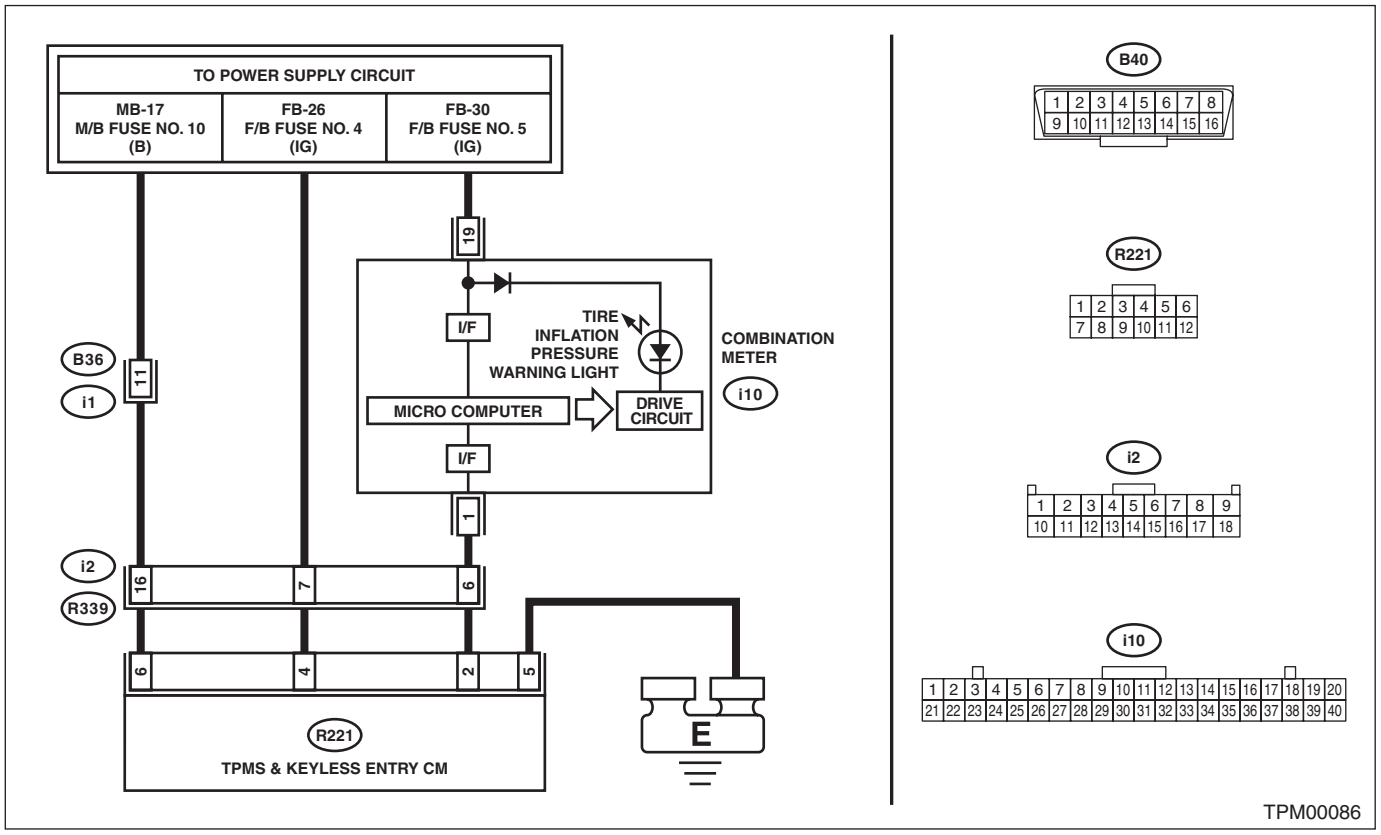

Step		Check	Yes	No
1	**CHECK DTC.** Connect the Subaru Select Monitor, and read the Diagnostic Trouble Code. <Ref. to TPM(diag)-9, OPERATION, Read Diagnostic Trouble Code (DTC).>	Is diagnostics code (DTC) displayed?	Perform the diagnosis according to the DTC. <Ref. to TPM(diag)-20, List of Diagnostic Trouble Code (DTC).>	Go to step **2**.
2	**CHECK HARNESS.** 1) Connect the Subaru Select Monitor to the terminal No. 2 of the TPMS & keyless entry control module connector (R221). ***Connector & terminal (R221) No. 2 (+) — Chassis ground (–):*** 2) Turn the ignition switch to ON, and select "Oscilloscope" from the Main Menu of Subaru Select Monitor. 3) Check the voltage displayed.	Is the voltage 10 V or more?	Go to step **3**.	Go to step **4**.

Step	Check	Yes	No
3 **CHECK HARNESS.** 1) Check the output waveform displayed in the oscilloscope of Subaru Select Monitor. 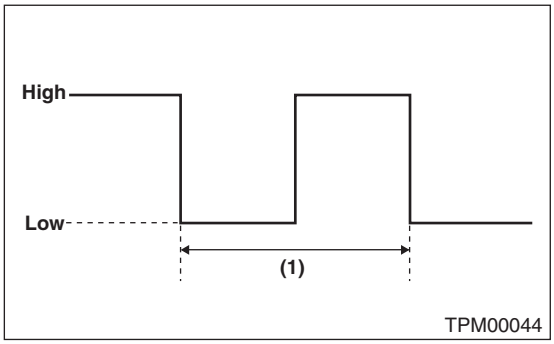	Is the pattern the same output waveform as shown in the figure? (1) 400±9 ms Duty 50% High: Battery voltage Low:1.5 V or less	Check the combination meter.	Replace the TPMS & keyless entry control module.
4 **CHECK HARNESS.** 1) Disconnect the TPMS & keyless entry control module connector. 2) Connect the Subaru Select Monitor to the terminal No. 2 of the TPMS & keyless entry control module connector (R221). ***Connector & terminal*** ***(R221) No. 2 (+) — Chassis ground (–):*** 3) Turn the ignition switch to ON, and select "Oscilloscope" from the Main Menu of Subaru Select Monitor. 4) Check the voltage displayed.	Is the voltage 10 V or more?	Replace the TPMS & keyless entry control module.	The harness between the combination meter connector and the TPMS & keyless entry control module connector is shorted or open. Repair or replace the harness.

13.List of Diagnostic Trouble Code (DTC)

A: LIST

DTC	Item	Contents of diagnosis	Remarks
11	Tire 1 Air Pressure Decrease	Tire pressure of tire 1 is reduced.	<Ref. to TPM(diag)-22, DTC 11 TIRE 1 AIR PRESSURE DECREASE, Diagnostic Procedure with Diagnostic Trouble Code (DTC).>
12	Tire 2 Air Pressure Decrease	Tire pressure of tire 2 is reduced.	<Ref. to TPM(diag)-22, DTC 12 TIRE 2 AIR PRESSURE DECREASE, Diagnostic Procedure with Diagnostic Trouble Code (DTC).>
13	Tire 3 Air Pressure Decrease	Tire pressure of tire 3 is reduced.	<Ref. to TPM(diag)-22, DTC 13 TIRE 3 AIR PRESSURE DECREASE, Diagnostic Procedure with Diagnostic Trouble Code (DTC).>
14	Tire 4 Air Pressure Decrease	Tire pressure of tire 4 is reduced.	<Ref. to TPM(diag)-23, DTC 14 TIRE 4 AIR PRESSURE DECREASE, Diagnostic Procedure with Diagnostic Trouble Code (DTC).>
21	Transmitter 1 No Data	Data cannot be received from transmitter 1.	<Ref. to TPM(diag)-23, DTC 21 TRANSMITTER 1 NO DATA, Diagnostic Procedure with Diagnostic Trouble Code (DTC).>
22	Transmitter 2 No Data	Data cannot be received from transmitter 2.	<Ref. to TPM(diag)-23, DTC 22 TRANSMITTER 2 NO DATA, Diagnostic Procedure with Diagnostic Trouble Code (DTC).>
23	Transmitter 3 No Data	Data cannot be received from transmitter 3.	<Ref. to TPM(diag)-23, DTC 23 TRANSMITTER 3 NO DATA, Diagnostic Procedure with Diagnostic Trouble Code (DTC).>
24	Transmitter 4 No Data	Data cannot be received from transmitter 4.	<Ref. to TPM(diag)-24, DTC 24 TRANSMITTER 4 NO DATA, Diagnostic Procedure with Diagnostic Trouble Code (DTC).>
31	Transmitter 1 Pressure Data Abnormal	Transmitter 1 data contents are abnormal.	<Ref. to TPM(diag)-25, DTC 31 TRANSMITTER 1 PRESSURE DATA ABNORMAL, Diagnostic Procedure with Diagnostic Trouble Code (DTC).>
32	Transmitter 2 Pressure Data Abnormal	Transmitter 2 data contents are abnormal.	<Ref. to TPM(diag)-25, DTC 32 TRANSMITTER 2 PRESSURE DATA ABNORMAL, Diagnostic Procedure with Diagnostic Trouble Code (DTC).>
33	Transmitter 3 Pressure Data Abnormal	Transmitter 3 data contents are abnormal.	<Ref. to TPM(diag)-25, DTC 33 TRANSMITTER 3 PRESSURE DATA ABNORMAL, Diagnostic Procedure with Diagnostic Trouble Code (DTC).>

DTC	Item	Contents of diagnosis	Remarks
34	Transmitter 4 Pressure Data Abnormal	Transmitter 4 data contents are abnormal.	<Ref. to TPM(diag)-26, DTC 34 TRANSMITTER 4 PRESSURE DATA ABNORMAL, Diagnostic Procedure with Diagnostic Trouble Code (DTC).>
41	Transmitter 1 Function Code Abnormal	Function code has error.	<Ref. to TPM(diag)-27, DTC 41 TRANSMITTER 1 FUNCTION CODE ABNORMAL, Diagnostic Procedure with Diagnostic Trouble Code (DTC).>
42	Transmitter 2 Function Code Abnormal	Function code has error.	<Ref. to TPM(diag)-27, DTC 42 TRANSMITTER 2 FUNCTION CODE ABNORMAL, Diagnostic Procedure with Diagnostic Trouble Code (DTC).>
43	Transmitter 3 Function Code Abnormal	Function code has error.	<Ref. to TPM(diag)-27, DTC 43 TRANSMITTER 3 FUNCTION CODE ABNORMAL, Diagnostic Procedure with Diagnostic Trouble Code (DTC).>
44	Transmitter 4 Function Code Abnormal	Function code has error.	<Ref. to TPM(diag)-28, DTC 44 TRANSMITTER 4 FUNCTION CODE ABNORMAL, Diagnostic Procedure with Diagnostic Trouble Code (DTC).>
51	Transmitter 1 Battery Voltage Decrease	Transmitter battery voltage is low.	<Ref. to TPM(diag)-29, DTC 51 TRANSMITTER 1 BATTERY VOLTAGE DECREASE, Diagnostic Procedure with Diagnostic Trouble Code (DTC).>
52	Transmitter 2 Battery Voltage Decrease	Transmitter battery voltage is low.	<Ref. to TPM(diag)-29, DTC 52 TRANSMITTER 2 BATTERY VOLTAGE DECREASE, Diagnostic Procedure with Diagnostic Trouble Code (DTC).>
53	Transmitter 3 Battery Voltage Decrease	Transmitter battery voltage is low.	<Ref. to TPM(diag)-29, DTC 53 TRANSMITTER 3 BATTERY VOLTAGE DECREASE, Diagnostic Procedure with Diagnostic Trouble Code (DTC).>
54	Transmitter 4 Battery Voltage Decrease	Transmitter battery voltage is low.	<Ref. to TPM(diag)-30, DTC 54 TRANSMITTER 4 BATTERY VOLTAGE DECREASE, Diagnostic Procedure with Diagnostic Trouble Code (DTC).>
61	Vehicle Speed is Abnormal	Vehicle speed signal is not input to the control module when the vehicle speed is 6 km/h (3.7 MPH) or more.	<Ref. to TPM(diag)-31, DTC 61 VEHICLE SPEED IS ABNORMAL, Diagnostic Procedure with Diagnostic Trouble Code (DTC).>

14.Diagnostic Procedure with Diagnostic Trouble Code (DTC)

A: DTC 11 TIRE 1 AIR PRESSURE DECREASE

NOTE:
Refer to DTC 14 for diagnostic procedure. <Ref. to TPM(diag)-23, DTC 14 TIRE 4 AIR PRESSURE DECREASE, Diagnostic Procedure with Diagnostic Trouble Code (DTC).>

B: DTC 12 TIRE 2 AIR PRESSURE DECREASE

NOTE:
Refer to DTC 14 for diagnostic procedure. <Ref. to TPM(diag)-23, DTC 14 TIRE 4 AIR PRESSURE DECREASE, Diagnostic Procedure with Diagnostic Trouble Code (DTC).>

C: DTC 13 TIRE 3 AIR PRESSURE DECREASE

NOTE:
Refer to DTC 14 for diagnostic procedure. <Ref. to TPM(diag)-23, DTC 14 TIRE 4 AIR PRESSURE DECREASE, Diagnostic Procedure with Diagnostic Trouble Code (DTC).>

D: DTC 14 TIRE 4 AIR PRESSURE DECREASE

DTC DETECTING CONDITION:
Inflation pressure of tires dropped below the specified value.

NOTE:
For the specifications, refer to “CURRENT DATA”. <Ref. to TPM(diag)-11, LIST, Read Current Data.>
TROUBLE SYMPTOM:
Tire inflation pressure warning light illuminates.

	Step	Check	Yes	No
1	**CHECK TIRES.** Lift up the vehicle and check for damage in the tires.	Are there cracks or damage?	Replace the tire.	Go to step **2**.
2	**CHECK TIRES.** Check the tire inflation pressure.	Is the tire inflation pressure within the specified value?	Go to step **3**.	Adjust the tire inflation pressure.
3	**CHECK TRANSMITTER.** Drive the vehicle at 40 km/h (25 MPH) or faster and compare the data from the transmitters on the four wheels.	Is there a transmitter with different data?	Replace the transmitter (tire inflation pressure sensor).	Go to step **4**.
4	**PERFORM DRIVING TEST.** 1) Perform the Clear Memory Mode. <Ref. to TPM(diag)-10, OPERATION, Clear Memory Mode.> 2) Perform the driving test. <Ref. to TPM(diag)-14, PROCEDURE, Inspection Mode.> 3) Read diagnostic trouble code (DTC). <Ref. to TPM(diag)-9, OPERATION, Read Diagnostic Trouble Code (DTC).>	Is DTC displayed?	Inspect using “Diagnostic Procedure with Diagnostic Trouble Code (DTC)”. <Ref. to TPM(diag)-22, Diagnostic Procedure with Diagnostic Trouble Code (DTC).>	Finish the diagnosis.

CAUTION:
When driving vehicle to perform driving test, there should be always 2 persons (driver and checker) to check.

E: DTC 21 TRANSMITTER 1 NO DATA

NOTE:
Refer to DTC 24 for diagnostic procedure. <Ref. to TPM(diag)-24, DTC 24 TRANSMITTER 4 NO DATA, Diagnostic Procedure with Diagnostic Trouble Code (DTC).>

F: DTC 22 TRANSMITTER 2 NO DATA

NOTE:
Refer to DTC 24 for diagnostic procedure. <Ref. to TPM(diag)-24, DTC 24 TRANSMITTER 4 NO DATA, Diagnostic Procedure with Diagnostic Trouble Code (DTC).>

G: DTC 23 TRANSMITTER 3 NO DATA

NOTE:
Refer to DTC 24 for diagnostic procedure. <Ref. to TPM(diag)-24, DTC 24 TRANSMITTER 4 NO DATA, Diagnostic Procedure with Diagnostic Trouble Code (DTC).>

H: DTC 24 TRANSMITTER 4 NO DATA

DTC DETECTING CONDITION:
Data from transmitters cannot be received for 8 minutes
TROUBLE SYMPTOM:
Tire inflation pressure warning light blinks 25 times and then illuminates.

	Step	Check	Yes	No
1	**START FL TRANSMITTER.** 1) Connect the Subaru Select Monitor and then turn the ignition switch to ON. 2) Select “Transmitter ID display”. <Ref. to TPM(diag)-13, OPERATION, Display Transmitter (ID).> 3) Use the transmitter registration tool and transmit the ID from the FL transmitter to check “Latest reception ID”.	Is “Latest reception ID” updated?	Go to step **2**.	Replace front left transmitter.
2	**CHECK FL TRANSMITTER ID.** Check the ID displayed in the updated ID display and the tire 1 registered ID.	Are the two IDs same?	Go to step **3**.	Record the received ID update as the FL transmitter. Go to step **3**.
3	**START FR TRANSMITTER.** Use the transmitter registration tool and transmit the ID from the FR transmitter to check “Latest reception ID”.	Is “Latest reception ID” updated?	Go to step **4**.	Replace front right transmitter.
4	**CHECK FR TRANSMITTER ID.** Check the ID displayed in the updated ID display and the tire 2 registered ID.	Are the two IDs same?	Go to step **5**.	Record the received ID update as the FR transmitter. Go to step **5**.
5	**START RR TRANSMITTER.** Use the transmitter registration tool and transmit the ID from the RR transmitter to check “Latest reception ID”.	Is “Latest reception ID” updated?	Go to step **6**.	Replace RR transmitter.
6	**CHECK RR TRANSMITTER ID.** Check the ID displayed in the updated ID display and the tire 3 registered ID.	Are the two IDs same?	Go to step **7**.	Record the received ID update as the RR transmitter. Go to step **7**.
7	**START RL TRANSMITTER.** Use the transmitter registration tool and transmit the ID from the RL transmitter to check “Latest reception ID”.	Is “Latest reception ID” updated?	Go to step **8**.	Replace RL transmitter.
8	**CHECK RL TRANSMITTER ID.** Check the ID displayed in the updated ID display and the tire 4 registered ID.	Are the two IDs same?	Go to step **9**.	Record the received ID update as the RL transmitter. Go to step **9**.
9	**CHECK MALFUNCTION TRANSMITTER.**	Is ID recorded by this procedure?	Go to step **10**.	Go to step **1**.
10	**CHECK MALFUNCTION TRANSMITTER.** Check the registered ID of the transmitter indicated by diagnostic trouble code (DTC).	Is the checked ID included in the record?	Replace the transmitter of the recorded position.	Replace the transmitter showing the latest ID that is not included in the registered IDs.

CAUTION:
When driving vehicle to perform driving test, there should be always 2 persons (driver and checker) to check.

I: DTC 31 TRANSMITTER 1 PRESSURE DATA ABNORMAL

NOTE:
Refer to DTC 34 for diagnostic procedure. <Ref. to TPM(diag)-26, DTC 34 TRANSMITTER 4 PRESSURE DATA ABNORMAL, Diagnostic Procedure with Diagnostic Trouble Code (DTC).>

J: DTC 32 TRANSMITTER 2 PRESSURE DATA ABNORMAL

NOTE:
Refer to DTC 34 for diagnostic procedure. <Ref. to TPM(diag)-26, DTC 34 TRANSMITTER 4 PRESSURE DATA ABNORMAL, Diagnostic Procedure with Diagnostic Trouble Code (DTC).>

K: DTC 33 TRANSMITTER 3 PRESSURE DATA ABNORMAL

NOTE:
Refer to DTC 34 for diagnostic procedure. <Ref. to TPM(diag)-26, DTC 34 TRANSMITTER 4 PRESSURE DATA ABNORMAL, Diagnostic Procedure with Diagnostic Trouble Code (DTC).>

L: DTC 34 TRANSMITTER 4 PRESSURE DATA ABNORMAL

DTC DETECTING CONDITION:

- When comparing the data from each transmitter with the previous data, the change is large.
- The pressure exceeds what the transmitter can measure. (Excessive pressure)

TROUBLE SYMPTOM:

Tire inflation pressure warning light blinks 25 times and then illuminates.

	Step	Check	Yes	No
1	**START FL TRANSMITTER.** 1) Connect the Subaru Select Monitor and then turn the ignition switch to ON. 2) Select “Transmitter ID display”. <Ref. to TPM(diag)-13, OPERATION, Display Transmitter (ID).> 3) Use the transmitter registration tool and transmit the ID from the FL transmitter to check “Latest reception ID”.	Is “Latest reception ID” updated?	Go to step **2**.	Replace front left transmitter.
2	**CHECK FL TRANSMITTER ID.** Check the ID displayed in the updated ID display and the tire 1 registered ID.	Are the two IDs same?	Go to step **3**.	Record the received ID update as the FL transmitter. Go to step **3**.
3	**START FR TRANSMITTER.** Use the transmitter registration tool and transmit the ID from the FR transmitter to check “Latest reception ID”.	Is “Latest reception ID” updated?	Go to step **4**.	Replace front right transmitter.
4	**CHECK FR TRANSMITTER ID.** Check the ID displayed in the updated ID display and the tire 2 registered ID.	Are the two IDs same?	Go to step **5**.	Record the received ID update as the FR transmitter. Go to step **5**.
5	**START RR TRANSMITTER.** Use the transmitter registration tool and transmit the ID from the RR transmitter to check “Latest reception ID”.	Is “Latest reception ID” updated?	Go to step **6**.	Replace RR transmitter.
6	**CHECK RR TRANSMITTER ID.** Check the ID displayed in the updated ID display and the tire 3 registered ID.	Are the two IDs same?	Go to step **7**.	Record the received ID update as the RR transmitter. Go to step **7**.
7	**START RL TRANSMITTER.** Use the transmitter registration tool and transmit the ID from the RL transmitter to check “Latest reception ID”.	Is “Latest reception ID” updated?	Go to step **8**.	Replace RL transmitter.
8	**CHECK RL TRANSMITTER ID.** Check the ID displayed in the updated ID display and the tire 4 registered ID.	Are the two IDs same?	Go to step **9**.	Record the received ID update as the RL transmitter. Go to step **9**.
9	**CHECK MALFUNCTION TRANSMITTER.**	Is ID recorded by this procedure?	Go to step **10**.	Go to step **1**.
10	**CHECK MALFUNCTION TRANSMITTER.** Check the registered ID of the transmitter indicated by diagnostic trouble code (DTC).	Is the checked ID included in the record?	Replace the transmitter of the recorded position.	Replace the transmitter showing the latest ID that is not included in the registered IDs.

M: DTC 41 TRANSMITTER 1 FUNCTION CODE ABNORMAL

NOTE:
Refer to DTC 44 for diagnostic procedure. <Ref. to TPM(diag)-28, DTC 44 TRANSMITTER 4 FUNCTION CODE ABNORMAL, Diagnostic Procedure with Diagnostic Trouble Code (DTC).>

N: DTC 42 TRANSMITTER 2 FUNCTION CODE ABNORMAL

NOTE:
Refer to DTC 44 for diagnostic procedure. <Ref. to TPM(diag)-28, DTC 44 TRANSMITTER 4 FUNCTION CODE ABNORMAL, Diagnostic Procedure with Diagnostic Trouble Code (DTC).>

O: DTC 43 TRANSMITTER 3 FUNCTION CODE ABNORMAL

NOTE:
Refer to DTC 44 for diagnostic procedure. <Ref. to TPM(diag)-28, DTC 44 TRANSMITTER 4 FUNCTION CODE ABNORMAL, Diagnostic Procedure with Diagnostic Trouble Code (DTC).>

P: DTC 44 TRANSMITTER 4 FUNCTION CODE ABNORMAL

DTC DETECTING CONDITION:
Unexpected function codes received from each transmitter.
TROUBLE SYMPTOM:
Tire inflation pressure warning light blinks 25 times and then illuminates.

	Step	Check	Yes	No
1	**START FL TRANSMITTER.** 1) Connect the Subaru Select Monitor and then turn the ignition switch to ON. 2) Select “Transmitter ID display”. <Ref. to TPM(diag)-13, OPERATION, Display Transmitter (ID).> 3) Use the transmitter registration tool and transmit the ID from the FL transmitter to check “Latest reception ID”.	Is “Latest reception ID” updated?	Go to step **2**.	Replace front left transmitter.
2	**CHECK FL TRANSMITTER ID.** Check the ID displayed in the updated ID display and the tire 1 registered ID.	Are the two IDs same?	Go to step **3**.	Record the received ID update as the FL transmitter. Go to step **3**.
3	**START FR TRANSMITTER.** Use the transmitter registration tool and transmit the ID from the FR transmitter to check “Latest reception ID”.	Is “Latest reception ID” updated?	Go to step **4**.	Replace front right transmitter.
4	**CHECK FR TRANSMITTER ID.** Check the ID displayed in the updated ID display and the tire 2 registered ID.	Are the two IDs same?	Go to step **5**.	Record the received ID update as the FR transmitter. Go to step **5**.
5	**START RR TRANSMITTER.** Use the transmitter registration tool and transmit the ID from the RR transmitter to check “Latest reception ID”.	Is “Latest reception ID” updated?	Go to step **6**.	Replace RR transmitter.
6	**CHECK RR TRANSMITTER ID.** Check the ID displayed in the updated ID display and the tire 3 registered ID.	Are the two IDs same?	Go to step **7**.	Record the received ID update as the RR transmitter. Go to step **7**.
7	**START RL TRANSMITTER.** Use the transmitter registration tool and transmit the ID from the RL transmitter to check “Latest reception ID”.	Is “Latest reception ID” updated?	Go to step **8**.	Replace RL transmitter.
8	**CHECK RL TRANSMITTER ID.** Check the ID displayed in the updated ID display and the tire 4 registered ID.	Are the two IDs same?	Go to step **9**.	Record the received ID update as the RL transmitter. Go to step **9**.
9	**CHECK MALFUNCTION TRANSMITTER.**	Is ID recorded by this procedure?	Go to step **10**.	Replace the transmitter indicated by diagnostics trouble code (DTC).
10	**CHECK MALFUNCTION TRANSMITTER.** Check the registered ID of the transmitter indicated by diagnostic trouble code (DTC).	Is the checked ID included in the record?	Replace the transmitter of the recorded position.	Replace the transmitter indicated by diagnostics trouble code (DTC).

Q: DTC 51 TRANSMITTER 1 BATTERY VOLTAGE DECREASE

NOTE:
Refer to DTC 54 for diagnostic procedure. <Ref. to TPM(diag)-30, DTC 54 TRANSMITTER 4 BATTERY VOLTAGE DECREASE, Diagnostic Procedure with Diagnostic Trouble Code (DTC).>

R: DTC 52 TRANSMITTER 2 BATTERY VOLTAGE DECREASE

NOTE:
Refer to DTC 54 for diagnostic procedure. <Ref. to TPM(diag)-30, DTC 54 TRANSMITTER 4 BATTERY VOLTAGE DECREASE, Diagnostic Procedure with Diagnostic Trouble Code (DTC).>

S: DTC 53 TRANSMITTER 3 BATTERY VOLTAGE DECREASE

NOTE:
Refer to DTC 54 for diagnostic procedure. <Ref. to TPM(diag)-30, DTC 54 TRANSMITTER 4 BATTERY VOLTAGE DECREASE, Diagnostic Procedure with Diagnostic Trouble Code (DTC).>

T: DTC 54 TRANSMITTER 4 BATTERY VOLTAGE DECREASE

DTC DETECTING CONDITION:
Low battery signals received 20 times from each transmitter.
TROUBLE SYMPTOM:
Tire pressure warning light blinks 25 times and then illuminates.

	Step	Check	Yes	No
1	**CHECK TRANSMITTER.** 1) Replace all transmitters and register their IDs. <Ref. to TPM(diag)-12, OPERATION, Register Transmitter (ID).> 2) Perform the Clear Memory Mode, and perform driving test.	Is the fault eliminated?	Internal battery of the transmitter had worn out.	Replace the TPMS & keyless entry control module.

U: DTC 61 VEHICLE SPEED IS ABNORMAL

DTC DETECTING CONDITION:
Vehicle speed function codes were received from the transmitter, but the vehicle speed signal was not input to the module.

TROUBLE SYMPTOM:
Tire pressure warning light blinks 25 times and then illuminates.

WIRING DIAGRAM:

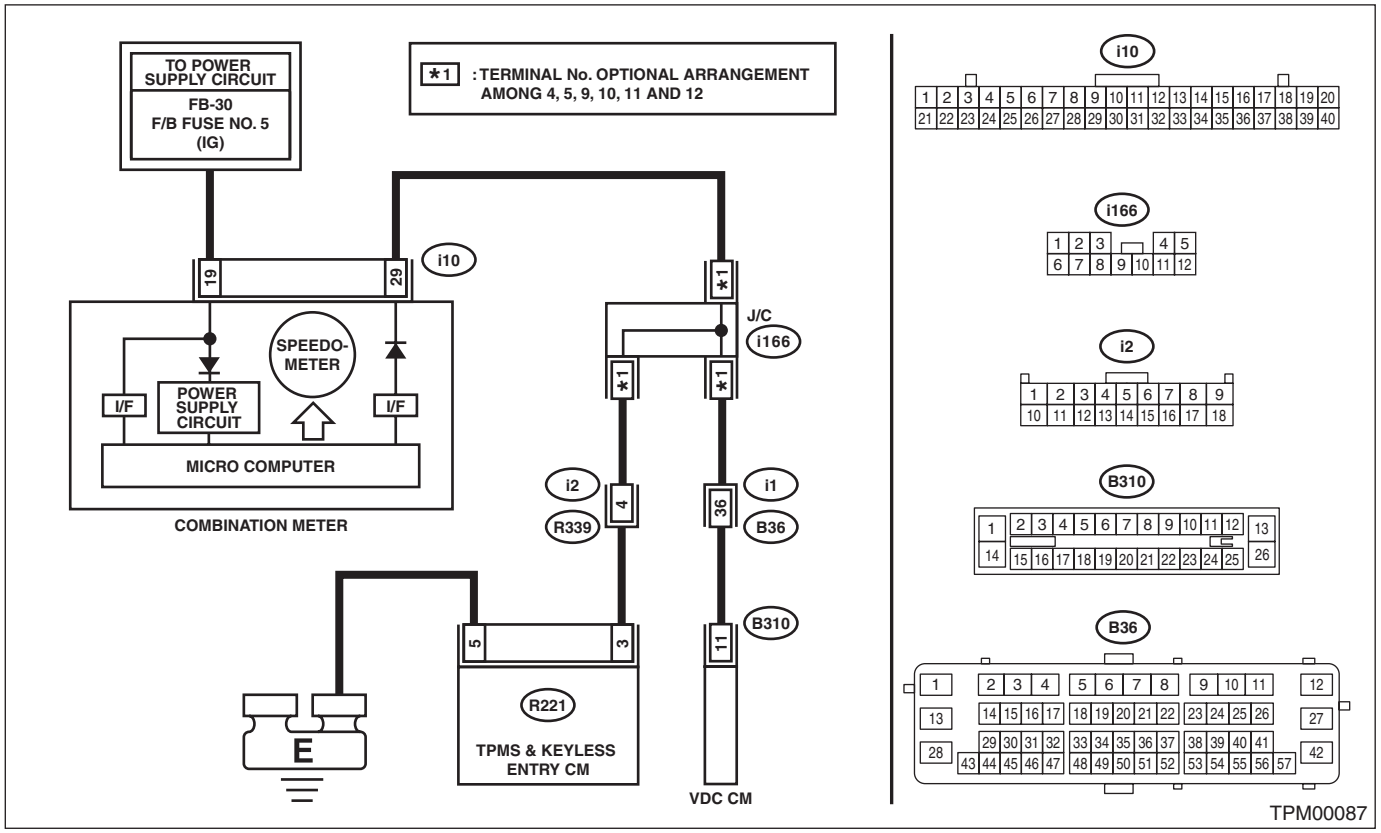

Step		Check	Yes	No
1	**CHECK TPMS & KEYLESS ENTRY CONTROL MODULE.** 1) Connect an oscilloscope to the terminal No. 3 of the TPMS & keyless entry control module connector (R221). 2) Lift up the vehicle and then drive the vehicle at 40 km/h (25 MPH) and check the vehicle speed signal at that time.	Is the vehicle speed being input?	Replace the TPMS & keyless entry control module.	Go to step **2**.
2	**CHECK HARNESS.** 1) Disconnect the combination meter connector (i10). 2) Connect the tester to the TPMS & keyless entry control module connector (R221) and combination meter connector (i10), and measure the resistance. ***Connector & terminal*** ***(R221) No. 3 — (i10) No. 29:***	Is the resistance less than 0.5 Ω?	Check the combination meter. <Ref. to IDI-21, REMOVAL, Combination Meter.>	Repair or replace the open circuit of the harness.

15.General Diagnostic Table

A: INSPECTION

Symptoms		Faulty parts
Tire pressure warning light illuminates.	Tire pressure is reduced.	• Improper tire pressure adjustment. • Punctured tire
Tire pressure warning light blinks 25 times and then illuminates.	Tire pressure monitoring system has malfunction.	• Air pressure sensor malfunction • Air pressure sensor is out of battery. • Defective TPMS & keyless entry control module • Defective vehicle harness • Defective combination meter
Tire pressure is dropping but the warning light does not illuminate.	Tire pressure warning light does not illuminate.	• Air pressure sensor is faulty. • Defective TPMS & keyless entry control module • Defective combination meter

DIFFERENTIALS

DI

		Page
1.	General Description	2
2.	Differential Gear Oil	23
3.	Front Differential Assembly	25
4.	Rear Differential (T-type)	26
5.	Rear Differential (VA-type)	46
6.	Rear Differential Front Oil Seal	76
7.	Rear Differential Side Oil Seal	78
8.	Rear Differential Front Member	79
9.	Rear Differential Mount Bushing	80
10.	Rear Differential Inspection Mode	84
11.	General Diagnostic Table	85

1. General Description

A: SPECIFICATION

1. REAR DIFFERENTIAL

When replacing a rear differential assembly, select the correct one according to the following table.

NOTE:
• Using a different rear differential assembly will cause the drive train and tires to drag or emit abnormal noise.
• For option code, refer to “ID” section. <Ref. to ID-2, IDENTIFICATION, Identification.>

Model	Sedan				OUTBACK		
	2.5 L SOHC		2.5 L DOHC turbo	3.6 L	2.5 L SOHC		3.6 L
	CVT	6MT	6MT	5AT	CVT	6MT	5AT
Rear differential type	VA1-type	T-type	T-type	VA2-TYPE	T-type	T-type	VA2-TYPE
Identification	XD	T2	B1	XC	B2	TP	XC
LSD type	—						
Type of gear	Hypoid gear						
Gear ratio (Number of gear teeth)	3.700 (37/10)	4.111 (37/9)	4.111 (37/9)	3.083 (37/12)	3.900 (39/10)	4.444 (40/9)	3.083 (37/12)
Oil capacity	0.8 ℓ (0.8 US qt, 0.7 Imp qt)						
Rear differential gear oil	GL–5 (75W–90)						

2. IDENTIFICATION

Identification positions are shown in the following figures. For details concerning identification, refer to the “ID” section.

- T-type

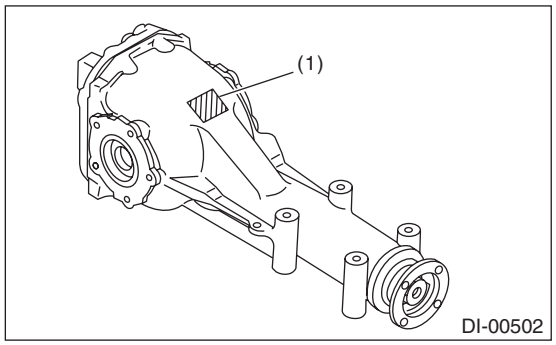

(1) Identification

- VA1-type

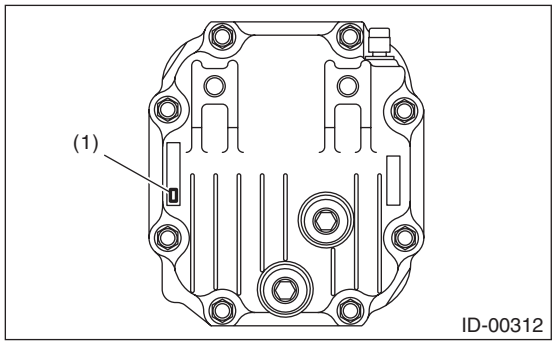

(1) Identification

- VA2-type

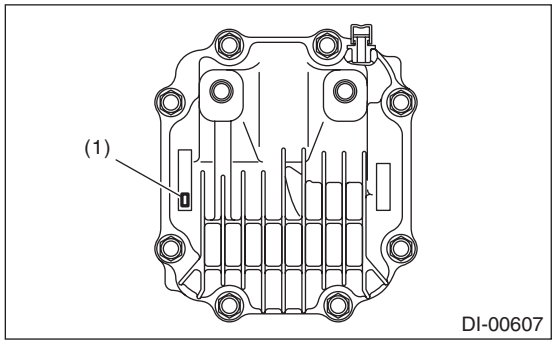

(1) Identification

3. REAR DIFFERENTIAL GEAR OIL

Recommended gear oil:
GL–5 (75W–90)

CAUTION:
Each oil manufacturer has its base oil and additives. Thus, do not mix two or more brands.

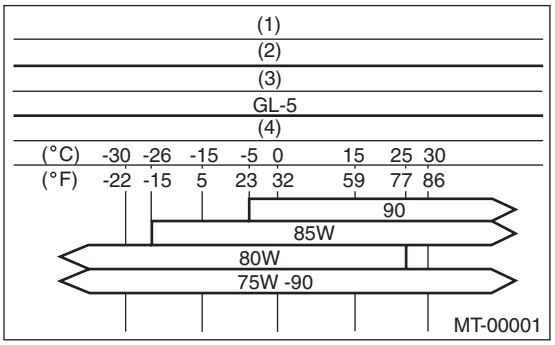

(1) Item
(2) Rear differential gear oil
(3) API classification
(4) SAE viscosity No. and applicable temperature

4. SERVICE DATA

Drive pinion bearing preload (For new bearing)	Measured with spring measurement (Measured at companion flange bolt hole) N (kgf, lbf)	T-type	18.1 — 38.8 (1.8 — 4.0, 4.1 — 8.7)
		VA1, VA2-type	12.7 — 32.2 (1.3 — 3.3, 2.9 — 7.2)
	Measured with torque wrench N·m (kgf-m, ft-lb)	T-type	0.69 — 1.47 (0.07 — 0.15, 0.51 — 1.08)
		VA1, VA2-type	0.48 — 1.22 (0.05 — 0.12, 0.35 — 0.90)
Side gear backlash mm (in)		T-type	0.10 — 0.20 (0.004 — 0.008)
		VA1-type	0.05 — 0.15 (0.002 — 0.006)
		VA2-type	0.13 — 0.18 (0.005 — 0.007)
Hypoid driven gear backlash mm (in)		T-type	0.10 — 0.20 (0.004 — 0.008)
		VA1, VA2-type	0.10 — 0.15 (0.004 — 0.006)
Hypoid driven gear runout on its back surface mm (in)		T-type	0.05 (0.002)
Total preload (Measured from the companion flange bolt hole) N (kgf, lbf)		T-type	20.7 — 54.4 (2.1 — 5.5, 4.7 — 12.2)
Companion flange mating surface runout mm (in)			0.08 (0.003)
Companion flange runout on its inner side mm (in)			0.08 (0.003)

B: COMPONENT

1. REAR DIFFERENTIAL (T-TYPE)

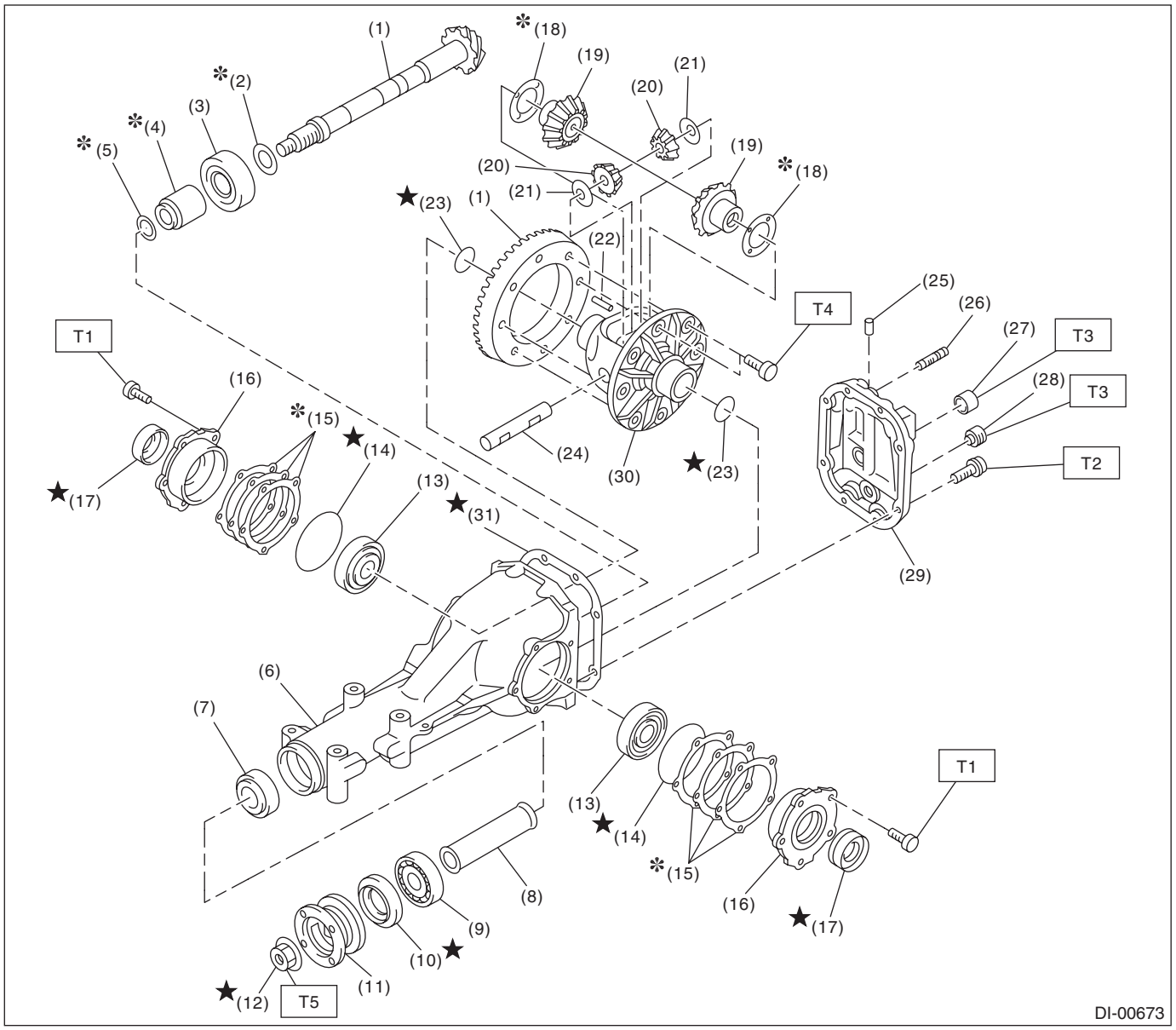

(1)	Hypoid driven gear and drive pinion set	(14)	O-ring	(27)	Filler plug
(2)	Pinion height adjusting washer	(15)	Side retainer shim	(28)	Drain plug
(3)	Rear bearing	(16)	Side retainer	(29)	Rear cover
(4)	Preload adjusting spacer	(17)	Side oil seal	(30)	Differential case
(5)	Preload adjusting washer	(18)	Side gear thrust washer	(31)	Gasket
(6)	Differential carrier	(19)	Side gear		
(7)	Front bearing	(20)	Pinion mate gear		
(8)	Spacer	(21)	Pinion mate gear washer		
(9)	Pilot bearing	(22)	Pinion shaft lock pin		
(10)	Front oil seal	(23)	Snap ring		
(11)	Companion flange	(24)	Pinion mate shaft		
(12)	Self-locking nut	(25)	Air breather cap		
(13)	Side bearing	(26)	Stud bolt		

Tightening torque:N·m (kgf-m, ft-lb)

T1: 10.5 (1.1, 7.7)
T2: 29.5 (3.0, 21.8)
T3: 49 (5.0, 36.1)
T4: 103 (10.5, 76.0)
T5: 181.5 (18.5, 133.9)

2. REAR DIFFERENTIAL (VA1-TYPE)

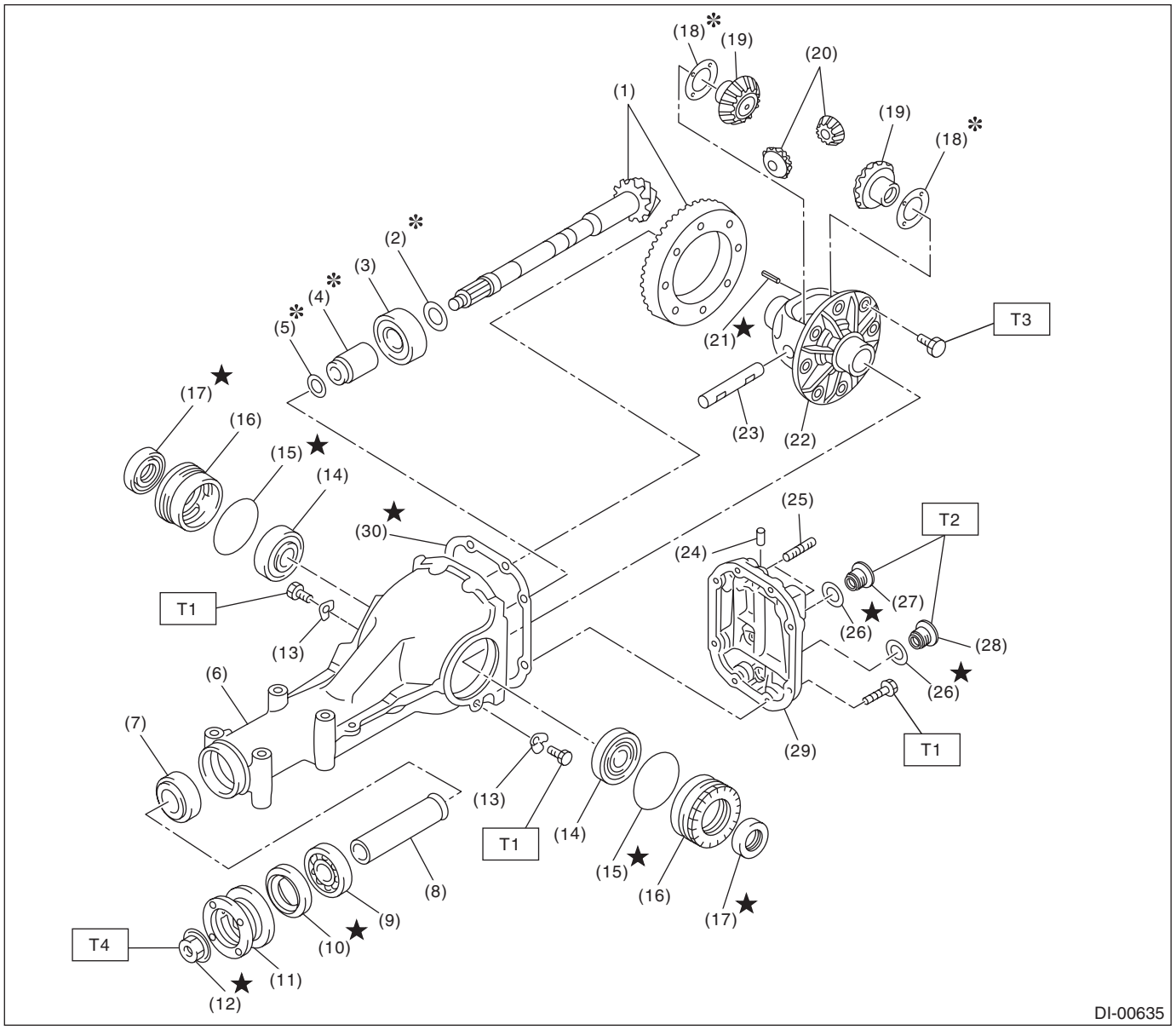

(1)	Hypoid driven gear and drive pinion set	(13)	Lock plate	(25)	Stud bolt
(2)	Pinion height adjusting washer	(14)	Side bearing	(26)	Gasket
(3)	Rear bearing	(15)	O-ring	(27)	Filler plug
(4)	Preload adjusting spacer	(16)	Side retainer	(28)	Drain plug
(5)	Preload adjusting washer	(17)	Side oil seal	(29)	Rear cover
(6)	Differential carrier	(18)	Side gear thrust washer	(30)	Gasket
(7)	Front bearing	(19)	Side gear		
(8)	Spacer	(20)	Pinion mate gear	***Tightening torque:N·m (kgf-m, ft-lb)***	
(9)	Pilot bearing	(21)	Spring pin	***T1:***	***25 (2.5, 18.4)***
(10)	Front oil seal	(22)	Differential case	***T2:***	***50 (5.1, 36.9)***
(11)	Companion flange	(23)	Pinion mate shaft	***T3:***	***<Ref. to DI-52, ASSEMBLY, Rear Differential (VA-type).>***
(12)	Self-locking nut	(24)	Air breather cap	***T4:***	***191 (19.5, 140.9)***

3. REAR DIFFERENTIAL (VA2-TYPE)

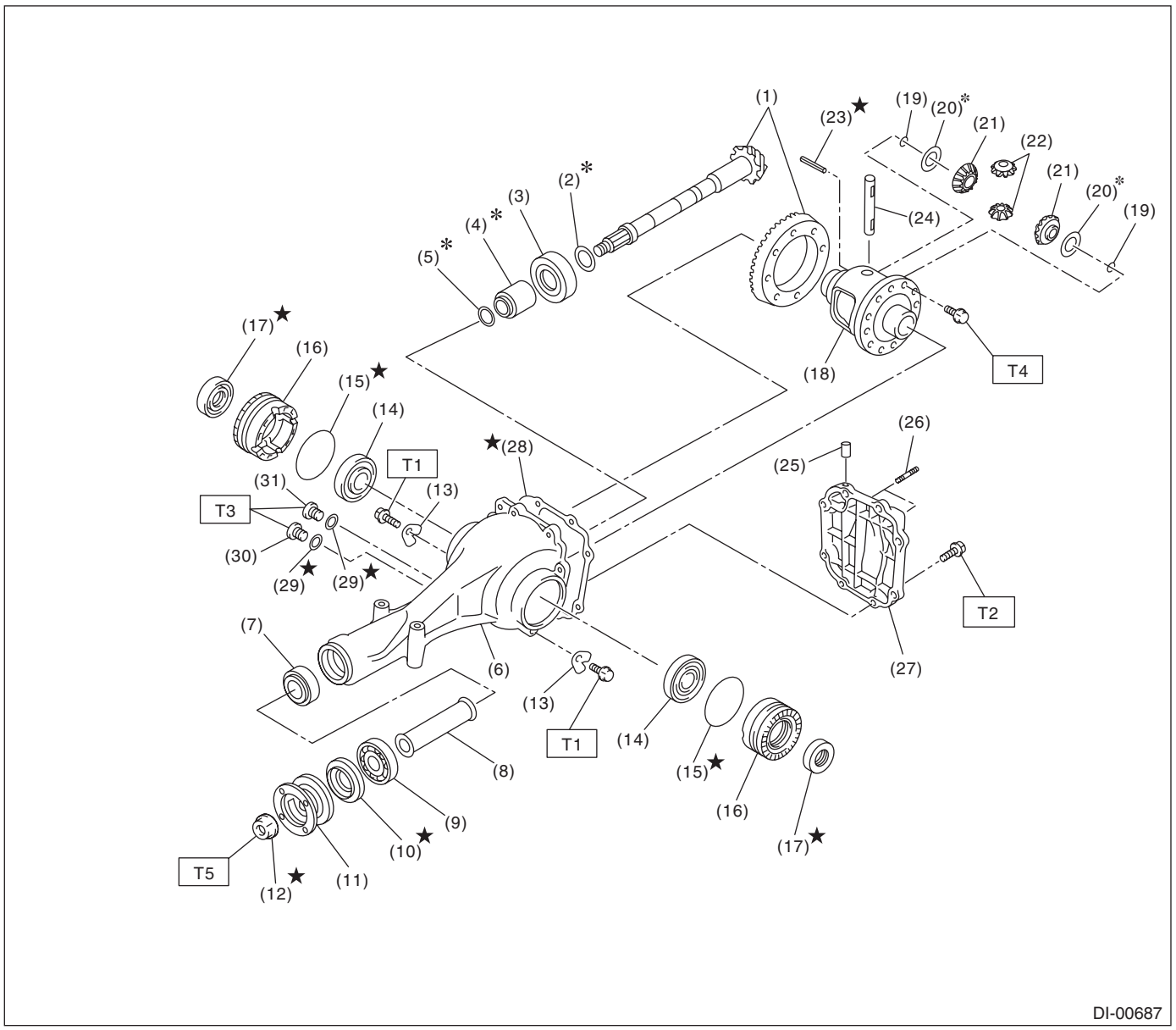

DI-00687

(1)	Hypoid driven gear and drive pinion set	(14)	Side bearing	(27)	Rear cover
(2)	Pinion height adjusting washer	(15)	O-ring	(28)	Gasket
(3)	Rear bearing	(16)	Side retainer	(29)	Gasket
(4)	Preload adjusting spacer	(17)	Side oil seal	(30)	Filler plug
(5)	Preload adjusting washer	(18)	Differential case	(31)	Drain plug
(6)	Differential carrier	(19)	Circlip		
(7)	Front bearing	(20)	Side gear thrust washer		
(8)	Spacer	(21)	Side gear		
(9)	Pilot bearing	(22)	Pinion mate gear		
(10)	Front oil seal	(23)	Spring pin		
(11)	Companion flange	(24)	Pinion mate shaft		
(12)	Self-locking nut	(25)	Air breather cap		
(13)	Lock plate	(26)	Stud bolt		

Tightening torque:N·m (kgf-m, ft-lb)	
T1:	*25 (2.5, 18.4)*
T2:	*34 (3.5, 25.1)*
T3:	*50 (5.1, 36.9)*
T4:	*<Ref. to DI-52, ASSEMBLY, Rear Differential (VA-type).>*
T5:	*191 (19.5, 140.9)*

4. REAR DIFFERENTIAL MOUNTING SYSTEM

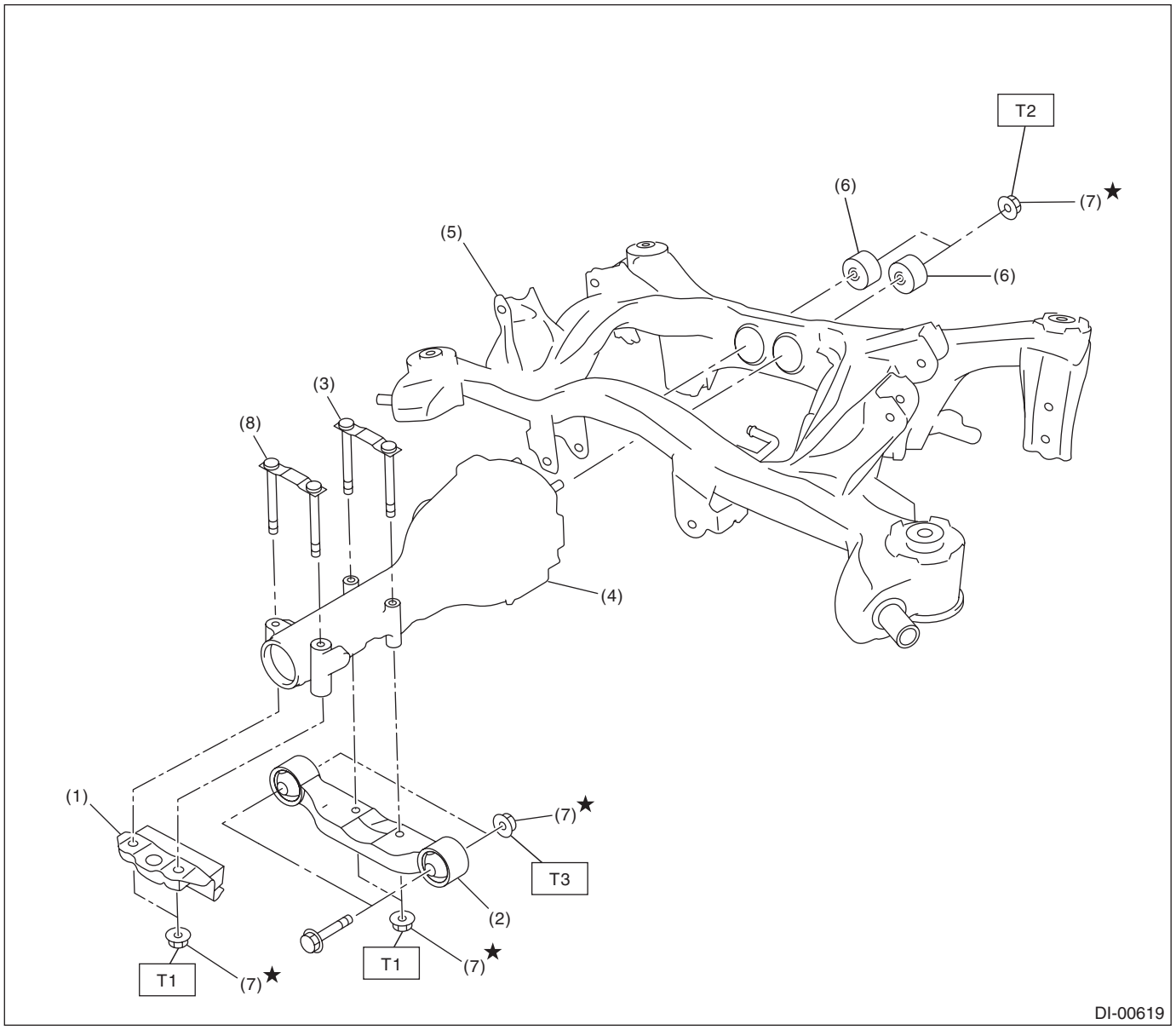

(1)	Mass damper (CVT model)	(5)	Sub frame
(2)	Rear differential front member	(6)	Rear differential mount bushing
(3)	Rear differential member plate	(7)	Self-locking nut
(4)	Rear differential ASSY	(8)	Rear differential member plate (CVT model)

Tightening torque:N·m (kgf-m, ft-lb)
T1: 50 (5.1, 36.9)
T2: 70 (7.1, 51.6)
T3: 110 (11.2, 81.1)

C: CAUTION

- Wear appropriate work clothing, including a cap, protective goggles and protective shoes when performing any work.
- Remove contamination including dirt and corrosion before removal, installation or disassembly.
- Keep the disassembled parts in order and protect them from dust and dirt.
- Before removal, installation or disassembly, be sure to clarify the failure. Avoid unnecessary removal, installation, disassembly and replacement.
- Vehicle components are extremely hot after driving. Be wary of receiving burns from heated parts.
- Use SUBARU genuine gear oil, grease or equivalent. Do not mix gear oil, grease, etc. of different grades or manufacturers.
- Be sure to tighten fasteners including bolts and nuts to the specified torque.
- Place shop jacks or rigid racks at the specified points.
- Apply gear oil onto sliding or revolving surfaces before installation.
- Before installing the O-ring or snap ring, apply a sufficient amount of gear oil to avoid damage and deformation.
- Before securing a part on a vise, place cushioning material such as wood blocks, aluminum plate, or cloth between the part and the vise.
- Avoid damaging the mating surface of the case.

D: PREPARATION TOOL

1. SPECIAL TOOL

ILLUSTRATION	TOOL NUMBER	DESCRIPTION	REMARKS
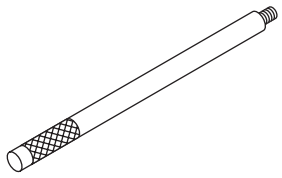 ST-398477701	398477701	HANDLE	• Used for installing the rear bearing race. • Used for installing the front bearing race. (T-type and VA1-type)
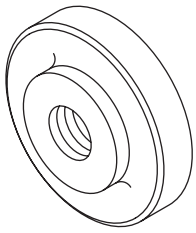 ST-398477702	398477702	DRIFT	• Used for installing the front bearing race. (T-type) • Used for installing the rear bearing race. (VA1-type) • Used for installing side bearing race. (VA1-type)
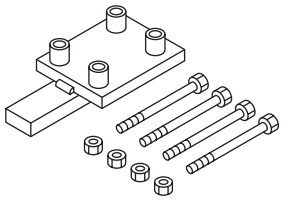 ST-398217700	398217700	ATTACHMENT SET	Stand for rear differential carrier disassembly and assembly.
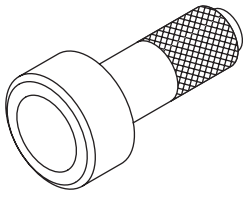 ST-498447120	498447120	INSTALLER	Used for installing the front oil seal.

ILLUSTRATION	TOOL NUMBER	DESCRIPTION	REMARKS
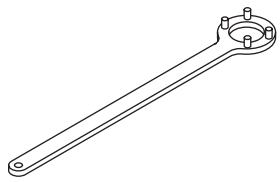 ST-498427200	498427200	FLANGE WRENCH	Used for stopping rotation of companion flange when removing and tightening self-lock nut.
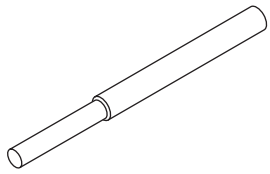 ST-398467700	398467700	DRIFT	Used for removing drive pinion shaft, pilot bearing and front bearing cone. (T-type and VA1-type)
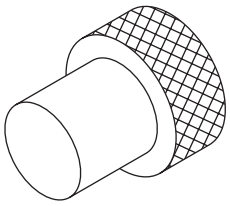 ST-399780104	399780104	WEIGHT	• Used for installing the front bearing cone and the companion flange. • Used for installing the pilot bearing. (T-type and VA1-type)
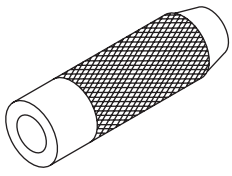 ST-899580100	899580100	INSTALLER	Used for installing the front bearing cone and the pilot bearing. (T-type and VA1-type)
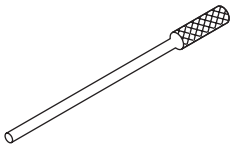 ST-899904100	899904100	STRAIGHT PIN REMOVER	• Used for removing and installing the pinion mate shaft lock pin. (T-type) • Used for removing and installing the pinion mate shaft spring pin. (VA-type)

ILLUSTRATION	TOOL NUMBER	DESCRIPTION	REMARKS
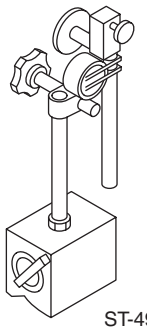 ST-498247001	498247001	MAGNET BASE	• Used for measuring backlash between side gear and pinion, and hypoid gear. • Used together with DIAL GAUGE (498247100).
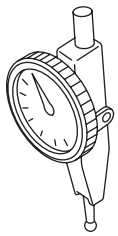 ST-498247100	498247100	DIAL GAUGE	• Used for measuring backlash between side gear and pinion, and hypoid gear. • Used together with MAGNET BASE (498247001).
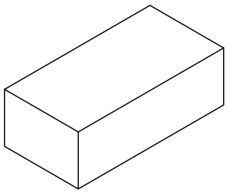 ST-398507704	398507704	BLOCK	Used for adjusting pinion height and preload. (T-type and VA1-type)
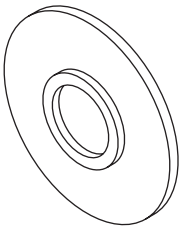 ST-398177700	398177700	INSTALLER	Used for installing the rear bearing cone. (T-type and VA2-type)
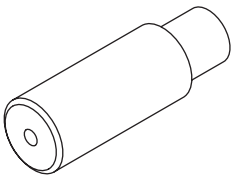 ST-398457700	398457700	ATTACHMENT	Used for removing the side retainer. (T-type)

ILLUSTRATION	TOOL NUMBER	DESCRIPTION	REMARKS
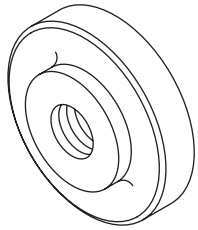 ST-398477703	398477703	DRIFT 2	Used for installing the rear bearing race. (T-type and VA2-type)
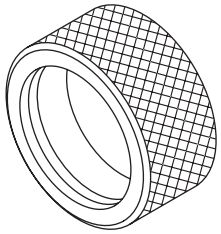 ST-398437700	398437700	DRIFT	Used for installing the side oil seal. (T-type and VA2-type)
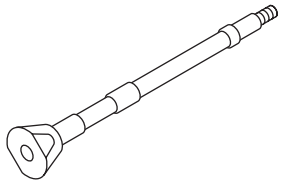 ST-398507702	398507702	DUMMY SHAFT	Used for adjusting pinion height and preload. (T-type)
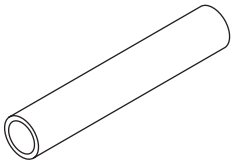 ST-398507703	398507703	DUMMY COLLAR	Used for adjusting pinion height and preload. (T-type)
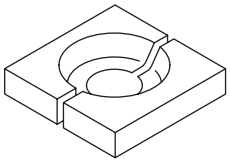 ST-398517700	398517700	REPLACER	Used for removing rear bearing cone. (T-type and VA2-type)

ILLUSTRATION	TOOL NUMBER	DESCRIPTION	REMARKS
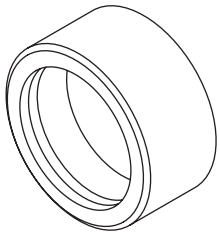 ST-398487700	398487700	DRIFT	Used for installing side bearing cone. (T-type and VA2-type)
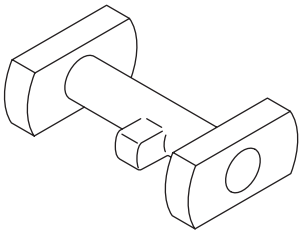 ST-398507701	398507701	DIFFERENTIAL CARRIER GAUGE	Used for adjusting pinion height. (T-type)
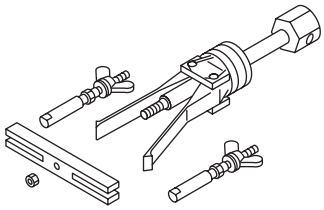 ST-398527700	398527700	PULLER ASSY	• Used for removing front oil seal. • Used for removing the side bearing race. (T-type)
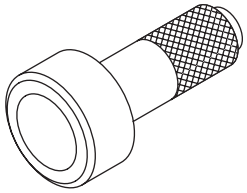 ST-398417700	398417700	DRIFT	Used for installing side bearing race. (T-type and VA2-type)
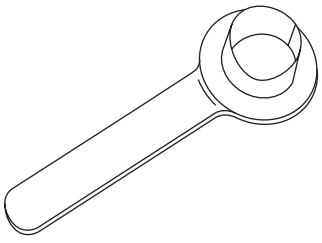 ST28099PA090	28099PA090	OIL SEAL PROTECTOR	Used for installing the rear drive shaft to the rear differential. (For oil seal protection)

ILLUSTRATION	TOOL NUMBER	DESCRIPTION	REMARKS
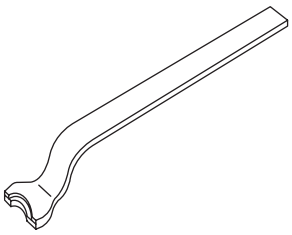 ST28099PA100	28099PA100	DRIVE SHAFT REMOVER	Used for removing the rear drive shaft from rear differential. (T-type)
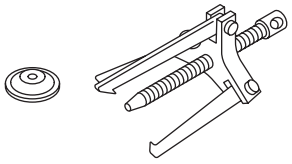 ST-399703600	399703600	PULLER ASSY	Used for removing companion flange.
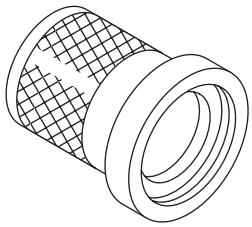 ST-899874100	899874100	INSTALLER	Used for installing the companion flange.
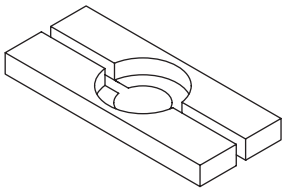 ST-498077000	498077000	REMOVER	Used for removing the side bearing cone. (VA2-type)
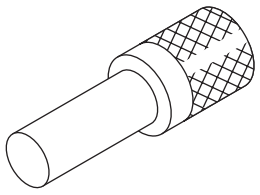 ST-899864100	899864100	REMOVER	Used for removing the side bearing cone. (VA2-type)

ILLUSTRATION	TOOL NUMBER	DESCRIPTION	REMARKS
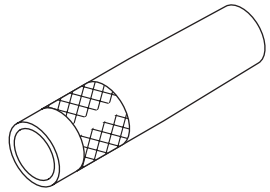 ST-499277200	499277200	INSTALLER	Used for installing the front bearing race and front oil seal. (VA2-type)
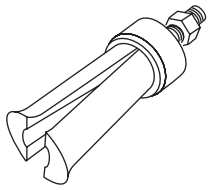 ST18758AA000	18758AA000	PULLER	Used for removing the side bearing race. (VA2-type)
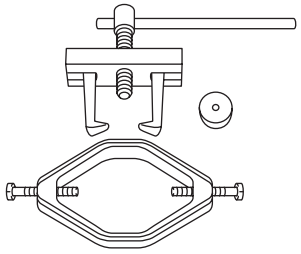 ST18759AA000	18759AA000	PULLER ASSY	Used for removing the side bearing cone. (T-type)
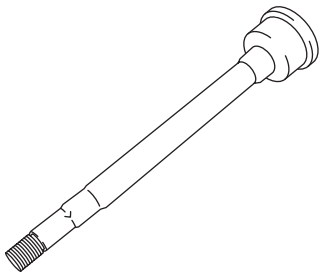 ST18678AA000	18678AA000	DUMMY SHAFT	Used for adjusting pinion height and preload. (VA2-type)
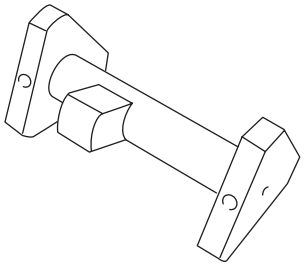 ST18831AA010	18831AA010	DIFFERENTIAL CARRIER GAUGE	Used for adjusting pinion height. (VA2-type)

ILLUSTRATION	TOOL NUMBER	DESCRIPTION	REMARKS
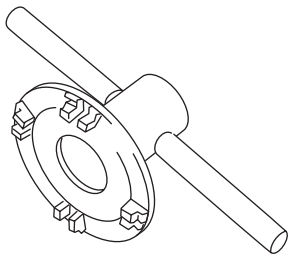 ST18630AA010	18630AA010	WRENCH COMPL RETAINER	• Used for removing and installing the side retainer. (VA1-type and VA2-type) • WRENCH ASSY (499787000) can also be used.
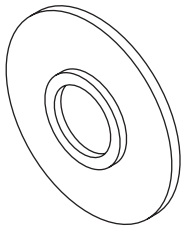 ST-498175500	498175500	INSTALLER	Used for installing the rear bearing cone. (VA1-type)
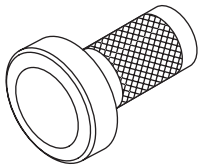 ST498447100	498447100	INSTALLER	Used for installing the side oil seal. (VA1-type and VA2-type)
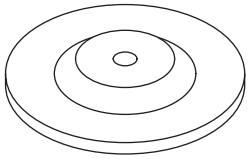 ST-399520105	399520105	SEAT	• Used for removing the side bearing cone. (VA1-type and VA2-type) • Used together with PULLER SET (899524100). (VA1-type) • Used together with REMOVER (899864100). (VA2-type)
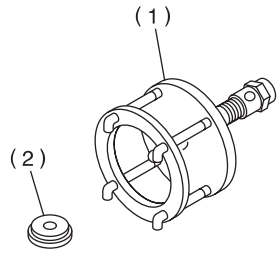 ST-899524100	899524100	PULLER SET	• Used for removing the side bearing cone. (VA1-type) • Used together with SEAT (399520105). (1) Puller (2) Cap

ILLUSTRATION	TOOL NUMBER	DESCRIPTION	REMARKS
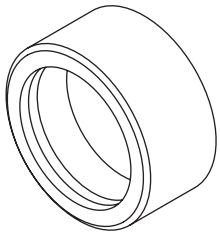 ST-498485400	498485400	DRIFT	Used for installing side bearing cone. (VA1-type)
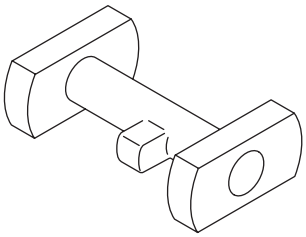 ST-498505501	498505501	DIFFERENTIAL CARRIER GAUGE	Used for adjusting pinion height. (VA1-type)
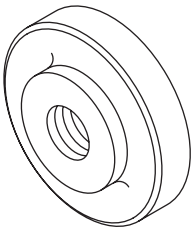 ST-498447110	498447110	DRIFT	Used for installing the front bearing race. (VA1-type)
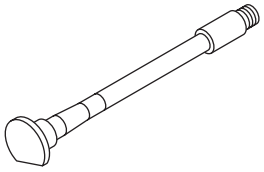 ST-498447150	498447150	DUMMY SHAFT	Used for adjusting pinion height and preload. (VA1-type)
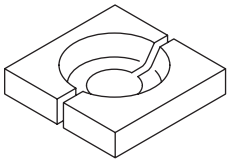 ST-498515500	498515500	REPLACER	Used for removing rear bearing cone. (VA1-type)

ILLUSTRATION	TOOL NUMBER	DESCRIPTION	REMARKS
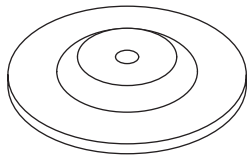 ST-499705404	499705404	SEAT	• Used for removing the side bearing race. (VA1-type) • Used together with PULLER ASSY (499705401).
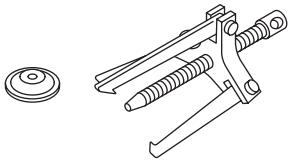 ST-499705401	499705401	PULLER ASSY	• Used for removing the side bearing race. (VA1-type) • Used together with SEAT (499705404).
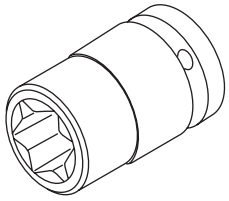 ST18270KA020	18270KA020	SOCKET (E20)	Used for removing and installing the hypoid driven gear. (VA1-type and VA2-type)
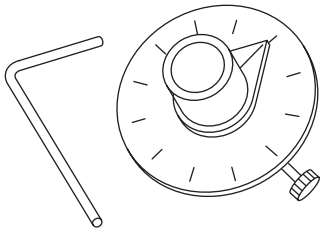 ST18854AA000	18854AA000	ANGLE GAUGE	Used for installing the hypoid driven gear. (VA1-type and VA2-type)

ILLUSTRATION	TOOL NUMBER	DESCRIPTION	REMARKS
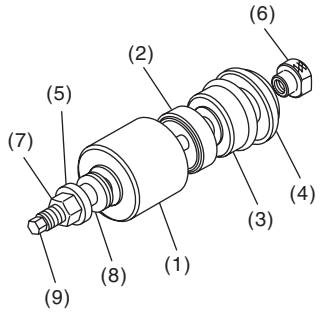 ST41399FG001	41399FG001	SPECIAL TOOL ASSY	• Used for removing and installing the rear differential mount bushing. • Use (1), (3), (5), (6), (7), (8) and (9) for removal. • Use (2), (4), (5), (6), (7), (8) and (9) for installation. (1) SPECIAL TOOL A (41399FG010) (2) SPECIAL TOOL B (41399FG020) (3) SPECIAL TOOL C (41399FG031) (4) SPECIAL TOOL D (41399FG041) (5) SPECIAL TOOL SLEEVE (41399FG050) (6) SPECIAL TOOL RING (41399FG061) (7) SPECIAL TOOL NUT (41399FG070) (8) SPECIAL TOOL BEARING (41399FG080) (9) SPECIAL TOOL SHAFT (41399FG091)
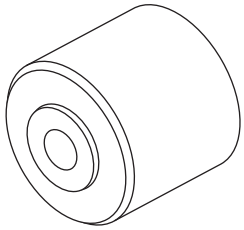 ST41399FG010	41399FG010	SPECIAL TOOL A	• Used for removing the rear differential mount bushing. • For combination of tools for removal, refer to “SPECIAL TOOL ASSY (41399FG001)”.
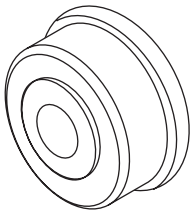 ST41399FG020	41399FG020	SPECIAL TOOL B	• Used for installing the rear differential mount bushing. • For combination of tools for installation, refer to “SPECIAL TOOL ASSY (41399FG001)”.
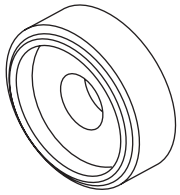 ST41399FG031	41399FG031	SPECIAL TOOL C	• Used for removing the rear differential mount bushing. • For combination of tools for removal, refer to “SPECIAL TOOL ASSY (41399FG001)”.

ILLUSTRATION	TOOL NUMBER	DESCRIPTION	REMARKS
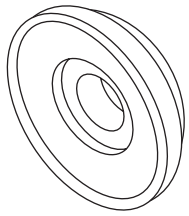 ST41399FG041	41399FG041	SPECIAL TOOL D	• Used for installing the rear differential mount bushing. • For combination of tools for installation, refer to “SPECIAL TOOL ASSY (41399FG001)”.
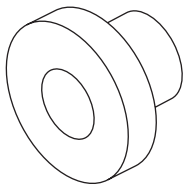 ST41399FG050	41399FG050	SPECIAL TOOL SLEEVE	• Used for removing and installing the rear differential mount bushing. • For combination of tools for removal and installation, refer to “SPECIAL TOOL ASSY (41399FG001)”.
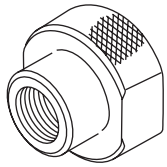 ST41399FG061	41399FG061	SPECIAL TOOL RING	• Used for removing and installing the rear differential mount bushing. • For combination of tools for removal and installation, refer to “SPECIAL TOOL ASSY (41399FG001)”.
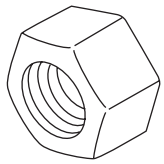 ST41399FG070	41399FG070	SPECIAL TOOL NUT	• Used for removing and installing the rear differential mount bushing. • For combination of tools for removal and installation, refer to “SPECIAL TOOL ASSY (41399FG001)”.
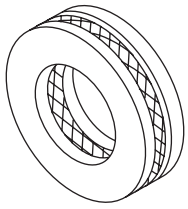 ST41399FG080	41399FG080	SPECIAL TOOL BEARING	• Used for removing and installing the rear differential mount bushing. • For combination of tools for removal and installation, refer to “SPECIAL TOOL ASSY (41399FG001)”.

ILLUSTRATION	TOOL NUMBER	DESCRIPTION	REMARKS
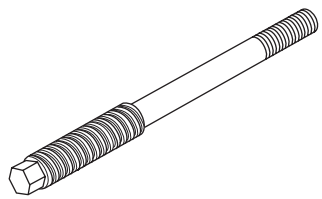 ST41399FG091	41399FG091	SPECIAL TOOL SHAFT	• Used for removing and installing the rear differential mount bushing. • For combination of tools for removal and installation, refer to “SPECIAL TOOL ASSY (41399FG001)”.
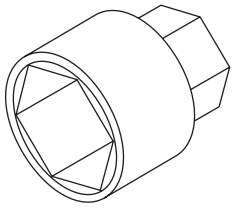 ST41399YC000	41399YC000	SOCKET WRENCH (17)	Used for tightening the self-locking nut. (Except for OUTBACK)
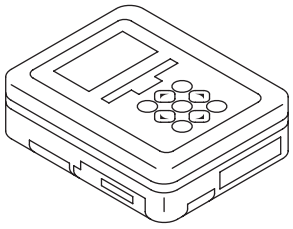 ST1B022XU0	1B022XU0	SUBARU SELECT MONITOR III KIT	Used for troubleshooting the electrical system.

2. GENERAL TOOL

TOOL NAME	REMARKS
Transmission jack	Used for removing and installing the rear differential.
Puller	Used for removing the side bearing retainer.
Thickness gauge	Used for measuring clearance.
Hexagon wrench	Used for installing and removing the oil filler plug and oil drain plug.
Tire lever	Used for removing the rear drive shaft. (VA-type)

2. Differential Gear Oil

A: INSPECTION

1) Remove the filler plug, and then check the gear oil. Replace the gear oil if it is contaminated, deteriorated or cloudy. <Ref. to DI-23, REPLACEMENT, Differential Gear Oil.>
2) Check that the gear oil level is within –5 mm (–0.2 in) from the bottom of the filler plug hole. If the level is low, make sure that there is no oil leakage and refill up to the bottom of filler plug hole.

NOTE:
On VA1-types at factory settings, the oil level may be within –14 mm (–0.6 in) from the bottom of the filler plug. This is at normal level, requiring no oil refill.

- T-type

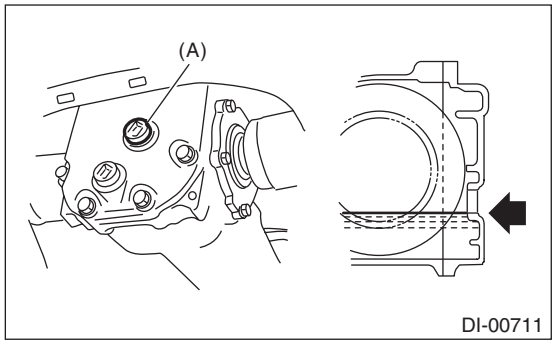

(A) Filler plug

- VA1-type

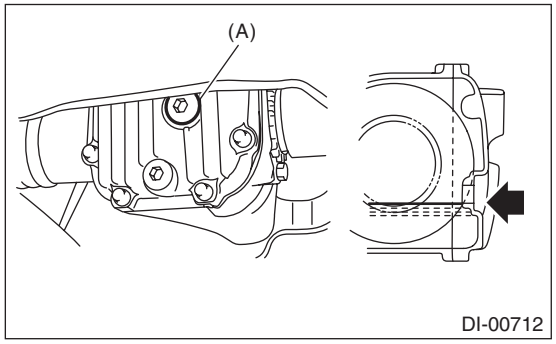

(A) Filler plug

- VA2-type

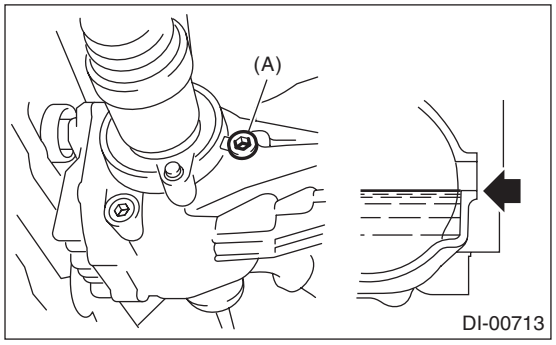

(A) Filler plug

B: REPLACEMENT

CAUTION:
• Gear oil is extremely hot just after driving. Be wary of receiving burns.
• Be careful not to spill the differential gear oil on exhaust pipe. If gear oil is spilled, wipe it off completely.
1) Lift up the vehicle.
2) Remove the drain plug and filler plug, and drain the gear oil.

- T-type

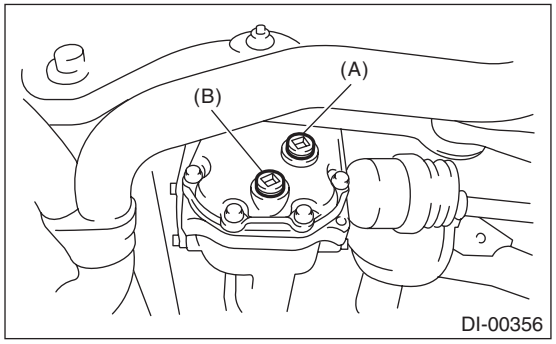

(A) Filler plug
(B) Drain plug

- VA1-type

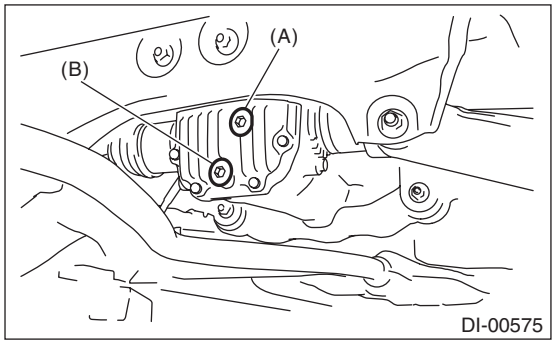

(A) Filler plug
(B) Drain plug

• VA2-type

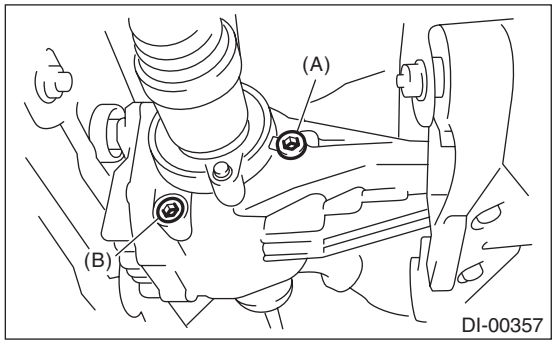

(A) Filler plug
(B) Drain plug

3) Tighten the drain plug.

NOTE:
• For the T-type, apply liquid gasket to the drain plug.

Liquid gasket:
THREE BOND 1105 (Part No. 004403010) or equivalent
• For VA type, use a new gasket.

Tightening torque:
T-type
49 N·m (5.0 kgf-m, 36.1 ft-lb)
VA-type:
50 N·m (5.1 kgf-m, 36.9 ft-lb)

4) Fill the differential carrier with gear oil to the bottom of filler plug.

NOTE:
Carefully refill gear oil while watching the level. Excessive or insufficient oil must be avoided.

Recommended gear oil:
<Ref. to DI-2, SPECIFICATION, General Description.>

Oil capacity:
0.8 ℓ (0.8 US qt, 0.7 Imp qt)

• T-type

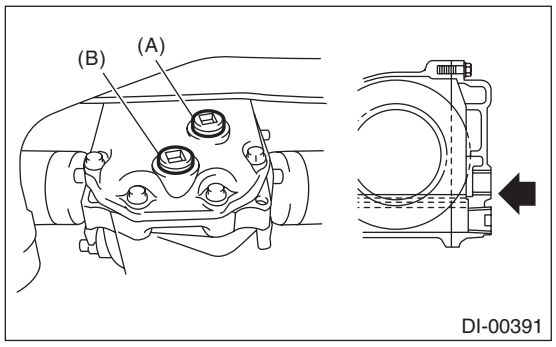

(A) Filler plug
(B) Drain plug

• VA1-type

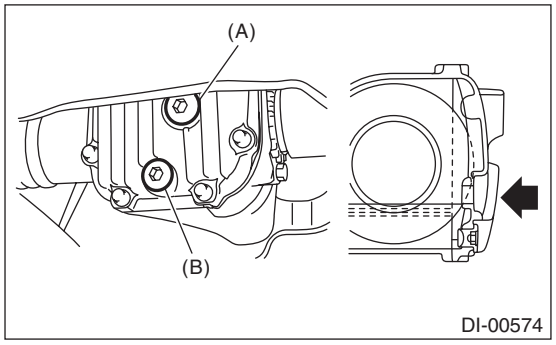

(A) Filler plug
(B) Drain plug

• VA2-type

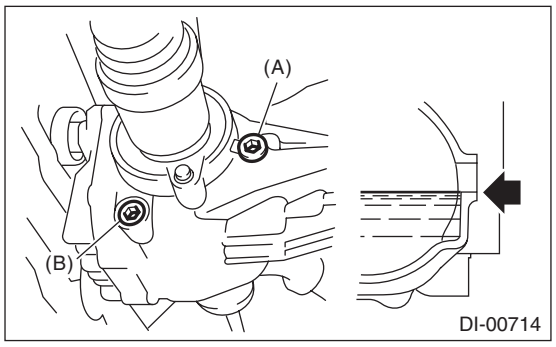

(A) Filler plug
(B) Drain plug

5) Install the filler plug.

NOTE:
• For the T-type, apply liquid gasket to the filler plug.

Liquid gasket:
THREE BOND 1105 (Part No. 004403010) or equivalent
• For VA type, use a new gasket.

Tightening torque:
T-type:
49 N·m (5.0 kgf-m, 36.1 ft-lb)
VA-type:
50 N·m (5.1 kgf-m, 36.9 ft-lb)

3. Front Differential Assembly

A: NOTE

1. CVT MODEL

For front differential for the CVT model, refer to the “CVT” section. <Ref. to CVT-263, Front Differential Assembly.>

2. AT MODEL

For front differential of 5AT model, refer to “5AT” section. <Ref. to 5AT-89, Front Differential Assembly.>

3. MT MODEL

For front differential for the 6MT model, refer to the “6MT” section. <Ref. to 6MT-77, Front Differential Assembly.>

4. Rear Differential (T-type)

A: REMOVAL

1) Shift the select lever or gear shift lever to neutral.
2) Release the parking brake.
3) Disconnect the ground cable from battery.
4) Loosen the wheel nuts.
5) Lift up the vehicle.
6) Remove the rear wheels.
7) Drain differential gear oil. <Ref. to DI-23, REPLACEMENT, Differential Gear Oil.>
8) Remove the rear exhaust pipe.
• 2.5 L SOHC model
<Ref. to EX(H4SO)-9, REMOVAL, Rear Exhaust Pipe.>
• 2.5 L DOHC turbo model
<Ref. to EX(H4DOTC)-15, REMOVAL, Rear Exhaust Pipe.>
• 3.6 L model
<Ref. to EX(H6DO)-8, REMOVAL, Rear Exhaust Pipe.>
9) Remove the heat shield cover.

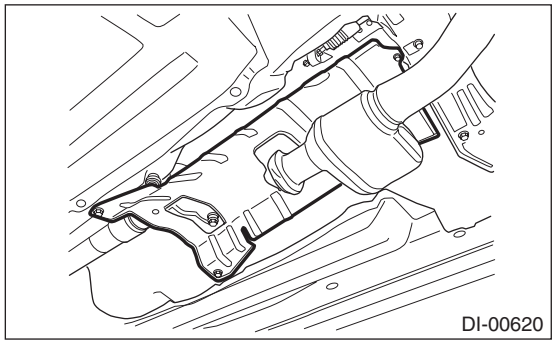

10) Remove the propeller shaft. <Ref. to DS-10, REMOVAL, Propeller Shaft.>
11) Loosen the self-lock nuts which hold the rear differential to rear crossmember.

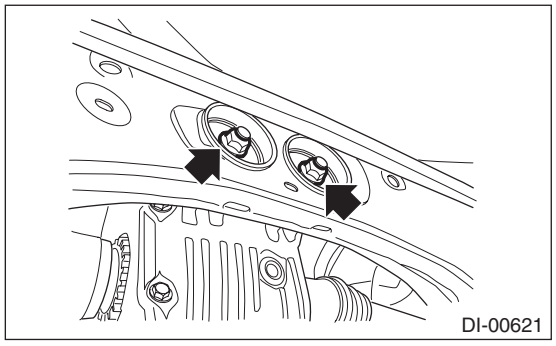

12) Remove the DOJ of rear drive shaft from rear differential using ST or tire lever.

NOTE:
• For the T-type, use the ST.
• For the VA-type, use the tire lever.
• When removing the DOJ from the rear differential, fit the tire lever or ST to the bolts as shown in the figure so as not to damage the side retainer.

T-type

ST 28099PA100 DRIVE SHAFT REMOVER

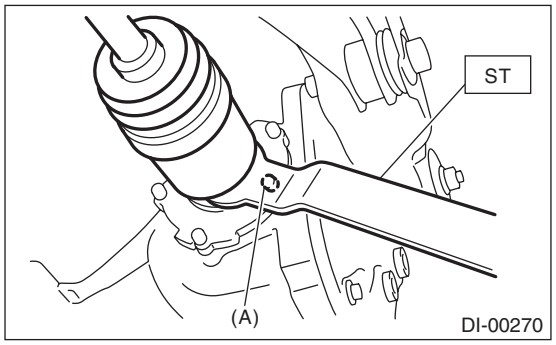

(A) Bolt

VA-type

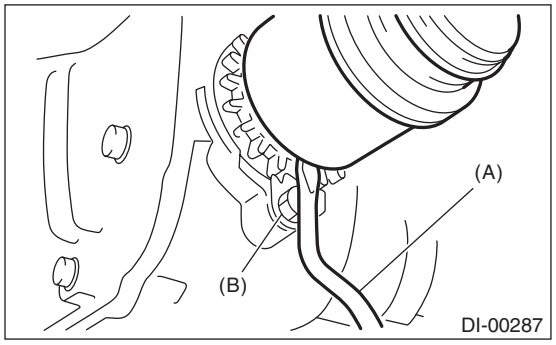

(A) Tire lever
(B) Bolt

13) Set the rear differential to transmission jack.

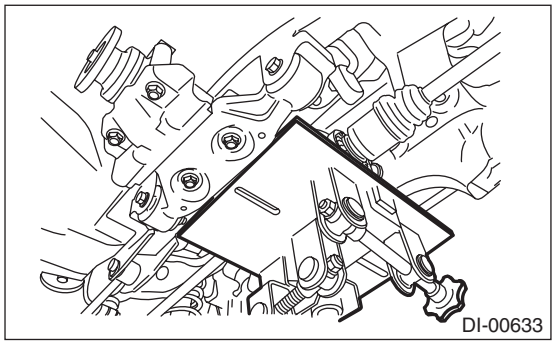

14) Remove the mass damper. (CVT model)

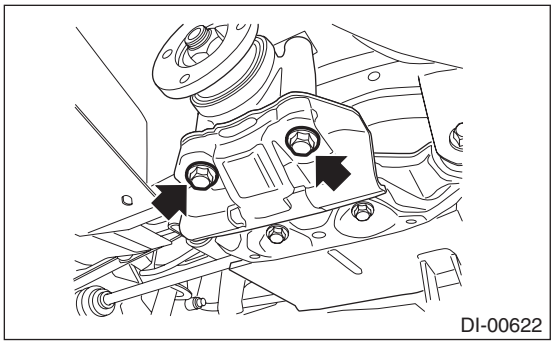

15) Remove the rear differential front member.

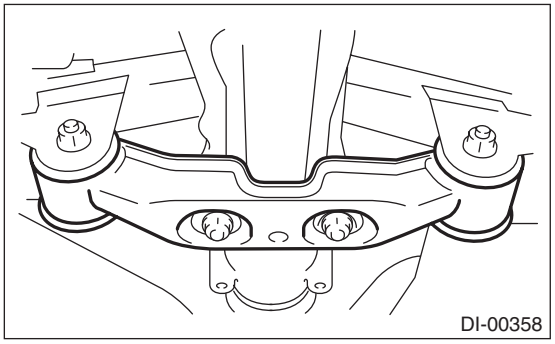

16) Remove the self-locking nuts which hold the rear differential to the crossmember.

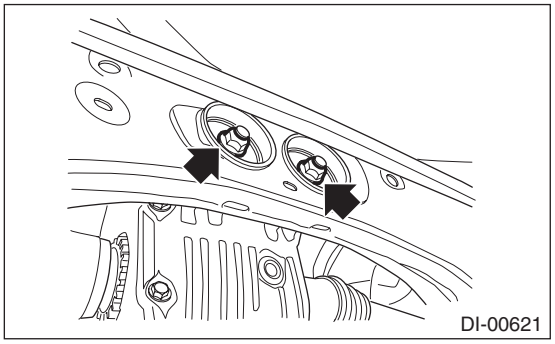

17) Pull out the rear differential stud bolt from rear crossmember bushing.

NOTE:
When removing the stud bolt from the rear crossmember bushing, carefully adjust the angle and location of transmission jack and jack stand, if necessary.

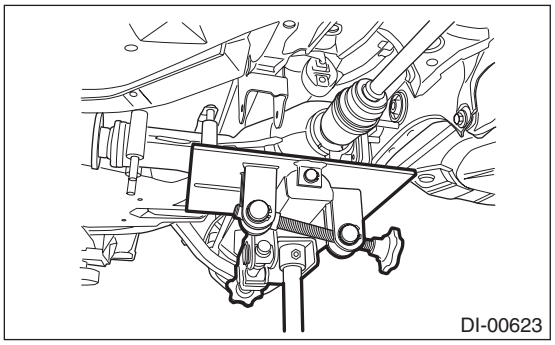

18) Lower the transmission jack.

19) Pull out the rear drive shaft from the rear differential.

NOTE:
• If it is difficult to pull out the rear drive shaft from rear differential, use the ST for T-type and the tire lever for VA-type.
ST 28099PA100 DRIVE SHAFT REMOVER
• If a circlip is attached to the removed rear drive shaft for VA2-type, remove the differential case assembly and replace it with a new part.

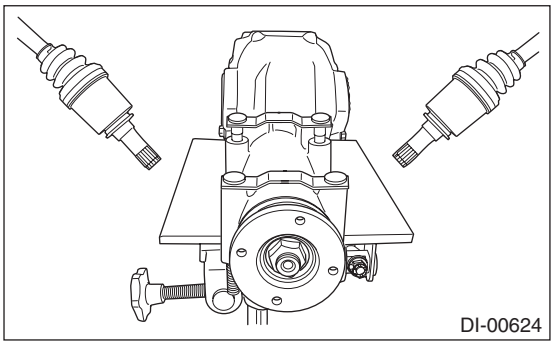

20) Lower the transmission jack.
21) Secure the rear drive shaft to rear lateral link using wire.

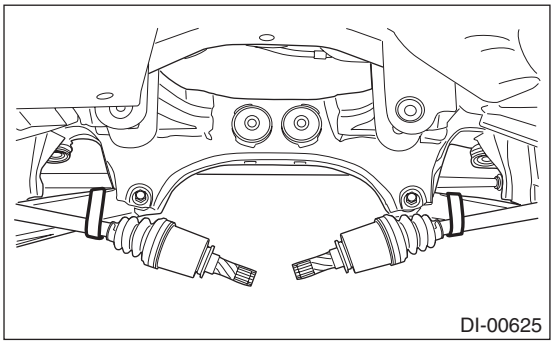

22) Remove the rear differential member plate from rear differential.

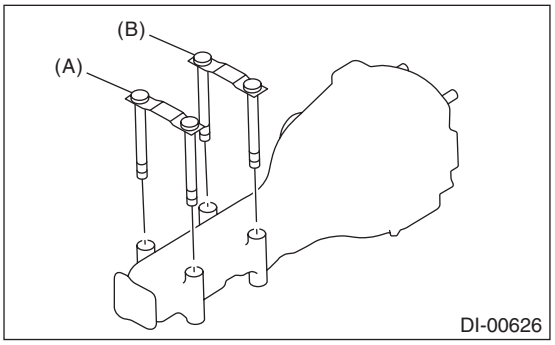

(A) Rear differential member plate (CVT model)
(B) Rear differential member plate

B: INSTALLATION

1) Attach the rear differential member plate to the rear differential.

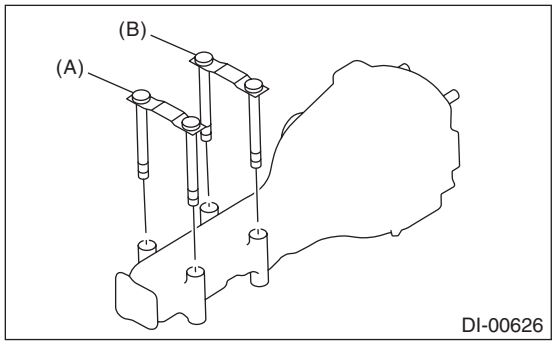

(A) Rear differential member plate (CVT model)
(B) Rear differential member plate

2) Set the rear differential to transmission jack.
3) Set the ST to the rear differential.
ST 28099PA090 OIL SEAL PROTECTOR

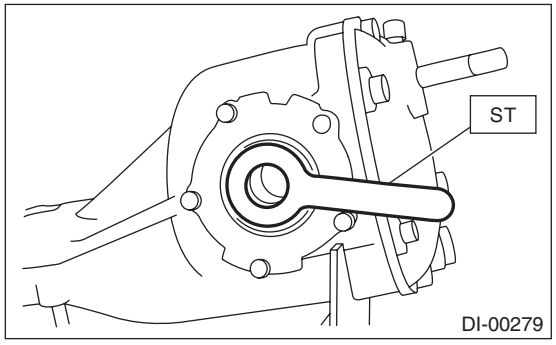

4) Insert the rear drive shaft until the spline portion of the rear drive shaft exceeds the side oil seal.

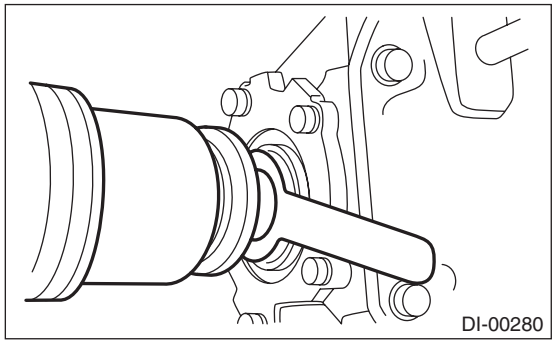

5) Remove ST from rear differential.

6) Push the rear differential from side to side to insert the DOJ into rear differential completely.

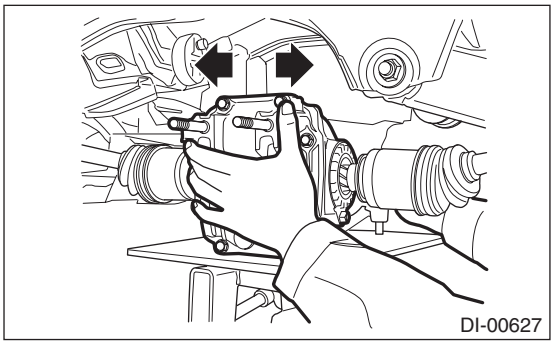

7) Adjust the transmission jack, if necessary, and insert the rear differential stud bolt into rear crossmember bushing properly.

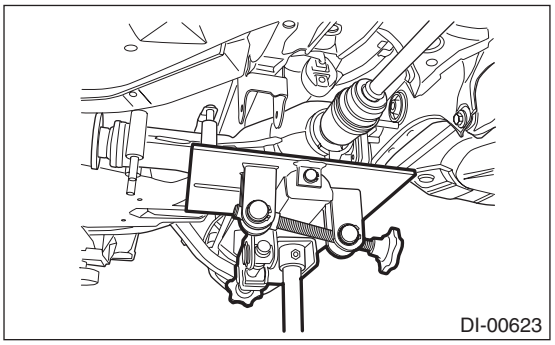

8) After inserting the rear differential stud bolt into the rear crossmember bushing, lift up the transmission jack and align the rear differential to its attachment position.

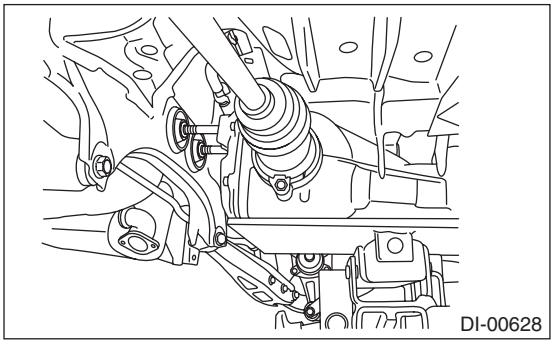

9) Tighten a new self-locking nut temporarily to rear crossmember.

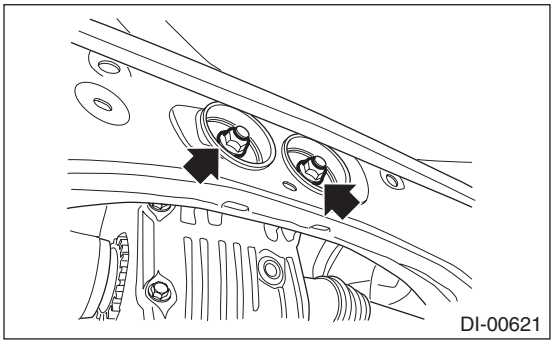

10) Install the rear differential front member with a new self-locking nut.

Tightening torque:
T1: 50 N·m (5.1 kgf-m, 36.9 ft-lb)
T2: 110 N·m (11.2 kgf-m, 81.1 ft-lb)

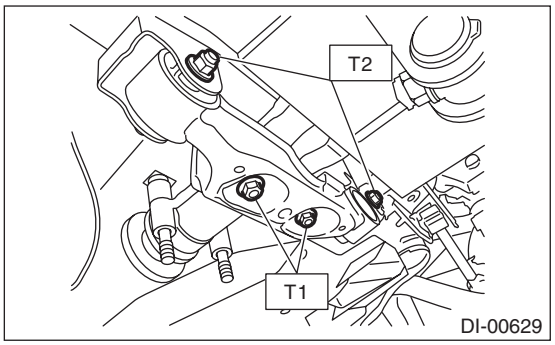

11) Install the mass damper with a new self-locking nut. (CVT model)

Tightening torque:
50 N·m (5.1 kgf-m, 36.9 ft-lb)

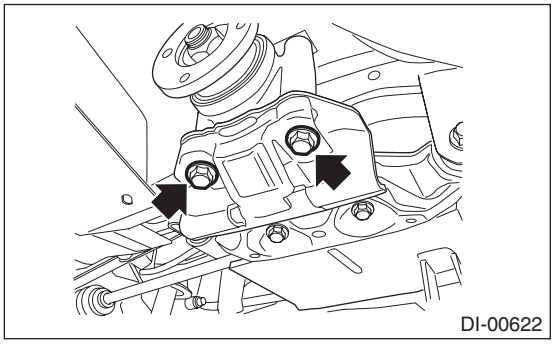

12) Remove the transmission jack.
13) Tighten the self-locking nut.

NOTE:
For models other than OUTBACK model, tighten the self-locking nut using the ST.
ST 41399YC000 SOCKET WRENCH (17)

Tightening torque:
70 N·m (7.1 kgf-m, 51.6 ft-lb)

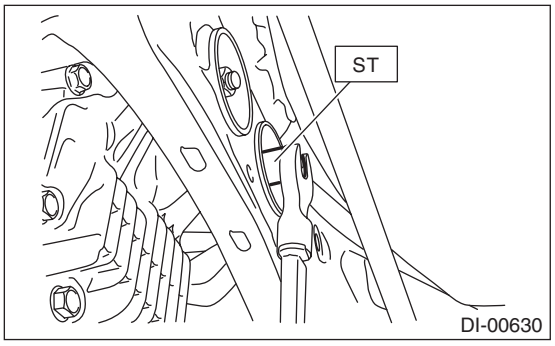

14) Install the propeller shaft. <Ref. to DS-11, INSTALLATION, Propeller Shaft.>

15) Install the heat shield cover.

Tightening torque:
18 N·m (1.8 kgf-m, 13.3 ft-lb)

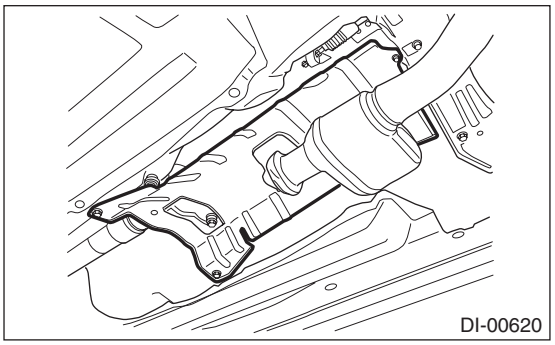

16) Install the rear exhaust pipe.
- 2.5 L SOHC model

<Ref. to EX(H4SO)-9, INSTALLATION, Rear Exhaust Pipe.>
- 2.5 L DOHC turbo model

<Ref. to EX(H4DOTC)-15, INSTALLATION, Rear Exhaust Pipe.>
- 3.6 L model

<Ref. to EX(H6DO)-8, INSTALLATION, Rear Exhaust Pipe.>

17) Fill differential gear oil. <Ref. to DI-23, REPLACEMENT, Differential Gear Oil.>
18) Installing procedure hereafter is in the reverse order of removal.
19) Perform “Rear differential inspection mode ” using the Subaru Select Monitor. (CVT model) <Ref. to DI-84, Rear Differential Inspection Mode.>

CAUTION:
Be sure to perform rear differential inspection mode when the following work has been performed.
- **Replacement of rear differential**
- **Replacement of rear differential hypoid gear set**
- **Replacement of transmission assembly**
- **Replacement of front differential hypoid gear set**

C: DISASSEMBLY

To detect the real cause of trouble, inspect the following items before disassembling.
• Tooth contact and backlash between hypoid driven gear and drive pinion
• Hypoid driven gear runout on its back surface
• Total preload of drive pinion
1) Set the ST on vise and install the differential assembly to ST.
ST 398217700 ATTACHMENT SET

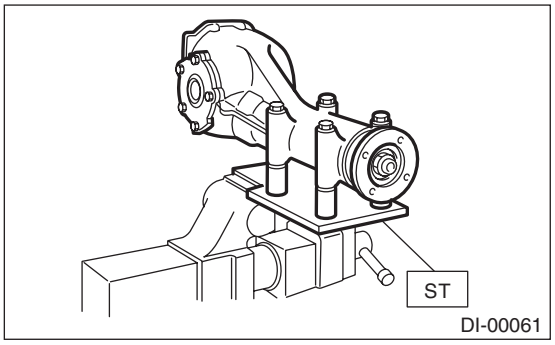

2) Remove the drain plug and filler plug.
3) Remove the air breather cap.

NOTE:
• Do not attempt to remove the air breather cap unless necessary.
• Whenever the air breather cap is removed, replace it with a new part.

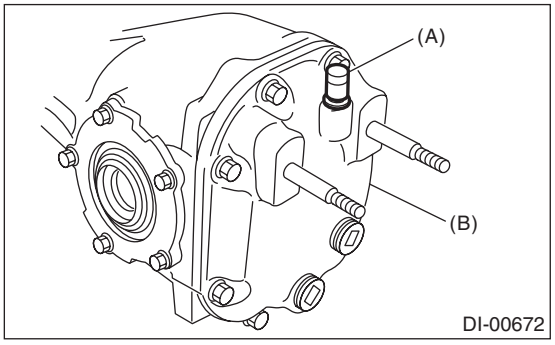

(A) Air breather cap
(B) Rear cover

4) Remove the bolts, and then remove the rear cover.

5) Remove the side retainer attachment bolts, set the ST to differential case, and extract the side retainers RH and LH with a puller.

NOTE:
• Side retainer shim of each side should be kept together with its mating retainer.
• Keep the side retainers separate by attaching tags or in similar ways to make it possible to identify RH and LH sides during reassembly.
ST 398457700 ATTACHMENT

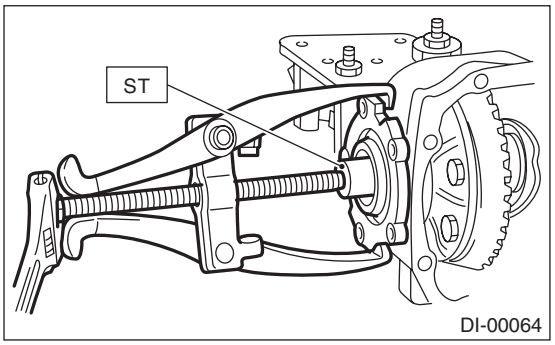

6) Remove the oil seal from the side retainer.
7) Pull out the differential case assembly from the differential carrier.

NOTE:
Be careful not to hit the teeth of hypoid driven gear against the differential carrier.

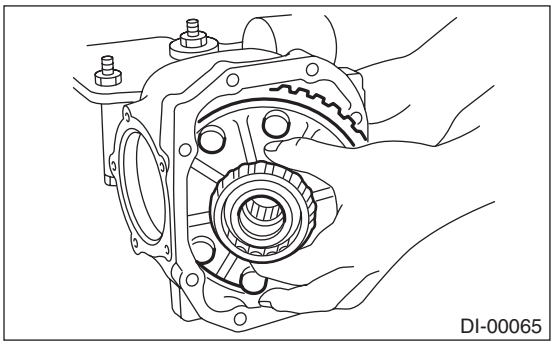

8) When replacing the side bearing, remove the bearing race from the side retainer using ST.
ST 398527700 PULLER ASSY

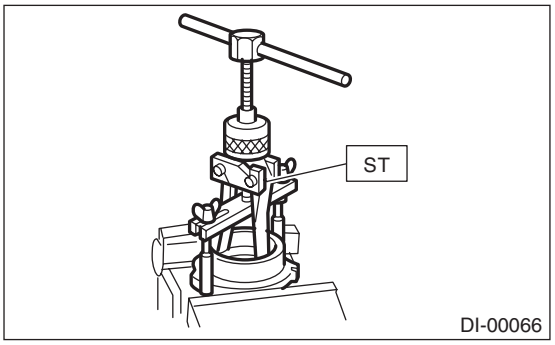

9) Using the ST, remove the bearing cone.

NOTE:
• Do not attempt to disassemble the parts unless necessary.
• Set the ST so that its claws catch the edge of the bearing cone.
• Never mix up the RH and LH bearing races and cones.

ST 18759AA000 PULLER ASSY

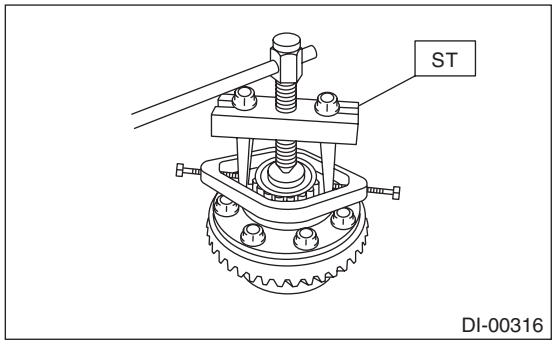

10) Remove the hypoid driven gear by loosening hypoid driven gear bolts.

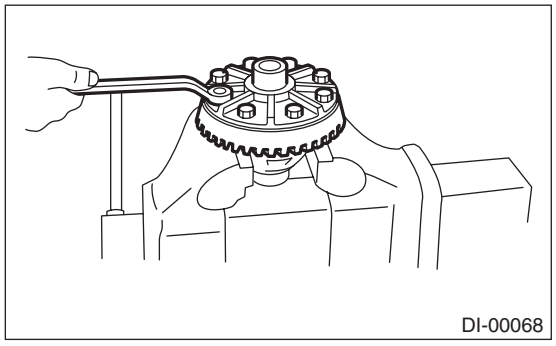

11) Remove the pinion shaft lock pin from hypoid driven gear side using ST.

ST 899904100 STRAIGHT PIN REMOVER

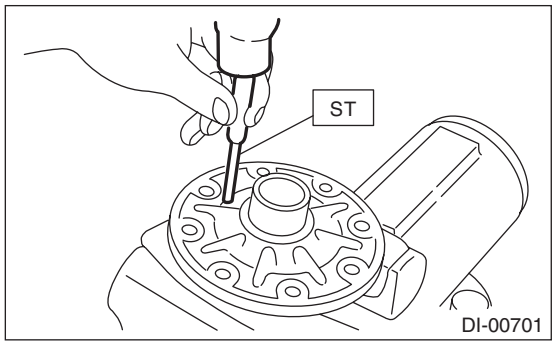

12) Draw out the pinion mate shaft, and remove pinion mate gears, pinion mate gear washers, side gears, and thrust washers.

NOTE:
The gears and washers should be marked with RH or LH, front or rear, or kept separately.

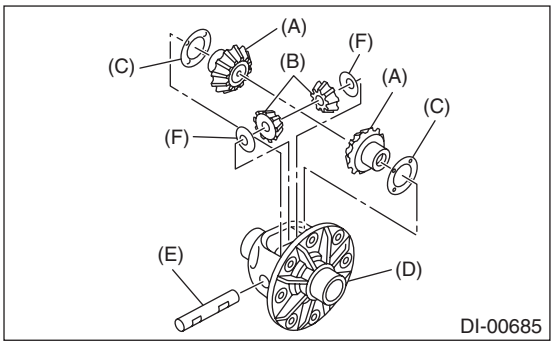

(A) Side gear
(B) Pinion mate gear
(C) Side gear thrust washer
(D) Differential case
(E) Pinion mate shaft
(F) Pinion mate gear washer

13) Remove the self-locking nut while securing the companion flange with ST.

ST 498427200 FLANGE WRENCH

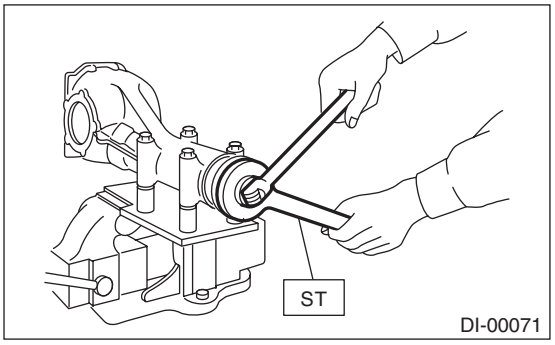

14) Extract the companion flange with a puller.

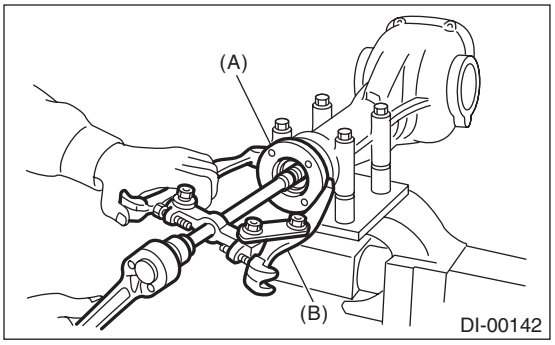

(A) Companion flange
(B) Puller

15) Press the end of drive pinion shaft using ST and remove the rear bearing cone, preload adjusting spacer and washer.

NOTE:
Hold the drive pinion so as not to drop it.
ST 398467700 DRIFT

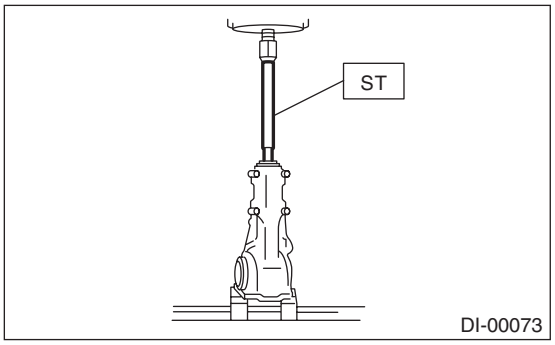

16) Remove the rear bearing cone from drive pinion by supporting the cone with ST.

NOTE:
Place the replacer so that its center-recessed side faces the bearing cone.
ST 398517700 REPLACER

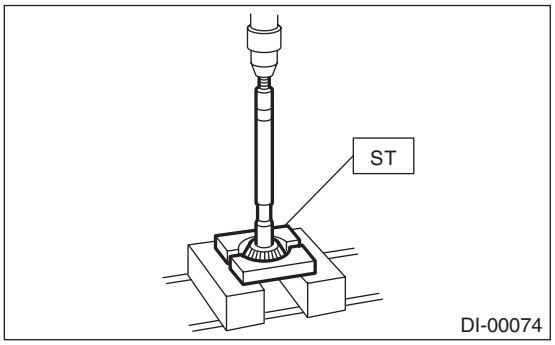

17) Remove the front oil seal from differential carrier using ST.
ST 398527700 PULLER ASSY

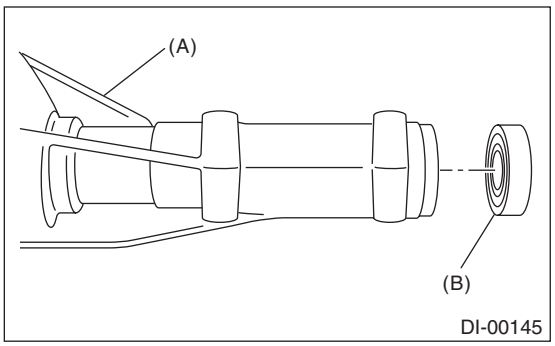

(A) Differential carrier
(B) Front oil seal

18) Remove the pilot bearing together with the front bearing cone and spacer using the ST.
ST 398467700 DRIFT

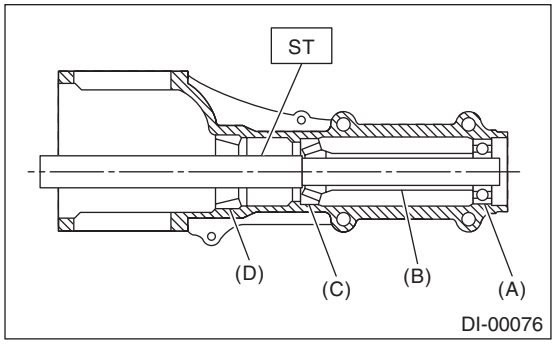

(A) Pilot bearing
(B) Spacer
(C) Front bearing
(D) Rear bearing race

19) When replacing the bearings, use a brass bar to tap out the front bearing race and rear bearing race in this order to remove them.

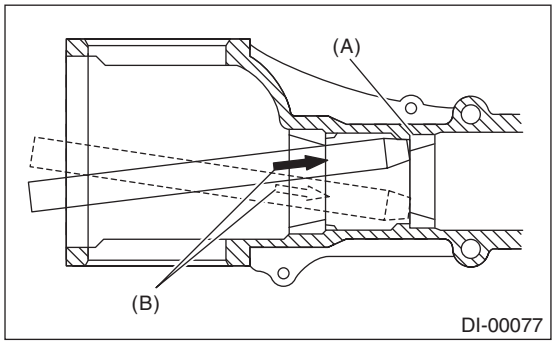

(A) 2 cutout portions along diagonal lines
(B) Tap alternately with brass bar.

D: ASSEMBLY

NOTE:
- Assemble in the reverse order of disassembly.
- Check and adjust each part during assembly.
- Keep the shims and washers in order, so that they are not improperly installed.
- Thoroughly clean the surfaces on which the shims, washers and bearings are to be installed.
- Apply gear oil when installing the bearings and thrust washers.
- Be careful not to mix up the RH and LH bearing races.
- Use a new O-ring and gasket.
- Replace the oil seal with a new part at every disassembly.
- Be careful not to mix up the oil seal RH and LH.

• Apply differential gear oil to the lips when installing the oil seal.

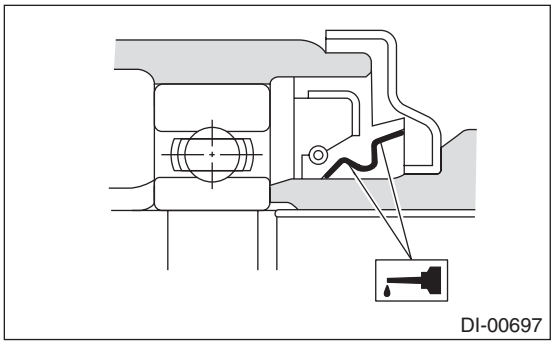

1) Adjusting preload for front and rear bearings

NOTE:
Adjust the bearing preload between front and rear bearings with preload adjusting spacer and washer. Pinion height adjusting washer is not affected by this adjustment. The adjustment must not be carried out with oil seal inserted.

(1) Install the rear bearing race into the differential carrier using ST1 and ST2.

ST1 398477701 HANDLE
ST2 398477703 DRIFT 2

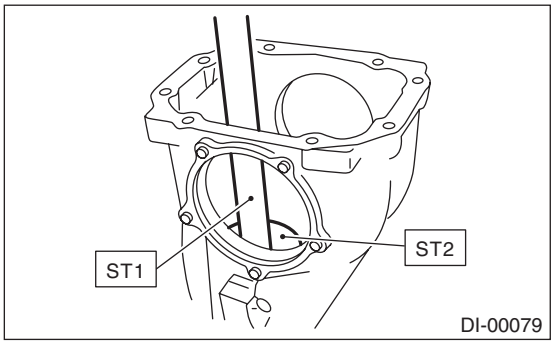

(2) Install the front bearing race to the differential carrier using ST1 and ST2.

ST1 398477701 HANDLE
ST2 398477702 DRIFT

(3) Insert ST1 into the differential carrier with the pinion height adjusting washer and rear bearing cone fitted onto it.

NOTE:
• If tooth contact (drive pinion, hypoid driven gear) is normal in the inspection before disassembling, verify that the washer is not deformed, and then reuse the used washer.
• Use new rear bearing cone.

(4) Install the preload adjusting spacer and washer, front bearing cone, ST2, companion flange and self-locking nut.

ST1 398507702 DUMMY SHAFT
ST2 398507703 DUMMY COLLAR

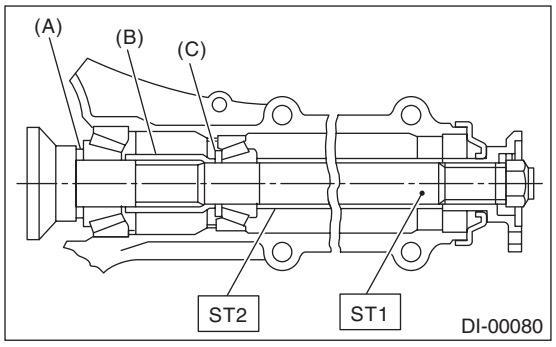

(A) Pinion height adjusting washer
(B) Preload adjusting spacer
(C) Preload adjusting washer

(5) Turn the ST1 by hand to smooth the bearing, and tighten the self-locking nut while measuring the initial load or initial torque with a spring scale or torque wrench. Select the preload adjusting washer and spacer so that the specified preload is obtained when nut is tightened to the specified torque.

NOTE:
• Use a new self-locking nut.
• Measure the preload in direction of tangent to the flange.
• Be careful not to give excessive preload.
• When tightening the self-locking nut, lock ST1 with ST2 as shown in the figure.

ST1 398507702 DUMMY SHAFT
ST2 398507704 BLOCK

Tightening torque:
181.5 N·m (18.5 kgf-m, 133.9 ft-lb)

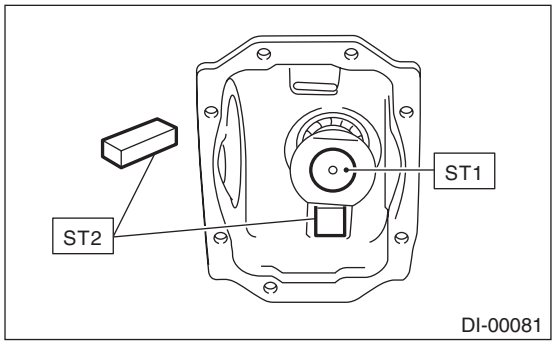

Initial load:
18.1 — 38.8 N (1.8 — 4.0 kgf, 4.1 — 8.7 lbf)

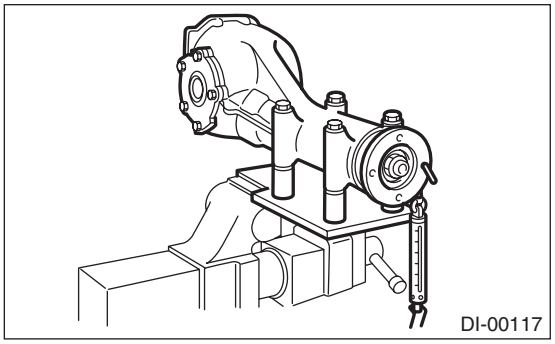

Initial torque:
0.69 — 1.47 N·m (0.07 — 0.15 kgf-m, 0.51 — 1.08 ft-lb)

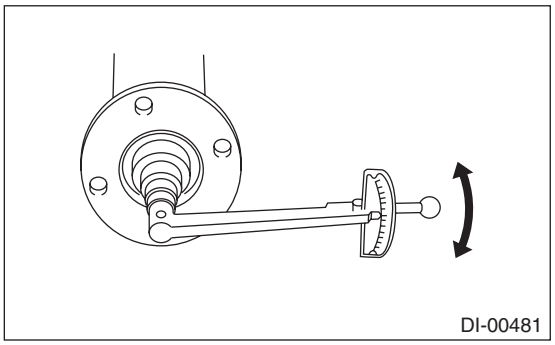

Preload adjusting washer	
Part No.	Thickness mm (in)
383705200	2.59 (0.1020)
383715200	2.57 (0.1012)
383725200	2.55 (0.1004)
383735200	2.53 (0.0996)
383745200	2.51 (0.0988)
383755200	2.49 (0.0980)
383765200	2.47 (0.0972)
383775200	2.45 (0.0965)
383785200	2.43 (0.0957)
383795200	2.41 (0.0949)
383805200	2.39 (0.0941)
383815200	2.37 (0.0933)
383825200	2.35 (0.0925)
383835200	2.33 (0.0917)
383845200	2.31 (0.0909)

Preload adjusting spacer	
Part No.	Length mm (in)
383695201	56.2 (2.213)
383695202	56.4 (2.220)
383695203	56.6 (2.228)
383695204	56.8 (2.236)
383695205	57.0 (2.244)
383695206	57.2 (2.252)

2) Adjusting drive pinion height:
Adjust the drive pinion height with pinion height adjusting washer installed between the rear bearing cone and the back of pinion gear.
(1) Attach the ST2.

NOTE:
At this time, install a provisionally selected or previously used pinion height adjusting washer. Measure and record the thickness.
ST1 398507702 DUMMY SHAFT
ST2 398507701 DIFFERENTIAL CARRIER GAUGE
ST3 398507703 DUMMY COLLAR

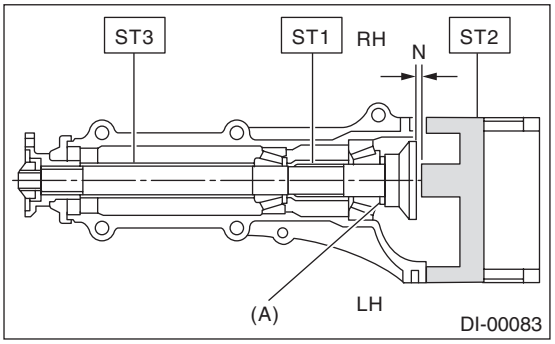

(A) Pinion height adjusting washer

(2) Measure the clearance “N” between the end of ST2 and the end surface of ST1 by using a thickness gauge.

NOTE:
Make sure there is no clearance between the differential carrier and ST2.
ST1 398507702 DUMMY SHAFT
ST2 398507701 DIFFERENTIAL CARRIER GAUGE

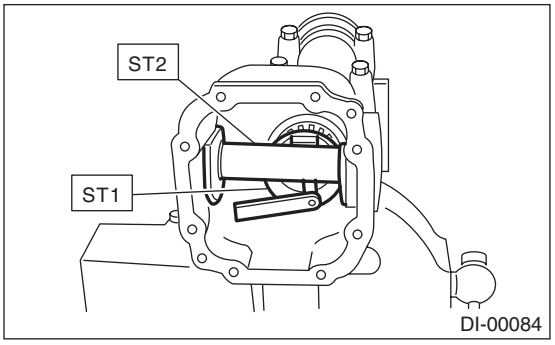

(3) Obtain the thickness of pinion height adjusting washer to be inserted from the following formula, and replace the temporarily installed washer with this one.
T = To + N – (H × 0.01) – 0.20 mm (0.0079 in)

T	Thickness of pinion height adjusting washer mm (in)	
To	Thickness of washer temporarily inserted mm (in)	
N	Clearance of thickness gauge mm (in)	
H	Figure marked on drive pinion head	
Memo:		

(Example of calculation)
To = 3.39 mm (0.1335 in)
N = 0.24 mm (0.0094 in)
H = + 1
T = 3.39 mm (0.1335 in) + 0.24 mm (0.0094 in) – 0.01 mm (0.0004 in) – 0.20 mm (0.0079 in) = 3.42 mm (0.1346 in)
Result: Thickness = 3.42 mm (0.1346 in)
Therefore use washer 383605200.

Pinion height adjusting washer	
Part No.	Thickness mm (in)
383495200	3.09 (0.1217)
383505200	3.12 (0.1228)
383515200	3.15 (0.1240)
383525200	3.18 (0.1252)
383535200	3.21 (0.1264)
383545200	3.24 (0.1276)
383555200	3.27 (0.1287)
383565200	3.30 (0.1299)
383575200	3.33 (0.1311)
383585200	3.36 (0.1323)
383595200	3.39 (0.1335)
383605200	3.42 (0.1346)
383615200	3.45 (0.1358)
383625200	3.48 (0.1370)
383635200	3.51 (0.1382)
383645200	3.54 (0.1394)
383655200	3.57 (0.1406)
383665200	3.60 (0.1417)
383675200	3.63 (0.1429)
383685200	3.66 (0.1441)

3) Install the selected pinion height adjusting washer on drive pinion, and press the rear bearing cone into position with ST.
ST 398177700 INSTALLER

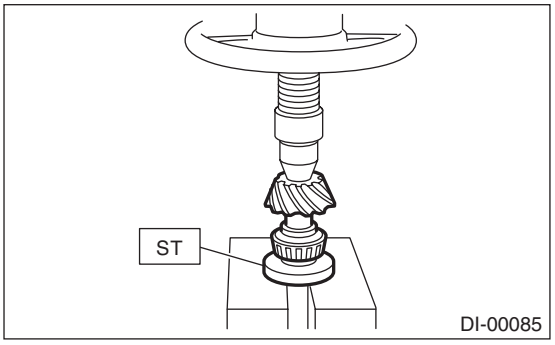

4) Insert the drive pinion into the differential carrier, and install the preselected preload adjusting spacer and washer.

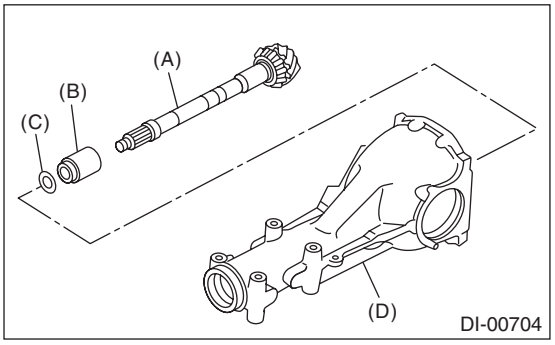

(A) Drive pinion
(B) Preload adjusting spacer
(C) Preload adjusting washer
(D) Differential carrier

5) Press-fit the front bearing cone with ST1, ST2 and ST3.
ST1 398507703 DUMMY COLLAR
ST2 399780104 WEIGHT
ST3 899580100 INSTALLER

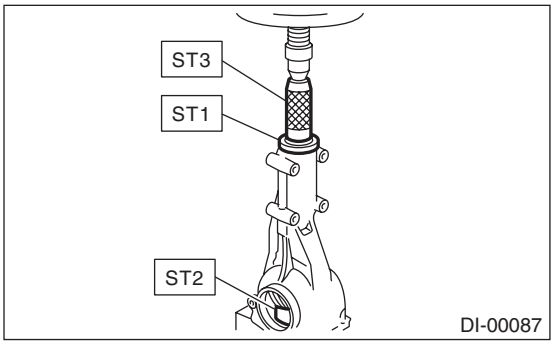

6) Insert the spacer, then press-fit the pilot bearing with ST1 and ST2.
ST1 399780104 WEIGHT
ST2 899580100 INSTALLER

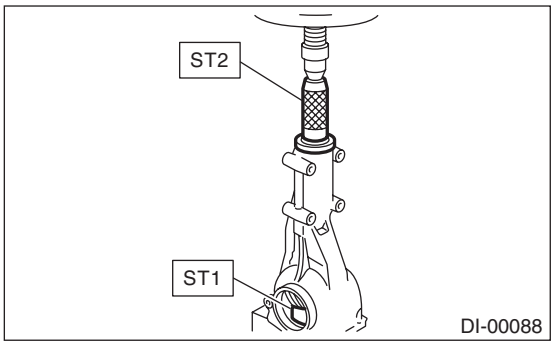

7) Using the ST, install the oil seal.

NOTE:
- Use a new oil seal.
- Press-fit until the oil seal end comes 1 mm (0.04 in) inward from end of carrier.
- Apply differential gear oil to the oil seal lips.

ST 498447120 INSTALLER

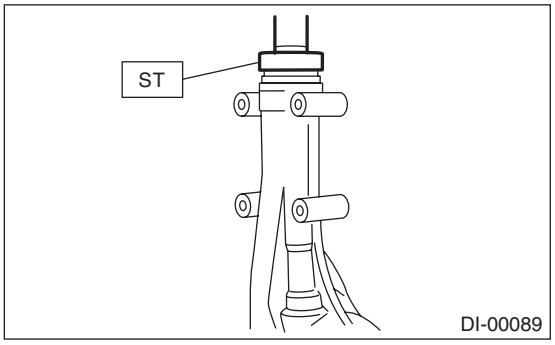

8) Press-fit the companion flange with ST1 and ST2.

NOTE:
Be careful not to damage the bearing.
ST1 899874100 INSTALLER
ST2 399780104 WEIGHT

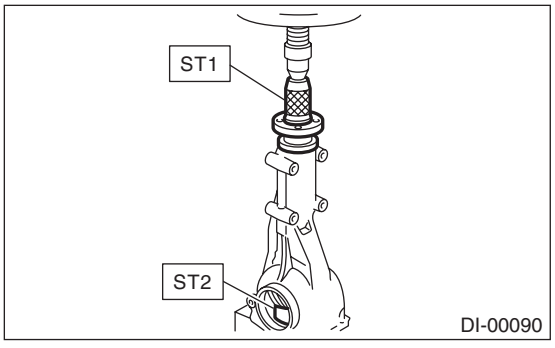

9) Apply seal material on the drive pinion shaft thread and new self-locking nut seat.

Seal material:
THREE BOND 1324 (Part No. 004403042) or equivalent

10) Attach the new self-locking nut and use the ST to fix the companion flange in place, then tighten the self-locking nut.

Tightening torque:
181.5 N·m (18.5 kgf-m, 133.9 ft-lb)
ST 498427200 FLANGE WRENCH

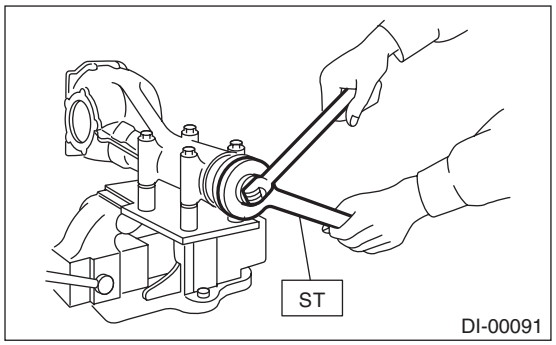

11) Check the initial torque or initial load.

Initial load:
18.1 — 38.8 N (1.8 — 4.0 kgf, 4.1 — 8.7 lbf)

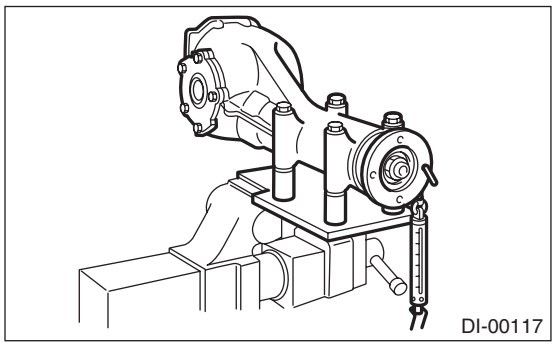

Initial torque:
0.69 — 1.47 N·m (0.07 — 0.15 kgf-m, 0.51 — 1.08 ft-lb)

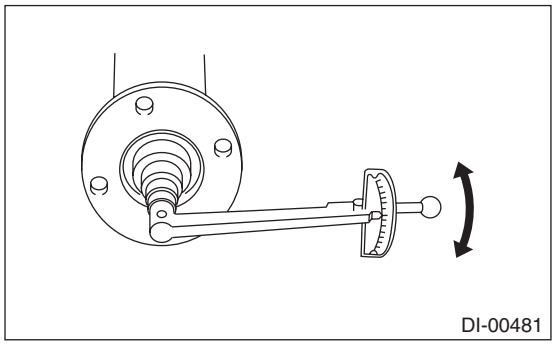

12) Assembling differential case
Install the side gears and pinion mate gears, with their side gear thrust washers, pinion mate gear washer, and pinion mate shaft, into the differential case.

NOTE:
• Apply gear oil on both sides of the washer and on the pinion mate shaft before installing.
• Insert the pinion mate shaft into the differential case by aligning the pin holes.

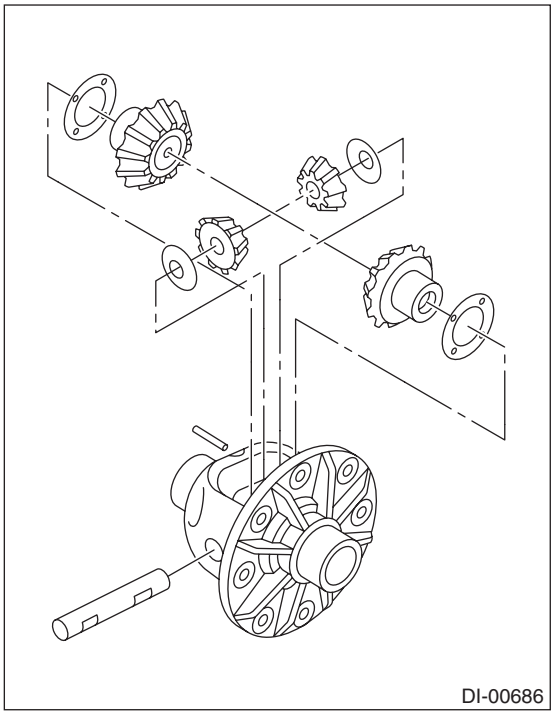
DI-00686

(1) Measure the side gear backlash.

Side gear backlash:
0.10 — 0.20 mm (0.004 — 0.008 in)

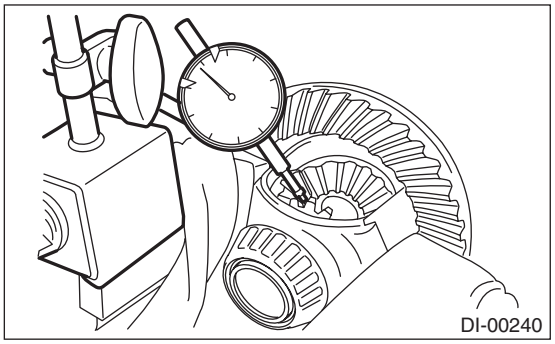
DI-00240

(2) Adjust the backlash as specified by selecting side gear thrust washer.

Side gear thrust washer	
Part No.	Thickness mm (in)
383445201	0.75 — 0.80 (0.0295 — 0.0315)
383445202	0.80 — 0.85 (0.0315 — 0.0335)
383445203	0.85 — 0.90 (0.0335 — 0.0354)

(3) Check the condition of rotation after applying oil to the gear tooth surfaces and thrust washer surfaces.
(4) Drive the pinion shaft lock pin into the differential case.

13) Install the driven gear to the differential case.

NOTE:
• Before installing bolts, apply seal material to bolt threads.

Seal material:
THREE BOND 1324 (Part No. 004403042) or equivalent
• Make sure there is no clearance between the differential case and driven gear.
• Tighten opposing bolts in order.

Tightening torque:
103 N·m (10.5 kgf-m, 76.0 ft-lb)

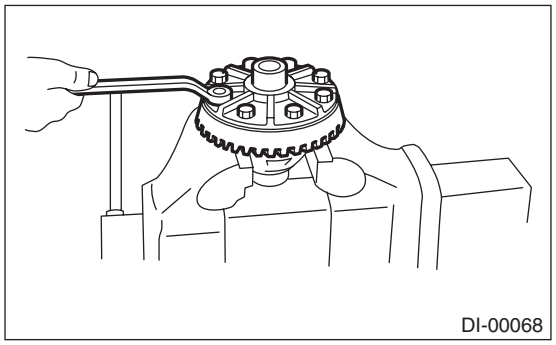
DI-00068

14) Using the ST, press-fit the side bearing to the differential case.
ST 398487700 DRIFT

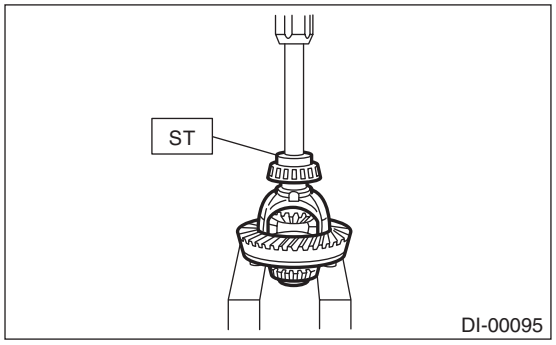

DI-00095

15) Using the ST, press-fit the side bearing outer race to the side retainer.

CAUTION:
Make sure that the bearing outer races and cones are properly assembled.
ST 398417700 DRIFT

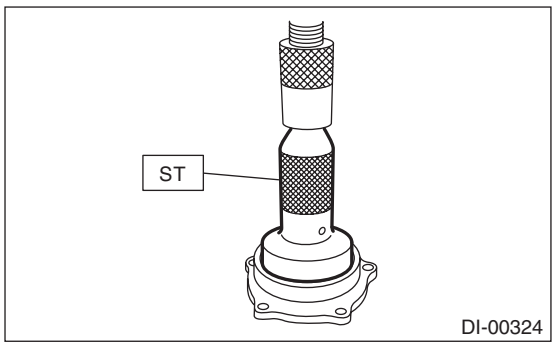

DI-00324

16) Side retainer shim adjustment
(1) The hypoid driven gear backlash and side bearing preload can be adjusted by the side retainer shim thickness.
(2) Install the differential case assembly into differential carrier in the reverse order of disassembly.

NOTE:
Be careful not to hit the teeth of hypoid driven gear against the differential carrier.

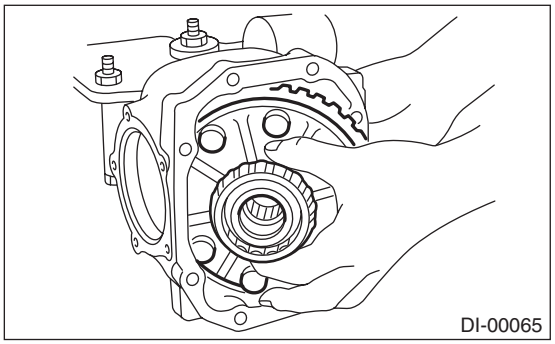
DI-00065

(3) Install the side retainer shim.

NOTE:
• Be careful not to mix up the side retainer shim RH and LH.
• Replace broken or corroded side retainer shims with a new part of the same thickness.

Side retainer shim	
Part No.	Thickness mm (in)
383475201	0.20 (0.0079)
383475202	0.25 (0.0098)
383475203	0.30 (0.0118)
383475204	0.40 (0.0157)
383475205	0.50 (0.0197)

(4) Align the arrow mark on the differential carrier with the arrow mark on the side retainer when installing the side retainer.

NOTE:
Be careful that the side bearing outer race is not damaged by the bearing roller.

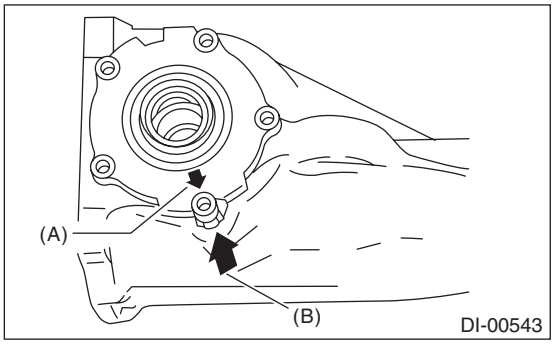

DI-00543

(A) Arrow mark (on the side retainer)
(B) Arrow mark (on the differential carrier)

(5) Tighten the side retainer bolts.

Tightening torque:
10.5 N·m (1.1 kgf-m, 7.7 ft-lb)

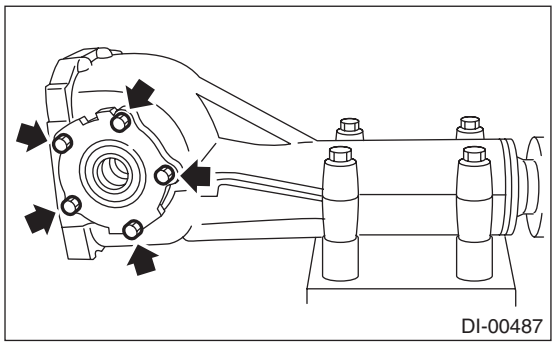
DI-00487

(6) Measure the hypoid driven gear to drive pinion backlash. Set the magnet base on differential carrier. Align the contact point of dial gauge with tooth face of hypoid driven gear, and move hypoid driven gear while holding drive pinion still. Read the value indicated on dial gauge. If the backlash is outside the standard range, adjust the side retainer shim by the following method.
•When backlash is less than 0.1 mm (0.004 in):
Reduce the thickness of shim on the back side of the hypoid driven gear and increase the thickness of shims on the teeth side of the hypoid driven gear.
•When backlash exceeds 0.2 mm (0.008 in):
Increase the thickness of shim on the back side of the hypoid driven gear and reduce the thickness of shims on the teeth side of the hypoid driven gear.

Backlash:
0.10 — 0.20 mm (0.004 — 0.008 in)

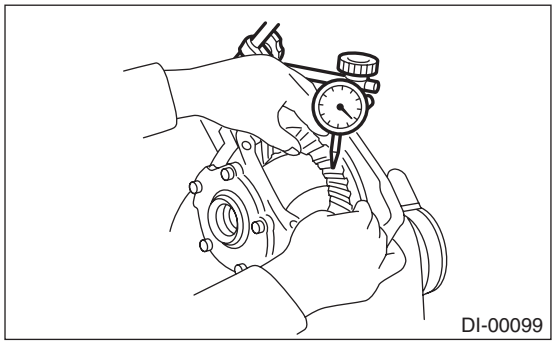
DI-00099

(7) Measure the total preload of the drive pinion. If the total preload is outside the specification range, adjust the thickness of side retainer shims, increasing/reducing both shims by an even amount at a time.

Total preload:
20.7 — 54.4 N (2.1 — 5.5 kgf, 4.7 — 12.2 lbf)

17) Recheck the hypoid driven gear to drive pinion backlash.

Backlash:
0.10 — 0.20 mm (0.004 — 0.008 in)

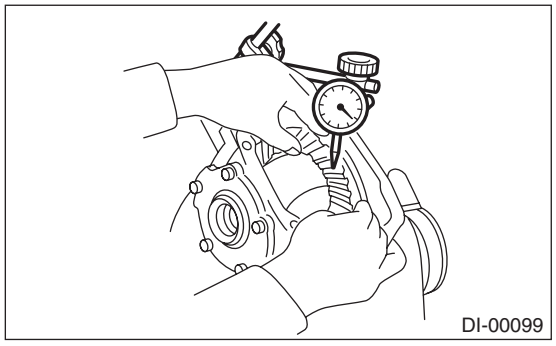

18) Check pinion and hypoid driven gears rotate smoothly and make sure of the hypoid driven gear runout on its back surface. If the hypoid driven gear runout on its back surface exceeds the specification, check for any foreign objects between the hypoid driven gear and differential case, and for any deformation of the differential case or hypoid driven gear.

Hypoid driven gear back surface runout:
0.05 mm (0.002 in)

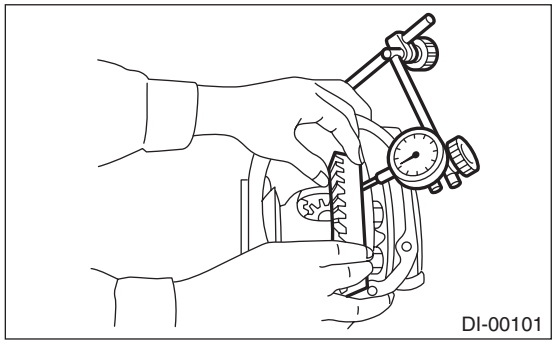

19) Check and adjustment of the tooth contact of hypoid driven gear and drive pinion
(1) Apply lead-free red dye evenly on the both sides of three to four teeth of the hypoid driven gear. Check the contact pattern after rotating the hypoid driven gear several revolutions back and forth until a definite contact pattern appears on the hypoid driven gear.
(2) When the contact pattern is not correct, re-adjust.

NOTE:
Be sure to wipe off the lead-free red dye completely after the adjustment is completed.

- Correct tooth contact

Check item: Tooth contact pattern is slightly shifted toward toe side under no-load rotation. (When driving, it moves towards the heel side.)

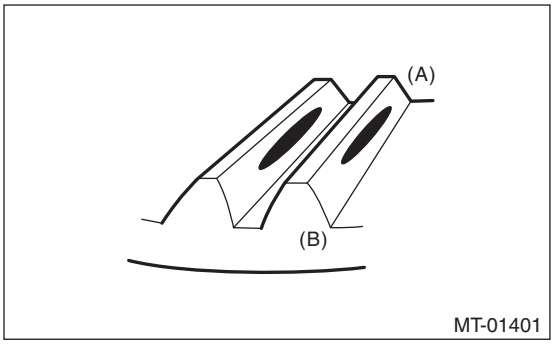

(A) Toe side
(B) Heel side

- Face contact

Check item: Backlash is too large.
Contact pattern

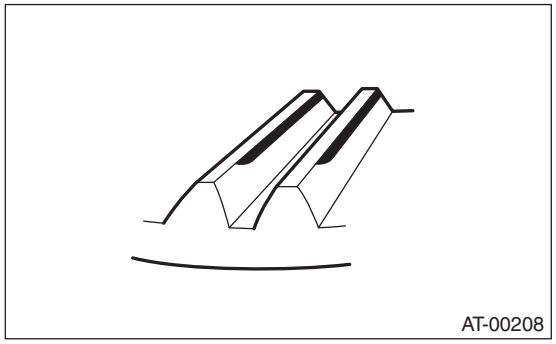

Corrective action: Increase thickness of pinion height adjusting washer according to the procedure for bringing drive pinion close to hypoid driven gear side.

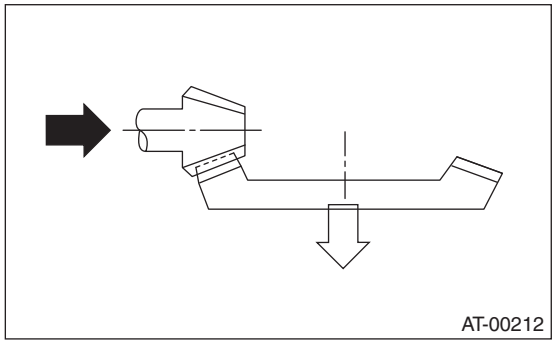

- Flank contact

Check item: Backlash is too small.
Contact pattern

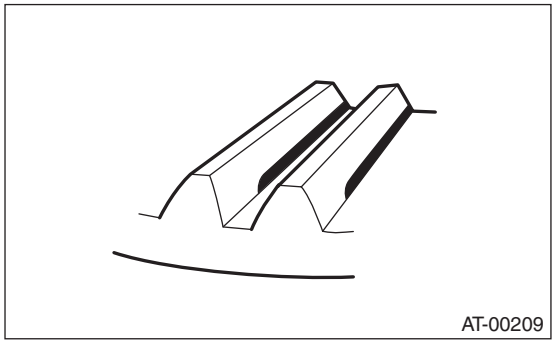

Corrective action: Reduce the thickness of pinion height adjusting washer according to the procedure for bringing drive pinion away from hypoid driven gear.

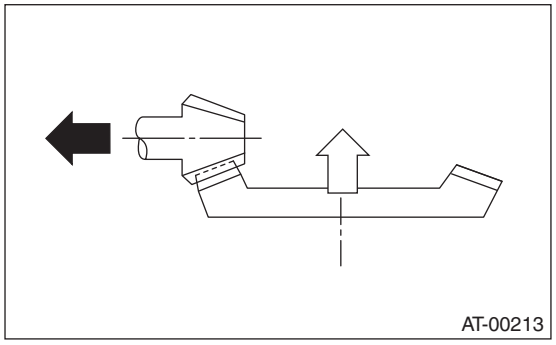

• Toe contact (inside contact)

Check item: Teeth contact area is too small.

Contact pattern

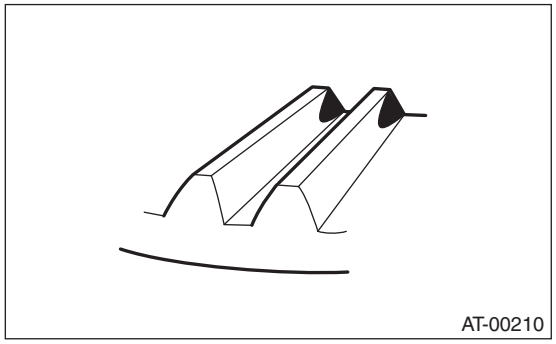

Corrective action: Reduce the thickness of pinion height adjusting washer according to the procedure for bringing drive pinion away from hypoid driven gear.

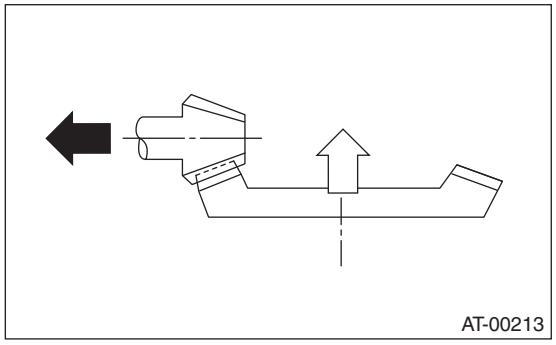

• Heel contact (outside end contact)

Check item: Teeth contact area is too small.

Contact pattern

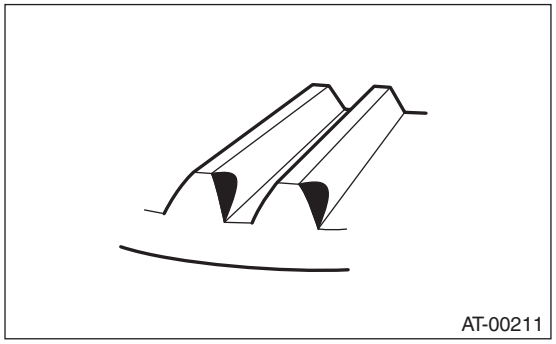

Corrective action: Increase thickness of pinion height adjusting washer according to the procedure for bringing drive pinion close to hypoid driven gear side.

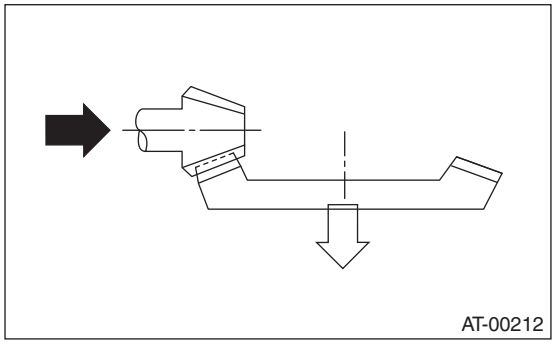

20) If proper tooth contact is not obtained, readjust the drive pinion height by changing the RH and LH side retainer shims and the hypoid gear backlash.
(1) Drive pinion height

ST1 398507702 DUMMY SHAFT
ST2 398507701 DIFFERENTIAL CARRIER GAUGE

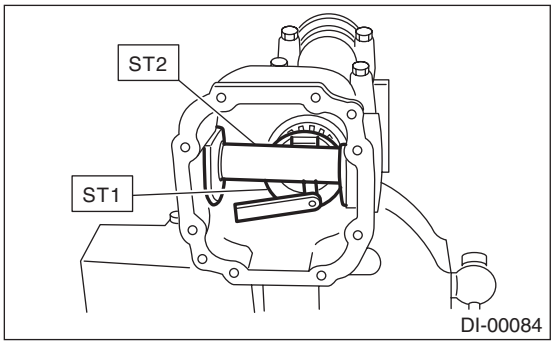

T = To + N – (H × 0.01) – 0.20 mm (0.0079 in)

T	Thickness of pinion height adjusting washer mm (in)	
To	Thickness of washer temporarily inserted mm (in)	
N	Clearance of thickness gauge mm (in)	
H	Figure marked on drive pinion head	
Memo:		

(2) Hypoid gear backlash

Backlash:
0.10 — 0.20 mm (0.004 — 0.008 in)

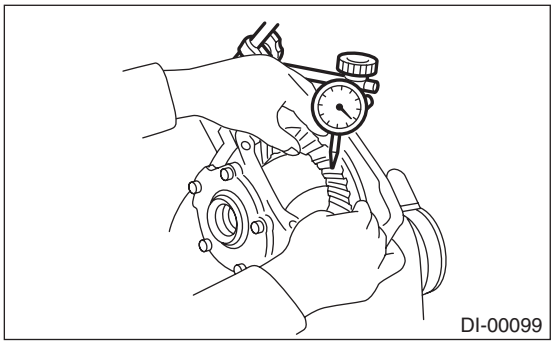

21) Remove the RH and LH side retainers.
22) Install the O-ring to left and right side retainers.

NOTE:
Use new O-rings.

23) Install the oil seal to the side retainer of both sides. <Ref. to DI-78, REPLACEMENT, Rear Differential Side Oil Seal.>

24) Align the arrow mark on the differential carrier with the arrow mark on the side retainer when installing the side retainer.

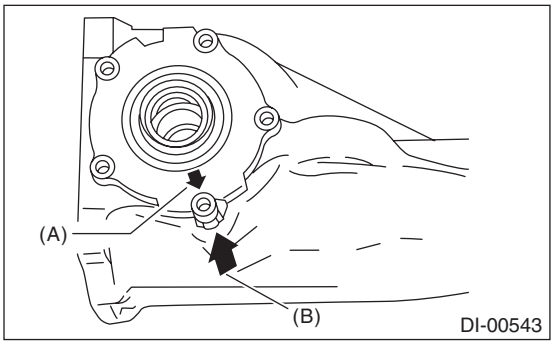

(A) Arrow mark (on the side retainer)
(B) Arrow mark (on the differential carrier)

25) Apply liquid gasket to the bolts indicated by arrows, and tighten the bolts.

Liquid gasket:
THREE BOND 1110B (Part No. K0879Y0020) or equivalent

Tightening torque:
10.5 N·m (1.1 kgf-m, 7.7 ft-lb)

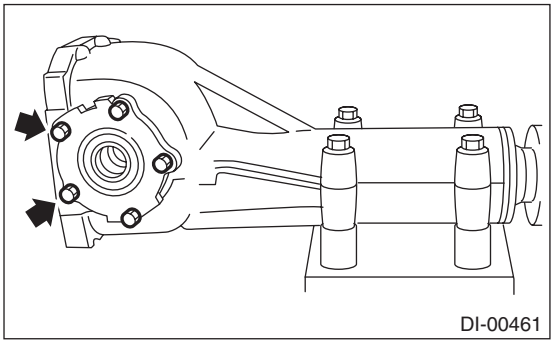

26) Install the gasket and rear cover, and tighten the bolts to specified torque.

NOTE:
Use a new gasket.

Tightening torque:
29.5 N·m (3.0 kgf-m, 21.8 ft-lb)

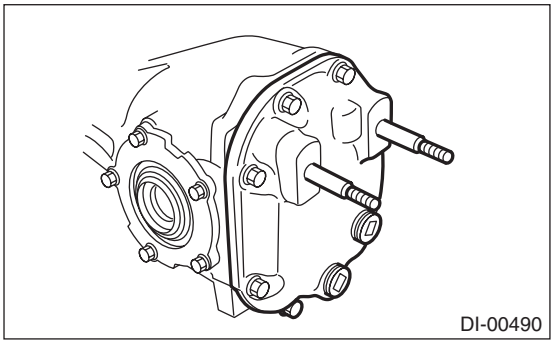

27) Install the air breather cap.

NOTE:
When installing the air breather cap, do not tap section (A). Be sure to tap section (B) to install.

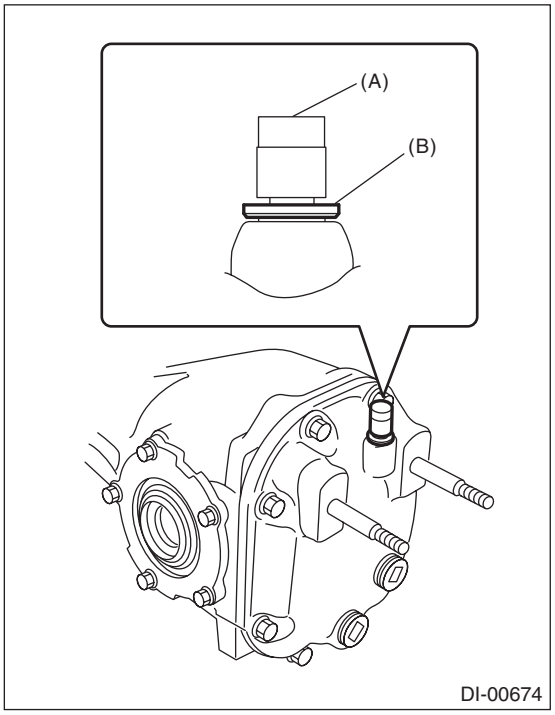

28) Install the drain plug.

NOTE:
Apply liquid gasket to the drain plug.

Liquid gasket:
THREE BOND 1105 (Part No. 004403010) or equivalent

Tightening torque:
49 N·m (5.0 kgf-m, 36.1 ft-lb)

29) Install the filler plug.

NOTE:
After installing the rear differential assembly to the vehicle, fill the gear oil, then apply liquid gasket, and tighten to the specified torque. <Ref. to DI-23, REPLACEMENT, Differential Gear Oil.>

E: INSPECTION

Wash all the disassembled parts clean, and examine them for wear, damage and other defects. Repair or replace the defective parts as necessary.
1) Hypoid driven gear and drive pinion
• If there is evidently an abnormal tooth contact, find out the cause and adjust until the teeth contact correctly. Replace the gear if there is an excessive worn or an incapable adjustment.
• If crack, cutout or seizure is found, replace the parts as a set. Slight damage of some teeth can be corrected by oil stone or the like.
2) Side gear and pinion mate gear
• Replace if cracks, scoring or other defects are evident on the tooth surface.
• Replace if thrust washer contact surface is worn or scored. Slight damages of the surface can be corrected by oil stones or equivalent.
3) Bearing
Replace if seizure, peeling, wear, rust, dragging during rotation, noise or other defect is evident.
4) Thrust washer of the side gear and pinion mate gear
Replace if seized, flawed, abnormally worn or having other defects.
5) Oil seal
Replace if deformed or damaged, and at every disassembling.
6) Differential carrier
Replace if the bearing bores are worn or damaged.
7) Differential case
Replace if sliding surfaces are abnormally worn, burned, or cracked.
8) Companion flange
Replace if the oil seal lip contact surface shows cracking.

1. SIDE GEAR BACKLASH

Using a dial gauge, check the backlash of side gear.

Side gear backlash:
0.10 — 0.20 mm (0.004 — 0.008 in)

If the side gear backlash is not within the specification, select the side gear thrust washer and adjust the side gear backlash as specified.

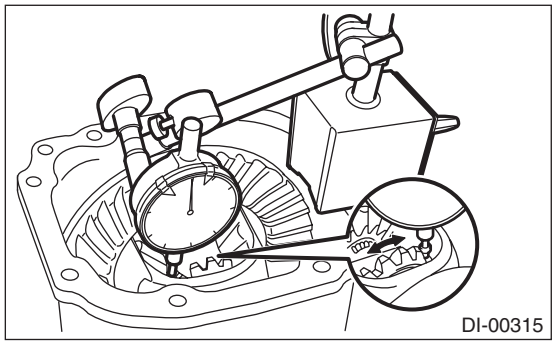

2. HYPOID DRIVEN GEAR BACKLASH

Using a dial gauge, check the backlash of hypoid driven gear.

Hypoid driven gear backlash:
0.10 — 0.20 mm (0.004 — 0.008 in)

If the hypoid driven gear backlash is outside the specification range, adjust the side bearing preload and repair if necessary.

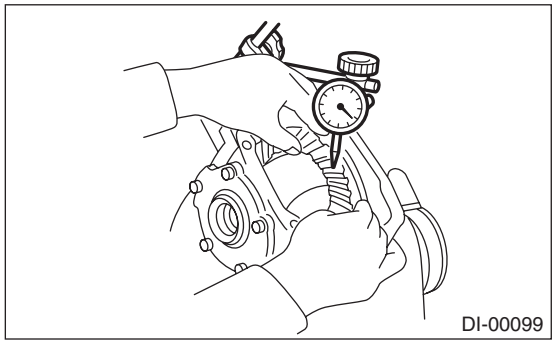

3. HYPOID DRIVEN GEAR RUNOUT ON ITS BACK SURFACE

Using a dial gauge, check the hypoid driven gear back surface runout.

Hypoid driven gear back surface runout:
0.05 mm (0.002 in)

If the hypoid driven gear runout on its back surface exceeds the limit, replace the hypoid driven gear.

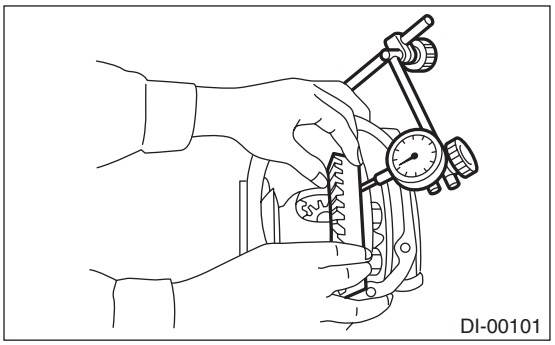

4. TOOTH CONTACT BETWEEN HYPOID DRIVEN GEAR AND DRIVE PINION

Inspect the tooth contact between the hypoid driven gear and drive pinion. <Ref. to DI-32, ASSEMBLY, Rear Differential (T-type).>

5. TOTAL PRELOAD

Using a spring scale, check the total preload.

Total preload:
20.7 — 54.4 N (2.1 — 5.5 kgf, 4.7 — 12.2 lb)

If the total preload is not within the specification, adjust the side retainer shim.

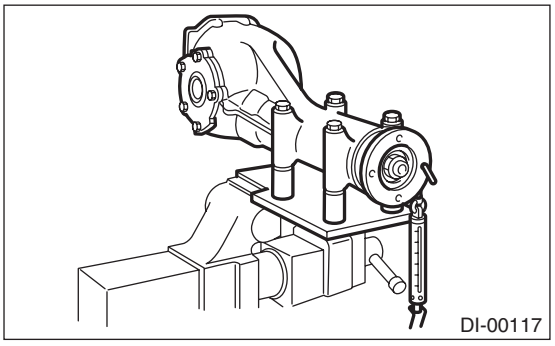

6. COMPANION FLANGE

1) If rust or dirt is attached to the companion flange, remove them.
2) Set a dial gauge at a companion flange surface (mating surface of propeller shaft and companion flange), and then measure the companion flange runout.

Limit of runout:
0.08 mm (0.003 in)

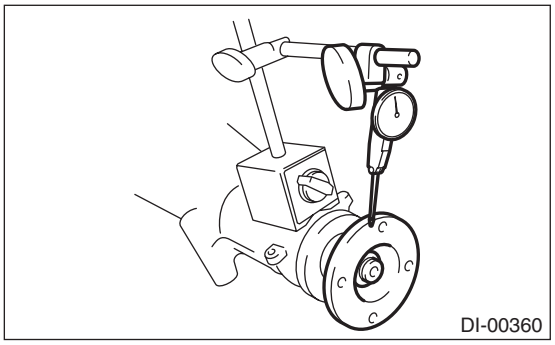

3) Set the gauge inside of the companion flange, and measure the runout.

Limit of runout:
0.08 mm (0.003 in)

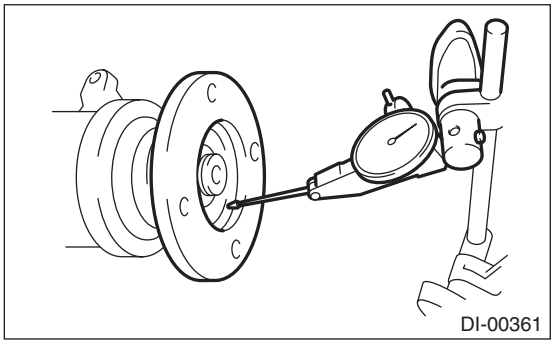

4) If either runout exceeds the limit, move the phase of companion flange and drive pinion 90° each, and find the point where the runout is within the limit.
5) If the runout exceeds the limit even after changing the phase, replace the companion flange and recheck the runout.
6) If the runout exceeds the limit after replacing the companion flange, the drive pinion may be assembled incorrectly or bearing is faulty.

F: ADJUSTMENT

1. SIDE GEAR BACKLASH

Adjust the side gear backlash. <Ref. to DI-32, ASSEMBLY, Rear Differential (T-type).>

2. HYPOID DRIVEN GEAR BACKLASH

Adjust hypoid driven gear backlash. <Ref. to DI-32, ASSEMBLY, Rear Differential (T-type).>

3. TOOTH CONTACT BETWEEN HYPOID DRIVEN GEAR AND DRIVE PINION

Adjust the tooth contact between hypoid driven gear and drive pinion gear. <Ref. to DI-32, ASSEMBLY, Rear Differential (T-type).>

4. TOTAL PRELOAD

Adjust the side retainer shim. <Ref. to DI-32, ASSEMBLY, Rear Differential (T-type).>

5. Rear Differential (VA-type)

A: REMOVAL

The removal procedure for VA-type is included in “REMOVAL” for T-type. <Ref. to DI-26, REMOVAL, Rear Differential (T-type).>

B: INSTALLATION

The installation procedure for VA-type is included in “INSTALLATION” for T-type. <Ref. to DI-28, INSTALLATION, Rear Differential (T-type).>

C: DISASSEMBLY

1. VA1-TYPE

To detect the real cause of trouble, inspect the following items before disassembling.

• Tooth contact and backlash between hypoid driven gear and drive pinion

1) Set the ST on vise and install the differential assembly to ST.

ST 398217700 ATTACHMENT SET

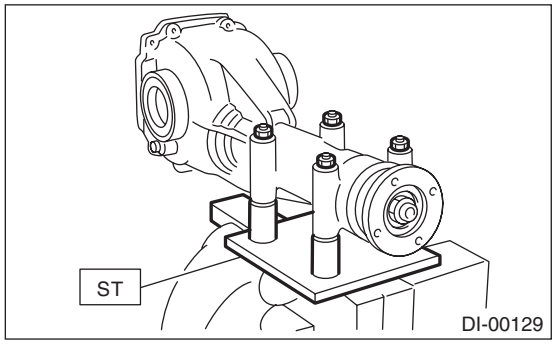

2) Remove the drain plug and filler plug.

3) Remove the rear cover by removing retaining bolts.

NOTE:
Remove it by tapping with a plastic hammer.

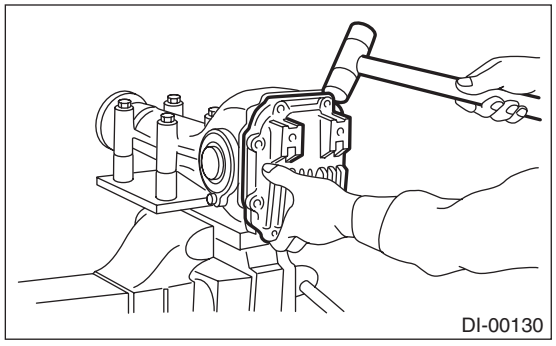

4) Remove the air breather cap.

NOTE:

• Do not attempt to remove the air breather cap unless necessary.

• Whenever the air breather cap is removed, replace it with a new part.

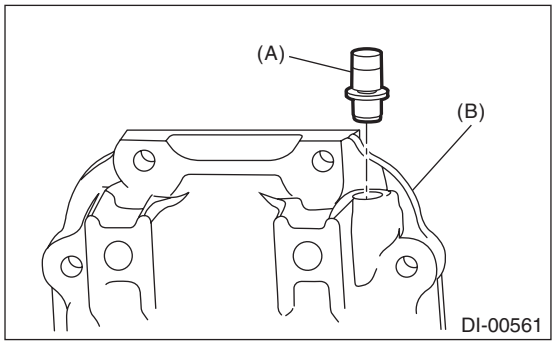

(A) Air breather cap
(B) Rear cover

5) Remove the lock plate RH and LH.

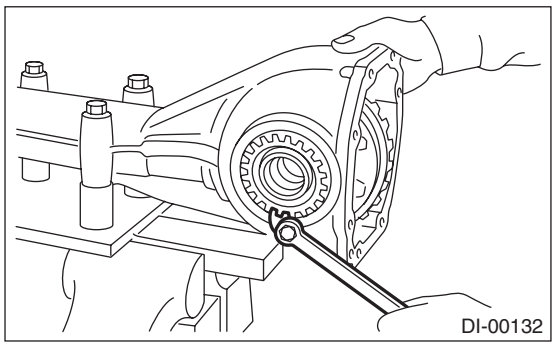

6) Remove the side retainer RH and LH with ST.

NOTE:
When keeping the retainers aside, use labels etc. to avoid confusing the left and right.

ST 18630AA010 WRENCH COMPL RETAINER

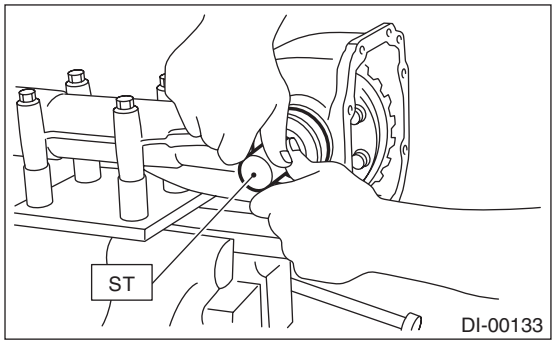

7) Pull out the differential case assembly from differential carrier.

NOTE:
Be careful not to hit the teeth of hypoid driven gear against the differential carrier.

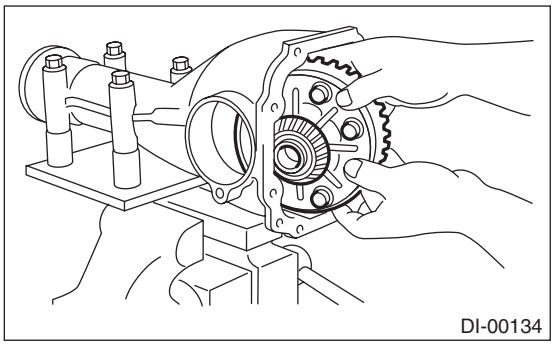

8) Remove the bearing race from side retainer RH and LH with ST1 and ST2.
ST1 499705401 PULLER ASSY
ST2 499705404 SEAT

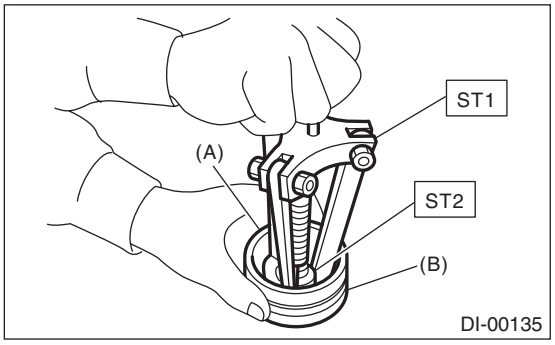

(A) Bearing race
(B) Side retainer

9) Remove the oil seal from the RH and LH side retainers using a screwdriver.

NOTE:
Perform this operation only when changing oil seal.

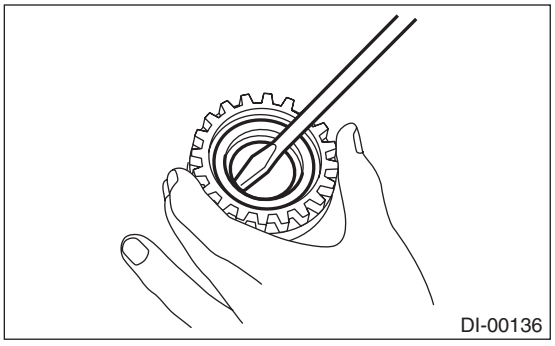

10) Extract the bearing cone with ST1 and ST2.

NOTE:
• Do not attempt to disassemble the parts unless necessary.
• Set the puller so that its claws catch the edge of the bearing cone.
• Store so that the right and left side bearing races and cones are not mixed together.
ST1 899524100 PULLER SET
ST2 399520105 SEAT

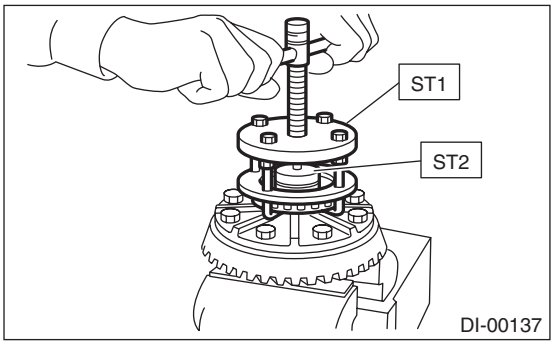

11) Using the ST, loosen the hypoid driven gear bolt and remove the hypoid driven gear.
ST 18270KA020 SOCKET (E20)

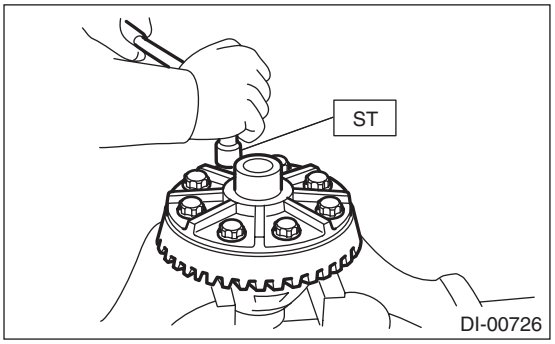

12) Remove the spring pin from hypoid driven gear side using ST.
ST 899904100 STRAIGHT PIN REMOVER

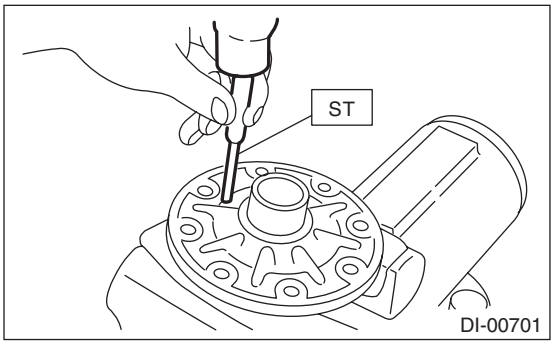

13) Draw out the pinion mate shaft and remove pinion mate gears, side gears and thrust washers.

NOTE:
The gears and washers should be marked with RH or LH, front or rear, or kept separately.

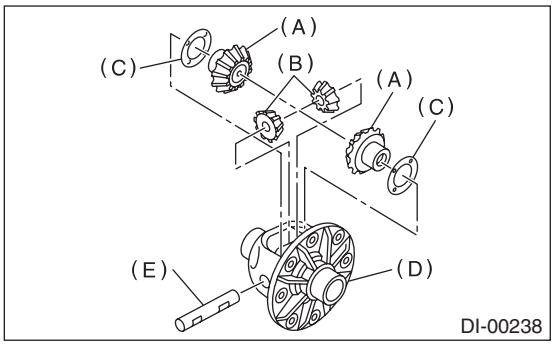

(A) Side gear
(B) Pinion mate gear
(C) Thrust washer
(D) Differential case
(E) Pinion mate shaft

14) Remove the self-locking nut while securing the companion flange with ST.
ST 498427200 FLANGE WRENCH

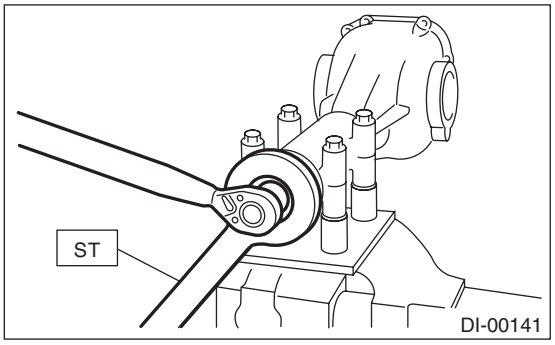

15) Extract the companion flange with a puller.

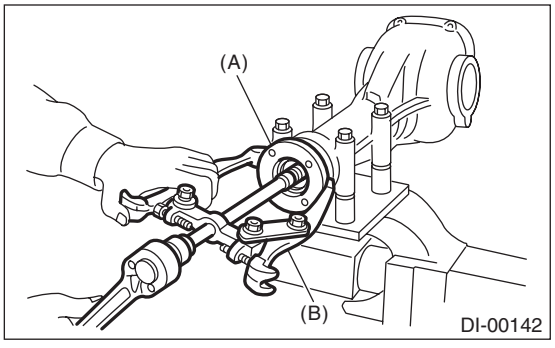

(A) Companion flange
(B) Puller

16) Press the end of drive pinion shaft and extract it together with rear bearing cone, pinion height adjusting washer and washer by using the ST.

NOTE:
Hold the drive pinion so as not to drop it.
ST 398467700 DRIFT

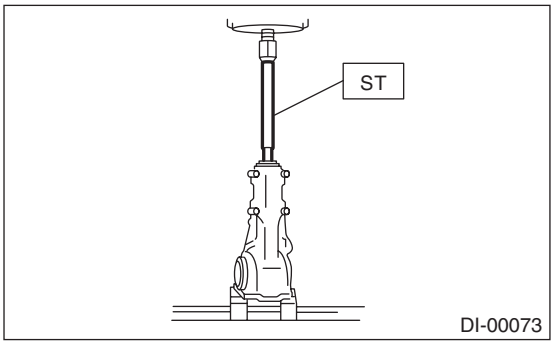

17) Remove the rear bearing cone from drive pinion by supporting the cone with ST.

NOTE:
Place the replacer so that its center-recessed side faces the bearing cone.
ST 498515500 REPLACER

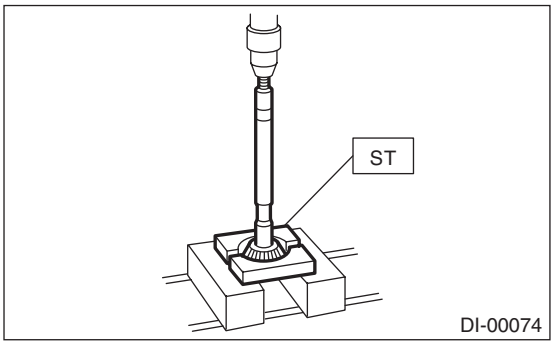

18) Remove the front oil seal from differential carrier using ST.
ST 398527700 PULLER ASSY

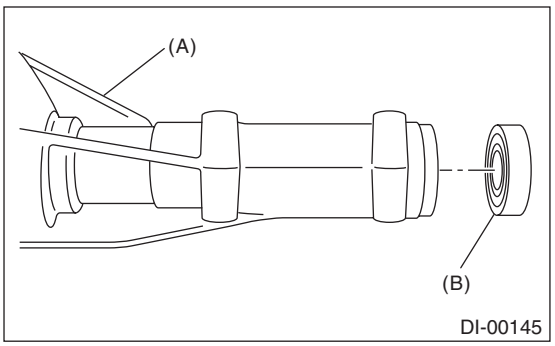

(A) Differential carrier
(B) Front oil seal

19) Remove the pilot bearing together with the front bearing cone and spacer using the ST.
ST 398467700 DRIFT

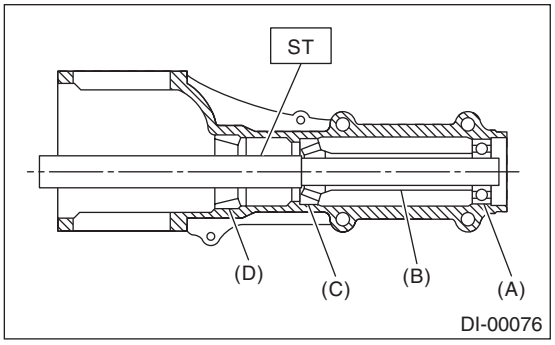

(A) Pilot bearing
(B) Spacer
(C) Front bearing
(D) Rear bearing cup

20) When replacing the bearings, hit out the front bearing cup and rear bearing cup in this order using a brass bar.

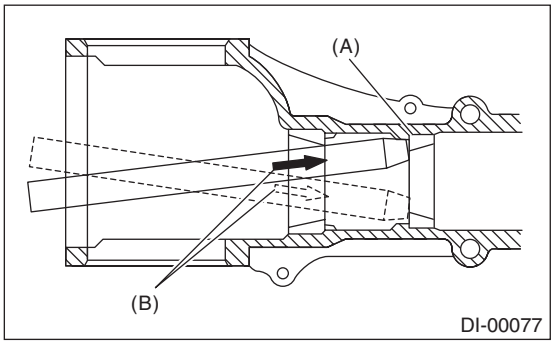

(A) 2 cutout portions along diagonal lines
(B) Tap alternately with brass bar.

2. VA2-TYPE

To detect the real cause of trouble, inspect the following items before disassembling.
• Tooth contact and backlash between hypoid driven gear and drive pinion
1) Set the ST on vise and install the differential assembly to ST.
ST 398217700 ATTACHMENT SET

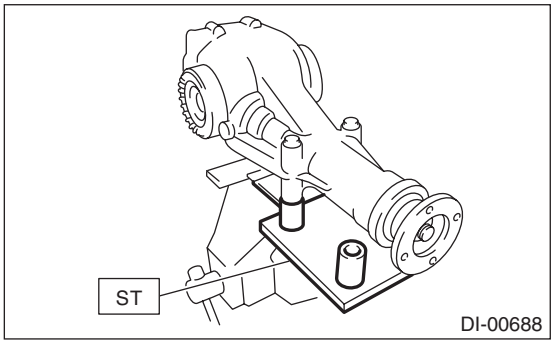

2) Remove the drain plug and filler plug.
3) Remove the rear cover by removing retaining bolts.

NOTE:
Remove it by tapping with a plastic hammer.

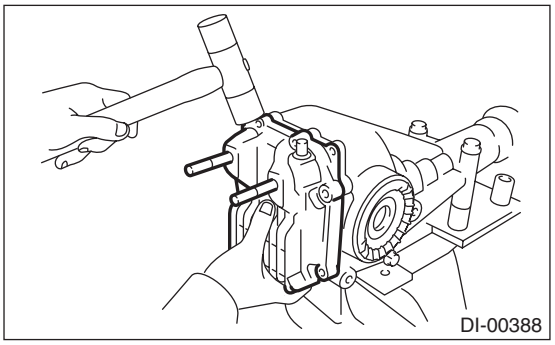

4) Remove the air breather cap.

NOTE:
• Do not attempt to remove the air breather cap unless necessary.
• Whenever the air breather cap is removed, replace it with a new part.

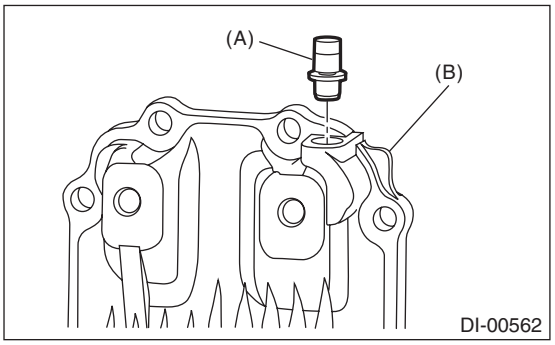

(A) Air breather cap
(B) Rear cover

5) Remove the lock plate RH and LH.

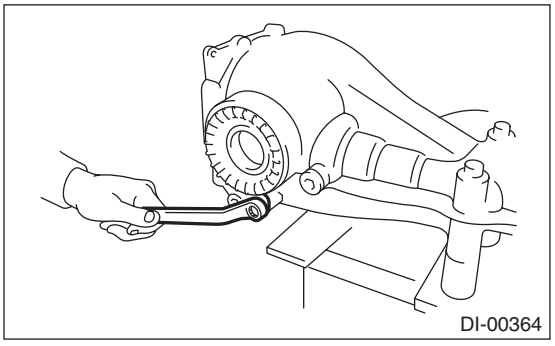

6) Remove the side retainer RH and LH with ST.

NOTE:
When keeping the retainers aside, use labels etc. to avoid confusing the left and right.

ST 18630AA010 WRENCH COMPL RETAINER

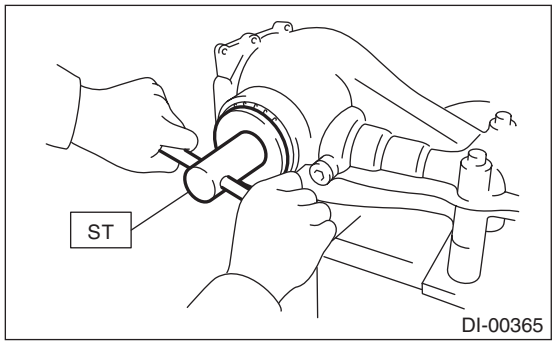

7) Pull out the differential case assembly from differential carrier.

NOTE:
Be careful not to hit the teeth of hypoid driven gear against the differential carrier.

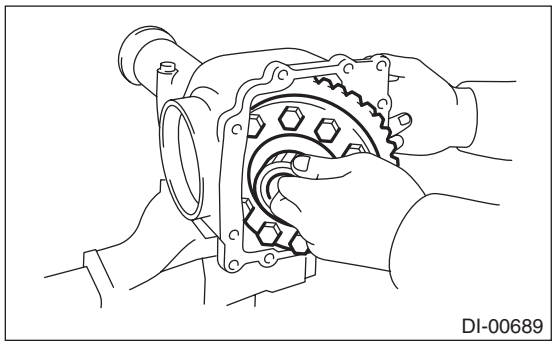

8) Remove the bearing race from side retainer RH and LH with ST and the press.

NOTE:
- Be sure to turn the bolt of the ST by hand.
- Set the puller so that its claws catch the groove of side retainer.

ST 18758AA000 PULLER

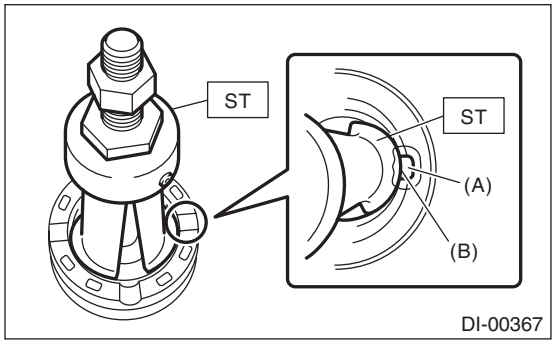

(A) Groove
(B) Claw

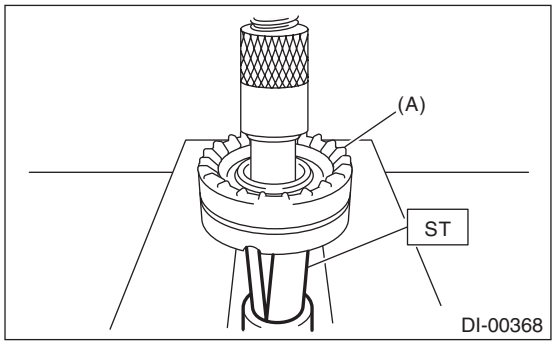

(A) Side retainer

9) Remove the oil seal from the RH and LH side retainers using a screwdriver.

NOTE:
Perform this operation only when changing oil seal.

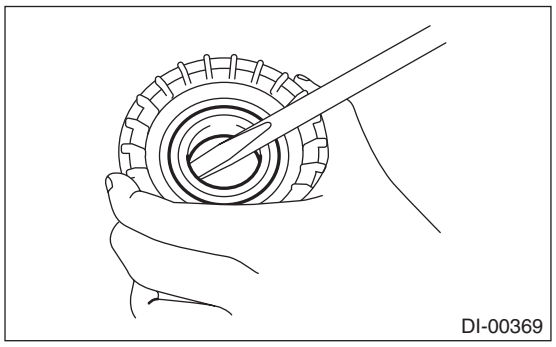

10) Extract the bearing cone with ST1, ST2 and ST3.

NOTE:
• Do not attempt to disassemble the parts unless necessary.
• Never mix up the RH and LH bearing races and cones.

ST1 498077000 REMOVER
ST2 399520105 SEAT
ST3 899864100 REMOVER

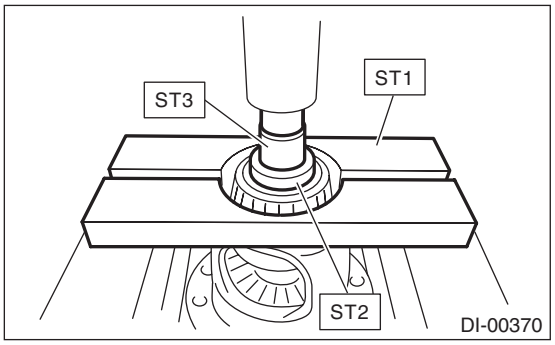

11) Using the ST, loosen the hypoid driven gear bolt and remove the hypoid driven gear.

ST 18270KA020 SOCKET (E20)

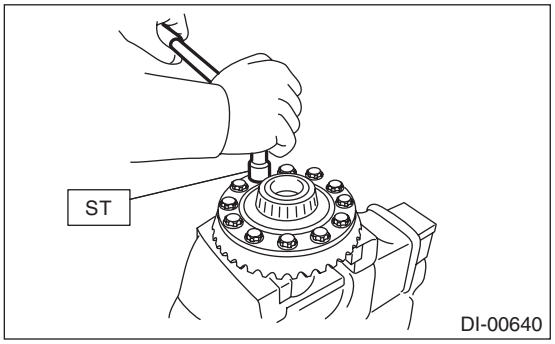

12) Remove the spring pin from hypoid driven gear side using ST.

ST 899904100 STRAIGHT PIN REMOVER

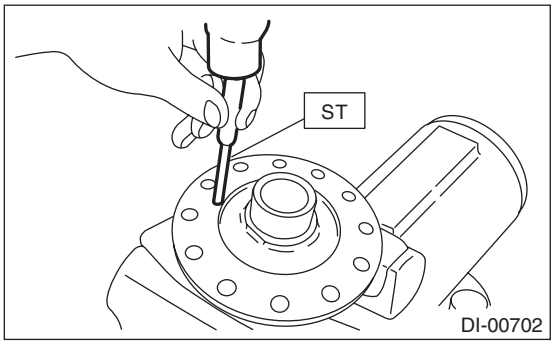

13) Draw out the pinion mate shaft and remove pinion mate gears, side gears and thrust washers.

NOTE:
The gears and washers should be marked with RH or LH, front or rear, or kept separately.

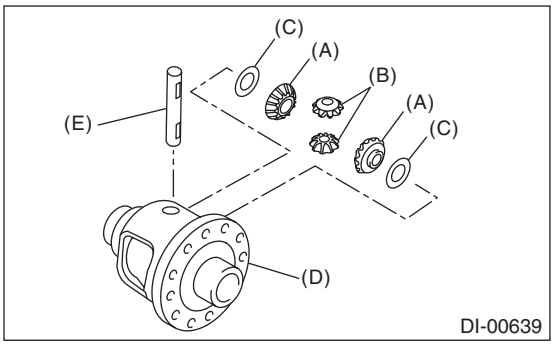

(A) Side gear
(B) Pinion mate gear
(C) Thrust washer
(D) Differential case
(E) Pinion mate shaft

14) Remove the circlip from the side gear.

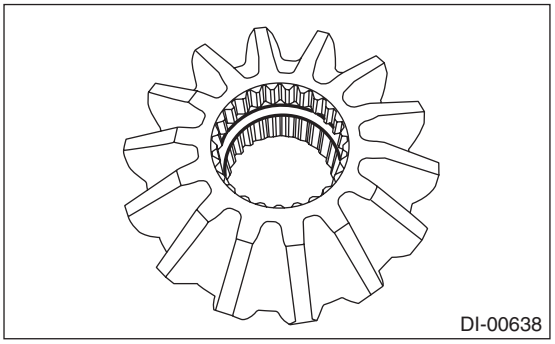

15) Remove the self-locking nut while securing the companion flange with ST.

ST 498427200 FLANGE WRENCH

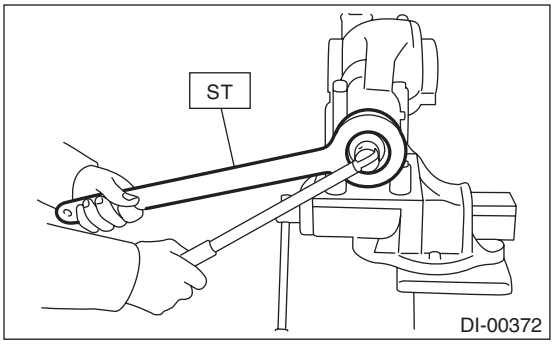

16) Extract the companion flange using a puller.

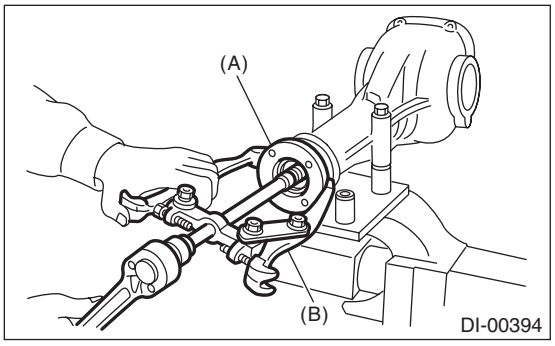

(A) Companion flange
(B) Puller

17) Remove the drive pinion shaft.
18) Remove the rear bearing cone from drive pinion by supporting the cone with ST.

NOTE:
Place the replacer so that its center-recessed side faces the bearing cone.
ST 398517700 REPLACER

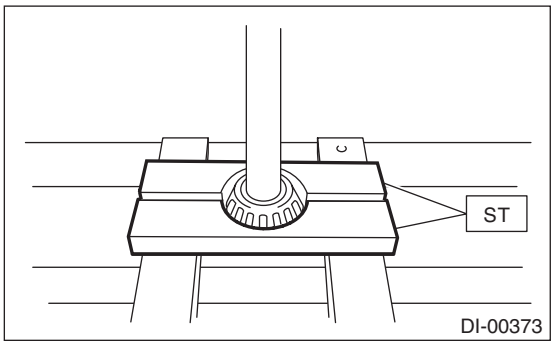

19) Remove the front oil seal from differential carrier using screwdriver.
20) Remove the pilot bearing, front bearing cone and spacer.

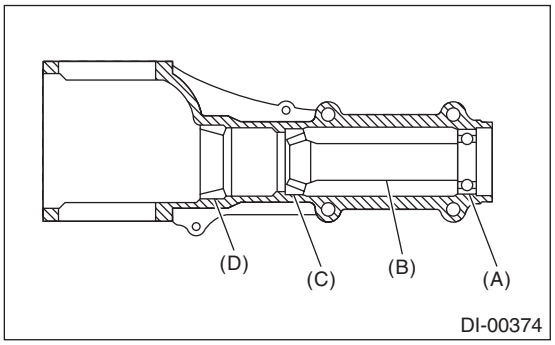

(A) Pilot bearing
(B) Spacer
(C) Front bearing
(D) Rear bearing race

21) When replacing the bearings, tap out the front bearing race and rear bearing race in this order using a brass bar to remove them.

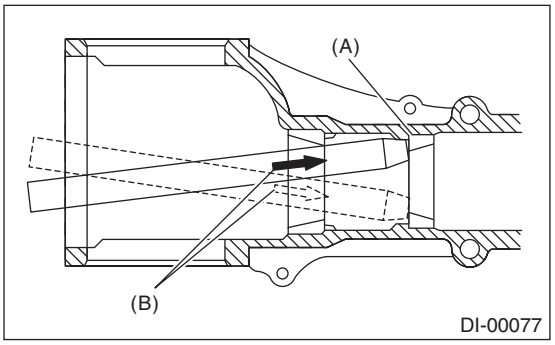

(A) 2 cutout portions along diagonal lines
(B) Tap alternately with brass bar.

D: ASSEMBLY

1. VA1-TYPE

NOTE:
- Assemble in the reverse order of disassembly.
- Check and adjust each part during assembly.
- Use new gaskets and O-rings.
- Keep the shims and washers in order, so that they are not improperly installed.
- Thoroughly clean the surfaces on which the shims, washers and bearings are to be installed.
- Apply gear oil when installing the bearings and thrust washers.
- Be careful not to mix up the RH and LH bearing races.
- Replace the oil seal and O-ring with a new part at every disassembly.
- Be careful not to mix up the side oil seal RH and LH.
- Apply differential gear oil to the lips when installing the oil seal.

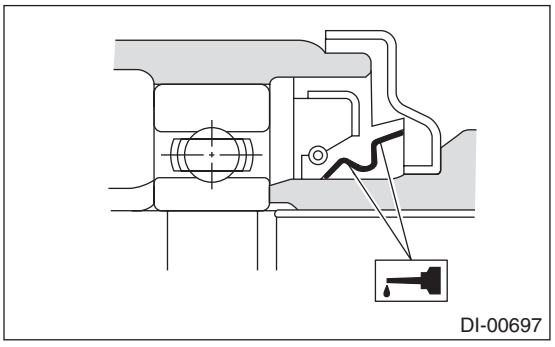

1) Adjusting preload for front and rear bearings

NOTE:
Adjust the bearing preload between front and rear bearings with preload adjusting spacer and washer. Pinion height adjusting washer is not affected by this adjustment. The adjustment must be carried out with oil seal removed.

(1) Install the rear bearing race into the differential carrier using ST1 and ST2.
ST1 398477701 HANDLE
ST2 398477702 DRIFT

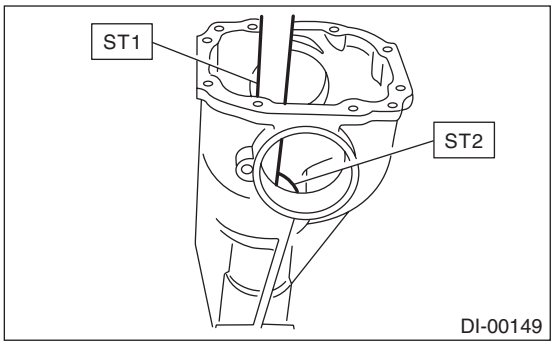

(2) Install the front bearing race to the differential carrier using ST1 and ST2.
ST1 398477701 HANDLE
ST2 498447110 DRIFT

(3) Insert the front bearing cone.

NOTE:
Use new front bearing cone.

(4) Measure and record the thickness of pinion height adjusting washer.

NOTE:
If tooth contact (drive pinion and hypoid driven gear) is normal in the inspection before disassembling, verify that the washer is not deformed, and then reuse the used washer.

(5) Insert the ST (DUMMY SHAFT) into case with the pinion height adjusting washer and rear bearing cone fitted onto it.

NOTE:
Use new rear bearing cone.

(6) Install the preload adjusting spacer, washer, front bearing cone, spacer, pilot bearing, companion flange, and self-locking nut.
ST 498447150 DUMMY SHAFT
Part No. 32285AA000 Spacer

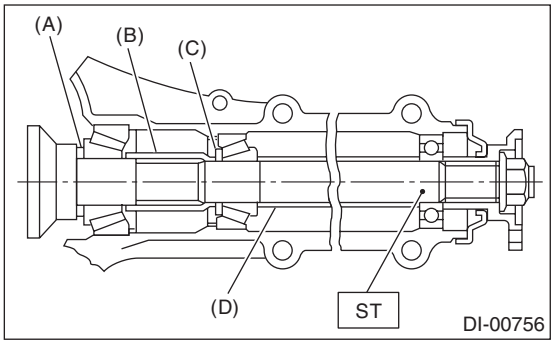

(A) Pinion height adjusting washer
(B) Preload adjusting spacer
(C) Preload adjusting washer
(D) Spacer (SUBARU genuine parts)

(7) Turn the ST by hand to slowly seat the bearing, and tighten the self-locking nut while measuring the initial load or initial torque with a spring scale or torque wrench. Select the preload adjusting washer and spacer so that the specified preload is obtained when nut is tightened to the specified torque.

NOTE:
• Use a new self-locking nut.
• Measure the preload in direction of tangent to the flange.
• Be careful not to give excessive preload.
• When tightening the self-locking nut, lock ST1 with ST2 as shown in the figure.
ST1 498447150 DUMMY SHAFT
ST2 398507704 BLOCK

Tightening torque:
191 N·m (19.5 kgf-m, 140.9 ft-lb)

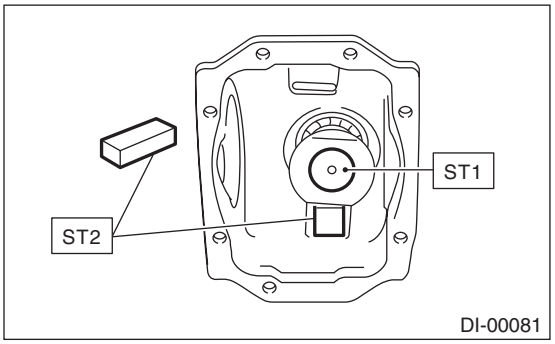

Initial load:
12.7 — 32.2 N (1.3 — 3.3 kgf, 2.9 — 7.2 lbf)

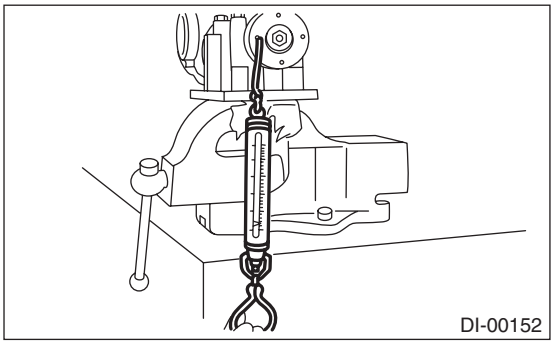

Initial torque:
0.48 — 1.22 N·m (0.05 — 0.12 kgf-m, 0.35 — 0.90 ft-lb)

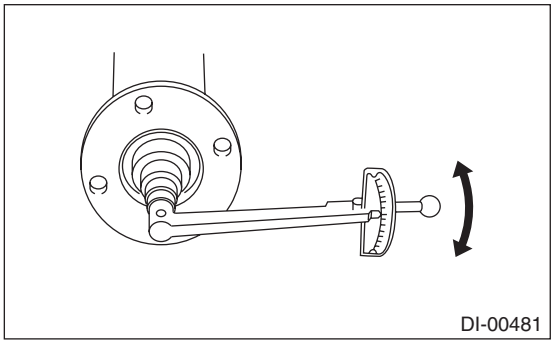

Preload adjusting washer	
Part No.	Thickness mm (in)
38336AA000	1.500 (0.0591)
38336AA120	1.513 (0.0596)
38336AA010	1.525 (0.0600)
38336AA130	1.538 (0.0606)
38336AA020	1.550 (0.0610)
38336AA140	1.563 (0.0615)
38336AA030	1.575 (0.0620)
38336AA150	1.588 (0.0625)
38336AA040	1.600 (0.0630)
38336AA160	1.613 (0.0635)
38336AA050	1.625 (0.0640)
38336AA170	1.638 (0.0645)
38336AA060	1.650 (0.0650)
38336AA180	1.663 (0.0655)
38336AA070	1.675 (0.0659)
38336AA190	1.688 (0.0665)
38336AA080	1.700 (0.0669)
38336AA200	1.713 (0.0674)
38336AA090	1.725 (0.0679)
38336AA210	1.738 (0.0684)
38336AA100	1.750 (0.0689)
38336AA220	1.763 (0.0694)
38336AA110	1.775 (0.0699)

Preload adjusting spacer	
Part No.	Length mm (in)
32288AA040	52.3 (2.059)
32288AA050	52.5 (2.067)
31454AA100	52.6 (2.071)
32288AA060	52.7 (2.075)
31454AA110	52.8 (2.079)
32288AA070	52.9 (2.083)
31454AA120	53.0 (2.087)
32288AA080	53.1 (2.091)
32288AA090	53.3 (2.098)

2) Adjusting drive pinion height:
Adjust the drive pinion height with pinion height adjusting washer installed between the rear bearing cone and the back of pinion gear.
(1) Attach the ST2.

NOTE:
At this time, install a provisionally selected or previously used pinion height adjusting washer.
ST1 498447150 DUMMY SHAFT
ST2 498505501 DIFFERENTIAL CARRIER GAUGE
Part No. 32285AA000 Spacer

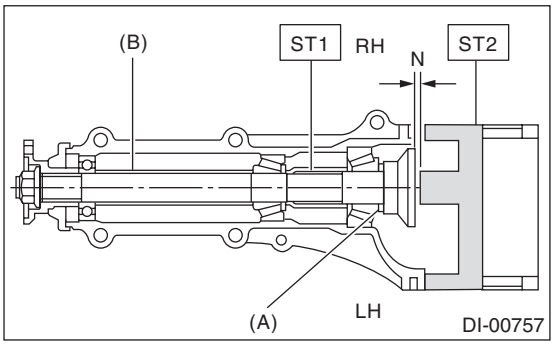

(A) Pinion height adjusting washer
(B) Spacer (SUBARU genuine parts)

(2) Measure the clearance “N” between the end of ST2 and the end surface of ST1 by using a thickness gauge.

NOTE:
Make sure there is no clearance between the differential carrier and ST2.
ST1 498447150 DUMMY SHAFT
ST2 498505501 DIFFERENTIAL CARRIER GAUGE

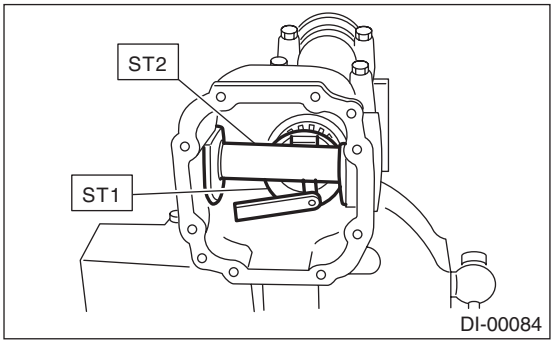

(3) Obtain the thickness of pinion height adjusting washer to be inserted from the following formula, and replace the temporarily installed washer with this one.

NOTE:
Adjust it using the 1 — 3 washers.

T = To + N – 0.05 mm (0.0020 in)

T	Thickness of pinion height adjusting washer mm (in)	
To	Thickness of washer temporarily inserted mm (in)	
N	Clearance of thickness gauge mm (in)	
Memo:		

(Example of calculation)
To = 0.15 mm (0.0059 in)
N = 0.1 mm (0.0039 in)
T = 0.15 + 0.1 – 0.05 = 0.2 mm (0.0079 in)
Result: Thickness = 0.2 mm (0.0079 in)
Therefore use part number 32295AA220.

Pinion height adjusting washer	
Part No.	Thickness mm (in)
32295AA200	0.150 (0.0059)
32295AA210	0.175 (0.0069)
32295AA220	0.200 (0.0079)
32295AA230	0.225 (0.0089)
32295AA240	0.250 (0.0098)
32295AA250	0.275 (0.0108)

3) Install the selected pinion height adjusting washer on drive pinion, and press the rear bearing cone into position with ST.
ST 498175500 INSTALLER

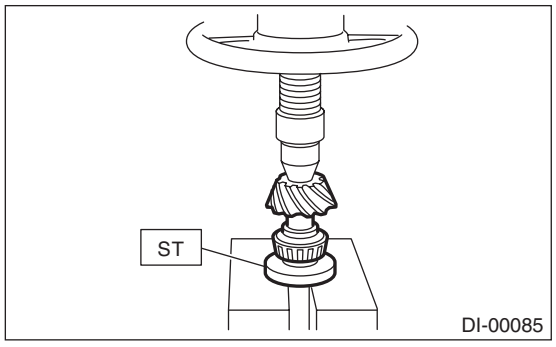

4) Insert the drive pinion into the differential carrier, and install the preselected preload adjusting spacer and washer.

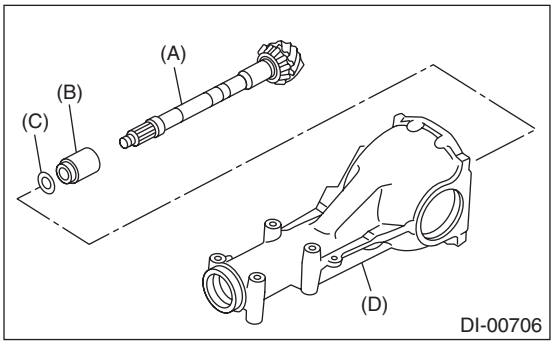

(A) Drive pinion
(B) Preload adjusting spacer
(C) Preload adjusting washer
(D) Differential carrier

5) Press-fit the front bearing cone into the carrier with ST1, ST2 and the spacer.
ST1 399780104 WEIGHT
ST2 899580100 INSTALLER
Part No. 32285AA000 Spacer

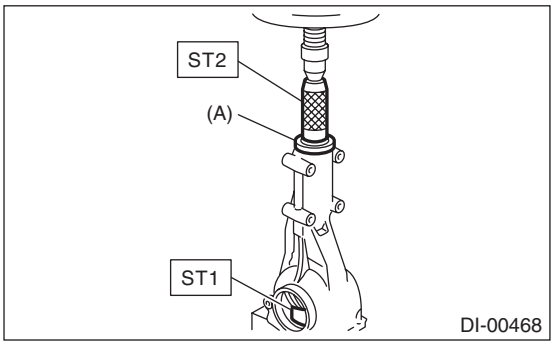

(A) Spacer (SUBARU genuine parts)

6) Insert the spacer, then press-fit the pilot bearing with ST1 and ST2.
ST1 399780104 WEIGHT
ST2 899580100 INSTALLER

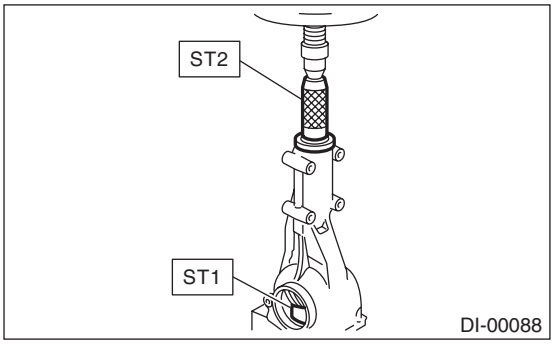

7) Using the ST, install the oil seal.

NOTE:
- Use a new oil seal.
- Press-fit until the oil seal end comes 1 mm (0.04 in) inward from end of carrier.
- Apply differential gear oil to the oil seal lips.

ST 498447120 INSTALLER

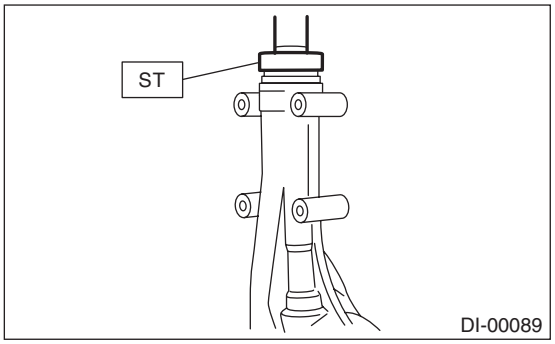

8) Press-fit the companion flange with ST1 and ST2.

NOTE:
Be careful not to damage the pilot bearing.

ST1 899874100 INSTALLER
ST2 399780104 WEIGHT

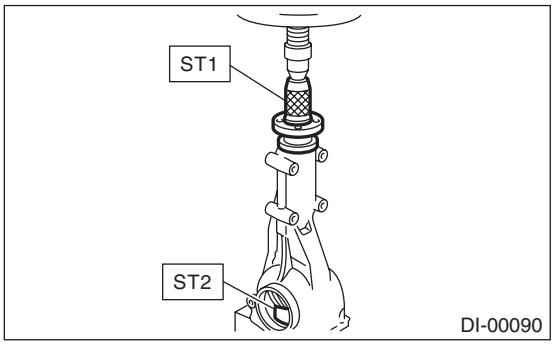

9) Attach the self-locking nut and use the ST to fix the companion flange in place, then tighten the self-locking nut.

NOTE:
- Use a new self-locking nut.
- Before installing the self-locking nut, apply the seal material to the threads of the drive pinion shaft and to the seating surface of the self-locking nut.

Seal material:
THREE BOND 1324 (Part No. 004403042) or equivalent

Tightening torque:
191 N·m (19.5 kgf-m, 140.9 ft-lb)

ST 498427200 FLANGE WRENCH

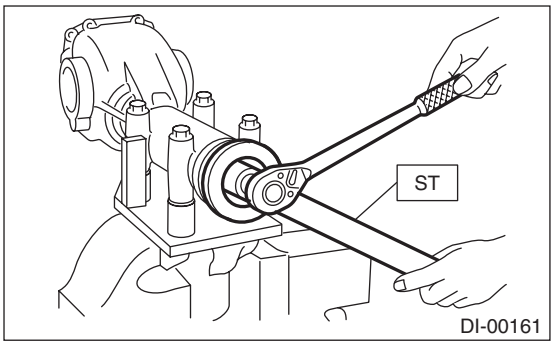

10) Check the initial torque or initial load.

Initial load:
12.7 — 32.2 N (1.3 — 3.3 kgf, 2.9 — 7.2 lbf)

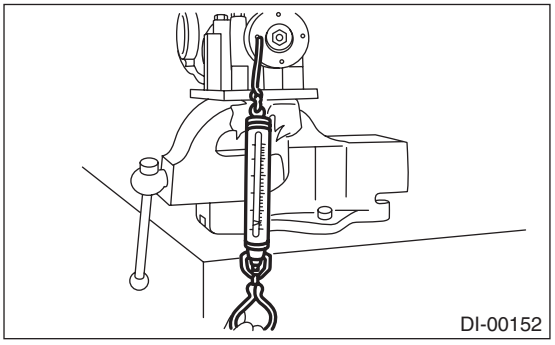

Initial torque:
0.48 — 1.22 N·m (0.05 — 0.12 kgf-m, 0.35 — 0.90 ft-lb)

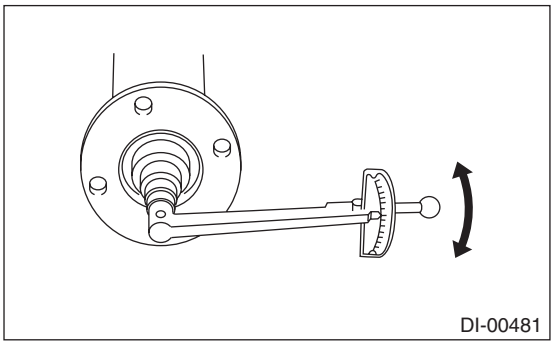

11) Assembling differential case
(1) Install the side gears and pinion mate gears, with their thrust washers and pinion mate shaft, into the differential case.

NOTE:
• Apply gear oil on both sides of the washer and on the side gear shaft before installing.
• Insert the pinion mate shaft into the differential case by aligning the pin holes.
• The thrust washer inner surface has a chamfered side. Install the washer with the chamfered side facing toward the side gear.

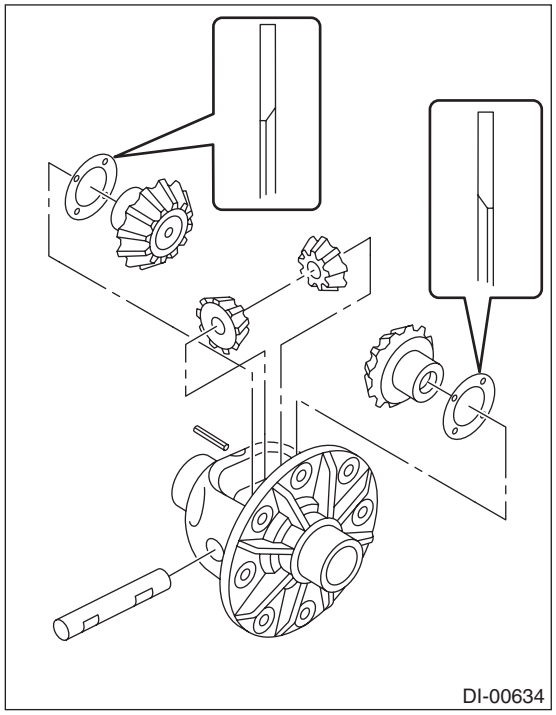
DI-00634

(2) Measure the side gear backlash.

Side gear backlash:
0.05 — 0.15 mm (0.002 — 0.006 in)

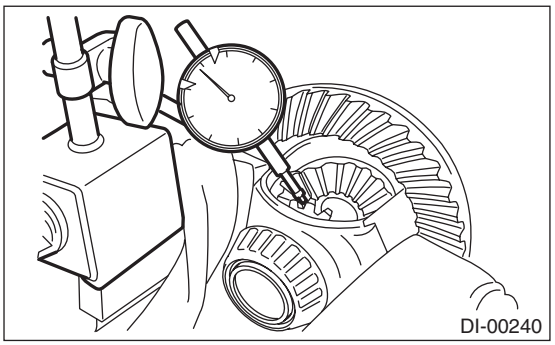
DI-00240

(3) Adjust the side gear backlash by selecting side gear thrust washer.

Side gear thrust washer	
Part No.	Thickness mm (in)
803135011	0.925 — 0.950 (0.0364 — 0.0374)
803135012	0.950 — 0.975 (0.0374 — 0.0384)
803135013	0.975 — 1.000 (0.0384 — 0.0394)
803135014	1.000 — 1.025 (0.0394 — 0.0404)
803135015	1.025 — 1.050 (0.0404 — 0.0413)

(4) Check the condition of rotation after applying oil to the gear tooth surfaces and thrust washer surfaces.
(5) Drive the spring pin into the differential case.

NOTE:
Use new spring pin.

12) Install the hypoid driven gear to differential case.

NOTE:
• Before installing bolts, apply seal material to bolt threads.

Seal material:
THREE BOND 1324 (Part No. 004403042) or equivalent

• Tighten opposing bolts in order.
(1) Tighten the hypoid driven gear mounting bolts to the specified torque using the ST.

ST 18270KA020 SOCKET (E20)

Tightening torque:
20 N·m (2.0 kgf-m, 14.8 ft-lb)

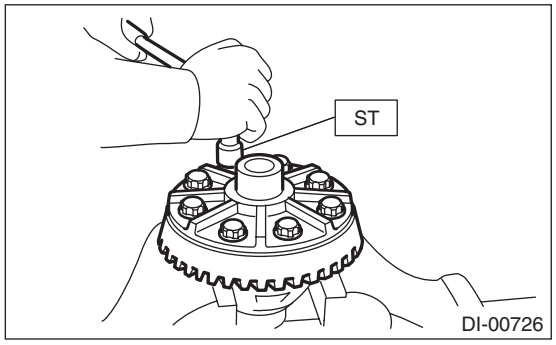

(2) While checking the tightening angle with the ST, further tighten the hypoid driven gear mounting bolts.

Tightening angle:
35°±2°

ST 18554AA000 ANGLE GAUGE

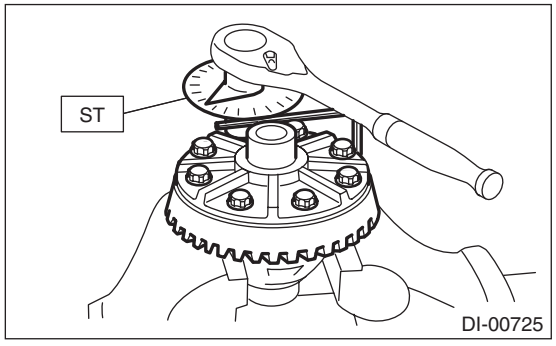

13) Using the ST, press-fit the side bearing to the differential case.

ST 498485400 DRIFT

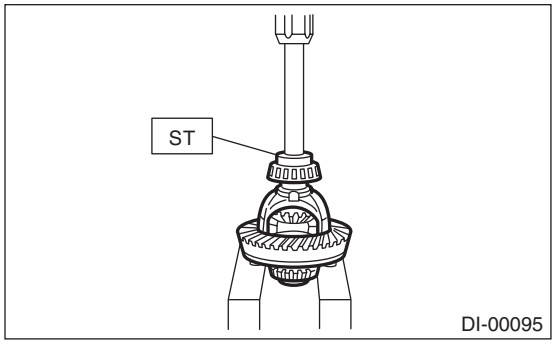

14) Assemble the side retainer.
(1) Install the oil seal into side retainer RH and LH.

CAUTION:
Pay attention to the left and right of the oil seal.

NOTE:
Use a new oil seal.

ST 498447100 INSTALLER

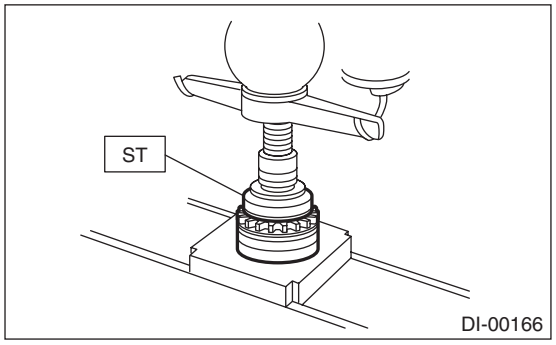

(2) Install the bearing race into side retainer RH and LH.

CAUTION:
Make sure that the bearing outer races and cones are properly assembled.

ST 398477702 DRIFT

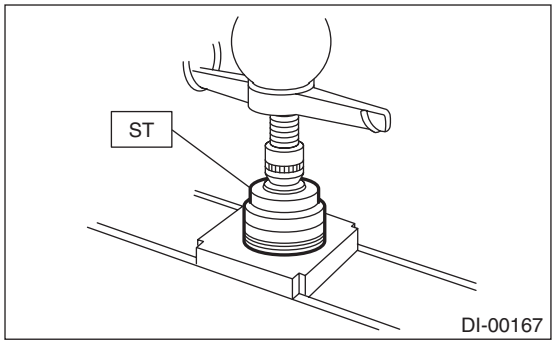

(3) Install the differential case assembly into differential carrier in the reverse order of disassembly.

NOTE:
Be careful not to hit the teeth of hypoid driven gear against the differential carrier.

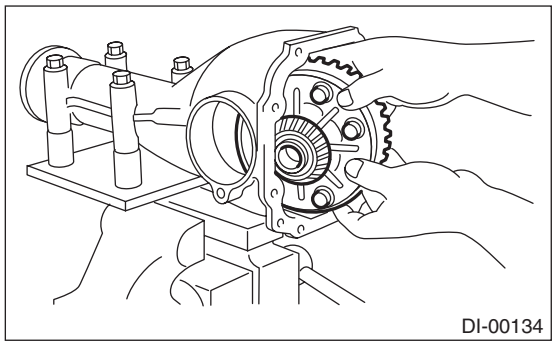
DI-00134

(4) Temporally tighten the side retainers RH and LH in differential carrier to install.

15) Perform the backlash adjustment between the hypoid driven gear and drive pinion, and preload adjustment of differential side bearing.

(1) Turn the drive pinion with ST for better fitting of differential side bearing.

ST 498427200 FLANGE WRENCH

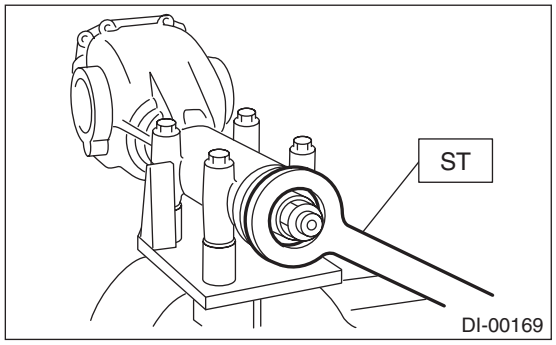

DI-00169

(2) Using the ST, tighten side retainer RH, and then tighten side retainer LH until there is no backlash.

ST 18630AA010 WRENCH COMPL RETAINER

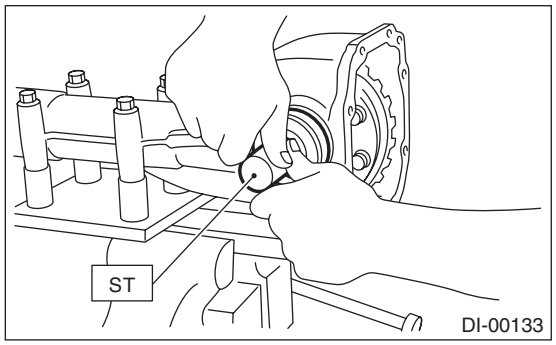

DI-00133

(3) Loosen the side retainer LH by approx. 1 and 1/2 teeth, and tighten the side retainer RH by approx. 2 teeth [amount that the side retainer LH is turned back (1 and 1/2) + approx. 0.5 teeth]. Difference between [amount that the side retainer LH is turned back (approx. 1 and 1/2 teeth)] and [amount that the side retainer RH is tightened (approx. 2 teeth)] gives preload.

(4) Temporarily tighten the lock plate.

NOTE:
Turn over the lock plate to shift the holder by 1/2 tooth.

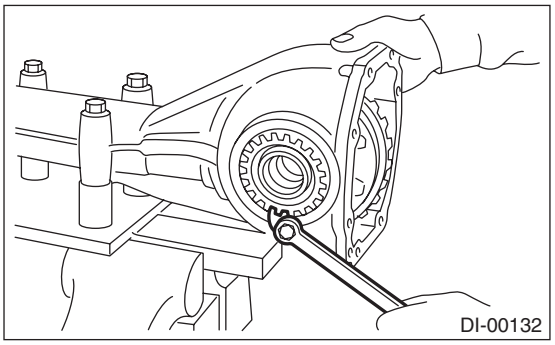
DI-00132

(5) Measure the hypoid driven gear-to-drive pinion backlash. Set the magnet base on differential carrier. Align the contact point of dial gauge with tooth face of hypoid driven gear, and move hypoid driven gear while holding drive pinion still. Read the value indicated on dial gauge.

NOTE:
If measured value of backlash is not within the specified range, repeat the procedures for pinion driven gear set backlash adjustment and the differential side bearing preload adjustment.

Backlash:
0.10 — 0.15 mm (0.004 — 0.006 in)

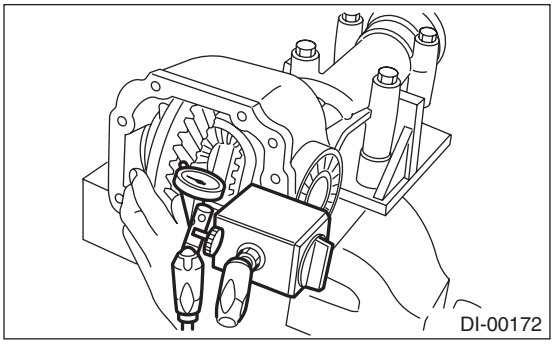
DI-00172

16) Put alignment marks on both the differential carrier and side retainer. Remove the side retainers one side at a time. After installing an O-ring and applying oil to the threaded portion, restore them to the original position.

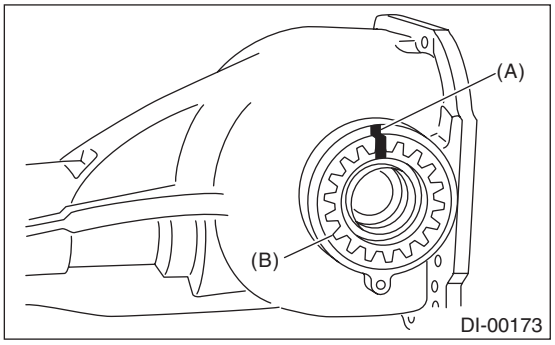

(A) Alignment mark
(B) Side retainer

17) Install the lock plate, and tighten the bolts to the specified torque.

Tightening torque:
25 N·m (2.5 kgf-m, 18.4 ft-lb)

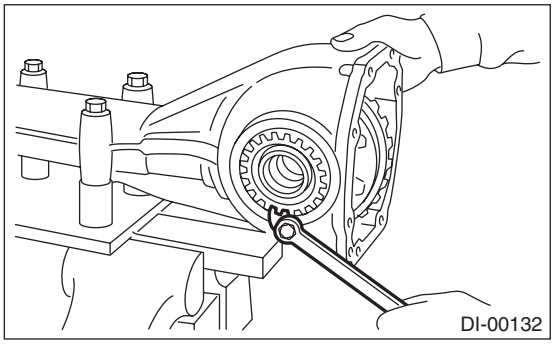

18) Recheck the backlash between hypoid driven gear and drive pinion.

Backlash:
0.10 — 0.15 mm (0.004 — 0.006 in)

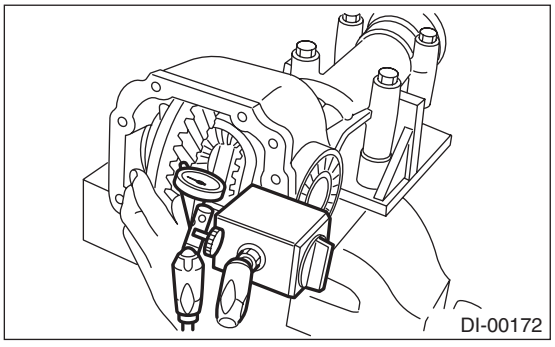

19) Checking and adjusting the tooth contact of hypoid driven gear
(1) Apply lead-free red dye evenly on the both sides of three to four teeth of the hypoid driven gear. Check the contact pattern after rotating the hypoid driven gear several revolutions back and forth until a definite contact pattern appears on the hypoid driven gear.
(2) When the contact pattern is not correct, readjust.

NOTE:
Be sure to wipe off the lead-free red dye completely after the adjustment is completed.

- Correct tooth contact

Check item: Tooth contact pattern is slightly shifted toward toe side under no-load rotation. (When driving, it moves towards the heel side.)

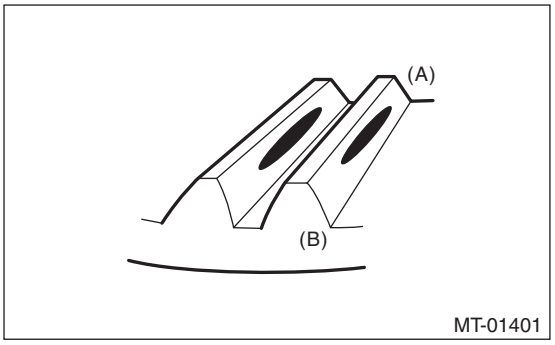

(A) Toe side
(B) Heel side

• Face contact

Check item: Backlash is too large.

Contact pattern

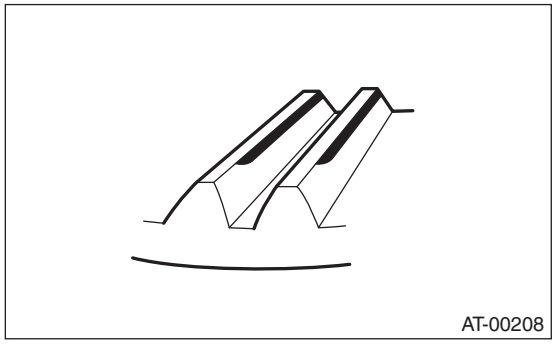

Corrective action: Increase thickness of pinion height adjusting washer according to the procedure for bringing drive pinion close to hypoid driven gear side.

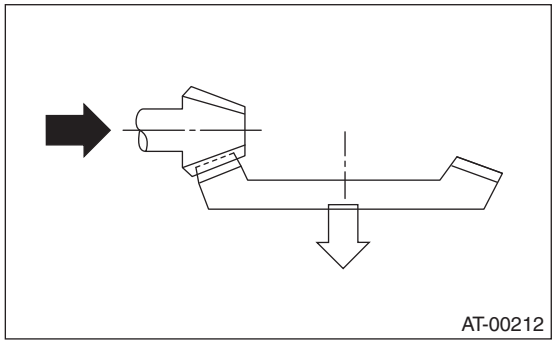

• Flank contact

Check item: Backlash is too small.

Contact pattern

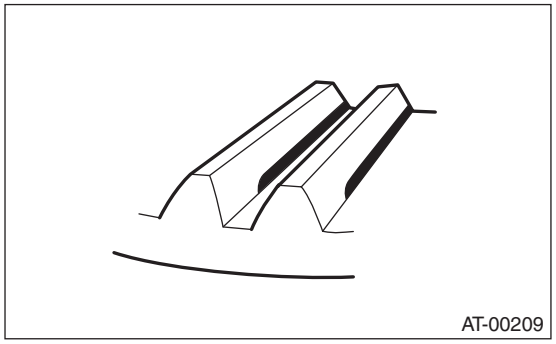

Corrective action: Reduce the thickness of pinion height adjusting washer according to the procedure for bringing drive pinion away from hypoid driven gear.

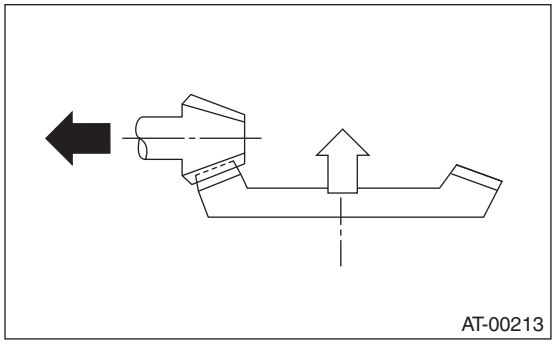

• Toe contact (inside contact)
Check item: Teeth contact area is too small.
Contact pattern

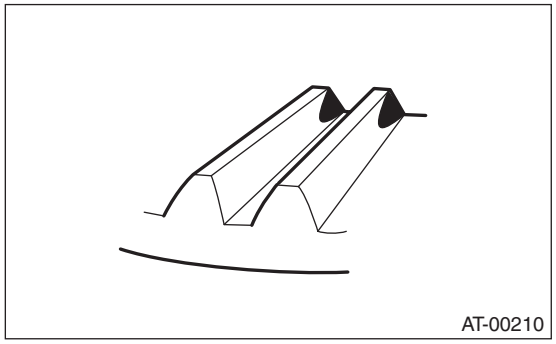

Corrective action: Reduce the thickness of pinion height adjusting washer according to the procedure for bringing drive pinion away from hypoid driven gear side.

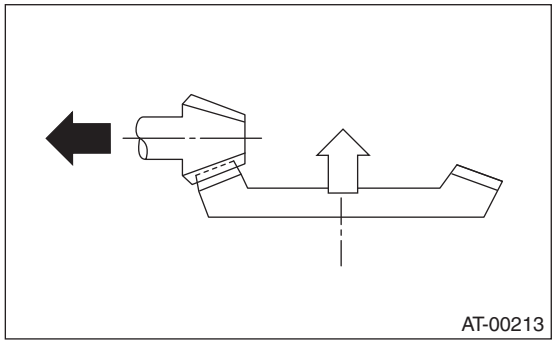

• Heel contact (outside end contact)
Check item: Teeth contact area is too small.
Contact pattern

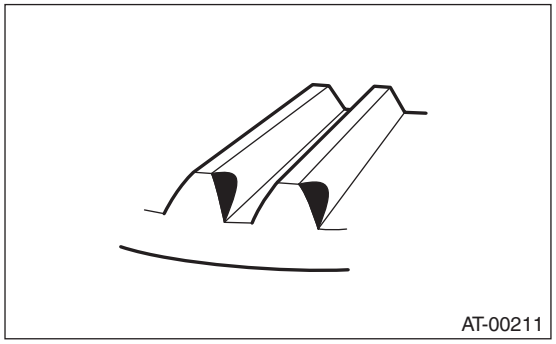

Corrective action: Increase thickness of pinion height adjusting washer according to the procedure for bringing drive pinion close to hypoid driven gear side.

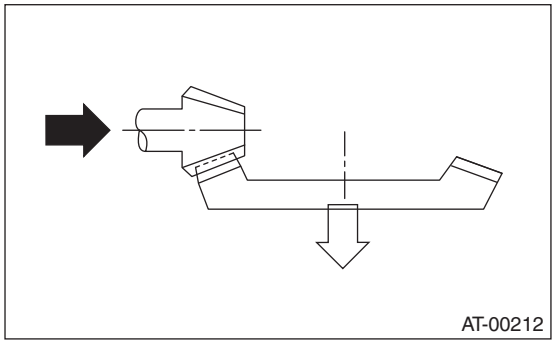

20) If correct tooth contact is not obtained, readjust the drive pinion height and the differential side bearing preload (already mentioned) and the hypoid gear backlash.
21) Install the gasket and rear cover to the differential carrier, and tighten the bolts to specified torque.

NOTE:
Use a new gasket.

Tightening torque:
25 N·m (2.5 kgf-m, 18.4 ft-lb)

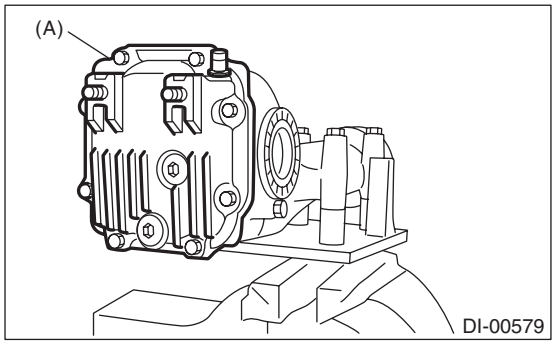

(A) Rear cover

22) Install the air breather cap.

NOTE:
When installing the air breather cap, do not tap section (A). Be sure to tap section (B) to install.

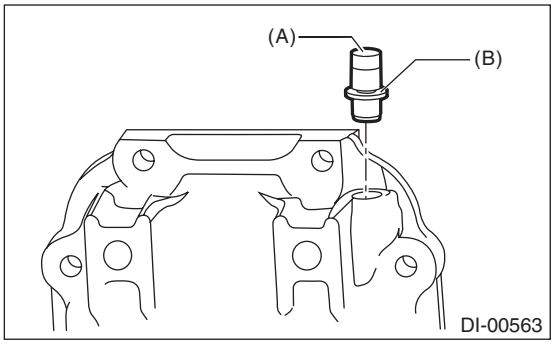

23) Install the drain plug.

NOTE:
Use a new gasket.

Tightening torque:
50 N·m (5.1 kg-m, 36.9 ft-lb)

24) Install the filler plug.

NOTE:
After installing the rear differential assembly to the vehicle, fill the gear oil, then use a new gasket, and tighten to the specified torque. <Ref. to DI-23, REPLACEMENT, Differential Gear Oil.>

2. VA2-TYPE

NOTE:
- Assemble in the reverse order of disassembly.
- Check and adjust each part during assembly.
- Use new gaskets and O-rings.
- Keep the shims and washers in order, so that they are not improperly installed.
- Thoroughly clean the surfaces on which the shims, washers and bearings are to be installed.
- Apply gear oil when installing the bearings and thrust washers.
- Attach tags not to mix up the RH and LH bearing races.
- Replace the oil seal and O-ring with a new part at every disassembly.
- Apply differential gear oil to the lips when installing the oil seal.

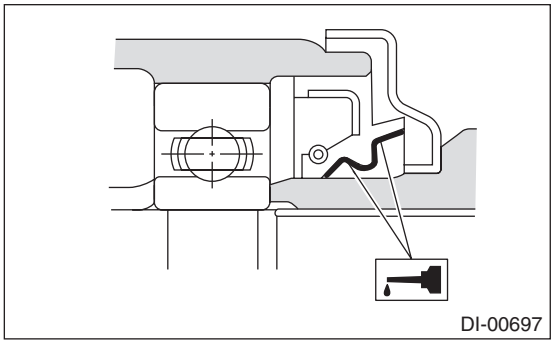

1) Adjusting preload for front and rear bearings

NOTE:
Adjust the bearing preload between front and rear bearings with preload adjusting spacer and washer. Pinion height adjusting washer is not affected by this adjustment. The adjustment must not be carried out with oil seal inserted.

(1) Install the rear bearing race into the differential carrier using ST1 and ST2.

ST1 398477701 HANDLE
ST2 398477703 DRIFT 2

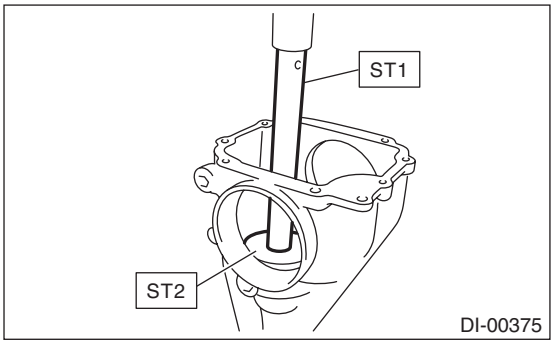

(2) Using the ST, press-fit the front bearing race to the differential carrier.

ST 499277200 INSTALLER

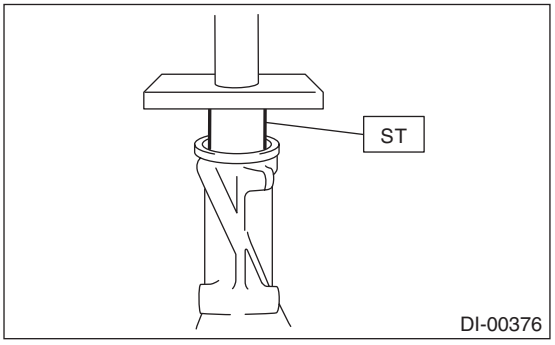

(3) Insert the front bearing cone.

NOTE:
Use new front bearing cone.

(4) Measure and record the thickness of the pinion height adjusting washer.

NOTE:
If tooth contact (drive pinion and hypoid driven gear) is normal in the inspection before disassembling, verify that the washer is not deformed, and then reuse the used washer.

(5) Insert the ST1 into carrier with the pinion height adjusting washer and rear bearing cone fitted onto it.

NOTE:
Use new rear bearing cone.

(6) Install the preload adjusting spacer, washer, front bearing cone, spacer, pilot bearing, companion flange, and self-locking nut.

ST1 18678AA000 DUMMY SHAFT

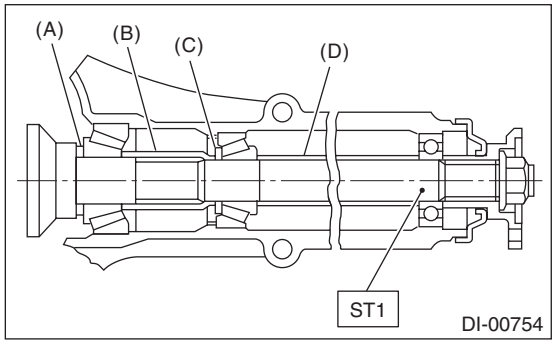

(A) Pinion height adjusting washer
(B) Preload adjusting spacer
(C) Preload adjusting washer
(D) Spacer

(7) Turn the ST1 by hand to smooth the bearing, and tighten the self-locking nut while measuring the initial load or initial torque with a spring scale or torque wrench. Select the preload adjusting washer and spacer so that the specified preload is obtained when nut is tightened to the specified torque.

NOTE:
- Use a new self-locking nut.
- Measure the preload in direction of tangent to the flange.
- Be careful not to give excessive preload.
- When tightening the self-locking nut, lock companion flange with ST2 as shown in the figure.

ST1 18678AA000 DUMMY SHAFT
ST2 498427200 FLANGE WRENCH

Tightening torque:
191 N·m (19.5 kgf-m, 140.9 ft-lb)

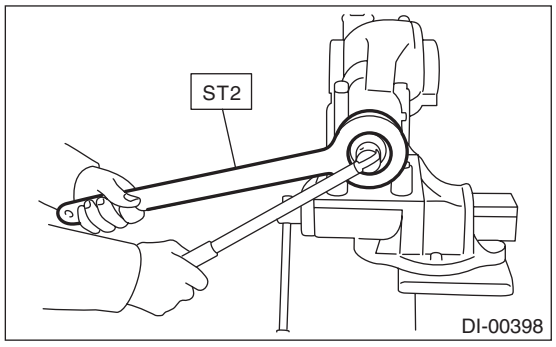

Initial load:
12.7 — 32.2 N (1.3 — 3.3 kgf, 2.9 — 7.2 lbf)

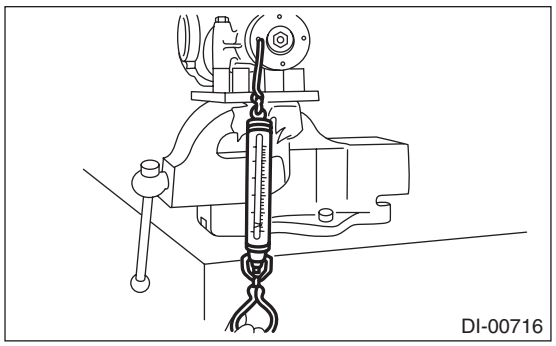

Initial torque:
0.48 — 1.22 N·m (0.05 — 0.12 kgf-m, 0.35 — 0.90 ft-lb)

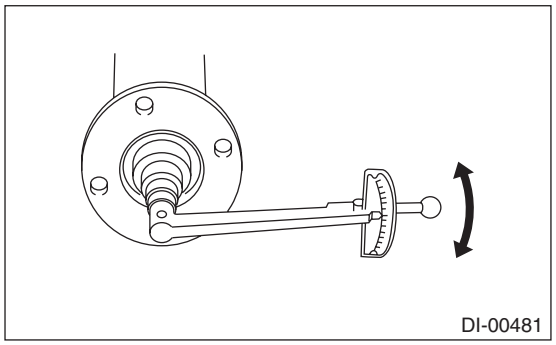

Preload adjusting washer	
Part No.	Thickness mm (in)
38336AA430	1.500 (0.0591)
38336AA440	1.513 (0.0596)
38336AA450	1.525 (0.0600)
38336AA460	1.538 (0.0606)
38336AA470	1.550 (0.0610)
38336AA480	1.563 (0.0615)
38336AA490	1.575 (0.0620)
38336AA500	1.588 (0.0625)
38336AA510	1.600 (0.0630)
38336AA520	1.613 (0.0635)
38336AA530	1.625 (0.0640)
38336AA540	1.638 (0.0645)
38336AA550	1.650 (0.0650)
38336AA560	1.663 (0.0655)
38336AA570	1.675 (0.0659)
38336AA580	1.688 (0.0665)
38336AA590	1.700 (0.0669)
38336AA600	1.713 (0.0674)
38336AA610	1.725 (0.0679)
38336AA620	1.738 (0.0684)
38336AA630	1.750 (0.0689)
38336AA640	1.763 (0.0694)
38336AA650	1.775 (0.0699)

Preload adjusting spacer	
Part No.	Length mm (in)
31454AA250	51.05 (2.010)
31454AA260	51.25 (2.018)
31454AA270	51.35 (2.022)
31454AA280	51.45 (2.026)
31454AA290	51.55 (2.030)
31454AA300	51.65 (2.033)
31454AA310	51.75 (2.037)
31454AA320	51.85 (2.041)
31454AA330	52.05 (2.049)

2) Adjusting drive pinion height:
Adjust the drive pinion height with pinion height adjusting washer installed between the rear bearing cone and the back of pinion gear.
(1) Attach the ST2.

NOTE:
At this time, install a provisionally selected or previously used pinion height adjusting washer.
ST1 18678AA000 DUMMY SHAFT
ST2 18831AA010 DIFFERENTIAL CARRIER GAUGE

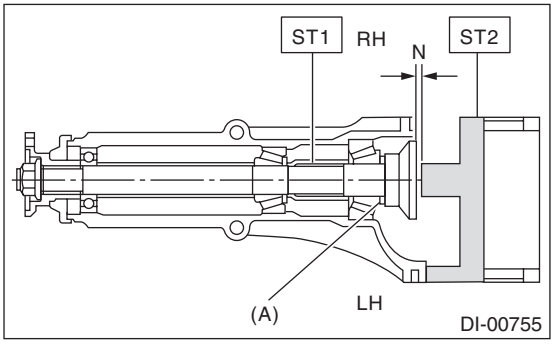

(A) Pinion height adjusting washer

(2) Install the side retainer LH to the left side of the differential carrier in reverse direction.

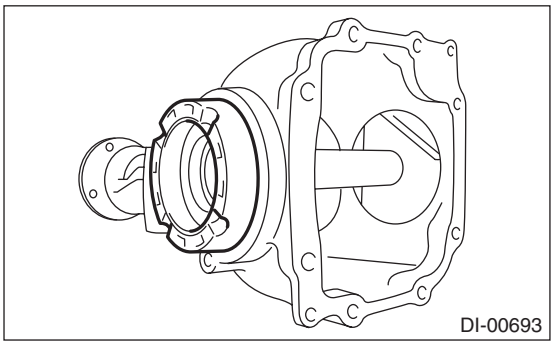

(3) Measure the clearance “N” between the end of ST2 and the end surface of ST1 by using a thickness gauge.

NOTE:
Make sure there is no clearance between the differential carrier and ST2.
ST1 18678AA000 DUMMY SHAFT
ST2 18831AA010 DIFFERENTIAL CARRIER GAUGE

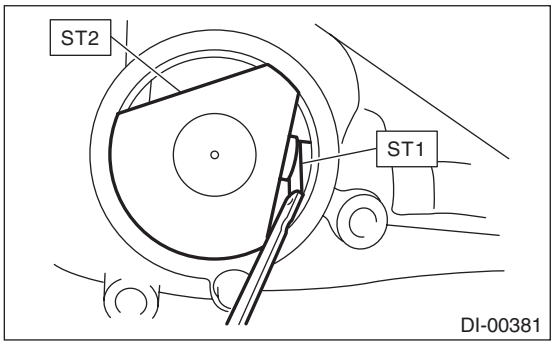

(4) Obtain the thickness of pinion height adjusting washer to be inserted from the following formula, and replace the temporarily installed washer with this one.

NOTE:
Adjust it using the 1 — 3 washers.
T = To + N – 0.05 mm (0.0020 in)

T	Thickness of pinion height adjusting washer mm (in)	
To	Thickness of washer temporarily inserted mm (in)	
N	Clearance of thickness gauge mm (in)	
Memo:		

(Example of calculation)
To = 0.15 mm (0.0059 in)
N = 0.1 mm (0.0039 in)
T = 0.15 mm (0.0059 in) + 0.1 mm (0.0039 in) – 0.05 mm (0.0020 in) = 0.2 mm (0.0079 in)
Result: Thickness = 0.2 mm (0.0079 in)
Therefore use part number 32295AA370.

Pinion height adjusting washer	
Part No.	Thickness mm (in)
32295AA350	0.150 (0.0059)
32295AA360	0.175 (0.0069)
32295AA370	0.200 (0.0079)
32295AA380	0.225 (0.0089)
32295AA390	0.250 (0.0098)
32295AA400	0.275 (0.0108)

3) Install the selected pinion height adjusting washer on drive pinion, and press the rear bearing cone into position with ST.
ST 398177700 INSTALLER

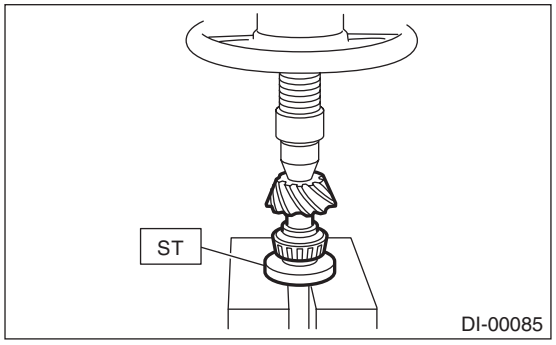

4) Insert the drive pinion into the differential carrier, and install the preselected preload adjusting spacer and washer.

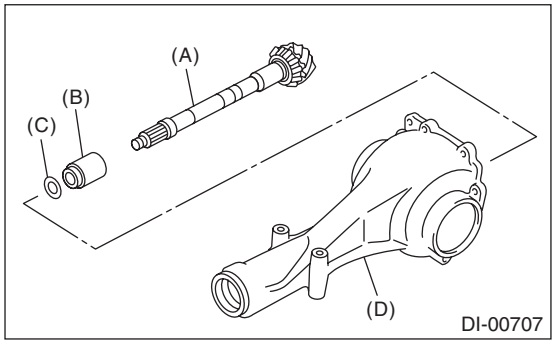

(A) Drive pinion
(B) Preload adjusting spacer
(C) Preload adjusting washer
(D) Differential carrier

5) Set ST and differential carrier to the press and install the front bearing cone.
ST 399780104 WEIGHT

NOTE:
Set the carrier to the press until the companion flange is installed.

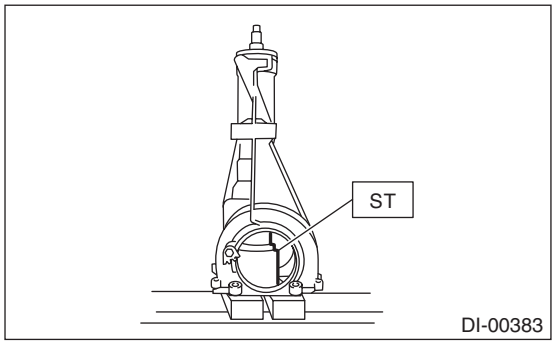

6) Insert the spacer, then install the pilot bearing.

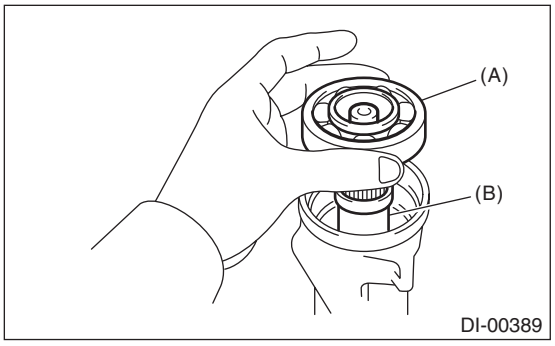

(A) Pilot bearing
(B) Spacer

7) Using the ST, install the oil seal.

NOTE:
- Use a new oil seal.
- Press-fit until the oil seal end comes 1 mm (0.04 in) inward from end of carrier.
- Apply differential gear oil to the oil seal lips.

ST 499277200 INSTALLER

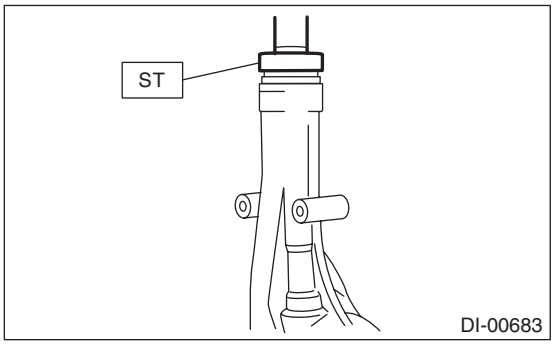

8) Press-fit the companion flange with ST.

NOTE:
Be careful not to damage the bearing.

ST 899874100 INSTALLER

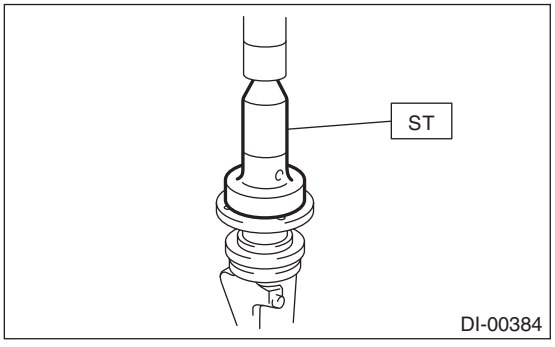

9) Apply seal material on the drive pinion shaft thread and new self-locking nut seat.

Seal material:
THREE BOND 1324 (Part No. 004403042) or equivalent

10) Install the self-locking nut while holding the companion flange with ST.

Tightening torque:
191 N·m (19.5 kgf-m, 140.9 ft-lb)
ST 498427200 FLANGE WRENCH

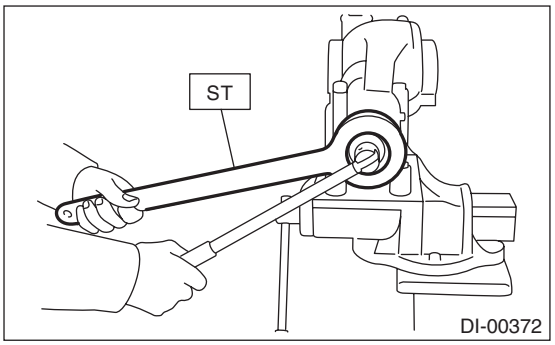

11) Check the initial torque or initial load.

Initial load:
12.7 — 32.2 N (1.3 — 3.3 kgf, 2.9 — 7.2 lbf)

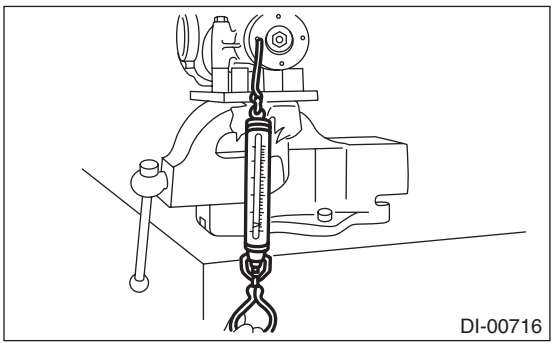

Initial torque:
0.48 — 1.22 N·m (0.05 — 0.12 kgf-m, 0.35 — 0.90 ft-lb)

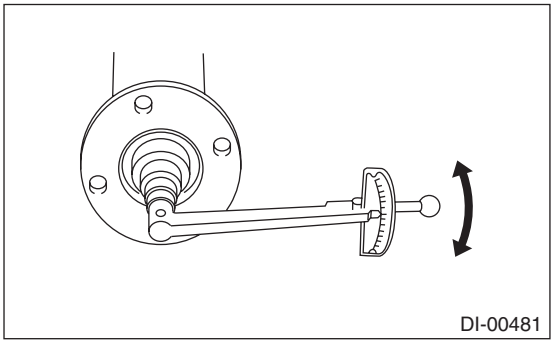

12) Assembling differential case
(1) Attach the circlip to the side gear.

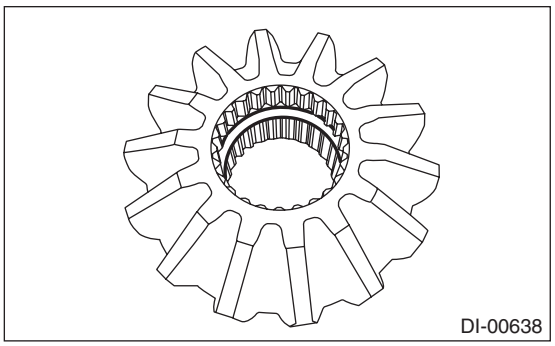

(2) Install the side gears and pinion mate gears, with their thrust washers and pinion mate shaft, into the differential case.

NOTE:
• Apply gear oil on both sides of the washer and on the side gear shaft before installing.
• Insert the pinion mate shaft into the differential case by aligning the pin holes.

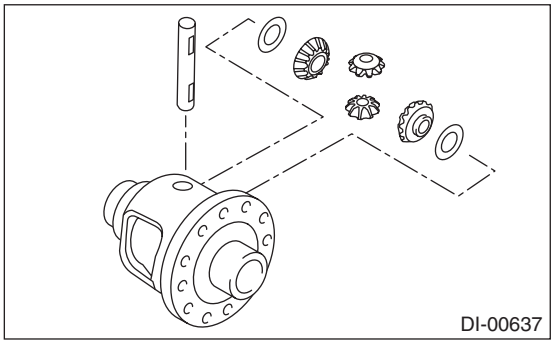

(3) Measure the side gear backlash.

Side gear backlash:
0.13 — 0.18 mm (0.005 — 0.007 in)

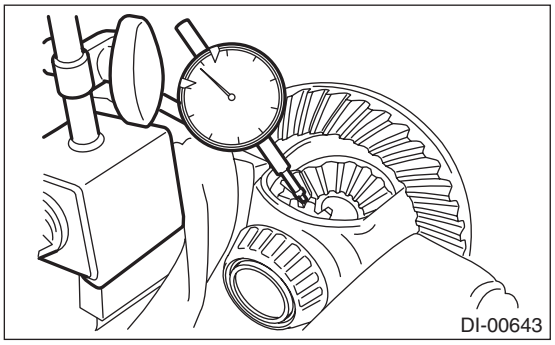

(4) Adjust the side gear backlash as specified by selecting side gear thrust washer.

Side gear thrust washer	
Part No.	Thickness mm (in)
803038021	0.950 (0.0374)
803038022	1.000 (0.0394)
803038023	1.050 (0.0413)

(5) Check the condition of rotation after applying oil to the gear tooth surfaces and thrust washer surfaces.
(6) Attach the spring pin to the differential case.

NOTE:
Use new spring pin.
13) Install the hypoid driven gear to differential case.

NOTE:
• Set a cushioning such as wooden block, aluminum plate or shop cloth between vise and differential case if the side gear comes into contact with vise.
• Before installing bolts, apply seal material to bolt threads.

Seal material:
THREE BOND 1324 (Part No. 004403042) or equivalent
• Tighten opposing bolts in order.
(1) Tighten the hypoid driven gear mounting bolts to the specified torque using the ST.
ST 18270KA020 SOCKET (E20)

Tightening torque:
20 N·m (2.0 kgf-m, 14.8 ft-lb)

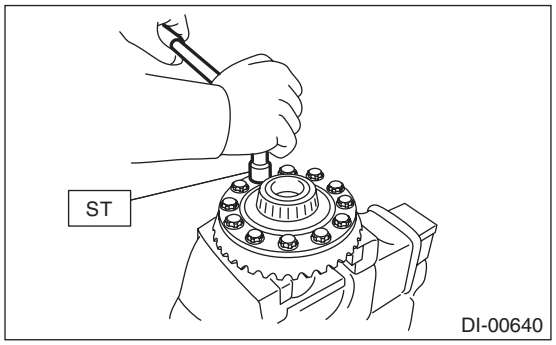

(2) While checking the tightening angle with the ST, further tighten the hypoid driven gear mounting bolts.

Tightening angle:
33°±2°
ST 18554AA000 ANGLE GAUGE

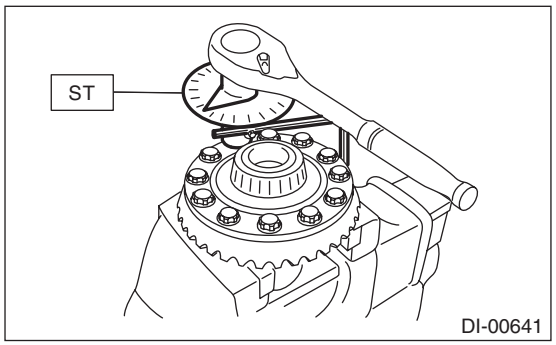

14) Using the ST, press-fit the side bearing to the differential case.
ST 398487700 DRIFT

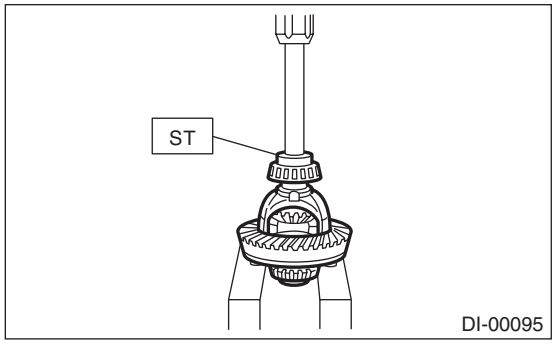

15) Assemble the side retainer.
(1) Install the oil seal into side retainer RH and LH.

NOTE:
Use a new oil seal.
ST 498447100 INSTALLER

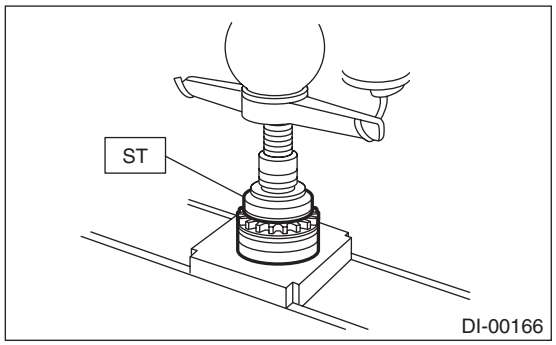

(2) Install the bearing race into side retainer RH and LH.

CAUTION:
Make sure that the bearing outer races and cones are properly assembled.
ST 398417700 DRIFT

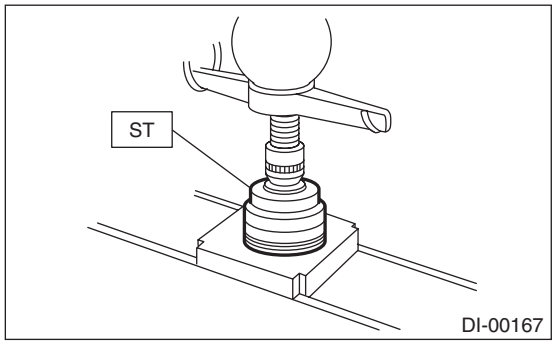

(3) Install the differential case assembly into differential carrier in the reverse order of disassembly.

NOTE:
Be careful not to hit the teeth of hypoid driven gear against the differential carrier.

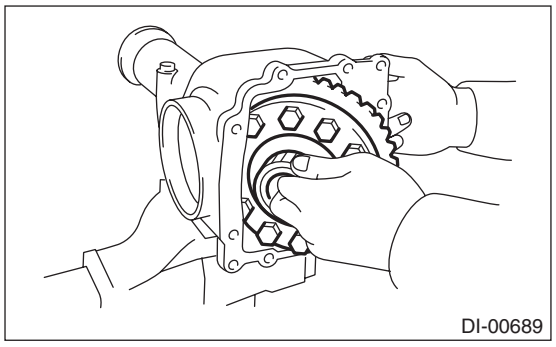

(4) Temporally tighten the side retainers RH and LH in differential carrier to install.

16) Perform the backlash adjustment between the hypoid driven gear and drive pinion, and side bearing preload adjustment.
(1) Turn the drive pinion with ST for better fitting of differential side bearing.
ST 498427200 FLANGE WRENCH

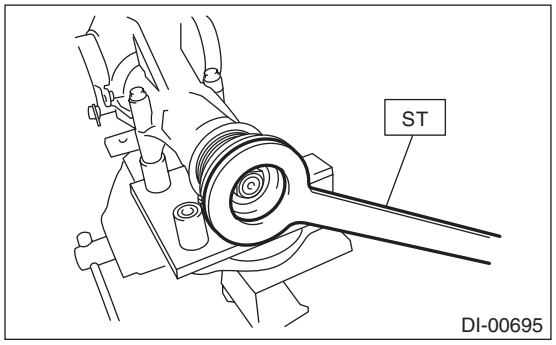

(2) Using the ST, tighten side retainer RH, and then tighten side retainer LH until there is no backlash.
ST 18630AA010 WRENCH COMPL RETAINER

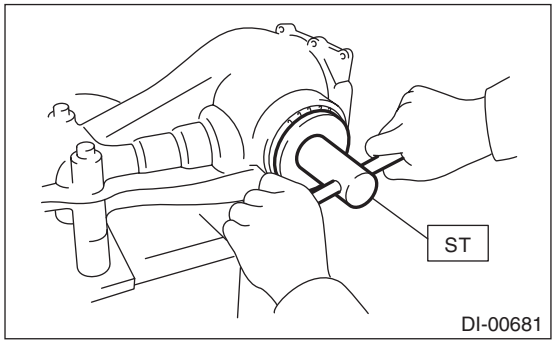

(3) Back off the side retainer LH by approx. 1.5 teeth, and tighten the side retainer RH by approx. 2 teeth [amount that the side retainer LH is turned back (1.5) + 1/2 teeth].

NOTE:
Difference between [amount that the side retainer LH is turned back (approx. 1 and 1/2 teeth)] and [amount that the side retainer RH is tightened (approx. 2 teeth)] gives preload.

(4) Temporarily attach the lock plate.

NOTE:
Turn over the lock plate to shift the holder by 1/2 teeth.

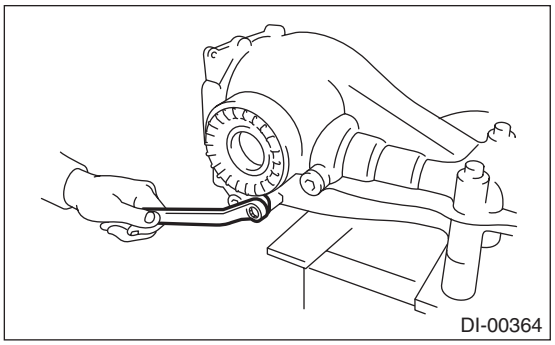
DI-00364

(5) Measure the hypoid driven gear-to-drive pinion backlash. Set the magnet base on differential carrier. Align the contact point of dial gauge with tooth face of hypoid driven gear, and move hypoid driven gear while holding drive pinion still. Read the value indicated on dial gauge.

NOTE:
If measured value of backlash is not within the specified range, repeat the procedures for the backlash adjustment between hypoid driven gear and drive pinion, and the differential side bearing preload adjustment.

Backlash:
0.10 — 0.15 mm (0.004 — 0.006 in)

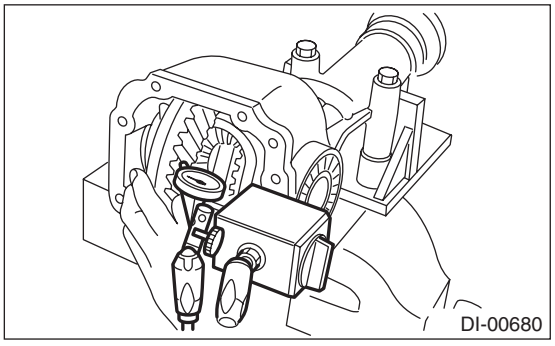
DI-00680

17) Put alignment marks on both the differential carrier and side retainer. Remove the side retainers one side at a time. After installing an O-ring and applying differential gear oil to the threaded portion, restore them to the original position.

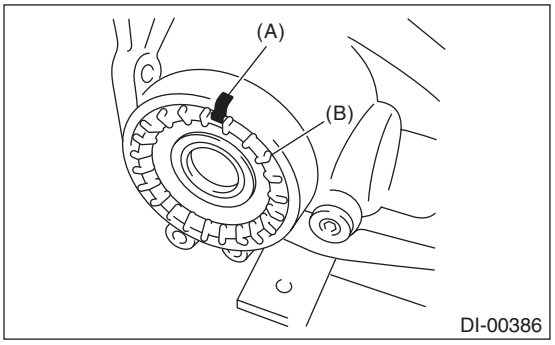

DI-00386

(A) Alignment mark
(B) Side retainer

18) Tighten the bolt of lock plate to specified torque.

Tightening torque:
25 N·m (2.5 kgf-m, 18.4 ft-lb)

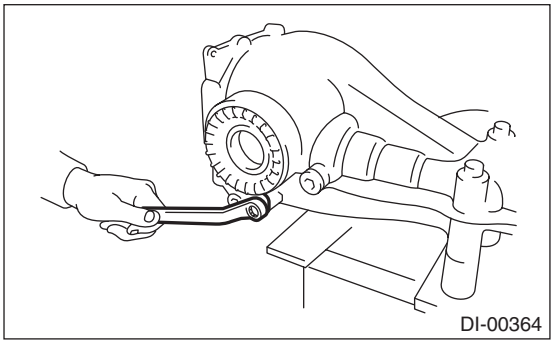
DI-00364

19) Recheck the hypoid driven gear to pinion backlash.

Backlash:
0.10 — 0.15 mm (0.004 — 0.006 in)

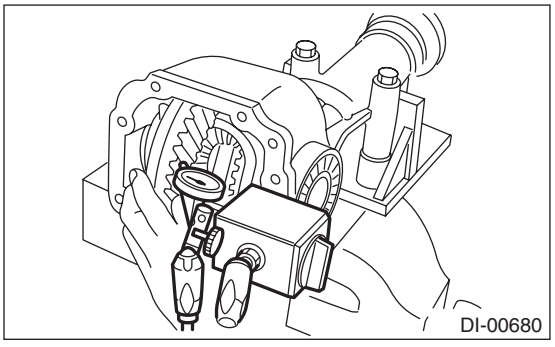
DI-00680

20) Checking and adjusting the tooth contact of hypoid driven gear

(1) Apply lead-free red dye evenly on the both sides of three to four teeth of the hypoid driven gear. Check the contact pattern after rotating the hypoid driven gear several revolutions back and forth until a definite contact pattern appears on the hypoid driven gear.

(2) When the contact pattern is not correct, readjust.

NOTE:
Be sure to wipe off the lead-free red dye completely after the adjustment is completed.

- Correct tooth contact

Check item: Tooth contact pattern is slightly shifted toward toe side under no-load rotation. (When driving, it moves towards the heel side.)

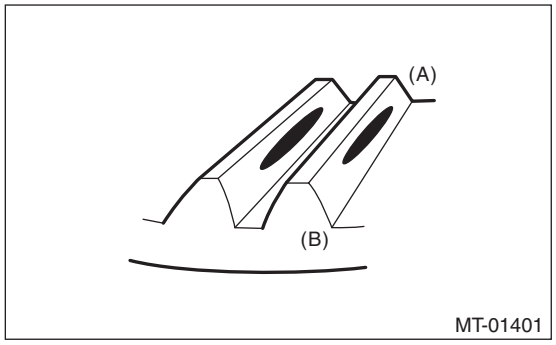

(A) Toe side
(B) Heel side

- Face contact

Check item: Backlash is too large.
Contact pattern

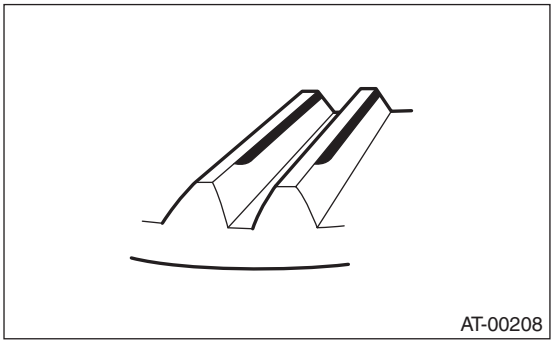

Corrective action: Increase thickness of pinion height adjusting washer according to the procedure for bringing drive pinion close to hypoid driven gear side.

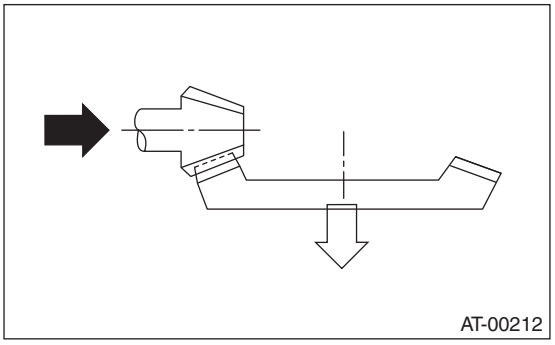

- Flank contact

Check item: Backlash is too small.

Contact pattern

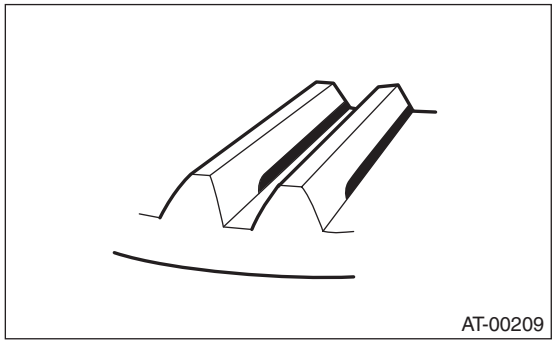

Corrective action: Reduce the thickness of pinion height adjusting washer according to the procedure for bringing drive pinion away from hypoid driven gear.

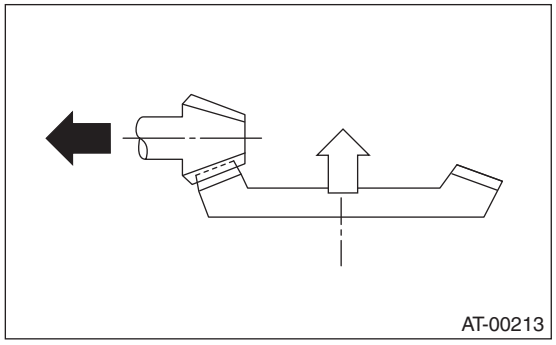

- Toe contact (inside contact)

Check item: Teeth contact area is too small.

Contact pattern

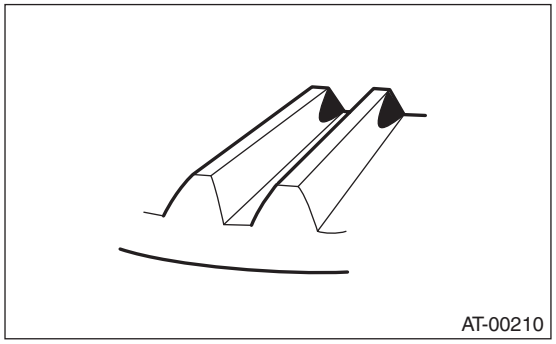

Corrective action: Reduce the thickness of pinion height adjusting washer according to the procedure for bringing drive pinion away from hypoid driven gear.

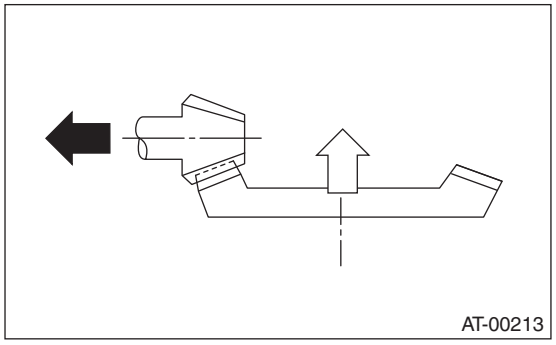

• Heel contact (outside end contact)
Check item: Teeth contact area is too small.
Contact pattern

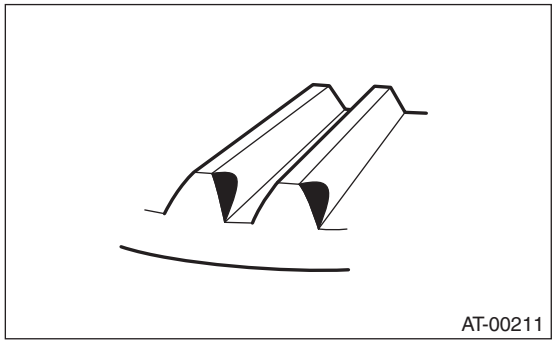

Corrective action: Increase thickness of pinion height adjusting washer according to the procedure for bringing drive pinion close to hypoid driven gear side.

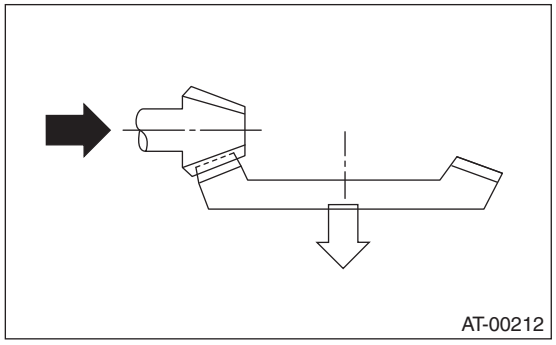

21) If correct tooth contact is not obtained, readjust the drive pinion height and the differential side bearing preload (already mentioned) and the hypoid gear backlash.
22) Install the gasket and rear cover to the differential carrier, and tighten the bolts to specified torque.

NOTE:
Use a new gasket.

Tightening torque:
34 N·m (3.5 kgf-m, 25.1 ft-lb)

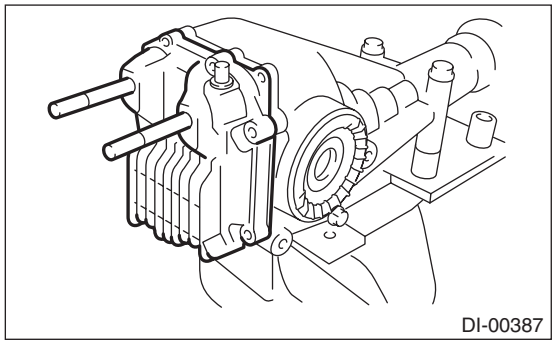

23) Install the air breather cap.

NOTE:
When installing the air breather cap, do not tap section (A). Be sure to tap section (B) to install.

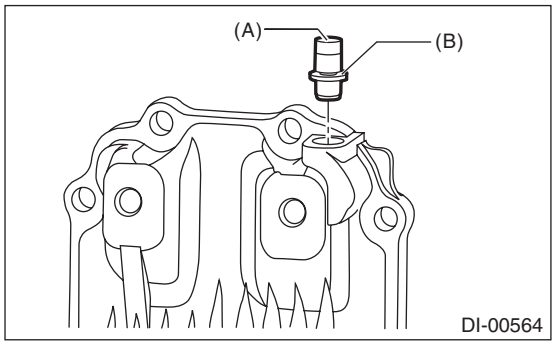

24) Install the drain plug.

NOTE:
Use a new gasket.

Tightening torque:
50 N·m (5.1 kgf-m, 36.9 ft-lb)
25) Install the filler plug.

NOTE:
After installing the rear differential assembly to the vehicle, fill the gear oil, then use a new gasket, and tighten to the specified torque. <Ref. to DI-23, REPLACEMENT, Differential Gear Oil.>

E: INSPECTION

Wash all the disassembled parts clean, and examine them for wear, damage or other defects. Repair or replace the defective parts as necessary.
1) Hypoid driven gear and drive pinion
• If there is evidently an abnormal tooth contact, find out the cause and adjust until the teeth contact correctly. Replace the gear if there is an excessive worn or an incapable adjustment.
• If crack, cutout or seizure is found, replace the parts as a set. Slight damage of some teeth can be corrected by oil stone or the like.
2) Side gear and pinion mate gear
• Replace if cracks, scoring or other defects are evident on the tooth surface.
• Replace if thrust washer contact surface is worn or seized. Slight damages of the surface can be corrected by oil stones or equivalent.
3) Bearing
Replace if seizure, peeling, wear, rust, dragging during rotation, noise or other defect is evident.
4) Thrust washer of the side gear and pinion mate gear:
Replace if seized, flawed, abnormally worn or having other defects.
5) Oil seal
Replace if deformed or damaged, and at every disassembling.

6) Differential carrier
Replace if the bearing bores are worn or damaged.
7) Differential case
Replace if its sliding surfaces are abnormally worn, burned, or cracked.
8) Companion flange
Replace if the oil seal lip contact surface shows cracking.

1. SIDE GEAR BACKLASH

Using a dial gauge, check the backlash of side gear.

Side gear backlash:
VA1-type:
0.05 — 0.15 mm (0.002 — 0.006 in)
VA2-type:
0.13 — 0.18 mm (0.005 — 0.007 in)
If the side gear backlash is outside the specification range, select the side gear thrust washer and adjust the side gear backlash as specified.

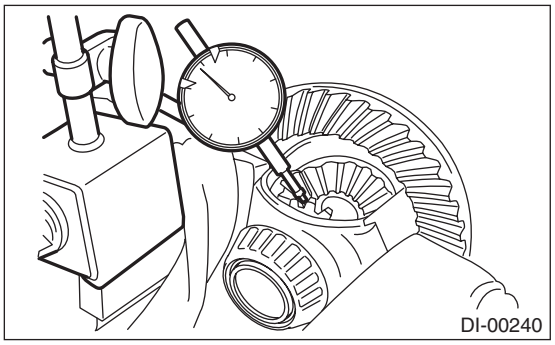
DI-00240

2. HYPOID DRIVEN GEAR BACKLASH

Using a dial gauge, check the backlash of hypoid driven gear.

Hypoid driven gear backlash:
0.10 — 0.15 mm (0.004 — 0.006 in)
If the hypoid driven gear backlash is outside the specification range, adjust the side bearing preload and repair if necessary.

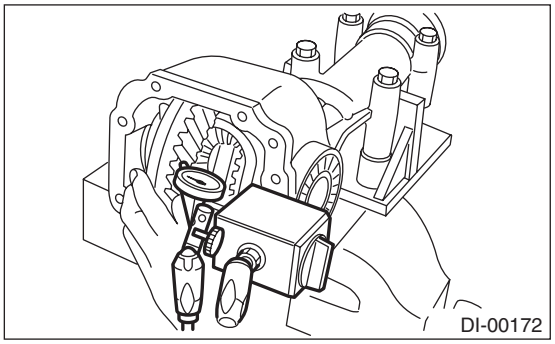
DI-00172

3. COMPANION FLANGE

1) If rust or dirt is attached to the companion flange, remove them.
2) Set a dial gauge at a companion flange surface (mating surface of propeller shaft and companion flange), and then measure the companion flange runout.

Limit of runout:
0.08 mm (0.003 in)

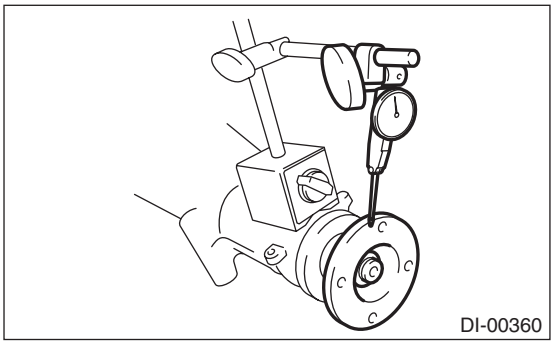
DI-00360

3) Set the gauge inside of the companion flange, and measure the runout.

Limit of runout:
0.08 mm (0.003 in)

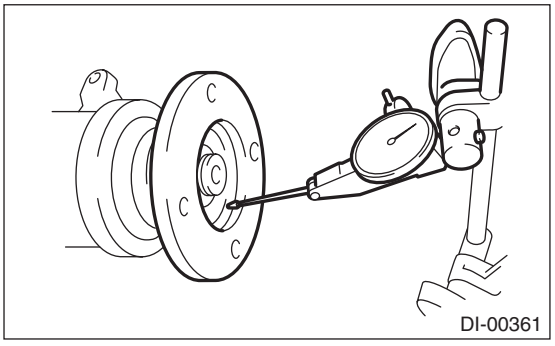
DI-00361

4) If either runout exceeds the limit, move the phase of companion flange and drive pinion 90° each, and find the point where the runout is within the limit.
5) If the runout exceeds the limit even after changing the phase, replace the companion flange and recheck the runout.
6) If the runout exceeds the limit after replacing the companion flange, the drive pinion may be assembled incorrectly or bearing is faulty.

4. TOOTH CONTACT BETWEEN HYPOID DRIVEN GEAR AND DRIVE PINION

Inspect the tooth contact between the hypoid driven gear and drive pinion. <Ref. to DI-52, ASSEMBLY, Rear Differential (VA-type).>

F: ADJUSTMENT

1. SIDE GEAR BACKLASH

Adjust the side gear backlash. <Ref. to DI-52, ASSEMBLY, Rear Differential (VA-type).>

2. HYPOID DRIVEN GEAR BACKLASH

Adjust hypoid driven gear backlash. <Ref. to DI-52, ASSEMBLY, Rear Differential (VA-type).>

3. TOOTH CONTACT BETWEEN HYPOID DRIVEN GEAR AND DRIVE PINION

Adjust the tooth contact between hypoid driven gear and drive pinion gear. <Ref. to DI-52, ASSEMBLY, Rear Differential (VA-type).>

6. Rear Differential Front Oil Seal

A: INSPECTION

Make sure that there is no leakage from front oil seal portion. If there is any leakage, replace the oil seal and inspect the propeller shaft.

B: REPLACEMENT

1) Shift the select lever or gear shift lever to neutral.
2) Release the parking brake.
3) Disconnect the ground cable from battery.
4) Lift up the vehicle.
5) Drain differential gear oil. <Ref. to DI-23, REPLACEMENT, Differential Gear Oil.>
6) Remove the rear exhaust pipe.
• 2.5 L SOHC model
<Ref. to EX(H4SO)-9, REMOVAL, Rear Exhaust Pipe.>
• 2.5 L DOHC turbo model
<Ref. to EX(H4DOTC)-15, REMOVAL, Rear Exhaust Pipe.>
• 3.6 L model
<Ref. to EX(H6DO)-8, REMOVAL, Rear Exhaust Pipe.>
7) Remove the heat shield cover.

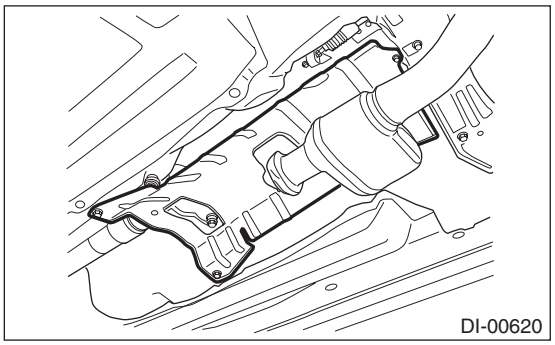
DI-00620

8) Remove the propeller shaft. <Ref. to DS-10, REMOVAL, Propeller Shaft.>
9) Check the initial torque and write it down.
10) Remove the self-locking nut while holding the companion flange with ST.
ST 498427200 FLANGE WRENCH

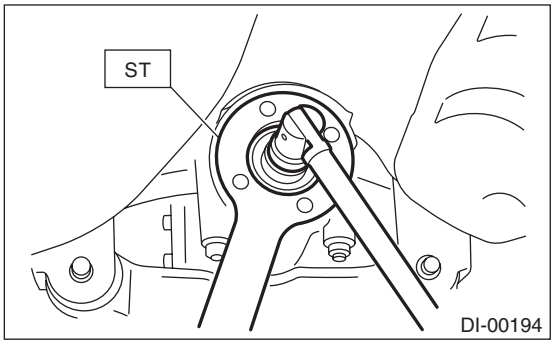

DI-00194

11) Extract the companion flange using the ST.
ST 399703600 PULLER ASSY

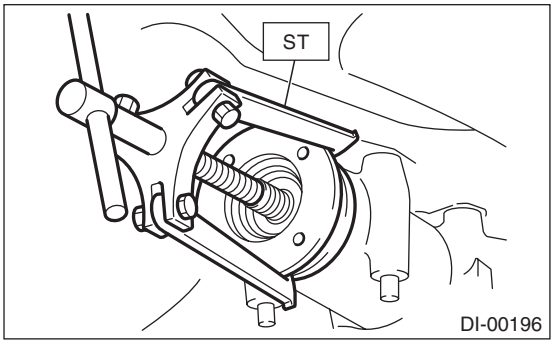

DI-00196

12) Remove the oil seal using ST or screwdriver.
ST 398527700 PULLER ASSY

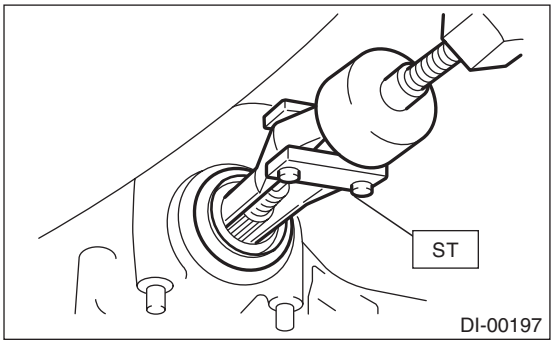

DI-00197

13) Using the ST, install the oil seal.

NOTE:
• Use a new oil seal.
• Apply differential gear oil to the oil seal lips.
ST 498447120 INSTALLER

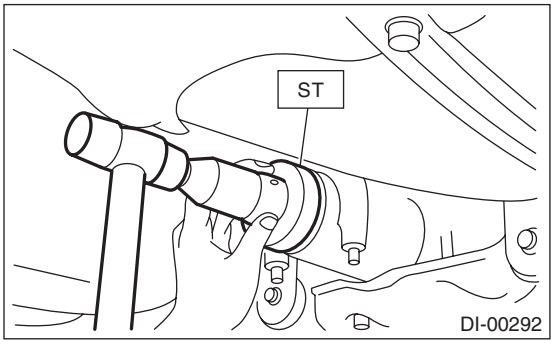

DI-00292

14) Install the companion flange.

NOTE:
Use a plastic hammer to install companion flange.

15) Tighten the self-locking nut to the specified torque so that the initial torque of companion flange becomes the same as that of before oil seal replacement.

NOTE:
- Use a new self-locking nut.
- Before installing the self-locking nut, apply the seal material to the threads of the drive pinion shaft and to the seating surface of the self-locking nut.

Seal material:
THREE BOND 1324 (Part No. 004403042) or equivalent

Tightening torque:
T-type
167 — 196 N·m (17.0 — 20.0 kgf-m, 123.2 — 144.6 ft-lb)
VA-type
162 — 220 N·m (16.5 — 22.5 kgf-m, 119.5 — 162.3 ft-lb)

ST 498427200 FLANGE WRENCH

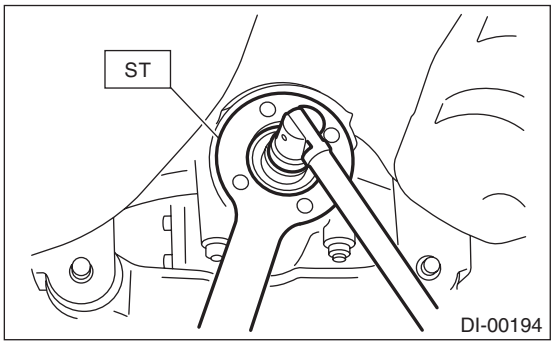

16) Hereafter, perform assembly in the reverse order of disassembly.
17) Fill differential gear oil. <Ref. to DI-23, REPLACEMENT, Differential Gear Oil.>

7. Rear Differential Side Oil Seal

A: INSPECTION

Make sure that there is no leakage from side oil seal. If there is any leakage, replace the oil seal.

B: REPLACEMENT

1) Remove the rear differential. <Ref. to DI-26, REMOVAL, Rear Differential (T-type).> <Ref. to DI-46, REMOVAL, Rear Differential (VA-type).>
2) Remove the rear differential side oil seal using a ST or screwdriver wrapped with vinyl tape to prevent the side retainer from scratching.
ST 398527700 PULLER ASSY
3) Using the ST, install the oil seal to the side retainer.

NOTE:
- Use a new oil seal.
- Apply differential gear oil to the oil seal lips.
- T-type and VA2-type

ST 398437700 DRIFT

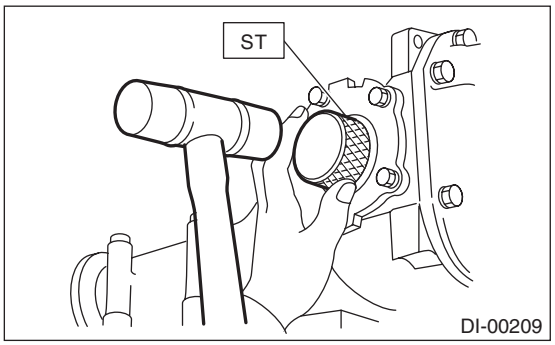

- VA1-type

ST 498447100 INSTALLER

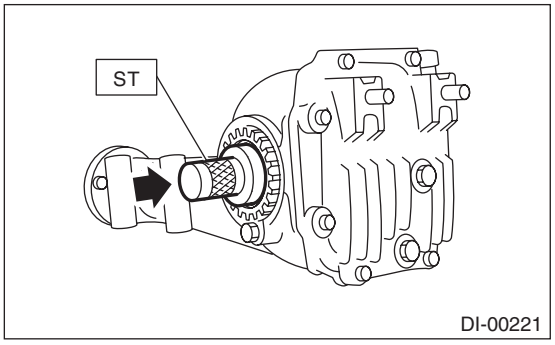

4) Install the rear differential. <Ref. to DI-28, INSTALLATION, Rear Differential (T-type).> <Ref. to DI-46, INSTALLATION, Rear Differential (VA-type).>

8. Rear Differential Front Member

A: REMOVAL

1) Disconnect the ground cable from battery.
2) Lift up the vehicle.
3) Support the rear differential using transmission jack, and then remove the rear differential front member.

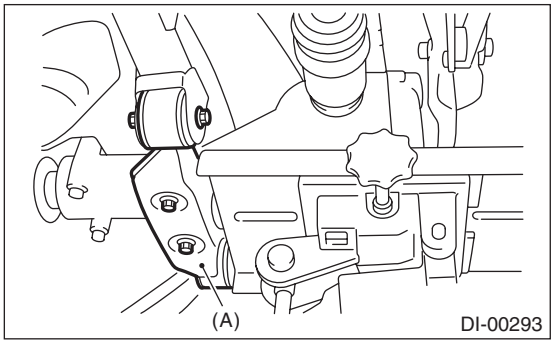

(A) Rear differential front member

B: INSTALLATION

Install the rear differential front member with a new self-locking nut.

Tightening torque:
T1: 50 N·m (5.1 kgf-m, 36.9 ft-lb)
T2: 110 N·m (11.2 kgf-m, 81.1 ft-lb)

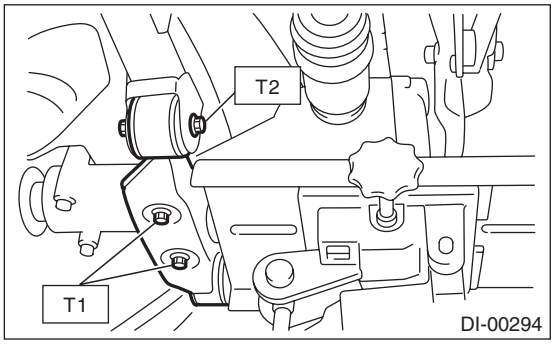

C: INSPECTION

1) Check the rear differential front member for damage, bend and corrosion.
If damage, bend or corrosion is excessive, replace the rear differential front member.
2) Check the bushings of rear differential member for cracking, hardening and damage. If cracking, hardening or damage is excessive, replace rear differential front member.

9. Rear Differential Mount Bushing

A: INSPECTION

Check the rear differential mount bushing for cracks, hardening or damage. If cracking, hardening or damage is excessive, replace rear differential mount bushing.

B: REPLACEMENT

CAUTION:
• If there was so much rust in the rear differential mount bushing, remove the rust before starting work.
• Apply the molybdenum grease on the square thread of the ST (shaft and nut) before use.
1) Remove the rear differential. <Ref. to DI-26, REMOVAL, Rear Differential (T-type).> <Ref. to DI-46, REMOVAL, Rear Differential (VA-type).>
2) Fit the ST to the periphery of the sub frame cylinder, and make sure that the ST does not contact with welded spots or spatters.
ST 41399FG010 SPECIAL TOOL A

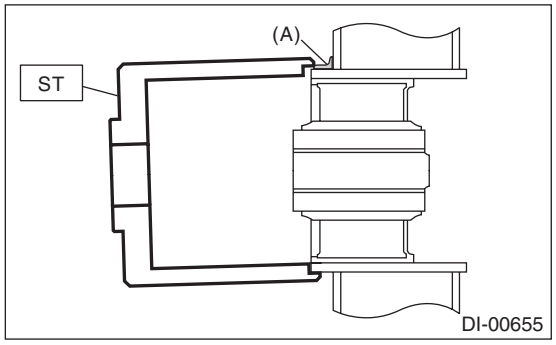

(A) Welded spot

3) If the ST contacts with welded spots or spatters, remove the excessive welds or spatters with sander or the equivalent so that the ST contacts the cylinder peripheral part.

CAUTION:
Performing the operation with the ST contacting with welded spots or spatters may break the ST. Be sure to remove excessive welds or spatters before the operation.

4) Set ST1, ST2, ST3, ST4 and ST5 as shown in the figure.
ST1 41399FG091 SPECIAL TOOL SHAFT
ST2 41399FG070 SPECIAL TOOL NUT
ST3 41399FG050 SPECIAL TOOL SLEEVE
ST4 41399FG080 SPECIAL TOOL BEARING
ST5 41399FG010 SPECIAL TOOL A

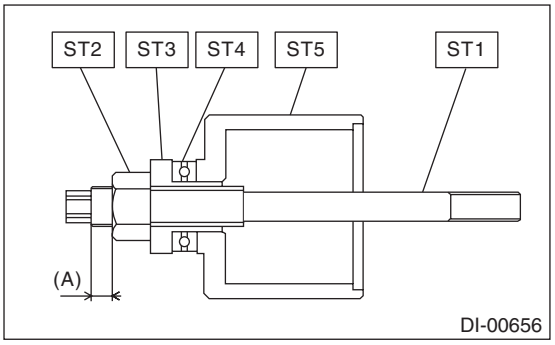

(A) 5 mm (0.2 in) or less

5) Fit and hold the ST1 and ST2 to the rear differential mount bushing from the rear side of vehicle.
ST1 41399FG031 SPECIAL TOOL C
ST2 41399FG061 SPECIAL TOOL RING

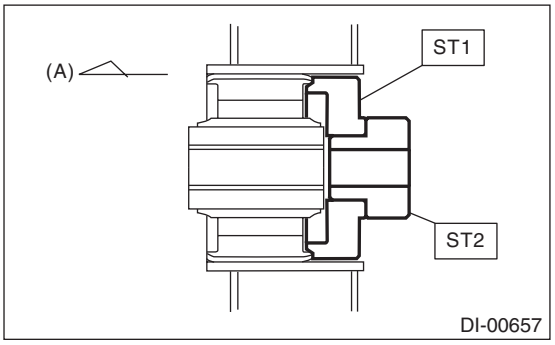

(A) Front side of vehicle

6) Insert the ST set in the step 4) through the rear differential mount bushing hole from the front side of vehicle, and screw in the ST1 by hand till the front end of ST1 comes out slightly from the rear end of ST2.
ST1 41399FG091 SPECIAL TOOL SHAFT
ST2 41399FG061 SPECIAL TOOL RING

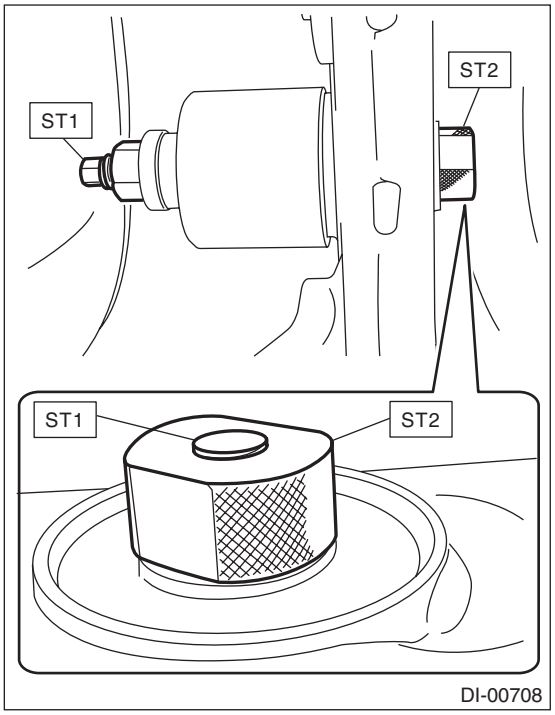

7) Hold the ST1 to prevent it from rotating, and screw in the ST3 by hand till there is no loose fit on the ST2.

CAUTION:
When setting the ST to the vehicle, always make sure that the ST2 fits the periphery of the sub frame cylinder and is not tilted.
ST1 41399FG091 SPECIAL TOOL SHAFT
ST2 41399FG010 SPECIAL TOOL A
ST3 41399FG070 SPECIAL TOOL NUT

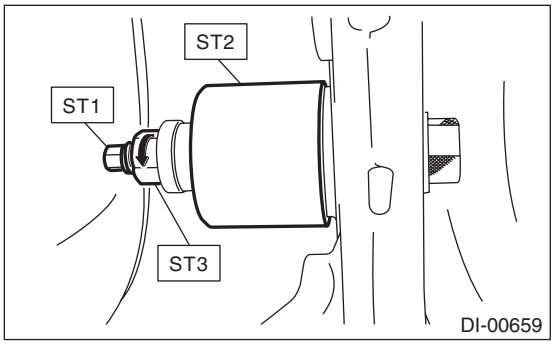

8) Hold the ST1 with a tool to prevent it from rotating, and screw in the ST2 to remove the rear differential mount bushing.

CAUTION:
• Rotation of ST1 will damage the screw at the rear end of rear differential mount bushing. Never rotate the ST1.
• If the ST starts to tilt while removing the rear differential mount bushing, stop the work and set the ST again.
ST1 41399FG091 SPECIAL TOOL SHAFT
ST2 41399FG070 SPECIAL TOOL NUT

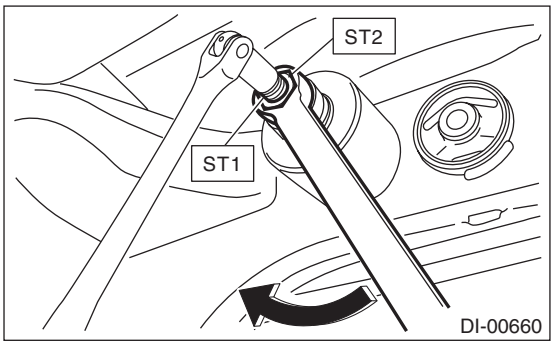

9) Set ST1, ST2, ST3, ST4, ST5 and rear differential mount bushing as shown in the figure.

NOTE:
• Set the ST2 nut near to the end of ST1 screw.
• Hold the rear differential mount bushing with the marked side facing toward the rear of the vehicle, and set the rear differential mount bushing to the ST so that the arrow mark faces upward.

• Mark the bottom end of rear differential mount bushing to identify the installing direction.

ST1 41399FG091 SPECIAL TOOL SHAFT
ST2 41399FG070 SPECIAL TOOL NUT
ST3 41399FG050 SPECIAL TOOL SLEEVE
ST4 41399FG080 SPECIAL TOOL BEARING
ST5 41399FG020 SPECIAL TOOL B

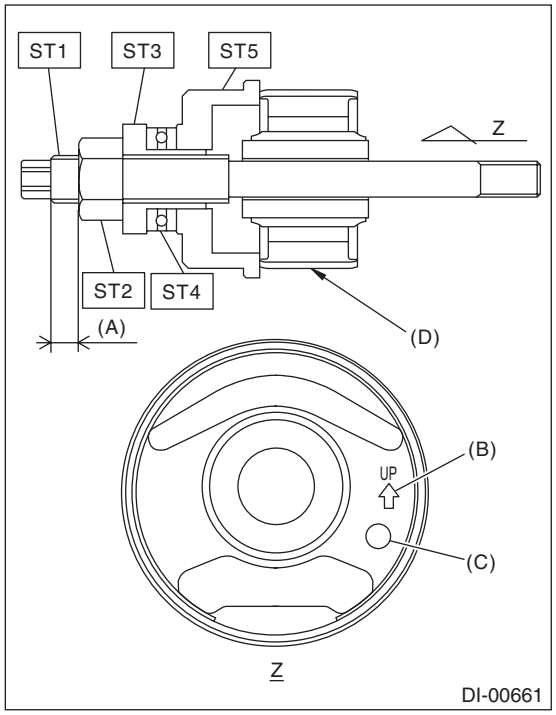

(A) 8 mm (0.31 in) or more
(B) Arrow mark
(C) Mark
(D) Marked position

10) Attach ST1 to the ST2, and fit and hold the STs as a unit to the sub frame from the rear side of vehicle.

ST1 41399FG061 SPECIAL TOOL RING
ST2 41399FG041 SPECIAL TOOL D

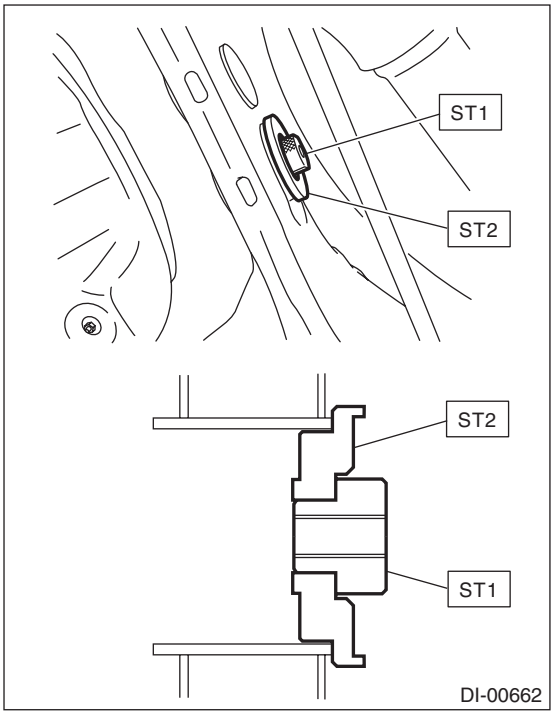

11) Insert the ST and rear differential mount bushing set in the step 9) through the sub frame from the front side of vehicle, and screw in the ST1 by hand till the front end of ST1 comes out slightly from the rear end of ST2.

CAUTION:
Set the rear differential mount bushing with its mark facing the bottom end direction.

ST1 41399FG091 SPECIAL TOOL SHAFT
ST2 41399FG061 SPECIAL TOOL RING

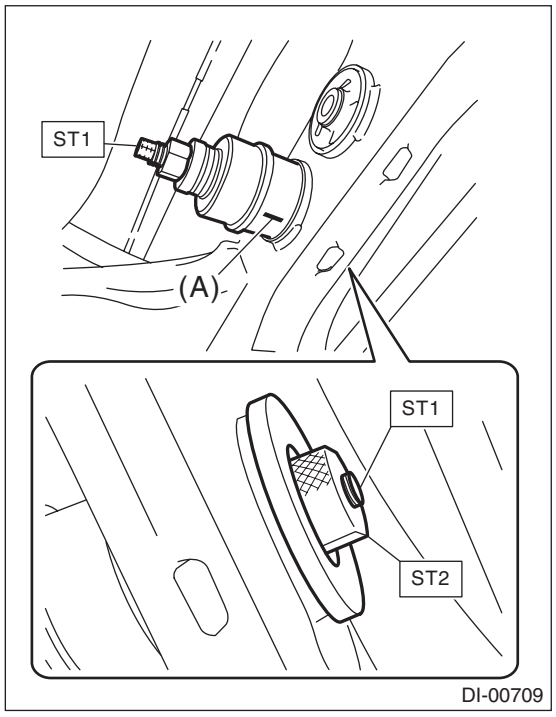

(A) Mark

12) Hold the ST1 to prevent it from rotating, and screw in the ST2 by hand till there is no loose fit on the ST and the rear differential mount bushing.

CAUTION:
Make sure that the ST and rear differential mount bushing are not tilted.

ST1 41399FG091 SPECIAL TOOL SHAFT
ST2 41399FG070 SPECIAL TOOL NUT

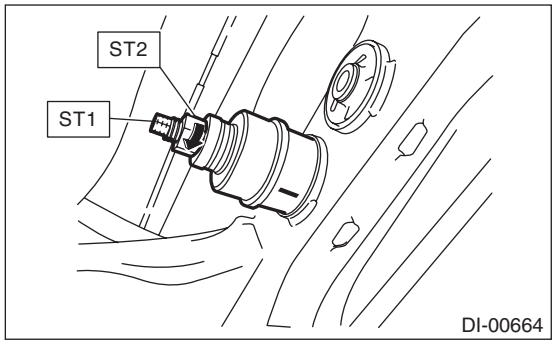

13) Screw in the ST2 while holding the ST1 with a tool to prevent it from rotating, and press-fit the rear differential mount bushing to the front end of sub frame cylinder.

ST1 41399FG091 SPECIAL TOOL SHAFT
ST2 41399FG070 SPECIAL TOOL NUT

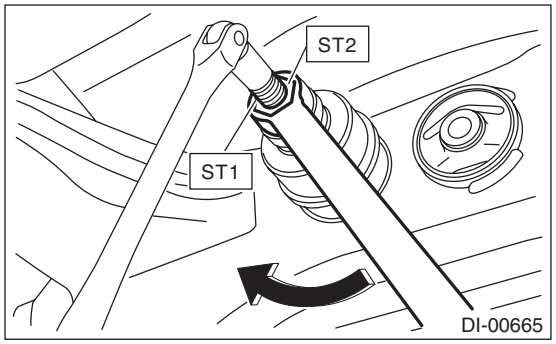

14) Make sure that the rear differential mount bushing is inserted to the front end of sub frame cylinder.

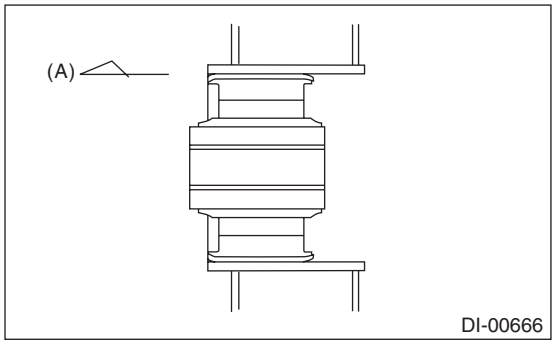

(A) Front side of vehicle

15) Install the rear differential. <Ref. to DI-28, INSTALLATION, Rear Differential (T-type).> <Ref. to DI-46, INSTALLATION, Rear Differential (VA-type).>

10.Rear Differential Inspection Mode

A: GENERAL DESCRIPTION

CAUTION:
Be sure to perform Rear Differential Inspection Mode.
- Follow the messages displayed on the Subaru Select Monitor when working.
- “Rear Differential Inspection Mode” using the Subaru Select Monitor is available only for the CVT model.
- Perform Rear Differential Inspection Mode when the following work has been performed.

Transmission assembly replacement/Replacement of rear differential/Replacement of front differential hypoid gear set/Replacement of rear differential hypoid gear set

B: PROCEDURE

CAUTION:
Do not turn the power of the Subaru Select Monitor OFF during work, and do not disconnect the data link connector.
1) Shift the select lever to “P” range.
2) Apply the electronic parking brake.
3) Lift up the vehicle.

WARNING:
Lift up the vehicle until the tire bottom is 30 cm or more above the ground.
4) Connect the Subaru Select Monitor to data link connector.
5) Turn the ignition switch to ON. (In the case of a push button start, press the push button ignition switch twice without stepping on the brake.)
6) Select {AT related learning & inspecting mode} in the «Transmission Diagnosis» display screen of the Subaru Select Monitor.
7) Select {Rear differential inspection mode} in the «AT related learning & inspecting mode» display screen of the Subaru Select Monitor.
8) Follow the messages displayed on the Subaru Select Monitor screen when working.
9) The results of the rear differential inspection mode are displayed on the Subaru Select Monitor screen.
- When ended normally: “The rear differential has been replaced normally.”
- When ended abnormally: “A rear differential abnormality has been detected. Reinspect the items at the time of rear differential installation.”
- When interrupted: “Inspection is stopped. Restart this inspection mode from the beginning.”

10) After the message “Inspection has been completed. Set the ignition switch to OFF.” appears, the rear differential inspection mode completes.

NOTE:
- For detailed operation procedures, refer to “PC application help for Subaru Select Monitor”.
- If the rear differential inspection mode does not end normally, repeat the mode until it ends normally.
- When the inspection mode does not end normally, the AWD warning light will start blinking at 2 Hz.
- When the inspection mode ends abnormally, the front differential and rear differential may be different from the specifications for the vehicle.
- When the inspection mode is interrupted, the following reasons are possible.

Message	Main reasons for abnormal termination
• “Inspection is stopped.” • “Inspection is stopped. Restart this inspection mode from the beginning.”	• TCM has detected a failure. • VDC has a failure. • Brake is applied after start during automatic running. • Too delayed operation to the instructions displayed on the Subaru Select Monitor.
“TCM incompatible. Rear differential inspection mode is stopped.”	The model does not support the rear differential inspection mode.
The TCM has detected a fault. Inspect following the manual.	TCM has detected a failure.

11) Perform “Function Check Sequence” for VDC. <Ref. to VDC(diag)-18, FUNCTION CHECK, OPERATION, Subaru Select Monitor.> <Ref. to VDC-16, ADJUSTMENT, VDC Control Module and Hydraulic Control Unit (VDCCM&H/U).>

11.General Diagnostic Table

A: INSPECTION

Symptom or trouble	Possible cause	Remedy
1. Oil leakage	(1) Worn, scratched, or incorrectly seated front or side oil seal. Scored, battered or excessively worn sliding surface of companion flange.	Repair or replace.
	(2) Clogged or damaged air breather cap.	Clean, repair or replace.
	(3) Loose bolts on the side retainer, or incorrectly fitted O-ring.	Tighten the bolts to specified torque. Replace the O-ring.
	(4) Loose rear cover attachment bolts or damaged gasket.	Replace the gasket, and tighten the bolts to specified torque.
	(5) Loose filler plug or drain plug.	• Apply liquid gasket, and tighten to the specified torque. (T-type) • Replace the gasket, and tighten to the specified torque. (VA-type)
	(6) Wear, damage or incorrect fitting of drive shaft, side retainer or oil seal.	Repair or replace.
2. Seizure NOTE: Seized or damaged parts should be replaced, and also other parts should be thoroughly checked for any defect and should be repaired or replaced as required.	(1) Insufficient backlash for hypoid gear.	Readjust or replace.
	(2) Excessive preload for side, rear or front bearing.	Readjust or replace.
	(3) Insufficient or improper oil used.	Add recommended oil to the specified level.
3. Damage NOTE: Damaged parts should be replaced, and also other parts should be thoroughly checked for any defect and should be repaired or replaced as required.	(1) Improper backlash for hypoid gear.	Replace.
	(2) Insufficient or excessive preload for side, rear or front bearing.	Readjust or replace.
	(3) Excessive backlash for differential gear.	Replace gear or thrust washer.
	(4) Loose bolts and nuts such as hypoid driven gear bolt.	Retighten.
	(5) Damage due to overloading.	Replace.
4. Noises when starting or shifting gears NOTE: Noises may be caused by differential assembly, universal joint, wheel bearing, etc. Find out what is actually making noise before disassembling.	(1) Improper tooth contact of hypoid driven gear and drive pinion	Readjust. (drive pinion adjustment and backlash adjustment)
	(2) Excessive backlash for hypoid driven gear	Replace the gear or the pinion height adjusting washer.
	(3) Excessive backlash for side gear.	Replace gear or thrust washer.
	(4) Insufficient preload for front or rear bearing.	Readjust.
	(5) Loose drive pinion nut.	Tighten to the specified torque.
	(6) Loose bolts and nuts such as side retainer attachment bolt.	Tighten to the specified torque.
5. Noises when cornering	(1) Damaged differential gear.	Replace.
	(2) Excessive wear or damage of thrust washer.	Replace.
	(3) Broken pinion mate shaft.	Replace.
	(4) Seized or damaged side bearing.	Replace.

Symptom or trouble	Possible cause	Remedy
6. Gear Noise NOTE: Since noises from engine, muffler, transmission, propeller shaft, wheel bearings, tires, and body are sometimes mistaken for noises from differential assembly, be careful in checking them. Inspection methods to locate noises include coasting, accelerating, cruising, and lifting-up all four wheels. Perform these inspections according to the condition of trouble. When listening to noises, shift the gear into four-wheel drive and fourth speed position, trying to pick up only differential noise.	(1) Improper tooth contact of hypoid driven gear and drive pinion	Readjust or replace the hypoid gear set.
	(2) Improper backlash of the hypoid driven gear	Readjust.
	(3) Scored or chipped teeth of hypoid gear.	Replace hypoid gear set.
	(4) Scuffed hypoid gear	Replace hypoid gear set.
	(5) Improper preload for front or rear bearings.	Readjust.
	(6) Stuck, scored or chipped teeth of front or rear bearing	Replace.
	(7) Stuck, scored or chipped teeth of side bearing	Replace.
	(8) Vibrating differential gear.	Replace.

TRANSFER CASE

TC

Page

1. General Description 2
2. Transfer Case and Extension Case Assembly 3
3. Transfer Clutch 4
4. Extension Case 5
5. Oil Seal 6
6. Transfer Drive Gear 7
7. Transfer Driven Gear 8
8. Center Differential Carrier 9
9. Reduction Driven Gear 10
10. Center Differential 11
11. Transfer Clutch Pressure Test 12

1. General Description

A: NOTE

For general description, refer to “5AT”, “CVT” or “6MT” section.
5AT model:
<Ref. to 5AT-2, General Description.>
CVT model:
<Ref. to CVT-3, General Description.>
6MT model:
<Ref. to 6MT-2, General Description.>

2. Transfer Case and Extension Case Assembly

A: NOTE

For removal, installation and inspection, refer to “6MT” section. <Ref. to 6MT-40, Transfer Case and Extension Case Assembly.>

3. Transfer Clutch

A: NOTE

For removal, installation and inspection, refer to “5AT” or “CVT” section.
5AT model:
<Ref. to 5AT-67, Transfer Clutch.>
CVT model:
<Ref. to CVT-146, Transfer Clutch.>

4. Extension Case

A: NOTE

For removal, installation and inspection, refer to “5AT” or “CVT” section.
5AT model:
<Ref. to 5AT-65, Extension Case.>
CVT model:
<Ref. to CVT-138, Extension Case.>

5. Oil Seal

A: NOTE

For replacement and inspection, refer to “5AT”, “CVT” or “6MT” section.
5AT model:
<Ref. to 5AT-48, Extension Case Oil Seal.>
CVT model:
<Ref. to CVT-89, Extension Case Oil Seal.>
6MT model:
<Ref. to 6MT-35, Oil Seal.>

6. Transfer Drive Gear

A: NOTE

For removal, installation and inspection, refer to “6MT” section. <Ref. to 6MT-45, Transfer Drive Gear.>

7. Transfer Driven Gear

A: NOTE

For removal, installation and inspection, refer to “6MT” section. <Ref. to 6MT-47, Transfer Driven Gear.>

8. Center Differential Carrier

A: NOTE

For removal, installation and inspection, refer to “5AT” section. <Ref. to 5AT-74, Center Differential Carrier.>

9. Reduction Driven Gear

A: NOTE

For removal, installation and inspection, refer to “5AT” or “CVT” section.
5AT model:
<Ref. to 5AT-71, Reduction Driven Gear.>
CVT model:
<Ref. to CVT-158, Transfer Reduction Driven Gear.>

10.Center Differential

A: NOTE

For removal, installation and inspection, refer to “6MT” section. <Ref. to 6MT-49, Center Differential.>

11. Transfer Clutch Pressure Test

A: NOTE

For inspection, refer to “5AT” or “CVT” section.
5AT model:
<Ref. to 5AT-36, Transfer Clutch Pressure Test.>
CVT model:
<Ref. to CVT-53, Transfer Clutch Pressure Test.>

DRIVE SHAFT SYSTEM

DS

		Page
1.	General Description	2
2.	Propeller Shaft	10
3.	Front Axle	15
4.	Front Hub Unit Bearing	23
5.	Rear Axle	30
6.	Rear Hub Unit Bearing	39
7.	Front Drive Shaft	48
8.	Rear Drive Shaft	57
9.	General Diagnostic Table	66

1. General Description

A: SPECIFICATION

1. PROPELLER SHAFT

Car line			All models
Propeller shaft type			EDJ
Front propeller shaft Joint-to-joint length: L_1	mm (in)	CVT	578 (22.76)
		6MT	735.5 (28.96)
		5AT	562 (22.13)
Rear propeller shaft Joint-to-Joint length: L_2		mm (in)	828 (32.6)
Outer diameter of tube:	mm (in)	D_1	63.5 (2.500)
		D_2	57.5 (2.264)

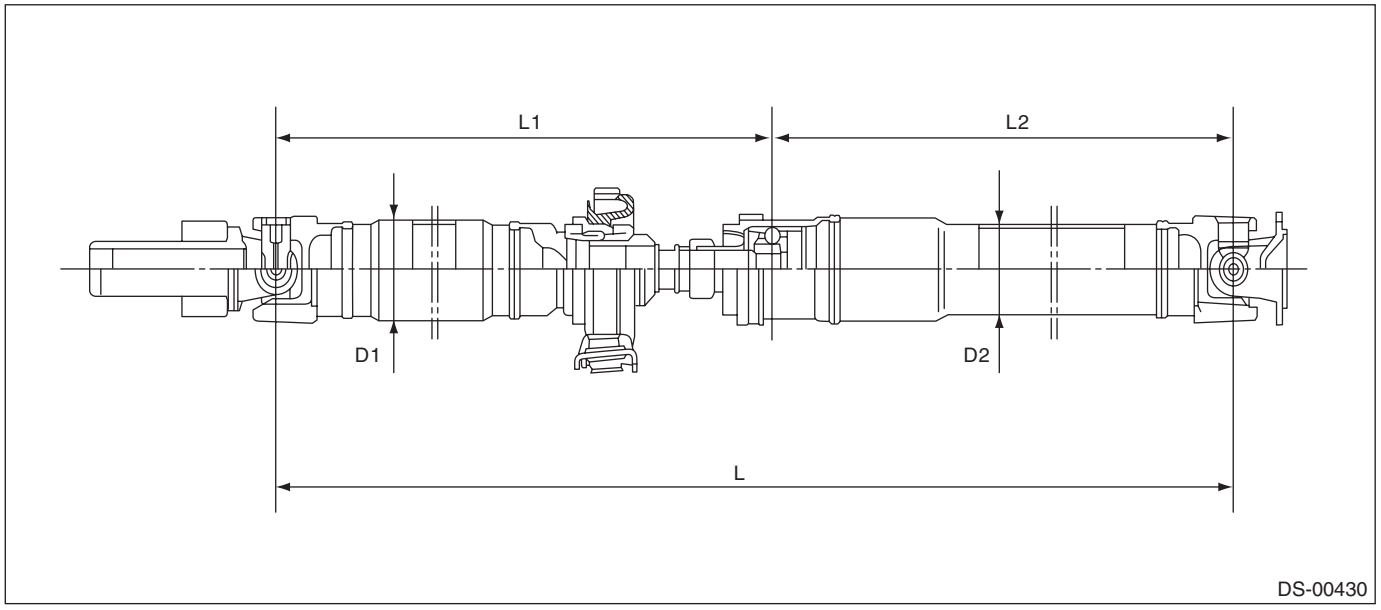

2. FRONT DRIVE SHAFT ASSEMBLY

Model	Type of drive shaft	Axle diameterϕ mm (in)	Axle length mm (in)
All models	AC + AAR	22.67 (0.89)	352.4 (13.87)

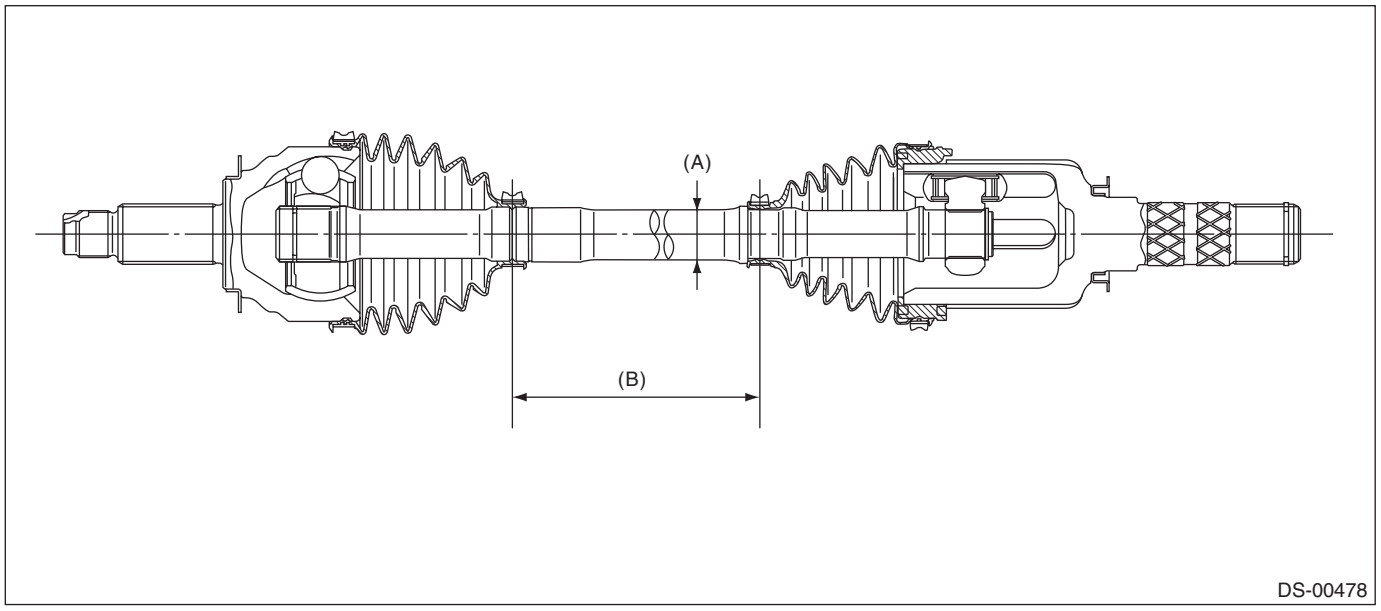

(A) Axle diameter (B) Axle length

3. REAR DRIVE SHAFT ASSEMBLY

Model	Type of drive shaft	Axle diameterϕ mm (in)	Axle length mm (in)
Sedan CVT	BJ + DOJ	22 (0.87)	400.6 (15.77)
Other than above	EBJ + DOJ	22 (0.87)	394.3 (15.52)

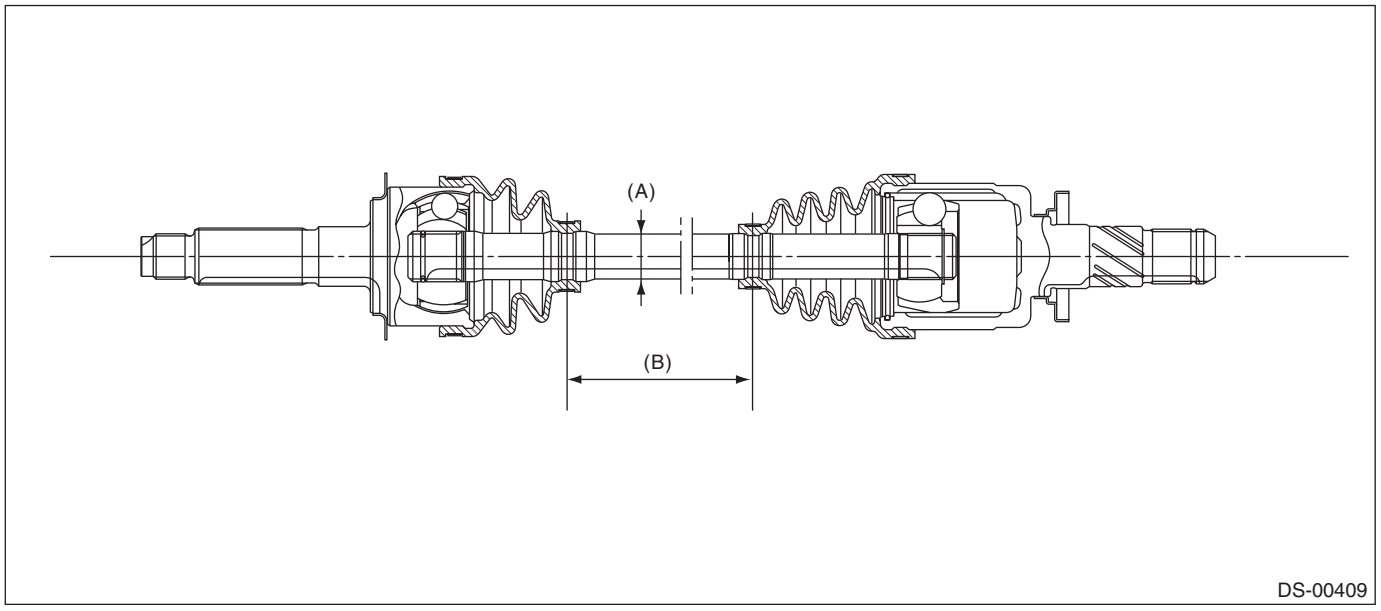

(A) Axle diameter (B) Axle length

B: COMPONENT

1. PROPELLER SHAFT

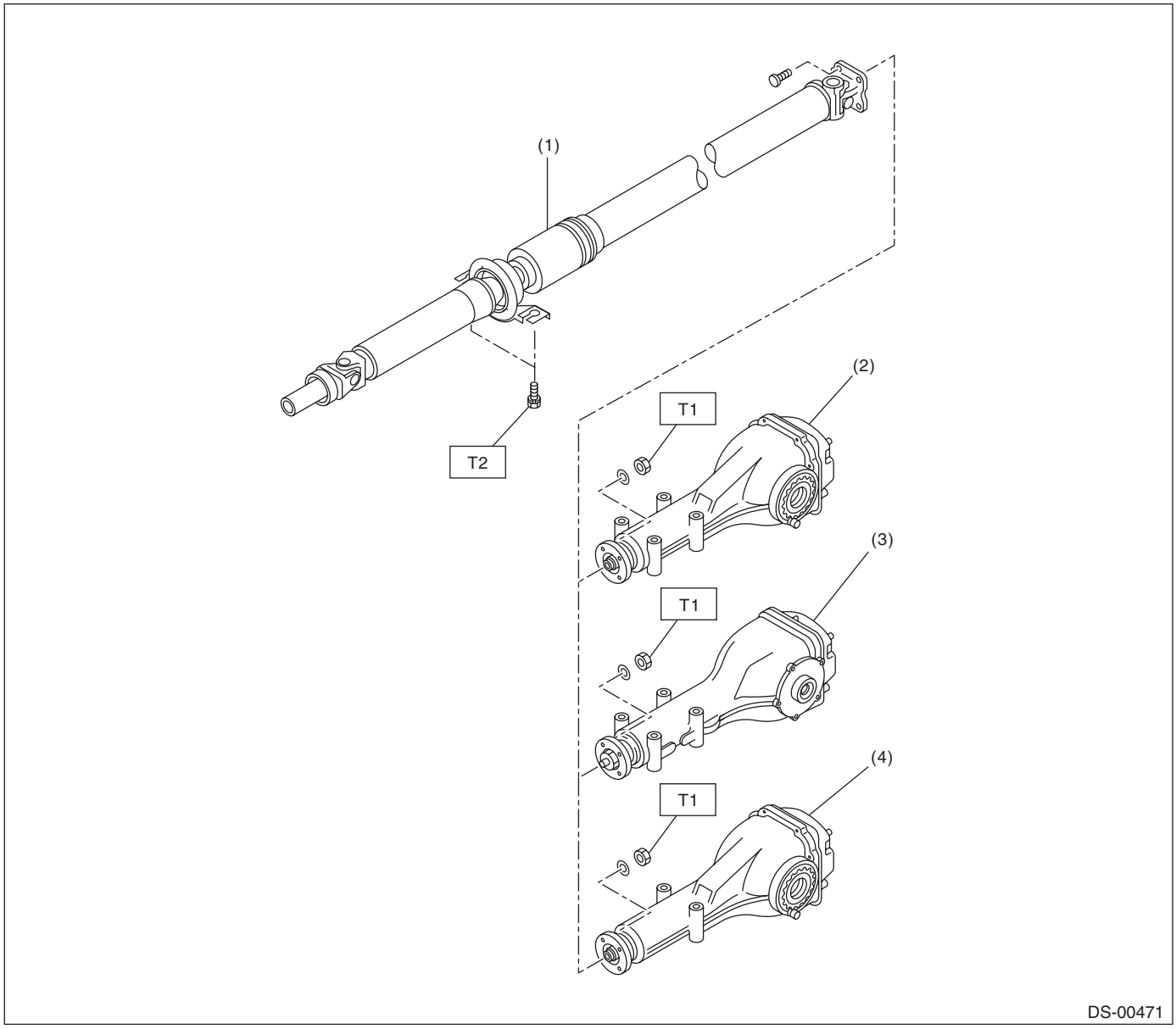

(1) Propeller shaft
(2) Rear differential (VA1-type)
(3) Rear differential (T-type)
(4) Rear differential (VA2-type)

Tightening torque:N·m (kgf-m, ft-lb)
T1: 31 (3.16, 22.9)
T2: 52 (5.3, 38.4)

2. FRONT AXLE

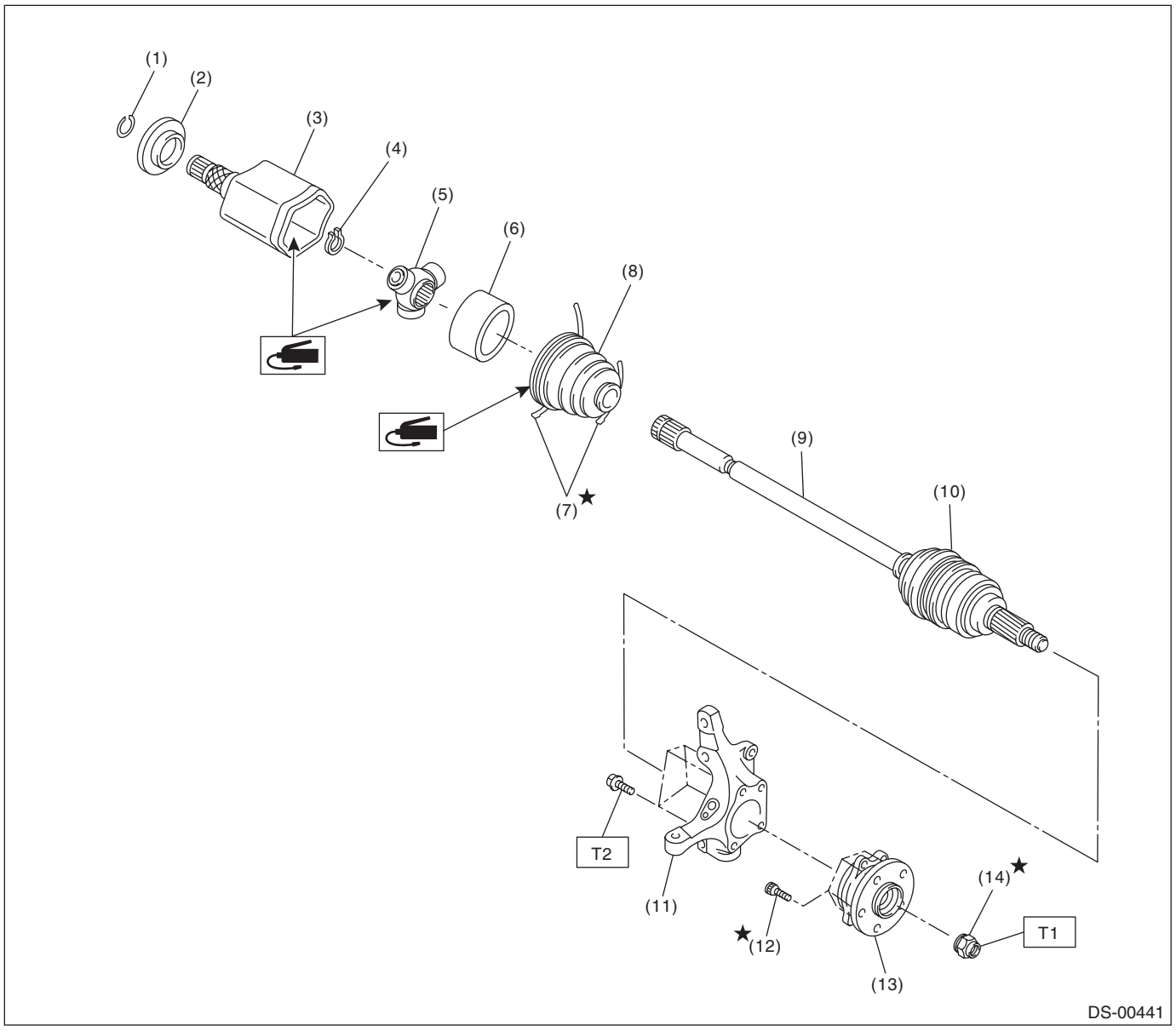

(1) Circlip
(2) Baffle plate
(3) Outer race (AAR)
(4) Snap ring
(5) Trunnion
(6) Grommet
(7) Boot band
(8) Boot (AAR)
(9) AC shaft ASSY
(10) Boot (AC)
(11) Front axle housing
(12) Hub bolt
(13) Front hub unit bearing
(14) Axle nut

Tightening torque:N·m (kgf-m, ft-lb)	
T1:	*220 (22.43, 162.3)*
T2:	*65 (6.63, 47.9)*

3. REAR AXLE

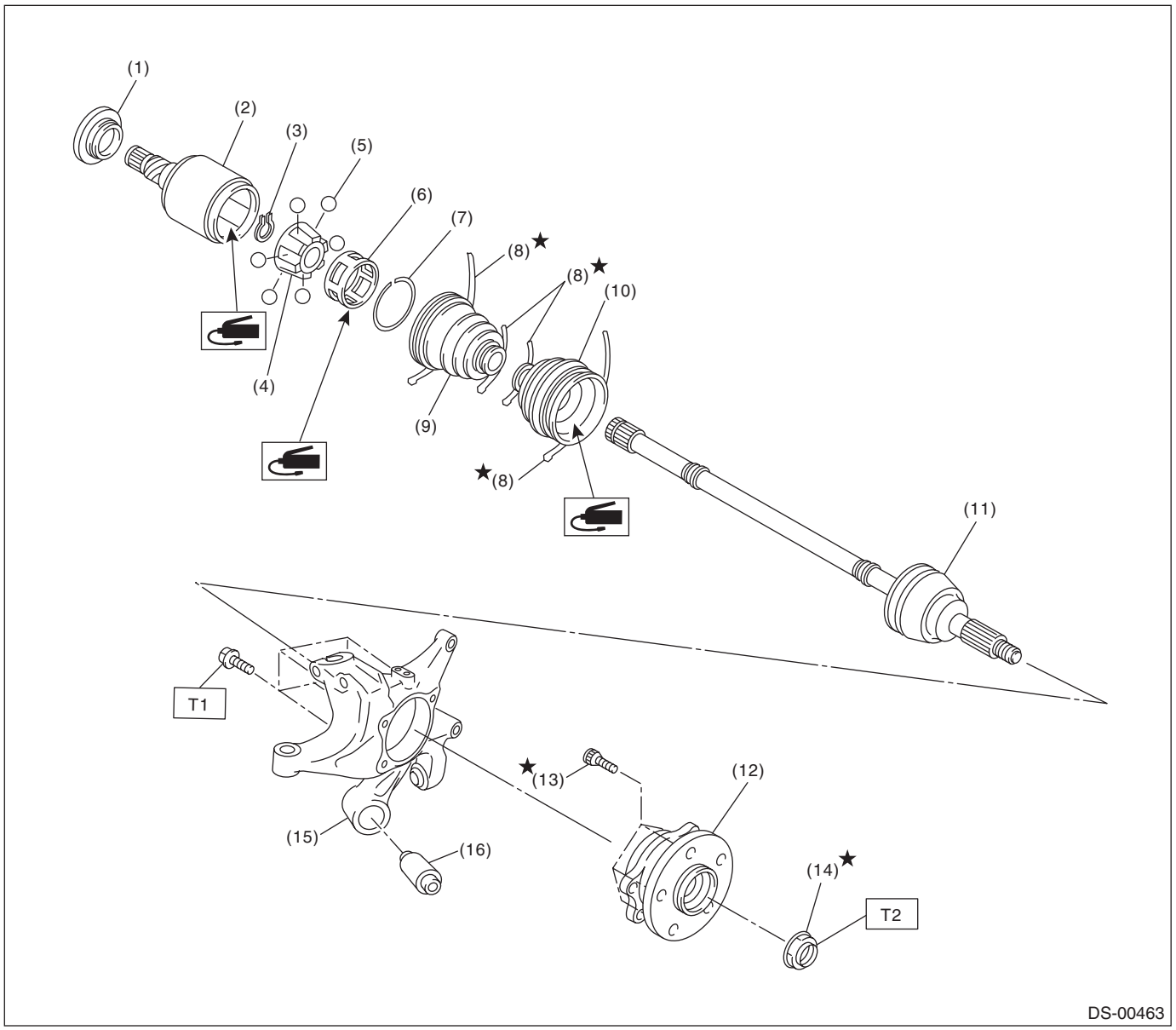

(1)	Baffle plate	(8)	Boot band	(14)	Axle nut
(2)	Outer race (DOJ)	(9)	Boot (DOJ)	(15)	Rear axle housing
(3)	Snap ring	(10)	Boot (BJ)	(16)	Rear bushing
(4)	Inner race	(11)	BJ shaft ASSY (sedan CVT model) EBJ shaft ASSY (except for sedan CVT model)	***Tightening torque:N·m (kgf-m, ft-lb)***	
(5)	Ball				
(6)	Cage	(12)	Rear hub unit bearing	***T1:***	***65 (6.63, 47.9)***
(7)	Snap ring	(13)	Hub bolt	***T2:***	***240 (24.47, 177.0)***

C: CAUTION

• Wear appropriate work clothing, including a helmet, protective goggles and protective shoes when performing any work.
• Remove contamination including dirt and corrosion before removal, installation or disassembly.
• Keep the disassembled parts in order and protect them from dust and dirt.
• Before removal, installation or disassembly, be sure to clarify the failure. Avoid unnecessary removal, installation, disassembly and replacement.
• Vehicle components are extremely hot after driving. Be wary of receiving burns from heated parts.
• Use SUBARU genuine grease etc. or equivalent. Do not mix grease etc. of different grades or manufacturers.
• Be sure to tighten fasteners including bolts and nuts to the specified torque.
• Place shop jacks or rigid racks at the specified points.
• Apply grease onto sliding or revolving surfaces before installation.
• Before installing snap rings, apply sufficient amount of grease to avoid damage and deformation.
• Before securing a part on a vise, place cushioning materials such as wood blocks, aluminum plates, or waste cloth between the part and the vise.

D: PREPARATION TOOL

1. SPECIAL TOOL

ILLUSTRATION	Part No.	DESCRIPTION	REMARKS
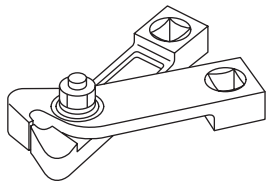 ST28099AC000	28099AC000	BOOT BAND PLIER	Used for tightening the boot band. (Front boot band)
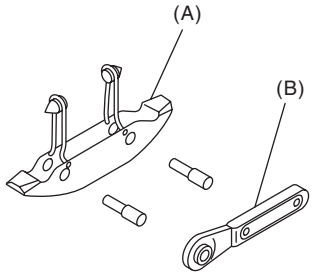 ST-925091000	925091000	BAND TIGHTENING TOOL	Used for tightening the boot band. (A) Jig for the band (B) Ratchet wrench
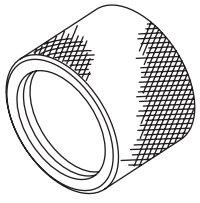 ST18675AA000	18675AA000	DIFFERENTIAL SIDE OIL SEAL INSTALLER	Used for installing the differential side retainer oil seal.

ILLUSTRATION	Part No.	DESCRIPTION	REMARKS
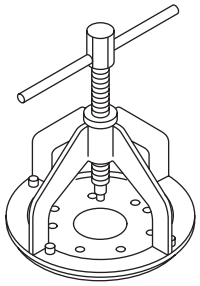 ST-926470000	926470000	AXLE SHAFT PULLER	• Used for removing the axle shaft. • Used together with AXLE SHAFT PULLER PLATE (28099PA110).
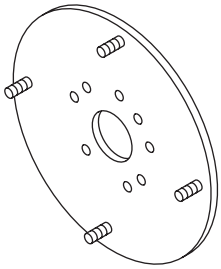 ST28099PA110	28099PA110	AXLE SHAFT PULLER PLATE	Exchange with the plate of the AXLE SHAFT PULLER (926470000) to use.
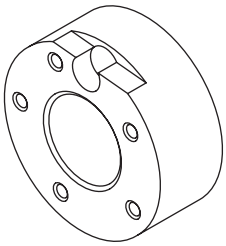 ST-927080000	927080000	HUB STAND	Used for assembling hub bolt in hub.
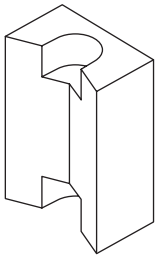 ST28399AG000	28399AG000	HUB STAND	Used for extracting hub bolt.
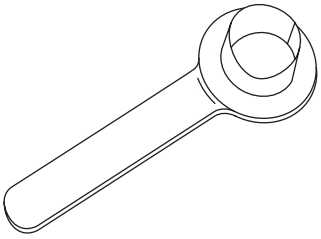 ST28099PA090	28099PA090	OIL SEAL PROTECTOR	• Used for installing the rear drive shaft to the rear differential. • For protecting the oil seal.

ILLUSTRATION	Part No.	DESCRIPTION	REMARKS
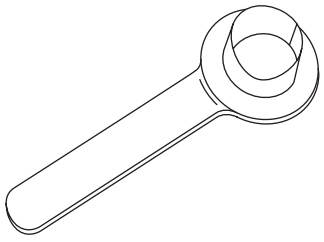 ST28399SA010	28399SA010	OIL SEAL PROTECTOR	• Used for installing front drive shaft into front differential. • For protecting the oil seal.

2. GENERAL TOOL

TOOL NAME	REMARKS
Tie-rod end puller	Used for disconnecting tie-rod end.
Puller	Used for removing the ball joint from knuckle arm.
Dial gauge	Used for inspecting the propeller shaft run-out.
Extension cap	Used for preventing leakage of gear oil or ATF.
Crowbar	Used for extracting drive shaft.

2. Propeller Shaft

A: REMOVAL

CAUTION:
- **Do not disassemble the center EDJ of the propeller shaft.**
- **Before removing propeller shaft, wrap the metal parts attached to the rubber boot of center EDJ with a cloth or rubber material, as shown in the figure. The rubber boot may be damaged due to interference with adjacent metal parts while bending the EDJ during removal.**

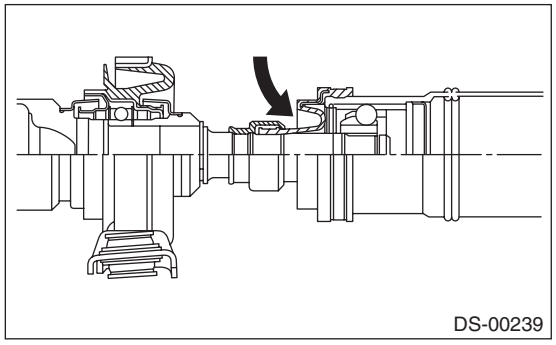

1) Shift the select lever or gear shift lever to neutral.
2) Release the parking brake.
3) Lift up the vehicle.
4) Remove the center exhaust pipe, rear exhaust pipe, and muffler.
- **Center exhaust pipe & rear exhaust pipe**
  - H4 turbo model: <Ref. to EX(H4DOTC)-15, REMOVAL, Rear Exhaust Pipe.>
  - H4 non-turbo model: <Ref. to EX(H4SO)-9, REMOVAL, Rear Exhaust Pipe.>
  - H6 model: <Ref. to EX(H6DO)-8, REMOVAL, Rear Exhaust Pipe.>
- **Muffler**
  - H4 turbo model: <Ref. to EX(H4DOTC)-17, REMOVAL, Muffler.>
  - H4 non-turbo model: <Ref. to EX(H4SO)-11, REMOVAL, Muffler.>
  - H6 model: <Ref. to EX(H6DO)-10, REMOVAL, Muffler.>

5) Remove the bolts to remove the front heat shield cover.

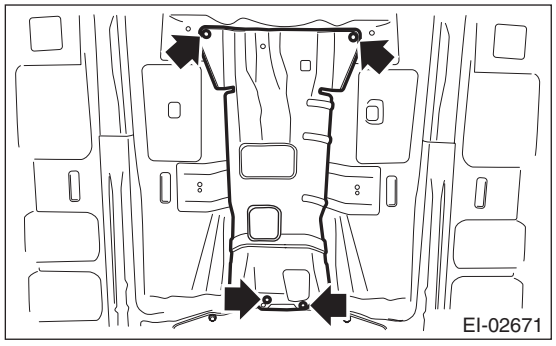

6) Remove the propeller shaft assembly.

CAUTION:
Do not disassemble the propeller shaft.

(1) Place alignment marks (A) on the flange yoke and rear differential.
(2) Remove four bolts holding the propeller shaft to the rear differential.

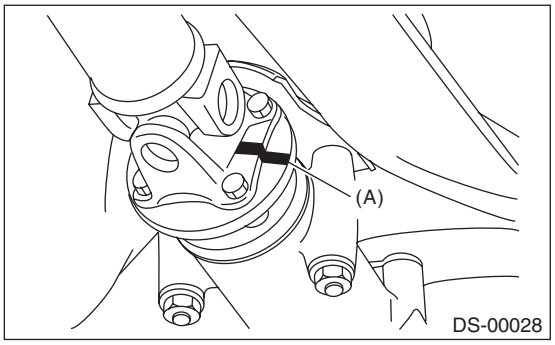

(3) Remove the center bearing.

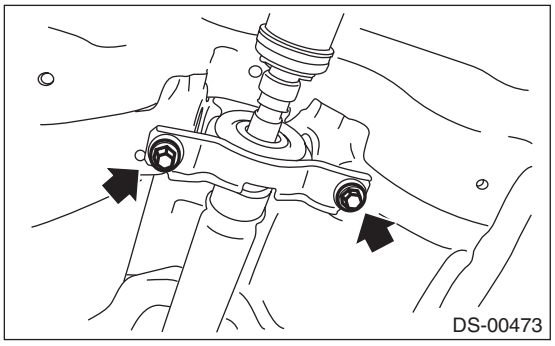

(4) Remove the propeller shaft from transmission.

NOTE:
- Use a container to catch ATF or oil flowing from propeller shaft.
- To prevent ATF from leaking, install extension cap etc. to the transmission.

B: INSTALLATION

1) Before installation, check the following items, and replace the propeller shaft assembly as necessary.
- Dents or cracks on the tube surface
- Splines for deformation or abnormal wear
- Unsmooth joint operation or abnormal noise
- Center bearing for free play, noise or non-smooth operation.
- Oil seals for abnormal wear or damage
- Damaged center bearing

2) Insert the sleeve yoke into the transmission and attach center bearing to body.

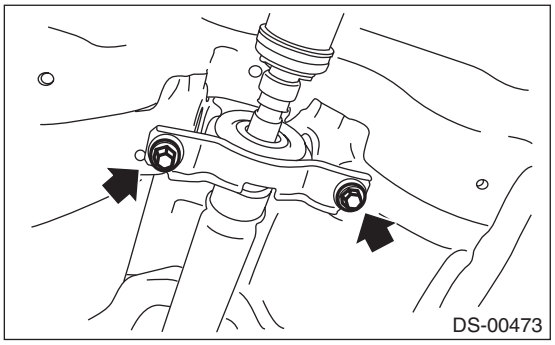

Tightening torque:
52 N·m (5.3 kgf-m, 38.4 ft-lb)

3) Align the alignment marks (A), and connect the flange yoke and rear differential.

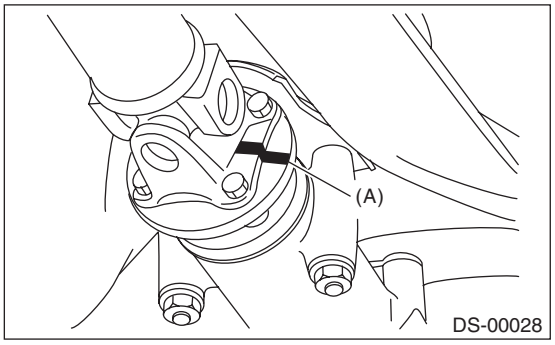

Tightening torque:
31 N·m (3.16 kgf-m, 22.9 ft-lb)

4) Check the propeller shaft with the propeller shaft installed to the vehicle. <Ref. to DS-12, INSPECTION, Propeller Shaft.>
5) Install the heat shield cover.

Tightening torque:
18 N·m (1.84 kgf-m, 13.3 ft-lb)

6) Install the center exhaust pipe and rear exhaust pipe.
7) Lower the vehicle.

C: INSPECTION

Check the propeller shaft with the propeller shaft installed to the vehicle.
1) Remove the front exhaust pipe.
- H4 turbo model: <Ref. to EX(H4DOTC)-5, REMOVAL, Front Exhaust Pipe.>
- H4 non-turbo model: <Ref. to EX(H4SO)-5, REMOVAL, Front Exhaust Pipe.>
- H6 model: <Ref. to EX(H6DO)-5, REMOVAL, Front Exhaust Pipe.>

2) Remove the center exhaust pipe, rear exhaust pipe, and muffler.
- **Center exhaust pipe & rear exhaust pipe**
  - H4 turbo model: <Ref. to EX(H4DOTC)-15, REMOVAL, Rear Exhaust Pipe.>
  - H4 non-turbo model: <Ref. to EX(H4SO)-9, REMOVAL, Rear Exhaust Pipe.>
  - H6 model: <Ref. to EX(H6DO)-8, REMOVAL, Rear Exhaust Pipe.>
- **Muffler**
  - H4 turbo model: <Ref. to EX(H4DOTC)-17, REMOVAL, Muffler.>
  - H4 non-turbo model: <Ref. to EX(H4SO)-11, REMOVAL, Muffler.>
  - H6 model: <Ref. to EX(H6DO)-10, REMOVAL, Muffler.>

3) Remove the bolts to remove the front heat shield cover.

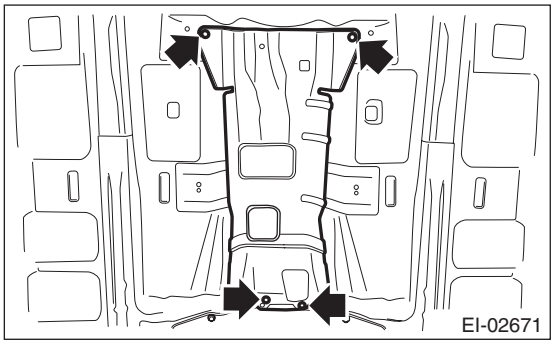

4) Check the propeller shaft mounting bolt for looseness.
   (1) Yoke flange mounting bolts which connect to the rear differential
   (2) Center bearing bracket mounting bolts

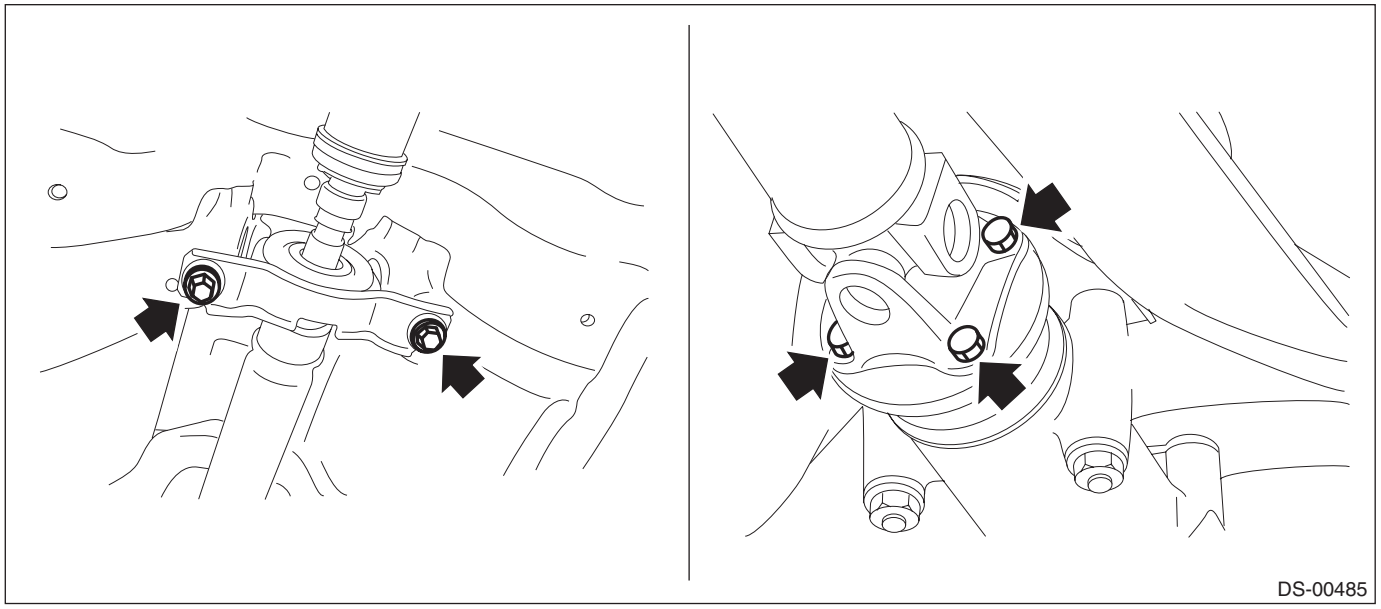

5) Check the spline and bearing for the propeller shaft.
   (1) Turn the propeller shaft by hand to check if abnormal free play exists at splines.
   (2) Also move yokes to check if abnormal free play exists at spiders and bearings.

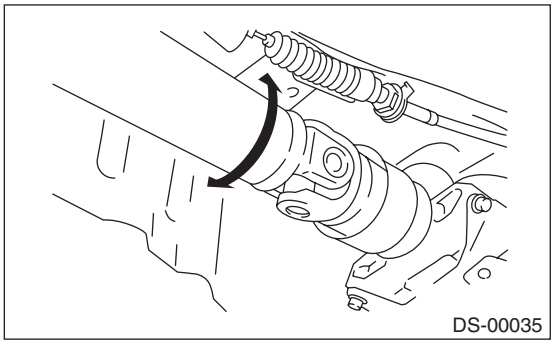

6) Measure the deflection of the propeller shaft.
   (1) Set the dial gauge (B) with its indicator stem at the center of the propeller shaft (A).
   (2) Turn the propeller shaft (A) slowly by hands to check for runout of the propeller shaft.

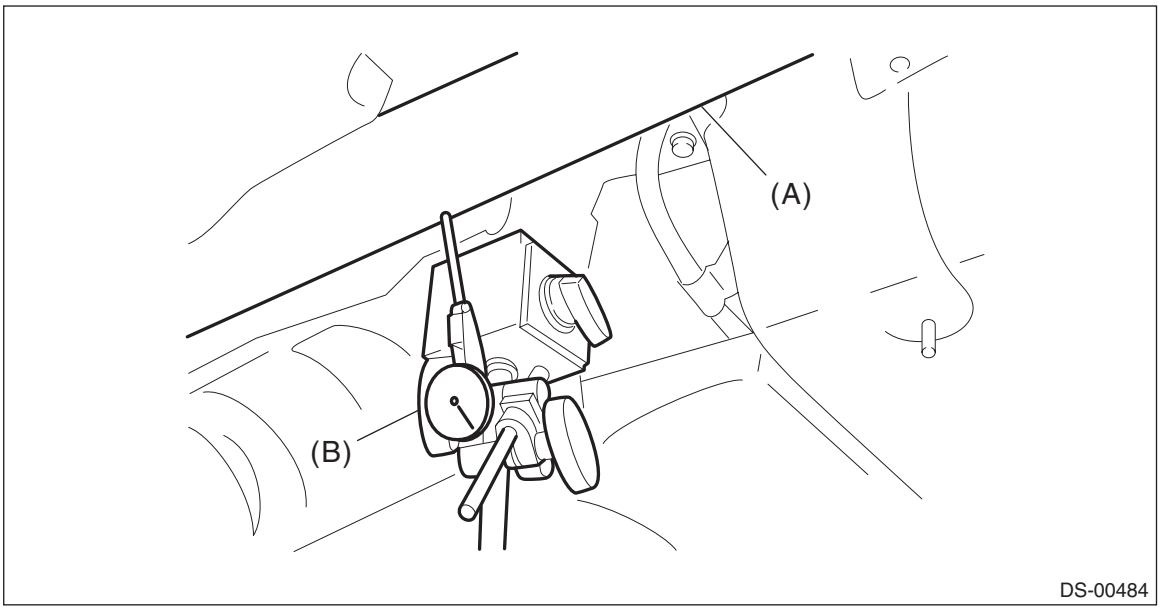

Runout:
Limit: 0.6 mm (0.024 in)

7) Check the center bearing for free play.
Move the propeller shaft near the center bearing up, down, left, right by hand, to check for any abnormal free play of the bearings.

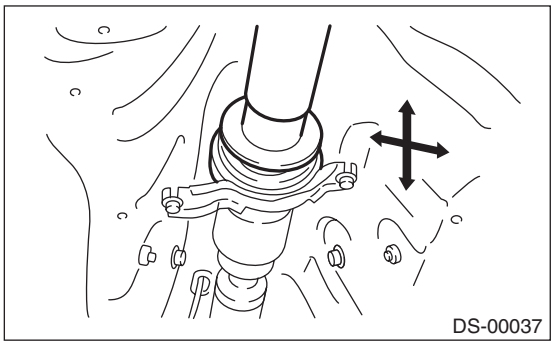

8) Replace the propeller shaft assembly if faulty is found in the inspection.

3. Front Axle

A: REMOVAL

1) Lift up the vehicle, and then remove the front wheels.
2) Remove the axle nut.

CAUTION:
Do not loosen the axle nut while the front axle is loaded. Doing so may damage the hub bearing.

(1) Lift the crimped section of axle nut.
(2) Remove the axle nut using a socket wrench while depressing the brake pedal.

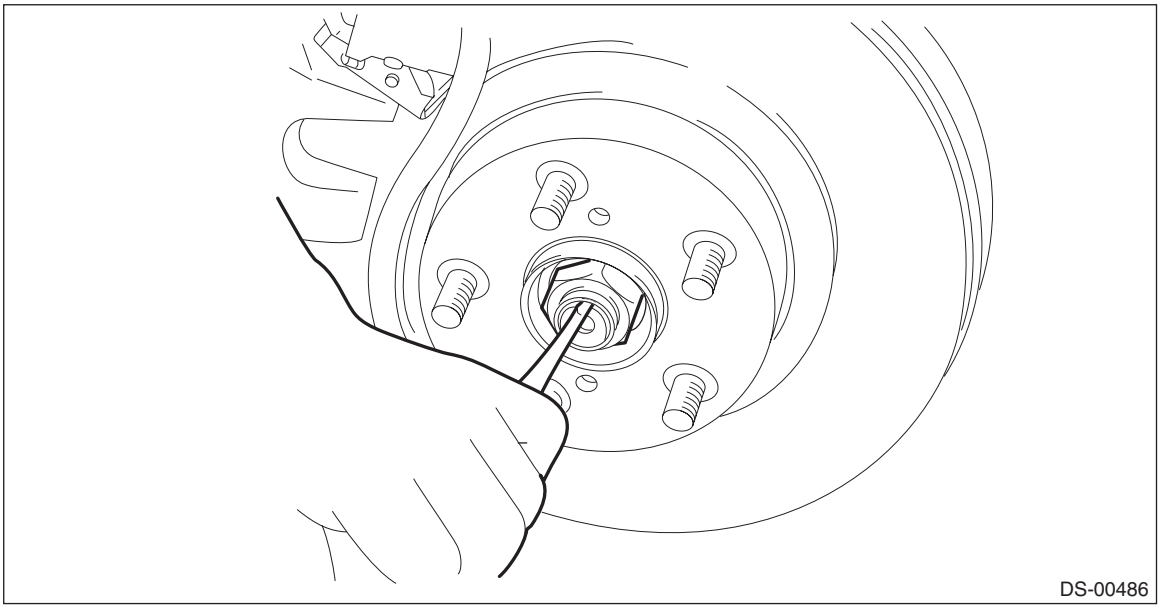

3) Remove the front disc brake caliper from the front axle housing.

(1) Remove the mounting bolts, and then remove the front disc brake caliper.
(2) Prepare wiring harnesses etc. to be discarded, and suspend the front disc brake caliper from the shock absorber with the harnesses.

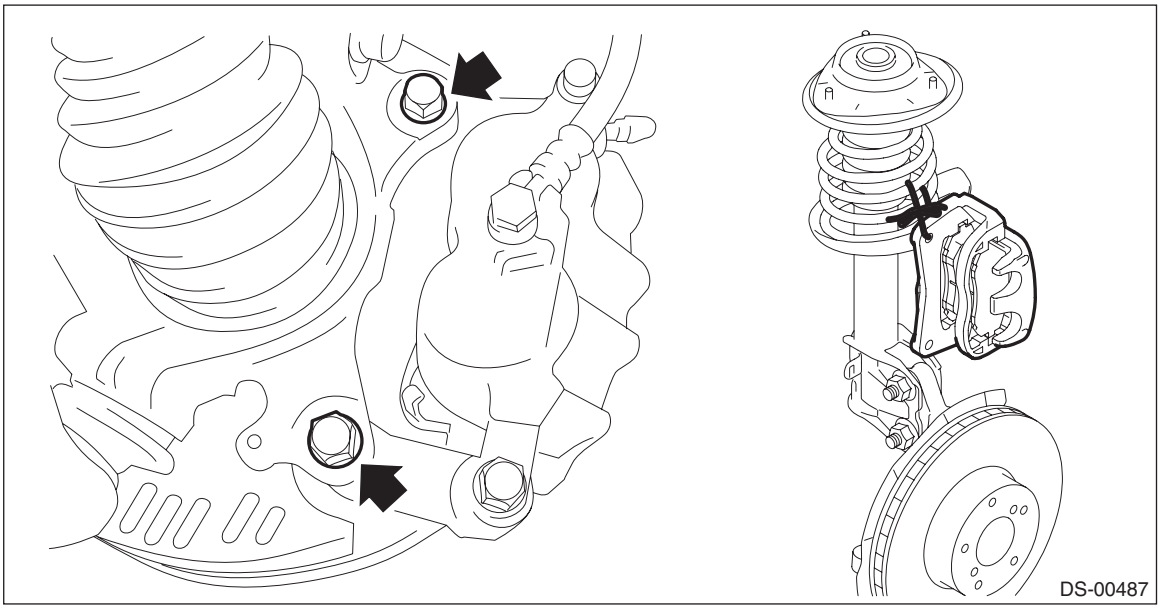

4) Remove the disc rotor.

NOTE:
When the disc rotor is difficult to be removed from the front hub unit bearing, screw in 8 mm (0.31 in) bolt to the threaded part of the disc rotor (A), and remove the disc rotor.

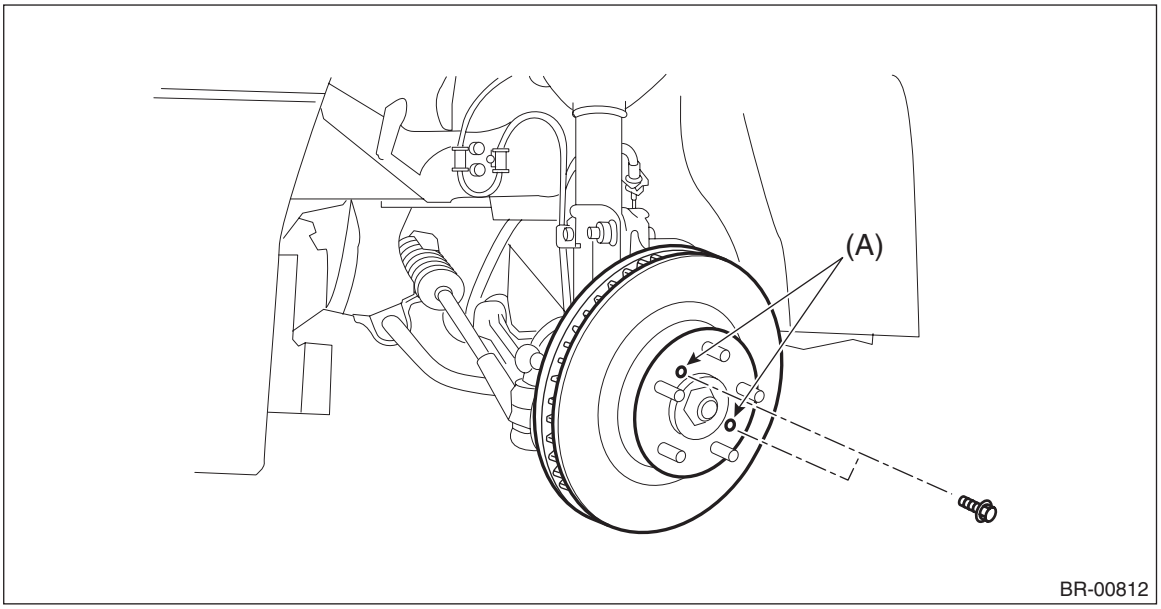

5) Disconnect the tie-rod end.
   (1) Pull out the cotter pin.
   (2) Remove the castle nut.
   (3) Extract the tie-rod end from the front axle housing.

PREPARATION TOOL:
Tie-rod end puller

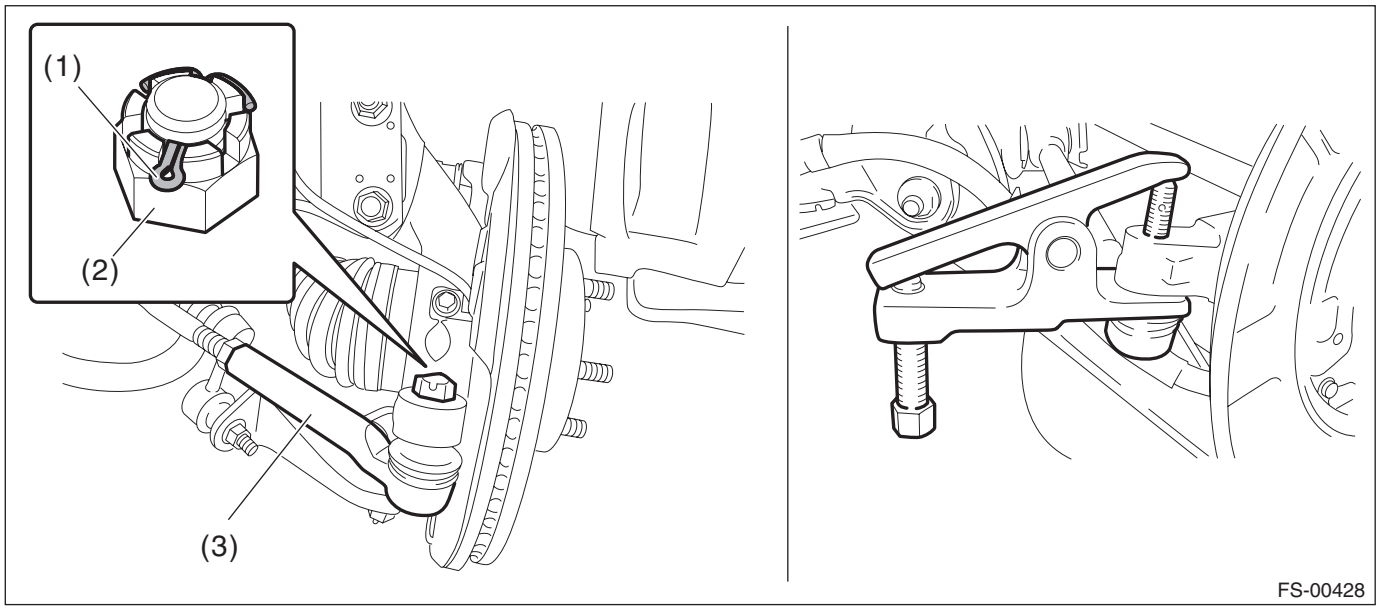

6) Remove the bolts, and remove the front ABS wheel speed sensor.

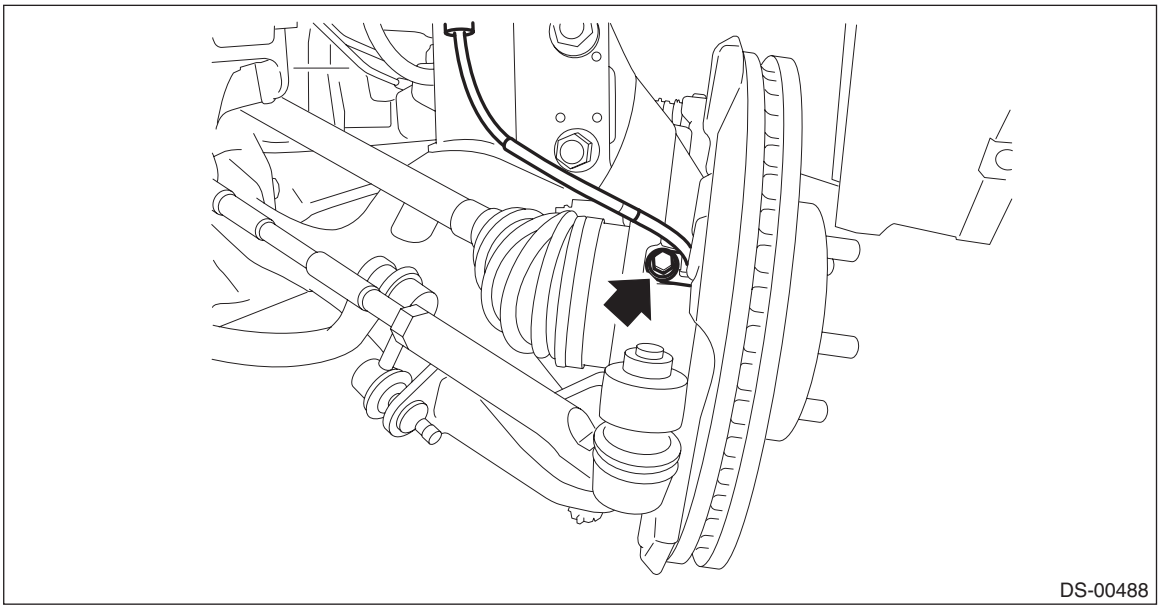

7) Remove the stabilizer link and ball joint.

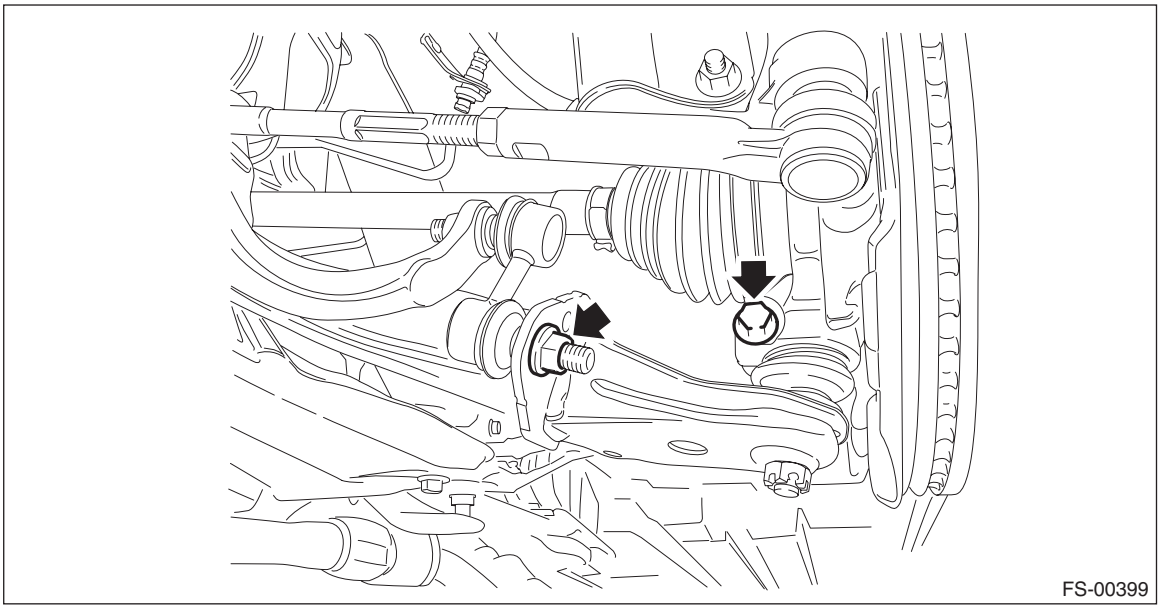

8) Using a bar, remove the front drive shaft from transmission.

CAUTION:
Be careful not to allow the bar to damage holder area.

9) Remove the front drive shaft assembly from the hub. If it is hard to remove, use the ST.

PREPARATION TOOL:
ST1: AXLE SHAFT PULLER (926470000)
ST2: AXLE SHAFT PULLER PLATE (28099PA110)

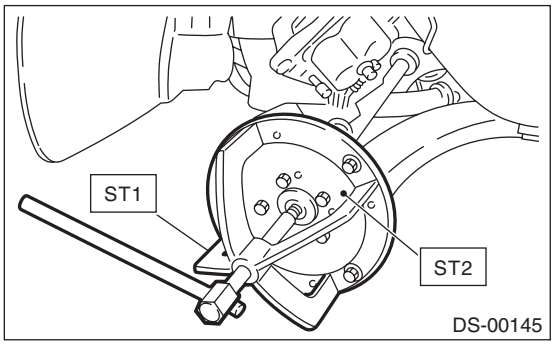

10) Place an alignment marks on the camber adjusting bolt and front axle housing.
11) Remove two bolts to remove the front axle housing from the strut.

B: INSTALLATION

1) Install the front drive shaft. <Ref. to DS-49, INSTALLATION, Front Drive Shaft.>
2) Install the ball joint to the front axle housing.

CAUTION:
Before tightening, make sure the lower side of front axle housing and stepped section of ball joint are in contact.

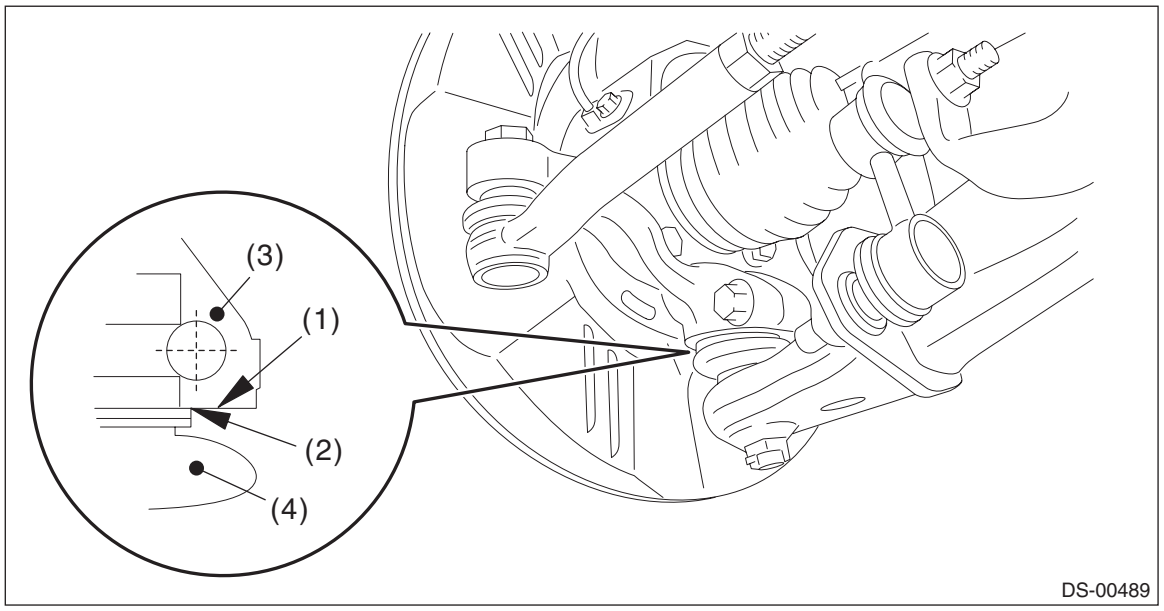

(1) Lower side of front axle housing
(2) Raised section of ball joint
(3) Front axle housing
(4) Ball joint

Tightening torque:
50 N·m (5.1 kgf-m, 36.9 ft-lb)
3) Install the front ABS wheel speed sensor.

Tightening torque:
7.5 N·m (0.76 kgf-m, 5.5 ft-lb)
4) Install the disc rotor.

5) Install the disc brake.

Tightening torque:
120 N·m (12.24 kgf-m, 88.5 ft-lb)

6) Install the stabilizer link.

Tightening torque:
60 N·m (6.12 kgf-m, 44.3 ft-lb)

7) Connect the tie-rod ends.
(1) Connect the tie-rod ends from the front axle housing.
(2) Tighten the castle nuts to the specified torque.

CAUTION:
When connecting the tie-rod, do not hit the cap at bottom of tie-rod end with a hammer.

Tightening torque:
27 N·m (2.75 kgf-m, 19.9 ft-lb)

(3) Tighten the castle nut within the range of 60° so that the cotter pin hole and cutout portion of the castle nut are aligned.
(4) Insert the cotter pin, and bend the tip of the pin to fix it.

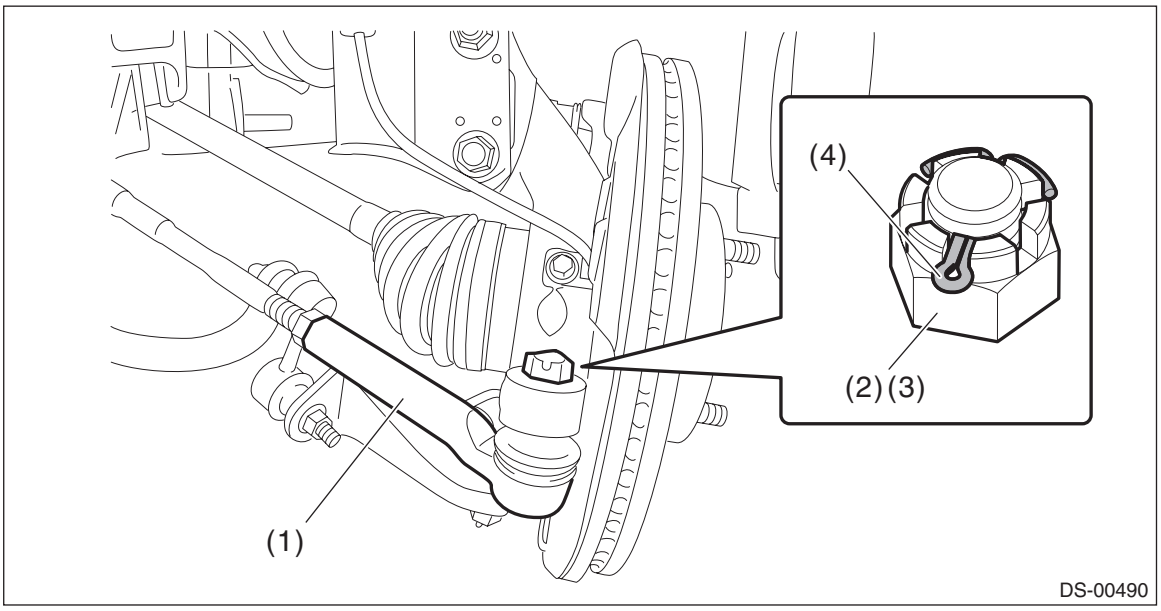

8) While depressing the brake pedal, tighten a new axle nut to the specified torque and lock it securely.

CAUTION:
Do not load the front axle before tightening the axle nut. Doing so may damage the hub bearing.

Tightening torque:
220 N·m (22.43 kgf-m, 162.3 ft-lb)

9) Inspect the lean of axis direction using a dial gauge. Replace the bearing if the load range exceeds the limitation.

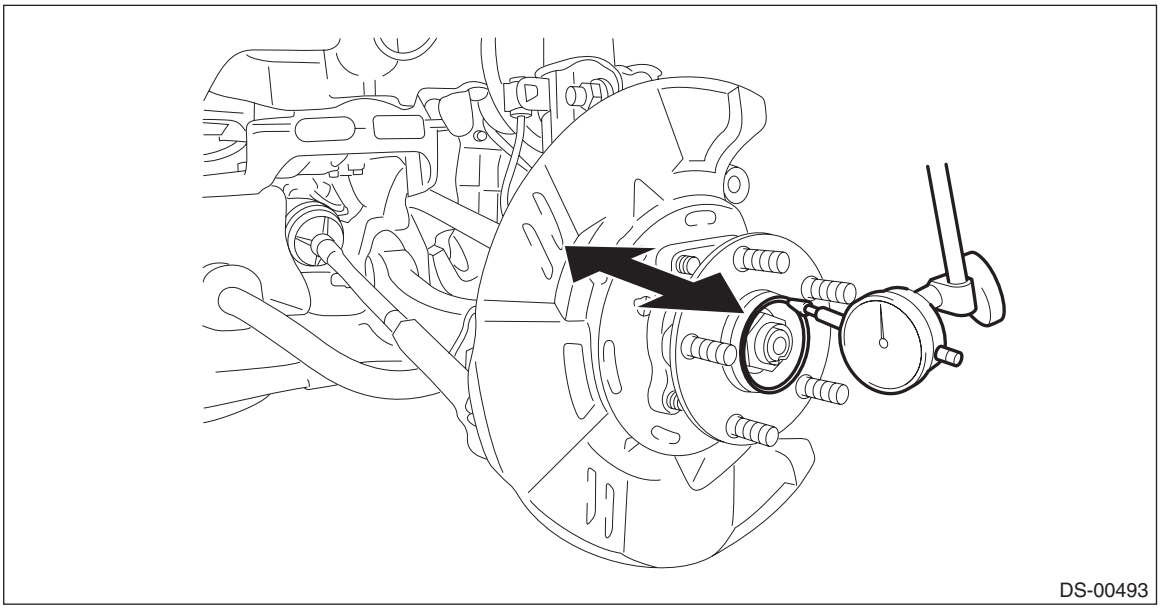

Service limit:
Maximum: 0.05 mm (0.0020 in)

10) After tightening the axle nut, lock it securely.

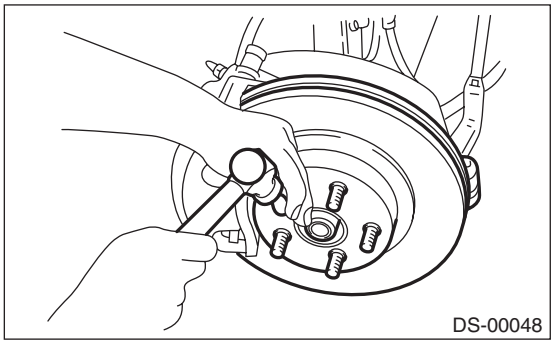

11) Install the wheel.

Tightening torque:
120 N·m (12.24 kgf-m, 88.5 ft-lb)

12) Moving the front tire up and down by hand, check there is no play in bearing, and check the wheel rotates smoothly.

CAUTION:
If there is any fault in the bearing, replace hub unit bearing.

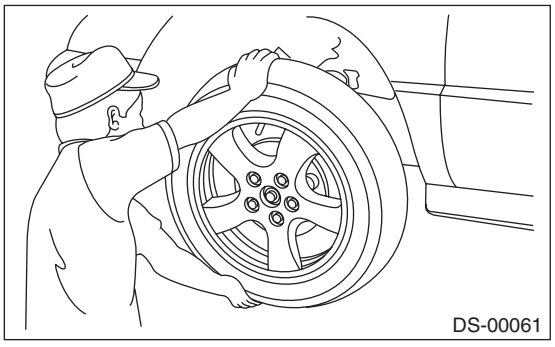

13) Inspect the wheel alignment and adjust if necessary.
- Inspection: <Ref. to FS-9, INSPECTION, Wheel Alignment.>
- Adjustment: <Ref. to FS-14, ADJUSTMENT, Wheel Alignment.>

C: DISASSEMBLY

1) Remove bolt from the front axle housing, and remove the front hub unit bearing and disc brake cover.

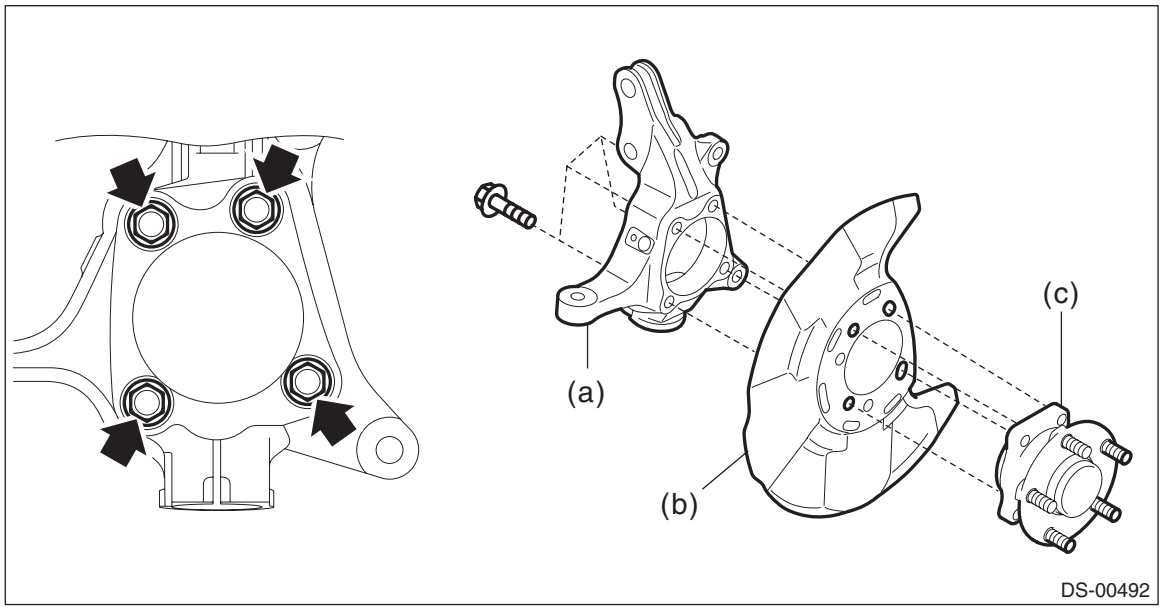

(a) Front axle housing (b) Disc brake cover (c) Front hub unit bearing

CAUTION:
- **Do not get closer the tool which charged magnetism to magnetic encoder.**
- **Be careful not to damage the magnetic encoder.**

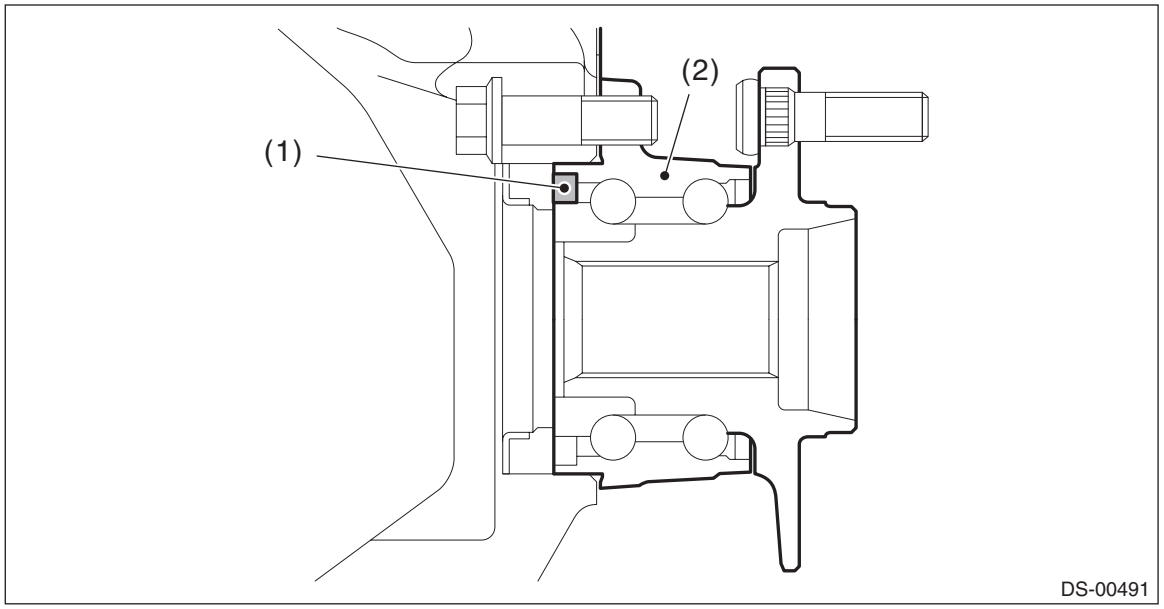

(1) Magnetic encoder (2) Front hub unit bearing

2) Disassemble the front hub unit bearing. <Ref. to DS-28, DISASSEMBLY, Front Hub Unit Bearing.>

D: ASSEMBLY

1) Assemble the front hub unit bearing. <Ref. to DS-28, ASSEMBLY, Front Hub Unit Bearing.>
2) Install the front axle housing (a) and front hub unit bearing (c) to the disc brake cover (b) as shown in the figure, and tighten the bolt.

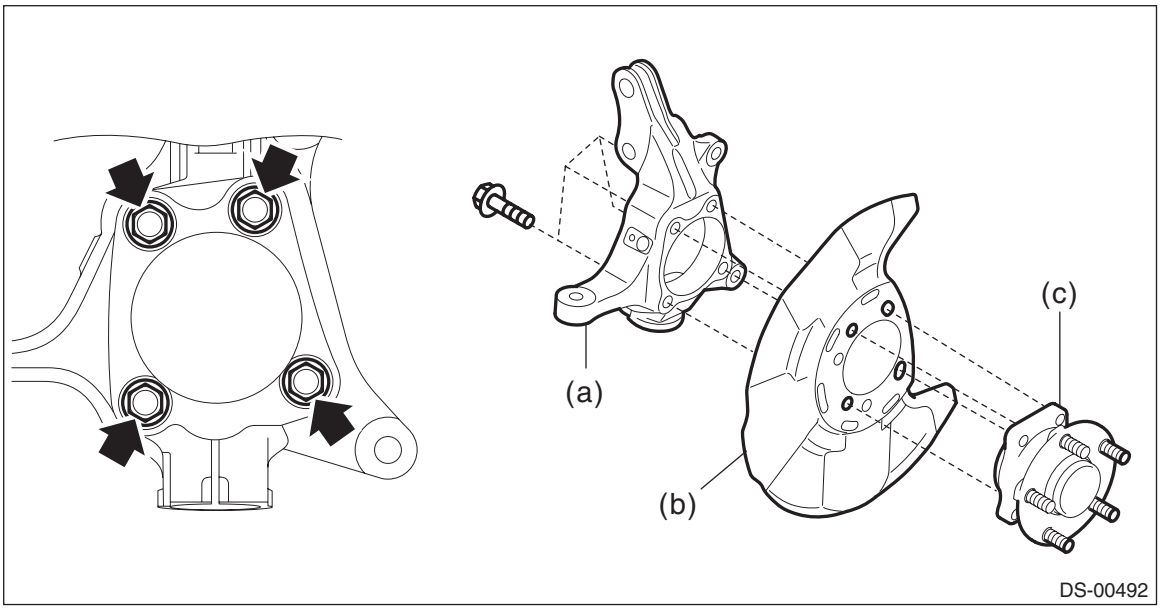

Tightening torque:
65 N·m (6.63 kgf-m, 47.9 ft-lb)

CAUTION:
- **Do not get closer the tool which charged magnetism to magnetic encoder.**
- **Be careful not to damage the magnetic encoder.**

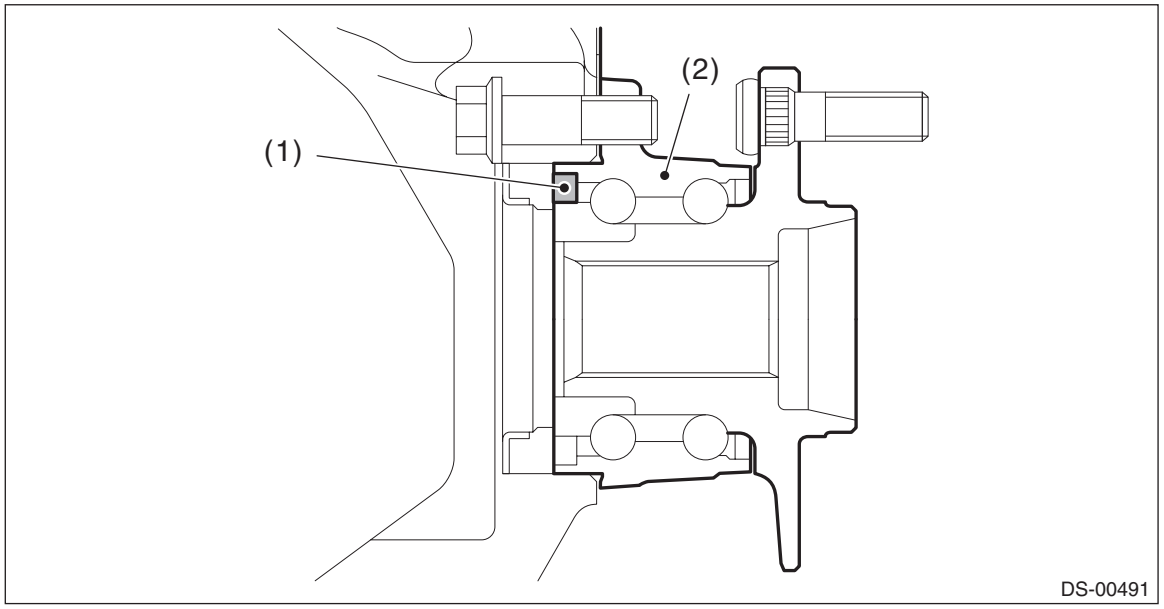

(1) Magnetic encoder
(2) Front hub unit bearing

4. Front Hub Unit Bearing

A: REMOVAL

1) Lift up the vehicle, and then remove the front wheels.
2) Remove the axle nut.

CAUTION:
Do not loosen the axle nut while the front axle is loaded. Doing so may damage the hub bearing.

(1) Lift the crimped section of axle nut.
(2) Remove the axle nut using a socket wrench while depressing the brake pedal.

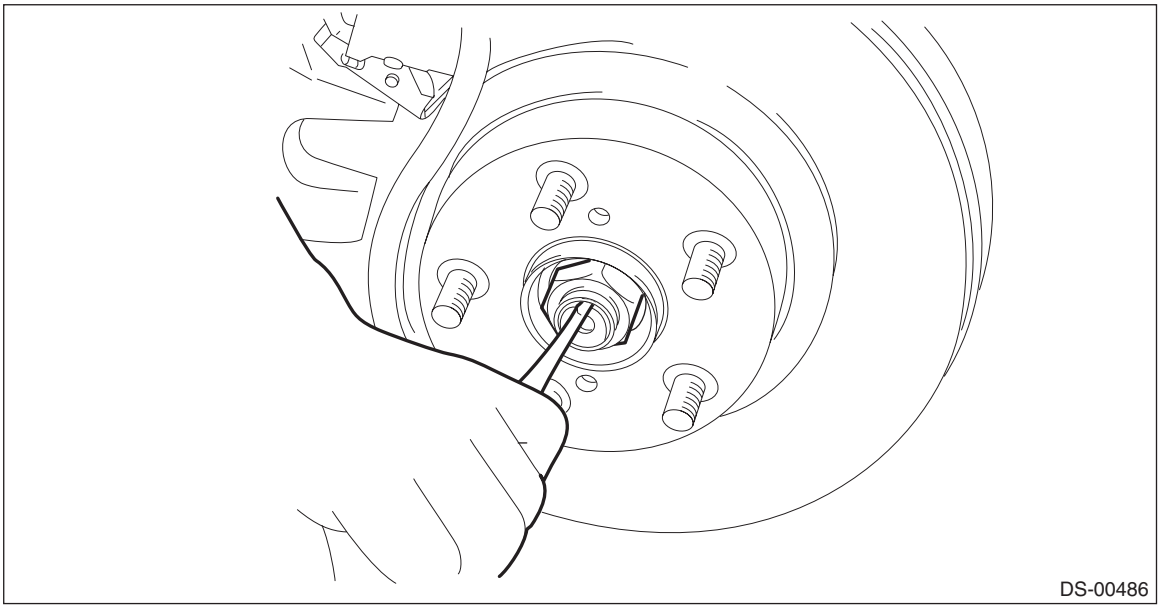

3) Remove the front ABS wheel speed sensor.

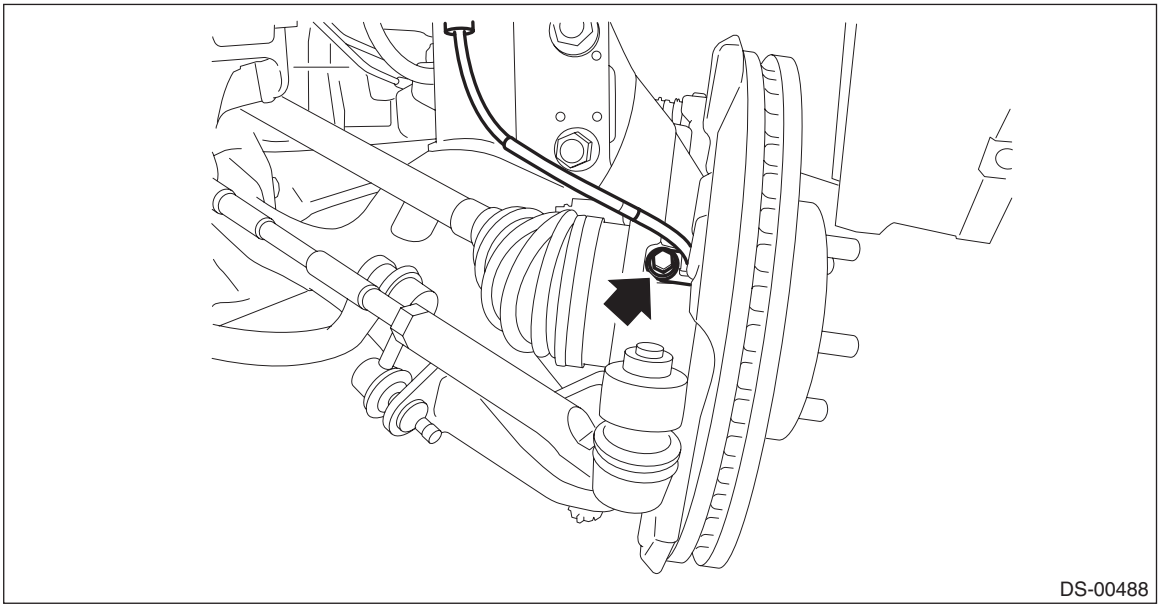

4) Remove the front disc brake caliper from the front axle housing.
(1) Remove the mounting bolts, and then remove the front disc brake caliper.
(2) Prepare wiring harnesses etc. to be discarded, and suspend the front disc brake caliper from the shock absorber with the harnesses.

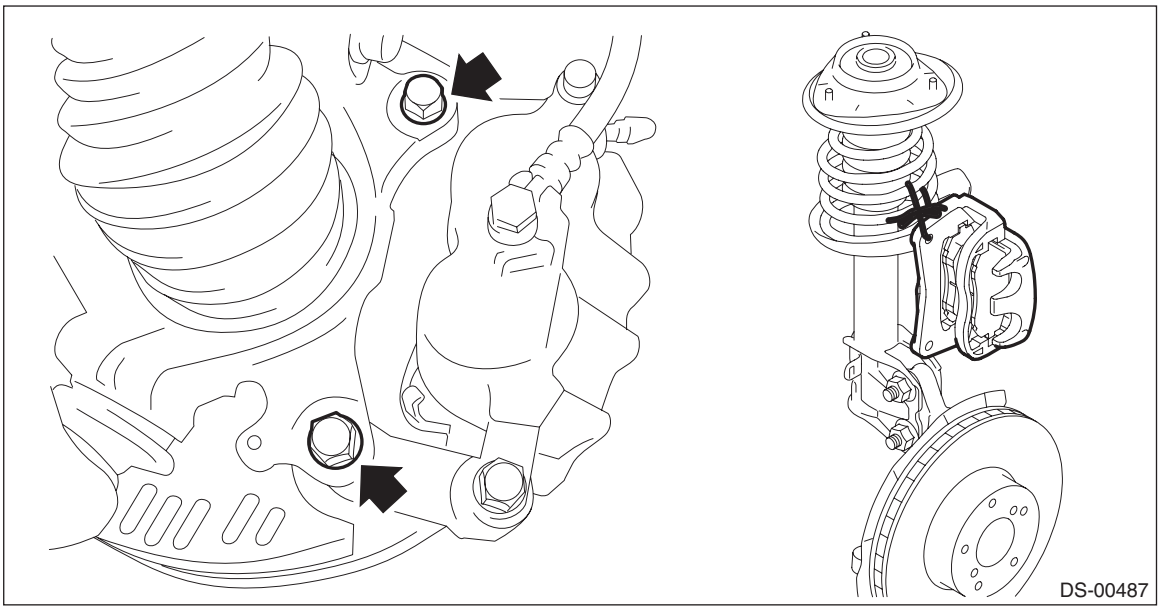

5) Remove the disc rotor.

NOTE:
When the disc rotor is difficult to be removed from the front hub unit bearing, screw in 8 mm (0.31 in) bolt to the threaded part of the disc rotor (A), and remove the disc rotor.

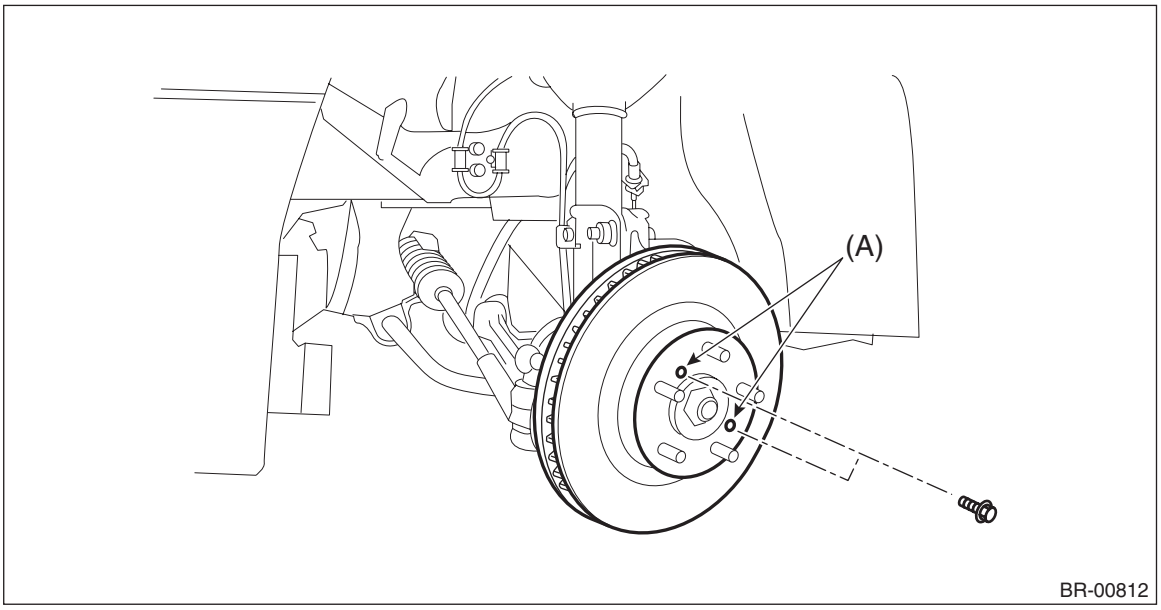

6) Remove the bolt from the front axle housing.

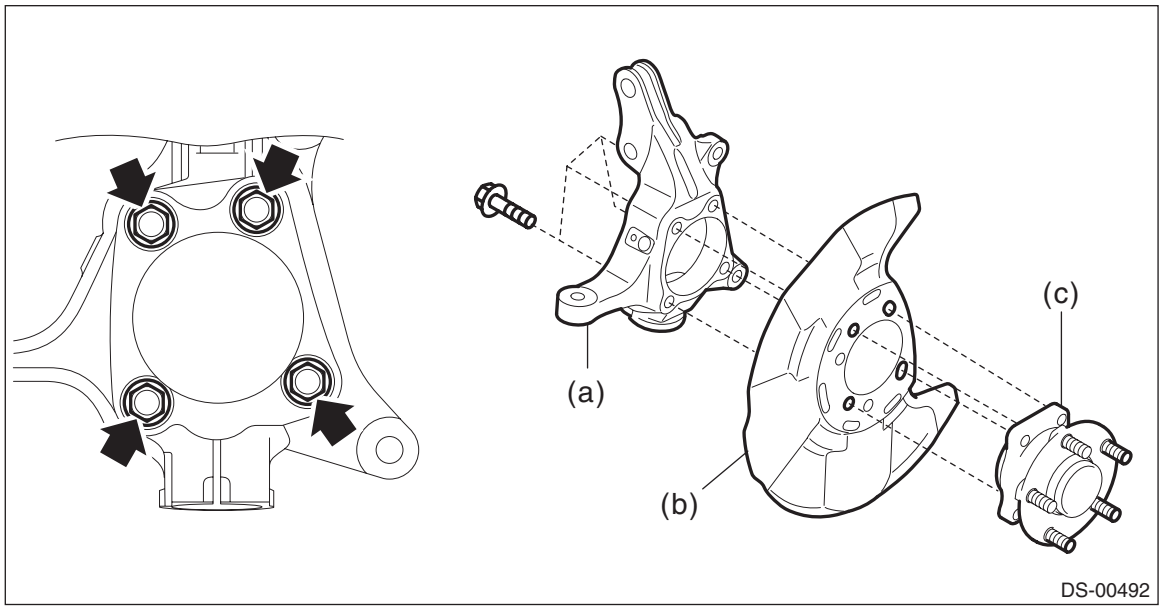

(a) Front axle housing (b) Disc brake cover (c) Front hub unit bearing

CAUTION:
- **Do not get closer the tool which charged magnetism to magnetic encoder.**
- **Be careful not to damage the magnetic encoder.**

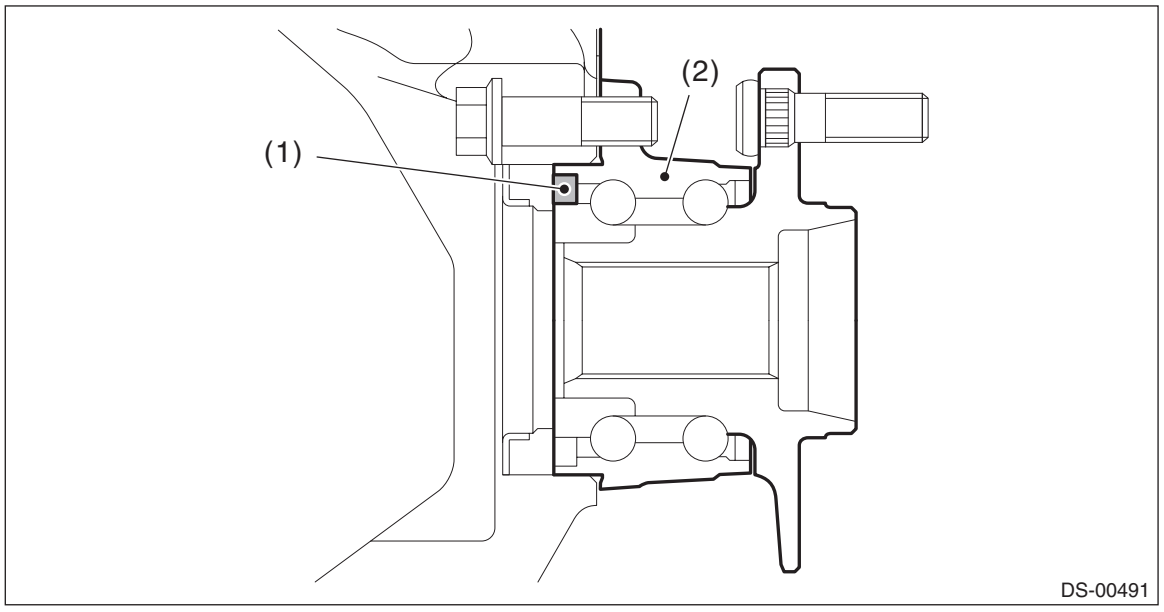

(1) Magnetic encoder (2) Front hub unit bearing

7) Remove the front hub unit bearing. If it is hard to remove, use the ST.

PREPARATION TOOL:
ST1: AXLE SHAFT PULLER (926470000)
ST2: AXLE SHAFT PULLER PLATE (28099PA110)

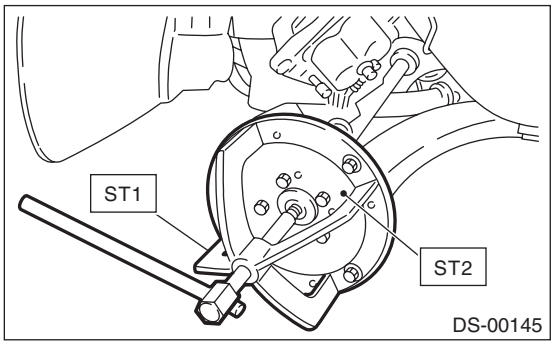

B: INSTALLATION

1) Install the front axle housing (a) and front hub unit bearing (c) to the disc brake cover (b) as shown in the figure, and tighten the bolt.

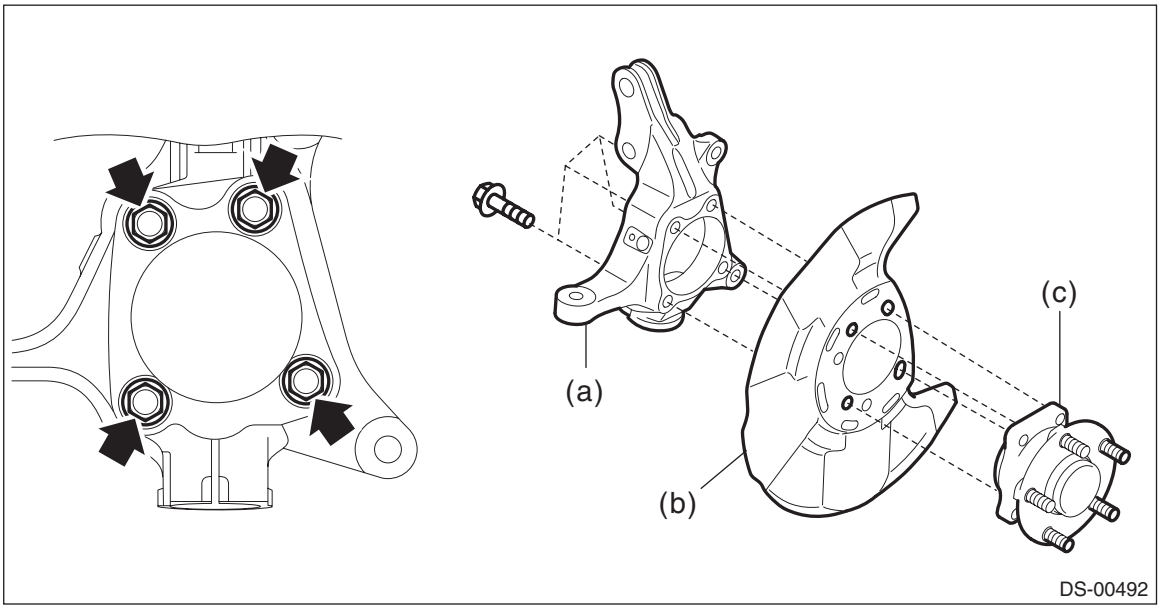

Tightening torque:
65 N·m (6.63 kgf-m, 47.9 ft-lb)

2) Install the front drive shaft. <Ref. to DS-49, INSTALLATION, Front Drive Shaft.>
3) Tighten the axle nut temporarily.
4) Install the disc rotor to hub unit bearing.
5) Install the disc brake caliper to the front axle housing.

Tightening torque:
120 N·m (12.24 kgf-m, 88.5 ft-lb)

6) Install the front ABS wheel speed sensor.

Tightening torque:
7.5 N·m (0.76 kgf-m, 5.5 ft-lb)

7) While pressing the brake pedal, tighten the new axle nuts to the specified torque.

CAUTION:
Do not load the front axle before tightening the axle nut. Doing so may damage the hub bearing.

Tightening torque:
220 N·m (22.43 kgf-m, 162.3 ft-lb)

8) Inspect the lean of axis direction using a dial gauge. Replace the bearing if the load range exceeds the limitation.

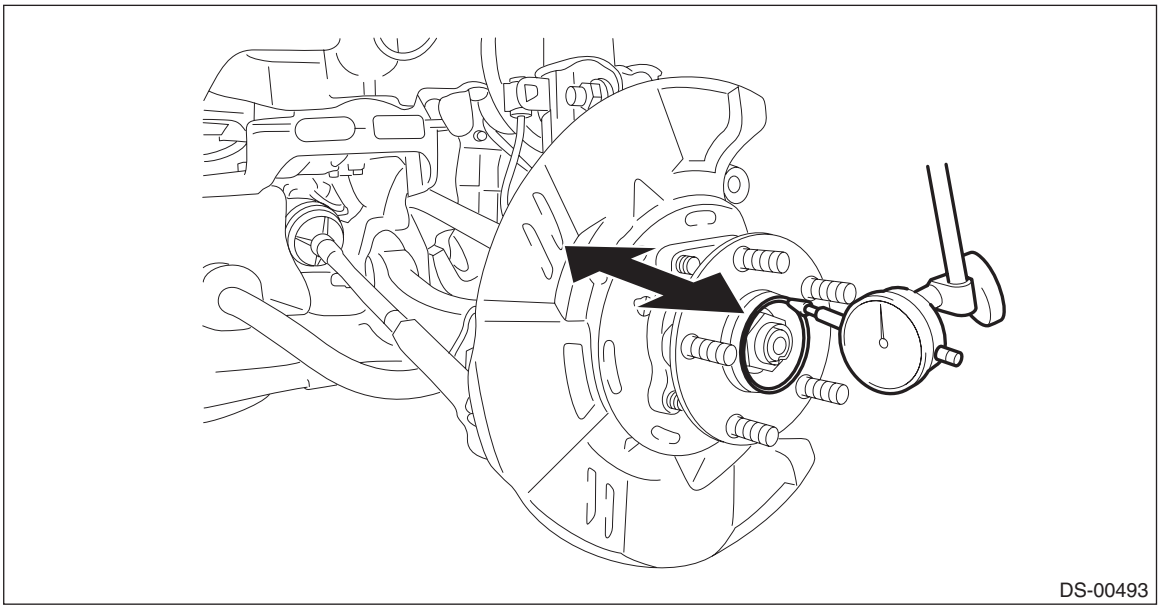

Service limit:
Maximum: 0.05 mm (0.0020 in)

9) After tightening the axle nut, lock it securely.

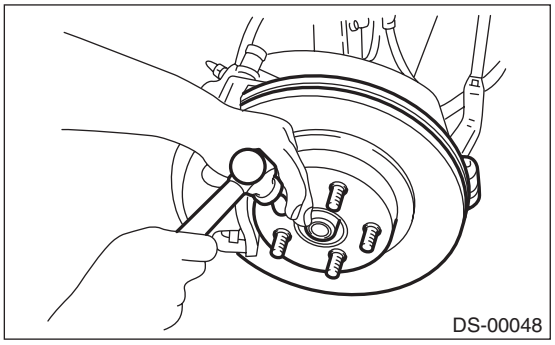

10) Install the wheel.

Tightening torque:
120 N·m (12.24 kgf-m, 88.5 ft-lb)

11) Moving the front tire up and down by hand, check there is no play in bearing, and check the wheel rotates smoothly.

CAUTION:
If there is any fault in the bearing, replace hub unit bearing.

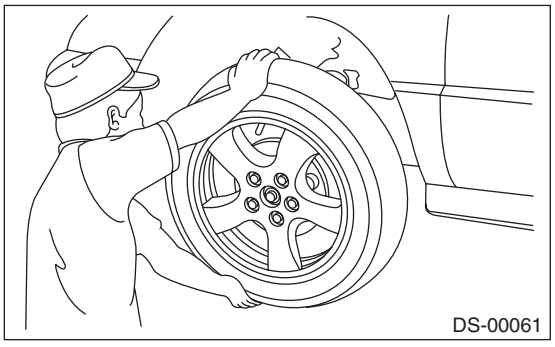

C: DISASSEMBLY

Using the ST or a hydraulic press, push out the hub bolt (b) from the front hub unit bearing (a).

CAUTION:
- **Be careful not to hammer the hub bolts. This may deform the hub.**
- **Do not reuse the hub bolt.**

PREPARATION TOOL:
ST: HUB STAND (28399AG000)

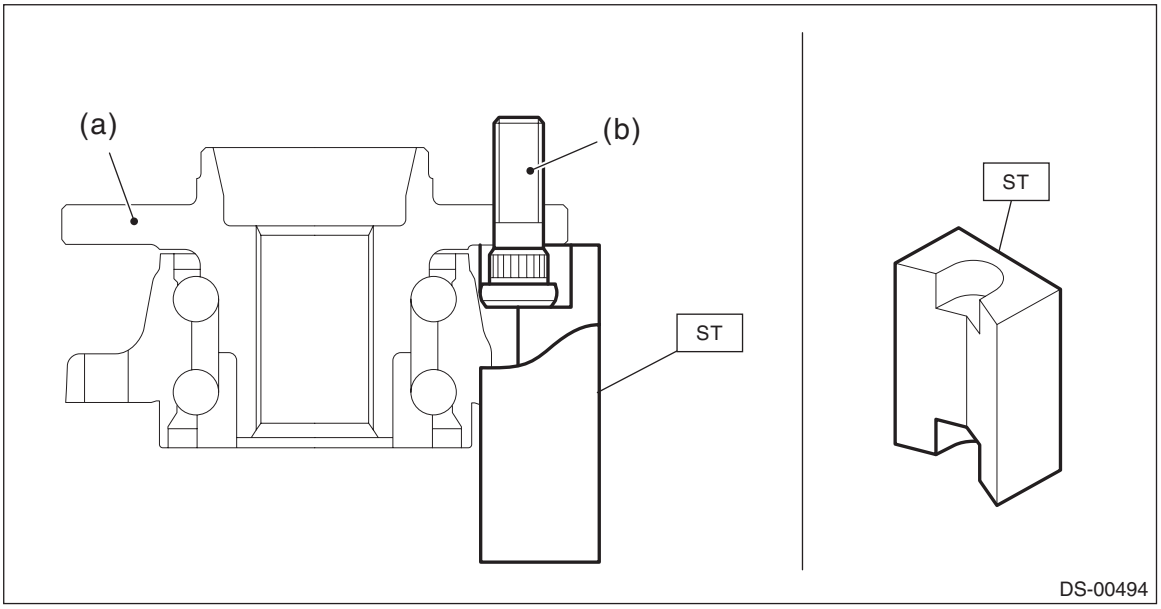

NOTE:
Since the hub unit bearing can not be disassembled, only hub bolts can be removed.

D: ASSEMBLY

1) Install the hub unit bearing to the ST securely.

PREPARATION TOOL:
ST: HUB STAND (927080000)

2) Using a press, press the new hub bolts (b) until their seating surfaces contact the hub unit bearing (a).

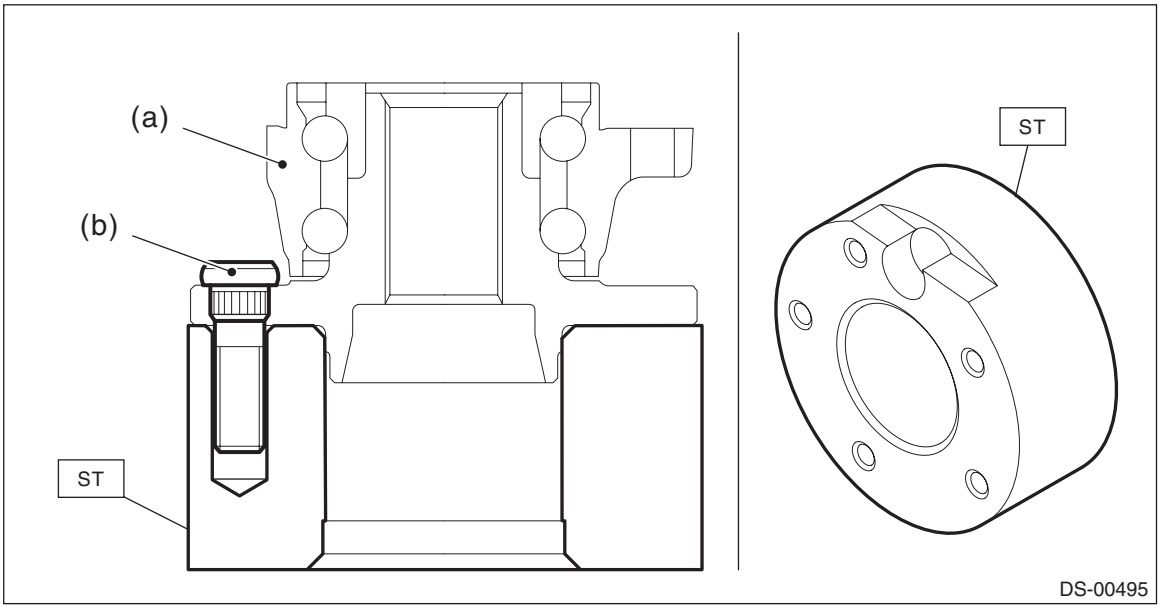

NOTE:
Use the 12 mm (0.47 in) dia. holes in the HUB STAND to prevent bolts from tilting.

E: INSPECTION

1) Moving the front tire up and down by hand, check there is no play in bearing, and check the wheel rotates smoothly.

CAUTION:
If there is any fault in the bearing, replace hub unit bearing.

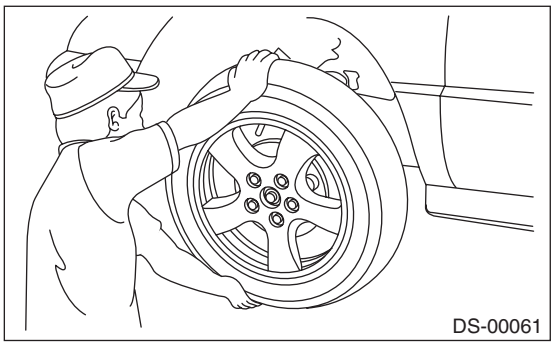

2) Inspect the lean of axis direction using a dial gauge. Replace the bearing if the load range exceeds the limitation.

Service limit:
Maximum: 0.05 mm (0.0020 in)

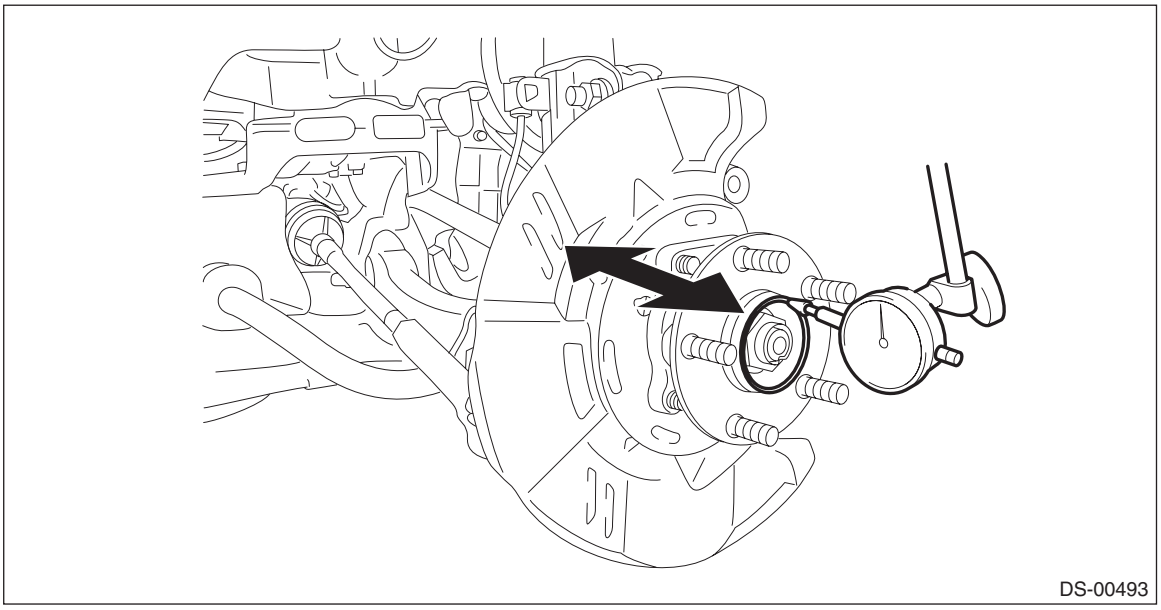

5. Rear Axle

A: REMOVAL

1) Lift up the vehicle, and then remove the rear wheels.
2) Remove the axle nut.

CAUTION:
Do not loosen the axle nut while the rear axle is loaded. Doing so may damage the hub bearing.

(1) Lift the crimped section of axle nut.
(2) Remove the axle nut using a socket wrench while depressing the brake pedal.

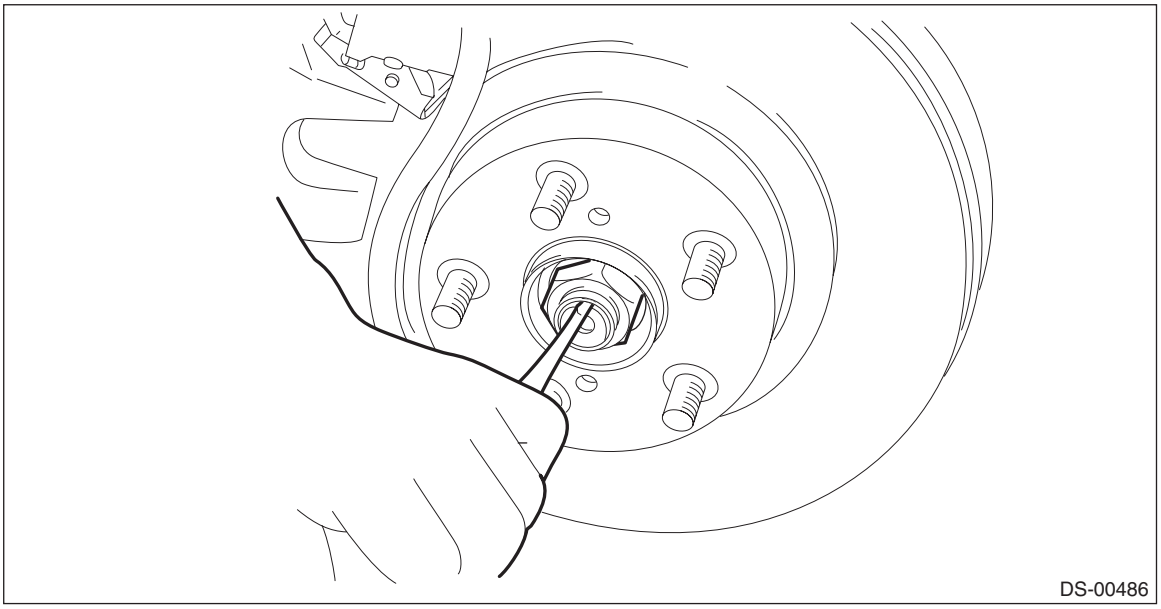

3) Remove the rear disc brake caliper from the rear axle housing.
(1) Remove the bolts, and remove the brake hose bracket and ABS wheel speed sensor.
(2) Remove the mounting bolts, and then remove the rear disc brake caliper.

(3) Prepare wiring harnesses etc. to be discarded, and suspend the rear disc brake caliper from the shock absorber with the harnesses.

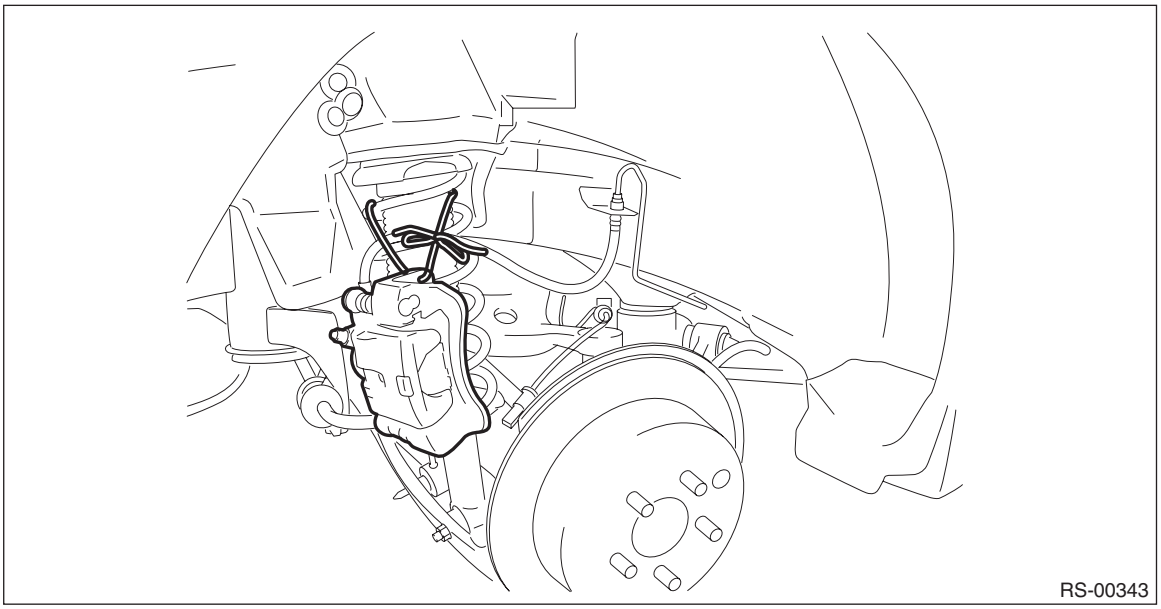

4) Remove the rear disc rotor.

NOTE:
If it is difficult to remove the disc rotor, perform the following two methods in order.
1. Insert the flat tip screwdriver (b) into the brake adjustment hole (A), and rotate the adjusting screw (a) until the brake shoe moves far enough to remove the disc rotor (c).

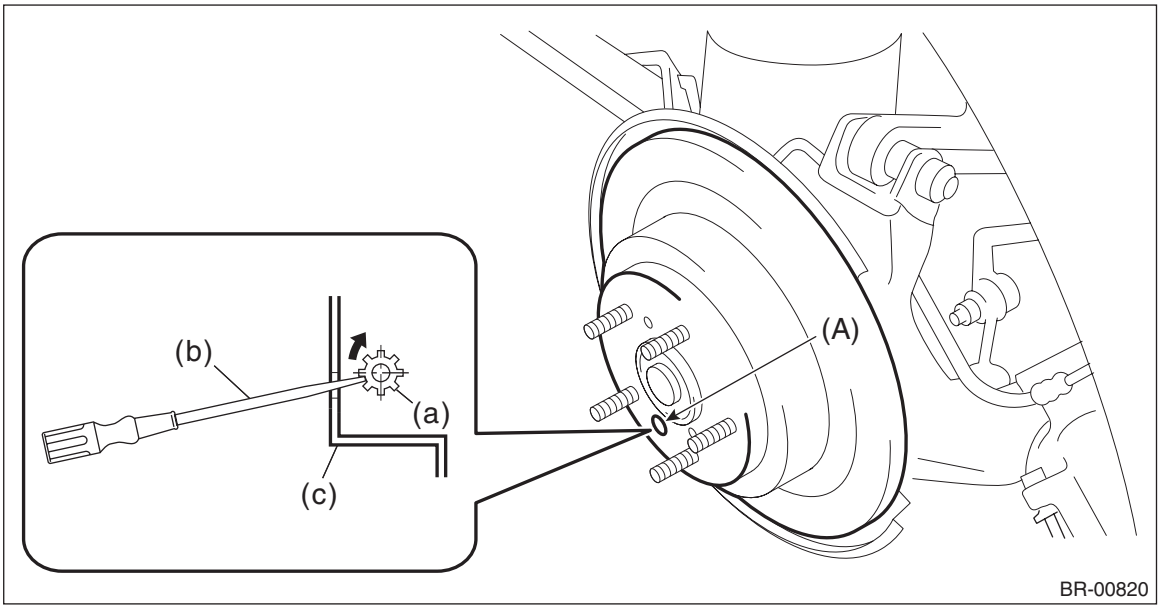

2. When the disc rotor is difficult to be removed from the rear hub unit bearing, screw in 8 mm (0.31 in) bolt to the threaded part of the disc rotor (A), and remove the disc rotor.

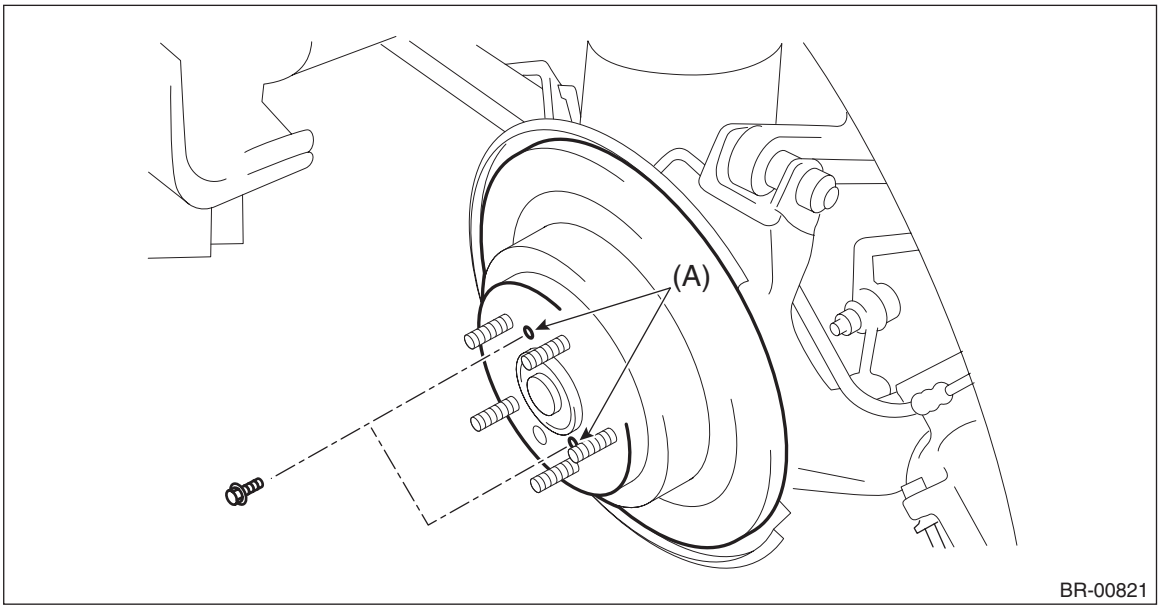

5) Remove the rear hub unit bearing.

CAUTION:
- **Be careful not to damage the magnetic encoder.**
- **Do not get closer the tool which charged magnetism to magnetic encoder.**

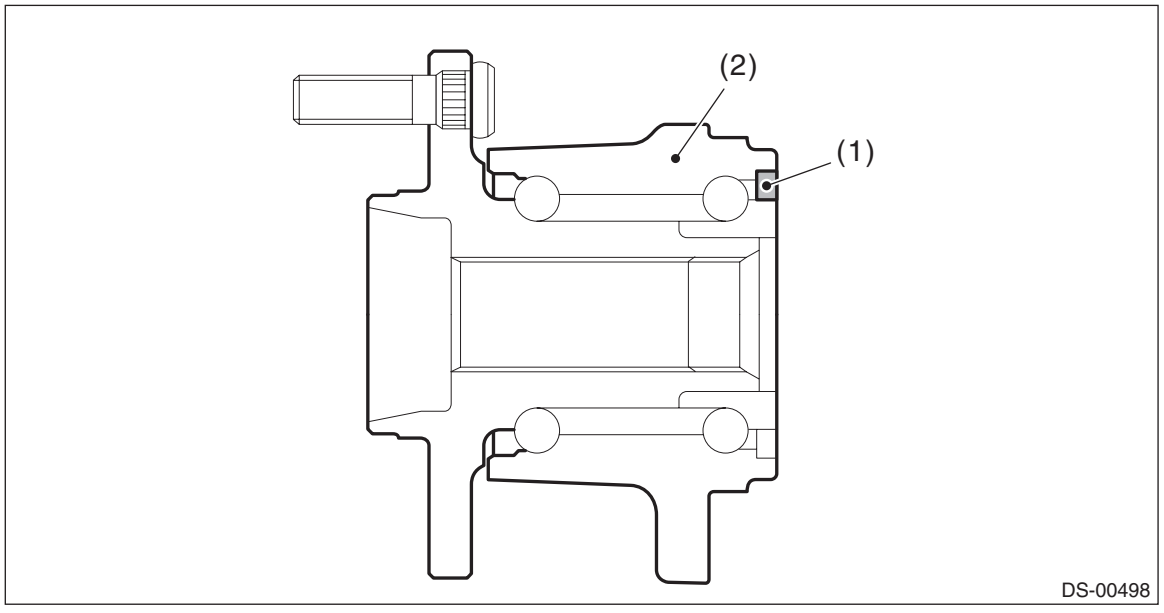

(1) Magnetic encoder (2) Rear hub unit bearing

(1) Remove the bolt from the rear axle housing.

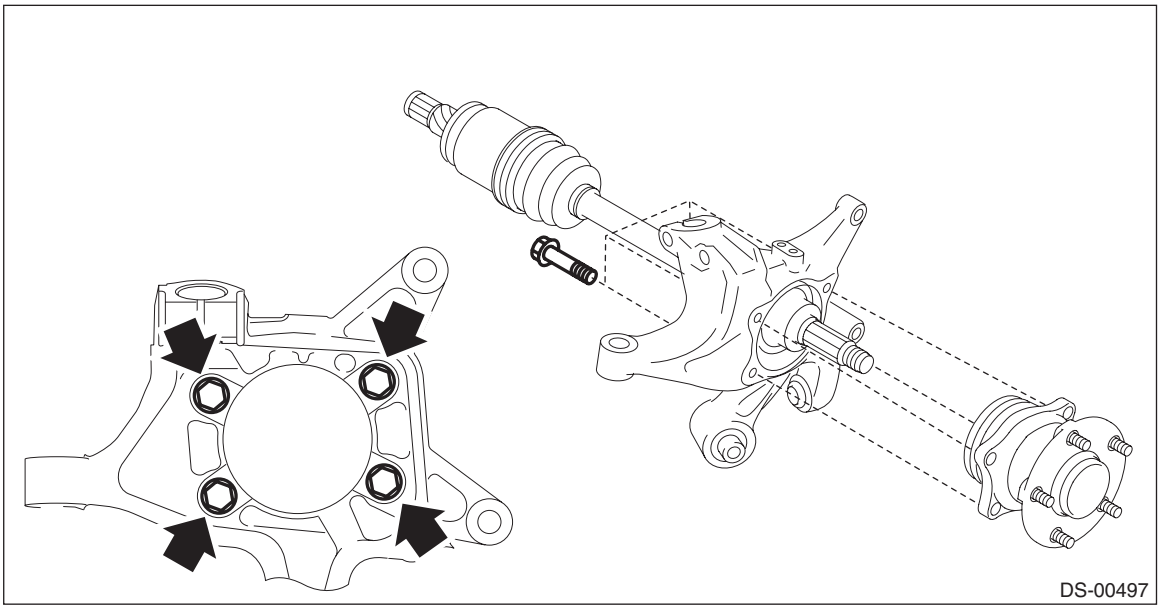

(2) Remove the rear hub unit bearing.

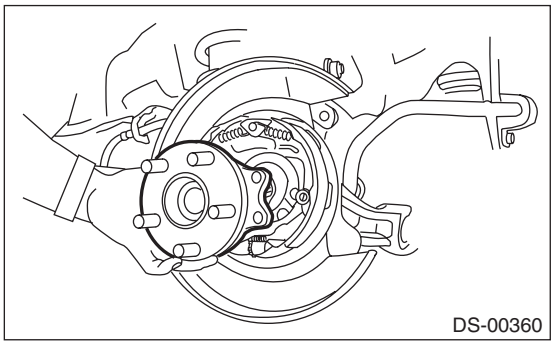

NOTE:
If it is hard to remove, use the ST.

PREPARATION TOOL:
ST1: AXLE SHAFT PULLER (926470000)
ST2: AXLE SHAFT PULLER PLATE (28099PA110)

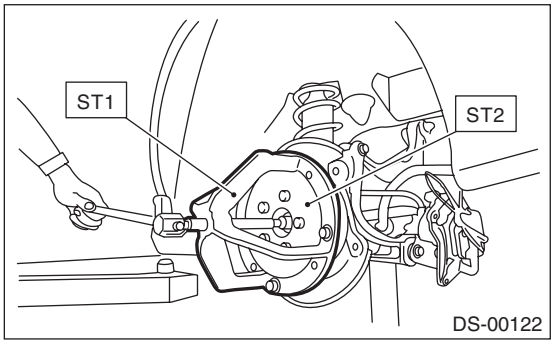

6) Remove the front lateral link.
(1) Remove the snap pin (a) and nut (b).
(2) Using a puller, remove the ball joint.

PREPARATION TOOL:
Tie-rod end puller

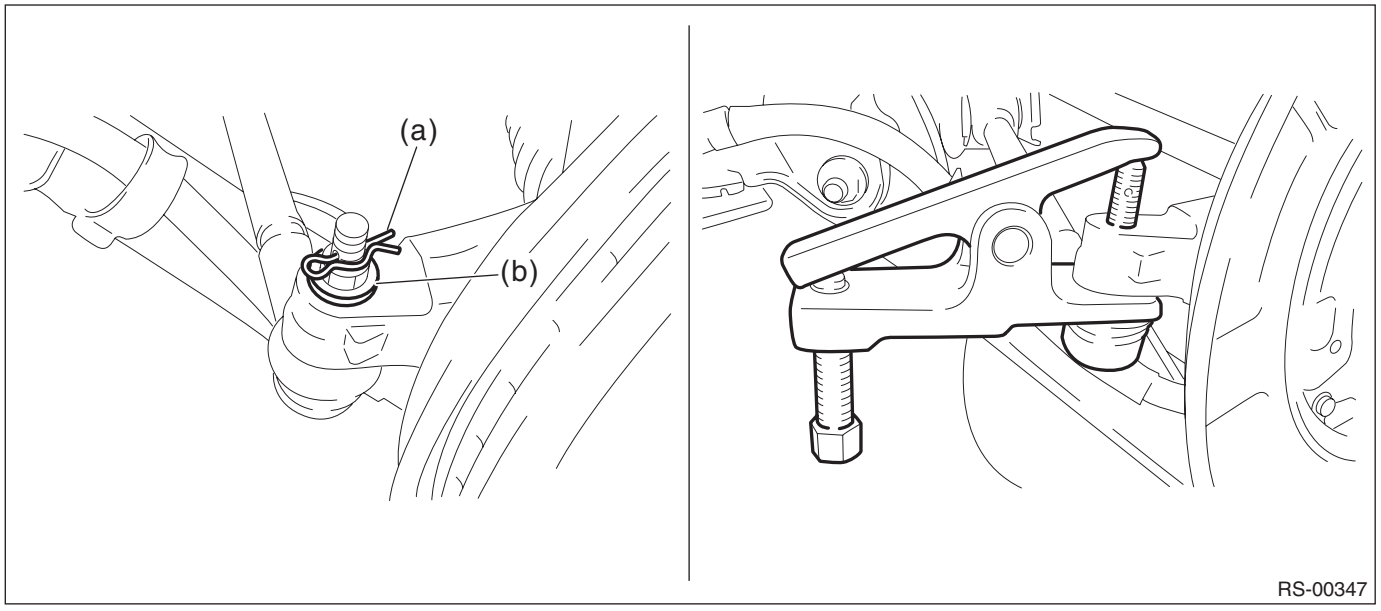

7) Remove the rear axle housing.
(1) Remove the bolts for the upper arm, trailing link, and rear lateral link, and then separate the rear axle housing.

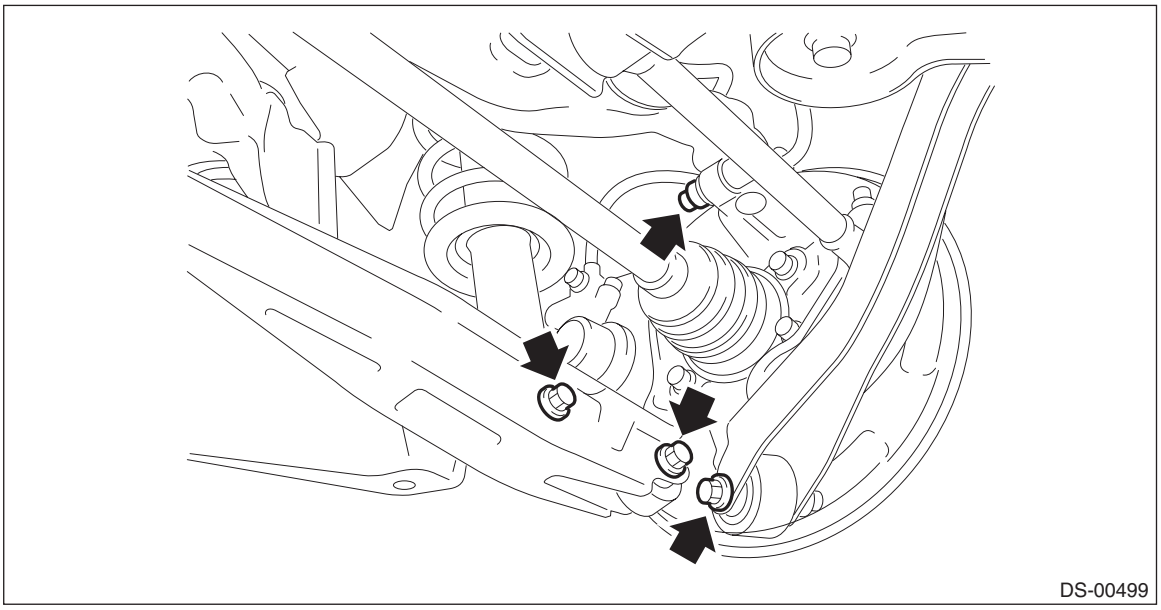

(2) Remove the rear axle housing.

B: INSTALLATION

1) Temporarily tighten the rear axle housing to the upper arm.
2) Aligning with the mounting hole of the rear brake back plate, temporarily tighten the rear hub unit bearing to the rear axle housing.

CAUTION:
- **Be careful not to damage the magnetic encoder.**
- **Do not get closer the tool which charged magnetism to magnetic encoder.**

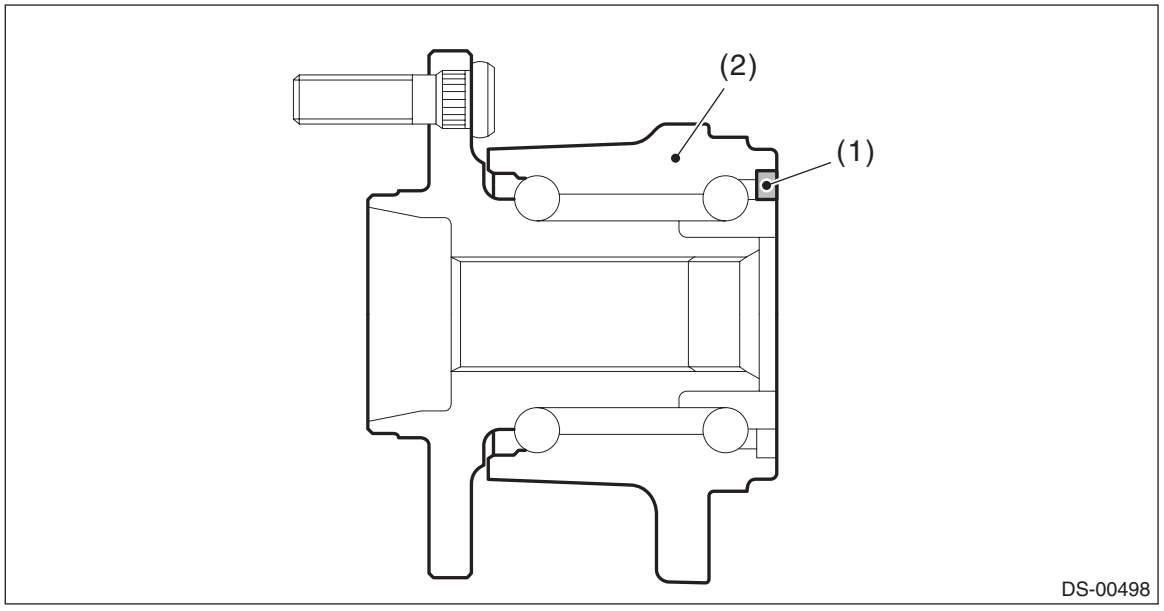

(1) Magnetic encoder (2) Rear hub unit bearing

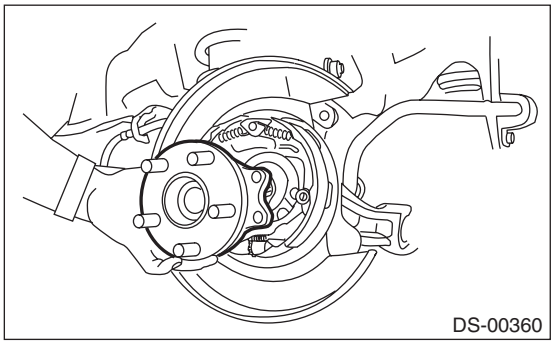

3) Attach the rear drive shaft to the rear hub unit bearing.
4) Tighten the new axle nut temporarily.

CAUTION:
Use new axle nuts.
5) Attach the links to the rear axle housing and tighten them to the specified torque.

Tightening torque:
Upper arm: 80 N·m (8.2 kgf-m, 59 ft-lb)
Front lateral link: 60 N·m (6.1 kgf-m, 44.3 ft-lb)
Rear lateral link: 80 N·m (8.2 kgf-m, 59 ft-lb)
Trailing link: 80 N·m (8.2 kgf-m, 59 ft-lb)

6) Tighten the rear hub unit bearing.

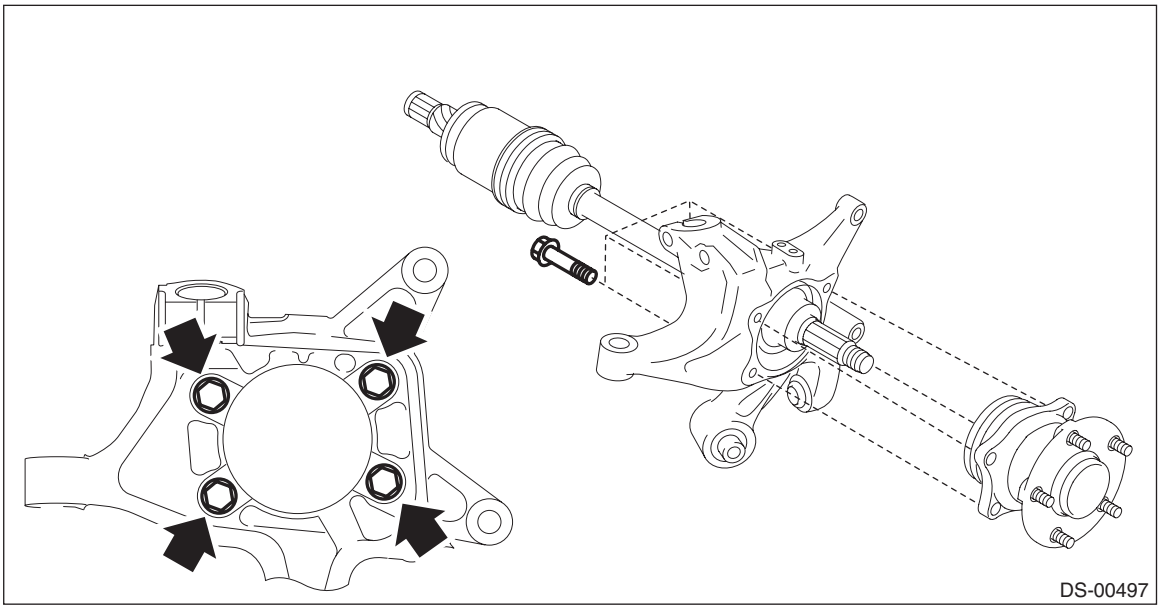

Tightening torque:
65 N·m (6.63 kgf-m, 47.9 ft-lb)

7) Install the rear disc rotor.
8) Install the rear disc brake.

Tightening torque:
66 N·m (6.73 kgf-m, 48.7 ft-lb)

9) Install the brake hose bracket and rear ABS wheel speed sensor.

Tightening torque:
Brake hose bracket: 33 N·m (3.36 kgf-m, 24.3 ft-lb)
Rear ABS wheel speed sensor: 7.5 N·m (0.76 kgf-m, 5.5 ft-lb)

10) While pressing the brake pedal, tighten the new axle nuts to the specified torque.

CAUTION:
Do not load the rear axle before tightening the axle nut. Doing so may damage the hub bearing.

Tightening torque:
240 N·m (24.47 kgf-m, 177 ft-lb)

11) Inspect the lean of axis direction using a dial gauge. Replace the bearing if the load range exceeds the limitation.

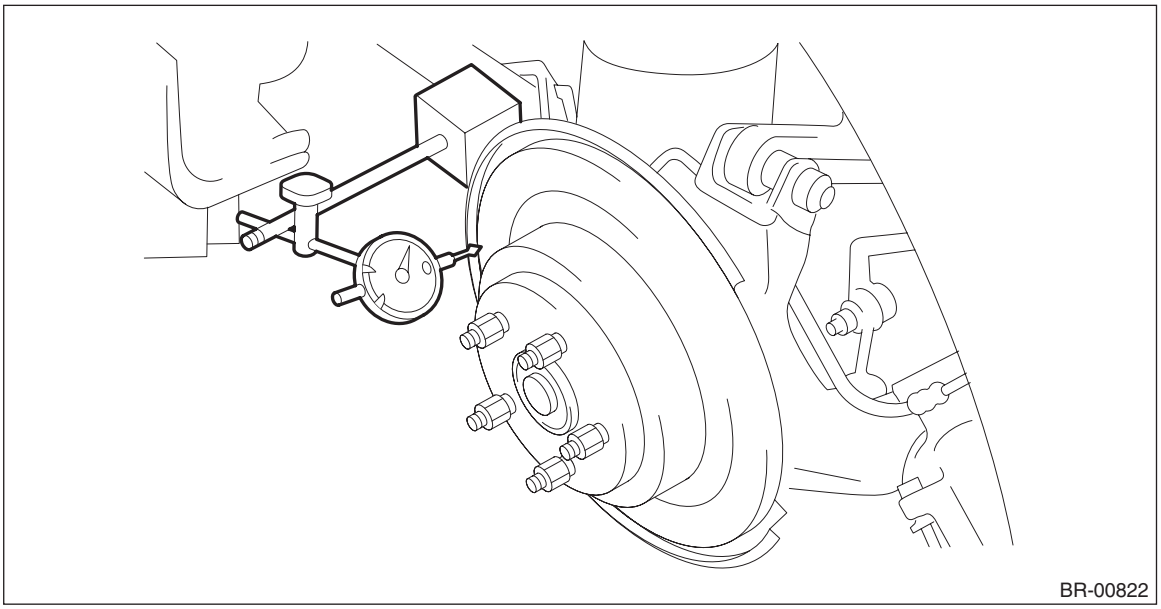

Service limit:
Maximum: 0.05 mm (0.0020 in)

12) After tightening the axle nut, lock it securely.

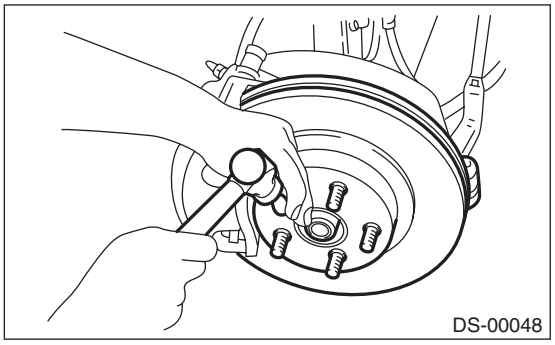

13) Install the rear wheels.

Tightening torque:
120 N·m (12.24 kgf-m, 88.5 ft-lb)

14) Moving the rear tire up and down by hand, check there is no backlash in bearing, and check the wheel rotates smoothly.

CAUTION:
If there is any fault in the bearing, replace hub unit bearing.

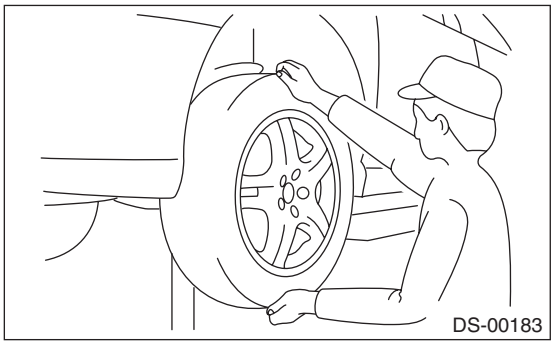

15) Inspect the wheel alignment and adjust if necessary.
- Inspection: <Ref. to FS-9, INSPECTION, Wheel Alignment.>
- Adjustment: <Ref. to FS-14, ADJUSTMENT, Wheel Alignment.>

C: DISASSEMBLY

For the removal procedure of bushing, refer to “Rear Trailing Link” in “REAR SUSPENSION”. <Ref. to RS-13, REAR AXLE HOUSING BUSHING, DISASSEMBLY, Rear Trailing Link.>

D: ASSEMBLY

For the installation procedure of bushing, refer to “Rear Trailing Link” in “REAR SUSPENSION”. <Ref. to RS-15, REAR AXLE HOUSING BUSHING, ASSEMBLY, Rear Trailing Link.>

6. Rear Hub Unit Bearing

A: REMOVAL

1) Lift up the vehicle, and then remove the rear wheels.
2) Remove the axle nut.

CAUTION:
Do not loosen the axle nut while the rear axle is loaded. Doing so may damage the hub bearing.

(1) Lift the crimped section of axle nut.
(2) Remove the axle nut using a socket wrench while depressing the brake pedal.

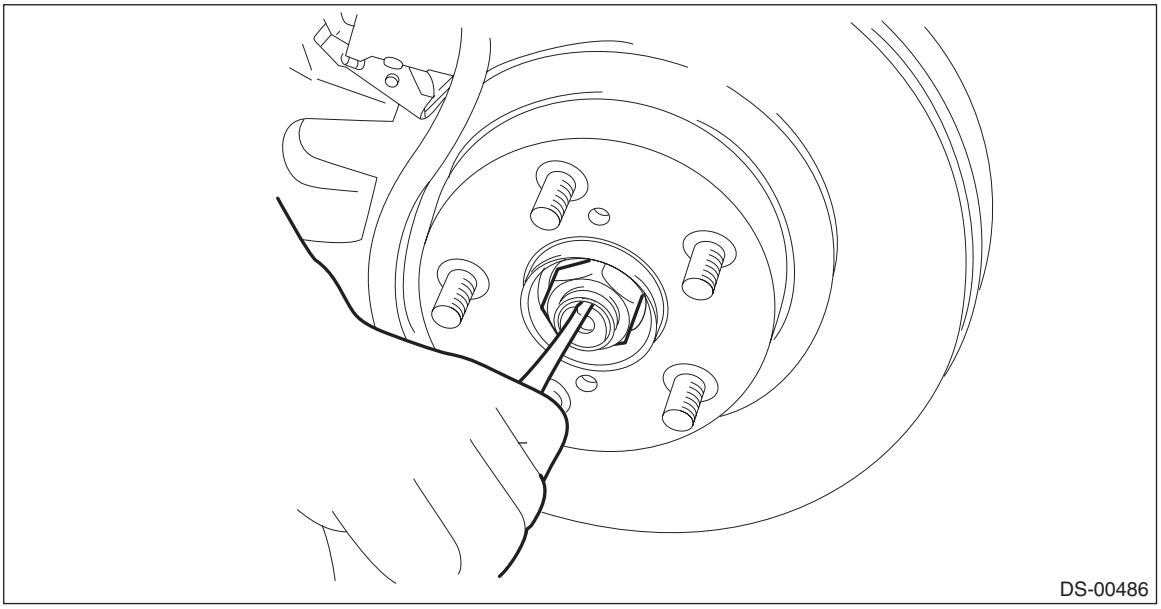

3) Remove the rear disc brake caliper from the rear axle housing.
(1) Remove the bolt from the brake hose bracket.
(2) Remove the mounting bolts, and then remove the rear disc brake caliper.

(3) Prepare wiring harnesses etc. to be discarded, and suspend the rear disc brake caliper from the shock absorber with the harnesses.

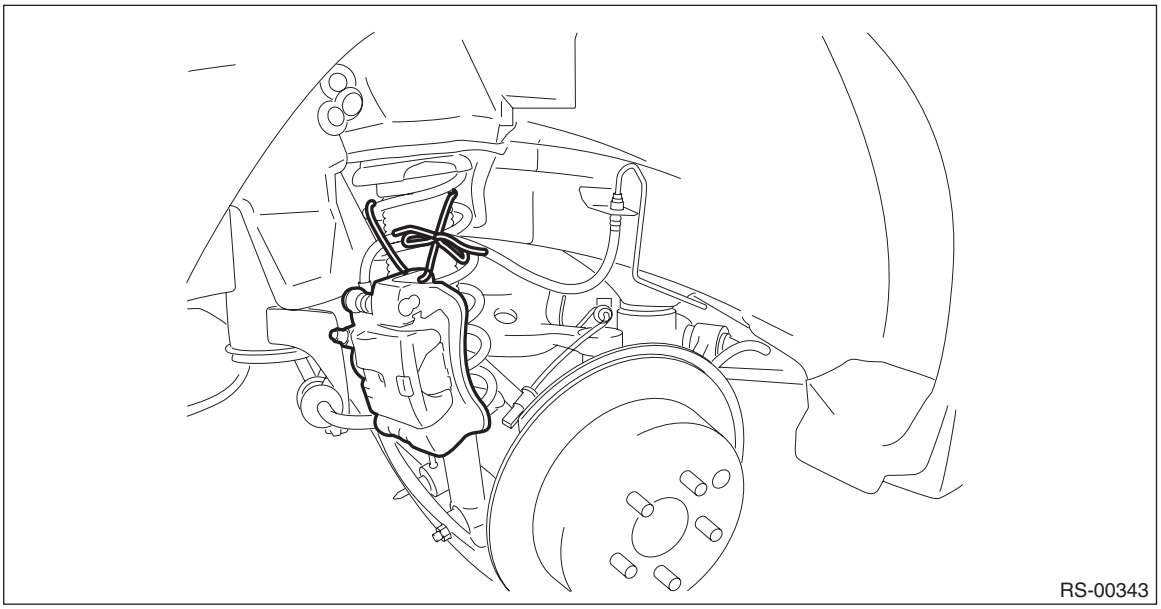

4) Remove the rear disc rotor.

NOTE:
If it is difficult to remove the disc rotor, perform the following two methods in order.
1. Insert the flat tip screwdriver (b) into the brake adjustment hole (A), and rotate the adjusting screw (a) until the brake shoe moves far enough to remove the disc rotor (c).

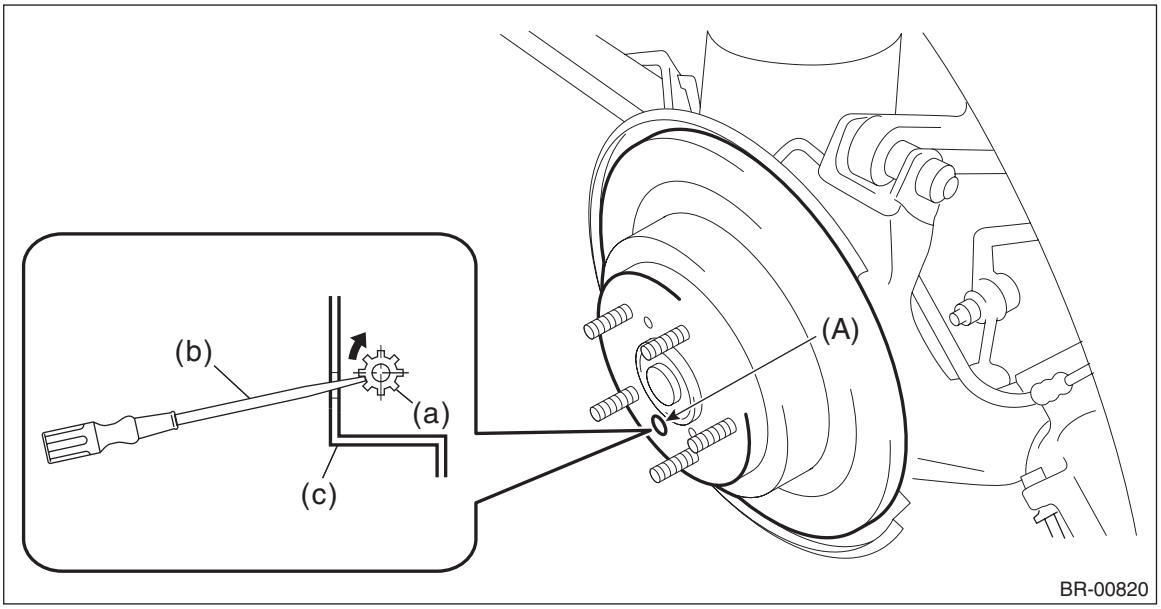

2. When the disc rotor is difficult to be removed from the rear hub unit bearing, screw in 8 mm (0.31 in) bolt to the threaded part of the disc rotor (A), and remove the disc rotor.

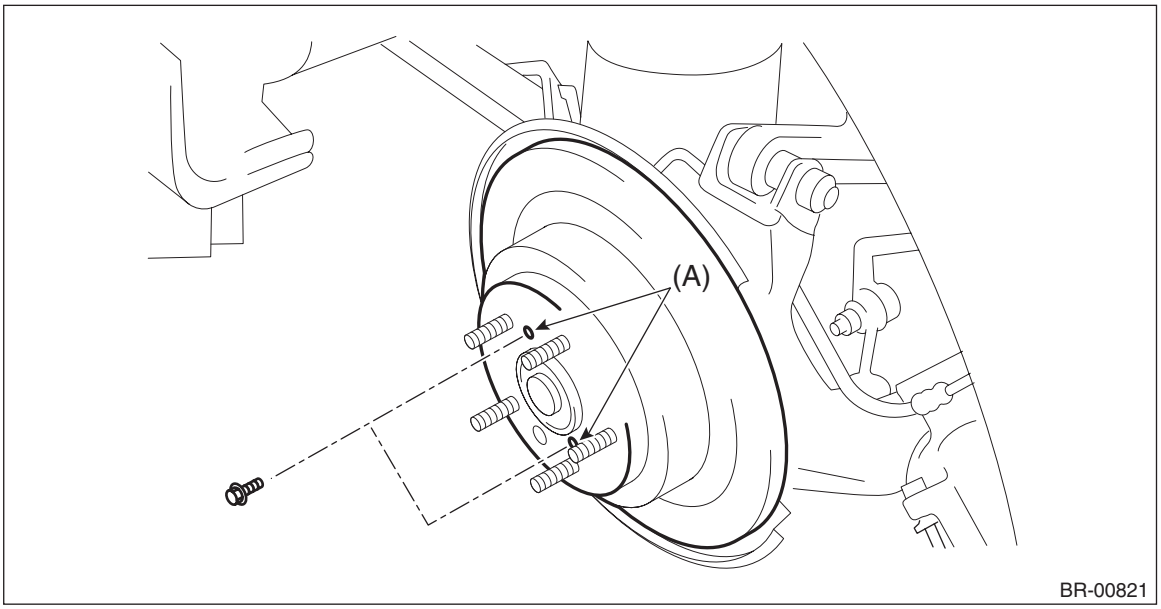

5) Remove the rear hub unit bearing.

CAUTION:
- **Be careful not to damage the magnetic encoder.**
- **Do not get closer the tool which charged magnetism to magnetic encoder.**

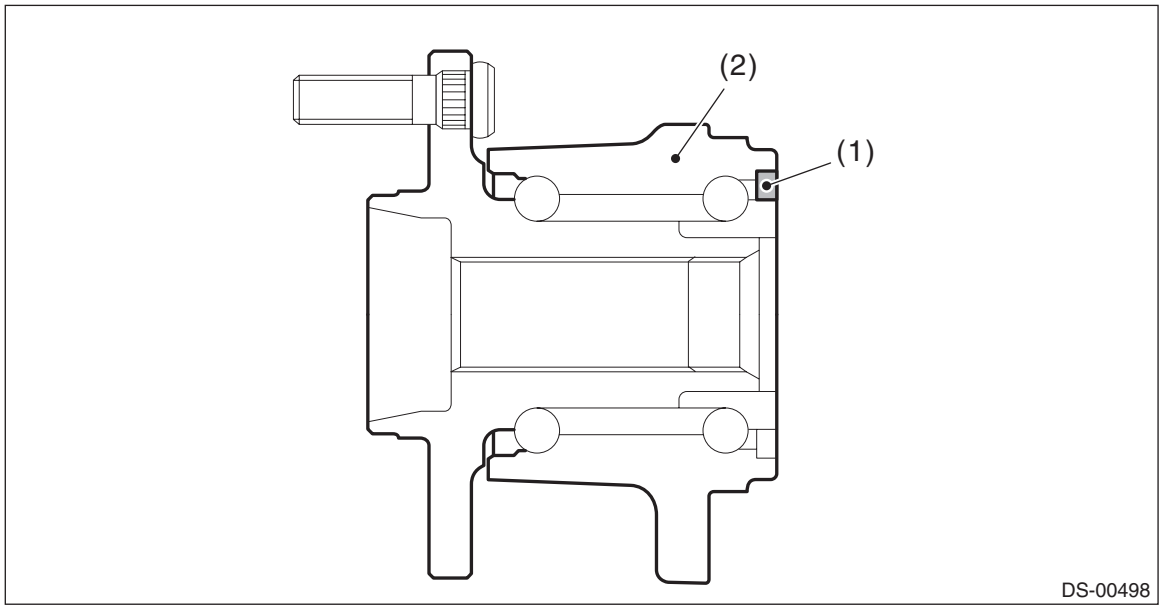

(1) Magnetic encoder (2) Rear hub unit bearing

(1) Remove the bolt from the rear axle housing.

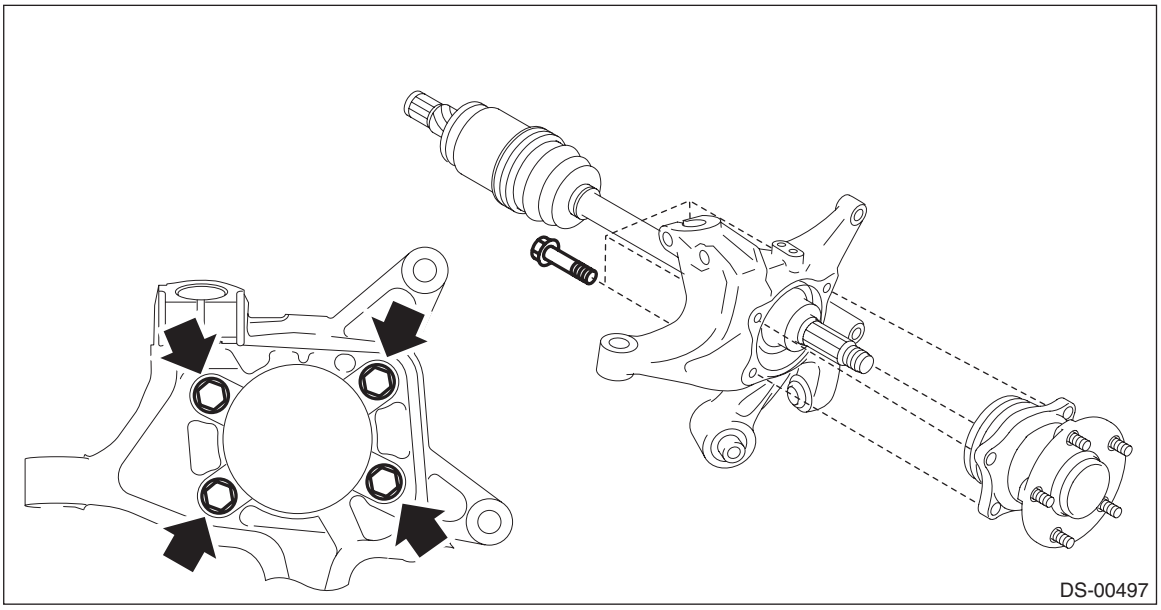

(2) Remove the rear hub unit bearing.

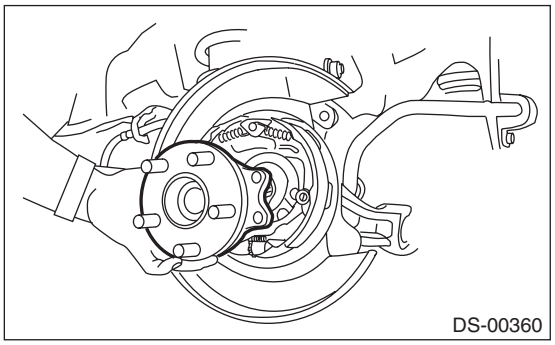

NOTE:
If it is hard to remove, use the ST.

PREPARATION TOOL:
ST1: AXLE SHAFT PULLER (926470000)
ST2: AXLE SHAFT PULLER PLATE (28099PA110)

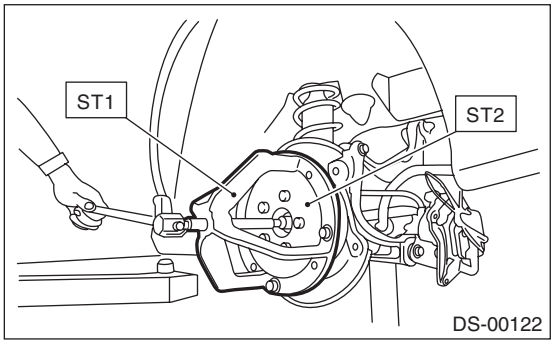

B: INSTALLATION

1) Aligning with the mounting hole of the rear brake back plate, temporarily tighten the rear hub unit bearing to the rear axle housing.

CAUTION:
- **Be careful not to damage the magnetic encoder.**
- **Do not get closer the tool which charged magnetism to magnetic encoder.**

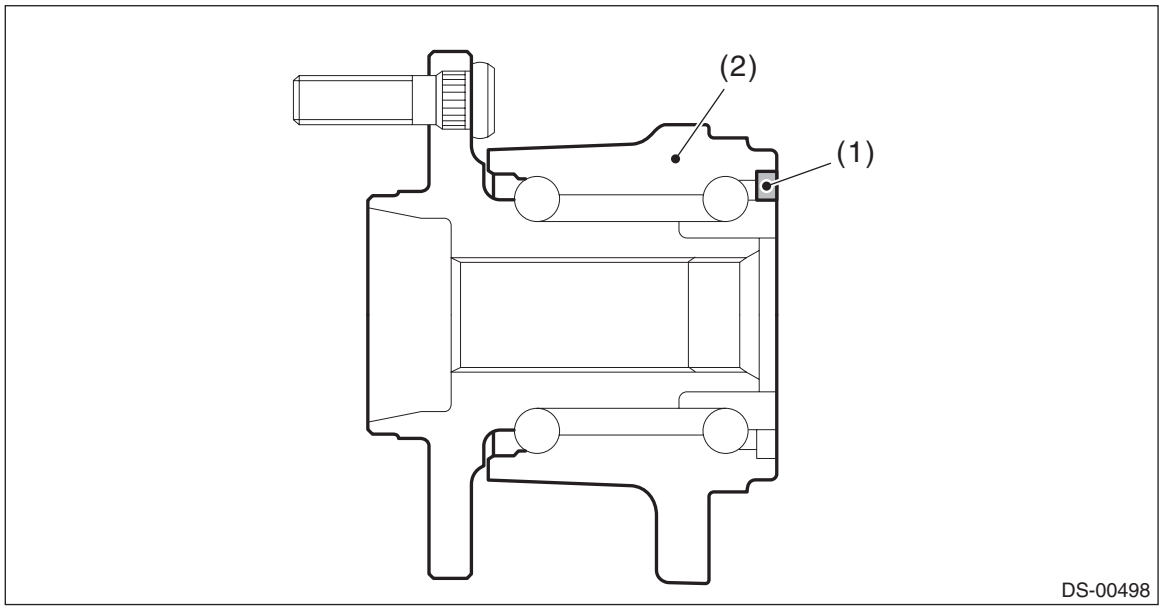

(1) Magnetic encoder (2) Rear hub unit bearing

2) Tighten the rear hub unit bearing.

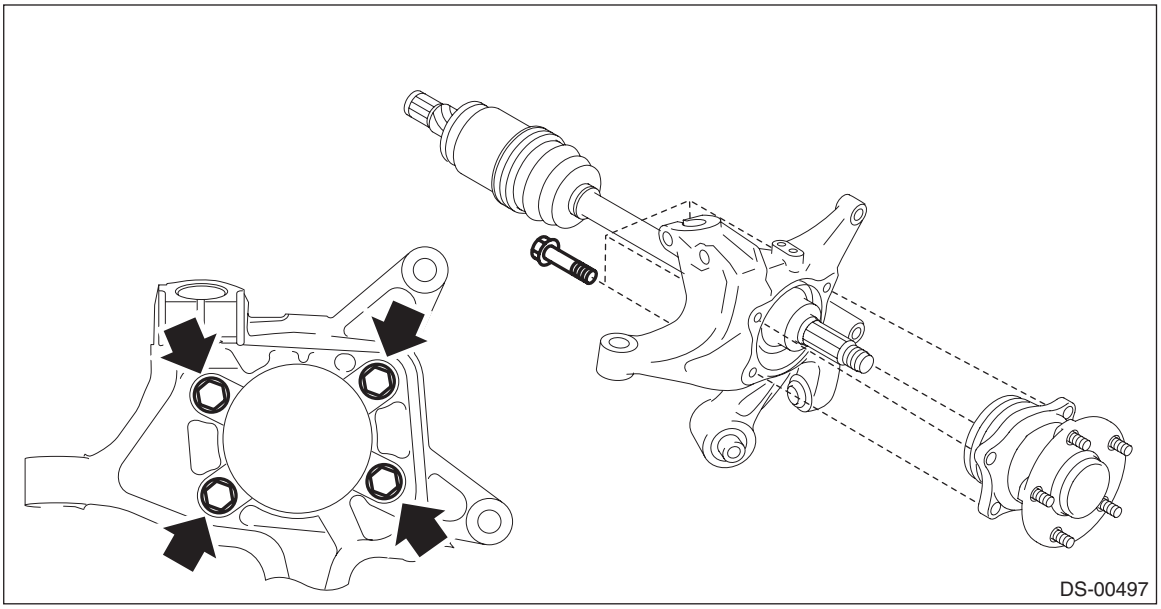

Tightening torque:
65 N·m (6.63 kgf-m, 47.9 ft-lb)

3) Tighten the new axle nut temporarily.

CAUTION:
Use new axle nuts.

4) Install the rear disc rotor.

5) Install the disc brake.

Tightening torque:
66 N·m (6.73 kgf-m, 48.7 ft-lb)

6) While pressing the brake pedal, tighten the new axle nuts to the specified torque.

CAUTION:
Do not load the rear axle before tightening the axle nut. Doing so may damage the hub bearing.

Tightening torque:
240 N·m (24.47 kgf-m, 177 ft-lb)

7) Inspect the lean of axis direction using a dial gauge. Replace the bearing if the load range exceeds the limitation.

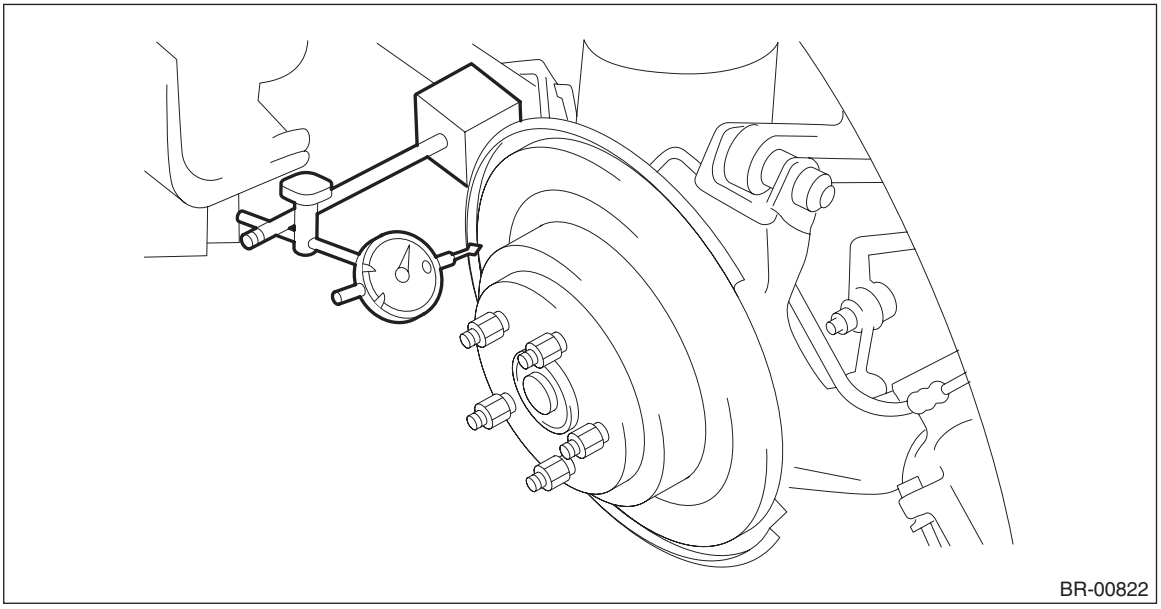

Service limit:
Maximum: 0.05 mm (0.0020 in)

8) After tightening the axle nut, lock it securely.

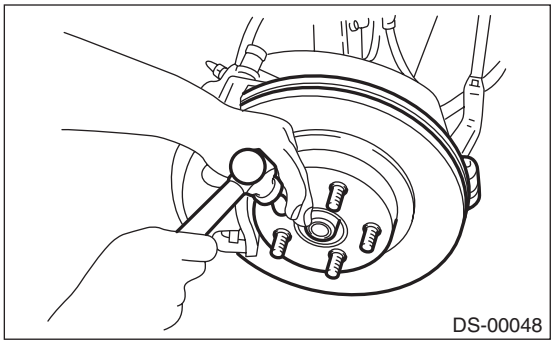

9) Install the rear wheels.

Tightening torque:
120 N·m (12.24 kgf-m, 88.5 ft-lb)

10) Moving the rear tire up and down by hand, check there is no backlash in bearing, and check the wheel rotates smoothly.

CAUTION:
If there is any fault in the bearing, replace hub unit bearing.

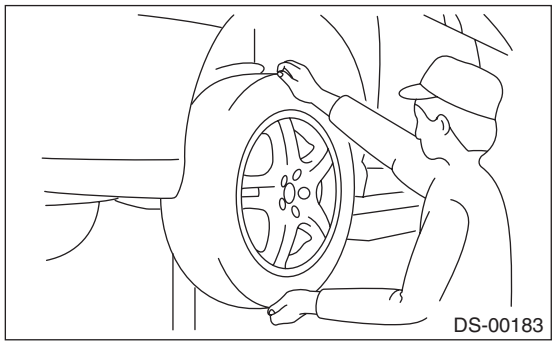

C: DISASSEMBLY

Using the ST or a hydraulic press, push out the hub bolt (b) from the rear hub unit bearing (a).

CAUTION:
- **Be careful not to hammer the hub bolts. This may deform the hub.**
- **Do not reuse the hub bolt.**

PREPARATION TOOL:
ST: HUB STAND (28399AG000)

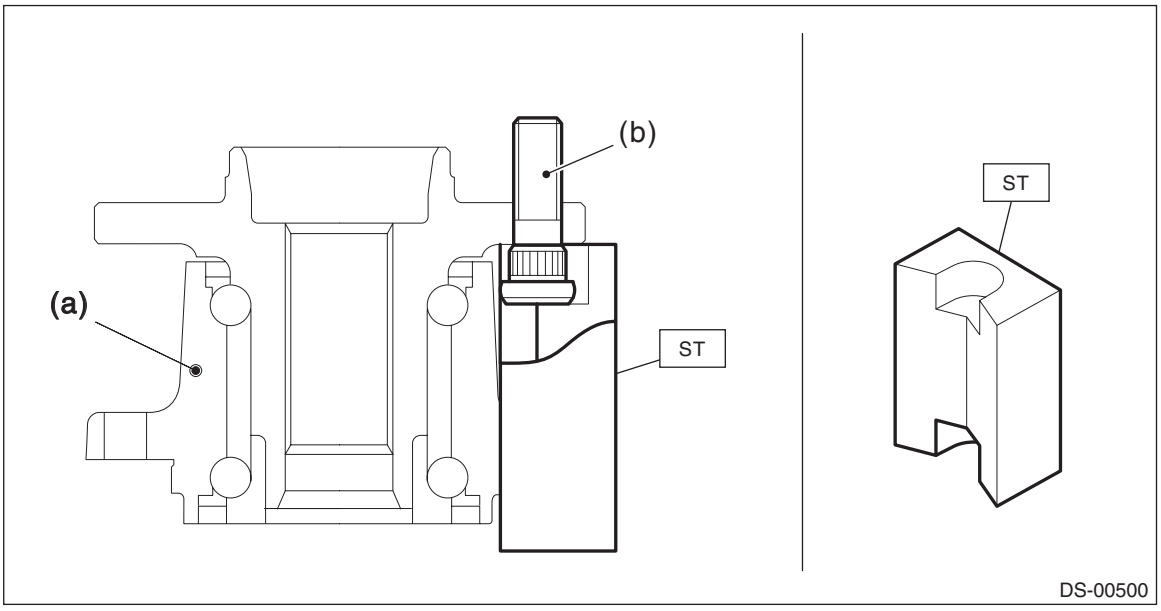

NOTE:
Since the hub unit bearing can not be disassembled, only hub bolts can be removed.

D: ASSEMBLY

1) Install the hub unit bearing to the ST securely.

PREPARATION TOOL:
ST: HUB STAND (927080000)

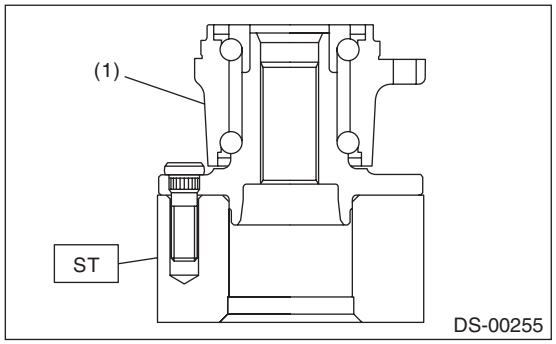

(1) Rear hub unit bearing

2) Using a press, press the new hub bolts (b) until their seating surfaces contact the hub unit bearing (a).

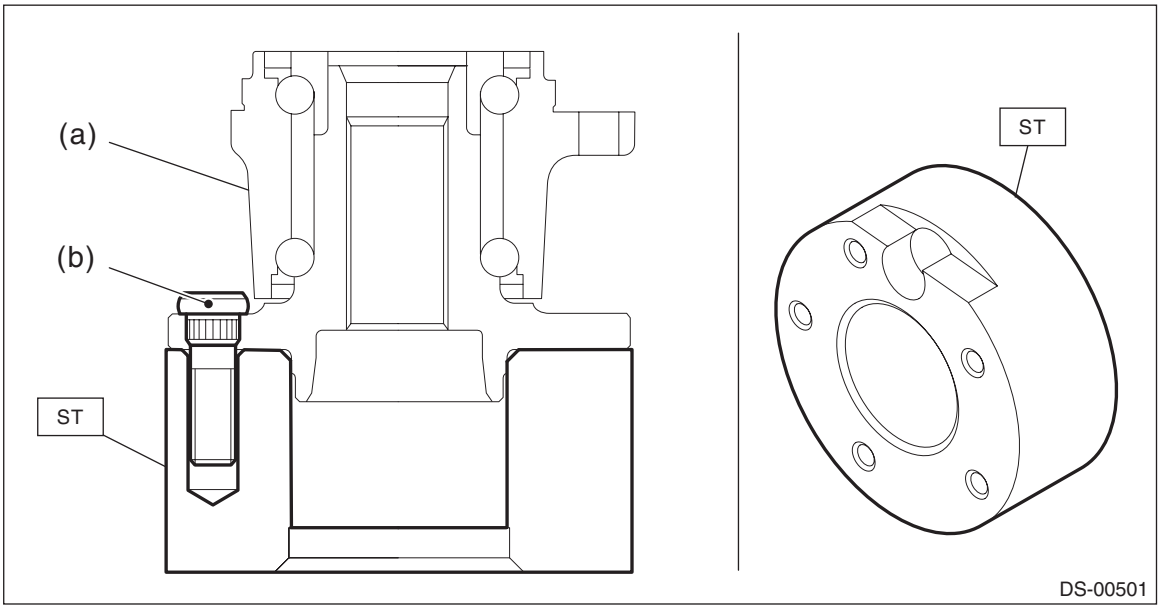

NOTE:
Use the 12 mm (0.47 in) dia. holes in the HUB STAND to prevent bolts from tilting.

E: INSPECTION

1) Moving the rear tire up and down by hand, check there is no backlash in bearing, and check the wheel rotates smoothly.

CAUTION:
If there is any fault in the bearing, replace hub unit bearing.

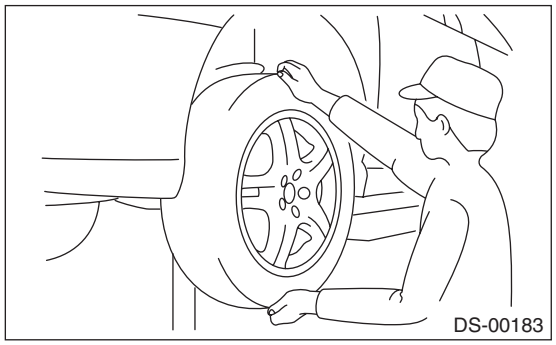

2) Inspect the lean of axis direction using a dial gauge. Replace the bearing if the load range exceeds the limitation.

Service limit:
Maximum: 0.05 mm (0.0020 in)

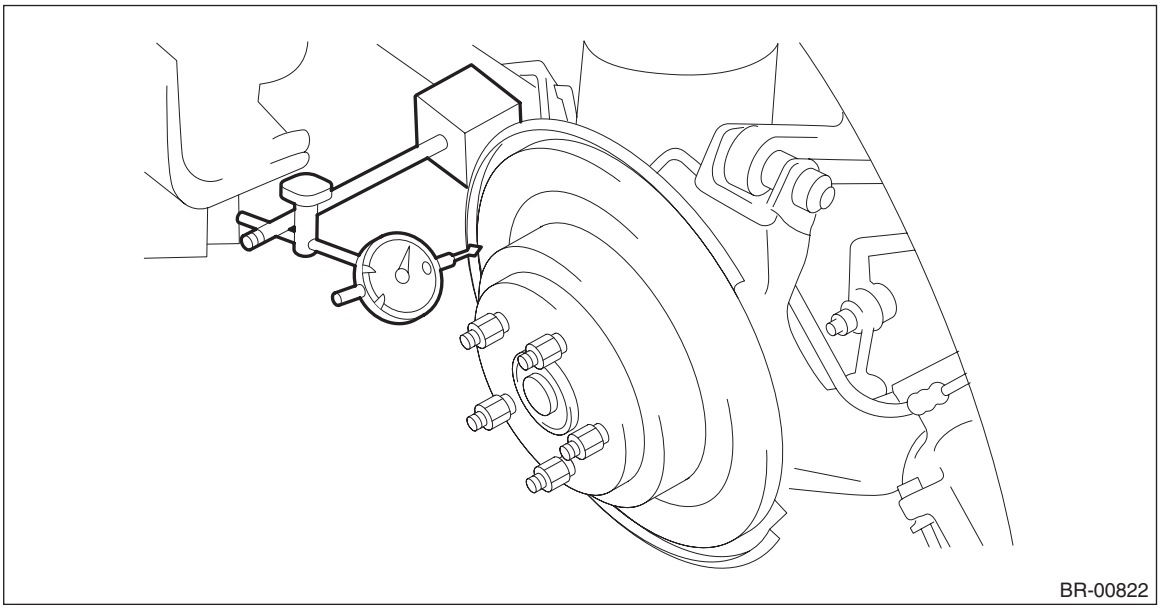

7. Front Drive Shaft

A: REMOVAL

1) Lift up the vehicle, and then remove the front wheels.
2) Remove the axle nut.

CAUTION:
Do not loosen the axle nut while the front axle is loaded. Doing so may damage the hub bearing.

(1) Lift the crimped section of axle nut.
(2) Remove the axle nut using a socket wrench while depressing the brake pedal.

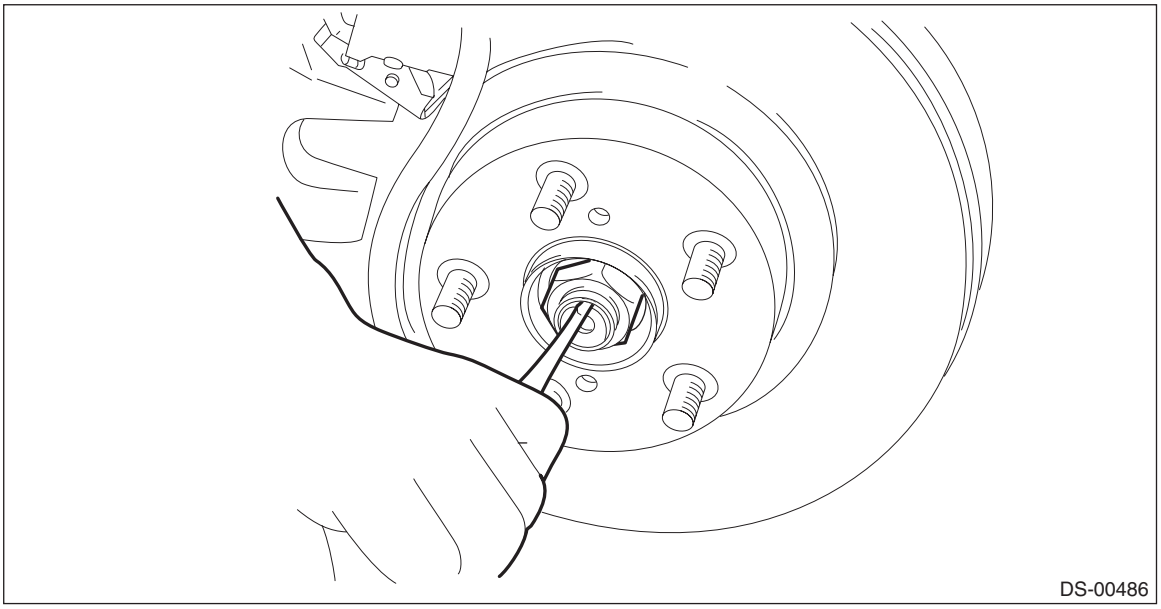
DS-00486

3) Drain the transmission gear oil. (MT model)
4) Drain differential gear oil. (AT and CVT models)
5) Remove the front arm.

(1) Remove the nut and disconnect the front stabilizer link.
(2) Remove the bolt, and disconnect the front arm ball joint from the front axle housing.

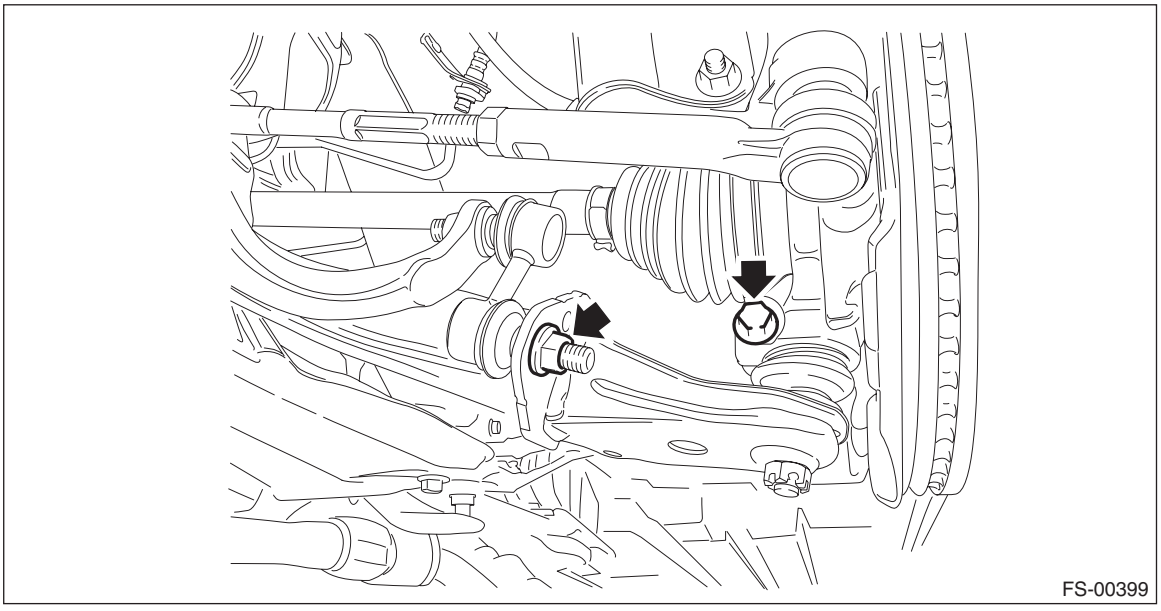
FS-00399

6) Remove the front drive shaft assembly. If it is hard to remove, use the ST.

PREPARATION TOOL:
ST1: AXLE SHAFT PULLER (926470000)
ST2: AXLE SHAFT PULLER PLATE (28099PA110)

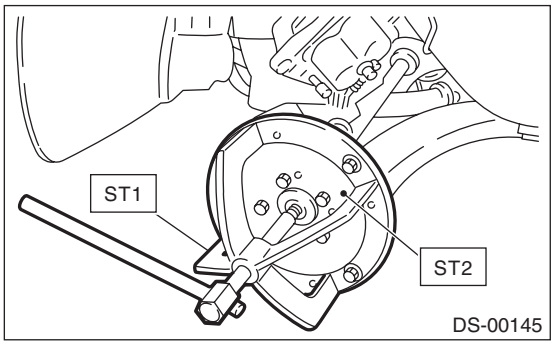

7) Using a bar, remove the front drive shaft from transmission.

CAUTION:
Be careful not to allow the bar to damage holder area.

B: INSTALLATION

1) Before installation, check the drive shaft. <Ref. to DS-56, INSPECTION, Front Drive Shaft.>
2) Replace the differential side retainer oil seal with a new part.
- 6MT model: <Ref. to 6MT-36, REPLACEMENT, Differential Side Retainer Oil Seal.>
- 5AT model: <Ref. to 5AT-49, REPLACEMENT, Differential Side Retainer Oil Seal.>
- CVT model: <Ref. to CVT-91, REPLACEMENT, Differential Side Retainer Oil Seal.>

NOTE:
After pulling out the drive shaft, be sure to replace with a new oil seal.
3) Insert the drive shaft into the hub spline, and pull in the drive shaft into specified position.

CAUTION:
Do not hammer drive shaft when installing it.
4) Tighten the axle nut temporarily.
5) Using the ST, install the front drive shaft to transmission.

PREPARATION TOOL:
ST: OIL SEAL PROTECTOR (28399SA010)

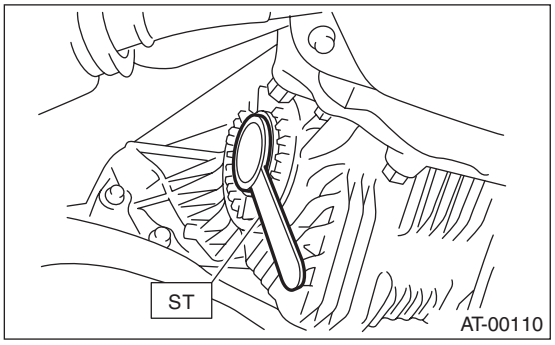

6) Install the front arm ball joint to the front axle housing.

CAUTION:
Before tightening, make sure the lower side of front axle housing and stepped section of ball joint are in contact.

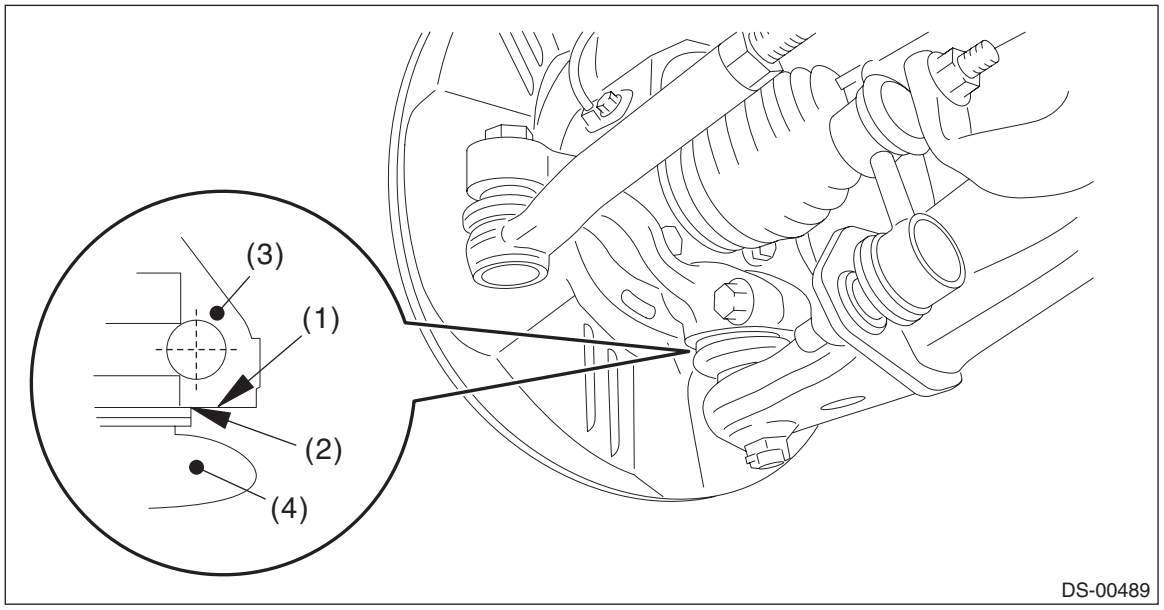

(1) Lower side of front axle housing
(2) Raised section of ball joint
(3) Front axle housing
(4) Ball joint

Tightening torque:
50 N·m (5.1 kgf-m, 36.9 ft-lb)

7) Install the stabilizer link.

CAUTION:
Use a new flange nut.

Tightening torque:
60 N·m (6.12 kgf-m, 44.3 ft-lb)

8) While pressing the brake pedal, tighten the new axle nuts to the specified torque.

CAUTION:
Do not load the front axle before tightening the axle nut. Doing so may damage the hub bearing.

Tightening torque:
220 N·m (22.43 kgf-m, 162.3 ft-lb)

9) After tightening axle nut, lock it securely.
10) Fill transmission gear oil. (MT model)
11) Fill differential gear oil. (AT and CVT models)
12) Install the front wheels.

Tightening torque:
120 N·m (12.24 kgf-m, 88.5 ft-lb)

13) Inspect the wheel alignment and adjust if necessary.
- Inspection: <Ref. to FS-9, INSPECTION, Wheel Alignment.>
- Adjustment: <Ref. to FS-14, ADJUSTMENT, Wheel Alignment.>

C: DISASSEMBLY

1) Remove the AAR outer race from shaft assembly.

CAUTION:
Be careful not to damage the boot.

(1) Place alignment marks on the shaft and outer race.

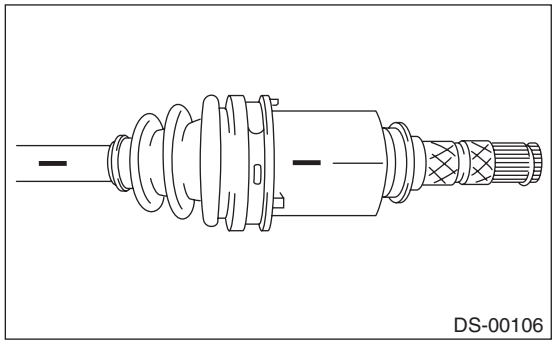

(2) Remove the AAR boot band and boot.

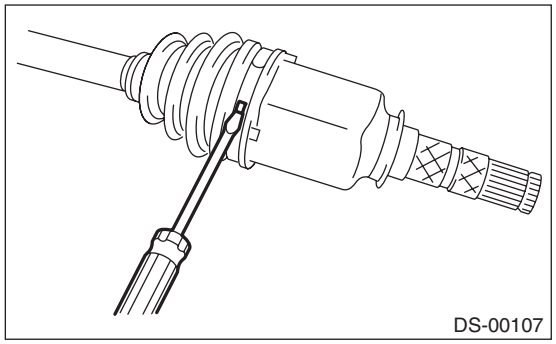

(3) Place the drive shaft between wooden blocks and fix it on a vise.

CAUTION:
Do not set the only drive shaft on a vise.

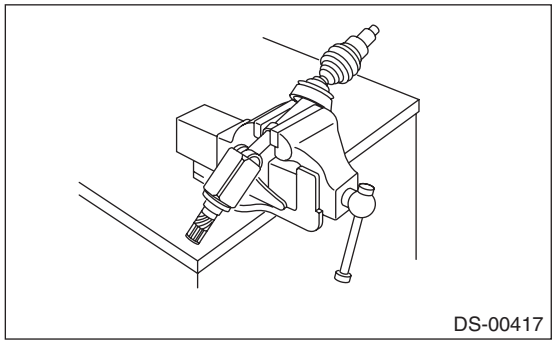

(4) Tap the staking are of the outer race alternately with a plastic or wooden bar, and remove one roller at a time.

CAUTION:
- **Tap the staking area (A) of the outer race.**
- **Do not use a metal bar as the outer race may deform.**
- **Be careful not to damage the roller parts.**

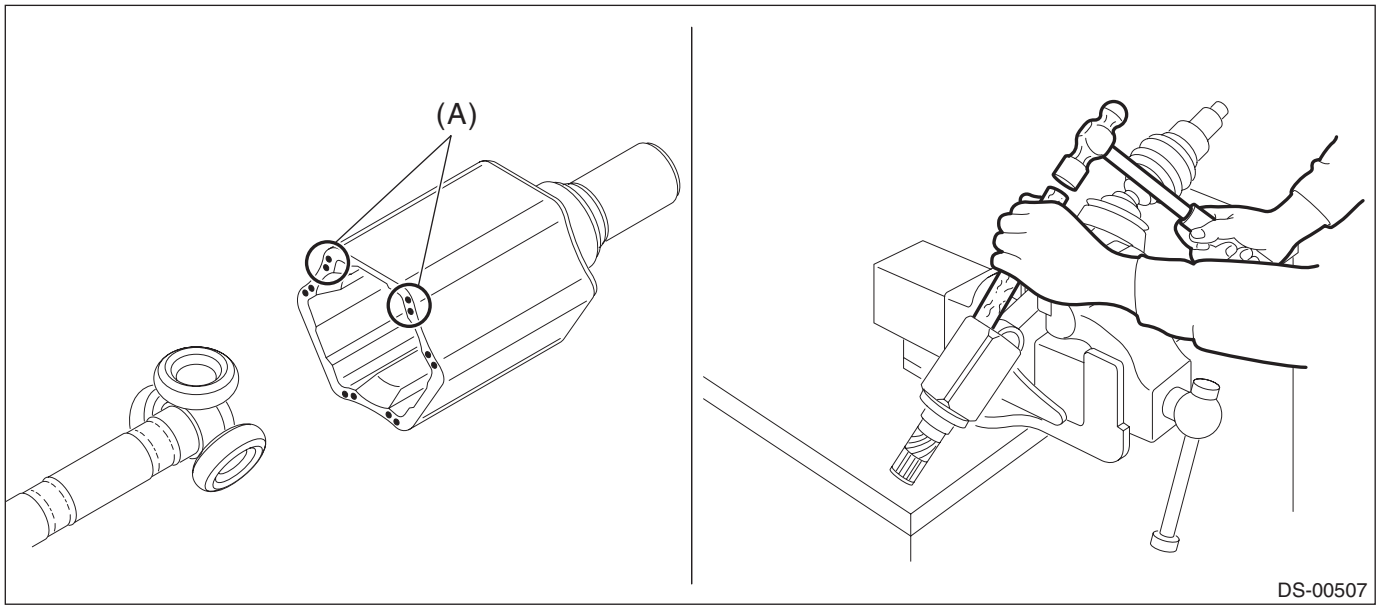

(5) Remove the outer race from shaft assembly.

CAUTION:
Make sure to have your associate held the outer race when removing the third roller to prevent the outer race from falling.

(6) Wipe off grease.

CAUTION:
The grease is a special type of grease. Do not mix with other grease.

2) Remove the roller kit from trunnion.

CAUTION:
Be careful with the roller kit position.

(1) Place alignment marks on the roller kit and trunnion.

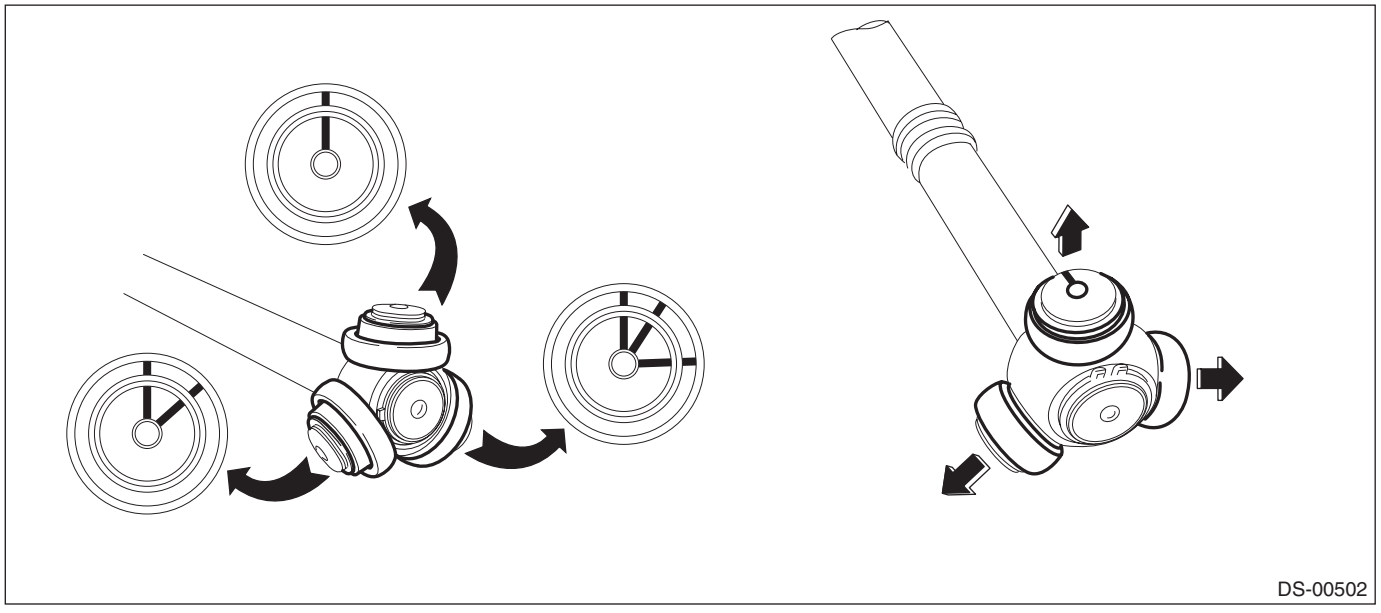

(2) Remove the roller kit from trunnion.

3) Remove the trunnion from the shaft.

(1) Place alignment marks on the trunnion and shaft.

(2) Remove the snap ring and trunnion.

CAUTION:
Be sure to wrap shaft splines with vinyl tape to protect the boot from scratches.

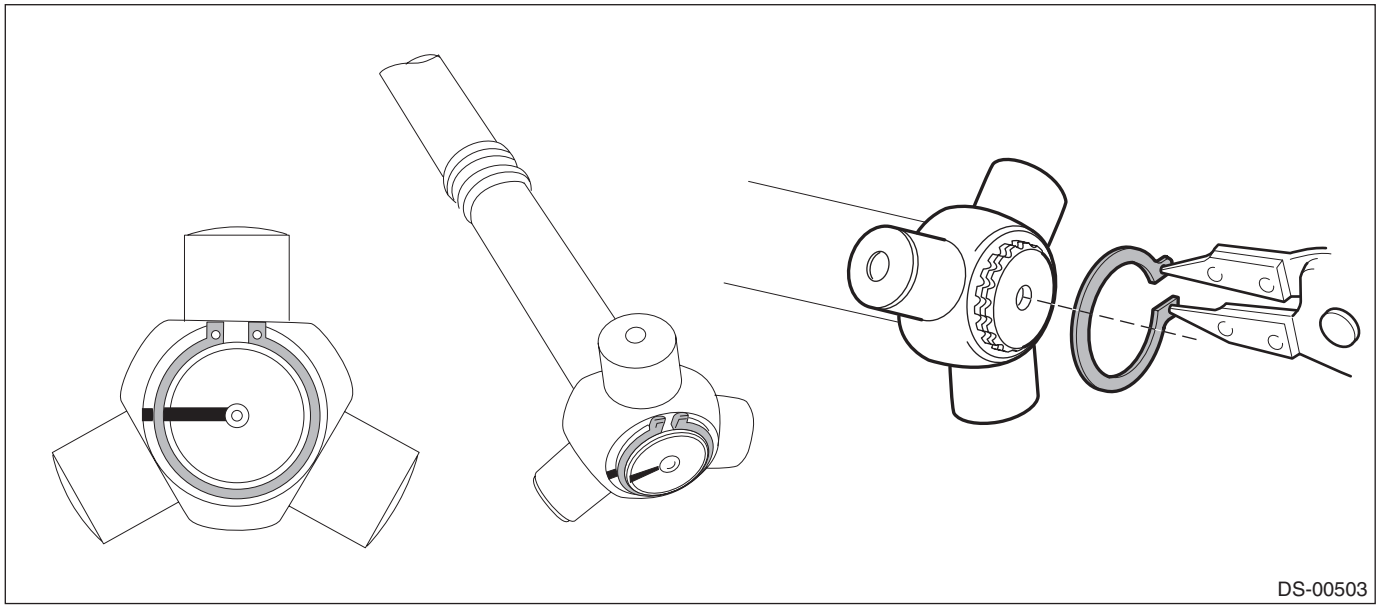

4) Remove the AAR boot.

NOTE:
The AC is a non-disassembly part, so the drive shaft disassembly stops here.

D: ASSEMBLY

NOTE:
Use specified grease.

AAR side:
ONE LUBER C

1) Pass the AAR boot through the shaft.
2) Install the trunnion to the shaft.
   (1) Match the alignment marks, and attach the trunnion onto the shaft.
   (2) Attach the snap ring to the shaft.

CAUTION:
Confirm that the snap ring is completely fitted in the shaft groove.

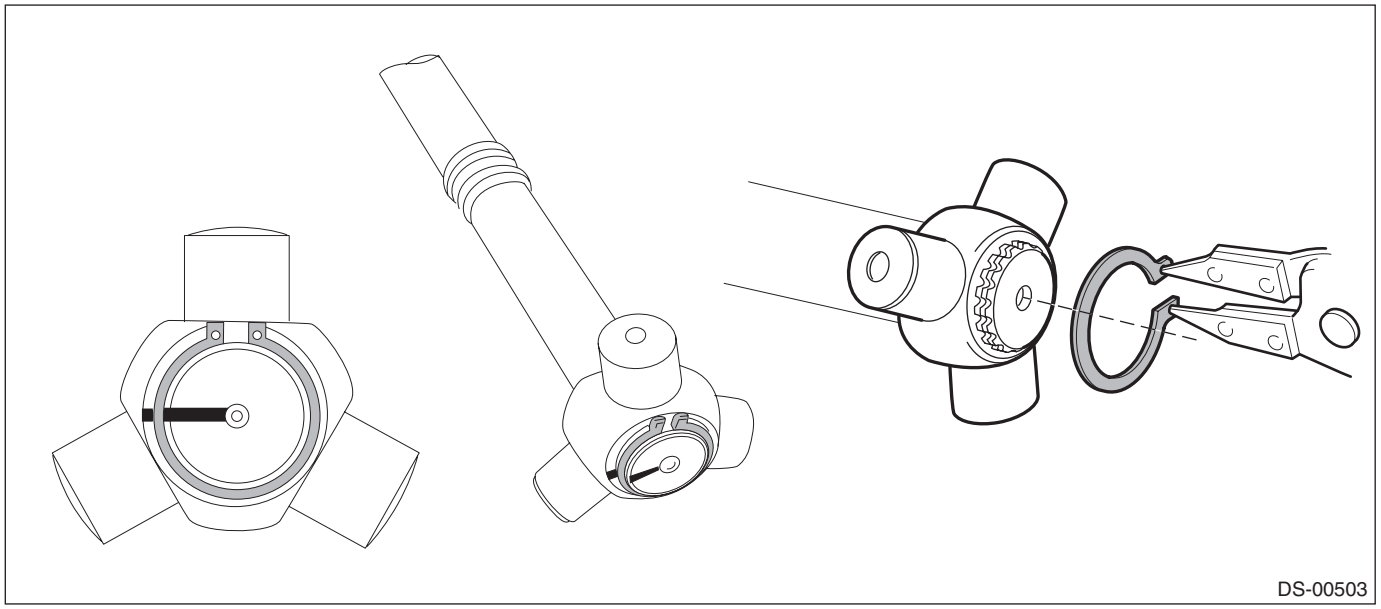

3) Fill 50 to 60 g (1.76 to 2.12 oz) of specified grease into the interior of AAR outer race.
4) Install the trunnion to the roller kit.
   (1) Apply a thin coat of specified grease to the roller kit and trunnion.
   (2) Place the drive shaft between wooden blocks and fix it on a vise.

CAUTION:
Do not set the drive shaft directly on a vise.

5) Align the alignment marks on the shaft and outer race.
6) Tap the insertion upper part of the outer race alternately using a plastic or wood bar shown in the figure, and then insert the roller one by one.

CAUTION:
- **Do not use a metal bar as the outer race may deform.**
- **Do not tap on the end of outer race (shaft part).**
- **Be careful not to deform the baffle plate.**

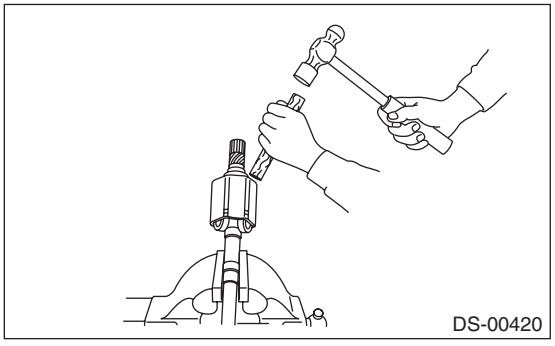

7) Apply an even coat of the specified grease 30 to 40 g (1.06 to 1.41 oz) to the entire inner surface of boot.
8) Install the AAR boot and grommet taking care not to twist it.

CAUTION:
- **Replace the boot and grommet as a set.**
- **Do not let grease get on groove of the outer race side.**

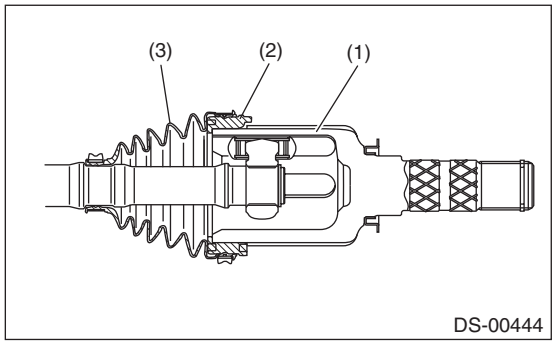

(1) Outer race
(2) Grommet
(3) Boot

9) Insert a flat tip screwdriver, etc. between outer race and grommet to make pressure inside of boot as high as barometric pressure.
10) Tighten the boot band.
(1) Install the new large boot band and small boot band at the required positions.
(2) Connect the torque wrench and socket flex handle to the ST.

PREPARATION TOOL:
ST: BOOT BAND PLIER (28099AC000)
Torque wrench
Socket flex handle
(3) Use a prepared tool, tighten the boot band.

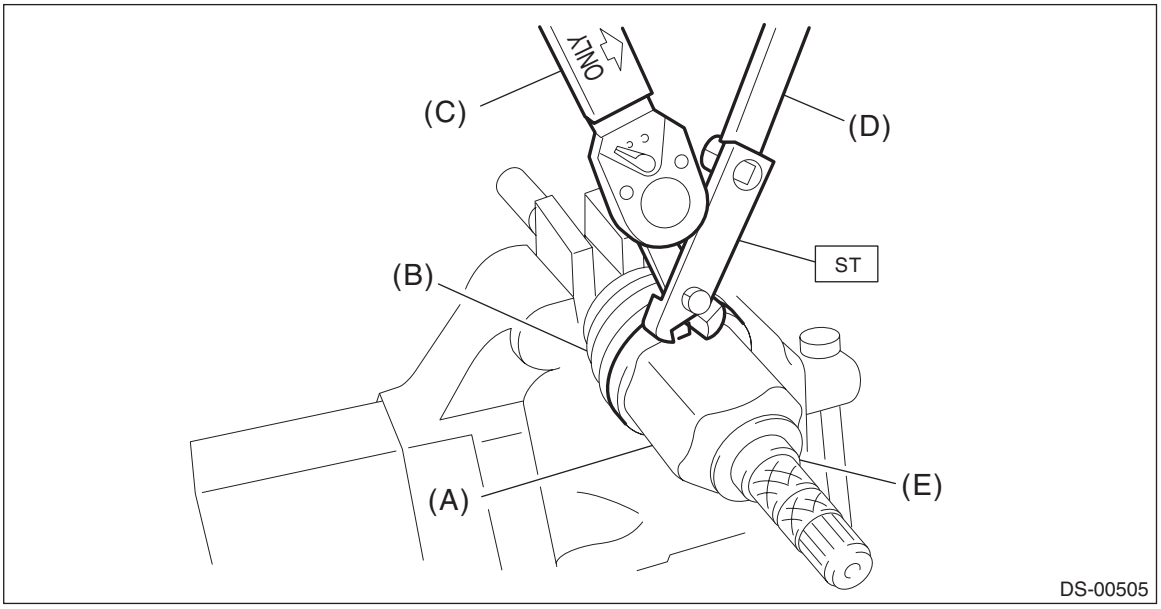

(A) Large boot band
(B) Boot
(C) Torque wrench
(D) Socket flex handle
(E) Outer race

Clearance at the crimped section of the boot band:
Large boot band
1 mm (0.04 in) or less
Small boot band
1 mm (0.04 in) or less

Tightening torque:
Large boot band: 178 N·m (18.15 kgf-m, 131.3 ft-lb)
Small boot band: 145 N·m (14.79 kgf-m, 106.9 ft-lb)
11) Extend and retract the AAR repeatedly to provide an equal coating of grease.

E: INSPECTION

Check the removed parts for damage, wear, corrosion etc. If faulty, repair or replace.
- **AAR and AC:**

Check for seizure, corrosion, damage, wear and excessive play.
- **Shaft:**

Check for excessive bending, twisting, damage and wear.
- **Boot:**

Check for wear, warping, breakage and scratches.
- **Grease:**

Check for discoloration and fluidity.

8. Rear Drive Shaft

A: REMOVAL

1) Lift up the vehicle, and then remove the rear wheels.
2) Remove the axle nut.

CAUTION:
Do not loosen the axle nut while the rear axle is loaded. Doing so may damage the hub bearing.

(1) Lift the crimped section of axle nut.
(2) Remove the axle nut using a socket wrench while depressing the brake pedal.

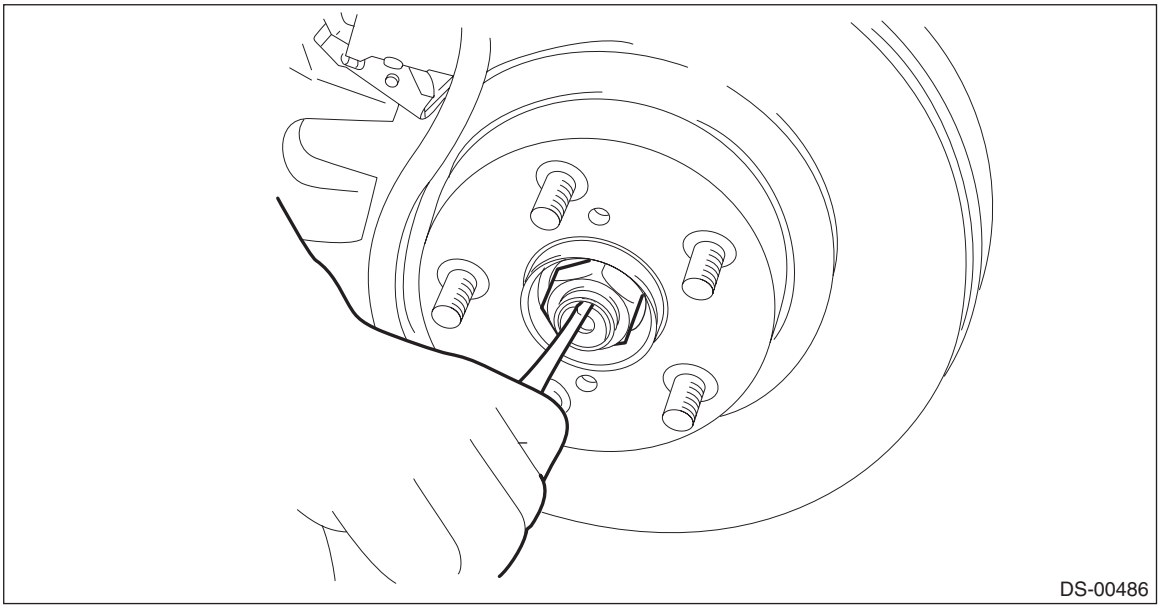

3) Drain differential gear oil.
4) Remove the trailing link.

(1) Remove the bracket, and remove the parking brake cable from the guide (a).
(2) Remove the bolts and nuts, and then remove the trailing link.

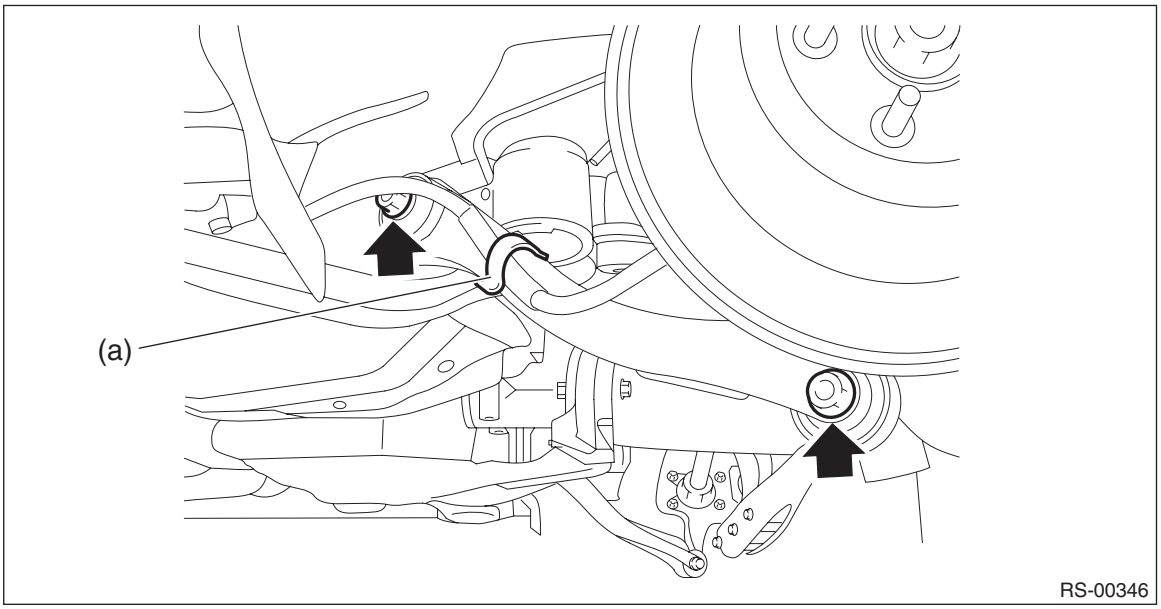

5) Remove the bolts and nuts and lower the rear lateral link.
(1) Remove the nut and disconnect the rear stabilizer link.
(2) Remove the shock absorber lower bolt.
(3) Disconnect the rear lateral link.

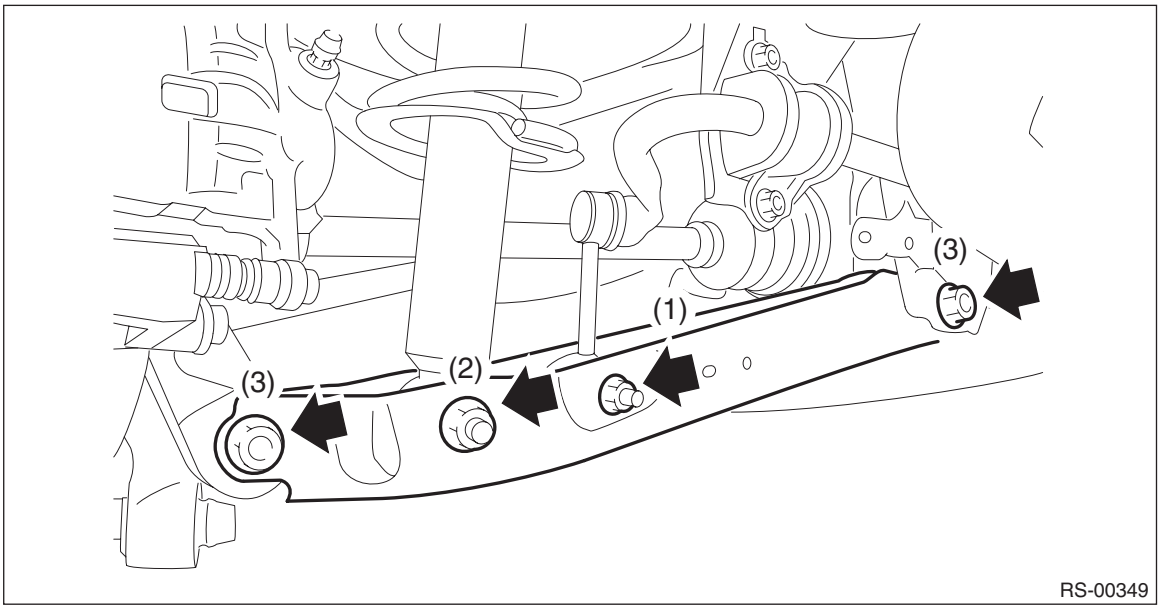

6) Remove the rear drive shaft from the rear differential.
- T-type
  1. Fit the ST to the bolt (a) as shown in the figure.

CAUTION:
Fit the ST to the bolts as shown in the figure to prevent damage of the side bearing retainer.

PREPARATION TOOL:
ST: DRIVE SHAFT REMOVER (28099PA100)

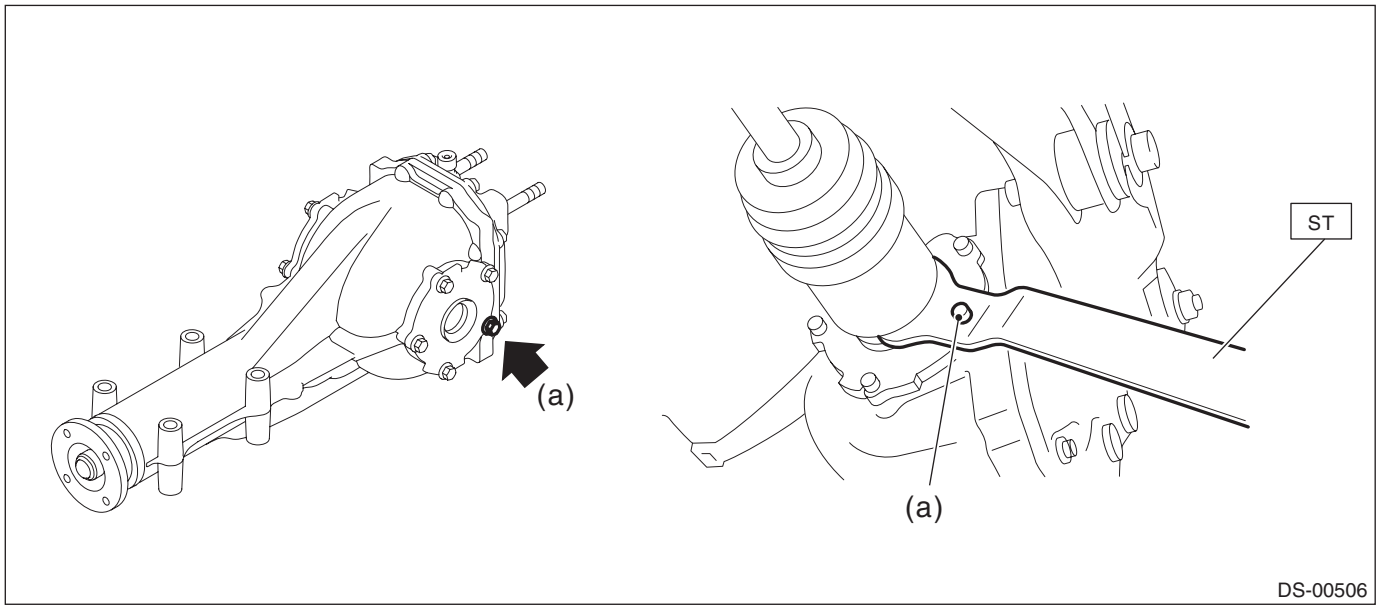

2. Extract the rear drive shaft from the rear differential.

- VA-type
  1. Fit the tire lever (b) to the bolt (a) as shown in the figure.

CAUTION:
To prevent damage to the side bearing retainer, use by placing the tire lever against the bolt as shown in the figure.

Preparation tool: Tire lever

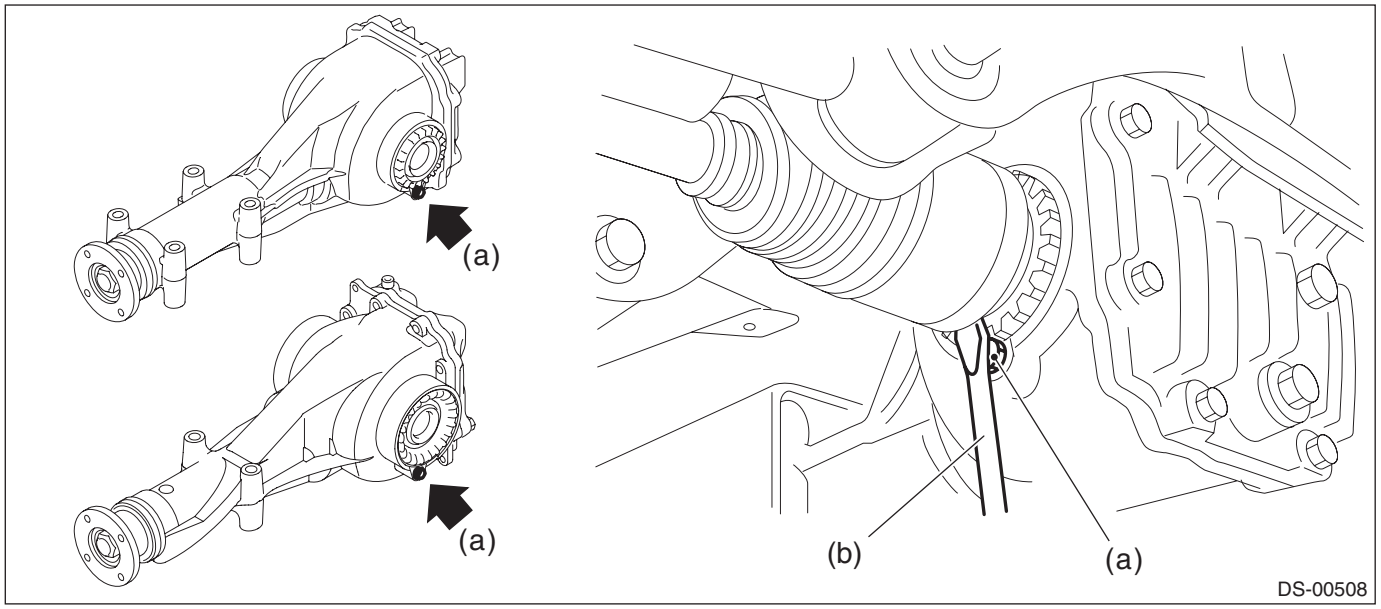

  2. Extract the rear drive shaft from the rear differential.

7) Remove the rear drive shaft from the rear axle.

NOTE:
If it is hard to remove, use the ST.

PREPARATION TOOL:
ST1: AXLE SHAFT PULLER (926470000)
ST2: AXLE SHAFT PULLER PLATE (28099PA110)

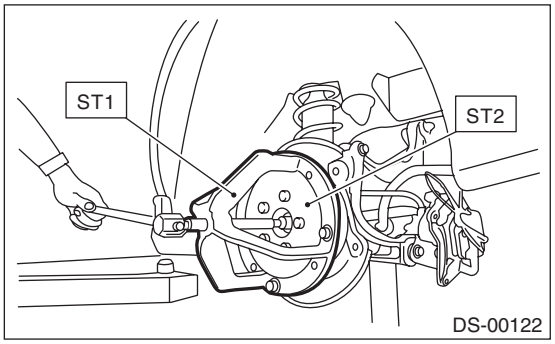

B: INSTALLATION

1) Replace the rear differential side oil seal. <Ref. to DI-78, REPLACEMENT, Rear Differential Side Oil Seal.>

NOTE:
After pulling out the drive shaft, be sure to replace with a new oil seal.
2) Insert the drive shaft into the rear hub spline, and pull the drive shaft into specified position.

CAUTION:
- **Be careful not to damage the magnetic encoder.**
- **Do not get closer the tool which charged magnetism to magnetic encoder.**
- **Do not hammer drive shaft when installing it.**

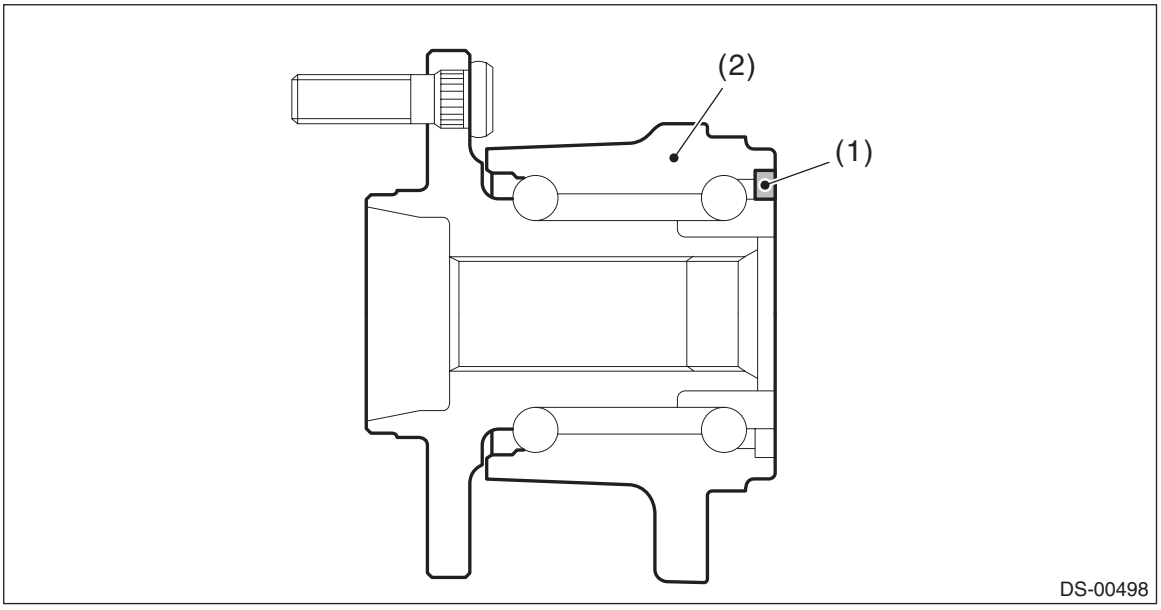

(1) Magnetic encoder (2) Rear hub unit bearing

3) Tighten the axle nut temporarily.
4) Using the ST, install the rear drive shaft to the rear differential.

PREPARATION TOOL:
ST: OIL SEAL PROTECTOR (28099PA090)

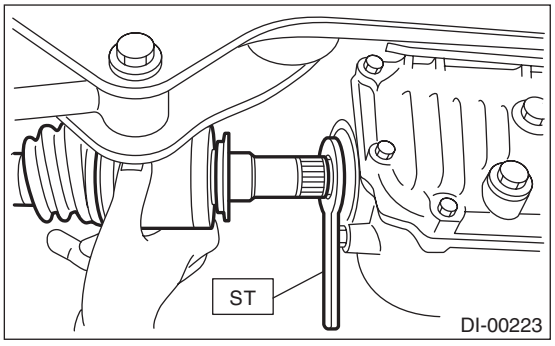

5) Attach the links to the rear housing and tighten them to the specified torque.

Tightening torque:
Stabilizer link: 33 N·m (3.4 kgf-m, 24.3 ft-lb)
Shock absorber: 120 N·m (12.2 kgf-m, 88.5 ft-lb)
Rear lateral link: 80 N·m (8.2 kgf-m, 59 ft-lb)
Trailing link — rear sub frame: 120 N·m (12.2 kgf-m, 88.5 ft-lb)
Trailing link — rear housing: 80 N·m (8.2 kgf-m, 59 ft-lb)

6) While pressing the brake pedal, tighten the new axle nuts to the specified torque.

CAUTION:
Do not load the rear axle before tightening the axle nut. Doing so may damage the hub bearing.

Tightening torque:
240 N·m (24.47 kgf-m, 177 ft-lb)

7) Lock the axle nut securely.

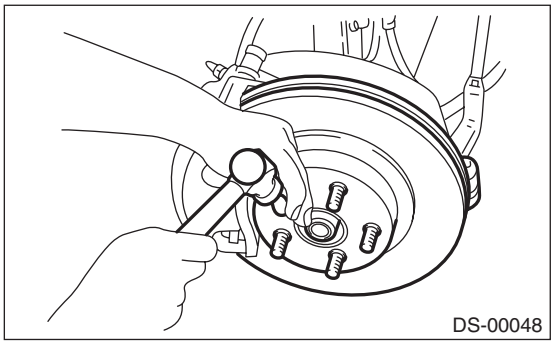
DS-00048

8) Fill differential gear oil.
9) Install the rear wheels.

Tightening torque:
120 N·m (12.24 kgf-m, 88.5 ft-lb)

10) Inspect the wheel alignment and adjust if necessary.
- Inspection: <Ref. to FS-9, INSPECTION, Wheel Alignment.>
- Adjustment: <Ref. to FS-14, ADJUSTMENT, Wheel Alignment.>

C: DISASSEMBLY

1) Take out the DOJ outer race from the shaft assembly.

CAUTION:
Be careful not to damage the boot.

(1) Using a flat tip screwdriver or plier, loosen the boot band on the large end of DOJ boot.

CAUTION:
Be careful not to damage the boot.

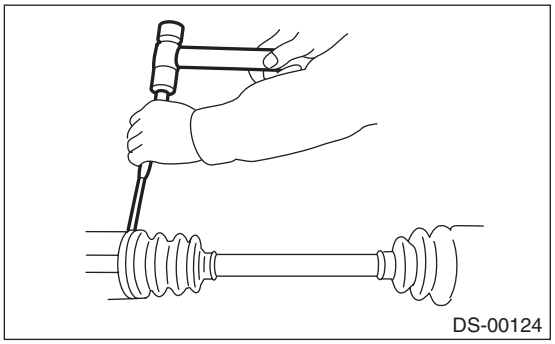
DS-00124

(2) Remove the boot band on the small end of DOJ boot in the same manner.
(3) Remove the large end of DOJ boot from DOJ outer race.

(4) Remove the round snap ring at the neck of DOJ outer race with a flat tip screwdriver.

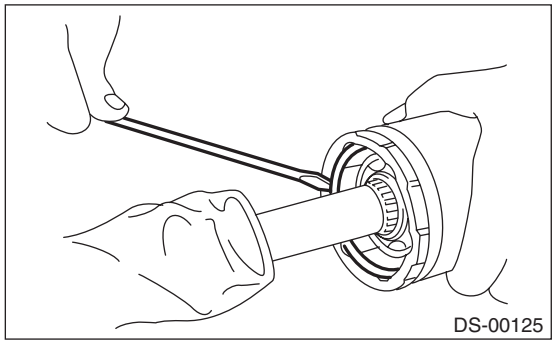

(5) Take out the DOJ outer race from the shaft assembly.
(6) Wipe off the grease and take out the ball bearings.

CAUTION:
The grease is a special grease (grease for constant velocity joints). Do not mix with other greases.

NOTE:
Disassemble exercising care not to lose balls.

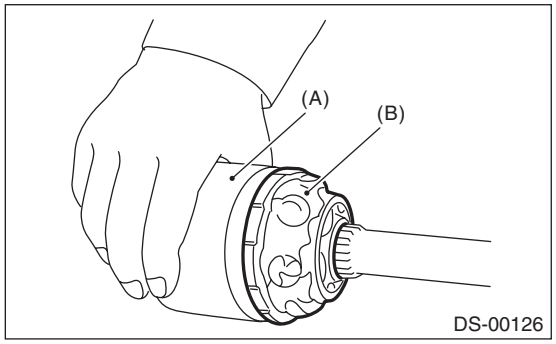

(A) Outer race
(B) Grease

2) Remove the cage from the inner race.
(1) Turn the cage by a half pitch to the track groove of inner race and shift the cage.
(2) Using pliers, remove the snap ring fixing the inner race to the shaft.

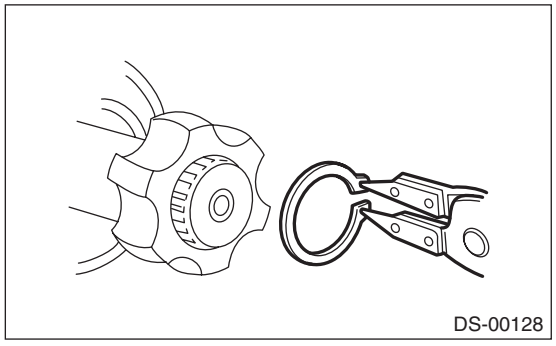

(3) Take out the DOJ inner race.
(4) Take off the DOJ cage from shaft and remove the DOJ boot.

CAUTION:
Wrap shaft splines with vinyl tape to protect the boot from scratches.

3) Remove the BJ boot or EBJ boot in the same procedure as the DOJ boot.

NOTE:
Further disassembly of the drive shaft is impossible because the BJ and EBJ cannot be disassembled.

D: ASSEMBLY

CAUTION:
Wrap shaft splines with vinyl tape to protect the boot from scratches.

NOTE:
Use specified grease.

BJ, EBJ side:
NKG106

DOJ side:
NKG205

1) Install the DOJ inner race to the shaft.
   (1) Install the BJ or EBJ boot in specified position, and fill it with 50 to 60 g (1.76 to 2.12 oz.) of specified grease.
   (2) Place the DOJ boot at the center of shaft.
   (3) Insert the DOJ cage onto shaft.

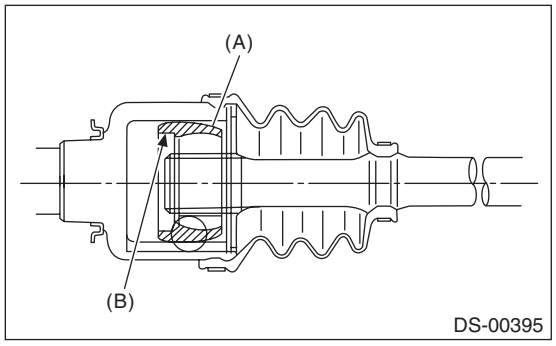

(A) Cage
(B) Cutout portion

NOTE:
Insert the cage with the cutout portion facing the shaft end, since the cage has an orientation.

   (4) Install the DOJ inner race on shaft and fix the snap ring in place with pliers.

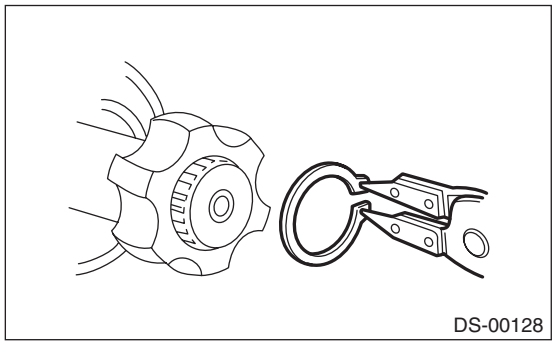

NOTE:
Confirm that the snap ring is completely fitted in the shaft groove.

2) Install the cage to the inner race.
(1) Install the cage (B) with the protruding section aligned with the track on the inner race (A), and turn by a half pitch.

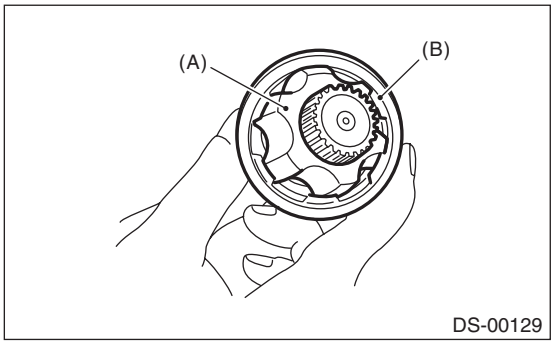

(2) Fill 80 to 90 g (2.82 to 3.17 oz) of specified grease into the inner side of the DOJ outer race.
(3) Apply a thin coat of specified grease to the cage pocket and ball.
(4) Insert the ball bearings into the cage pocket.
3) Connect the shaft assembly to the outer race.
(1) Align the outer race track and ball positions, and place the shaft, inner race, cage and ball bearings in the original positions, and then fix outer race in place.

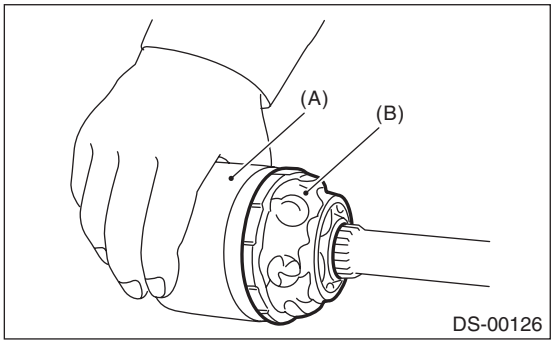

(A) Outer race
(B) Grease

(2) Install the snap ring in the groove on the DOJ outer race.

CAUTION:
Be careful of the following items during installation:
- **Make sure that the balls, cage and inner race are completely fitted in the outer race of DOJ.**
- **Use care not to place the matched position of snap ring in the ball groove of outer race.**
- **Pull the shaft lightly and assure that the circlip is completely fitted in the groove.**

(3) Apply an even coat of the specified grease [20 to 30 g (0.71 to 1.06 oz)] to the entire inner surface of boot. Also apply grease to the shaft.
(4) Install the DOJ boot taking care not to twist it.

NOTE:
- The inside of the large end of DOJ boot and the boot groove shall be cleaned so as to be free from grease and other substances.
- When installing the DOJ boot, position the outer race of DOJ at center of the stroke.

(5) Put a new band through the clip and wind twice in the band groove of the boot.
(6) Pinch the end of band with pliers. Hold the clip and tighten securely.

NOTE:
When tightening boot, use care so that the air within the boot is appropriate.

(7) Tighten the band using the ST.

PREPARATION TOOL:
ST: BAND TIGHTENING TOOL (925091000)

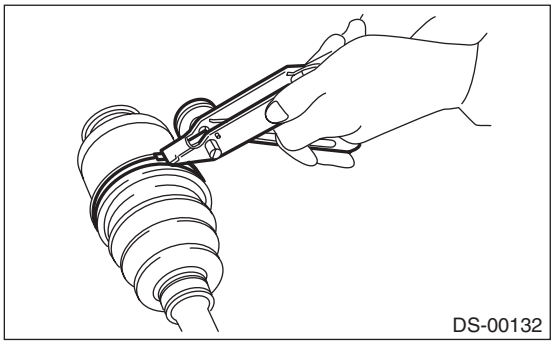

NOTE:
Tighten the band until it cannot be moved by hand.

(8) Tap the clip with the punch provided at the end of the ST.

PREPARATION TOOL:
ST: BAND TIGHTENING TOOL (925091000)

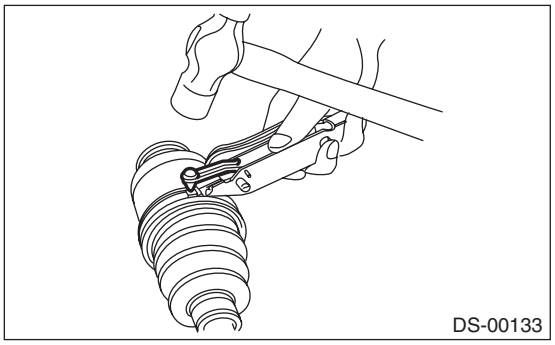

NOTE:
Tap to an extent that the boot underneath is not damaged.

(9) Cut off the band with an allowance of about 10 mm (0.39 in) left from the clip and bend this allowance over the clip.

CAUTION:
Make sure that the end of the band is in close contact with clip.

4) Install the BJ boot or EBJ boot in the same procedure as a DOJ boot.
5) Extend and retract the DOJ repeatedly to provide an equal coating of grease.

E: INSPECTION

Check the removed parts for damage, wear, corrosion etc. Repair or replace if defective.

- **DOJ (Double Offset Joint):**

Check for seizure, corrosion, damage, wear and excessive play.

- **EBJ (high-efficiency compact ball fixed joint):**

Check for seizure, corrosion, damage, wear and excessive play.

- **Shaft:**

Check for excessive bending, twisting, damage and wear.

- **BJ (Bell Joint):**

Check for seizure, corrosion, damage and excessive play.

- **Boot:**

Check for wear, warping, breakage and scratches.

- **Grease:**

Check for discoloration and fluidity.

9. General Diagnostic Table

A: INSPECTION

NOTE:
Vibration while cruising may be caused by an unbalanced tire, improper tire inflation pressure, improper wheel alignment, etc.

Symptoms	Possible cause	Corrective action
Noise or vibration from propeller shaft	• Center bearing • Runout of propeller shaft • Loose or gap at connections	Inspect the propeller shaft. <Ref. to DS-12, INSPECTION, Propeller Shaft.>
Abnormal wheel vibration	Wheel is out of balance.	Check the wheel balance. <Ref. to WT-6, WHEEL BALANCING, INSPECTION, Tire and Wheel.>
	Front wheel alignment	Check the front wheel alignment. <Ref. to FS-9, INSPECTION, Wheel Alignment.>
	Rear wheel alignment	Check the rear wheel alignment. <Ref. to RS-9, INSPECTION, Wheel Alignment.>
	Front strut	Check the front strut. <Ref. to FS-45, INSPECTION, Front Strut.>
	Rear shock absorber	Check the rear shock absorber. <Ref. to RS-21, INSPECTION, Rear Shock Absorber.>
	Front drive shaft	Check the front drive shaft. <Ref. to DS-56, INSPECTION, Front Drive Shaft.>
	Rear drive shaft	Check the rear drive shaft. <Ref. to DS-65, INSPECTION, Rear Drive Shaft.>
	Front hub unit bearing	Check the front hub unit bearing. <Ref. to DS-29, INSPECTION, Front Hub Unit Bearing.>
	Rear hub unit bearing	Check the rear hub unit bearing. <Ref. to DS-47, INSPECTION, Rear Hub Unit Bearing.>
Noise from the underbody	Wheel is out of balance.	Check the wheel balance. <Ref. to WT-6, WHEEL BALANCING, INSPECTION, Tire and Wheel.>
	Front wheel alignment	Check the front wheel alignment. <Ref. to FS-9, INSPECTION, Wheel Alignment.>
	Rear wheel alignment	Check the rear wheel alignment. <Ref. to RS-9, INSPECTION, Wheel Alignment.>
	Front strut	Check the front strut. <Ref. to FS-45, INSPECTION, Front Strut.>
	Rear shock absorber	Check the rear shock absorber. <Ref. to RS-21, INSPECTION, Rear Shock Absorber.>

VEHICLE DYNAMICS CONTROL (VDC)

VDC

		Page
1.	General Description	2
2.	Relay and Fuse	7
3.	Vehicle Dynamics Control System	8
4.	VDC Control Module and Hydraulic Control Unit (VDCCM&H/U)	9
5.	ABS Sequence Control	17
6.	VDC Sequence Control	20
7.	Yaw Rate and G Sensor	23
8.	Steering Angle Sensor	24
9.	Front ABS Wheel Speed Sensor	29
10.	Rear ABS Wheel Speed Sensor	32
11.	Front Magnetic Encoder	34
12.	Rear Magnetic Encoder	35
13.	VDC OFF Switch	36

1. General Description

A: SPECIFICATION

Item				Specification or identification
ABS wheel speed sensor	ABS wheel speed sensor gap (for reference)	Front		0.77 — 1.43 mm (0.030 — 0.056 in)
		Rear		0.64 — 1.56 mm (0.025 — 0.061 in)
	Identifications of harness (marks, color)	Front	Except for OBK model	S1 (Pink)
			OBK model	S2 (Blue)
		Rear	RH (Except for OBK model)	S3 (Yellow)
			LH (Except for OBK model)	S4 (White)
			RH (OBK model)	S5 (Red)
			LH (OBK model)	S6 (Light green)
VDCCM&H/U Identification				V4

B: COMPONENT

1. ABS WHEEL SPEED SENSOR

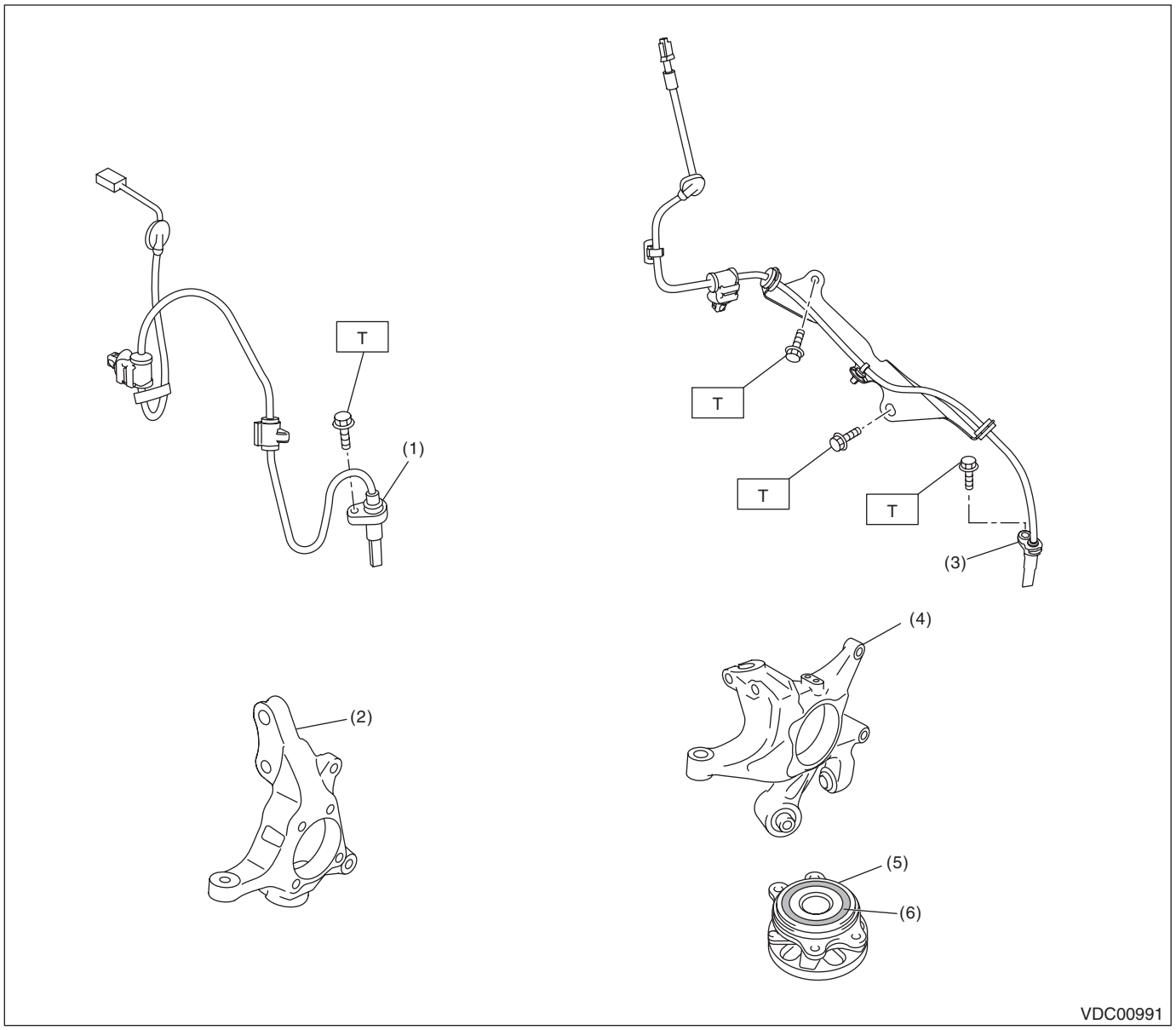

(1) Front ABS wheel speed sensor
(2) Front axle housing
(3) Rear ABS wheel speed sensor
(4) Rear axle housing
(5) Hub unit bearing
(6) Magnetic encoder

Tightening torque:N·m (kgf-m, ft-lb)
T: 7.5 (0.76, 5.5)

2. STEERING ANGLE SENSOR

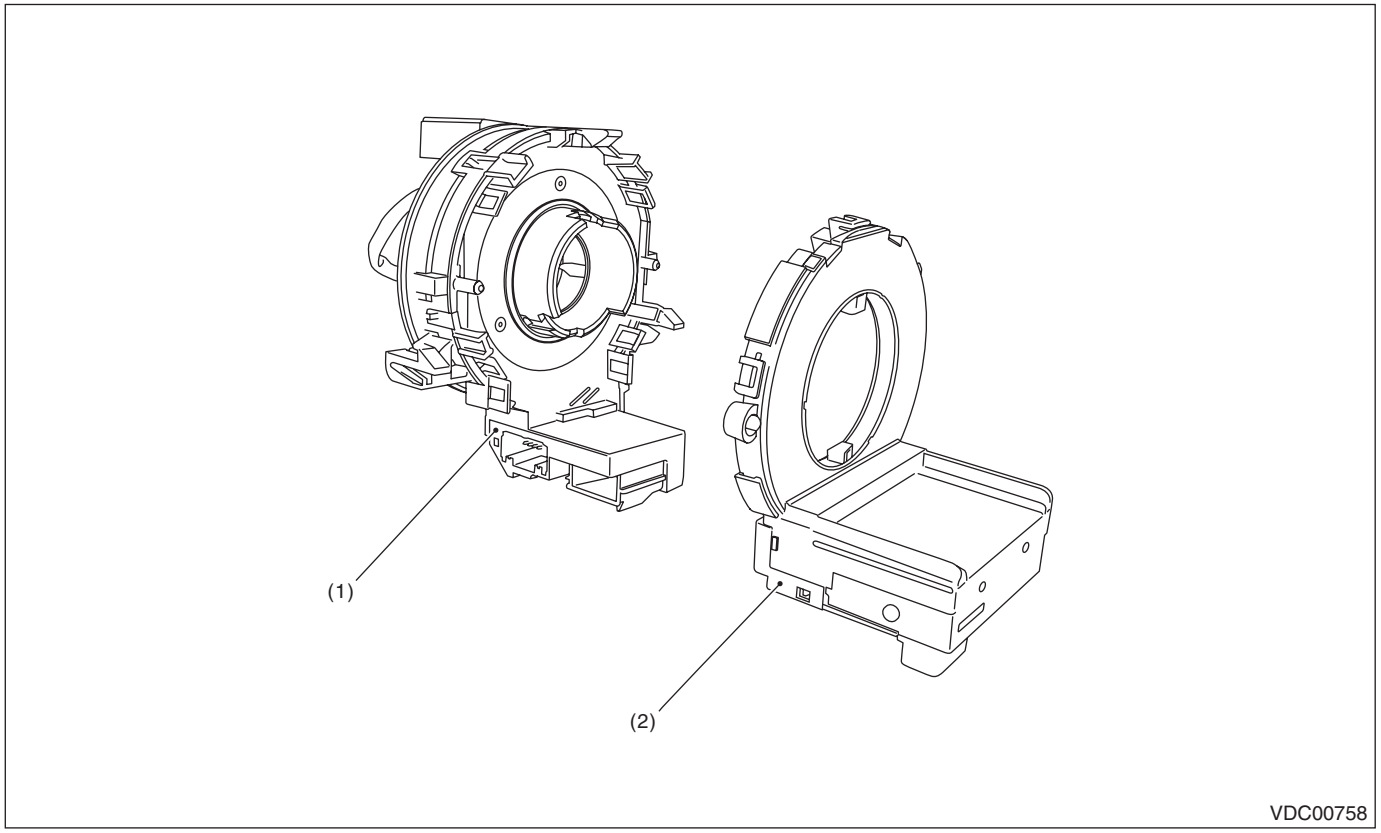

(1) Steering roll connector
(2) Steering angle sensor

3. VDC CONTROL MODULE & HYDRAULIC CONTROL UNIT (VDCCM&H/U)

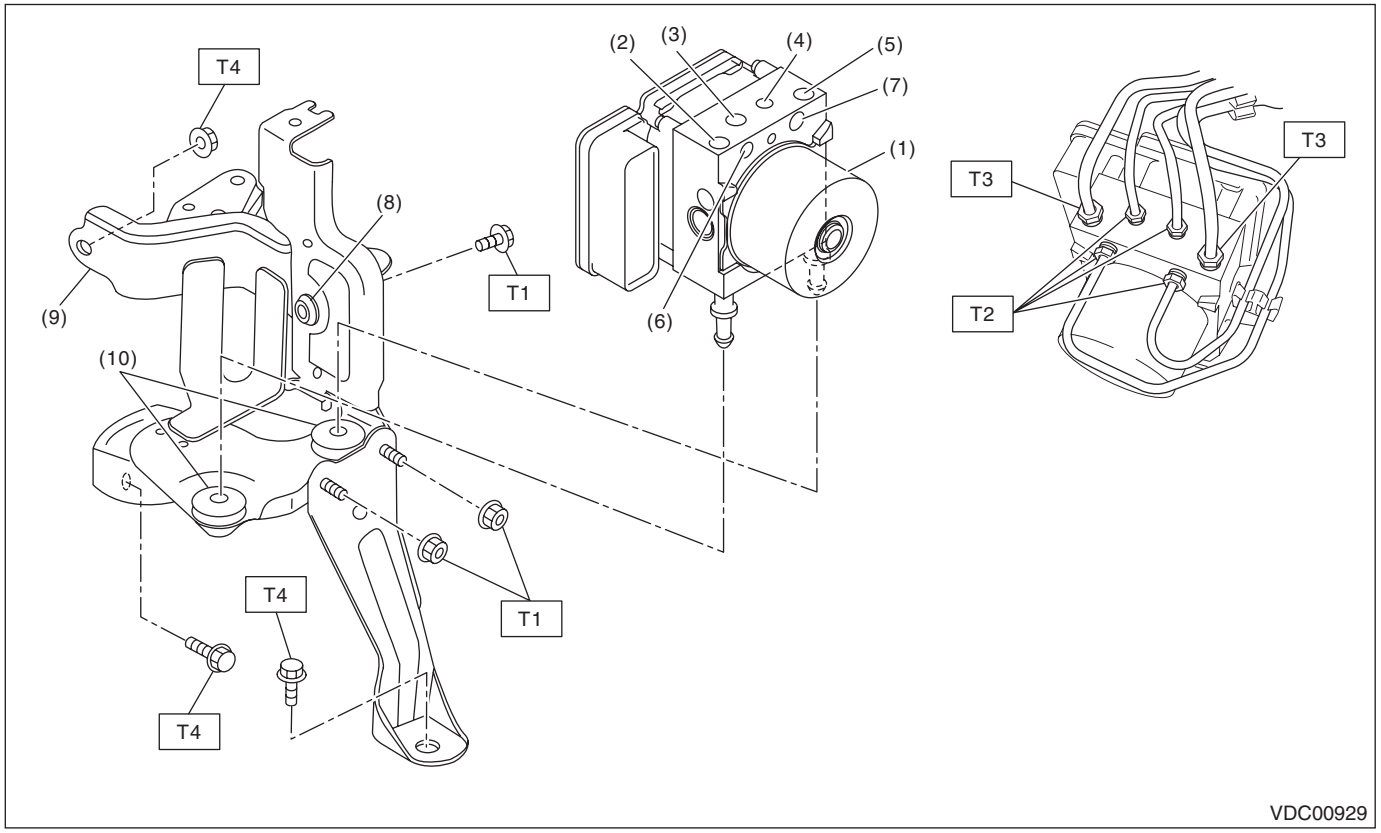

(1)	VDC control module and hydraulic control unit (VDCCM&H/U)	(6)	Rear RH outlet	***Tightening torque:N·m (kgf-m, ft-lb)***
(2)	Secondary inlet	(7)	Rear LH outlet	***T1: 7.5 (0.76, 5.5)***
(3)	Front LH outlet	(8)	Damper & spacer	***T2: 15 (1.53, 11.1)***
(4)	Front RH outlet	(9)	Bracket	***T3: 19 (1.94, 14.0)***
(5)	Primary inlet	(10)	Damper	***T4: 33 (3.36, 24.3)***

C: CAUTION

- Wear appropriate work clothing, including a helmet, protective goggles and protective shoes when performing any work.
- Remove contamination including dirt and corrosion before removal, installation or disassembly.
- Keep the disassembled parts in order and protect them from dust and dirt.
- Before disconnecting connectors of sensors or units, be sure to disconnect the ground cable from battery.
- Before removal, installation or disassembly, be sure to clarify the failure. Avoid unnecessary removal, installation, disassembly and replacement.
- Vehicle components are extremely hot after driving. Be wary of receiving burns from heated parts.
- Be sure to tighten fasteners including bolts and nuts to the specified torque.
- Place shop jacks or rigid racks at the specified points.

D: PREPARATION TOOL

1. SPECIAL TOOL

ILLUSTRATION	TOOL NUMBER	DESCRIPTION	REMARKS
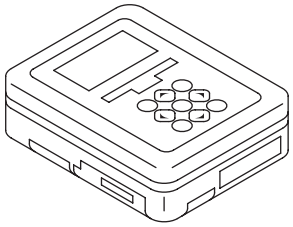 ST1B022XU0	1B022XU0	SUBARU SELECT MONITOR III KIT	Used for setting of each function and trouble-shooting for electrical system.

2. GENERAL TOOL

TOOL NAME	REMARKS
Circuit tester	Used for measuring resistance and voltage.
Pressure gauge	Used for measuring oil pressure.
Oscilloscope	Used for measuring the sensor.

2. Relay and Fuse

A: LOCATION

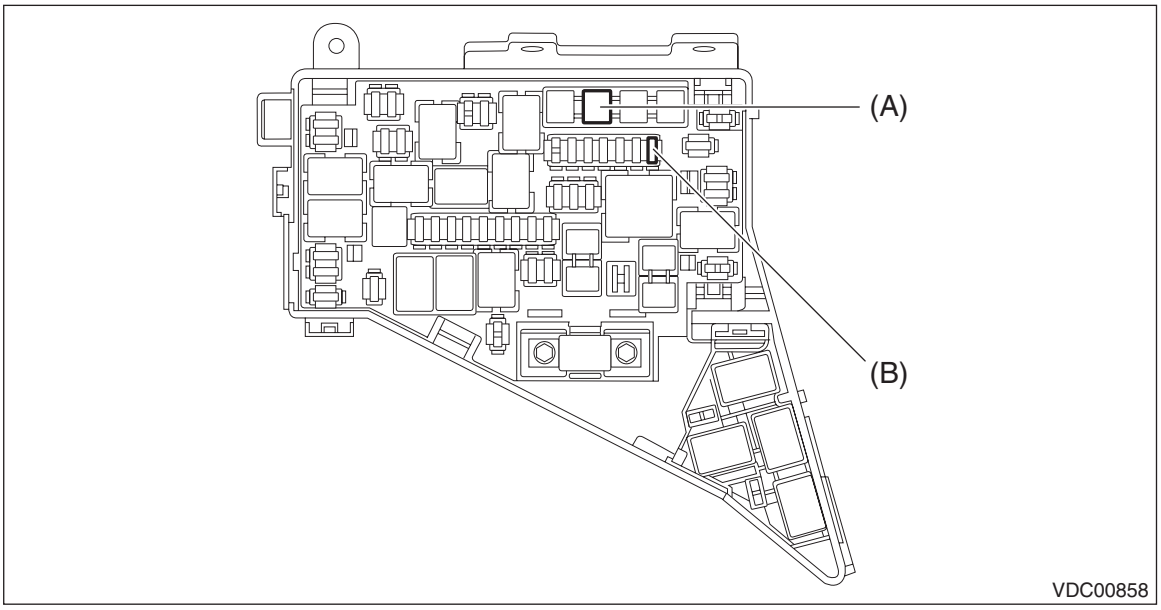

Main fuse box	Fuse 40 A (VDC CM&H/U)	(A)
	Fuse 30 A (VDC CM&H/U)	(B)

NOTE:
For other related fuses, refer to the wiring diagram. <Ref. to WI-15, Power Supply Circuit.>

B: INSPECTION

1. CHECK FUSE.

1) Remove the fuse and inspect visually.
2) If the fuse is blown out, replace the fuse.

3. Vehicle Dynamics Control System

A: WIRING DIAGRAM

Refer to “Vehicle Dynamics Control System” in the wiring diagram. <Ref. to WI-251, WIRING DIAGRAM, Vehicle Dynamics Control System.>

B: ELECTRICAL SPECIFICATION

Refer to the Control Module I/O Signal of the “Vehicle Dynamics Control System (VDC) (DIAGNOSTICS)”. <Ref. to VDC(diag)-12, ELECTRICAL SPECIFICATION, Control Module I/O Signal.>

C: INSPECTION

Refer to the “Vehicle Dynamics Control System (VDC) (DIAGNOSTICS)”. <Ref. to VDC(diag)-90, INSPECTION, General Diagnostic Table.>

D: NOTE

For operation procedures of each component of the vehicle dynamics control system, refer to the respective section.

- VDC control module & hydraulic control unit (VDCCM&H/U): <Ref. to VDC-9, VDC Control Module and Hydraulic Control Unit (VDCCM&H/U).>
- Yaw rate & G sensor: <Ref. to VDC-23, Yaw Rate and G Sensor.>
- Steering angle sensor: <Ref. to VDC-24, Steering Angle Sensor.>
- Front ABS wheel speed sensor: <Ref. to VDC-29, Front ABS Wheel Speed Sensor.>
- Rear ABS wheel speed sensor: <Ref. to VDC-32, Rear ABS Wheel Speed Sensor.>
- Front magnetic encoder: <Ref. to VDC-34, Front Magnetic Encoder.>
- Rear magnetic encoder: <Ref. to VDC-35, Rear Magnetic Encoder.>
- VDC OFF switch: <Ref. to VDC-36, VDC OFF Switch.>

4. VDC Control Module and Hydraulic Control Unit (VDCCM&H/U)

A: REMOVAL

1) Disconnect the ground cable from battery.
2) Remove the air intake boot.
- H4 model: <Ref. to IN(H4DOTC)-10, REMOVAL, Air Intake Boot.>
- H6 model: <Ref. to IN(H6DO)-7, REMOVAL, Air Intake Boot.>

3) Remove the VDC control module & hydraulic control unit (VDCCM&H/U).
   (1) Remove any dirt from around the VDCCM&H/U.
   (2) Push the lock button (a), pull down the lock lever (b) and disconnect the VDCCM&H/U connector.

CAUTION:
Do not pull on the harness when disconnecting the connector.

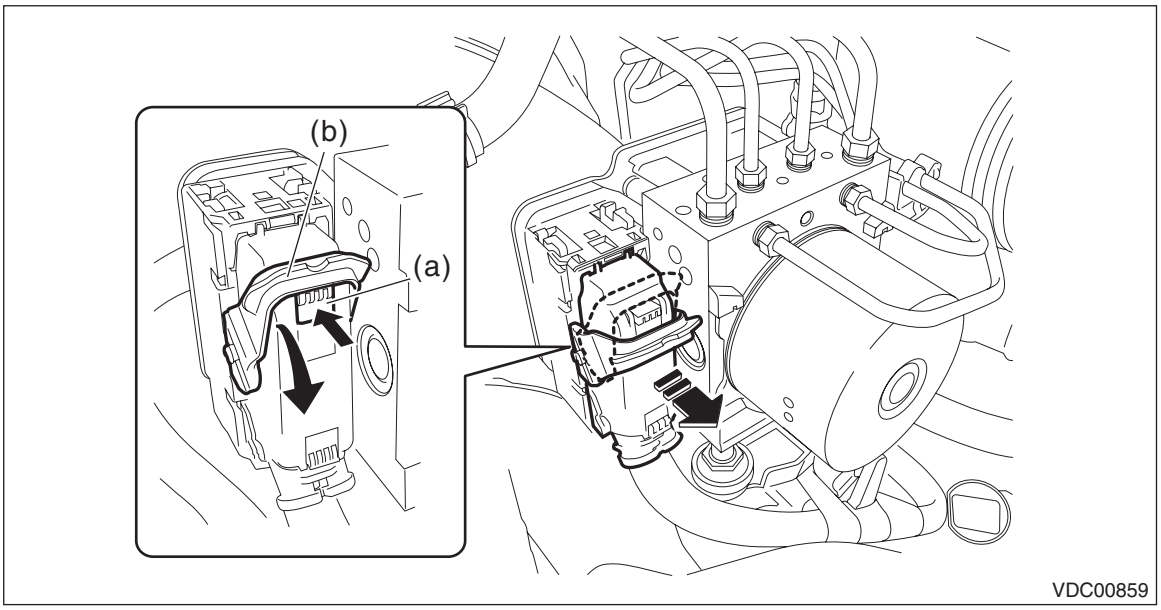

(3) Using a flare nut wrench, disconnect each brake pipe from VDCCM&H/U.

CAUTION:
• Wrap the brake pipe with a vinyl bag so as not to spill the brake fluid on the painted surface of the vehicle body.
• If brake fluid is spilled on the painted surface of the vehicle body, wash it off immediately with water and wipe clean.

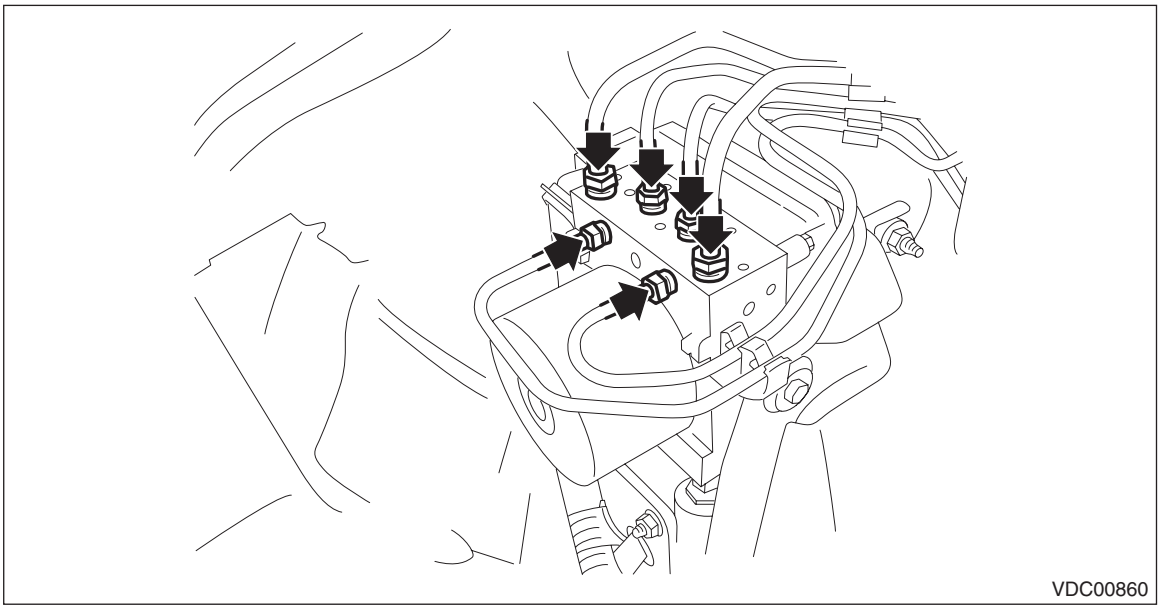
VDC00860

(4) Remove the bolt, and then remove the VDCCM&H/U from the bracket damper.

CAUTION:
- **Do not drop or bump the VDCCM&H/U.**
- **Do not turn the VDCCM&H/U upside down or place it sideways for storage.**
- **Be careful not to let foreign matter enter the VDCCM&H/U.**
- **Be careful that no water enters the connectors.**

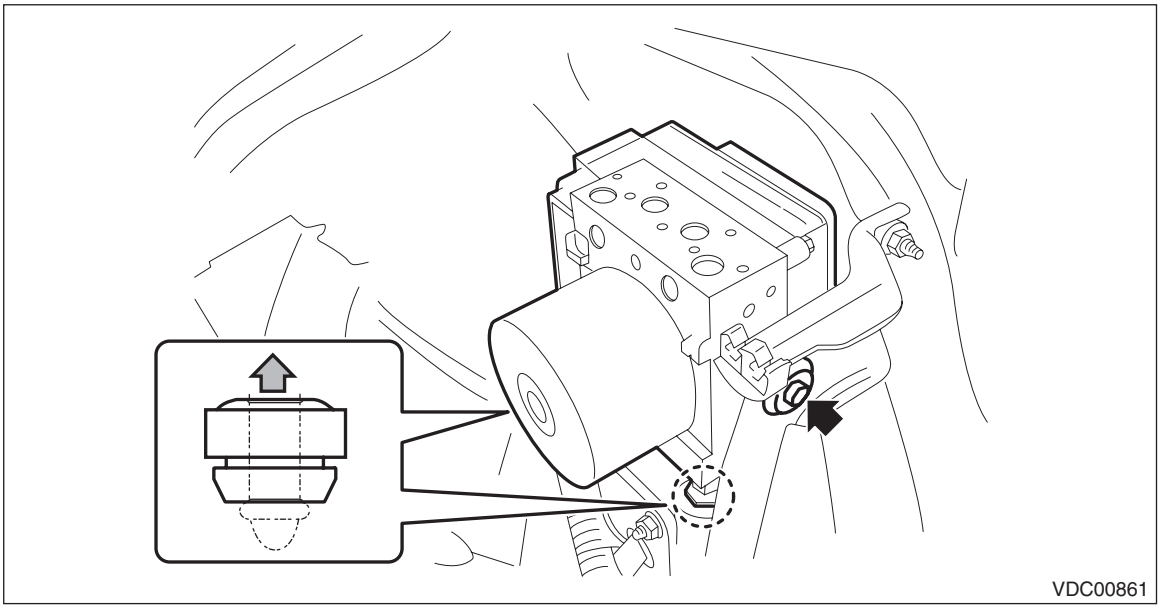
VDC00861

B: INSTALLATION

CAUTION:
• When installing the VDCCM&H/U to the bracket, make sure that there is no oil adhered to the threads of VDCCM&H/U. If the oil is adhered, degrease it carefully before tightening.
• Connect the VDCCM&H/U connector securely.
1) Install each part in the reverse order of removal.

Tightening torque:
Refer to "COMPONENT" of "General Description". <Ref. to VDC-5, VDC CONTROL MODULE & HYDRAULIC CONTROL UNIT (VDCCM&H/U), COMPONENT, General Description.>
2) Bleed air from the brake system. <Ref. to BR-54, Air Bleeding.>
3) Perform parameter confirmation, selection, and registration.

NOTE:
• When the VDCCM&H/U is replaced with a new part, be sure to perform the selection · registration operation.
• For the selection and registration of parameter, the Subaru Select Monitor is required.
• When the registration has not been performed, the DTC code "Parameter selection error" is detected together with the ABS/EBD/VDC warning light illumination.
(1) Check that the applied model and grade of the relevant vehicle are included. <Ref. to VDC(diag)-19, PARAMETER CHECK, OPERATION, Subaru Select Monitor.>
(2) If the applied model and grade of the target vehicle are not included on the {Confirm on parameter} display screen, perform parameter selection and registration. <Ref. to VDC(diag)-19, PARAMETER SELECTION, OPERATION, Subaru Select Monitor.>
4) Perform mode setting for each sensor.
• Set up mode for Neutral of Steering Angle Sensor & Lateral G Sensor 0 point: <Ref. to VDC-16, SET UP MODE FOR NEUTRAL OF STEERING ANGLE SENSOR & LATERAL G SENSOR 0 POINT, ADJUSTMENT, VDC Control Module and Hydraulic Control Unit (VDCCM&H/U).>
• Longitudinal G sensor & lateral G sensor 0 point setting mode: <Ref. to VDC-16, LONGITUDINAL G SENSOR & LATERAL G SENSOR 0 POINT SETTING MODE, ADJUSTMENT, VDC Control Module and Hydraulic Control Unit (VDCCM&H/U).>

C: INSPECTION

1) Check the identification label (a) of the VDC control unit & hydraulic control unit (VDCCM&H/U).

NOTE:
For the identification label, refer to "SPECIFICATION" in "General Description". <Ref. to VDC-2, SPECIFICATION, General Description.>

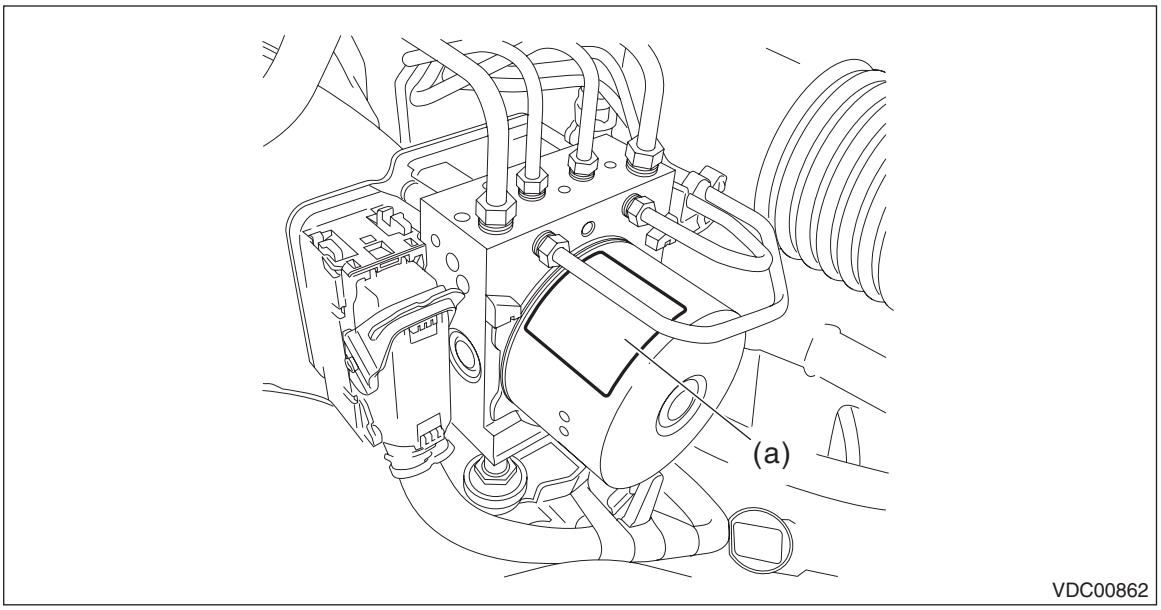

2) Check the condition of connection and settlement of connector, and correct or replace if defective.

1. CHECKING THE HYDRAULIC UNIT ABS OPERATION BY PRESSURE GAUGE

1) Lift up the vehicle, and then remove the wheel.
2) Remove the air bleeder screws from FL and FR caliper bodies.
3) Connect two pressure gauges to FL and FR caliper bodies.

CAUTION:
- **Use a pressure gauge used exclusively for brake fluid measurement.**
- **Do not use the pressure gauge used for the measurement of transmission oil. Doing so will cause the piston seal to expand and deform.**

NOTE:
Wrap sealing tape around the pressure gauge.

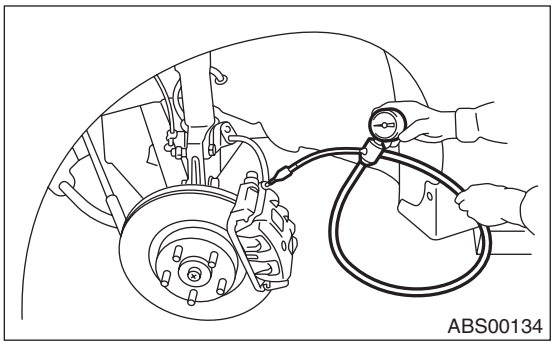

4) Bleed air from the pressure gauges and the FL and FR caliper bodies.
5) Perform ABS sequence control. <Ref. to VDC-17, ABS Sequence Control.>
6) When the hydraulic unit begins to work, first the FL side performs decompression, hold and compression, and then the FR side performs decompression, hold and compression.
7) Read values indicated on the pressure gauge and check if the fluctuation of the values between decompression and compression meets the standard values. Depress the brake pedal and check that the kick-back is normal, and tightness is normal.

Inspection conditions	Front wheel	Rear wheel
Initial value	3,500 kPa (36 kgf/cm^2, 511 psi)	3,500 kPa (36 kgf/cm^2, 511 psi)
When depressurized	500 kPa (5 kgf/cm^2, 73 psi) or less	500 kPa (5 kgf/cm^2, 73 psi) or less
When pressurized	3,500 kPa (36 kgf/cm^2, 511 psi) or more	3,500 kPa (36 kgf/cm^2, 511 psi) or more

8) Disconnect the pressure gauges from FL and FR caliper bodies.
9) Install the air bleeder screws of FL and FR caliper bodies.
10) Remove the air bleeder screws from RL and RR caliper bodies.
11) Connect two pressure gauges to RL and RR caliper bodies.
12) Bleed air from RL and RR caliper bodies, and pressure gauge.
13) Perform ABS sequence control. <Ref. to VDC-17, ABS Sequence Control.>
14) When the hydraulic unit begins to work, first the RR side performs decompression, hold and compression, and then the RL side performs decompression, hold and compression.
15) Read values indicated on the pressure gauge and check if the fluctuation of the values between decompression and compression meets specification. Depress the brake pedal and check that the kick-back is normal, and tightness is normal.
16) Disconnect the pressure gauge from the RL and RR caliper bodies.
17) Install the air bleeder screws of RL and RR caliper bodies.
18) Bleed air from the brake system. <Ref. to BR-54, Air Bleeding.>

2. CHECKING THE HYDRAULIC UNIT ABS OPERATION WITH THE BRAKE TESTER

1) Set wheels other than the one to measure on free rollers.

2) Prepare for the ABS sequence control operation. <Ref. to VDC-17, ABS Sequence Control.>
3) Set the front wheels or rear wheels on the brake tester (a) and set the gear to neutral.

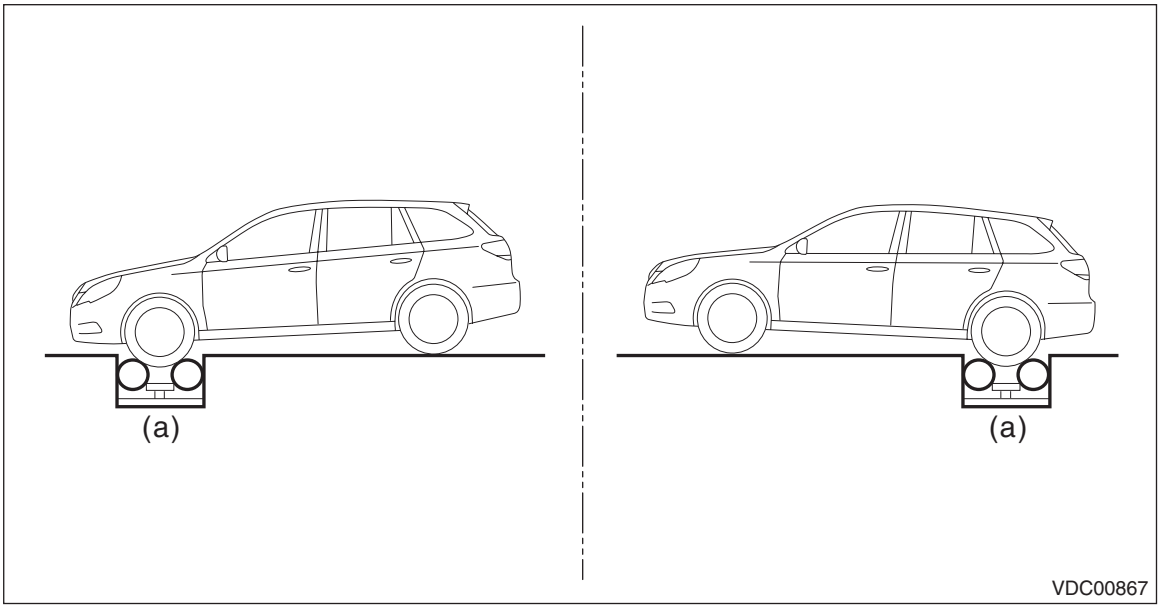

4) Operate the brake tester.
5) Perform ABS sequence control. <Ref. to VDC-17, ABS Sequence Control.>
6) When the hydraulic unit begins to work, check the following work sequence.
   (1) The FL wheel performs decompression, hold and compression in sequence, and subsequently the FR wheel repeats the cycle.
   (2) The RR wheel performs decompression, hold and compression in sequence, and subsequently the RL wheel repeats the cycle.
7) Read values indicated on the brake tester and check if the fluctuation of the values between decompression and compression meets specification.

Inspection conditions	Front wheel	Rear wheel
Initial value	1,000 N (102 kgf, 225 lb)	1,000 N (102 kgf, 225 lb)
When depressurized	500 N (51 kgf, 112 lb) or less	500 N (51 kgf, 112 lb) or less
When pressurized	1,000 N (102 kgf, 225 lb) or more	1,000 N (102 kgf, 225 lb) or more

8) After the inspection, depress the brake pedal and check that it is not abnormally hard, and tightness is normal.

3. CHECKING THE HYDRAULIC UNIT VDC OPERATION USING A PRESSURE GAUGE

1) Lift up the vehicle, and then remove the wheel.
2) Remove the air bleeder screws from FL and FR caliper bodies.
3) Connect two pressure gauges to FL and FR caliper bodies.

CAUTION:
- **Use a pressure gauge used exclusively for brake fluid measurement.**
- **Do not use a pressure gauge used for the measuring transmission oil pressure, as the piston seal may expand and deform.**

NOTE:
Wrap sealing tape around the pressure gauge.

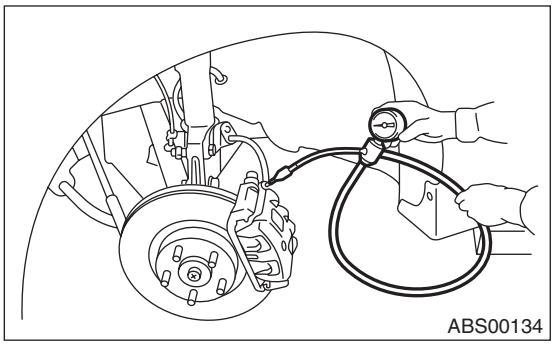

4) Bleed air from the pressure gauge.
5) Perform VDC sequence control. <Ref. to VDC-20, VDC Sequence Control.>
6) When the hydraulic unit begins to work, first the FL side performs compression, hold, and decompression, and then the FR side performs compression, hold, and decompression.
7) Read values indicated on the pressure gauge and check if the fluctuation of the values between decompression and compression meets specification. Depress the brake pedal and check that it is not abnormally hard, and tightness is normal.

Inspection conditions	Front wheel	Rear wheel
When pressurized	3,000 kPa (31 kgf/cm^2, 441 psi) or more	3,000 kPa (31 kgf/cm^2, 441 psi) or more
When depressurized	500 kPa (5 kgf/cm^2, 73 psi) or less	500 kPa (5 kgf/cm^2, 73 psi) or less

8) Disconnect the pressure gauges from FL and FR caliper bodies.
9) Install the air bleeder screws of FL and FR caliper bodies.
10) Remove the air bleeder screws from RL and RR caliper bodies.
11) Connect two pressure gauges to RL and RR caliper bodies.
12) Bleed air from RL and RR caliper bodies, and pressure gauge.
13) Perform VDC sequence control. <Ref. to VDC-20, VDC Sequence Control.>
14) When the hydraulic unit begins to work, first the RR side performs compression, hold, and decompression, and then the RL side performs compression, hold, and decompression.
15) Read the values indicated on the pressure gauges and check if it is within specification. Depress the brake pedal and check that it is not abnormally hard, and tightness is normal.
16) Disconnect the pressure gauge from the RL and RR caliper bodies.
17) Install the air bleeder screws of RL and RR caliper bodies.
18) Bleed air from the brake system. <Ref. to BR-54, Air Bleeding.>

4. CHECK HYDRAULIC UNIT VDC OPERATION WITH BRAKE TESTER

1) Set wheels other than the one to measure on free rollers.
2) Prepare to operate the VDC sequence control. <Ref. to VDC-20, VDC Sequence Control.>
3) Set the front wheels or rear wheels on the brake tester (a) and set the gear to neutral.

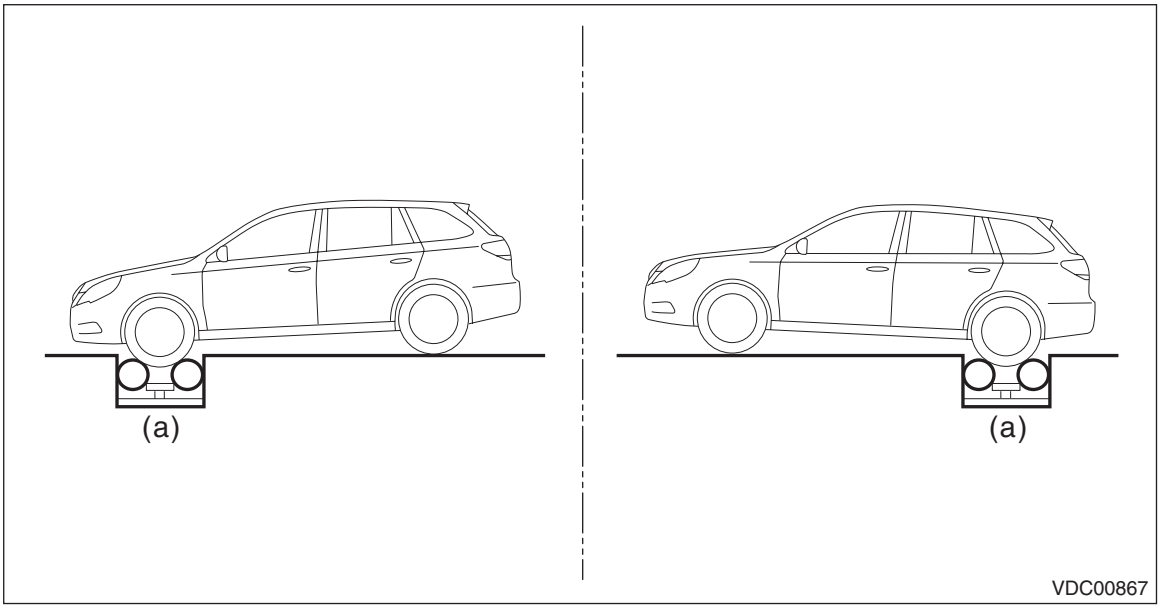

4) Operate the brake tester.
5) Perform VDC sequence control. <Ref. to VDC-20, VDC Sequence Control.>
6) When the hydraulic unit begins to work, check the following work sequence.
   (1) The FL wheel performs compression, hold and decompression in sequence, and subsequently the FR wheel repeats the cycle.
   (2) The RR wheel performs compression, hold and decompression in sequence, and subsequently the RL wheel repeats the cycle.
7) Read values indicated on the brake tester and check if the fluctuation of the values between decompression and compression meets specification.

Inspection conditions	Front wheel	Rear wheel
When pressurized	2,000 N (204 kgf, 450 lbf) or more	2,000 N (204 kgf, 450 lbf) or more
When depressurized	500 N (51 kgf, 112 lbf) or less	500 N (51 kgf, 112 lbf) or less

8) After the inspection, depress the brake pedal and check that it is not abnormally hard, and tightness is normal.

D: ADJUSTMENT

1. SET UP MODE FOR NEUTRAL OF STEERING ANGLE SENSOR & LATERAL G SENSOR 0 POINT

After installing, replacing, or adjusting the following part, perform the Set up mode for Neutral of Steering Angle Sensor & Lateral G Sensor 0 point.

- Steering angle sensor
- Steering wheel
- Suspension parts
- Wheel alignment
- VDCCM&H/U
- VDCCM&H/U bracket

1) Set the steering wheel to the neutral position.
2) Connect the Subaru Select Monitor to data link connector.
   (1) Run the “PC application for Subaru Select Monitor”.
   (2) On «Main Menu» display, select {Each System Check}.
   (3) Select {Brake Control System}. When {VDC} is displayed, select the [OK] button.
   (4) From {Current Data Display & Save}, select {Steer Angle Sensor Op}.
3) Check that the steering angle sensor output value is between –10 and 10 deg.
4) From {Function Check Sequence}, select {Set up mode for Neutral of Steering Angle Sensor & Lateral G Sensor 0 point}, and perform the setting according to the procedure displayed on the Subaru Select Monitor Screen.
5) Drive the vehicle for 10 minutes, and check that there is no system malfunction or the warning light illumination while driving.
6) Make sure that the DTC is not stored.

2. LONGITUDINAL G SENSOR & LATERAL G SENSOR 0 POINT SETTING MODE

After installing or replacing the following part, perform the longitudinal G sensor & lateral G sensor 0 point setting mode.

- Suspension parts
- VDCCM&H/U
- VDCCM&H/U bracket

1) Park the vehicle on a level surface with all wheels aligned straight.
2) Connect the Subaru Select Monitor to data link connector.
   (1) Run the “PC application for Subaru Select Monitor”.
   (2) On «Main Menu» display, select {Each System Check}.
   (3) Select {Brake Control System}. When {VDC} is displayed, select the [OK] button.
   (4) From {Current Data Display & Save}, select {Longitudinal G Sensor Output} and {Lateral G Sensor Output}.
3) Check that output values for the longitudinal G sensor and lateral G sensor are –2 — 2 m/s^2.
4) From {Function Check Sequence}, select {Longitudinal G Sensor & Lateral G Sensor 0 Point Setting Mode}, and perform the setting according to the procedure displayed on the Subaru Select Monitor Screen.
5) Drive the vehicle for 10 minutes, and check that there is no system malfunction or the warning light illumination while driving.
6) Make sure that the DTC is not stored.

5. ABS Sequence Control

A: OPERATION

1) While the ABS sequence control is being performed, the operation of the hydraulic unit can be checked using the brake tester or pressure gauge after the hydraulic unit solenoid valve operation.
2) ABS sequence control can be started by the Subaru Select Monitor.

1. ABS SEQUENCE CONTROL WITH SUBARU SELECT MONITOR

NOTE:
In the event of any trouble, the ABS sequence control will not operate.
1) Connect the Subaru Select Monitor to data link connector.
   (1) Run the “PC application for Subaru Select Monitor”.
   (2) On «Main Menu» display, select {Each System Check}.
   (3) Select {Brake Control System}. When {ABS} is displayed, select the [OK] button.
   (4) Select the {ABS Function Check Mode} from {ABS Sequence Control Mode}.
2) Follow the procedures displayed in the Subaru Select Monitor to execute the following.
   (1) When using a brake tester, press the brake pedal pad with a force of 1,000 N (102 kgf, 225 lbf).
   (2) When using a pressure gauge, press the brake pedal so that the pressure gauge indicates 3,500 kPa (36 kgf/cm^2, 511 psi).
3) The brake system being operated is displayed on the Subaru Select Monitor.

2. CONDITIONS FOR ABS SEQUENCE CONTROL

NOTE:
The control operation starts at point A.

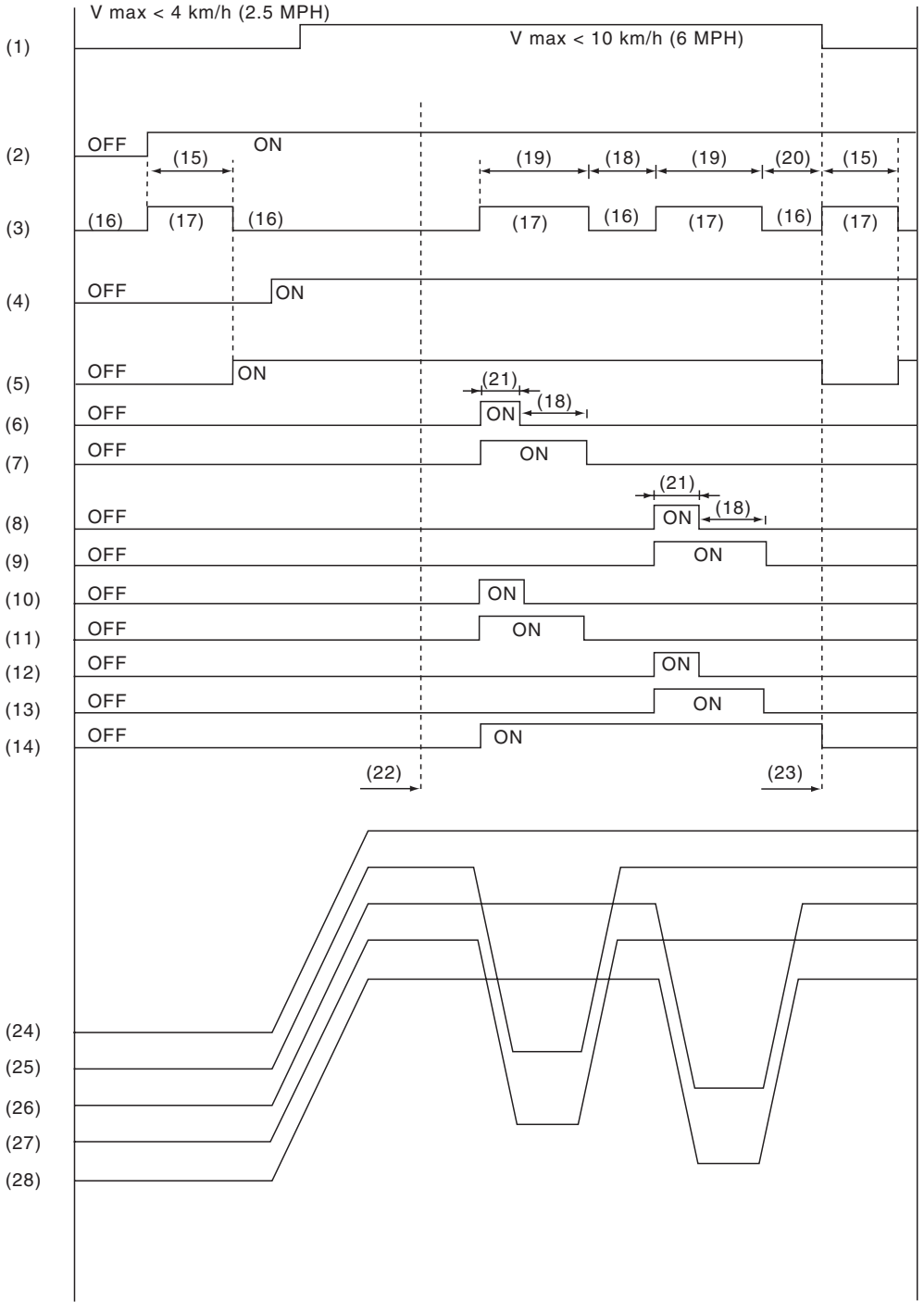

VDC00799

(1) All wheel speed
(2) Ignition key
(3) ABS warning light
(4) Stop light switch
(5) Valve relay
(6) FL decompression valve
(7) FL compression valve
(8) FR decompression valve
(9) FR compression valve
(10) RR decompression valve
(11) RR compression valve
(12) RL decompression valve
(13) RL compression valve
(14) Pump motor
(15) 2 seconds
(16) Light OFF
(17) Light ON
(18) 1.0 second
(19) 1.4 seconds
(20) 0.6 seconds
(21) 0.4 seconds
(22) Point A
(23) Reset
(24) Master cylinder pressure
(25) FL wheel cylinder pressure
(26) FR wheel cylinder pressure
(27) RR wheel cylinder pressure
(28) RL wheel cylinder pressure

B: SPECIFICATION

1. CONDITIONS FOR COMPLETION OF ABS SEQUENCE CONTROL

When the following conditions develop, the ABS sequence control stops and ABS operation is returned to the normal control mode.

- When the speed of at least one wheel reaches 10 km/h (6 MPH).
- When the brake pedal is released during ABS sequence control and the stop light switch is becomes OFF.
- After completion of ABS sequence control.
- When a malfunction is detected.

6. VDC Sequence Control

A: OPERATION

1) While the VDC sequence control is performed, the operation of the hydraulic unit can be checked using the brake tester or pressure gauge after the hydraulic unit solenoid valve is operated.
2) VDC sequence control can be started by Subaru Select Monitor.

1. VDC SEQUENCE CONTROL WITH SUBARU SELECT MONITOR

NOTE:
In the event of any trouble, sequence control will not operate.
1) Connect the Subaru Select Monitor to data link connector.
   (1) Run the “PC application for Subaru Select Monitor”.
   (2) On «Main Menu» display, select {Each System Check}.
   (3) Select {Brake Control System}. When {VDC} is displayed, select the [OK] button.
   (4) Select the {VDC Function Check Mode} from {Function Check Sequence}.
2) Operate according to the procedures displayed in the Subaru Select Monitor.
3) The brake system being operated is displayed on the Subaru Select Monitor.

2. CONDITIONS FOR VDC SEQUENCE CONTROL

NOTE:
The control operation starts at point A.

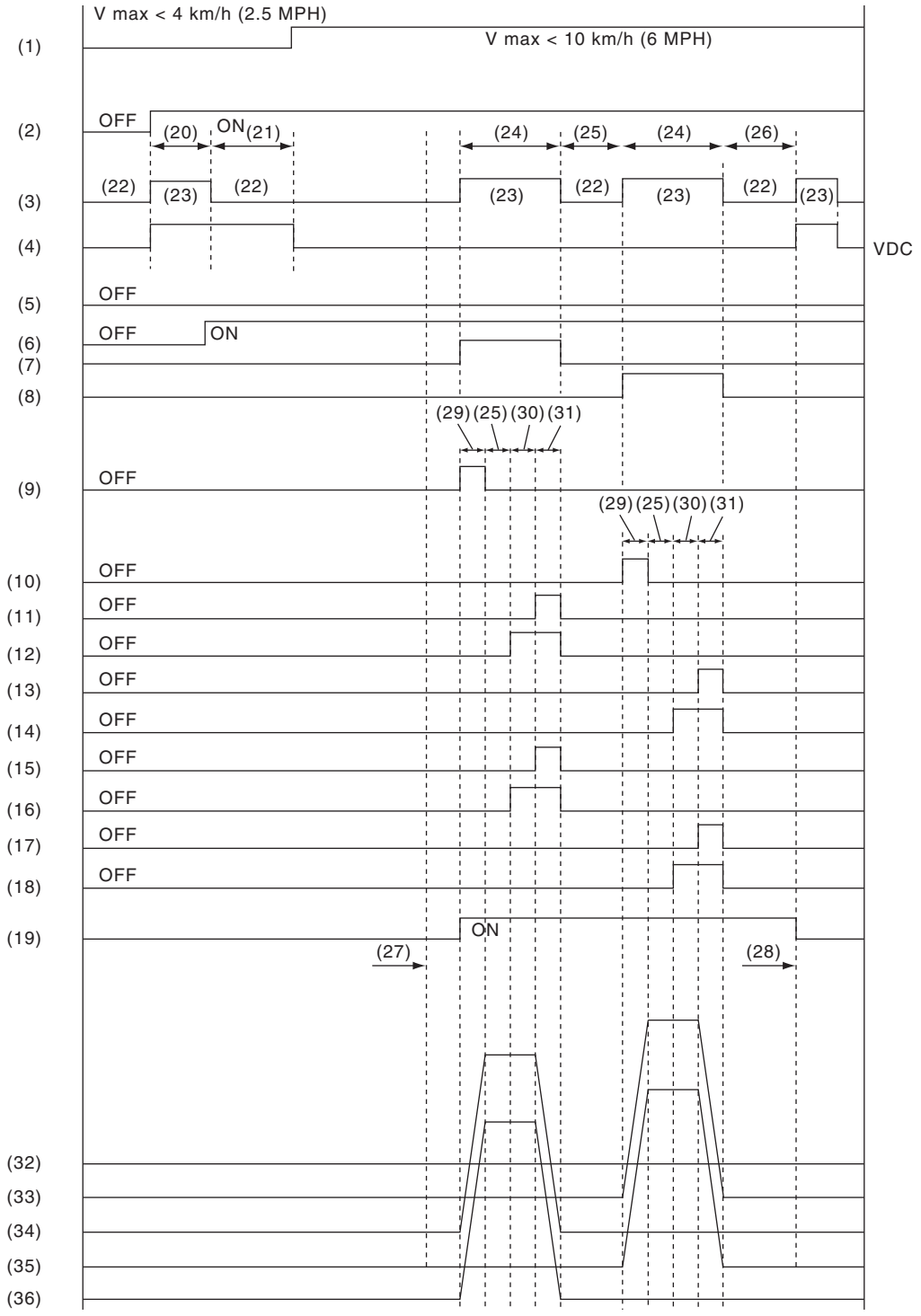

VDC00800

(1) All wheel speed
(2) Ignition key
(3) ABS warning light
(4) VDC warning light
(5) Stop light switch
(6) Valve relay
(7) VDC switching valve 1 FL
(8) VDC switching valve 1 FR
(9) VDC switching valve 2 FL
(10) VDC switching valve 2 FR
(11) FL decompression valve
(12) FL compression valve
(13) FR decompression valve
(14) FR compression valve
(15) RR decompression valve
(16) RR compression valve
(17) RL decompression valve
(18) RL compression valve
(19) Pump motor
(20) 2 seconds
(21) Approx. 1 second
(22) Light OFF
(23) Light ON
(24) 3.4 seconds
(25) 1 second
(26) 1.6 seconds
(27) Point A
(28) Reset
(29) 0.8 seconds
(30) 1.2 seconds
(31) 0.4 seconds
(32) Master cylinder pressure
(33) FR wheel cylinder pressure
(34) FL wheel cylinder pressure
(35) RL wheel cylinder pressure
(36) RR wheel cylinder pressure

B: SPECIFICATION

1. CONDITIONS FOR COMPLETION OF VDC SEQUENCE CONTROL

When the following conditions develop, the VDC sequence control stops and VDC operation is returned to the normal control mode.

- When the speed of at least one wheel reaches 10 km/h (6 MPH).
- After completion of VDC sequence control.
- When a malfunction is detected.

7. Yaw Rate and G Sensor

A: NOTE

Yaw rate & longitudinal G and lateral G sensor are integrated with the VDC control module & hydraulic control module (VDCCM&H/U).

B: INSPECTION

1. YAW RATE & LONGITUDINAL G AND LATERAL G SENSOR SIGNAL

	Step	Check	Yes	No
1	**CHECK YAW RATE & G SENSOR.** 1) Select “Current Data Display & Save” on the Subaru Select Monitor. 2) Read the output of yaw rate & G sensor.	When the vehicle is placed horizontally, are the displayed values –1.5 — 1.5 m/s^2 for longitudinal G and lateral G sensor, and –4 — 4 deg/s for yaw rate sensor?	Go to step **2**.	Replace the VDC control module & hydraulic control unit (VDCCM&H/U).
2	**DRIVING INSPECTION.** Drive for approximately 10 minutes, and check that there is no system malfunction or the warning light illumination while driving.	Is there any abnormal movement or the warning light illumination while driving?	Perform the diagnosis according to DTCs for the VDC system. <Ref. to VDC(diag)-35, List of Diagnostic Trouble Code (DTC).>	G sensor is normal.

8. Steering Angle Sensor

A: REPLACEMENT

1) Position the front wheels straight ahead. (After moving a vehicle 5 m (16 ft) or more with front wheels positioned straight ahead, make sure that the vehicle moves straight ahead.)
2) Turn the ignition switch to OFF.
3) Disconnect the ground cable from battery and wait for at least 60 seconds before starting work.

CAUTION:
Always refer to "CAUTION" of "General Description" in the Airbag System before performing service on the airbag modules. <Ref. to AB-9, CAUTION, General Description.>
4) Remove the driver's airbag module assembly.
   (1) Push in the snap pin using a hexagon wrench or equivalent wrapped with a protective tape to disengage the locks (3 locations).

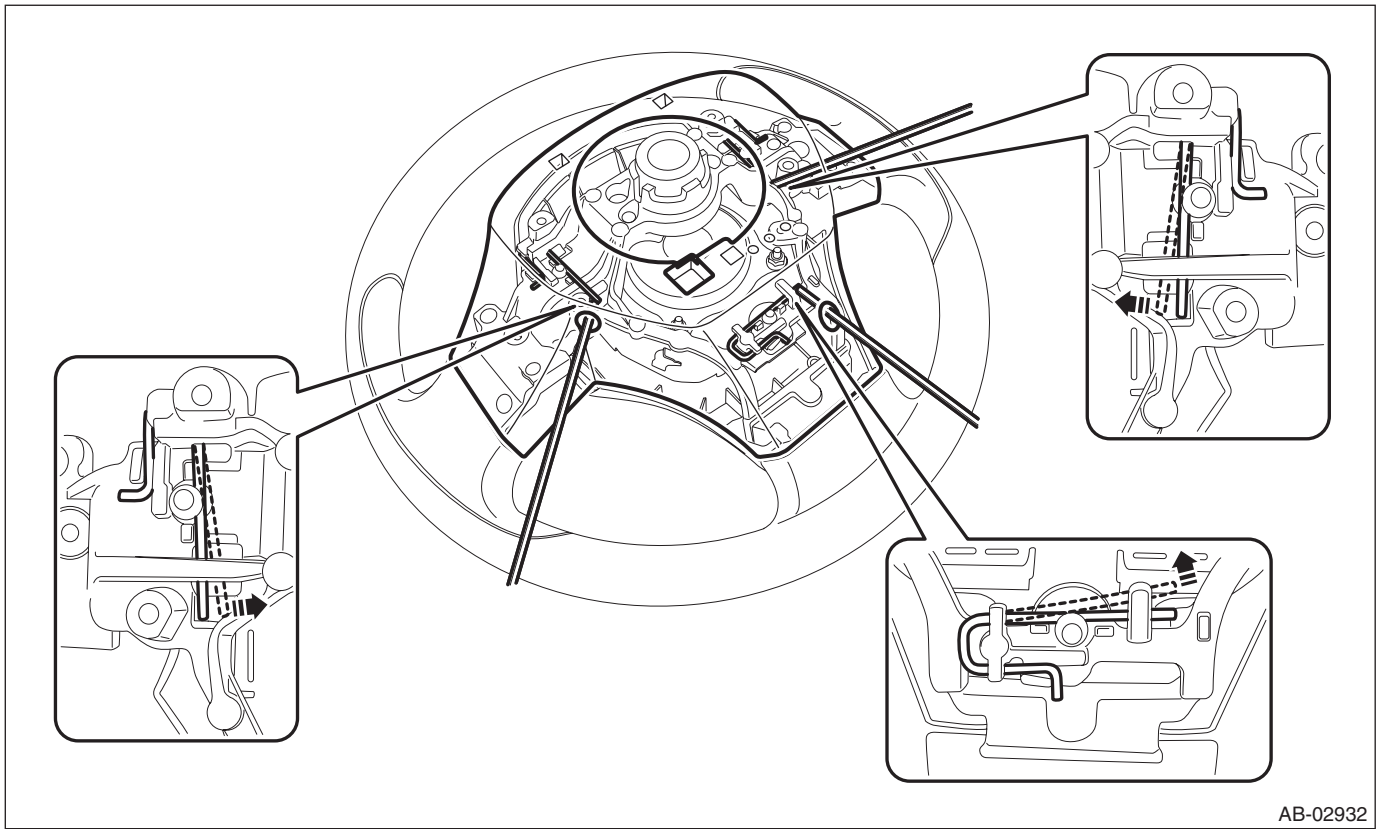

(2) Disconnect the horn harness and airbag connector and remove the airbag module assembly. <Ref. to AB-21, DRIVER'S AIRBAG MODULE, CURTAIN AIRBAG MODULE & PRETENSIONER, PROCEDURE, Airbag Connector.>

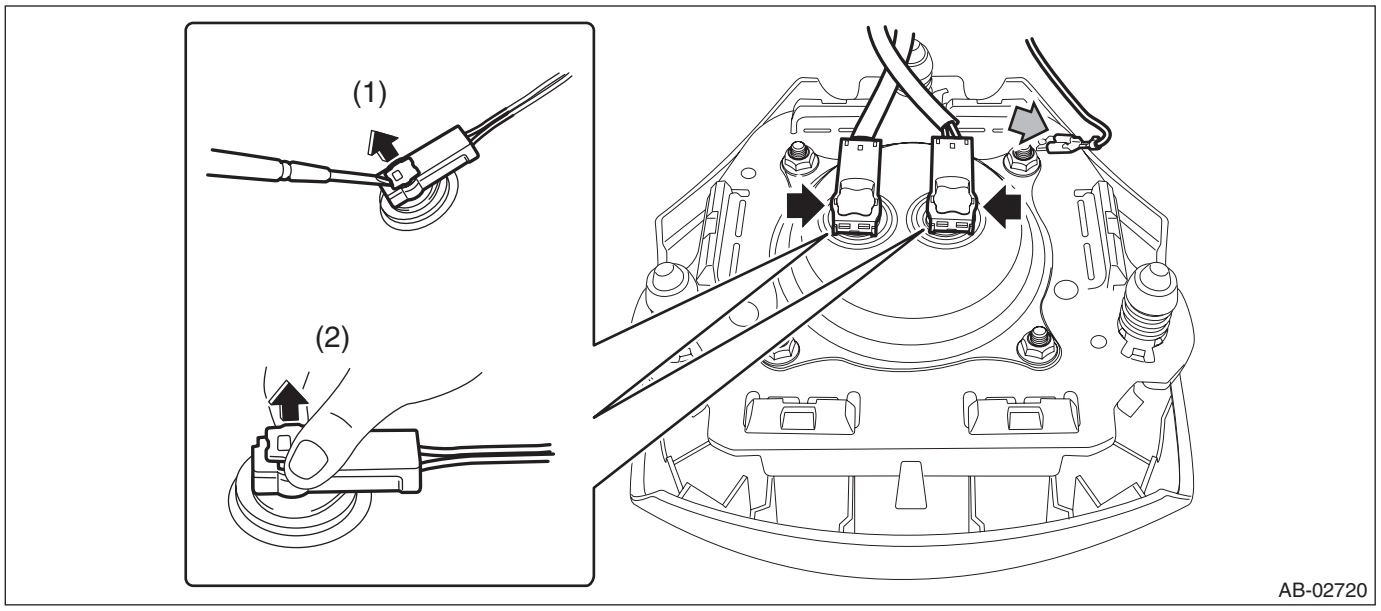

5) Remove the steering wheel.

CAUTION:
• Always use the steering wheel puller for removal to avoid deforming the steering wheel.
• If the steering wheel has been removed, make sure that the roll connector is not turned from the original position.

Preparation tool: Steering wheel puller

(1) Disconnect the connector and remove the nut.
(2) Put alignment marks and remove the steering wheel.

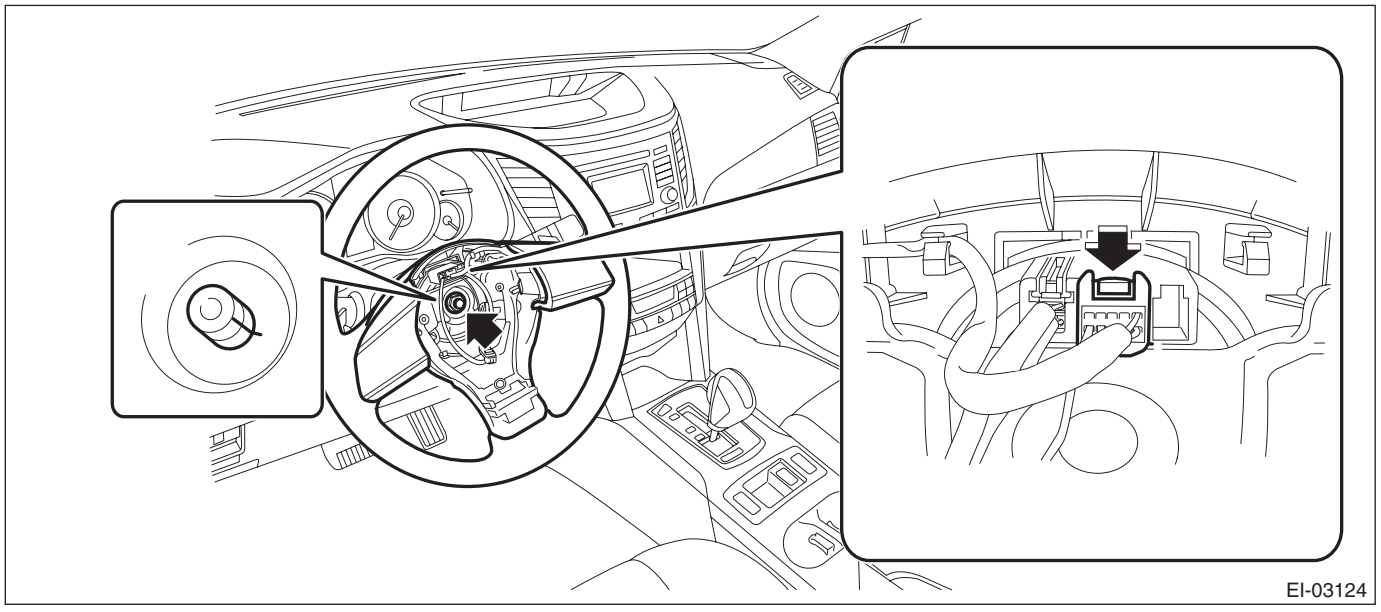

6) Remove the steering column cover.
(1) Lower the lever of the steering column.
(2) Release the claws and remove the screws, then detach the steering column lower cover.

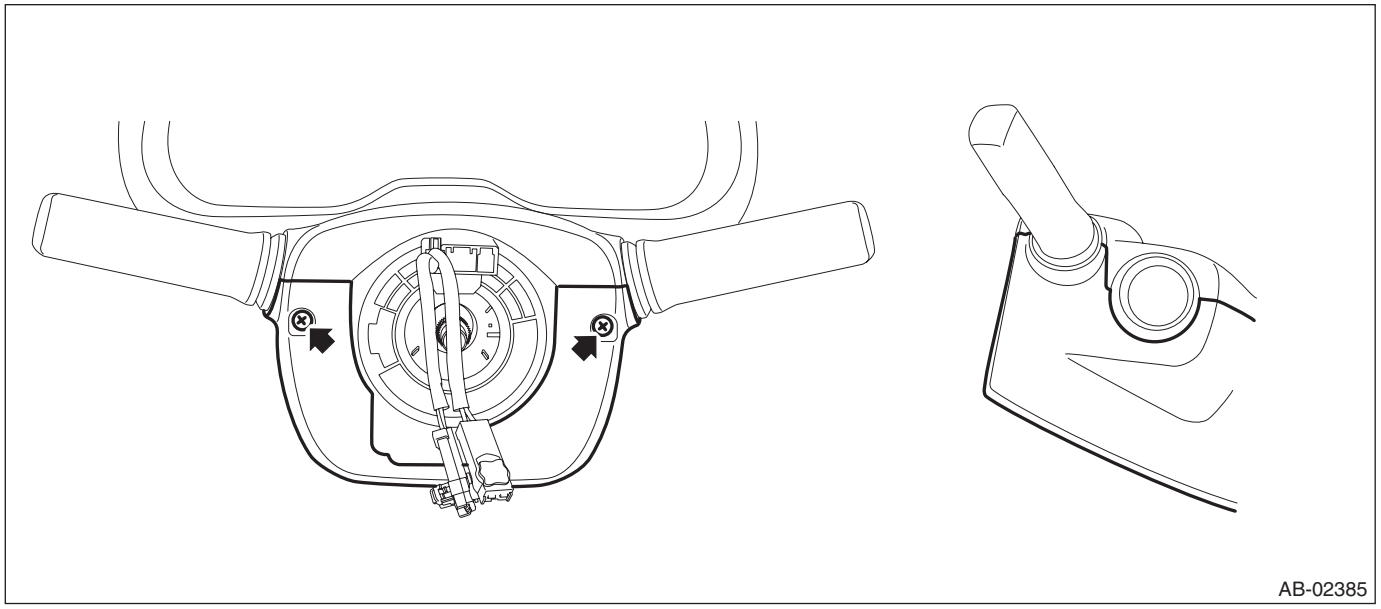

(3) Separate the steering column upper cover and steering upper cover, and remove the steering column upper cover.

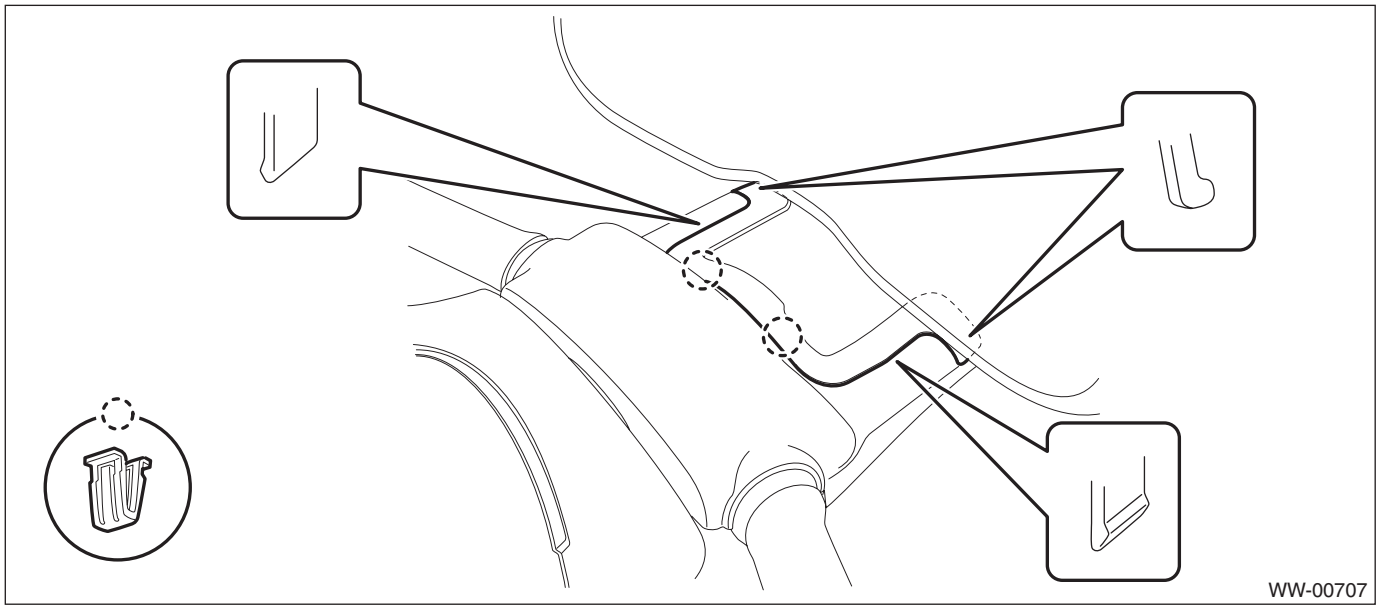

7) Remove the roll connector.

CAUTION:
Make sure that the roll connector is not turned from the original position.

(1) Disconnect the connector under the roll connector.
(2) Release the claws and remove the roll connector.

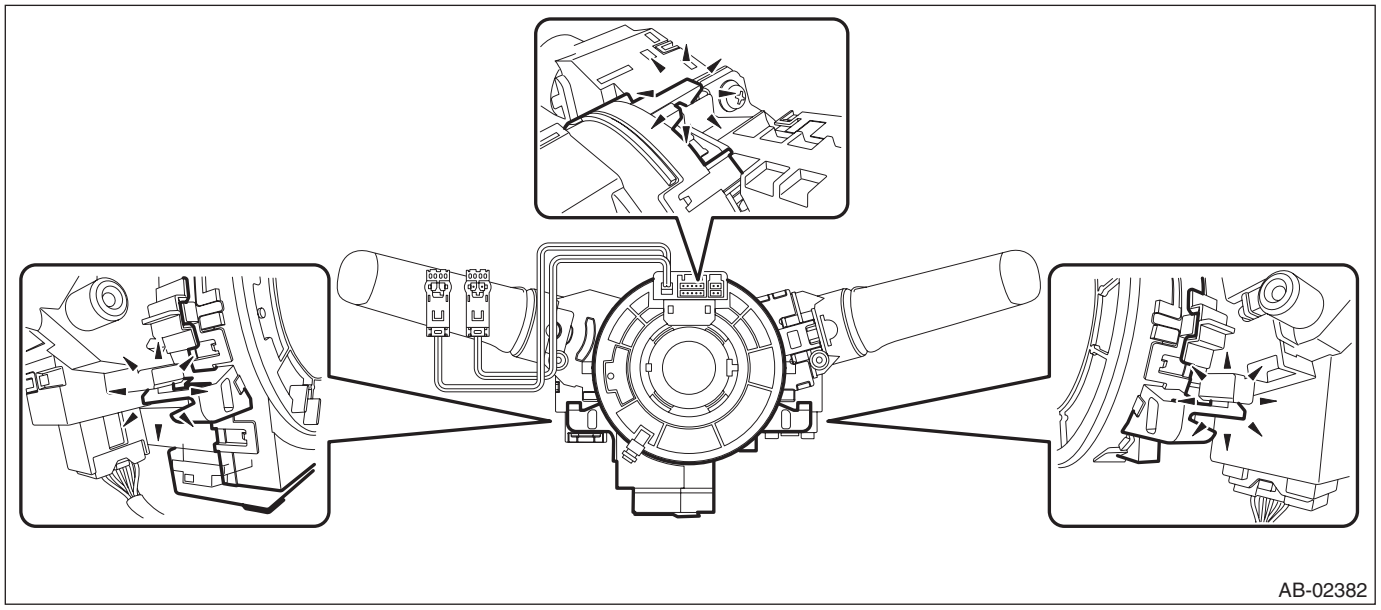

8) Remove the steering angle sensor.

(1) Release the claws and remove the steering angle sensor (b) from the roll connector (a).

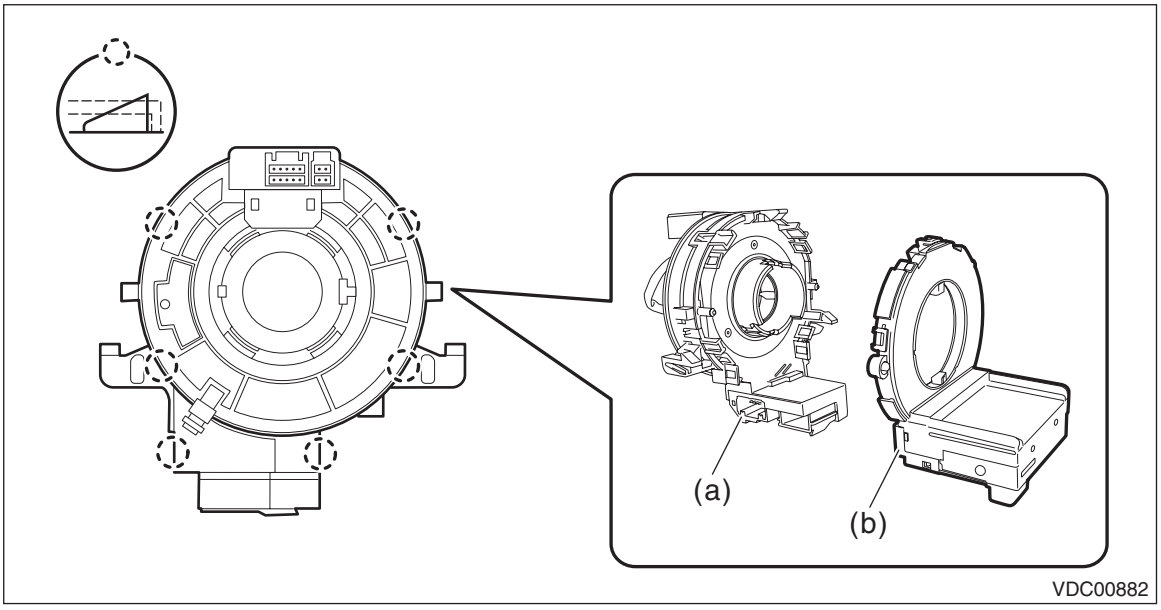

9) Install the steering angle sensor.
(1) Apply grease to the protrusion (a) of the new steering angle sensor.

CAUTION:
Do not rotate the steering angle sensor protrusion.

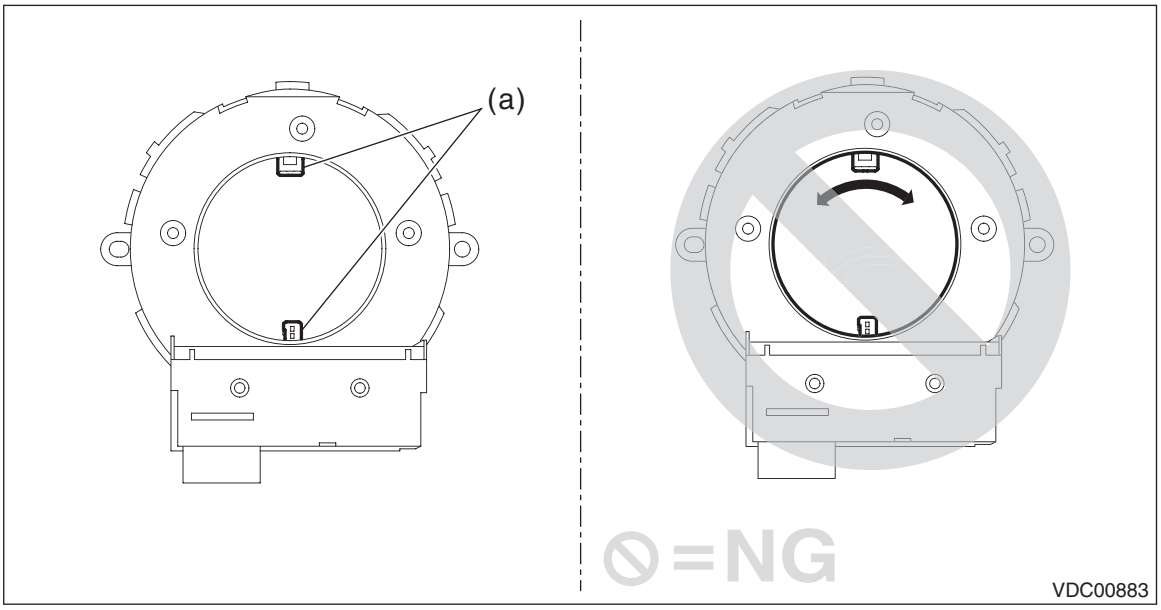

(2) Align the center of roll connector. <Ref. to AB-99, INSTALLATION, Roll Connector.>
(3) Align the position of the protrusion and install roll connector to steering angle sensor.
10) Install each part in the reverse order of removal.

Tightening torque:
Steering wheel: 39 N·m (3.98 kgf-m, 28.8 ft-lb)

Clearance:
Column cover to steering wheel: 2 — 4 mm (0.08 — 0.16 in)
11) After installation, perform the neutral position setting of the steering angle sensor. <Ref. to VDC-16, SET UP MODE FOR NEUTRAL OF STEERING ANGLE SENSOR & LATERAL G SENSOR 0 POINT, ADJUSTMENT, VDC Control Module and Hydraulic Control Unit (VDCCM&H/U).>

9. Front ABS Wheel Speed Sensor

A: REMOVAL

1) Disconnect the ground cable from battery.
2) Lift up the vehicle, and then remove the front wheels.
3) Remove the front ABS wheel speed sensor.

CAUTION:
- **Be careful not to damage the sensor.**
- **Do not apply excessive force to the sensor harness.**

(1) Disconnect the front ABS wheel speed sensor connector in the engine compartment.

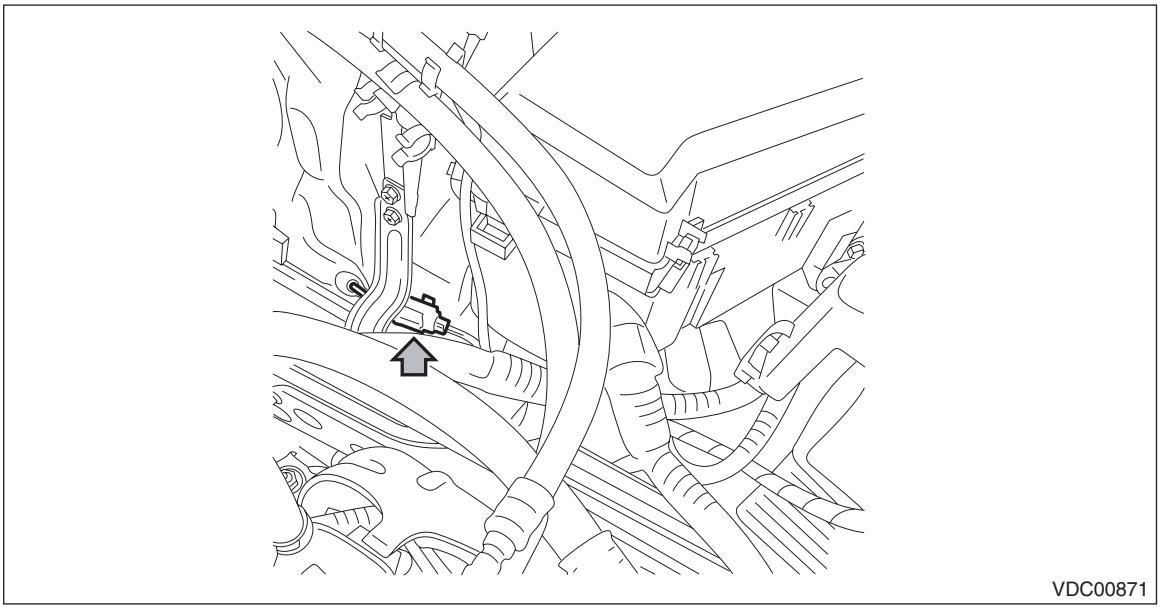

(2) Remove each harness clip and grommet.
(3) Remove the bolts, and remove the front ABS wheel speed sensor from the front axle housing.

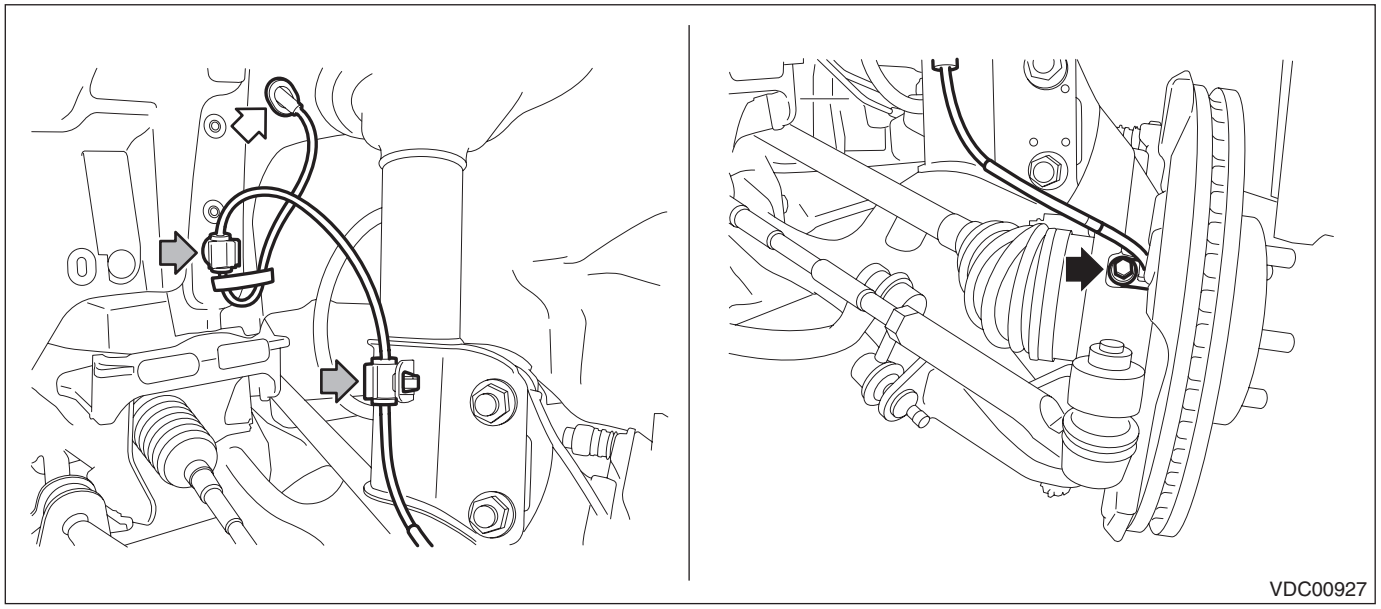

B: INSTALLATION

CAUTION:
Be careful not to damage the sensor.
Install each part in the reverse order of removal.

NOTE:
• Check the identification (mark) on the harness to make sure there is no warpage. <Ref. to VDC-2, SPECIFICATION, General Description.>
• Check if the harness is not pulled and does not come in contact with the suspension or body while operating the steering.

Tightening torque:
Front ABS wheel speed sensor: 7.5 N·m (0.76 kgf-m, 5.5 ft-lb)

C: INSPECTION

1. CHECK WITH SUBARU SELECT MONITOR

1) Connect the Subaru Select Monitor to data link connector.
(1) Run the “PC application for Subaru Select Monitor”.
(2) On «Main Menu» display, select {Each System Check}.
(3) Select {Brake Control System}. When {VDC} is displayed, select the [OK] button.
(4) From {Current Data Display & Save}, select {FR Wheel Speed} and {FL Wheel Speed}.
2) Check if the speed indicated on the display changes in the same manner as the speedometer reading during acceleration/deceleration when the steering wheel is in the straight-ahead position.
3) If the speed indicated on the display does not change in the inspection, check the ABS wheel speed sensor. <Ref. to VDC-30, CHECK ABS WHEEL SPEED SENSOR UNIT., INSPECTION, Front ABS Wheel Speed Sensor.>

2. CHECK ABS WHEEL SPEED SENSOR UNIT

1) Visually check the tip of the ABS wheel speed sensor for foreign particles or damage. If necessary, clean the tip or replace the ABS wheel speed sensor.
2) Disconnect the ABS wheel speed sensor connector.
3) Check the ABS wheel speed sensor cable for discontinuity. If defective, replace the ABS wheel speed sensor.

4) Connect a 12 V power supply to No. 1 terminal of ABS wheel speed sensor connector, then attach resistance to the No. 2 terminal. Rotate the wheel at about 2.75 km/h (2 MPH), and measure the voltage using an oscilloscope.

Standard value of output voltage:
0.7 — 1.4 V

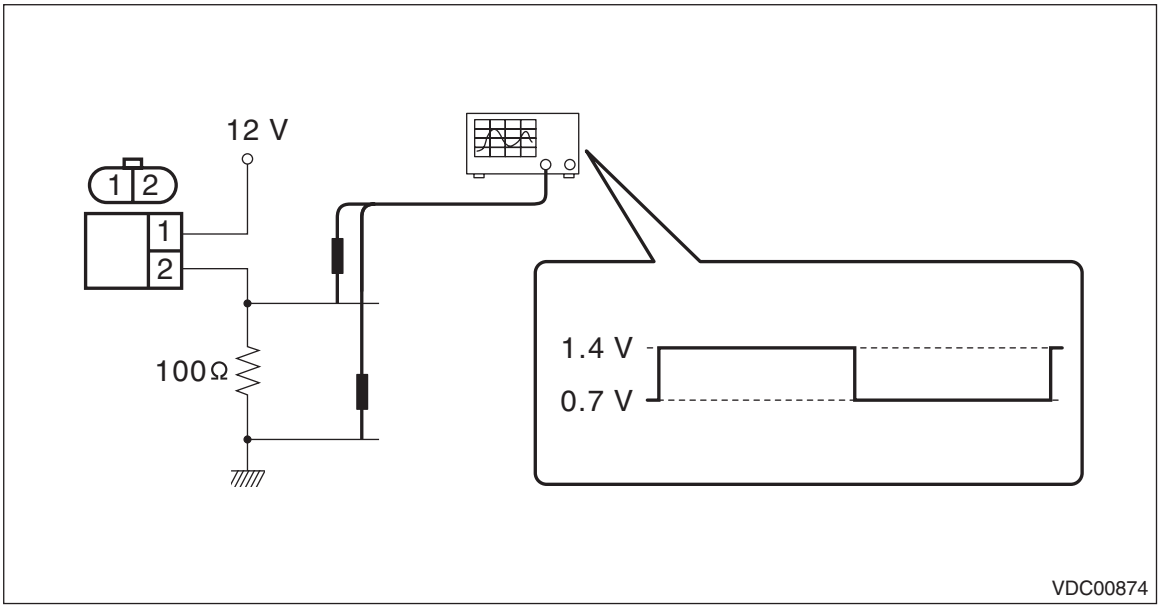

5) Replace the ABS wheel speed sensor if the inspection result is not within the standard value.

10.Rear ABS Wheel Speed Sensor

A: REMOVAL

1) Disconnect the ground cable from battery.
2) Lift up the vehicle, and then remove the rear wheels.
3) Remove the rear ABS wheel speed sensor.

CAUTION:
- **Be careful not to damage the sensor.**
- **Do not apply excessive force to the sensor harness.**
- **Leave the sensor harness clamp (white arrow) on the vehicle side.**

(1) Remove the clips and turn over the mud guard.
(2) Disconnect the connector from the rear ABS wheel speed sensor, and remove the grommet.

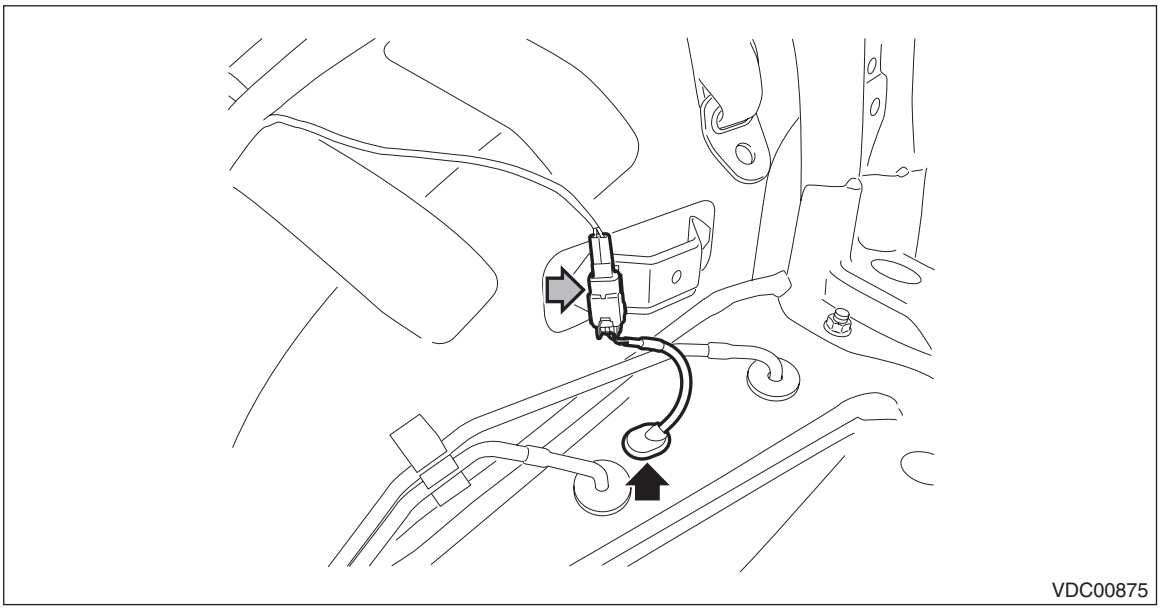
VDC00875

(3) Remove the harness clamp and bolts, and remove the rear ABS wheel speed sensor from the rear axle housing.

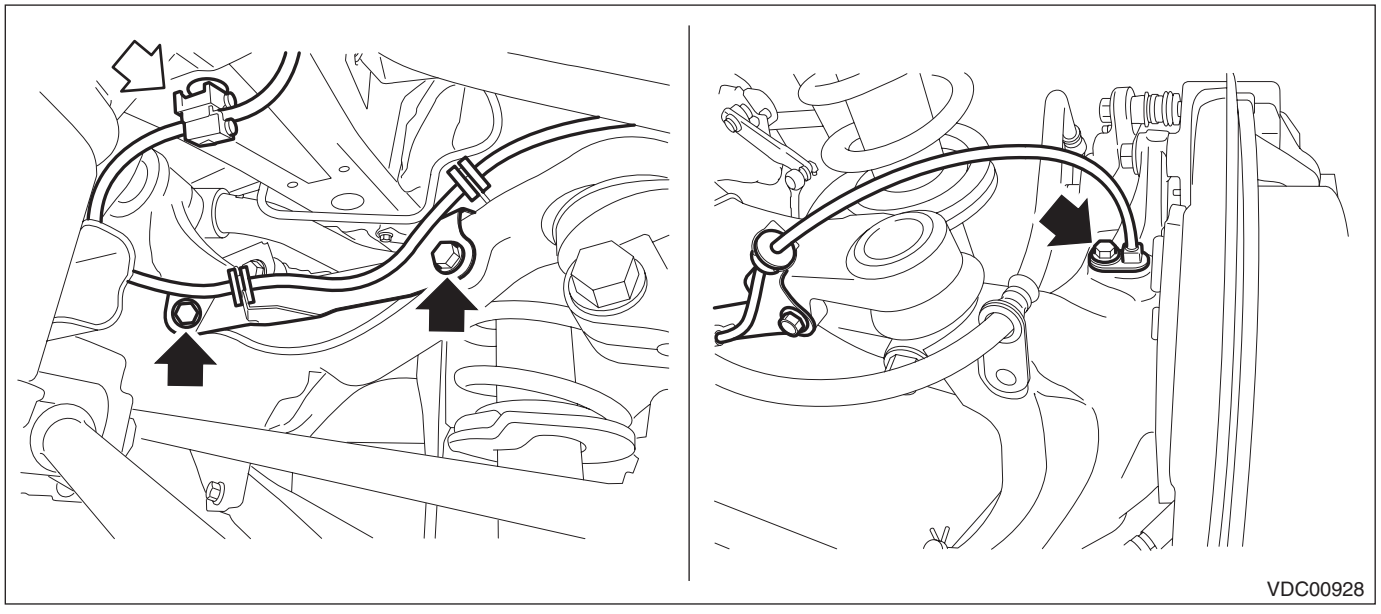
VDC00928

B: INSTALLATION

CAUTION:
Be careful not to damage the sensor.
Install each part in the reverse order of removal.

NOTE:
Check the identification (mark) on the harness to make sure there is no warpage. <Ref. to VDC-2, SPECIFICATION, General Description.>

Tightening torque:
Rear ABS wheel speed sensor: 7.5 N·m (0.76 kgf-m, 5.5 ft-lb)
Rear ABS wheel speed sensor bracket: 7.5 N·m (0.76 kgf-m, 5.5 ft-lb)

C: INSPECTION

1. ABS WHEEL SPEED SENSOR

For inspection of rear ABS wheel speed sensor, refer to inspection of front ABS wheel speed sensor. <Ref. to VDC-30, CHECK ABS WHEEL SPEED SENSOR UNIT., INSPECTION, Front ABS Wheel Speed Sensor.>

11.Front Magnetic Encoder

A: REMOVAL

Refer to “Front Hub Bearing” for removal, because the front magnetic encoder is integrated with front hub bearing. <Ref. to DS-23, REMOVAL, Front Hub Unit Bearing.>

B: INSTALLATION

Refer to “Front Hub Bearing” for installation, because the front magnetic encoder is integrated with front hub bearing. <Ref. to DS-26, INSTALLATION, Front Hub Unit Bearing.>

C: INSPECTION

Visually check the magnetic encoder for any damage. If necessary, replace with a new hub unit bearing.

NOTE:
Because the magnetic encoder is integrated with hub unit bearing assembly, replace the hub unit bearing with a new part if there is any defect found on the magnetic encoder.

12.Rear Magnetic Encoder

A: REMOVAL

Refer to “Rear Hub Unit Bearing” for removal, because the rear magnetic encoder is integrated with rear hub unit bearing. <Ref. to DS-39, REMOVAL, Rear Hub Unit Bearing.>

B: INSTALLATION

Refer to “Rear Hub Unit Bearing” for installation, because the rear magnetic encoder is integrated with rear hub unit bearing. <Ref. to DS-43, INSTALLATION, Rear Hub Unit Bearing.>

C: INSPECTION

Visually check the magnetic encoder parts for any damage. If necessary, replace with a new hub unit bearing.

NOTE:
Because the magnetic encoder is integrated with hub unit bearing assembly, replace the hub unit bearing with a new part if there is any defect found on the magnetic encoder.

13.VDC OFF Switch

A: REMOVAL

NOTE:
The trunk opener switch is integrated with the VDC OFF switch. (Sedan model)
1) Remove the instrument panel lower cover. <Ref. to EI-64, REMOVAL, Instrument Panel Lower Cover.>
2) Release the claws and remove the VDC OFF switch.

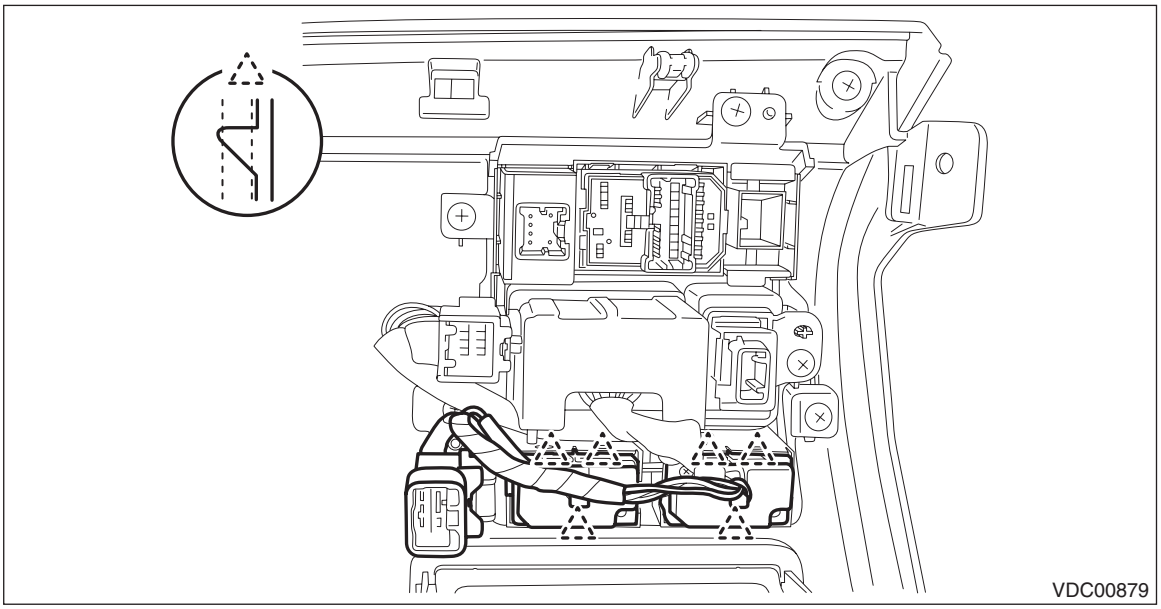

B: INSTALLATION

Install each part in the reverse order of removal.

C: INSPECTION

1) Disconnect the VDC OFF switch connector.
2) Check the resistance between the VDC OFF switch terminals.

Preparation tool: Circuit tester

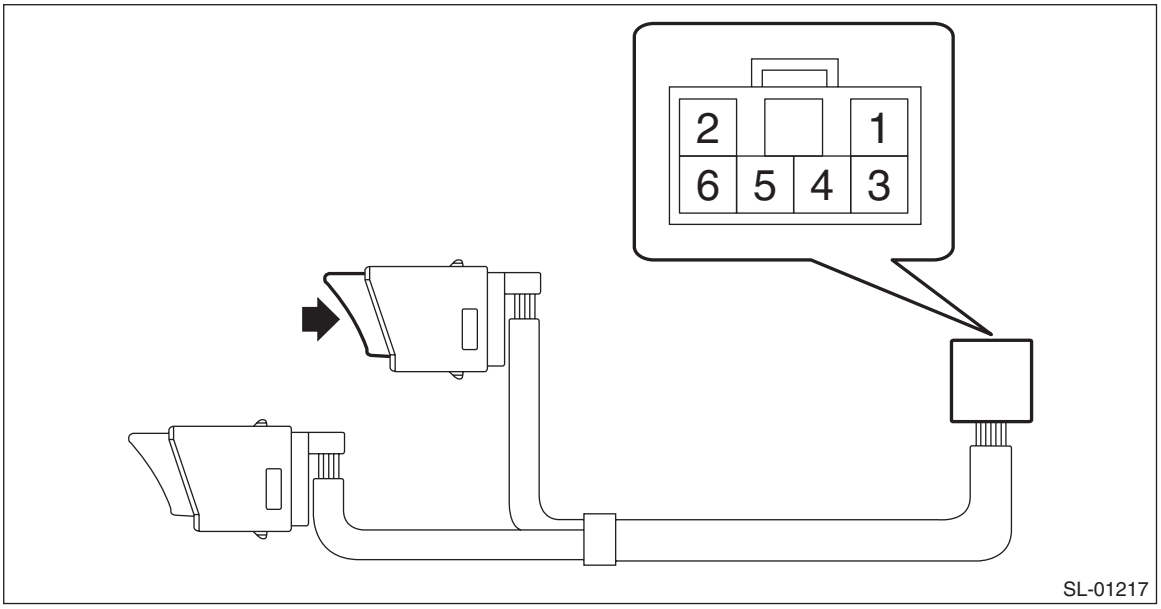

Terminal No.	Inspection conditions	Standard
1 — 3	Switch OFF	1 MΩ or more
	Switch ON	Less than 1 Ω

3) Replace the VDC OFF switch if the inspection result is not within the standard value.

VEHICLE DYNAMICS CONTROL (VDC) (DIAGNOSTICS)

VDC(diag)

		Page
1.	Basic Diagnostic Procedure	2
2.	Check List for Interview	4
3.	General Description	8
4.	Electrical Component Location	10
5.	Control Module I/O Signal	12
6.	Subaru Select Monitor	16
7.	Read Diagnostic Trouble Code (DTC)	23
8.	Inspection Mode	24
9.	Clear Memory Mode	25
10.	Warning Light Illumination Pattern	26
11.	List of Diagnostic Trouble Code (DTC)	35
12.	Diagnostic Procedure with Diagnostic Trouble Code (DTC)	39
13.	General Diagnostic Table	90

1. Basic Diagnostic Procedure

A: PROCEDURE

CAUTION:
Remove foreign matter (dust, water, oil etc.) from the VDCCM&H/U connector during removal and installation.

NOTE:
- To check the harness for open or short circuits, shake problem spot or connector.
- Refer to “Check List for Interview”. <Ref. to VDC(diag)-4, Check List for Interview.>

	Step	Check	Yes	No
1	**CHECK PRE-INSPECTION.** 1) Ask the customer when and how the trouble occurred using the interview check list. <Ref. to VDC(diag)-4, Check List for Interview.> 2) Before performing diagnostics, check the component which might affect VDC problems. <Ref. to VDC(diag)-8, INSPECTION, General Description.>	Is the component that might influence the VDC problem normal?	Go to step **2**.	Repair or replace each component.
2	**CHECK INDICATION OF DTC.** 1) Turn the ignition switch to OFF. 2) Connect the Subaru Select Monitor to data link connector. 3) Turn the ignition switch to ON and run the Subaru Select Monitor. 4) Read the DTC using the Subaru Select Monitor. <Ref. to VDC(diag)-23, OPERATION, Read Diagnostic Trouble Code (DTC).> NOTE: If the communication function of the Subaru Select Monitor cannot be executed properly, check the communication circuit. <Ref. to VDC(diag)-20, COMMUNICATION FOR INITIALIZING IMPOSSIBLE, INSPECTION, Subaru Select Monitor.>	Is DTC displayed on Subaru Select Monitor?	Record the DTC. Go to step **4**.	Go to step **3**.
3	**PERFORM GENERAL DIAGNOSTICS.** 1) Perform the inspection by referring to “General Diagnostic Table”. <Ref. to VDC(diag)-90, INSPECTION, General Diagnostic Table.> 2) Perform the Clear Memory Mode. <Ref. to VDC(diag)-25, OPERATION, Clear Memory Mode.> 3) Perform the Inspection Mode. <Ref. to VDC(diag)-24, PROCEDURE, Inspection Mode.> 4) Read the DTC. <Ref. to VDC(diag)-23, OPERATION, Read Diagnostic Trouble Code (DTC).> 5) Check the DTC is not displayed.	Do the VDC warning light & VDC indicator light, VDC OFF indicator light and ABS warning light go off after starting the engine?	Finish the diagnosis.	Check the combination meter circuit. <Ref. to VDC(diag)-29, ABS WARNING LIGHT DOES NOT GO OFF, Warning Light Illumination Pattern.> <Ref. to VDC(diag)-30, VDC WARNING LIGHT AND VDC INDICATOR LIGHT DO NOT GO OFF, Warning Light Illumination Pattern.> <Ref. to VDC(diag)-31, VDC OFF INDICATOR LIGHT DOES NOT GO OFF, Warning Light Illumination Pattern.>

	Step	Check	Yes	No
4	**CHECK INFORMATION STORED IN FREEZE FRAME DATA.** Using the Subaru Select Monitor, check the freeze frame data of VDC control module.	Are freeze frame data recorded?	Record the freeze frame data. Go to step **5**.	Go to step **5**.
5	**PERFORM DIAGNOSIS.** 1) Refer to “List of Diagnostic Trouble Code (DTC)”. NOTE: For the DTC list, refer to “List of Diagnostic Trouble Code (DTC)”. <Ref. to VDC(diag)-35, LIST, List of Diagnostic Trouble Code (DTC).> 2) Correct the cause of trouble. 3) Perform the Clear Memory Mode. <Ref. to VDC(diag)-25, OPERATION, Clear Memory Mode.> 4) Perform the Inspection Mode. <Ref. to VDC(diag)-24, PROCEDURE, Inspection Mode.> 5) Read the DTC. <Ref. to VDC(diag)-23, OPERATION, Read Diagnostic Trouble Code (DTC).>	Is DTC displayed?	Repeat step 5 until DTC is not shown.	Finish the diagnosis.

2. Check List for Interview

A: CHECK

Check the following item about the vehicle's state.

1. STATE OF ABS WARNING LIGHT

ABS warning light comes on.	❑ Always ❑ Sometimes ❑ Only once ❑ Does not illuminate • When/How long does it illuminate?		
Ignition key position	❑ LOCK ❑ ACC ❑ ON (Before starting engine) ❑ START ❑ ON (After starting engine, engine is running) ❑ ON (After starting engine, engine is at a standstill)		
Timing	❑ Immediately after turning the ignition switch to ON ❑ Immediately after turning the ignition switch to START		
	❑ When accelerating	—	km/h
		—	MPH
	❑ While driving at a constant speed	km/h	MPH
	❑ While decelerating	—	km/h
		—	MPH
	❑ When turning to the right	Steering angle:	deg
		Steering time:	Sec.
	❑ When turning to the left	Steering angle:	deg
		Steering time:	Sec.
	❑ When operating other electrical parts		
	• Part name: • Operating condition:		

2. STATE OF VDC WARNING LIGHT & VDC INDICATOR LIGHT

VDC warning light & VDC indicator light illuminates.	❑ Always ❑ Sometimes ❑ Only once ❑ Does not illuminate • When/How long does it illuminate?		
Ignition key position	❑ LOCK ❑ ACC ❑ ON (Before starting engine) ❑ START ❑ ON (After starting engine, engine is running) ❑ ON (After starting engine, engine is at a standstill)		
Timing	❑ Immediately after turning the ignition switch to ON ❑ Immediately after turning the ignition switch to START		
	❑ When accelerating	—	km/h
		—	MPH
	❑ While driving at a constant speed	km/h	MPH
	❑ While decelerating	—	km/h
		—	MPH
	❑ When turning to the right	Steering angle:	deg
		Steering time:	Sec.
	❑ When turning to the left	Steering angle:	deg
		Steering time:	Sec.
	❑ When operating other electrical parts		
	• Part name: • Operating condition:		

3. STATE OF VDC OFF INDICATOR LIGHT

VDC OFF indicator light comes on.	❑ Always ❑ Sometimes ❑ Only once ❑ Does not illuminate • When/How long does it illuminate?		
Ignition key position	❑ LOCK ❑ ACC ❑ ON (Before starting engine) ❑ START ❑ ON (After starting engine, engine is running) ❑ ON (After starting engine, engine is at a standstill)		
Timing	❑ Immediately after turning the ignition switch to ON ❑ Immediately after turning the ignition switch to START		
	❑ When accelerating	—	km/h
		—	MPH
	❑ While driving at a constant speed	km/h	MPH
	❑ While decelerating	—	km/h
		—	MPH
	❑ When turning to the right	Steering angle:	deg
		Steering time:	Sec.
	❑ When turning to the left	Steering angle:	deg
		Steering time:	Sec.
	❑ When operating other electrical parts		
	• Part name: • Operating condition:		

4. CONDITIONS UNDER WHICH TROUBLE OCCURS

Environment	a) Weather	❑ Fine ❑ Cloudy ❑ Rainy ❑ Snowy ❑ Others:
	b) Ambient temperature	°C (°F)
	c) Road	❑ Inner city ❑ Suburbs ❑ Highway ❑ Local street ❑ Uphill ❑ Downhill ❑ Paved road ❑ Gravel road ❑ Muddy road ❑ Sandy place ❑ Straight road ❑ Sharp curve ❑ Gentle curve ❑ S-curve ❑ Road with a slope on both sides ❑ Others:
	d) Road surface	❑ Dry ❑ Wet ❑ Covered with fresh snow ❑ Covered with hardened snow ❑ Frozen slope ❑ Others:

Check List for Interview

Condition	a) Brakes	Deceleration:	G
		❑ continuous / ❑ intermittent	
	b) Accelerator	Acceleration:	G
		❑ continuous / ❑ intermittent	
	c) Vehicle speed	km/h	MPH
		❑ Advancing ❑ When accelerating ❑ While decelerating ❑ At low speed ❑ When turning ❑ Others:	
	d) Tire inflation pressure	Front RH tire:	kPa
		Front LH tire:	kPa
		Rear RH tire:	kPa
		Rear LH tire:	kPa
	e) Degree of wear	Front RH tire:	mm (in)
		Front LH tire:	mm (in)
		Rear RH tire:	mm (in)
		Rear LH tire:	mm (in)
	f) Steering wheel	❑ Sharp turning ❑ Gentle turning ❑ Straight forward motion ❑ Gentle return ❑ Sharp return	
	g) Tire/Wheel size	❑ Specified size ❑ Except specification ( )	
	h) Tire variation	❑ Summer tire ❑ Studless tire (Brand:)	
	i) Tire chain is attached: ❑ Yes / ❑ No		
	j) Using T-type tires: ❑ Yes / ❑ No		
	k) Condition of suspension alignment:		
	l) Load condition:		
	m) Repaired parts are used: ❑ Yes / ❑ No		
	• Content:		
	n) Others:		

3. General Description

A: CAUTION

1. SUPPLEMENTAL RESTRAINT SYSTEM "AIRBAG"

Airbag system wiring harness is routed near the ABS wheel speed sensor and VDCCM&H/U.

CAUTION:
• Do not use electrical test devices on airbag system wiring harnesses or connector circuits.
• Be careful not to damage the airbag system wiring harness when servicing the ABS wheel speed sensor and VDCCM&H/U.

B: INSPECTION

Before performing diagnosis, check the following items which might affect VDC problems.

1. BATTERY

Measure the battery voltage and check electrolyte.

Standard voltage:
12 V or more

Specific gravity:
1.260 or more

2. GROUND

Check the tightening torque of ground (GV) bolt for VDC.

Tightening torque:
13 N·m (1.3 kgf-m, 9.6 ft-lb)

3. BRAKE FLUID

1) Check the brake fluid level.
2) Check the brake fluid for leaks.

4. HYDRAULIC UNIT

Check the hydraulic unit.
• With brake tester <Ref. to VDC-12, CHECKING THE HYDRAULIC UNIT ABS OPERATION WITH THE BRAKE TESTER, INSPECTION, VDC Control Module and Hydraulic Control Unit (VDC-CM&H/U).>
• Without brake tester <Ref. to VDC-12, CHECKING THE HYDRAULIC UNIT ABS OPERATION BY PRESSURE GAUGE, INSPECTION, VDC Control Module and Hydraulic Control Unit (VDC-CM&H/U).>

5. BRAKE DRAG

Check for brake drag.

6. BRAKE PAD AND ROTOR

Check the brake pad and rotor.
• Front <Ref. to BR-17, INSPECTION, Front Brake Pad.> <Ref. to BR-19, INSPECTION, Front Disc Rotor.>
• Rear <Ref. to BR-31, INSPECTION, Rear Brake Pad.> <Ref. to BR-34, INSPECTION, Rear Disc Rotor.>

7. TIRE

Check the tire specifications, tire wear and air pressure. <Ref. to WT-2, SPECIFICATION, General Description.>

C: PREPARATION TOOL

1. SPECIAL TOOL

ILLUSTRATION	TOOL NUMBER	DESCRIPTION	REMARKS
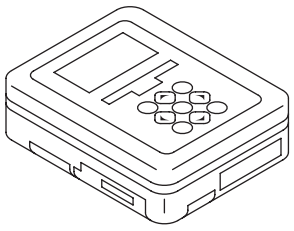 ST1B022XU0	1B022XU0	SUBARU SELECT MONITOR III KIT	Used for troubleshooting the electrical system.

2. GENERAL TOOL

TOOL NAME	REMARKS
Circuit tester	Used for measuring resistance, voltage and current.
Oscilloscope	Used for measuring the sensor.

4. Electrical Component Location

A: LOCATION

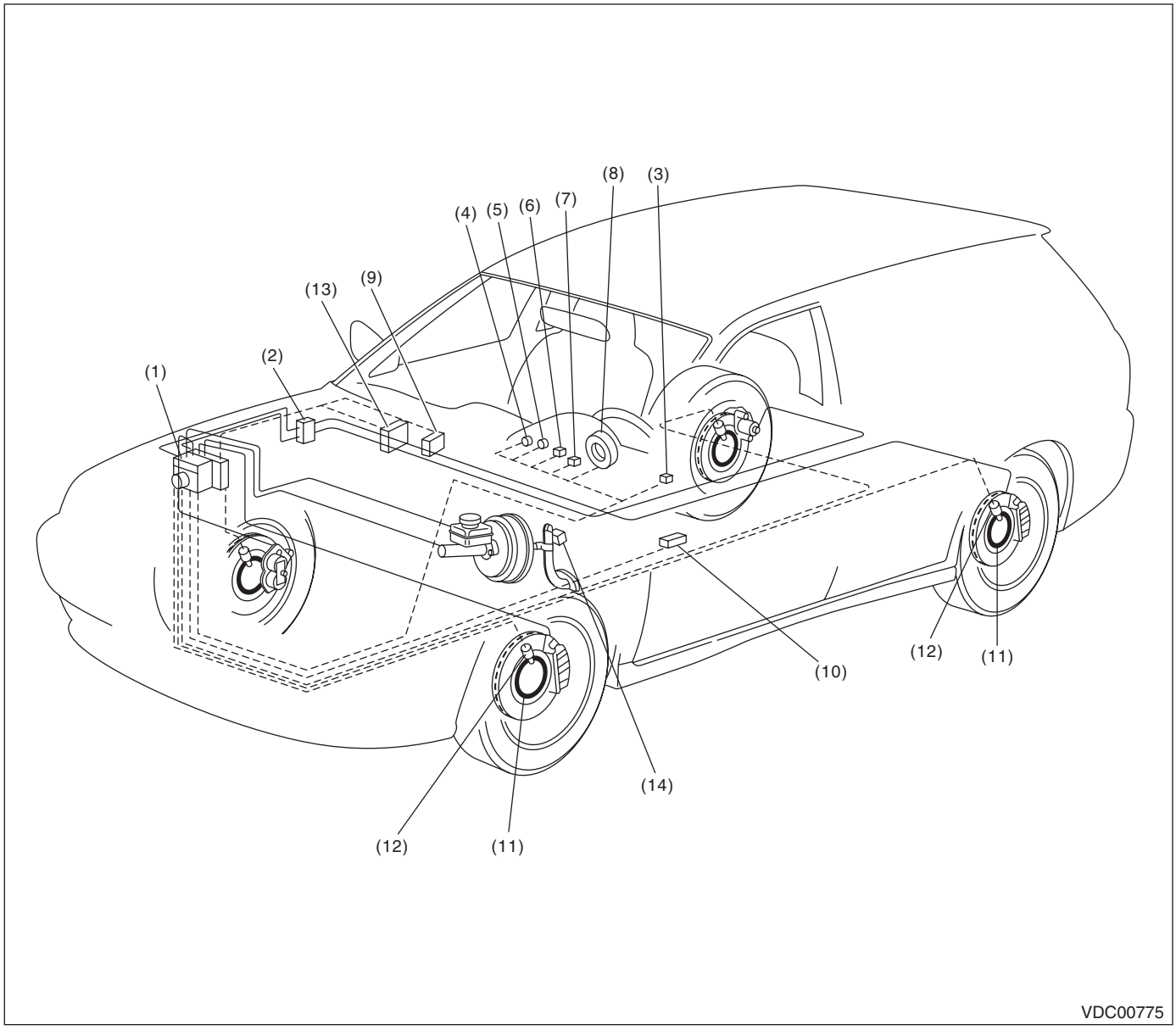

(1)	VDC control module & hydraulic control unit (VDCCM&H/U)	(6)	VDC warning light & VDC indicator light	(11)	Magnetic encoder
(2)	Connector	(7)	VDC OFF indicator light	(12)	ABS wheel speed sensor
(3)	VDC OFF switch	(8)	Steering angle sensor	(13)	Engine control module (ECM)
(4)	ABS warning light	(9)	Transmission control module (TCM)	(14)	Stop light & brake switch
(5)	Brake warning light (EBD warning light)	(10)	Data link connector		

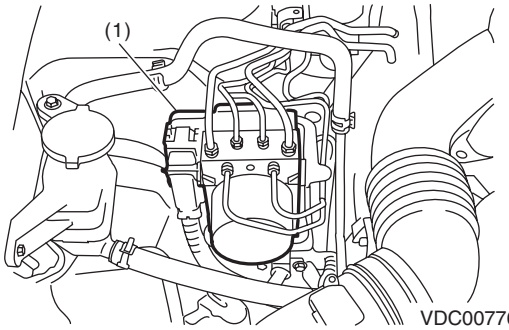

VDC00776

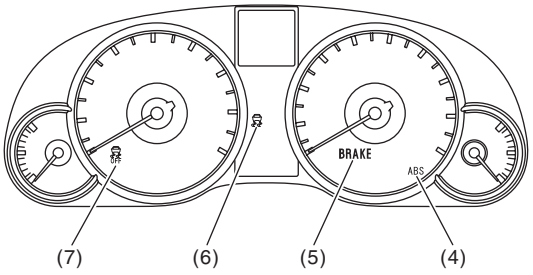

VDC00777

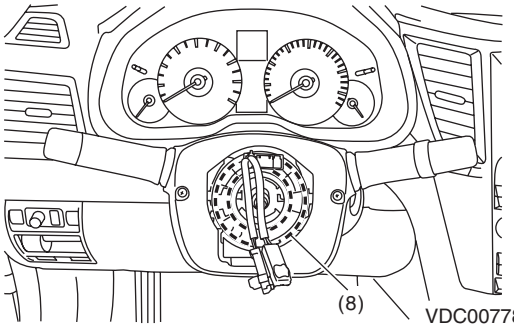

VDC00778

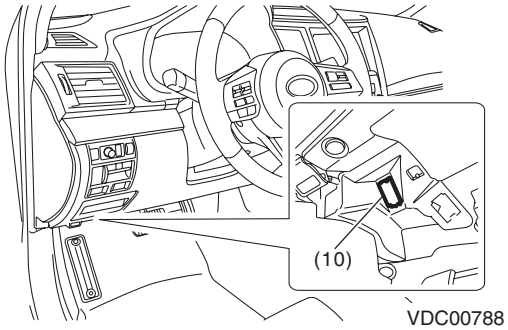

VDC00788

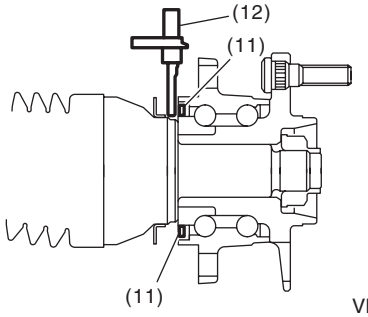

VDC00741

5. Control Module I/O Signal

A: ELECTRICAL SPECIFICATION

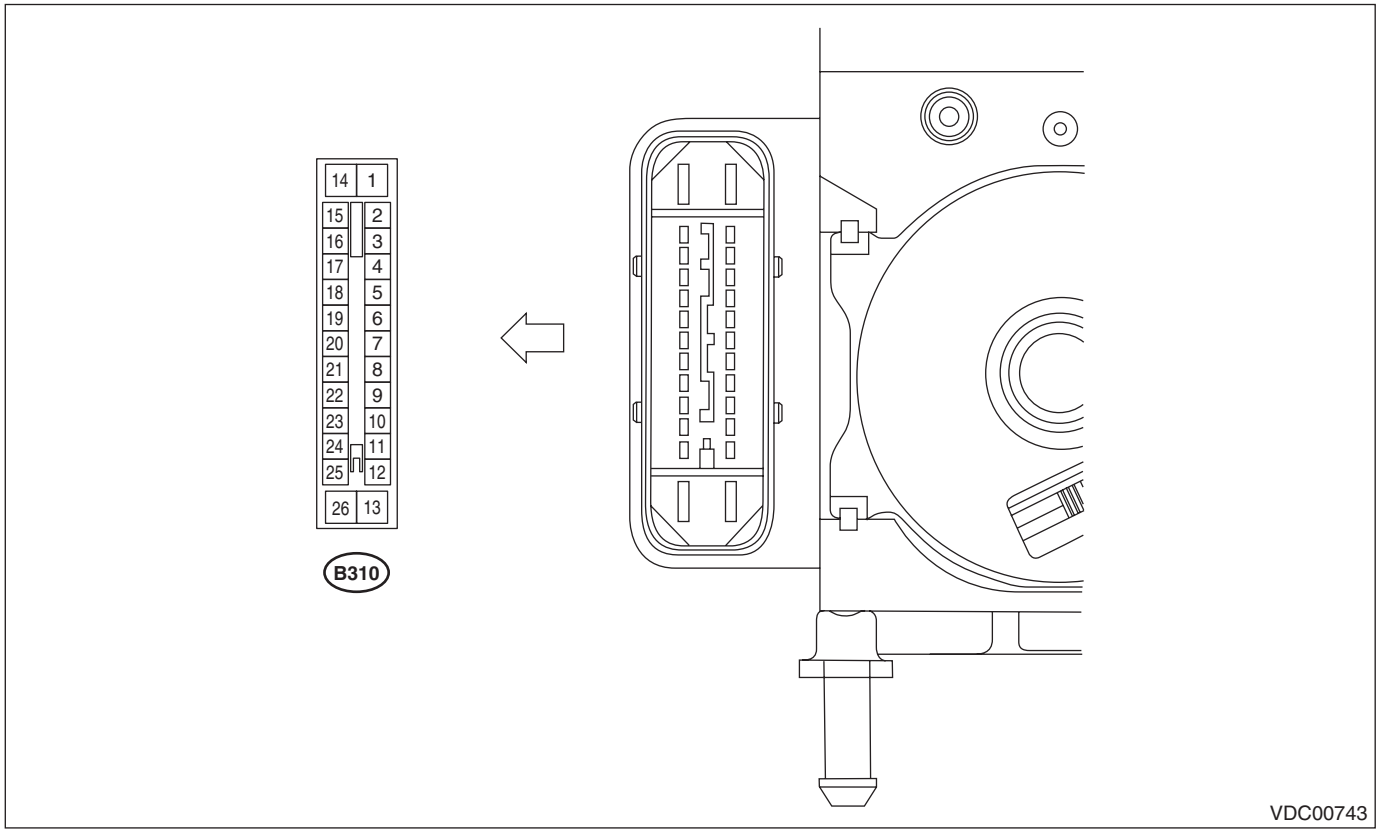

NOTE:
- Terminal numbers in VDCCM&H/U connector are shown in the figure.
- When the connector is removed from VDCCM&H/U, the brake warning light (EBD warning light), ABS warning light, and VDC warning light & VDC indicator light illuminate.

Content			Terminal No. (+) — (–)	Input/Output signal
				Measured value and measuring conditions
Power supply			7 — 13	10 — 15 V when the ignition switch is ON.
ABS wheel speed sensor	Front LH wheel	Power supply	22 — 13	0 — 18 V
		Signal	21	7 — 14 mA: Rectangle waveform
	Front RH wheel	Power supply	18 — 13	0 — 18 V
		Signal	19	7 — 14 mA: Rectangle waveform
	Rear LH wheel	Power supply	16 — 13	0 — 18 V
		Signal	15	7 — 14 mA: Rectangle waveform
	Rear RH wheel	Power supply	24 — 13	0 — 18 V
		Signal	25	7 — 14 mA: Rectangle waveform
CAN communication line (L)			8	0.5 — 2.25 V pulse signal
CAN communication line (H)			10	2.75 — 4.5 V pulse signal
Valve relay power supply			14 — 13	10 — 15 V when the ignition switch is ON.
Motor relay power supply			1 — 13	10 — 15 V when the ignition switch is ON.
Stop light switch			3 — 13	1.5 V or less when the stop light is OFF; otherwise, 10 — 15 V when the stop light is ON.
Subaru Select Monitor			5 — 13	0 ←→ 12 V pulse (in communication)
Vehicle speed output signal			11	0 ←→ 12 V pulse
VDC OFF switch			9 — 13	0.5 Ω or less when the OFF switch is ON; 1 MΩ or more when the switch is OFF.
Clutch stroke sensor power supply			2 — 13	4.8 — 5.2 V
Clutch stroke sensor ground			23	—
Ground			13	—

B: WIRING DIAGRAM

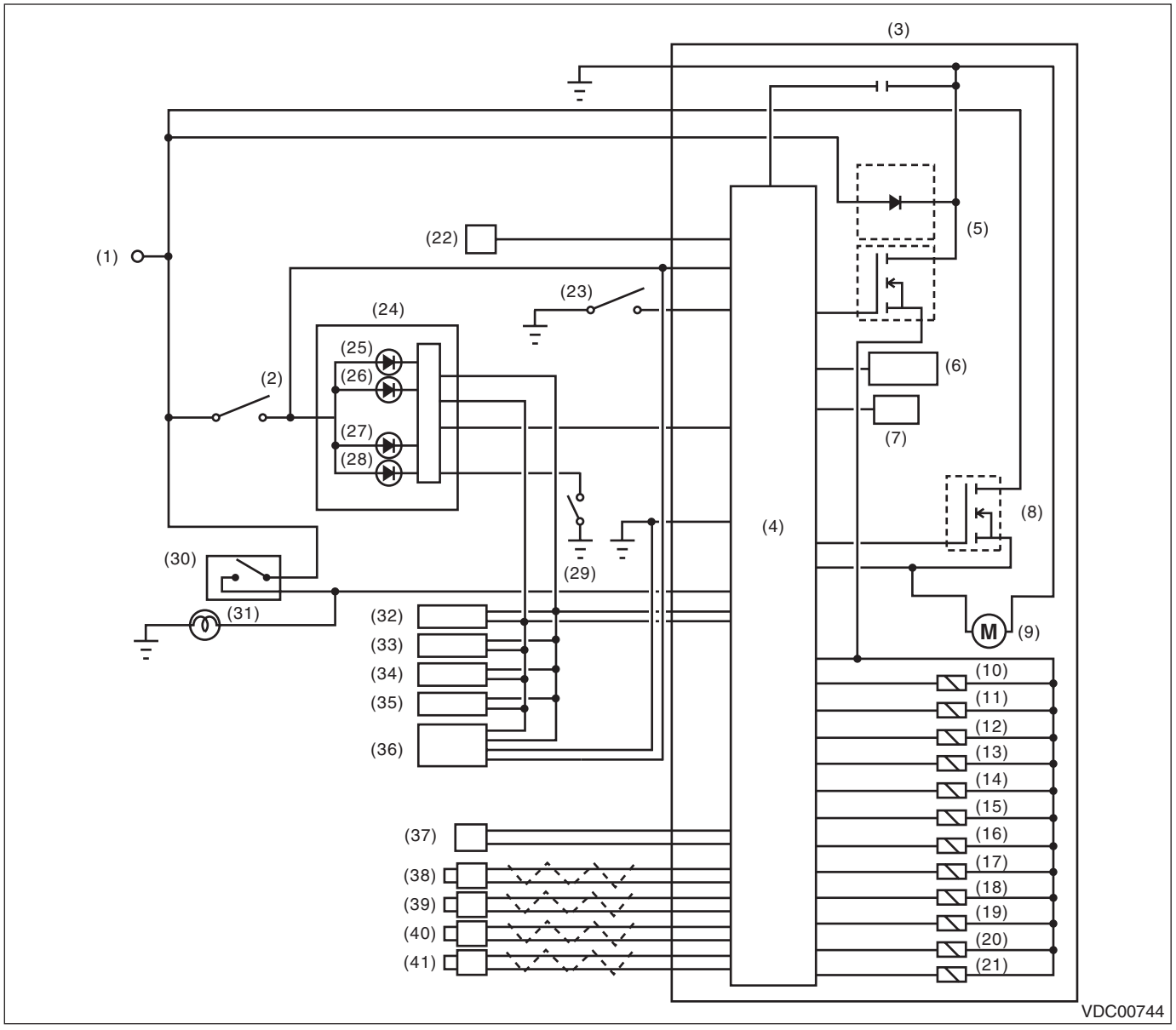

(1) Battery
(2) Ignition switch
(3) VDC control module & hydraulic control unit (VDCCM&H/U)
(4) VDC control module
(5) Valve relay
(6) Pressure sensor
(7) Yaw rate & G sensor
(8) Motor relay
(9) Motor
(10) Front inlet solenoid valve LH
(11) Front outlet solenoid valve LH
(12) Front inlet solenoid valve RH
(13) Front outlet solenoid valve RH
(14) Rear inlet solenoid valve LH
(15) Rear outlet solenoid valve LH
(16) Rear inlet solenoid valve RH
(17) Rear outlet solenoid valve RH
(18) Primary cut solenoid valve
(19) Primary suction solenoid valve
(20) Secondary cut solenoid valve
(21) Secondary suction solenoid valve
(22) Data link connector
(23) VDC OFF switch
(24) Combination meter
(25) VDC OFF indicator light
(26) VDC warning light & VDC indicator light
(27) ABS warning light
(28) Brake warning light (EBD warning light)
(29) Brake fluid level switch
(30) Stop light switch
(31) Stop light
(32) Body integrated unit
(33) Engine control module (ECM)
(34) Transmission control module (TCM)
(35) Parking brake control module
(36) Steering angle sensor
(37) Clutch stroke sensor (MT model only)
(38) Front ABS wheel speed sensor LH
(39) Front ABS wheel speed sensor RH
(40) Rear ABS wheel speed sensor LH
(41) Rear ABS wheel speed sensor RH

6. Subaru Select Monitor

A: OPERATION

1. HOW TO USE SUBARU SELECT MONITOR

NOTE:
• For detailed operation procedures, refer to “PC application help for Subaru Select Monitor”.
• If VDC and Subaru Select Monitor cannot communicate, check the communication circuit. <Ref. to VDC(diag)-20, COMMUNICATION FOR INITIALIZING IMPOSSIBLE, INSPECTION, Subaru Select Monitor.>

2. READ CURRENT DATA

NOTE:
- For detailed operation procedures, refer to “PC application help for Subaru Select Monitor”.
- A list of the support data is shown in the following table.

Display	Contents to be displayed	Unit of measure
FR Wheel Speed	Wheel speed detected by front ABS wheel speed sensor RH is displayed.	km/h or MPH
FL Wheel Speed	Wheel speed detected by front ABS wheel speed sensor LH is displayed.	km/h or MPH
RR Wheel Speed	Wheel speed detected by rear ABS wheel speed sensor RH is displayed.	km/h or MPH
RL Wheel Speed	Wheel speed detected by rear ABS wheel speed sensor LH is displayed.	km/h or MPH
Steering Angle Sensor Op	Steering angle detected by steering angle sensor is displayed.	deg
Yaw Rate Sensor Output	Vehicle angular speed detected by yaw rate sensor is displayed.	deg/s
Longitudinal G sensor output	Vehicle longitudinal acceleration detected by longitudinal G sensor is displayed.	m/s^2
Lateral G sensor Output	Vehicle lateral acceleration detected by lateral G sensor is displayed.	m/s^2
IG power supply voltage	Voltage supplied to VDCCM&H/U is displayed.	V
M. Relay monitor Voltage	Voltage applied to the motor relay is displayed.	V
Motor Relay Signal	Motor relay operation signal is displayed.	ON or OFF
Valve Relay Signal	Valve relay operation signal is displayed.	ON or OFF
EBD Warning Light	ON operation of the EBD warning light is displayed.	ON or OFF
ABS Warning Light	ON operation of the ABS warning light is displayed.	ON or OFF
VDC Warning Light	ON operation of the VDC warning light is displayed.	ON or OFF
EBD Control Flag	EBD operation condition is displayed.	ON or OFF
ABS Control Flag	ABS operation condition is displayed.	ON or OFF
TCS Control Flag	TCS operation condition is displayed.	ON or OFF
VDC Control Flag	VDC operation condition is displayed.	ON or OFF
E/G Control Stop Flag	Engine control command signal is displayed.	1 or 0
OFF Lamp	ON/OFF condition of VDC OFF indicator light is displayed.	ON or OFF
OFF SW Signal	Operation condition of VDC OFF switch is displayed.	ON or OFF
Brake Switch	Brake ON/OFF is displayed.	ON or OFF
Master Cylinder Pressure Sensor	Master cylinder brake fluid pressure detected by pressure sensor is displayed.	bar
FL Wheel Cylinder Pressure Sensor	0 bar is always displayed.	bar
FR Wheel Cylinder Pressure Sensor	0 bar is always displayed.	bar

3. FUNCTION CHECK

Display	Contents of display	Index No.
ABS Sequence Control Mode	Operate the valve and pump motor continuously to perform the ABS sequence control.	<Ref. to VDC-17, ABS Sequence Control.>
VDC Check Mode	Operate the valve and pump motor continuously to perform the VDC sequence control.	<Ref. to VDC-20, VDC Sequence Control.>
Set up mode for Neutral of Steering Angle Sensor & Lateral G Sensor 0 point	Set the steering angle sensor neutral position and the lateral G sensor “0” point.	<Ref. to VDC-16, SET UP MODE FOR NEUTRAL OF STEERING ANGLE SENSOR & LATERAL G SENSOR 0 POINT, ADJUSTMENT, VDC Control Module and Hydraulic Control Unit (VDCCM&H/U).>
Longitudinal G sensor & lateral G sensor 0 point setting mode	Set “0” point of the longitudinal G sensor and the lateral G sensor.	<Ref. to VDC-16, LONGITUDINAL G SENSOR & LATERAL G SENSOR 0 POINT SETTING MODE, ADJUSTMENT, VDC Control Module and Hydraulic Control Unit (VDCCM&H/U).>

4. FREEZE FRAME DATA

NOTE:
- Data stored at the time of trouble occurrence is shown on display.
- Each time a trouble occurs, the latest information is stored in the freeze frame data in memory.
- If a freeze frame data is not properly stored in memory (due to a drop in VDCCM power supply, etc.), a DTC suffixed with a question mark “?” appears on the Subaru Select Monitor display. This shows it may be an unreliable reading.

Display	Contents to be displayed
FR Wheel Speed	Wheel speed detected by front ABS wheel speed sensor RH is displayed in km/h or MPH.
FL Wheel Speed	Wheel speed detected by front ABS wheel speed sensor LH is displayed in km/h or MPH.
RR Wheel Speed	Wheel speed detected by rear ABS wheel speed sensor RH is displayed in km/h or MPH.
RL Wheel Speed	Wheel speed detected by rear ABS wheel speed sensor LH is displayed in km/h or MPH.
Vehicle Speed	Vehicle speed calculated by VDC control module is displayed.
Steering Angle Sensor Op	Steering angle detected by steering angle sensor is displayed.
Yaw Rate Sensor Output	Vehicle angular speed detected by yaw rate sensor is displayed.
Longitudinal G sensor output	Vehicle longitudinal acceleration detected by longitudinal G sensor is displayed.
Lateral G sensor Output	Vehicle lateral acceleration detected by lateral G sensor is displayed.
IG power supply voltage	Voltage supplied to VDC control module is displayed.
Accel. Opening Angle	Acceleration opening is displayed.
Engine Speed	Engine speed on malfunction occurrence is displayed.
Steering angle flag	Whether the absolute angle of the steering angle sensor was determined is displayed.

Display	Contents to be displayed
EBD Control Flag	EBD control condition is displayed.
ABS Control Flag	ABS control condition is displayed.
TCS Control Flag	TCS control condition is displayed.
VDC Control Flag	VDC control condition is displayed.
E/G Control Stop Flag	Engine control command signal is displayed.
OFF Switch Detection	ON/OFF condition of the VDC operated by the driver is displayed.
Brake Switch	Brake ON/OFF is displayed.
Master Cylinder Pressure Sensor	Master cylinder brake fluid pressure detected by pressure sensor is displayed.
FL Wheel Cylinder Pressure Sensor	0 bar is always displayed.
FR Wheel Cylinder Pressure Sensor	0 bar is always displayed.

5. PARAMETER SELECTION

CAUTION:
• Subaru Select Monitor is required for parameter selection.
• This function can be used for the replacement part of VDCCM&H/U.

NOTE:
• When the VDCCM&H/U is replaced with a replacement part, be sure to perform the parameter selection/registration to the VDCCM&H/U using this function.
• To confirm the applied model, refer to the “model number plate” attached on the vehicle. <Ref. to ID-2, IDENTIFICATION, Identification.>
• When the applied model is entered wrong, re-entry is possible.
• When the registration has not been performed, the DTC code “Parameter selection error” is detected together with the ABS/EBD/VDC warning light illumination.
1) Connect the Subaru Select Monitor.
2) On «Main Menu» display, select {Each System Check}.
3) On «System Selection Menu» display, select {Brake Control System}.
4) When {VDC} is displayed, select the [OK] button.
5) On «Brake Control Diagnosis» display, select {Select Parameter}.
6) Check the applied model and option code indicated in the “Model number plate”. <Ref. to ID-2, IDENTIFICATION, Identification.>
7) Enter the applied model of 7-digit alphanumeric characters and press the [Enter] key.
8) When the option code input screen appears after entering the applied model, enter the option code consisting of 4-digit alphanumeric characters, and press the [Enter] key When the option code is 3 digits, add “0” in front and enter the code as 4 digits.
9) When the confirmation screen indicating the vehicle information appears, check that the correct applied model and grade are displayed and click the [OK] button.

NOTE:
When the displayed applied model and grade are different from those of the vehicle, perform registration operations again after clicking the [OK] button.
10) Execute the Clear Memory Mode after parameter selection and registration operations because the DTC for “Parameter selection error” is memorized. <Ref. to VDC(diag)-25, Clear Memory Mode.>

6. PARAMETER CHECK

NOTE:
The parameter data registered in the VDCCM is shown on the display.
1) Connect the Subaru Select Monitor.
2) On the «Main Menu» display, select the {Each System Check}.
3) On the «System Selection Menu» display, select the {Brake Control System}.
4) Click the [OK] button after the {VDC} is displayed.
5) On the «Brake Control Diagnosis» display, select the {Confirm on parameter}.
6) On the {Confirm on parameter} display screen, check that the applied model and grade of the target vehicle are included, and click the [OK] button.
7) If the applied model and grade of the target vehicle are not included on the {Confirm on parameter} display screen, perform parameter selection and registration. <Ref. to VDC(diag)-19, PARAMETER SELECTION, OPERATION, Subaru Select Monitor.>

B: INSPECTION

1. COMMUNICATION FOR INITIALIZING IMPOSSIBLE

DETECTING CONDITION:
Defective harness connector
TROUBLE SYMPTOM:
Communication is impossible between VDC and Subaru Select Monitor.
WIRING DIAGRAM:

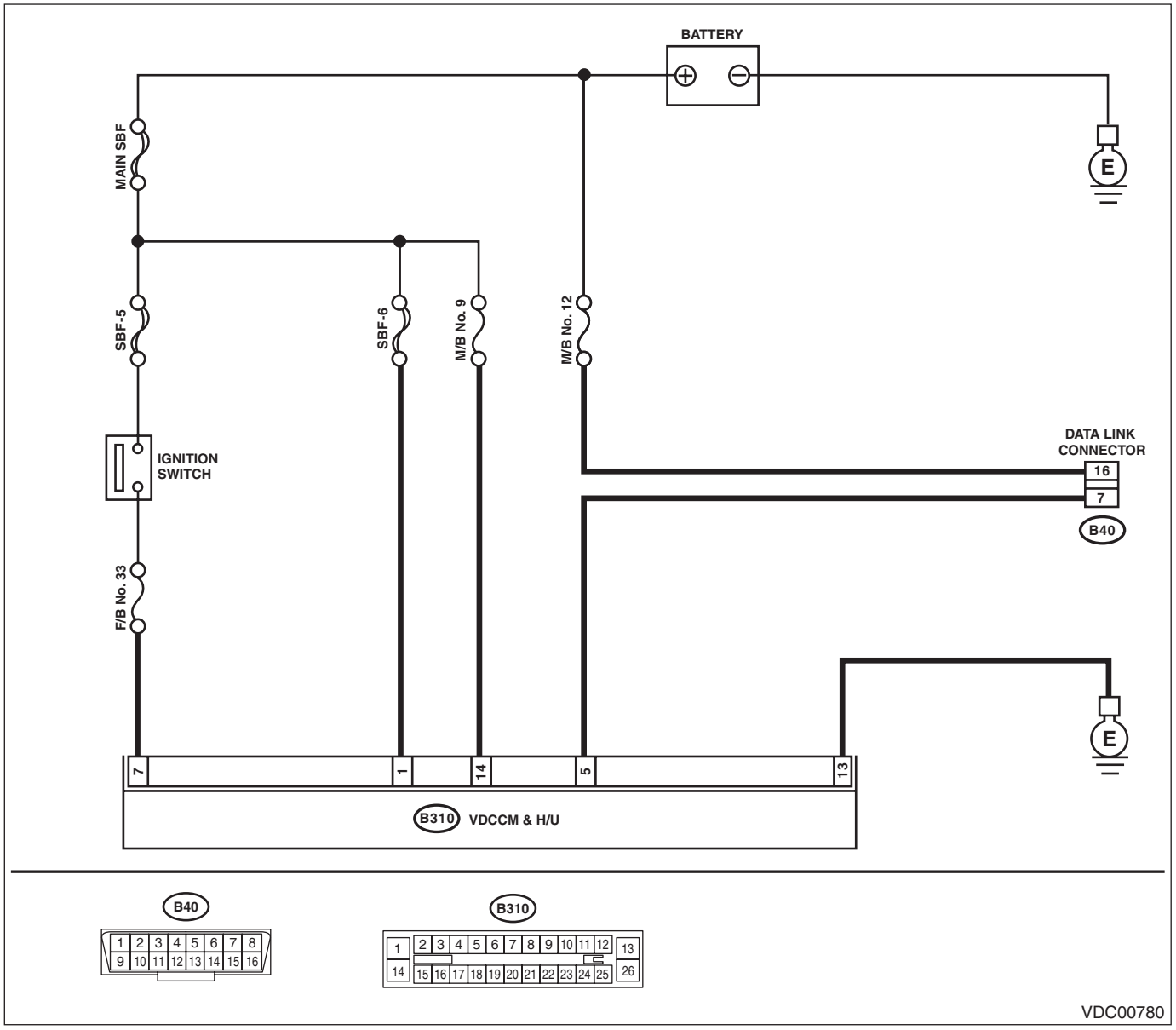

	Step	Check	Yes	No
1	**CHECK IGNITION SWITCH.**	Is the ignition switch ON?	Go to step **2**.	Turn the ignition switch to ON, and select VDC mode using Subaru Select Monitor.
2	**CHECK BATTERY.** 1) Turn the ignition switch to OFF. 2) Measure the battery voltage.	Is the voltage 11 V or more?	Go to step **3**.	Charge or replace the battery.

	Step	Check	Yes	No
3	**CHECK BATTERY TERMINAL.**	Is there poor contact at battery terminal?	Repair or tighten the battery terminal.	Go to step **4**.
4	**CHECK SUBARU SELECT MONITOR COMMUNICATION.** 1) Turn the ignition switch to ON. 2) Using the Subaru Select Monitor, check whether communication to other systems can be executed normally.	Is the system name displayed on Subaru Select Monitor?	Go to step **8**.	Go to step **5**.
5	**CHECK SUBARU SELECT MONITOR COMMUNICATION.** 1) Turn the ignition switch to OFF. 2) Disconnect the VDCCM&H/U connector. 3) Turn the ignition switch to ON. 4) Check whether communication to other systems can be executed normally.	Is the system name displayed on Subaru Select Monitor?	Replace the VDCCM&H/U. <Ref. to VDC-9, VDC Control Module and Hydraulic Control Unit (VDCCM&H/U).>	Go to step **6**.
6	**CHECK HARNESS CONNECTOR BETWEEN EACH CONTROL MODULE AND DATA LINK CONNECTOR.** 1) Turn the ignition switch to OFF. 2) Disconnect the connectors from the ECM, TCM, airbag CM, TPMS & keyless entry CM, and impact sensor. **CAUTION:** **When disconnecting the connector from airbag CM, always follow the precautions on AB section. <Ref. to AB-9, CAUTION, General Description.>** 3) Measure the resistance between data link connector and chassis ground. ***Connector & terminal*** ***(B40) No. 7 — Chassis ground:***	Is the resistance 1 MΩ or more?	Go to step **7**.	Repair the harness and connector between each control module and data link connector.
7	**CHECK HARNESS CONNECTOR BETWEEN VDCCM&H/U AND DATA LINK CONNECTOR.** 1) Turn the ignition switch to ON. 2) Measure the voltage between data link connector and chassis ground. ***Connector & terminal*** ***(B40) No. 7 (+) — Chassis ground (–):***	Is the voltage less than 1 V?	Go to step **8**.	Repair the harness and connector between each control module and data link connector.
8	**CHECK HARNESS CONNECTOR BETWEEN VDCCM&H/U AND DATA LINK CONNECTOR.** Measure the resistance between VDCCM&H/U connector and data link connector. ***Connector & terminal*** ***(B310) No. 5 — (B40) No. 7:***	Is the resistance less than 1 Ω?	Go to step **9**.	Repair harness and connector between VDCCM&H/U and data link connector.
9	**CHECK INSTALLATION OF VDCCM&H/U CONNECTOR.** Turn the ignition switch to OFF.	Is the VDCCM&H/U connector inserted into VDCCM&H/U until the clamp locks onto it?	Go to step **10**.	Insert VDCCM&H/U connector into VDCCM&H/U.
10	**CHECK POWER SUPPLY CIRCUIT.** 1) Turn the ignition switch to ON. (engine OFF) 2) Measure the ignition power supply voltage between VDCCM&H/U connector and chassis ground. ***Connector & terminal*** ***(B310) No. 7 (+) — Chassis ground (–):*** ***(B310) No. 14 (+) — Chassis ground (–):*** ***(B310) No. 1 (+) — Chassis ground (–):***	Is the voltage 10 — 15 V?	Go to step **11**.	Repair open circuit in harness between VDCCM&H/U and battery.

	Step	Check	Yes	No
11	**CHECK HARNESS CONNECTOR BETWEEN VDCCM&H/U AND CHASSIS GROUND.** 1) Turn the ignition switch to OFF. 2) Disconnect the connector from the VDCCM&H/U. 3) Measure the resistance of harness between VDCCM&H/U connector and chassis ground. ***Connector & terminal*** ***(B310) No. 13 — Chassis ground:***	Is the resistance less than 10 Ω?	Go to step **12**.	Repair the open circuit of VDCCM&H/U ground harness and poor contact of connector.
12	**CHECK POOR CONTACT OF CONNECTOR.**	Is there poor contact of control module power supply, ground circuit and data link connector?	Repair the connector.	Replace the VDCCM&H/U. <Ref. to VDC-9, VDC Control Module and Hydraulic Control Unit (VDCCM&H/U).>

7. Read Diagnostic Trouble Code (DTC)

A: OPERATION

NOTE:
• For detailed operation procedures, refer to “PC application help for Subaru Select Monitor”.
• For details concerning DTCs, refer to “List of Diagnostic Trouble Code (DTC)”. <Ref. to VDC(diag)-35, List of Diagnostic Trouble Code (DTC).>
• Up to 3 DTCs are displayed in the order of detection.
• If a particular DTC is not stored in memory properly at the occurrence of problem (due to a drop in VDCCM&H/U power supply etc.), the DTC suffixed with a question mark “?” is displayed on Subaru Select Monitor display screen. This shows it may be an unreliable reading.

Display	Contents to be displayed
(Current)	The current DTC is displayed on Subaru Select Monitor display screen.
(Old)	The latest DTC from the history of previous problems is displayed on Subaru Select Monitor display screen.
(Older)	The second latest DTC from the history of previous problems is displayed on the Subaru Select Monitor display screen.
(Before 3)	The third latest DTC from the history of previous problems is displayed on Subaru Select Monitor display screen.

8. Inspection Mode

A: PROCEDURE

Reproduce the malfunction occurrence condition as much as possible.
Drive the vehicle at least ten minutes.

NOTE:
Make sure the vehicle is not dragged to one side under usual driving condition.

9. Clear Memory Mode

A: OPERATION

NOTE:
For detailed operation procedures, refer to “PC application help for Subaru Select Monitor”.

10.Warning Light Illumination Pattern

A: INSPECTION

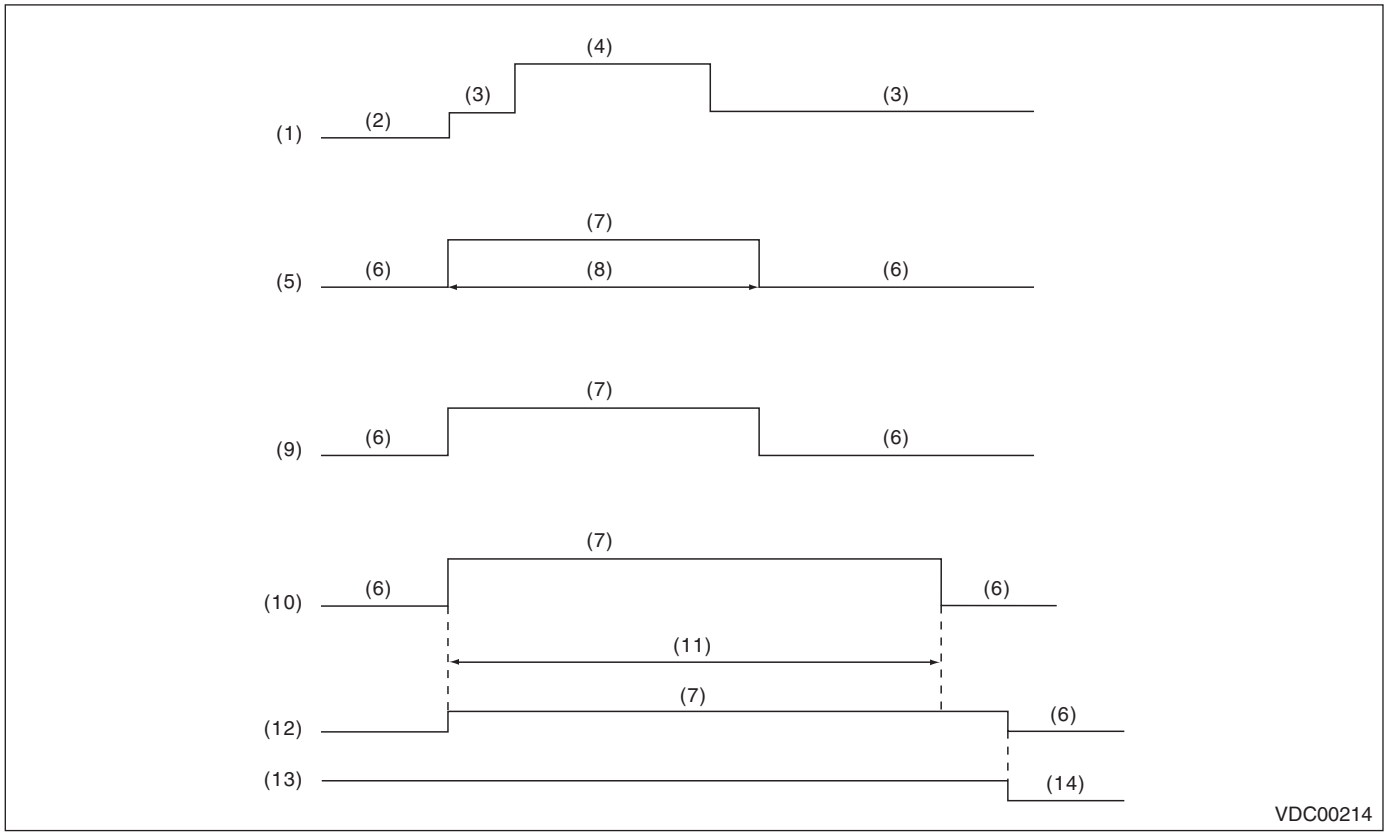

(1)	Ignition switch	(6)	Light OFF	(11)	Several seconds (depending on engine coolant temperature)
(2)	OFF	(7)	Light ON	(12)	Brake warning light (EBD warning light)
(3)	ON	(8)	2 sec.	(13)	Parking brake
(4)	Engine start	(9)	VDC OFF indicator light	(14)	Released
(5)	ABS warning light	(10)	VDC warning light & VDC indicator light		

1) When warning lights or indicator lights do not illuminate in accordance with this illumination pattern, there must be an electrical malfunction.
2) When warning lights or indicator lights remain constantly OFF, check the combination meter circuit or CAN communication circuit. <Ref. to VDC(diag)-28, ABS WARNING LIGHT, VDC OFF INDICATOR LIGHT, VDC WARNING LIGHT AND VDC INDICATOR LIGHT DO NOT COME ON, Warning Light Illumination Pattern.>
3) When the ABS warning light, VDC OFF indicator light, and VDC warning light & VDC indicator light do not go off, check the combination meter circuit or CAN communication circuit. <Ref. to VDC(diag)-29, ABS WARNING LIGHT DOES NOT GO OFF, Warning Light Illumination Pattern.> <Ref. to VDC(diag)-31, VDC OFF INDICATOR LIGHT DOES NOT GO OFF, Warning Light Illumination Pattern.> <Ref. to VDC(diag)-30, VDC WARNING LIGHT AND VDC INDICATOR LIGHT DO NOT GO OFF, Warning Light Illumination Pattern.>
4) When the brake warning light blinks and the hill hold indicator light illumination is faulty, check the parking brake system. <Ref. to PB(diag)-2, Basic Diagnostic Procedure.>

NOTE:
• Even though the ABS warning light, and the VDC warning light & VDC indicator light do not go off in 2 seconds after illuminating, the ABS and VDC functions are normal if the warning lights go off while the vehicle is driven at approximately 12 km/h (7 MPH). However, while these lights are on, the functions with their warning lights illuminated do not operate.
• It may take several minutes before the VDC warning light & VDC indicator light goes off, if the vehicle is parked under low temperature for a specified time. This is not defective because it is resulted from low engine coolant temperature. If DTC is recorded at this time, perform the Clear Memory Mode. <Ref. to VDC(diag)-25, Clear Memory Mode.>
• With the vehicle jack-up/lift-up or set on free rollers, when the wheels lock or spin after starting the engine, ABS warning light, and VDC warning light & VDC indicator light may illuminate because VDC-CM&H/U detects the abnormal conditions from ABS wheel speed sensors. In this case, this is not a malfunction. Perform the Clear Memory Mode. <Ref. to VDC(diag)-25, Clear Memory Mode.>

B: ABS WARNING LIGHT, VDC OFF INDICATOR LIGHT, VDC WARNING LIGHT AND VDC INDICATOR LIGHT DO NOT COME ON

DETECTING CONDITION:

- Defective combination meter
- Defective CAN communication

TROUBLE SYMPTOM:

When the ignition switch is turned to ON (engine OFF), ABS warning light, VDC OFF indicator light, and VDC warning light & VDC indicator light do not illuminate.

NOTE:

When pressing the VDC OFF switch for 10 seconds or more, the VDC OFF indicator light goes off and cannot operate any more. When turning the ignition switch from OFF to ON, the OFF operation enabled status is restored.

	Step	Check	Yes	No
1	**CHECK OTHER INDICATOR LIGHT.** Turn the ignition switch to ON.	Does other indicator light illuminate soon after “ON”?	Go to step **2**.	Perform the self-diagnosis of combination meter. <Ref. to IDI-6, SELF-DIAGNOSIS DISPLAY MODE, OPERATION, Combination Meter System.>
2	**CHECK LAN SYSTEM.** Perform the diagnosis for LAN system. <Ref. to LAN(diag)-2, Basic Diagnostic Procedure.>	Is there any fault in LAN system?	Perform the diagnosis according to DTC for LAN system. <Ref. to LAN(diag)-32, List of Diagnostic Trouble Code (DTC).>	Go to step **3**.
3	**CHECK VDCCM.** When the engine does not start, display the current data of VDCCM using Subaru Select Monitor.	Is the «EBD Warning Light» output ON?	Go to step **4**.	Replace the VDCCM&H/U. <Ref. to VDC-9, VDC Control Module and Hydraulic Control Unit (VDCCM&H/U).>
4	**CHECK VDCCM.** When the engine does not start, display the current data of VDCCM using Subaru Select Monitor.	Is the «ABS Warning Light» output ON?	Go to step **5**.	Replace the VDCCM&H/U. <Ref. to VDC-9, VDC Control Module and Hydraulic Control Unit (VDCCM&H/U).>
5	**CHECK VDCCM.** When the engine does not start, display the current data of VDCCM using Subaru Select Monitor.	Is the «VDC Warning Light» output ON?	Go to step **6**.	Replace the VDCCM&H/U. <Ref. to VDC-9, VDC Control Module and Hydraulic Control Unit (VDCCM&H/U).>
6	**CHECK COMBINATION METER.** Check the combination meter. <Ref. to IDI-6, SELF-DIAGNOSIS DISPLAY MODE, OPERATION, Combination Meter System.>	Is combination meter OK?	Replace the VDCCM&H/U. <Ref. to VDC-9, VDC Control Module and Hydraulic Control Unit (VDCCM&H/U).>	Replace the combination meter. <Ref. to IDI-21, REMOVAL, Combination Meter.>

C: ABS WARNING LIGHT DOES NOT GO OFF

DETECTING CONDITION:

- Defective combination meter
- Defective CAN communication

TROUBLE SYMPTOM:

When starting the engine, the ABS warning light is kept ON.

Step		Check	Yes	No
1	**READ DTC.** Read the DTC. <Ref. to VDC(diag)-23, Read Diagnostic Trouble Code (DTC).>	Is DTC displayed?	Perform the diagnosis according to DTC. <Ref. to VDC(diag)-35, List of Diagnostic Trouble Code (DTC).>	Go to step **2**.
2	**CHECK LAN SYSTEM.** Perform the diagnosis for LAN system. <Ref. to LAN(diag)-2, Basic Diagnostic Procedure.>	Is there any fault in LAN system?	Perform the diagnosis according to DTC for LAN system. <Ref. to LAN(diag)-32, List of Diagnostic Trouble Code (DTC).>	Go to step **3**.
3	**CHECK COMBINATION METER.** Check the combination meter. <Ref. to IDI-6, SELF-DIAGNOSIS DISPLAY MODE, OPERATION, Combination Meter System.>	Is combination meter OK?	Replace the VDCCM&H/U. <Ref. to VDC-9, VDC Control Module and Hydraulic Control Unit (VDCCM&H/U).>	Replace the combination meter. <Ref. to IDI-21, REMOVAL, Combination Meter.>

D: VDC WARNING LIGHT AND VDC INDICATOR LIGHT DO NOT GO OFF

DETECTING CONDITION:

- Defective combination meter
- Defective engine
- Defective CAN communication

TROUBLE SYMPTOM:

When starting the engine, the VDC warning light & VDC indicator light remains lit.

	Step	Check	Yes	No
1	**READ DTC.** Read the DTC. <Ref. to VDC(diag)-23, Read Diagnostic Trouble Code (DTC).>	Is DTC displayed?	Perform the diagnosis according to DTC. <Ref. to VDC(diag)-35, List of Diagnostic Trouble Code (DTC).>	Go to step **2**.
2	**CHECK ENGINE.**	Does the malfunction indicator light illuminate?	Repair the engine. <Ref. to EN(H4SO)(diag)-39, Read Diagnostic Trouble Code (DTC).> <Ref. to EN(H4DOTC)(diag)-40, Read Diagnostic Trouble Code (DTC).> <Ref. to EN(H6DO)(diag)-43, Read Diagnostic Trouble Code (DTC).>	Go to step **3**.
3	**CHECK ENGINE COOLANT TEMPERATURE.** Warm up the engine, and check if the VDC warning light & VDC indicator light illumination condition changes.	When the engine coolant temperature is too low, the VDC warning light & VDC indicator light illuminates. Do the lights go off when the engine is warmed up?	Normal If DTC is recorded, clear the memory. <Ref. to VDC(diag)-25, Clear Memory Mode.>	Go to step **4**.
4	**CHECK LAN SYSTEM.** Perform the diagnosis for LAN system. <Ref. to LAN(diag)-2, Basic Diagnostic Procedure.>	Is there any fault in LAN system?	Perform the diagnosis according to DTC for LAN system. <Ref. to LAN(diag)-32, List of Diagnostic Trouble Code (DTC).>	Go to step **5**.
5	**CHECK COMBINATION METER.** Check the combination meter. <Ref. to IDI-6, SELF-DIAGNOSIS DISPLAY MODE, OPERATION, Combination Meter System.>	Is combination meter OK?	Replace the VDCCM&H/U. <Ref. to VDC-9, VDC Control Module and Hydraulic Control Unit (VDCCM&H/U).>	Replace the combination meter. <Ref. to IDI-21, REMOVAL, Combination Meter.>

E: VDC OFF INDICATOR LIGHT DOES NOT GO OFF

DETECTING CONDITION:

- Defective combination meter
- Defective CAN communication
- VDC OFF switch is shorted.

TROUBLE SYMPTOM:

When starting the engine, VDC OFF indicator light is kept ON.

NOTE:
When pressing the VDC OFF switch for 10 seconds or more, the VDC OFF indicator light goes off and cannot operate any more. When turning the ignition switch from OFF to ON, the OFF operation enabled status is restored.

	Step	Check	Yes	No
1	**READ DTC.** Read the DTC. <Ref. to VDC(diag)-23, Read Diagnostic Trouble Code (DTC).>	Is DTC displayed?	Perform the diagnosis according to DTC. <Ref. to VDC(diag)-35, List of Diagnostic Trouble Code (DTC).>	Go to step **2**.
2	**CHECK VDC OFF SWITCH.** Remove and check VDC OFF switch. <Ref. to VDC-36, VDC OFF Switch.>	Is the VDC OFF switch normal?	Go to step **3**.	Replace the VDC OFF switch.
3	**CHECK LAN SYSTEM.** Perform the diagnosis for LAN system. <Ref. to LAN(diag)-2, Basic Diagnostic Procedure.>	Is there any fault in LAN system?	Perform the diagnosis according to DTC for LAN system. <Ref. to LAN(diag)-32, List of Diagnostic Trouble Code (DTC).>	Go to step **4**.
4	**CHECK COMBINATION METER.** Check the combination meter. <Ref. to IDI-6, SELF-DIAGNOSIS DISPLAY MODE, OPERATION, Combination Meter System.>	Is combination meter OK?	Replace the VDCCM&H/U. <Ref. to VDC-9, VDC Control Module and Hydraulic Control Unit (VDCCM&H/U).>	Replace the combination meter. <Ref. to IDI-21, REMOVAL, Combination Meter.>

F: BRAKE WARNING LIGHT DOES NOT GO OFF

DETECTING CONDITION:

- Brake warning light circuit is shorted.
- Defective sensor/connector

TROUBLE SYMPTOM:

After starting the engine, the brake warning light remains lit though the parking lever is released.

NOTE:
When brake warning light blinks, check the parking brake system. <Ref. to PB(diag)-2, Basic Diagnostic Procedure.>

WIRING DIAGRAM:

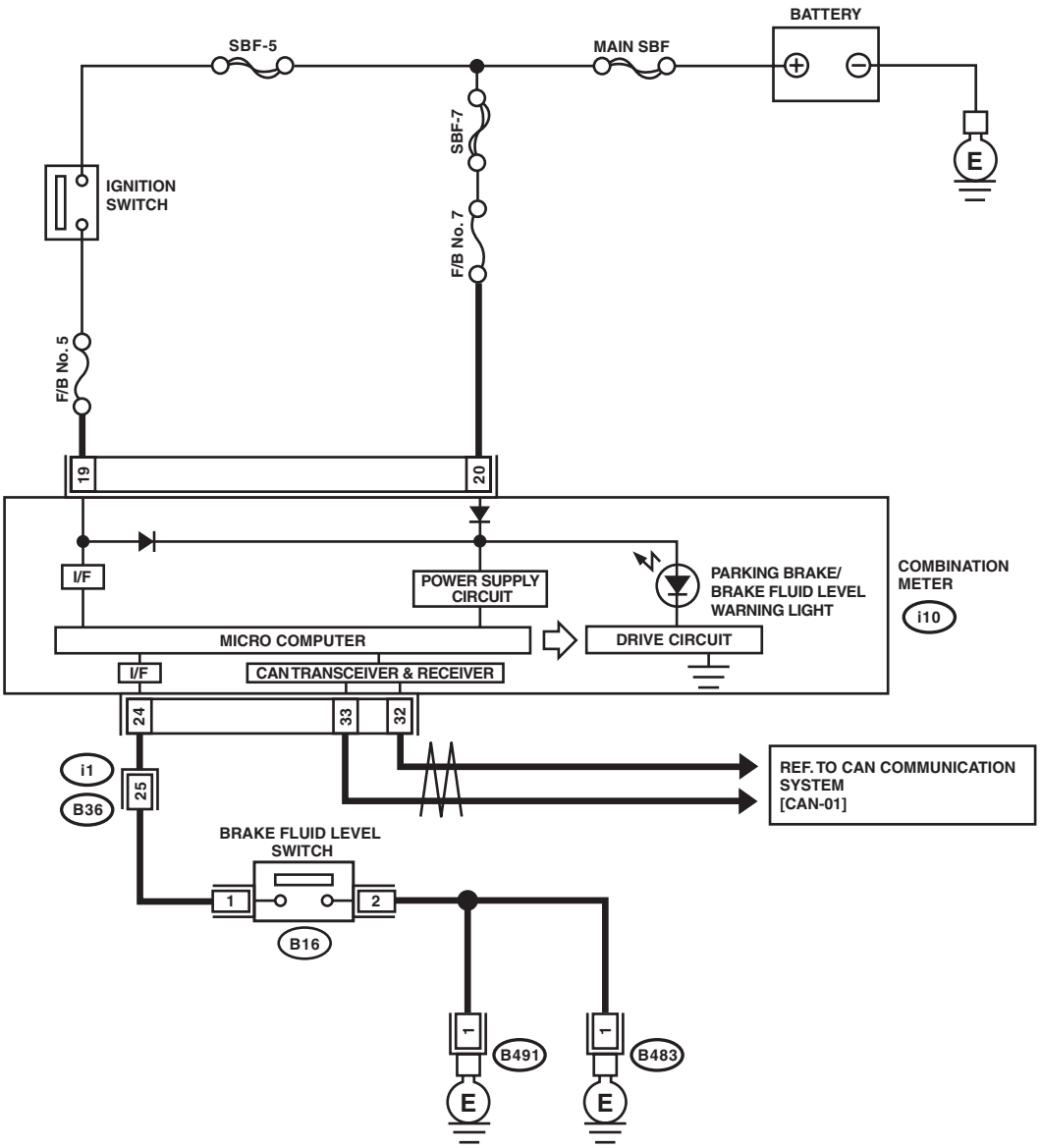

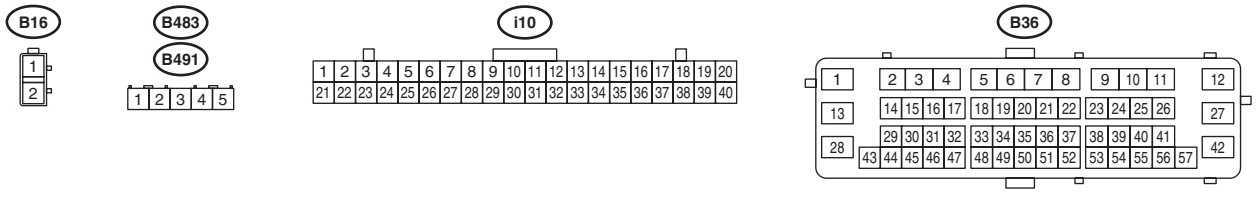

VDC00921

Step		Check	Yes	No
1	**CHECK INSTALLATION OF VDCCM&H/U CONNECTOR.** 1) Turn the ignition switch to OFF. 2) Check that the VDCCM&H/U connector is inserted until it is locked by clamp.	Is the connector firmly inserted?	Go to step **2**.	Insert the VDCCM&H/U connector until it is locked by clamp.

	Step	Check	Yes	No
2	**READ DTC.** Read the DTC. <Ref. to VDC(diag)-23, Read Diagnostic Trouble Code (DTC).>	Is DTC displayed?	Perform the diagnosis according to DTC. <Ref. to VDC(diag)-35, List of Diagnostic Trouble Code (DTC).>	Go to step **3**.
3	**CHECK BRAKE FLUID AMOUNT.** Check the amount of brake fluid in the reservoir tank of master cylinder.	Does the level of the brake fluid amount fall between the lines of "MAX" and "MIN"?	Go to step **4**.	Replenish brake fluid to the specified value.
4	**CHECK BRAKE FLUID LEVEL SWITCH.** 1) Turn the ignition switch to OFF. 2) Disconnect the level switch connector (B16) from master cylinder. 3) Measure the resistance of master cylinder terminals. ***Terminals*** ***No. 1 — No. 2:***	Is the resistance 1 MΩ or more?	Go to step **5**.	Replace the master cylinder. <Ref. to BR-41, Master Cylinder.>
5	**CHECK GROUND SHORT OF HARNESS.** 1) Disconnect the connector from the combination meter. 2) Measure the resistance between combination meter connector and chassis ground. ***Connector & terminal*** ***(i10) No. 24 — Chassis ground:***	Is the resistance 1 MΩ or more?	Go to step **6**.	Repair the harness connector between combination meter and brake fluid level switch.
6	**CHECK LAN SYSTEM.** Perform the diagnosis for LAN system. <Ref. to LAN(diag)-2, Basic Diagnostic Procedure.>	Is there any fault in LAN system?	Perform the diagnosis according to DTC for LAN system. <Ref. to LAN(diag)-32, List of Diagnostic Trouble Code (DTC).>	Go to step **7**.
7	**CHECK COMBINATION METER.** Check the combination meter. <Ref. to IDI-6, SELF-DIAGNOSIS DISPLAY MODE, OPERATION, Combination Meter System.>	Is combination meter OK?	Perform the diagnosis for the parking brake system. <Ref. to PB(diag)-23, Read Diagnostic Trouble Code (DTC).>	Replace the combination meter. <Ref. to IDI-21, REMOVAL, Combination Meter.>

11.List of Diagnostic Trouble Code (DTC)

A: LIST

DTC	Detailed code	Item	Content of diagnosis	Reference
C0021	5045	Front Right ABS Sensor Circuit Open or Short	Open/high input of front ABS wheel speed sensor RH	<Ref. to VDC(diag)-39, DTC C0021 FRONT RIGHT ABS SENSOR CIRCUIT OPEN OR SHORT, Diagnostic Procedure with Diagnostic Trouble Code (DTC).>
C0022	5049 5053 5057 5061 5065	Front Right ABS Sensor Signal	Front ABS wheel speed sensor RH signal malfunction	<Ref. to VDC(diag)-42, DTC C0022 FRONT RIGHT ABS SENSOR SIGNAL, Diagnostic Procedure with Diagnostic Trouble Code (DTC).>
C0023	5044	Front Left ABS Sensor Circuit Open or Short	Open/high input of front ABS wheel speed sensor LH	<Ref. to VDC(diag)-39, DTC C0023 FRONT LEFT ABS SENSOR CIRCUIT OPEN OR SHORT, Diagnostic Procedure with Diagnostic Trouble Code (DTC).>
C0024	5048 5052 5056 5060 5064	Front Left ABS Sensor Signal	Front ABS wheel speed sensor LH signal malfunction	<Ref. to VDC(diag)-42, DTC C0024 FRONT LEFT ABS SENSOR SIGNAL, Diagnostic Procedure with Diagnostic Trouble Code (DTC).>
C0025	5047	Rear Right ABS Sensor Circuit Open or Short	Open/high input of rear ABS wheel speed sensor RH	<Ref. to VDC(diag)-39, DTC C0025 REAR RIGHT ABS SENSOR CIRCUIT OPEN OR SHORT, Diagnostic Procedure with Diagnostic Trouble Code (DTC).>
C0026	5051 5055 5059 5063 5067	Rear Right ABS Sensor Signal	Rear ABS wheel speed sensor RH signal malfunction	<Ref. to VDC(diag)-42, DTC C0026 REAR RIGHT ABS SENSOR SIGNAL, Diagnostic Procedure with Diagnostic Trouble Code (DTC).>
C0027	5046	Rear Left ABS Sensor Circuit Open or Short	Open/high input of rear ABS wheel speed sensor LH	<Ref. to VDC(diag)-40, DTC C0027 REAR LEFT ABS SENSOR CIRCUIT OPEN OR SHORT, Diagnostic Procedure with Diagnostic Trouble Code (DTC).>
C0028	5050 5054 5058 5062 5066	Rear Left ABS Sensor Signal	Rear ABS wheel speed sensor LH signal malfunction	<Ref. to VDC(diag)-43, DTC C0028 REAR LEFT ABS SENSOR SIGNAL, Diagnostic Procedure with Diagnostic Trouble Code (DTC).>
C0031	5019	FR Hold Valve Malfunction	Front inlet solenoid valve RH malfunction in VDCCM&H/U	<Ref. to VDC(diag)-45, DTC C0031 FR HOLD VALVE MALFUNCTION, Diagnostic Procedure with Diagnostic Trouble Code (DTC).>
C0032	5023	FR Pressure Reducing Valve Malfunction	Front outlet solenoid valve RH malfunction in VDCCM&H/U	<Ref. to VDC(diag)-45, DTC C0032 FR PRESSURE REDUCING VALVE MALFUNCTION, Diagnostic Procedure with Diagnostic Trouble Code (DTC).>
C0033	5018	FL Hold Valve Malfunction	Front inlet solenoid valve LH malfunction in VDCCM&H/U	<Ref. to VDC(diag)-45, DTC C0033 FL HOLD VALVE MALFUNCTION, Diagnostic Procedure with Diagnostic Trouble Code (DTC).>
C0034	5022	FL Pressure Reducing Valve Malfunction	Front outlet solenoid valve LH malfunction in VDCCM&H/U	<Ref. to VDC(diag)-45, DTC C0034 FL PRESSURE REDUCING VALVE MALFUNCTION, Diagnostic Procedure with Diagnostic Trouble Code (DTC).>
C0035	5021	RR Hold Valve Malfunction	Rear inlet solenoid valve RH malfunction in VDCCM&H/U	<Ref. to VDC(diag)-45, DTC C0035 RR HOLD VALVE MALFUNCTION, Diagnostic Procedure with Diagnostic Trouble Code (DTC).>

DTC	Detailed code	Item	Content of diagnosis	Reference
C0036	5025	RR Pressure Reducing Valve Malfunction	Rear outlet solenoid valve RH malfunction in VDCCM&H/U	<Ref. to VDC(diag)-46, DTC C0036 RR PRESSURE REDUCING VALVE MALFUNCTION, Diagnostic Procedure with Diagnostic Trouble Code (DTC).>
C0037	5020	RL Hold Valve Malfunction	Rear inlet solenoid valve LH malfunction in VDCCM&H/U	<Ref. to VDC(diag)-46, DTC C0037 RL HOLD VALVE MALFUNCTION, Diagnostic Procedure with Diagnostic Trouble Code (DTC).>
C0038	5024	RL Pressure Reducing Valve Malfunction	Rear outlet solenoid valve LH malfunction in VDCCM&H/U	<Ref. to VDC(diag)-46, DTC C0038 RL PRESSURE REDUCING VALVE MALFUNCTION, Diagnostic Procedure with Diagnostic Trouble Code (DTC).>
C0041	5002 5003 5004 5005 5006 5007 5008 5009 5010 5011 5012 5013 5014 5015 5037 5038 5040 5041 5068 5069 5134	ECM	VDC control module malfunction	<Ref. to VDC(diag)-49, DTC C0041 ECM, Diagnostic Procedure with Diagnostic Trouble Code (DTC).>
	5148 5149	Parameter Selection Error	VDC control module parameter selection failure	<Ref. to VDC(diag)-51, DTC C0041 PARAMETER SELECTION ERROR, Diagnostic Procedure with Diagnostic Trouble Code (DTC).>
C0042	5000 5001	Power Supply Voltage Failure	Power voltage malfunction	<Ref. to VDC(diag)-52, DTC C0042 POWER SUPPLY VOLTAGE FAILURE, Diagnostic Procedure with Diagnostic Trouble Code (DTC).>
C0044	5137 5140 5142	TCM Communication Circuit	CAN communication failure of transmission control module	<Ref. to VDC(diag)-54, DTC C0044 TCM COMMUNICATION CIRCUIT, Diagnostic Procedure with Diagnostic Trouble Code (DTC).>
C0045	5144	TCM Malfunction	Malfunction of transmission control module	<Ref. to VDC(diag)-55, DTC C0045 TCM MALFUNCTION, Diagnostic Procedure with Diagnostic Trouble Code (DTC).>
	5146	Incorrect VDC Control Module Specifications	Different VDC control module specification	<Ref. to VDC(diag)-56, DTC C0045 INCORRECT VDC CONTROL MODULE SPECIFICATIONS, Diagnostic Procedure with Diagnostic Trouble Code (DTC).>
C0046	5155	Body Integrated Module Communication Circuit	Body integrated module communication circuit	<Ref. to VDC(diag)-58, DTC C0046 BODY INTEGRATED MODULE COMMUNICATION CIRCUIT, Diagnostic Procedure with Diagnostic Trouble Code (DTC).>
C0047	5135	CAN Communication	Improper CAN communication	<Ref. to VDC(diag)-59, DTC C0047 CAN COMMUNICATION, Diagnostic Procedure with Diagnostic Trouble Code (DTC).>

DTC	Detailed code	Item	Content of diagnosis	Reference
C0048	5156	Parking Brake System Communication Circuit	Parking brake system communication circuit	<Ref. to VDC(diag)-61, DTC C0048 PARKING BRAKE SYSTEM COMMUNICATION CIRCUIT, Diagnostic Procedure with Diagnostic Trouble Code (DTC).>
C0051	5016 5017 5034 5036	Valve Relay	Valve Relay	<Ref. to VDC(diag)-62, DTC C0051 VALVE RELAY, Diagnostic Procedure with Diagnostic Trouble Code (DTC).>
C0052	5039 5042 5043 5154	Motor Malfunction	Motor	<Ref. to VDC(diag)-64, DTC C0052 MOTOR MALFUNCTION, Diagnostic Procedure with Diagnostic Trouble Code (DTC).>
C0054	5133	BLS Off Malfunction	BLS OFF Malfunction	<Ref. to VDC(diag)-67, DTC C0054 BLS OFF MALFUNCTION, Diagnostic Procedure with Diagnostic Trouble Code (DTC).>
	5153	BLS On Malfunction	BLS ON malfunction	<Ref. to VDC(diag)-69, DTC C0054 BLS ON MALFUNCTION, Diagnostic Procedure with Diagnostic Trouble Code (DTC).>
C0056	5102 5108	G Sensor Abnormal	G sensor failure	<Ref. to VDC(diag)-70, DTC C0056 G SENSOR ABNORMAL, Diagnostic Procedure with Diagnostic Trouble Code (DTC).>
	5103 5104 5105 5106 5107 5109	G Sensor Signal	G sensor signal	<Ref. to VDC(diag)-71, DTC C0056 G SENSOR SIGNAL, Diagnostic Procedure with Diagnostic Trouble Code (DTC).>
C0057	5136 5139 5141	ECM Communication Circuit	CAN communication failure of engine control module	<Ref. to VDC(diag)-73, DTC C0057 ECM COMMUNICATION CIRCUIT, Diagnostic Procedure with Diagnostic Trouble Code (DTC).>
	5143	ECM Control System	Coordinate control prohibition of engine control module	<Ref. to VDC(diag)-74, DTC C0057 ECM CONTROL SYSTEM, Diagnostic Procedure with Diagnostic Trouble Code (DTC).>
	5145	VDC Interrupted Due to EGI Reason	VDC interrupted due to EGI reason	<Ref. to VDC(diag)-75, DTC C0057 VDC INTERRUPTED DUE TO EGI REASON, Diagnostic Procedure with Diagnostic Trouble Code (DTC).>
C0061	5027	Normal Opening Valve 1 Malfunction	Secondary cut valve malfunction in VDCCM&H/U	<Ref. to VDC(diag)-46, DTC C0061 NORMAL OPENING VALVE 1 MALFUNCTION, Diagnostic Procedure with Diagnostic Trouble Code (DTC).>
C0062	5026	Normal Opening Valve 2 Malfunction	Primary cut valve malfunction in VDCCM&H/U	<Ref. to VDC(diag)-46, DTC C0062 NORMAL OPENING VALVE 2 MALFUNCTION, Diagnostic Procedure with Diagnostic Trouble Code (DTC).>
C0063	5029	Normal Closing Valve 1 Malfunction	Secondary suction valve malfunction in VDCCM&H/U	<Ref. to VDC(diag)-46, DTC C0063 NORMAL CLOSING VALVE 1 MALFUNCTION, Diagnostic Procedure with Diagnostic Trouble Code (DTC).>
C0064	5028	Normal Closing Valve 2 Malfunction	Primary suction valve malfunction in VDCCM&H/U	<Ref. to VDC(diag)-47, DTC C0064 NORMAL CLOSING VALVE 2 MALFUNCTION, Diagnostic Procedure with Diagnostic Trouble Code (DTC).>

DTC	Detailed code	Item	Content of diagnosis	Reference
C0071	5121 5122 5123 5138	No Signal From Steering Angle Sensor	Steering angle sensor communication	<Ref. to VDC(diag)-76, DTC C0071 NO SIGNAL FROM STEERING ANGLE SENSOR, Diagnostic Procedure with Diagnostic Trouble Code (DTC).>
	5124 5125 5126 5127 5128 5129 5132	Steer Angle Sensor Op	Steering angle sensor output	<Ref. to VDC(diag)-78, DTC C0071 STEER ANGLE SENSOR OP, Diagnostic Procedure with Diagnostic Trouble Code (DTC).>
C0072	5116 5117 5118 5119 5120 5131	Abnormal Yaw Rate Sensor Output	Yaw rate sensor output	<Ref. to VDC(diag)-81, DTC C0072 ABNORMAL YAW RATE SENSOR OUTPUT, Diagnostic Procedure with Diagnostic Trouble Code (DTC).>
C0073	5110 5114	Lateral G Sensor Power/Output	Lateral G sensor power supply/output	<Ref. to VDC(diag)-83, DTC C0073 LATERAL G SENSOR POWER/OUTPUT, Diagnostic Procedure with Diagnostic Trouble Code (DTC).>
	5111 5112 5113 5115 5130	Abnormal Lateral G Sensor Output	Lateral G sensor output	<Ref. to VDC(diag)-84, DTC C0073 ABNORMAL LATERAL G SENSOR OUTPUT, Diagnostic Procedure with Diagnostic Trouble Code (DTC).>
C0074	5070 5071 5072 5073 5074 5075 5076 5077 5078 5079	Master Cylinder Pressure Sensor Output	Master cylinder pressure sensor output	<Ref. to VDC(diag)-87, DTC C0074 MASTER CYLINDER PRESSURE SENSOR OUTPUT, Diagnostic Procedure with Diagnostic Trouble Code (DTC).>
C0075	5080 5081 5082 5083 5084 5086 5087 5088 5089 5090 5091 5092 5093 5094 5095 5097 5098 5099 5100 5101	Wheel Cylinder Pressure Sensor Output	Wheel cylinder pressure sensor output	<Ref. to VDC(diag)-87, DTC C0075 WHEEL CYLINDER PRESSURE SENSOR OUTPUT, Diagnostic Procedure with Diagnostic Trouble Code (DTC).>
C0081	5147	System Failure	System malfunction	<Ref. to VDC(diag)-88, DTC C0081 SYSTEM FAILURE, Diagnostic Procedure with Diagnostic Trouble Code (DTC).>

12.Diagnostic Procedure with Diagnostic Trouble Code (DTC)

A: DTC C0021 FRONT RIGHT ABS SENSOR CIRCUIT OPEN OR SHORT

NOTE:
For the diagnostic procedure, refer to “DTC C0027 REAR LEFT ABS SENSOR CIRCUIT OPEN OR SHORT”. <Ref. to VDC(diag)-40, DTC C0027 REAR LEFT ABS SENSOR CIRCUIT OPEN OR SHORT, Diagnostic Procedure with Diagnostic Trouble Code (DTC).>

B: DTC C0023 FRONT LEFT ABS SENSOR CIRCUIT OPEN OR SHORT

NOTE:
For the diagnostic procedure, refer to “DTC C0027 REAR LEFT ABS SENSOR CIRCUIT OPEN OR SHORT”. <Ref. to VDC(diag)-40, DTC C0027 REAR LEFT ABS SENSOR CIRCUIT OPEN OR SHORT, Diagnostic Procedure with Diagnostic Trouble Code (DTC).>

C: DTC C0025 REAR RIGHT ABS SENSOR CIRCUIT OPEN OR SHORT

NOTE:
For the diagnostic procedure, refer to “DTC C0027 REAR LEFT ABS SENSOR CIRCUIT OPEN OR SHORT”. <Ref. to VDC(diag)-40, DTC C0027 REAR LEFT ABS SENSOR CIRCUIT OPEN OR SHORT, Diagnostic Procedure with Diagnostic Trouble Code (DTC).>

D: DTC C0027 REAR LEFT ABS SENSOR CIRCUIT OPEN OR SHORT

DTC DETECTING CONDITION:

- Defective ABS wheel speed sensor (broken wire, input voltage too high)
- Defective harness connector

TROUBLE SYMPTOM:

- ABS does not operate.
- VDC does not operate.
- Hill start assist does not operate.

WIRING DIAGRAM:

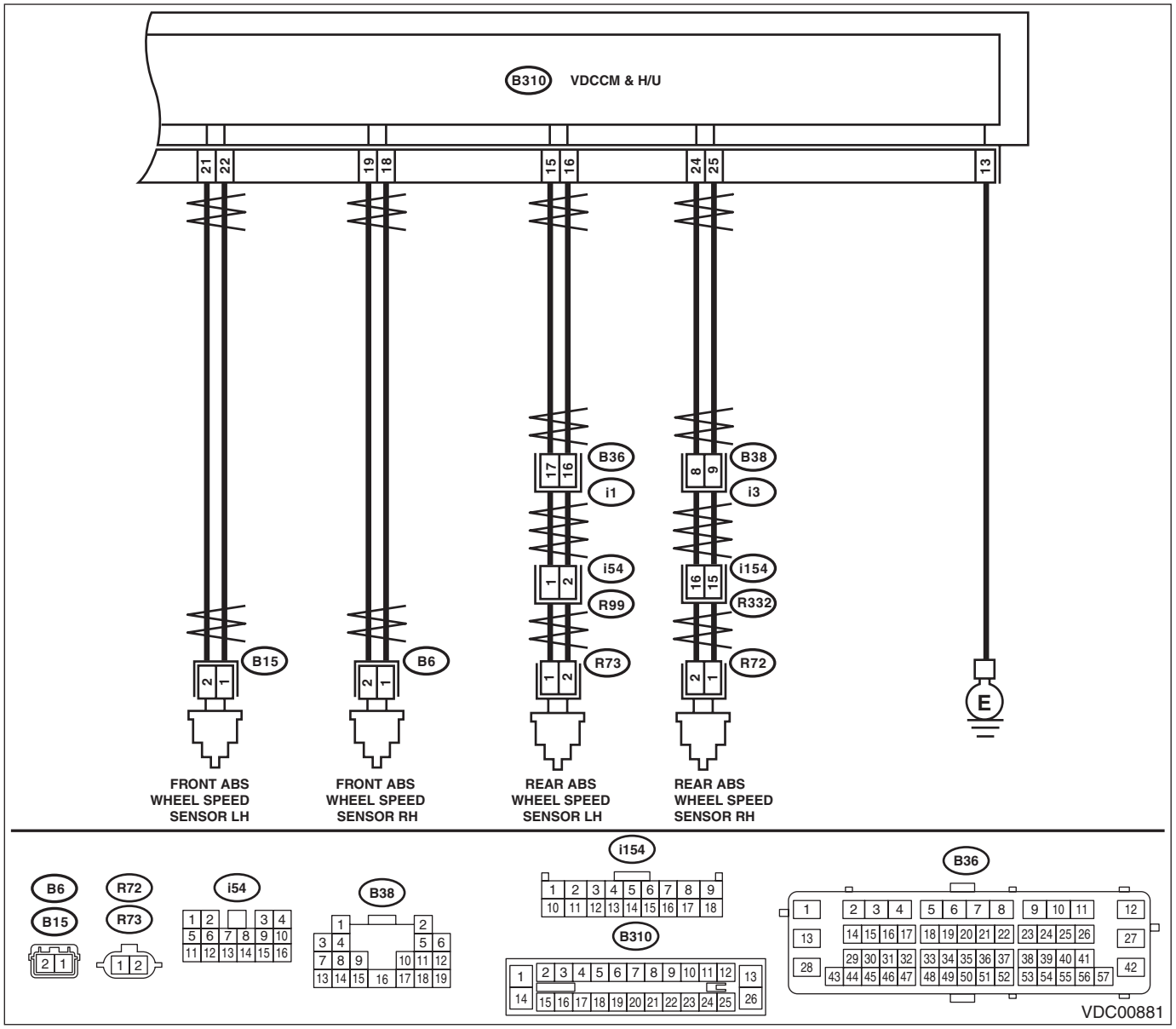

Step		Check	Yes	No
1	**CHECK POOR CONTACT OF CONNECTOR.** Check if there is poor contact between VDCCM&H/U and ABS wheel speed sensor.	Is there poor contact?	Repair the connector.	Go to step **2**.

	Step	Check	Yes	No
2	**CHECK HARNESS CONNECTOR BETWEEN VDCCM&H/U AND ABS WHEEL SPEED SENSOR.** 1) Disconnect the connector (B310) from the VDCCM&H/U. 2) Disconnect the connector from ABS wheel speed sensor. 3) Measure the resistance between VDCCM&H/U connector and ABS wheel speed sensor connector. ***Connector & terminal*** ***DTC C0021*** ***(B310) No. 18 — (B6) No. 1:*** ***(B310) No. 19 — (B6) No. 2:*** ***DTC C0023*** ***(B310) No. 22 — (B15) No. 1:*** ***(B310) No. 21 — (B15) No. 2:*** ***DTC C0025*** ***(B310) No. 25 — (R72) No. 1:*** ***(B310) No. 24 — (R72) No. 2:*** ***DTC C0027*** ***(B310) No. 15 — (R73) No. 1:*** ***(B310) No. 16 — (R73) No. 2:***	Is the resistance less than 1 Ω?	Go to step **3**.	Repair the harness connector between VDCCM&H/U and ABS wheel speed sensor.
3	**CHECK GROUND SHORT OF HARNESS.** Measure the resistance between VDCCM&H/U connector and chassis ground. ***Connector & terminal*** ***DTC C0021*** ***(B310) No. 19 — Chassis ground:*** ***DTC C0023*** ***(B310) No. 21 — Chassis ground:*** ***DTC C0025*** ***(B310) No. 25 — Chassis ground:*** ***DTC C0027*** ***(B310) No. 15 — Chassis ground:***	Is the resistance 1 MΩ or more?	Go to step **4**.	Repair the harness connector between VDCCM&H/U and ABS wheel speed sensor.
4	**CHECK ABS WHEEL SPEED SENSOR POWER SUPPLY CIRCUIT.** 1) Connect the VDCCM&H/U connector. 2) Turn the ignition switch to ON. 3) Measure the voltage between ABS wheel speed sensor connector and chassis ground. ***Connector & terminal*** ***DTC C0021*** ***(B6) No. 1 (+) — Chassis ground (–):*** ***DTC C0023*** ***(B15) No. 1 (+) — Chassis ground (–):*** ***DTC C0025*** ***(R72) No. 2 (+) — Chassis ground (–):*** ***DTC C0027*** ***(R73) No. 2 (+) — Chassis ground (–):***	Is the voltage 5 — 16 V?	Go to step **6**.	Go to step **5**.

	Step	Check	Yes	No
5	**CHECK VDCCM&H/U POWER SUPPLY CIRCUIT.** 1) Turn the ignition switch to OFF. 2) Disconnect the VDCCM&H/U connector. 3) Turn the ignition switch to ON. 4) Measure the voltage between VDCCM&H/U connector terminals. ***Connector & terminal*** ***(B310) No. 7 (+) — (B310) No. 13 (–):*** ***(B310) No. 14 (+) — (B310) No. 13 (–):*** ***(B310) No. 1 (+) — (B310) No. 13 (–):***	Is the voltage 10 — 15 V?	Go to step **6**.	Check the generator, battery and VDCCM&H/U power supply circuit.
6	**CHECK ABS WHEEL SPEED SENSOR SIGNAL.** 1) Install the ABS wheel speed sensor. 2) Prepare an oscilloscope. 3) Check the ABS wheel speed sensor. <Ref. to VDC-30, CHECK ABS WHEEL SPEED SENSOR UNIT., INSPECTION, Front ABS Wheel Speed Sensor.>	Does the oscilloscope indicate the waveform pattern as shown in the figure?	Go to step **7**.	Replace the ABS wheel speed sensor. <Ref. to VDC-29, Front ABS Wheel Speed Sensor.>
7	**CHECK VDCCM&H/U.** 1) Connect all connectors. 2) Clear the memory. <Ref. to VDC(diag)-25, Clear Memory Mode.> 3) Perform the Inspection Mode. <Ref. to VDC(diag)-24, Inspection Mode.> 4) Read the DTC.	Is the same DTC displayed?	Replace the VDCCM&H/U. <Ref. to VDC-9, VDC Control Module and Hydraulic Control Unit (VDCCM&H/U).>	Go to step **8**.
8	**CHECK OTHER DTC DETECTION.**	Is any other DTC displayed?	Perform the diagnosis according to DTC. <Ref. to VDC(diag)-35, List of Diagnostic Trouble Code (DTC).>	It results from a temporary noise interference.

E: DTC C0022 FRONT RIGHT ABS SENSOR SIGNAL

NOTE:
For the diagnostic procedure, refer to “DTC C0028 REAR LEFT ABS SENSOR SIGNAL”. <Ref. to VDC(diag)-43, DTC C0028 REAR LEFT ABS SENSOR SIGNAL, Diagnostic Procedure with Diagnostic Trouble Code (DTC).>

F: DTC C0024 FRONT LEFT ABS SENSOR SIGNAL

NOTE:
For the diagnostic procedure, refer to “DTC C0028 REAR LEFT ABS SENSOR SIGNAL”. <Ref. to VDC(diag)-43, DTC C0028 REAR LEFT ABS SENSOR SIGNAL, Diagnostic Procedure with Diagnostic Trouble Code (DTC).>

G: DTC C0026 REAR RIGHT ABS SENSOR SIGNAL

NOTE:
For the diagnostic procedure, refer to “DTC C0028 REAR LEFT ABS SENSOR SIGNAL”. <Ref. to VDC(diag)-43, DTC C0028 REAR LEFT ABS SENSOR SIGNAL, Diagnostic Procedure with Diagnostic Trouble Code (DTC).>

H: DTC C0028 REAR LEFT ABS SENSOR SIGNAL

DTC DETECTING CONDITION:

- Defective ABS wheel speed sensor signal (noise, irregular signal, etc.)
- Defective harness connector

TROUBLE SYMPTOM:

- ABS does not operate.
- VDC does not operate.
- Hill start assist does not operate.

WIRING DIAGRAM:

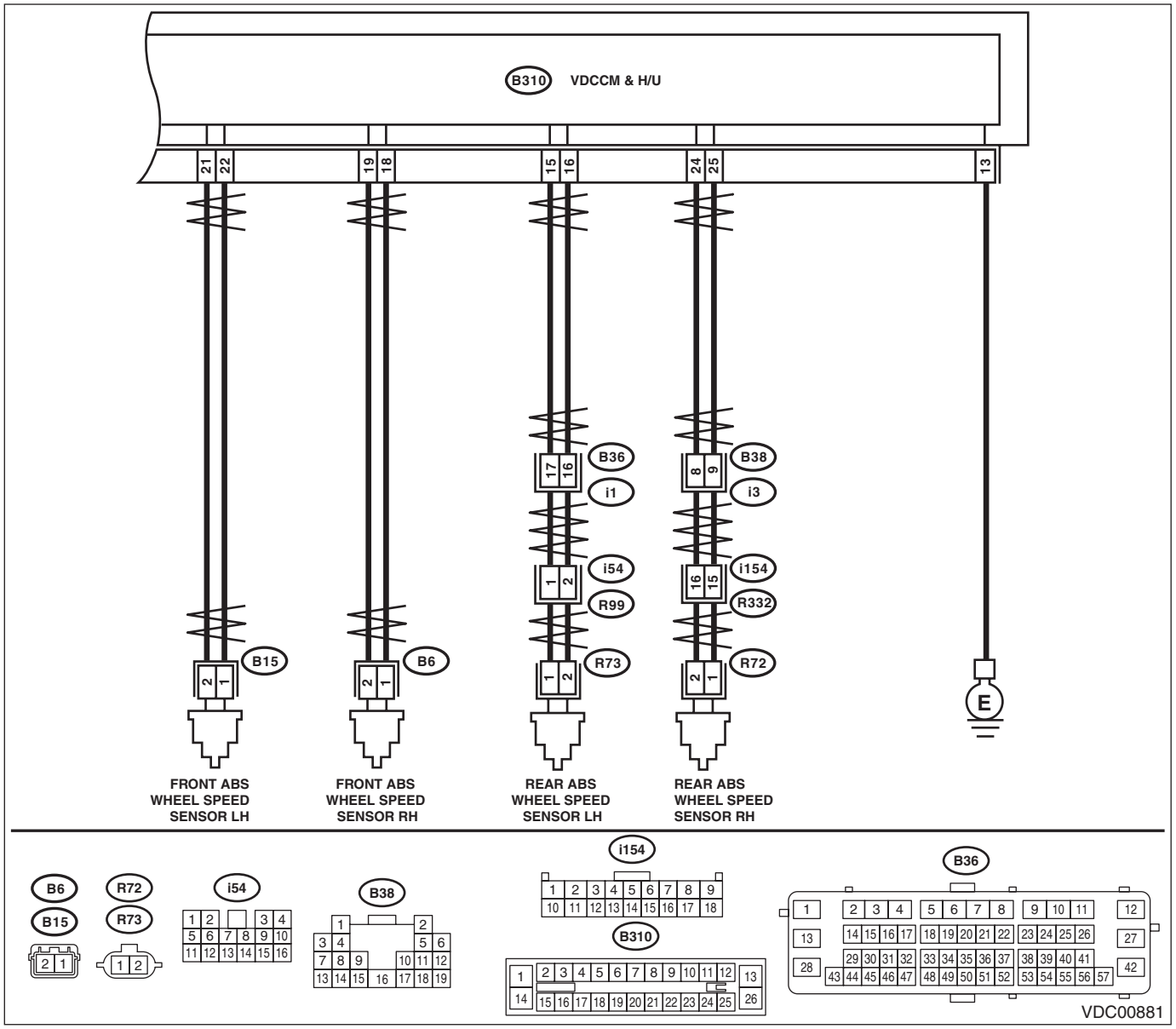

Step		Check	Yes	No
1	**CHECK OUTPUT OF ABS WHEEL SPEED SENSOR USING SUBARU SELECT MONITOR.** 1) Select "Current Data Display & Save" on the Subaru Select Monitor. 2) Read the defective ABS wheel speed sensor output.	Does the speed indicated on the display change in response to the speedometer reading during acceleration/deceleration when the steering wheel is in the straight-ahead position?	Go to step **2**.	Go to step **7**.

	Step	Check	Yes	No
2	**CHECK POOR CONTACT OF CONNECTOR.** Turn the ignition switch to OFF.	Is there poor contact of connectors between VDCCM&H/U and ABS wheel speed sensor?	Repair the connector.	Go to step **3**.
3	**CHECK CAUSE OF SIGNAL NOISE.** Make sure the radio wave devices and electronic components are installed correctly.	Are the radio wave devices and electronic components installed correctly?	Go to step **4**.	Install the radio wave devices and electronic components properly.
4	**CHECK CAUSE OF SIGNAL NOISE.** Check if the noise sources (such as an antenna) are installed near the sensor harness.	Are noise sources installed?	Install the noise sources apart from sensor harness.	Go to step **5**.
5	**CHECK VDCCM&H/U.** 1) Connect all connectors. 2) Clear the memory. <Ref. to VDC(diag)-25, Clear Memory Mode.> 3) Perform the Inspection Mode. <Ref. to VDC(diag)-24, Inspection Mode.> 4) Read the DTC.	Is the same DTC displayed?	Replace the VDCCM&H/U. <Ref. to VDC-9, VDC Control Module and Hydraulic Control Unit (VDCCM&H/U).>	Go to step **6**.
6	**CHECK OTHER DTC DETECTION.**	Is any other DTC displayed?	Perform the diagnosis according to DTC. <Ref. to VDC(diag)-35, List of Diagnostic Trouble Code (DTC).>	It results from a temporary noise interference.
7	**CHECK INSTALLATION OF ABS WHEEL SPEED SENSOR.**	Is the ABS wheel speed sensor installation bolt tightened to 7.5 N·m (0.76 kgf-m, 5.5 ft-lb)?	Go to step **8**.	Tighten the ABS wheel speed sensor installation bolts.
8	**CHECK ABS WHEEL SPEED SENSOR SIGNAL.** 1) Install the ABS wheel speed sensor. 2) Prepare an oscilloscope. 3) Check the ABS wheel speed sensor. <Ref. to VDC-30, CHECK ABS WHEEL SPEED SENSOR UNIT., INSPECTION, Front ABS Wheel Speed Sensor.>	Does the oscilloscope indicate the waveform pattern like shown in the figure when the tire is slowly turned? Does the oscilloscope indication repeat the waveform pattern like shown in the figure when the tire is slowly turned in equal speed for one rotation or more?	Go to step **10**.	Go to step **9**.
9	**CHECK ABS WHEEL SPEED SENSOR OR MAGNETIC ENCODER.**	Are there foreign matter, breakage or damage at the tip of ABS wheel speed sensor or magnetic encoder?	Remove dirt thoroughly. Also replace the ABS wheel speed sensor or magnetic encoder as a unit with hub unit bearing if it is broken or damaged.	Go to step **10**.
10	**CHECK CAUSE OF SIGNAL NOISE.** Make sure the radio wave devices and electronic components are installed correctly.	Are the radio wave devices and electronic components installed correctly?	Go to step **11**.	Install the radio wave devices and electronic components properly.
11	**CHECK CAUSE OF SIGNAL NOISE.** Check if the noise sources (such as an antenna) are installed near the sensor harness.	Are noise sources installed?	Install the noise sources apart from sensor harness.	Go to step **12**.
12	**CHECK VDCCM&H/U.** 1) Connect all connectors. 2) Clear the memory. <Ref. to VDC(diag)-25, Clear Memory Mode.> 3) Perform the Inspection Mode. <Ref. to VDC(diag)-24, Inspection Mode.> 4) Read the DTC.	Is the same DTC displayed?	Replace the VDCCM&H/U. <Ref. to VDC-9, VDC Control Module and Hydraulic Control Unit (VDCCM&H/U).>	Go to step **13**.

Step		Check	Yes	No
13	CHECK OTHER DTC DETECTION.	Is any other DTC displayed?	Perform the diagnosis according to DTC. <Ref. to VDC(diag)-35, List of Diagnostic Trouble Code (DTC).>	It results from a temporary noise interference. NOTE: Though the ABS warning light, and the VDC warning light & VDC indicator light remain lit at this point, this is normal. Drive the vehicle at 12 km/h (7 MPH) or more in order to turn off the ABS warning light, and the VDC warning light & VDC indicator light. Be sure to drive the vehicle and check that the warning light goes off.

I: DTC C0031 FR HOLD VALVE MALFUNCTION

NOTE:
For the diagnostic procedure, refer to “DTC C0064 NORMAL CLOSING VALVE 2 MALFUNCTION”. <Ref. to VDC(diag)-47, DTC C0064 NORMAL CLOSING VALVE 2 MALFUNCTION, Diagnostic Procedure with Diagnostic Trouble Code (DTC).>

J: DTC C0032 FR PRESSURE REDUCING VALVE MALFUNCTION

NOTE:
For the diagnostic procedure, refer to “DTC C0064 NORMAL CLOSING VALVE 2 MALFUNCTION”. <Ref. to VDC(diag)-47, DTC C0064 NORMAL CLOSING VALVE 2 MALFUNCTION, Diagnostic Procedure with Diagnostic Trouble Code (DTC).>

K: DTC C0033 FL HOLD VALVE MALFUNCTION

NOTE:
For the diagnostic procedure, refer to “DTC C0064 NORMAL CLOSING VALVE 2 MALFUNCTION”. <Ref. to VDC(diag)-47, DTC C0064 NORMAL CLOSING VALVE 2 MALFUNCTION, Diagnostic Procedure with Diagnostic Trouble Code (DTC).>

L: DTC C0034 FL PRESSURE REDUCING VALVE MALFUNCTION

NOTE:
For the diagnostic procedure, refer to “DTC C0064 NORMAL CLOSING VALVE 2 MALFUNCTION”. <Ref. to VDC(diag)-47, DTC C0064 NORMAL CLOSING VALVE 2 MALFUNCTION, Diagnostic Procedure with Diagnostic Trouble Code (DTC).>

M: DTC C0035 RR HOLD VALVE MALFUNCTION

NOTE:
For the diagnostic procedure, refer to “DTC C0064 NORMAL CLOSING VALVE 2 MALFUNCTION”. <Ref. to VDC(diag)-47, DTC C0064 NORMAL CLOSING VALVE 2 MALFUNCTION, Diagnostic Procedure with Diagnostic Trouble Code (DTC).>

N: DTC C0036 RR PRESSURE REDUCING VALVE MALFUNCTION

NOTE:
For the diagnostic procedure, refer to “DTC C0064 NORMAL CLOSING VALVE 2 MALFUNCTION”. <Ref. to VDC(diag)-47, DTC C0064 NORMAL CLOSING VALVE 2 MALFUNCTION, Diagnostic Procedure with Diagnostic Trouble Code (DTC).>

O: DTC C0037 RL HOLD VALVE MALFUNCTION

NOTE:
For the diagnostic procedure, refer to “DTC C0064 NORMAL CLOSING VALVE 2 MALFUNCTION”. <Ref. to VDC(diag)-47, DTC C0064 NORMAL CLOSING VALVE 2 MALFUNCTION, Diagnostic Procedure with Diagnostic Trouble Code (DTC).>

P: DTC C0038 RL PRESSURE REDUCING VALVE MALFUNCTION

NOTE:
For the diagnostic procedure, refer to “DTC C0064 NORMAL CLOSING VALVE 2 MALFUNCTION”. <Ref. to VDC(diag)-47, DTC C0064 NORMAL CLOSING VALVE 2 MALFUNCTION, Diagnostic Procedure with Diagnostic Trouble Code (DTC).>

Q: DTC C0061 NORMAL OPENING VALVE 1 MALFUNCTION

NOTE:
For the diagnostic procedure, refer to “DTC C0064 NORMAL CLOSING VALVE 2 MALFUNCTION”. <Ref. to VDC(diag)-47, DTC C0064 NORMAL CLOSING VALVE 2 MALFUNCTION, Diagnostic Procedure with Diagnostic Trouble Code (DTC).>

R: DTC C0062 NORMAL OPENING VALVE 2 MALFUNCTION

NOTE:
For the diagnostic procedure, refer to “DTC C0064 NORMAL CLOSING VALVE 2 MALFUNCTION”. <Ref. to VDC(diag)-47, DTC C0064 NORMAL CLOSING VALVE 2 MALFUNCTION, Diagnostic Procedure with Diagnostic Trouble Code (DTC).>

S: DTC C0063 NORMAL CLOSING VALVE 1 MALFUNCTION

NOTE:
For the diagnostic procedure, refer to “DTC C0064 NORMAL CLOSING VALVE 2 MALFUNCTION”. <Ref. to VDC(diag)-47, DTC C0064 NORMAL CLOSING VALVE 2 MALFUNCTION, Diagnostic Procedure with Diagnostic Trouble Code (DTC).>

T: DTC C0064 NORMAL CLOSING VALVE 2 MALFUNCTION

DTC DETECTING CONDITION:

- Defective harness connector
- Defective VDCH/U solenoid valve

TROUBLE SYMPTOM:

- ABS does not operate.
- EBD does not operate.
- VDC does not operate.
- Hill start assist does not operate.

WIRING DIAGRAM:

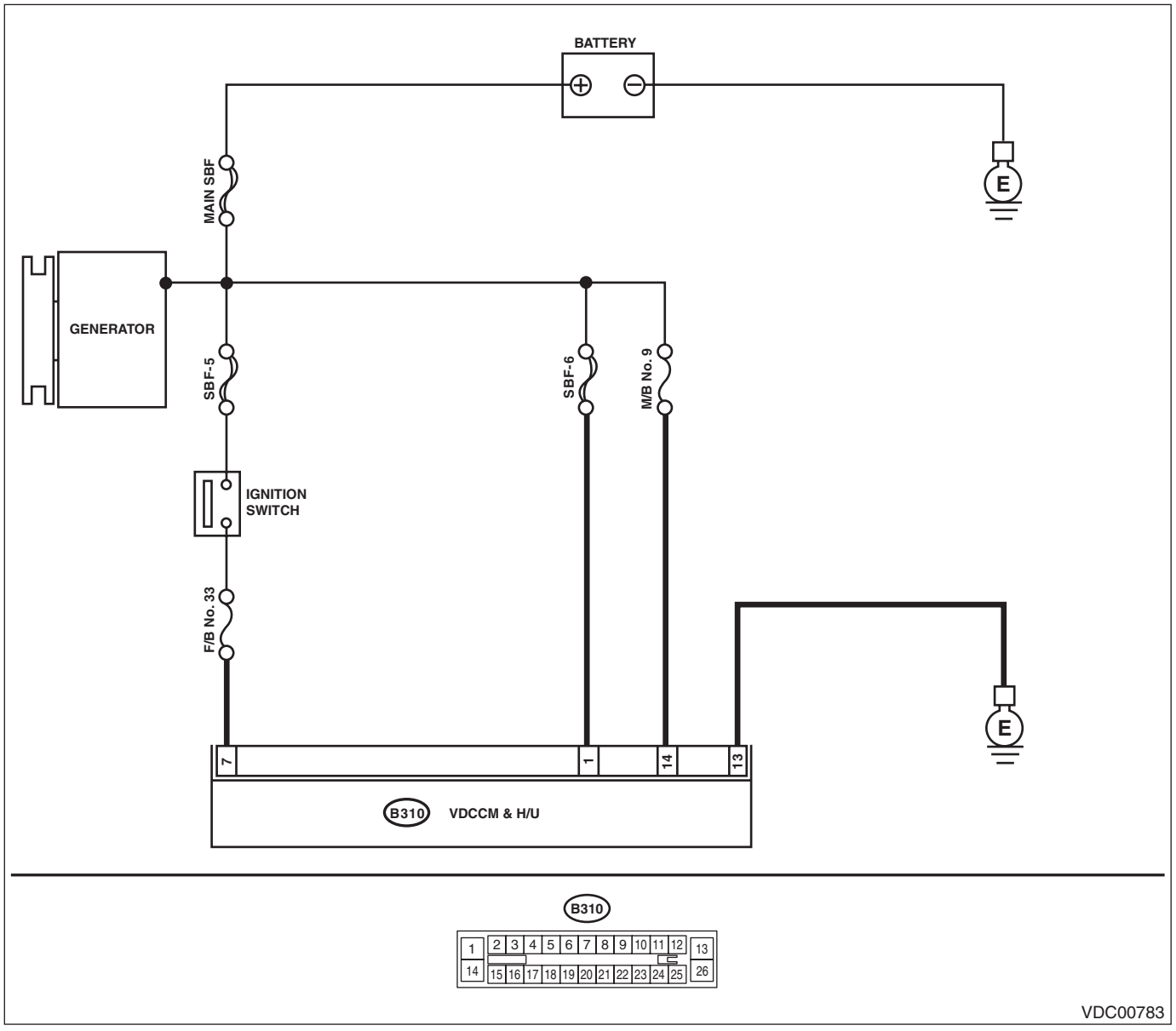

	Step	Check	Yes	No
1	**CHECK VDCCM&H/U INPUT VOLTAGE.** 1) Turn the ignition switch to OFF. 2) Disconnect the connector from the VDCCM&H/U. 3) Run the engine at idle. 4) Measure the voltage between VDCCM&H/U connector and chassis ground. ***Connector & terminal*** ***(B310) No. 7 (+) — Chassis ground (–):*** ***(B310) No. 14 (+) — Chassis ground (–):*** ***(B310) No. 1 (+) — Chassis ground (–):***	Is the voltage 10 — 15 V?	Go to step **2**.	Repair the power supply circuit.
2	**CHECK VDCCM&H/U GROUND CIRCUIT.** 1) Turn the ignition switch to OFF. 2) Measure the resistance between VDCCM&H/U connector and chassis ground. ***Connector & terminal*** ***(B310) No. 13 — Chassis ground:***	Is the resistance less than 10 Ω?	Go to step **3**.	Repair the VDCCM&H/U ground harness.
3	**CHECK POOR CONTACT OF CONNECTORS.**	Is there poor contact of connector between generator, battery and VDCCM&H/U?	Repair the connector.	Go to step **4**.
4	**CHECK VDCCM&H/U.** 1) Connect all connectors. 2) Clear the memory. <Ref. to VDC(diag)-25, Clear Memory Mode.> 3) Perform the Inspection Mode. <Ref. to VDC(diag)-24, Inspection Mode.> 4) Read the DTC.	Is the same DTC displayed?	Replace the VDCCM&H/U. <Ref. to VDC-9, VDC Control Module and Hydraulic Control Unit (VDCCM&H/U).>	Go to step **5**.
5	**CHECK OTHER DTC DETECTION.**	Is any other DTC displayed?	Perform the diagnosis according to DTC. <Ref. to VDC(diag)-35, List of Diagnostic Trouble Code (DTC).>	Temporary poor contact occurs.

U: DTC C0041 ECM

DTC DETECTING CONDITION:
Defective VDCCM&H/U

TROUBLE SYMPTOM:
- ABS does not operate.
- EBD does not operate.
- VDC does not operate.
- Hill start assist does not operate.

WIRING DIAGRAM:

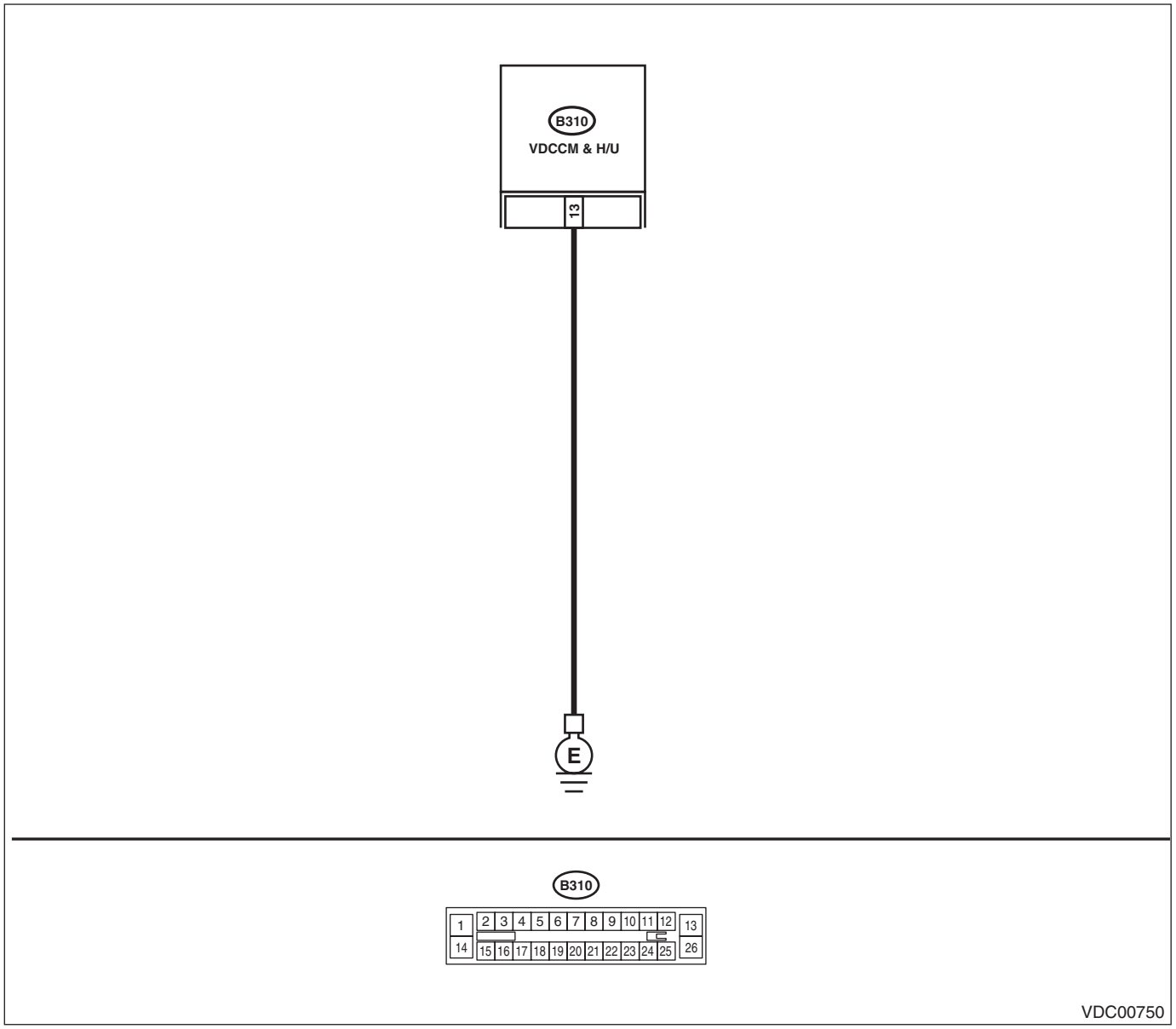

Step		Check	Yes	No
1	**CHECK VDCCM&H/U GROUND CIRCUIT.** 1) Turn the ignition switch to OFF. 2) Disconnect the connector from the VDCCM&H/U. 3) Measure the resistance between VDCCM&H/U and chassis ground. ***Connector & terminal*** ***(B310) No. 13 — Chassis ground:***	Is the resistance less than 10 Ω?	Go to step **2**.	Repair the VDCCM&H/U ground harness.

	Step	Check	Yes	No
2	**CHECK POOR CONTACT OF CONNECTORS.**	Is there poor contact of the connector between the battery, ignition switch and VDCCM&H/U?	Repair the connector.	Go to step **3**.
3	**CHECK CAUSE OF SIGNAL NOISE.**	Are the radio wave devices and electronic components installed correctly?	Go to step **4**.	Install the radio wave devices and electronic components properly.
4	**CHECK CAUSE OF SIGNAL NOISE.**	Is there a noise source (such as an antenna) installed near the sensor harness and VDCCM?	Install the noise source apart from the sensor harness and VDCCM.	Go to step **5**.
5	**CHECK VDCCM&H/U.** 1) Connect all connectors. 2) Clear the memory. <Ref. to VDC(diag)-25, Clear Memory Mode.> 3) Perform the Inspection Mode. <Ref. to VDC(diag)-24, Inspection Mode.> 4) Read the DTC.	Is the same DTC displayed?	Replace the VDCCM&H/U. <Ref. to VDC-9, VDC Control Module and Hydraulic Control Unit (VDCCM&H/U).>	Go to step **6**.
6	**CHECK OTHER DTC DETECTION.**	Is any other DTC displayed?	Perform the diagnosis according to DTC. <Ref. to VDC(diag)-35, List of Diagnostic Trouble Code (DTC).>	Temporary poor contact occurs.

V: DTC C0041 PARAMETER SELECTION ERROR

DTC DETECTING CONDITION:
VDCCM parameter selection error
TROUBLE SYMPTOM:
- ABS does not operate.
- EBD does not operate.
- VDC does not operate.
- Hill start assist does not operate.

NOTE:
When the VDCCM&H/U is replaced, this DTC may be stored.

	Step	Check	Yes	No
1	**CHECK VDCCM&H/U IDENTIFICATION SYMBOL.** Check the identification symbol attached on the H/U. Identification symbol: V4	Is the identification symbol correct?	Go to step **2**.	Replace the VDCCM&H/U. <Ref. to VDC-9, VDC Control Module and Hydraulic Control Unit (VDCCM&H/U).>
2	**CHECK PARAMETER SELECTED IN VDCCM.** <Ref. to VDC(diag)-19, PARAMETER CHECK, OPERATION, Subaru Select Monitor.>	Does the parameter registered in the VDCCM match the relevant vehicle?	Replace the VDCCM&H/U. <Ref. to VDC-9, VDC Control Module and Hydraulic Control Unit (VDCCM&H/U).>	Select and register the correct parameter. <Ref. to VDC(diag)-19, PARAMETER SELECTION, OPERATION, Subaru Select Monitor.>

W: DTC C0042 POWER SUPPLY VOLTAGE FAILURE

DTC DETECTING CONDITION:
Improper VDCCM&H/U power supply voltage
TROUBLE SYMPTOM:

- ABS does not operate.
- EBD may not operate.
- VDC does not operate.
- Hill start assist does not operate.

NOTE:
Warning lights go off if voltage returns.
WIRING DIAGRAM:

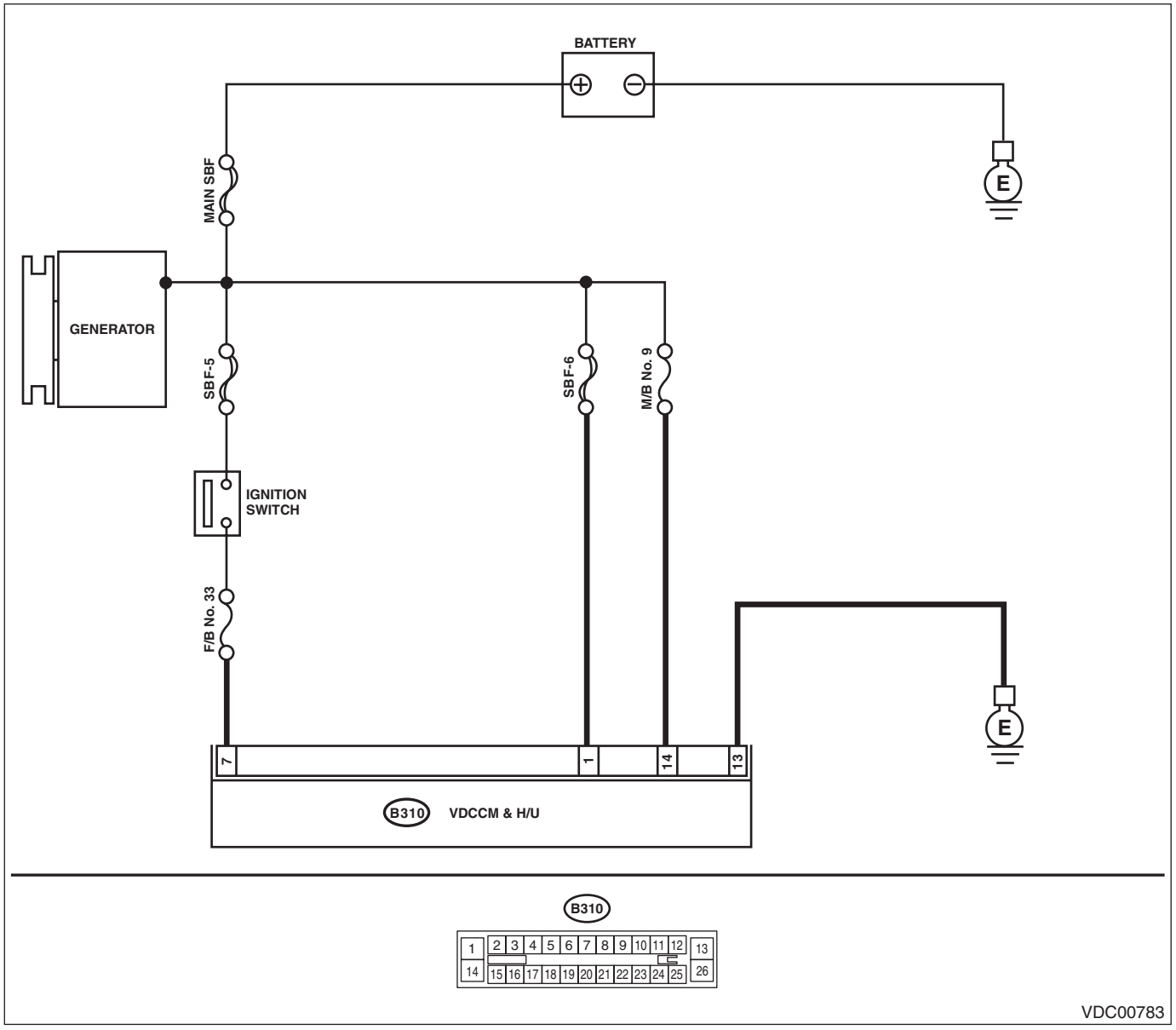

	Step	Check	Yes	No
1	**CHECK GENERATOR.** 1) Start the engine. 2) Run the engine at idle after warming up. 3) Measure the voltage between generator terminal B and chassis ground. ***Terminals*** ***Generator terminal B (+) — Chassis ground (–):***	Is the voltage 10 — 15 V?	Go to step **2**.	Repair the generator. <Ref. to SC(H4SO)-18, Generator.>
2	**CHECK BATTERY TERMINAL.** Turn the ignition switch to OFF.	Are the positive and negative battery terminals clamped tightly?	Go to step **3**.	Tighten the terminal.
3	**CHECK VDCCM&H/U INPUT VOLTAGE.** 1) Disconnect the connector from the VDCCM&H/U. 2) Run the engine at idle. 3) Operate devices such as headlights, air conditioner, defogger, etc. which produce an electrical load. 4) Measure the voltage between VDCCM&H/U connector and chassis ground. ***Connector & terminal*** ***(B310) No. 7 (+) — Chassis ground (–):*** ***(B310) No. 14 (+) — Chassis ground (–):*** ***(B310) No. 1 (+) — Chassis ground (–):***	Is the voltage 10 — 15 V?	Go to step **4**.	Repair the power supply circuit.
4	**CHECK VDCCM&H/U GROUND CIRCUIT.** 1) Turn the ignition switch to OFF. 2) Measure the resistance between VDCCM&H/U connector and chassis ground. ***Connector & terminal*** ***(B310) No. 13 — Chassis ground:***	Is the resistance less than 10 Ω?	Go to step **5**.	Repair the VDCCM&H/U ground harness.
5	**CHECK POOR CONTACT OF CONNECTORS.**	Is there poor contact of connector between generator, battery and VDCCM&H/U?	Repair the connector.	Go to step **6**.
6	**CHECK VDCCM&H/U.** 1) Connect all connectors. 2) Clear the memory. <Ref. to VDC(diag)-25, Clear Memory Mode.> 3) Perform the Inspection Mode. <Ref. to VDC(diag)-24, Inspection Mode.> 4) Read the DTC.	Is the same DTC displayed?	Replace the VDCCM&H/U. <Ref. to VDC-9, VDC Control Module and Hydraulic Control Unit (VDCCM&H/U).>	Go to step **7**.
7	**CHECK OTHER DTC DETECTION.**	Is any other DTC displayed?	Perform the diagnosis according to DTC. <Ref. to VDC(diag)-35, List of Diagnostic Trouble Code (DTC).>	Temporary poor contact occurs.

X: DTC C0044 TCM COMMUNICATION CIRCUIT

DTC DETECTING CONDITION:
No CAN signal from TCM.
TROUBLE SYMPTOM:
- ABS does not operate.
- VDC does not operate.
- Hill start assist does not operate.

	Step	Check	Yes	No
1	**CHECK LAN SYSTEM.** Perform the diagnosis for LAN system. <Ref. to LAN(diag)-2, Basic Diagnostic Procedure.>	Is there any fault in LAN system?	Perform the diagnosis according to DTC for LAN system. <Ref. to LAN(diag)-32, List of Diagnostic Trouble Code (DTC).>	Go to step **2**.
2	**CHECK POOR CONTACT OF CONNECTORS.**	Is there poor contact of TCM connector?	Repair the connector.	Go to step **3**.
3	**CHECK TCM.** Refer to the basic diagnostic procedure for each transmission (diagnostics).	Is the TCM normal?	Go to step **4**.	Replace the TCM. <Ref. to 5AT-57, Transmission Control Module (TCM).> <Ref. to CVT-124, Transmission Control Module (TCM).>
4	**CHECK VDCCM&H/U.** 1) Connect all connectors. 2) Clear the memory. <Ref. to VDC(diag)-25, Clear Memory Mode.> 3) Perform the Inspection Mode. <Ref. to VDC(diag)-24, Inspection Mode.> 4) Read the DTC.	Is the same DTC displayed?	Replace the VDCCM&H/U. <Ref. to VDC-9, VDC Control Module and Hydraulic Control Unit (VDCCM&H/U).>	Go to step **5**.
5	**CHECK OTHER DTC DETECTION.**	Is any other DTC displayed?	Perform the diagnosis according to DTC. <Ref. to VDC(diag)-35, List of Diagnostic Trouble Code (DTC).>	It results from a temporary noise interference.

Y: DTC C0045 TCM MALFUNCTION

DTC DETECTING CONDITION:
Defective TCM
TROUBLE SYMPTOM:
- ABS does not operate.
- VDC does not operate.
- Hill start assist does not operate.

	Step	Check	Yes	No
1	**CHECK AT SYSTEM OR CVT SYSTEM.** 1) Start the engine. 2) Check the DTC in AT system or CVT system.	Is DTC of AT system or CVT system displayed?	Repair the AT system or CVT system. <Ref. to 5AT(diag)-33, List of Diagnostic Trouble Code (DTC).> <Ref. to CVT(diag)-32, List of Diagnostic Trouble Code (DTC).>	Go to step **2**.
2	**CHECK VDCCM&H/U.** 1) Connect all connectors. 2) Clear the memory. <Ref. to VDC(diag)-25, Clear Memory Mode.> 3) Perform the Inspection Mode. <Ref. to VDC(diag)-24, Inspection Mode.> 4) Read the DTC.	Is the same DTC displayed?	Replace the VDCCM&H/U. <Ref. to VDC-9, VDC Control Module and Hydraulic Control Unit (VDCCM&H/U).>	Go to step **3**.
3	**CHECK OTHER DTC DETECTION.**	Is any other DTC displayed?	Perform the diagnosis according to DTC. <Ref. to VDC(diag)-35, List of Diagnostic Trouble Code (DTC).>	It results from a temporary noise interference.

Z: DTC C0045 INCORRECT VDC CONTROL MODULE SPECIFICATIONS

DTC DETECTING CONDITION:
Different control module specification
TROUBLE SYMPTOM:
- ABS does not operate.
- VDC does not operate.
- Hill start assist does not operate.

NOTE:
When parameter selection for VDCCM is improper, this DTC may be memorized.

	Step	Check	Yes	No
1	**CHECK VDCCM&H/U IDENTIFICATION SYMBOL.** Check the identification symbol attached on the H/U. Identification symbol: V4	Is the identification symbol correct?	Go to step **2**.	Replace the VDCCM&H/U. <Ref. to VDC-9, VDC Control Module and Hydraulic Control Unit (VDCCM&H/U).>
2	**CHECK PARAMETER SELECTED IN VDCCM.** <Ref. to VDC(diag)-19, PARAMETER CHECK, OPERATION, Subaru Select Monitor.>	Does the parameter registered in the VDCCM match the relevant vehicle?	Go to step **3**.	Select and register the correct parameter. <Ref. to VDC(diag)-19, PARAMETER SELECTION, OPERATION, Subaru Select Monitor.>
3	**CHECK TCM SPECIFICATION.** Check the TCM specification.	Is the specification of TCM same as vehicle specification?	Go to step **4**.	Replace the TCM. <Ref. to 5AT-57, Transmission Control Module (TCM).> <Ref. to CVT-124, Transmission Control Module (TCM).>
4	**CHECK AT SYSTEM OR CVT SYSTEM.** 1) Start the engine. 2) Check the DTC in AT system or CVT system.	Is DTC of AT system or CVT system displayed?	Repair the AT system or CVT system. <Ref. to 5AT(diag)-33, List of Diagnostic Trouble Code (DTC).> <Ref. to CVT(diag)-32, List of Diagnostic Trouble Code (DTC).>	Go to step **5**.
5	**CHECK ECM SPECIFICATION.** Check the ECM specification.	Is the specification of ECM same as vehicle specification?	Go to step **6**.	Replace the ECM. <Ref. to FU(H4SO)-46, Engine Control Module (ECM).> <Ref. to FU(H4DOTC)-58, Engine Control Module (ECM).> <Ref. to FU(H6DO)-54, Engine Control Module (ECM).>

	Step	Check	Yes	No
6	**CHECK VDCCM&H/U.** 1) Connect all connectors. 2) Clear the memory. <Ref. to VDC(diag)-25, Clear Memory Mode.> 3) Perform the Inspection Mode. <Ref. to VDC(diag)-24, Inspection Mode.> 4) Read the DTC.	Is the same DTC displayed?	Replace the VDCCM&H/U. <Ref. to VDC-9, VDC Control Module and Hydraulic Control Unit (VDCCM&H/U).>	Go to step **7**.
7	**CHECK OTHER DTC DETECTION.**	Is any other DTC displayed?	Perform the diagnosis according to DTC. <Ref. to VDC(diag)-35, List of Diagnostic Trouble Code (DTC).>	It results from a temporary noise interference.

AA:DTC C0046 BODY INTEGRATED MODULE COMMUNICATION CIRCUIT

DTC DETECTING CONDITION:

No CAN signal received from body integrated unit.

TROUBLE SYMPTOM:

- VDC may not operate.
- Hill start assist does not operate. (MT model only)

	Step	Check	Yes	No
1	**CHECK LAN SYSTEM.** Perform the diagnosis for LAN system. <Ref. to LAN(diag)-2, Basic Diagnostic Procedure.>	Is there any fault in LAN system?	Perform the diagnosis according to DTC for LAN system. <Ref. to LAN(diag)-32, List of Diagnostic Trouble Code (DTC).>	Go to step **2**.
2	**CHECK POOR CONTACT OF CONNECTORS.**	Is there poor contact of body integrated unit connector?	Repair the connector.	Go to step **3**.
3	**CHECK BODY INTEGRATED UNIT.** Perform the diagnosis for body integrated unit. <Ref. to BC(diag)-2, Basic Diagnostic Procedure.>	Is the body integrated unit normal?	Go to step **4**.	Perform the diagnosis according to DTC for the body integrated unit. <Ref. to BC(diag)-21, List of Diagnostic Trouble Code (DTC).>
4	**CHECK VDCCM&H/U.** 1) Connect all connectors. 2) Clear the memory. <Ref. to VDC(diag)-25, Clear Memory Mode.> 3) Perform the Inspection Mode. <Ref. to VDC(diag)-24, Inspection Mode.> 4) Read the DTC.	Is the same DTC displayed?	Replace the VDCCM&H/U. <Ref. to VDC-9, VDC Control Module and Hydraulic Control Unit (VDCCM&H/U).>	Go to step **5**.
5	**CHECK OTHER DTC DETECTION.**	Is any other DTC displayed?	Perform the diagnosis according to DTC. <Ref. to VDC(diag)-35, List of Diagnostic Trouble Code (DTC).>	It results from a temporary noise interference.

AB:DTC C0047 CAN COMMUNICATION

DTC DETECTING CONDITION:

CAN communication line circuit is open or shorted.

TROUBLE SYMPTOM:

- VDC does not operate.
- Hill start assist does not operate.

WIRING DIAGRAM:

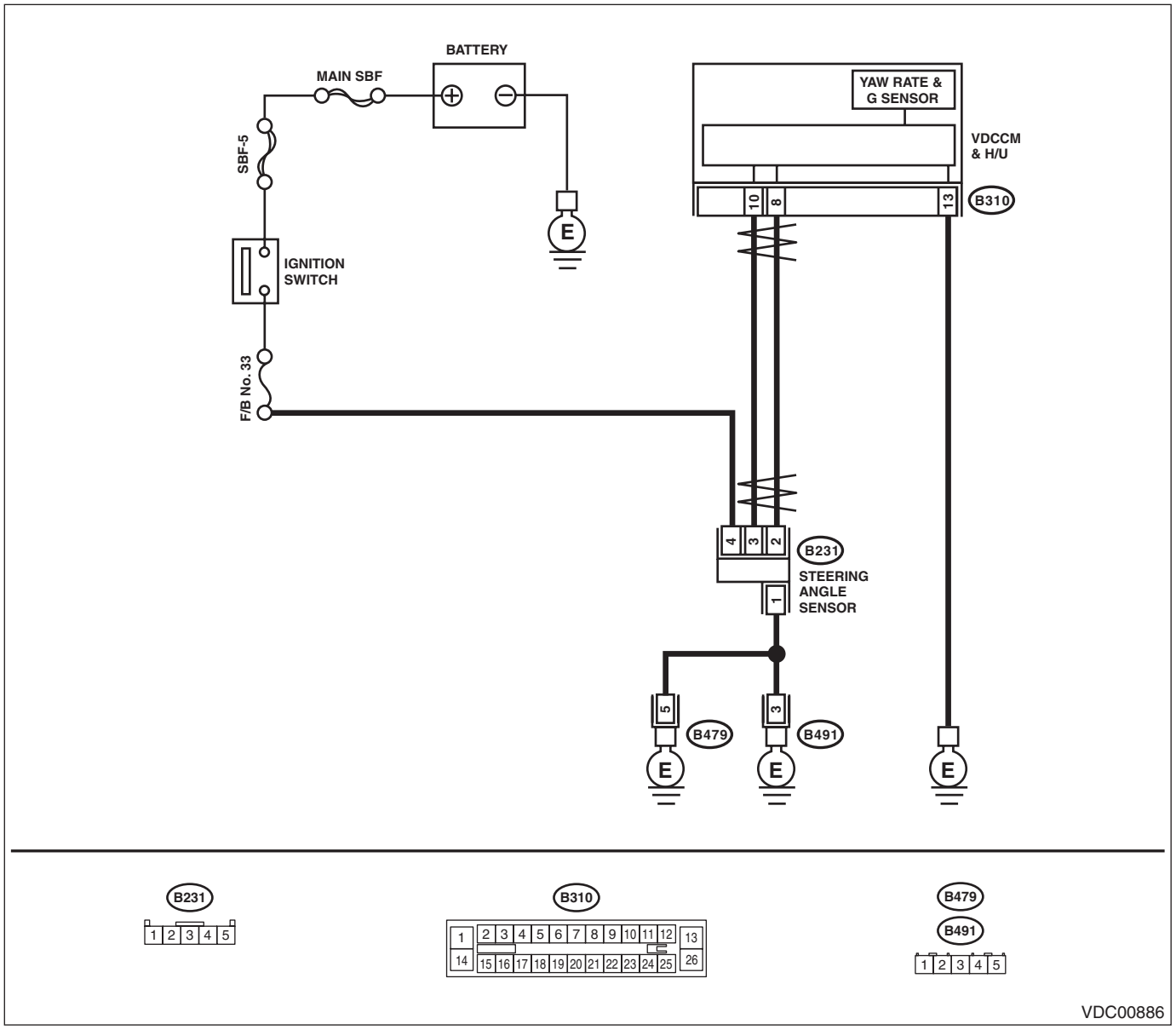

Step		Check	Yes	No
1	**CHECK LAN SYSTEM.** Perform the diagnosis for LAN system. <Ref. to LAN(diag)-2, Basic Diagnostic Procedure.>	Is there any fault in LAN system?	Perform the diagnosis according to DTC for LAN system. <Ref. to LAN(diag)-32, List of Diagnostic Trouble Code (DTC).>	Go to step **2**.
2	**CHECK POOR CONTACT OF CONNECTORS.**	Is there poor contact of VDCCM&H/U connector?	Repair the connector.	Go to step **3**.

	Step	Check	Yes	No
3	**CHECK OUTPUT OF STEERING ANGLE SENSOR WITH SUBARU SELECT MONITOR.** 1) Select “Current Data Display & Save” on the Subaru Select Monitor. 2) Check the «Steer Angle Sensor Op».	Does the output signal change?	Go to step **4**.	Check output of the steering angle sensor. <Ref. to VDC(diag)-78, DTC C0071 STEER ANGLE SENSOR OP, Diagnostic Procedure with Diagnostic Trouble Code (DTC).>
4	**CHECK VDCCM&H/U.** 1) Connect all connectors. 2) Clear the memory. <Ref. to VDC(diag)-25, Clear Memory Mode.> 3) Perform the Inspection Mode. <Ref. to VDC(diag)-24, Inspection Mode.> 4) Read the DTC.	Is the same DTC displayed?	Replace the VDCCM&H/U. <Ref. to VDC-9, VDC Control Module and Hydraulic Control Unit (VDCCM&H/U).>	Temporary poor contact occurs.

AC:DTC C0048 PARKING BRAKE SYSTEM COMMUNICATION CIRCUIT

DTC DETECTING CONDITION:

No CAN signal from parking brake control module.

TROUBLE SYMPTOM:

- VDC may not operate.
- Hill start assist does not operate.

	Step	Check	Yes	No
1	**CHECK LAN SYSTEM.** Perform the diagnosis for LAN system. <Ref. to LAN(diag)-2, Basic Diagnostic Procedure.>	Is there any fault in LAN system?	Perform the diagnosis according to DTC for LAN system. <Ref. to LAN(diag)-32, List of Diagnostic Trouble Code (DTC).>	Go to step **2**.
2	**CHECK POOR CONTACT OF CONNECTORS.**	Is there poor contact of the parking brake control module connector?	Repair the connector.	Go to step **3**.
3	**CHECK PARKING BRAKE SYSTEM.** Perform the diagnosis for the parking brake system. <Ref. to PB(diag)-2, Basic Diagnostic Procedure.>	Is the parking brake system normal?	Go to step **4**.	Perform the diagnosis according to DTC for the parking brake system. <Ref. to PB(diag)-35, List of Diagnostic Trouble Code (DTC).>
4	**CHECK VDCCM&H/U.** 1) Connect all connectors. 2) Clear the memory. <Ref. to VDC(diag)-25, Clear Memory Mode.> 3) Perform the Inspection Mode. <Ref. to VDC(diag)-24, Inspection Mode.> 4) Read the DTC.	Is the same DTC displayed?	Replace the VDCCM&H/U. <Ref. to VDC-9, VDC Control Module and Hydraulic Control Unit (VDCCM&H/U).>	Go to step **5**.
5	**CHECK OTHER DTC DETECTION.**	Is any other DTC displayed?	Perform the diagnosis according to DTC. <Ref. to VDC(diag)-35, List of Diagnostic Trouble Code (DTC).>	It results from a temporary noise interference.

AD:DTC C0051 VALVE RELAY

DTC DETECTING CONDITION:
Defective valve relay
TROUBLE SYMPTOM:
- ABS does not operate.
- EBD does not operate.
- VDC does not operate.
- Hill start assist does not operate.

WIRING DIAGRAM:

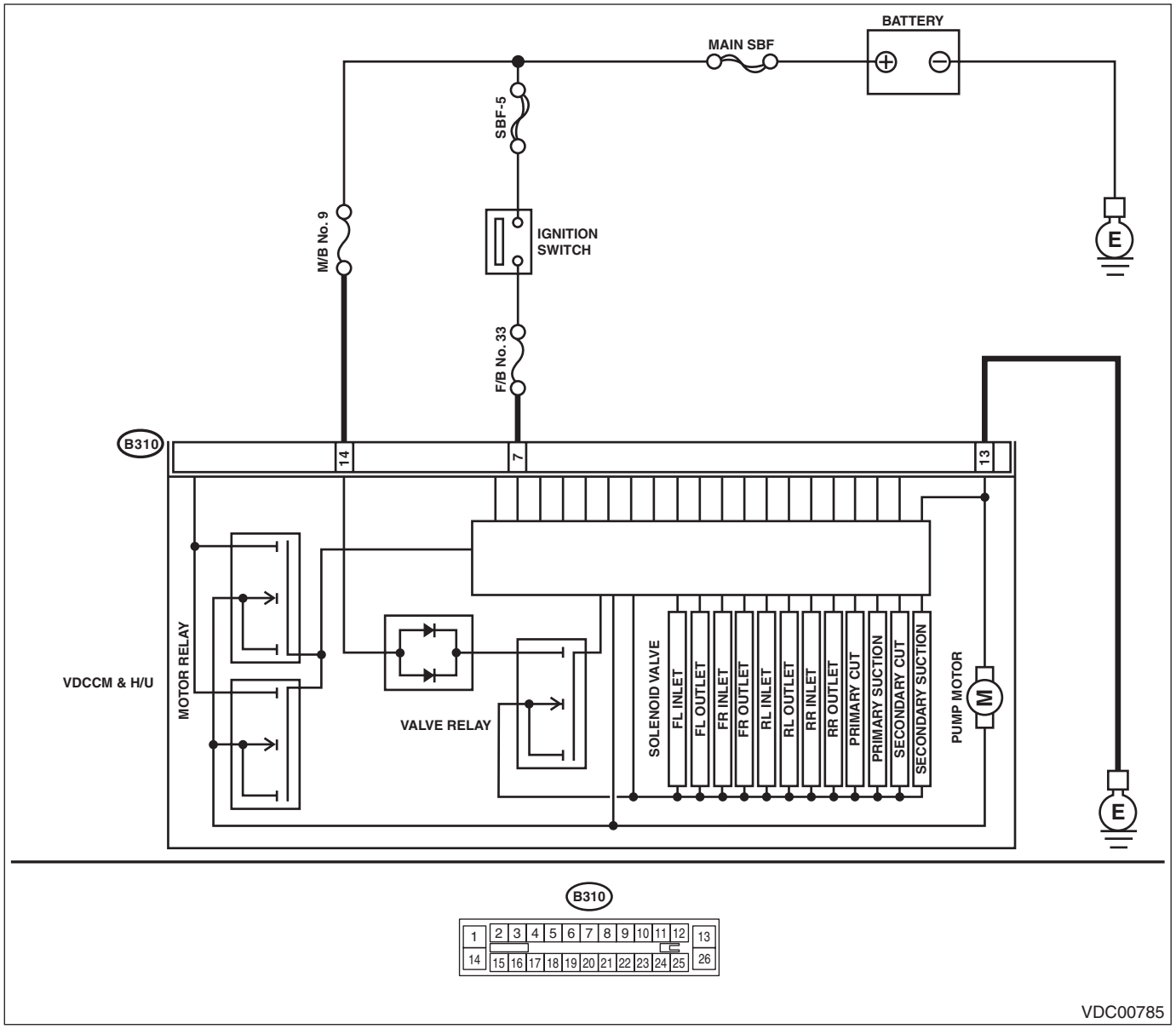

	Step	Check	Yes	No
1	**CHECK VDCCM&H/U INPUT VOLTAGE.** 1) Turn the ignition switch to OFF. 2) Disconnect the connector from the VDCCM&H/U. 3) Run the engine at idle. 4) Measure the voltage between VDCCM&H/U connector and chassis ground. ***Connector & terminal*** ***(B310) No. 7 (+) — Chassis ground (–):*** ***(B310) No. 14 (+) — Chassis ground (–):***	Is the voltage 10 — 15 V?	Go to step **2**.	Repair the power supply circuit.
2	**CHECK VDCCM&H/U INPUT VOLTAGE.** Calculate the voltage difference measured in step 1. A: (B310) No. 7 (+) — Chassis ground (–): B: (B310) No. 14 (+) — Chassis ground (–):	Is the voltage difference between A and B 2 V or more?	Repair the power supply circuit.	Go to step **3**.
3	**CHECK INSTALLATION OF VDCCM&H/U GROUND.**	Is the VDCCM&H/U ground terminal installation bolt tightened to 13 N·m (1.3 kgf-m, 9.6 ft-lb)?	Go to step **4**.	Tighten the VDCCM&H/U ground terminal installation bolt.
4	**CHECK VDCCM&H/U GROUND CIRCUIT.** 1) Turn the ignition switch to OFF. 2) Measure the resistance between VDCCM&H/U connector and chassis ground. ***Connector & terminal*** ***(B310) No. 13 — Chassis ground:***	Is the resistance less than 10 Ω?	Go to step **5**.	Repair the VDCCM&H/U ground harness.
5	**CHECK VDCCM&H/U VALVE RELAY.** Measure the resistance between VDCCM&H/U connector terminals. ***Connector & terminal*** ***(B310) No. 14 — (B310) No. 13:***	Is the resistance 1 MΩ or more?	Go to step **6**.	Replace the VDCCM&H/U. <Ref. to VDC-9, VDC Control Module and Hydraulic Control Unit (VDCCM&H/U).>
6	**CHECK POOR CONTACT OF CONNECTORS.**	Is there poor contact of connector between generator, battery and VDCCM&H/U?	Repair the connector.	Go to step **7**.
7	**CHECK VDCCM&H/U.** 1) Connect all connectors. 2) Clear the memory. <Ref. to VDC(diag)-25, Clear Memory Mode.> 3) Perform the Inspection Mode. <Ref. to VDC(diag)-24, Inspection Mode.> 4) Read the DTC.	Is the same DTC displayed?	Replace the VDCCM&H/U. <Ref. to VDC-9, VDC Control Module and Hydraulic Control Unit (VDCCM&H/U).>	Go to step **8**.
8	**CHECK OTHER DTC DETECTION.**	Is any other DTC displayed?	Perform the diagnosis according to DTC. <Ref. to VDC(diag)-35, List of Diagnostic Trouble Code (DTC).>	Temporary poor contact occurs.

AE:DTC C0052 MOTOR MALFUNCTION

DTC DETECTING CONDITION:

- Defective motor and motor relay
- Defective harness connector

TROUBLE SYMPTOM:

- ABS does not operate.
- VDC does not operate.
- EBD may not operate.
- Hill start assist does not operate.

WIRING DIAGRAM:

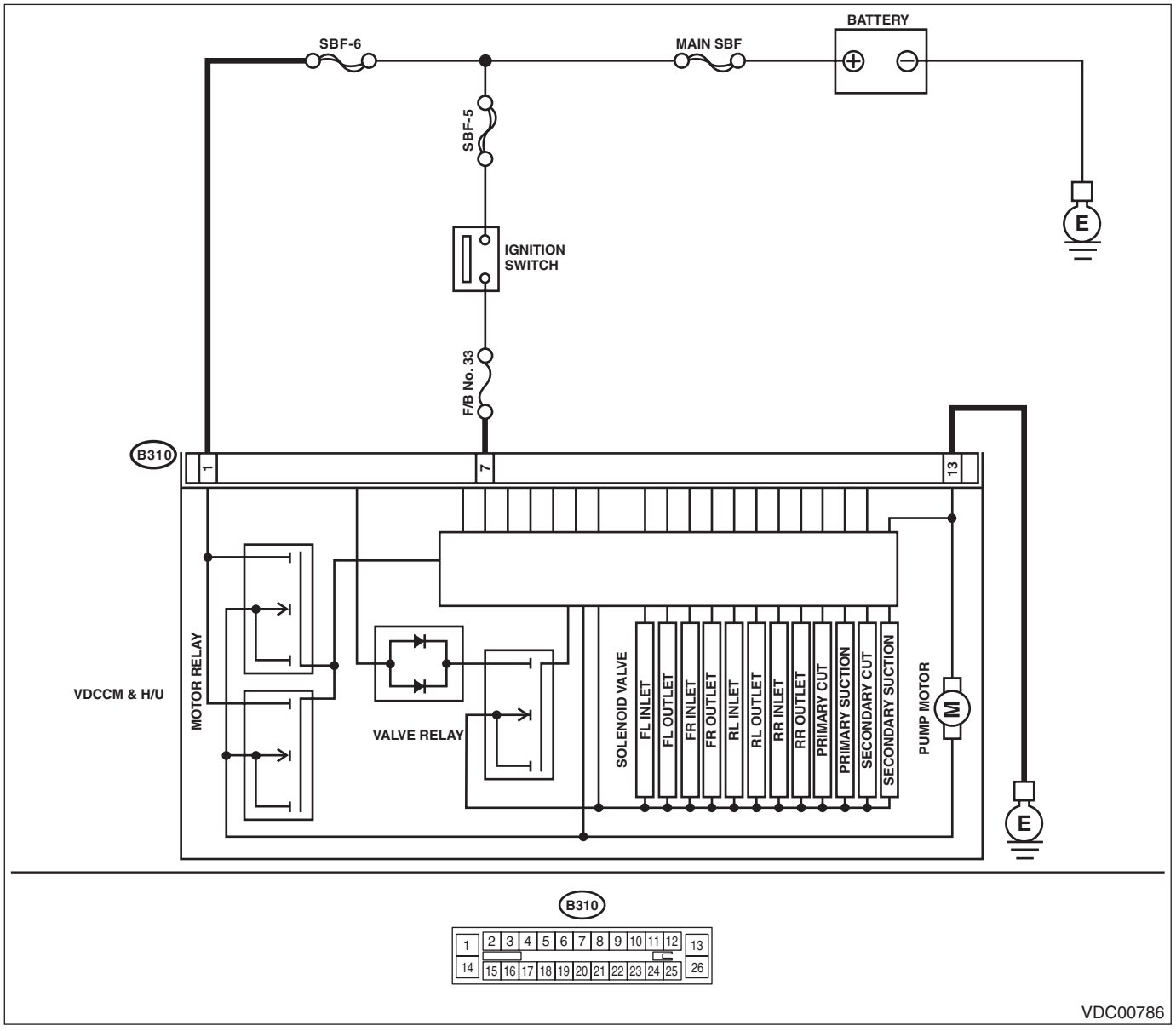

	Step	Check	Yes	No
1	**CHECK VDCCM&H/U INPUT VOLTAGE.** 1) Turn the ignition switch to OFF. 2) Disconnect the connector from the VDCCM&H/U. 3) Turn the ignition switch to ON. 4) Measure the voltage between VDCCM&H/U connector and chassis ground. ***Connector & terminal*** ***(B310) No. 1 (+) — Chassis ground (–):*** ***(B310) No. 7 (+) — Chassis ground (–):***	Is the voltage 10 — 15 V?	Go to step **2**.	Repair the VDCCM&H/U power supply circuit.
2	**CHECK VDCCM&H/U INPUT VOLTAGE.** Calculate the voltage difference measured in step 1. A: (B310) No. 1 (+) — Chassis ground (–): B: (B310) No. 7 (+) — Chassis ground (–):	Is the voltage difference between A and B 2 V or more?	Repair the power supply circuit.	Go to step **3**.
3	**CHECK INSTALLATION OF VDCCM&H/U GROUND.**	Is the VDCCM&H/U ground terminal installation bolt tightened to 13 N·m (1.3 kgf-m, 9.6 ft-lb)?	Go to step **4**.	Tighten the VDCCM&H/U ground terminal installation bolt.
4	**CHECK VDCCM&H/U GROUND CIRCUIT.** 1) Turn the ignition switch to OFF. 2) Measure the resistance between VDCCM&H/U connector and chassis ground. ***Connector & terminal*** ***(B310) No. 13 — Chassis ground:***	Is the resistance less than 10 Ω?	Go to step **5**.	Repair the VDCCM&H/U ground harness.
5	**CHECK VDCCM&H/U MOTOR RELAY.** Measure the resistance between VDCCM&H/U connector terminals. ***Connector & terminal*** ***(B310) No. 1 — (B310) No. 13:***	Is the resistance 1 MΩ or more?	Go to step **6**.	Replace the VDCCM&H/U. <Ref. to VDC-9, VDC Control Module and Hydraulic Control Unit (VDCCM&H/U).>
6	**CHECK POOR CONTACT OF CONNECTORS.** Turn the ignition switch to OFF.	Is there poor contact of connector between generator, battery and VDCCM&H/U?	Repair the connector.	Go to step **7**.
7	**CHECK VDCCM&H/U.** 1) Connect all connectors. 2) Clear the memory. <Ref. to VDC(diag)-25, Clear Memory Mode.> 3) Perform the Inspection Mode. <Ref. to VDC(diag)-24, Inspection Mode.> 4) Read the DTC.	Is the same DTC displayed?	Replace the VDCCM&H/U. <Ref. to VDC-9, VDC Control Module and Hydraulic Control Unit (VDCCM&H/U).>	Go to step **8**.

Step	Check	Yes	No
8 **CHECK OTHER DTC DETECTION.**	Is any other DTC displayed?	Perform the diagnosis according to DTC. <Ref. to VDC(diag)-35, List of Diagnostic Trouble Code (DTC).>	Temporary poor contact occurs. NOTE: Though the ABS warning light, and the VDC warning light & VDC indicator light remain lit at this point, this is normal. Drive the vehicle at 12 km/h (7 MPH) or more in order to turn off the ABS warning light, and the VDC warning light & VDC indicator light. Be sure to drive the vehicle and check that the warning light goes off.

AF:DTC C0054 BLS OFF MALFUNCTION

DTC DETECTING CONDITION:
Defective stop light switch
TROUBLE SYMPTOM:
- VDC does not operate.
- Hill start assist does not operate.

WIRING DIAGRAM:

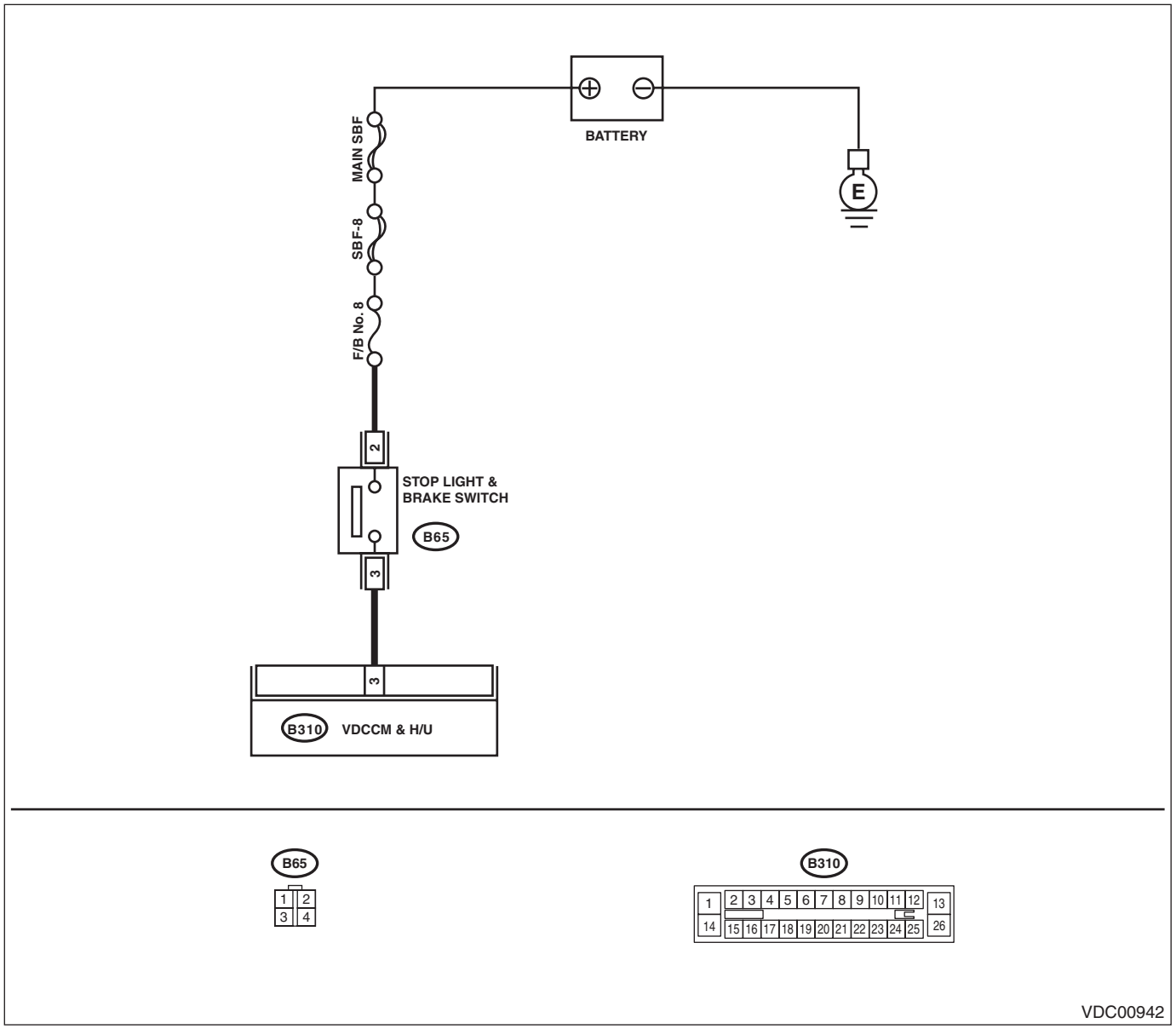

Step		Check	Yes	No
1	**CHECK STOP LIGHT SWITCH.** 1) Turn the ignition switch to OFF. 2) Disconnect the stop light switch connector. 3) Measure the resistance of stop light switch terminals. ***Connector & terminal*** ***(B65) No. 2 — No. 3:***	Is the resistance 1 Ω or less when the switch is ON (when pedal is depressed)?	Go to step **2**.	Replace the stop light switch. <Ref. to BR-64, Stop Light Switch.>

	Step	Check	Yes	No
2	**CHECK STOP LIGHT POWER SUPPLY.** Measure the voltage between stop light switch terminal and chassis ground. ***Connector & terminal*** ***(B65) No. 2 (+) — Chassis ground (–):***	Is the voltage 10 — 15 V?	Go to step **3**.	Repair the stop light power supply circuit.
3	**CHECK STOP LIGHT SWITCH HARNESS.** 1) Disconnect the connector from the VDCCM&H/U. 2) Measure the resistance between VDCCM&H/U and stop light switch. ***Connector & terminal*** ***(B65) No. 3 — (B310) No. 3:***	Is the resistance less than 1 Ω?	Go to step **4**.	Repair the stop light switch circuit.
4	**CHECK POOR CONTACT OF CONNECTORS.**	Is there poor contact of connector between stop light switch and VDCCM&H/U?	Repair the connector.	Go to step **5**.
5	**CHECK VDCCM&H/U.** 1) Connect all connectors. 2) Clear the memory. <Ref. to VDC(diag)-25, Clear Memory Mode.> 3) Perform the Inspection Mode. <Ref. to VDC(diag)-24, Inspection Mode.> 4) Read the DTC.	Is the same DTC displayed?	Replace the VDCCM&H/U. <Ref. to VDC-9, VDC Control Module and Hydraulic Control Unit (VDCCM&H/U).>	Go to step **6**.
6	**CHECK OTHER DTC DETECTION.**	Is any other DTC displayed?	Perform the diagnosis according to DTC. <Ref. to VDC(diag)-35, List of Diagnostic Trouble Code (DTC).>	Temporary poor contact occurs.

AG:DTC C0054 BLS ON MALFUNCTION

DTC DETECTING CONDITION:
Defective stop light switch
TROUBLE SYMPTOM:
- VDC does not operate.
- Hill start assist does not operate.

WIRING DIAGRAM:

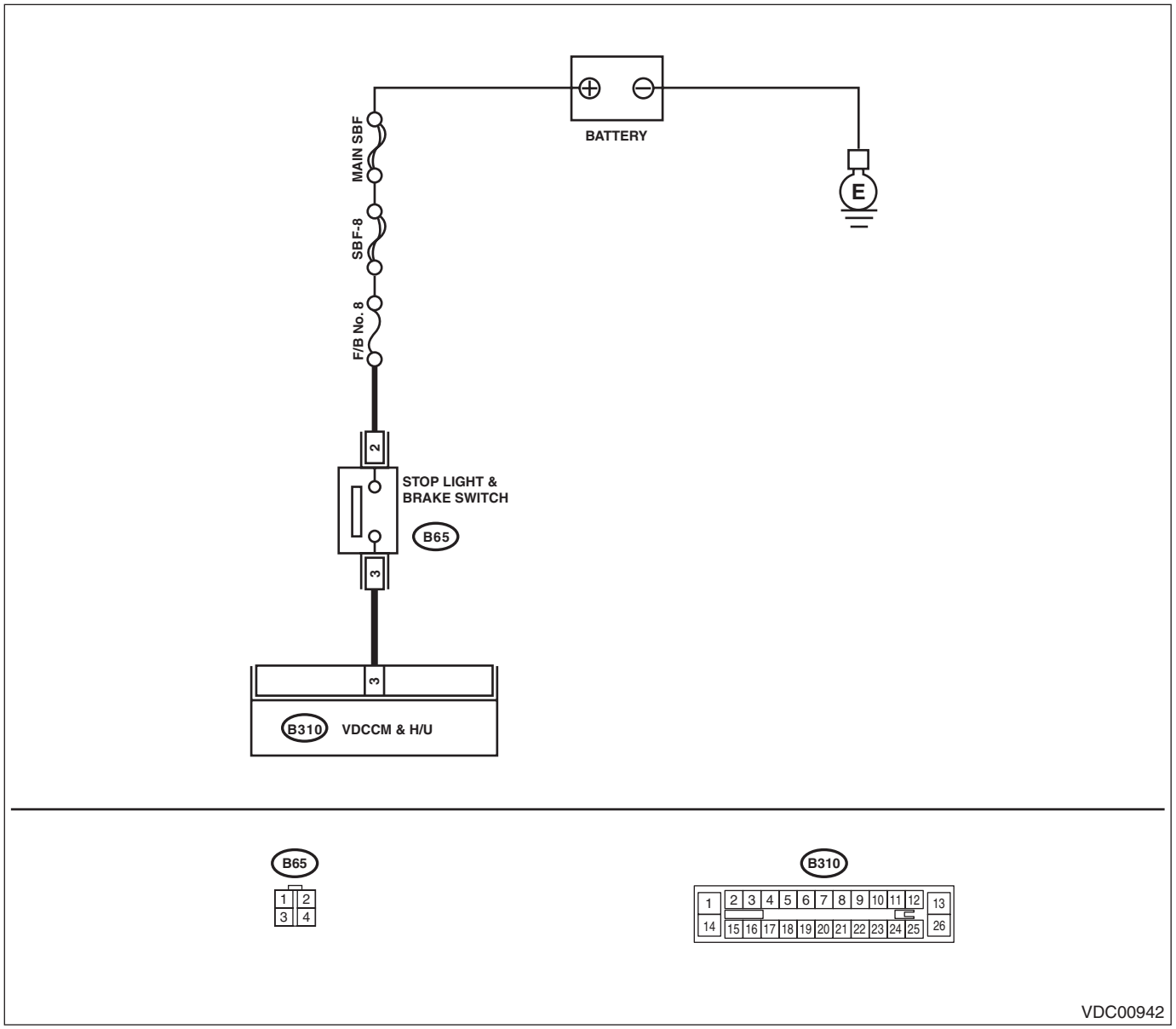

Step		Check	Yes	No
1	**CHECK STOP LIGHT SWITCH.** 1) Turn the ignition switch to OFF. 2) Disconnect the stop light switch connector. 3) Measure the resistance of stop light switch terminals. ***Connector & terminal*** ***(B65) No. 2 — No. 3:***	Is the resistance 1 MΩ or more when switch is OFF (when pedal is not depressed)?	Go to step **2**.	Replace the stop light switch. <Ref. to BR-64, Stop Light Switch.>

	Step	Check	Yes	No
2	**CHECK STOP LIGHT SWITCH HARNESS.** 1) Disconnect the connector from the VDCCM&H/U. 2) Measure the resistance between VDCCM&H/U connector and chassis ground. ***Connector & terminal*** ***(B310) No. 3 — Chassis ground:***	Is the resistance less than 1 MΩ?	Go to step **3**.	Repair the stop light switch circuit.
3	**INTERVIEW CUSTOMERS.** Make sure that the operation was performed in which accelerator pedal and brake pedal were depressed simultaneously (with depressing brake pedal with left foot).	Were the acceleration pedal and brake pedal depressed simultaneously?	System is normal. (DTC may be recorded while brake is applied during driving.)	Go to step **4**.
4	**CHECK VDCCM&H/U.** 1) Connect all connectors. 2) Clear the memory. <Ref. to VDC(diag)-25, Clear Memory Mode.> 3) Perform the Inspection Mode. <Ref. to VDC(diag)-24, Inspection Mode.> 4) Read the DTC.	Is the same DTC displayed?	Replace the VDCCM&H/U. <Ref. to VDC-9, VDC Control Module and Hydraulic Control Unit (VDCCM&H/U).>	Go to step **5**.
5	**CHECK OTHER DTC DETECTION.**	Is any other DTC displayed?	Perform the diagnosis according to DTC. <Ref. to VDC(diag)-35, List of Diagnostic Trouble Code (DTC).>	Temporary poor contact occurs.

AH:DTC C0056 G SENSOR ABNORMAL

DTC DETECTING CONDITION:

Longitudinal G sensor signal failure

TROUBLE SYMPTOM:

- ABS does not operate.
- VDC does not operate.
- Hill start assist does not operate.

NOTE:

For the diagnostic procedure, refer to “DTC C0056 G SENSOR SIGNAL”. <Ref. to VDC(diag)-71, DTC C0056 G SENSOR SIGNAL, Diagnostic Procedure with Diagnostic Trouble Code (DTC).>

AI: DTC C0056 G SENSOR SIGNAL

DTC DETECTING CONDITION:
Longitudinal G sensor signal failure
TROUBLE SYMPTOM:
- ABS does not operate.
- VDC does not operate.
- Hill start assist does not operate.

	Step	Check	Yes	No
1	**CHECK INSTALLATION OF VDCCM&H/U.**	Is VDCCM&H/U installed properly without being tilted? Is the bracket deformation-free? Are the VDCCM&H/U installation bolts installed without missing or getting loose?	Go to step **2**.	Repair the fault location. Go to step **2**. • Install VDCCM&H/U properly. • Replace the bracket if faulty. • Tighten the VDCCM&H/U installation bolt. <Ref. to VDC-5, VDC CONTROL MODULE & HYDRAULIC CONTROL UNIT (VDCCM&H/U), COMPONENT, General Description.>
2	**CHECK OUTPUT OF LONGITUDINAL G SENSOR USING SUBARU SELECT MONITOR.** 1) Park the vehicle on a level surface. 2) Connect Subaru Select Monitor, and select {Current Data Display & Save}. 3) Read the «Fr Rr G sensor Output» displayed on display.	Is the indicated reading of the longitudinal G sensor on the monitor display –2 — 2 m/s^2?	Go to step **3**.	Recheck from step 1, and if the problem is not solved, go to next. Go to step **6**.
3	**SET 0 POINT FOR LONGITUDINAL G SENSOR USING SUBARU SELECT MONITOR.** 1) Select “Function Check Sequence” on Subaru Select Monitor. 2) Perform the “Longitudinal G sensor & lateral G sensor 0 point setting mode”. <Ref. to VDC-16, LONGITUDINAL G SENSOR & LATERAL G SENSOR 0 POINT SETTING MODE, ADJUSTMENT, VDC Control Module and Hydraulic Control Unit (VDCCM&H/U).>	Is the 0 point setting successful?	Go to step **4**.	Recheck from step 1, and when the 0 point setting is not possible, replace the VDCCM&H/U. <Ref. to VDC-9, VDC Control Module and Hydraulic Control Unit (VDCCM&H/U).>
4	**DRIVING INSPECTION.** Drive approximately 10 minutes, and check if the warning lights illuminate or improperly operate during driving. In a safe place, drive the vehicle while alternating acceleration and deceleration as much as possible.	Did the ABS warning light or VDC warning light remain off? Does ABS or VDC operate without malfunction?	Go to step **5**.	Recheck from step 1, and when the warning lights illuminate or improperly operate, replace the VDCCM&H/U. <Ref. to VDC-9, VDC Control Module and Hydraulic Control Unit (VDCCM&H/U).>

	Step	Check	Yes	No
5	**CHECK OUTPUT OF LONGITUDINAL G SENSOR USING SUBARU SELECT MONITOR.** 1) Park the vehicle on a level surface. 2) Connect Subaru Select Monitor, and select {Current Data Display & Save}. 3) Read the «Fr Rr G sensor Output» displayed on display.	Is the indicated reading of the longitudinal G sensor on the monitor display –1.5 — 1.5 m/s^2?	End. It results from a temporary noise interference.	Recheck from step 1, and if the problem is not solved, replace the VDCCM&H/U. <Ref. to VDC-9, VDC Control Module and Hydraulic Control Unit (VDCCM&H/U).>
6	**CHECK OUTPUT OF LONGITUDINAL G SENSOR USING SUBARU SELECT MONITOR.** 1) Remove the VDCCM&H/U installation bolt and bracket. 2) Keep VDCCM&H/U in a horizontal position. 3) Connect Subaru Select Monitor, and select {Current Data Display & Save}. 4) Read the «Fr Rr G sensor Output» displayed on display.	When the VDCCM&H/U is in a horizontal position, is the indicated reading of the longitudinal G sensor on the monitor display –1.5 — 1.5 m/s^2?	Check the bracket and brake pipe, and install VDCCM&H/U in a horizontal position to the vehicle.	Replace the VDCCM&H/U. <Ref. to VDC-9, VDC Control Module and Hydraulic Control Unit (VDCCM&H/U).>

AJ:DTC C0057 ECM COMMUNICATION CIRCUIT

DTC DETECTING CONDITION:
No CAN signal from ECM.
TROUBLE SYMPTOM:
- VDC does not operate.
- Hill start assist does not operate.

	Step	Check	Yes	No
1	**CHECK LAN SYSTEM.** Perform the diagnosis for LAN system. <Ref. to LAN(diag)-2, Basic Diagnostic Procedure.>	Is there any fault in LAN system?	Perform the diagnosis according to DTC for LAN system. <Ref. to LAN(diag)-32, List of Diagnostic Trouble Code (DTC).>	Go to step **2**.
2	**CHECK POOR CONTACT OF CONNECTORS.**	Is there poor contact of ECM connector?	Repair the connector.	Go to step **3**.
3	**CHECK ECM.** Refer to the basic diagnostic procedure for each engine (diagnostics).	Is ECM normal?	Go to step **4**.	Replace the ECM. <Ref. to FU(H4SO)-46, Engine Control Module (ECM).> <Ref. to FU(H4DOTC)-58, Engine Control Module (ECM).> <Ref. to FU(H6DO)-54, Engine Control Module (ECM).>
4	**CHECK VDCCM&H/U.** 1) Connect all connectors. 2) Clear the memory. <Ref. to VDC(diag)-25, Clear Memory Mode.> 3) Perform the Inspection Mode. <Ref. to VDC(diag)-24, Inspection Mode.> 4) Read the DTC.	Is the same DTC displayed?	Replace the VDCCM&H/U. <Ref. to VDC-9, VDC Control Module and Hydraulic Control Unit (VDCCM&H/U).>	Go to step **5**.
5	**CHECK OTHER DTC DETECTION.**	Is any other DTC displayed?	Perform the diagnosis according to DTC. <Ref. to VDC(diag)-35, List of Diagnostic Trouble Code (DTC).>	It results from a temporary noise interference.

AK:DTC C0057 ECM CONTROL SYSTEM

DTC DETECTING CONDITION:
ECM malfunctioning
TROUBLE SYMPTOM:
- VDC does not operate.
- Hill start assist does not operate.

	Step	Check	Yes	No
1	**CHECK COOPERATION CONTROL FEASIBILITY OF ECM USING SUBARU SELECT MONITOR.** 1) Start the engine, and run the engine at idle approximately 5 minutes. 2) Connect Subaru Select Monitor, and select "Current Data Display & Save". 3) Check the «E/G Control Stop Flag» displayed on screen.	Is the «E/G Control Stop Flag» "1"?	Go to step **4**.	Go to step **2**.
2	**CHECK WARNING LIGHT.** Check whether the VDC warning light illuminates after driving for 1 minute or more at a speed of 10 km/h or more.	Does the VDC warning light illuminate?	Go to step **3**.	VDC is normal. Perform the Clear Memory Mode. NOTE: DTC may be recorded if cranking is performed during driving.
3	**CHECK POOR CONTACT OF CONNECTORS.**	Is there poor contact of ECM connector?	Repair the connector.	Go to step **4**.
4	**CHECK ECM.** Refer to the basic diagnostic procedure for each engine (diagnostics).	Is ECM normal?	Go to step **5**.	Replace the ECM. <Ref. to FU(H4SO)-46, Engine Control Module (ECM).> <Ref. to FU(H4DOTC)-58, Engine Control Module (ECM).> <Ref. to FU(H6DO)-54, Engine Control Module (ECM).>
5	**CHECK VDCCM&H/U.** 1) Connect all connectors. 2) Clear the memory. <Ref. to VDC(diag)-25, Clear Memory Mode.> 3) Perform the Inspection Mode. <Ref. to VDC(diag)-24, Inspection Mode.> 4) Read the DTC.	Is the same DTC displayed?	Replace the VDCCM&H/U. <Ref. to VDC-9, VDC Control Module and Hydraulic Control Unit (VDCCM&H/U).>	Go to step **6**.
6	**CHECK OTHER DTC DETECTION.**	Is any other DTC displayed?	Perform the diagnosis according to DTC. <Ref. to VDC(diag)-35, List of Diagnostic Trouble Code (DTC).>	It results from a temporary noise interference.

AL:DTC C0057 VDC INTERRUPTED DUE TO EGI REASON

DTC DETECTING CONDITION:
ECM prohibits the cooperation control.
TROUBLE SYMPTOM:
- VDC does not operate.
- Hill start assist does not operate.

NOTE:
- For the diagnostic procedure, refer to “DTC C0057 ECM CONTROL SYSTEM”. <Ref. to VDC(diag)-74, DTC C0057 ECM CONTROL SYSTEM, Diagnostic Procedure with Diagnostic Trouble Code (DTC).>
- Warning lights go off if the cooperation control of ECM returns.

AM:DTC C0071 NO SIGNAL FROM STEERING ANGLE SENSOR

DTC DETECTING CONDITION:

Communication from steering angle sensor is faulty.

TROUBLE SYMPTOM:

- VDC does not operate.
- Hill start assist does not operate.

WIRING DIAGRAM:

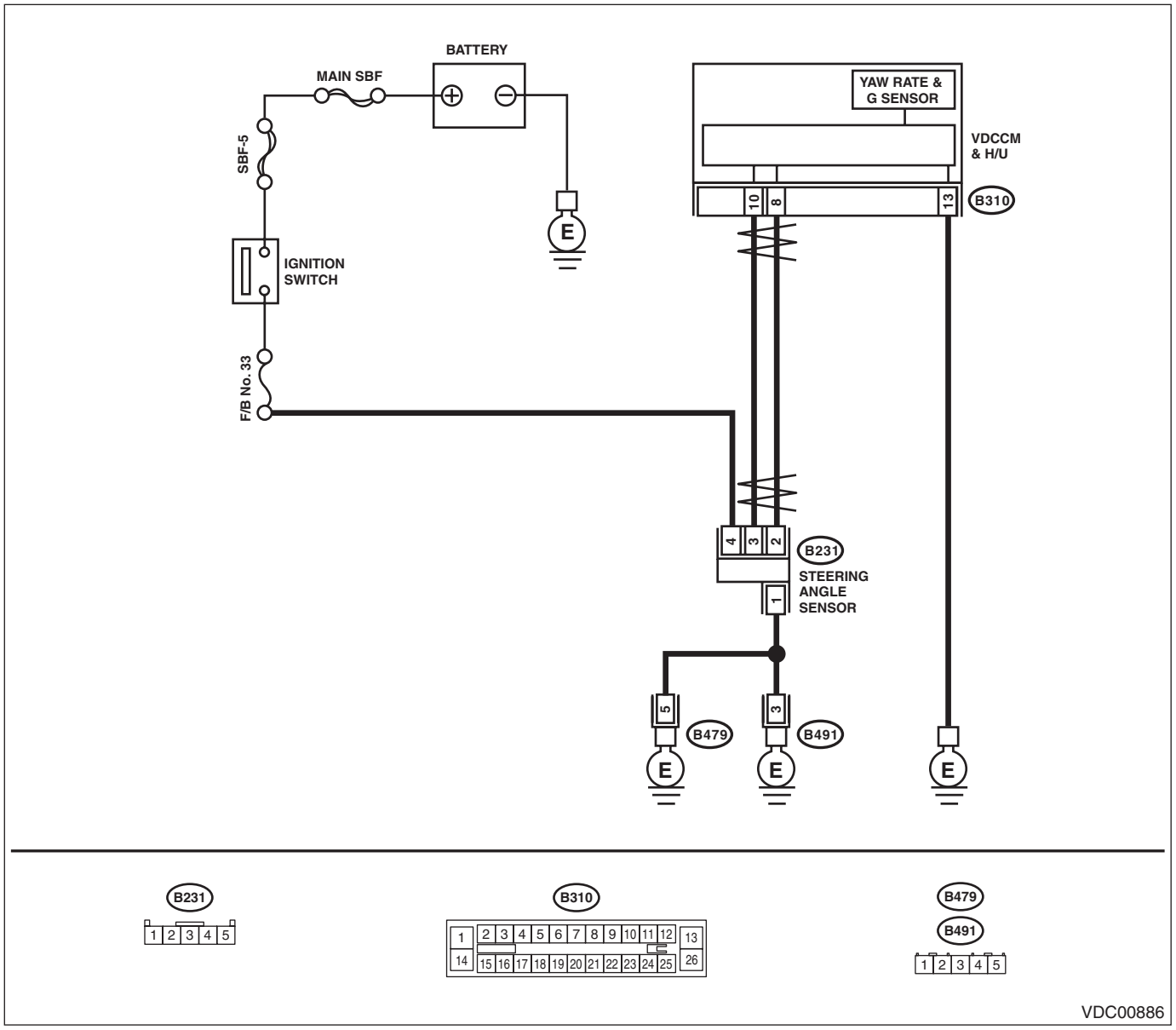

Step		Check	Yes	No
1	**CHECK POWER SUPPLY FOR STEERING ANGLE SENSOR.** 1) Turn the ignition switch to OFF. 2) Disconnect the connector from steering angle sensor. 3) Turn the ignition switch to ON. 4) Measure the voltage between steering angle sensor and chassis ground. ***Connector & terminal*** ***(B231) No. 4 (+) — Chassis ground (–):***	Is the voltage 10 — 15 V?	Go to step **2**.	Repair the steering angle sensor power supply circuit.

	Step	Check	Yes	No
2	**CHECK GROUND CIRCUIT OF STEERING ANGLE SENSOR.** Measure the resistance between steering angle sensor and chassis ground. ***Connector & terminal*** ***(B231) No. 1 — Chassis ground:***	Is the resistance less than 10 Ω?	Go to step **3**.	Repair ground circuit in the steering angle sensor.
3	**CHECK STEERING ANGLE SENSOR.** 1) Turn the ignition switch to OFF. 2) Connect all connectors. 3) Clear the memory. <Ref. to VDC(diag)-25, Clear Memory Mode.> 4) Perform the Inspection Mode. <Ref. to VDC(diag)-24, Inspection Mode.> 5) Read the DTC.	Is the same DTC displayed?	Go to step **4**.	Go to step **5**.
4	**CHECK VDCCM&H/U.** 1) Turn the ignition switch to OFF. 2) Replace the steering angle sensor. <Ref. to VDC-24, Steering Angle Sensor.> 3) Clear the memory. <Ref. to VDC(diag)-25, Clear Memory Mode.> 4) Perform the Inspection Mode. <Ref. to VDC(diag)-24, Inspection Mode.> 5) Read the DTC.	Is the same DTC displayed?	Replace the VDCCM&H/U. <Ref. to VDC-9, VDC Control Module and Hydraulic Control Unit (VDCCM&H/U).>	Go to step **6**.
5	**CHECK OTHER DTC DETECTION.**	Is any other DTC displayed?	Perform the diagnosis according to DTC. <Ref. to VDC(diag)-35, List of Diagnostic Trouble Code (DTC).>	Temporary poor contact occurs. Though VDC warning light may remain lit, this is normal. Warning light goes off when the vehicle is driven at 12 km/h (7 MPH) or more.
6	**CHECK OTHER DTC DETECTION.**	Is any other DTC displayed?	Perform the diagnosis according to DTC. <Ref. to VDC(diag)-35, List of Diagnostic Trouble Code (DTC).>	Original steering angle sensor malfunction

AN:DTC C0071 STEER ANGLE SENSOR OP

DTC DETECTING CONDITION:
Steering angle sensor output is faulty.
TROUBLE SYMPTOM:
- VDC does not operate.
- Hill start assist does not operate.

WIRING DIAGRAM:

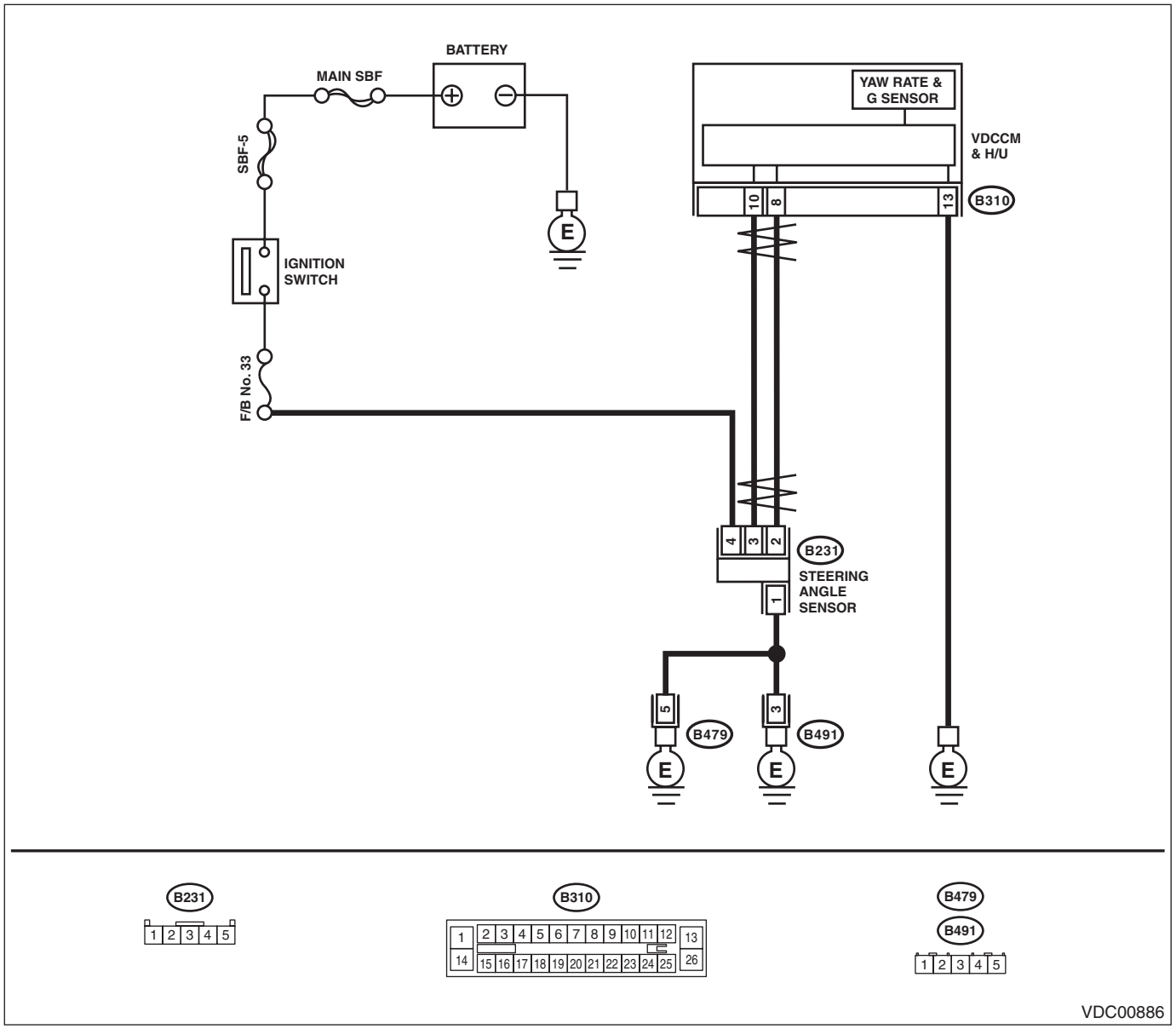

Step		Check	Yes	No
1	**CHECK POWER SUPPLY FOR STEERING ANGLE SENSOR.** 1) Turn the ignition switch to OFF. 2) Disconnect the connector from steering angle sensor. 3) Turn the ignition switch to ON. 4) Measure the voltage between steering angle sensor and chassis ground. ***Connector & terminal*** ***(B231) No. 4 (+) — Chassis ground (–):***	Is the voltage 10 — 15 V?	Go to step **2**.	Repair the steering angle sensor power supply circuit.

	Step	Check	Yes	No
2	**CHECK GROUND CIRCUIT OF STEERING ANGLE SENSOR.** Measure the resistance between steering angle sensor and chassis ground. ***Connector & terminal*** ***(B231) No. 1 — Chassis ground:***	Is the resistance less than 10 Ω?	Go to step **3**.	Repair ground circuit in the steering angle sensor.
3	**CHECK STEERING ANGLE SENSOR HARNESS.** 1) Disconnect the connector from the VDCCM&H/U. 2) Measure the resistance between VDCCM&H/U and steering angel sensor. ***Connector & terminal*** ***(B231) No. 2 — (B310) No. 8:*** ***(B231) No. 3 — (B310) No. 10:***	Is the resistance less than 1 Ω?	Go to step **4**.	Repair the harness between the steering angle sensor and VDCCM&H/U.
4	**CHECK GROUND SHORT CIRCUIT OF STEERING ANGLE SENSOR HARNESS.** Measure the resistance between steering angle sensor and chassis ground. ***Connector & terminal*** ***(B231) No. 2 — Chassis ground:*** ***(B231) No. 3 — Chassis ground:***	Is the resistance 1 MΩ or more?	Go to step **5**.	Repair the harness between the steering angle sensor and VDCCM&H/U.
5	**CHECK STEERING WHEEL.** 1) Drive the vehicle on a flat road. 2) Park the vehicle straight. 3) Check the steering wheel for deviation from center.	Is the deviation from the center of steering wheel less than 5°?	Go to step **6**.	Perform the centering adjustment of steering wheel, and perform Set up mode for Neutral of Steering Angle Sensor & Lateral G Sensor 0 point. <Ref. to VDC-16, SET UP MODE FOR NEUTRAL OF STEERING ANGLE SENSOR & LATERAL G SENSOR 0 POINT, ADJUSTMENT, VDC Control Module and Hydraulic Control Unit (VDCCM&H/U).>
6	**CHECK OUTPUT OF STEERING ANGLE SENSOR USING SUBARU SELECT MONITOR.** 1) Adjust steering wheel to the center position. 2) Connect Subaru Select Monitor, and select {Current Data Display & Save}. 3) Read the «Steer Angle Sensor Op» displayed on display.	Is the indicated reading of the «Steer Angle Sensor Op» on the monitor display –10° — 10°?	Perform Set up mode for Neutral of Steering Angle Sensor & Lateral G Sensor 0 point. Go to step **7**. <Ref. to VDC-16, SET UP MODE FOR NEUTRAL OF STEERING ANGLE SENSOR & LATERAL G SENSOR 0 POINT, ADJUSTMENT, VDC Control Module and Hydraulic Control Unit (VDCCM&H/U).>	Check the installation of the steering wheel and steering angle sensor.

	Step	Check	Yes	No
7	**CHECK STEERING ANGLE SENSOR USING SUBARU SELECT MONITOR.** 1) Turn the ignition switch to OFF. 2) Connect all connectors. 3) Clear the memory. <Ref. to VDC(diag)-25, Clear Memory Mode.> 4) Perform the Inspection Mode. <Ref. to VDC(diag)-24, Inspection Mode.> 5) Read the DTC.	Is the same DTC displayed?	Go to step **8**.	Go to step **9**.
8	**CHECK VDCCM&H/U.** 1) Turn the ignition switch to OFF. 2) Replace the steering angle sensor. <Ref. to VDC-24, Steering Angle Sensor.> 3) Clear the memory. <Ref. to VDC(diag)-25, Clear Memory Mode.> 4) Perform the Inspection Mode. <Ref. to VDC(diag)-24, Inspection Mode.> 5) Read the DTC.	Is the same DTC displayed?	Replace the VDCCM&H/U. <Ref. to VDC-9, VDC Control Module and Hydraulic Control Unit (VDCCM&H/U).>	Go to step **10**.
9	**CHECK OTHER DTC DETECTION.**	Is any other DTC displayed?	Perform the diagnosis according to DTC. <Ref. to VDC(diag)-35, List of Diagnostic Trouble Code (DTC).>	Temporary poor contact occurs. Though VDC warning light may remain lit, this is normal. Warning light goes off when the vehicle is driven at 12 km/h (7 MPH) or more.
10	**CHECK OTHER DTC DETECTION.**	Is any other DTC displayed?	Perform the diagnosis according to DTC. <Ref. to VDC(diag)-35, List of Diagnostic Trouble Code (DTC).>	Original steering angle sensor malfunction

AO:DTC C0072 ABNORMAL YAW RATE SENSOR OUTPUT

DTC DETECTING CONDITION:
Defective yaw rate sensor
TROUBLE SYMPTOM:
- VDC does not operate.
- Hill start assist does not operate.

WIRING DIAGRAM:

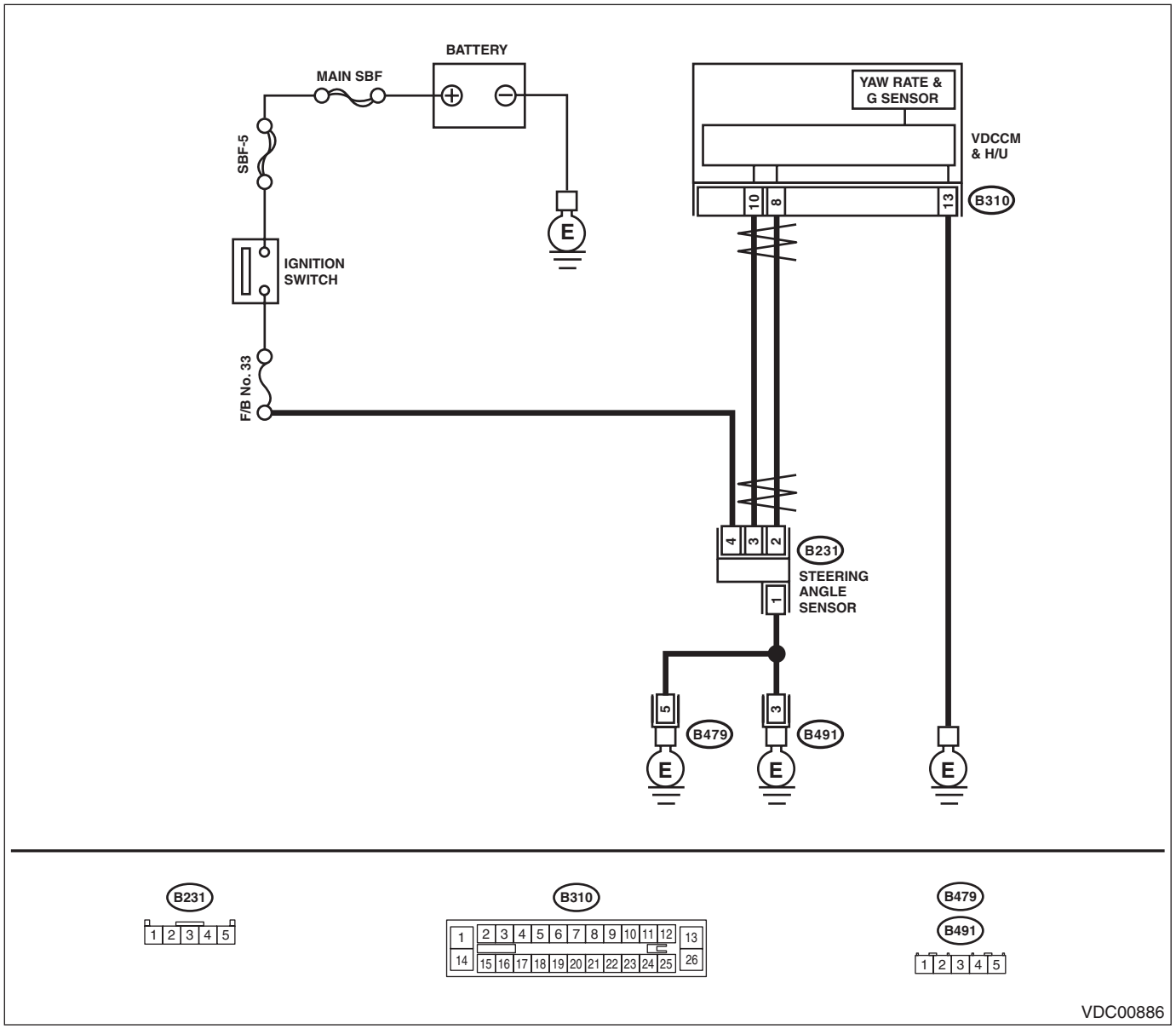

Step		Check	Yes	No
1	**INTERVIEW CUSTOMERS.** Check if the vehicle ran the road with banks or sandy surface (which does not mean a dirt road).	Did the vehicle run the road with banks or sandy surface (which does not mean a dirt road)?	VDCCM&H/U may record DTC when the vehicle ran the road with banks or sandy surface (which does not mean a dirt road).	Go to step **2**.

	Step	Check	Yes	No
2	**CHECK INSTALLATION OF VDCCM&H/U.**	Is VDCCM&H/U installed properly without being tilted? Is the bracket deformation-free? Are the VDCCM&H/U installation bolts installed without missing or getting loose?	Go to step **3**.	Repair the fault location. Go to step **3**. • Install VDCCM&H/U properly. • Replace the bracket if faulty. • Tighten the VDCCM&H/U installation bolt. <Ref. to VDC-5, VDC CONTROL MODULE & HYDRAULIC CONTROL UNIT (VDCCM&H/U), COMPONENT, General Description.>
3	**CHECK OUTPUT OF YAW RATE & G SENSOR WITH SUBARU SELECT MONITOR.** 1) Drive the vehicle on a flat road. 2) Park the vehicle straight. 3) Select “Current Data Display & Save” on the Subaru Select Monitor. 4) Read the «Yaw Rate Sensor Output» displayed on display.	Is the reading indicated on monitor display –4 — 4 deg/s?	Go to step **4**.	Replace the VDCCM&H/U. <Ref. to VDC-9, VDC Control Module and Hydraulic Control Unit (VDCCM&H/U).>
4	**CHECK OUTPUT OF STEERING ANGLE SENSOR WITH SUBARU SELECT MONITOR.** 1) Drive the vehicle on a flat road. 2) Park the vehicle straight. 3) Select “Current Data Display & Save” on the Subaru Select Monitor. 4) Read the «Steer Angle Sensor Op» displayed on display.	Is the reading indicated on monitor display –5 — 5°?	Go to step **5**.	Perform the centering adjustment of steering wheel.
5	**CHECK VDCCM&H/U.** 1) Turn the ignition switch to OFF. 2) Clear the memory. <Ref. to VDC(diag)-25, Clear Memory Mode.> 3) Perform the Inspection Mode. <Ref. to VDC(diag)-24, Inspection Mode.> 4) Read the DTC.	Is the same DTC displayed?	Replace the VDCCM&H/U. <Ref. to VDC-9, VDC Control Module and Hydraulic Control Unit (VDCCM&H/U).>	Go to step **6**.
6	**CHECK OTHER DTC DETECTION.**	Is any other DTC displayed?	Perform the diagnosis according to DTC. <Ref. to VDC(diag)-35, List of Diagnostic Trouble Code (DTC).>	It results from a temporary noise interference. Though VDC warning light may remain lit, this is normal. Warning light goes off when the vehicle is driven at 12 km/h (7 MPH) or more.

AP:DTC C0073 LATERAL G SENSOR POWER/OUTPUT

NOTE:
For the diagnostic procedure, refer to “DTC C0073 ABNORMAL LATERAL G SENSOR OUTPUT”. <Ref. to VDC(diag)-84, DTC C0073 ABNORMAL LATERAL G SENSOR OUTPUT, Diagnostic Procedure with Diagnostic Trouble Code (DTC).>

AQ:DTC C0073 ABNORMAL LATERAL G SENSOR OUTPUT

DTC DETECTING CONDITION:

Defective lateral G sensor

TROUBLE SYMPTOM:

- VDC does not operate.
- Hill start assist does not operate.

WIRING DIAGRAM:

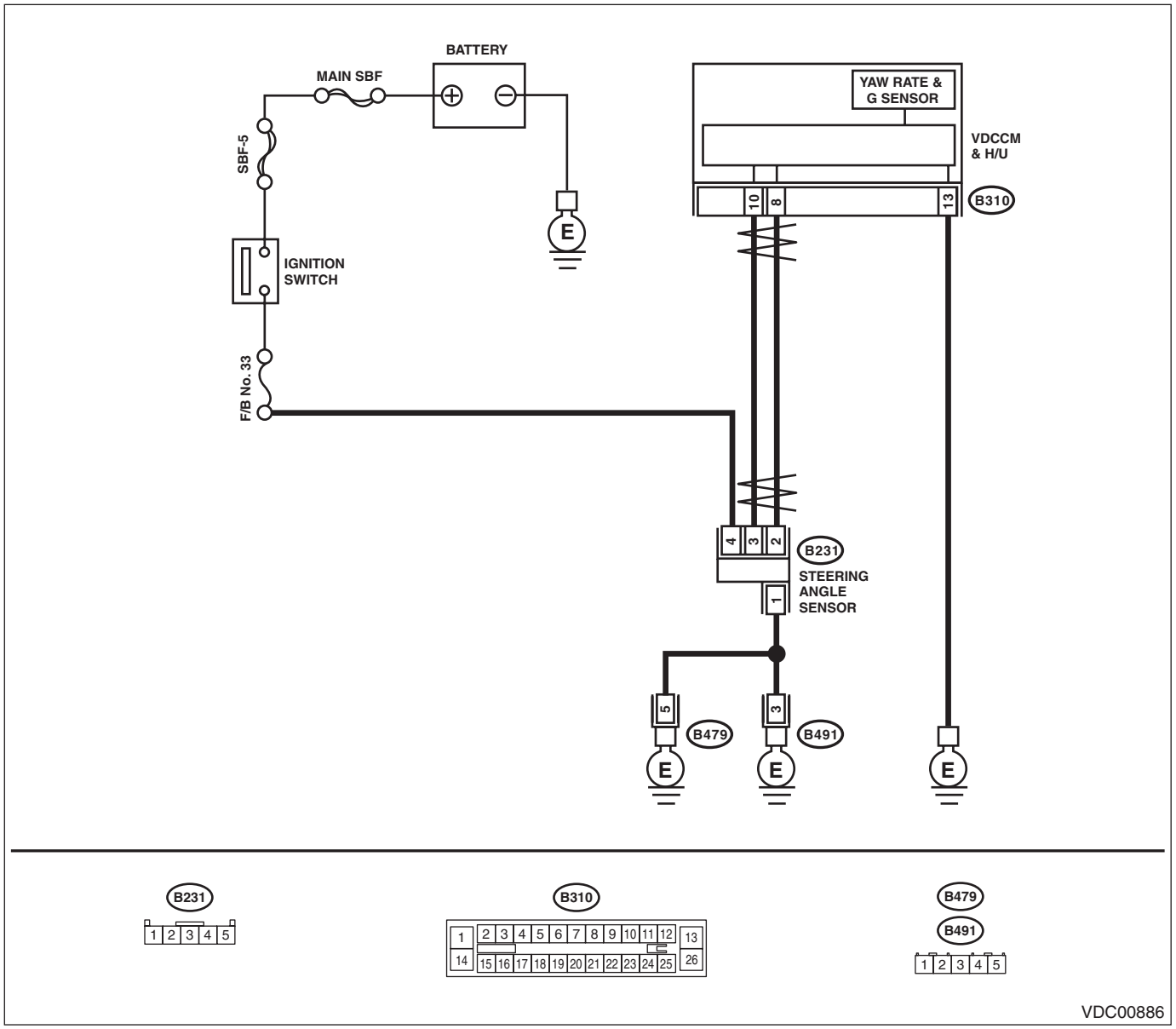

	Step	Check	Yes	No
1	**CHECK INSTALLATION OF VDCCM&H/U.**	Is VDCCM&H/U installed properly without being tilted? Is the bracket deformation-free? Are the VDCCM&H/U installation bolts installed without missing or getting loose?	Go to step **2**.	Repair the fault location. Go to step **2**. • Install VDCCM&H/U properly. • Replace the bracket if faulty. • Tighten the VDCCM&H/U installation bolt. <Ref. to VDC-5, VDC CONTROL MODULE & HYDRAULIC CONTROL UNIT (VDCCM&H/U), COMPONENT, General Description.>
2	**CHECK OUTPUT OF STEERING ANGLE SENSOR USING SUBARU SELECT MONITOR.** 1) Park the vehicle straight on a level surface. 2) Connect Subaru Select Monitor, and select {Current Data Display & Save}. 3) Read the «Steer Angle Sensor Op» displayed on display.	Is the indicated reading of the steering angle sensor on the monitor display –10° — 10°?	Go to step **3**.	Check the installation of steering angle sensor.
3	**CHECK OUTPUT OF LATERAL G SENSOR WITH SUBARU SELECT MONITOR.** 1) Park the vehicle straight on a level surface. 2) Connect Subaru Select Monitor, and select {Current Data Display & Save}. 3) Read the «Lateral G sensor Output» displayed on display.	Is the indicated reading of the lateral G sensor on the monitor display –2 — 2 m/s^2?	Go to step **4**.	Recheck from step 1, and if the problem is not solved, go to next. Go to step **7**.
4	**SET 0 POINT FOR LATERAL G SENSOR USING SUBARU SELECT MONITOR.** 1) Select “Function Check Sequence” on Subaru Select Monitor. 2) Perform Set up mode for Neutral of Steering Angle Sensor & Lateral G Sensor 0 point. <Ref. to VDC-16, SET UP MODE FOR NEUTRAL OF STEERING ANGLE SENSOR & LATERAL G SENSOR 0 POINT, ADJUSTMENT, VDC Control Module and Hydraulic Control Unit (VDCCM&H/U).>	Is the 0 point setting successful?	Go to step **5**.	Recheck from step 1, and when the 0 point setting is not possible, replace the VDCCM&H/U. <Ref. to VDC-9, VDC Control Module and Hydraulic Control Unit (VDCCM&H/U).>
5	**DRIVING INSPECTION.** Drive approximately 10 minutes, and check if the warning lights illuminate or improperly operate during driving. In a safe place, drive the vehicle while alternating acceleration and deceleration as much as possible.	Did the ABS warning light or VDC warning light remain off? Does ABS or VDC operate without malfunction?	Go to step **6**.	Recheck from step 1, and when the warning lights illuminate or improperly operate, replace the VDCCM&H/U. <Ref. to VDC-9, VDC Control Module and Hydraulic Control Unit (VDCCM&H/U).>

	Step	Check	Yes	No
6	**CHECK OUTPUT OF LATERAL G SENSOR WITH SUBARU SELECT MONITOR.** 1) Park the vehicle on a level surface. 2) Connect Subaru Select Monitor, and select {Current Data Display & Save}. 3) Read the «Lateral G sensor Output» displayed on display.	Is the indicated reading of the lateral G sensor on the monitor display –1.5 — 1.5 m/s^2?	End. It results from a temporary noise interference. Though VDC warning light may remain lit, this is normal. Warning light goes off when the vehicle is driven at 12 km/h (7 MPH) or more.	Recheck from step 1, and if the problem is not solved, replace the VDCCM&H/U. <Ref. to VDC-9, VDC Control Module and Hydraulic Control Unit (VDCCM&H/U).>
7	**CHECK OUTPUT OF LATERAL G SENSOR WITH SUBARU SELECT MONITOR.** 1) Remove the VDCCM&H/U installation bolt and bracket. 2) Keep VDCCM&H/U in a horizontal position. 3) Connect Subaru Select Monitor, and select {Current Data Display & Save}. 4) Read the «Lateral G sensor Output» displayed on display.	When the VDCCM&H/U is in a horizontal position, is the indicated reading of the lateral G sensor on the monitor display –1.5 — 1.5 m/s^2?	Check the bracket and brake pipe, and install VDCCM&H/U in a horizontal position to the vehicle.	Replace the VDCCM&H/U. <Ref. to VDC-9, VDC Control Module and Hydraulic Control Unit (VDCCM&H/U).>

AR:DTC C0074 MASTER CYLINDER PRESSURE SENSOR OUTPUT

DTC DETECTING CONDITION:
Defective pressure sensor
TROUBLE SYMPTOM:
- ABS does not operate.
- VDC does not operate.
- Hill start assist does not operate.

	Step	Check	Yes	No
1	**CHECK STOP LIGHT SWITCH CIRCUIT.** Check stop light switch open circuit.	Is the stop light switch circuit OK?	Go to step **2**.	Repair the stop light switch circuit. NOTE: If there is malfunction in the stop light circuit, DTC may be recorded in the memory.
2	**CHECK OUTPUT OF PRESSURE SENSOR WITH SUBARU SELECT MONITOR.** 1) Select {Current Data Display & Save} in Subaru Select Monitor. 2) Read the master cylinder output displayed on display.	With the brake pedal released, is the displayed value 0 — 11 bar?	Go to step **3**.	Replace the VDCCM&H/U. <Ref. to VDC-9, VDC Control Module and Hydraulic Control Unit (VDCCM&H/U).>
3	**CHECK OUTPUT OF PRESSURE SENSOR WITH SUBARU SELECT MONITOR.** 1) Select {Current Data Display & Save} in Subaru Select Monitor. 2) Read the master cylinder output displayed on display.	When the brake pedal is operated, does the master cylinder output value displayed on the display change in accordance with the brake pedal?	Go to step **4**.	Replace the VDCCM&H/U. <Ref. to VDC-9, VDC Control Module and Hydraulic Control Unit (VDCCM&H/U).>
4	**CHECK PRESSURE SENSOR.** 1) Clear the memory. <Ref. to VDC(diag)-25, Clear Memory Mode.> 2) Perform the Inspection Mode. <Ref. to VDC(diag)-24, Inspection Mode.> 3) Read the DTC.	Is the same DTC displayed?	Replace the VDCCM&H/U. <Ref. to VDC-9, VDC Control Module and Hydraulic Control Unit (VDCCM&H/U).>	Go to step **5**.
5	**CHECK OTHER DTC DETECTION.**	Is any other DTC displayed?	Perform the diagnosis according to DTC. <Ref. to VDC(diag)-35, List of Diagnostic Trouble Code (DTC).>	It results from a temporary noise interference.

AS:DTC C0075 WHEEL CYLINDER PRESSURE SENSOR OUTPUT

DTC DETECTING CONDITION:
Different VDCCM&H/U specification

NOTE:
When this DTC is displayed, replace the VDCCM&H/U. <Ref. to VDC-9, VDC Control Module and Hydraulic Control Unit (VDCCM&H/U).>

AT:DTC C0081 SYSTEM FAILURE

DTC DETECTING CONDITION:
VDC long time sequential control
TROUBLE SYMPTOM:
- VDC does not operate.
- Hill start assist does not operate.

	Step	Check	Yes	No
1	**CHECK INSTALLATION OF VDCCM&H/U.**	Is VDCCM&H/U installed properly without being tilted? Is the bracket deformation-free? Are the VDCCM&H/U installation bolts installed without missing or getting loose?	Go to step **2**.	Repair the fault location. Go to step **2**. • Install VDCCM&H/U properly. • Replace the bracket if faulty. • Tighten the VDCCM&H/U installation bolt. <Ref. to VDC-5, VDC CONTROL MODULE & HYDRAULIC CONTROL UNIT (VDCCM&H/U), COMPONENT, General Description.>
2	**CHECK STEERING WHEEL.** 1) Drive the vehicle on a flat road. 2) Park the vehicle straight. 3) Check the steering wheel for deviation from center.	Is the deviation from the center of steering wheel less than 5°?	Go to step **3**.	Perform the centering adjustment of steering wheel, and perform Set up mode for Neutral of Steering Angle Sensor & Lateral G Sensor 0 point. Go to step **3**. <Ref. to VDC-16, SET UP MODE FOR NEUTRAL OF STEERING ANGLE SENSOR & LATERAL G SENSOR 0 POINT, ADJUSTMENT, VDC Control Module and Hydraulic Control Unit (VDCCM&H/U).>
3	**CHECK OUTPUT OF STEERING ANGLE SENSOR USING SUBARU SELECT MONITOR.** 1) Adjust steering wheel to the center position. 2) Connect Subaru Select Monitor, and select {Current Data Display & Save}. 3) Read the «Steer Angle Sensor Op» displayed on display.	Is the indicated reading of the «Steer Angle Sensor Op» on the monitor display –10° — 10°?	Go to step **4**.	Check the installation of the steering wheel and steering angle sensor, and replace the parts if necessary.

	Step	Check	Yes	No
4	**CHECK OUTPUT OF SENSORS USING SUBARU SELECT MONITOR.** 1) Drive the vehicle on a flat road. 2) Park the vehicle straight. 3) Connect Subaru Select Monitor, and select {Current Data Display & Save}. 4) Read output of sensors displayed on display.	Are the indicated reading of sensor outputs following values? Lateral G sensor Output: –2 — 2 m/s^2 Longitudinal G sensor output: –2 — 2 m/s^2 Yaw Rate Sensor Output: –4 — 4 deg/s	Go to step **5**.	Recheck from step 1, and if the problem is not solved, go to next. Go to step **8**.
5	**SET 0 POINT FOR LONGITUDINAL G SENSOR USING SUBARU SELECT MONITOR.** 1) Select “Function Check Sequence” on Subaru Select Monitor. 2) Perform Set up mode for Neutral of Steering Angle Sensor & Lateral G Sensor 0 point. <Ref. to VDC-16, SET UP MODE FOR NEUTRAL OF STEERING ANGLE SENSOR & LATERAL G SENSOR 0 POINT, ADJUSTMENT, VDC Control Module and Hydraulic Control Unit (VDCCM&H/U).>	Is the 0 point setting successful?	Go to step **6**.	Recheck from step 1, and when the 0 point setting is not possible, replace the VDCCM&H/U and steering angle sensor. <Ref. to VDC-9, VDC Control Module and Hydraulic Control Unit (VDCCM&H/U).> <Ref. to VDC-24, Steering Angle Sensor.>
6	**DRIVING INSPECTION.** Drive approximately 10 minutes, and check if the warning lights illuminate or improperly operate during driving.	Did the ABS warning light or VDC warning light remain off? Does ABS or VDC operate without malfunction?	Go to step **7**.	Recheck from step 1, and when the warning lights illuminate or improperly operate, replace the VDCCM&H/U. <Ref. to VDC-9, VDC Control Module and Hydraulic Control Unit (VDCCM&H/U).>
7	**CHECK OUTPUT OF SENSORS USING SUBARU SELECT MONITOR.** 1) Park the vehicle on a level surface. 2) Connect Subaru Select Monitor, and select {Current Data Display & Save}. 3) Read output of sensors displayed on display.	Are the indicated reading of sensor outputs following values? Lateral G sensor Output: –1.5 — 1.5 m/s^2 Longitudinal G sensor output: –1.5 — 1.5 m/s^2 Yaw Rate Sensor Output: –4 — 4 deg/s	It results from a temporary noise interference.	Replace the VDCCM&H/U. <Ref. to VDC-9, VDC Control Module and Hydraulic Control Unit (VDCCM&H/U).>
8	**CHECK OUTPUT OF SENSORS USING SUBARU SELECT MONITOR.** 1) Remove the VDCCM&H/U installation bolt and bracket. 2) Keep VDCCM&H/U in a horizontal position. 3) Connect Subaru Select Monitor, and select {Current Data Display & Save}. 4) Read output of sensors displayed on display.	When VDCCM&H/U is in a horizontal position, are the indicated reading of sensor outputs following values? Lateral G sensor Output: –1.5 — 1.5 m/s^2 Longitudinal G sensor output: –1.5 — 1.5 m/s^2 Yaw Rate Sensor Output: –4 — 4 deg/s	Check the bracket and brake pipe, and install VDCCM&H/U in a horizontal position to the vehicle.	Replace the VDCCM&H/U. <Ref. to VDC-9, VDC Control Module and Hydraulic Control Unit (VDCCM&H/U).>

13.General Diagnostic Table

A: INSPECTION

Symptoms		Main probable cause	Other probable cause
Poor brake performance	Long braking/ stopping distance	• VDCCM&H/U • Brake pad • Aeration to brake line • Tire specifications, tire wear and air pressures • Incorrect wiring or piping connections	• Defective ABS wheel speed sensor or sensor gap • Defective steering angle sensor or improper neutral position • Defective yaw rate & G sensor or improper installation of VDCCM&H/U. • Master cylinder • Brake caliper • Disc rotor • Brake pipe • Brake booster
	Wheel lock	• VDCCM&H/U • Defective ABS wheel speed sensor or sensor gap • Incorrect wiring or piping connections	• Defective steering angle sensor or improper neutral position • Defective yaw rate & G sensor or improper installation of VDCCM&H/U. • Brake caliper • Brake pipe
	Brake drag	• VDCCM&H/U • Defective ABS wheel speed sensor or sensor gap • Master cylinder • Brake caliper • Parking brake • Axle and wheels • Brake pedal play	• Defective steering angle sensor or improper neutral position • Defective yaw rate & G sensor or improper installation of VDCCM&H/U. • Brake pad • Brake pipe
	Long brake pedal stroke	• Aeration to brake line • Brake pedal play	• VDCCM&H/U • Master cylinder • Brake caliper • Brake pad • Brake pipe • Brake booster
	Vehicle vertical pitching	• VDCCM&H/U • Road surface (uneven) • Suspension play or fatigue (reduced damping) • Incorrect wiring or piping connections	• Defective ABS wheel speed sensor or sensor gap • Defective steering angle sensor or improper neutral position • Defective yaw rate & G sensor or improper installation of VDCCM&H/U.
Poor brake performance	Unstable or uneven braking	• VDCCM&H/U • Defective ABS wheel speed sensor or sensor gap • Brake caliper • Brake pad • Road surface (uneven) • Tire specifications, tire wear and air pressures • Incorrect wiring or piping connections	• Defective ABS wheel speed sensor or sensor gap • Defective steering angle sensor or improper neutral position • Defective yaw rate & G sensor or improper installation of VDCCM&H/U. • Master cylinder • Disc rotor • Brake pipe • Axle and wheels • Road with crowns or banks • Suspension play or fatigue (reduced damping)

General Diagnostic Table

Symptoms		Main probable cause	Other probable cause
Vibration or noise • When braking suddenly • When accelerating suddenly • While driving on a slippery road	Excessive brake pedal vibration	• Road surface (uneven) • Incorrect wiring or piping connections	• VDCCM&H/U • Brake booster • Suspension play or fatigue (reduced damping)
	Noise from VDCH/U	• VDCCM&H/U (mount bushing) • Defective ABS wheel speed sensor or sensor gap • Brake pipe	• VDCCM&H/U • Defective steering angle sensor or improper neutral position • Defective yaw rate & G sensor or improper installation of VDCCM&H/U.
	Noise from the front side of vehicle	• VDCCM&H/U (mount bushing) • Defective ABS wheel speed sensor or sensor gap • Master cylinder • Brake caliper • Brake pad • Disc rotor • Brake pipe • Brake booster • Suspension play or fatigue (reduced damping)	• Axle and wheels • Tire specifications, tire wear and air pressures
	Noise from the rear side of vehicle	• Defective ABS wheel speed sensor or sensor gap • Brake caliper • Brake pad • Disc rotor • Parking brake • Brake pipe • Suspension play or fatigue (reduced damping)	• Axle and wheels • Tire specifications, tire wear and air pressures
Engine does not accelerate or goes into a stall when accelerating suddenly or driving on a slippery surface.		• VDCCM&H/U • Defective ABS wheel speed sensor or sensor gap • Master cylinder • Brake caliper • Parking brake • Incorrect wiring or piping	• Defective steering angle sensor or improper neutral position • Defective yaw rate & G sensor or improper installation of VDCCM&H/U. • Brake pad • Brake pipe

General Diagnostic Table

Symptoms		Main probable cause	Other probable cause
Poor change-direction-operation stability of TCS	Deviation to right or left direction	• VDCCM&H/U • Defective ABS wheel speed sensor or sensor gap • Defective steering angle sensor or improper neutral position • Defective yaw rate & G sensor or improper installation of VDCCM&H/U. • Brake caliper • Brake pad • Wheel alignment • Road surface (uneven) • Road with crowns or banks • Tire specifications, tire wear and air pressures • Incorrect wiring or piping connections	• Disc rotor • Brake pipe • Axle and wheels • Suspension play or fatigue (reduced damping)
	Vehicle spin	• VDCCM&H/U • Defective ABS wheel speed sensor or sensor gap • Defective steering angle sensor or improper neutral position • Defective yaw rate & G sensor or improper installation of VDCCM&H/U. • Brake pad • Tire specifications, tire wear and air pressures • Incorrect wiring or piping connections	• Brake caliper • Brake pipe
Steering wheel drag while driving		• VDCCM&H/U • Defective ABS wheel speed sensor or sensor gap • Defective steering angle sensor or improper neutral position • Defective yaw rate & G sensor or improper installation of VDCCM&H/U. • Incorrect wiring or piping connections • Power steering system	• Brake caliper • Brake pad • Disc rotor • Wheel alignment • Road surface (uneven) • Road with crowns or banks • Suspension play or fatigue (reduced damping) • Tire specifications, tire wear and air pressures
VDC operates while driving normally.		• VDCCM&H/U • Defective ABS wheel speed sensor or sensor gap • Defective steering angle sensor or improper neutral position • Defective yaw rate & G sensor or improper installation of VDCCM&H/U. • Wheel alignment • Road surface (uneven) • Road with crowns or banks • Suspension play or fatigue (reduced damping) • Tire specifications, tire wear and air pressures • Incorrect wiring or piping connections • Power steering system	

Symptoms	Main probable cause	Other probable cause
VDC OFF indicator light does not illuminate when the VDC OFF switch is depressed. NOTE: When pressing VDC OFF switch for 10 seconds or more, VDC OFF indicator light goes off and cannot operate any more. When turning the ignition switch from OFF to ON, the previous status is restored.	• Harness • Combination meter • VDC OFF switch	

BRAKE

BR

		Page
1.	General Description	2
2.	Front Brake Pad	14
3.	Front Disc Rotor	18
4.	Front Disc Brake Assembly	21
5.	Rear Brake Pad	29
6.	Rear Disc Rotor	32
7.	Rear Disc Brake Assembly	36
8.	Master Cylinder	41
9.	Brake Booster	43
10.	Brake Fluid	53
11.	Air Bleeding	54
12.	Brake Hose	56
13.	Brake Pipe	59
14.	Brake Pedal	60
15.	Stop Light Switch	64
16.	General Diagnostic Table	69

1. General Description

A: SPECIFICATION

Front disc brake	Size		16-inch type	17-inch type
	Type		Disc (Floating type, ventilated)	
	Effective disc diameter	mm (in)	244 (4.61)	261 (10.28)
	Disc thickness × Diameter	mm (in)	24 × 294 (0.94 × 11.57)	30 × 316 (1.18 × 12.44)
	Effective cylinder diameter	mm (in)	42.8 (1.685) × 2	
	Pad dimensions (Length × Width × Thickness)	mm (in)	117.8 × 50.5 × 11.0 (4.638 × 1.988 × 0.433)	130.0 × 53.5 × 11.0 (5.118 × 2.106 × 0.433)
	Clearance adjustment		Automatic adjustment	
Rear disc brake	Size		16-inch type	
	Type		Disc (Floating type, solid)	Disc (Floating type, ventilated)
	Effective disc diameter	mm (in)	250 (9.84)	255 (10.0)
	Disc thickness × Diameter	mm (in)	10 × 286 (0.39 × 11.26)	18 × 290 (0.71 × 11.42)
	Effective cylinder diameter	mm (in)	38.1 (1.500)	40.4 (1.591)
	Pad dimensions (Length × Width × Thickness)	mm (in)	92.0 × 33.0 × 9.0 (3.622 × 1.299 × 0.354)	95.5 × 34.8 × 11.0 (3.759 × 1.370 × 0.433)
	Clearance adjustment		Automatic adjustment	
Master cylinder	Type		Tandem	
	Effective diameter	mm (in)	23.8 (15/16)	
	Reservoir type		Sealed type	
	Brake fluid reservoir capacity	cm^3 (cu in)	205 (12.51)	
Brake booster	Type		Vacuum suspended	
	Effective diameter	mm (in)	208 + 229 (8.19 + 9.02)	
Brake line			Dual circuit system	
Brake fluid			FMVSS No. 116, DOT3, or DOT4 **CAUTION:** **• Avoid mixing brake fluid of different brands to prevent fluid performance from degrading.** **• When filling with brake fluid, be careful not to allow any dust to enter the reservoir.** **• Use new SUBARU genuine brake fluid when replacing or refilling the fluid.**	

NOTE:
Refer to “PB” section for parking brake specifications. <Ref. to PB-2, SPECIFICATION, General Description.>

Item			Standard	Limit
Front brake	Pad thickness mm (in)	16-inch type	11 (0.43)	1.5 (0.059)
		17-inch type	11 (0.43)	1.5 (0.059)
	Disc thickness mm (in)	16-inch type	24 (0.94)	22 (0.87)
		17-inch type	30 (1.18)	28 (1.10)
	Disc runout mm (in)		—	0.05 (0.0020)
Rear brake (disc type)	Pad thickness mm (in)	Solid disc	9.0 (0.354)	1.5 (0.059)
		Ventilated disc	11 (0.43)	1.5 (0.059)
	Disc thickness mm (in)	Solid disc	10 (0.39)	8.5 (0.335)
		Ventilated disc	18 (0.71)	16 (0.63)
	Disc runout mm (in)		—	0.05 (0.0020)
Parking brake	Inside diameter mm (in)		190 (7.48)	191 (7.52)
	Lining thickness mm (in)		2.8 (0.11)	1.5 (0.059)

		Brake pedal force N (kgf, lbf)	Fluid pressure kPa (kgf/cm^2, psi)
Brake booster	Brake fluid pressure with engine stopped	147 (15, 33)	553 (5, 77)
		294 (30, 66)	1,551 (16, 225)
	Brake fluid pressure with engine running and vacuum pressure at 66.7 kPa (500 mmHg, 19.69 inHg)	147 (15, 33)	6,177 (63, 896)
		294 (30, 66)	11,273 (115, 1,635)

Brake pedal	Free play mm (in)	2 — 5 (0.079 — 0.197) [When pulling the brake pedal upward with a force of less than 10 N (1 kgf, 2 lbf)]

B: COMPONENT

1. FRONT DISC BRAKE

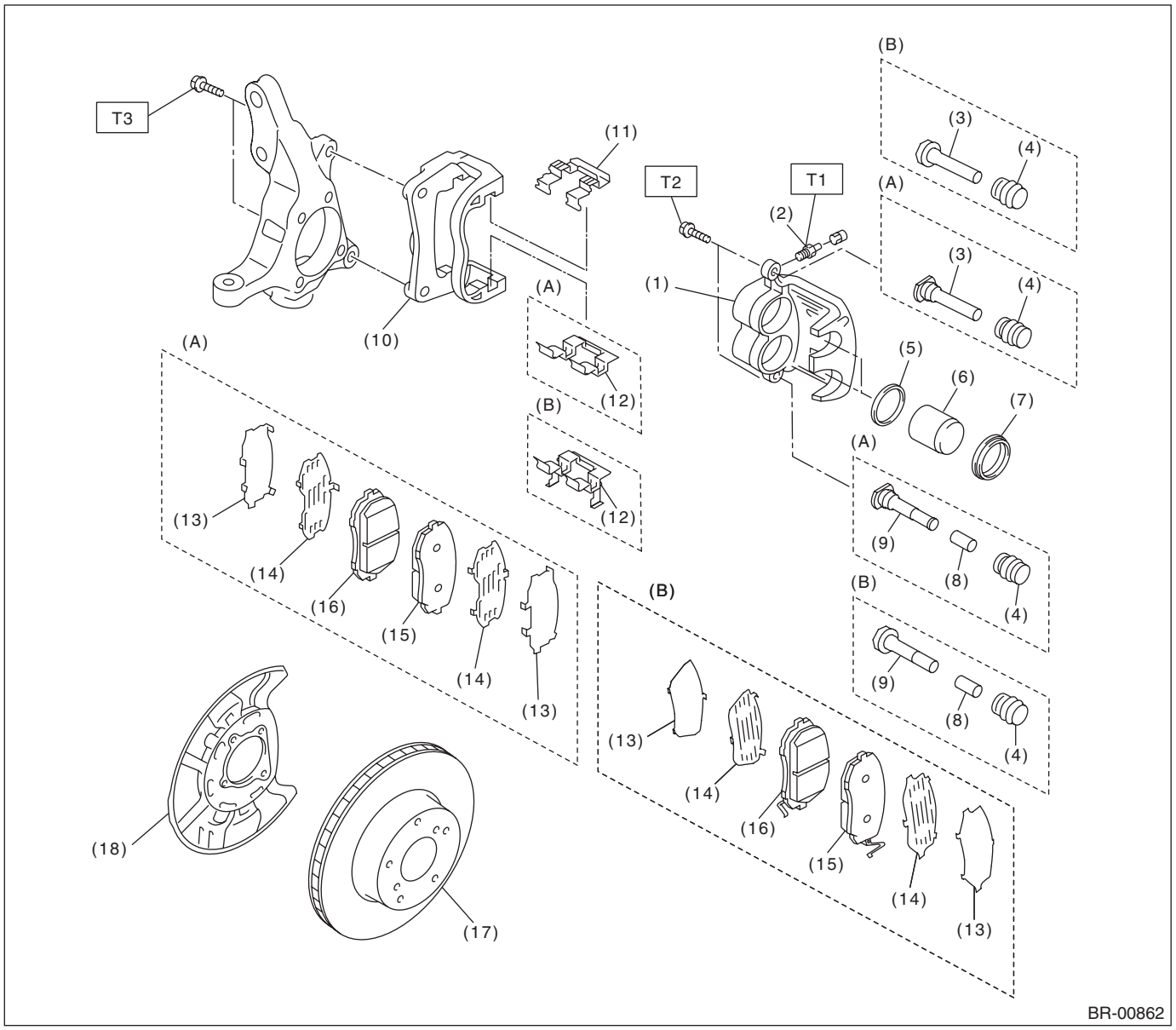

(A) 16-inch type
(B) 17-inch type

(1) Caliper body
(2) Air bleeder screw
(3) Guide pin (black)
(4) Pin boot
(5) Piston seal
(6) Piston
(7) Piston boot
(8) Bushing
(9) Lock pin (silver)
(10) Support
(11) Pad clip upper
(12) Pad clip lower
(13) Outer shim
(14) Inner shim
(15) Pad (outside)
(16) Pad (inside)
(17) Disc rotor
(18) Disc cover

Tightening torque:N·m (kgf-m, ft-lb)
T1: 8 (0.82, 5.9)
T2: 27 (2.75, 19.9)
T3: 120 (12.24, 88.5)

2. REAR DISC BRAKE

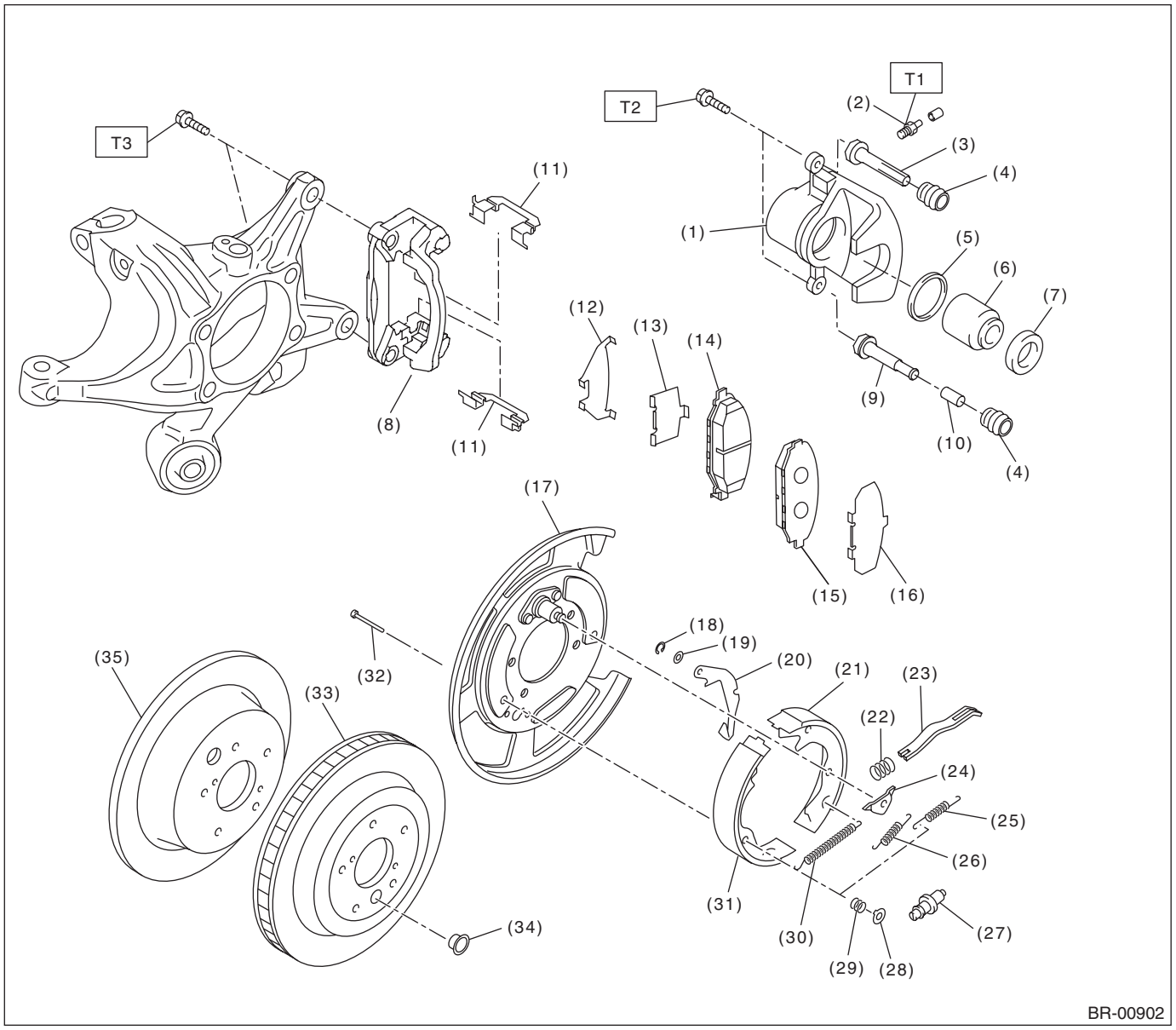

(1) Caliper body
(2) Air bleeder screw
(3) Guide pin (black)
(4) Pin boot
(5) Piston seal
(6) Piston
(7) Piston boot
(8) Support
(9) Lock pin (silver)
(10) Bushing
(11) Pad clip
(12) Outer shim
(13) Inner shim
(14) Inner pad
(15) Outer pad
(16) Shim
(17) Back plate
(18) Retainer
(19) Wave washer
(20) Lever
(21) Parking brake shoe (secondary)
(22) Strut spring
(23) Strut
(24) Shoe guide plate
(25) Secondary shoe return spring
(26) Primary shoe return spring
(27) Adjusting screw
(28) Shoe hold-down cup
(29) Shoe hold-down spring
(30) Adjusting spring
(31) Parking brake shoe (primary)
(32) Shoe hold-down pin
(33) Disc rotor (ventilated type)
(34) Adjusting hole cover
(35) Disc rotor (solid type)

Tightening torque:N·m (kgf-m, ft-lb)
T1: 8 (0.82, 5.9)
T2: 27 (2.75, 19.9)
T3: 66 (6.73, 48.7)

3. MASTER CYLINDER

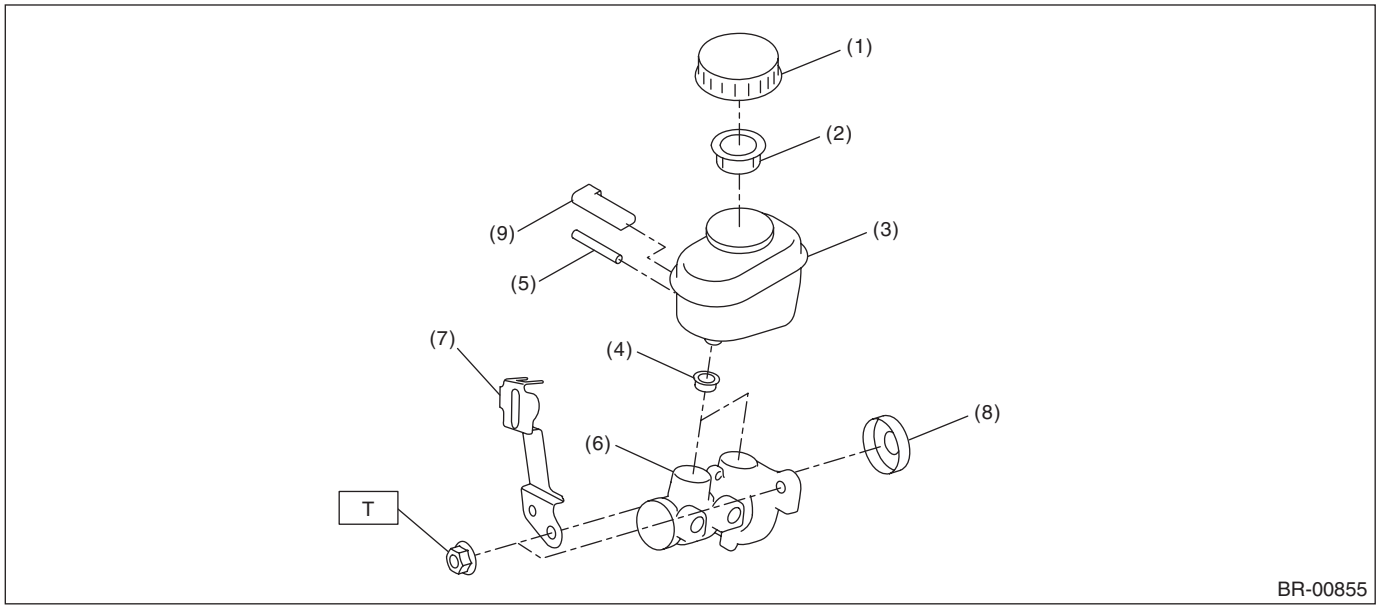

(1) Cap
(2) Filter
(3) Reservoir tank
(4) Seal
(5) Pin
(6) Cylinder body ASSY
(7) Bracket
(8) Seal sub ASSY
(9) Level sensor

Tightening torque:N·m (kgf-m, ft-lb)
T: 13 (1.33, 9.6)

4. FRONT BRAKE PIPES AND HOSES

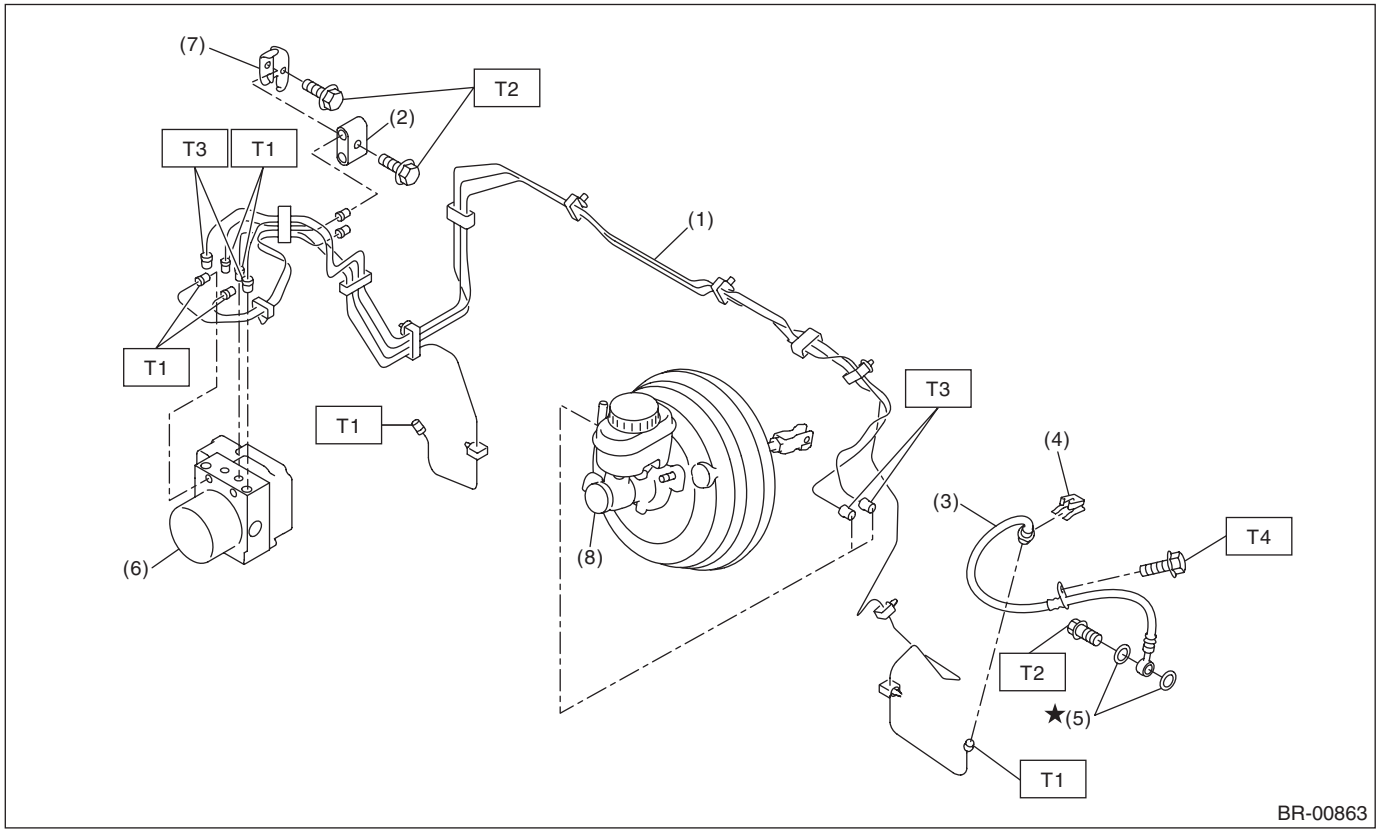

(1)	Front brake pipe ASSY	(6)	VDC control module and hydraulic control unit (VDCCM&H/U)	***Tightening torque:N·m (kgf-m, ft-lb)***
(2)	Two-way connector	(7)	Bracket	***T1: 15 (1.53, 11.1)***
(3)	Front brake hose RH/LH	(8)	Master cylinder	***T2: 18 (1.84, 13.3)***
(4)	Clamp			***T3: 19 (1.94, 14.0)***
(5)	Gasket			***T4: 33 (3.36, 24.3)***

5. CENTER AND REAR BRAKE PIPES AND HOSES

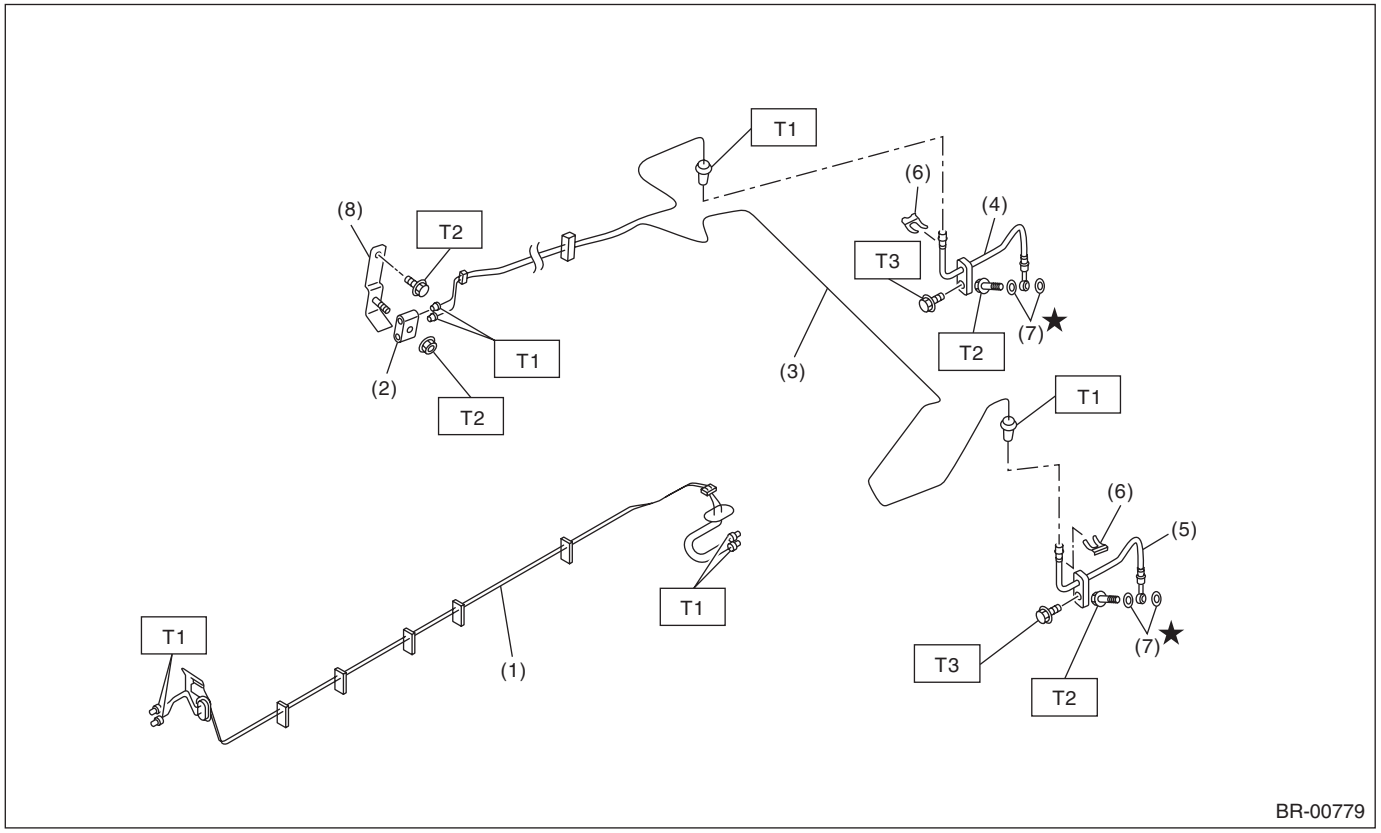

(1)	Center brake pipe ASSY	(5)	Rear brake hose LH	***Tightening torque:N·m (kgf-m, ft-lb)***
(2)	Connector	(6)	Clamp	***T1: 15 (1.53, 11.1)***
(3)	Rear brake pipe ASSY	(7)	Gasket	***T2: 18 (1.84, 13.3)***
(4)	Rear brake hose RH	(8)	Bracket	***T3: 33 (3.36, 24.3)***

6. BRAKE BOOSTER

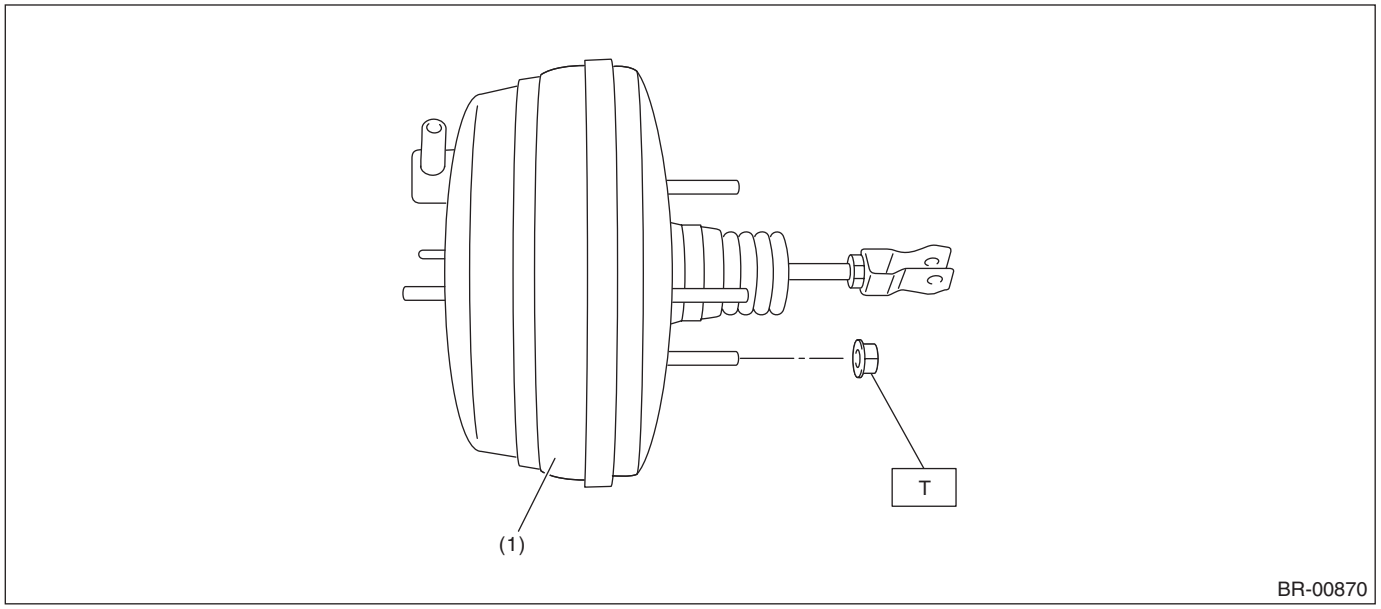

(1) Brake booster

Tightening torque:N·m (kgf-m, ft-lb)
T: 18 (1.84, 13.3)

7. BRAKE PEDAL

- AT model

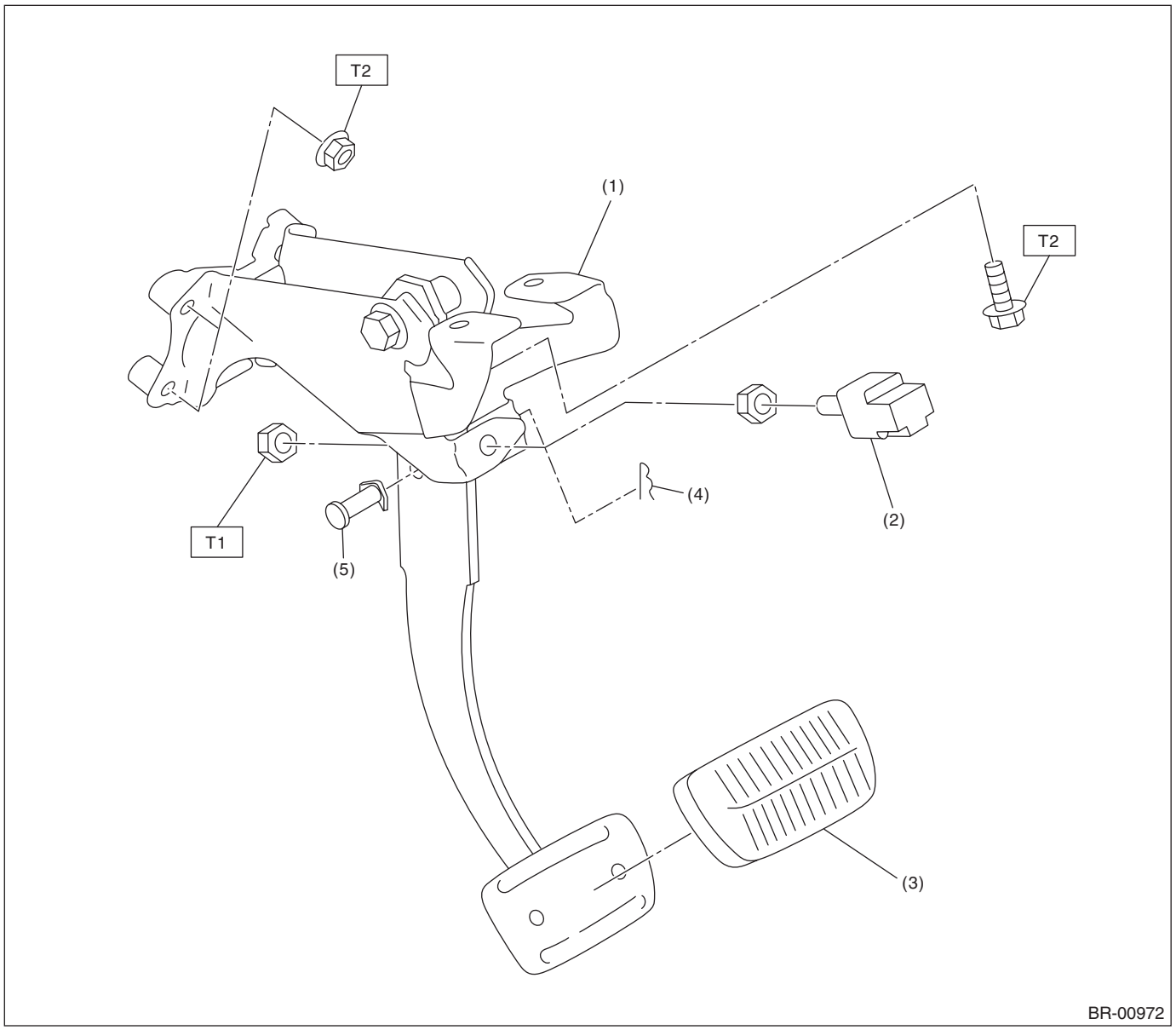

(1)	Brake pedal ASSY	(4)	Snap pin
(2)	Stop light switch	(5)	Clevis pin
(3)	Brake pedal pad		

Tightening torque:N·m (kgf-m, ft-lb)
T1: 8 (0.82, 5.9)
T2: 18 (1.84, 13.3)

- MT model

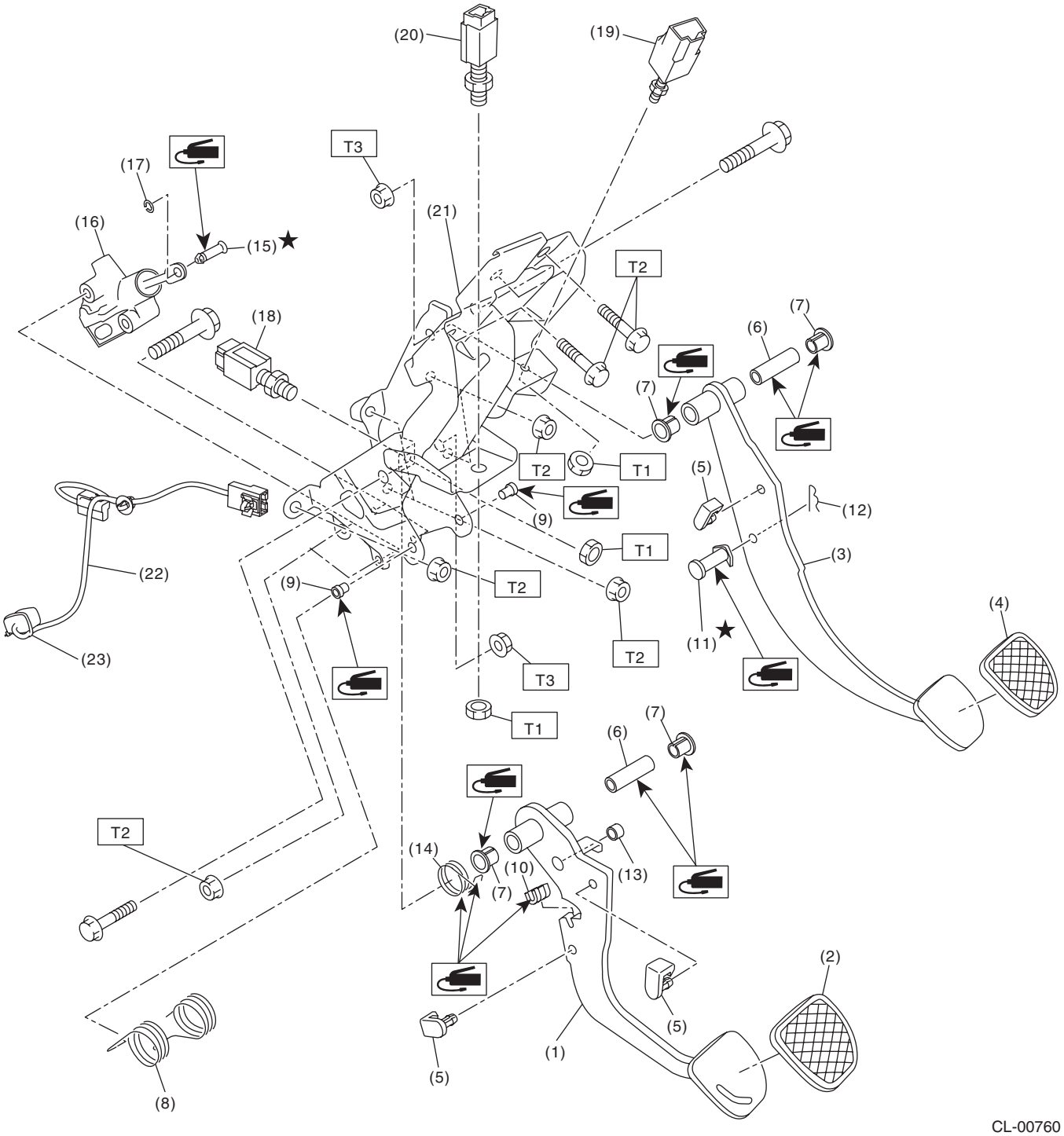
(20)
(19)
T3
(17)
(16)
(15)★
(21)
T2
(18)
(7)
(6)
(7)
T2
T1
(5)
(9)
(12)
T1
(3)
(22)
(9)
T2
(4)
(11)★
(23)
T2
T3
T1
(7)
(6)
T2
(14)
(10)
(7)
(13)
(2)
(5)
(1)
(5)
(8)
CL-00760

(1) Clutch pedal
(2) Clutch pedal pad
(3) Brake pedal
(4) Brake pedal pad
(5) Stopper
(6) Spacer
(7) Bushing
(8) Torsion spring
(9) Assist bushing
(10) Torsion spring bushing
(11) Clevis pin
(12) Snap pin
(13) Bushing A
(14) Assist spring
(15) Clevis pin
(16) Master cylinder ASSY
(17) Clip
(18) Clutch switch (clutch start)
(19) Stop & brake switch
(20) Clutch switch (cruise control)
(21) Pedal bracket
(22) Sensor harness
(23) Band

Tightening torque:N·m (kgf-m, ft-lb)
T1: 8 (0.82, 5.9)
T2: 18 (1.84, 13.3)
T3: 30 (3.06, 22.1)

C: CAUTION

• Wear appropriate work clothing, including a helmet, protective goggles and protective shoes when performing any work.
• Before removal, installation or disassembly, be sure to clarify the failure. Avoid unnecessary removal, installation, disassembly and replacement.
• Use SUBARU genuine grease etc. or equivalent. Do not mix grease etc. of different grades or manufacturers.
• Before securing a part on a vise, place cushioning material such as wood blocks, aluminum plate, or cloth between the part and the vise.
• Be sure to tighten fasteners including bolts and nuts to the specified torque.
• Place shop jacks or rigid racks at the specified points.

D: PREPARATION TOOL

1. GENERAL TOOL

TOOL NAME	REMARKS
Circuit tester	Used for measuring resistance and voltage.
Pressure gauge	Used for measuring the operation and airtightness of the brake booster.
Vacuum gauge	Used for measuring the operation and airtightness of the brake booster.
Dial gauge	Used for measuring brake disc rotor run-out.

2. Front Brake Pad

A: REMOVAL

1) Lift up the vehicle, and then remove the front wheels.
2) Remove the front brake pad.
   (1) Remove the caliper bolt.
   (2) Raise the caliper body and support it.

NOTE:
Do not disconnect the brake hose from the caliper body.

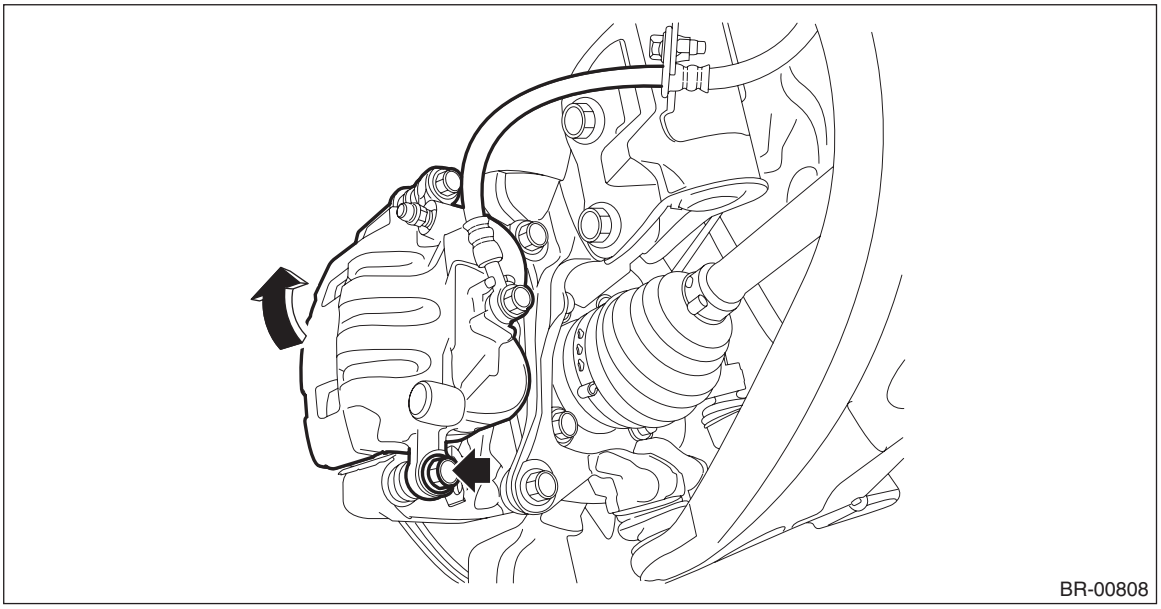

(3) Remove the brake pad from support.

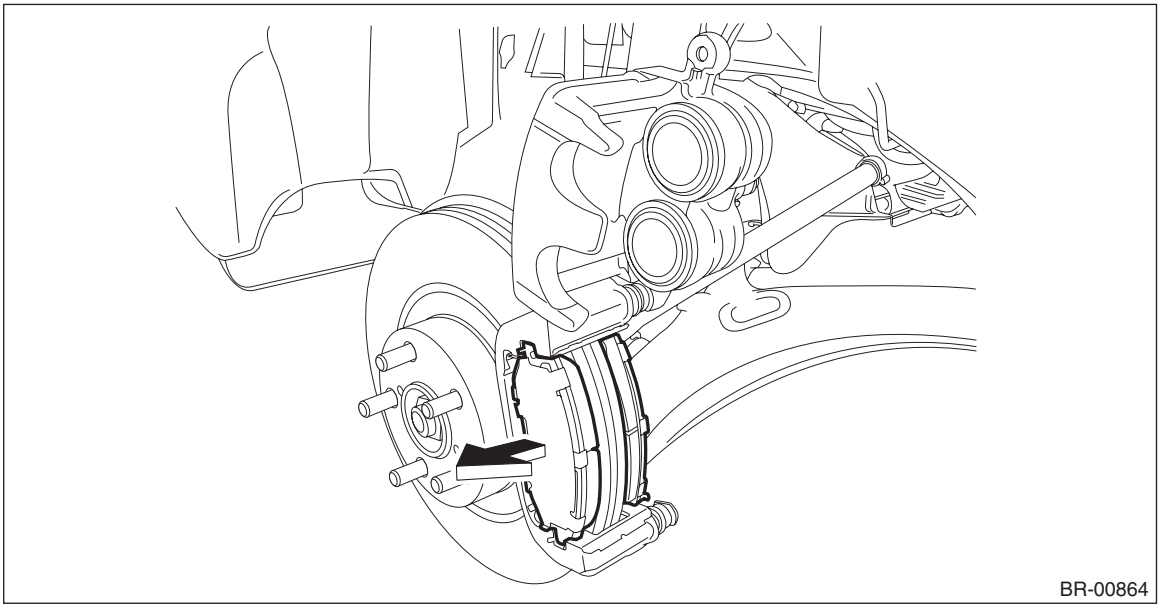

B: INSTALLATION

1. 16-INCH TYPE

NOTE:
Before installation, remove mud and foreign matter from the caliper body and support.
1) Before installation, check the brake pad. <Ref. to BR-17, INSPECTION, Front Brake Pad.>
2) Apply a thin coat of Molykote M7439 (Part No. 003602001) or grease contained in the pad kit to the pad clip.

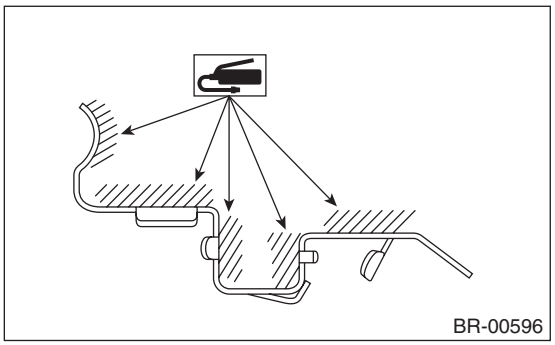

3) Apply a thin coat of Molykote AS880N (Part No. K0777YA010) or grease contained in the pad kit to both surfaces of the pad and inner shim.

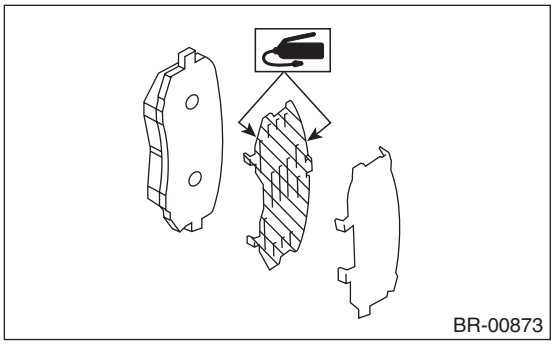

4) Install the brake pad to the support.
5) Install the caliper body to the support.

Tightening torque:
Caliper bolt: 27 N·m (2.75 kgf-m, 19.9 ft-lb)
6) Install the front wheels.

2. 17-INCH TYPE

NOTE:
Before installation, remove mud and foreign matter from the caliper body and support.
1) Before installation, check the brake pad. <Ref. to BR-17, INSPECTION, Front Brake Pad.>
2) Apply a thin coat of Molykote M7439 (Part No. 003602001) or grease contained in the pad kit to the pad clip.

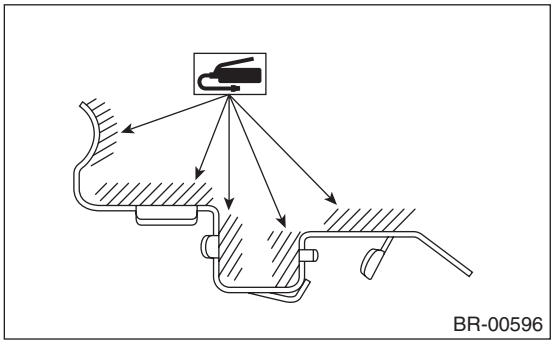

3) Apply a thin coat of Molykote AS880N (Part No. K0777YA010) or grease contained in the pad kit to both surfaces of the pad and inner shim.

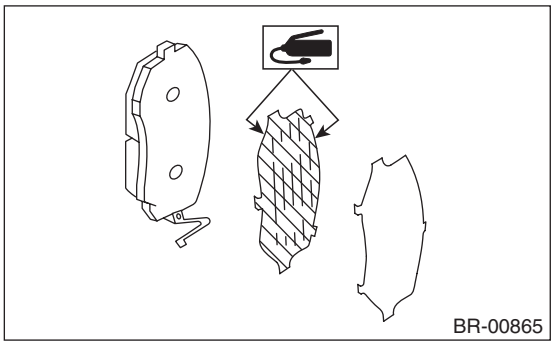

4) Install the brake pad to the support.

CAUTION:
• Be sure to install so that the pad return spring faces the input side of the direction of brake rotor rotation, as shown in the figure.
• Correctly install the pad return spring to the supporting surface of the pad clip as shown in the figure.
• If the pad return spring is deformed or damaged, replace the brake pad.

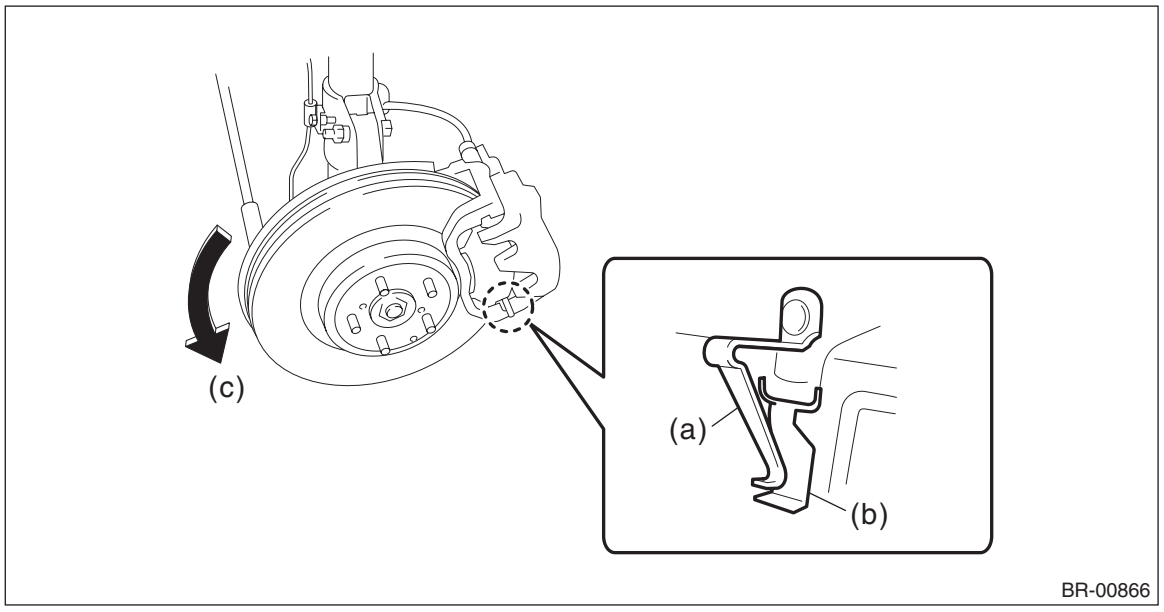

(a) Pad return spring (b) Supporting surface of pad clip (c) Direction of brake rotor rotation

NOTE:
Install the brake pad indicator in proper direction.

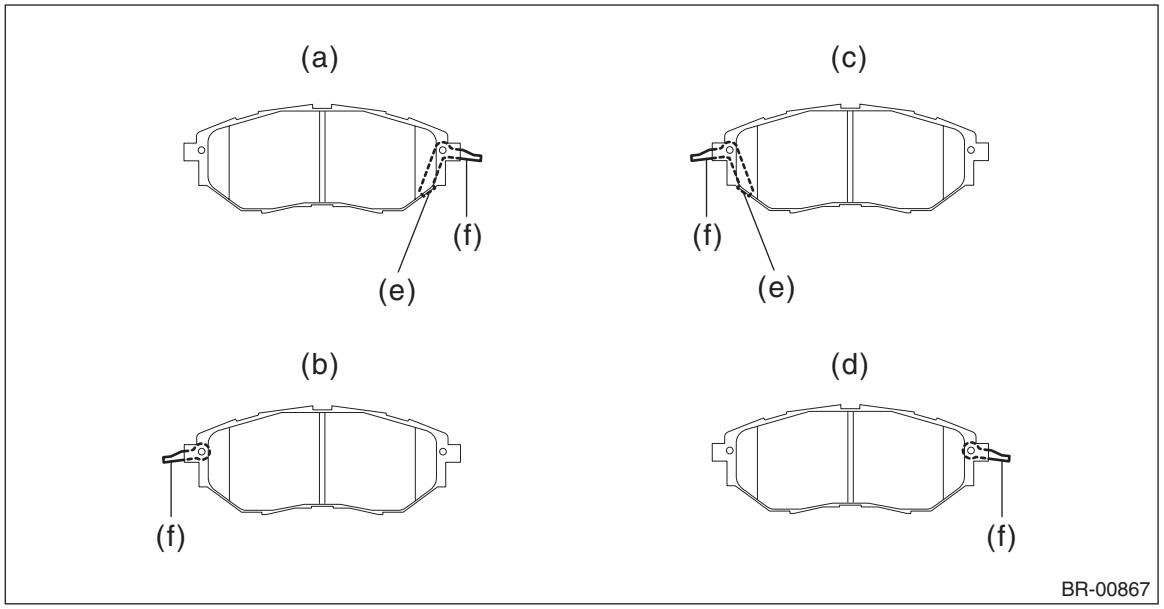

(a) LH — IN
(b) LH — OUT
(c) RH — IN
(d) RH — OUT
(e) Pad indicator
(f) Pad return spring

5) Install the caliper body to the support.

Tightening torque:
Caliper bolt: 27 N·m (2.75 kgf-m, 19.9 ft-lb)

6) Install the front wheels.

C: INSPECTION

1) Check the pad thickness (A).

NOTE:
- Always replace the pads of both wheels and both sides as a set.
- Replace pad clips if they are twisted or worn.
- Replace the pad if there is oil or grease on it.

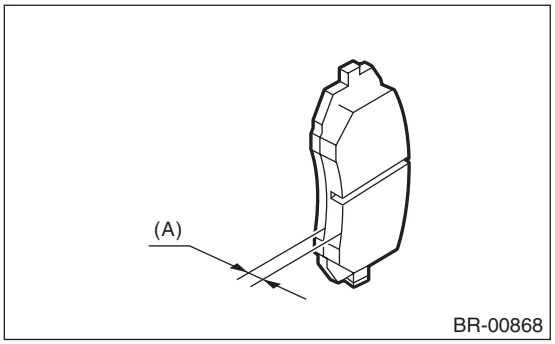

	Standard	Wear limit
Pad thickness (A)	11 mm (0.43 in)	1.5 mm (0.059 in)

2) If the wear limit is exceeded in the inspection, replace the brake pad.

3. Front Disc Rotor

A: REMOVAL

1) Lift up the vehicle, and then remove the front wheels.
2) Remove the caliper body assembly from the front axle housing.
   (1) Remove the bolt from the brake hose bracket.
   (2) Remove the mounting bolt, and remove the caliper body assembly.

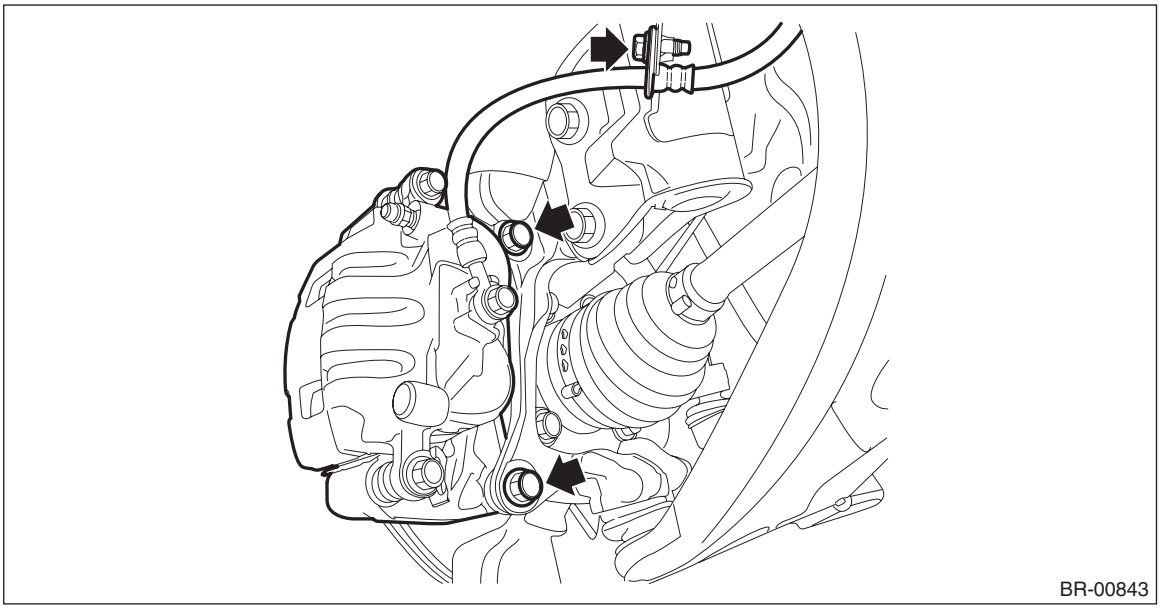
BR-00843

   (3) Prepare wiring harnesses etc. to be discarded, and suspend the caliper body assembly from the shock absorber with the harnesses.

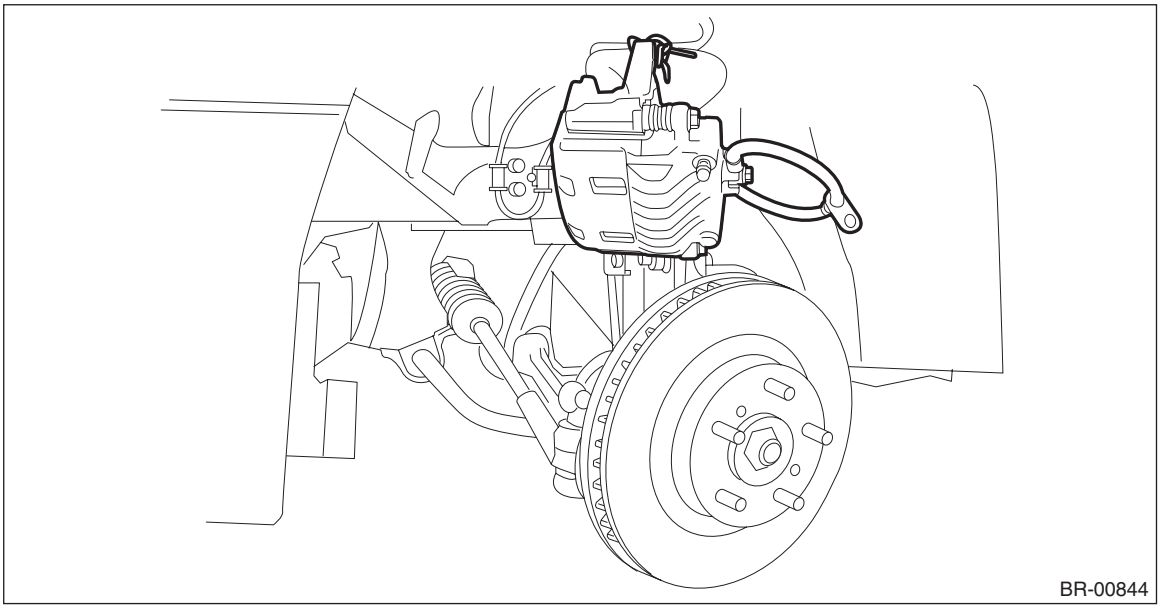
BR-00844

3) Remove the front disc rotor.

NOTE:
When the disc rotor is difficult to be removed from the front hub unit bearing, screw in 8 mm (0.31 in) bolt to the threaded part of the disc rotor (A), and remove the disc rotor.

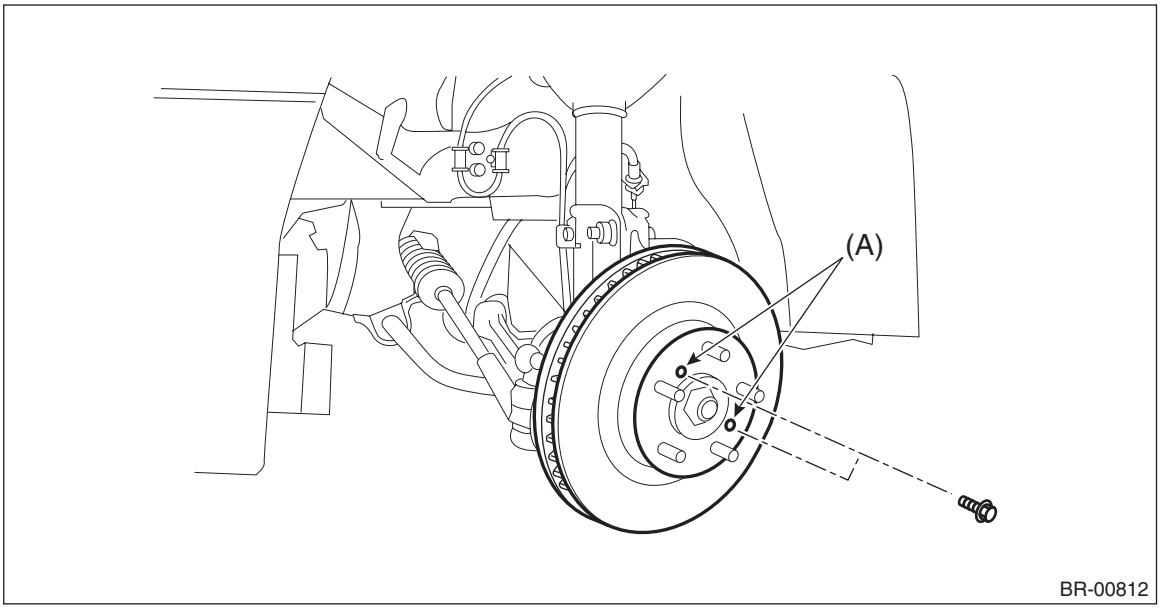

B: INSTALLATION

NOTE:
Before installation, remove mud and foreign matter from the caliper body assembly.
1) Before installation, check the front disc rotor. <Ref. to BR-19, INSPECTION, Front Disc Rotor.>
2) Install each part in the reverse order of removal.

Tightening torque:
Brake hose bracket: 33 N·m (3.36 kgf-m, 24.3 ft-lb)
Mounting bolt: 120 N·m (12.24 kgf-m, 88.5 ft-lb)

C: INSPECTION

1. DISC ROTOR RUNOUT CHECK

1) Check the front hub unit bearing for free play and runout before the inspection of disc rotor runout limit. <Ref. to DS-29, INSPECTION, Front Hub Unit Bearing.>
2) Tighten the wheel nuts to secure disc rotor.

3) Set a dial gauge 10 mm (0.39 in) inward from the disc rotor outer circumference, and check the disc rotor runout while rotating the disc rotor.

Disc rotor runout limit: 0.05 mm (0.0020 in)

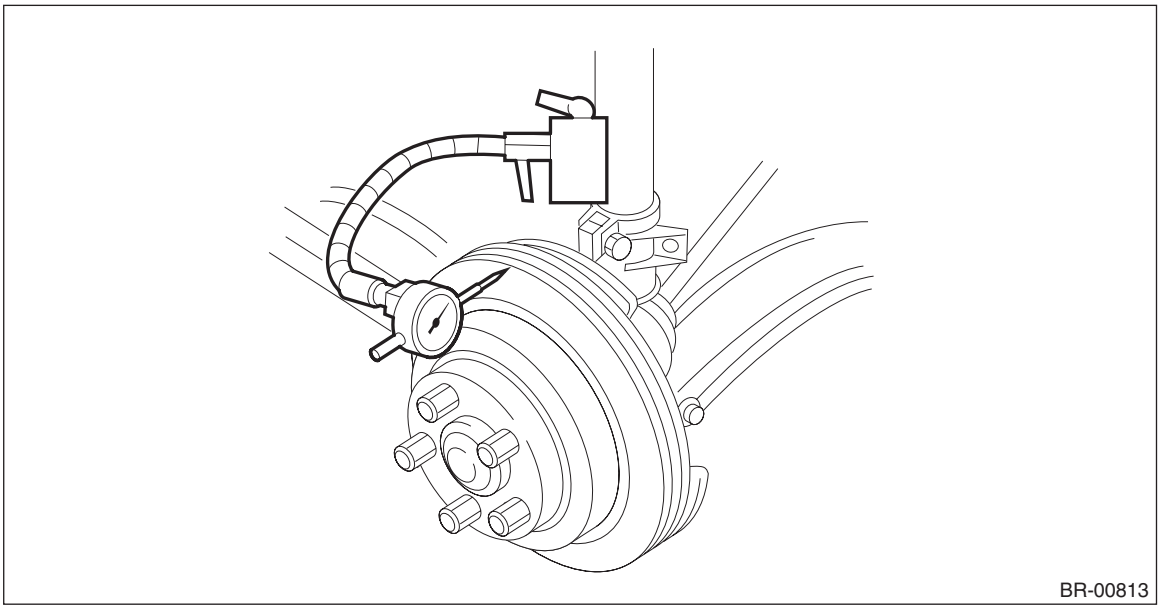

4) If the runout limit is exceeded in the inspection, replace the disc rotor.

2. DISC ROTOR THICKNESS CHECK

1) Set a micrometer 10 mm (0.39 in) inward from the disc rotor outer perimeter, and then measure the disc rotor thickness (A).

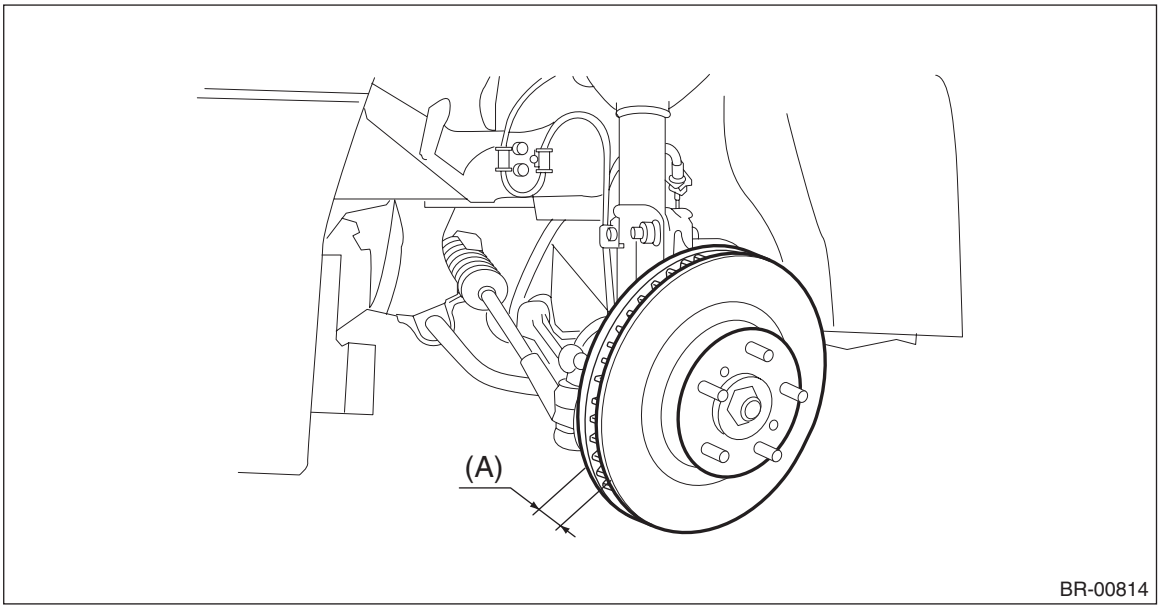

	Size	Standard	Wear limit	Disc rotor outer diameter
Disc rotor thickness (A)	16-inch	24 mm (0.94 in)	22 mm (0.87 in)	294 mm (11.57 in)
	17-inch	30 mm (1.18 in)	28 mm (1.10 in)	316 mm (12.44 in)

2) If the wear limit is exceeded in the inspection, replace the disc rotor.

4. Front Disc Brake Assembly

A: REMOVAL

CAUTION:
Do not allow brake fluid to come in contact with the painted surface of the vehicle body. If it does, wash off with water and wipe away completely.

1) Lift up the vehicle, and then remove the front wheels.
2) Remove the caliper body.
    (1) Remove the union bolt and caliper bolt, and remove the caliper body from the support.

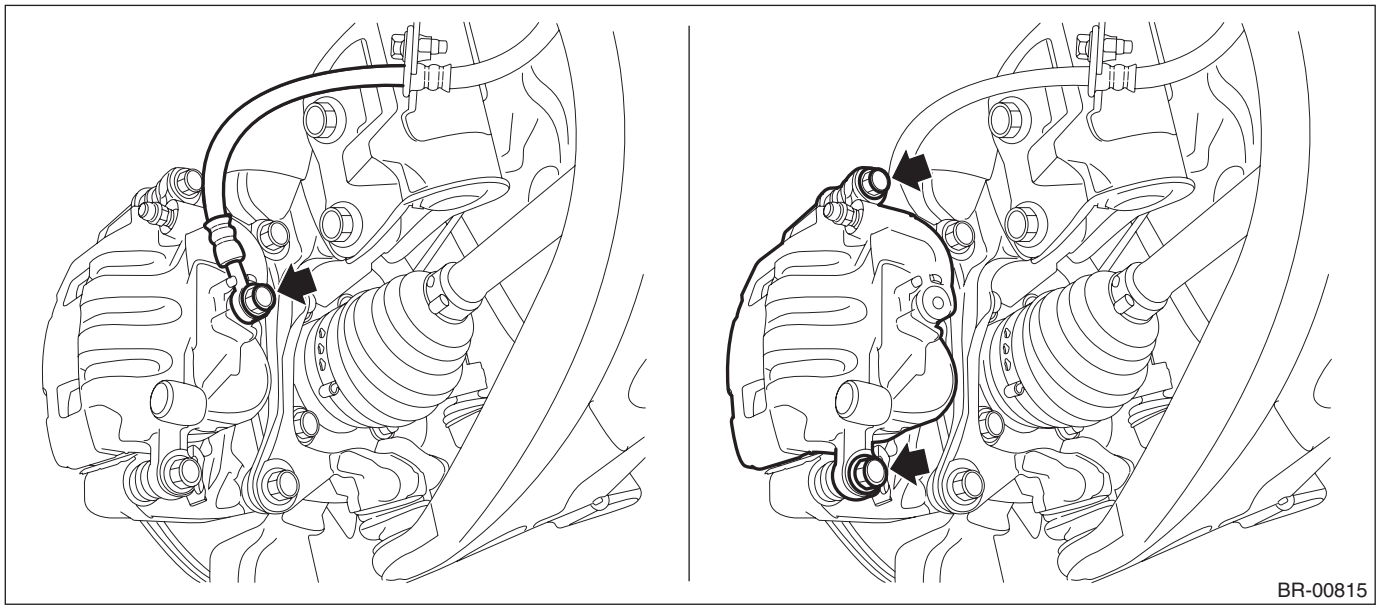

3) Remove the support.

NOTE:
Remove the support only when replacing the disc rotor or support. It is not necessary to remove it when servicing the caliper body.

    (1) Remove the brake pad from support.

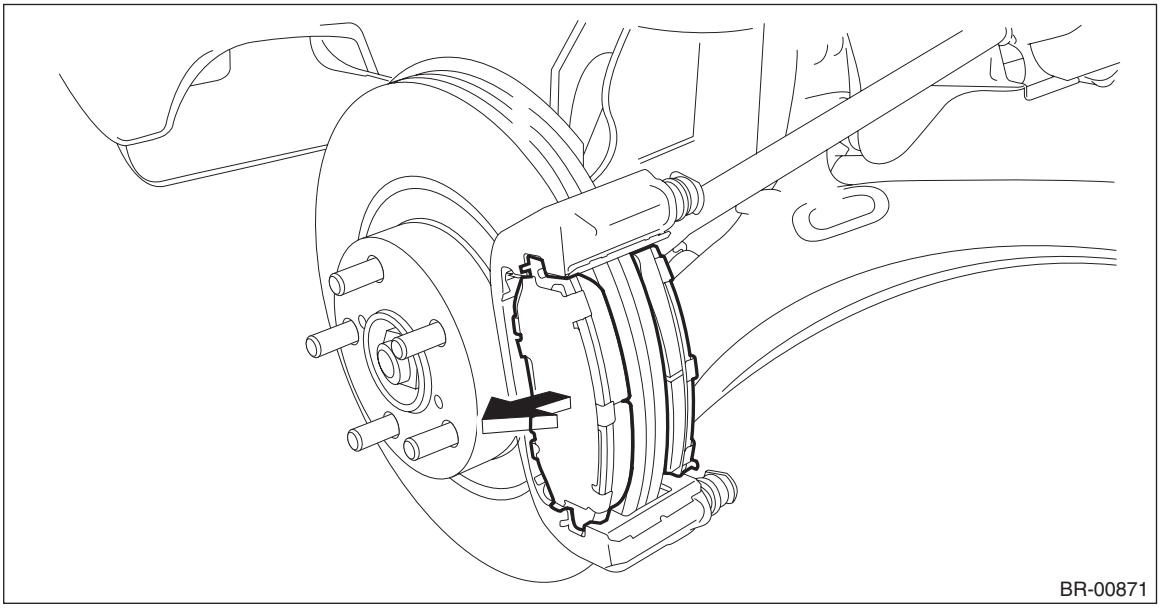

(2) Remove the mounting bolts, and then remove the support from the front axle housing.

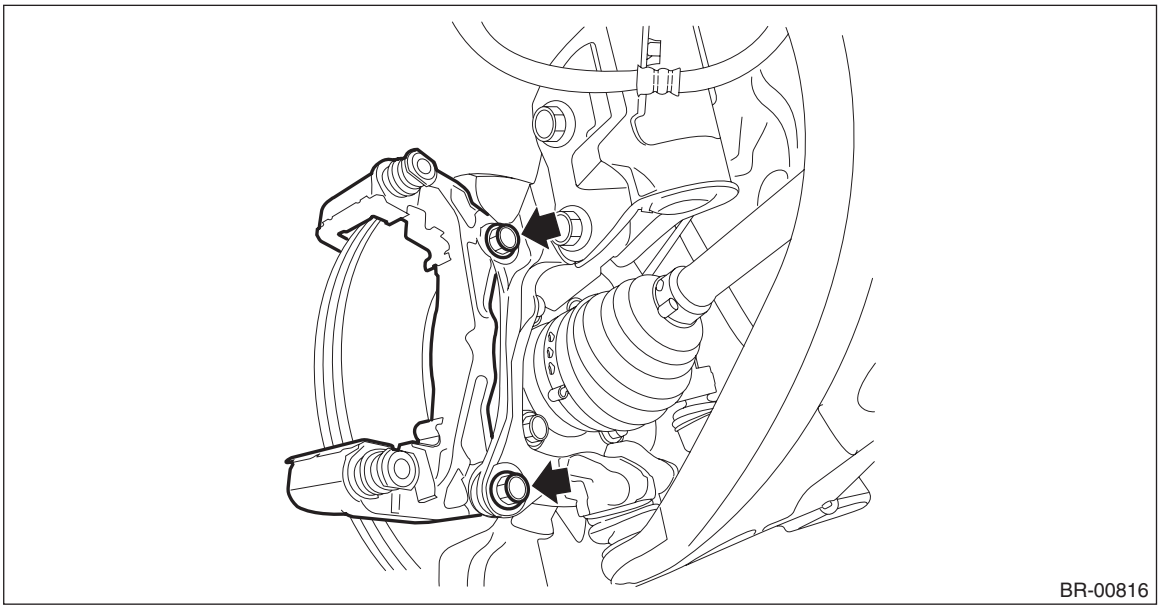

B: INSTALLATION

1. 16-INCH TYPE

NOTE:
Before installation, remove mud and foreign matter from the caliper body and support.
1) Before installation, check each part. <Ref. to BR-28, INSPECTION, Front Disc Brake Assembly.>
2) Apply a thin coat of Molykote M7439 (Part No. 003602001) to the support.

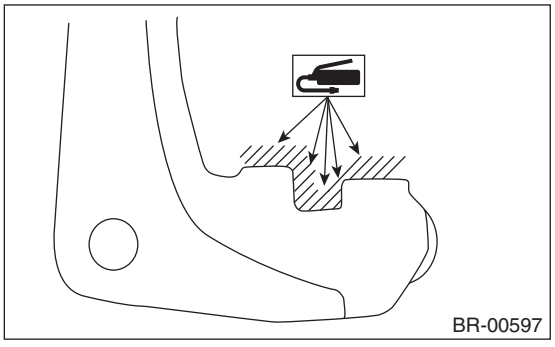

3) Install the support to the front axle housing.

Tightening torque:
Mounting bolt: 120 N·m (12.24 kgf-m, 88.5 ft-lb)

4) Apply a thin coat of Molykote M7439 (Part No. 003602001) or grease contained in the pad kit to the pad clip.

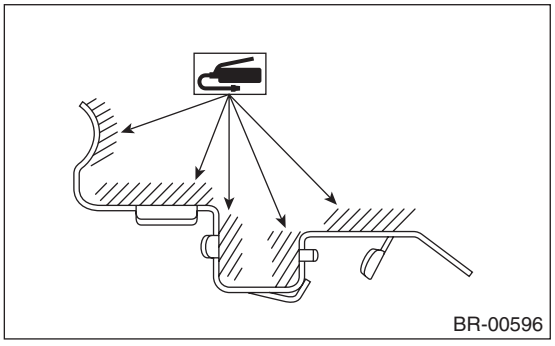

5) Apply a thin coat of Molykote AS880N (Part No. K0777YA010) or grease contained in the pad kit to both surfaces of the pad and inner shim.

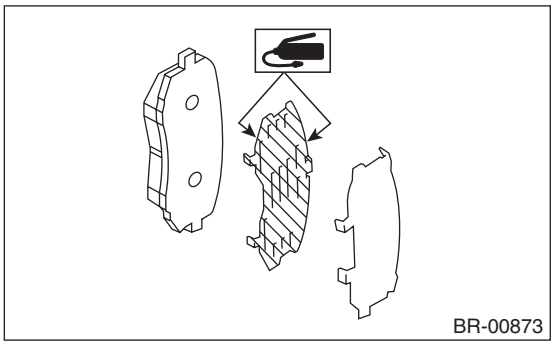

6) Install the brake pad to the support.
7) Install the caliper body to the support.

Tightening torque:
Caliper bolt: 27 N·m (2.75 kgf-m, 19.9 ft-lb)

8) Connect the brake hose using a new brake hose gasket.

Tightening torque:
Union bolt: 18 N·m (1.84 kgf-m, 13.3 ft-lb)

9) Bleed air from the brake system. <Ref. to BR-54, BRAKE LINE, PROCEDURE, Air Bleeding.>
10) Install the front wheels.

2. 17-INCH TYPE

NOTE:
Before installation, remove mud and foreign matter from the caliper body and support.
1) Before installation, check each part. <Ref. to BR-28, INSPECTION, Front Disc Brake Assembly.>
2) Apply a thin coat of Molykote M7439 (Part No. 003602001) to the support.

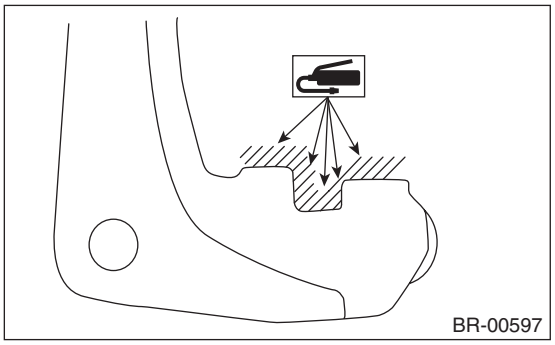

3) Install the support to the front axle housing.

Tightening torque:
Mounting bolt: 120 N·m (12.24 kgf-m, 88.5 ft-lb)

4) Apply a thin coat of Molykote M7439 (Part No. 003602001) or grease contained in the pad kit to the pad clip.

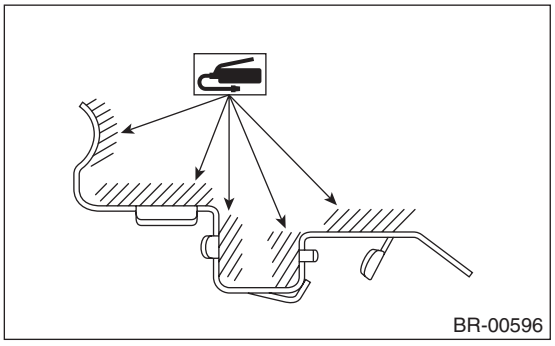

5) Apply a thin coat of Molykote AS880N (Part No. K0777YA010) or grease contained in the pad kit to both surfaces of the pad and inner shim.

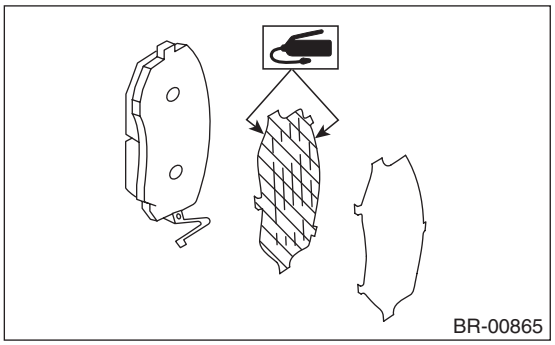

6) Install the brake pad to the support.

CAUTION:
• Be sure to install so that the pad return spring faces the input side of the direction of brake rotor rotation, as shown in the figure.
• Correctly install the pad return spring to the supporting surface of the pad clip as shown in the figure.
• If the pad return spring is deformed or damaged, replace the brake pad.

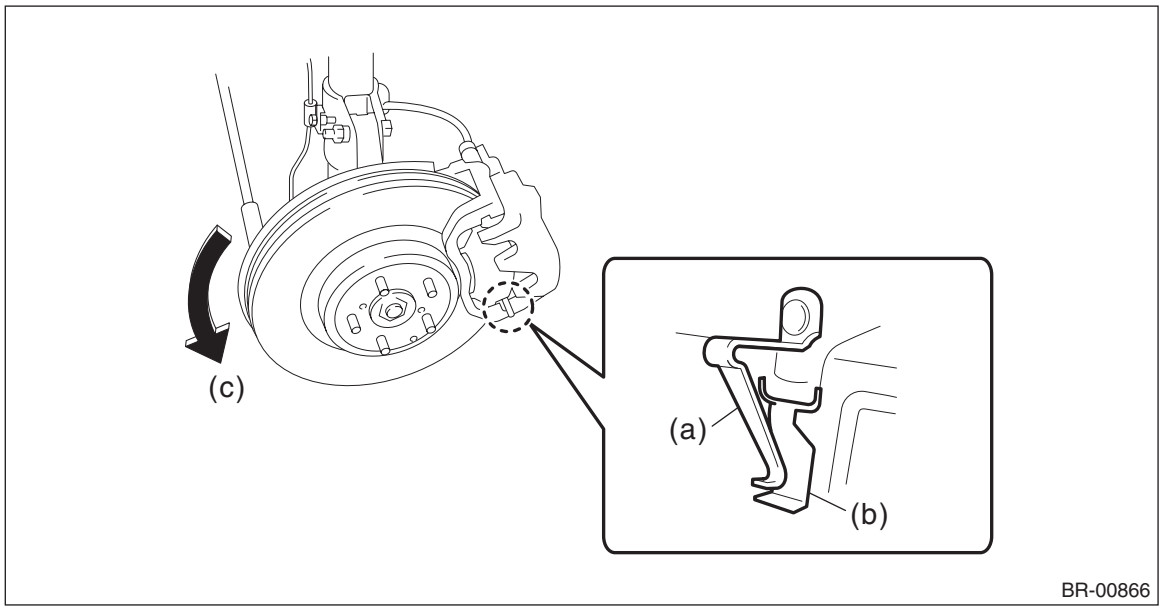

(a) Pad return spring (b) Supporting surface of pad clip (c) Direction of brake rotor rotation

NOTE:
Install the brake pad indicator in proper direction.

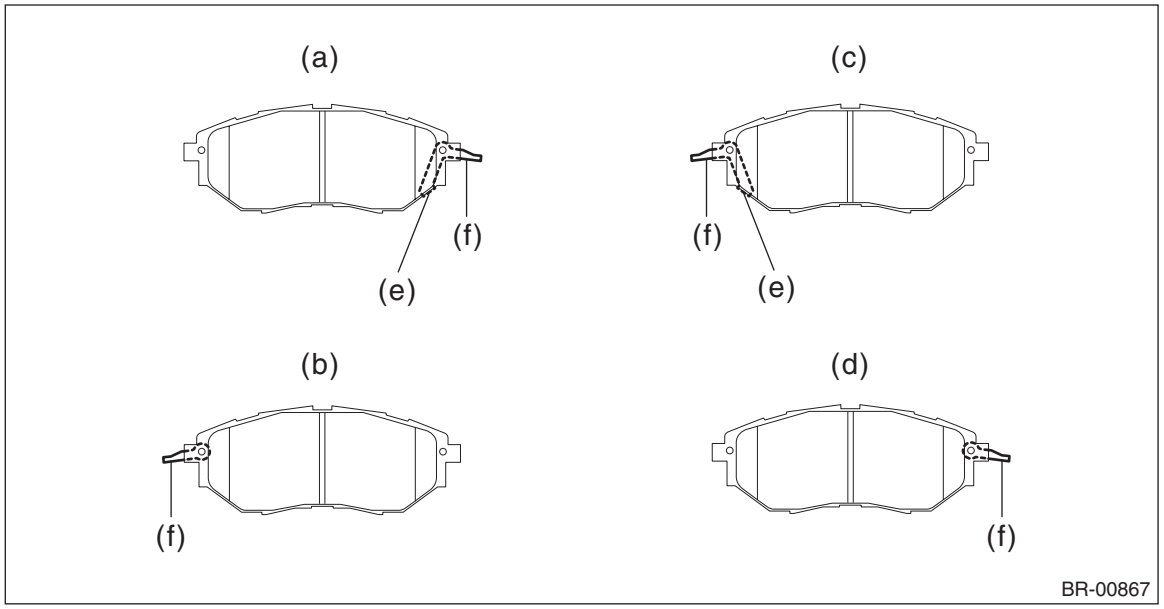

(a) LH — IN
(b) LH — OUT
(c) RH — IN
(d) RH — OUT
(e) Pad indicator
(f) Pad return spring

7) Install the caliper body to the support.

Tightening torque:
Caliper bolt: 27 N·m (2.75 kgf-m, 19.9 ft-lb)
8) Connect the brake hose using a new brake hose gasket.

Tightening torque:
Union bolt: 18 N·m (1.84 kgf-m, 13.3 ft-lb)
9) Bleed air from the brake system. <Ref. to BR-54, BRAKE LINE, PROCEDURE, Air Bleeding.>
10) Install the front wheels.

C: DISASSEMBLY

CAUTION:
Be careful not to allow foreign matter to enter the brake hose connector.
1) Remove mud and foreign matter from the caliper body.
2) Remove the piston.
(1) Place a wooden block in the caliper body as shown in the figure to prevent the piston from jumping out and being damaged.
(2) Using an air gun, gradually apply compressed air via the brake hose installation hole to push the piston out.

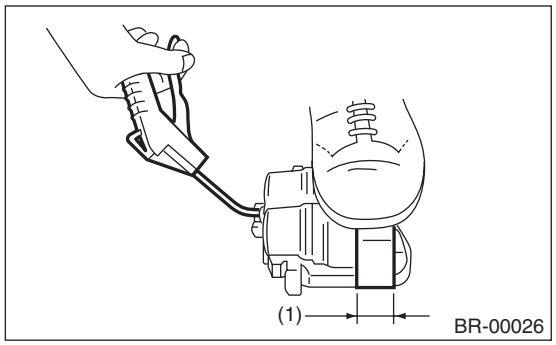

(1) Place a wooden block of 30 mm (1.18 in) width.

3) Remove the piston boot from caliper body cylinder.

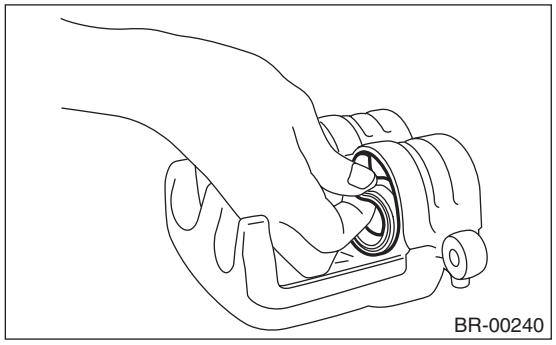

4) Remove the piston seal from caliper body cylinder.

CAUTION:
Do not damage the cylinder and piston seal groove.

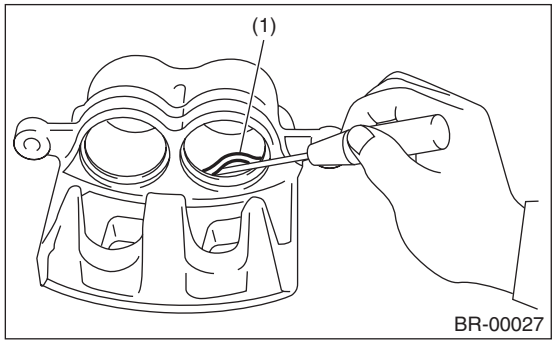

(1) Piston seal

5) Remove the guide pin, lock pin, bushing pin, and pin boot from the support.

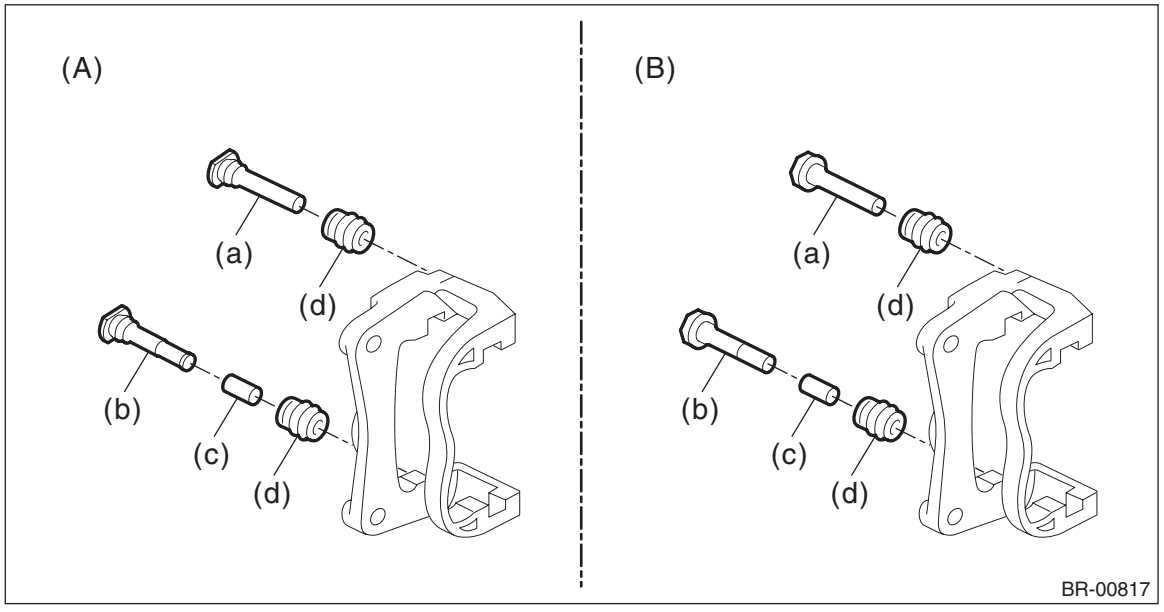

(A) 16-inch
(B) 17-inch
(a) Guide pin (black)
(b) Lock pin (silver)
(c) Bushing
(d) Pin boot

D: ASSEMBLY

1) Before assembly, check each part. <Ref. to BR-28, INSPECTION, Front Disc Brake Assembly.>
2) Clean the inside of the caliper body cylinder using brake fluid.
3) Apply a coat of brake fluid to piston seal and install the piston seal to the caliper body cylinder groove.
4) Apply a coat of brake fluid to the inner surface of caliper body cylinder and the entire outer surface of the piston.
5) Apply grease contained in the piston seal kit to the piston boot, and install it to the groove at the end of the cylinder.
6) Insert the piston into caliper body cylinder.

CAUTION:
Do not force the piston into caliper body cylinder.

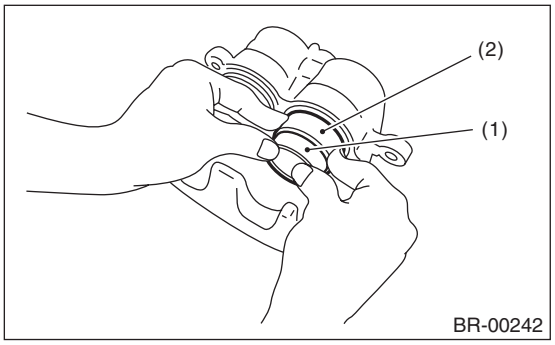

(1) Piston
(2) Piston boot

7) Position the piston boot in the grooves on caliper body cylinder and piston.

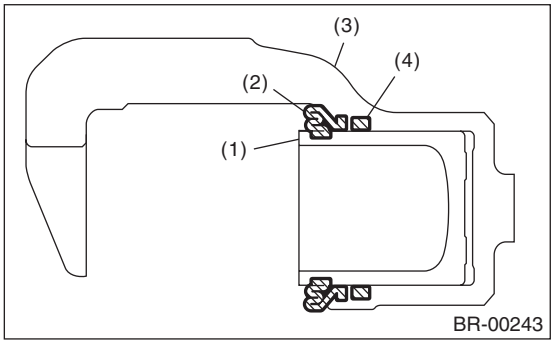

(1) Piston
(2) Piston boot
(3) Caliper body
(4) Piston seal

8) Apply grease contained in the piston seal kit to the lock pin, guide pin outer surface, support cylinder inner surface, and pin boot grooves.

9) Install the pin boot to the lock pin and guide pin, and insert it into the support cylinder.

CAUTION:
Insert the lock pin and guide pin into specified position, and make sure that they slide and seat properly.

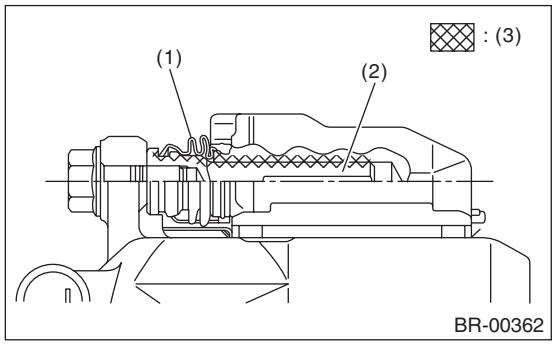

(1) Pin boot
(2) Lock pin or guide pin
(3) Grease applied area

E: INSPECTION

1) Check the caliper body cylinder and piston for uneven wear, damage or rust.
2) Check the rubber parts for damage or deterioration.
3) If faulty is found in the inspection, replace the relevant part.

5. Rear Brake Pad

A: REMOVAL

1) Lift up the vehicle, and then remove the rear wheels.
2) Remove the rear brake pad.
   (1) Remove the bolts and remove the brake hose bracket.
   (2) Remove the caliper bolt, and raise and hold the caliper body.

NOTE:
Do not disconnect the brake hose from the caliper body.

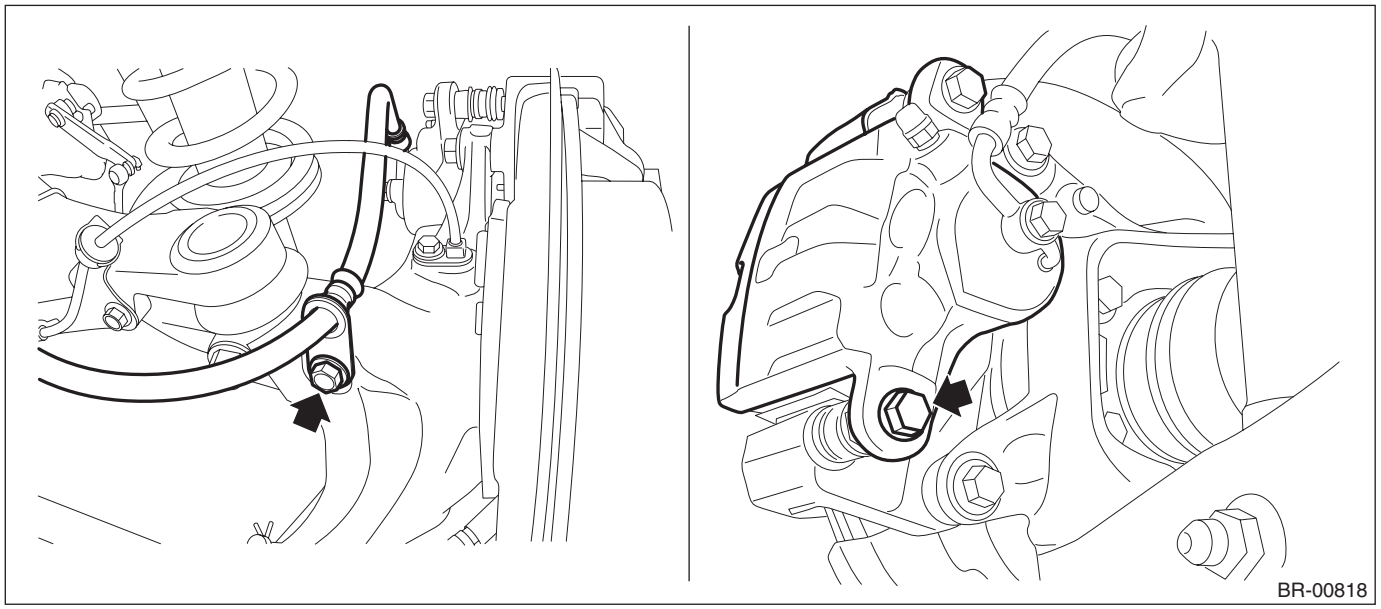

(3) Remove the brake pad from support.

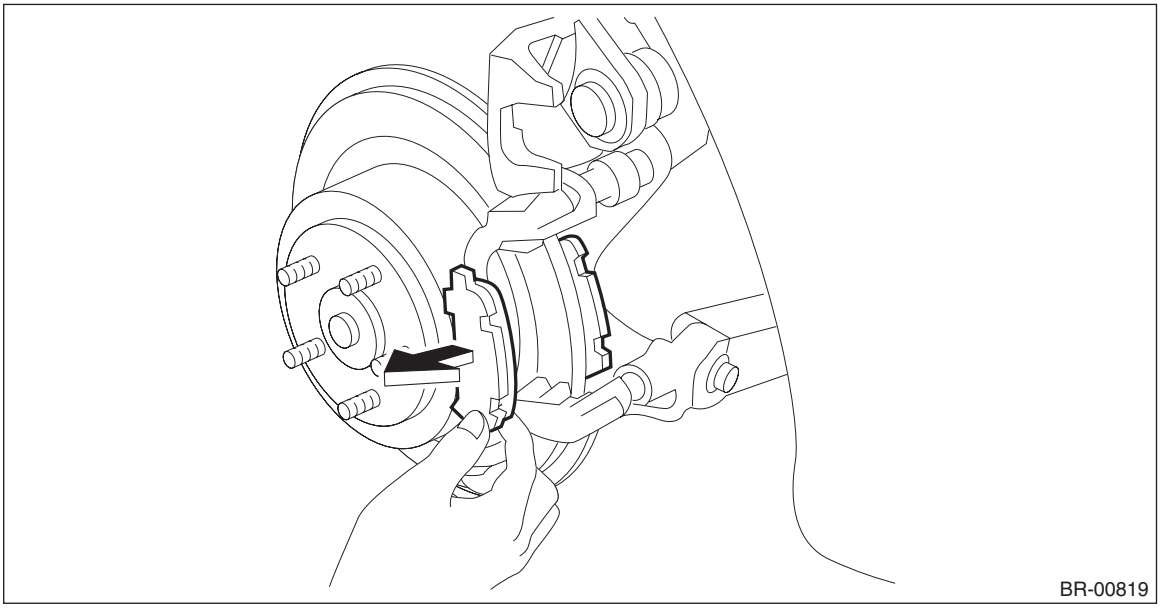

B: INSTALLATION

NOTE:
Before installation, remove mud and foreign matter from the caliper body and support.
1) Before installation, check the brake pad. <Ref. to BR-31, INSPECTION, Rear Brake Pad.>
2) Apply a thin coat of Molykote M7439 (Part No. 003602001) or grease contained in the pad kit to the pad clip.

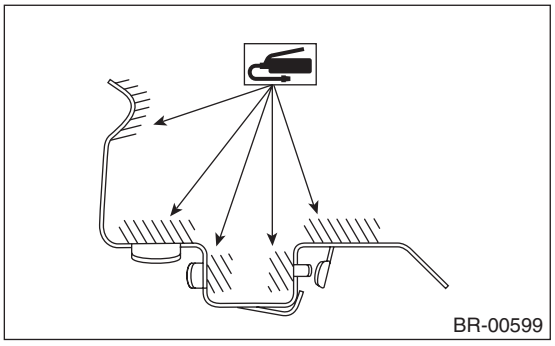

3) Apply a thin coat of Molykote AS880N (Part No. K0777YA010) or grease contained in the pad kit between the outer pad and shim.

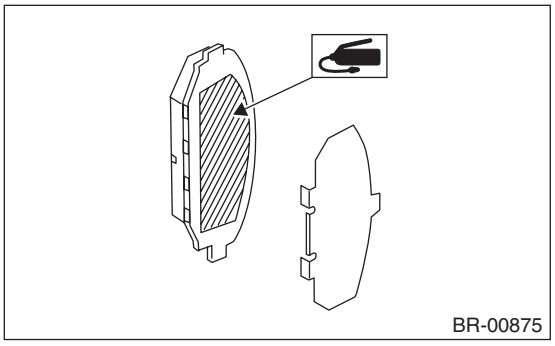

4) Apply a thin coat of Molykote AS880N (Part No. K0777YA010) or grease contained in the pad kit to both surfaces of the inner pad inner shim.

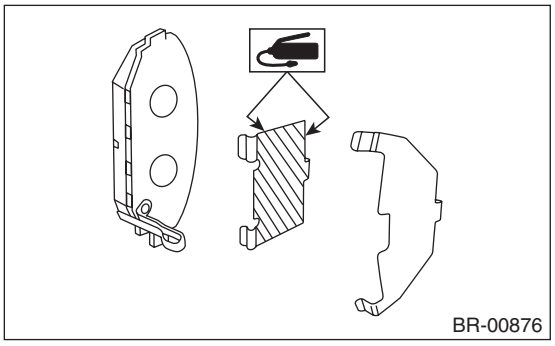

5) Install the brake pad to the support.
6) Install the caliper body to the support.

Tightening torque:
Caliper bolt: 27 N·m (2.75 kgf-m, 19.9 ft-lb)
7) Install the brake hose bracket.

Tightening torque:
Brake hose bracket: 33 N·m (3.36 kgf-m, 24.3 ft-lb)
8) Install the rear wheels.

C: INSPECTION

1) Check the pad thickness (A).

NOTE:
- Always replace the pads of both wheels and both sides as a set.
- Replace pad clips if they are twisted or worn.
- Replace the pad if there is oil or grease on it.
- A wear indicator is installed on the inner disc brake pad. If the pad is worn to the limit, the end of wear indicator contacts disc rotor, and a squeaking sound is heard as the wheel rotates. If the sound is heard, replace the pad.

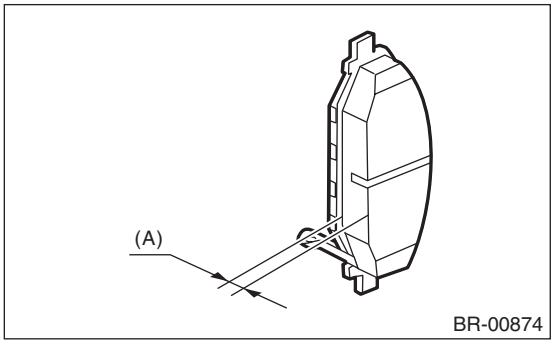

	Disc rotor type	Standard	Wear limit
Pad thickness (A)	Solid	9 mm (0.35 in)	1.5 mm (0.059 in)
	Ventilated	11 mm (0.43 in)	1.5 mm (0.059 in)

2) If the wear limit is exceeded in the inspection, replace the brake pad.

6. Rear Disc Rotor

A: REMOVAL

1) Lift up the vehicle, and then remove the rear wheels.
2) Release the parking brake.
3) Remove the caliper body assembly from the rear axle housing.
   (1) Remove the bolt from the brake hose bracket.
   (2) Remove the mounting bolt, and remove the caliper body assembly.

   (3) Prepare wiring harnesses etc. to be discarded, and suspend the caliper body assembly from the shock absorber with the harnesses.

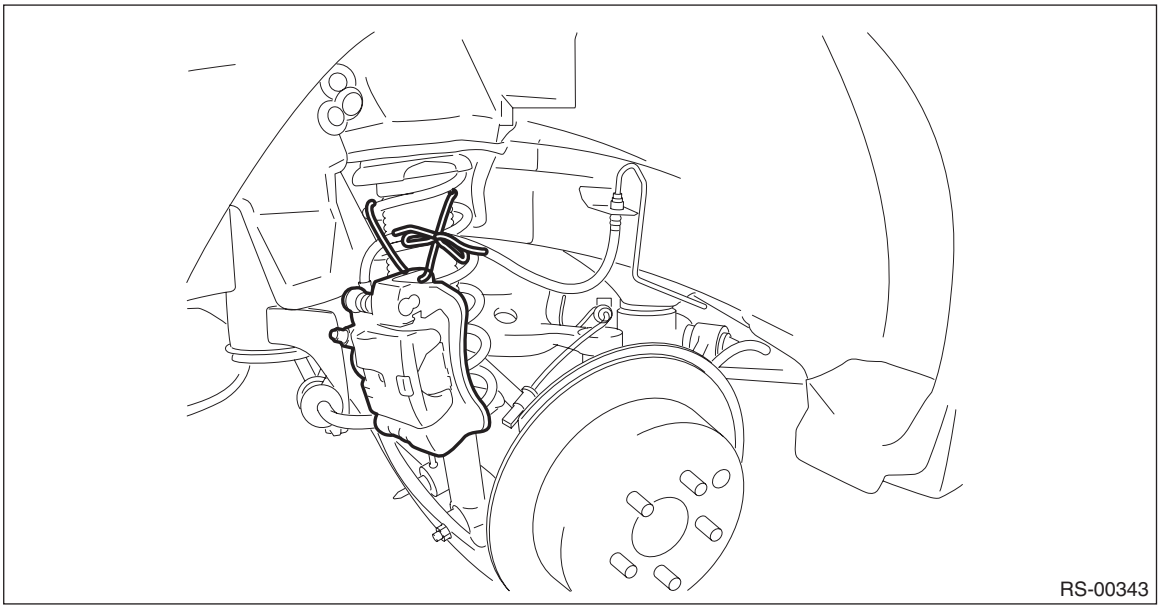

4) Remove the rear disc rotor.

NOTE:
If it is difficult to remove the disc rotor, perform the following two methods in order.

1. Insert the flat tip screwdriver into the brake adjustment hole (A), and rotate the adjusting screw until the brake shoe moves far enough to remove the disc rotor.

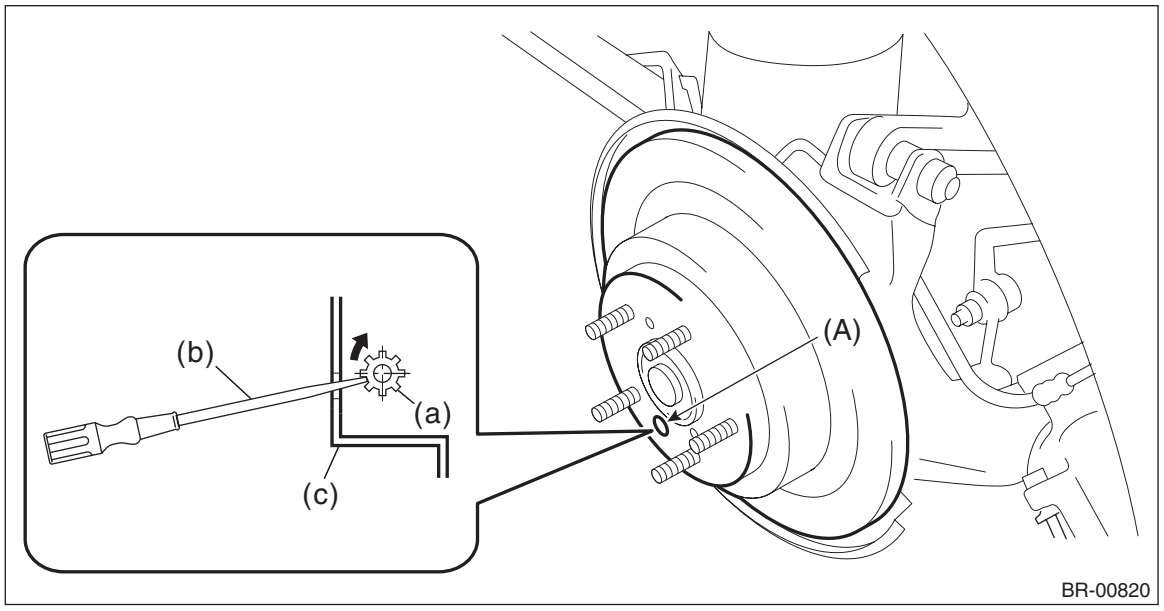

(a) Adjusting screw (b) Flat tip screwdriver (c) Disc rotor

2. When the disc rotor is difficult to be removed from the rear hub unit bearing, screw in 8 mm (0.31 in) bolt to the threaded part of the disc rotor (A), and remove the disc rotor.

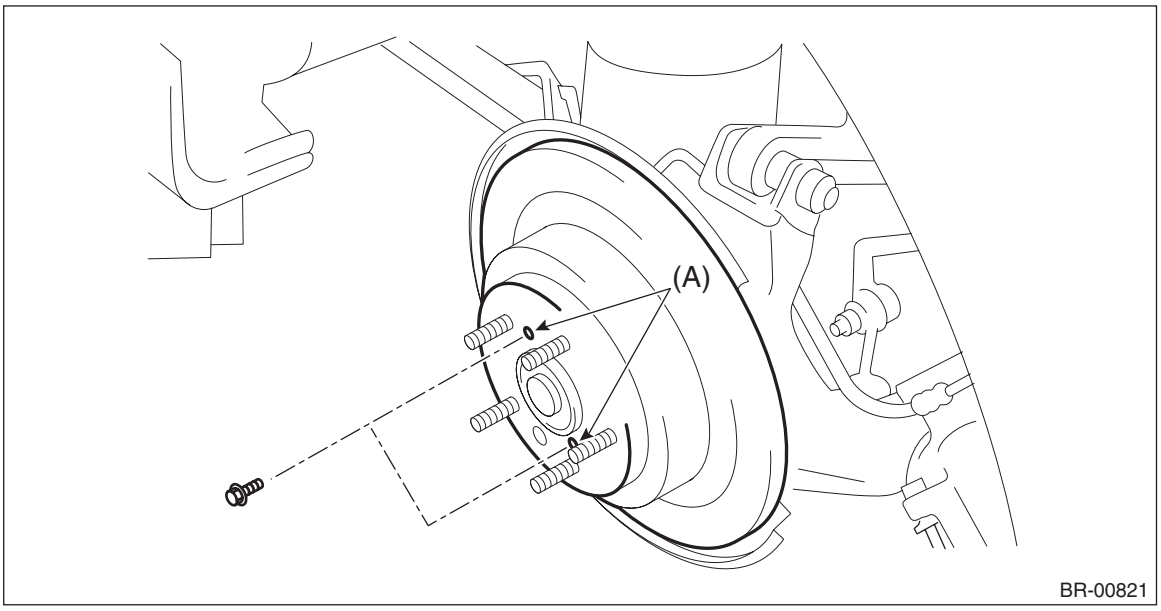

B: INSTALLATION

NOTE:
Before installation, remove mud and foreign matter from the caliper body assembly.
1) Before installation, check the rear disc rotor. <Ref. to BR-34, INSPECTION, Rear Disc Rotor.>
2) Install each part in the reverse order of removal.
3) Adjust the parking brake. <Ref. to PB-15, ADJUSTMENT, Parking Brake Assembly (Rear Disc Brake).>

Tightening torque:
Brake hose bracket: 33 N·m (3.36 kgf-m, 24.3 ft-lb)
Mounting bolt: 66 N·m (6.73 kgf-m, 48.7 ft-lb)

C: INSPECTION

1. DISC ROTOR RUNOUT CHECK

1) Check the rear hub unit bearing for free play and runout before the inspection of disc rotor runout limit. <Ref. to DS-47, INSPECTION, Rear Hub Unit Bearing.>
2) Secure the disc rotor by tightening the five wheel nuts.
3) Set a dial gauge 10 mm (0.39 in) inward from the disc rotor outer circumference, and check the disc rotor runout while rotating the disc rotor.

Disc rotor runout limit:
0.05 mm (0.0020 in)

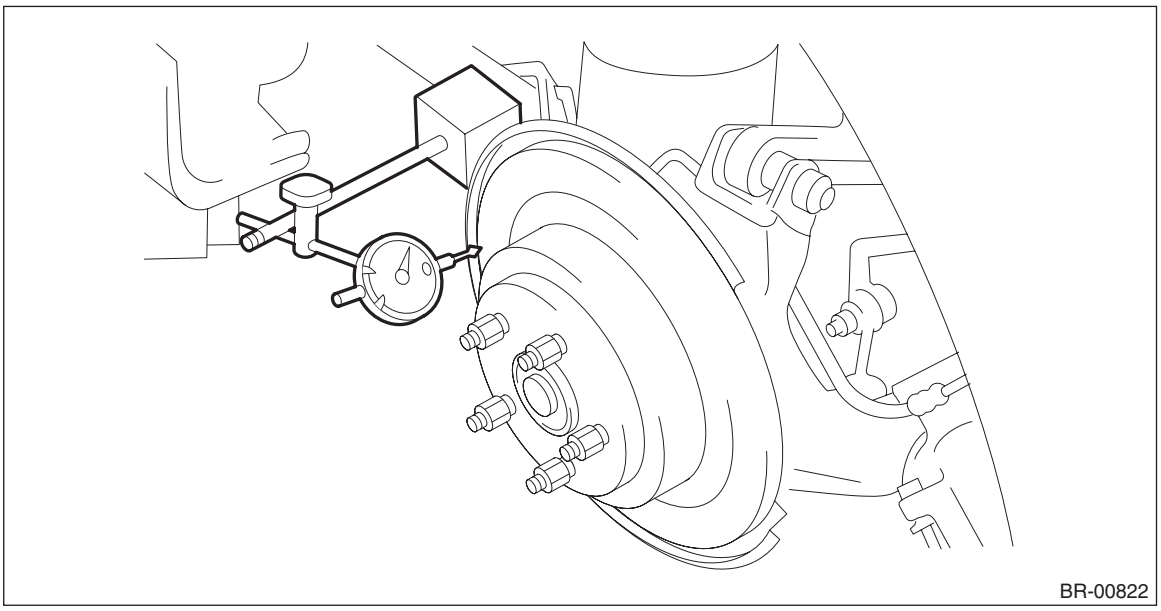

4) If the runout limit is exceeded in the inspection, replace the disc rotor.

2. DISC ROTOR THICKNESS CHECK

1) Set a micrometer 10 mm (0.39 in) inward from the disc rotor outer perimeter, and then measure the disc rotor thickness (A).

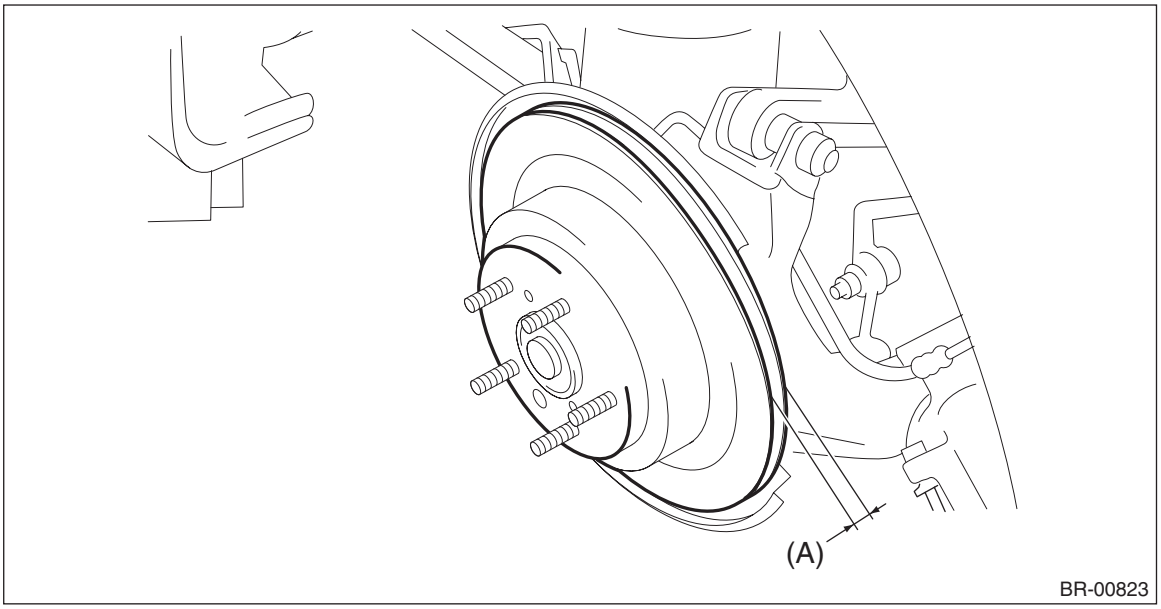

	Disc rotor type	Standard	Wear limit	Disc rotor outer diameter
Disc rotor thickness (A)	Solid disc	10 mm (0.39 in)	8.5 mm (0.33 in)	286 mm (11.26 in)
	Ventilated disc	18 mm (0.71 in)	16 mm (0.63 in)	290 mm (11.42 in)

2) If the wear limit is exceeded in the inspection, replace the disc rotor.

7. Rear Disc Brake Assembly

A: REMOVAL

CAUTION:
Do not allow brake fluid to come in contact with the painted surface of the vehicle body. If it does, wash off with water and wipe away completely.

1) Lift up the vehicle, and then remove the rear wheels.
2) Remove the caliper body from support.
   (1) Remove the brake hose bracket and union bolt.

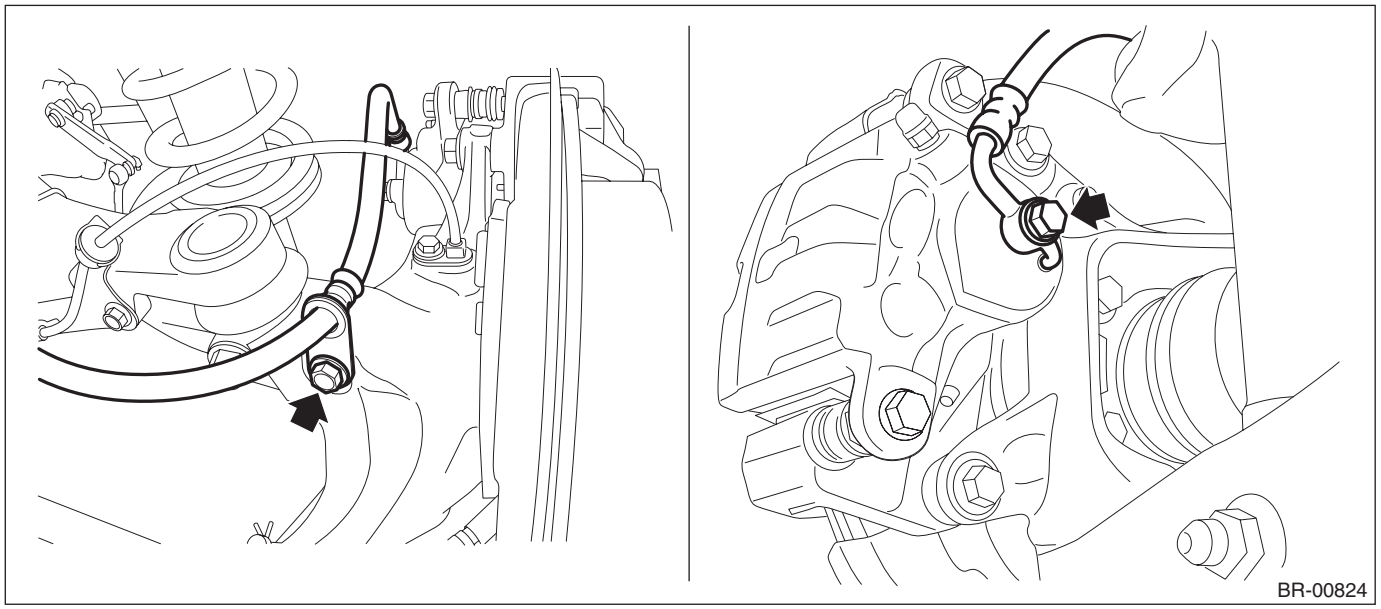

   (2) Remove the caliper bolt, and remove the caliper body.

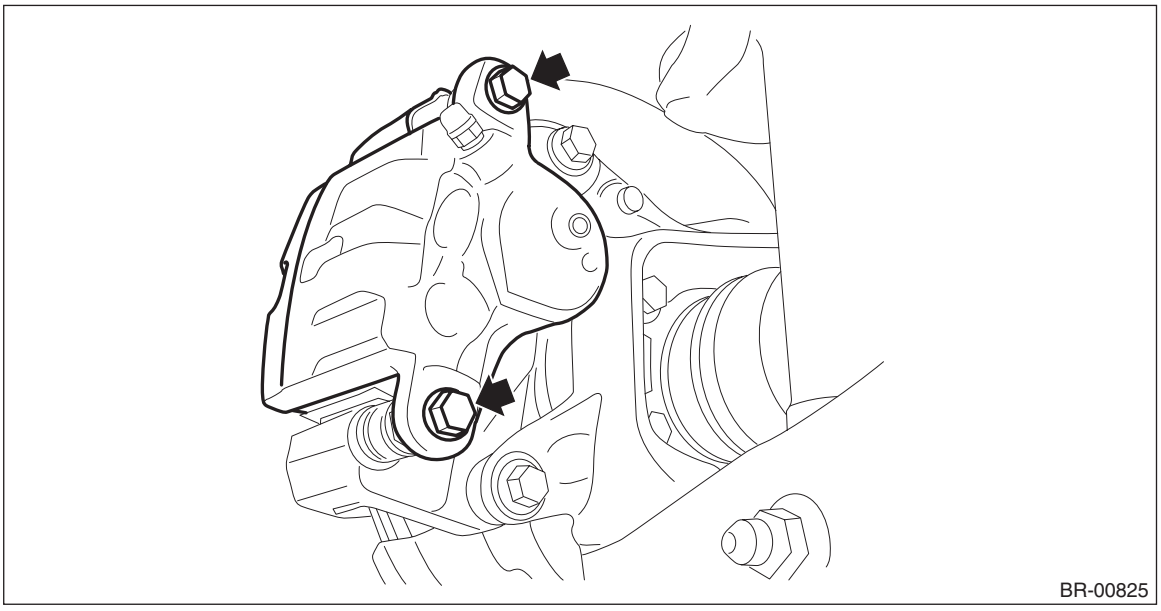

3) Remove the support.

NOTE:
Remove the support only when replacing the disc rotor or support. It is not necessary to remove it when servicing the caliper body.

   (1) Remove the brake pad from support.
   (2) Remove the mounting bolts, and then remove the support from the rear axle housing.

B: INSTALLATION

NOTE:
Before installation, remove mud and foreign matter from the caliper body and support.
1) Before installation, check each part. <Ref. to BR-40, INSPECTION, Rear Disc Brake Assembly.>
2) Apply a thin coat of Molykote M7439 (Part No. 003602001) or the grease included with pad kit to the support.

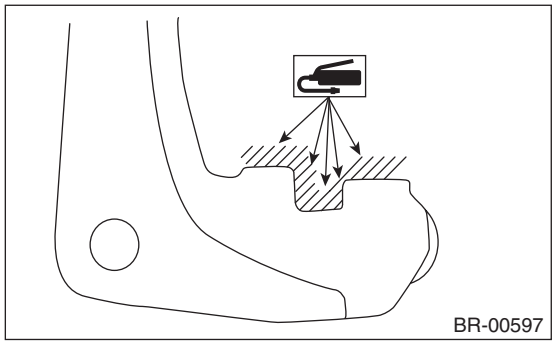

3) Install the support to the rear axle housing.

Tightening torque:
Mounting bolt: 66 N·m (6.73 kgf-m, 48.7 ft-lb)

4) Apply a thin coat of Molykote M7439 (Part No. 003602001) or grease contained in the pad kit to the pad clip.

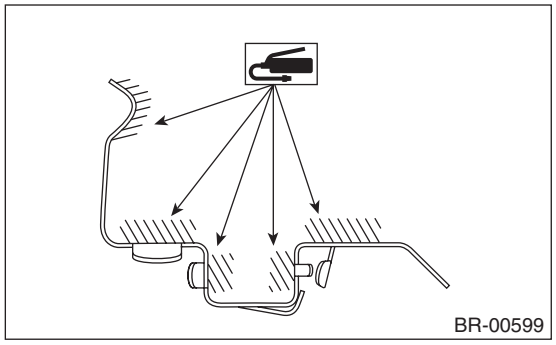

5) Apply a thin coat of Molykote AS880N (Part No. K0777YA010) or grease contained in the pad kit between the outer pad and shim.

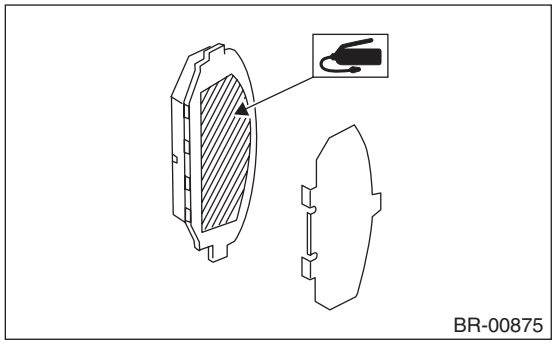

6) Apply a thin coat of Molykote AS880N (Part No. K0777YA010) or grease contained in the pad kit to both surfaces of the inner pad inner shim.

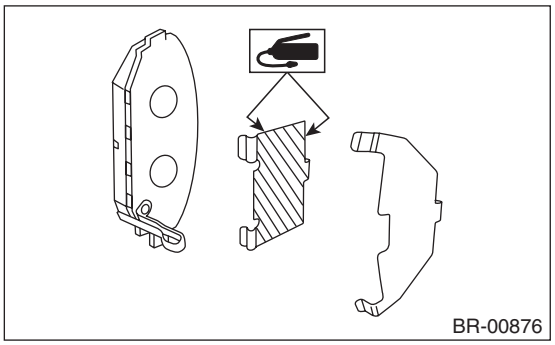

7) Install the brake pad to the support.
8) Install the caliper body to the support.

Tightening torque:
Caliper bolt: 27 N·m (2.75 kgf-m, 19.9 ft-lb)
9) Install the brake hose bracket.

Tightening torque:
Brake hose bracket: 33 N·m (3.4 kgf-m, 14.3 ft-lb)
10) Connect the brake hose using a new brake hose gasket.

Tightening torque:
Union bolt: 18 N·m (1.84 kgf-m, 13.3 ft-lb)
11) Bleed air from the brake system. <Ref. to BR-54, BRAKE LINE, PROCEDURE, Air Bleeding.>
12) Install the rear wheels.

C: DISASSEMBLY

CAUTION:
Be careful not to allow foreign matter to enter the brake hose connector.
1) Remove mud and foreign matter from the caliper body.
2) Remove the piston boot from caliper body cylinder.

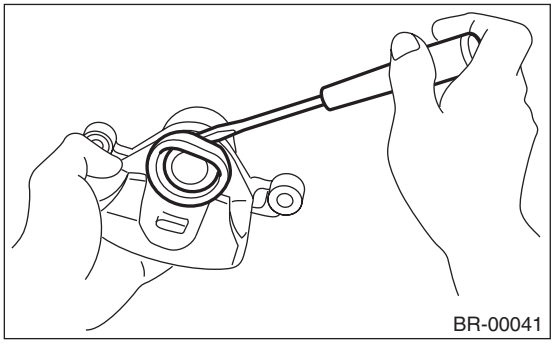

3) Remove the piston.
(1) Place a wooden block in the caliper body as shown in the figure to prevent the piston from jumping out and being damaged.
(2) Using an air gun, gradually apply compressed air via the brake hose installation hole to push the piston out.

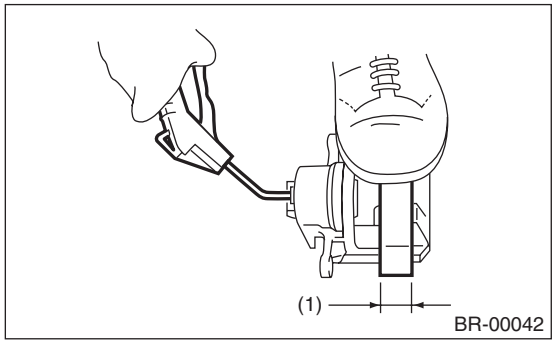

(1) Place a wooden block of 30 mm (1.18 in) width.

4) Remove the piston seal from caliper body cylinder.

CAUTION:
Do not damage the cylinder and piston seal groove.

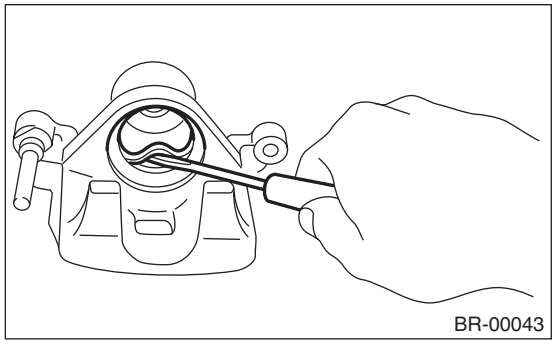

5) Remove the guide pin, lock pin, bushing pin, and pin boot from the support.

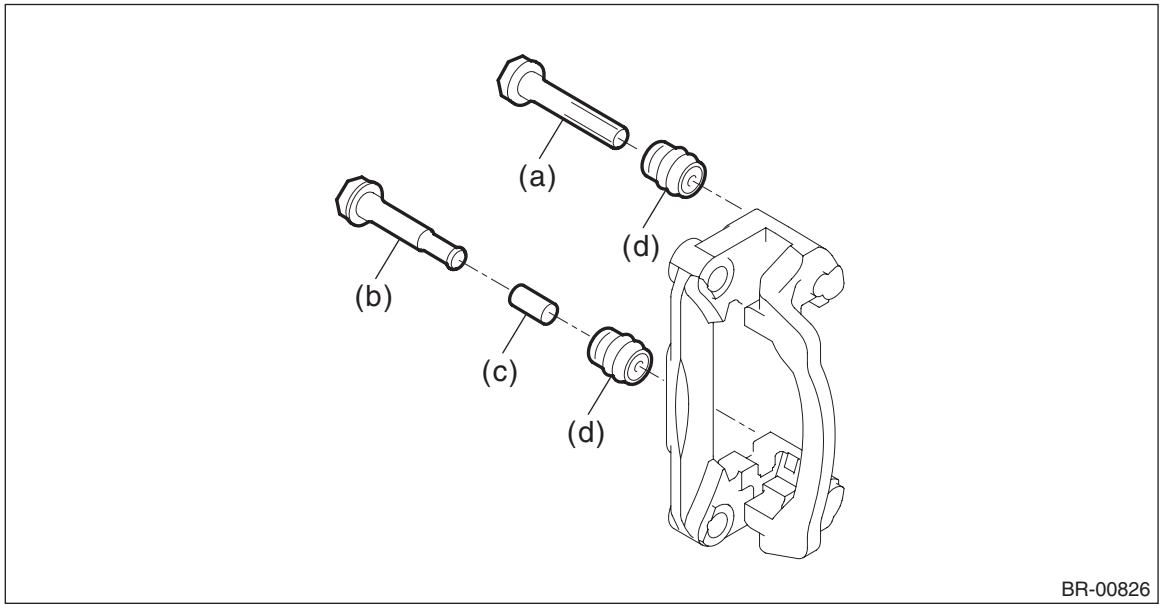

(a) Guide pin (black)
(b) Lock pin (silver)
(c) Bushing
(d) Pin boot

D: ASSEMBLY

1) Before installation, check each part. <Ref. to BR-40, INSPECTION, Rear Disc Brake Assembly.>
2) Clean the inside of the caliper body cylinder using brake fluid.
3) Apply a coat of brake fluid to piston seal and install the piston seal to the caliper body cylinder groove.
4) Apply a coat of brake fluid to the inner surface of caliper body cylinder and the entire outer surface of the piston.
5) Apply grease contained in the piston seal kit to the piston boot, and install it to the groove at the end of the cylinder.
6) Insert the piston into caliper body cylinder.

CAUTION:
Do not force the piston into caliper body cylinder.
7) Position the piston boot in the grooves on caliper body cylinder and piston.

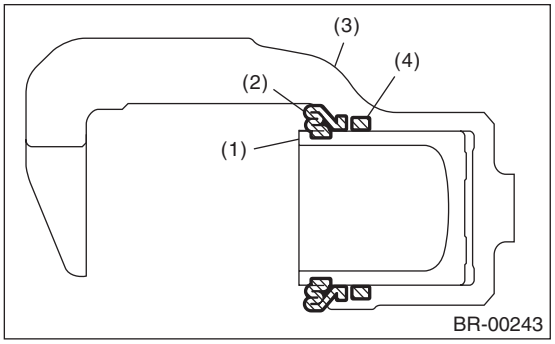

(1) Piston
(2) Piston boot
(3) Caliper body
(4) Piston seal

8) Apply grease contained in the piston seal kit to the lock pin, guide pin outer surface, support cylinder inner surface, and pin boot grooves.
9) Install the pin boot to the lock pin and guide pin, and insert it into the support cylinder.

CAUTION:
Insert the lock pin and guide pin into specified position, and make sure that they slide and seat properly.

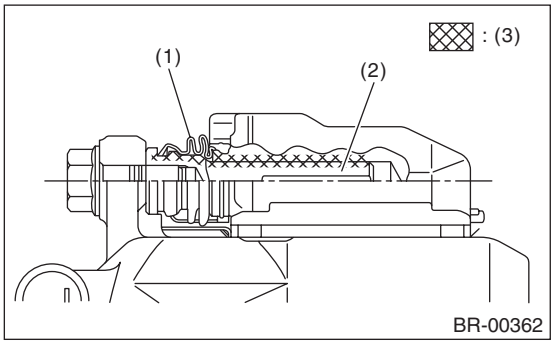

(1) Pin boot
(2) Lock pin or guide pin
(3) Grease applied area

E: INSPECTION

1) Check the caliper body cylinder and piston for uneven wear, damage or rust.
2) Check the rubber parts for damage or deterioration.
3) If faulty is found in the inspection, replace the relevant part.

8. Master Cylinder

A: REMOVAL

CAUTION:
Do not allow brake fluid to come in contact with the painted surface of the vehicle body. If it does, wash off with water and wipe away completely.

1) Disconnect the ground cable from battery.
2) Drain brake fluid from the reservoir tank completely.
3) Remove the master cylinder assembly.

CAUTION:
In order to prevent the contact of the bracket and check valve, be sure to loosen the master cylinder mounting nut while holding the bracket with hand. Otherwise it may deform the bracket.

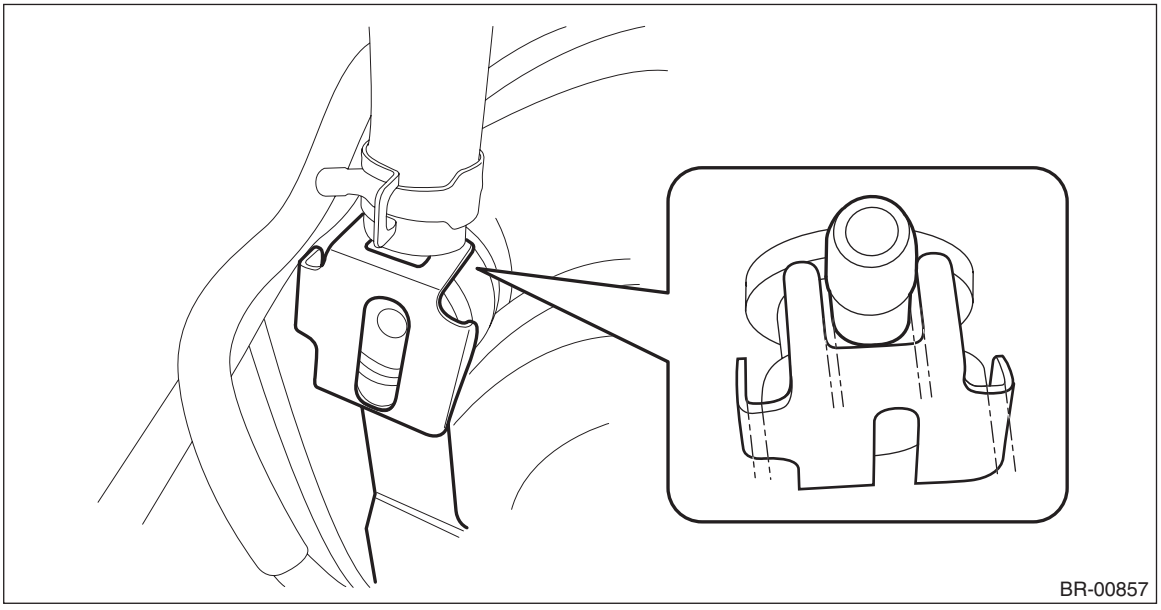

(1) Disconnect the fluid level gauge connector (a).
(2) Disconnect the brake pipe (b).
(3) Remove the nut (c), and slowly remove the master cylinder from the brake booster.

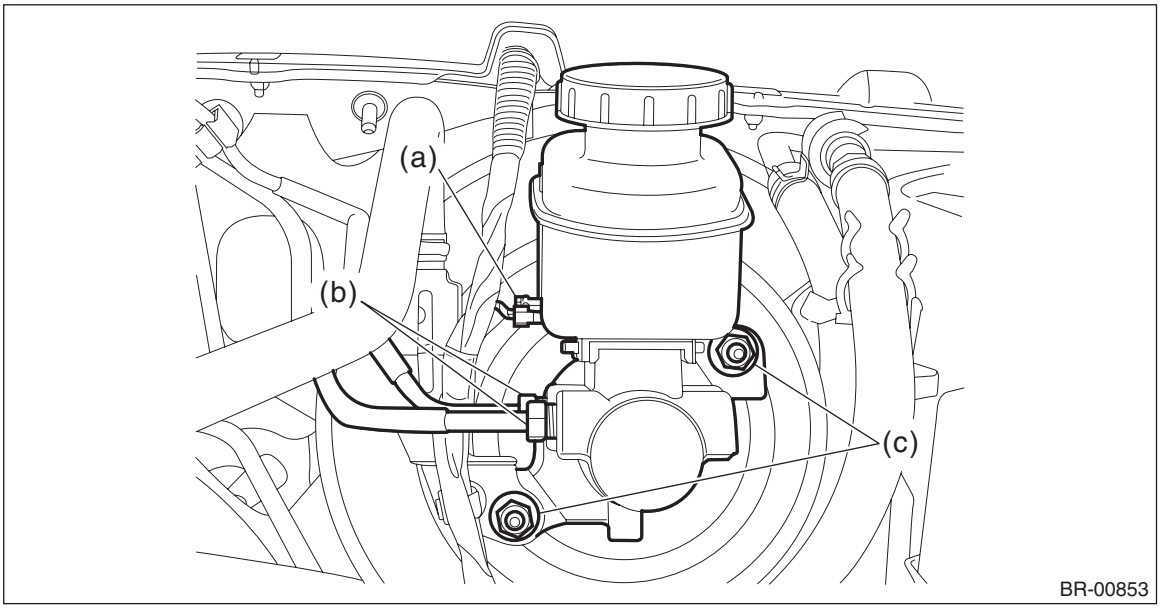

B: INSTALLATION

1) Replace the seal sub assembly for the master cylinder with a new part.

CAUTION:
Be careful not to install the seal sub assembly in the wrong location.

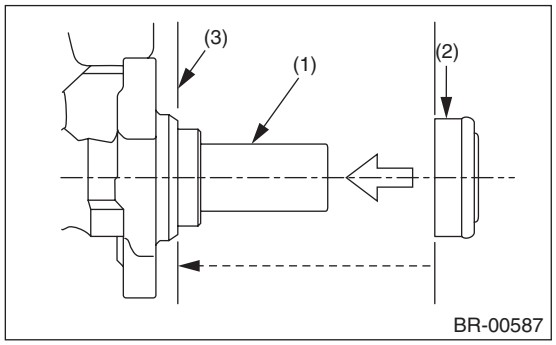

(1) Primary piston
(2) Seal sub ASSY
(3) Install the seal sub assembly to this surface.

2) Install each part in the reverse order of removal.

CAUTION:
• Install the bracket at the position with sufficient clearance that it does not contact with the check valve.
• Be sure to loosen the master cylinder mounting nut while holding the bracket with hand. Otherwise the bracket may deform.

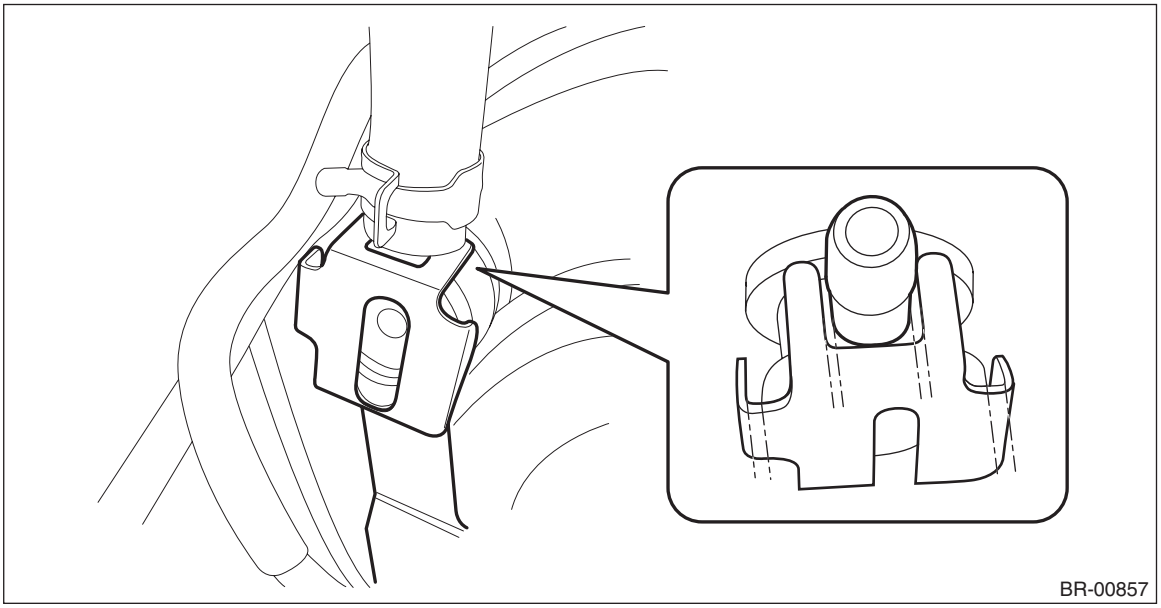

Tightening torque:
Master cylinder: 13 N·m (1.33 kgf-m, 9.6 ft-lb)
Brake pipe flare nut: 19 N·m (1.94 kgf-m, 14.0 ft-lb)

3) Bleed air from the brake system. <Ref. to BR-54, PROCEDURE, Air Bleeding.>

C: REPLACEMENT

CAUTION:
Since the master cylinder assembly cannot be disassembled, disassembly and cleaning are prohibited. When replacing, replace the master cylinder assembly.

9. Brake Booster

A: REMOVAL

CAUTION:
Do not allow brake fluid to come in contact with the painted surface of the vehicle body. If it does, wash off with water and wipe away completely.

1) Disconnect the ground cable from battery.
2) Drain brake fluid from the reservoir tank completely.
3) Remove the master cylinder assembly.

CAUTION:
In order to prevent the contact of the bracket and check valve, be sure to loosen the master cylinder mounting nut while holding the bracket with hand. Otherwise it may deform the bracket.

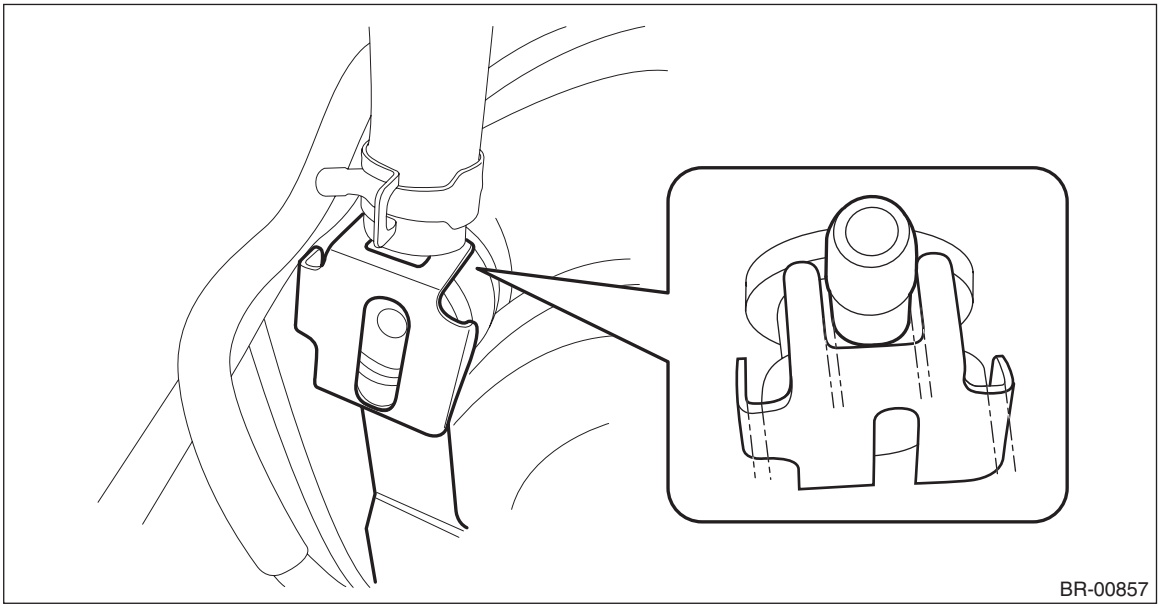

(1) Disconnect the fluid level gauge connector (a).
(2) Disconnect the brake pipe (b).
(3) Remove the nut (c), and slowly remove the master cylinder from the brake booster.

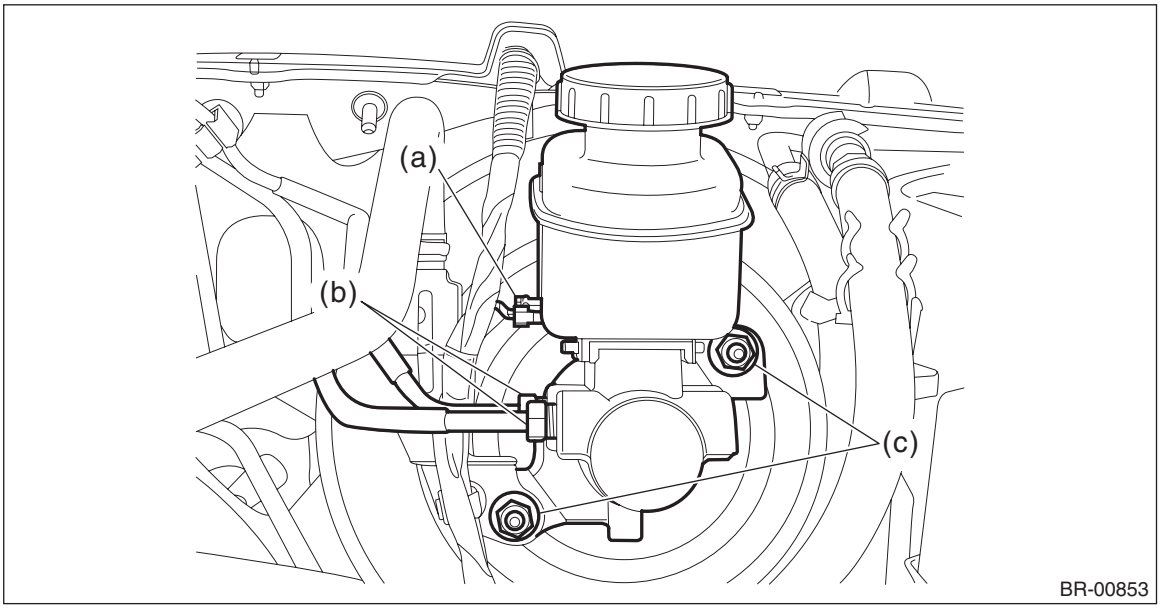

4) Remove the brake booster.

CAUTION:
• Do not disassemble the brake booster.
• If external force (1) is applied from above when brake booster is placed in this position, the resin portion as indicated by "P" may become damaged.

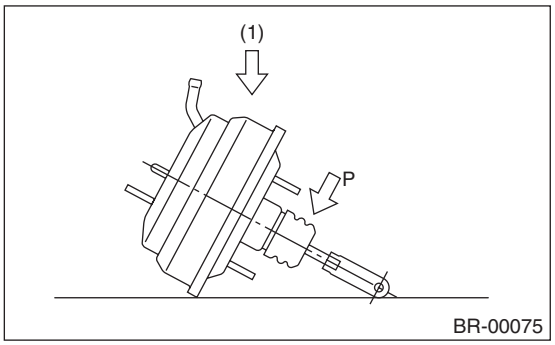

(1) Remove the clamp and remove the vacuum hose.

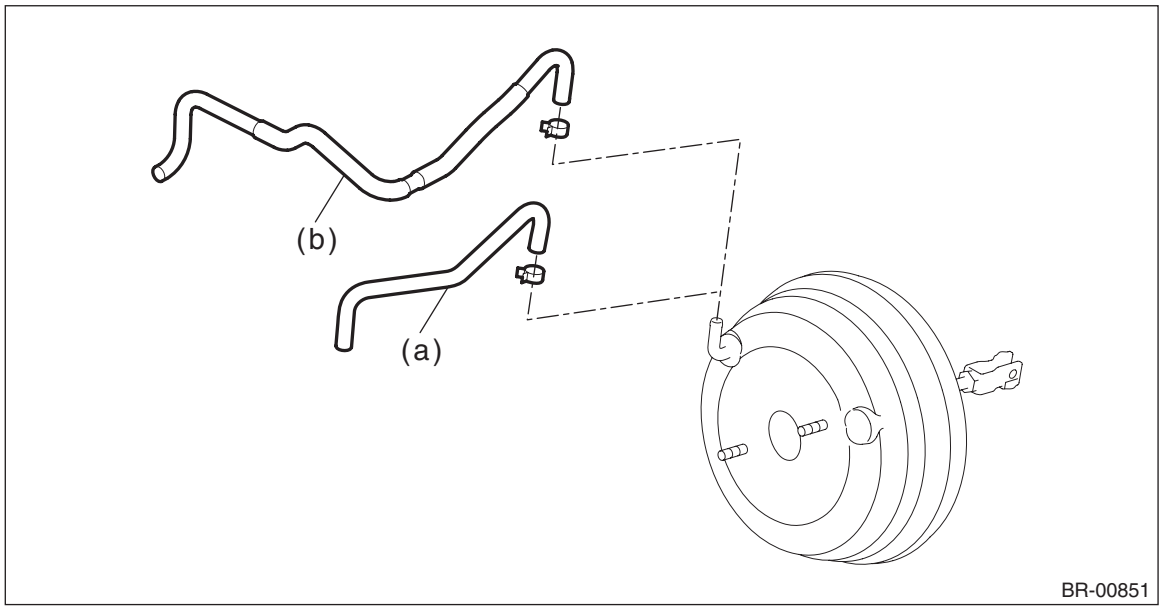

(a) Non-turbo model (b) Turbo model

(2) Remove the clips, and remove the instrument panel side cover LH.

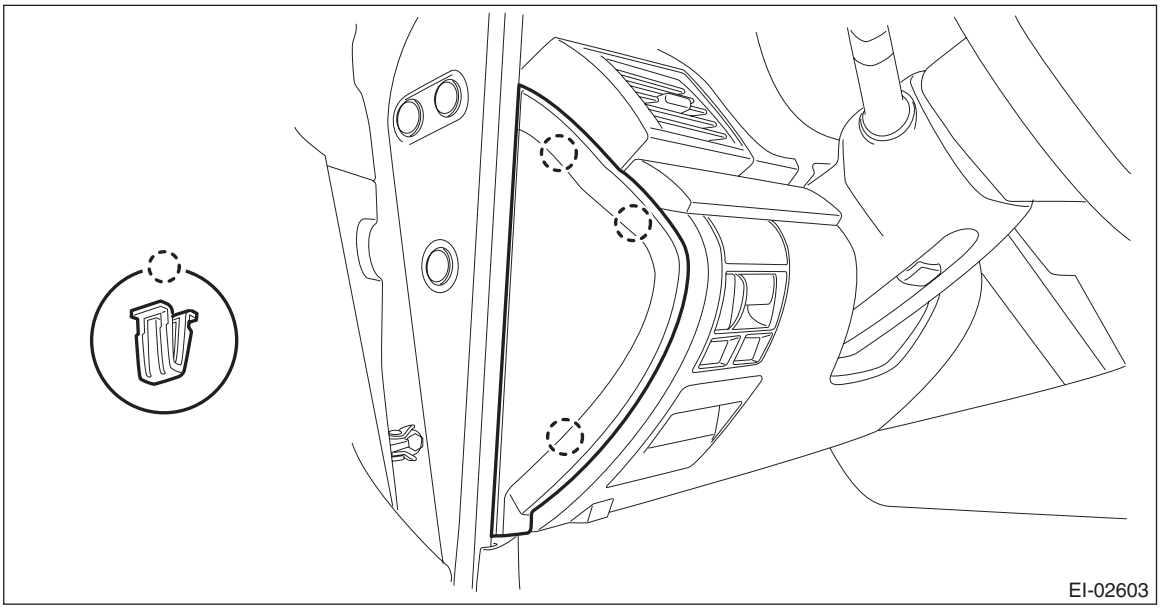

(3) Remove the clips and data link connector, and remove the instrument panel lower cover under.

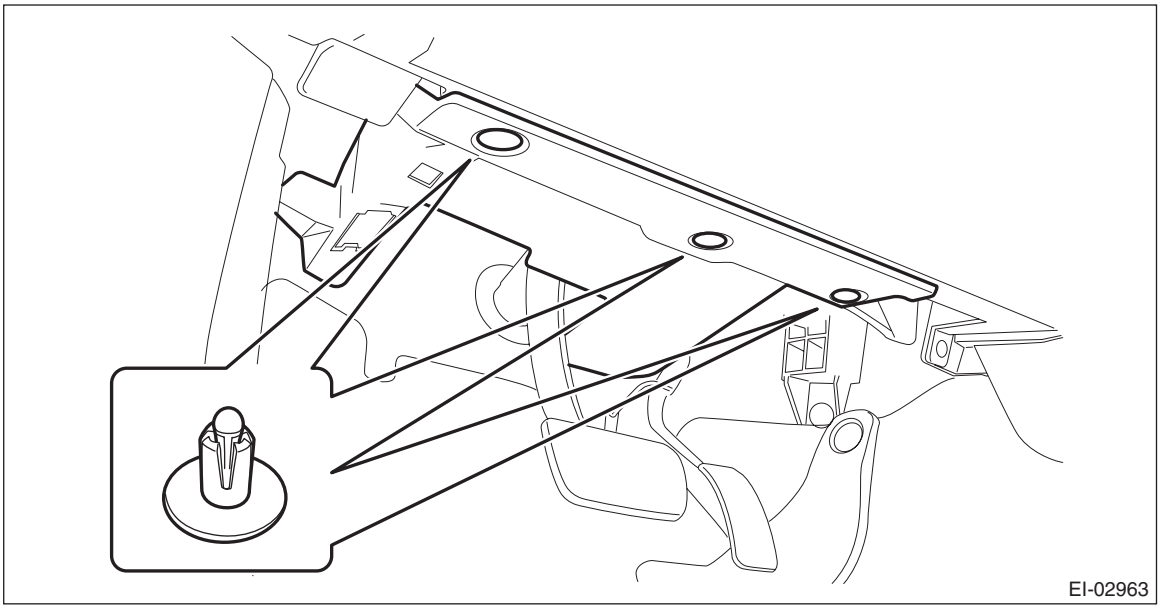

(4) Remove the screws and clips and release the claws, and remove the instrument panel lower cover while disconnecting the harness connectors.

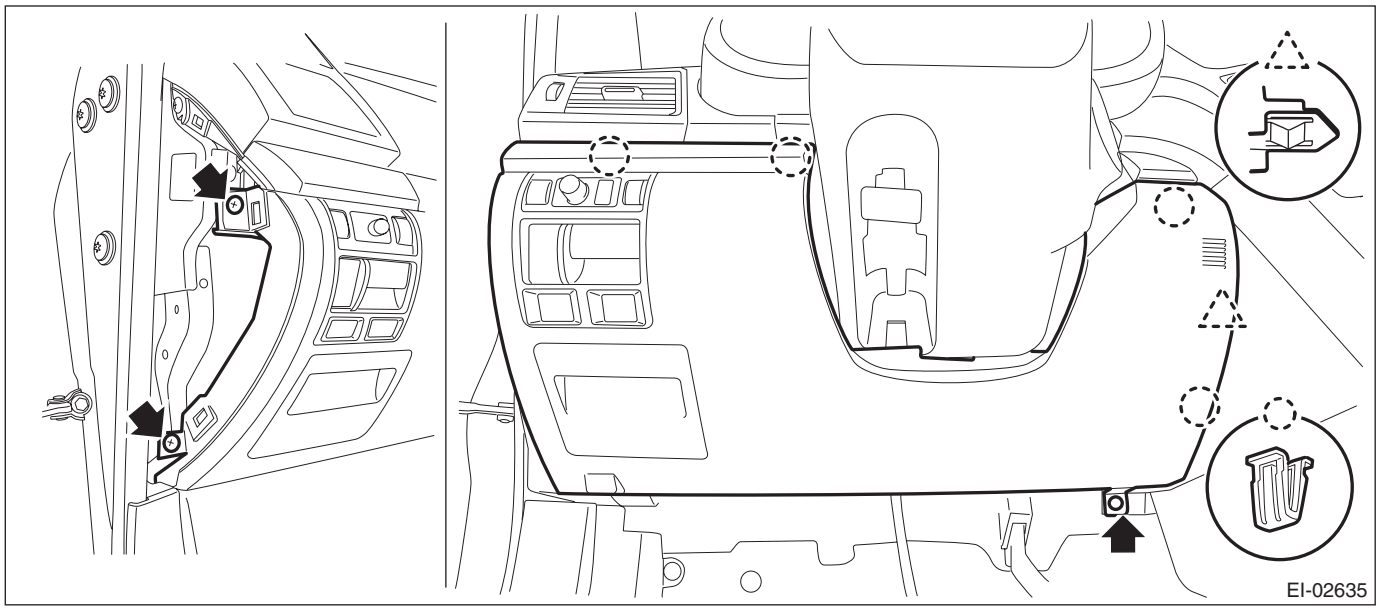

(5) Remove the bolts, and remove the knee guard panel.

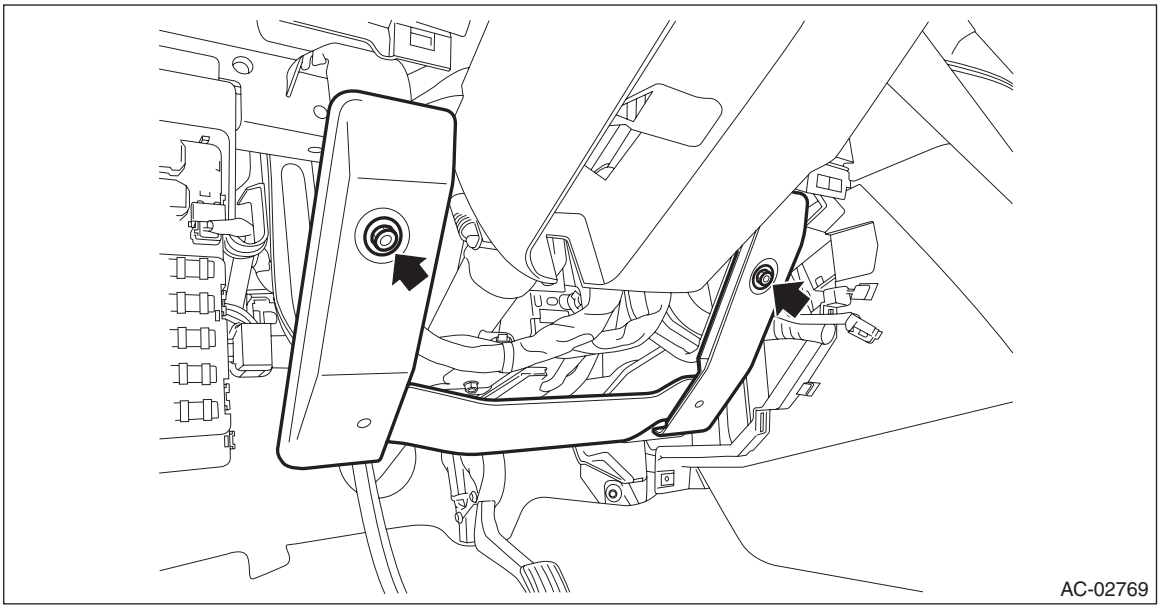

(6) Remove the snap pin (a) and clevis pin (b), and remove the operating rod from the brake pedal.

NOTE:
- Use special care when handling the operating rod. If excessive force is applied to the operating rod, the angle may change by ±3°, and it may result in damage to power piston cylinder.
- Do not change the push rod length.

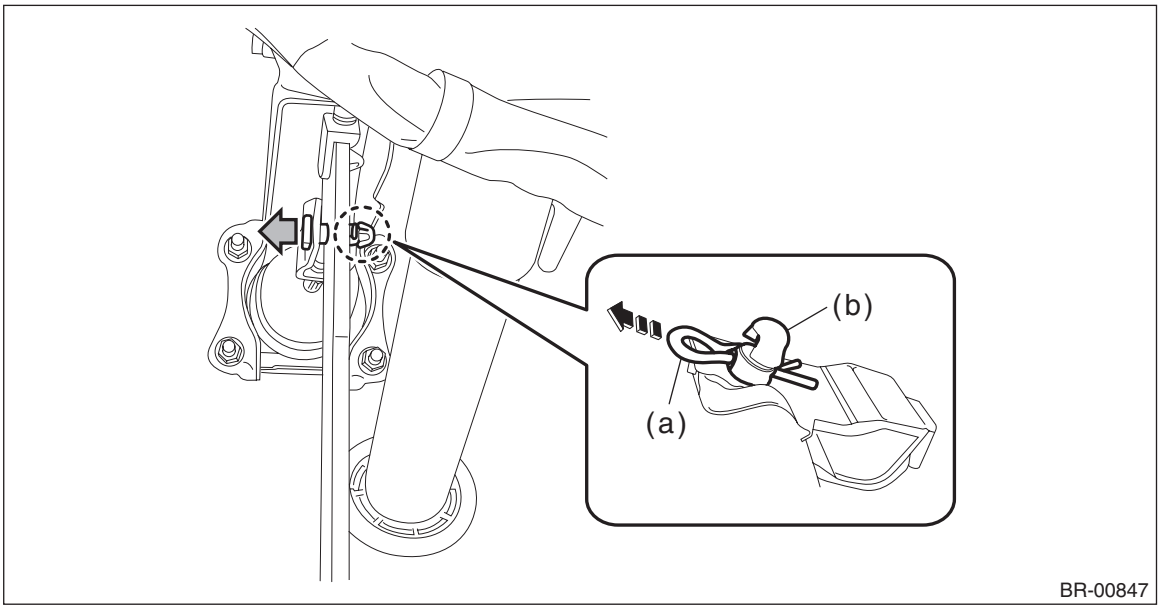

(7) Remove the nut and remove the brake booster.

NOTE:
- Make sure that the booster shell and vacuum pipe are not subject to strong impacts.
- Be careful not to drop the brake booster. If the brake booster is dropped accidentally, replace it.
- Be careful when placing the brake booster on floor.

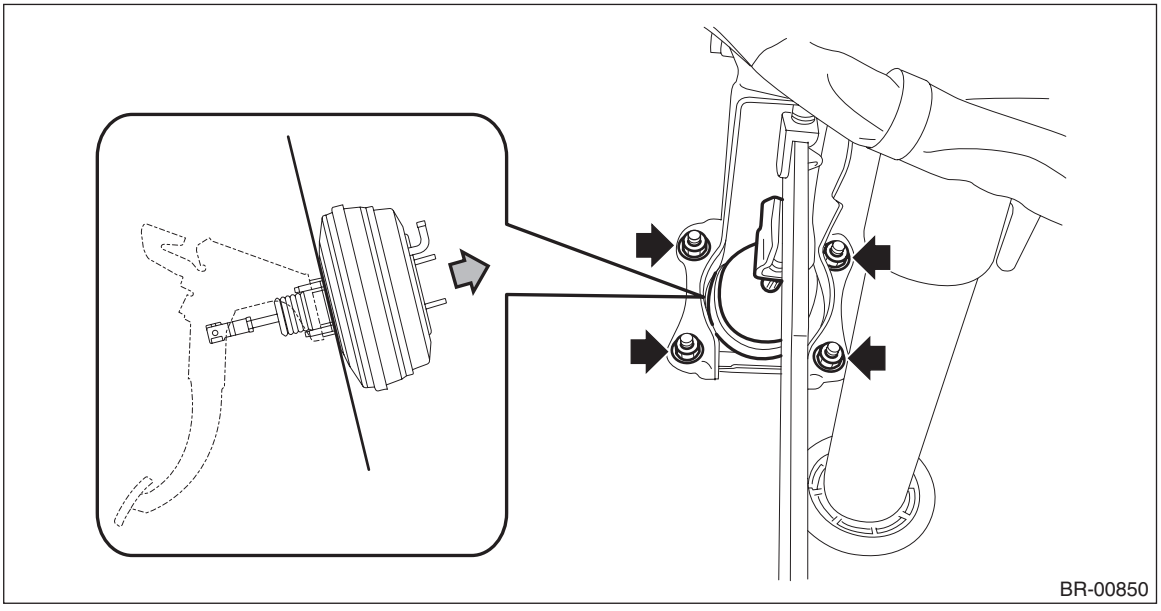

B: INSTALLATION

1) Check and adjust the operating rod of the brake booster.
   (1) Measure the length between the brake booster mounting surface and clevis pin hole.
   (2) If it is not within specification, loosen the lock nut, rotate the brake booster operating rod to adjust the rod length.

Specification L:
136.5 mm (5.37 in)

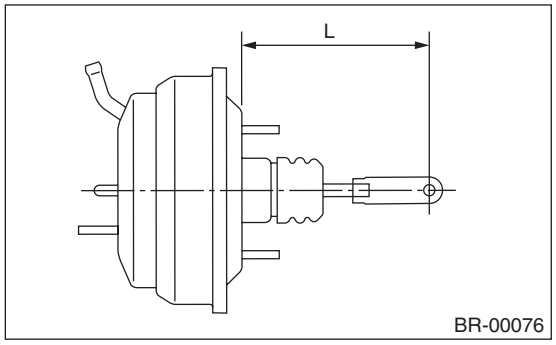

2) Install each part in the reverse order of removal.

CAUTION:
• Apply grease to the snap pin to prevent the operating rod from wear.
• Replace the clevis pin with new parts, and apply thin coat of NIGTIGHT LYW No. 2 grease to the clevis pin.
• When installing the master cylinder assembly, replace the seal sub assembly with a new part, and install it to the brake booster.

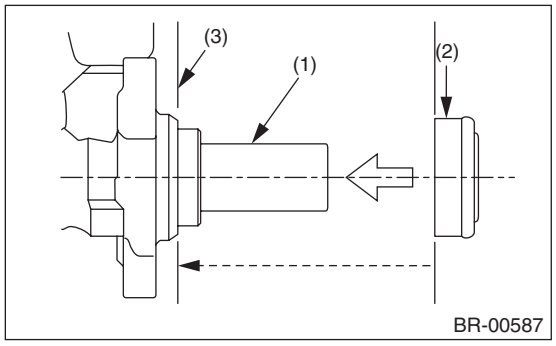

(1) Primary piston
(2) Seal sub ASSY
(3) Install the seal sub assembly to this surface.

• Install the bracket at the position with sufficient clearance that it does not contact with the check valve.

• Be sure to loosen the master cylinder mounting nut while holding the bracket with hand. Otherwise the bracket may deform.

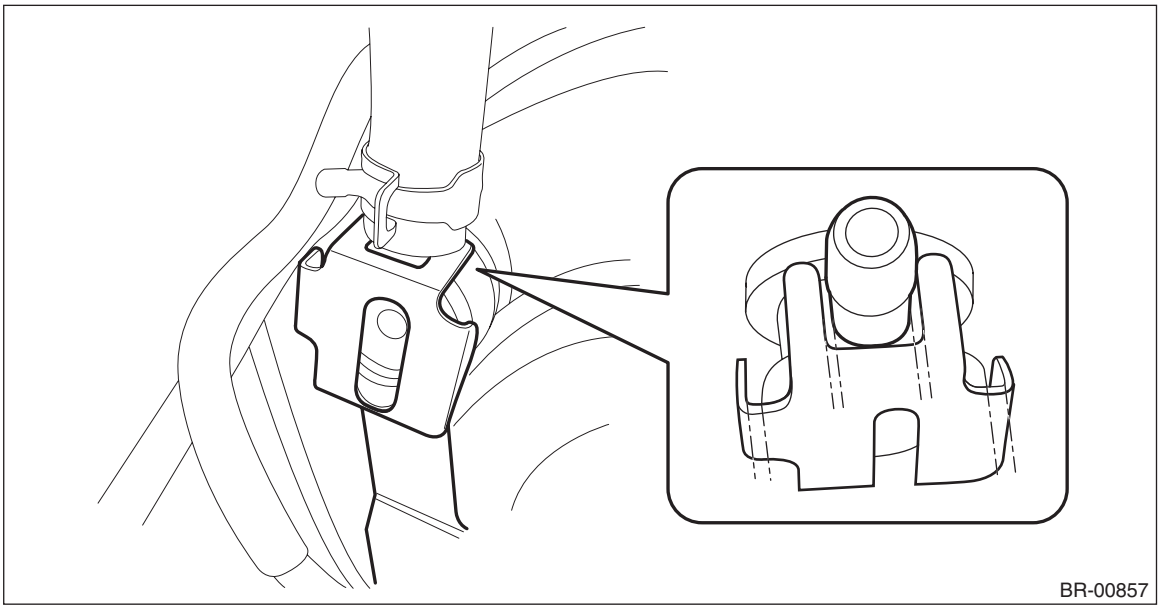

Tightening torque:
Brake booster: 18 N·m (1.84 kgf-m, 13.3 ft-lb)
Master cylinder: 13 N·m (1.33 kgf-m, 9.6 ft-lb)
Brake pipe flare nut: 19 N·m (1.94 kgf-m, 14.0 ft-lb)
Operating lock nut: 22 N·m (2.24 kgf-m, 16.2 ft-lb)

3) Bleed air from the brake system. <Ref. to BR-54, PROCEDURE, Air Bleeding.>
4) Perform a road test to make sure the brakes do not drag.

C: INSPECTION

1. OPERATION CHECK (WITHOUT GAUGES)

CAUTION:
When checking operation, be sure to apply the parking brake securely.

• Check without gauges

This method can not determine exactly what part is defective. But it is possible to identify the outline of the defect by performing the check according to the following procedures.

• Air tightness check

Start the engine, and idle it for 1 to 2 minutes, then turn it OFF. Depress the brake pedal several times applying the normal pedal force. The pedal stroke should be the longest at the 1st depression, and it should become shorter at each successive depression. If no change occurs in the pedal height when pressed, the brake booster is faulty.

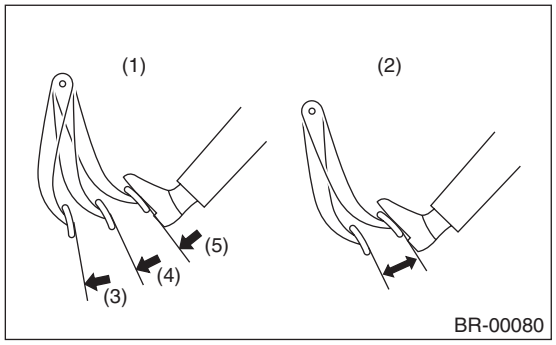

(1) Normal
(2) Not OK
(3) 1st
(4) 2nd
(5) 3rd

NOTE:
- In case of defective operation, inspect the condition of the check valve and vacuum hose as well.
- Replace them if faulty, and perform the test again.
- If no improvement is observed, check precisely with gauges.

• Check operation

1) While the engine is OFF, depress the brake pedal several times applying the same pedal force, to check for a change in pedal height.

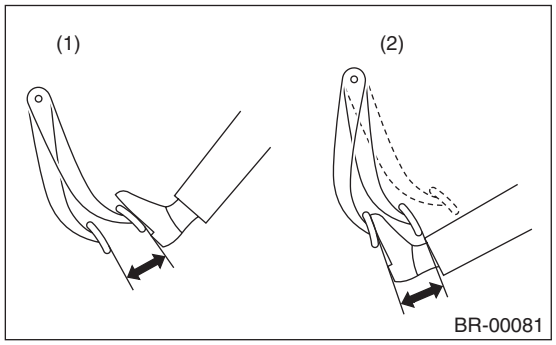

(1) When engine is stopped
(2) When engine is started

2) With the brake pedal depressed, start the engine.
3) As the engine starts, the brake pedal should move slowly toward the floor. If the pedal height does not change, the brake booster is faulty.

NOTE:
If faulty, check precisely with gauges.

• Loaded air tightness check

Depress the brake pedal while the engine is running, and turn the engine to OFF while the pedal is depressed. Keep the pedal depressed for 30 seconds. If the pedal height does not change, the function of brake booster is normal. If the pedal height increases, it is faulty.

NOTE:
If faulty, check precisely with gauges.

2. OPERATION CHECK (WITH GAUGES)

CAUTION:
When checking operation, be sure to apply the parking brake securely.

• Check with gauge

Connect the gauge as shown in the figure. After bleeding air from the pressure gauge, perform each check.

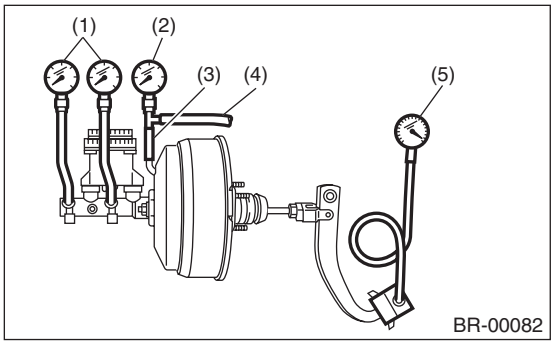

(1) Pressure gauge
(2) Vacuum gauge
(3) Adapter hose
(4) Vacuum hose
(5) Pedal force gauge

• Air tightness check

1) Start the engine and keep it running until vacuum pressure indicates point A of the vacuum gauge = 66.7 kPa (500 mmHg, 19.69 inHg). Do not depress the brake pedal at this time.

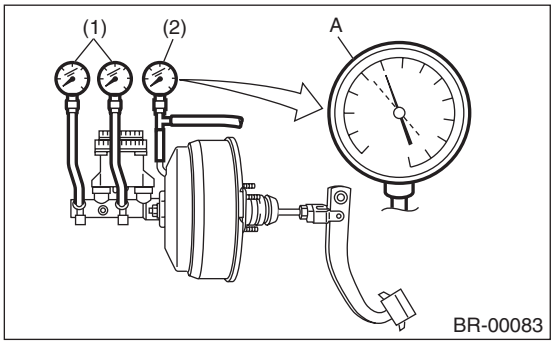

(1) Pressure gauge
(2) Vacuum gauge

2) Stop the engine and check the gauge. If the vacuum pressure drop within 15 seconds after stopping the engine is 3.3 kPa (25 mmHg, 0.98 inHg) or less, the function of brake booster is normal.
If faulty, the cause may be one of the following.
- Check valve malfunction
- Leak from vacuum hose
- Leak from shell joint section or stud bolt welded section
- Damaged diaphragm

- Leak from valve body seal and bearing section
- Leak from plate and seal assembly section
- Leak from poppet valve assembly section

• Loaded air tightness check

1) Start the engine and depress the brake pedal with a pedal force of 196 N (20 kgf, 44 lbf). Keep the engine running and keep the pedal pressed until a vacuum of point B = 66.7 kPa (500 mmHg, 19.69 inHg) is indicated on the vacuum gauge.

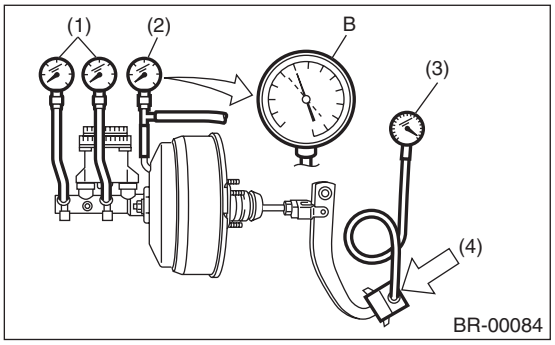

(1) Pressure gauge
(2) Vacuum gauge
(3) Pedal force gauge
(4) Depressed

2) Stop the engine and check the vacuum gauge.
If the vacuum pressure drop within 15 seconds after stopping the engine is 3.3 kPa (25 mmHg, 0.98 inHg) or less, the function of brake booster is normal.
If defective, refer to “AIR TIGHTNESS CHECK”.
<Ref. to BR-49, INSPECTION, Brake Booster.>
3) If the brake booster is faulty, replace it with a new part.

• Lack of boost action check

Turn the engine OFF, and set the value of the vacuum gauge to “0”. Then, check the fluid pressure when the brake pedal is depressed. The pressure must be greater than the specification listed.

Brake pedal operation force	N (kgf, lbf)	147 (15, 33)	294 (30, 66)
Fluid pressure	kPa (kgf/cm^2, psi)	533 (5, 77)	1,551 (16, 225)

• Boosting action check

Set the vacuum gauge reading to 66.7 kPa (500 mmHg, 19.69 inHg) with the engine running. Then, check the fluid pressure when the brake pedal is depressed. The pressure must be greater than the specification listed.

Brake pedal operation force	N (kgf, lbf)	147 (15, 33)	294 (30, 66)
Fluid pressure	kPa (kgf/cm^2, psi)	6,177 (63, 896)	11,273 (115, 1,635)

10.Brake Fluid

A: INSPECTION

1) Check that the amount of brake fluid is between the lines of “MIN” and “MAX”. If out of the specified range, refill or drain the fluid. If the fluid level is close to “MIN”, check the brake pad for wear and refill the fluid.
2) Check the fluid for discoloration. If the fluid is extremely discolored, replace with the new fluid.

B: REPLACEMENT

CAUTION:
• Do not let brake fluid come into contact with the painted surface of the vehicle body. Wash away with water immediately and wipe off if it is spilled by accident.
• Avoid mixing brake fluid of different brands to prevent fluid performance from degrading.
• Be careful not to allow dirt or dust to enter the reservoir tank.

NOTE:
• During the operation, keep the reservoir tank filled with brake fluid to prevent entry of air.
• Operate the brake pedal slowly.
• For convenience and safety, perform the work with 2 people.
• The required amount of brake fluid is approximately 500 m ℓ (16.9 US fl oz, 17.6 Imp fl oz) for the entire brake system.
1) Lift up the vehicle and set rigid racks at the specified locations, or keep the vehicle lifted.
2) Remove both the front and rear wheels.
3) Drain brake fluid from the reservoir tank.
4) Refill the reservoir tank with recommended brake fluid.

Recommended brake fluid:
FMVSS No. 116, DOT3, or DOT4
Perform the same procedure as for bleeding the brake line, until new brake fluid comes out from vinyl tube. <Ref. to BR-54, PROCEDURE, Air Bleeding.>

11.Air Bleeding

A: PROCEDURE

CAUTION:
• Do not let brake fluid come into contact with the painted surface of the vehicle body. Wash away with water immediately and wipe off if it is spilled by accident.
• Avoid mixing brake fluid of different brands to prevent fluid performance from degrading.
• Be careful not to allow dirt or dust to enter the reservoir tank.

1. MASTER CYLINDER

NOTE:
• When the master cylinder is replaced or the reservoir tank is empty, bleed the master cylinder.
• If bleeding of the master cylinder is not necessary, omit the following procedures, and perform bleeding of the brake line. <Ref. to BR-54, BRAKE LINE, PROCEDURE, Air Bleeding.>
1) Fill the reservoir tank of the master cylinder with brake fluid.

NOTE:
While bleeding air, keep the reservoir tank filled with brake fluid to prevent entry of air.
2) Disconnect the brake line at primary and secondary sides.
3) Wrap the master cylinder with a plastic bag.
4) Depress the brake pedal slowly and hold it.

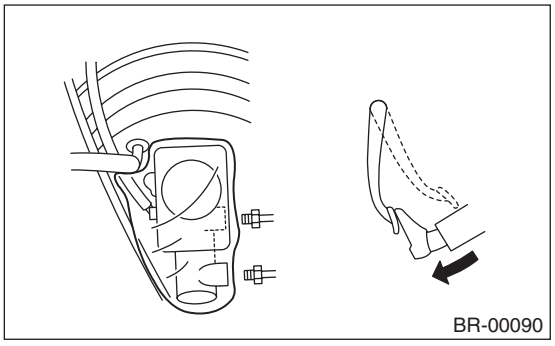
BR-00090

5) Plug the outlet plug with your finger, and then release the brake pedal.

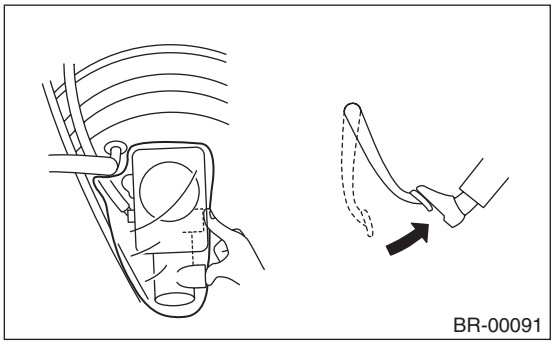
BR-00091

6) Repeat the step 4) and 5) several times.
7) Remove the plastic bag.
8) Install the brake pipe to the master cylinder.

Tightening torque:
Brake pipe flare nut: 19 N·m (1.94 kgf-m, 14.0 ft-lb)
9) Bleed air from the brake line. <Ref. to BR-54, BRAKE LINE, PROCEDURE, Air Bleeding.>

2. BRAKE LINE

1) When the master cylinder is replaced or the reservoir tank is empty, bleed the master cylinder before bleeding the brake line. <Ref. to BR-54, MASTER CYLINDER, PROCEDURE, Air Bleeding.>

2) Fill the reservoir tank of the master cylinder with brake fluid.

NOTE:
While bleeding air, keep the reservoir tank filled with brake fluid to prevent entry of air.

3) Attach one end of the vinyl tube to the air bleeder and the other end to the brake fluid container.

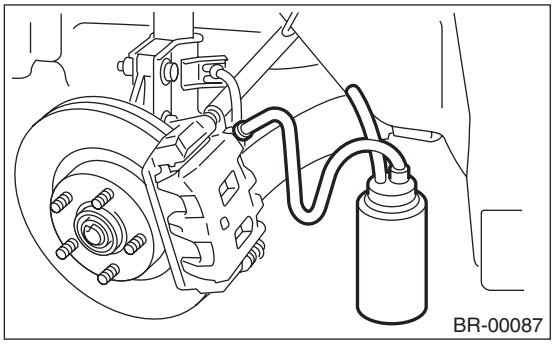

4) Depress the brake pedal several times, and hold it.
5) Loosen the air bleeder screw to drain brake fluid. Tighten the air bleeder quickly, and release the brake pedal.
6) Repeat the steps 4) to 5) until there are no more air bubbles in the vinyl tube.
7) Repeat the steps from 2) to 6) above to bleed air from each wheel.

NOTE:
Perform air bleed starting in the order from the farthest wheel cylinder from the master cylinder.

8) Securely tighten the air bleeder screws.

Tightening torque:
Air bleeder screw: 8 N·m (0.82 kgf-m, 5.9 ft-lb)

9) Check that there are no brake fluid leaks in the entire brake system.
10) Check the pedal stroke.
Run the engine at idle after warming up the engine, and depress the brake pedal with a force of 500 N (51 kgf, 112 lbf). Measure the distance between the brake pedal and steering wheel. Release the pedal, and measure the distance between pedal and steering wheel again.

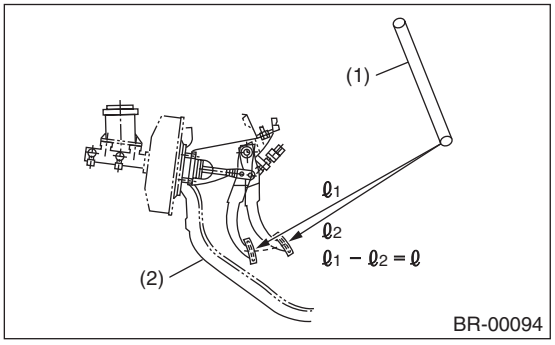

(1) Steering wheel
(2) Toe board

Specification of pedal stroke:
When depressing the pedal with a force of 500 N (51 kgf, 112 lbf).
110 mm (4.33 in) or less

11) If the distance is more than specification, there is a possibility of air being caught in the brake line. Bleed the brake line of all air until the pedal stroke meets the specification.
12) Operate the hydraulic control unit in the sequence control mode. <Ref. to VDC-17, ABS Sequence Control.>
13) Check the pedal stroke again.
14) If the distance is more than specification, there is a possibility of air being caught in the hydraulic unit. Repeat above steps 2) to 9) until the pedal stroke meets the specification.
15) Fill the reservoir tank with brake fluid up to the “MAX” level.
16) Perform a road test and ensure that the brakes operate normally.

12.Brake Hose

A: REMOVAL

1. FRONT BRAKE HOSE

1) Separate the brake pipe (b) from brake hose (a) using a flare nut wrench.
2) Remove the clamp, strut mounting bolt and union bolt, and remove the front brake hose.

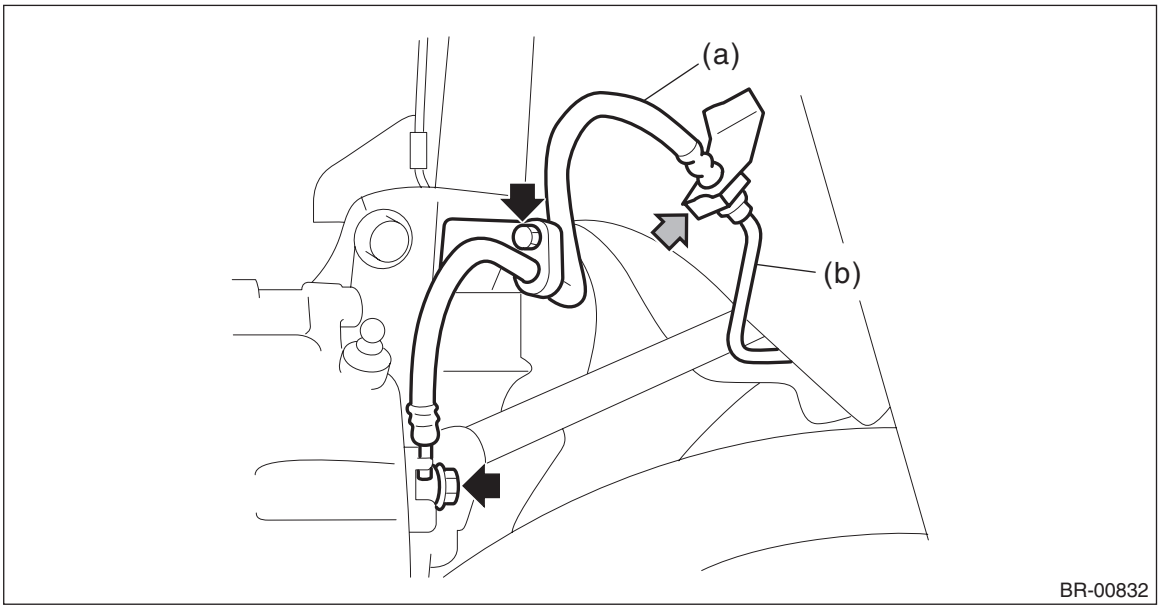

2. REAR BRAKE HOSE

1) Remove the brake hose bracket bolt and union bolt.

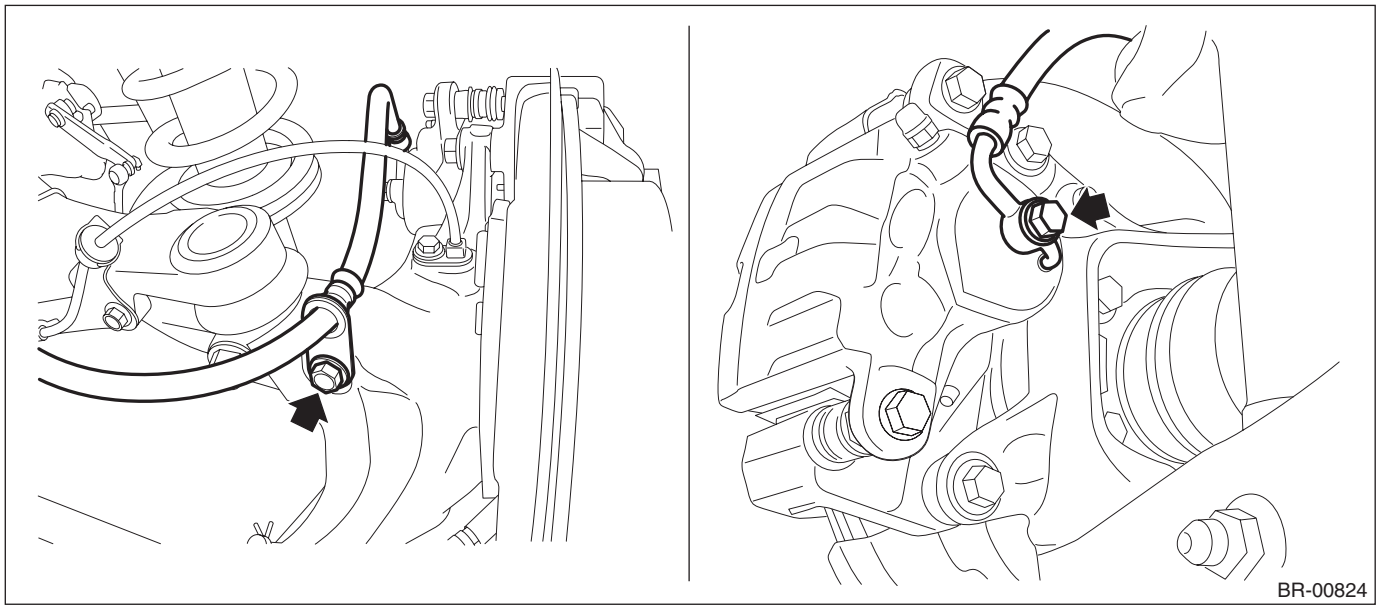

2) Separate the brake pipe (a) using a flare nut wrench.

3) Remove the brake hose clamp (b), and remove the rear brake hose (c).

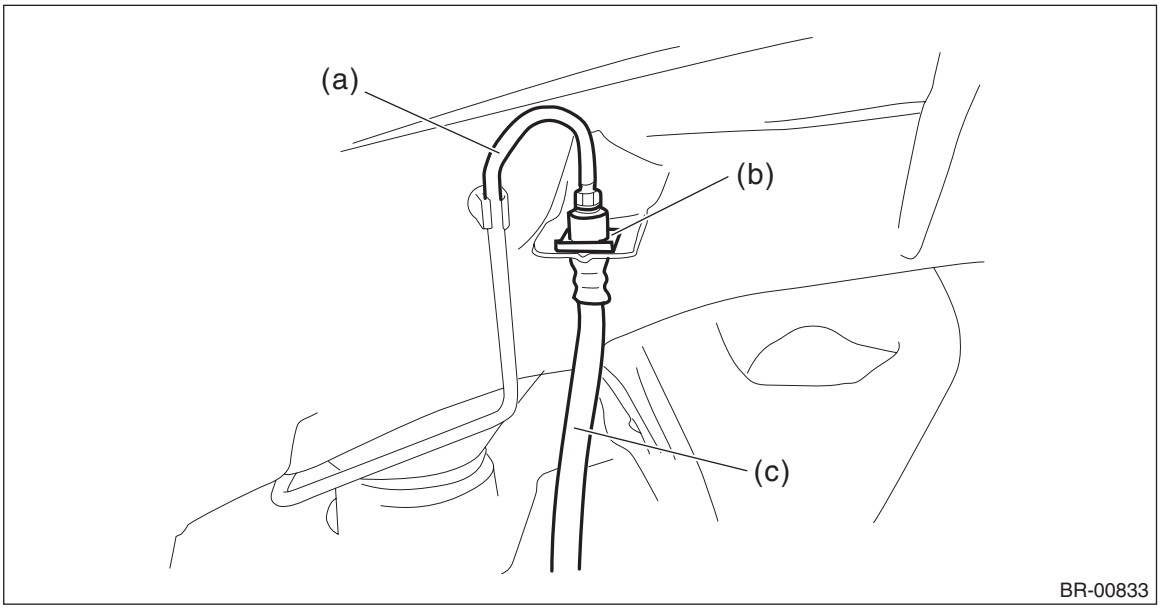

B: INSTALLATION

1. FRONT BRAKE HOSE

1) Secure the brake hose to strut mount.

Tightening torque:
Brake hose: 33 N·m (3.36 kgf-m, 24.3 ft-lb)

2) Connect the brake hose to the front caliper body using a new gasket.

Tightening torque:
Union bolt: 18 N·m (1.84 kgf-m, 13.3 ft-lb)

3) Position the disc in straight position and route the brake hose through the hole in the bracket on the wheel apron side.

CAUTION:
Do not twist the brake hose.

4) Temporarily tighten the flare nut which connects brake pipe and hose.
5) Secure the brake hose to wheel apron bracket with clamp.
6) Tighten the flare nut to the specified torque.

Tightening torque:
Brake pipe flare nut: 15 N·m (1.53 kgf-m, 11.1 ft-lb)

7) Bleed air from the brake system. <Ref. to BR-54, PROCEDURE, Air Bleeding.>

2. REAR BRAKE HOSE

1) Route the brake hose through the hole of bracket, and lightly tighten the flare nut to connect brake pipe.
2) Insert the clamp to secure brake hose.

Tightening torque:
Brake hose bracket: 33 N·m (3.36 kgf-m, 24.3 ft-lb)

3) Install the brake hose to rear caliper body using a new gasket.

Tightening torque:
Union bolt: 18 N·m (1.84 kgf-m, 13.3 ft-lb)

4) Tighten the flare nut to the specified torque.

Tightening torque:
Brake pipe flare nut: 15 N·m (1.53 kgf-m, 11.1 ft-lb)

5) Bleed air from the brake system. <Ref. to BR-54, PROCEDURE, Air Bleeding.>

C: INSPECTION

Check the hose for crack and damage, and also check the connection for fluid leakage. If any faulty is found, repair or replace the relevant part.

13.Brake Pipe

A: REMOVAL

CAUTION:
• Airbag system wiring harness and connectors are colored yellow. Do not use electrical test equipment on these circuits.
• Be careful not to damage the airbag system wiring harness when servicing the center brake pipe.
• When removing the brake pipe, do not bend.

NOTE:
The airbag system wiring harness is routed near the center brake pipe.

B: INSTALLATION

CAUTION:
• Airbag system wiring harness and connectors are colored yellow. Do not use electrical test equipment on these circuits.
• Be careful not to damage the airbag system wiring harness when servicing the center brake pipe.
• When installing the brake pipe, do not bend.
• After installing the brake pipe and hose, perform air bleed.
• After installing the brake hoses, make sure that they do not contact the tires or suspension assembly, etc.

NOTE:
The airbag system wiring harness is routed near the center brake pipe.

Tightening torque:
Front brake pipes & hoses: <Ref. to BR-7, FRONT BRAKE PIPES AND HOSES, COMPONENT, General Description.>
Center & rear brake pipes and hoses: <Ref. to BR-8, CENTER AND REAR BRAKE PIPES AND HOSES, COMPONENT, General Description.>

C: INSPECTION

Check the pipe for crack and damage, and also check the connection for fluid leakage. If any faulty is found, repair or replace the relevant part.

NOTE:
Use a mirror when inspecting back sides and other locations which are hard to see.

14.Brake Pedal

A: REMOVAL

1. AT MODELS AND CVT MODELS

1) Disconnect the ground cable from battery.
2) Remove the instrument panel lower cover.
   (1) Remove the clips, and remove the instrument panel side cover LH.

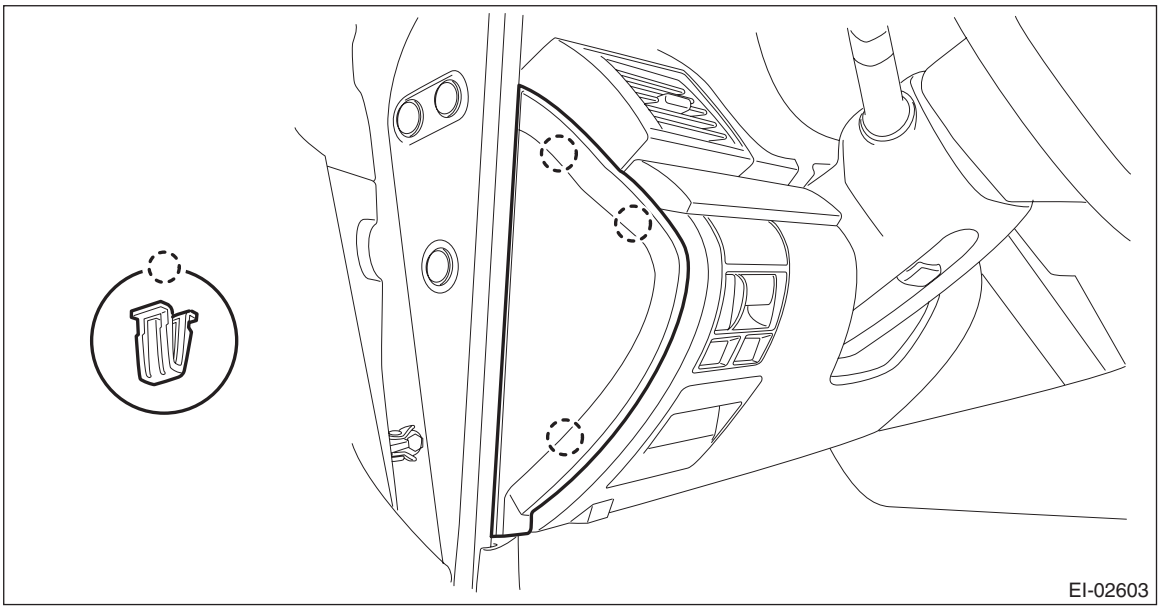

   (2) Remove the clips and data link connector, and remove the instrument panel lower cover under.

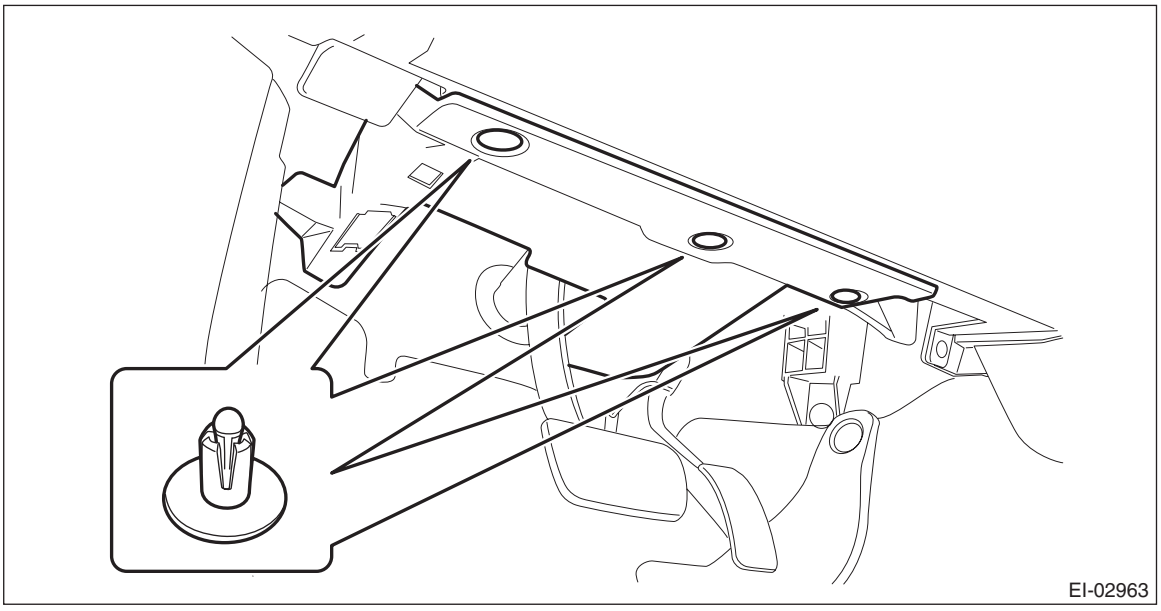

(3) Remove the bolts, and remove the knee guard panel.

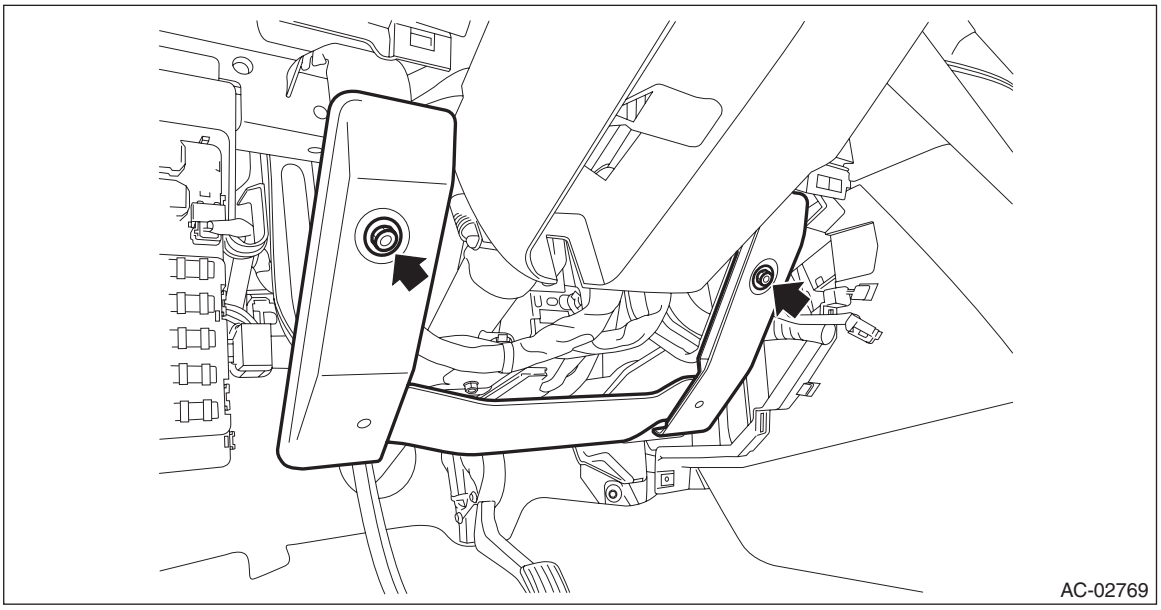

(4) Remove the screws and clips and release the claws, and remove the instrument panel lower cover while disconnecting the harness connectors.

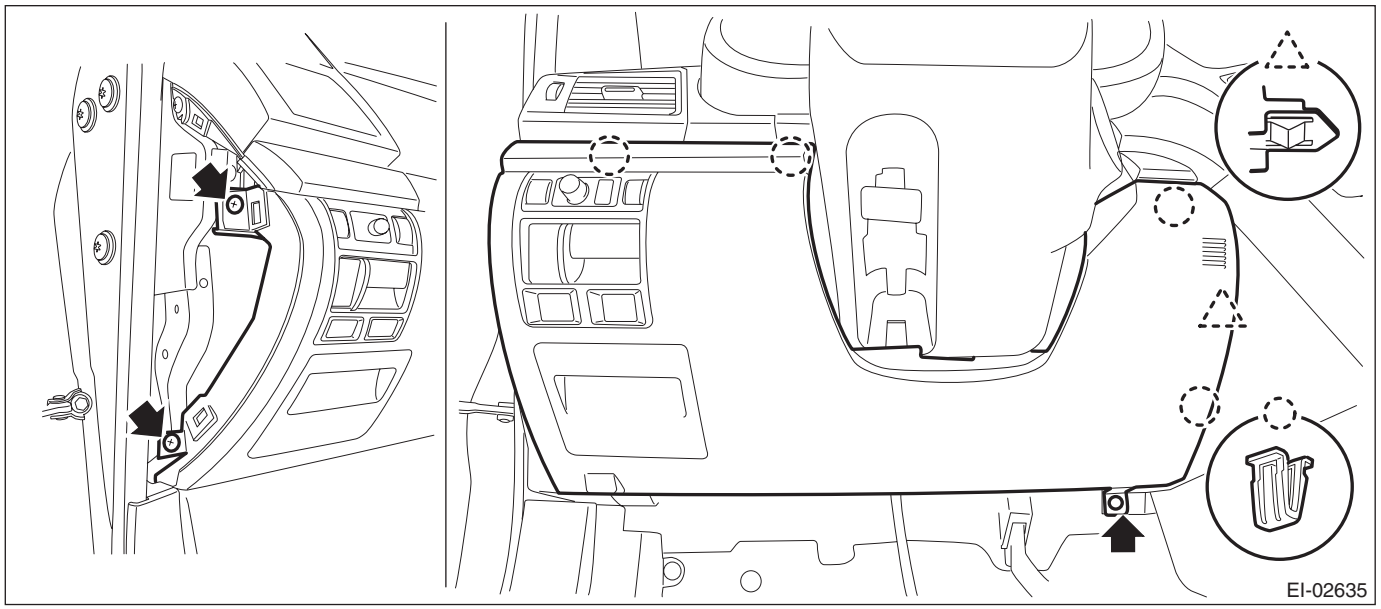

3) Remove the brake pedal assembly.
(1) Disconnect the stop light switch connector.
(2) Remove the snap pin (a) and clevis pin (b), and remove the operating rod from the brake pedal.

NOTE:
• Use special care when handling the operating rod. If excessive force is applied to the operating rod, the angle may change by ±3°, and it may result in damage to power piston cylinder.
• Do not change the push rod length.

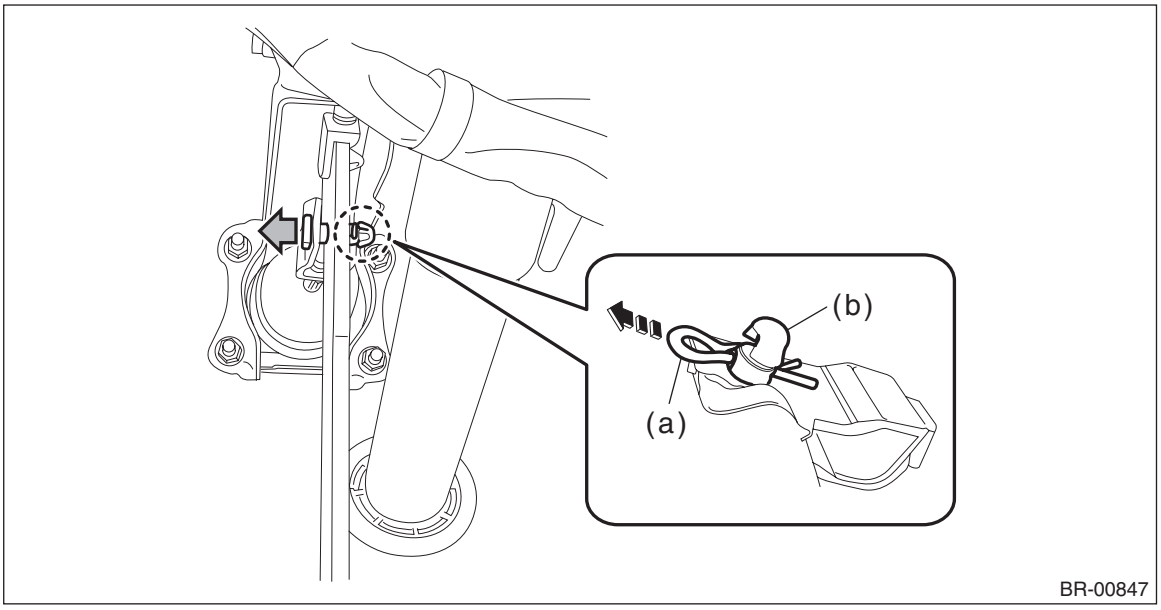

(3) Remove the bolt and nut, and then detach the brake pedal assembly.

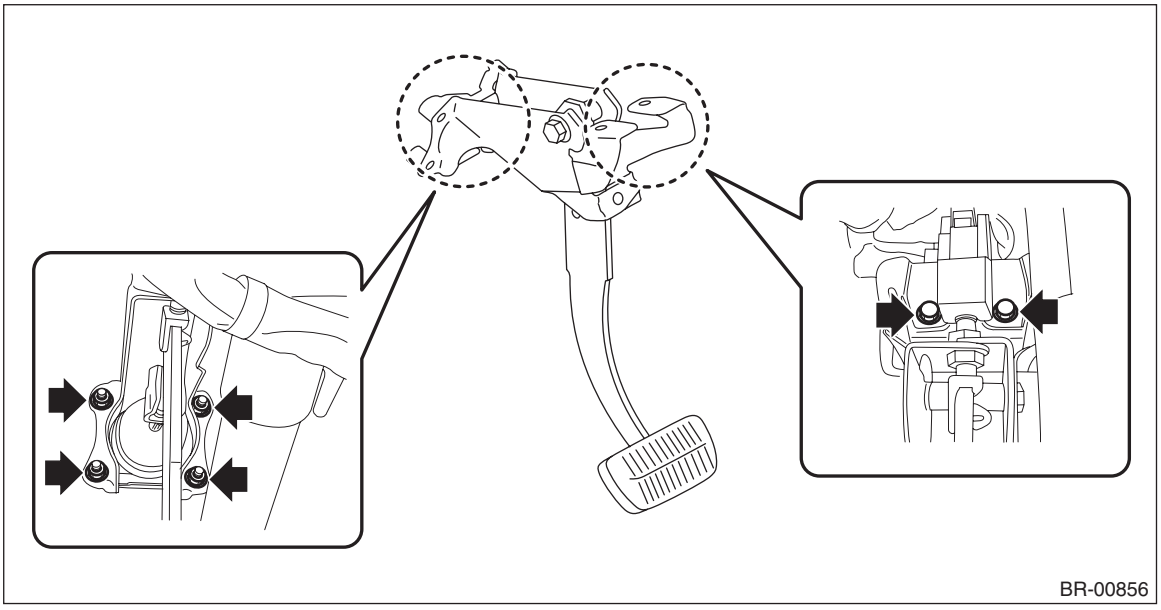

2. MT MODEL

NOTE:
Brake pedal is integrated with the clutch pedal.
For removal procedures of the brake pedal, refer to Clutch section. <Ref. to CL-26, REMOVAL, Clutch Pedal.>

B: INSTALLATION

1) Install each part in the reverse order of removal.

CAUTION:
- **Apply grease to the snap pin to prevent the operating rod from wear.**
- **Replace the clevis pin with new parts, and apply thin coat of NIGTIGHT LYW No. 2 grease to the clevis pin.**

Tightening torque:
Brake pedal: 18 N·m (1.84 kgf-m, 13.3 ft-lb)

2) Check that the brake light operate properly.
3) Check the brake pedal after installation. <Ref. to BR-63, INSPECTION, Brake Pedal.>

C: INSPECTION

1) Move the brake pedal pads in a horizontal direction with a force of approx. 10 N (1 kgf, 2 lbf), and check that the pedal deflection is in the range of specifications.

CAUTION:
If excessive deflection is noted, replace with a new bushing.

Deflection of brake pedal:
Wear limit: 5.0 mm (0.197 in) or less

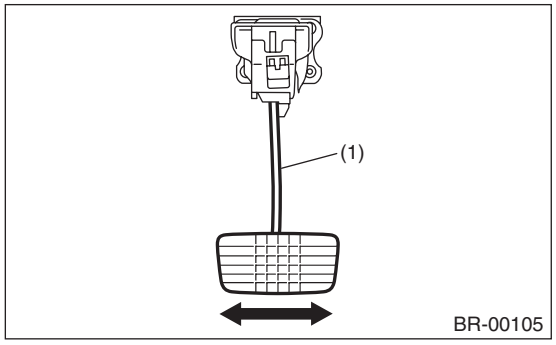

(1) Brake pedal

2) Check the position of the pedal pad.

Pedal height L:
140 — 150 mm (5.51 — 5.91 in)

Brake pedal free play A:
2 — 5 mm (0.079 — 0.197 in) [When pulling the brake pedal upward with a force of less than 10 N (1 kgf, 2 lbf).]

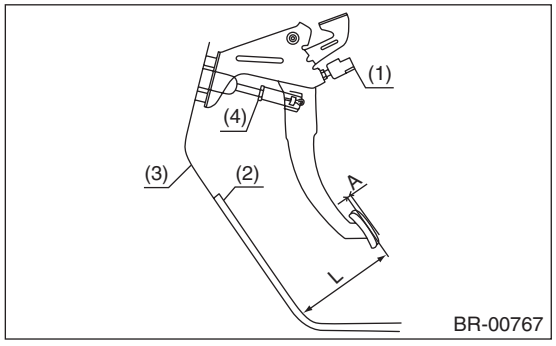

(1) Stop light switch
(2) Mat
(3) Toe board
(4) Brake booster operating rod

3) If it is not within the specification, loosen the lock nuts of brake booster operating rod, and rotate the rod to adjust the pedal height L within the specification.
4) Tighten the lock nut.

Tightening torque:
Operating lock nut: 22 N·m (2.24 kgf-m, 16.2 ft-lb)

15.Stop Light Switch

A: REMOVAL

1) Disconnect the ground cable from battery.
2) Remove the instrument panel lower cover.
   (1) Remove the clips, and remove the instrument panel side cover LH.

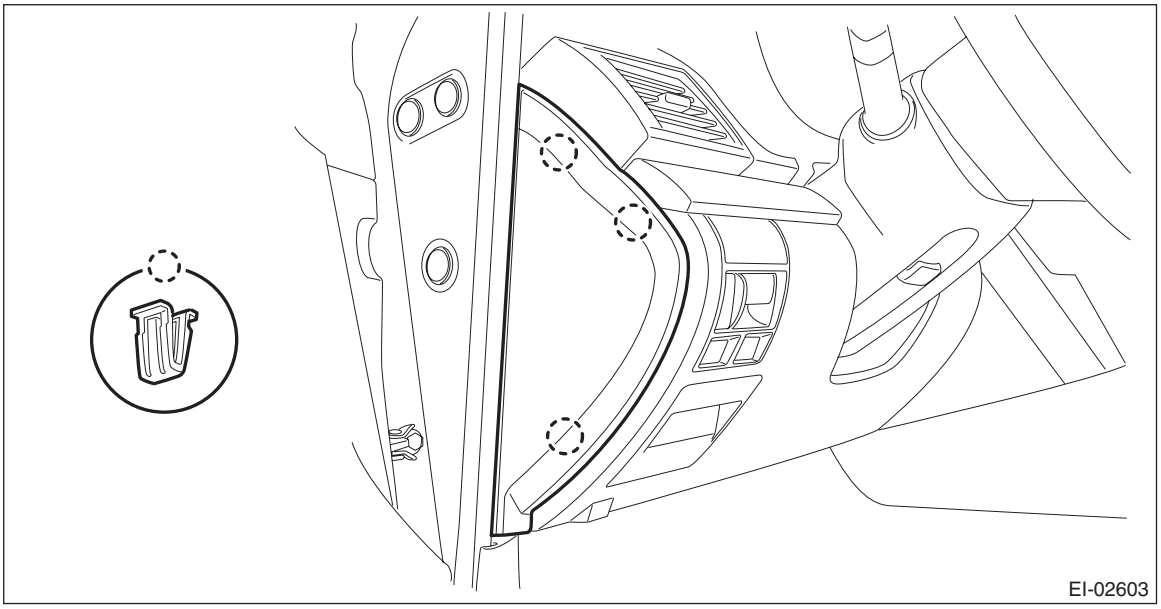

   (2) Remove the clips and data link connector, and remove the instrument panel lower cover under.

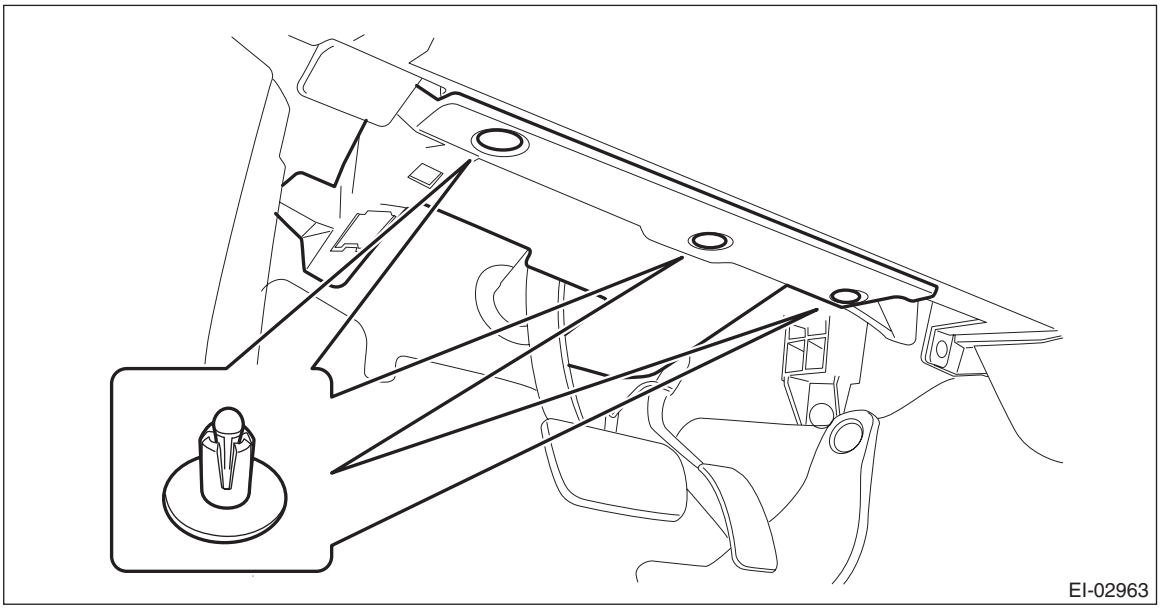

(3) Remove the bolts, and remove the knee guard panel.

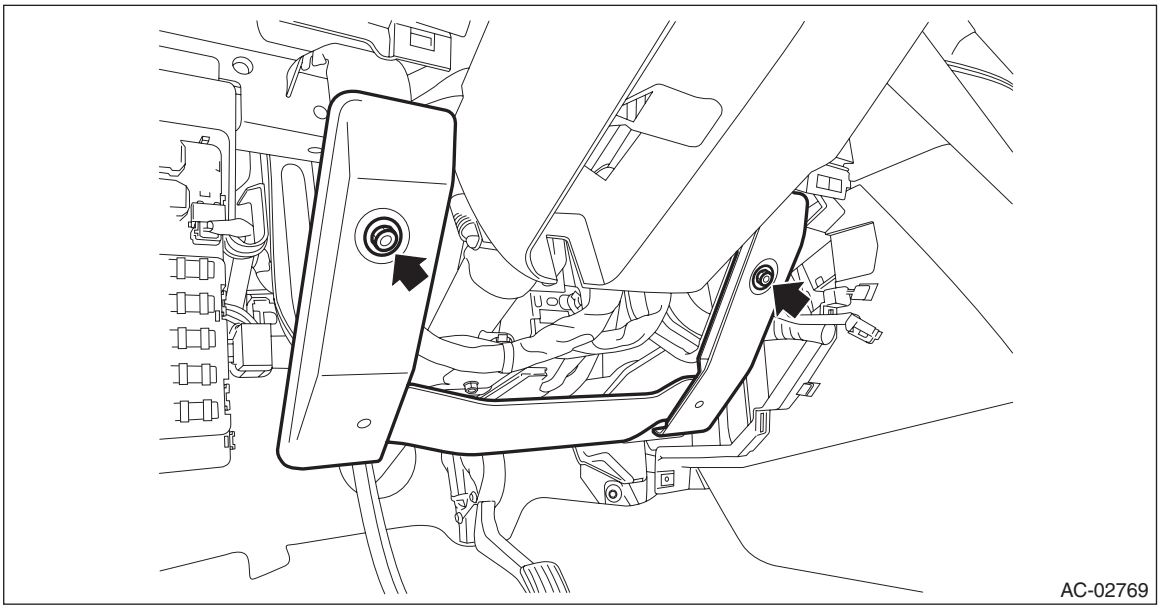

(4) Remove the screws and clips and release the claws, and remove the instrument panel lower cover while disconnecting the harness connectors.

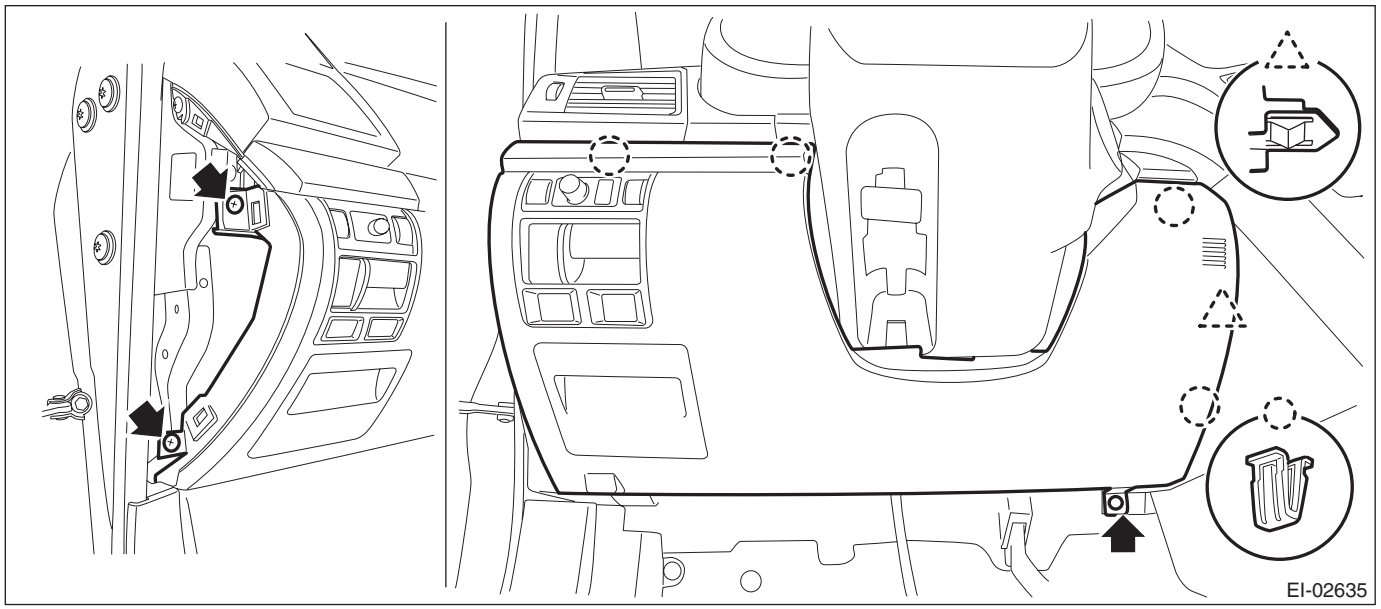

3) Remove the stop light switch.

(1) Disconnect the stop light switch connector (a).

(2) Remove the nut (b), and remove the stop light switch.

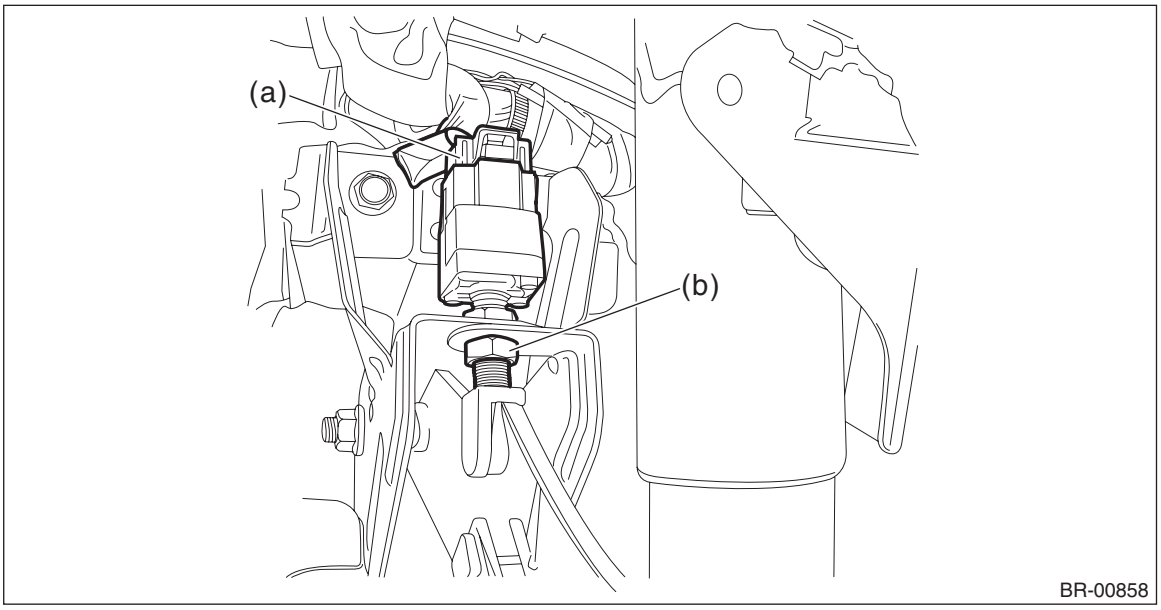

B: INSTALLATION

1) Install the stop light switch onto the bracket with screws and position it with the nut.
2) Adjust the stop light switch position, and then tighten the nut. <Ref. to BR-68, ADJUSTMENT, Stop Light Switch.>
3) Install each part in the reverse order of removal.

Tightening torque:
Stop light switch: 8 N·m (0.82 kgf-m, 5.9 ft-lb)

C: INSPECTION

1. CHECK SPECIFIED POSITION

1) If the stop light switch does not operate properly or if it is not secured at the specified position, replace with a new part.

Specified position L:
2.8 mm$^{+1.5\ mm}_{-0\ mm}$ (0.11 in$^{+0.06\ in}_{-0\ in}$)

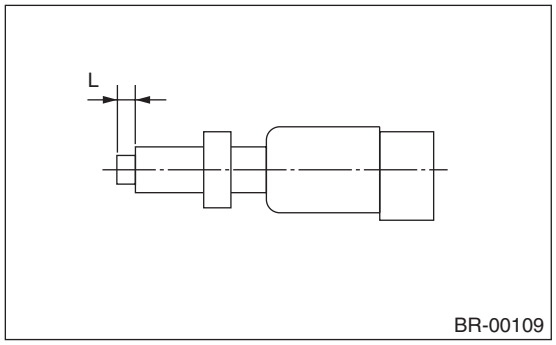

2) Measure the clearance between the threaded end of the stop light switch and the stopper.

CAUTION:
Be careful not to rotate the stop light switch.

Stop light switch clearance A:
0.8 mm (0.031 in)

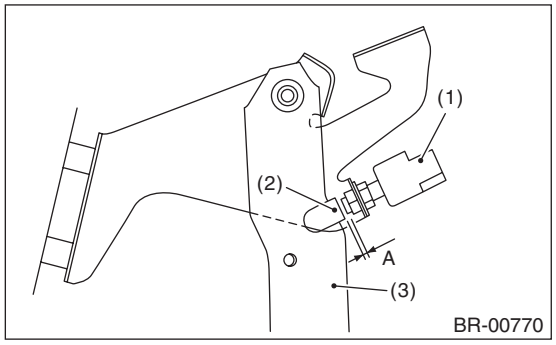

(1) Stop light switch
(2) Stopper
(3) Brake pedal

3) Adjust the position of the stop light switch if the inspection result is not within the standard value. <Ref. to BR-68, ADJUSTMENT, Stop Light Switch.>

2. CHECK RESISTANCE

1) Disconnect the stop light switch connector.
2) Measure the resistance between stop light switch terminals.

Preparation tool: Circuit tester

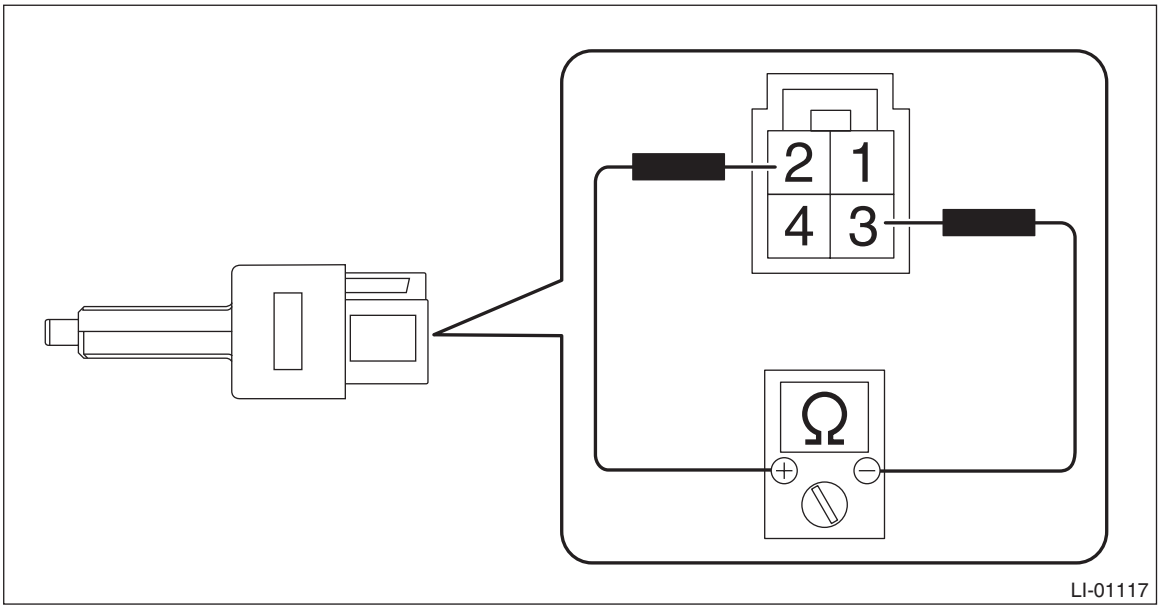

Terminal No.	Inspection conditions	Standard
2 — 3	When brake pedal is depressed	Less than 1 Ω
	When brake pedal is released	1 MΩ or more

3) Replace the stop light switch if the inspection result is not within the standard value.

D: ADJUSTMENT

1) Loosen the lock nut, and adjust the stop light switch position until the clearance (A) between the threaded end of the stop light switch and stopper becomes 0.8 mm (0.031 in). Then, tighten the lock nut.
2) Tighten the lock nut.

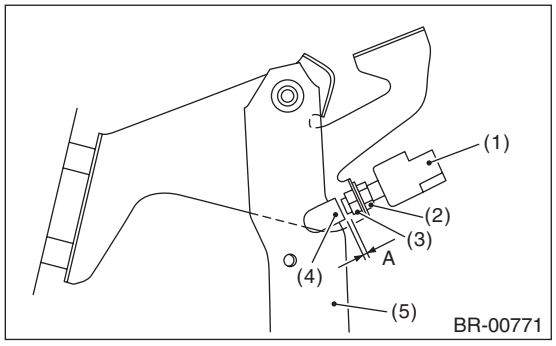

(1) Stop light switch
(2) Lock nut A
(3) Lock nut B
(4) Stopper
(5) Brake pedal

16.General Diagnostic Table

A: INSPECTION

	Trouble and possible cause	Corrective action
1. Insufficient braking	(1) Fluid leakage from the hydraulic mechanism	Repair or replace. (cup, piston seal, piston boot, master cylinder piston kit, pipe or hose)
	(2) Entry of air into the hydraulic mechanism	Bleed air.
	(3) Wear, deteriorated surface material, water or fluid on lining	Replace, grind or clean.
	(4) Improper operation of master cylinder, disc caliper, brake booster or check valve	Repair or replace.
2. Unstable or uneven braking	(1) Fluid on lining or rotor	Correct the cause of fluid leakage, and clean or replace.
	(2) Rotor defective	Repair or replace the rotor.
	(3) Improper lining contact, deteriorated surface, deteriorated or worn lining material	Repair by grinding, or replace.
	(4) Deformed back plate	Repair or replace.
	(5) Overinflation of tires	Adjust the air pressure.
	(6) Defective wheel alignment	Adjust alignment.
	(7) Loose back plate or support installation bolt	Tighten to the specified torque.
	(8) Faulty wheel bearing	Replace.
	(9) Defective hydraulic system	Replace the cylinder, brake pipe or hose.
	(10) Unstable performance of the parking brake	Check, adjust or replace the rear brake and cable system.
3. Excessive pedal stroke	(1) Entry of air into the hydraulic mechanism	Bleed air.
	(2) Excessive play in the master cylinder push rod	Adjust.
	(3) Fluid leakage from the hydraulic mechanism	Repair or replace. (cup, piston seal, piston boot, master cylinder piston kit, pipe or hose)
	(4) Improper lining contact or worn lining	Repair or replace.
4. Brake dragging or improper brake return	(1) Insufficient pedal play	Adjust play.
	(2) Improper master cylinder return	Clean or replace the cylinder.
	(3) Clogged hydraulic system	Replace.
	(4) Improper return or adjustment of parking brake	Repair or adjust.
	(5) Weakened spring tension or breakage of shoe return spring	Replace the spring.
	(6) Improper disc caliper operation	Repair or replace.
	(7) Faulty wheel bearing	Replace.
5. Brake noise (1) (creaking sound)	(1) Hardened or deteriorated brake pad	Replace the pad.
	(2) Worn brake pad	Replace the pad.
	(3) Loose back plate or support installation bolt	Tighten to the specified torque.
	(4) Loose wheel bearing	Tighten to the specified torque.
	(5) Dirty rotor	Clean the rotor, or clean and replace brake assembly.
6. Brake noise (2) (hissing sound)	(1) Worn brake pad	Replace the pad.
	(2) Improperly installed pad	Correct or replace the pad.
	(3) Loose or bent rotor	Retighten or replace.
7. Brake noise (3) (click sound)	Excessively worn pad or support	Replace the pad or the support.

PARKING BRAKE

PB

Page

1. General Description 2
2. Parking Brake System 5
3. Parking Brake Actuator 6
4. Parking Brake Assembly (Rear Disc Brake) 10
5. Parking Brake Switch 16
6. Emergency Release of Electronic Parking Brake 19
7. General Diagnostic Table 21

1. General Description

A: SPECIFICATION

Model		Rear disc brake
Type		Electronic type, drum in disc brakes
Effective drum diameter	mm (in)	190 (7.48)
Lining dimension (Length × Width × Thickness)	mm (in)	165.8 × 30.0 × 2.8 (6.53 × 1.181 × 0.11)
Clearance adjustment		Manual adjustment

B: COMPONENT

1. PARKING BRAKE (REAR DISC BRAKE)

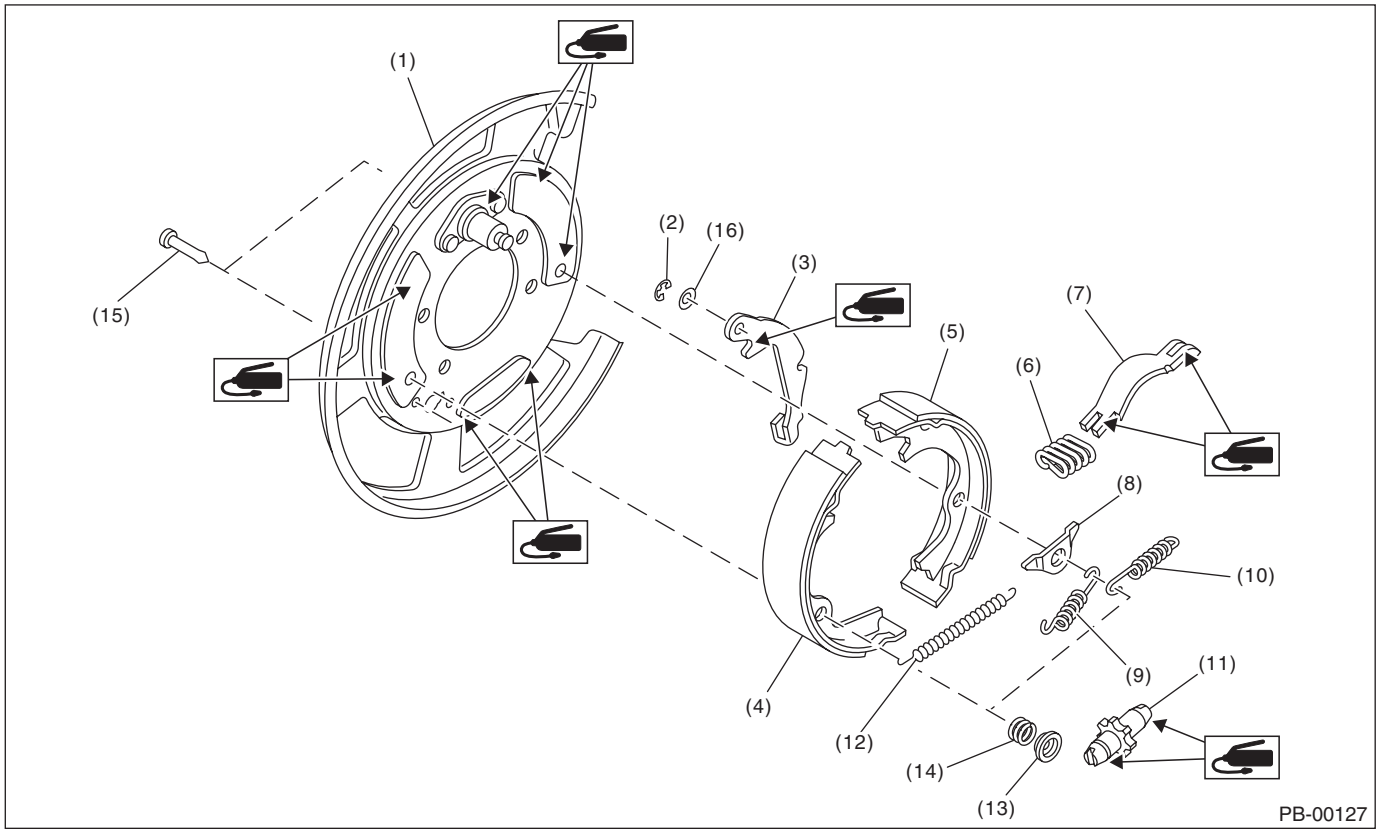

(1) Back plate
(2) Retainer
(3) Lever
(4) Parking brake shoe (Primary)
(5) Parking brake shoe (Secondary)
(6) Strut spring
(7) Strut
(8) Shoe guide plate
(9) Primary return spring
(10) Secondary return spring
(11) Adjusting screw
(12) Adjusting spring
(13) Shoe hold-down cup
(14) Shoe hold-down spring
(15) Shoe hold-down pin
(16) Wave washer

2. PARKING BRAKE ACTUATOR

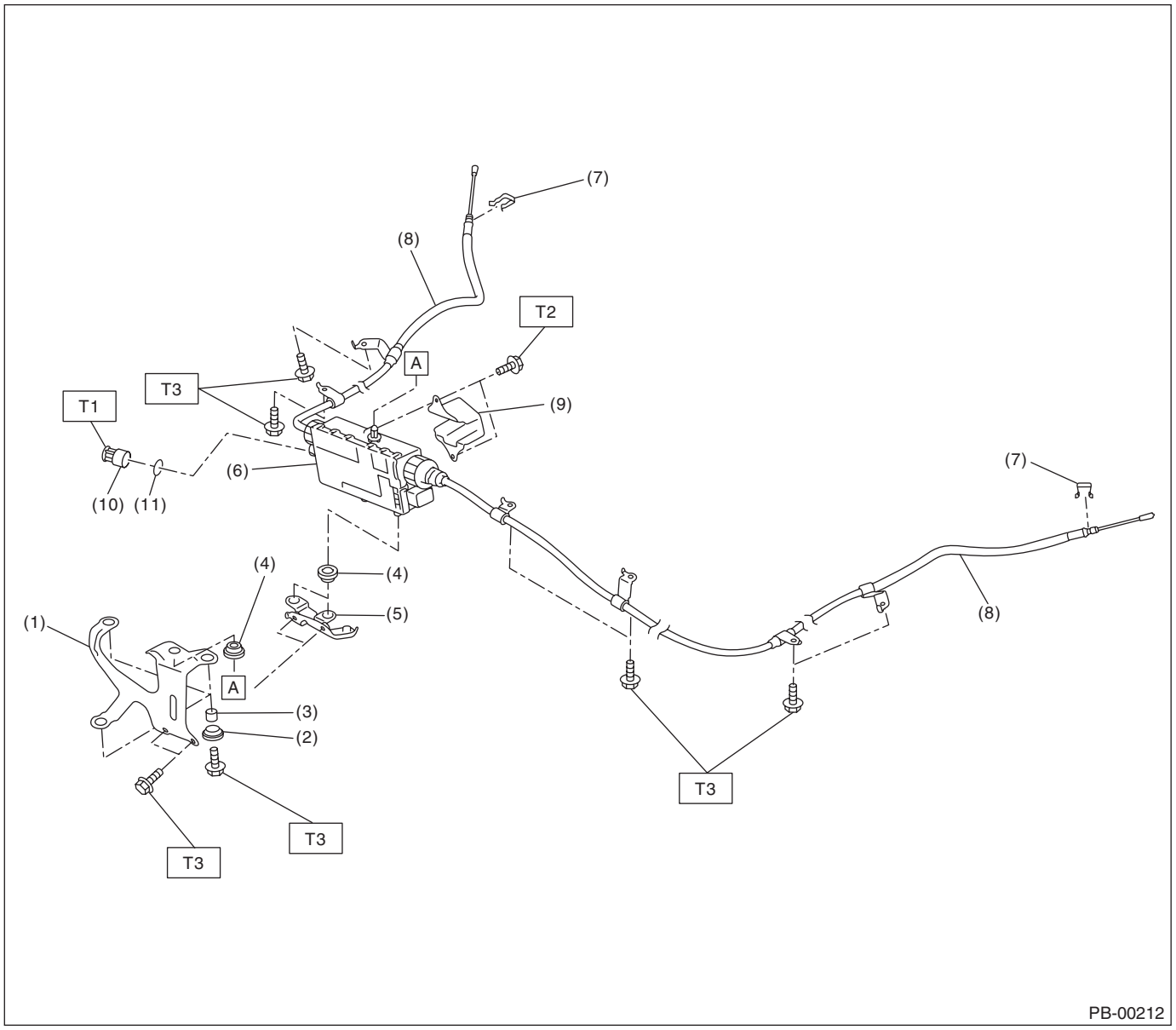

(1) Upper bracket
(2) Bushing
(3) Spacer
(4) Bushing
(5) Bracket
(6) Brake actuator
(7) Clamp
(8) Parking brake cable
(9) Tank bracket
(10) Cap
(11) O-ring

Tightening torque:N·m (kgf-m, ft-lb)
T1: 3 (0.31, 2.2)
T2: 7.5 (0.76, 5.5)
T3: 18 (1.84, 13.3)

C: CAUTION

• Wear appropriate work clothing, including a helmet, protective goggles and protective shoes when performing any work.
• Before removal, installation or disassembly, be sure to clarify the failure. Avoid unnecessary removal, installation, disassembly and replacement.
• Vehicle components are extremely hot after driving. Be wary of receiving burns from heated parts.
• Use SUBARU genuine grease etc. or equivalent. Do not mix grease etc. of different grades or manufacturers.
• Be sure to tighten fasteners including bolts and nuts to the specified torque.
• Place shop jacks or rigid racks at the specified points.
• Make sure grease does not come into contact with the parking shoes.

D: PREPARATION TOOL

1. SPECIAL TOOL

ILLUSTRATION	TOOL NUMBER	DESCRIPTION	REMARKS
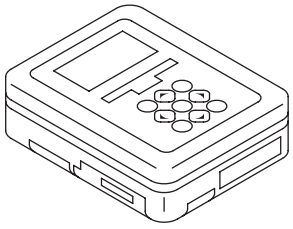 ST1B022XU0	1B022XU0	SUBARU SELECT MONITOR III KIT	Used for setting of each function and trouble-shooting for electrical system.

2. GENERAL TOOL

TOOL NAME	REMARKS
Circuit tester	Used for measuring resistance, voltage and current.

2. Parking Brake System

A: WIRING DIAGRAM

Refer to “Parking Brake / Brake Fluid Level Warning Light System” in the wiring diagram. <Ref. to WI-194, WIRING DIAGRAM, Parking Brake / Brake Fluid Level Warning Light System.>

B: ELECTRICAL SPECIFICATION

Refer to “Control Module I/O Signal” of “PARKING BRAKE (DIAGNOSTICS)”. <Ref. to PB(diag)-12, ELECTRICAL SPECIFICATION, Control Module I/O Signal.>

C: INSPECTION

Refer to “PARKING BRAKE (DIAGNOSTICS)”. <Ref. to PB(diag)-2, Basic Diagnostic Procedure.>

D: NOTE

For procedure of each component in the parking brake system, refer to the respective section.

- Parking brake actuator: <Ref. to PB-6, Parking Brake Actuator.>
- Parking brake assembly (rear disc brake): <Ref. to PB-10, Parking Brake Assembly (Rear Disc Brake).>
- Parking brake switch: <Ref. to PB-16, Parking Brake Switch.>
- Emergency release of electronic parking brake: <Ref. to PB-19, Emergency Release of Electronic Parking Brake.>

3. Parking Brake Actuator

A: REMOVAL

CAUTION:
Since the parking brake actuator and parking brake cable are integrated as a unit, do not disassemble them.

1) Lift up the vehicle, and then remove the rear wheels.
2) Perform “Parking Brake Removal Mode” after connecting the Subaru Select Monitor. <Ref. to PB(diag)-18, PARKING BRAKE REMOVAL MODE, OPERATION, Subaru Select Monitor.>

CAUTION:
Be sure to lift up the vehicle before performing the “Parking Brake Removal Mode”.

3) Disconnect the ground cable from battery.
4) Remove the fuel tank protector.
   (1) Remove the bolts, and remove the fuel tank protector.
   (2) Remove the clips.

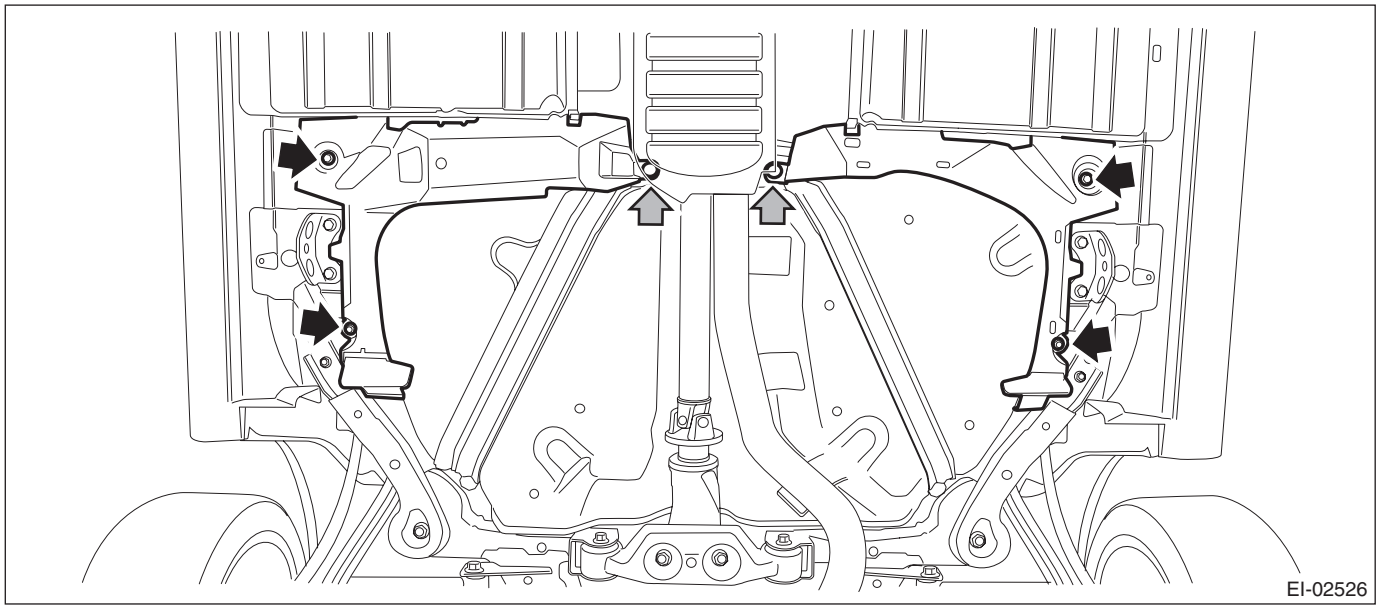

5) Remove the parking brake actuator.
   (1) Remove the parking brake cable from parking brake assembly. <Ref. to PB-10, REMOVAL, Parking Brake Assembly (Rear Disc Brake).>

(2) Remove the bolt and detach the cable clamp.

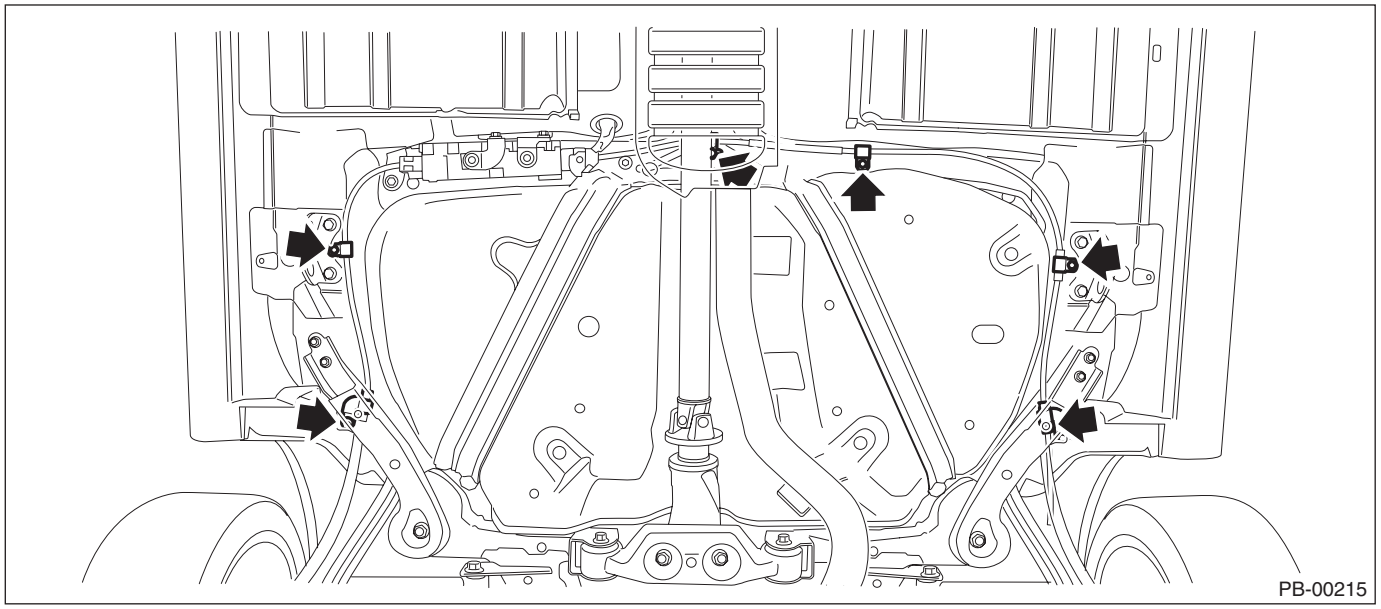

NOTE:
Make a line marking to confirm the twist of parking cable, and then perform the following procedures:

(3) Push the lock (a), and pull up the lock lever (b).
(4) With the lock lever pulled up, disconnect the parking brake actuator connector.
(5) Remove the bolts and remove the parking brake actuator.

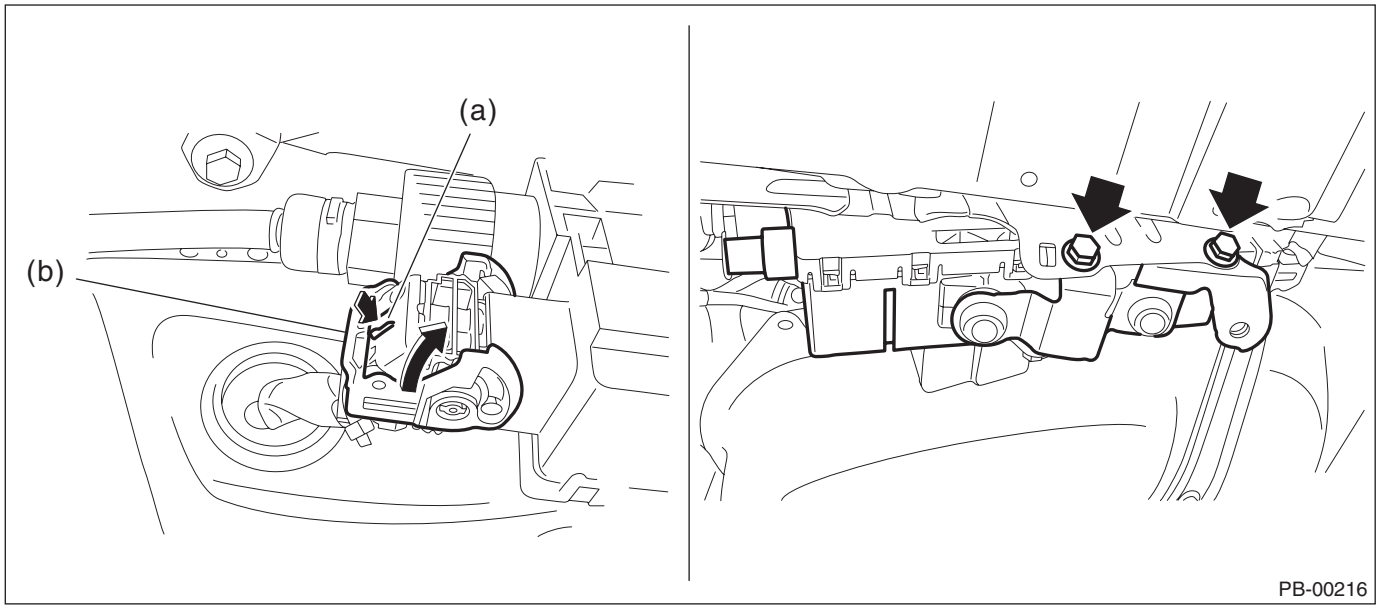

B: INSTALLATION

1) Install the parking brake actuator assembly.
(1) Connect the parking brake actuator connector.

CAUTION:
Securely lock the locking connector (a).

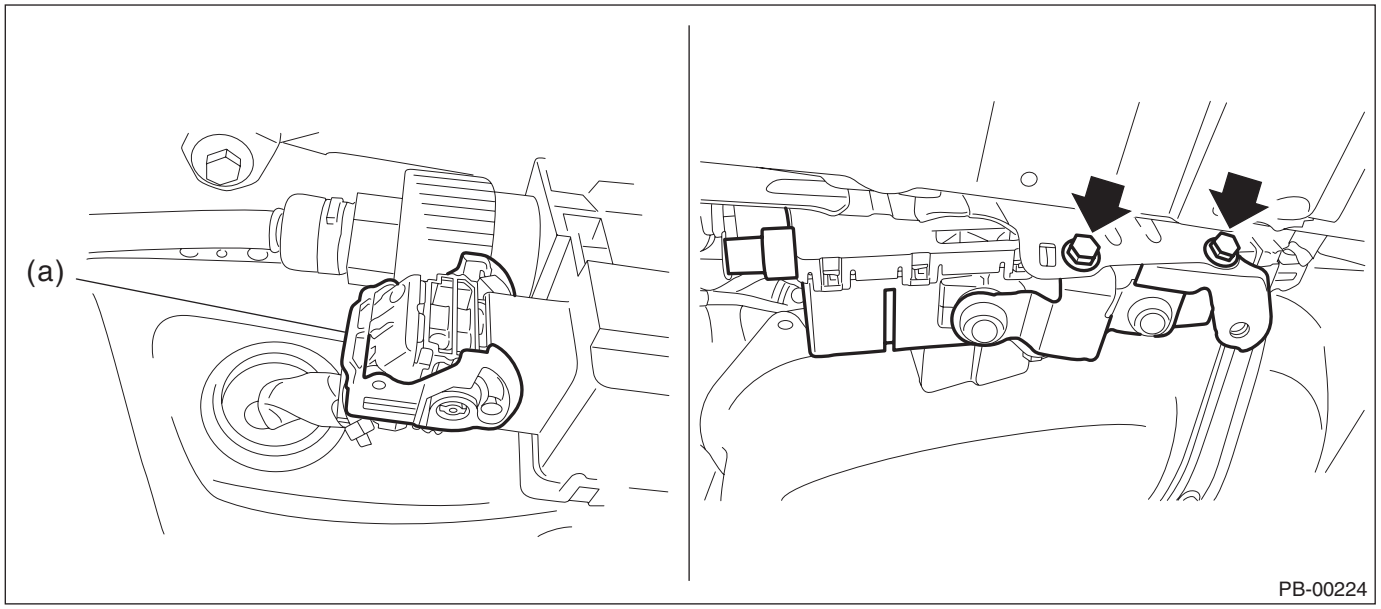

(2) Install the parking brake actuator.

Tightening torque:
18 N·m (1.84 kgf-m, 13.3 ft-lb)

(3) Check that the parking brake cable is not twisted, and install the cable clamps in the order of (a) to (f).

CAUTION:
- **Perform the installation with the line marking of the parking brake cable facing downward.**
- **Pay special attention to the cable clamps (d) and (f) because the cable is easy to be twisted due to these clamps.**

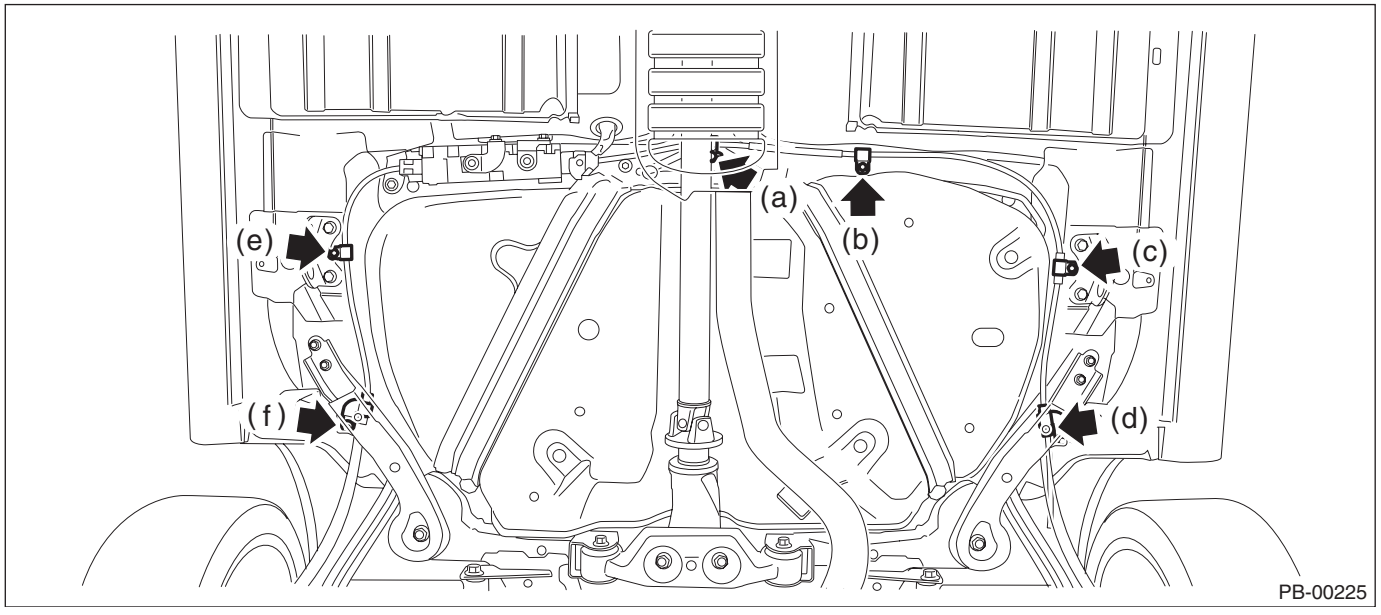

Tightening torque:
18 N·m (1.84 kgf-m, 13.3 ft-lb)

2) Install each part in the reverse order of removal.

3) Park the vehicle on a level ground with the four wheels on the ground.
4) Connect the Subaru Select Monitor to perform the following operations.
• “Force Sensor Calibration Mode”: <Ref. to PB(diag)-18, FORCE SENSOR CALIBRATION MODE, OPERATION, Subaru Select Monitor.>
• “Clutch Sensor Calibration Mode” (MT model only): <Ref. to PB(diag)-20, CLUTCH SENSOR CALIBRATION MODE, OPERATION, Subaru Select Monitor.>

4. Parking Brake Assembly (Rear Disc Brake)

A: REMOVAL

1) Lift up the vehicle, and then remove the rear wheels.
2) Perform “Parking Brake Removal Mode” after connecting the Subaru Select Monitor. <Ref. to PB(diag)-18, PARKING BRAKE REMOVAL MODE, OPERATION, Subaru Select Monitor.>

CAUTION:
Be sure to lift up the vehicle before performing the “Parking Brake Removal Mode”.
3) Disconnect the ground cable from battery.
4) Remove the rear disc brake caliper from the rear axle housing.
   (1) Remove the bolt from the brake hose bracket.
   (2) Remove the mounting bolts, and then remove the rear disc brake caliper.

(3) Prepare wiring harnesses etc. to be discarded, and suspend the rear disc brake caliper from the shock absorber with the harnesses.

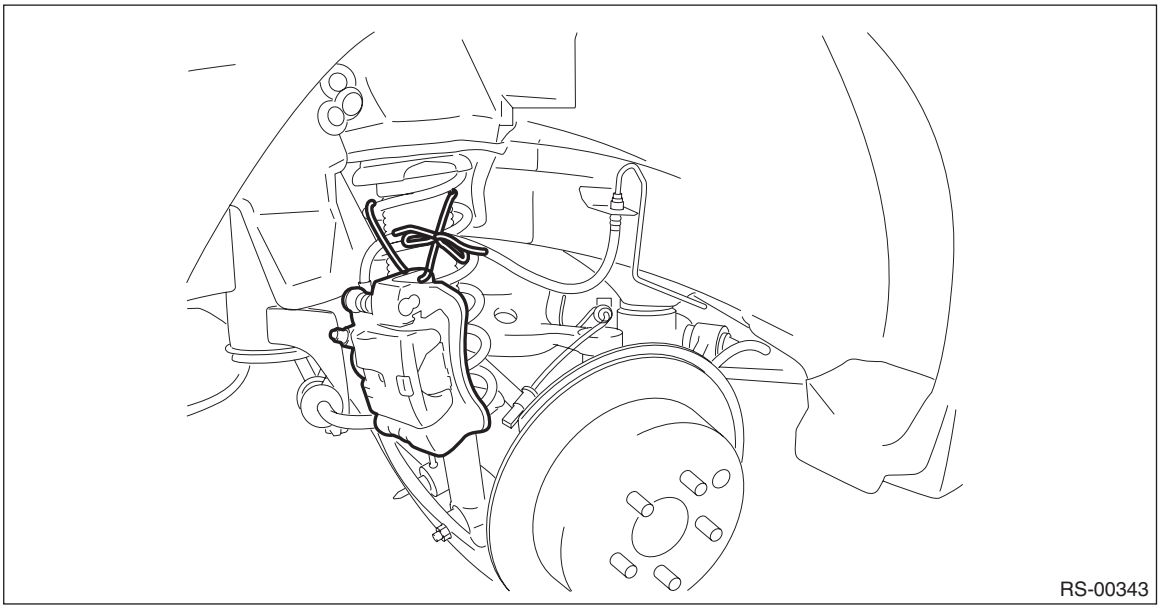

5) Remove the rear disc brake rotor.

NOTE:
If the disc rotor is difficult to remove, try the following two methods in order.

(1) Insert the flat tip screwdriver (b) into the brake adjustment hole (A), and rotate the adjusting screw (a) until the brake shoe moves far enough to remove the disc rotor (c).

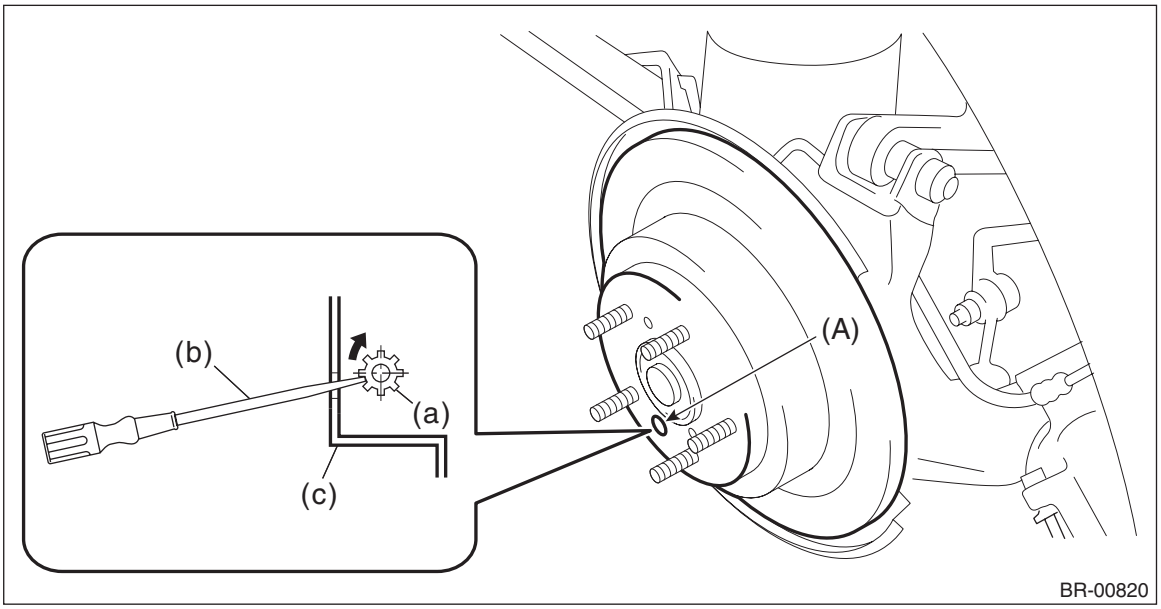

(2) When the disc rotor is difficult to be removed from the rear hub unit bearing, screw in 8 mm (0.31 in) bolt to the threaded part of the disc rotor (A), and remove the disc rotor.

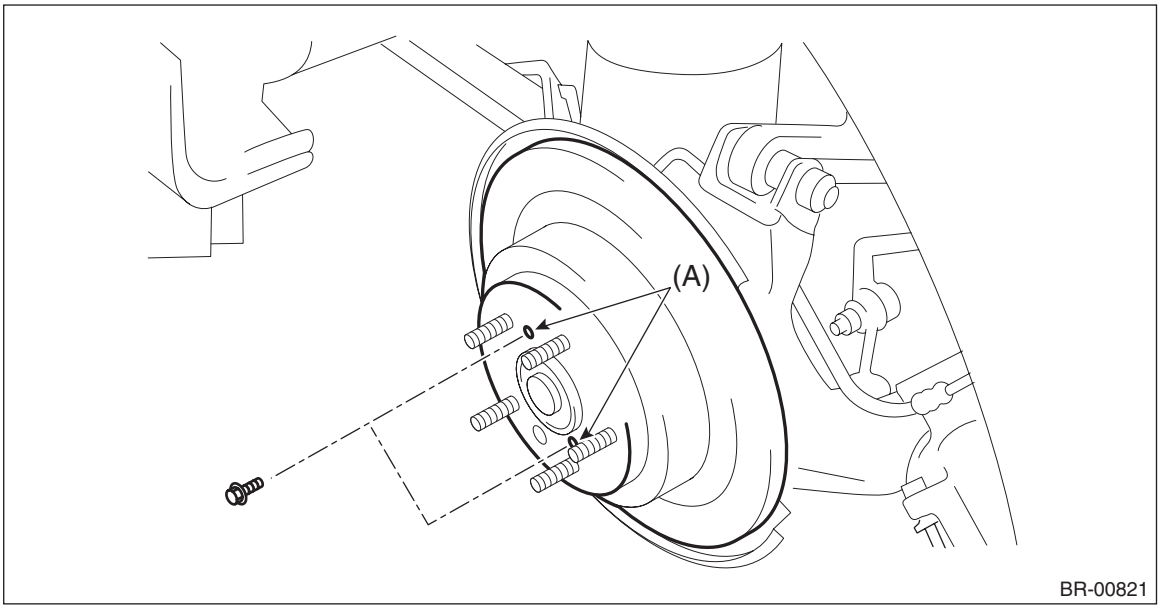

6) Remove the parking brake shoe (primary).
(1) Remove the primary and secondary return springs.

(2) Remove the shoe guide plate.

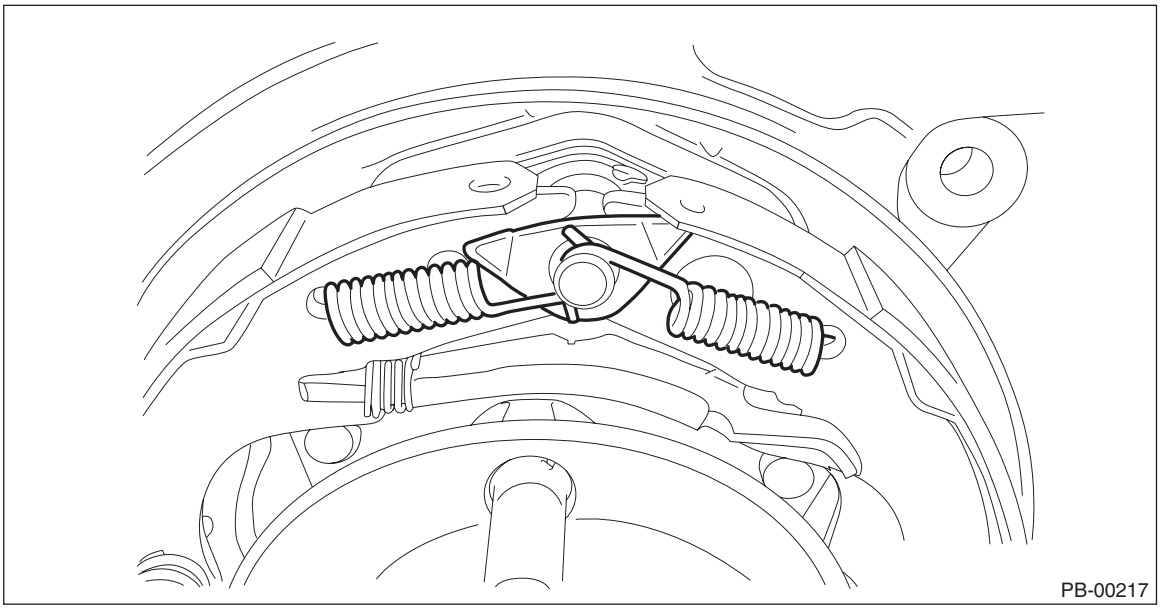

(3) Remove the shoe hold-down cup (a), and remove the shoe hold-down spring.
(4) Remove the parking brake shoe (primary) (b).

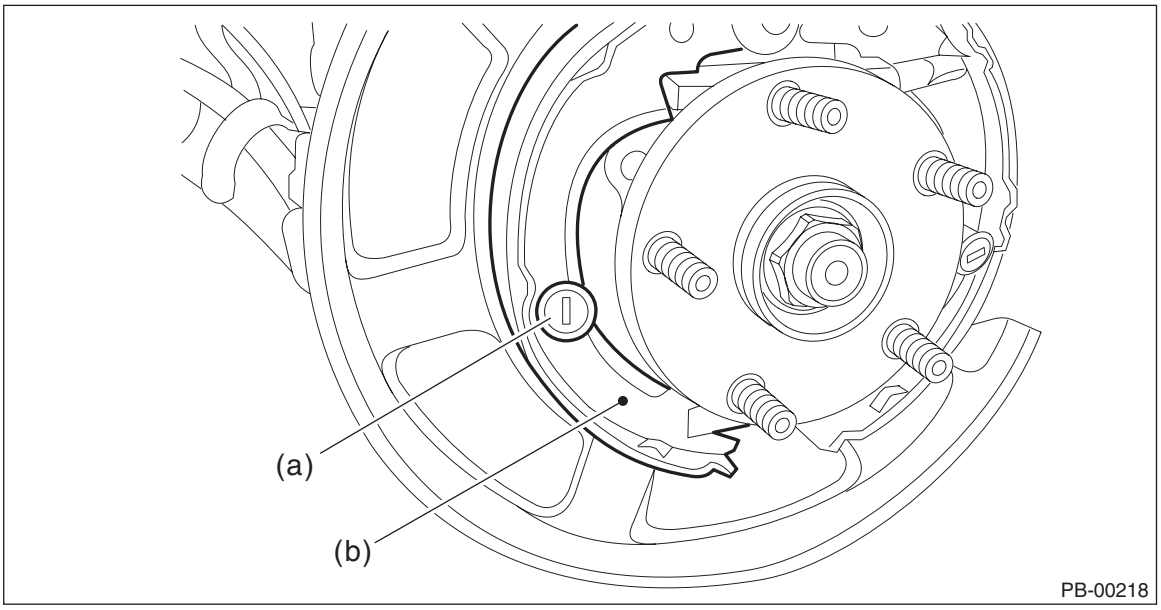

7) Remove the parking brake shoe (secondary).
(1) Remove the strut (a), strut spring (b), and adjusting screw (c).

(2) Remove the shoe hold-down cup (d), and remove the shoe hold-down spring (e).

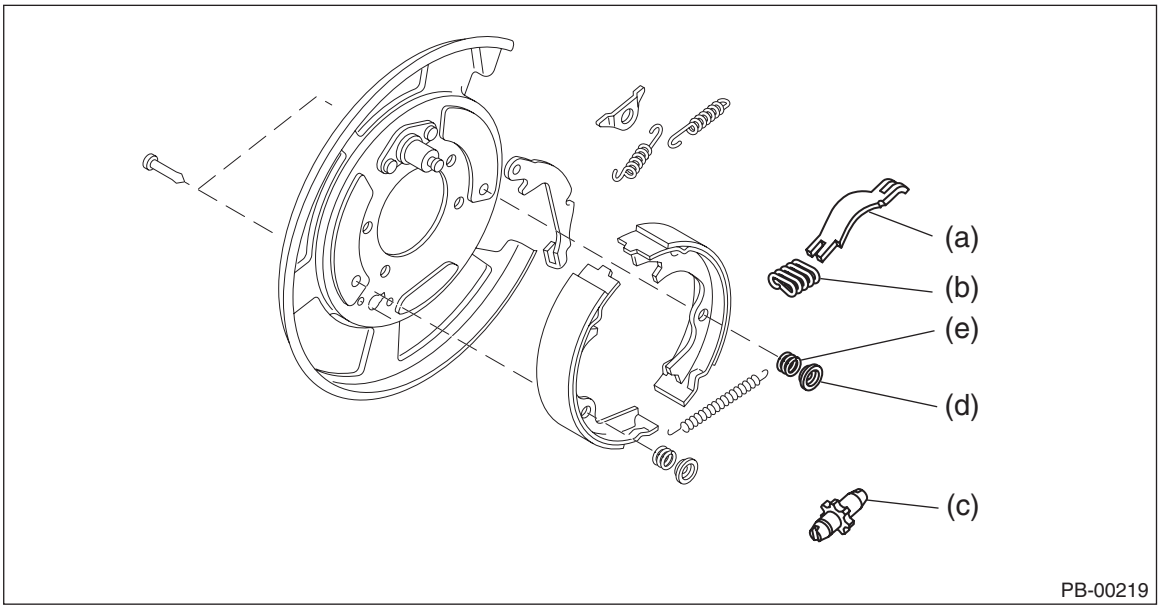

(3) Remove the parking brake cable (f) from lever (g).

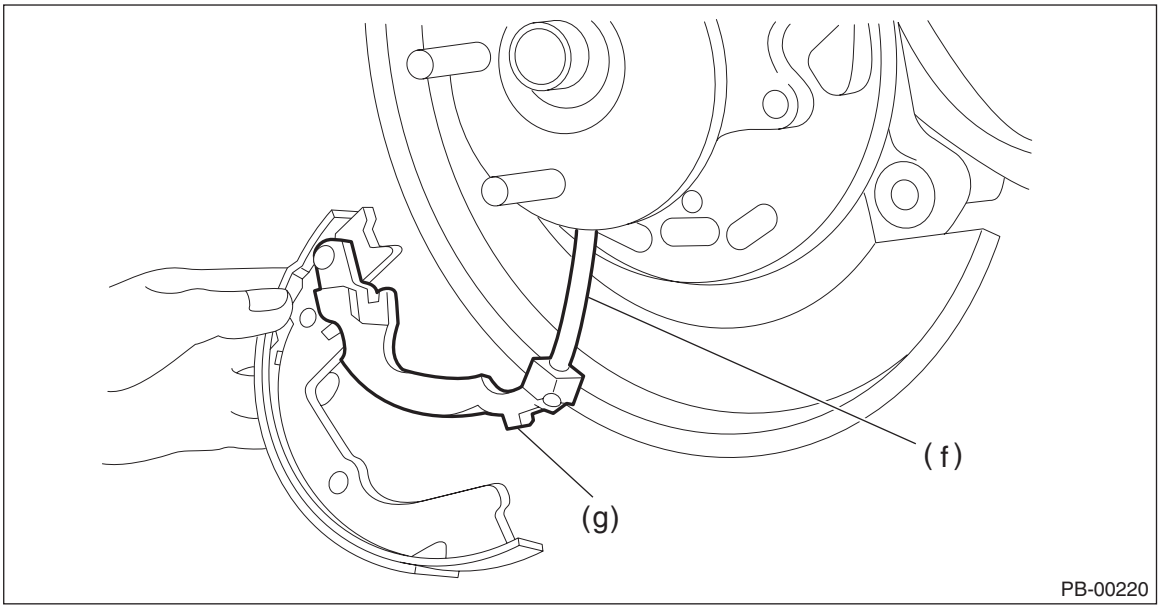

(4) Remove a retainer from the secondary side brake shoe.
(5) Remove the lever from the brake shoe.
(6) Remove the clamp, and remove the parking brake cable from the back plate.

B: INSTALLATION

1) Before assembly, check the brake disc rotor and brake shoe. <Ref. to PB-15, INSPECTION, Parking Brake Assembly (Rear Disc Brake).>
2) Install the parking brake cable to the back plate, and secure it with the clamp.

CAUTION:
Be sure the lining surface is free from brake fluid and grease.
3) Apply brake grease to the following locations.

Brake grease:
Brake Grease (Part No. 003602002)
- Six contact surfaces of the brake shoe rim and back plate gasket
- Contact surface of the brake shoe and the anchor pin
- Contact surface of the parking brake lever and strut
- Contact surface of the brake shoe and adjusting screw
- Contact surface of the brake shoe and strut
- Contact surface of the lever and brake shoe

4) Install the wave washer and lever to the secondary side brake shoe pin, and lock the retainer securely.
5) Install the parking brake cable to the lever.
6) Install the adjusting screw and adjusting spring to the brake shoe.

NOTE:
Install the adjusting screw with the screw section facing toward the direction shown in the figure below.

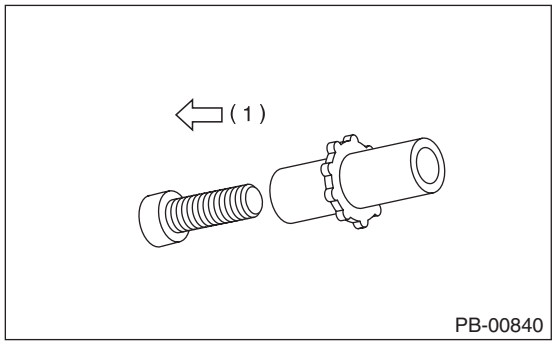

(1) Left wheel: front side of vehicle, right wheel: rear side of vehicle

7) Check that the parking brake cable does not fall from the cable guide.
8) Install the brake shoes to the back plate with shoe hold-down pins, shoe hold-down springs, and shoe hold-down cups.
9) Install the strut and strut spring to the brake shoes.

NOTE:
Install the strut springs on front side of the vehicle.
10) Install the return springs on the primary side first, and then the secondary side.
11) Install the brake disc rotor and brake caliper.
12) Install the brake hose bracket.

Tightening torque:
Refer to "COMPONENT" of "General Description". <Ref. to BR-4, COMPONENT, General Description.>
13) Adjust the parking brake. <Ref. to PB-15, ADJUSTMENT, Parking Brake Assembly (Rear Disc Brake).>
14) When replacing with the new brake shoe, connect the Subaru Select Monitor and perform the "Break-in Parking Brake Drive Mode". <Ref. to PB(diag)-19, BREAK-IN PARKING BRAKE DRIVE MODE, OPERATION, Subaru Select Monitor.>
15) After breaking-in, re-adjust the parking brakes. <Ref. to PB-15, ADJUSTMENT, Parking Brake Assembly (Rear Disc Brake).>

C: INSPECTION

1) Measure the inner diameter of the brake disc rotor.
If scoring or worn is found on the disk, replace the brake disc rotor.

Disc rotor inner diameter:
Specification: 190 mm (7.48 in)
Service limit: 191 mm (7.52 in)
2) Measure the lining thickness. If it exceeds the limit, replace the brake shoe.

Lining thickness:
Specification: 2.8 mm (0.11 in)
Service limit: 1.5 mm (0.059 in)

NOTE:
Replace the right and left brake shoe as a set.

D: ADJUSTMENT

1. SHOE CLEARANCE

1) Lift up the vehicle, and then remove the rear wheels.
2) Remove the adjusting hole cover from the disc rotor.
3) Insert the flat tip screwdriver (b) into the brake adjustment hole (A), and rotate the adjusting screw (a) until the brake shoe contacts the disc rotor (c).

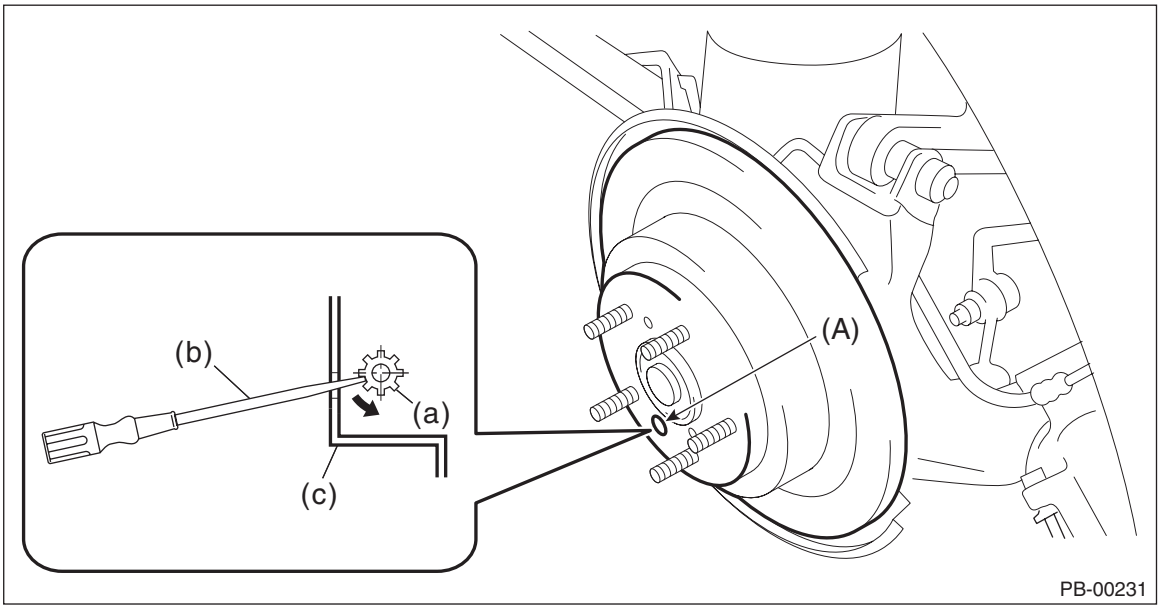

4) Loosen the adjusting screw by 5 notches to opposite direction of arrow.

CAUTION:
• After operating the parking brake several times, check that there is no brake drag.
• If the amount that the adjusting screw is turned back is little, securely loosen it by 5 notches to avoid dragging.
5) Install the adjusting hole cover to the disc rotor.
6) Install the rear wheels and lower the vehicle.
7) Park the vehicle on a level ground with the four wheels on the ground.
8) Connect the Subaru Select Monitor to perform the “Force Sensor Calibration Mode”. <Ref. to PB(diag)-18, FORCE SENSOR CALIBRATION MODE, OPERATION, Subaru Select Monitor.>

5. Parking Brake Switch

A: REMOVAL

1) Disconnect the ground cable from battery.
2) Remove the instrument panel lower cover.
   (1) Remove the clips, and remove the instrument panel side cover LH.

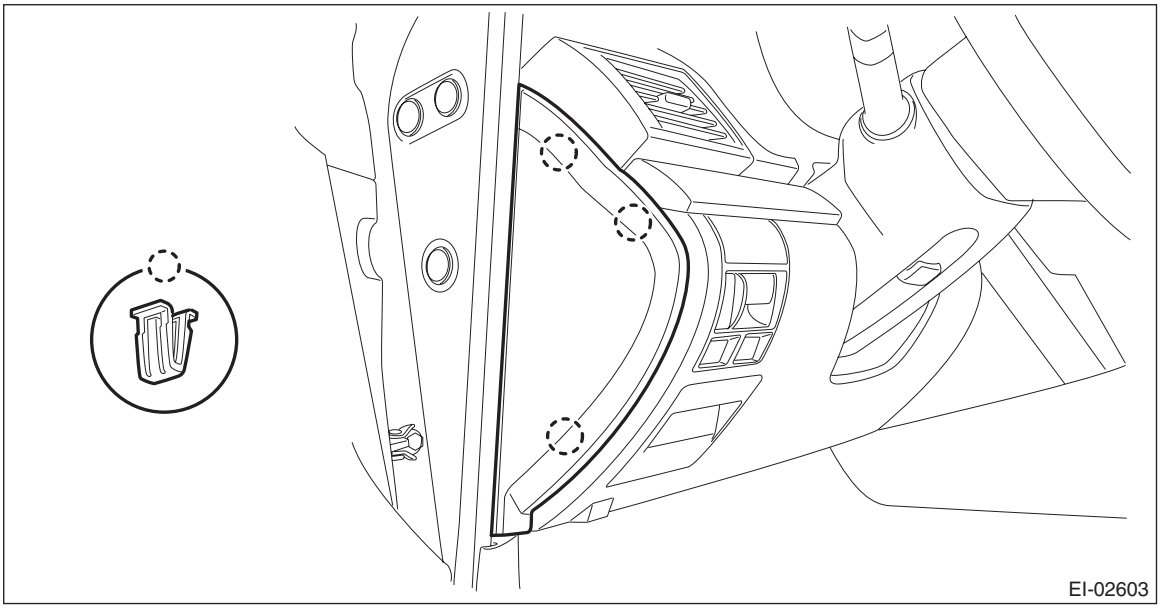

   (2) Remove the clips and data link connector, and remove the instrument panel lower cover under.

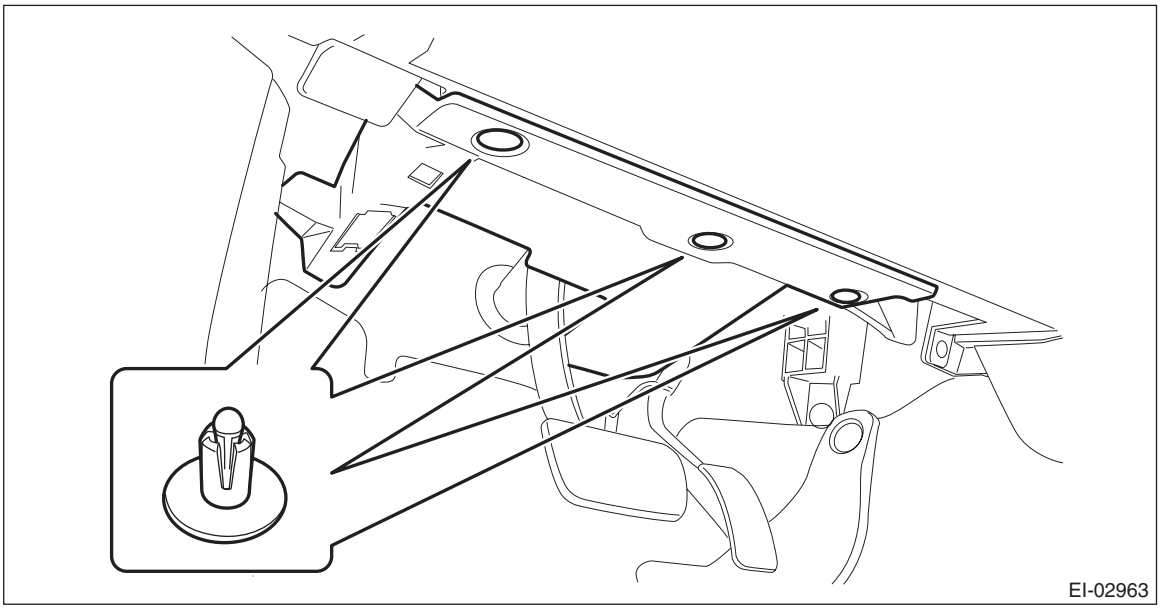

(3) Remove the screws and clips and release the claws, and remove the instrument panel lower cover while disconnecting the harness connectors.

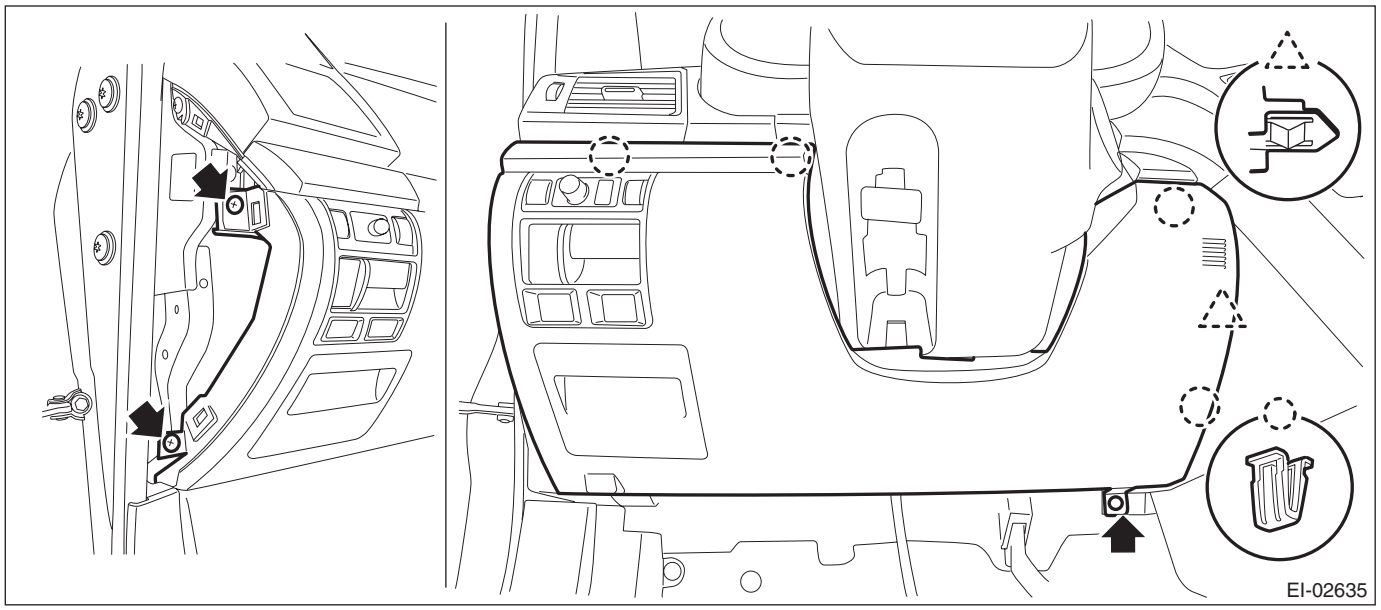

3) Remove the screws and remove the parking brake switch.

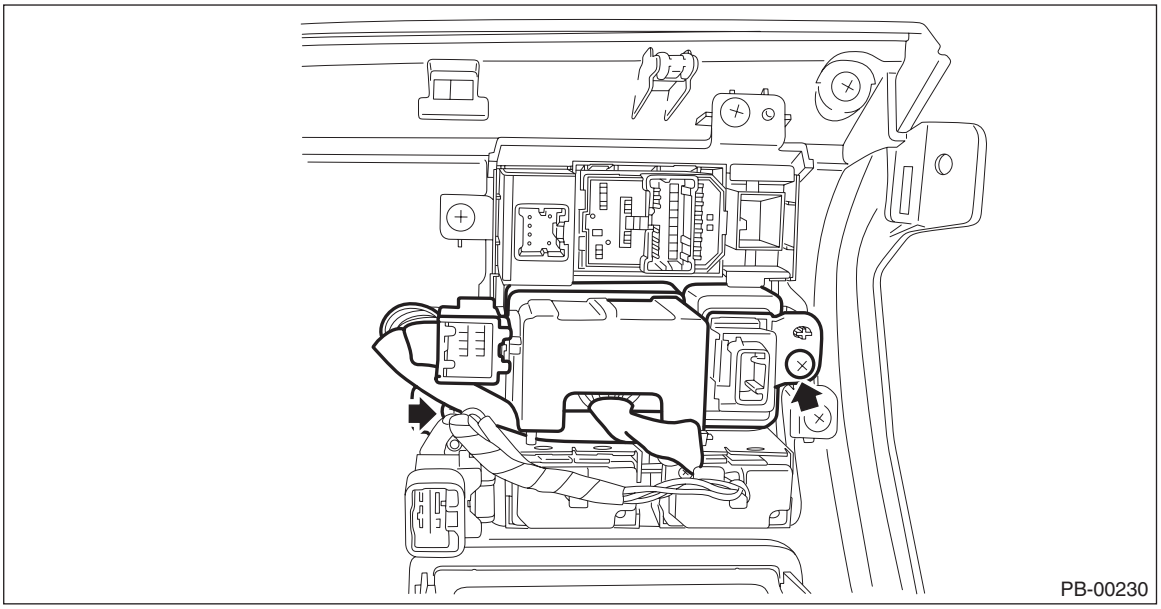

B: INSTALLATION

Install each part in the reverse order of removal.

C: INSPECTION

1. PARKING BRAKE CONTROL SWITCH

Check the resistance between parking brake control switch terminals.

Switch position	Terminal No.	Specification
Press	2 and 9 3 and 9	Less than 1 Ω
Neutral	2 and 9 1 and 3	Less than 1 Ω
Pull	1 and 3 2 and 3	Less than 1 Ω

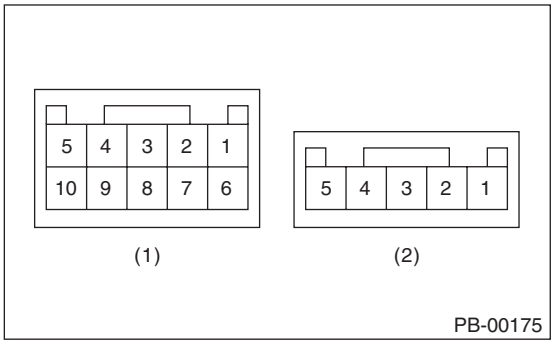

(1) Parking brake control switch
(2) Hill hold switch

NOTE:
Replace the switch if the inspection result is not within the standard value.

2. HILL HOLD SWITCH

Check the resistance between hill hold switch terminals.

Switch position	Terminal No.	Specification
ON	1 and 4	Less than 1 Ω
OFF	—	1 MΩ or more

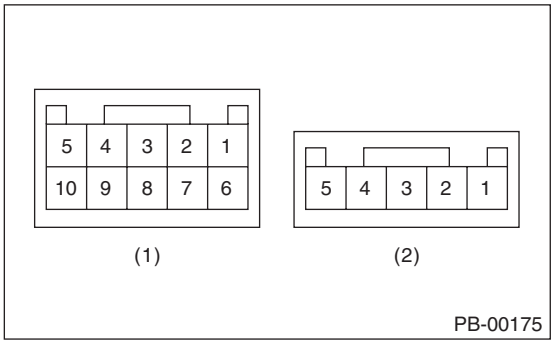

(1) Parking brake control switch
(2) Hill hold switch

NOTE:
Replace the switch if the inspection result is not within the standard value.

6. Emergency Release of Electronic Parking Brake

A: OPERATION

CAUTION:
• Perform this operation only when the parking brake must be released in emergency situation such as a system malfunction.
• When the operation is performed on a slope or any uneven road, the vehicle may start to move and cause a serious accident; Be sure to fully confirm safety in the nearby area.
1) Shift the select lever to “P” range (AT or CVT model), or set the shift lever to “1st ” or “R” position (MT model).
2) Stop the engine.
3) Set the wheel stoppers to tires.
4) Take out the electronic parking brake release tool from the vehicle service tools.
5) Insert the release tool to the parking brake actuator cap (a), and remove the cap by rotating it counterclockwise.

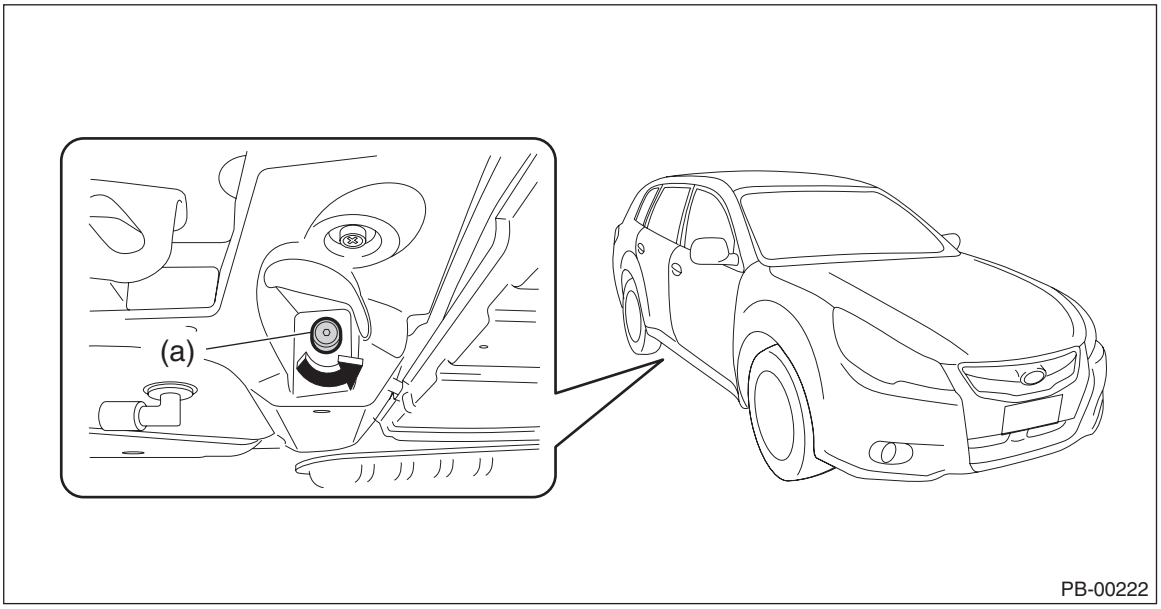

6) Insert the release tool through the film into the parking brake actuator, and rotate the tool clockwise 200 to 250 turns.

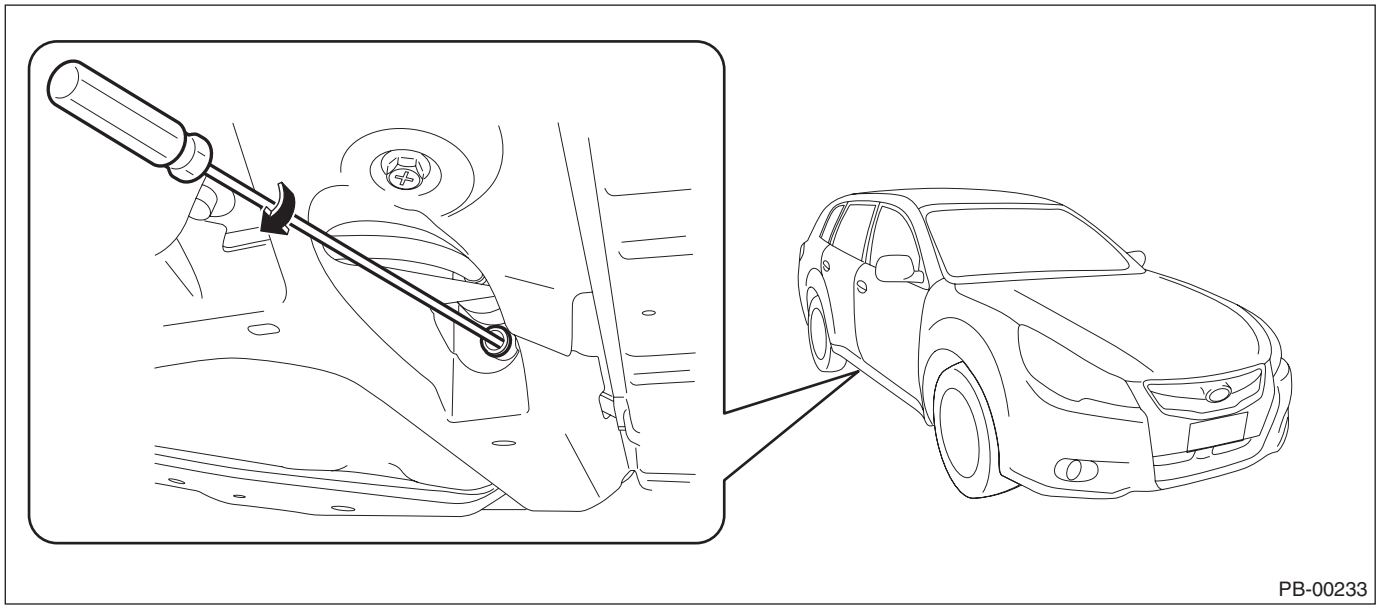

7) Install the cap removed in step 5).

Tightening torque:
3 N·m (0.31 kgf-m, 2.2 ft-lb)

8) When the emergency release of electronic parking brake was performed, be sure to perform the inspection related to the emergency release of electronic parking brake, regardless of whether the vehicle was running or not. <Ref. to PB-20, INSPECTION, Emergency Release of Electronic Parking Brake.>

B: INSPECTION

When the emergency release of electronic parking brake was performed, check the following points regardless of whether the vehicle was running or not.

- Check the operation of parking brake actuator when the parking brake switch is operated.

NOTE:
The actuator operates from lock to lock when recovering from the emergency release mode, and therefore it may take more than ten seconds to finish the operation.

- Check the illumination of brake warning light when the parking brake is operated. <Ref. to PB(diag)-26, Warning Light Illumination Pattern.>
- Check the noise when the parking brake is operated.
- Visually check the parking brake shoe. <Ref. to PB-10, Parking Brake Assembly (Rear Disc Brake).>
- Check the brake dragging when the parking brake is released. <Ref. to PB-15, ADJUSTMENT, Parking Brake Assembly (Rear Disc Brake).>

7. General Diagnostic Table

A: INSPECTION

Symptoms	Possible cause	Corrective action
Brake drag	Parking brake actuator is faulty.	Replace.
	Parking brake cable does not move.	Replace.
	Parking brake shoe clearance is maladjusted.	Adjust.
	Return spring is faulty.	Replace.
Noise from brake	Return spring is faulty.	Replace.
	Shoe hold-down spring faulty.	Replace.

PARKING BRAKE (DIAGNOSTICS)

PB(diag)

		Page
1.	Basic Diagnostic Procedure	2
2.	Check List for Interview	4
3.	General Description	8
4.	Electrical Component Location	10
5.	Control Module I/O Signal	12
6.	Subaru Select Monitor	14
7.	Read Diagnostic Trouble Code (DTC)	23
8.	Inspection Mode	24
9.	Clear Memory Mode	25
10.	Warning Light Illumination Pattern	26
11.	List of Diagnostic Trouble Code (DTC)	35
12.	Diagnostic Procedure with Diagnostic Trouble Code (DTC)	37
13.	General Diagnostic Table	67

1. Basic Diagnostic Procedure

A: PROCEDURE

CAUTION:
When removing or installing, remove all foreign matter (dust, water, and oil) from the electronic parking brake control module connectors.

NOTE:
- To check the harness for open or short circuits, shake problem spot or connector.
- Refer to “Check List for Interview”. <Ref. to PB(diag)-4, Check List for Interview.>

	Step	Check	Yes	No
1	**CHECK PRE-INSPECTION.** 1) Ask the customer when and how the trouble occurred using the interview check list. <Ref. to PB(diag)-4, Check List for Interview.> 2) Before performing diagnosis, check the component which might affect parking brake system problems. <Ref. to PB(diag)-8, INSPECTION, General Description.>	Is the component that might influence the parking brake system problem normal?	Go to step **2**.	Repair or replace each component.
2	**CHECK INDICATION OF DTC.** 1) Turn the ignition switch to OFF. 2) Connect the Subaru Select Monitor to data link connector. 3) Turn the ignition switch to ON and run the Subaru Select Monitor. 4) Read the DTC using the Subaru Select Monitor. <Ref. to PB(diag)-23, OPERATION, Read Diagnostic Trouble Code (DTC).> NOTE: If the communication function of the Subaru Select Monitor cannot be executed properly, check the communication circuit. <Ref. to PB(diag)-21, COMMUNICATION FOR INITIALIZING IMPOSSIBLE, INSPECTION, Subaru Select Monitor.>	Is DTC displayed on Subaru Select Monitor?	Record the DTC. Go to step **4**.	Go to step **3**.

	Step	Check	Yes	No
3	**PERFORM GENERAL DIAGNOSTICS.** 1) Perform the inspection by referring to "General Diagnostic Table". <Ref. to PB(diag)-67, General Diagnostic Table.> 2) Perform the Clear Memory Mode. <Ref. to PB(diag)-25, OPERATION, Clear Memory Mode.> 3) Perform the Inspection Mode. <Ref. to PB(diag)-24, PROCEDURE, Inspection Mode.> 4) Read the DTC. <Ref. to PB(diag)-23, OPERATION, Read Diagnostic Trouble Code (DTC).> 5) Check the DTC is not displayed.	After starting the engine, do the electronic parking brake warning light (C6 model only), hill hold indicator light and brake warning light go off with the parking brake released?	Finish the diagnosis.	Check the combination meter circuit. <Ref. to PB(diag)-30, ELECTRONIC PARKING BRAKE WARNING LIGHT AND HILL HOLD INDICATOR LIGHT DO NOT GO OFF, Warning Light Illumination Pattern.> <Ref. to PB(diag)-31, BRAKE WARNING LIGHT DOES NOT GO OFF, Warning Light Illumination Pattern.> <Ref. to PB(diag)-29, HILL HOLD INDICATOR LIGHT DO NOT GO OFF, Warning Light Illumination Pattern.> <Ref. to PB(diag)-33, BRAKE WARNING LIGHT REMAINS BLINKING, Warning Light Illumination Pattern.>
4	**CHECK FREEZE FRAME DATA.** Using the Subaru Select Monitor, check the freeze frame data for the electronic parking brake control module.	Are freeze frame data recorded?	Record the freeze frame data. Go to step **5**.	Go to step **5**.
5	**PERFORM DIAGNOSIS.** 1) Refer to "List of Diagnostic Trouble Code (DTC)". NOTE: For the DTC list, refer to "List of Diagnostic Trouble Code (DTC)". <Ref. to PB(diag)-35, LIST, List of Diagnostic Trouble Code (DTC).> 2) Correct the cause of trouble. 3) Perform the Clear Memory Mode. <Ref. to PB(diag)-25, OPERATION, Clear Memory Mode.> 4) Perform the Inspection Mode. <Ref. to PB(diag)-24, PROCEDURE, Inspection Mode.> 5) Read the DTC. <Ref. to PB(diag)-23, OPERATION, Read Diagnostic Trouble Code (DTC).>	Is DTC displayed?	Repeat step 5 until DTC is not shown.	Finish the diagnosis.

2. Check List for Interview

A: CHECK

Check the following item about the vehicle's state.

1. STATE OF BRAKE WARNING LIGHT

Brake warning light illuminates/goes off/ blinks.	❑ Always ❑ Sometimes ❑ Only once ❑ Does not illuminate ❑ Does not go off ❑ Blinks • When/How long does illuminate/go off/blink?		
Ignition key position	❑ LOCK ❑ ACC ❑ ON (Before starting engine) ❑ START ❑ ON (After starting engine, engine is running) ❑ ON (After starting engine, engine is at a standstill)		
Timing	❑ Immediately after turning the ignition switch to ON ❑ Immediately after turning the ignition switch to START ❑ When the parking brake switch is pressed ❑ When the parking brake switch is pulled ❑ When the parking brake switch is pressed continually (times) ❑ When the parking brake switch is pulled continually (times)		
	❑ When accelerating	—	km/h
		—	MPH
	❑ While driving at a constant speed	km/h	MPH
	❑ While decelerating	—	km/h
		—	MPH
	❑ When turning to the right	Steering angle:	deg
		Steering time:	Sec.
	❑ When turning to the left	Steering angle:	deg
		Steering time:	Sec.
	❑ When operating other electrical parts		
	• Part name: • Operating condition:		

2. STATE OF ELECTRONIC PARKING BRAKE WARNING LIGHT (C6 MODEL ONLY)

<table>
<tr><td>Electronic parking brake warning light illuminates.</td><td colspan="3">❑ Always
❑ Sometimes
❑ Only once
❑ Does not illuminate
• When/How long does it illuminate?</td></tr>
<tr><td>Ignition key position</td><td colspan="3">❑ LOCK
❑ ACC
❑ ON (Before starting engine)
❑ START
❑ ON (After starting engine, engine is running)
❑ ON (After starting engine, engine is at a standstill)</td></tr>
<tr><td rowspan="11">Timing</td><td colspan="3">❑ Immediately after turning the ignition switch to ON
❑ Immediately after turning the ignition switch to START
❑ When the parking brake switch is pressed
❑ When the parking brake switch is pulled
❑ When the parking brake switch is pressed continually (times)
❑ When the parking brake switch is pulled continually (times)</td></tr>
<tr><td rowspan="2">❑ When accelerating</td><td colspan="2">— km/h</td></tr>
<tr><td colspan="2">— MPH</td></tr>
<tr><td>❑ While driving at a constant speed</td><td>km/h</td><td>MPH</td></tr>
<tr><td rowspan="2">❑ While decelerating</td><td colspan="2">— km/h</td></tr>
<tr><td colspan="2">— MPH</td></tr>
<tr><td rowspan="2">❑ When turning to the right</td><td>Steering angle:</td><td>deg</td></tr>
<tr><td>Steering time:</td><td>Sec.</td></tr>
<tr><td rowspan="2">❑ When turning to the left</td><td>Steering angle:</td><td>deg</td></tr>
<tr><td>Steering time:</td><td>Sec.</td></tr>
<tr><td colspan="3">❑ When operating other electrical parts</td></tr>
<tr><td colspan="3">• Part name:
• Operating condition:</td></tr>
</table>

3. HILL HOLD INDICATOR LIGHT CONDITION

Hill hold indicator light illuminates.	❑ Always ❑ Sometimes ❑ Only once ❑ Does not illuminate • When/How long does it illuminate?		
Ignition key position	❑ LOCK ❑ ACC ❑ ON (Before starting engine) ❑ START ❑ ON (After starting engine, engine is running) ❑ ON (After starting engine, engine is at a standstill)		
Timing	❑ Immediately after turning the ignition switch to ON ❑ Immediately after turning the ignition switch to START ❑ When the hill hold switch is pressed (seconds) ❑ When the parking brake switch is pressed ❑ When the parking brake switch is pulled ❑ When the parking brake switch is pressed continually (times) ❑ When the parking brake switch is pulled continually (times)		
	❑ When accelerating	—	km/h
		—	MPH
	❑ While driving at a constant speed	km/h	MPH
	❑ While decelerating	—	km/h
		—	MPH
	❑ When turning to the right	Steering angle:	deg
		Steering time:	Sec.
	❑ When turning to the left	Steering angle:	deg
		Steering time:	Sec.
	❑ When operating other electrical parts		
	• Part name: • Operating condition:		

4. CONDITIONS UNDER WHICH TROUBLE OCCURS

Environment	a) Weather	❑ Fine ❑ Cloudy ❑ Rainy ❑ Snowy ❑ Others:
	b) Ambient temperature	°C (°F)
	c) Road	❑ Inner city ❑ Suburbs ❑ Highway ❑ Local street ❑ Uphill ❑ Downhill ❑ Paved road ❑ Gravel road ❑ Muddy road ❑ Sandy place ❑ Straight road ❑ Sharp curve ❑ Gentle curve ❑ S-curve ❑ Road with a slope on both sides ❑ Others:
	d) Road surface	❑ Dry ❑ Wet ❑ Covered with fresh snow ❑ Covered with hardened snow ❑ Frozen slope ❑ Others:
Condition	a) Tire inflation pressure	Front RH tire: kPa
		Front LH tire: kPa
		Rear RH tire: kPa
		Rear LH tire: kPa
	b) Degree of wear	Front RH tire: mm (in)
		Front LH tire: mm (in)
		Rear RH tire: mm (in)
		Rear LH tire: mm (in)
	c) Tire/Wheel size	❑ Specified size ❑ Except specification ( )
	d) Tire variation	❑ Summer tire ❑ Studless tire (Brand:)
	e) Tire chain is attached: ❑ Yes / ❑ No	
	f) Using T-type tires: ❑ Yes / ❑ No	
	g) Condition of suspension alignment:	
	h) Loaded condition:	
	i) Repaired parts are used: ❑ Yes / ❑ No	
	• Content:	
	j) Others:	

3. General Description

A: CAUTION

1. SUPPLEMENTAL RESTRAINT SYSTEM "AIRBAG"

Airbag system wiring harness is routed near the parking brake switch, hill hold switch and electronic parking brake control module.

CAUTION:
• Do not use electrical test equipment on the airbag system circuits.
• Be careful not to damage the airbag system wiring harness, when servicing the parking brake switch, hill hold switch and electronic parking brake control module.

B: INSPECTION

Before performing diagnosis, inspect the following items which may influence parking brake system problems.

1. BATTERY

Measure the battery voltage and specific gravity of the electrolyte.

Standard voltage:
12 V or more

Specific gravity:
1.260 or more

2. GROUND

Check the tightening torque of ground (GB-9 and 10) bolts of the parking brake system.

Tightening torque:
13 N·m (1.3 kgf-m, 9.6 ft-lb)

3. BRAKE DRAG

Check for brake drag.

4. PARKING BRAKE ASSEMBLY

Check and adjust the parking brake assembly.
• Check the disc rotor inner diameter and lining thickness. <Ref. to PB-15, INSPECTION, Parking Brake Assembly (Rear Disc Brake).>
• Adjust the shoe clearance. <Ref. to PB-15, ADJUSTMENT, Parking Brake Assembly (Rear Disc Brake).>

5. TIRE

Check the tire specifications, tire wear and air pressure. <Ref. to WT-2, SPECIFICATION, General Description.>

C: PREPARATION TOOL

1. SPECIAL TOOL

ILLUSTRATION	TOOL NUMBER	DESCRIPTION	REMARKS
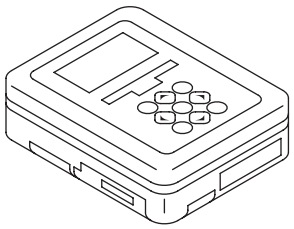 ST1B022XU0	1B022XU0	SUBARU SELECT MONITOR III KIT	Used for troubleshooting the electrical system.

2. GENERAL TOOL

TOOL NAME	REMARKS
Circuit tester	Used for measuring resistance, voltage and current.

4. Electrical Component Location

A: LOCATION

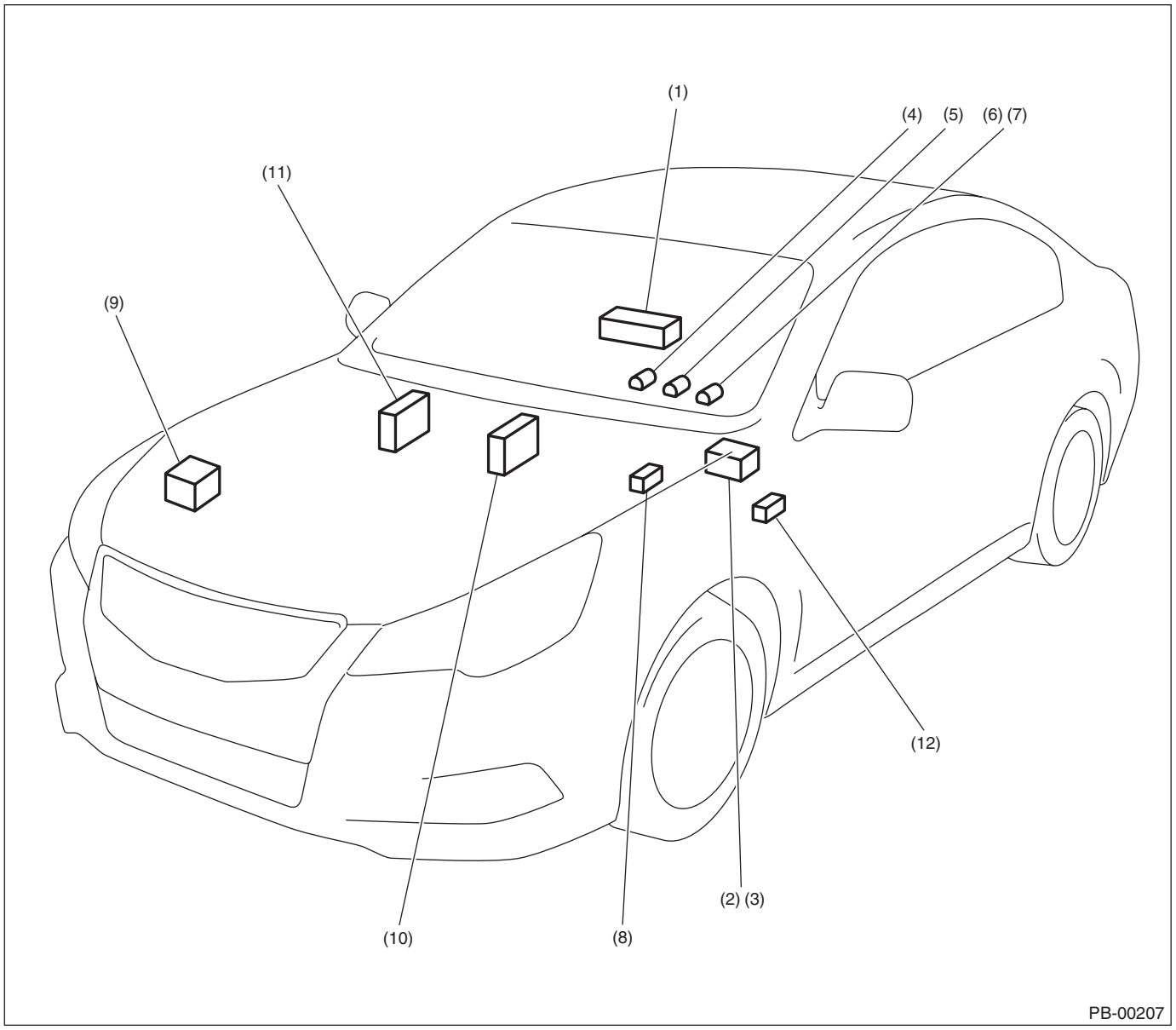

(1)	Electronic parking brake control module	(5)	Electronic parking brake warning light (C6 model only)	(9)	VDC control module and hydraulic control unit (VDCCM&H/U)
(2)	Parking brake switch	(6)	Brake warning light (C0, C5 and C6 models)	(10)	Body integrated unit
(3)	Hill hold switch	(7)	Brake warning light (U4, U5 and U6 models)	(11)	Engine control module (ECM)
(4)	Hill hold indicator light	(8)	Clutch stroke sensor (MT model only)	(12)	Data link connector

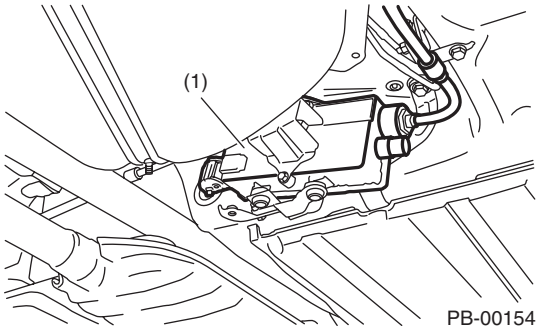

PB-00154

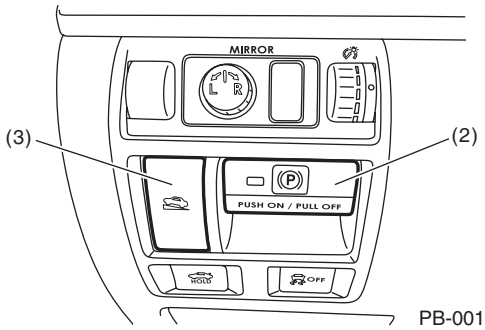

PB-00177

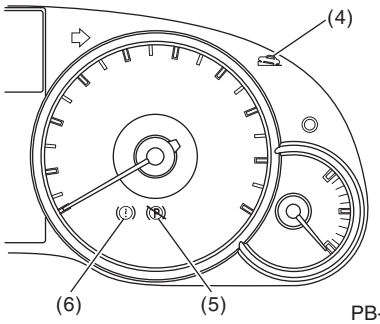

PB-00156

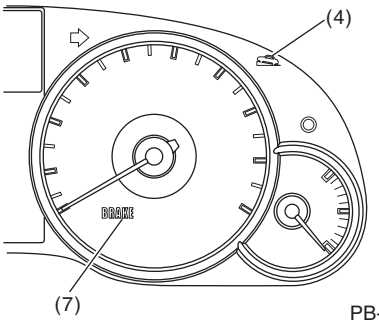

PB-00210

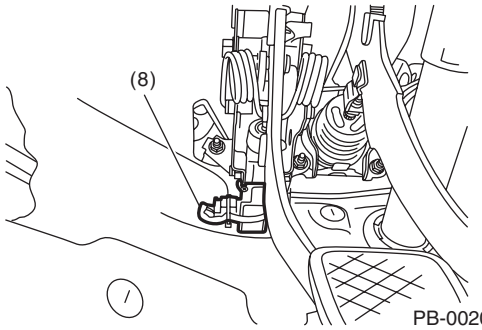

PB-00208

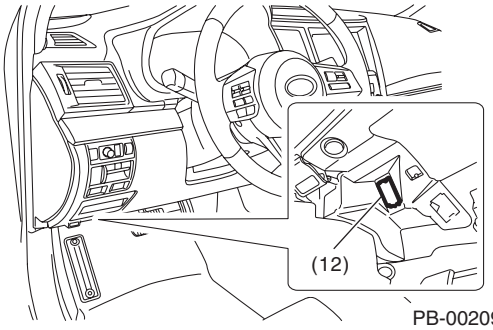

PB-00209

5. Control Module I/O Signal

A: ELECTRICAL SPECIFICATION

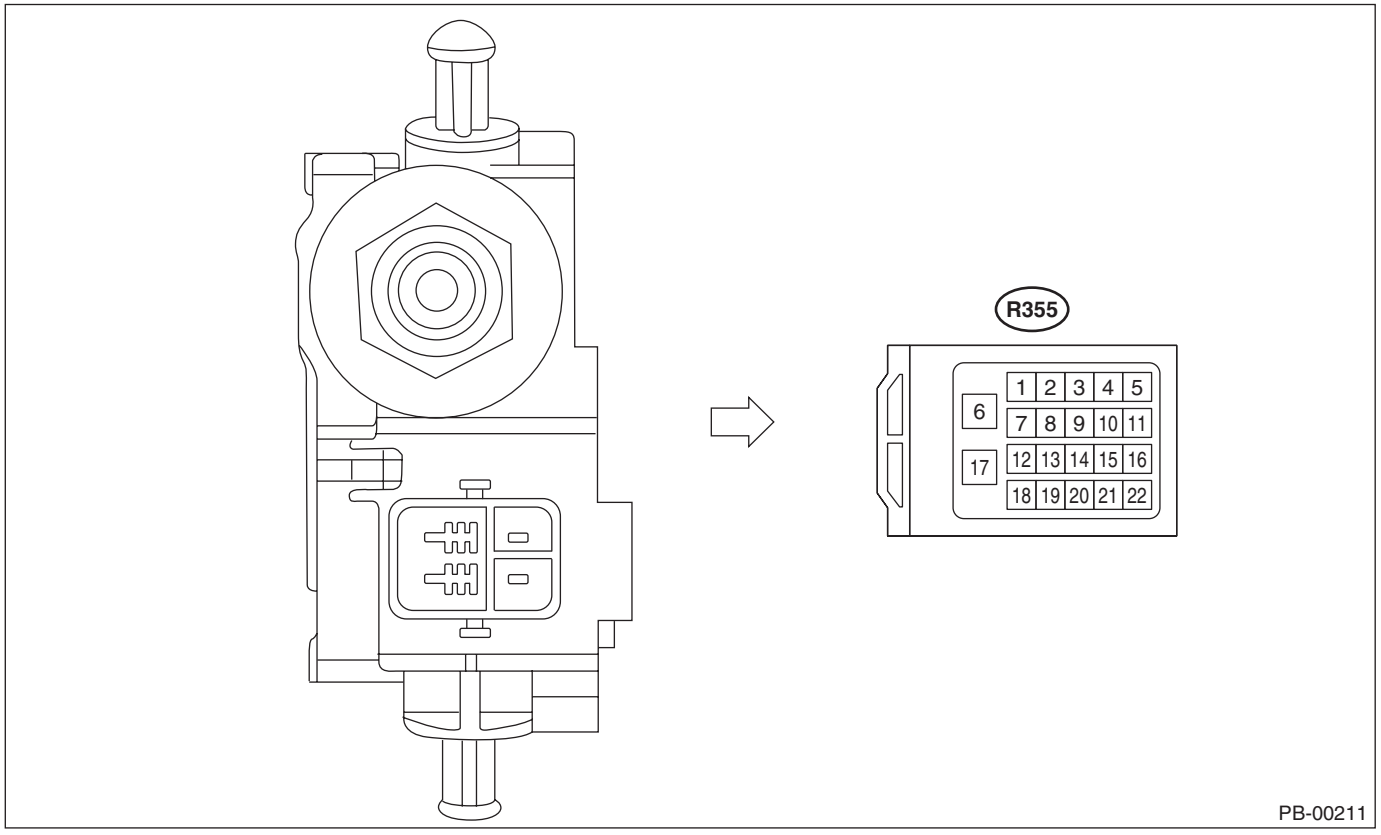

NOTE:
The terminal numbers of the electronic parking brake control module connectors are as indicated in the figure.

Content	Terminal No. (+) — (–)	Input/Output signal
		Measured value and measuring conditions
Battery power supply	17 — 6	Always 10 — 15 V
IGN power supply	18 — 6	10 — 15 V when the ignition switch is ON.
Parking brake switch	13	Pulse signal
Parking brake switch	14	Pulse signal
Parking brake switch	20	Pulse signal
Parking brake switch	19	Pulse signal
Hill hold switch	2 — 6	When hill hold switch is operated, 10 — 15 V
Parking brake switch indicator light	7 — 6	When the light is on: 0 V, when the light is off: 10 — 15 V
Clutch stroke sensor (MT model only)	12	Pulse signal
CAN-H	9	Serial communication
CAN-L	3	Serial communication
Ground	6	—

B: WIRING DIAGRAM

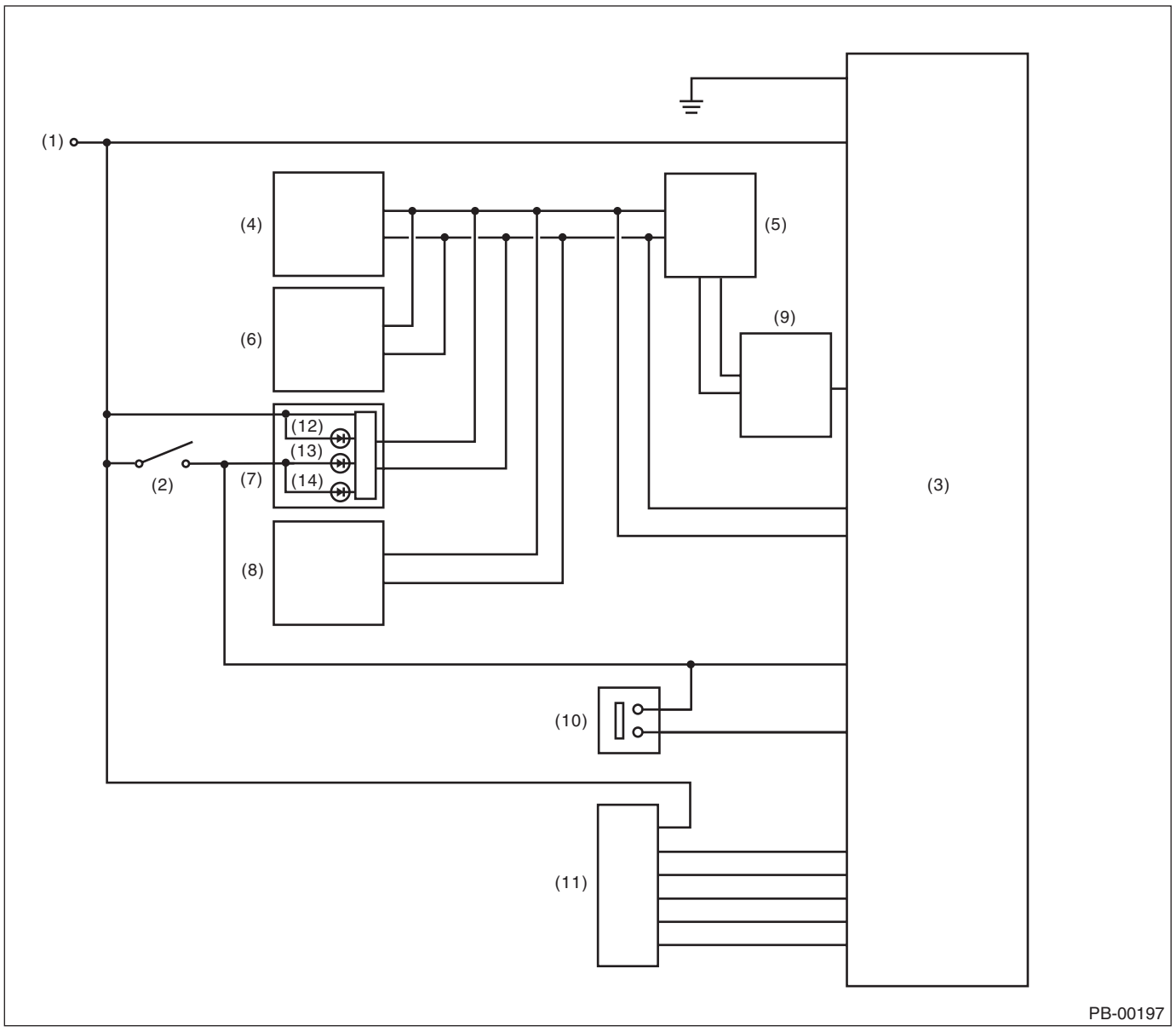

(1)	Battery	(6)	Transmission control module	(11)	Parking brake switch
(2)	Ignition switch	(7)	Combination meter	(12)	Hill hold indicator light
(3)	Electronic parking brake CM	(8)	Body integrated unit	(13)	Electronic parking brake warning light (C6 model only)
(4)	Engine control module (ECM)	(9)	Clutch stroke sensor (MT model only)	(14)	Brake warning light
(5)	VDC control module	(10)	Hill hold switch		

6. Subaru Select Monitor

A: OPERATION

1. HOW TO USE SUBARU SELECT MONITOR

NOTE:
• For detailed operation procedures, refer to “PC application help for Subaru Select Monitor”.
• If communication is not possible between the electronic parking brake control module and the Subaru Select Monitor, check the communication circuit. <Ref. to PB(diag)-21, COMMUNICATION FOR INITIALIZING IMPOSSIBLE, INSPECTION, Subaru Select Monitor.>

2. READ CURRENT DATA

NOTE:
- For detailed operation procedures, refer to “PC application help for Subaru Select Monitor”.
- A list of the support data is shown in the following table.

Display	Contents to be displayed	Unit
FR Wheel Speed	Wheel speed detected by front ABS wheel speed sensor RH is displayed.	km/h or MPH
FL Wheel Speed	Wheel speed detected by front ABS wheel speed sensor LH is displayed.	km/h or MPH
RR Wheel Speed	Wheel speed detected by rear ABS wheel speed sensor RH is displayed.	km/h or MPH
RL Wheel Speed	Wheel speed detected by rear ABS wheel speed sensor LH is displayed.	km/h or MPH
Power Supply Voltage	The voltage supplied to the electronic parking brake control module is displayed.	V
Engine Speed	Engine speed is displayed.	rpm
Accel. Opening Angle	Acceleration opening is displayed.	%
Reverse Signal	Input condition of reverse signal is displayed. (When reverse: ON)	ON or OFF
Force Sensor	The tension detected by the force sensor in the actuator is displayed.	N
Stroke Sensor	The parking brake cable stroke amount detected by the stroke sensor in the actuator is displayed.	mm
Clutch stroke sensor	The pedal stroke amount detected by the clutch stroke sensor is displayed.	%
Clutch engagement point	Clutch engagement position is displayed.	%
Actuator Inner Temperature (Primary)	Actuator inner temperature (PRY) is displayed.	°C
Actuator Inner Temperature (Secondary)	Actuator inner temperature (SEC) is displayed.	°C
Incline	Incline of the vehicle is displayed.	%
Total Operation Number	Total number of parking brake operation is displayed.	times
Hill Hold Operation Number	Operation number of hill hold function at uphill parking is displayed.	times
Auto Operation Number	“0” is always displayed.	times
Auto Cancel Number	Operation number of automatic accelerator interlock cancel function at starting is displayed.	times
Parking Operation Number when driving	Total number of parking brake operation while driving is displayed.	times
Engine Torque	Engine torque is displayed. (According to ECM specification, engine torque value may be displayed while engine stops.)	N·m
Manual Parking Operation	Parking brake operation condition is displayed. (At manual parking operation: 1)	1 or 0
Auto Parking Operation	Parking brake operation condition is displayed. (At automatic parking operation: 1)	1 or 0
Parking Operation when driving	Parking brake operation condition is displayed. (At parking operation when driving: 1)	1 or 0
Parking Cancel	Parking brake operation condition is displayed. (At parking cancel: 1)	1 or 0
Hill hold lamp	Hill hold indicator control condition is displayed. (When illuminating: ON)	ON or OFF
Ignition Signal	Input condition of ignition signal is displayed.	ON or OFF
Brake Warning Light	Brake warning light control condition is displayed. (When illuminating: ON)	ON or OFF

Display	Contents to be displayed	Unit
Parking System Warning Light	For C6 model, electric parking brake warning light control condition is displayed. (When illuminating: ON) For other than C6 model, brake warning light control condition is displayed. (When blinking: ON)	ON or OFF
Neutral Signal	Input condition of neutral signal is displayed. (When neutral: ON)	ON or OFF
Brake Switch	Input condition of brake pedal signal is displayed. (When depressed: ON)	ON or OFF
Engine idle flag	Engine speed condition is displayed. (When idling: ON)	ON or OFF
Door Signal	Input condition of door (4 locations) open/close signal is displayed. (When at least one door is open: OPEN)	OPEN or CLOSE
Driver Seat Belt Signal	Input condition of driver's seatbelt signal is displayed.	Not use or Use

3. MAINTENANCE OPERATION MODE

Display	Contents of display	Index No.
Force Sensor Calibration Mode	Perform the force sensor calibration.	<Ref. to PB(diag)-18, FORCE SENSOR CALIBRATION MODE, OPERATION, Subaru Select Monitor.>
Break-in Parking Brake Drive Mode	Perform the break-in parking brake drive mode after replacing the parking brake assembly.	<Ref. to PB(diag)-19, BREAK-IN PARKING BRAKE DRIVE MODE, OPERATION, Subaru Select Monitor.>
Parking Brake Removal Mode	Release the cable tension before removing the parking brake cable.	<Ref. to PB(diag)-18, PARKING BRAKE REMOVAL MODE, OPERATION, Subaru Select Monitor.>
Parameter Initialization Mode	Perform the parameter initialization.	<Ref. to PB(diag)-19, PARAMETER INITIALIZATION MODE, OPERATION, Subaru Select Monitor.>
Clutch Sensor Calibration Mode	Perform the clutch sensor calibration.	<Ref. to PB(diag)-20, CLUTCH SENSOR CALIBRATION MODE, OPERATION, Subaru Select Monitor.>
Clutch Engagement Position Setting	Perform the clutch sensor engagement position setting.	<Ref. to PB(diag)-20, CLUTCH ENGAGEMENT POSITION SETTING, OPERATION, Subaru Select Monitor.>

4. FREEZE FRAME DATA

NOTE:
- Data stored at the time of trouble occurrence is shown on display.
- Each time a trouble occurs, the latest information is stored in the Freeze Frame Data in memory.

Display	Contents to be displayed
FR Wheel Speed	Wheel speed detected by front ABS wheel speed sensor RH is displayed.
FL Wheel Speed	Wheel speed detected by front ABS wheel speed sensor LH is displayed.
RR Wheel Speed	Wheel speed detected by rear ABS wheel speed sensor RH is displayed.
RL Wheel Speed	Wheel speed detected by rear ABS wheel speed sensor LH is displayed.
Power Supply Voltage	The voltage supplied to the electronic parking brake control module is displayed.
Engine Speed	Engine speed is displayed.
Accel. Opening Angle	Acceleration opening is displayed.
Reverse Signal	Input condition of reverse signal is displayed. (When reverse: ON)
Brake Switch	Input condition of brake pedal signal is displayed. (When depressed: ON)
Force Sensor	The tension detected by the force sensor in the actuator is displayed.
Stroke Sensor	The parking brake cable stroke amount detected by the stroke sensor in the actuator is displayed.
Clutch stroke sensor	The pedal stroke amount detected by the clutch stroke sensor is displayed.
Clutch engagement point	Clutch engagement position is displayed.
Actuator Inner Temperature (Primary)	Actuator inner temperature (PRY) is displayed.
Actuator Inner Temperature (Secondary)	Actuator inner temperature (SEC) is displayed.
Incline	Incline of the vehicle is displayed.
Engine Torque	Engine torque is displayed.
Manual Parking Operation	Parking brake operation condition is displayed. (At manual parking operation: 1)
Auto Parking Operation	Parking brake operation condition is displayed. (At automatic parking operation: 1)
Parking Operation when driving	Parking brake operation condition is displayed. (At parking operation when driving: 1)
Parking Cancel	Parking brake operation condition is displayed. (At parking cancel: 1)
Hill hold lamp	Hill hold indicator control condition is displayed. (When illuminating: ON)
Ignition Signal	Input condition of ignition signal is displayed.
Neutral Signal	Input condition of neutral signal is displayed. (When neutral: ON)
Engine idle flag	Engine speed condition is displayed. (When idling: ON)
Door Signal	Input condition of door (4 locations) open/close signal is displayed. (When at least one door is open: OPEN)
Driver Seat Belt Signal	Input condition of driver's seatbelt signal is displayed.

5. PARKING BRAKE REMOVAL MODE

CAUTION:
• Subaru Select Monitor is required for the parking brake removal mode.
• Make sure to perform this procedure with the vehicle lifted.
• When this mode is performed by mistake, operate and then release the parking brake.

NOTE:
When disassembling the parking brake, use this function to set the parking brake cable at the release position.
1) Lift up the vehicle.
2) Connect the Subaru Select Monitor.
3) On «Main Menu» display, select {Each System Check}.
4) On «System Selection Menu» display, select {Brake Control System}.
5) Click the [OK] button after {Parking Brake System} is displayed.
6) On «Maintenance Operation Mode» display, select {Parking Brake Removal Mode}.
7) The confirmation screen, “Perform parking brake removal?”, is displayed. Click the [YES] button.
8) The message, “Releasing parking cable until removal position.”, is displayed on the screen, and the removal mode begins.
9) The message, “Parking cable released until removal position.”, is displayed on the screen. Turn the ignition switch to OFF to end the removal mode.

6. FORCE SENSOR CALIBRATION MODE

CAUTION:
• Subaru Select Monitor is required for the Force Sensor Calibration Mode.
• Make sure to perform this procedure with the vehicle parked in a horizontal place and to use wheel chocks.

NOTE:
• When the following work is performed, use this function to perform calibration of force sensor in the parking brake actuator.
– Removing the parking brake assembly
– Replacing the electronic parking brake control module
– Adjusting the shoe clearance
• After replacing the electronic parking brake control module, if the calibration of the force sensor has not yet been performed, the brake warning light will blink and “Force Sensor Line (abnormal)” DTC will be detected.
1) Park the vehicle in a horizontal place using wheel chocks.
2) Connect the Subaru Select Monitor.
3) On «Main Menu» display, select {Each System Check}.
4) On «System Selection Menu» display, select {Brake Control System}.
5) Click the [OK] button after {Parking Brake System} is displayed.
6) On «Maintenance Operation Mode» display, select {Force Sensor Calibration Mode}.
7) The confirmation screen of vehicle parking condition and wheel chocks usage is displayed. Confirm the parking condition and wheel chocks, and click the [YES] button.
8) A message indicating the calibration mode in progress is displayed on the screen, and the Force Sensor Calibration Mode begins.
9) The message, “Force sensor calibration done. Turn Ignition Switch OFF.”, is displayed on the screen. Turn the ignition switch to OFF to end the calibration mode.

7. BREAK-IN PARKING BRAKE DRIVE MODE

CAUTION:
Subaru Select Monitor is required for the "Break-in Parking Brake Drive Mode".

NOTE:
• When the parking brake shoe is replaced, use this function to perform parking brake lining break-in drive after adjusting the shoe clearance of the parking brake. <Ref. to PB-15, SHOE CLEARANCE, ADJUSTMENT, Parking Brake Assembly (Rear Disc Brake).>
• After performing the "Break-in Parking Brake Drive Mode", adjust the shoe clearance of the parking brake again, and perform the "Force Sensor Calibration Mode". <Ref. to PB(diag)-18, FORCE SENSOR CALIBRATION MODE, OPERATION, Subaru Select Monitor.>

1) Connect the Subaru Select Monitor.
2) On «Main Menu» display, select {Each System Check}.
3) On «System Selection Menu» display, select {Brake Control System}.
4) Click the [OK] button after {Parking Brake System} is displayed.
5) On «Maintenance Operation Mode» display, select {Break-in Parking Brake Drive Mode}.
6) The confirmation message, "Perform break-in parking brake drive?", is displayed on the screen. With the vehicle parked, release the parking brake, and click the [YES] button.
7) Confirm the message indicating the break-in drive mode start on the screen and the blink of the brake warning light, and begin the break-in drive.
8) Drive the vehicle at approximately 35 km/h (22 MPH) or more.
9) C6 model
Drive the vehicle approximately 200 m (0.12 miles) with the parking brake switch pressed, until the brake warning light goes off.
10) Models other than C6 model
Drive the vehicle approximately 200 m (0.12 miles) with the parking brake switch pressed. Release a hand from the parking brake switch once to cancel. Drive the vehicle again with the parking brake switch pressed, and if brake drag is not felt, go to step 11). If brake drag is felt, repeat steps 8) and 10) again.
11) Turn the ignition switch to OFF, and wait for 5 to 10 minutes until the parking brake temperature drops.
12) Repeat steps 2) to 10) again.
13) Turn the ignition switch to OFF to end the break-in drive mode.
14) Adjust the shoe clearance of the parking brake again. <Ref. to PB-15, SHOE CLEARANCE, ADJUSTMENT, Parking Brake Assembly (Rear Disc Brake).>
15) Perform the Force Sensor Calibration Mode. <Ref. to PB(diag)-18, FORCE SENSOR CALIBRATION MODE, OPERATION, Subaru Select Monitor.>

8. PARAMETER INITIALIZATION MODE

CAUTION:
• Subaru Select Monitor is required for the Parameter Initialization Mode.
• This function can be used for replacement parts of the electronic parking brake control module.

NOTE:
• When DTC "Parameter selection error" is detected after replacing the electronic parking brake control module, use this function to perform parameter initialization of the electronic parking brake control module.
• After performing Parameter Initialization Mode, perform the Force Sensor Calibration Mode and Clutch Sensor Calibration Mode. <Ref. to PB(diag)-18, FORCE SENSOR CALIBRATION MODE, OPERATION, Subaru Select Monitor.> <Ref. to PB(diag)-20, CLUTCH SENSOR CALIBRATION MODE, OPERATION, Subaru Select Monitor.>

1) Connect the Subaru Select Monitor.
2) On «Main Menu» display, select {Each System Check}.
3) On «System Selection Menu» display, select {Brake Control System}.
4) Click the [OK] button after {Parking Brake System} is displayed.
5) On «Maintenance Operation Mode» display, select {Parameter Initialization Mode}.
6) The confirmation message, "Perform parameter initialization?", is displayed on the screen. Following the instructions on the screen, confirm the connections of all control modules, and click the [YES] button.
7) The message, "Parameter initialization in progress...", is displayed on the screen, and initialization begins.
8) The message, "Parameter initialization done.. Turn Ignition Switch OFF.", is displayed on the screen. Turn the ignition switch to OFF to end the Parameter Initialization Mode.

9. CLUTCH SENSOR CALIBRATION MODE

CAUTION:
Subaru Select Monitor is required for Clutch Sensor Calibration Mode.

NOTE:
• When the following parts are replaced, use this function to perform clutch sensor calibration.
  – Clutch master cylinder assembly
  – Electronic parking brake control module
  – Clutch pedal
• After replacing the parts above, if the calibration of the clutch sensor has not yet been performed, “Clutch Sensor” DTC will be detected. At this time, the electronic parking brake warning light illuminates on C6 model, or the brake warning light blinks on models other than C6 model.
1) Connect the Subaru Select Monitor.
2) On «Main Menu» display, select {Each System Check}.
3) On «System Selection Menu» display, select {Brake Control System}.
4) Click the [OK] button after {Parking Brake System} is displayed.
5) On «Maintenance Operation Mode» display, select {Clutch Sensor Calibration Mode}.
6) The confirmation message, “Perform clutch sensor calibration?”, is displayed on the screen. Following the instructions on the screen, click the [YES] button with the clutch pedal not depressed.
7) The message, “Clutch sensor calibration done. Turn Ignition switch OFF.”, is displayed on the screen. Turn the ignition switch to OFF to end the calibration mode.

10.CLUTCH ENGAGEMENT POSITION SETTING

CAUTION:
Subaru Select Monitor is required for Clutch Engagement Position Setting.

NOTE:
• When the clutch master cylinder assembly is replaced, use this function to set the engagement position for the clutch stroke sensor.
• When the customer requested a change of the accelerator interlocking release timing, use this function to change the engagement position of the clutch stroke sensor in order to change the accelerator interlocking release timing.
• The clutch engagement position can be set between 50 — 80%.
1) Park the vehicle on a safe level surface without obstacles.
2) Start the engine to warm up.
3) Connect the Subaru Select Monitor.
4) On «Main Menu» display, select {Each System Check}.
5) On «System Selection Menu» display, select {Brake Control System}.
6) Click the [OK] button after {Parking Brake System} is displayed.
7) On «Maintenance Operation Mode» display, select {Clutch Engagement Position Setting}.
8) Release the parking brake. Shift the gear to 1st, then slowly release the clutch pedal, and read “Clutch position current value” on the screen when the vehicle starts to move.
9) Enter the reading to “Engagement position input value”, and press the [Execution] button.
10) Turn the ignition switch to OFF to end the clutch engagement position setting.
11) Drive the vehicle, and check the accelerator interlocking release timing.

CAUTION:
If the clutch engagement position is not set correctly, early release or release delay of the parking brake may occur at the accelerator interlocking release. After completing the setting, check the accelerator interlocking timing in a safe place, and confirm that neither early release nor release delay occurs.

NOTE:
• When a smaller value than “Engagement position learning value” is entered in “Engagement position input value”, the parking brake release timing delays.
• When a larger value than “Engagement position learning value” is entered in “Engagement position input value”, the parking brake release timing becomes early.

B: INSPECTION

1. COMMUNICATION FOR INITIALIZING IMPOSSIBLE

DETECTING CONDITION:
Defective harness connector
TROUBLE SYMPTOM:
Communication is impossible between the electronic parking brake control module and Subaru Select Monitor.
WIRING DIAGRAM:

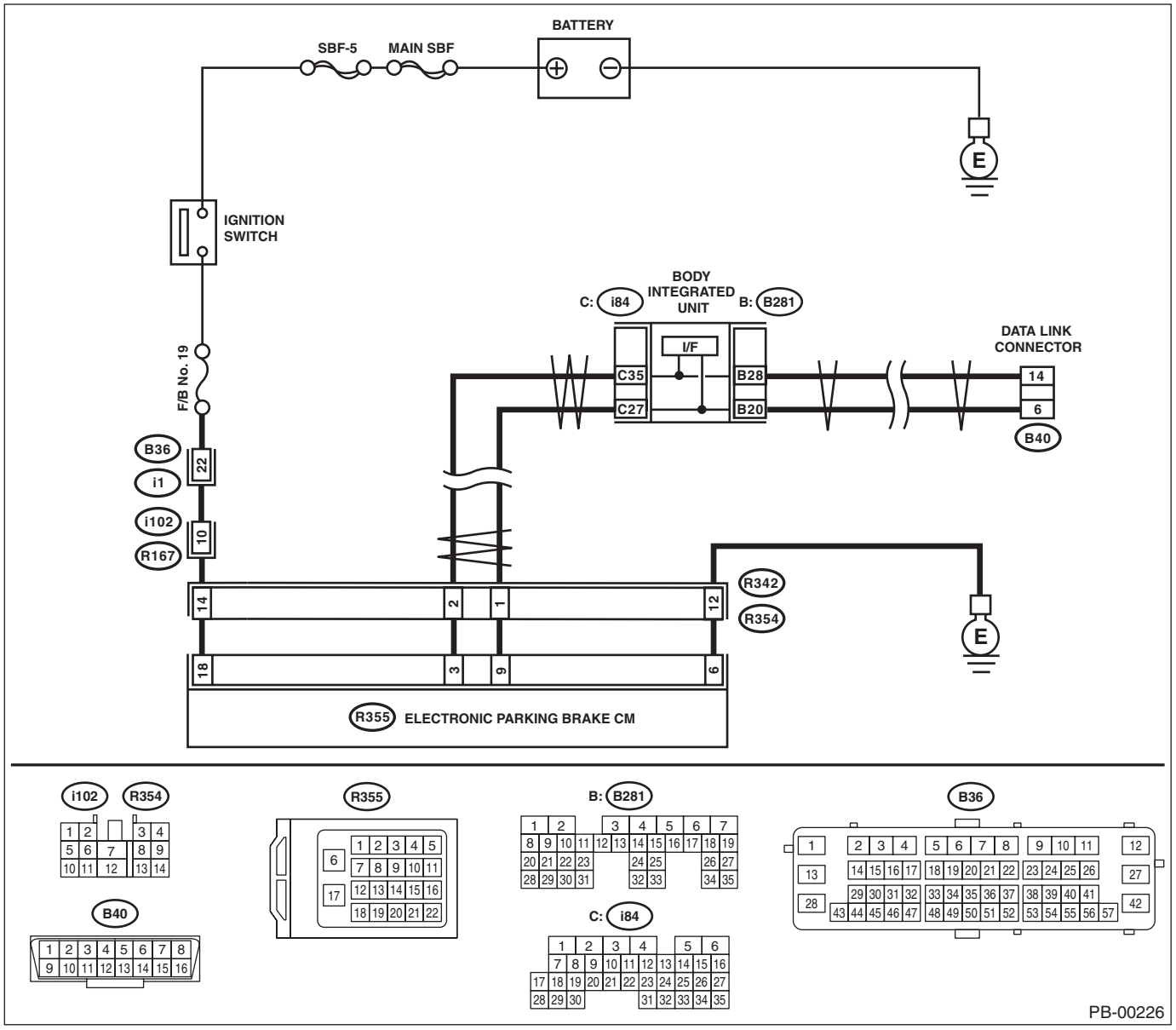

Step		Check	Yes	No
1	**CHECK IGNITION SWITCH.**	Is the ignition switch ON?	Go to step **2**.	Turn the ignition switch to ON, and select {Parking Brake System} using the Subaru Select Monitor.
2	**CHECK BATTERY.** 1) Turn the ignition switch to OFF. 2) Measure the battery voltage.	Is the voltage 11 V or more?	Go to step **3**.	Charge or replace the battery.

	Step	Check	Yes	No
3	**CHECK BATTERY TERMINAL.**	Is there poor contact at battery terminal?	Repair or tighten the battery terminal.	Go to step **4**.
4	**CHECK LAN SYSTEM.** Perform the diagnosis for LAN system. <Ref. to LAN(diag)-2, Basic Diagnostic Procedure.>	Is there any fault in LAN system?	Perform the diagnosis according to DTC for LAN system. <Ref. to LAN(diag)-32, List of Diagnostic Trouble Code (DTC).>	Go to step **5**.
5	**CHECK SUBARU SELECT MONITOR COMMUNICATION.** 1) Press the parking brake switch once. 2) Check whether communication with the parking brake system can be executed normally.	Is the system name displayed on Subaru Select Monitor?	Check DTC of the parking brake system. <Ref. to PB(diag)-23, Read Diagnostic Trouble Code (DTC).>	Go to step **6**.
6	**CHECK INSTALLATION OF ELECTRONIC PARKING BRAKE CM CONNECTOR.** Turn the ignition switch to OFF.	Is the electronic parking brake CM connector inserted into the electronic parking brake CM until the clamp locks onto it?	Go to step **7**.	Insert the electronic parking brake CM connector into the electronic parking brake CM.
7	**CHECK HARNESS CONNECTOR BETWEEN ELECTRONIC PARKING BRAKE CM AND CHASSIS GROUND.** Measure the resistance of harness between electronic parking brake CM connector and chassis ground. ***Connector & terminal*** ***(B355) No. 6 — Chassis ground:***	Is the resistance less than 10 Ω?	Go to step **8**.	Repair the open circuit of the electronic parking brake CM ground circuit and poor contact of connector.
8	**CHECK POOR CONTACT OF CONNECTOR.**	Is there poor contact of control module power supply, ground circuit and data link connector?	Repair the connector.	Replace the electronic parking brake CM. <Ref. to PB-6, Parking Brake Actuator.>

7. Read Diagnostic Trouble Code (DTC)

A: OPERATION

NOTE:
• For detailed operation procedures, refer to “PC application help for Subaru Select Monitor”.
• For details concerning DTCs, refer to “List of Diagnostic Trouble Code (DTC)”. <Ref. to PB(diag)-35, List of Diagnostic Trouble Code (DTC).>
• Up to 3 DTCs are displayed in the order of detection.

Display	Contents to be displayed
(Current)	The current DTC is displayed on Subaru Select Monitor display screen.
(Old)	The latest DTC from the history of previous problems is displayed on Subaru Select Monitor display screen.
(Older)	The second latest DTC from the history of previous problems is displayed on the Subaru Select Monitor display screen.
(Before 3)	The third latest DTC from the history of previous problems is displayed on Subaru Select Monitor display screen.

8. Inspection Mode

A: PROCEDURE

Reproduce the malfunction occurrence condition as much as possible.
Drive the vehicle at least 10 minutes, and operate and release the parking brake a few times.

9. Clear Memory Mode

A: OPERATION

NOTE:
For detailed operation procedures, refer to “PC application help for Subaru Select Monitor”.

10.Warning Light Illumination Pattern

A: INSPECTION

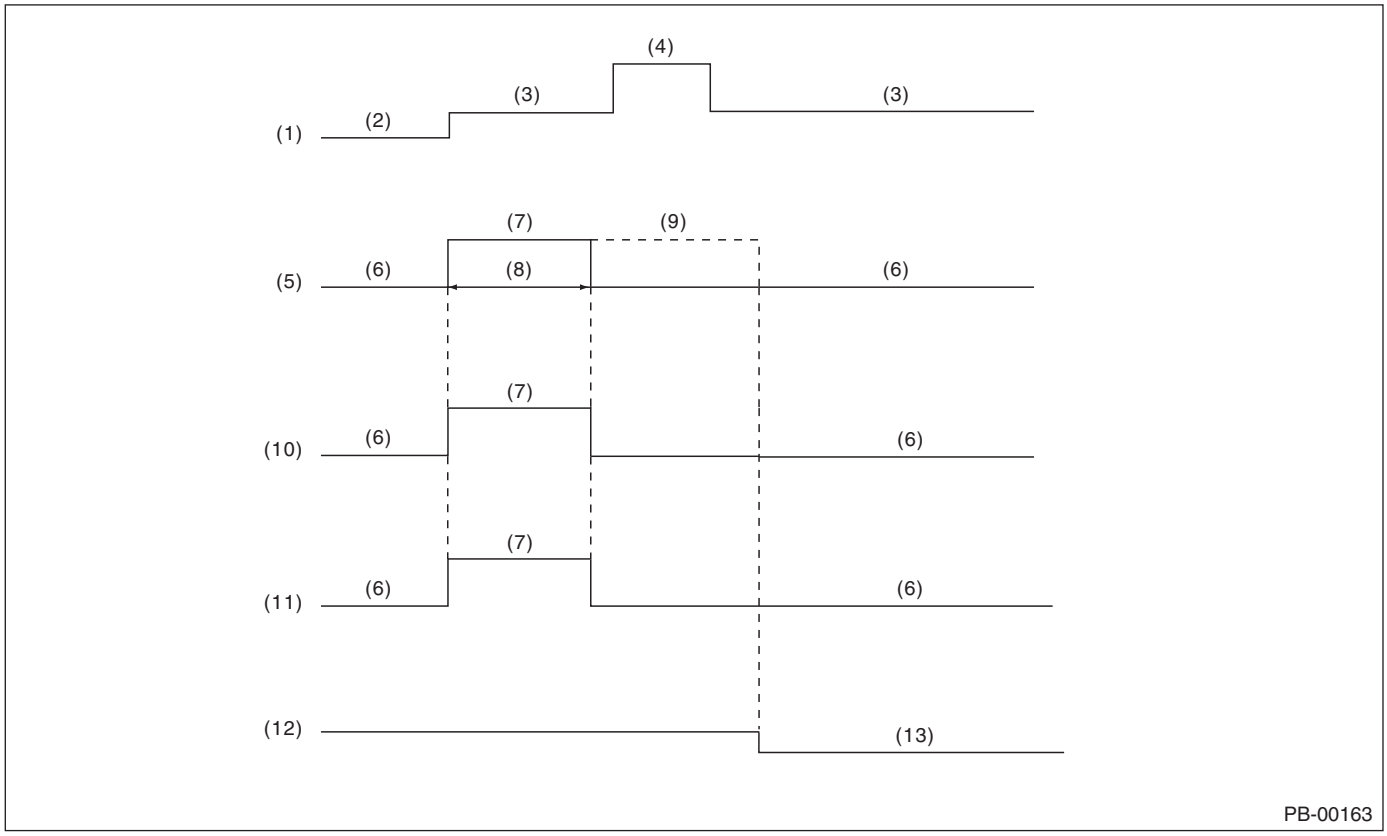

(1) Ignition switch
(2) OFF
(3) ON
(4) Engine start
(5) Brake warning light (EBD warning light)
(6) Light OFF
(7) Light ON
(8) Approx. 2 seconds
(9) If the parking brake is being operated, illumination continues until the brake is released.
(10) Electronic parking brake warning light (C6 model only)
(11) Hill hold indicator light
(12) Parking brake
(13) Released

1) When warning lights or indicator lights do not illuminate in accordance with this illumination pattern, there must be an electrical malfunction.
2) When warning lights or indicator lights remain constantly OFF, check the combination meter circuit or CAN communication circuit. <Ref. to PB(diag)-28, BRAKE WARNING LIGHT, ELECTRONIC PARKING BRAKE WARNING LIGHT AND HILL HOLD INDICATOR LIGHT DO NOT COME ON, Warning Light Illumination Pattern.>
3) When the electronic parking brake warning light (C6 model only) and hill hold indicator light do not go off, check the combination meter circuit, CAN communication circuit and electronic parking brake control module. <Ref. to PB(diag)-30, ELECTRONIC PARKING BRAKE WARNING LIGHT AND HILL HOLD INDICATOR LIGHT DO NOT GO OFF, Warning Light Illumination Pattern.> <Ref. to PB(diag)-29, HILL HOLD INDICATOR LIGHT DO NOT GO OFF, Warning Light Illumination Pattern.>
4) When the brake warning light does not go off, check the combination meter circuit, CAN communication circuit, electronic parking brake control module, and VDCCM&H/U. <Ref. to PB(diag)-31, BRAKE WARNING LIGHT DOES NOT GO OFF, Warning Light Illumination Pattern.> <Ref. to PB(diag)-33, BRAKE WARNING LIGHT REMAINS BLINKING, Warning Light Illumination Pattern.>
5) After replacing the electronic parking brake control module, the brake warning light blinks. Make sure to perform the Force Sensor Calibration Mode and Clutch Sensor Calibration Mode. <Ref. to PB(diag)-18, FORCE SENSOR CALIBRATION MODE, OPERATION, Subaru Select Monitor.> <Ref. to PB(diag)-20, CLUTCH SENSOR CALIBRATION MODE, OPERATION, Subaru Select Monitor.>
6) When operation and release of the parking brake is repeated excessively, the brake warning light blinks and the parking brake switch operation may not be accepted for several tens of seconds; this is not malfunction, however.

B: BRAKE WARNING LIGHT, ELECTRONIC PARKING BRAKE WARNING LIGHT AND HILL HOLD INDICATOR LIGHT DO NOT COME ON

DETECTING CONDITION:

- Defective combination meter
- Defective CAN communication

TROUBLE SYMPTOM:

When the ignition switch is turned to ON (engine OFF), brake warning light, electronic parking brake warning light (C6 model only) and hill hold indicator light do not come on.

	Step	Check	Yes	No
1	**CHECK OTHER INDICATOR LIGHT.** Turn the ignition switch to ON.	Does other indicator light illuminate soon after “ON”?	Go to step **2**.	Perform the diagnosis for combination meter. <Ref. to IDI-6, SELF-DIAGNOSIS DISPLAY MODE, OPERATION, Combination Meter System.>
2	**CHECK LAN SYSTEM.** Check the DTC in LAN system. <Ref. to LAN(diag)-10, OPERATION, Read Diagnostic Trouble Code (DTC).>	Is DTC of LAN system displayed?	Perform the diagnosis according to DTC. <Ref. to LAN(diag)-32, List of Diagnostic Trouble Code (DTC).>	Replace the combination meter case assembly. <Ref. to IDI-21, REMOVAL, Combination Meter.>

C: HILL HOLD INDICATOR LIGHT DO NOT GO OFF

NOTE:
This diagnosis is applied to models other than C6 model.

DETECTING CONDITION:

- Defective combination meter
- Defective CAN communication

TROUBLE SYMPTOM:

When starting the engine, the hill hold indicator light remains lit.

	Step	Check	Yes	No
1	**READ DTC.** Read the DTC. <Ref. to PB(diag)-23, Read Diagnostic Trouble Code (DTC).>	Is DTC displayed?	Perform the diagnosis according to DTC. <Ref. to PB(diag)-35, List of Diagnostic Trouble Code (DTC).>	Go to step **2**.
2	**CHECK LAN SYSTEM.** Check the DTC in LAN system. <Ref. to LAN(diag)-10, OPERATION, Read Diagnostic Trouble Code (DTC).>	Is DTC of LAN system displayed?	Perform the diagnosis according to DTC. <Ref. to LAN(diag)-32, List of Diagnostic Trouble Code (DTC).>	Go to step **3**.
3	**CHECK ELECTRONIC PARKING BRAKE CM.** With the engine started, display the current data of the electronic parking brake CM using Subaru Select Monitor.	When the hill hold switch is not operated after starting the engine, is the «Hill hold lamp» ON?	Replace the electronic parking brake CM. <Ref. to PB-6, Parking Brake Actuator.>	Go to step **4**.
4	**CHECK COMBINATION METER.** Check the combination meter. <Ref. to IDI-6, SELF-DIAGNOSIS DISPLAY MODE, OPERATION, Combination Meter System.>	Is combination meter OK?	Replace the electronic parking brake CM. <Ref. to PB-6, Parking Brake Actuator.>	Replace the combination meter case assembly. <Ref. to IDI-21, REMOVAL, Combination Meter.>

D: ELECTRONIC PARKING BRAKE WARNING LIGHT AND HILL HOLD INDICATOR LIGHT DO NOT GO OFF

NOTE:
This diagnosis is applied to C6 model.

DETECTING CONDITION:

- Defective combination meter
- Defective CAN communication

TROUBLE SYMPTOM:

When starting the engine, the electronic parking brake warning light and hill hold indicator light remain lit.

	Step	Check	Yes	No
1	**READ DTC.** Read the DTC. <Ref. to PB(diag)-23, Read Diagnostic Trouble Code (DTC).>	Is DTC displayed?	Perform the diagnosis according to DTC. <Ref. to PB(diag)-35, List of Diagnostic Trouble Code (DTC).>	Go to step **2**.
2	**CHECK LAN SYSTEM.** Check the DTC in LAN system. <Ref. to LAN(diag)-10, OPERATION, Read Diagnostic Trouble Code (DTC).>	Is DTC of LAN system displayed?	Perform the diagnosis according to DTC. <Ref. to LAN(diag)-32, List of Diagnostic Trouble Code (DTC).>	Go to step **3**.
3	**CHECK ELECTRONIC PARKING BRAKE CM.** With the engine started, display the current data of the electronic parking brake CM using Subaru Select Monitor.	Is «Parking System Warning Light» ON?	Replace the electronic parking brake CM. <Ref. to PB-6, Parking Brake Actuator.>	Go to step **4**.
4	**CHECK ELECTRONIC PARKING BRAKE CM.** With the engine started, display the current data of the electronic parking brake CM using Subaru Select Monitor.	When the hill hold switch is not operated after starting the engine, is the «Hill hold lamp» ON?	Replace the electronic parking brake CM. <Ref. to PB-6, Parking Brake Actuator.>	Go to step **5**.
5	**CHECK COMBINATION METER.** Check the combination meter. <Ref. to IDI-6, SELF-DIAGNOSIS DISPLAY MODE, OPERATION, Combination Meter System.>	Is combination meter OK?	Replace the electronic parking brake CM. <Ref. to PB-6, Parking Brake Actuator.>	Replace the combination meter case assembly. <Ref. to IDI-21, REMOVAL, Combination Meter.>

E: BRAKE WARNING LIGHT DOES NOT GO OFF

DETECTING CONDITION:

- Brake warning light circuit is shorted.
- Defective sensor/connector

TROUBLE SYMPTOM:

After starting the engine, the brake warning light remains lit or blinking though the parking brake is released.

WIRING DIAGRAM:

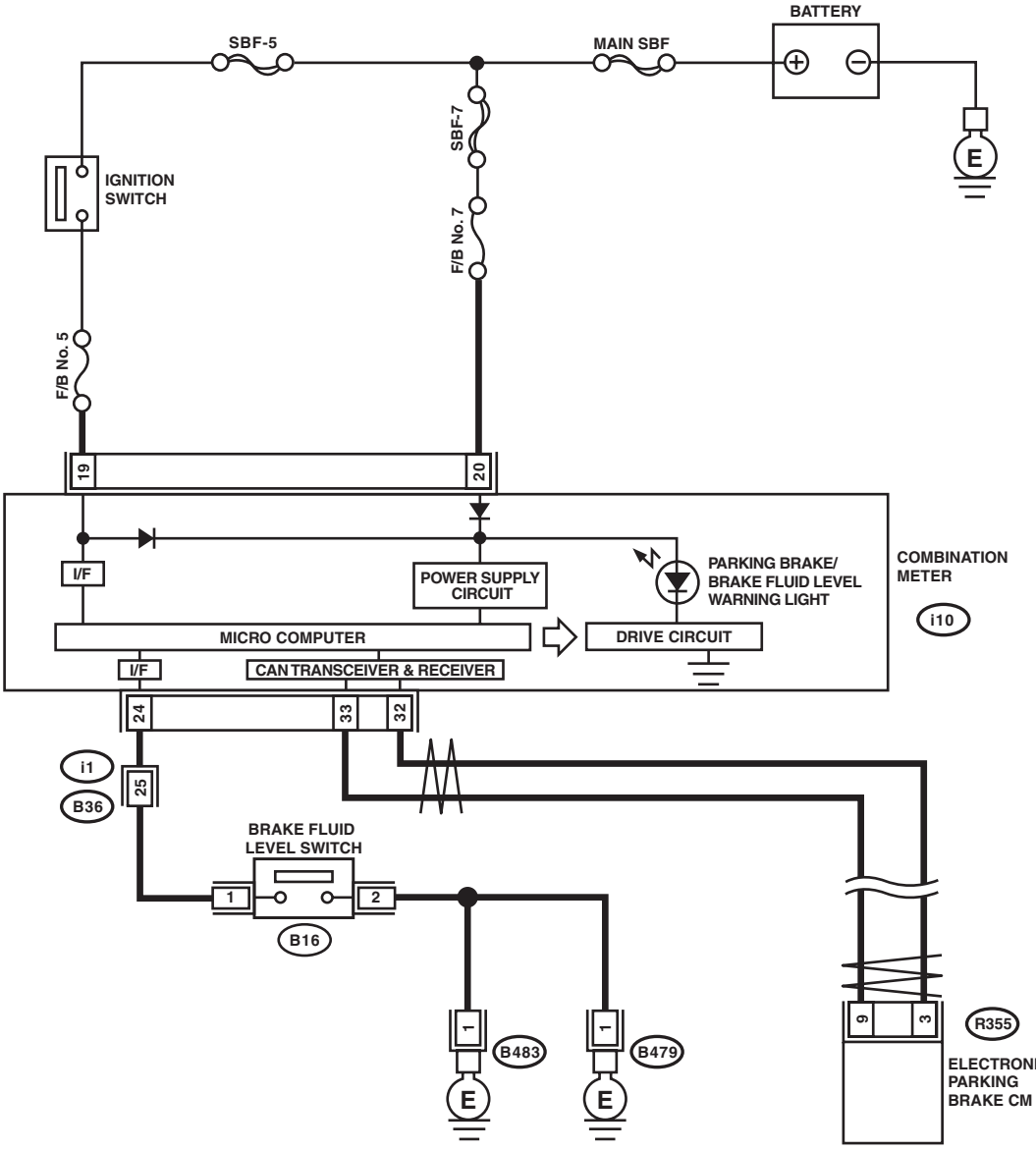

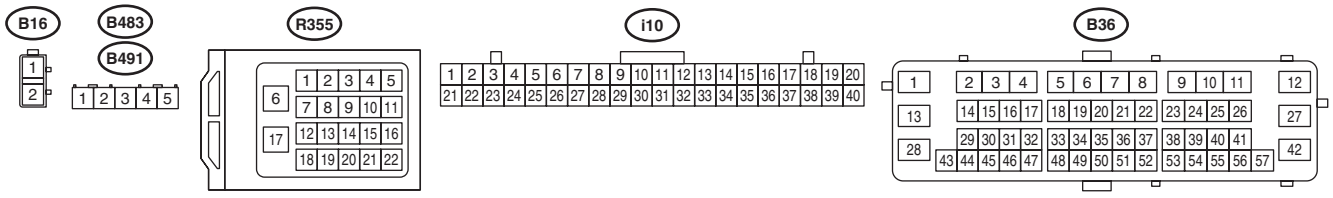

PB-00239

	Step	Check	Yes	No
1	**READ DTC.** Read the DTC. <Ref. to PB(diag)-23, Read Diagnostic Trouble Code (DTC).>	Is DTC displayed?	Perform the diagnosis according to DTC. <Ref. to PB(diag)-35, List of Diagnostic Trouble Code (DTC).>	Go to step **2**.
2	**CHECK BRAKE FLUID AMOUNT.** Check the amount of brake fluid in the reservoir tank of master cylinder.	Does the level of the brake fluid amount fall between the lines of "MAX" and "MIN"?	Go to step **3**.	Replenish brake fluid to the specified value.
3	**CHECK BRAKE FLUID LEVEL SWITCH.** 1) Turn the ignition switch to OFF. 2) Disconnect the level switch connector (B16) from master cylinder. 3) Measure the resistance of master cylinder terminals. ***Terminals*** ***No. 1 — No. 2:***	Is the resistance 1 MΩ or more?	Go to step **4**.	Replace the master cylinder. <Ref. to BR-41, Master Cylinder.>
4	**CHECK GROUND SHORT OF HARNESS.** 1) Disconnect the connector (i10) from combination meter. 2) Measure the resistance between combination meter connector and chassis ground. ***Connector & terminal*** ***(i10) No. 24 — Chassis ground:***	Is the resistance 1 MΩ or more?	Go to step **5**.	Repair the harness connector between combination meter and brake fluid level switch.
5	**CHECK LAN SYSTEM.** Check the DTC in LAN system. <Ref. to LAN(diag)-10, OPERATION, Read Diagnostic Trouble Code (DTC).>	Is DTC of LAN system displayed?	Perform the diagnosis according to DTC. <Ref. to LAN(diag)-32, List of Diagnostic Trouble Code (DTC).>	Go to step **6**.
6	**CHECK COMBINATION METER.** Check the combination meter. <Ref. to IDI-6, SELF-DIAGNOSIS DISPLAY MODE, OPERATION, Combination Meter System.>	Is combination meter OK?	Go to step **7**.	Replace the combination meter case assembly. <Ref. to IDI-21, REMOVAL, Combination Meter.>
7	**CHECK VDC SYSTEM.** Check the DTC in VDC system. <Ref. to VDC(diag)-23, OPERATION, Read Diagnostic Trouble Code (DTC).>	Is DTC of VDC system displayed?	Perform the diagnosis according to DTC. <Ref. to VDC(diag)-35, List of Diagnostic Trouble Code (DTC).>	Go to step **8**.
8	**CHECK ELECTRONIC PARKING BRAKE CM.** With the parking brake released, display the current data of the electronic parking brake CM using Subaru Select Monitor.	Is the «Brake Warning Light» ON?	Replace the electronic parking brake CM. <Ref. to PB-6, Parking Brake Actuator.>	Go to step **9**.
9	**CHECK OTHER DTC DETECTION.**	Is any other DTC displayed?	Perform the diagnosis according to DTC.	It results from a temporary poor contact interference.

F: BRAKE WARNING LIGHT REMAINS BLINKING

NOTE:
This diagnosis is applied to models other than C6 model.

DETECTING CONDITION:

- Brake warning light circuit is shorted.
- Defective sensor/connector

TROUBLE SYMPTOM:

After starting the engine, the brake warning light remains lit or blinking though the parking brake is released.

WIRING DIAGRAM:

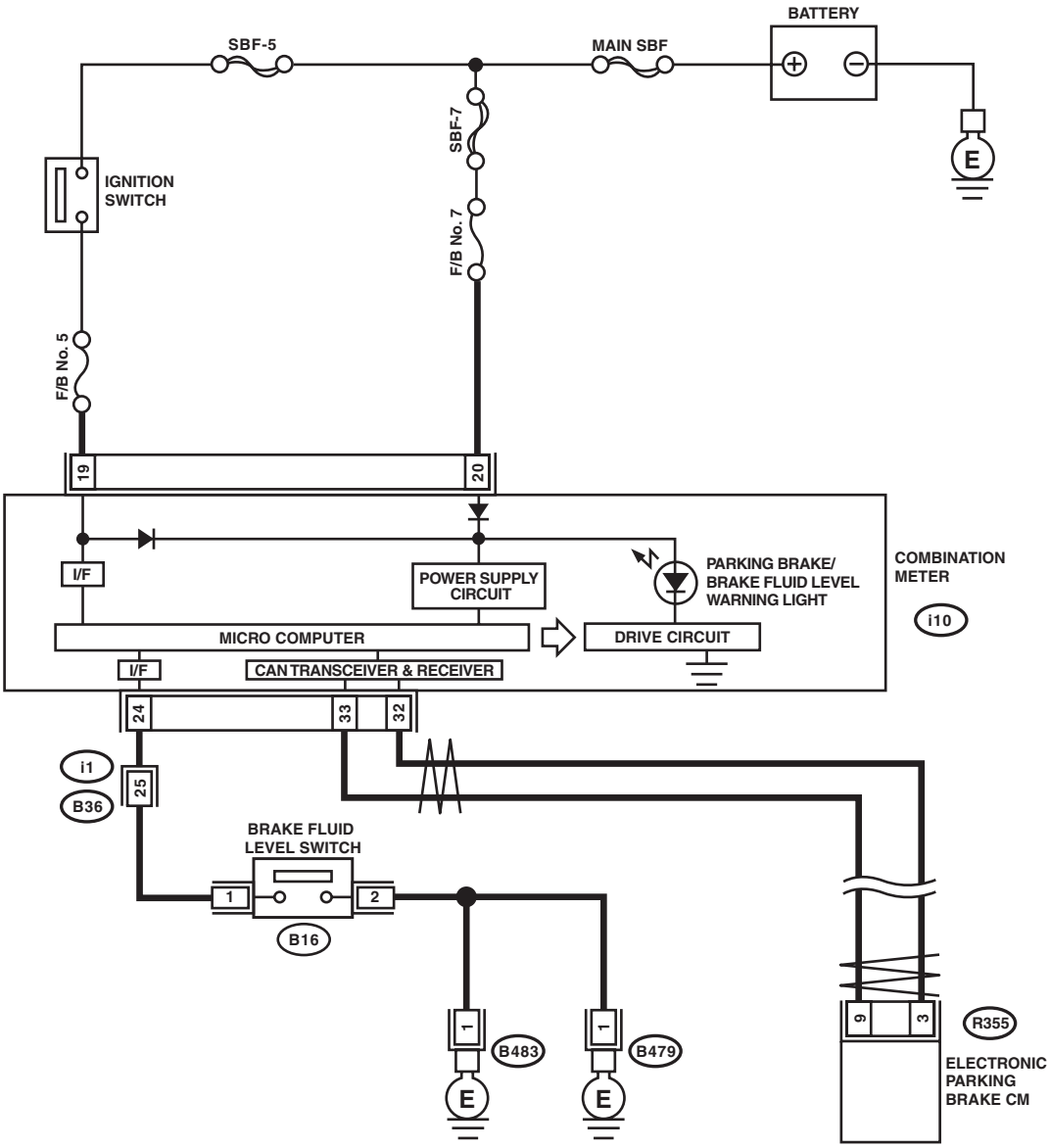

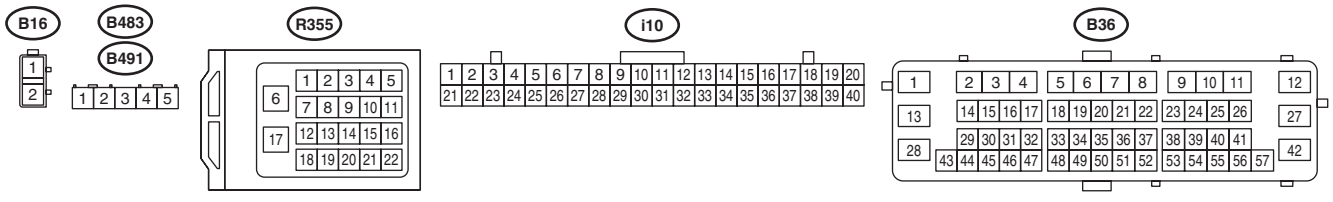

PB-00239

	Step	Check	Yes	No
1	**READ DTC.** Read the DTC. <Ref. to PB(diag)-23, Read Diagnostic Trouble Code (DTC).>	Is DTC displayed?	Perform the diagnosis according to DTC. <Ref. to PB(diag)-35, List of Diagnostic Trouble Code (DTC).>	Go to step **2**.
2	**CHECK BRAKE FLUID AMOUNT.** Check the amount of brake fluid in the reservoir tank of master cylinder.	Does the level of the brake fluid amount fall between the lines of "MAX" and "MIN"?	Go to step **3**.	Replenish brake fluid to the specified value.
3	**CHECK BRAKE FLUID LEVEL SWITCH.** 1) Turn the ignition switch to OFF. 2) Disconnect the level switch connector (B16) from master cylinder. 3) Measure the resistance of master cylinder terminals. ***Terminals*** ***No. 1 — No. 2:***	Is the resistance 1 MΩ or more?	Go to step **4**.	Replace the master cylinder. <Ref. to BR-41, Master Cylinder.>
4	**CHECK GROUND SHORT OF HARNESS.** 1) Disconnect the connector (i10) from combination meter. 2) Measure the resistance between combination meter connector and chassis ground. ***Connector & terminal*** ***(i10) No. 24 — Chassis ground:***	Is the resistance 1 MΩ or more?	Go to step **5**.	Repair the harness connector between combination meter and brake fluid level switch.
5	**CHECK LAN SYSTEM.** Check the DTC in LAN system. <Ref. to LAN(diag)-10, OPERATION, Read Diagnostic Trouble Code (DTC).>	Is DTC of LAN system displayed?	Perform the diagnosis according to DTC. <Ref. to LAN(diag)-32, List of Diagnostic Trouble Code (DTC).>	Go to step **6**.
6	**CHECK COMBINATION METER.** Check the combination meter. <Ref. to IDI-6, SELF-DIAGNOSIS DISPLAY MODE, OPERATION, Combination Meter System.>	Is combination meter OK?	Go to step **7**.	Replace the combination meter case assembly. <Ref. to IDI-21, REMOVAL, Combination Meter.>
7	**CHECK VDC SYSTEM.** Check the DTC in VDC system. <Ref. to VDC(diag)-23, OPERATION, Read Diagnostic Trouble Code (DTC).>	Is DTC of VDC system displayed?	Perform the diagnosis according to DTC. <Ref. to VDC(diag)-35, List of Diagnostic Trouble Code (DTC).>	Go to step **8**.
8	**CHECK ELECTRONIC PARKING BRAKE CM.** With the parking brake released, display the current data of the electronic parking brake CM using Subaru Select Monitor.	Is the «Brake Warning Light» ON?	Replace the electronic parking brake CM. <Ref. to PB-6, Parking Brake Actuator.>	Go to step **9**.
9	**CHECK ELECTRONIC PARKING BRAKE CM.** With the parking brake released, display the current data of the electronic parking brake CM using Subaru Select Monitor.	Is «Parking System Warning Light» ON?	Replace the electronic parking brake CM. <Ref. to PB-6, Parking Brake Actuator.>	Go to step **10**.
10	**CHECK OTHER DTC DETECTION.**	Is any other DTC displayed?	Perform the diagnosis according to DTC.	It results from a temporary poor contact interference.

11.List of Diagnostic Trouble Code (DTC)

A: LIST

DTC	Detailed code	Item	Content of diagnosis	Reference
C0221	504A 504B 504C	Parking Position Switch	Parking switch malfunction	<Ref. to PB(diag)-37, DTC C0221 PARKING POSITION SWITCH, Diagnostic Procedure with Diagnostic Trouble Code (DTC).>
C0222	504E	Hill Hold Switch Circuit	Hill hold switch malfunction	<Ref. to PB(diag)-39, DTC C0222 HILL HOLD SWITCH CIRCUIT, Diagnostic Procedure with Diagnostic Trouble Code (DTC).>
C0231	C110	ECM Failure	Malfunction signal reception from ECM	<Ref. to PB(diag)-41, DTC C0231 ECM FAILURE, Diagnostic Procedure with Diagnostic Trouble Code (DTC).>
C0232	C114	AT Abnormal	Malfunction signal reception from TCM	<Ref. to PB(diag)-41, DTC C0232 AT ABNORMAL, Diagnostic Procedure with Diagnostic Trouble Code (DTC).>
C0233	509E 509F	MT Shift Switch Circuit	Malfunction of neutral position switch, back-up light switch	<Ref. to PB(diag)-42, DTC C0233 MT SHIFT SWITCH CIRCUIT, Diagnostic Procedure with Diagnostic Trouble Code (DTC).>
C0234	C111	VDC Failure	Malfunction signal reception from VDC CM	<Ref. to PB(diag)-44, DTC C0234 VDC FAILURE, Diagnostic Procedure with Diagnostic Trouble Code (DTC).>
C0235	5046	Ignition Switch Circuit	No match of IGN input	<Ref. to PB(diag)-45, DTC C0235 IGNITION SWITCH CIRCUIT, Diagnostic Procedure with Diagnostic Trouble Code (DTC).>
C0241	5000 502A 5026 C100	Electrical Control Module	Electronic parking brake control module is faulty.	<Ref. to PB(diag)-47, DTC C0241 ELECTRICAL CONTROL MODULE, Diagnostic Procedure with Diagnostic Trouble Code (DTC).>
C0242	5040 5041	Power Supply Voltage Failure	Electronic parking brake control module power supply voltage is faulty.	<Ref. to PB(diag)-49, DTC C0242 POWER SUPPLY VOLTAGE FAILURE, Diagnostic Procedure with Diagnostic Trouble Code (DTC).>
	5042	Internal Power Supply Voltage Abnormal	Electronic parking brake control module inner power supply voltage is faulty.	<Ref. to PB(diag)-50, DTC C0242 INTERNAL POWER SUPPLY VOLTAGE ABNORMAL, Diagnostic Procedure with Diagnostic Trouble Code (DTC).>
C0243	50D1 50D3 50D4 50D5 50D6	Parameter Selection Error	Electronic parking brake control module parameter selection failure	<Ref. to PB(diag)-51, DTC C0243 PARAMETER SELECTION ERROR, Diagnostic Procedure with Diagnostic Trouble Code (DTC).>
C0251	5020 5022 5028 50CE 50CF	Actuator Line (Abnormal)	Actuator line of the electronic parking brake control module is faulty.	<Ref. to PB(diag)-52, DTC C0251 ACTUATOR LINE (ABNORMAL), Diagnostic Procedure with Diagnostic Trouble Code (DTC).>
C0252	5018 5019 501A 50A0	Motor Malfunction	Electronic parking brake control module motor is faulty.	<Ref. to PB(diag)-53, DTC C0252 MOTOR MALFUNCTION, Diagnostic Procedure with Diagnostic Trouble Code (DTC).>
C0253	501F 50C6	Actuator Stroke Excess	Actuator stroke excess	<Ref. to PB(diag)-54, DTC C0253 ACTUATOR STROKE EXCESS, Diagnostic Procedure with Diagnostic Trouble Code (DTC).>
C0261	C101 C13F	Improper CAN Communication	Defective CAN communication	<Ref. to PB(diag)-54, DTC C0261 IMPROPER CAN COMMUNICATION, Diagnostic Procedure with Diagnostic Trouble Code (DTC).>

DTC	Detailed code	Item	Content of diagnosis	Reference
C0262	C10B	TCM Communication Circuit	CAN signal not received from TCM	<Ref. to PB(diag)-55, DTC C0262 TCM COMMUNICATION CIRCUIT, Diagnostic Procedure with Diagnostic Trouble Code (DTC).>
C0263	C107	ECM Communication Circuit	CAN signal not received from ECM	<Ref. to PB(diag)-56, DTC C0263 ECM COMMUNICATION CIRCUIT, Diagnostic Procedure with Diagnostic Trouble Code (DTC).>
C0264	C108 C141	VDC Communication System	CAN signal not received from VDC CM	<Ref. to PB(diag)-57, DTC C0264 VDC COMMUNICATION SYSTEM, Diagnostic Procedure with Diagnostic Trouble Code (DTC).>
C0265	C109	Body Integrated Module Communication Circuit	CAN signal not received from body integrated unit	<Ref. to PB(diag)-58, DTC C0265 BODY INTEGRATED MODULE COMMUNICATION CIRCUIT, Diagnostic Procedure with Diagnostic Trouble Code (DTC).>
C0267	C13E	Meter Communication System	CAN signal not received from combination meter	<Ref. to PB(diag)-59, DTC C0267 METER COMMUNICATION SYSTEM, Diagnostic Procedure with Diagnostic Trouble Code (DTC).>
C0271	5030 5031 503C 50BE 50C5 50CB 50CC	Force Sensor Line (Abnormal)	Defective force sensor	<Ref. to PB(diag)-59, DTC C0271 FORCE SENSOR LINE (ABNORMAL), Diagnostic Procedure with Diagnostic Trouble Code (DTC).>
C0272	501B 503D 503E	Temperature Sensor Line (Abnormal)	Defective temperature sensor	<Ref. to PB(diag)-59, DTC C0272 TEMPERATURE SENSOR LINE (ABNORMAL), Diagnostic Procedure with Diagnostic Trouble Code (DTC).>
C0273	50B9 50BA	Stroke Sensor Line (Abnormal)	Defective stroke sensor	<Ref. to PB(diag)-59, DTC C0273 STROKE SENSOR LINE (ABNORMAL), Diagnostic Procedure with Diagnostic Trouble Code (DTC).>
C0274	5033 503A	Clutch Sensor Circuit	Defective clutch sensor	<Ref. to PB(diag)-60, DTC C0274 CLUTCH SENSOR CIRCUIT, Diagnostic Procedure with Diagnostic Trouble Code (DTC).>
C0275	5037	Longitudinal G Sensor Circuit	Defective longitudinal G sensor	<Ref. to PB(diag)-63, DTC C0275 LONGITUDINAL G SENSOR CIRCUIT, Diagnostic Procedure with Diagnostic Trouble Code (DTC).>
C0281	50CA	Mid Stop Condition	Stop in the middle of stroke while actuator operation	<Ref. to PB(diag)-65, DTC C0281 MID STOP CONDITION, Diagnostic Procedure with Diagnostic Trouble Code (DTC).>
C0282	50C9	Emergency Cancel Status	Perform the emergency cancel.	<Ref. to PB(diag)-66, DTC C0282 EMERGENCY CANCEL STATUS, Diagnostic Procedure with Diagnostic Trouble Code (DTC).>

12.Diagnostic Procedure with Diagnostic Trouble Code (DTC)

A: DTC C0221 PARKING POSITION SWITCH

DTC DETECTING CONDITION:

- Defective parking brake switch
- Defective harness connector

TROUBLE SYMPTOM:

- Electronic parking brake warning light illuminates. (C6 model)
- Brake warning light blinks. (Models other than C6 model)
- Parking brake system does not operate.

NOTE:

- When the parking brake switch is stopped at the mid-operation, or operated too slowly, this DTC may be stored; this is not malfunction, however.
- When the parking brake switch is pressed or pulled for 90 seconds or more, subsequent switch operations are not accepted. At this time, the electronic parking brake warning light illuminates on C6 model, or the brake warning light blinks on models other than C6 model. When turning the ignition switch from OFF to ON, the operation enabled status is restored.

WIRING DIAGRAM:

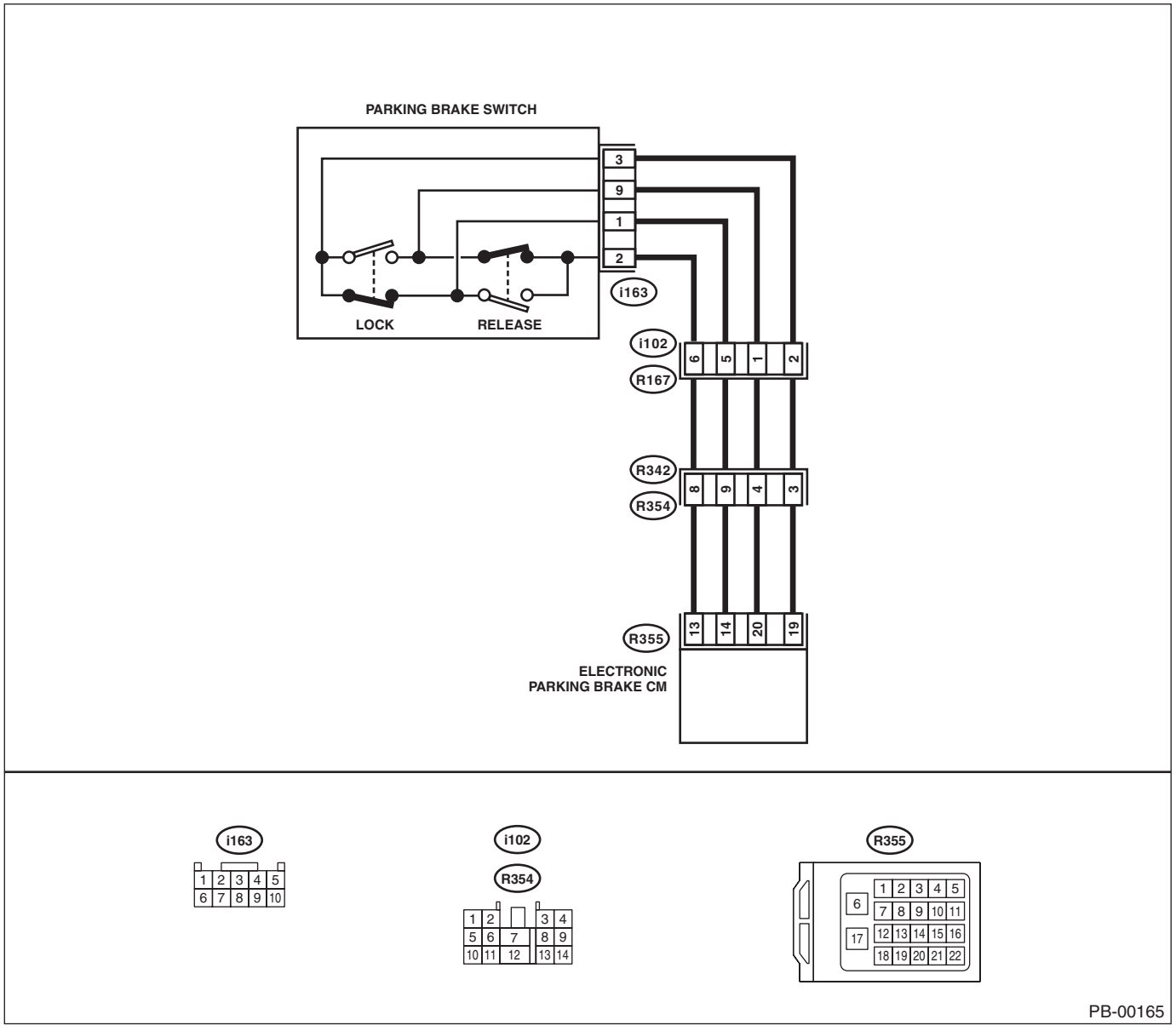

	Step	Check	Yes	No
1	**CHECK HARNESS.** 1) Turn the ignition switch to OFF. 2) Disconnect the connectors from the electronic parking brake CM, and parking brake switch. 3) Measure the resistance of harness between electronic parking brake CM and parking brake switch connector. ***Connector & terminal*** ***(R355) No. 13 — (i163) No. 2:*** ***(R355) No. 14 — (i163) No. 1:*** ***(R355) No. 20 — (i163) No. 9:*** ***(R355) No. 19 — (i163) No. 3:***	Is the resistance less than 1 Ω?	Go to step **2**.	Repair the harness and connector between electronic parking brake CM and parking brake switch connector.
2	**CHECK HARNESS.** Measure the resistance of harness between parking brake switch connector and chassis ground. ***Connector & terminal*** ***(i163) No. 2 — Chassis ground:*** ***(i163) No. 1 — Chassis ground:*** ***(i163) No. 9 — Chassis ground:*** ***(i163) No. 3 — Chassis ground:***	Is the resistance 1 MΩ or more?	Go to step **3**.	Repair ground short of harness between electronic parking brake CM and parking brake switch connector.
3	**CHECK HARNESS.** Measure the voltage between parking brake switch connector and chassis ground. ***Connector & terminal*** ***(i163) No. 2 (+) — Chassis ground (–):*** ***(i163) No. 1 (+) — Chassis ground (–):*** ***(i163) No. 9 (+) — Chassis ground (–):*** ***(i163) No. 3 (+) — Chassis ground (–):***	Is the voltage less than 1 V?	Go to step **4**.	Repair short to power supply of harness between electronic parking brake CM and parking brake switch connector.
4	**CHECK PARKING BRAKE SWITCH.** Check the parking brake switch. <Ref. to PB-18, INSPECTION, Parking Brake Switch.>	Is the parking brake switch normal?	Go to step **5**.	Replace the parking brake switch. <Ref. to PB-16, Parking Brake Switch.>
5	**CHECK ELECTRONIC PARKING BRAKE CM.** 1) Connect all connectors. 2) Clear the memory. <Ref. to PB(diag)-25, Clear Memory Mode.> 3) Perform the Inspection Mode. <Ref. to PB(diag)-24, Inspection Mode.> 4) Read the DTC.	Is the same DTC displayed?	Replace the electronic parking brake CM. <Ref. to PB-6, Parking Brake Actuator.>	Go to step **6**.
6	**CHECK OTHER DTC DETECTION.**	Is any other DTC displayed?	Perform the diagnosis according to DTC.	It results from a temporary noise interference.

B: DTC C0222 HILL HOLD SWITCH CIRCUIT

DTC DETECTING CONDITION:

- Defective hill hold switch
- Defective harness connector

TROUBLE SYMPTOM:

- Electronic parking brake warning light illuminates. (C6 model)
- Brake warning light blinks. (Models other than C6 model)
- Hill hold function cannot be set.

NOTE:
When hill hold switch is pressed for 30 seconds or more, hill hold indicator goes off, and subsequent switch operations are not accepted. At this time, the electronic parking brake warning light illuminates on C6 model, or the brake warning light blinks on models other than C6 model. When turning the ignition switch from OFF to ON, the operation enabled status is restored.

WIRING DIAGRAM:

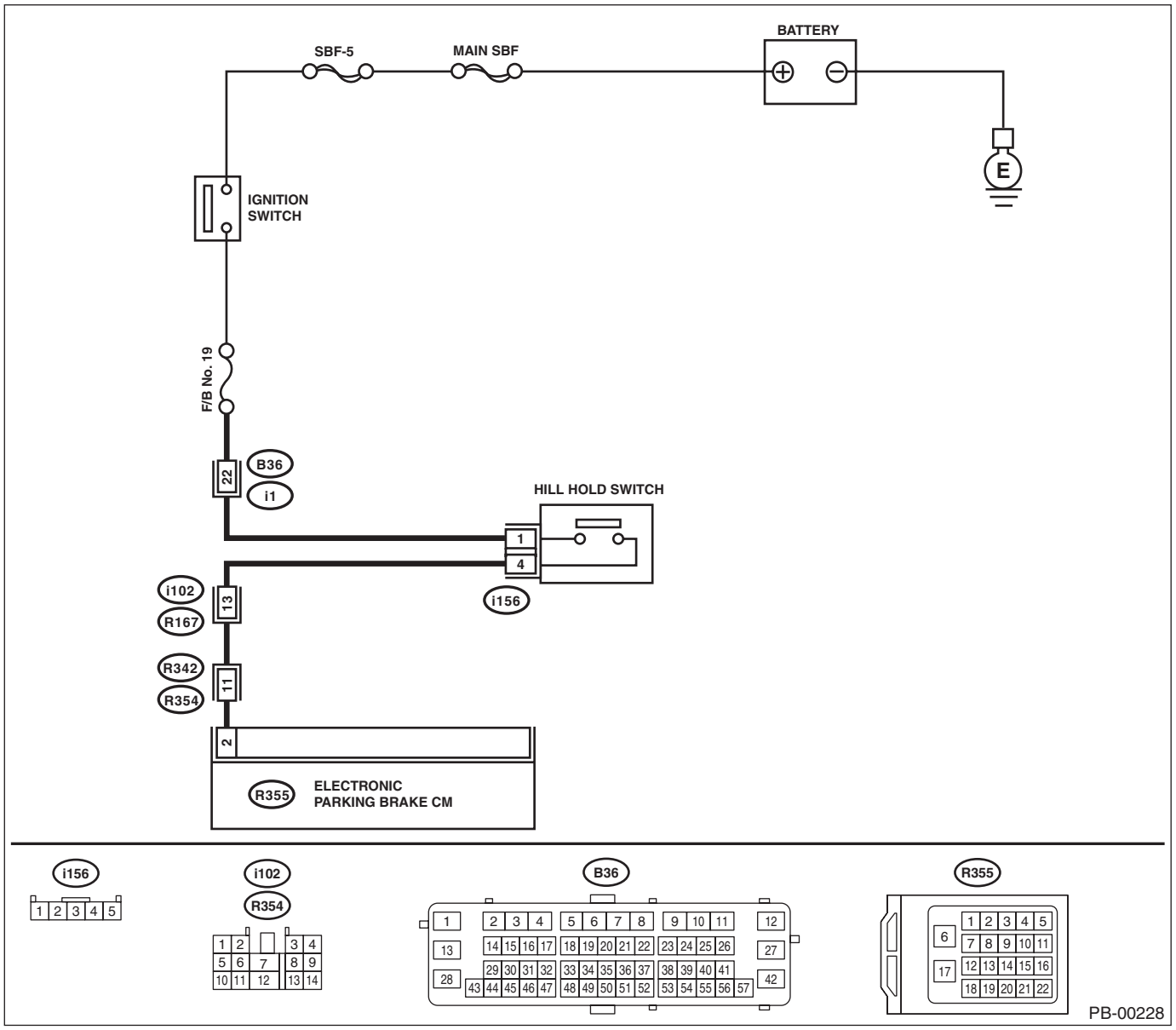

	Step	Check	Yes	No
1	**CHECK HILL HOLD SWITCH POWER SUPPLY.** 1) Turn the ignition switch to OFF. 2) Disconnect the connector from hill hold switch. 3) Turn the ignition switch to ON. 4) Measure the voltage between hill hold switch connector and chassis ground. ***Connector & terminal*** ***(i156) No. 1 (+) — Chassis ground (–):***	Is the voltage 10 — 15 V?	Go to step **2**.	Repair the power supply circuit of hill hold switch.
2	**CHECK HARNESS.** 1) Turn the ignition switch to OFF. 2) Disconnect the connectors from the electronic parking brake CM. 3) Measure the resistance of harness between hill hold switch and electronic parking brake CM connector. ***Connector & terminal*** ***(i156) No. 4 — (R355) No. 2:***	Is the resistance less than 1 Ω?	Go to step **3**.	Repair the harness and connector between hill hold switch and electronic parking brake CM connector.
3	**CHECK HARNESS.** Measure the resistance of harness between hill hold switch connector and chassis ground. ***Connector & terminal*** ***(i156) No. 4 — Chassis ground:***	Is the resistance less than 1 MΩ?	Go to step **4**.	Repair ground short of harness between hill hold switch and electronic parking brake CM connector.
4	**CHECK HARNESS.** Measure the voltage between hill hold switch connector and chassis ground. ***Connector & terminal*** ***(i156) No. 4 (+) — Chassis ground (–):***	Is the voltage less than 1 V?	Go to step **5**.	Repair short to power supply of harness between hill hold switch and electronic parking brake CM connector.
5	**CHECK HILL HOLD SWITCH.** Check the hill hold switch. <Ref. to PB-18, HILL HOLD SWITCH, INSPECTION, Parking Brake Switch.>	Is the hill hold switch normal?	Go to step **6**.	Replace the hill hold switch. <Ref. to PB-16, REMOVAL, Parking Brake Switch.>
6	**CHECK ELECTRONIC PARKING BRAKE CM.** 1) Connect all connectors. 2) Clear the memory. <Ref. to PB(diag)-25, Clear Memory Mode.> 3) Perform the Inspection Mode. <Ref. to PB(diag)-24, Inspection Mode.> 4) Read the DTC.	Is the same DTC displayed?	Replace the electronic parking brake CM. <Ref. to PB-6, Parking Brake Actuator.>	Go to step **7**.
7	**CHECK OTHER DTC DETECTION.**	Is any other DTC displayed?	Perform the diagnosis according to DTC.	It results from a temporary poor contact interference.

C: DTC C0231 ECM FAILURE

DTC DETECTING CONDITION:
Faulty signal received from engine control module (ECM)
TROUBLE SYMPTOM:
- Electronic parking brake warning light illuminates. (C6 model)
- Brake warning light blinks. (Models other than C6 model)
- Hill hold function and accelerator interlocking release function do not operate.

NOTE:
Refer to EN section for diagnostic procedure. <Ref. to EN(H4SO)(diag)-2, Basic Diagnostic Procedure.> <Ref. to EN(H4DOTC)(diag)-2, Basic Diagnostic Procedure.> <Ref. to EN(H6DO)(diag)-2, Basic Diagnostic Procedure.>

D: DTC C0232 AT ABNORMAL

DTC DETECTING CONDITION:
Faulty signal received from transmission control module (TCM)
TROUBLE SYMPTOM:
- Electronic parking brake warning light illuminates. (C6 model)
- Brake warning light blinks. (Models other than C6 model)
- Hill hold function and accelerator interlocking release function do not operate.

NOTE:
Refer to CVT or 5AT section for diagnostic procedure. <Ref. to CVT(diag)-2, Basic Diagnostic Procedure.> <Ref. to 5AT(diag)-2, Basic Diagnostic Procedure.>

E: DTC C0233 MT SHIFT SWITCH CIRCUIT

DTC DETECTING CONDITION:

- Defective neutral position switch
- Defective back-up light switch
- Defective harness connector

TROUBLE SYMPTOM:

- Electronic parking brake warning light illuminates. (C6 model)
- Brake warning light blinks. (Models other than C6 model)
- Hill hold function and accelerator interlocking release function do not operate.

WIRING DIAGRAM:

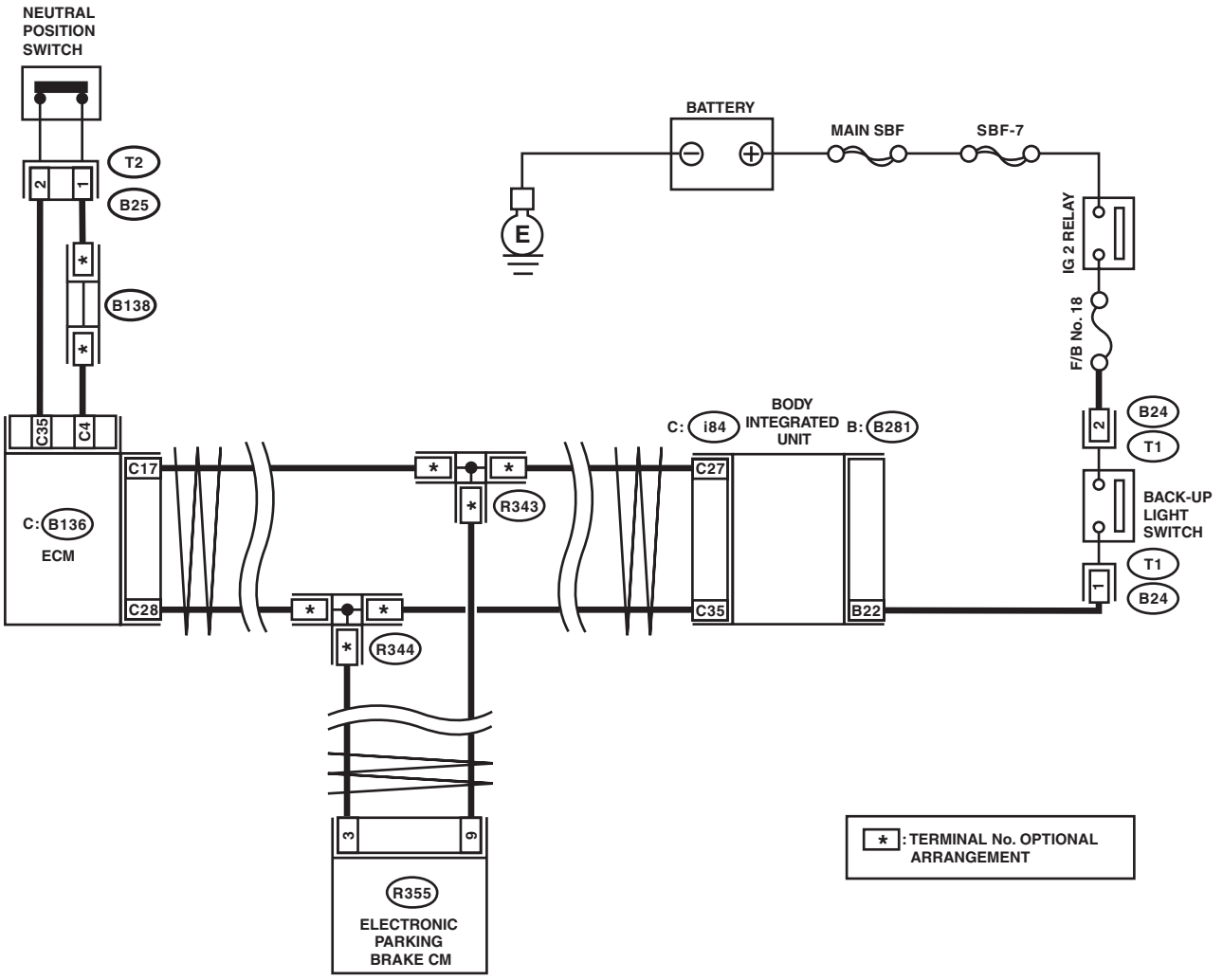

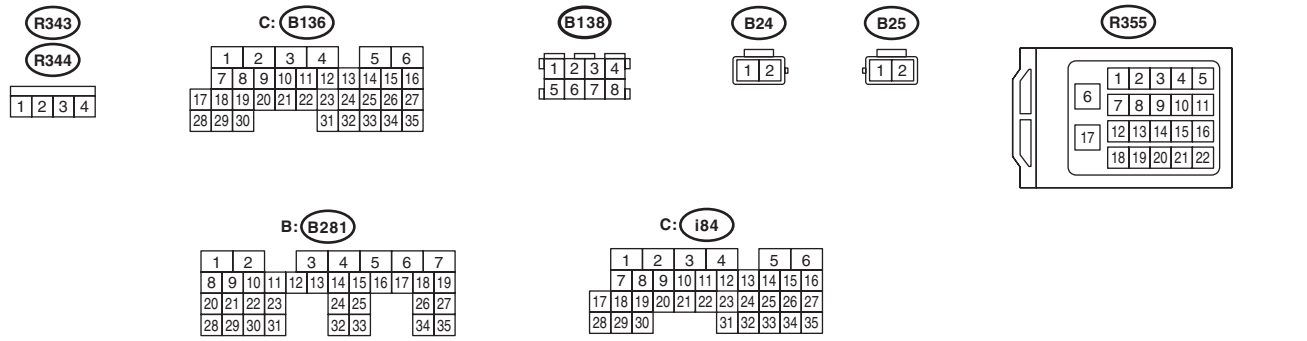

PB-00167

	Step	Check	Yes	No
1	**CHECK OUTPUT OF NEUTRAL POSITION SWITCH USING SUBARU SELECT MONITOR.** 1) Select “Current Data Display & Save” for “Engine Control System” on Subaru Select Monitor. <Ref. to EN(H4SO)(diag)-33, Subaru Select Monitor.> <Ref. to EN(H4DOTC)(diag)-34, Subaru Select Monitor.> 2) Read the «Neutral switch» output displayed on the screen.	Is “Neutral” displayed on the screen at neutral state?	Go to step **2**.	Perform the diagnosis for the engine. <Ref. to EN(H4SO)(diag)-39, Read Diagnostic Trouble Code (DTC).> <Ref. to EN(H4DOTC)(diag)-40, Read Diagnostic Trouble Code (DTC).>
2	**CHECK OUTPUT OF BACK-UP LIGHT SWITCH USING SUBARU SELECT MONITOR.** 1) Select “Current Data Display & Save” for “Integ. unit mode” on Subaru Select Monitor. <Ref. to BC(diag)-12, Read Current Data.> 2) Read the «MT Reverse Switch» output displayed on the screen.	Is “ON” displayed on the screen at reverse state?	Go to step **3**.	Check DTC of integrated unit. <Ref. to BC(diag)-10, Read Diagnostic Trouble Code (DTC).>
3	**CHECK LAN SYSTEM.** Check the DTC in LAN system. <Ref. to LAN(diag)-10, OPERATION, Read Diagnostic Trouble Code (DTC).>	Is DTC of LAN system displayed?	Perform the diagnosis according to DTC. <Ref. to LAN(diag)-32, List of Diagnostic Trouble Code (DTC).>	Go to step **4**.
4	**CHECK ELECTRONIC PARKING BRAKE CM.** 1) Clear the memory. <Ref. to PB(diag)-25, Clear Memory Mode.> 2) Perform the Inspection Mode. <Ref. to PB(diag)-24, Inspection Mode.> 3) Read the DTC.	Is the same DTC displayed?	Replace the electronic parking brake CM. <Ref. to PB-6, Parking Brake Actuator.>	Go to step **5**.
5	**CHECK OTHER DTC DETECTION.**	Is any other DTC displayed?	Perform the diagnosis according to DTC.	It results from a temporary poor contact interference.

F: DTC C0234 VDC FAILURE

DTC DETECTING CONDITION:
Faulty signal received from VDC control module
TROUBLE SYMPTOM:
- Electronic parking brake warning light illuminates. (C6 model)
- Brake warning light blinks. (Models other than C6 model)
- Hill hold function and accelerator interlocking release function do not operate.
- Parking brake system occasionally may not operate.

NOTE:
Refer to VDC section for diagnostic procedure. <Ref. to VDC(diag)-2, Basic Diagnostic Procedure.>

G: DTC C0235 IGNITION SWITCH CIRCUIT

DTC DETECTING CONDITION:

IGN input of the electronic parking brake control module and IGN input of VDC control module do not match.

TROUBLE SYMPTOM:

- Parking brake cannot be released.
- Electronic parking brake warning light illuminates. (C6 model)
- Brake warning light blinks. (Models other than C6 model)
- Hill hold function and accelerator interlocking release function do not operate.

WIRING DIAGRAM:

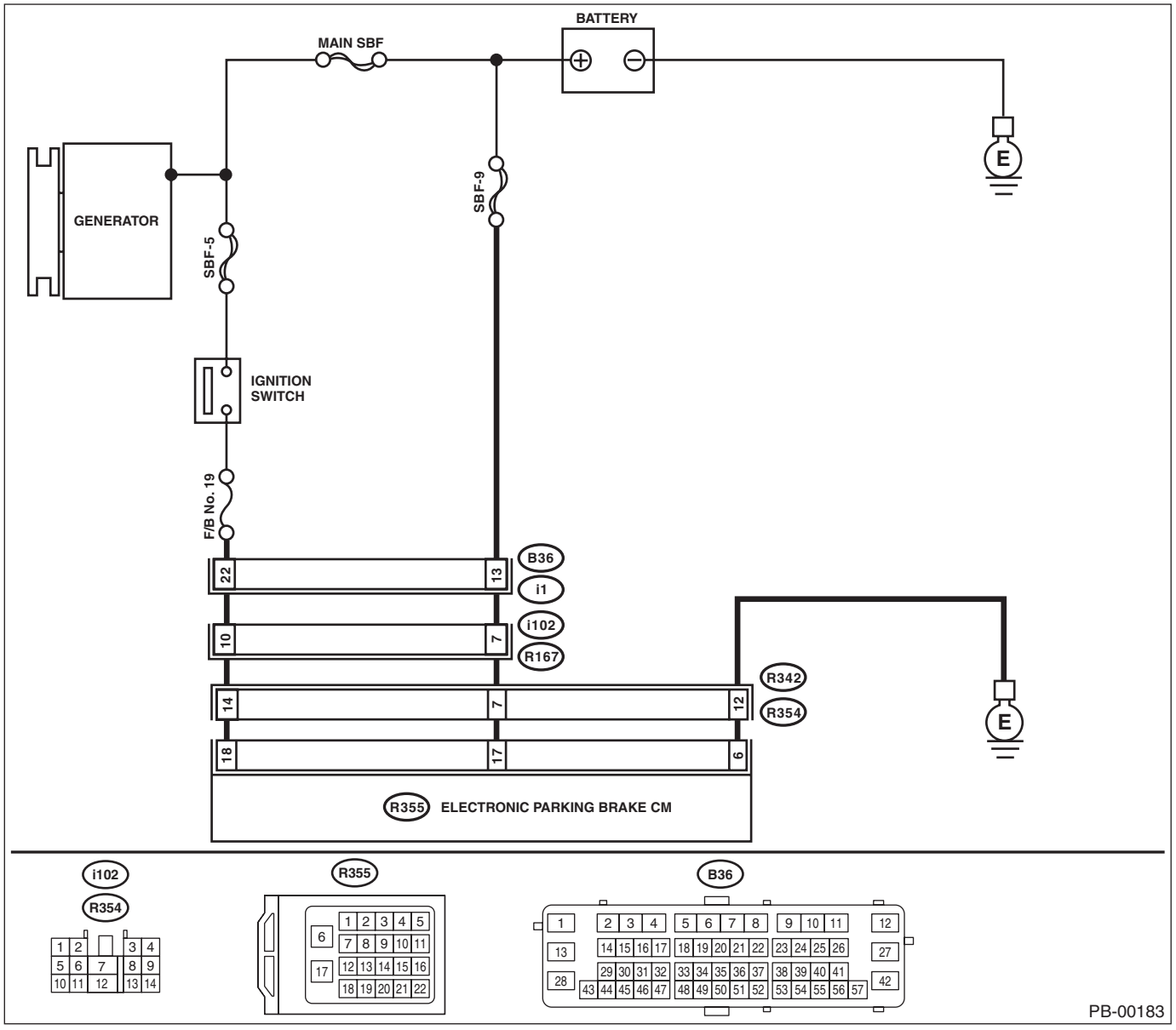

	Step	Check	Yes	No
1	**CHECK INPUT VOLTAGE FOR ELECTRONIC PARKING BRAKE CM.** 1) Turn the ignition switch to OFF. 2) Disconnect the connectors from the electronic parking brake CM. 3) Turn the ignition switch to ON. 4) Measure the resistance between electronic parking brake CM connector and chassis ground. ***Connector & terminal*** ***(R355) No. 18 (+) — Chassis ground (–):***	Is the voltage 10 — 15 V?	Go to step **2**.	Repair the power supply circuit.
2	**CHECK GROUND CIRCUIT OF ELECTRONIC PARKING BRAKE CM.** 1) Turn the ignition switch to OFF. 2) Measure the resistance between electronic parking brake CM connector and chassis ground. ***Connector & terminal*** ***(R355) No. 6 — Chassis ground:***	Is the resistance less than 10 Ω?	Go to step **3**.	Repair the defective ground circuit of the electronic parking brake CM.
3	**CHECK VDC.** 1) Turn the ignition switch to ON. 2) Check DTC of VDC. <Ref. to VDC(diag)-23, OPERATION, Read Diagnostic Trouble Code (DTC).>	Is DTC of VDC displayed?	Perform the diagnosis according to DTC. <Ref. to VDC(diag)-35, List of Diagnostic Trouble Code (DTC).>	Go to step **4**.
4	**CHECK LAN SYSTEM.** Check the DTC in LAN system. <Ref. to LAN(diag)-10, OPERATION, Read Diagnostic Trouble Code (DTC).>	Is DTC of LAN system displayed?	Perform the diagnosis according to DTC. <Ref. to LAN(diag)-32, List of Diagnostic Trouble Code (DTC).>	Go to step **5**.
5	**CHECK POOR CONTACT OF CONNECTORS.**	Is there poor contact of power supply circuit, ground circuit and electronic parking brake CM connector?	Repair the connector.	Go to step **6**.
6	**CHECK ELECTRONIC PARKING BRAKE CM.** 1) Connect all connectors. 2) Clear the memory. <Ref. to PB(diag)-25, Clear Memory Mode.> 3) Perform the Inspection Mode. <Ref. to PB(diag)-24, Inspection Mode.> 4) Read the DTC.	Is the same DTC displayed?	Replace the electronic parking brake CM. <Ref. to PB-6, Parking Brake Actuator.>	Go to step **7**.
7	**CHECK OTHER DTC DETECTION.**	Is any other DTC displayed?	Perform the diagnosis according to DTC.	It results from a temporary poor contact interference.

H: DTC C0241 ELECTRICAL CONTROL MODULE

DTC DETECTING CONDITION:

Defective electronic parking brake control module

TROUBLE SYMPTOM:

- Electronic parking brake warning light illuminates. (C6 model)
- Brake warning light blinks. (Models other than C6 model)
- Parking brake system does not operate.

WIRING DIAGRAM:

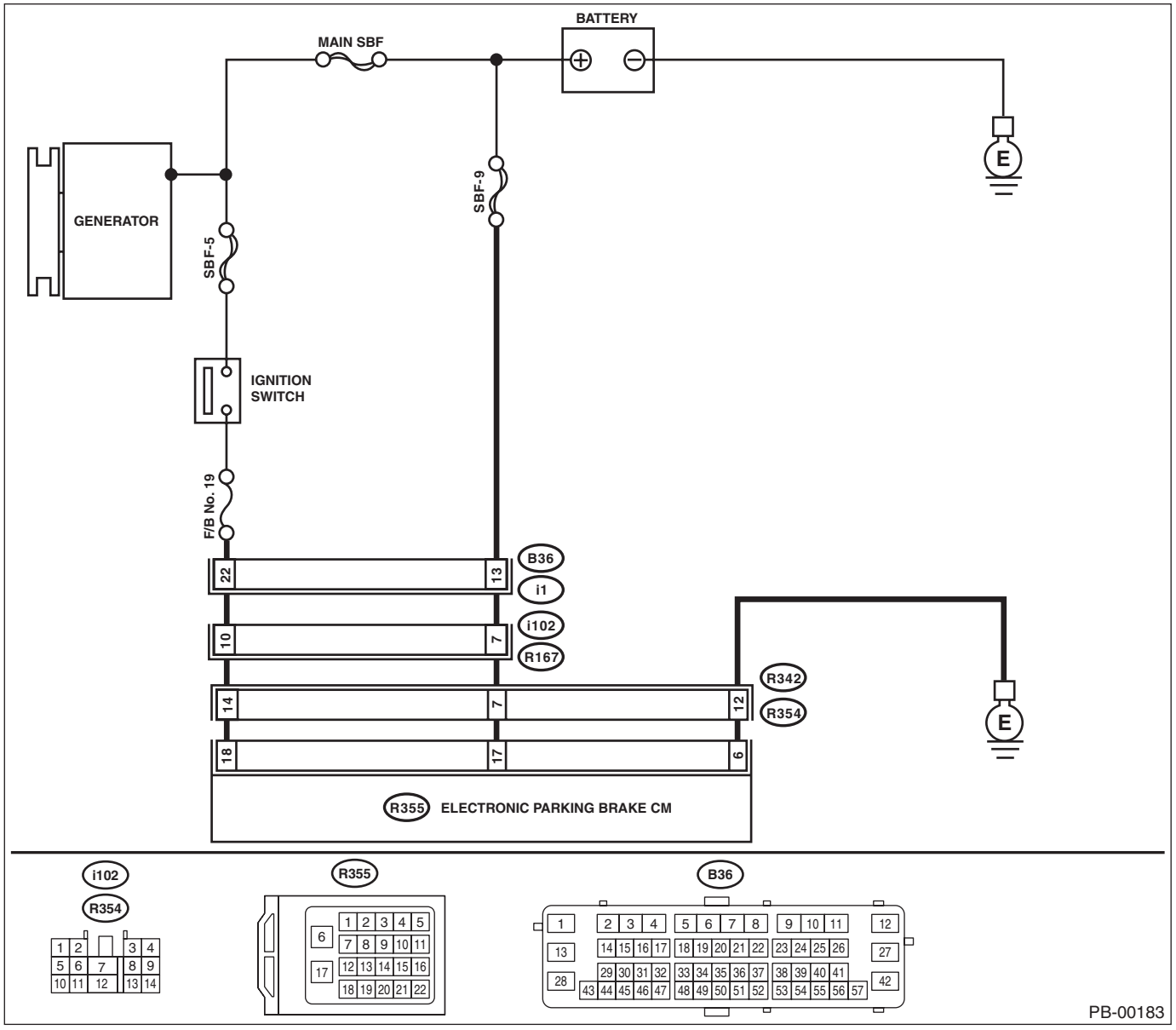

	Step	Check	Yes	No
1	**CHECK INPUT VOLTAGE FOR ELECTRONIC PARKING BRAKE CM.** 1) Turn the ignition switch to OFF. 2) Disconnect the connectors from the electronic parking brake CM. 3) Turn the ignition switch to ON. 4) Measure the voltage between electronic parking brake CM connector and chassis ground. ***Connector & terminal*** ***(R355) No. 18 (+) — Chassis ground (–):*** ***(R355) No. 17 (+) — Chassis ground (–):***	Is the voltage 10 — 15 V?	Go to step **2**.	Repair the power supply circuit.
2	**CHECK GROUND CIRCUIT OF ELECTRONIC PARKING BRAKE CM.** 1) Turn the ignition switch to OFF. 2) Measure the resistance between electronic parking brake CM connector and chassis ground. ***Connector & terminal*** ***(R355) No. 6 — Chassis ground:***	Is the resistance less than 10 Ω?	Go to step **3**.	Repair the defective ground circuit of the electronic parking brake CM.
3	**CHECK CAUSE OF SIGNAL NOISE.** Make sure the radio wave devices and electronic components are installed correctly.	Are the radio wave devices and electronic components installed correctly?	Go to step **4**.	Install the radio wave devices and electronic components properly.
4	**CHECK CAUSE OF SIGNAL NOISE.** Check if the noise sources (such as an antenna) are installed near the electronic parking brake CM harness.	Are noise sources installed?	Install the noise sources apart from the electronic parking brake CM harness.	Go to step **5**.
5	**CHECK POOR CONTACT OF CONNECTORS.**	Is there poor contact of power supply circuit, ground circuit and electronic parking brake CM connector?	Repair the connector.	Go to step **6**.
6	**CHECK ELECTRONIC PARKING BRAKE CM.** 1) Connect all connectors. 2) Clear the memory. <Ref. to PB(diag)-25, Clear Memory Mode.> 3) Perform the Inspection Mode. <Ref. to PB(diag)-24, Inspection Mode.> 4) Read the DTC.	Is the same DTC displayed?	Replace the electronic parking brake CM. <Ref. to PB-6, Parking Brake Actuator.>	Go to step **7**.
7	**CHECK OTHER DTC DETECTION.**	Is any other DTC displayed?	Perform the diagnosis according to DTC.	It results from a temporary poor contact interference.

I: DTC C0242 POWER SUPPLY VOLTAGE FAILURE

DTC DETECTING CONDITION:
Defective power supply voltage for the electronic parking brake control module
TROUBLE SYMPTOM:
- Electronic parking brake warning light illuminates. (C6 model)
- Brake warning light blinks. (Models other than C6 model)
- Parking brake system does not operate.

NOTE:
Warning lights go off if voltage returns.
WIRING DIAGRAM:

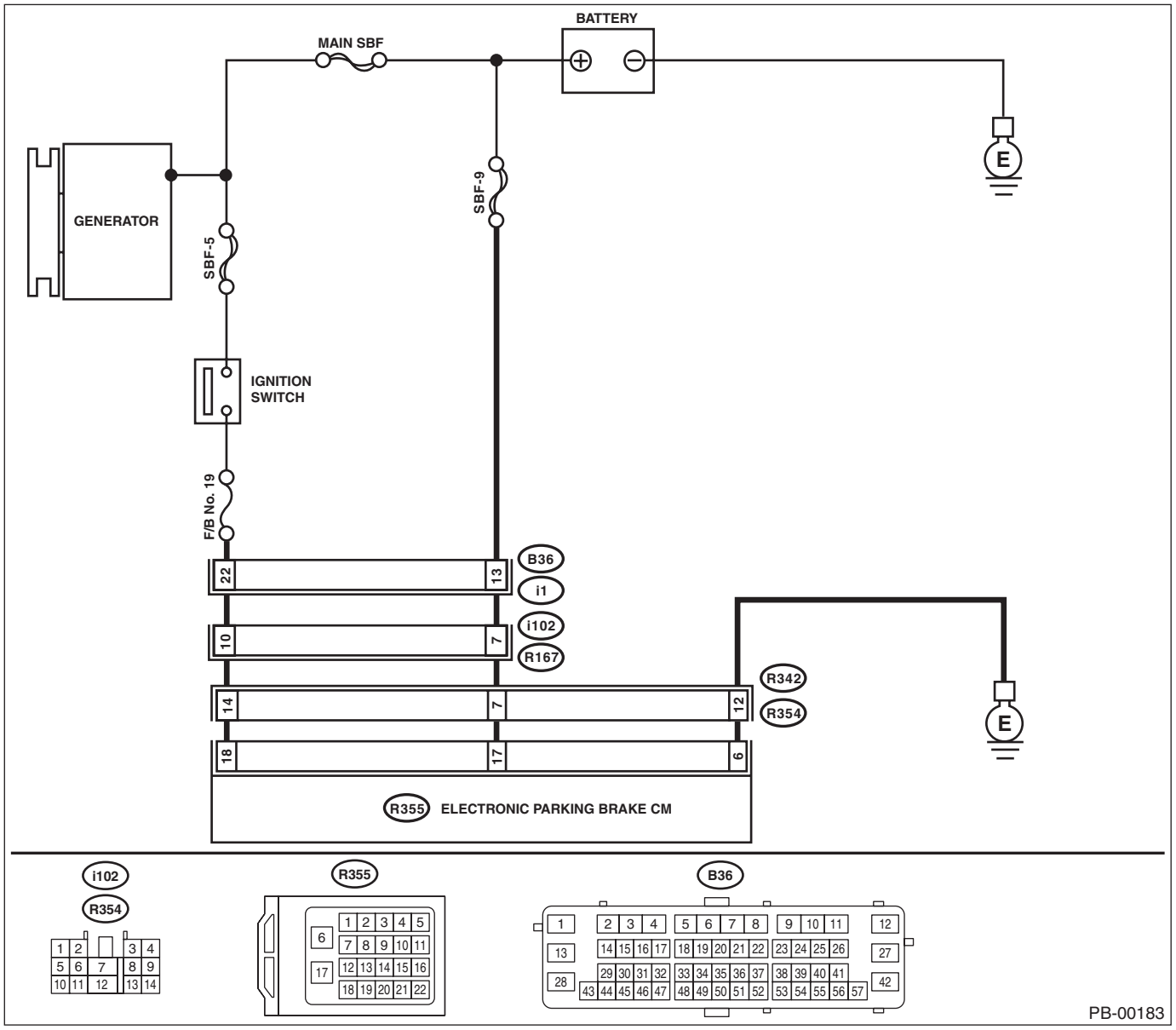

	Step	Check	Yes	No
1	**CHECK GENERATOR.** 1) Start the engine. 2) Run the engine at idle after warming up. 3) Measure the voltage between generator terminal B and chassis ground. ***Terminals*** ***Generator terminal B (+) — Chassis ground (–):***	Is the voltage 10 — 15 V?	Go to step **2**.	Repair the generator. <Ref. to SC(H4SO)-18, Generator.>
2	**CHECK BATTERY TERMINAL.** Turn the ignition switch to OFF.	Are the positive and negative battery terminals clamped tightly?	Go to step **3**.	Tighten the terminal.
3	**CHECK INPUT VOLTAGE FOR ELECTRONIC PARKING BRAKE CM.** 1) Disconnect the connectors from the electronic parking brake CM. 2) Run the engine at idle. 3) Operate devices such as headlights, air conditioner, defogger, etc. which produce an electrical load. 4) Measure the voltage between electronic parking brake CM connector and chassis ground. ***Connector & terminal*** ***(R355) No. 18 (+) — Chassis ground (–):***	Is the voltage 10 — 15 V?	Go to step **4**.	Repair the power supply circuit.
4	**CHECK GROUND CIRCUIT OF ELECTRONIC PARKING BRAKE CM.** 1) Turn the ignition switch to OFF. 2) Measure the resistance between electronic parking brake CM connector and chassis ground. ***Connector & terminal*** ***(R355) No. 6 — Chassis ground:***	Is the resistance less than 10 Ω?	Go to step **5**.	Repair the defective ground circuit of the electronic parking brake CM.
5	**CHECK POOR CONTACT OF CONNECTORS.**	Is there poor contact of power supply circuit, ground circuit and electronic parking brake CM connector?	Repair the connector.	Go to step **6**.
6	**CHECK ELECTRONIC PARKING BRAKE CM.** 1) Connect all connectors. 2) Clear the memory. <Ref. to PB(diag)-25, Clear Memory Mode.> 3) Perform the Inspection Mode. <Ref. to PB(diag)-24, Inspection Mode.> 4) Read the DTC.	Is the same DTC displayed?	Replace the electronic parking brake CM. <Ref. to PB-6, Parking Brake Actuator.>	Go to step **7**.
7	**CHECK OTHER DTC DETECTION.**	Is any other DTC displayed?	Perform the diagnosis according to DTC.	It results from a temporary poor contact interference.

J: DTC C0242 INTERNAL POWER SUPPLY VOLTAGE ABNORMAL

NOTE:
For the diagnostic procedure, refer to DTC C0242 “Power Supply Voltage Failure”. <Ref. to PB(diag)-49, DTC C0242 POWER SUPPLY VOLTAGE FAILURE, Diagnostic Procedure with Diagnostic Trouble Code (DTC).>

K: DTC C0243 PARAMETER SELECTION ERROR

DTC DETECTING CONDITION:
Parameter selection error for the electronic parking brake control module
TROUBLE SYMPTOM:
- Electronic parking brake warning light illuminates. (C6 model)
- Brake warning light blinks. (Models other than C6 model)
- Hill hold function and accelerator interlocking release function do not operate.

NOTE:
After performing Parameter Initialization Mode, make sure to perform the Force Sensor Calibration Mode and Clutch Sensor Calibration Mode. <Ref. to PB(diag)-18, FORCE SENSOR CALIBRATION MODE, OPERATION, Subaru Select Monitor.> <Ref. to PB(diag)-20, CLUTCH SENSOR CALIBRATION MODE, OPERATION, Subaru Select Monitor.>

	Step	Check	Yes	No
1	**CHECK ECM, TCM AND COMBINATION METER.** Check that ECM, TCM and combination meter with correct specifications are installed.	Are correct ECM, TCM and combination meter installed?	Go to step **2**.	Replace with parts with correct specifications.
2	**INITIALIZE PARAMETER USING SUBARU SELECT MONITOR.** 1) Using the Subaru Select Monitor, initialize the parameter for the electronic parking brake CM. <Ref. to PB(diag)-19, PARAMETER INITIALIZATION MODE, OPERATION, Subaru Select Monitor.> 2) Perform calibration of the force sensor. <Ref. to PB(diag)-18, FORCE SENSOR CALIBRATION MODE, OPERATION, Subaru Select Monitor.> 3) Perform calibration of the clutch sensor. <Ref. to PB(diag)-20, CLUTCH SENSOR CALIBRATION MODE, OPERATION, Subaru Select Monitor.> 4) Clear the memory. <Ref. to PB(diag)-25, Clear Memory Mode.> 5) Read the DTC.	Is the same DTC displayed?	Replace the electronic parking brake CM. <Ref. to PB-6, Parking Brake Actuator.>	It results from a temporary noise interference.

L: DTC C0251 ACTUATOR LINE (ABNORMAL)

DTC DETECTING CONDITION:
Defective electronic parking brake control module

TROUBLE SYMPTOM:
- Electronic parking brake warning light illuminates. (C6 model)
- Brake warning light blinks. (Models other than C6 model)
- Parking brake system does not operate.

WIRING DIAGRAM:

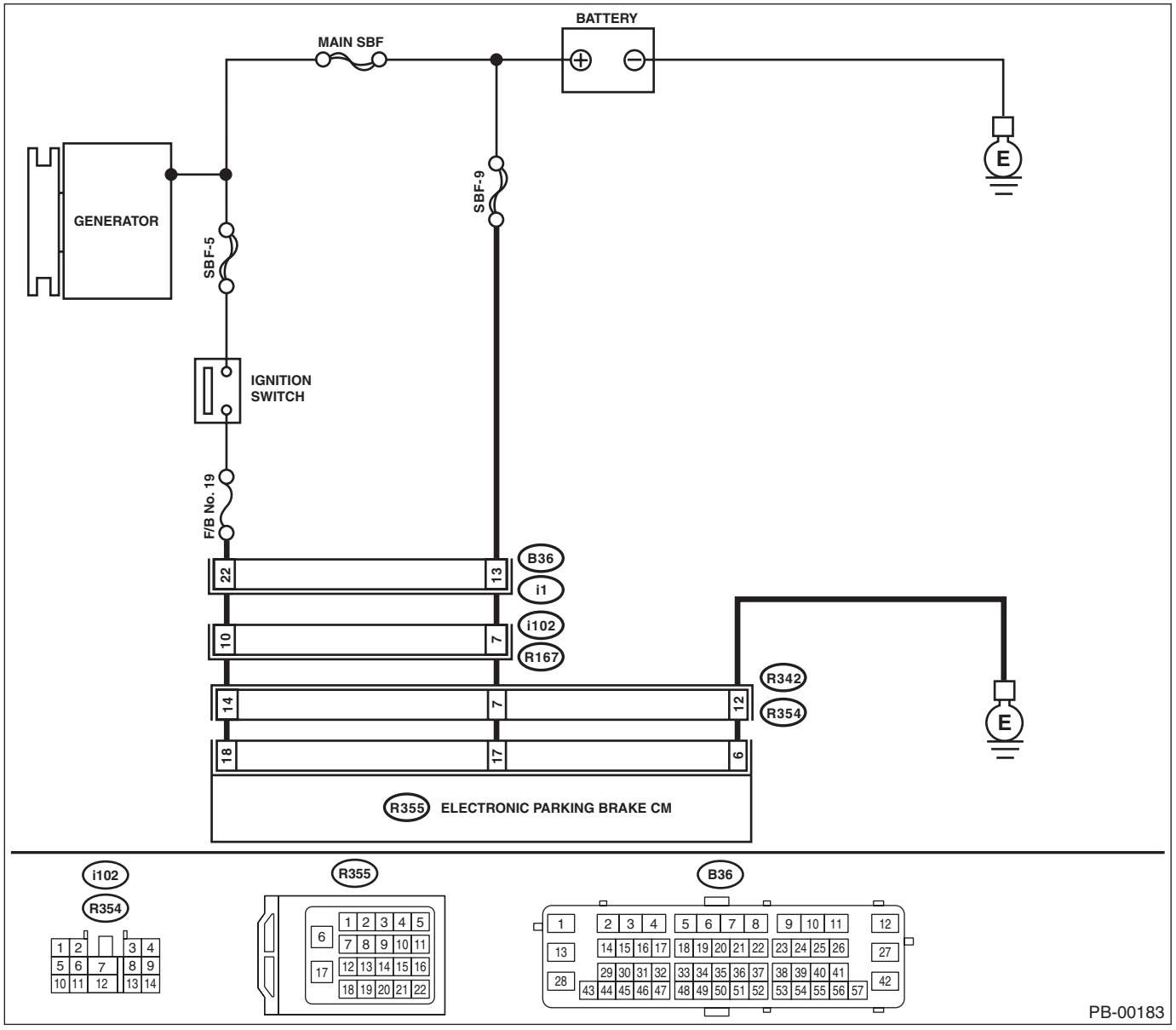

	Step	Check	Yes	No
1	**CHECK INPUT VOLTAGE FOR ELECTRONIC PARKING BRAKE CM.** 1) Turn the ignition switch to OFF. 2) Disconnect the connectors from the electronic parking brake CM. 3) Turn the ignition switch to ON. 4) Measure the voltage between electronic parking brake CM connector and chassis ground. ***Connector & terminal*** ***(R355) No. 18 (+) — Chassis ground (–):*** ***(R355) No. 17 (+) — Chassis ground (–):***	Is the voltage 10 — 15 V?	Go to step **2**.	Repair the power supply circuit.
2	**CHECK GROUND CIRCUIT OF ELECTRONIC PARKING BRAKE CM.** 1) Turn the ignition switch to OFF. 2) Measure the resistance between electronic parking brake CM connector and chassis ground. ***Connector & terminal*** ***(R355) No. 6 — Chassis ground:***	Is the resistance less than 10 Ω?	Go to step **3**.	Repair the defective ground circuit of the electronic parking brake CM.
3	**CHECK POOR CONTACT OF CONNECTORS.**	Is there poor contact of power supply circuit, ground circuit and electronic parking brake CM connector?	Repair the connector.	Go to step **4**.
4	**CHECK ELECTRONIC PARKING BRAKE CM.** 1) Connect all connectors. 2) Clear the memory. <Ref. to PB(diag)-25, Clear Memory Mode.> 3) Perform the Inspection Mode. <Ref. to PB(diag)-24, Inspection Mode.> 4) Release the parking brake, and then operate again. 5) Read the DTC.	Is the same DTC displayed?	Replace the electronic parking brake CM. <Ref. to PB-6, Parking Brake Actuator.>	Go to step **5**.
5	**CHECK OTHER DTC DETECTION.**	Is any other DTC displayed?	Perform the diagnosis according to DTC.	It results from a temporary poor contact interference.

M: DTC C0252 MOTOR MALFUNCTION

NOTE:
• For the diagnostic procedure, refer to DTC C0251 “Actuator Line (abnormal)”. <Ref. to PB(diag)-52, DTC C0251 ACTUATOR LINE (ABNORMAL), Diagnostic Procedure with Diagnostic Trouble Code (DTC).>
• When the operation and release of the parking brake is repeated excessively, this DTC may be stored.

N: DTC C0253 ACTUATOR STROKE EXCESS

DTC DETECTING CONDITION:
Actuator stroke too long
TROUBLE SYMPTOM:
- Brake warning light blinks.
- Electronic parking brake warning light illuminates. (C6 model)
- Parking brake system does not operate.

	Step	Check	Yes	No
1	**CHECK PARKING BRAKE ASSEMBLY.** Check the parking brake cable connection of parking brake assembly.	Is there any trouble with the parking brake shoe lever or the parking brake cable connection?	Repair the parking brake cable connection. Go to step **2**.	Go to step **2**.
2	**CHECK PARKING BRAKE ASSEMBLY.** Check the parking brake assembly disc rotor and shoe assembly. <Ref. to PB-15, INSPECTION, Parking Brake Assembly (Rear Disc Brake).>	Are the disc rotor and shoe assembly normal?	Adjust the shoe clearance of the parking brake assembly. <Ref. to PB-15, ADJUSTMENT, Parking Brake Assembly (Rear Disc Brake).> Go to step **3**.	Replace the defective parts, and adjust the shoe clearance of the parking brake assembly. <Ref. to PB-15, ADJUSTMENT, Parking Brake Assembly (Rear Disc Brake).> Go to step **3**.
3	**PERFORM CALIBRATION OF FORCE SENSOR USING SUBARU SELECT MONITOR.** 1) Perform calibration of force sensor using the Subaru Select Monitor. <Ref. to PB(diag)-18, FORCE SENSOR CALIBRATION MODE, OPERATION, Subaru Select Monitor.> 2) Clear the memory. <Ref. to PB(diag)-25, Clear Memory Mode.> 3) Read the DTC.	Is the same DTC displayed?	Replace the electronic parking brake CM. <Ref. to PB-6, Parking Brake Actuator.>	It results from poor adjustment of the shoe clearance.

O: DTC C0261 IMPROPER CAN COMMUNICATION

DTC DETECTING CONDITION:
Defective CAN communication
TROUBLE SYMPTOM:
- Electronic parking brake warning light illuminates. (C6 model)
- Brake warning light blinks. (Models other than C6 model)
- Parking brake system does not operate.

NOTE:
Refer to LAN section for diagnostic procedure. <Ref. to LAN(diag)-2, Basic Diagnostic Procedure.>

P: DTC C0262 TCM COMMUNICATION CIRCUIT

DTC DETECTING CONDITION:

No CAN signal received from transmission control module (TCM).

TROUBLE SYMPTOM:

- Electronic parking brake warning light illuminates. (C6 model)
- Brake warning light blinks. (Models other than C6 model)
- Hill hold function and accelerator interlocking release function do not operate.

	Step	Check	Yes	No
1	**CHECK AT SYSTEM OR CVT SYSTEM.** 1) Start the engine. 2) Check the DTC in AT system or CVT system.	Is DTC of AT system or CVT system displayed?	Perform the diagnosis according to DTC of AT system or CVT system. <Ref. to 5AT(diag)-33, List of Diagnostic Trouble Code (DTC).> <Ref. to CVT(diag)-32, List of Diagnostic Trouble Code (DTC).>	Go to step **2**.
2	**CHECK LAN SYSTEM.** Check the DTC in LAN system. <Ref. to LAN(diag)-10, OPERATION, Read Diagnostic Trouble Code (DTC).>	Is there any fault in LAN system?	Perform the diagnosis according to DTC for LAN system. <Ref. to LAN(diag)-32, List of Diagnostic Trouble Code (DTC).>	Go to step **3**.
3	**CHECK ELECTRONIC PARKING BRAKE CM.** 1) Connect all connectors. 2) Clear the memory. <Ref. to PB(diag)-25, Clear Memory Mode.> 3) Perform the Inspection Mode. <Ref. to PB(diag)-24, Inspection Mode.> 4) Read the DTC.	Is the same DTC displayed?	Replace the electronic parking brake CM. <Ref. to PB-6, Parking Brake Actuator.>	Go to step **4**.
4	**CHECK OTHER DTC DETECTION.**	Is any other DTC displayed?	Perform the diagnosis according to DTC.	It results from a temporary noise interference.

Q: DTC C0263 ECM COMMUNICATION CIRCUIT

DTC DETECTING CONDITION:
No CAN signal received from engine control module (ECM).
TROUBLE SYMPTOM:
- Electronic parking brake warning light illuminates. (C6 model)
- Brake warning light blinks. (Models other than C6 model)
- Hill hold function and accelerator interlocking release function do not operate.

	Step	Check	Yes	No
1	**CHECK ECM.** 1) Start the engine. 2) Check DTC of ECM.	Is DTC of ECM displayed?	Perform the diagnosis according to DTC of ECM.	Go to step **2**.
2	**CHECK LAN SYSTEM.** Check the DTC in LAN system. <Ref. to LAN(diag)-10, OPERATION, Read Diagnostic Trouble Code (DTC).>	Is there any fault in LAN system?	Perform the diagnosis according to DTC for LAN system. <Ref. to LAN(diag)-32, List of Diagnostic Trouble Code (DTC).>	Go to step **3**.
3	**CHECK ELECTRONIC PARKING BRAKE CM.** 1) Connect all connectors. 2) Clear the memory. <Ref. to PB(diag)-25, Clear Memory Mode.> 3) Perform the Inspection Mode. <Ref. to PB(diag)-24, Inspection Mode.> 4) Read the DTC.	Is the same DTC displayed?	Replace the electronic parking brake CM. <Ref. to PB-6, Parking Brake Actuator.>	Go to step **4**.
4	**CHECK OTHER DTC DETECTION.**	Is any other DTC displayed?	Perform the diagnosis according to DTC.	It results from a temporary noise interference.

R: DTC C0264 VDC COMMUNICATION SYSTEM

DTC DETECTING CONDITION:
No CAN signal received from VDC control module.
TROUBLE SYMPTOM:
- Electronic parking brake warning light illuminates. (C6 model)
- Brake warning light blinks. (Models other than C6 model)
- Parking brake system does not operate.

	Step	Check	Yes	No
1	**CHECK VDC SYSTEM.** 1) Start the engine. 2) Check the DTC in VDC system. <Ref. to VDC(diag)-23, OPERATION, Read Diagnostic Trouble Code (DTC).>	Is DTC of VDC system displayed?	Perform the diagnosis according to DTC of VDC system. <Ref. to VDC(diag)-35, List of Diagnostic Trouble Code (DTC).>	Go to step **2**.
2	**CHECK LAN SYSTEM.** Check the DTC in LAN system. <Ref. to LAN(diag)-10, OPERATION, Read Diagnostic Trouble Code (DTC).>	Is there any fault in LAN system?	Perform the diagnosis according to DTC for LAN system. <Ref. to LAN(diag)-32, List of Diagnostic Trouble Code (DTC).>	Go to step **3**.
3	**CHECK ELECTRONIC PARKING BRAKE CM.** 1) Connect all connectors. 2) Clear the memory. <Ref. to PB(diag)-25, Clear Memory Mode.> 3) Perform the Inspection Mode. <Ref. to PB(diag)-24, Inspection Mode.> 4) Read the DTC.	Is the same DTC displayed?	Replace the electronic parking brake CM. <Ref. to PB-6, Parking Brake Actuator.>	Go to step **4**.
4	**CHECK OTHER DTC DETECTION.**	Is any other DTC displayed?	Perform the diagnosis according to DTC.	It results from a temporary noise interference.

S: DTC C0265 BODY INTEGRATED MODULE COMMUNICATION CIRCUIT

DTC DETECTING CONDITION:

No CAN signal received from body integrated unit.

TROUBLE SYMPTOM:

- Electronic parking brake warning light illuminates. (C6 model)
- Brake warning light blinks. (Models other than C6 model)
- Hill hold function and accelerator interlocking release function do not operate.

	Step	Check	Yes	No
1	**CHECK BODY INTEGRATED UNIT.** 1) Start the engine. 2) Check DTC of body integrated unit. <Ref. to BC(diag)-10, OPERATION, Read Diagnostic Trouble Code (DTC).>	Is DTC of the body integrated unit displayed?	Perform the diagnosis according to DTC for the body integrated unit. <Ref. to BC(diag)-21, List of Diagnostic Trouble Code (DTC).>	Go to step **2**.
2	**CHECK ELECTRONIC PARKING BRAKE CM.** 1) Connect all connectors. 2) Clear the memory. <Ref. to PB(diag)-25, Clear Memory Mode.> 3) Perform the Inspection Mode. <Ref. to PB(diag)-24, Inspection Mode.> 4) Read the DTC.	Is the same DTC displayed?	Replace the electronic parking brake CM. <Ref. to PB-6, Parking Brake Actuator.>	Go to step **3**.
3	**CHECK OTHER DTC DETECTION.**	Is any other DTC displayed?	Perform the diagnosis according to DTC.	It results from a temporary noise interference.

T: DTC C0267 METER COMMUNICATION SYSTEM

DTC DETECTING CONDITION:
No CAN signal received from combination meter.
TROUBLE SYMPTOM:
- Electronic parking brake warning light illuminates. (C6 model)
- Brake warning light blinks. (Models other than C6 model)
- Hill hold function and accelerator interlocking release function do not operate.

	Step	Check	Yes	No
1	**CHECK COMBINATION METER.** Check the DTC of combination meter. <Ref. to IDI-9, DTC DISPLAY MODE, OPERATION, Combination Meter System.>	Is DTC of combination meter displayed?	Perform the diagnosis according to DTC of the combination meter. <Ref. to IDI-9, DTC DISPLAY MODE, OPERATION, Combination Meter System.>	Go to step **2**.
2	**CHECK LAN SYSTEM.** Check the DTC in LAN system. <Ref. to LAN(diag)-10, OPERATION, Read Diagnostic Trouble Code (DTC).>	Is there any fault in LAN system?	Perform the diagnosis according to DTC for LAN system. <Ref. to LAN(diag)-32, List of Diagnostic Trouble Code (DTC).>	Go to step **3**.
3	**CHECK ELECTRONIC PARKING BRAKE CM.** 1) Connect all connectors. 2) Clear the memory. <Ref. to PB(diag)-25, Clear Memory Mode.> 3) Perform the Inspection Mode. <Ref. to PB(diag)-24, Inspection Mode.> 4) Read the DTC.	Is the same DTC displayed?	Replace the electronic parking brake CM. <Ref. to PB-6, Parking Brake Actuator.>	Go to step **4**.
4	**CHECK OTHER DTC DETECTION.**	Is any other DTC displayed?	Perform the diagnosis according to DTC.	It results from a temporary noise interference.

U: DTC C0271 FORCE SENSOR LINE (ABNORMAL)

NOTE:
For the diagnostic procedure, refer to DTC C0251 “Actuator Line (abnormal)”. <Ref. to PB(diag)-52, DTC C0251 ACTUATOR LINE (ABNORMAL), Diagnostic Procedure with Diagnostic Trouble Code (DTC).>

V: DTC C0272 TEMPERATURE SENSOR LINE (ABNORMAL)

NOTE:
- For the diagnostic procedure, refer to DTC C0251 “Actuator Line (abnormal)”. <Ref. to PB(diag)-52, DTC C0251 ACTUATOR LINE (ABNORMAL), Diagnostic Procedure with Diagnostic Trouble Code (DTC).>
- When the operation and release of the parking brake is repeated excessively, this DTC may be stored.

W: DTC C0273 STROKE SENSOR LINE (ABNORMAL)

NOTE:
For the diagnostic procedure, refer to DTC C0251 “Actuator Line (abnormal)”. <Ref. to PB(diag)-52, DTC C0251 ACTUATOR LINE (ABNORMAL), Diagnostic Procedure with Diagnostic Trouble Code (DTC).>

X: DTC C0274 CLUTCH SENSOR CIRCUIT

DTC DETECTING CONDITION:

- Defective clutch stroke sensor
- Defective harness connector

TROUBLE SYMPTOM:

- Electronic parking brake warning light illuminates. (C6 model)
- Brake warning light blinks. (Models other than C6 model)
- Hill hold function and accelerator interlocking release function do not operate.
- Parking brake is not released even after depressing the clutch pedal to release the parking brake switch.

WIRING DIAGRAM:

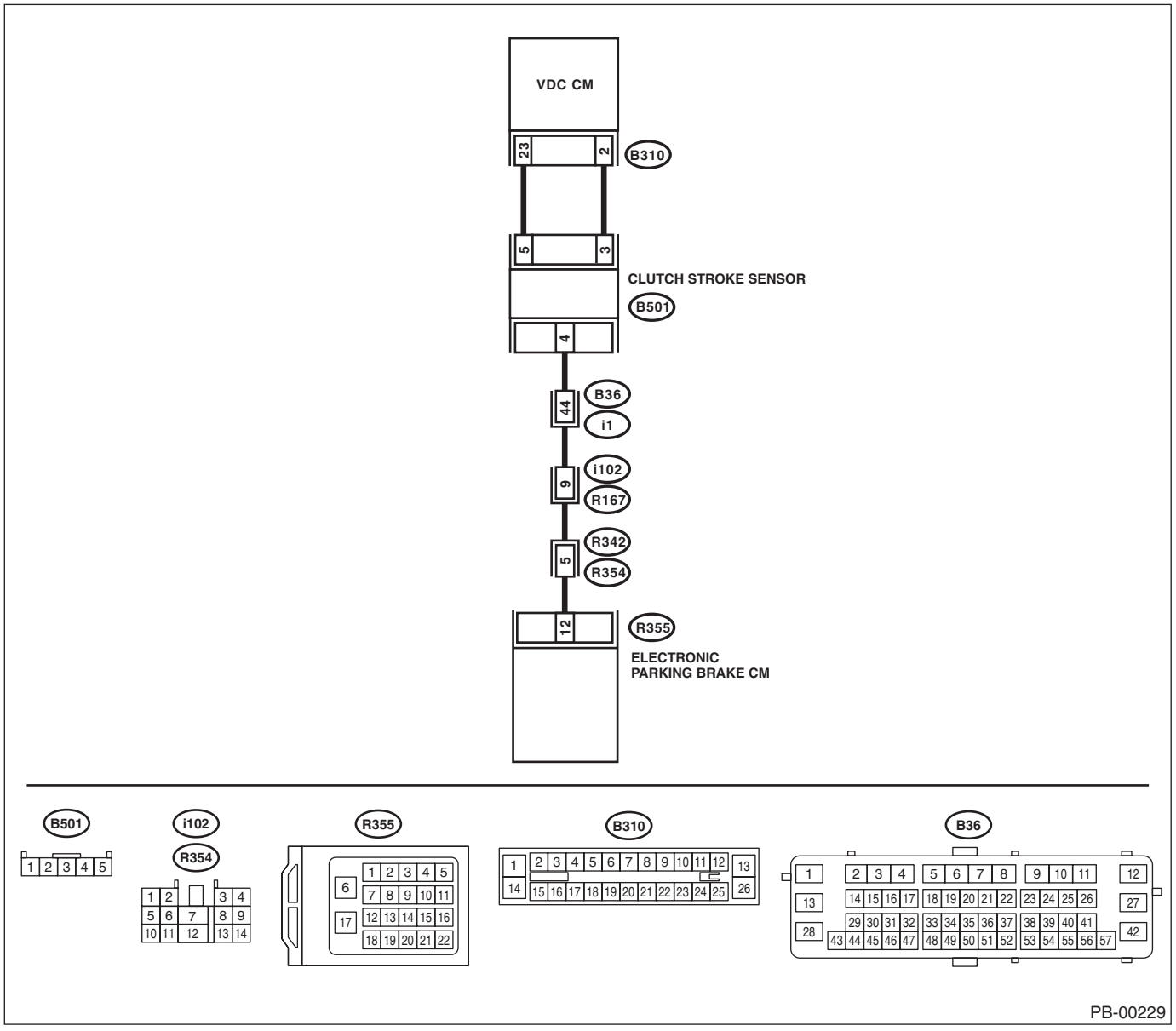

	Step	Check	Yes	No
1	**PERFORM CALIBRATION OF CLUTCH SENSOR USING SUBARU SELECT MONITOR.** 1) Select “Maintenance Operation Mode” on Subaru Select Monitor. 2) Perform the Clutch Sensor Calibration Mode. <Ref. to PB(diag)-20, CLUTCH SENSOR CALIBRATION MODE, OPERATION, Subaru Select Monitor.> 3) Clear the memory. <Ref. to PB(diag)-25, Clear Memory Mode.> 4) Perform the Inspection Mode. <Ref. to PB(diag)-24, Inspection Mode.> 5) Read the DTC.	Is the same DTC displayed?	Go to step **2**.	It results from poor calibration of the clutch stroke sensor.
2	**CHECK OUTPUT OF CLUTCH STROKE SENSOR USING SUBARU SELECT MONITOR.** 1) Select “Current Data Display & Save” on the Subaru Select Monitor. <Ref. to PB(diag)-14, Subaru Select Monitor.> 2) Read the clutch stroke sensor output displayed on the screen.	When the clutch pedal is operated, does the stroke sensor output value displayed on the screen change in accordance with the clutch pedal?	Go to step **11**.	Go to step **3**.
3	**CHECK HARNESS.** 1) Turn the ignition switch to OFF. 2) Disconnect the connector from clutch stroke sensor. 3) Turn the ignition switch to ON. 4) Measure the voltage between clutch stroke sensor connector terminals. ***Connector & terminal*** ***(B501) No. 3 (+) — (B501) No. 5 (–):***	Is the voltage 5 V or more?	Go to step **7**.	Go to step **4**.
4	**CHECK HARNESS.** 1) Turn the ignition switch to OFF. 2) Disconnect the connector from VDCCM. 3) Measure the resistance of harness between clutch stroke sensor and VDCCM connector. ***Connector & terminal*** ***(B501) No. 3 — (B310) No. 2:*** ***(B501) No. 5 — (B310) No. 23:***	Is the resistance less than 1 Ω?	Go to step **5**.	Repair the harness and connector between clutch stroke sensor and VDCCM connector.
5	**CHECK HARNESS.** Measure the resistance of harness between clutch stroke sensor and chassis ground. ***Connector & terminal*** ***(B501) No. 3 — Chassis ground:*** ***(B501) No. 5 — Chassis ground:***	Is the resistance 1 MΩ or more?	Go to step **6**.	Repair the ground short of harness between clutch stroke sensor and VDCCM connector.
6	**CHECK HARNESS.** Measure the voltage between clutch stroke sensor and chassis ground. ***Connector & terminal*** ***(B501) No. 3 (+) — Chassis ground (–):*** ***(B501) No. 5 (+) — Chassis ground (–):***	Is the voltage less than 1 V?	Check DTC of VDC. <Ref. to VDC(diag)-23, Read Diagnostic Trouble Code (DTC).>	Repair short to power supply of harness between clutch stroke sensor and VDCCM connector.
7	**CHECK HARNESS.** 1) Disconnect the connectors from the electronic parking brake CM. 2) Measure the resistance of harness between clutch stroke sensor and electronic parking brake CM connector. ***Connector & terminal*** ***(B501) No. 4 — (B355) No. 12:***	Is the resistance less than 1 Ω?	Go to step **8**.	Repair the harness and connector between clutch stroke sensor and electronic parking brake CM connector.

	Step	Check	Yes	No
8	**CHECK HARNESS.** Measure the resistance of harness between clutch stroke sensor and chassis ground. ***Connector & terminal*** ***(B501) No. 4 — Chassis ground:***	Is the resistance 1 MΩ or more?	Go to step **9**.	Repair ground short of harness between clutch stroke sensor and electronic parking brake CM connector.
9	**CHECK HARNESS.** Measure the voltage between clutch stroke sensor and chassis ground. ***Connector & terminal*** ***(B501) No. 4 (+) — Chassis ground (–):***	Is the voltage less than 1 V?	Go to step **10**.	Repair short to power supply of harness between clutch stroke sensor and electronic parking brake CM connector.
10	**CHECK CLUTCH STROKE SENSOR OUTPUT.** 1) Connect all connectors. 2) Turn the ignition switch to ON. 3) Using an oscilloscope, check clutch stroke sensor output. ***Connector & terminal*** ***(B501) No. 4 (+) — Chassis ground (–):***	Is there any output?	Go to step **11**.	Replace the clutch master cylinder. <Ref. to CL-20, Master Cylinder.>
11	**CHECK ELECTRONIC PARKING BRAKE CM.** 1) Connect all connectors. 2) Clear the memory. <Ref. to PB(diag)-25, Clear Memory Mode.> 3) Perform the Inspection Mode. <Ref. to PB(diag)-24, Inspection Mode.> 4) Read the DTC.	Is the same DTC displayed?	Replace the electronic parking brake CM. <Ref. to PB-6, Parking Brake Actuator.>	Go to step **12**.
12	**CHECK OTHER DTC DETECTION.**	Is any other DTC displayed?	Perform the diagnosis according to DTC.	It results from a temporary poor contact interference.

Y: DTC C0275 LONGITUDINAL G SENSOR CIRCUIT

DTC DETECTING CONDITION:

- Defective longitudinal G sensor
- Defective harness connector

TROUBLE SYMPTOM:

- Electronic parking brake warning light illuminates. (C6 model)
- Brake warning light blinks. (Models other than C6 model)
- Hill hold function and accelerator interlocking release function do not operate.

	Step	Check	Yes	No
1	**CHECK INSTALLATION OF VDCCM&H/U.**	Is VDCCM&H/U installed properly without being tilted? Is the bracket deformation-free? Are the VDCCM&H/U installation bolts installed without missing or getting loose?	Go to step **2**.	Repair the fault location. Go to step **2**. • Install VDCCM&H/U properly. • Replace the bracket if faulty. • Tighten the VDCCM&H/U installation bolt. <Ref. to VDC-5, VDC CONTROL MODULE & HYDRAULIC CONTROL UNIT (VDCCM&H/U), COMPONENT, General Description.>
2	**CHECK OUTPUT OF LONGITUDINAL G SENSOR USING SUBARU SELECT MONITOR.** 1) Park the vehicle on a level surface. 2) Connect Subaru Select Monitor, and select "VDC" and then "Current Data Display & Save". <Ref. to VDC(diag)-17, READ CURRENT DATA, OPERATION, Subaru Select Monitor.> 3) Read the «Fr Rr G sensor Output» displayed on display.	Is the indicated reading of the longitudinal G sensor on the monitor display –2 — 2 m/s^2?	Go to step **3**.	Recheck from step 1, and if the problem is not solved, go to next. Go to step **6**.
3	**SET 0 POINT FOR LONGITUDINAL G SENSOR USING SUBARU SELECT MONITOR.** 1) Select "VDC", and then "Function Check Sequence". 2) Perform the "Longitudinal G sensor & lateral G sensor 0 point setting mode". <Ref. to VDC-16, LONGITUDINAL G SENSOR & LATERAL G SENSOR 0 POINT SETTING MODE, ADJUSTMENT, VDC Control Module and Hydraulic Control Unit (VDCCM&H/U).>	Is the 0 point setting successful?	Go to step **4**.	Recheck from step 1, and when the 0 point setting is not possible, replace the VDCCM&H/U. <Ref. to VDC-9, VDC Control Module and Hydraulic Control Unit (VDCCM&H/U).>
4	**DRIVING INSPECTION.** Drive the vehicle approximately 10 minutes, and check if the warning lights illuminate/blink or improperly operate during driving. In a safe place, drive the vehicle while alternating acceleration and deceleration as much as possible.	Does the electronic parking brake warning light remain off without blinking? (C6 model) Does the brake warning light remain off? (Models other than C6 model) Does the parking brake operate without malfunction?	Go to step **5**.	Recheck from step 1, and if the warning lights illuminate/blink or there is abnormal operation, replace the electronic parking CM. <Ref. to PB-6, Parking Brake Actuator.>

	Step	Check	Yes	No
5	**CHECK OUTPUT OF LONGITUDINAL G SENSOR USING SUBARU SELECT MONITOR.** 1) Park the vehicle on a level surface. 2) Connect Subaru Select Monitor, and select “VDC” and then “Current Data Display & Save”. <Ref. to VDC(diag)-17, READ CURRENT DATA, OPERATION, Subaru Select Monitor.> 3) Read the «Fr Rr G sensor Output» displayed on display.	Is the indicated reading of the longitudinal G sensor on the monitor display –1.5 — 1.5 m/s^2?	It results from a temporary noise interference.	Recheck from step 1, and if the problem is not solved, replace the VDCCM&H/U. <Ref. to VDC-9, VDC Control Module and Hydraulic Control Unit (VDCCM&H/U).>
6	**CHECK OUTPUT OF LONGITUDINAL G SENSOR USING SUBARU SELECT MONITOR.** 1) Remove the VDCCM&H/U installation bolt and bracket. 2) Keep VDCCM&H/U in a horizontal position. 3) Connect Subaru Select Monitor, and select “VDC” and then “Current Data Display & Save”. <Ref. to VDC(diag)-17, READ CURRENT DATA, OPERATION, Subaru Select Monitor.> 4) Read the «Fr Rr G sensor Output» displayed on display.	When the VDCCM&H/U is in a horizontal position, is the indicated reading of the longitudinal G sensor on the monitor display –1.5 — 1.5 m/s^2?	Check the bracket and brake pipe, and install VDCCM&H/U in a horizontal position to the vehicle.	Replace the VDCCM&H/U. <Ref. to VDC-9, VDC Control Module and Hydraulic Control Unit (VDCCM&H/U).>

Z: DTC C0281 MID STOP CONDITION

DTC DETECTING CONDITION:
Actuator stops in the mid-stroke
TROUBLE SYMPTOM:
Brake warning light blinks.

NOTE:
• When the actuator stops in the mid-stroke due to power supply error (ex. voltage drop during cranking) during the operation, this DTC is stored. If the actuator operates normally after operating and then releasing the parking brake again, this is not malfunction.
• When being restored from the mid-stroke stop state, the actuator will have full-stroke once, and therefore, operation time may take approximately 10 seconds.

	Step	Check	Yes	No
1	**CHECK ELECTRONIC PARKING BRAKE CM USING SUBARU SELECT MONITOR.** 1) Turn the ignition switch to ON. 2) Release the parking brake. 3) Approximately 10 seconds after releasing the parking brake, clear the memory using the Subaru Select Monitor. <Ref. to PB(diag)-25, Clear Memory Mode.> 4) Read the DTC.	Is DTC displayed?	Perform the diagnosis according to DTC. <Ref. to PB(diag)-35, List of Diagnostic Trouble Code (DTC).>	It results from a temporary voltage drop.

AA:DTC C0282 EMERGENCY CANCEL STATUS

DTC DETECTING CONDITION:
Emergency release (manual release) of the parking brake was performed.
TROUBLE SYMPTOM:
Brake warning light blinks.

NOTE:
• When emergency release of the parking brake is performed, this DTC is stored. If the actuator operates normally after operating and then releasing the parking brake following the emergency release, this is not malfunction. When the actuator operates normally, the brake warning light goes off.
• When being restored from emergency release state, the actuator will have full-stroke once, and therefore, operation time may take approximately 10 seconds.
• When emergency release is performed, check the electronic parking brake control module and brake shoe. For details, refer to the restoring procedures after emergency release. <Ref. to PB-20, INSPECTION, Emergency Release of Electronic Parking Brake.>

	Step	Check	Yes	No
1	**INTERVIEW CUSTOMERS.** Ask the user if emergency release was performed.	Was the emergency release performed?	Go to step **2**.	Go to step **3**.
2	**CHECK ELECTRONIC PARKING BRAKE CM.** 1) Turn the ignition switch to ON, and then release the parking brake. 2) After approximately 10 seconds, clear the memory using the Subaru Select Monitor. <Ref. to PB(diag)-25, Clear Memory Mode.> 3) Perform the Inspection Mode. <Ref. to PB(diag)-24, Inspection Mode.> 4) Read the DTC.	Is DTC displayed?	Perform the diagnosis according to DTC. <Ref. to PB(diag)-35, List of Diagnostic Trouble Code (DTC).>	End.
3	**CHECK PARKING BRAKE ASSEMBLY.** Check that the parking brake assembly does not have malfunction. <Ref. to PB-20, INSPECTION, Emergency Release of Electronic Parking Brake.>	Is the parking brake assembly free of malfunction?	Replace the electronic parking brake CM. <Ref. to PB-6, Parking Brake Actuator.>	Repair the parking brake assembly.

13.General Diagnostic Table

A: INSPECTION

Symptoms		Malfunction parts/Condition
• Electronic parking brake warning light illuminates. (C6 model) • Brake warning light blinks. (Models other than C6 model)	Parking brake system does not operate.	• Defective parking brake switch • Defective electronic parking brake control module • Defective power supply/ground for electronic parking brake control module • No CAN signal received from VDC control module • Defective actuator in the electronic parking brake control module • Defective force sensor in the electronic parking brake control module • Defective temperature sensor in the electronic parking brake control module • Defective stroke sensor in the electronic parking brake control module • Defective CAN communication
• Electronic parking brake warning light illuminates. (C6 model) • Brake warning light blinks. (Models other than C6 model)	Hill hold function and accelerator interlocking release function do not operate.	• Defective hill hold switch • Faulty signal received from engine control module • Faulty signal received from transmission control module • Faulty signal received from VDC control module • Defective neutral position switch (MT model only) • Defective back-up light switch (MT model only) • Defective parameter selection for the electronic parking brake control module • No CAN signal received from engine control module • No CAN signal received from transmission control module • No CAN signal received from body integrated unit • Defective clutch stroke sensor (MT model only) • Defective longitudinal G sensor
The brake warning light blinks, and the electronic parking brake warning light (C6 model only) and hill hold indicator light illuminate.	—	No CAN signal from the electronic parking brake control module to combination meter
Only the brake warning light blinks.	—	• Mid-course stop state • Emergency release state • The operation and release of the parking brake was repeated excessively
The brake warning light blinks, and the electronic parking brake warning light (C6 model only) illuminates.	Parking brake system does not operate.	Parking brake shoe clearance too large
When the hill hold function is set to ON, drugging of brake may occur when the vehicle starts to move.	—	Driver's seat belt is not fastened.
Noise emitted from the parking brake cable when applying/releasing the parking brake.	—	Deterioration has occurred inside the cable due to improper assembly of the parking brake cable.

POWER ASSISTED SYSTEM (POWER STEERING)

PS

		Page
1.	General Description	2
2.	Steering Wheel	16
3.	Universal Joint	21
4.	Steering Column	26
5.	Steering Gearbox	35
6.	Pipe Assembly	63
7.	Oil Pump	67
8.	Reservoir Tank	76
9.	Power Steering Fluid	77
10.	General Diagnostic Table	78

1. General Description

A: SPECIFICATION

Model			H4 non-turbo model	H6, H4 turbo model
Whole system	Minimum turning radius m (ft)		5.6 (18.4)	
	Steering angle	Inner wheel	225/50R17 tire: 37.4°±1.5° 225/45R18 tire: 37.4°±1.5° 215/50R17 tire: 37.6°±1.5° 205/60R16 tire: 37.6°±1.5° 225/60R17 tire: 38.4°±1.5° 215/70R16 tire: 38.4°±1.5°	
		Outer wheel	225/50R17 tire: 33.0°±1.5° 225/45R18 tire: 33.0°±1.5° 215/50R17 tire: 33.3°±1.5° 205/60R16 tire: 33.3°±1.5° 225/60R17 tire: 34.1°±1.5° 215/70R16 tire: 34.1°±1.5°	
	Steering wheel diameter mm (in)		375 (14.76)	
	Lock-to-lock revolution number		OUTBACK: 3.2 Except for OUTBACK: 2.8	
Gearbox	Type		Rack and Pinion, Integral	
	Backlash		0 (Automatic adjusting)	
	Valve (Power steering system)		Rotary valve	
Pump (Power steering system)	Type		Vane pump	
	Oil tank		Installed on body	
	Specific output cm^3 (cu in)/rev.		8.5 (0.519)	8.5 (0.519)
	Relief pressure kPa (kgf/cm^2, psi)		8,300 — 9,000 (85 — 92, 1,203 — 1,305)	8,900 — 9,600 (91 — 98, 1,290 — 1,392)
	Hydraulic fluid control		Engine speed sensitive	
	Hydraulic fluid ℓ (US qt, Imp qt)		1,000 rpm: 6.5 (6.9, 5.7) 3,000 rpm: 5.3 (5.6, 4.7)	1,000 rpm: 6.8 (7.2, 6) 3,000 rpm: 5.8 (6.1, 5.1)
	RPM range rpm		500 — 9,600	670 — 9,869
	Direction of rotation		Clockwise	
Hydraulic oil (Power steering system)	Capacity ℓ (US qt, Imp qt)	Oil tank	0.2 (0.2, 0.2)	
		Whole system	0.7 (0.7, 0.6)	

Steering wheel	Free play mm (in)		17 (0.67)
Steering shaft	Clearance between the steering wheel and column cover mm (in)		2 — 4 (0.08 — 0.16)

Steering gearbox (Power steering system)	Sliding resistance		N (kgf, lbf)	650 (66.2, 146) or less Difference between right and left sliding resistance: 20%
	Rack shaft play in the radial direction	Right-turn steering	mm (in)	Horizontal play: 0.6 (0.024) or less Vertical play: 0.4 (0.016) or less
		Left-turn steering	mm (in)	0.4 (0.016) or less
	Input shaft play	In radial direction	mm (in)	0.18 (0.0071) or less
		In axial direction	mm (in)	0.27 (0.0106) or less
	Rotational resistance		N (kgf, lbf)	Maximum allowable value: 30 (3.1, 6.7) or less Difference between right and left sliding resistance: 20%
Oil pump (Power steering system)	Pulley shaft	Radial play	mm (in)	0.2 (0.008) or less
		Axial play	mm (in)	0.9 (0.035) or less
	Pulley	Ditch deflection	mm (in)	1.0 (0.039) or less
		Rotational resistance	N (kgf, lbf)	9.22 (0.94, 2.07) or less
	Regular pressure (Unloaded)		kPa (kgf/cm^2, psi)	981 (10, 142) or less
Steering wheel effort (Power steering system)	At standstill with engine idling on paved road		N (kgf, lbf)	29.4 (3.0, 6.6) or less
	At standstill with engine stalled on paved road		N (kgf, lbf)	294.2 (30, 66.2) or less

Recommended power steering fluid	SUBARU ATF or DEXRON III

B: COMPONENT

1. STEERING WHEEL AND COLUMN

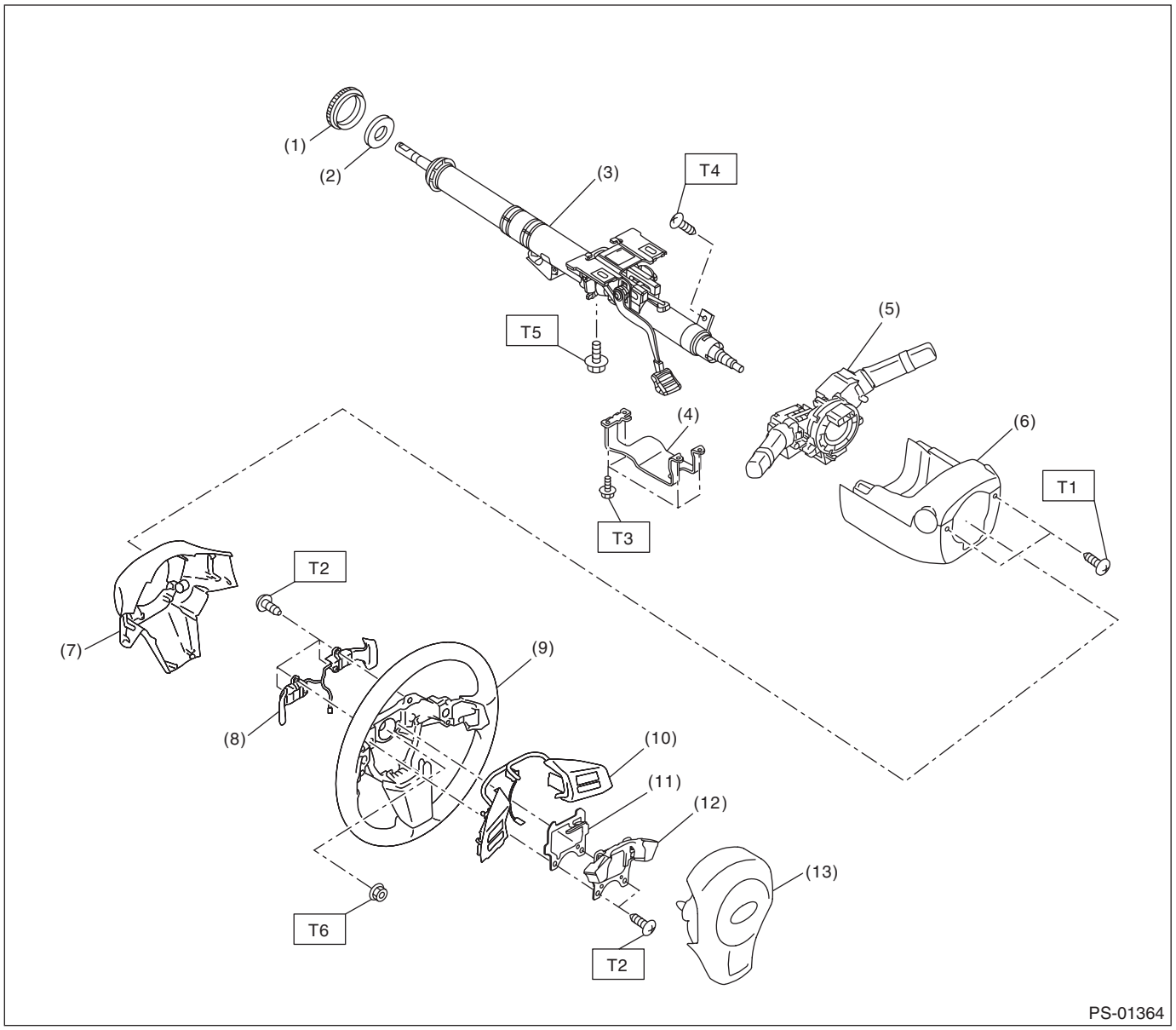

(1)	Bushing	(8)	Paddle shift
(2)	Insulator (CVT model)	(9)	Steering wheel
(3)	Steering shaft	(10)	Switch
(4)	Knee protector	(11)	Protector
(5)	Steering roll connector	(12)	Dynamic damper
(6)	Column cover	(13)	Airbag module
(7)	Steering wheel lower cover		

Tightening torque:N·m (kgf-m, ft-lb)
T1: 1.2 (0.12, 0.9)
T2: 1.7 (0.17, 1.3)
T3: 3.4 (0.35, 2.5)
T4: 3.5 (0.36, 2.6)
T5: 20 (2.04, 14.8)
T6: 39 (3.98, 28.8)

2. HOSE AND TANK

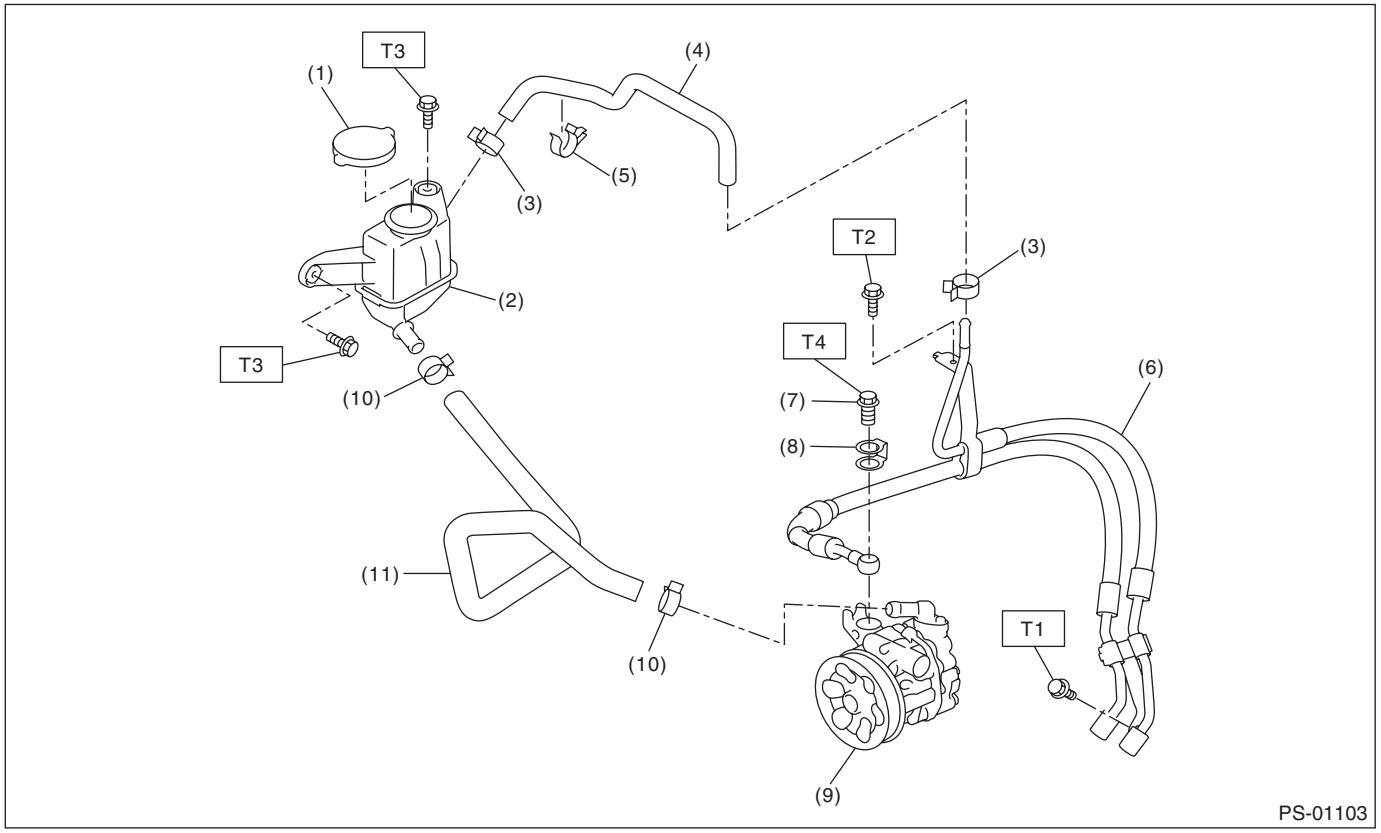

(1)	Cap	(7)	Eye bolt	***Tightening torque:N·m (kgf-m, ft-lb)***
(2)	Reservoir tank	(8)	Eye bolt gasket	***T1: 7.5 (0.76, 5.5)***
(3)	Clip	(9)	Oil pump	***T2: 10 (1.02, 7.4)***
(4)	Return hose	(10)	Clip	***T3: 13 (1.33, 9.6)***
(5)	Clip	(11)	Suction hose	***T4: 40 (4.08, 29.5)***
(6)	Hose ASSY			

3. STEERING GEARBOX

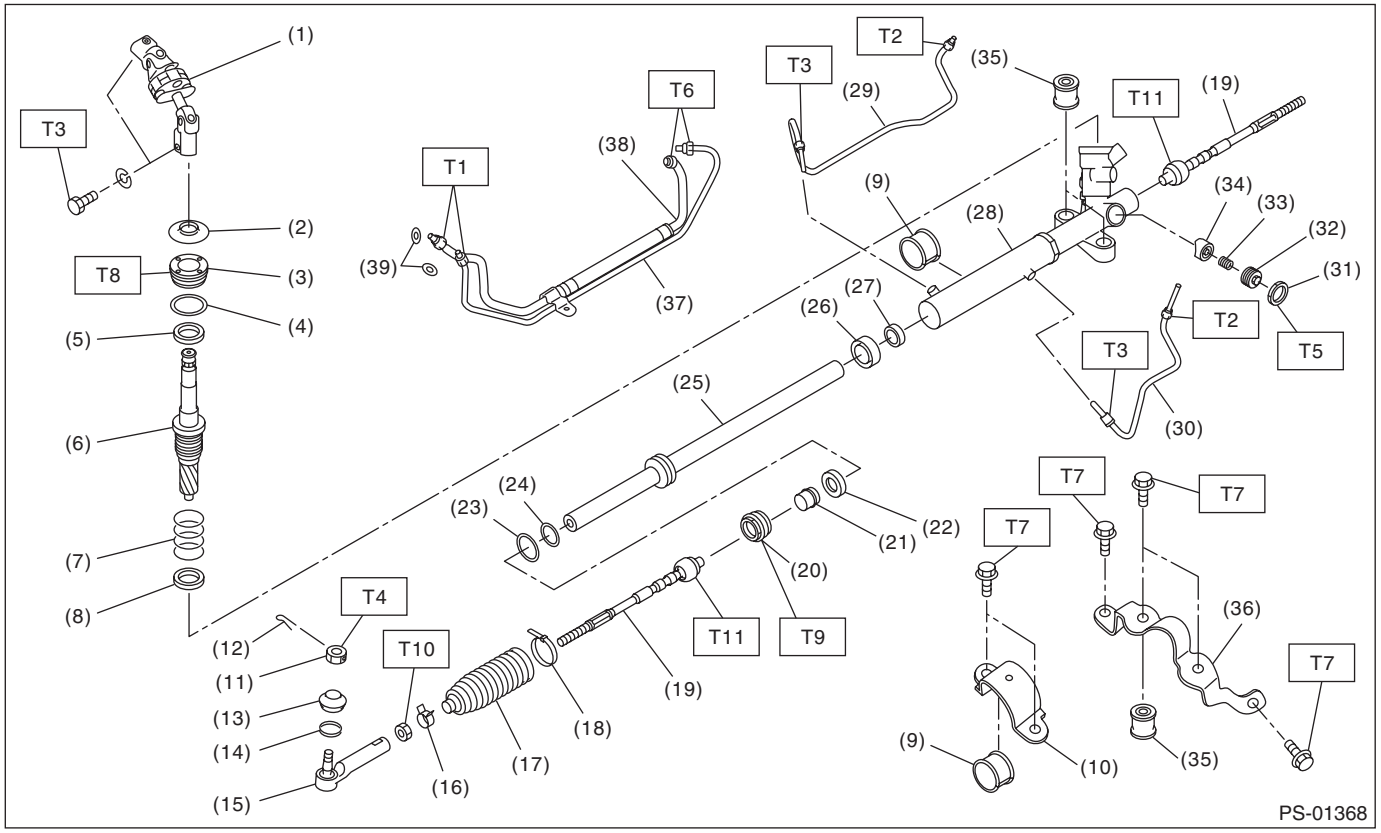

(1) Universal joint
(2) Dust cover
(3) Plug
(4) O-ring
(5) Oil seal
(6) Control valve
(7) Seal ring
(8) Oil seal
(9) Adapter
(10) Clamp
(11) Castle nut
(12) Cotter pin
(13) Dust seal
(14) Clip
(15) Tie-rod end
(16) Clip
(17) Boot
(18) Band
(19) Tie-rod
(20) Holder
(21) Bushing
(22) Oil seal
(23) Seal ring
(24) O-ring
(25) Rack
(26) Oil seal
(27) Back-up ring
(28) Steering body
(29) Pipe A
(30) Pipe B
(31) Lock nut
(32) Adjusting screw
(33) Spring
(34) Sleeve
(35) Bushing
(36) Stiffener
(37) Feed pipe
(38) Return pipe
(39) O-ring

Tightening torque:N·m (kgf-m, ft-lb)
T1: 15 (1.53, 11.1)
T2: 20 (2.04, 14.8)
T3: 24 (2.45, 17.7)
T4: 27 (2.75, 19.9)
T5: 39 (3.98, 28.8)
T6: 45 (4.59, 33.2)
T7: 60 (6.12, 44.3)
T8: 64 (6.53, 47.2)
T9: 75 (7.65, 55.3)
T10: 85 (8.67, 62.7)
T11: 90 (9.18, 66.4)

4. OIL PUMP

- H4 non-turbo model

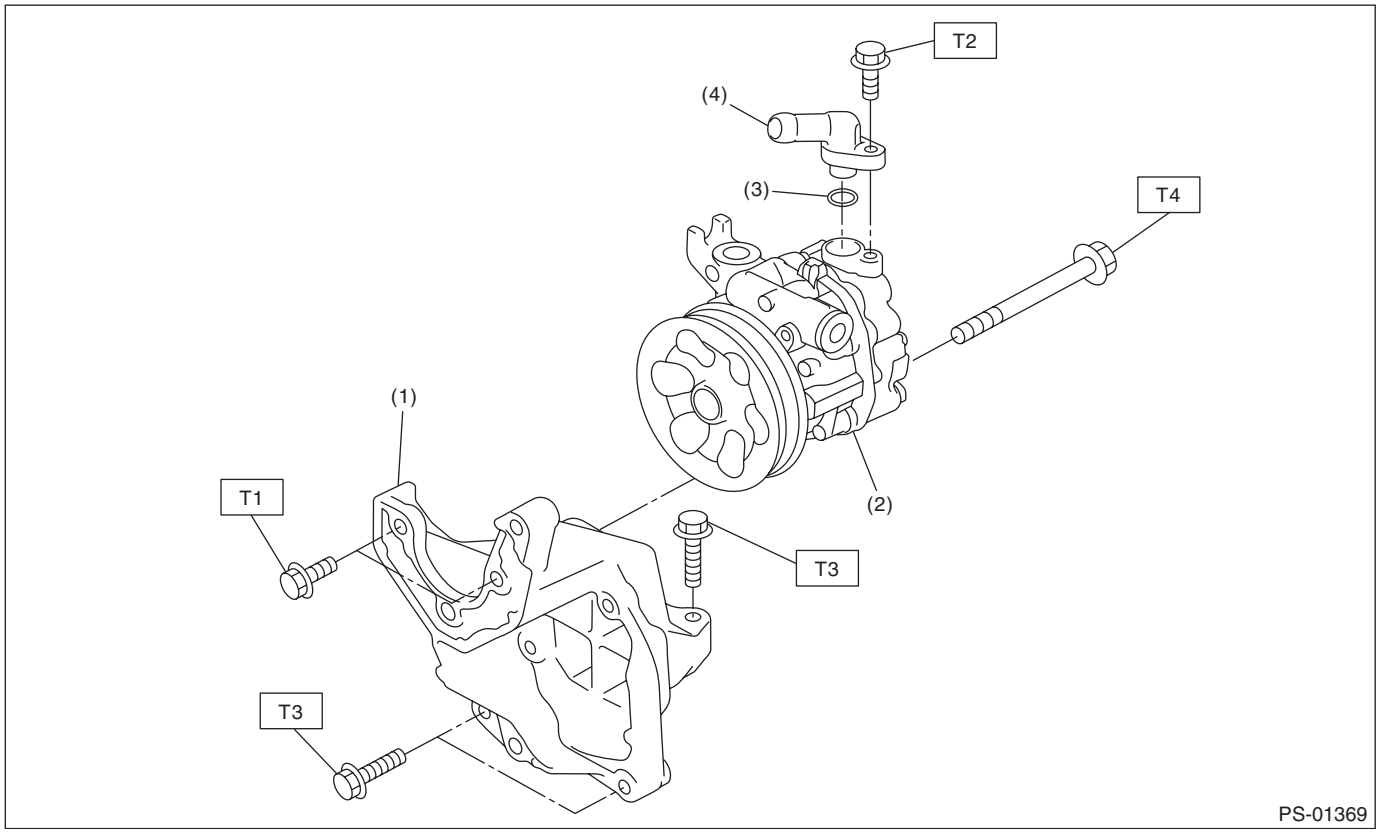

(1) Bracket
(2) Oil pump
(3) O-ring
(4) Joint

Tightening torque:N·m (kgf-m, ft-lb)
T1: 16 (1.63, 11.8)
T2: 21 (2.14, 15.5)
T3: 22 (2.24, 16.2)
T4: 36 (3.67, 26.6)

- H4 turbo model

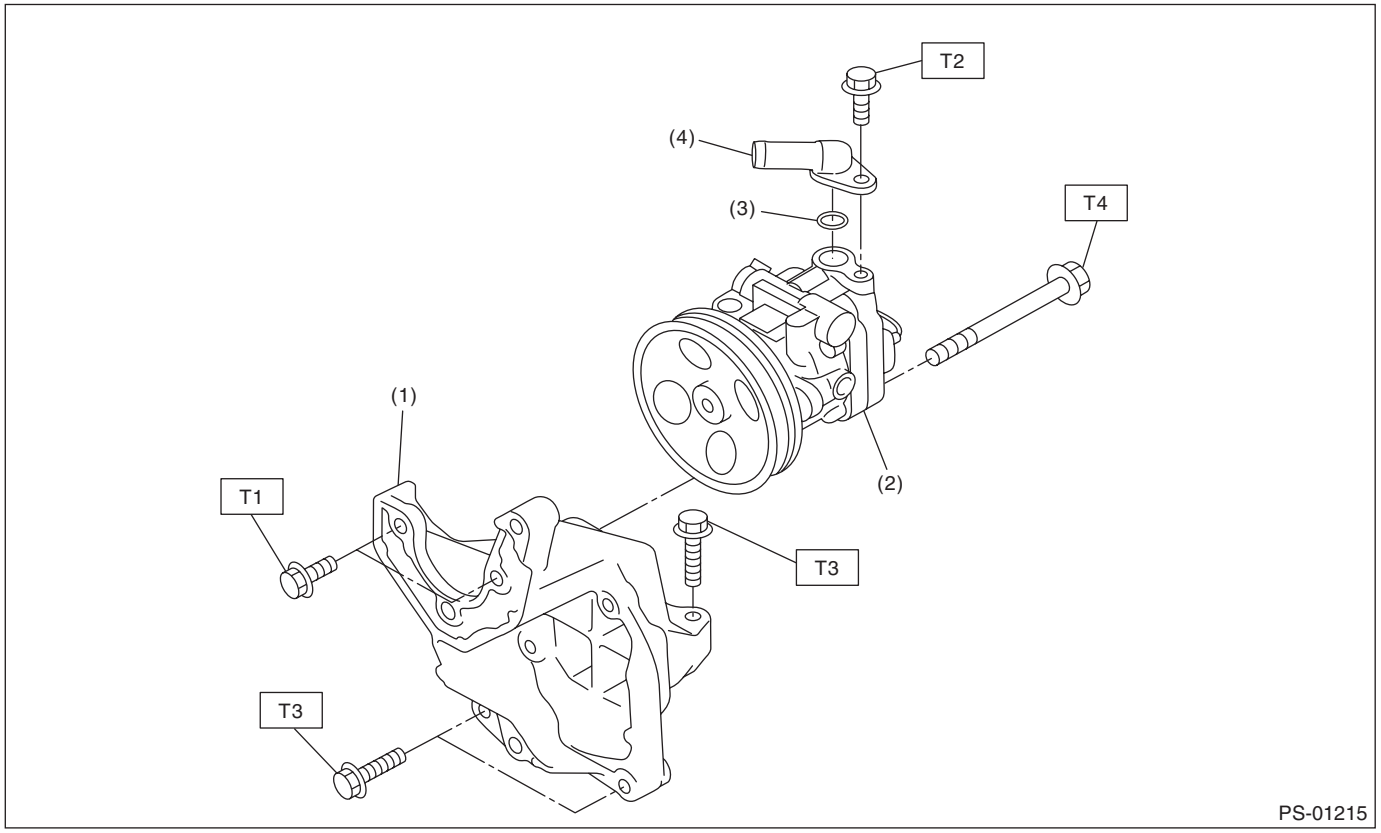

(1) Bracket
(2) Oil pump
(3) O-ring
(4) Joint

Tightening torque:N·m (kgf-m, ft-lb)
T1: 16 (1.63, 11.8)
T2: 21 (2.14, 15.5)
T3: 22 (2.24, 15.9)
T4: 36 (3.67, 26.6)

• H6 model

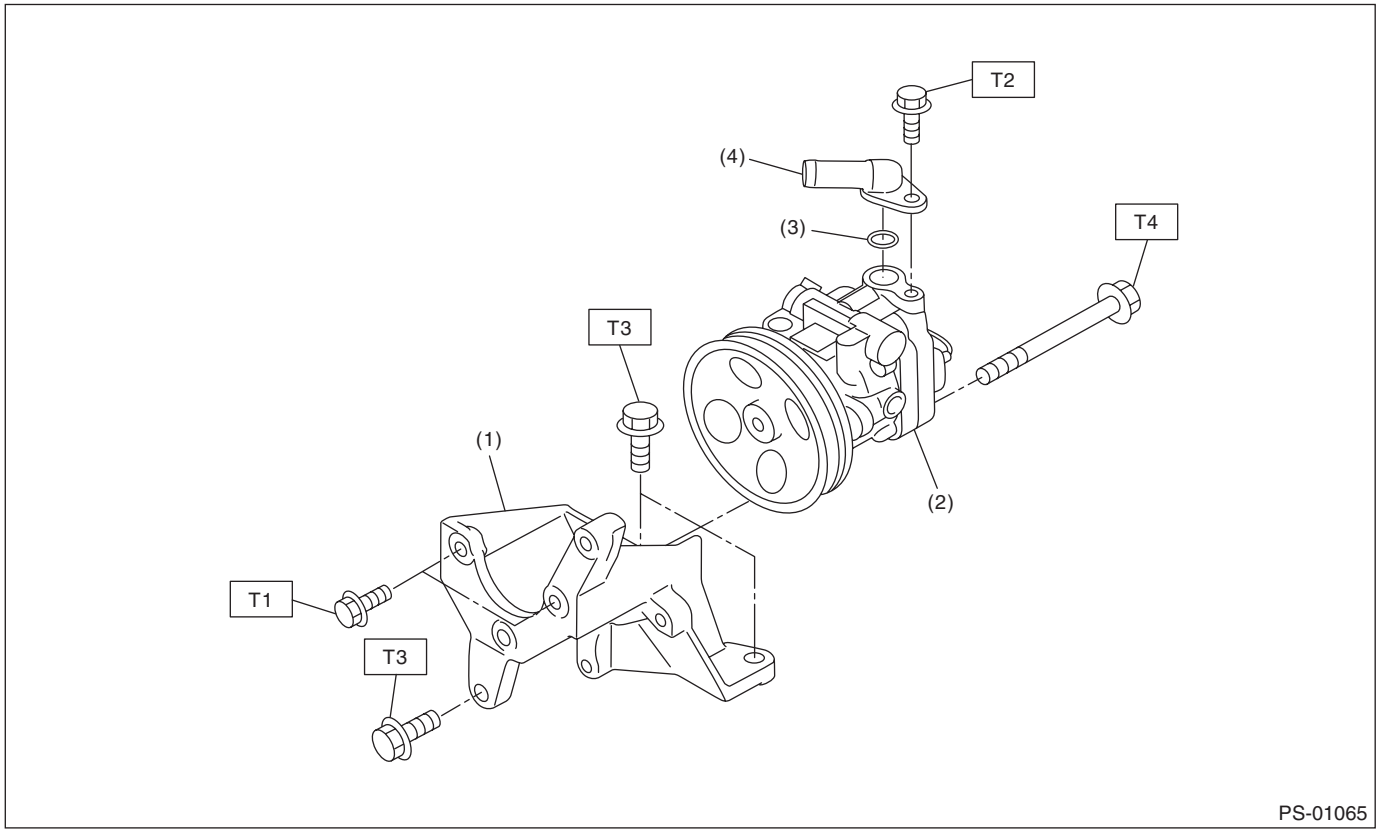

(1) Bracket
(2) Oil pump
(3) O-ring
(4) Joint

Tightening torque:N·m (kgf-m, ft-lb)
T1: 16 (1.63, 11.8)
T2: 21 (2.14, 15.5)
T3: 33 (3.36, 24.3)
T4: 36 (3.67, 26.6)

C: CAUTION

• Wear appropriate work clothing, including a helmet, protective goggles and protective shoes when performing any work.
• Before removal, installation or disassembly, be sure to clarify the failure. Avoid unnecessary removal, installation, disassembly and replacement.
• Vehicle components are extremely hot after driving. Be wary of receiving burns from heated parts.
• Use grease and oil of Subaru genuine or the equivalent products. Do not mix them of different grades or manufacturers.
• Be sure to tighten fasteners including bolts and nuts to the specified torque.
• Place shop jacks or rigid racks at the specified points.
• Before securing a part on a vise, place cushioning material such as wooden blocks, aluminum plate or cloth between the part and the vise.

D: PREPARATION TOOL

1. SPECIAL TOOL

ILLUSTRATION	TOOL NUMBER	DESCRIPTION	REMARKS
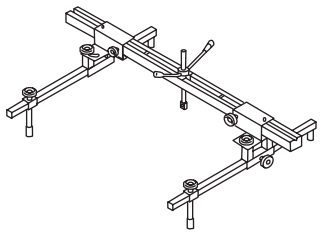 ST99099AJ000	99099AJ000	ENGINE HANGER	• Used for hanging power unit. • Used together with CHAIN BALANCER (99099AJ010).
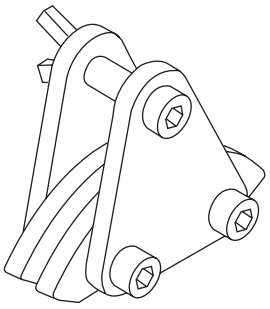 ST99099AJ010	99099AJ010	CHAIN BALANCER	• Used for hanging power unit. • Used together with ENGINE HANGER (99099AJ000).
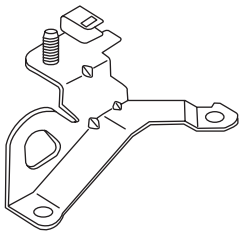 ST10004AA180	10004AA180 (SUBARU genuine part)	HANGER CP ENGINE RR	• Used for hanging power unit. • For H4 non-turbo model. • SUBARU genuine part
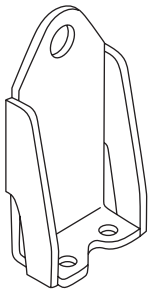 ST18360AA020	18360AA020	HANGER	• Used for hanging power unit. • For H6 model.

ILLUSTRATION	TOOL NUMBER	DESCRIPTION	REMARKS
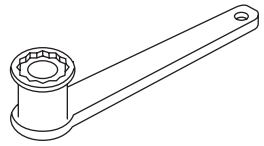 ST34199AJ060	34199AJ060	SPECIAL TOOL CPS	Used for adjusting the backlash of gearbox. (Lock nut side)
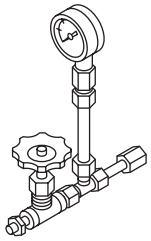 ST-925711000	925711000	PRESSURE GAUGE	Used for measuring oil pressure.
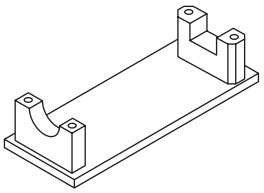 ST-926200000	926200000	STAND	• Used when inspecting characteristic of gearbox assembly and disassembling it. • Used together with BOSS D (34199AG000).
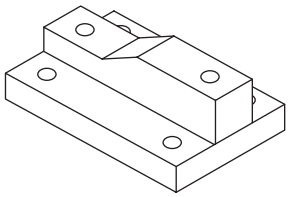 ST34199AG000	34199AG000	BOSS D	• Used when inspecting characteristic of gearbox assembly and disassembling it. • Used together with STAND (926200000).
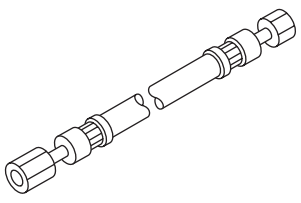 ST34099AC010	34099AC010	ADAPTER HOSE A	Used together with PRESSURE GAUGE (925711000).

ILLUSTRATION	TOOL NUMBER	DESCRIPTION	REMARKS
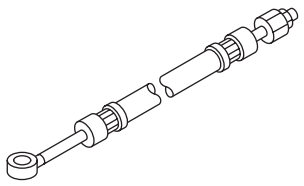 ST34099AC020	34099AC020	ADAPTER HOSE B	Used together with PRESSURE GAUGE (925711000).
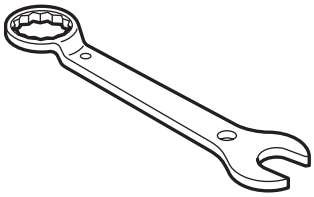 ST34099PA100	34099PA100	SPANNER	Used when measuring the rotational resistance of gearbox assembly.
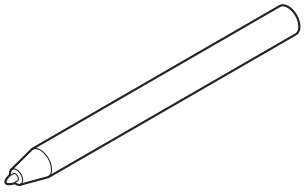 ST34099FA060	34099FA060	PUNCH HOLDER	Used for crimping.
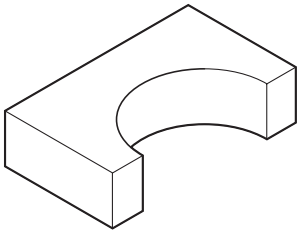 ST34199FE020	34199FE020	BASE	Used for crimping.
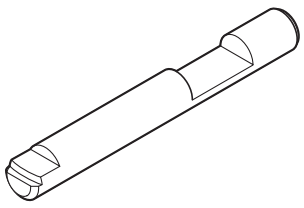 ST34099FA080	34099FA080	PUNCH	Used for removing crimps.

ILLUSTRATION	TOOL NUMBER	DESCRIPTION	REMARKS
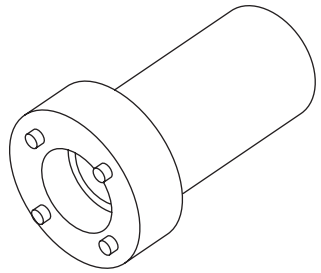 ST34199AE090	34199AE090	PLUG WRENCH	Used for removing the plug.
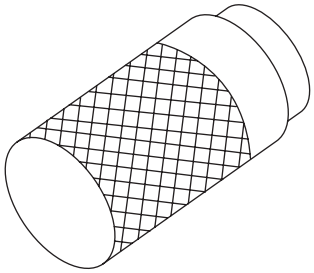 ST34199AE100	34199AE100	OIL SEAL PLUG REMOVER	Used for removing the oil seal plug.
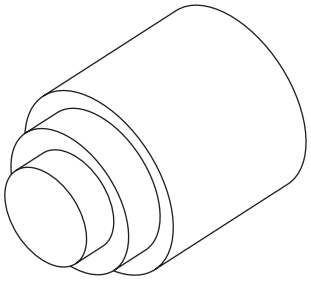 ST34199AE110	34199AE110	OIL SEAL PLUG INSTALLER	Used for installing the oil seal plug.
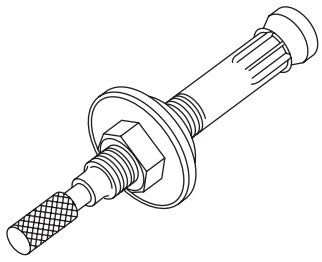 ST34199AE120	34199AE120	GEARBOX OIL SEAL REMOVER	Used for removing the gearbox oil seal.
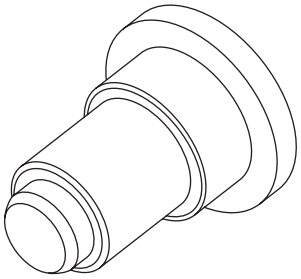 ST34199AE130	34199AE130	GEARBOX OIL SEAL INSTALLER	Used for installing the gearbox oil seal.

ILLUSTRATION	TOOL NUMBER	DESCRIPTION	REMARKS
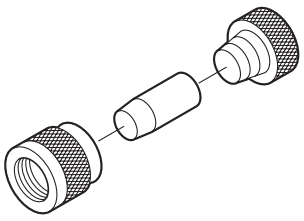 ST34199FE040	34199FE040	INSTALLER A, B, C	• Used for installing the oil seal to the rack assembly. • INSTALLER A: 34199FE070 • INSTALLER B: 34199FE080 • INSTALLER C: 34199FE090
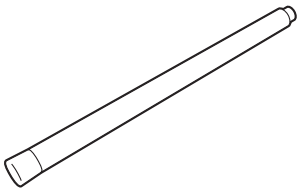 ST34199FE010	34199FE010	REMOVER	Used for removing the back-up ring and oil seal.
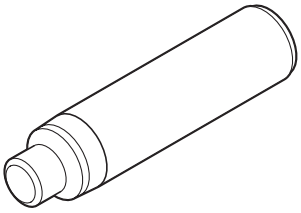 ST34199FE000	34199FE000	INSTALLER & REMOVER	Used for removing and installing the rack oil seal (outer and inner).
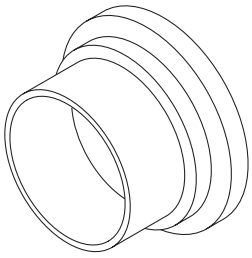 ST34199FE050	34199FE050	GUIDE	Used for installing the rack and seal into housing assembly.
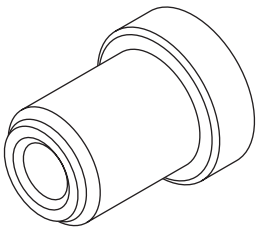 ST34199FE060	34199FE060	INSTALLER	Used for installing the rack oil seal (outer).

2. GENERAL TOOL

TOOL NAME	REMARKS
Chain sling	• Used for hanging power unit. • Diameter: 6 mm (0.24 in) or 6.3 mm (0.25 in) • Length: 0.8 — 1 m (2.6 — 3.3 ft) • Chain inner width: 8.5 mm (0.33 in) or more • Chain external width: 23.5 mm (0.93 in) or less • Load capacity: 1.2 t (2646 lb) or more
Shackle	• Two units used for hanging power unit. • Attached to both end of chain sling and connected to engine hook. • Load capacity: 250 kg (551 lb) or more
Sling belt	• Used to remove and install the cradle. • Width: 35 — 40 mm (1.38 — 1.57 in) • Length: 2 m (6.6 ft) • Load capacity: 1 t (2205 lb) or more
Shackle	• Used to remove and install the cradle. • Load capacity: 500 kg (1103 lb) or more
Steering wheel puller	Used for removing the steering wheel.

2. Steering Wheel

A: REMOVAL

1) Disconnect the negative terminal from the battery, and wait for 60 seconds or more.
2) Set the tire to the straight-ahead position.
3) Remove the driver's airbag module assembly.
   (1) Push in the snap pin using a hexagon wrench or equivalent wrapped with a protective tape to disengage the locks (3 locations).

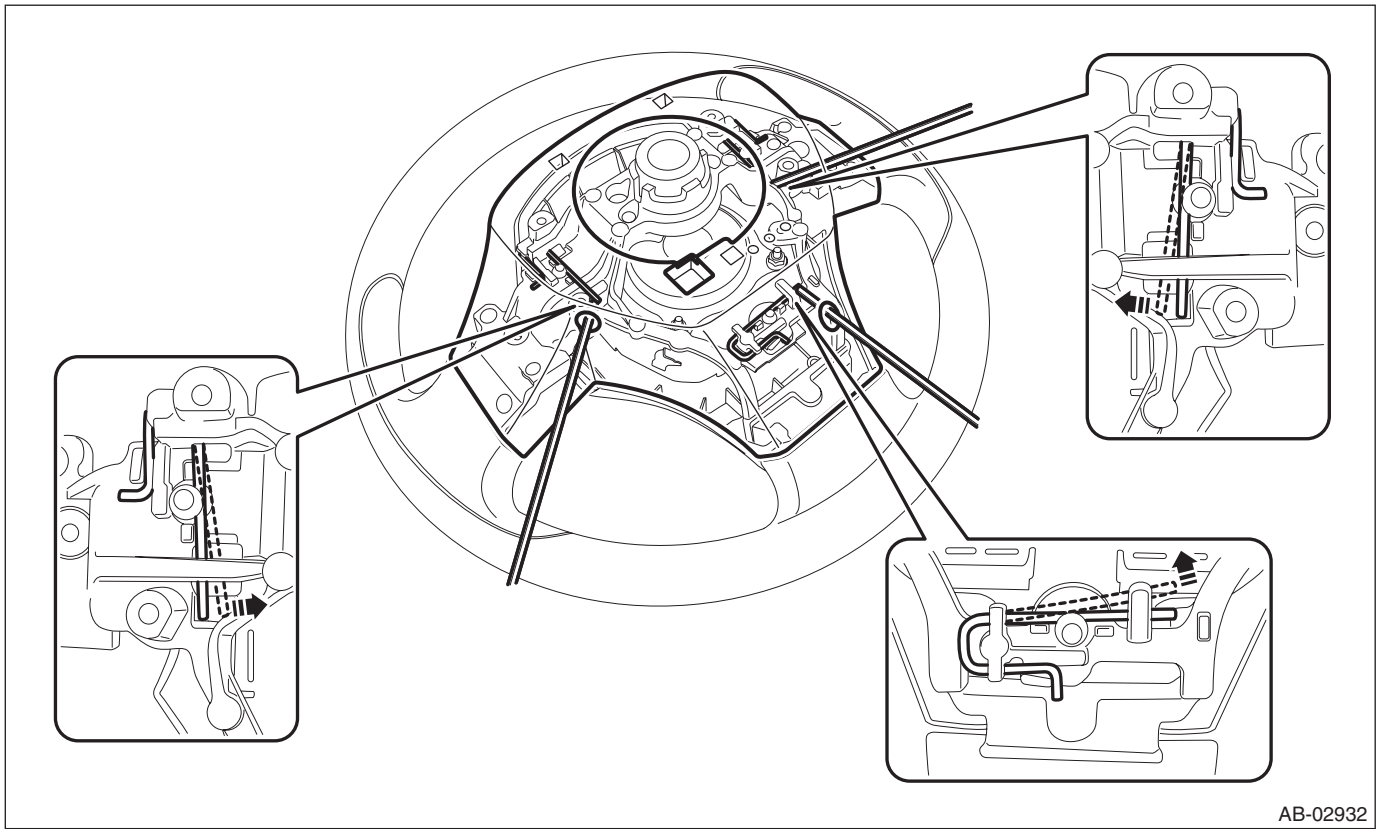

   (2) Disconnect the horn harness and airbag connector and remove the airbag module assembly. <Ref. to AB-21, DRIVER'S AIRBAG MODULE, CURTAIN AIRBAG MODULE & PRETENSIONER, PROCEDURE, Airbag Connector.>

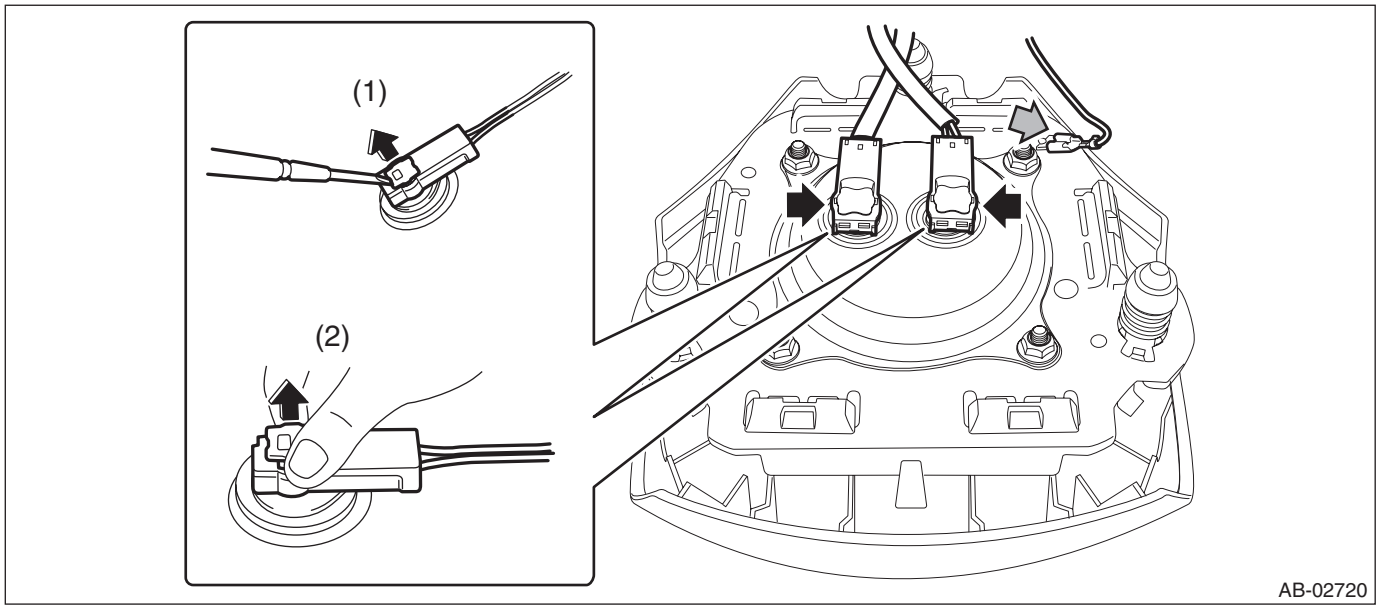

4) Remove the steering wheel.

CAUTION:
- **Always use the steering wheel puller for removal to avoid deforming the steering wheel.**
- **If the steering wheel has been removed, make sure that the roll connector is not turned from the original position.**

(1) Disconnect the connector and remove the nut.
(2) Put alignment marks and remove the steering wheel.

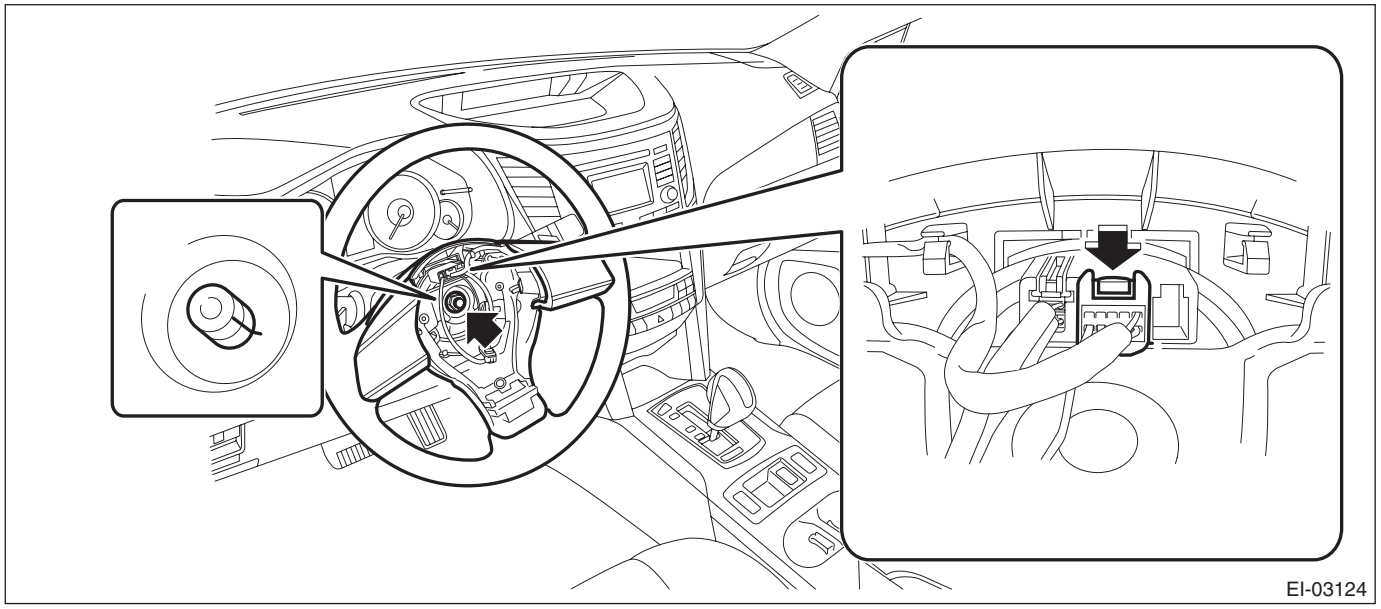

B: INSTALLATION

WARNING:
Always refer to "Airbag System" before performing service on the airbag modules. <Ref. to AB-9, CAUTION, General Description.>

1) Align the center position of the roll connector. <Ref. to AB-101, ADJUSTMENT, Roll Connector.>
2) Install each part in the reverse order of removal.

NOTE:
Align the alignment marks on the steering wheel and steering shaft.

Tightening torque:
Steering wheel: 39 N·m (4.0 kgf-m, 28.8 ft-lb)

Clearance:
Column cover to steering wheel: 2 — 4 mm (0.08 — 0.16 in)

C: DISASSEMBLY

1) Remove the screw, disconnect the connector and remove the paddle shift switch. (Model with paddle shift)

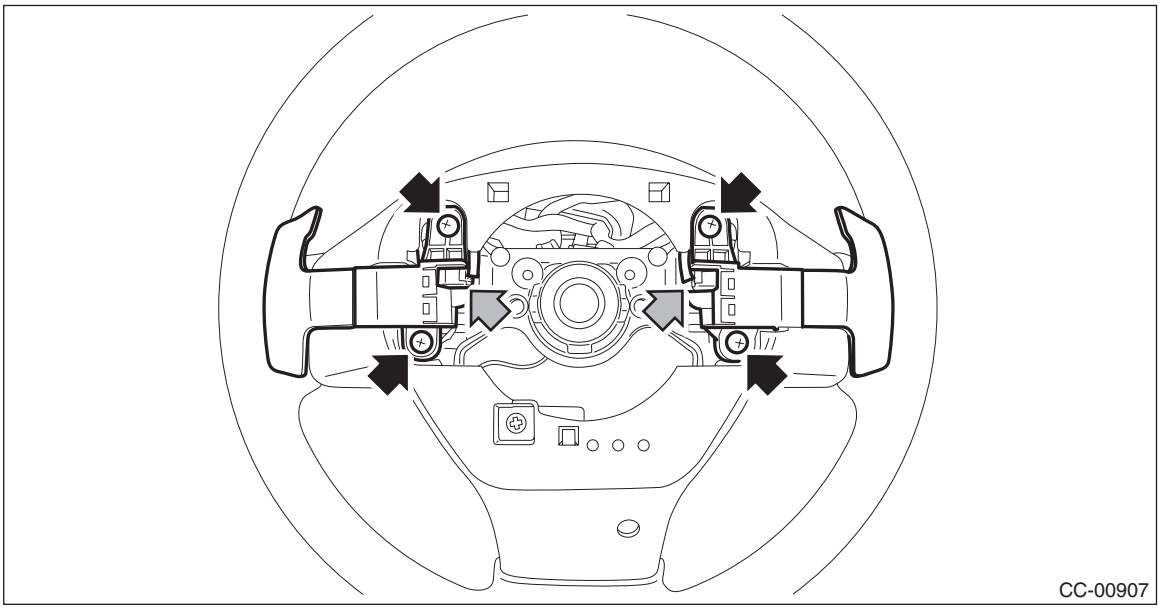

2) Disconnect the claws and then remove the lower cover.

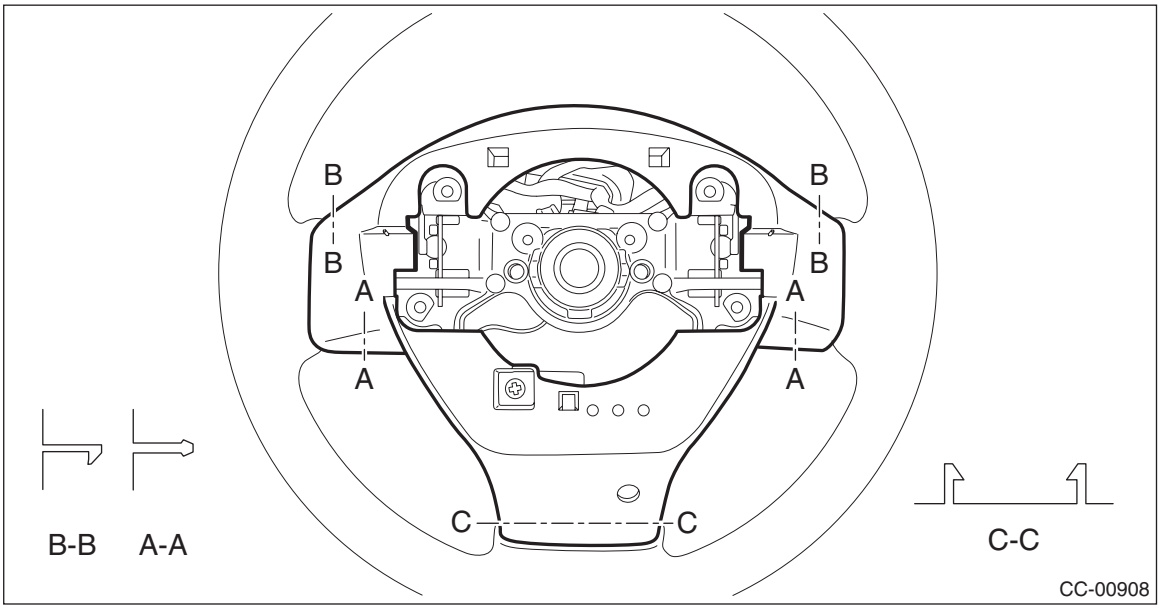

3) Remove the screw to remove the cruise control command switch assembly.

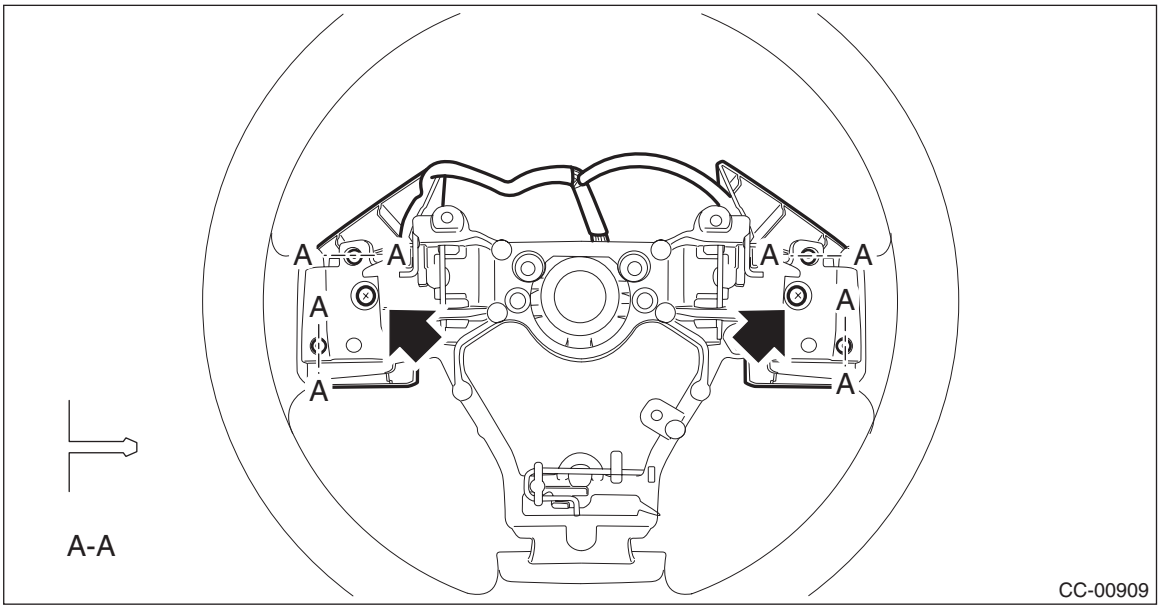

D: ASSEMBLY

Assemble each part in the reverse order of disassembly.

Tightening torque:
Paddle shift: 1.7 N·m (0.17 kgf-m, 1.3 ft-lb)

E: INSPECTION

Check the resistance of paddle switch.

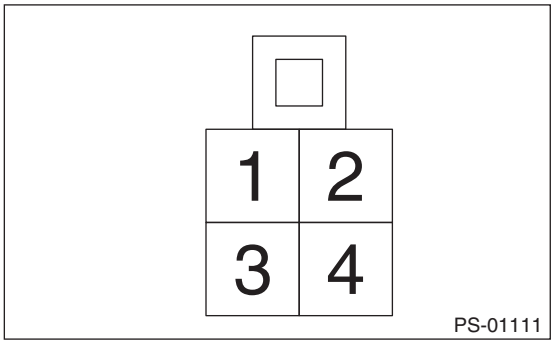

Step		Check	Yes	No
1	**SHIFT-UP SWITCH CONTINUITY CHECK.** 1) Operate the + side of paddle shift assembly and hold it. 2) Measure the resistance between terminals of the paddle shift assembly connector. ***Terminals*** ***No. 2 — No. 4:***	Is the resistance less than 10 Ω?	Go to step **2**.	Replace the paddle shift assembly.
2	**SHIFT-DOWN SWITCH CONTINUITY CHECK.** 1) Operate the – side of paddle shift assembly and hold it. 2) Measure the resistance between terminals of the paddle shift assembly connector. ***Terminals*** ***No. 2 — No. 3:***	Is the resistance less than 10 Ω?	Go to step **3**.	Replace the paddle shift assembly.
3	**CHECK SHIFT SWITCH INSULATION.** 1) Do not operate the paddle shift assembly. 2) Measure the resistance between terminals of the paddle shift assembly connector. ***Terminals*** ***No. 2 — No. 4:*** ***No. 2 — No. 3:***	Is the resistance 1 MΩ or more?	Paddle shift assembly is normal.	Replace the paddle shift assembly.

Replace the paddle switch if the inspection result is not within the standard value.

3. Universal Joint

A: REMOVAL

1) Adjust the tilt position of the steering column to the lowest position and lock the tilt lever.

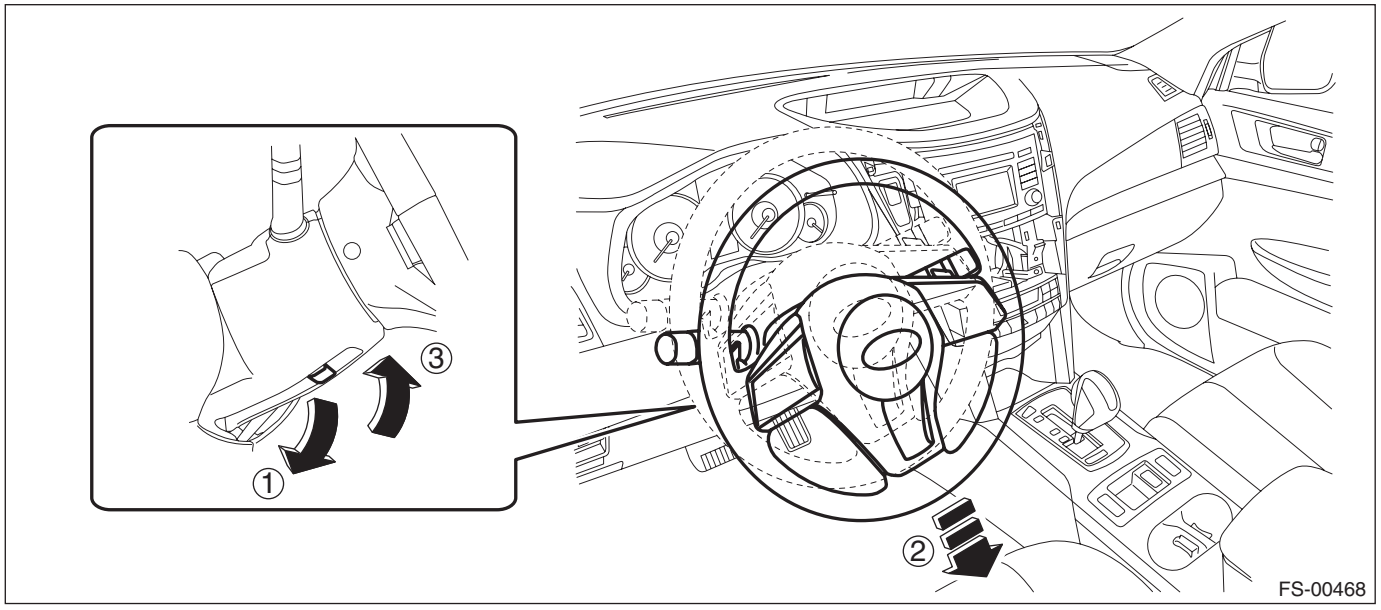

2) Prevent the steering wheel from turning using the seat belt.

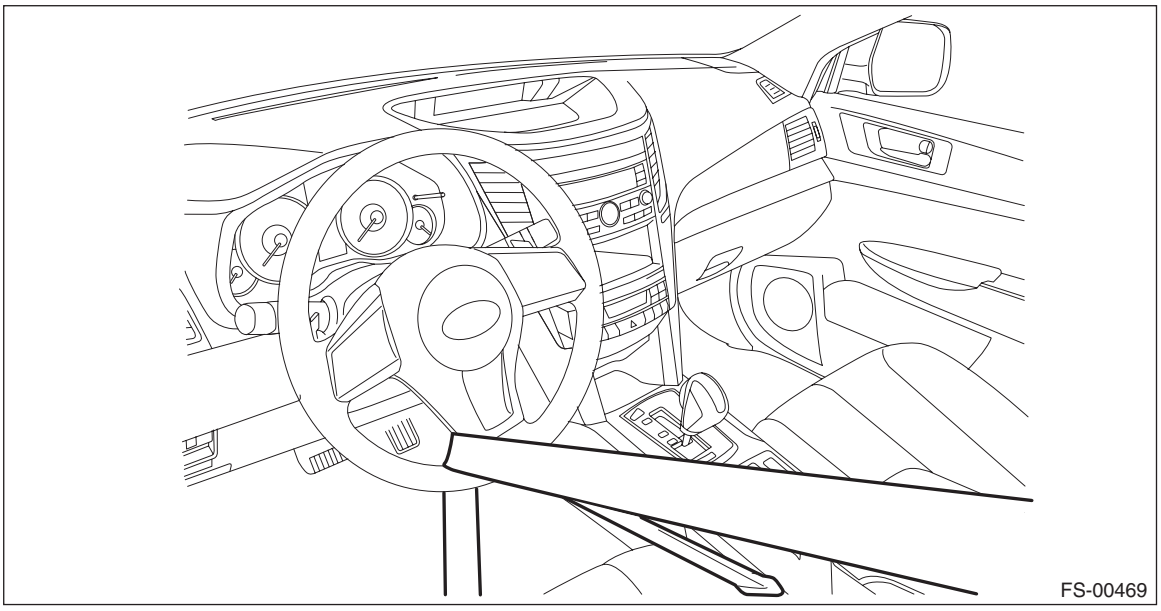

3) Remove the universal joint.
   (1) Place alignment marks on universal joint.

(2) Remove the universal joint bolt and remove the universal joint.

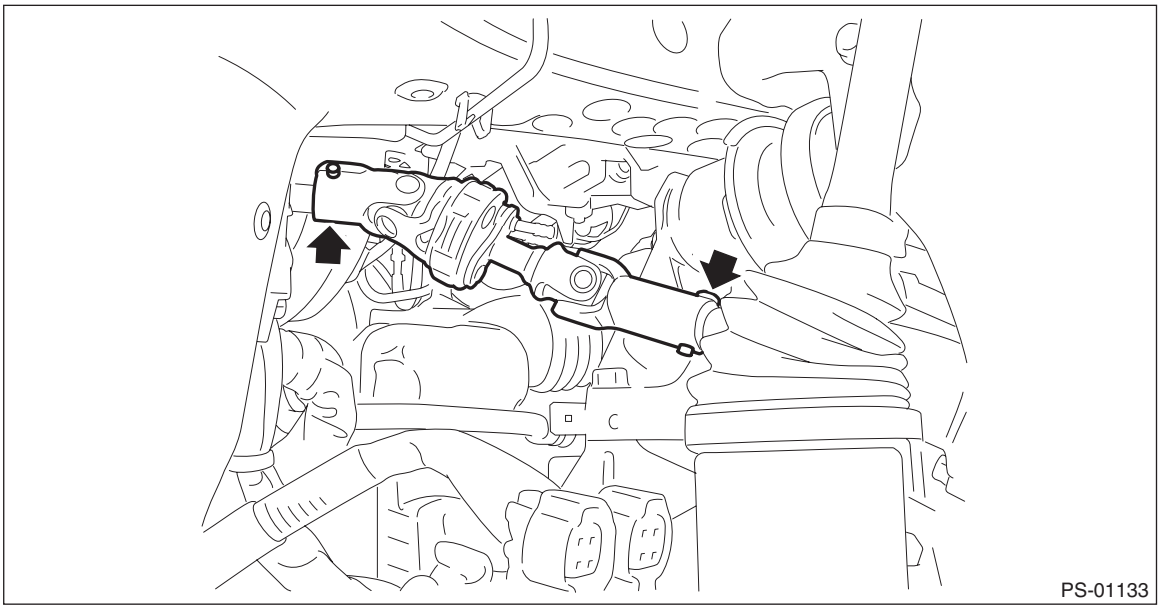

B: INSTALLATION

1) Before installation, check the universal joint. <Ref. to PS-23, INSPECTION, Universal Joint.>
2) Adjust the tilt position of the steering column to the lowest position and lock the tilt lever.

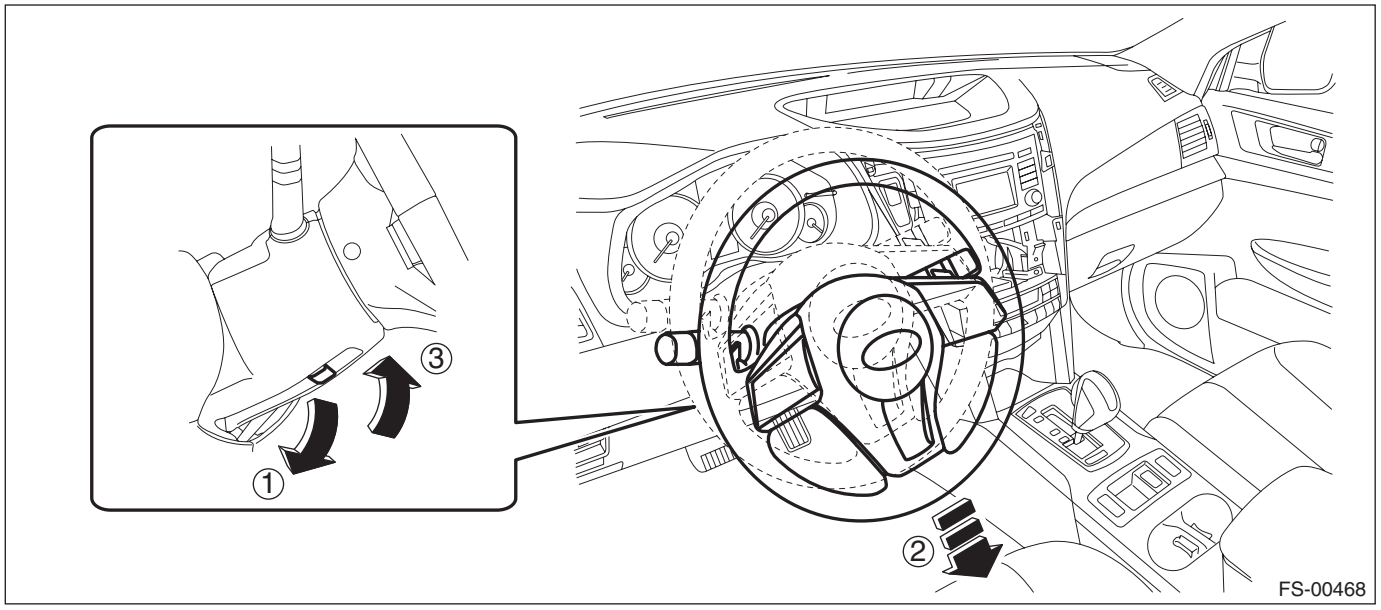

3) Align the cutout portion (a) at serrated section of the column shaft (c) and yoke (b), then install the universal joint into column shaft.

CAUTION:
Be sure to align the protrusion section (a) of the column shaft side with the cutout (a) of the serration. If the protrusion is aligned with the other cutout (d), the universal joint bolt cannot be assembled.

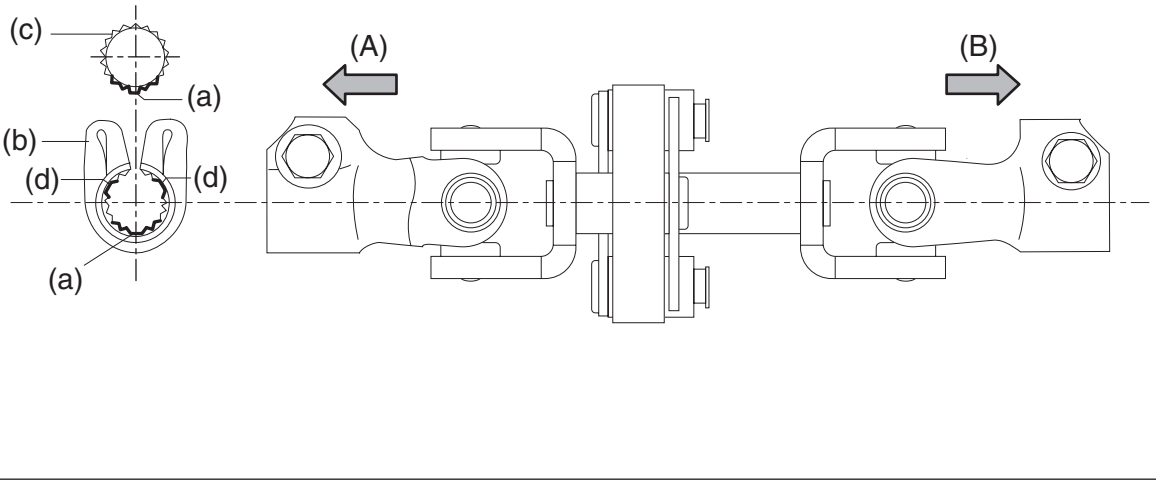

(A) Column shaft side (B) Gearbox side

4) Install the universal joint to the serrations of gearbox assembly by matching alignment marks.
5) Tighten the bolts on the gearbox side first, and then the column shaft side.

CAUTION:
Be sure to follow the tightening order and tightening torque of universal joint to avoid the steering effort from becoming heavy.

Tightening torque:
24 N·m (2.45 kgf-m, 17.7 ft-lb)

Clearance between universal joint coupling and adjacent parts:
15 mm (0.59 in) or more

C: INSPECTION

Check for wear, damage or any other faults.
1) Check the universal joint for excessive looseness.

Service limit:
Universal joint play: 0 mm (0 in)

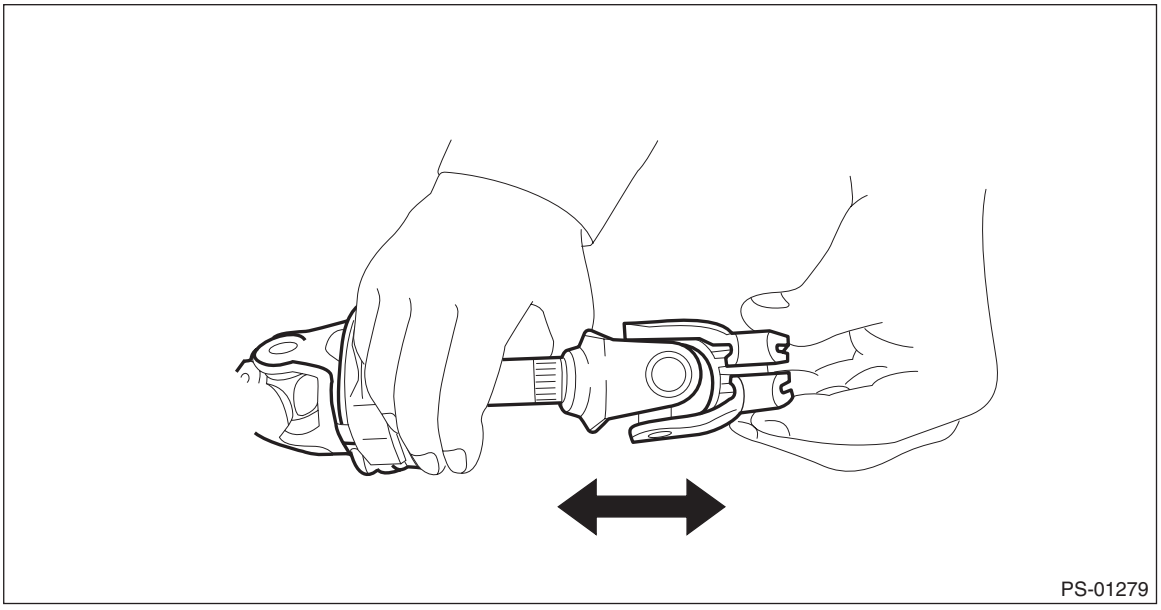

2) Measure the swing torque of universal joint.
(1) Place the universal joint between wooden blocks and fix it on a vise.
(2) With the yoke (a) of gearbox side facing up, measure the swing torque in two directions.

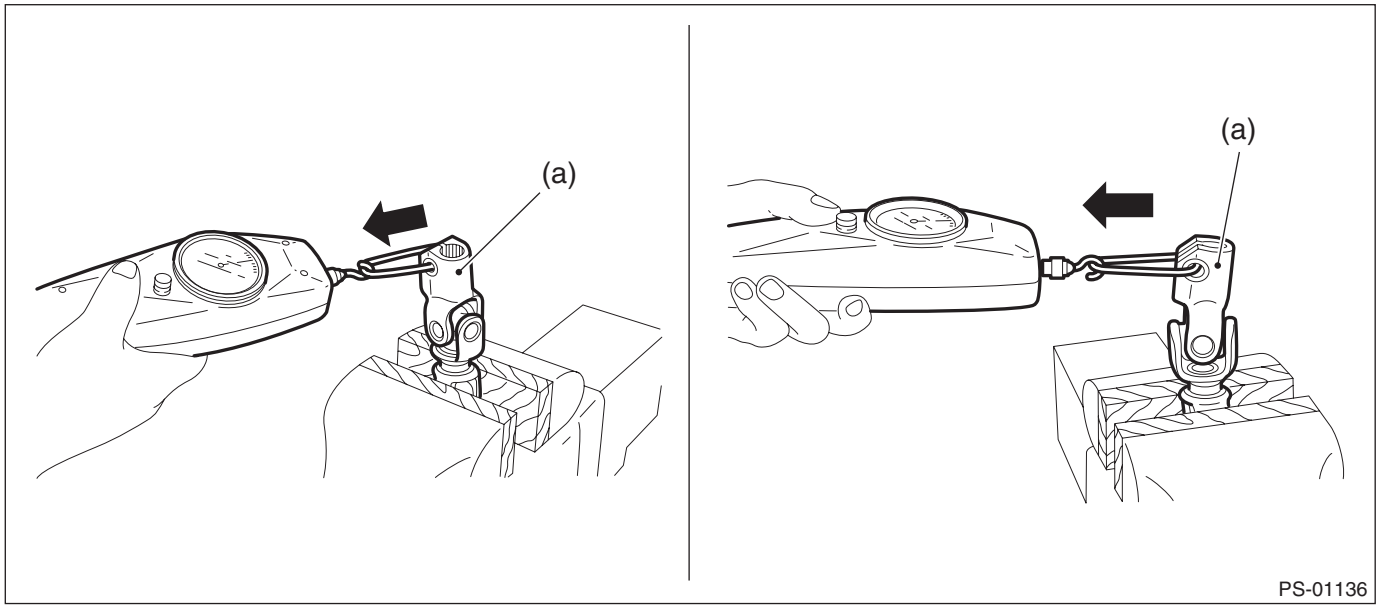

Service limit:
Maximum load: 3.8 N (0.39 kgf, 0.86 lbf) or less

(3) With the yoke (b) of steering column side facing up, measure the swing torque in two directions.

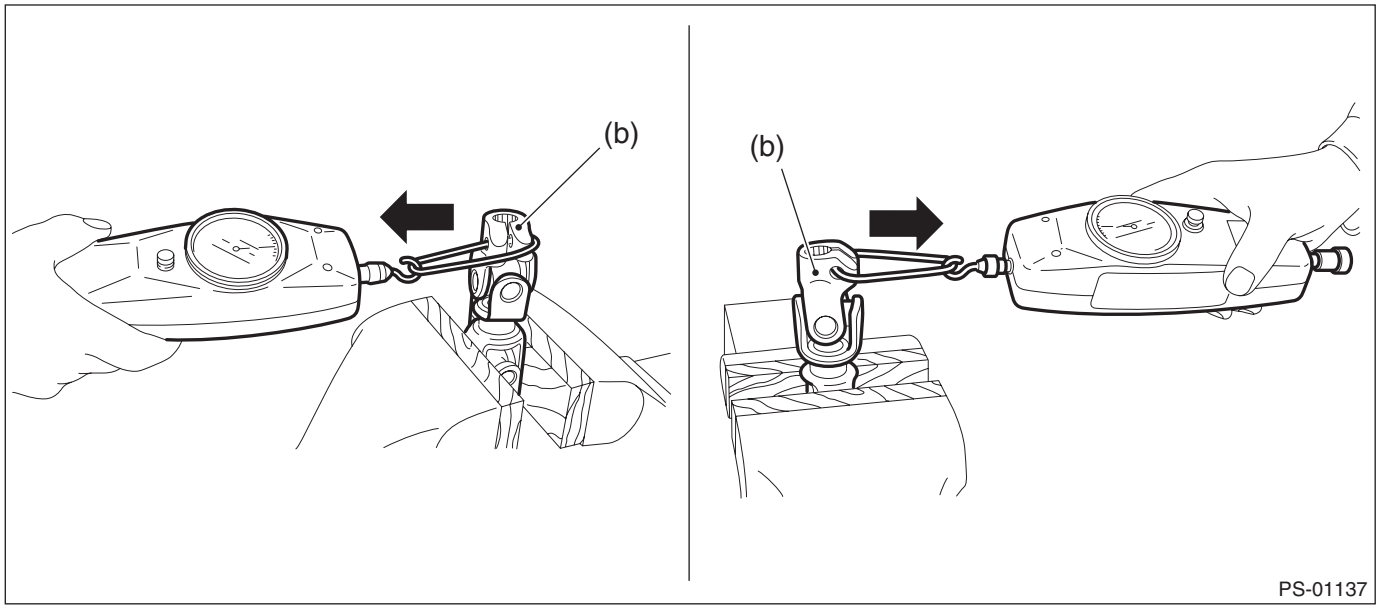

Service limit:

Maximum load: 7.3 N (0.74 kgf, 1.64 lbf) or less

(4) Replace as necessary, if it is found defective.

4. Steering Column

A: REMOVAL

1) Adjust the tilt position to the lowest position and lock the tilt lever.

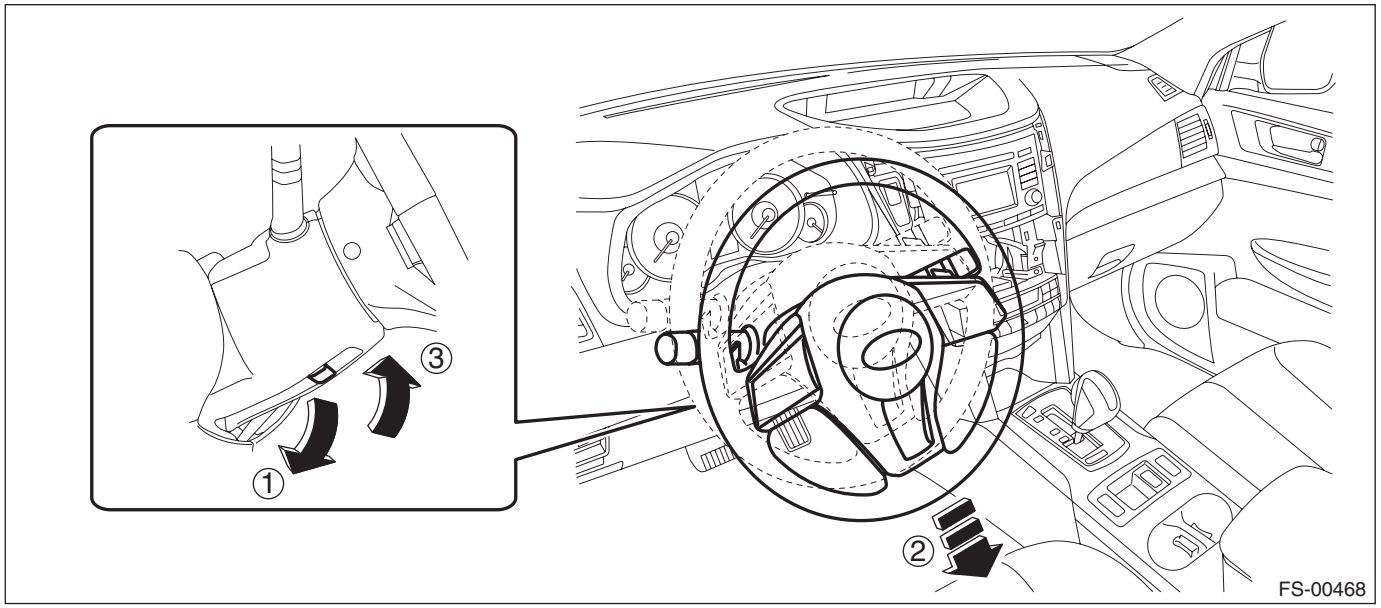

2) Remove the driver's airbag module assembly.
   (1) Push in the snap pin using a hexagon wrench or equivalent wrapped with a protective tape to disengage the locks (3 locations).

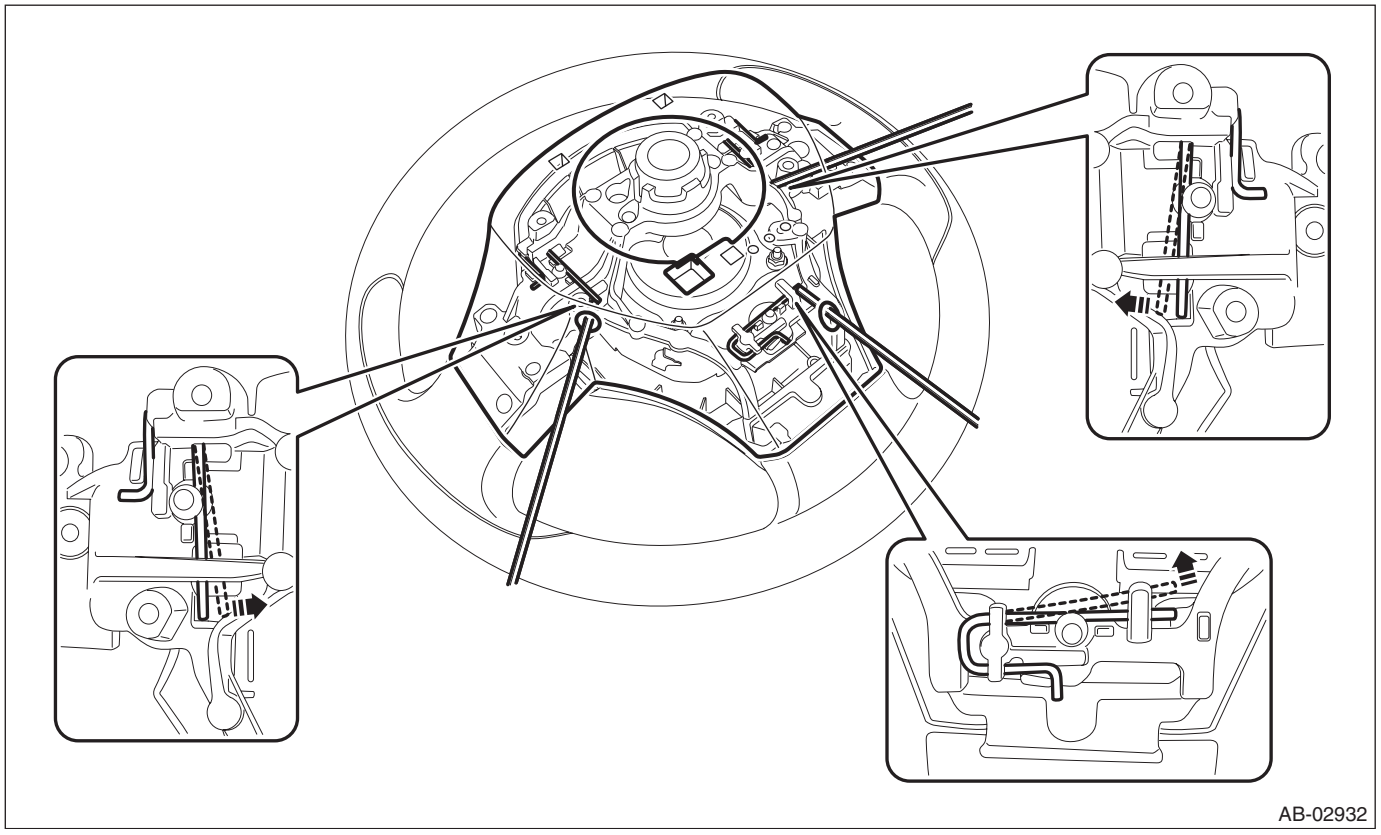

(2) Disconnect the horn harness and airbag connector and remove the airbag module assembly. <Ref. to AB-21, DRIVER'S AIRBAG MODULE, CURTAIN AIRBAG MODULE & PRETENSIONER, PROCEDURE, Airbag Connector.>

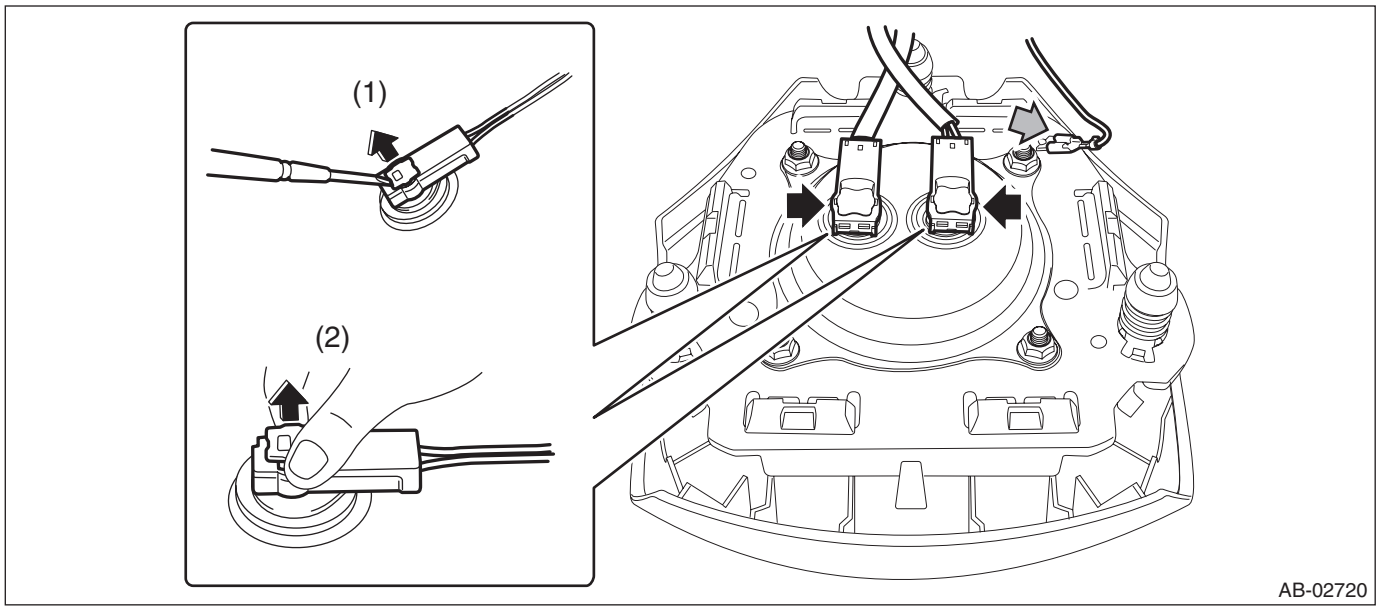

3) Remove the steering wheel.

CAUTION:
• Always use the steering wheel puller for removal to avoid deforming the steering wheel.
• If the steering wheel has been removed, make sure that the roll connector is not turned from the original position.

(1) Disconnect the connector and remove the nut.
(2) Put alignment marks and remove the steering wheel.

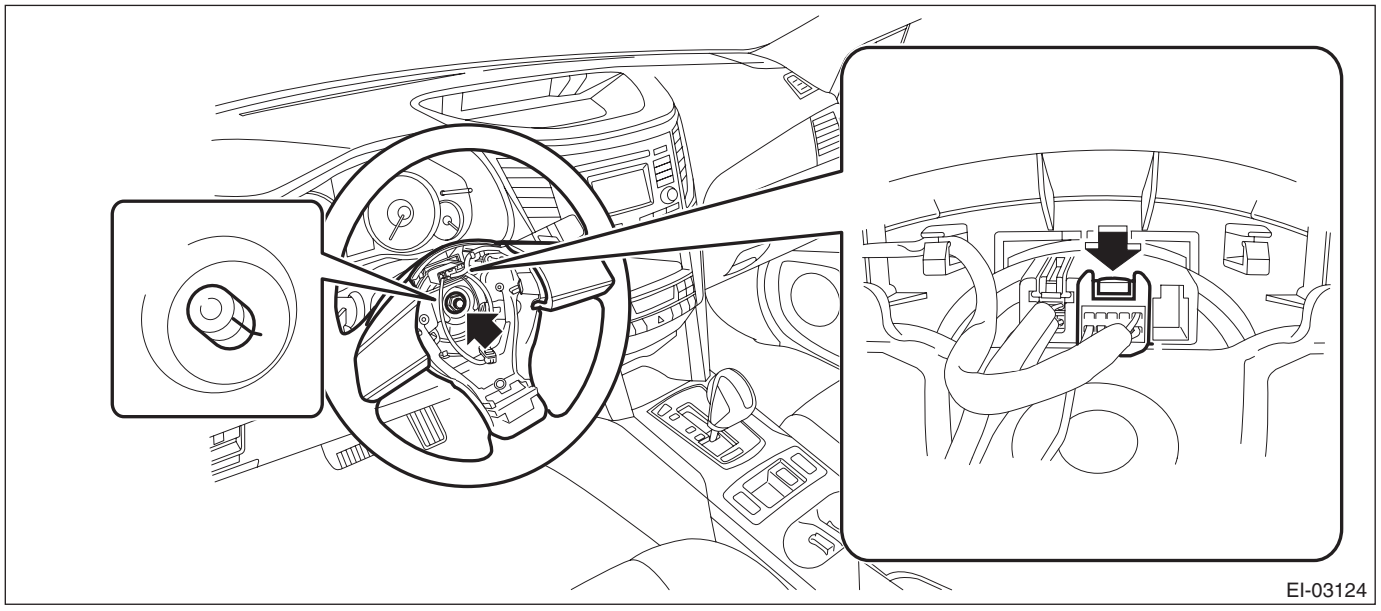

4) Remove the steering column cover.
(1) Lower the lever of the steering column.

(2) Release the claws and remove the screws, then detach the steering column lower cover.

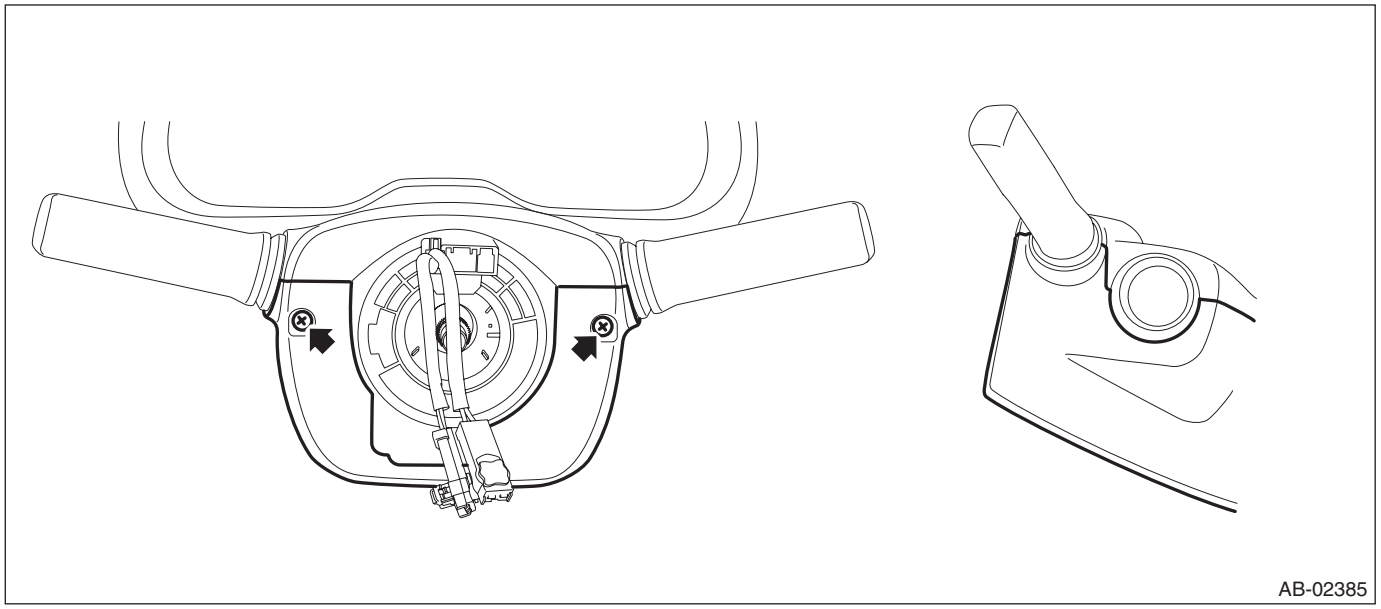

(3) Separate the steering column upper cover and steering upper cover, and remove the steering column upper cover.

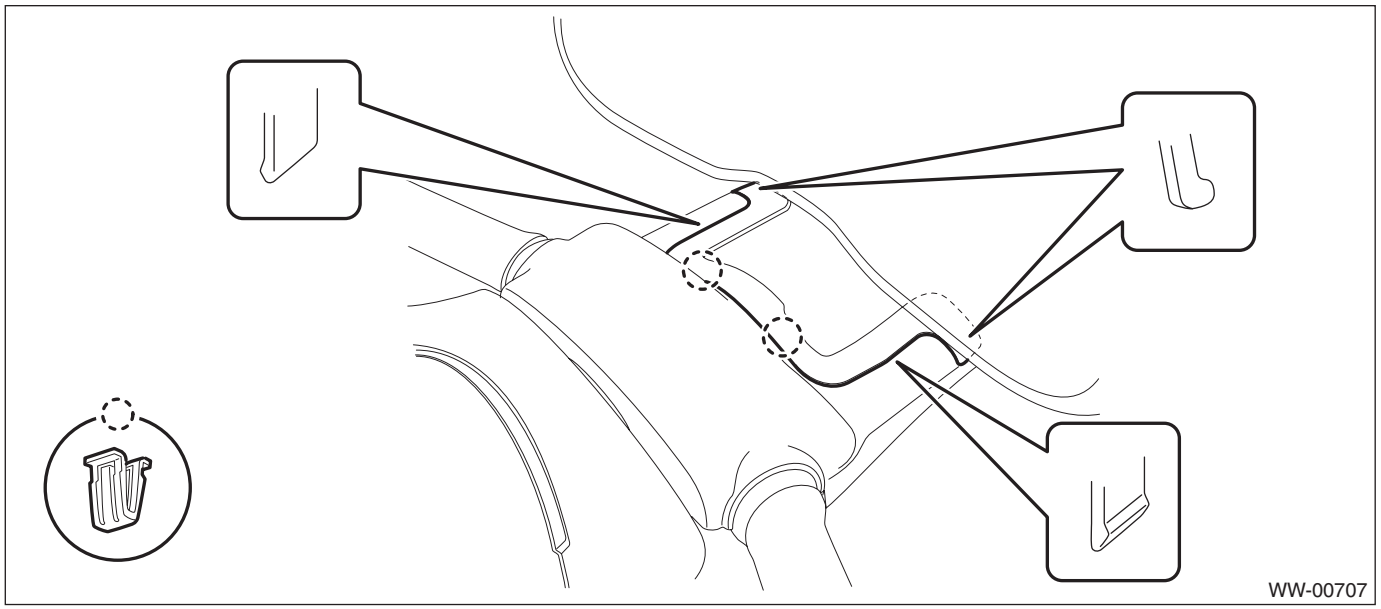

5) Remove the universal joint.

CAUTION:
To prevent damage to the universal joint and error of handling force, make sure to remove the universal joint.

(1) Place alignment marks on universal joint.

(2) Remove the universal joint bolt and remove the universal joint.

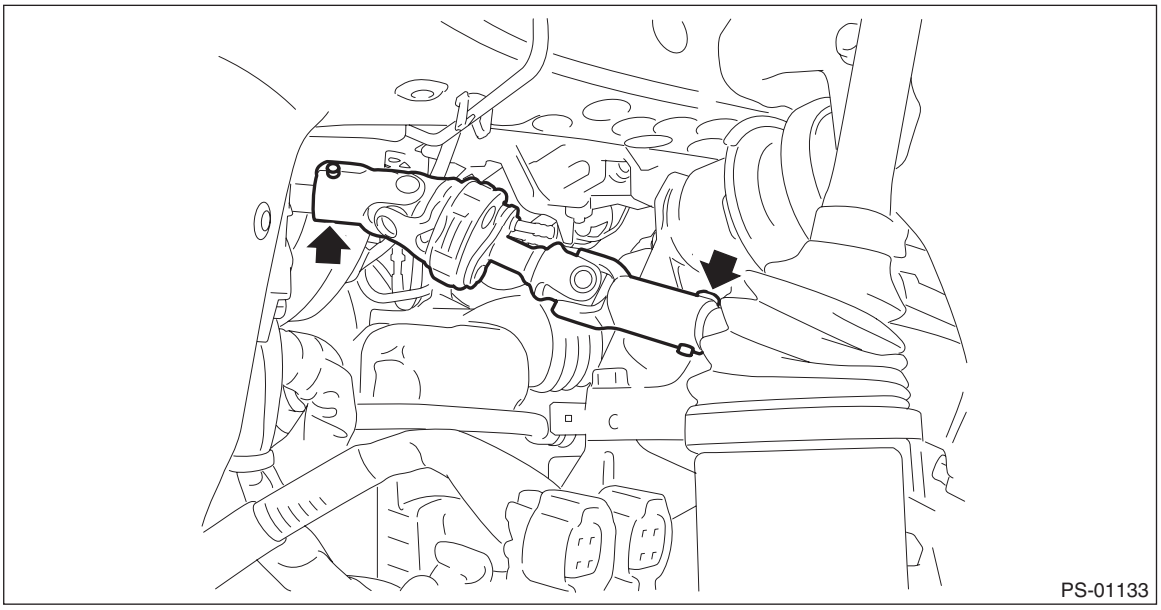

6) Remove the instrument panel lower cover.

(1) Remove the clips, and remove the instrument panel side cover LH.

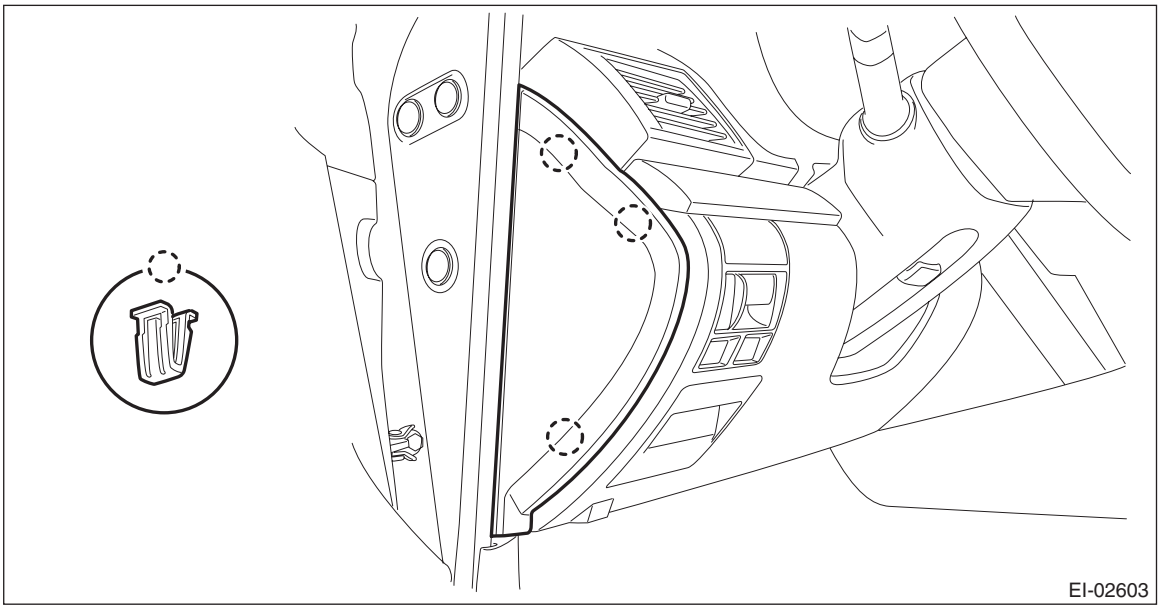

(2) Remove the clips and data link connector, and remove the instrument panel lower cover under.

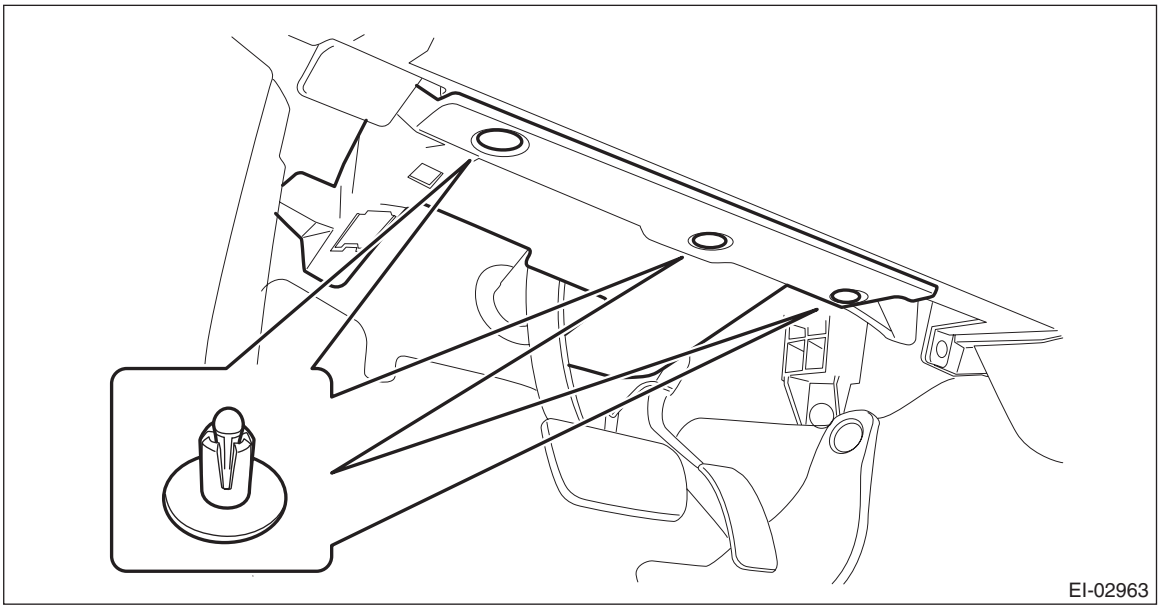

(3) Remove the screws and clips and release the claws, and remove the instrument panel lower cover while disconnecting the harness connectors.

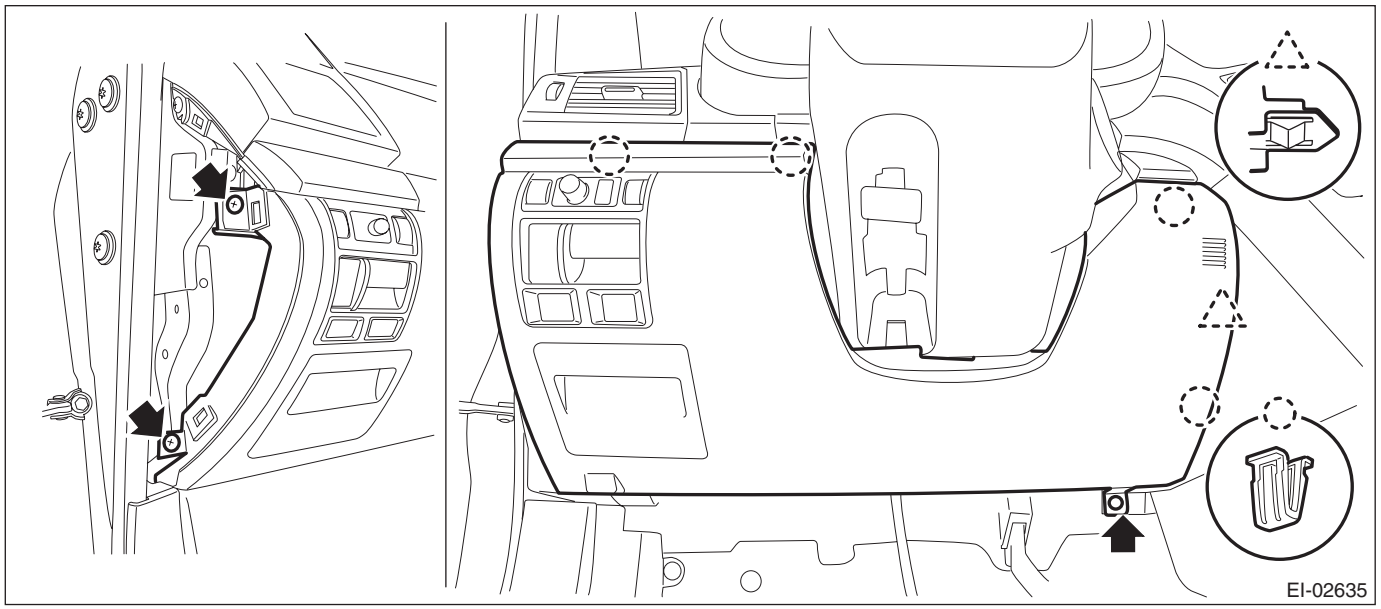

7) Remove the bolts, and remove the knee guard panel.

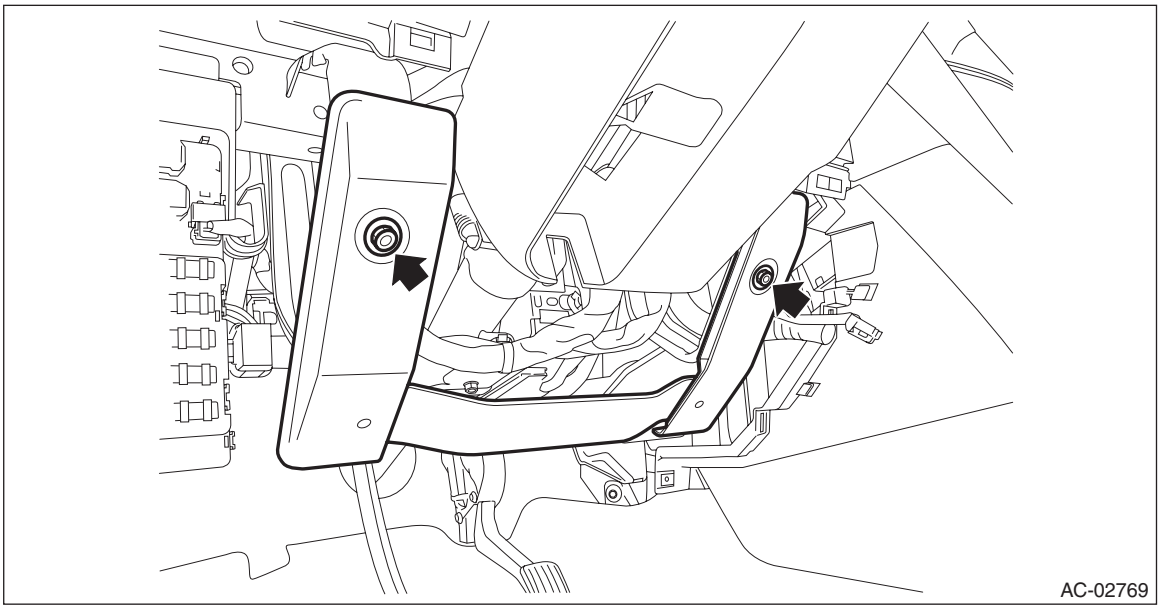

8) Remove all connectors from the steering column.
9) Remove the two bolts under instrument panel securing the steering column.

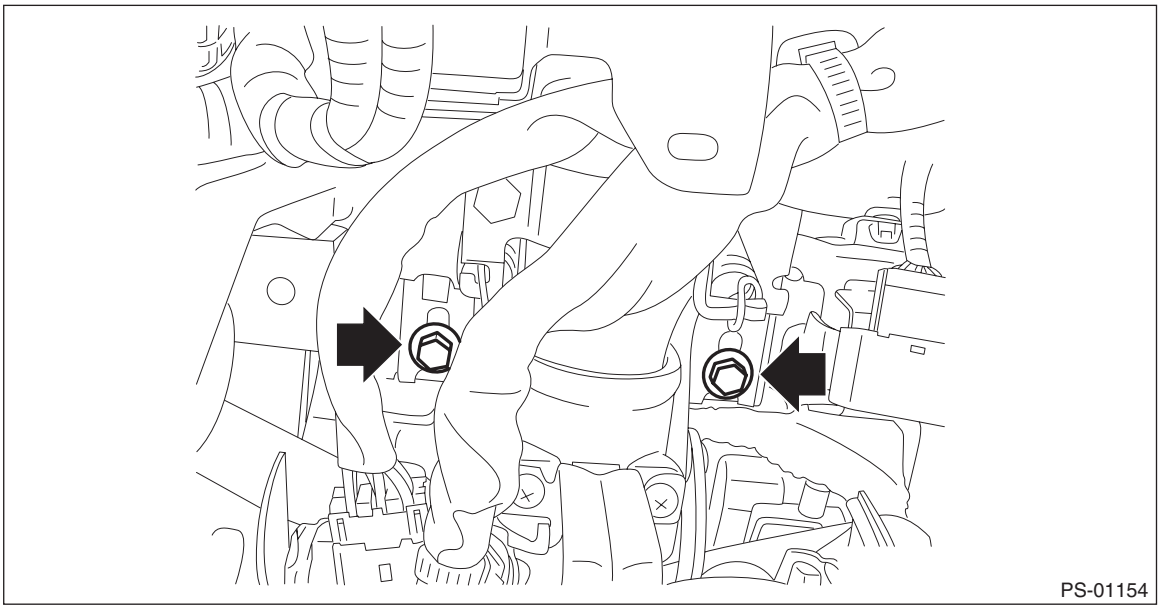

10) Pull out the steering shaft assembly from the hole on toe board.

CAUTION:
Do not loosen the tilt lever when the steering column is not secured to the vehicle.

B: INSTALLATION

1) Install the grommet to the toe board.

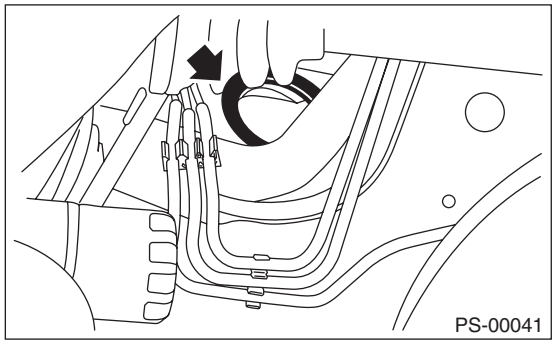

2) Insert the end of the steering shaft into the toe board grommet.
3) Tighten the steering column installation bolt located under the instrument panel with the tilt lever fixed.

Tightening torque:
20 N·m (2.04 kgf-m, 14.8 ft-lb)

4) Connect all the connectors under the instrument panel.
5) Connect the airbag system connector.
6) Install the instrument panel lower cover.
7) Install the universal joint. <Ref. to PS-22, INSTALLATION, Universal Joint.>

CAUTION:
• Always install the universal joint after installing the steering column to avoid damage to the universal joint.
• Be sure to follow the tightening order and tightening torque of universal joint to avoid the steering effort from becoming heavy.

8) Align the center position of the roll connector. <Ref. to AB-101, ADJUSTMENT, Roll Connector.>
9) Install the steering wheel. <Ref. to PS-18, INSTALLATION, Steering Wheel.>

C: DISASSEMBLY

1) Remove the steering column cover.
   (1) Lower the lever of the steering column.
   (2) Release the claws and remove the screws, then detach the steering column lower cover.

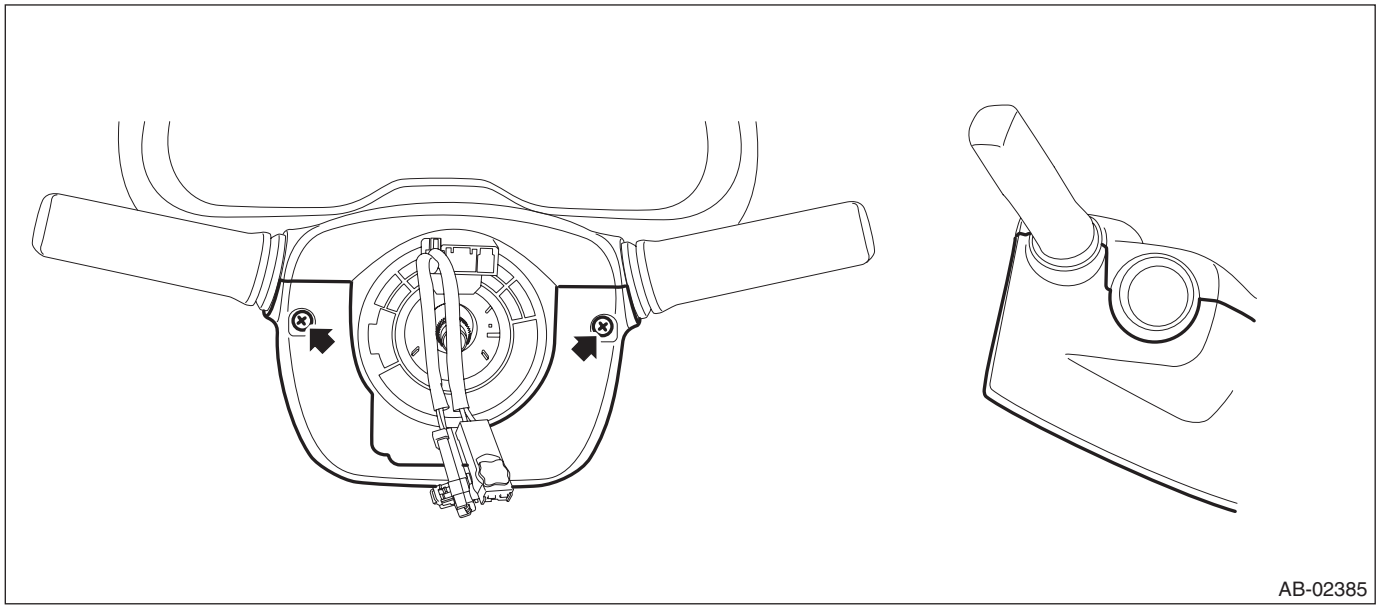

(3) Separate the steering column upper cover and steering upper cover, and remove the steering column upper cover.

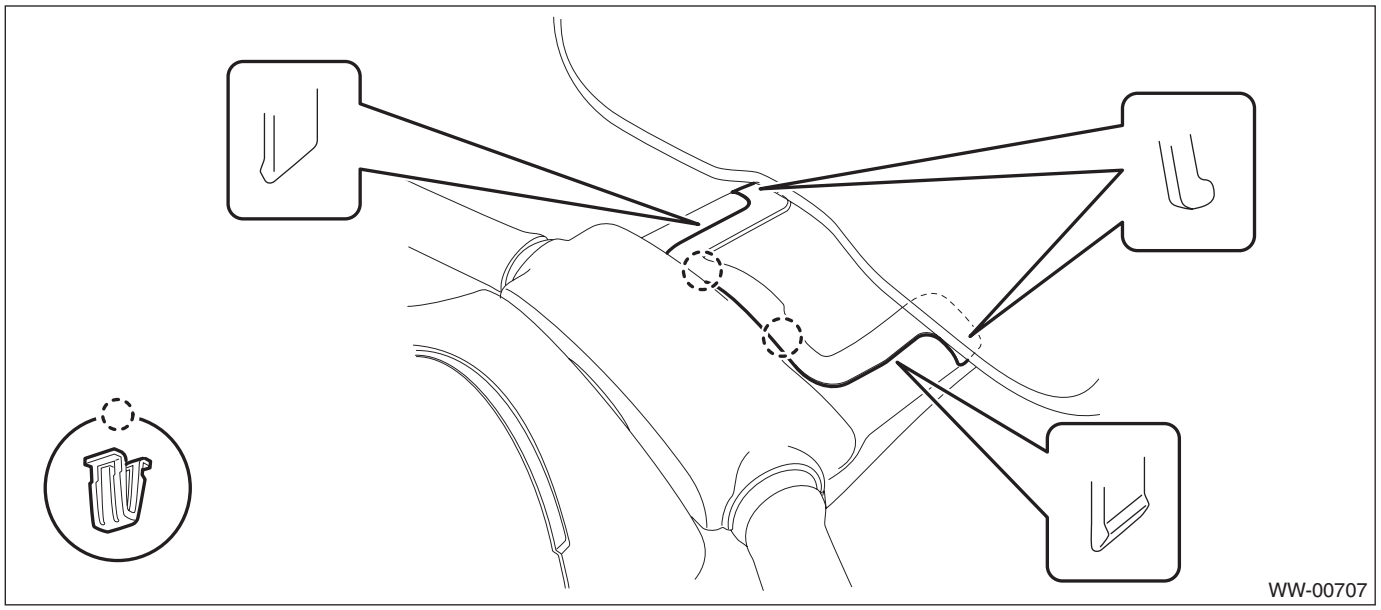

2) Remove the screw and remove the combination switch.

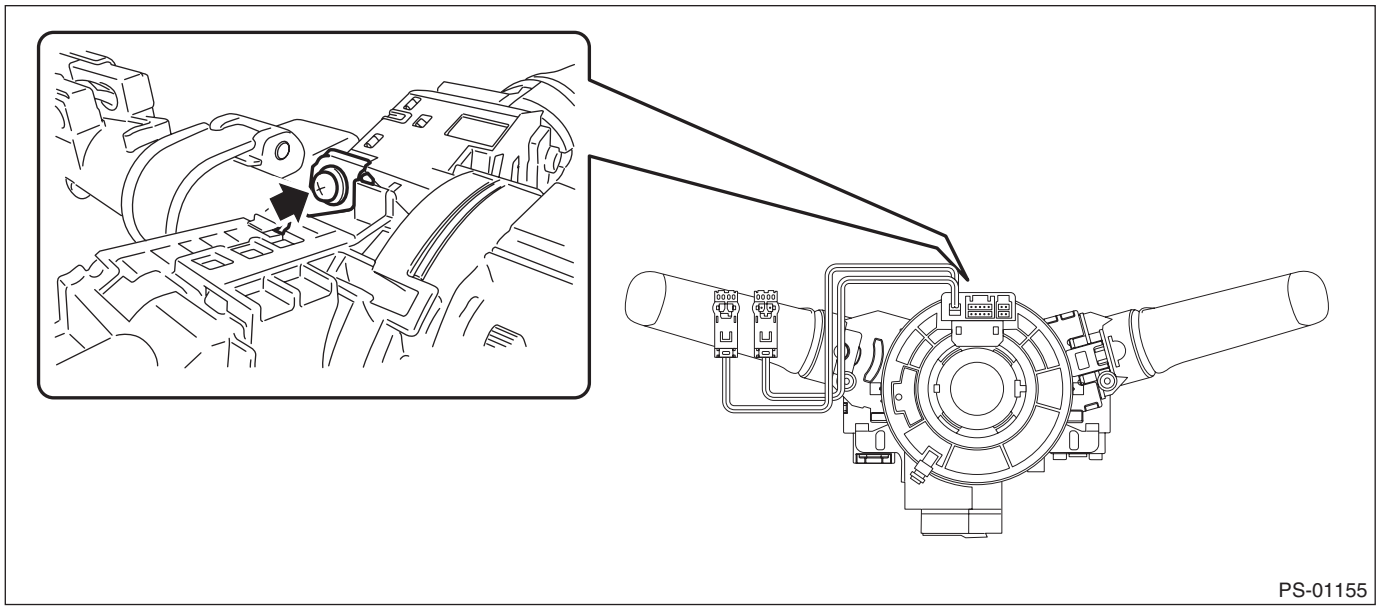

D: ASSEMBLY

Assemble each part in the reverse order of disassembly.

Tightening torque:
Combination switch: 3.5 N·m (0.36 kgf-m, 2.6 ft-lb)
Column cover: 1.2 N·m (0.12 kgf-m, 0.9 ft-lb)

E: INSPECTION

1. BASIC INSPECTION

Measure the overall length of steering column. If not within specification, replace it.

Standard: Overall length L

Tilt and telescopic column (measure while minimized):
$816.9^{+1.5}_{-1.5}$ mm ($32.2^{+0.059}_{-0.059}$ in)

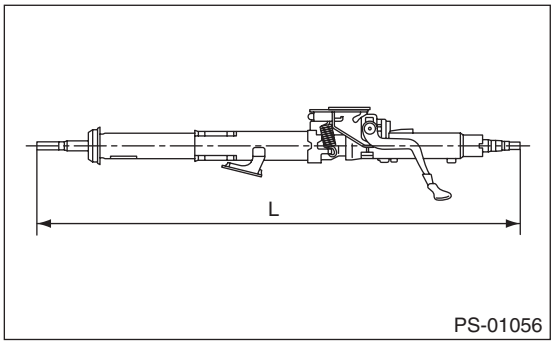

2. INSPECTION OF AIRBAG SYSTEM

Refer to “Airbag System” for airbag inspection procedure. <Ref. to AB-36, INSTALLATION, Driver’s Airbag Module.>

5. Steering Gearbox

A: REMOVAL

1) Remove the cradle. <Ref. to FS-20, REMOVAL, Cradle.>
2) Remove the bolts, and remove left and right main mounting brackets.

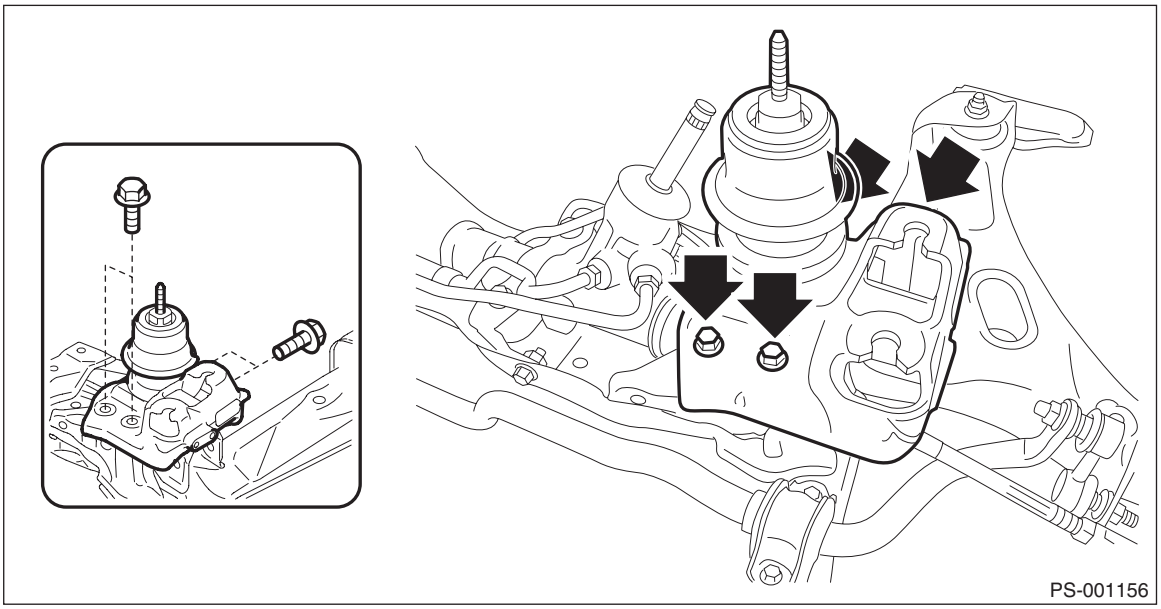

3) Remove the bolts and remove the steering gearbox.

CAUTION:
Be careful not to damage the steering boot.

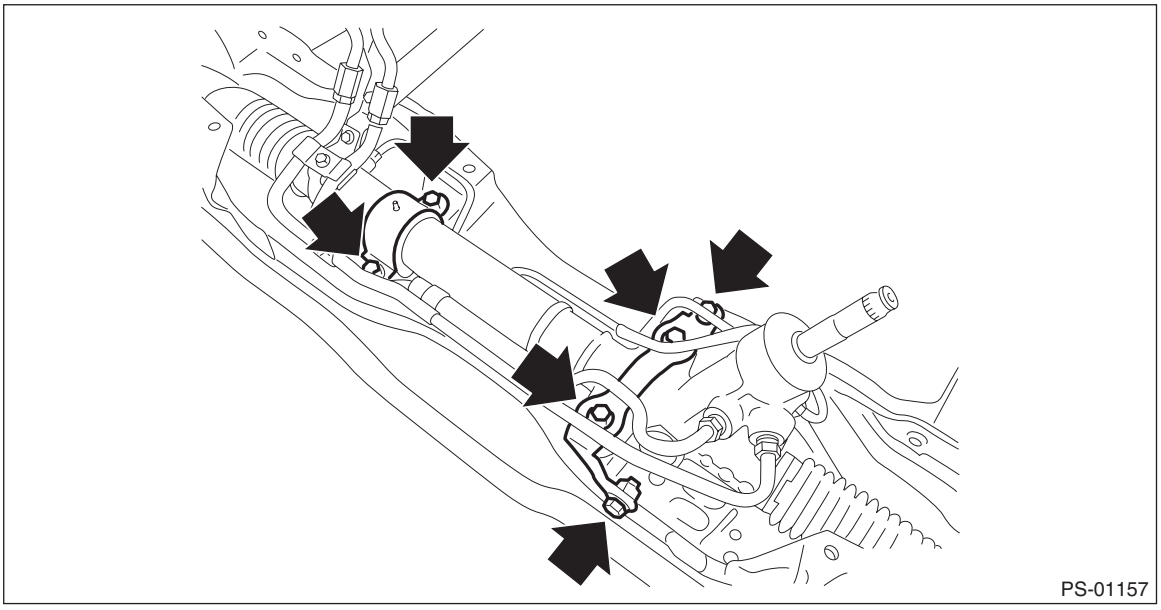

B: INSTALLATION

1) Before installation, check the steering gearbox. <Ref. to PS-56, INSPECTION, Steering Gearbox.>
2) Install each part in the reverse order of removal.

Tightening torque:
Steering gearbox parts: <Ref. to PS-4, COMPONENT, General Description.>
Front suspension parts: <Ref. to FS-3, COMPONENT, General Description.>
3) Inspect the wheel alignment and adjust if necessary.

C: DISASSEMBLY

1) Disconnect the four pipes from steering body and control valve housing.

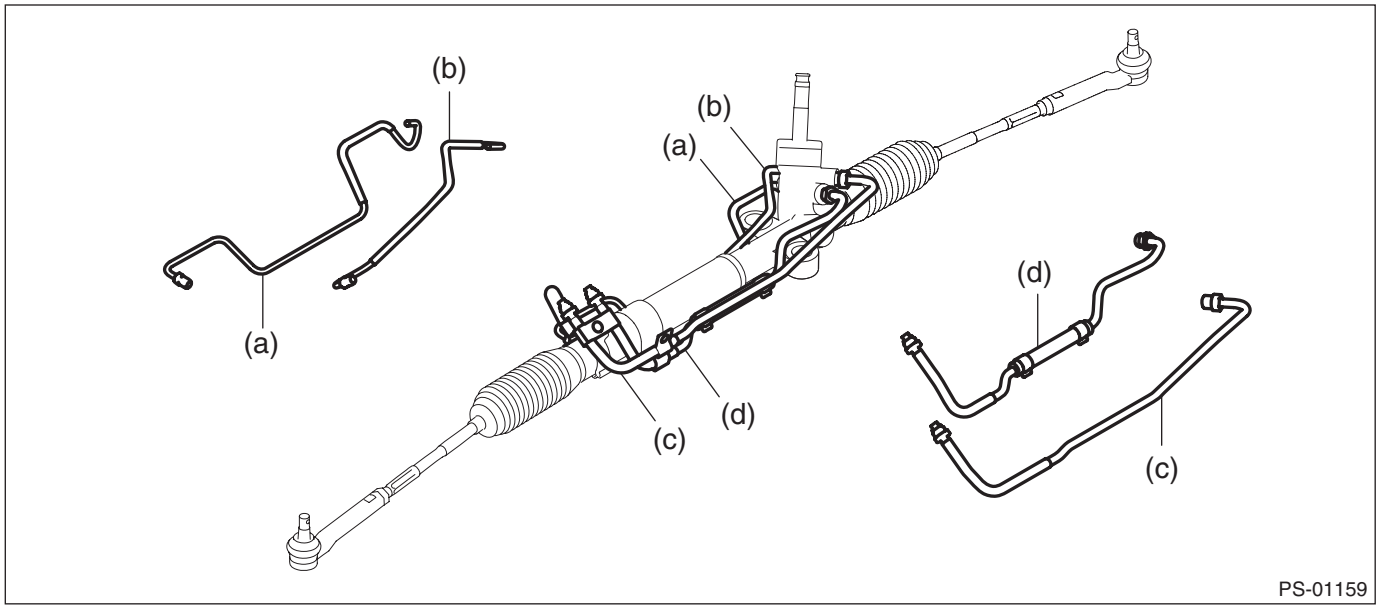

2) Secure the gearbox removed from vehicle in a vise using ST.

CAUTION:
Secure the gearbox assembly in a vise using ST as shown. Do not secure the gearbox without this ST.

PREPARATION TOOL:
ST1: STAND (926200000)
ST2: BOSS D (34199AG000)

(1) Replace BOSS of STAND (ST1) with BOSS D (ST2).
(2) Using the clamp (a) removed from vehicle body, attach the gearbox assembly to ST.

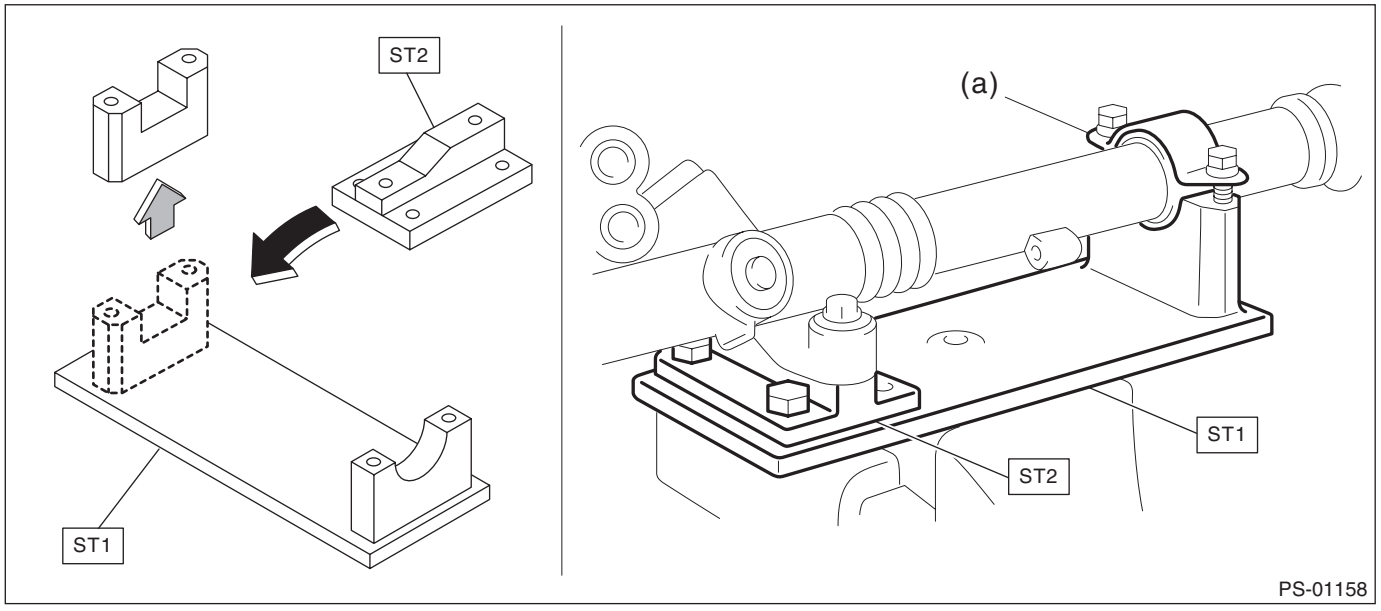

3) Remove the left and right boots from the gearbox.
(1) Remove the tie-rod end and lock nut (a) from gearbox.
(2) Remove the clip (b) located outside the boot using the pliers, and then slide the boot to the tie-rod end side.

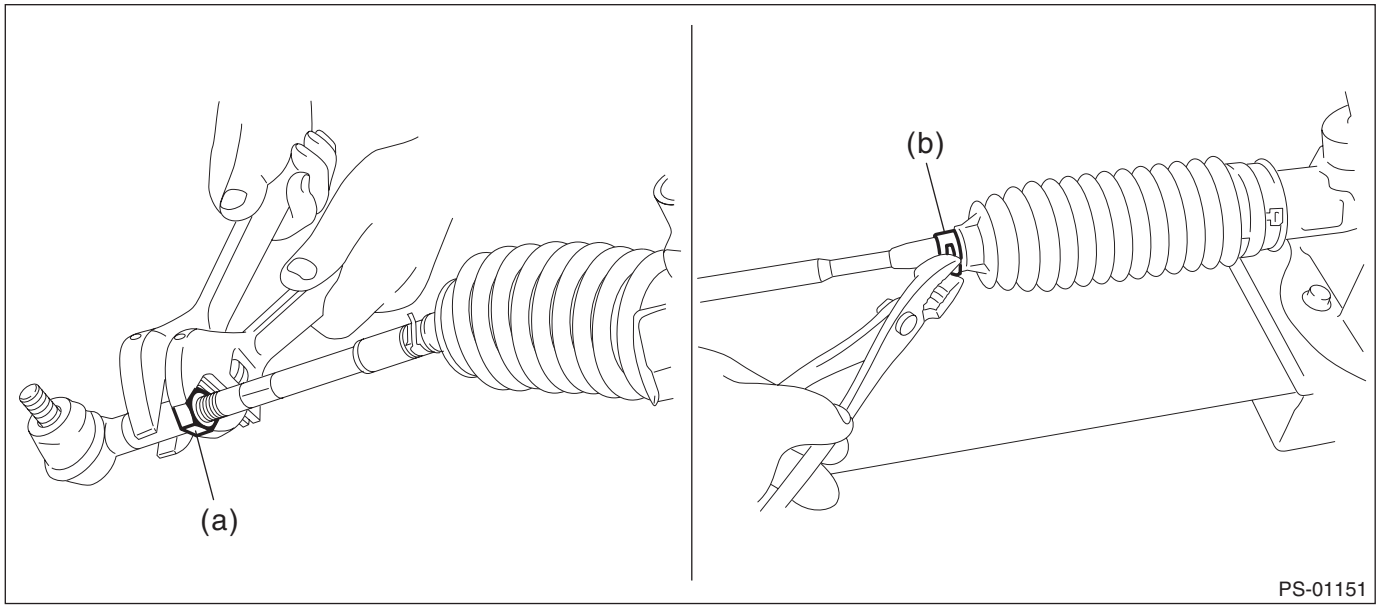

(3) Using a flat tip screwdriver, remove the band from boot.

NOTE:
Replace the boot if there is damage, cracks or deterioration.

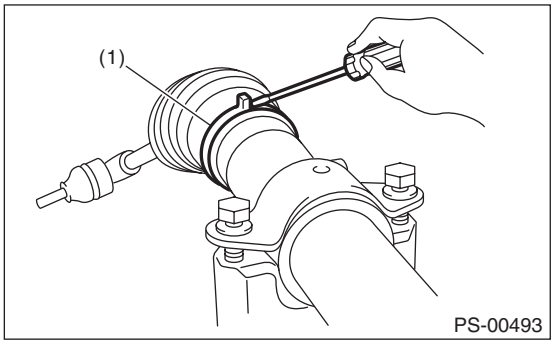

(1) Band

4) Remove the left and right tie-rods.
(1) Using the ST, loosen the lock nut.

PREPARATION TOOL:
ST: SPECIAL TOOL CPS (34199AJ060)

(2) Tighten the adjusting screw (a) until it can no longer be tightened.

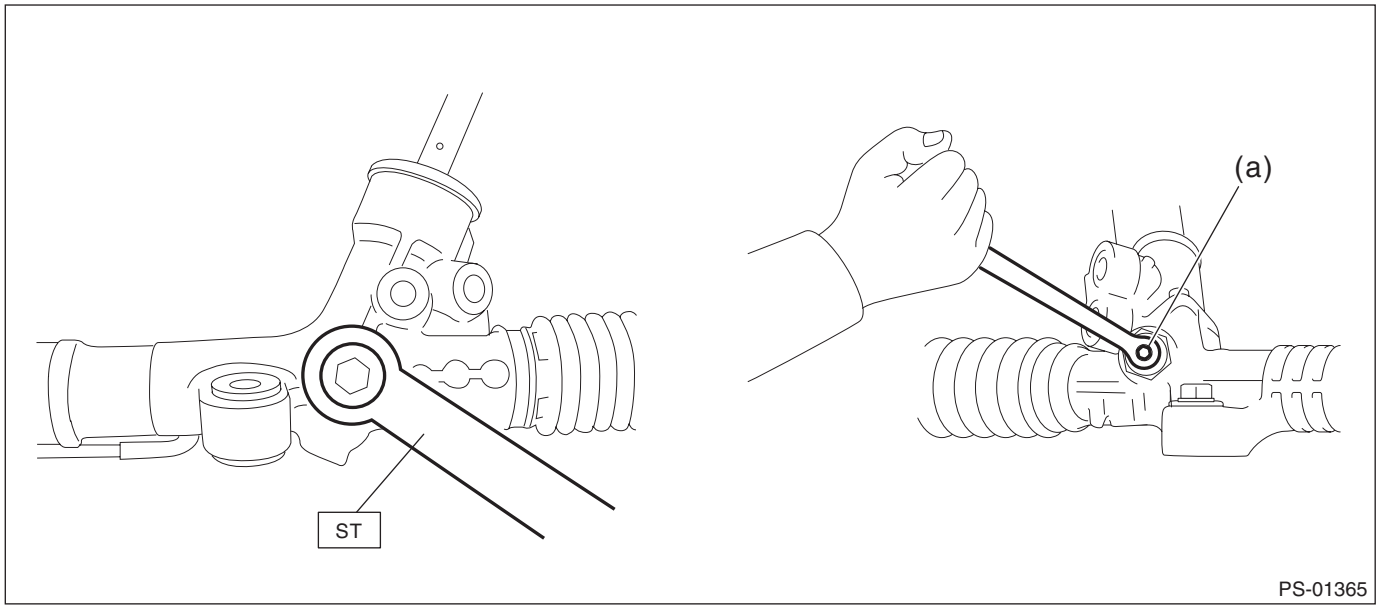

(3) Remove the tie-rod.

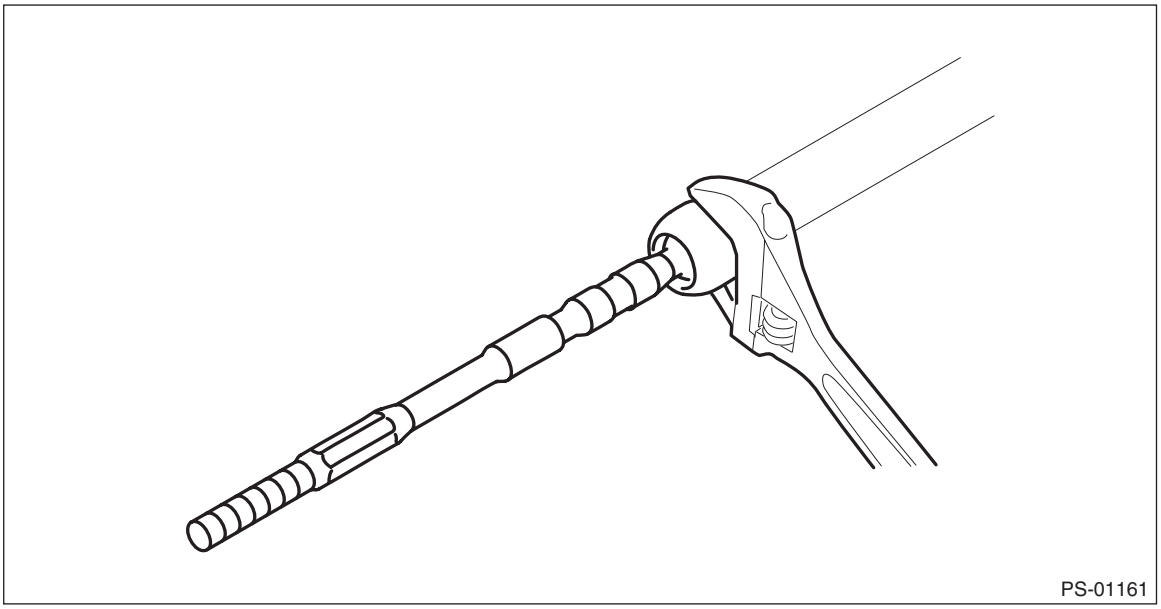

5) Remove the control valve.
(1) Loosen the adjusting screw (a), and remove the spring (b) and sleeve (c).

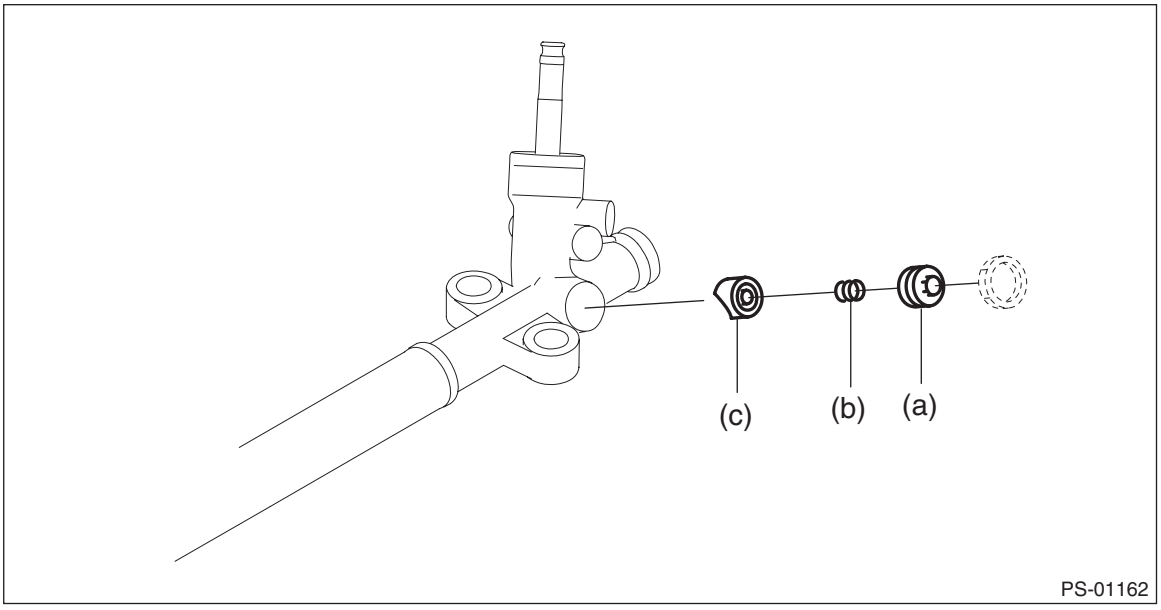

(2) Clean any dirt adhered to the input shaft.
(3) Remove the dust cover (a).

CAUTION:
• Pay attention not to scratch the housing or input shaft and not to allow foreign matter to enter gearbox interior.
• Roll a vinyl tape around the input shaft spline to avoid scratching the dust cover.

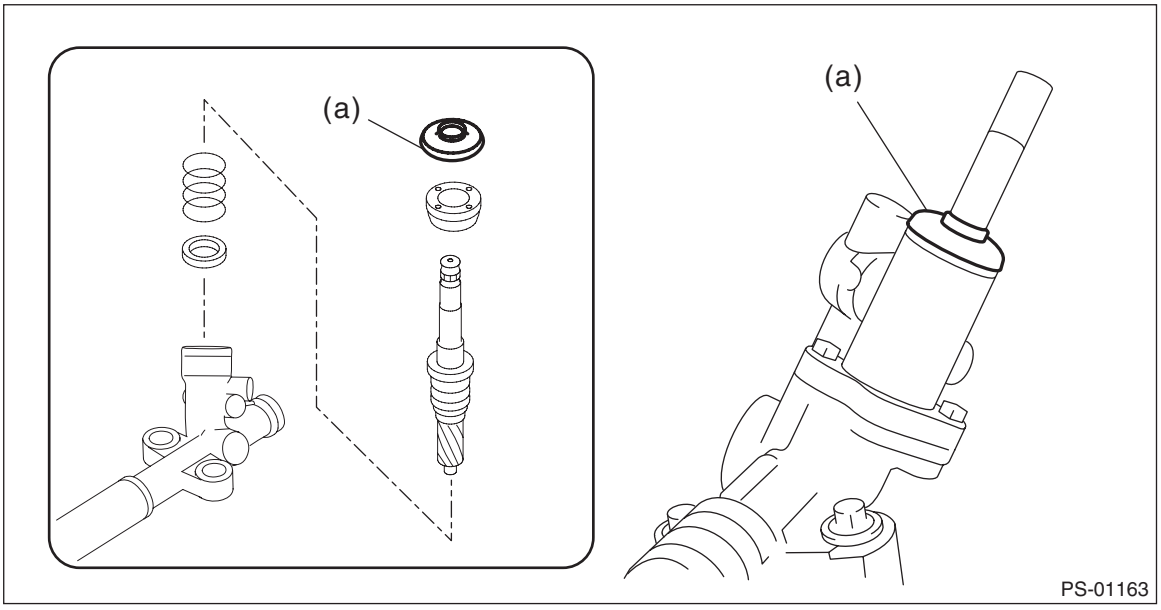

(4) Align the ST pin with plug hole to install, and then rotate the ST counterclockwise to remove plug (b).

PREPARATION TOOL:
ST: PLUG-WRENCH (34199AE090)

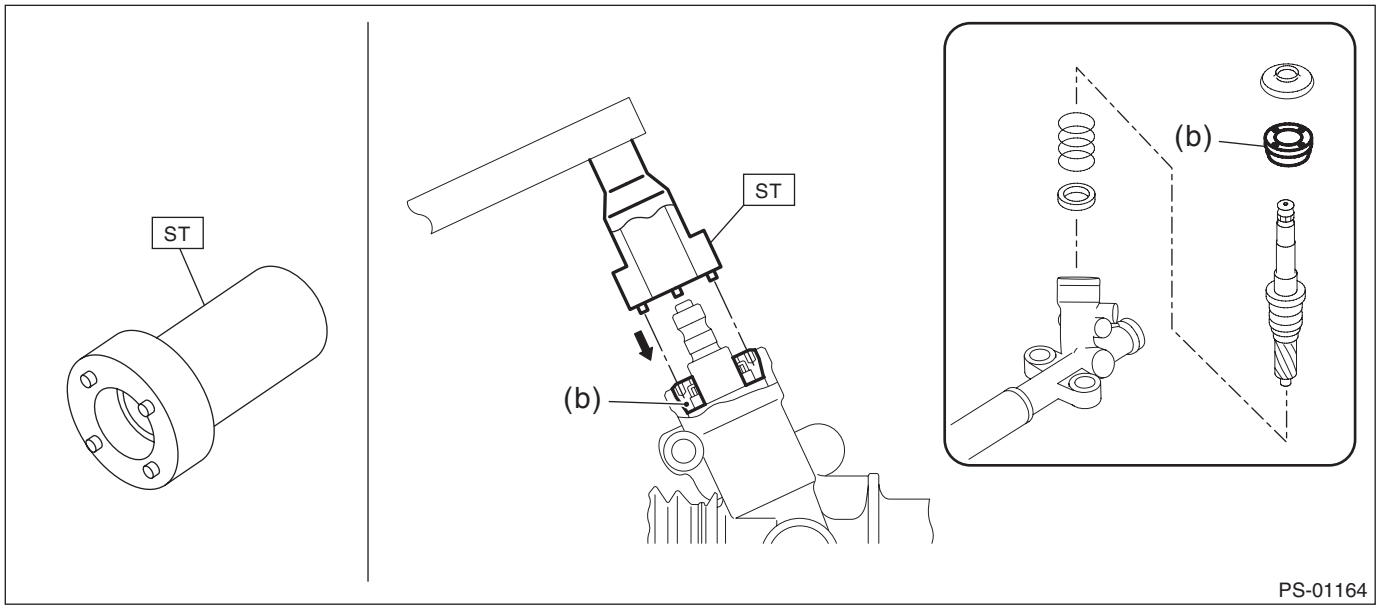

(5) Remove the valve assembly (c).

CAUTION:
Be careful not to scratch the seal rings (d) and inner surface of the valve housing.

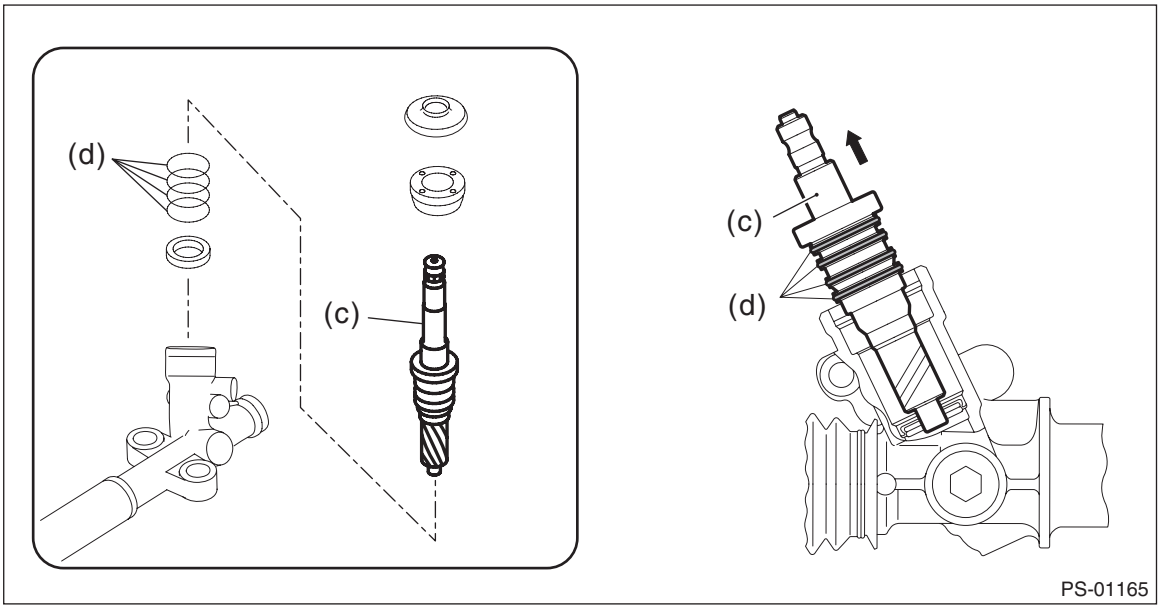

6) Remove the rack.
(1) Remove the holder (a).

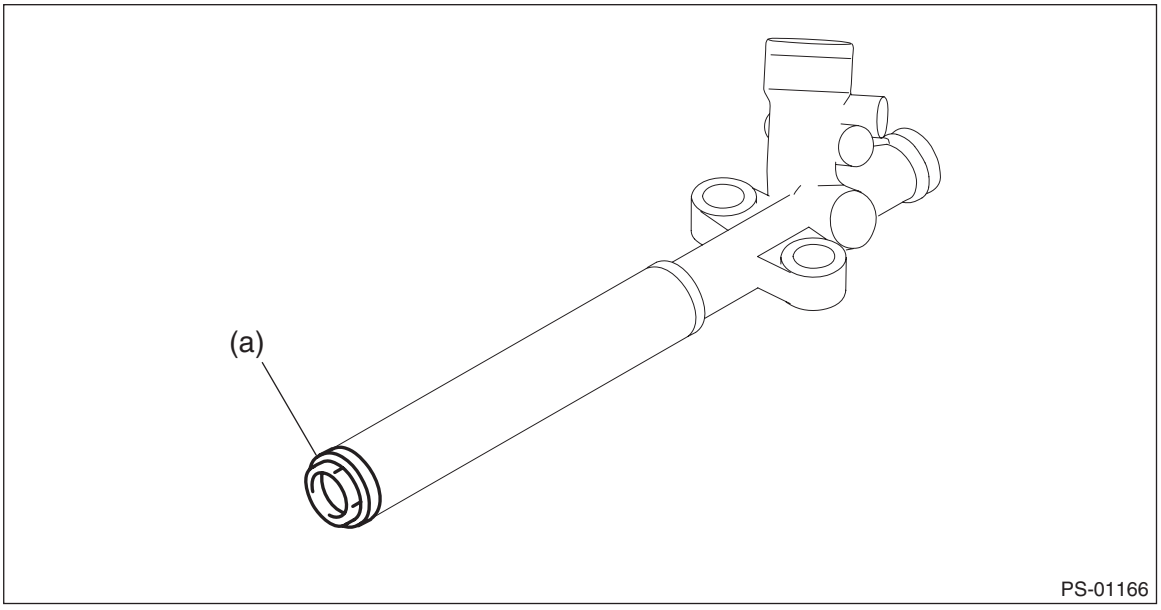

(2) Attach the ST1 to the pinion housing side of the rack.
(3) Push the rack so that the rack piston (b) pushes out the outer side oil seal (a) to be removed.

PREPARATION TOOL:
ST1: INSTALLER & REMOVER (34199FE000)

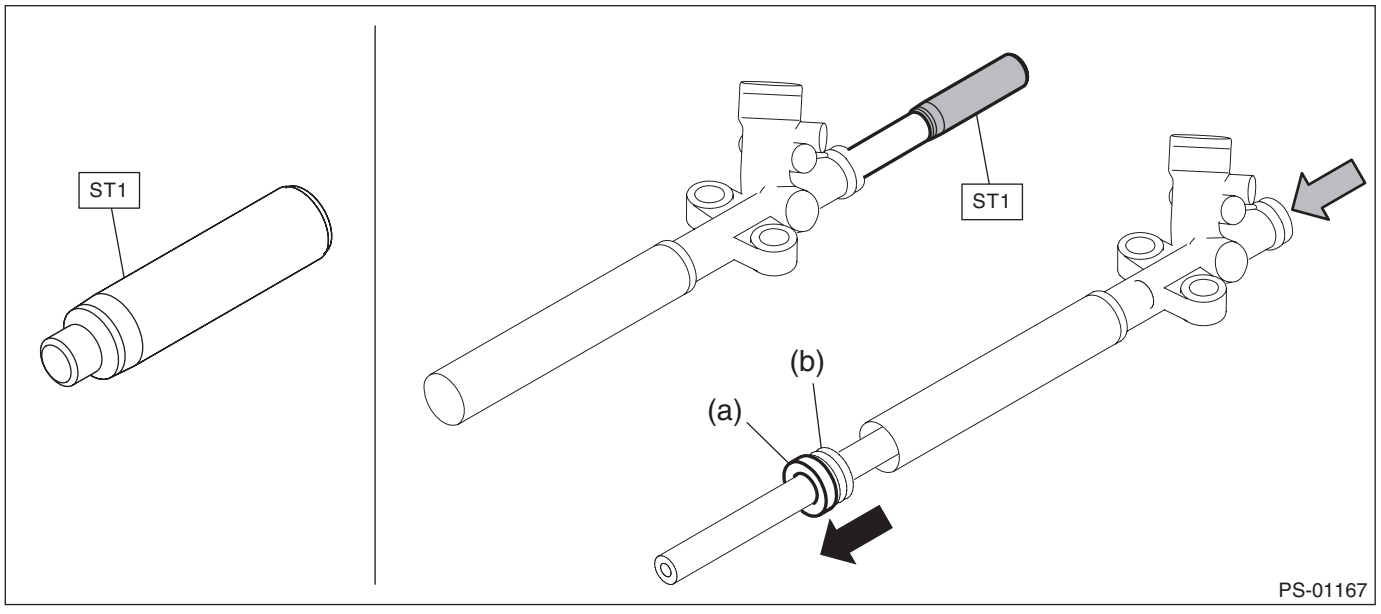

NOTE:
Block the pipe connection of steering body to prevent fluid from flowing out.

(4) Insert the ST2 from the valve side of the rack, and push out the back-up ring (c) and oil seal (d).

PREPARATION TOOL:
ST2: REMOVER (34199FE010)

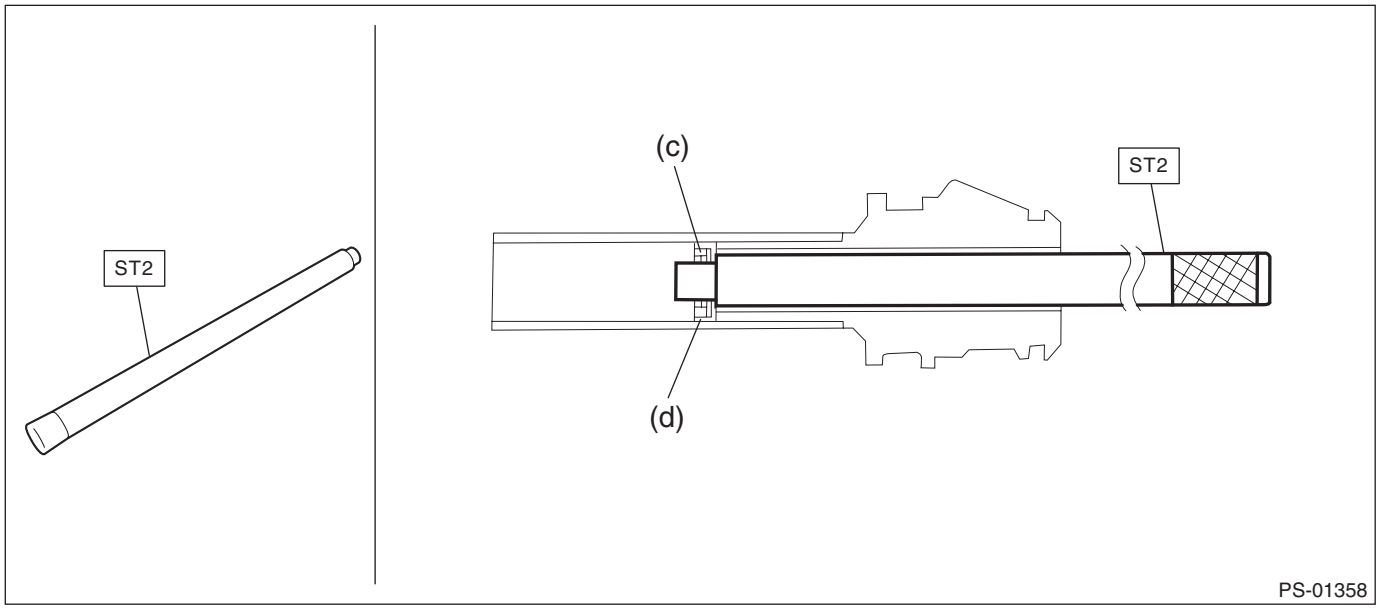

NOTE:
Block the pipe connection of steering body to prevent fluid from flowing out.

7) Repair the crimped portion of cylinder.

(1) Using ST, repair the crimped portion of cylinder (a).

PREPARATION TOOL:
ST1: PUNCH (34099FA080)
ST2: BASE (34199FE020)

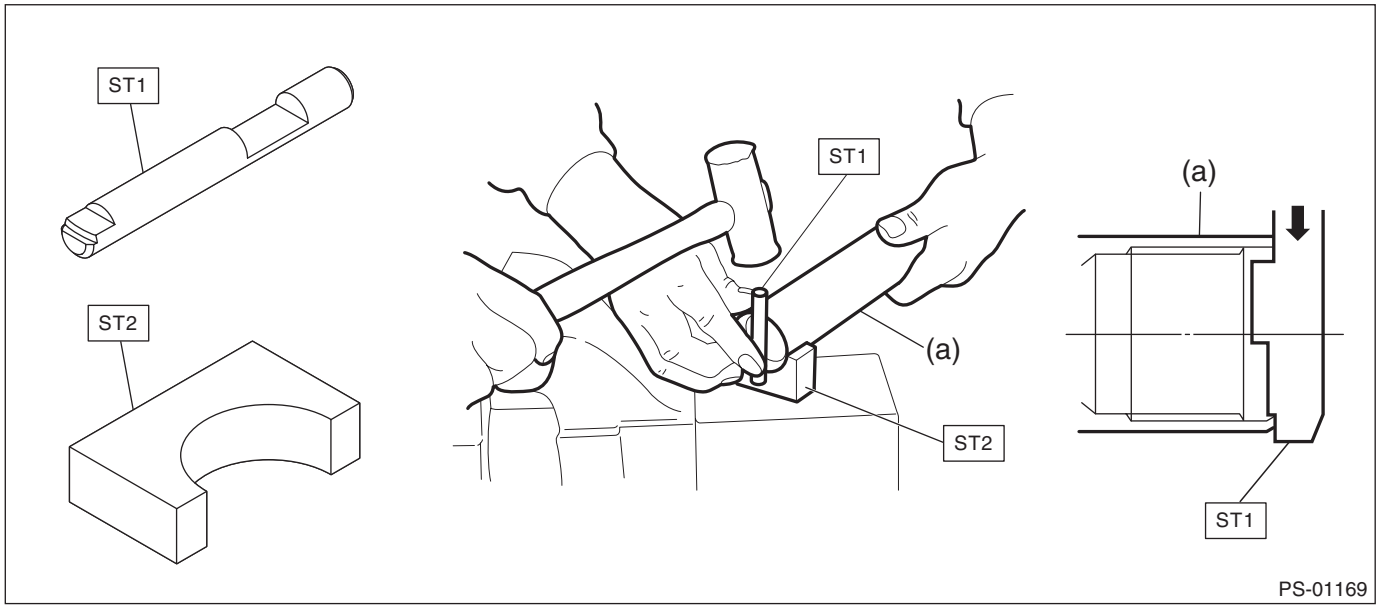

(2) If the cylinder edge is deformed in a convex shape, repair using an oil stone.

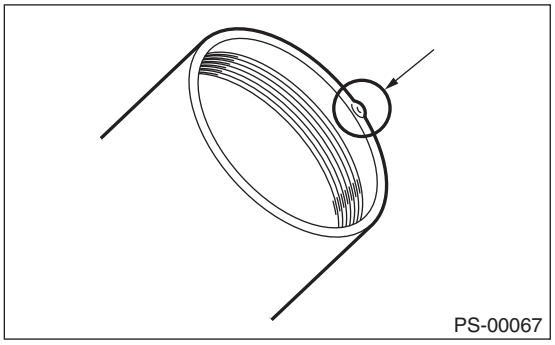

8) Using the ST, press the oil seal (a) out of plug.

CAUTION:
Do not apply force on the plug edge surface.

PREPARATION TOOL:
ST: OIL SEAL PLUG REMOVER (34199AE100)

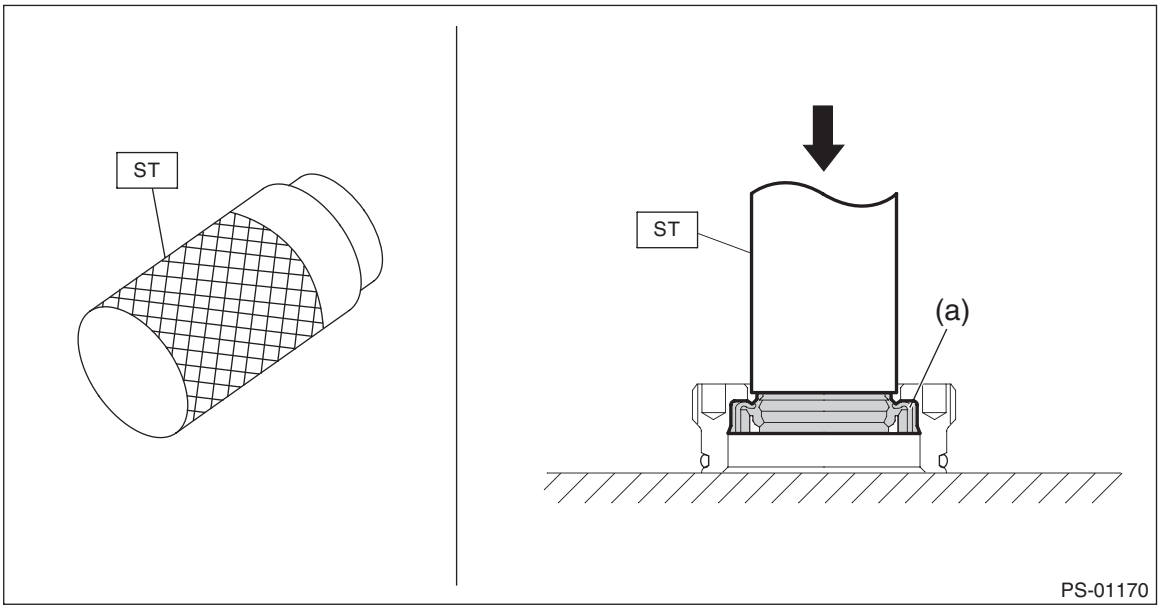

9) Remove the oil seal from the valve housing.
(1) Set the ST at a size shown in the figure.

PREPARATION TOOL:
ST: GEARBOX OIL SEAL REMOVER (34199AE120)

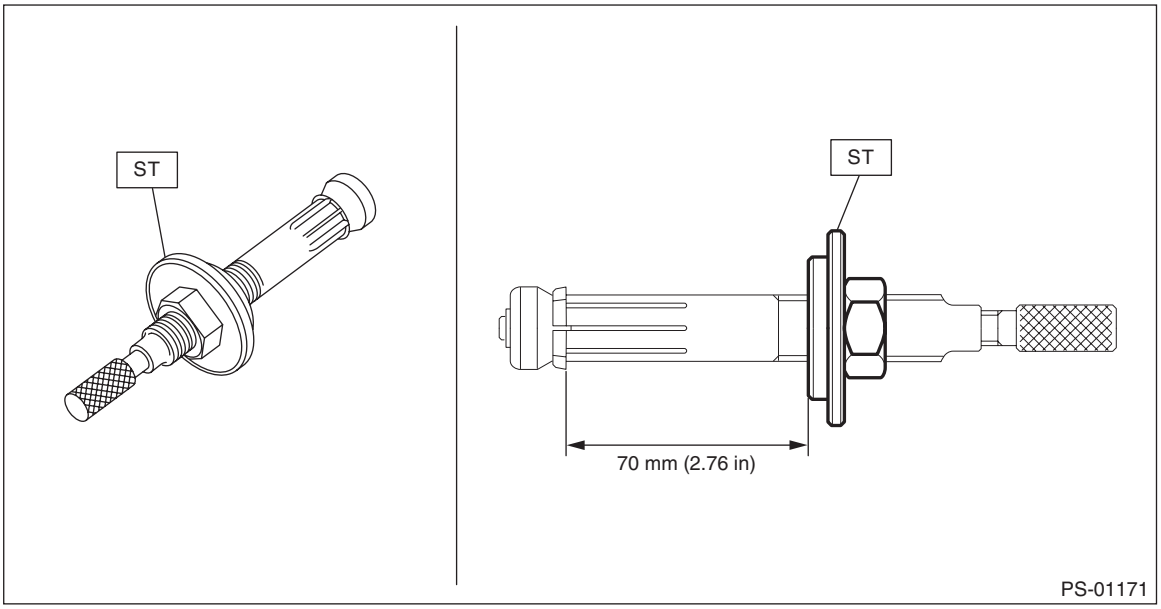

(2) Set the stopper (b) to gearbox, then insert the tip of the ST to the gearbox.

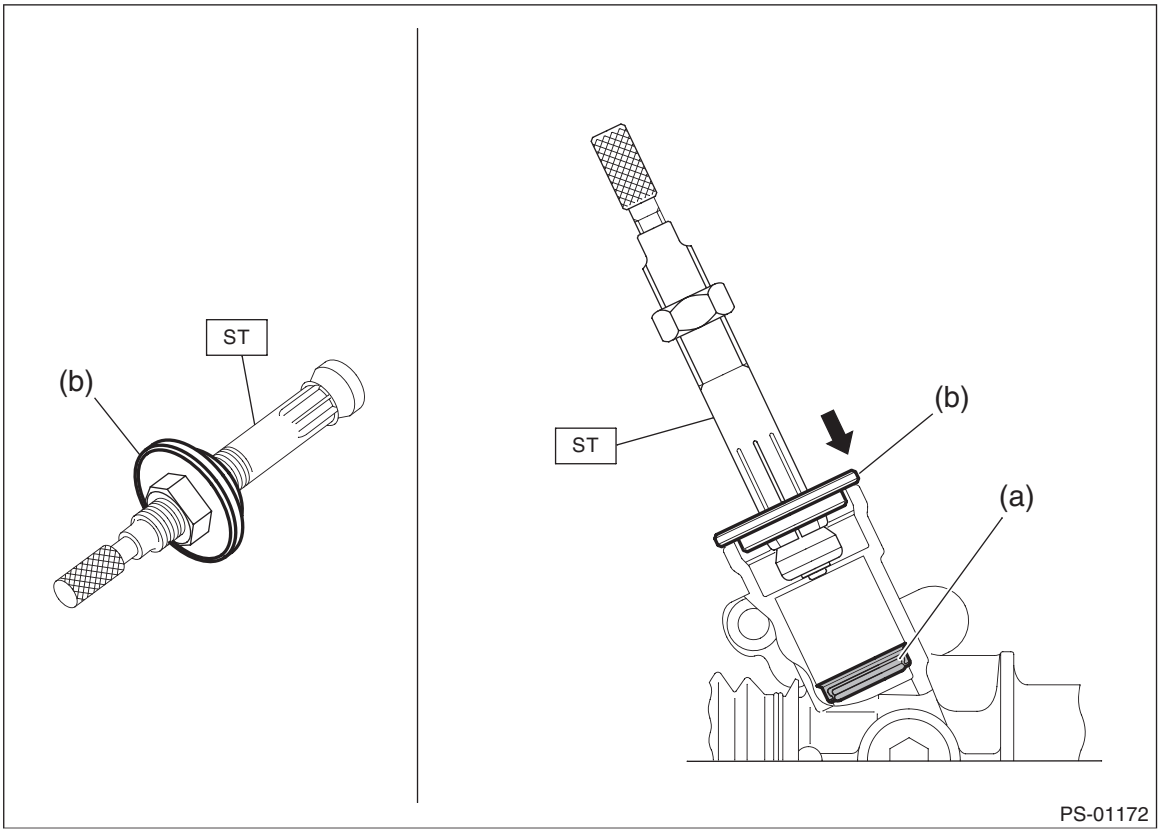

(3) By fixing section (A), press-in the rod (c) while rotating it and catch the oil seal (a).
(4) While fixing section (A), pull out the oil seal (a) by rotating nut (d).

CAUTION:
Take care not to scratch the gearbox inner surface.

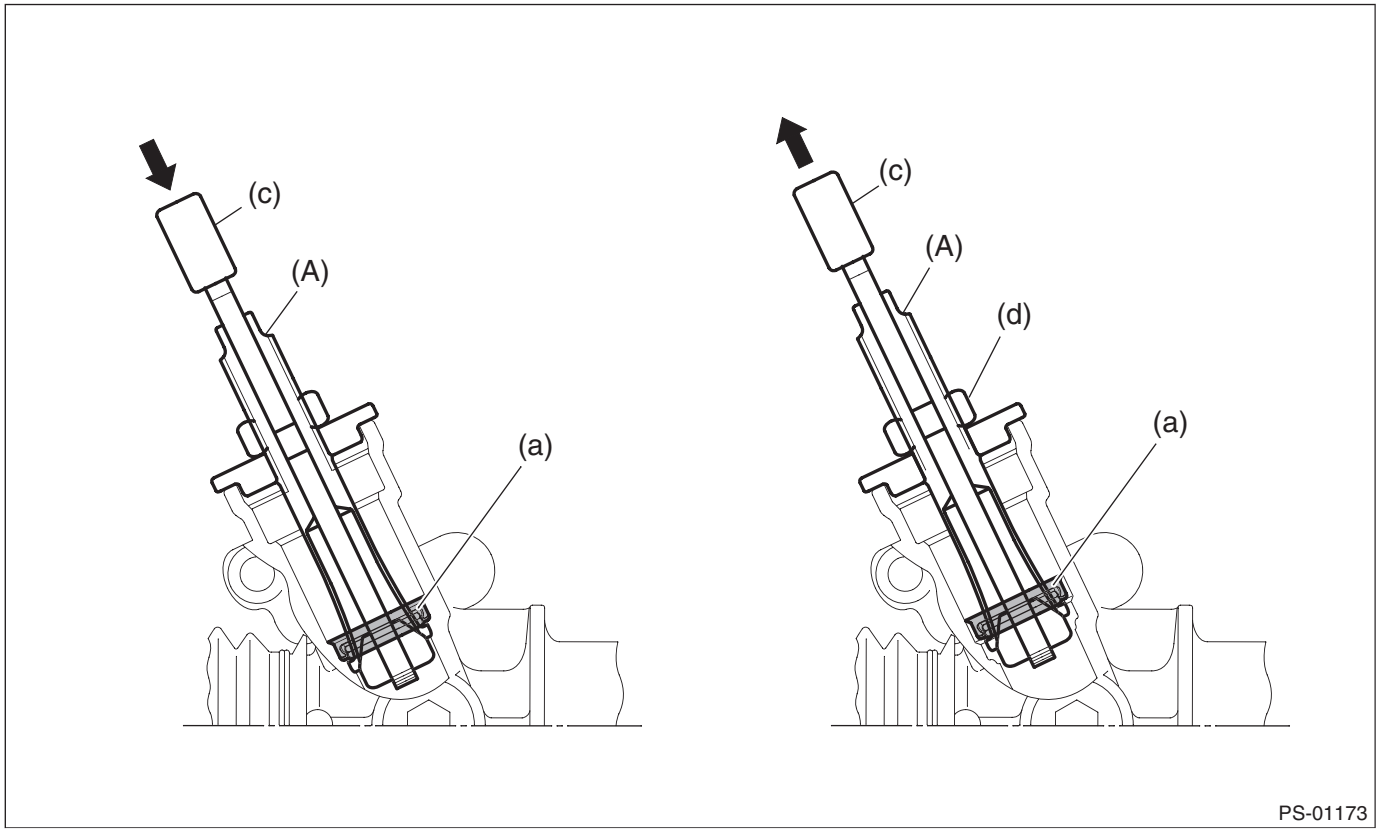

D: ASSEMBLY

1) Secure the gearbox to the ST.

CAUTION:
Secure the gearbox assembly in a vise using ST as shown. Do not secure the gearbox without this ST.

PREPARATION TOOL:
ST1: STAND (926200000)
ST2: BOSS D (34199AG000)
(1) Replace BOSS of STAND (ST1) with BOSS D (ST2).

(2) Using the clamp (a) removed from vehicle body, attach the gearbox assembly to ST.

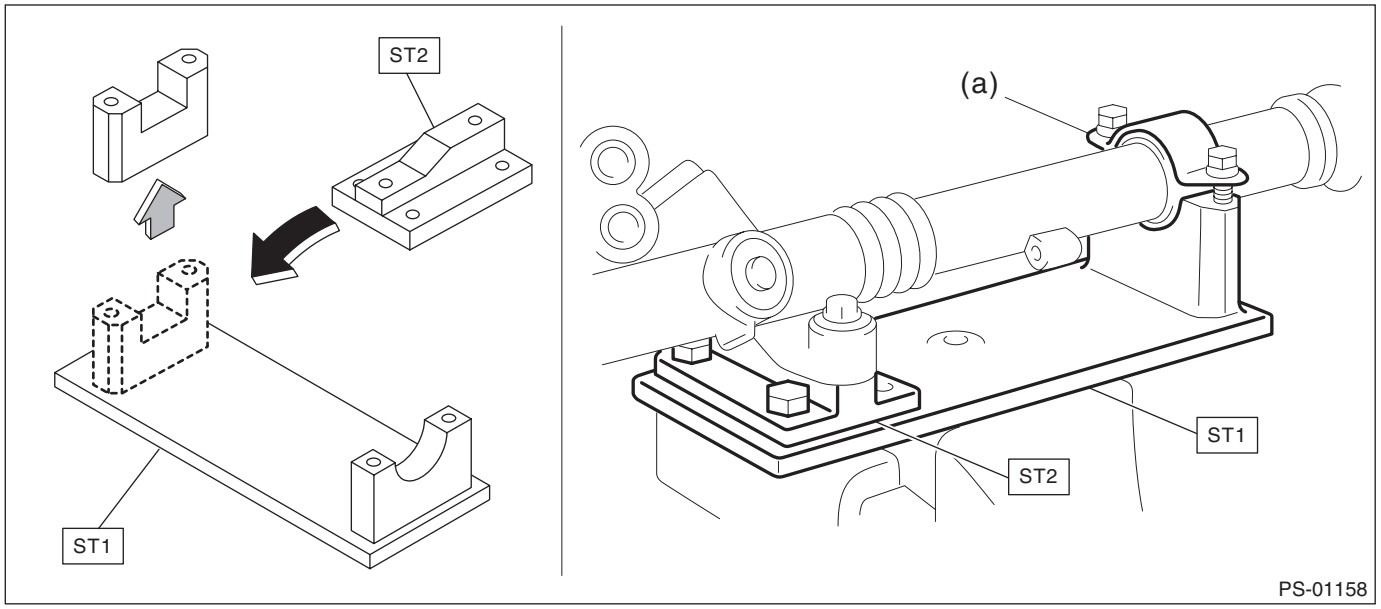

2) Apply a coat of grease to needle bearing.

CAUTION:
Make sure the needle bearing is free from defects. If it is faulty, replace the steering body with a new part.

3) Install the oil seal.

(1) Apply a coat of grease to the inside and outside of the new oil seal.

Steering grease:
VALIANT GREASE M2

(2) Verify the direction of the oil seal and installation position.

(3) Using the ST and a press, press-fit the oil seal (a) into the gearbox.

CAUTION:
- **Make sure to press fit the oil seal in all the way.**
- **The gap between the gearbox end face and the ST is to be approximately 4 mm (0.157 in) after press fitting.**

PREPARATION TOOL:
ST: GEARBOX OIL SEAL INSTALLER (34199AE130)

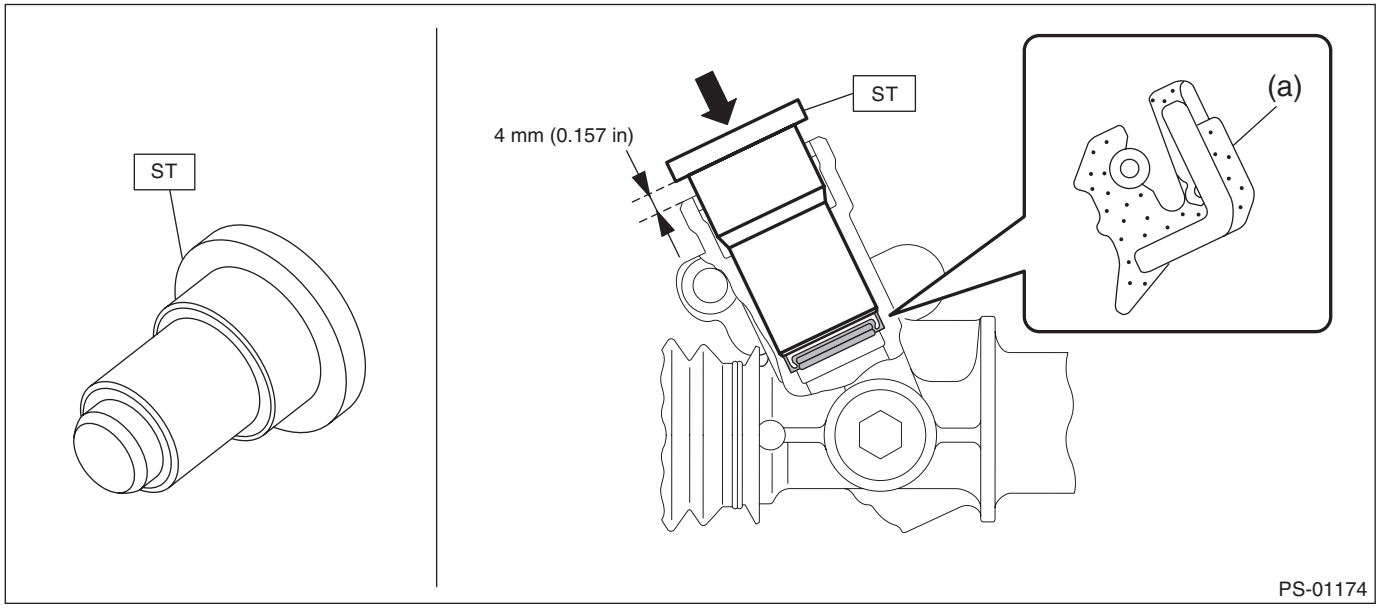

4) Using the ST, install the inner oil seal (a) to the rack.
(1) Using (ST-A) and (ST-B), install the inner oil seal (a) to (ST-C).

CAUTION:
Pay attention to the orientation of the oil seal.

PREPARATION TOOL:
ST: INSTALLER A, B, C (34199FE040)

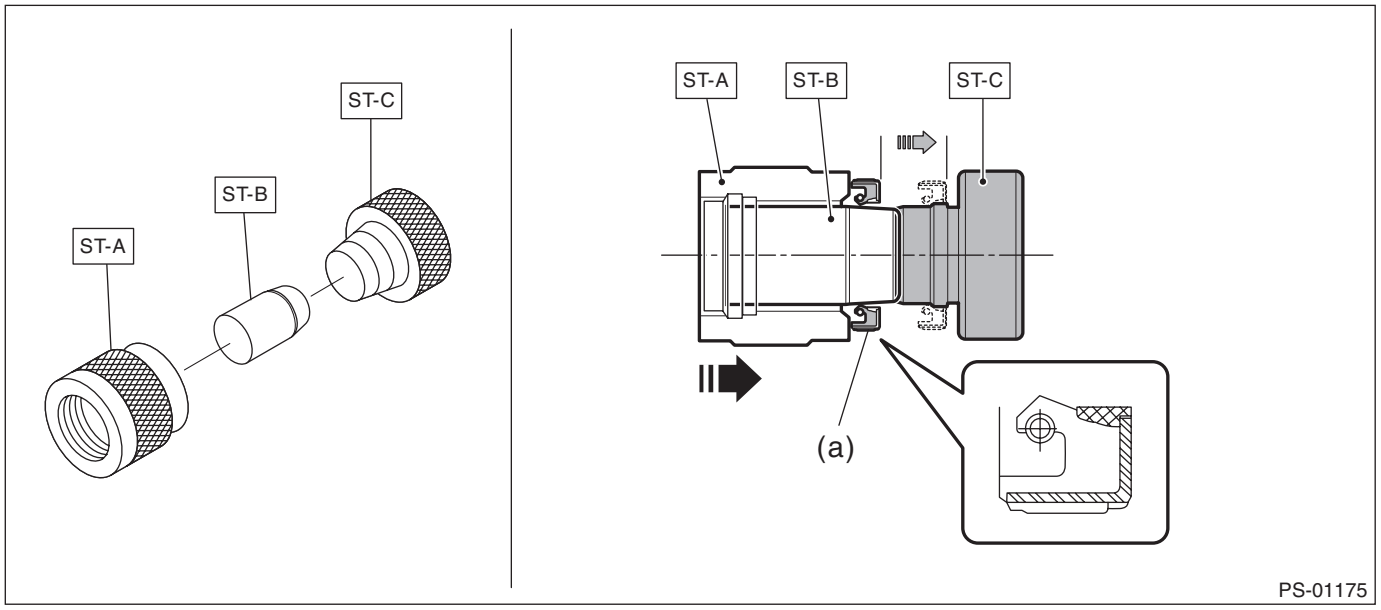

(2) Insert (ST-C) with oil seal assembled from the gear side of rack (b).
(3) Remove the inner oil seal (a) from (ST-C) near piston (c), and then remove (ST-C) from rack.
(4) Install the back-up washer (d) from the gear side of rack (b).

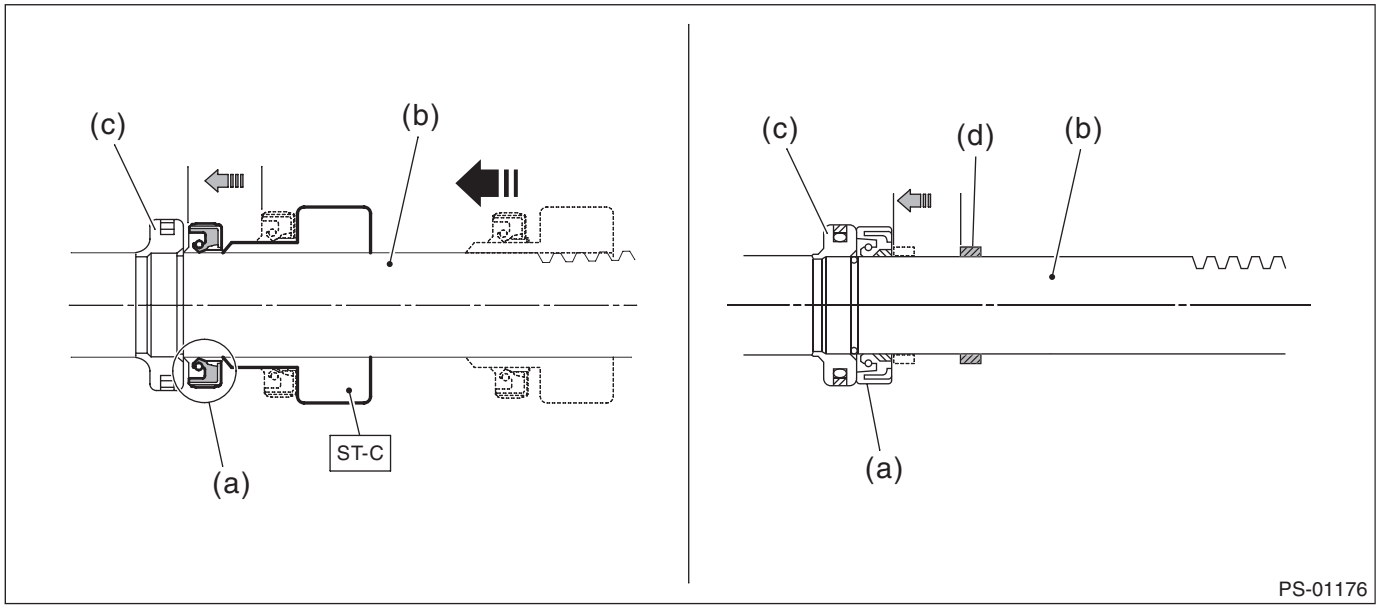

5) Then insert the rack into steering body.
(1) Apply a coat of grease to the grooves in rack, sliding surface of sleeve and sealing surface of piston.
(2) Then insert the rack into steering body from cylinder side.
(3) Temporarily tighten the holder (a) to gearbox cylinder.

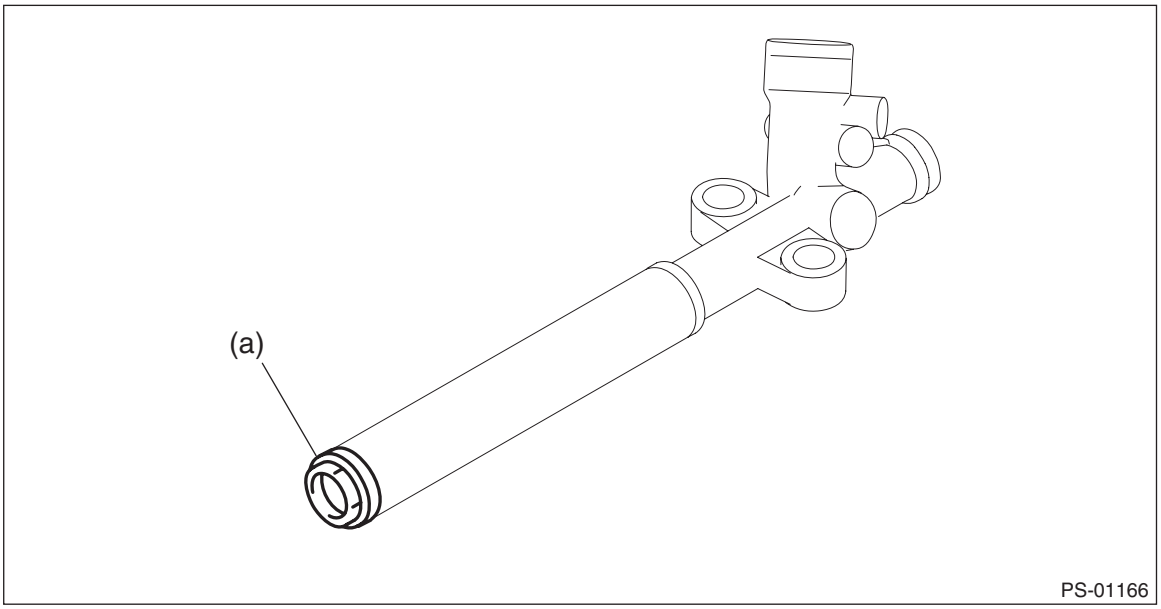

NOTE:
For temporarily tightening, reuse the holder removed during disassembly.
(4) Place a mark (b) at the location 9 mm (0.35 in) from the ST end surface.

PREPARATION TOOL:
ST: INSTALLER & REMOVER (34199FE000)
(5) Set the ST to the end of rack.
(6) Using a press, press-fit until the mark (b) on the ST is aligned with the end surface of the holder.

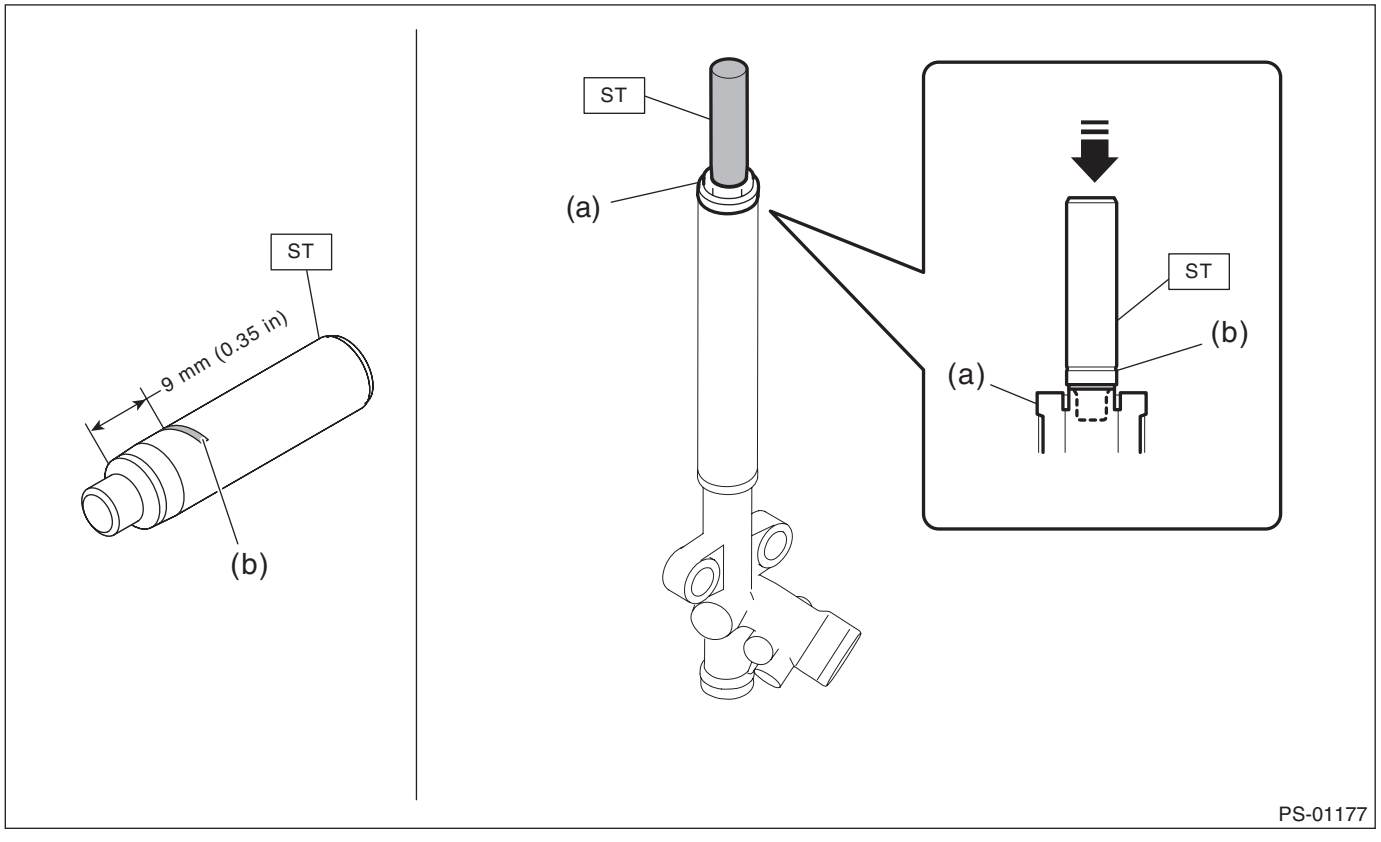

(7) Remove the ST and temporarily tightened holder.

6) Insert the outer oil seal (e) into the rack using the same procedure as step 4).

(1) Using (ST-A) and (ST-B), install the outer oil seal (e) to (ST-C).

CAUTION:
Pay attention to the orientation of the oil seal.

PREPARATION TOOL:
ST: INSTALLER A, B, C (34199FE040)

(2) Insert (ST-C) with outer oil seal (e) assembled into the rack (b).

(3) Remove the outer oil seal (e) from (ST-C), and then remove (ST-C) from rack (b).

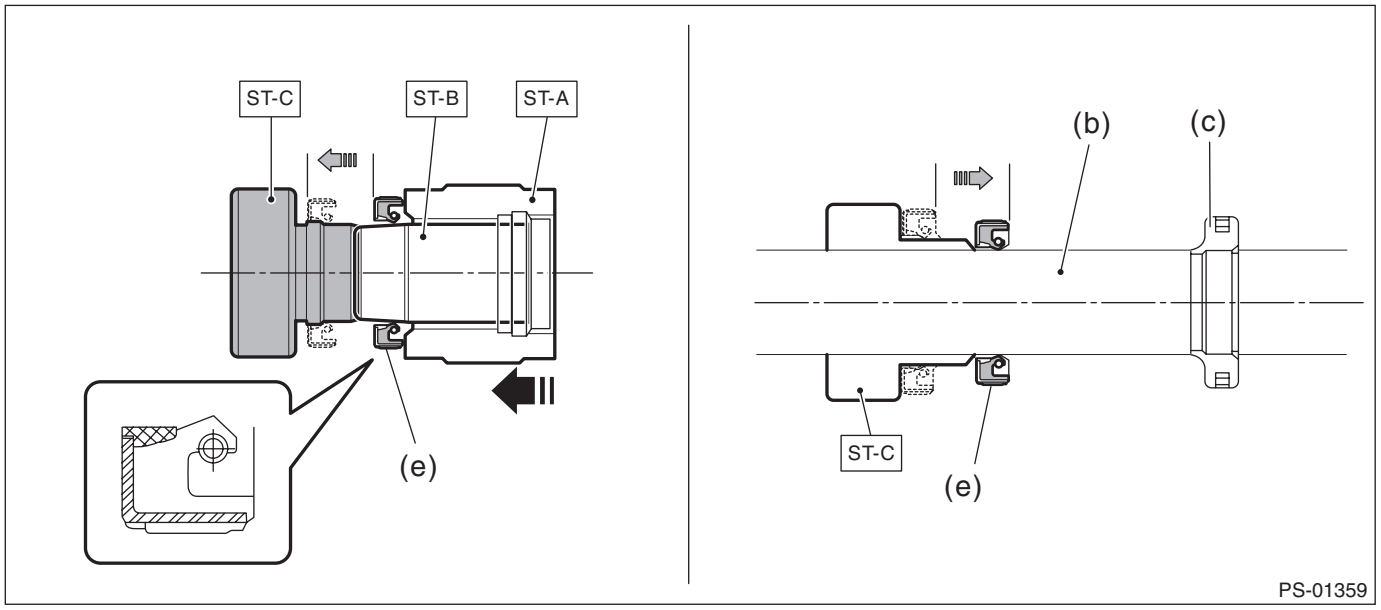

(4) Make the ST1 pass through the rack, and then press in the rack and ST2 using a press.

(5) Press in the outer oil seal (e) until ST1 and ST2 contact each other, and the rack end face is aligned with the end face of ST.

PREPARATION TOOL:
ST1: GUIDE (34199FE050)
ST2: INSTALLER (34199FE060)

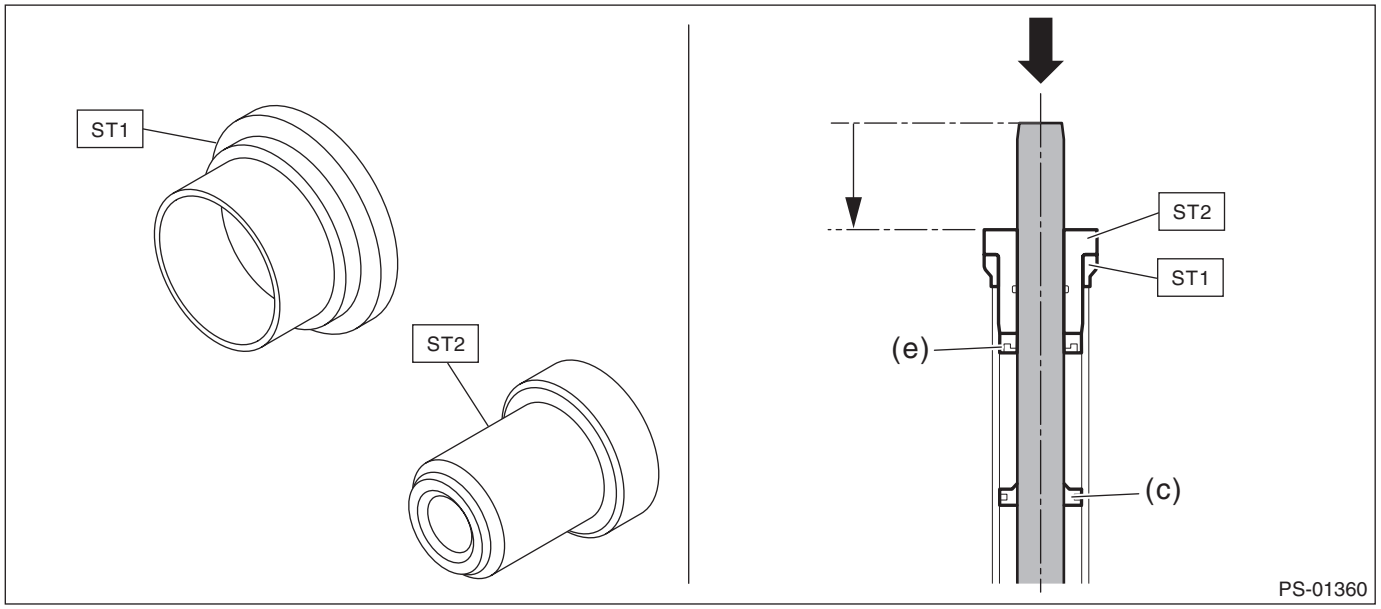

7) Install the holder (a) to the steering body (b).
(1) Install a new holder to the cylinder side of steering body.

Tightening torque:
75 N·m (7.65 kgf-m, 55.3 ft-lb)
(2) Using the ST, crimp one location less than 3 mm (0.12 in) from the holder.

CAUTION:
Be careful not to deform the holder.

PREPARATION TOOL:
ST1: PUNCH HOLDER (34099FA060)
ST2: BASE (34199FE020)

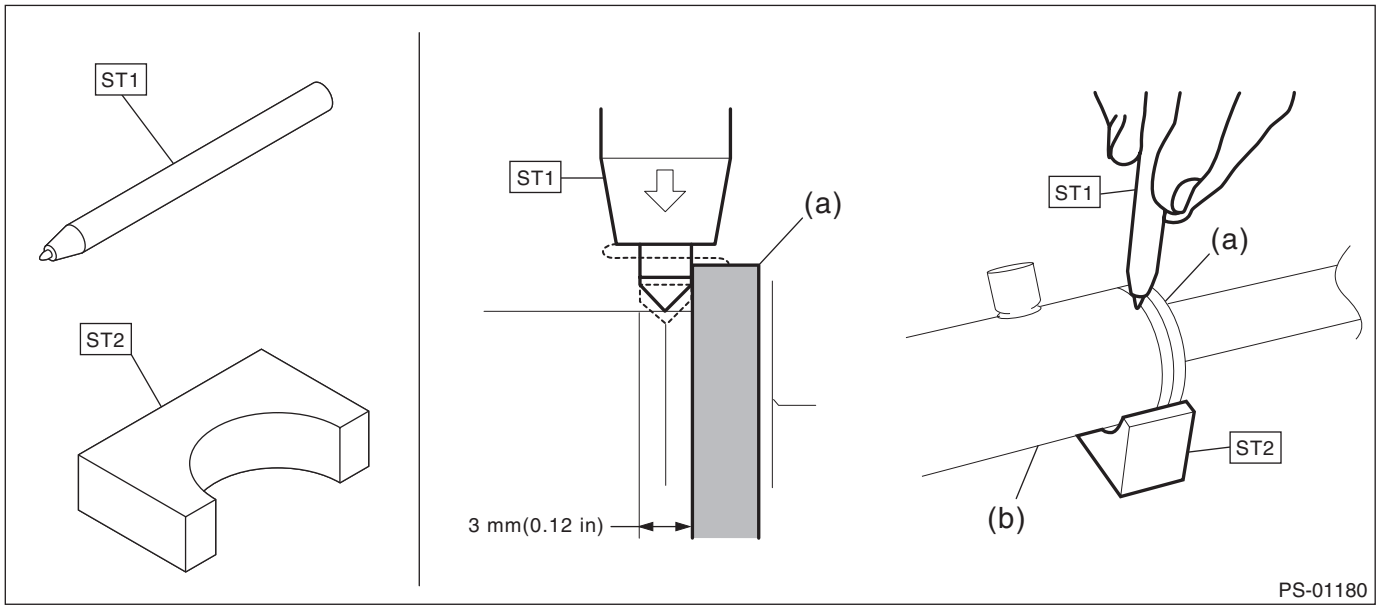

8) Install the valve assembly.
(1) Replace the O-ring (c) of plug (b) circumference with a new O-ring.
(2) Apply grease on the oil seal (a) circumference, and then press it into the plug using ST1 and a press.

CAUTION:
- **Install the oil seal paying attention to correct direction.**
- **Make sure to press fit the oil seal in all the way.**
- **The gap between the plug and the ST is to be approximately 1 mm (0.039 in) after press fitting.**

PREPARATION TOOL:
ST1: OIL SEAL PLUG INSTALLER (34199AE110)

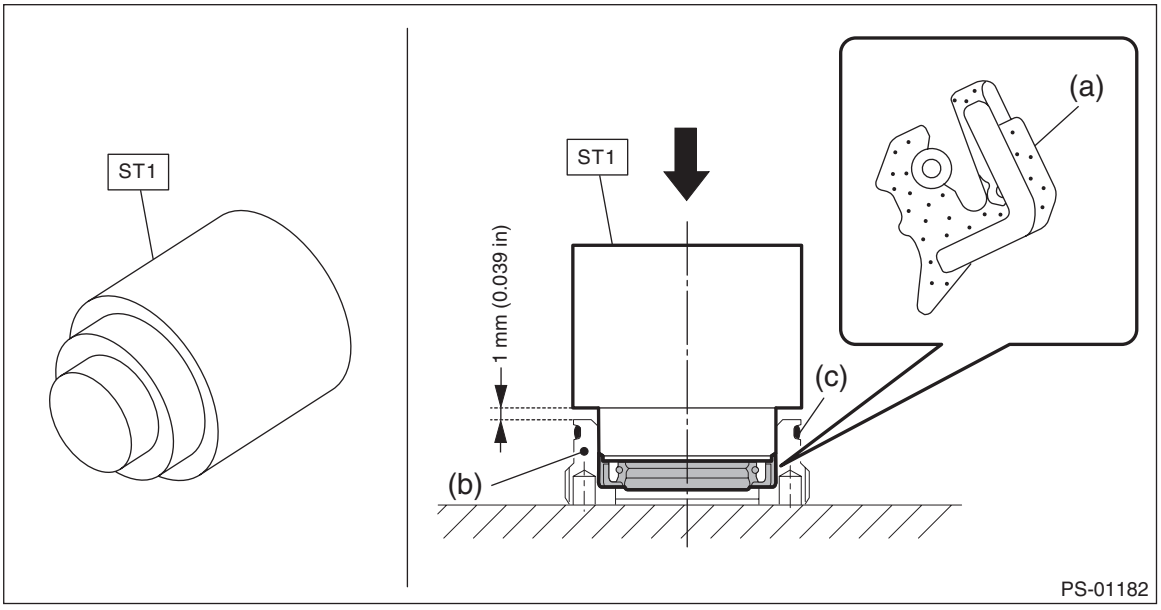

(3) Roll a vinyl tape (d) on the serration portion of valve assembly, and then apply grease on the tape surface.
(4) Apply a coat of grease on the gear teeth of the valve assembly, and then attach the valve assembly.

CAUTION:
Be careful not to scratch the oil seals (e) and seal ring (f).

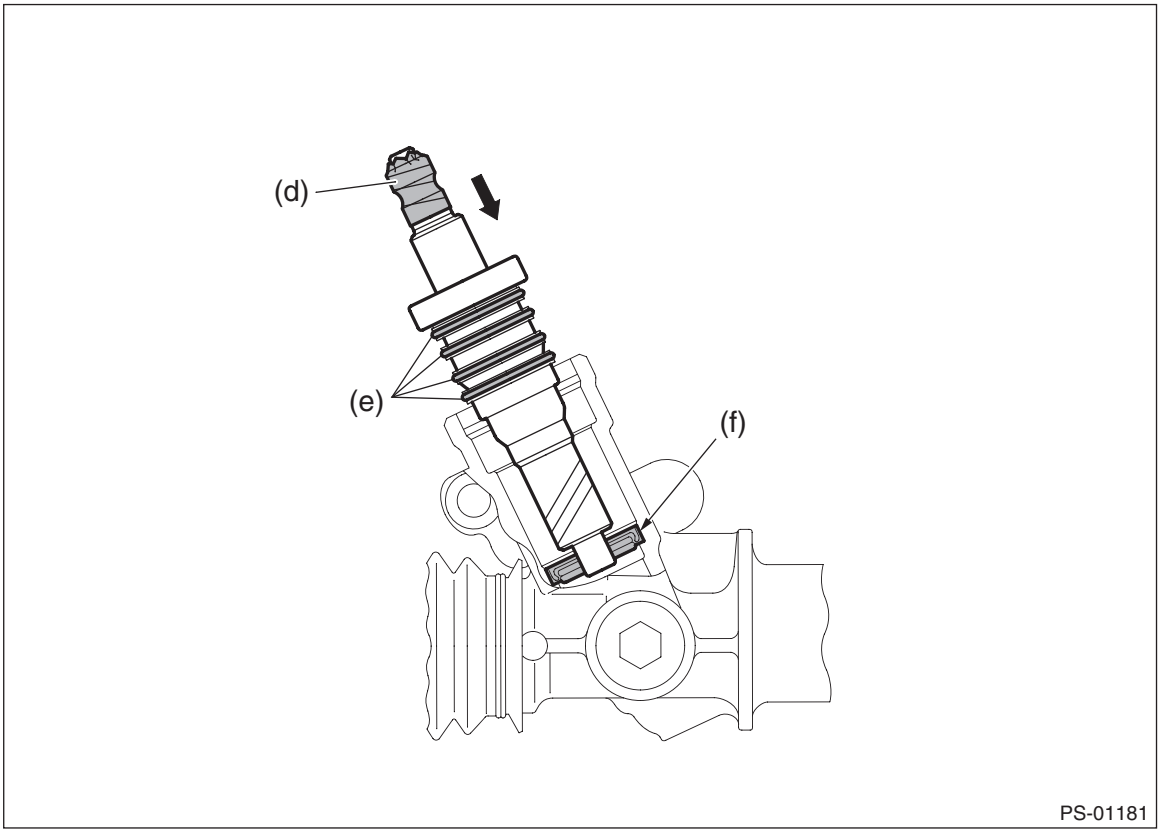

(5) Attach the plug (g) using ST2.

PREPARATION TOOL:
ST2: PLUG-WRENCH (34199AE090)

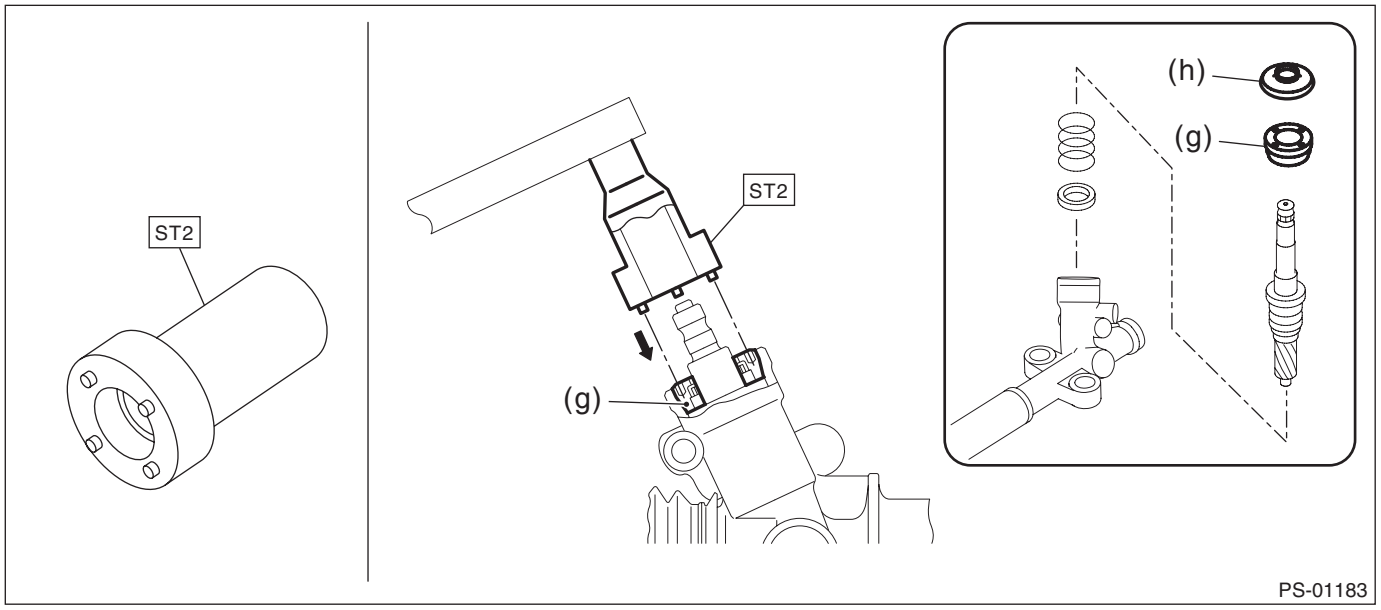

Tightening torque:
64 N·m (6.53 kgf-m, 47.2 ft-lb)

(6) Install the dust cover (h), and remove the vinyl tape (d).

9) Temporarily tighten the tie-rod to the rack end, and then operate the rack from lock to lock for two or three times to make it fit in.

CAUTION:
If operating the rack from lock to lock without installing tie-rods, it may damage the oil seal. Always install the tie-rods LH and RH.

10) Install the adjusting screw to the steering body.

(1) Apply liquid gasket to 1/3 or more (A) of entire perimeter of adjusting screw thread (c).

Liquid gasket:
THREE BOND 1102 or THREE BOND 1215

(2) Apply a coat of grease to the sliding surface (B) of sleeve (a) and seating surface (C) of spring (b), and then insert the sleeve into steering body.

(3) Charge the adjusting screw with grease (D), and then insert the spring into adjusting screw. Then install on the steering body.

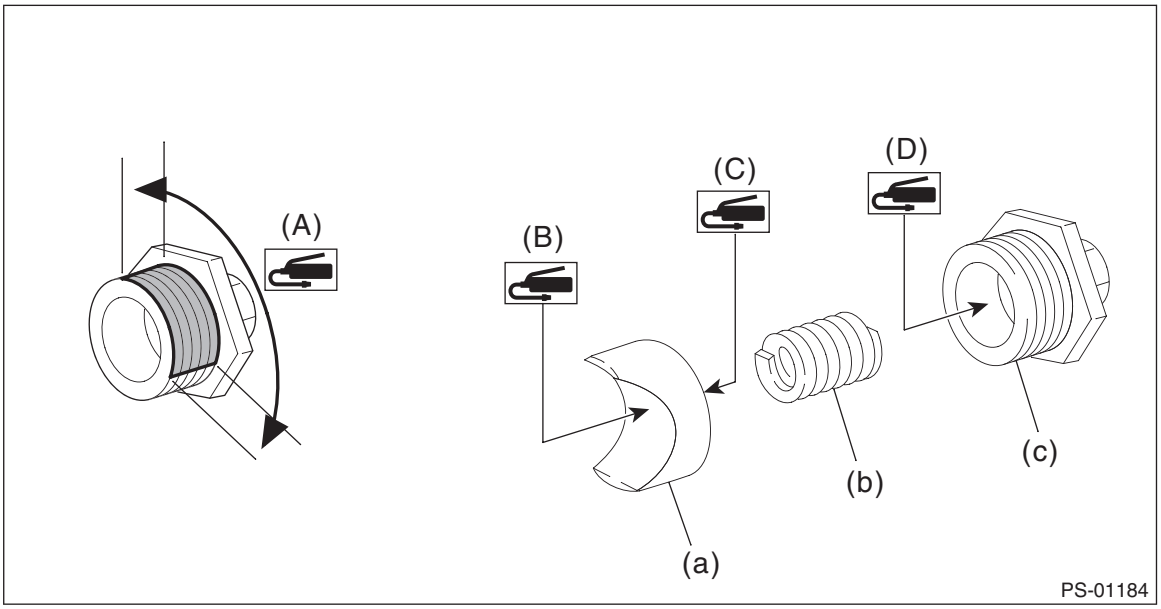

(4) Tighten the adjusting screw to the specified torque, then loosen it.

Tightening torque:
9.8 N·m (1.0 kgf-m, 7.2 ft-lb)

(5) Tighten the adjusting screw to the specified torque, then loosen it.

Tightening torque:
6.0 N·m (0.61 kgf-m, 4.4 ft-lb)

(6) Tighten the adjusting screw to the specified torque, then loosen it approx. 30°.

CAUTION:
Do not loosen 30° or more.

Tightening torque:
6.0 N·m (0.61 kgf-m, 4.4 ft-lb)

11) Remove the tie-rod which was temporarily tightened in step 9).
12) Check that play and looseness are within specifications. <Ref. to PS-56, SERVICE LIMIT, INSPECTION, Steering Gearbox.>
13) While holding the adjusting screw (a) with a wrench, tighten the lock nut using ST.

CAUTION:
Make sure that the screw is not turning while tightening the lock nut.

PREPARATION TOOL:
ST: SPECIAL TOOL CPS (34199AJ060)

Tightening torque (lock nut):
39 N·m (3.98 kgf-m, 28.8 ft-lb)

14) Install the tie-rod into rack.

CAUTION:
Check the mating face of rack and tie-rod for foreign matter such as dust etc.

Tightening torque:
90 N·m (9.18 kgf-m, 66.4 ft-lb)

15) Install the boot to the housing.
(1) Apply a coat of grease to the tie-rod groove, and then install the boot to the housing.

CAUTION:
Make sure that the boot is installed properly without unusual inflation or deflation.

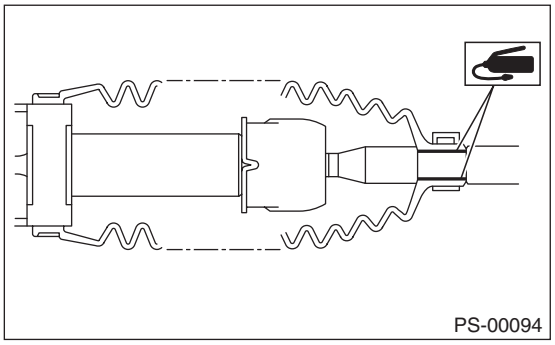

(2) Using the boot clamp pliers, crimp the boot so that the clearance (b) of the boot band (a) crimp portion becomes 2 mm (0.08 in) or less.

CAUTION:
Use a new boot band.

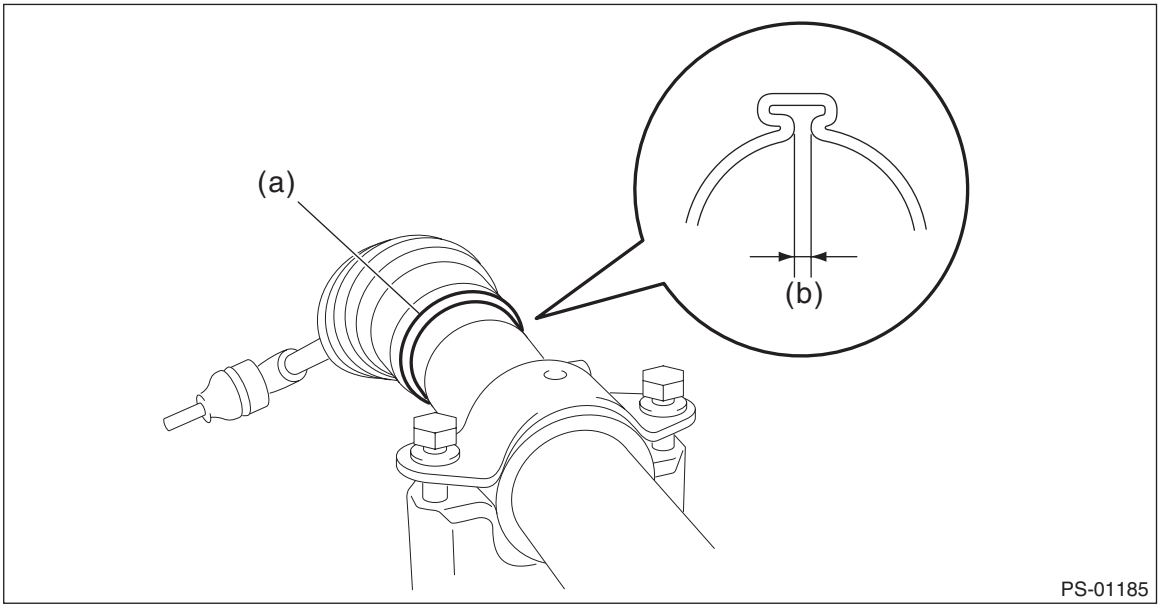

(3) Fix the boot end with small clip (1).

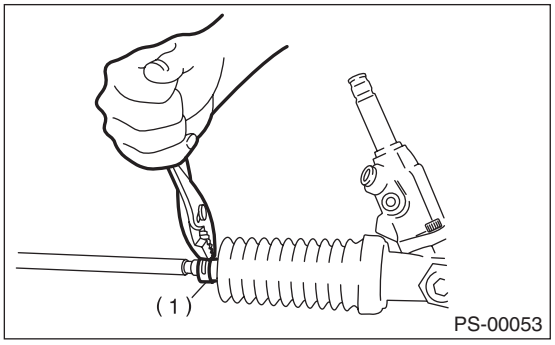

(4) After installing, check that the boot end is installed to the groove of the tie-rod.

(5) If the tie-rod end has been removed, screw in lock nut and tie-rod end to the screwed portion of tie-rod, and tighten the lock nut temporarily in a position as shown in the figure.

Installed tie-rod length L:
24 mm (0.9 in)

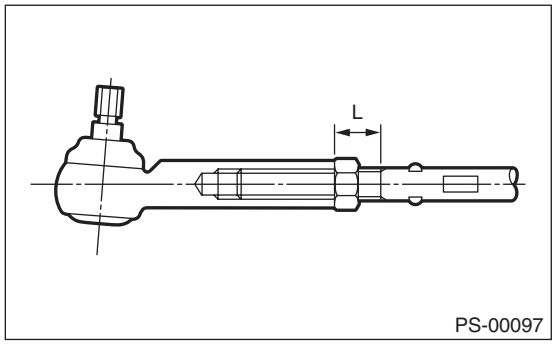

16) Inspect the gearbox as follows:
- "A" Holding the tie-rod end, repeat lock to lock several times as quickly as possible.
- "B" Holding the tie-rod end, turn it slowly at a radius several times as large as possible.
- Finally, make sure that the boot is installed in the specified position without inflating.

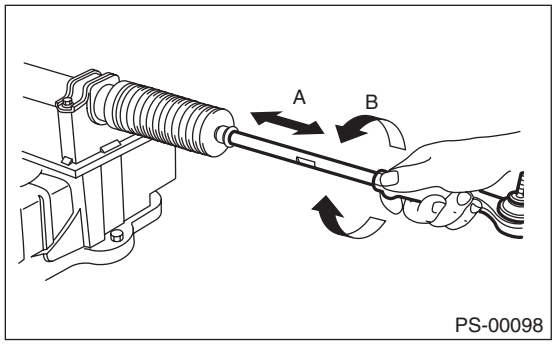

17) Remove the ST (STAND and BOSS D) from gearbox.
18) Attach the 4 pipes to the steering body and control valve housing.

E: INSPECTION

1. BASIC INSPECTION

1) Clean all the disassembled parts, and check for wear, damage or any other faults, then repair or replace as necessary.
2) When disassembling, check the inside of gearbox for water. If any water is found, carefully check the boot for damage, input shaft dust seal, adjusting screw and boot clips for poor sealing. If faulty, replace with new parts.

No.	Parts	Inspection	Corrective action
1	Input shaft	(1) Bent input shaft (2) Damage on serration	If the bend or damage is excessive, replace the entire gearbox.
2	Dust seal	(1) Crack or damage (2) Wear	If the outer wall slips, the lip is worn out or damage is found, replace it with a new part.
3	Rack and pinion	Poor mating of rack with pinion	(1) Adjust the backlash properly. By measuring the turning torque of the gearbox and sliding resistance of rack, check if the rack & pinion engage uniformly and smoothly with each other. (Refer to “Service limit”.) (2) Pull out the entire rack to allow viewing of the teeth, and check for damage. Even if abnormality is found in either (1) or (2), replace the entire gearbox.
4	Gearbox unit	(1) Bending of the rack shaft (2) Bending of the cylinder portion (3) Crack or damage on the aluminum portion	Replace the gearbox with a new part.
		(4) Wear or damage on rack bushing	If the free play of rack shaft in radial direction is out of the specified range, replace the gearbox with new part. (Refer to “Service limit”.)
		(5) Wear on input shaft bearing	If the free play of input shaft in radial and axial direction is out of the specified range, replace the gearbox with a new part. (Refer to “Service limit”.)
5	Boot	Crack, damage or deterioration	Replace.
6	Tie-rod	(1) Looseness of ball joint (2) Bend of tie-rod	Replace.
7	Tie-rod end	Damage or deterioration of dust seal	Replace.
8	Adjusting screw spring	Deterioration	Replace.
9	Boot clip	Deterioration	Replace.
10	Sleeve	Damage	Replace.
11	Pipe	(1) Damage to flared surface (2) Damage to flare nut (3) Damage to pipe	Replace.

2. SERVICE LIMIT

Make a measurements as follows. If it exceeds the specified service limits, adjust or replace.

CAUTION:
When making a measurement, secure the gearbox in a vise using ST.
When fixing the gearbox in a vise, apply a wooden piece on the flange portion.

PREPARATION TOOL:
ST1: STAND (926200000)
ST2: BOSS D (34199AG000)

Rack shaft sliding resistance

Measure the resistance with the rack shaft pulled.

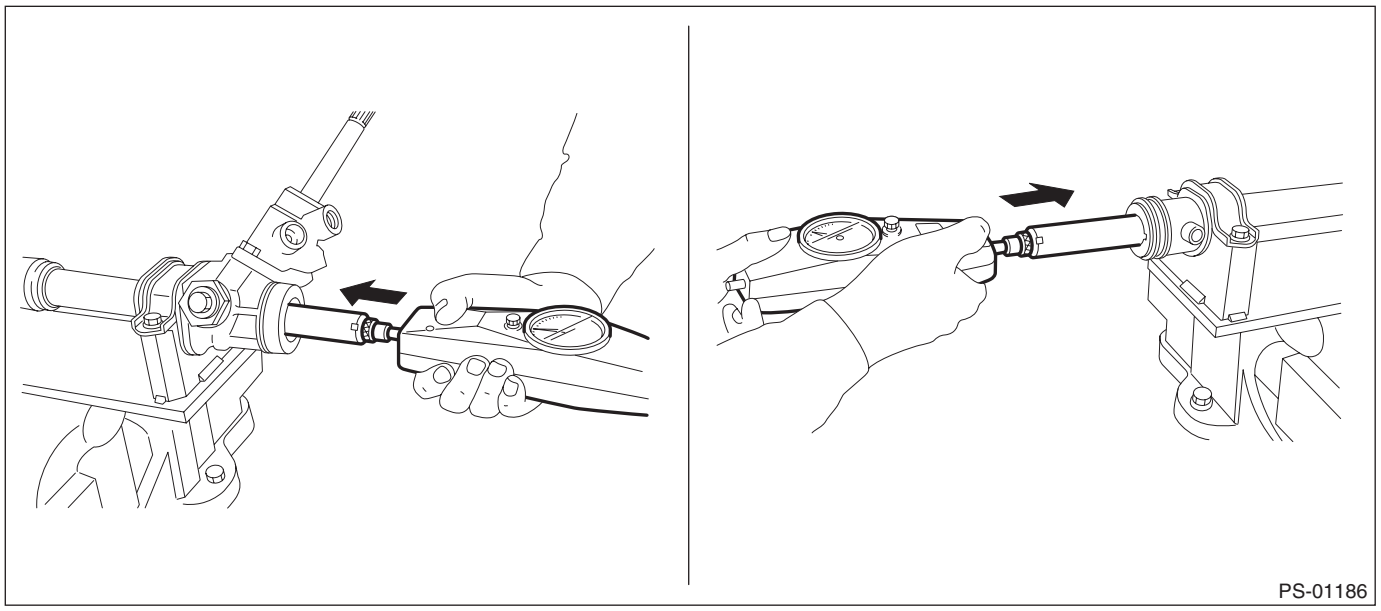

Limit: 650 N (66.2 kgf, 146 lbf) or less

Left/right differential of sliding resistance: 20 % or less

Rack shaft play in the radial direction

- **Right-turn steering**

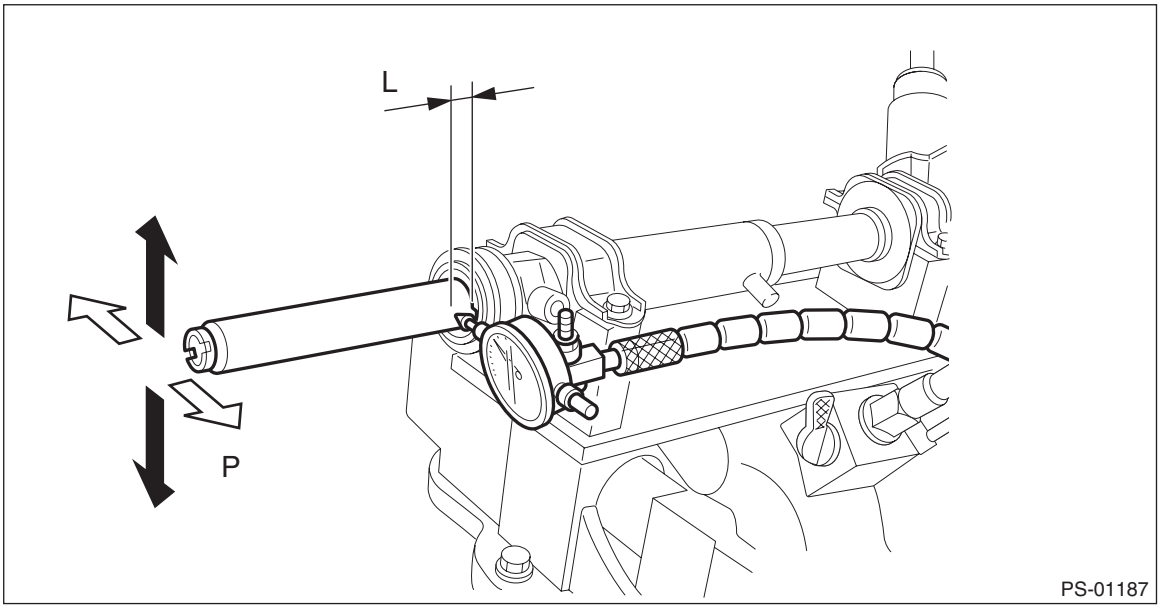

Limit

Direction ⬅ ➡: 0.4 mm (0.016 in) or less
Direction ⇦ ⇨: 0.6 mm (0.024 in) or less

Condition

L: 5 mm (0.20 in)
P: 98 N (10 kgf, 22 lbf)

- **Left-turn steering**

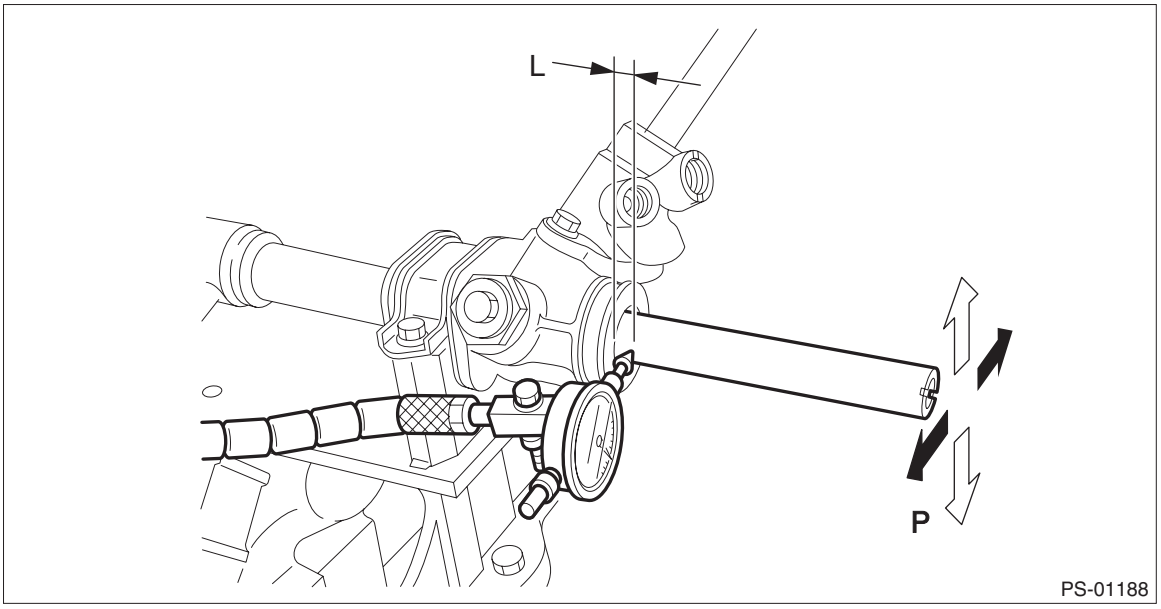

Service limit:
Direction ⇦ ⇨: 0.4 mm (0.016 in) or less
Direction ⬅ ➡: 0.4 mm (0.016 in) or less

Input shaft play

- **In radial direction**

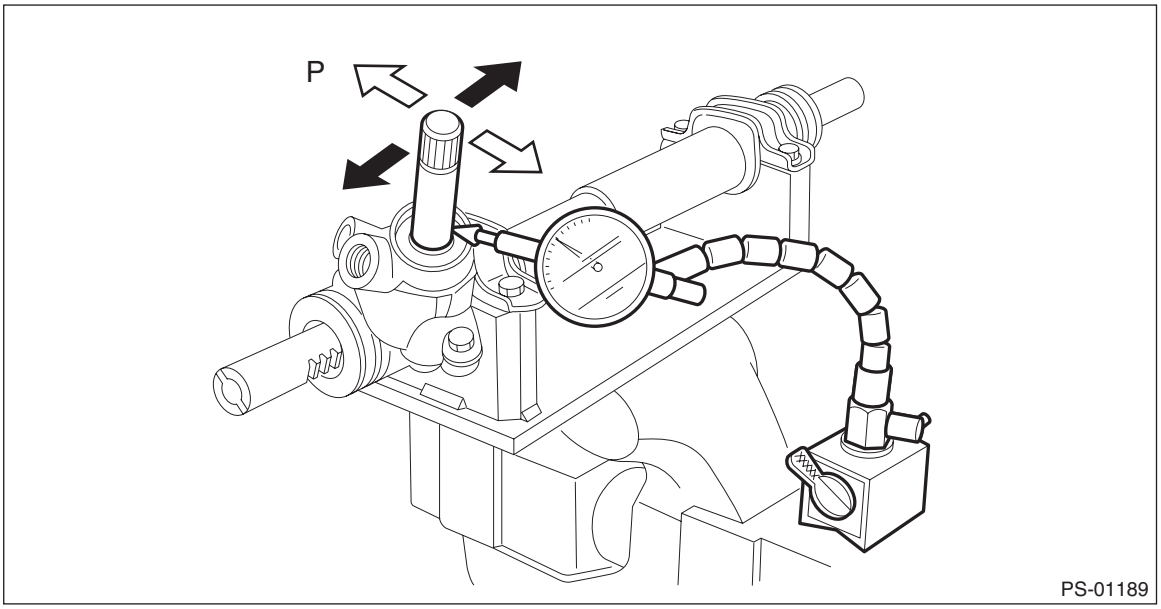

Limit
0.18 mm (0.0071 in) or less

Condition
P: 98 N (10 kgf, 22 lbf)

- **In axial direction**

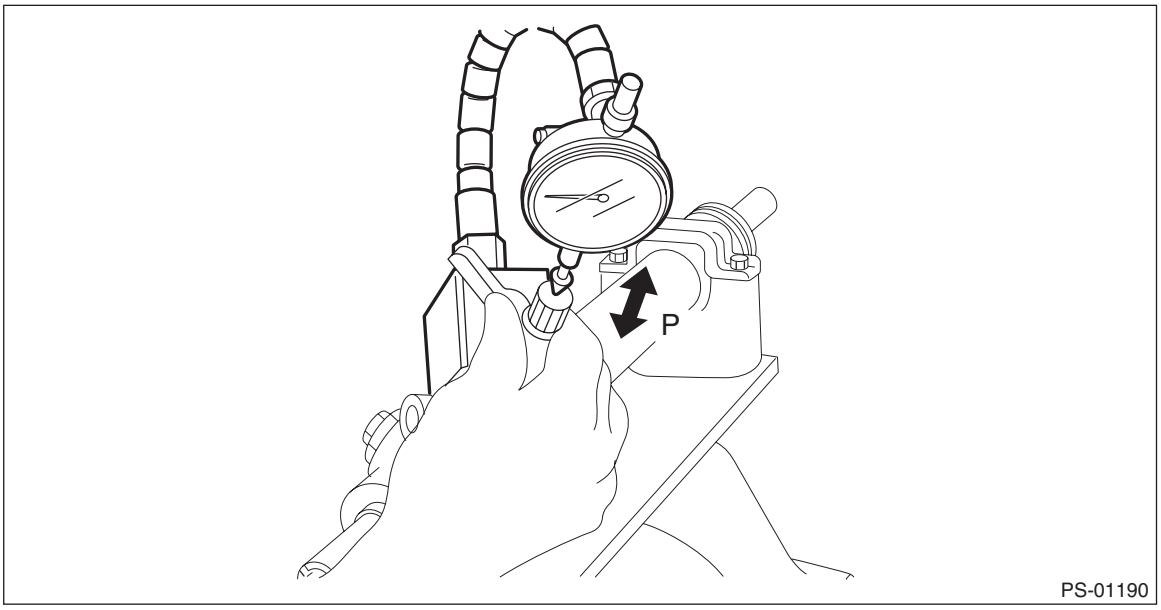

Service limit
0.27 mm (0.0106 in) or less

Condition
P: 20 — 49 N (2 — 5 kgf, 4 — 11 lbf)

ROTATIONAL RESISTANCE OF GEARBOX

Using the ST, measure the gearbox rotational resistance.

PREPARATION TOOL:
ST: SPECIAL TOOL EPS (34099PA100)

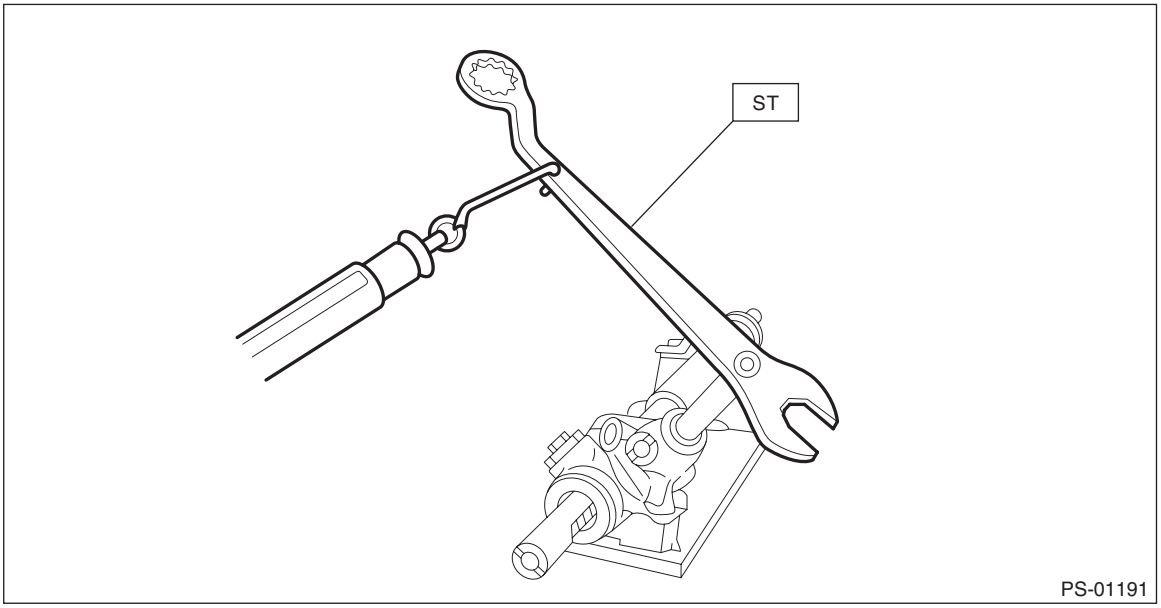

Service limit:
Maximum allowable resistance: 30 N (3.1 kgf, 6.7 lbf) or less
Difference between right and left rotational resistance: 20 % or less

3. OIL LEAKAGE

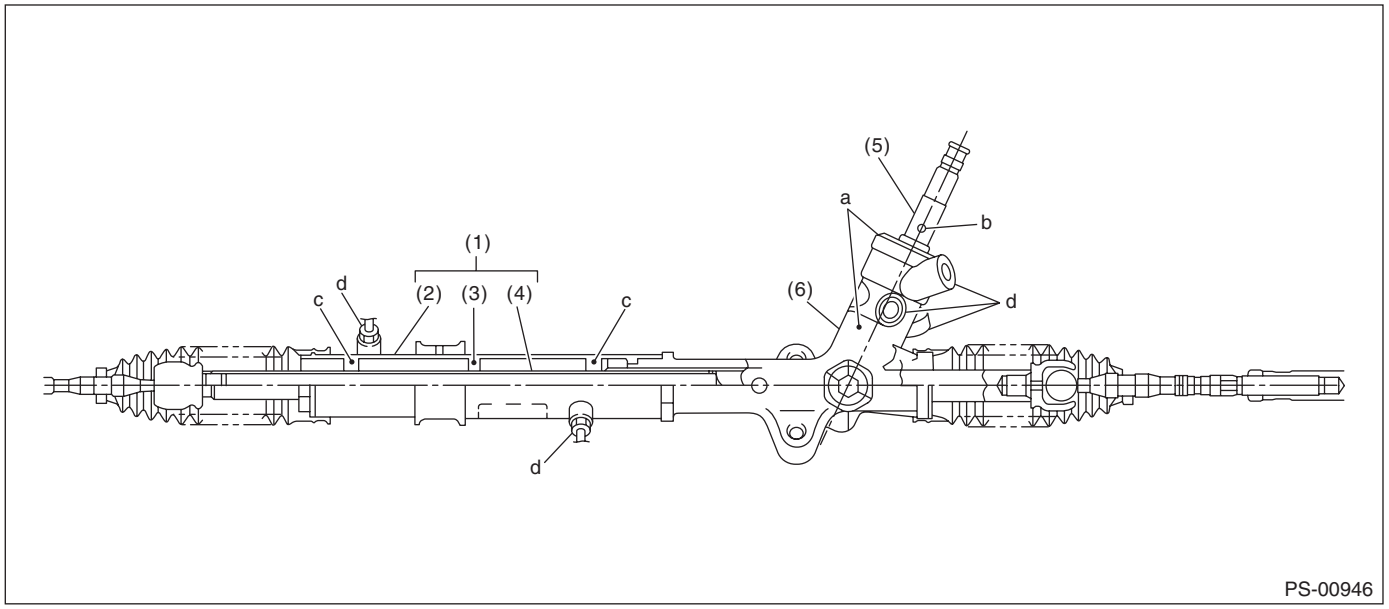

(1)	Power cylinder	(3)	Rack piston	(5)	Input shaft
(2)	Cylinder	(4)	Rack axle	(6)	Valve housing

1) Lift up the vehicle.
2) If a fluid leak is found, clean the fluid completely from the suspect area, and turn the steering wheel 30 to 40 times to the left and right from lock to lock, with the engine running, and check again for leaks immediately, and also after a few hours have passed.
3) **Cause and solution for oil leakage from "a"**
The oil seal is damaged. Replace the valve assembly or oil seal with a new part.
4) **Cause and solution for oil leakage from "b"**
The torsion bar O-ring is damaged. Replace the valve assembly with a new part.
5) **Cause and solution for oil leakage from "c"**
The oil seal is damaged. Replace the oil seal.
6) **Cause and solution for oil leakage from "d"**
The pipe is damaged. Replace the faulty pipe or O-ring.

F: ADJUSTMENT

1. GEARBOX BACKLASH ADJUSTMENT (SERVICING ON VEHICLE)

1) Using the ST, loosen the lock nut.
2) Loosen the adjusting screw by using ST, and apply liquid gasket to the entire area of the adjusting screw threads.

PREPARATION TOOL:
ST: SPECIAL TOOL CPS (34199AJ060)

Liquid gasket:
THREE BOND 1102 or THREE BOND 1215

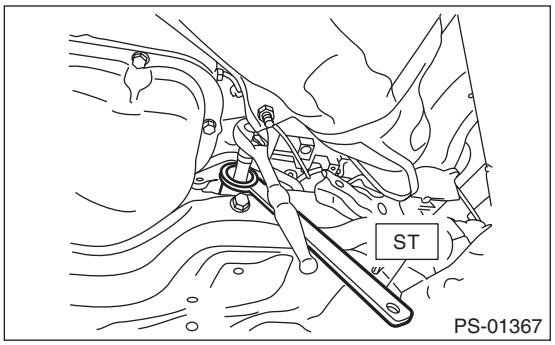

3) Tighten the adjusting screw to the specified torque, then loosen it.

Tightening torque:
9.8 N·m (1.0 kgf-m, 7.2 ft-lb)
4) Tighten the adjusting screw to the specified torque, then loosen it.

Tightening torque:
6.0 N·m (0.61 kgf-m, 4.4 ft-lb)
5) Tighten the adjusting screw to the specified torque, then loosen it approx. 30°.

CAUTION:
Do not loosen 30° or more.

Tightening torque:
6.0 N·m (0.61 kgf-m, 4.4 ft-lb)
6) Install the lock nut. While holding the adjusting screw, tighten the lock nut using ST.

Tightening torque (lock nut):
39 N·m (3.98 kgf-m, 28.8 ft-lb)

NOTE:
Secure the adjusting screw to prevent it from rotating while tightening the lock nut.

2. FRONT WHEEL ALIGNMENT ADJUSTMENT

1) Adjust the front toe.
<Ref. to FS-12, FRONT WHEEL TOE-IN, INSPECTION, Wheel Alignment.>
2) Check the steering angle of the wheels.

Standard of steering angle:

Model	Inner wheel	Outer wheel
225/50R17 tire	37.4°±1.5°	33.0°±1.5°
225/45R18 tire	37.4°±1.5°	33.0°±1.5°
215/50R17 tire	37.6°±1.5°	33.3°±1.5°
205/60R16 tire	37.6°±1.5°	33.3°±1.5°
225/60R17 tire	38.4°±1.5°	34.1°±1.5°
215/70R16 tire	38.4°±1.5°	34.1°±1.5°

3) If the steering wheel spokes are not horizontal when wheels are set in the straight ahead position, or error is more than 5° on the periphery of the steering wheel, correctly re-install the steering wheel.

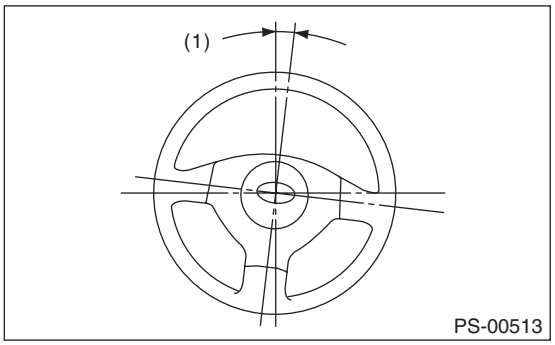

(1) 5° or less

4) If the steering wheel spokes are not horizontal with vehicle set in the straight ahead position after this adjustment, correct it by turning the right and left tie-rods in the opposite direction from each other by the same angle. Also check that there are no abnormal steering force, failure of the steering wheel to return or other faults.

6. Pipe Assembly

A: REMOVAL

1) Set the vehicle on a lift.
2) Remove the power steering hose bracket and power steering hose.

CAUTION:
Plug the removed hose and pipe to prevent foreign matter from entering.

(1) Remove the clip and disconnect the hose (a) from the pipe.
(2) Remove the power steering hose bracket (b).
(3) Remove the hose (c) from power steering pump.

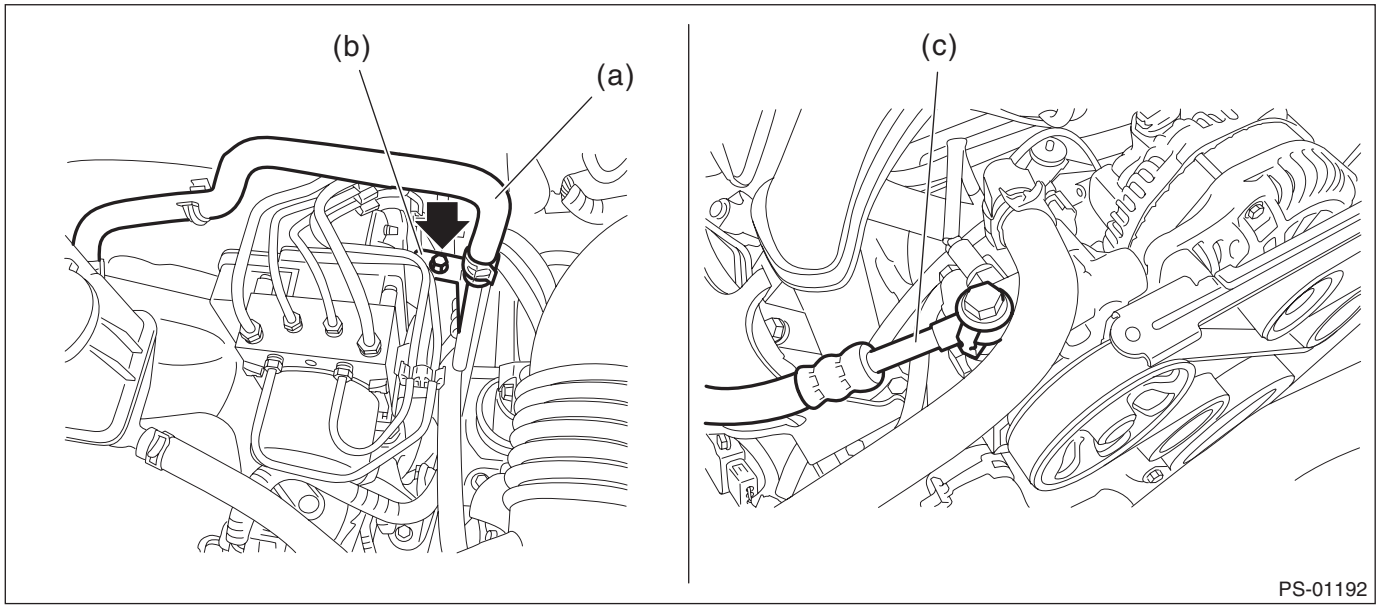

3) Lift up the vehicle, and then remove the under cover.

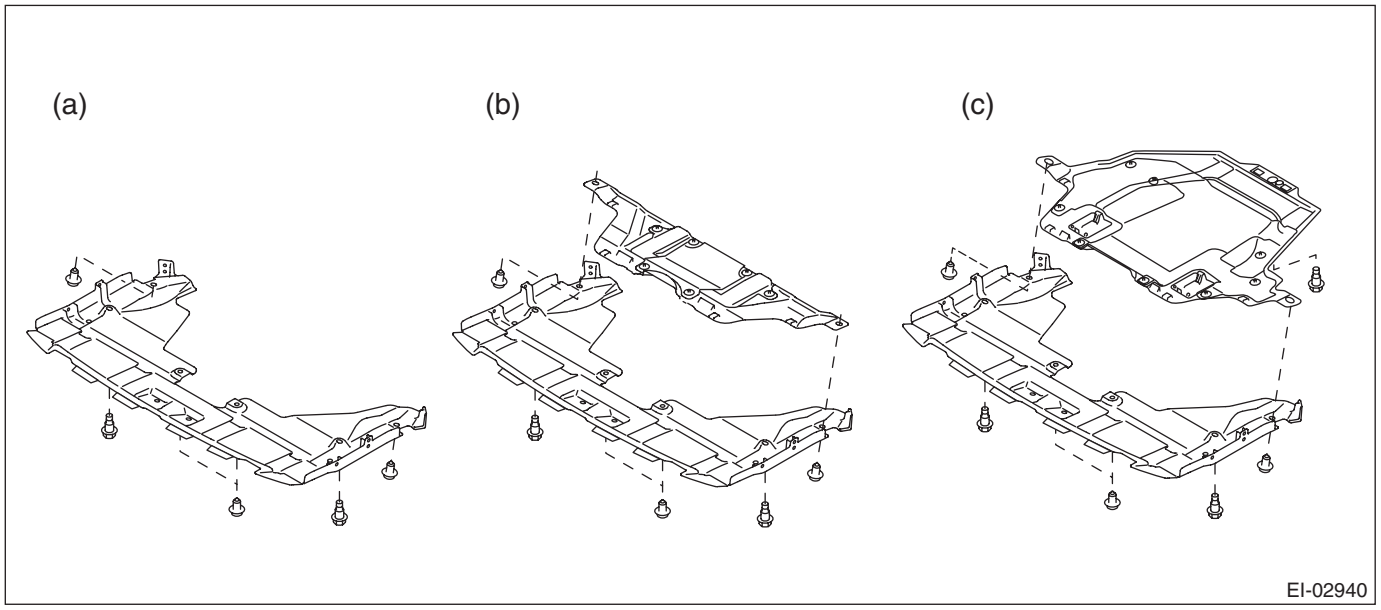

(a) Small type (b) Medium type (c) Large type

4) Disconnect the hose assembly from the steering gearbox.

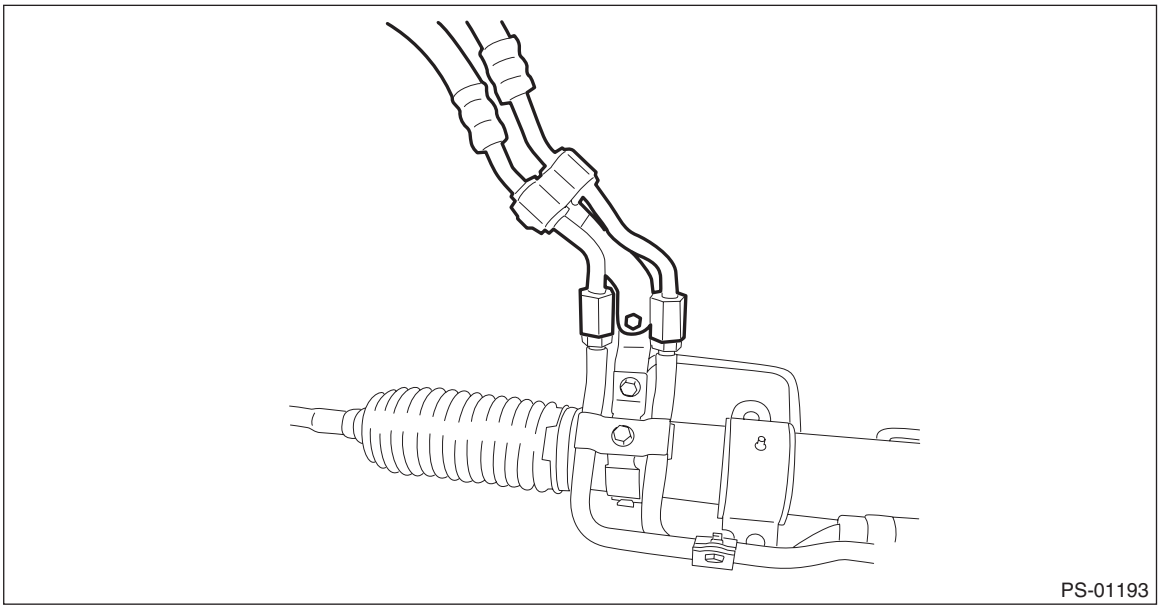

B: INSTALLATION

1) Install each part in the reverse order of removal.

Tightening torque:
Refer to "COMPONENT" of "General Description". <Ref. to PS-5, HOSE AND TANK, COMPONENT, General Description.>

2) Fill with recommended power steering fluid and perform air bleeding. <Ref. to PS-77, Power Steering Fluid.>

CAUTION:
Never start the engine before filling with fluid; otherwise the vane pump may become seized.

C: INSPECTION

Check all disassembled parts for wear, damage or other problems. Repair or replace the defective parts as necessary.

Part	Maintenance parts	Corrective action
Pipe	• O-ring fitting surface damage • Nut damage • Pipe damage	Replace with a new part.
Hose	• Flare surface damage • Flare nut damage • Outer surface cracks • Outer surface wear • Clip damage • End coupling or adapter deformation	Replace with a new part.

CAUTION:
Although the surface layer materials of rubber hoses have excellent weathering resistance, heat resistance and resistance for low temperature brittleness, they are likely to be damaged chemically by brake fluid, battery electrolyte, engine oil and automatic transmission fluid and their service lives are to be very shortened. Wipe off hoses immediately if any of these come into contact with the hoses.
Since resistances for heat or low temperature brittleness are gradually declining according to time accumulation of hot or cold conditions for the hoses and their service lives are shortening accordingly, it is necessary to perform careful inspection frequently when the vehicle is used in hot weather areas, cold weather areas and a driving condition in which many steering operations are required in short time.
Continuous discharge of the relief valve for 5 seconds or more will reduce the service lives of hoses, oil pump, fluid, etc., due to over heating.

Trouble	Possible cause	Corrective action
Pressure hose burst	Excessive holding time of relief status	Instruct customers.
	Malfunction of the relief valve	Replace the oil pump.
	Poor cold characteristic of fluid	Replace fluid.
Disconnection of the suction hose or return hose	Improper connection	Repair.
	Loosening of the clip	Replace the hose and clip.
	Poor cold characteristic of fluid	Replace fluid.
Fluid slightly leaking out of hose	Wrong layout, tensioned	Replace the hose.
	Excessive play of engine due to deterioration of engine mounting rubber	Replace the parts if defective.
	Improper stop position of pitching stopper	Replace the parts if defective.
Crack on hose	Excessive holding time of relief status	Replace. Instruct customers.
	Power steering fluid, engine oil, electrolyte adhere on the hose surface	Replace. Be careful during service work.
	Too many uses in extremely cold weather	Replace. Instruct customers.

NOTE:
There are conditions in which a fluid leak is diagnosed, but is not actually leaking. This is because the fluid spilt during the last maintenance was not completely wiped off. Be sure to wipe off spilt fluid thoroughly after maintenance.

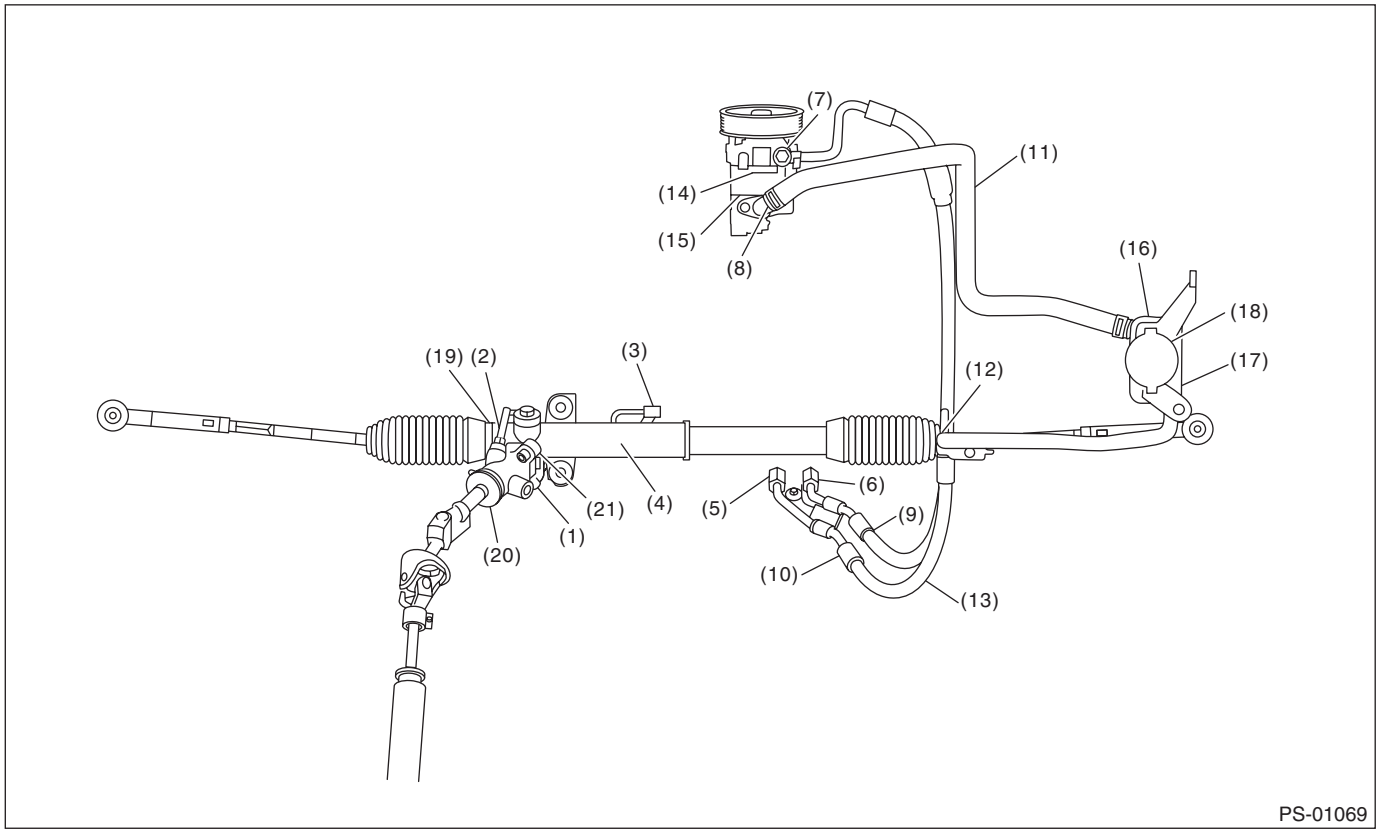

Fluid leaking area	Possible cause	Corrective action
Leakage from the connections of pipes and hoses, numbered (1) through (8) in the figure	Insufficient tightening of flare nut, adhesion of dirt, damage to flare or flare nut or eye bolt	Loosen and retighten. Replace if ineffective.
	Improper installation of hose or clamp	Replace.
	Damaged O-ring or gasket	Replace the O-ring, gasket pipe or hose with new part, if still no improvement, replace the gearbox or oil pump as well.
Leakage from hose (9) through (13) in the figure	Crack or damage in hose	Replace with a new part.
	Crack or damage in hose hardware	Replace with a new part.
Leakage from surrounding of aluminum portion of oil pump, (14) and (15) in the figure	Damaged O-ring	Replace the oil pump.
	Damaged gasket	Replace the oil pump.
Leakage from oil tank, (16) and (17) in the figure	Crack in oil tank	Replace the oil tank.
Leakage from filler neck of (18)	Damaged cap gasket	Replace the cap.
	Crack in root of filler neck	Replace the oil tank.
	Fluid level too high	Adjust the fluid level.
Leakage from power cylinder of gearbox area (19) in the figure	Damaged oil seal	Replace the oil seal.
Leakage from (20), (21) in the figure and control valve of gearbox	Damaged gasket or oil seal	Replace the faulty parts.
	Damage in control valve	Replace the control valve.

7. Oil Pump

A: REMOVAL

1) Disconnect the ground cable from battery.
2) Remove the V-belts. <Ref. to ME(H4SO)-43, REMOVAL, V-belt.>
3) Remove the power steering oil pump assembly.
   (1) Disconnect the connector from power steering pump switch.
   (2) Disconnect the pressure hose (b) and suction hose (a) from power steering oil pump.

CAUTION:
- **Do not allow fluid to come into contact with the pulley belt.**
- **Plug the ends of the hose and pipe to prevent foreign matter from entering.**

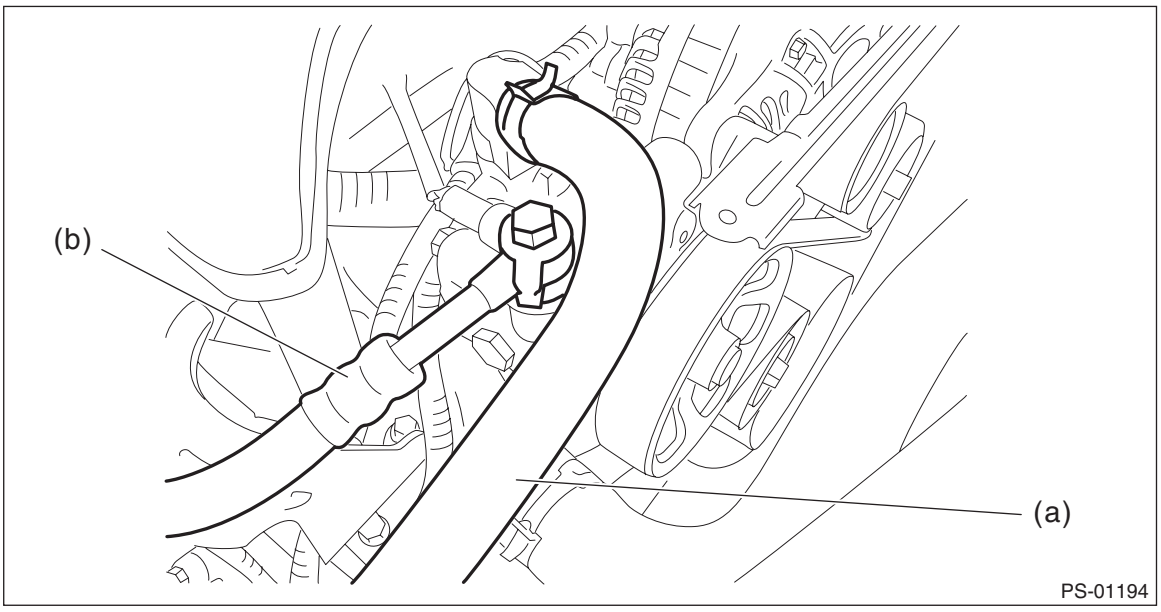

   (3) Remove the bolts, and remove the power steering oil pump assembly.

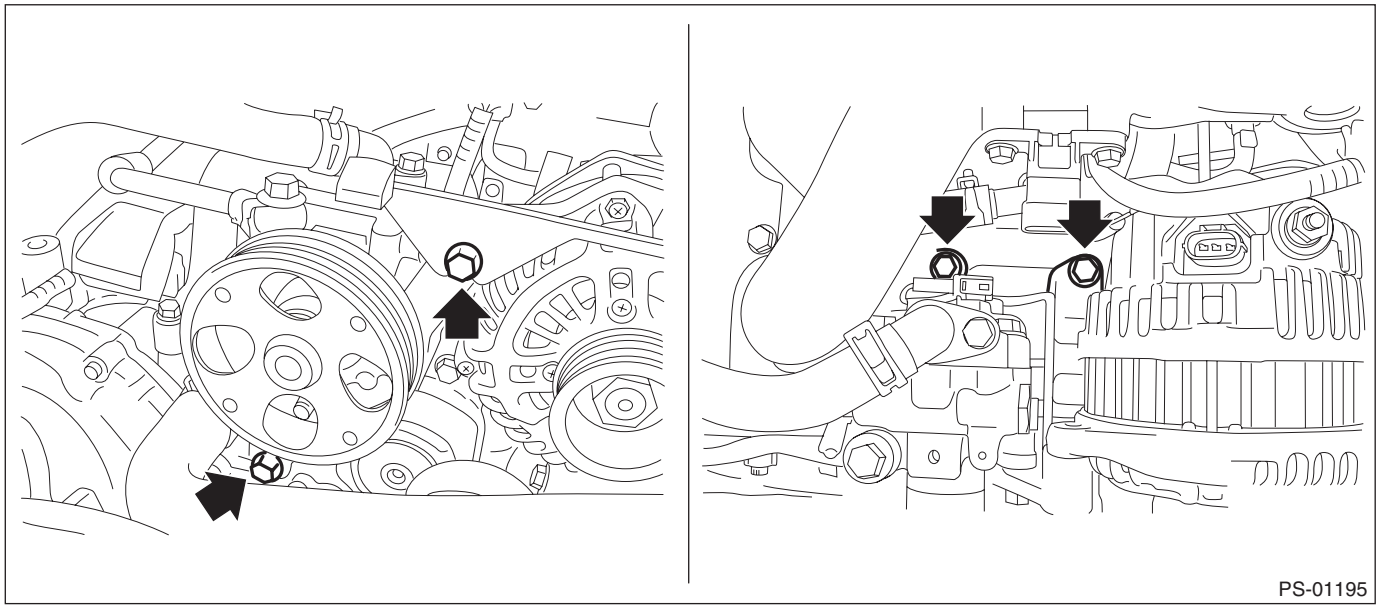

4) Secure the oil pump bracket in a vise, and remove the bolts from both front and rear sides of the oil pump.

CAUTION:
When securing the oil pump bracket in a vice, hold the oil pump bracket with the least possible force between two pieces of wood.

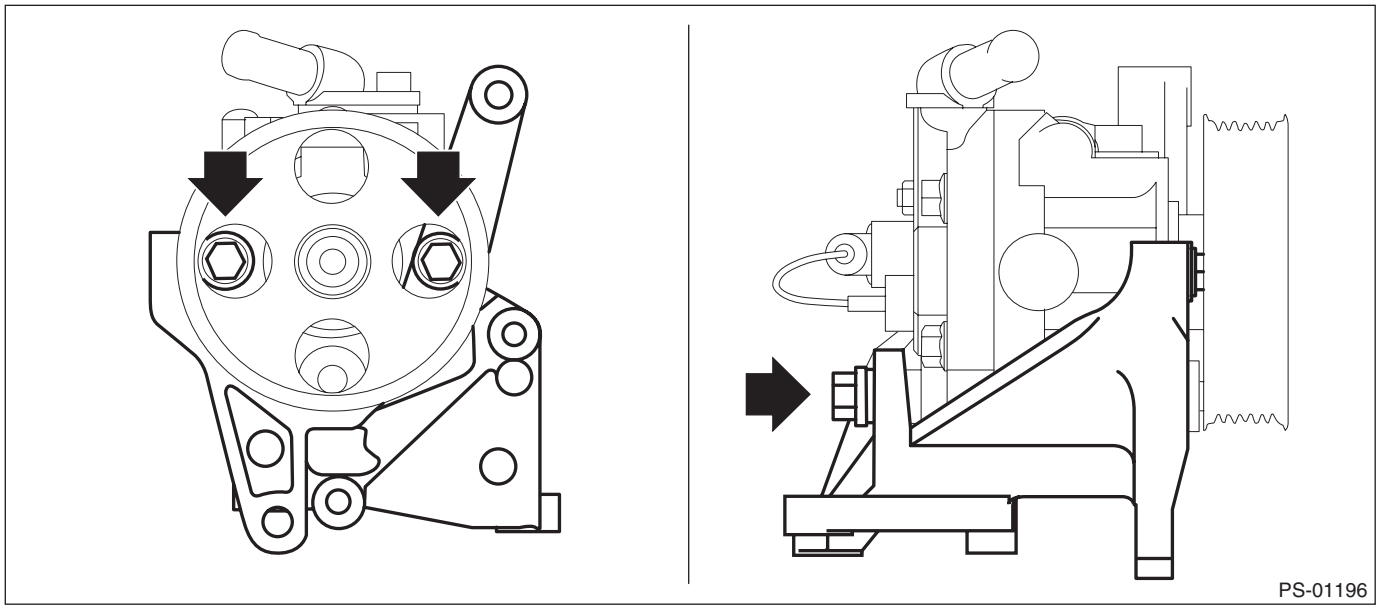

5) Remove the power steering oil pump assembly from the bracket.

B: INSTALLATION

1) Install the bracket to the power steering oil pump.

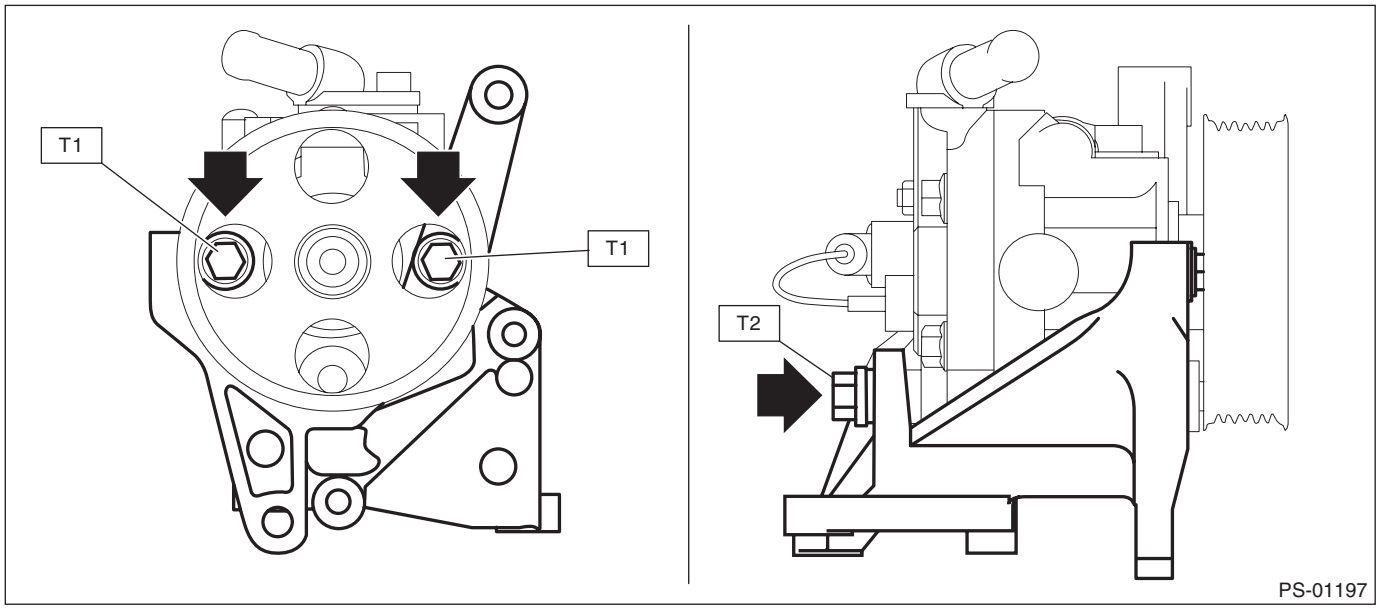

Tightening torque:
T1: 16 N·m (1.63 kgf-m, 11.8 ft-lb)
T2: 36 N·m (3.67 kgf-m, 26.6 ft-lb)

2) Install the power steering pump bracket.

Tightening torque:
H4 model: 22 N·m (2.24 kgf-m, 16.2 ft-lb)
H6 model: 33 N·m (3.36 kgf-m, 24.3 ft-lb)

3) Connect the pressure hose (b) and suction hose (a).

CAUTION:
Be careful when installing; If the hose is twisted it may come into contact with other parts.

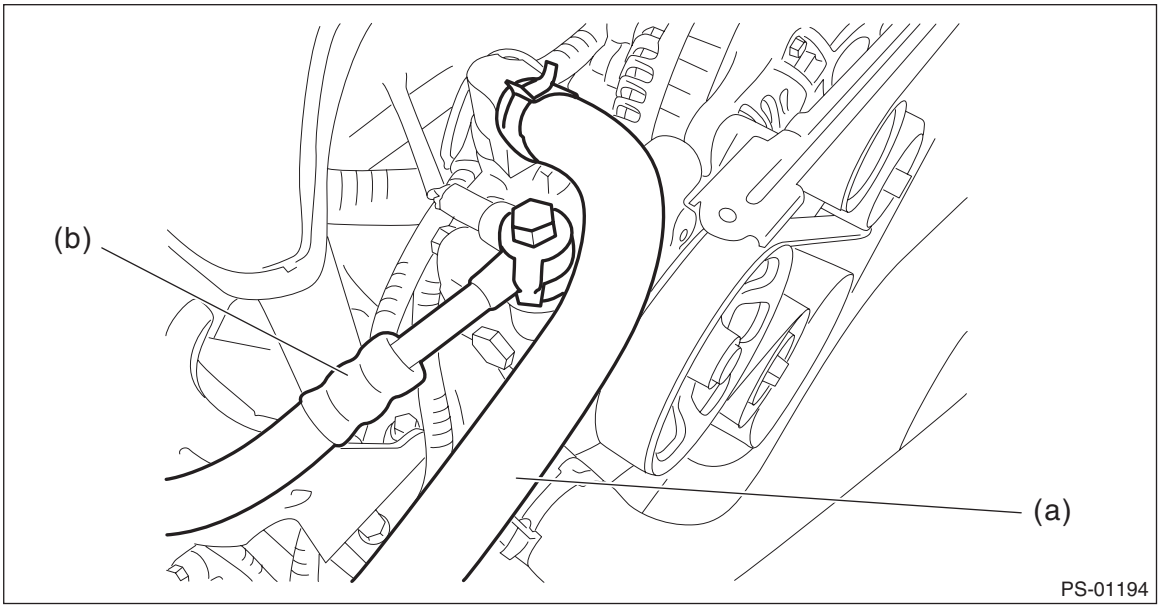

Tightening torque:
Eye bolt: 40 N·m (4.08 kgf-m, 29.5 ft-lb)

4) Connect the power steering pump switch to the connector.
5) After installing the oil pump, fill the oil pump with as much fluid as possible by rotating the pulley by hand.

CAUTION:
Always fill the oil pump with the fluid to prevent abnormal noise and seizure of the oil pump.

6) Install the V-belts. <Ref. to ME(H4SO)-43, INSTALLATION, V-belt.>
7) Connect the battery ground terminal.
8) Fill with recommended power steering fluid and perform air bleeding. <Ref. to PS-77, Power Steering Fluid.>

CAUTION:
Never start the engine before filling with fluid; otherwise the vane pump may become seized.

C: INSPECTION

1. BASIC INSPECTION

Perform the following inspection procedures and replace any faulty parts.

No.	Parts	Inspection	Corrective action
1	Oil pump (Exterior)	(1) Crack, damage or oil leakage	Replace the oil pump with a new part.
		(2) Play of pulley shaft	Measure the radial play and axial play. If any of these exceeds the service limit, replace the oil pump with a new part.
2	Pulley	(1) Damage	Replace with a new part.
		(2) Bend	Measure the V groove deflection. If it exceeds the service limit, replace the pulley with a new part.
3	Oil pump (Interior)	(1) Faulty or seized of vane pump	Check the rotating resistance of pulley. If it exceeds the service limit, replace the oil pump with a new part.
		(2) Bend in the shaft or damage to bearing	If the a string is wrapped on the pulley and rotated, and the oil pump emits a noise that is markedly different in tone and loudness from a sound of a new oil pump, replace the oil pump with a new part.
4	O-ring	Cracking or deterioration	Replace with a new part.
5	Bracket	Cracks	Replace with a new part.

2. SERVICE LIMIT

Make a measurements as follows. If it exceeds the service limit, replace with a new part.

CAUTION:
• When securing the oil pump on a vise, hold the oil pump with the least possible force between two pieces of wood.
• Do not set the outside of flow control valve or pulley on a vise; otherwise outside or pulley might be deformed. Select properly sized wood pieces.

1) Play of the pulley shaft

Condition:
P: When applying a force of 9.8 N (1.0 kgf, 2.2 lbf)

Service limit:
Play in the radial direction (Direction ⬅ ➡):
0.2 mm (0.008 in) or less
Axial play (Direction ⇦ ⇨):
0.9 mm (0.035 in) or less

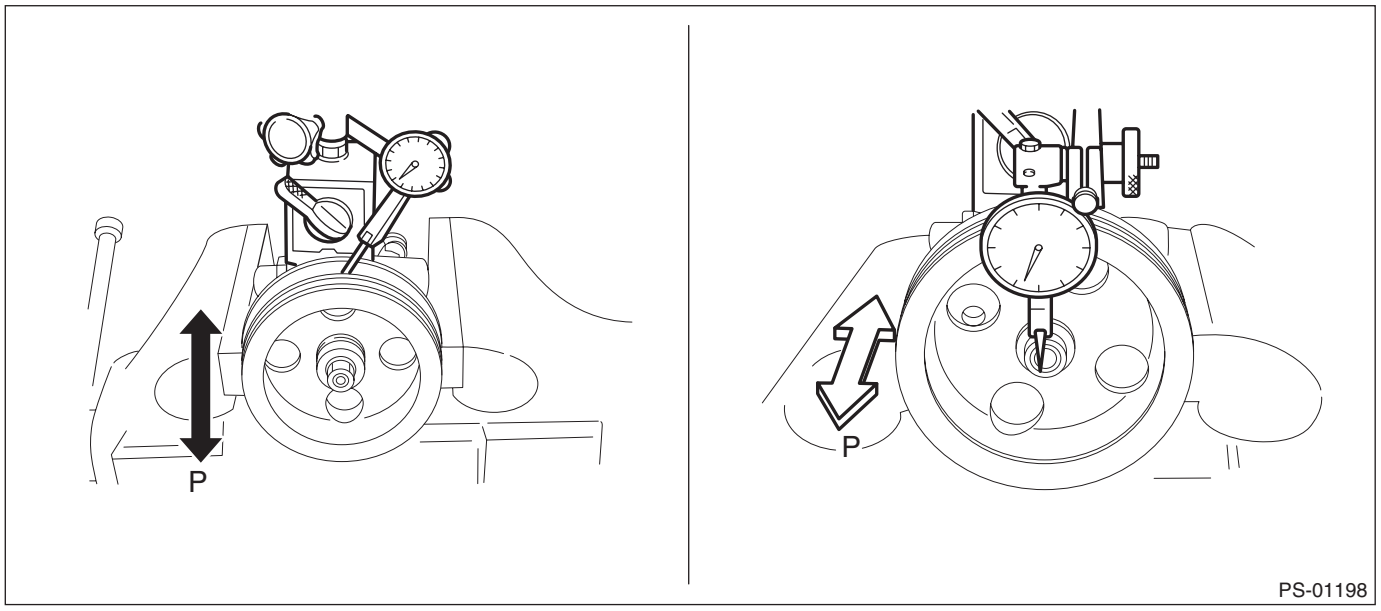

2) Deflection of the pulley groove

Service limit:
1.0 mm (0.039 in) or less

NOTE:
Read the value on one surface of V groove, set the dial gauge on the other surface, and read the value of the dial gauge.

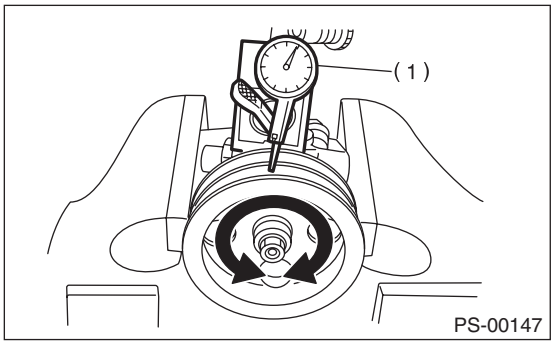

(1) Dial gauge

3) Rotating resistance of pulley

Service limit:
Maximum load: 9.22 N (0.94 kgf, 2.07 lbf) or less

NOTE:
- A rather higher value may be indicated when pulley starts turning.

- Measure the load during rotation to make a judgment.

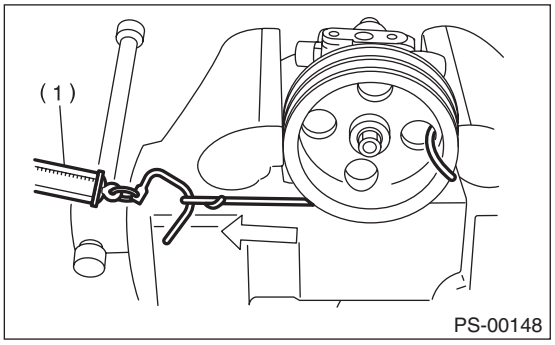

(1) Spring scale

3. HYDRAULIC PRESSURE

CAUTION:
• To measure hydraulic pressure correctly, be sure to complete all the items in "INSPECTION", prior to performing the measurement. <Ref. to PS-78, INSPECTION, General Diagnostic Table.>
• Do not leave the valve of pressure gauge closed or hold the steering wheel at lock for 5 seconds or more in any case, this can damage the oil pump.
• Before attaching a pressure gauge, place cloth at locations where fluid is expected to spill. Wipe off any spilt fluid completely after the measurement.

Regular pressure measurement

1) Connect the ST1, ST2 and ST3.

PREPARATION TOOL:
ST1: PRESSURE GAUGE (925711000)
ST2: ADAPTER HOSE B (34099AC020)
ST3: ADAPTER HOSE A (34099AC010)

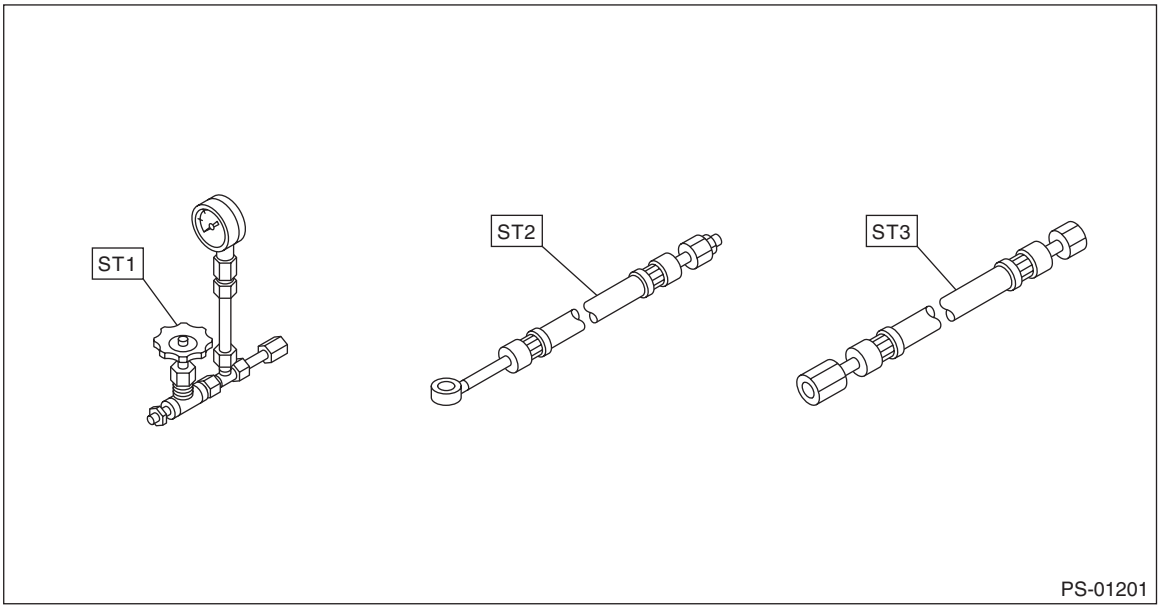

2) Remove the air intake duct.
3) Disconnect the pressure hose (a) from the pump.

4) Using the gasket (Part No. 34621AC021) and bolt (Part No. 34620AC010), install the ST2 to pump instead of pressure hose (a).

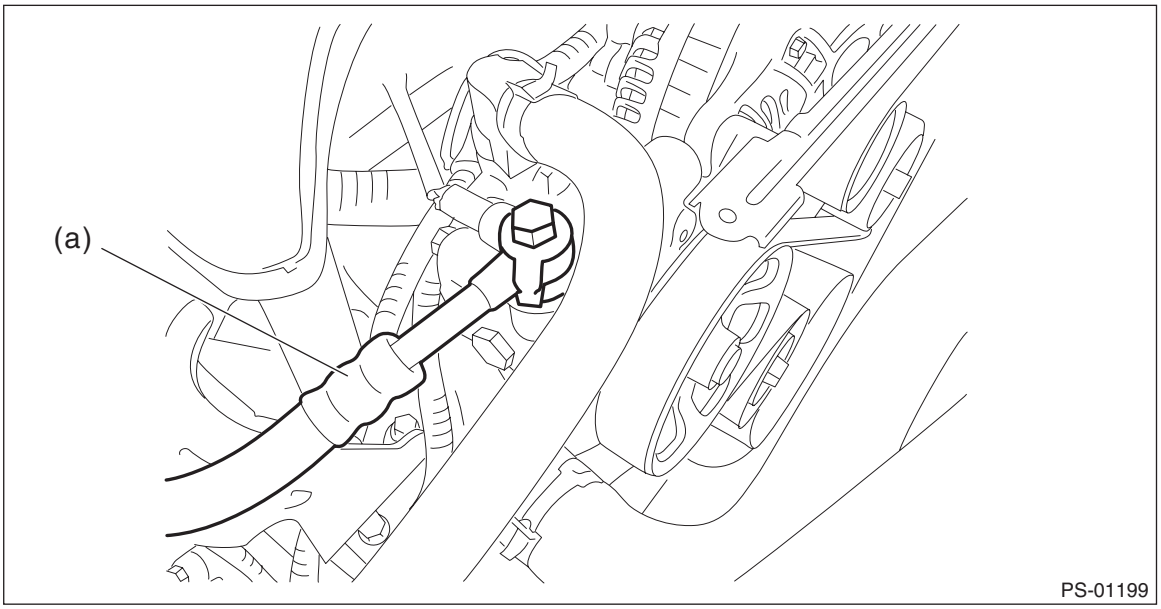

5) Attach the ST3 to the end of pressure hose which is removed from pump.
6) Replenish power steering fluid up to the specified level.
7) Open the valve, and start the engine.

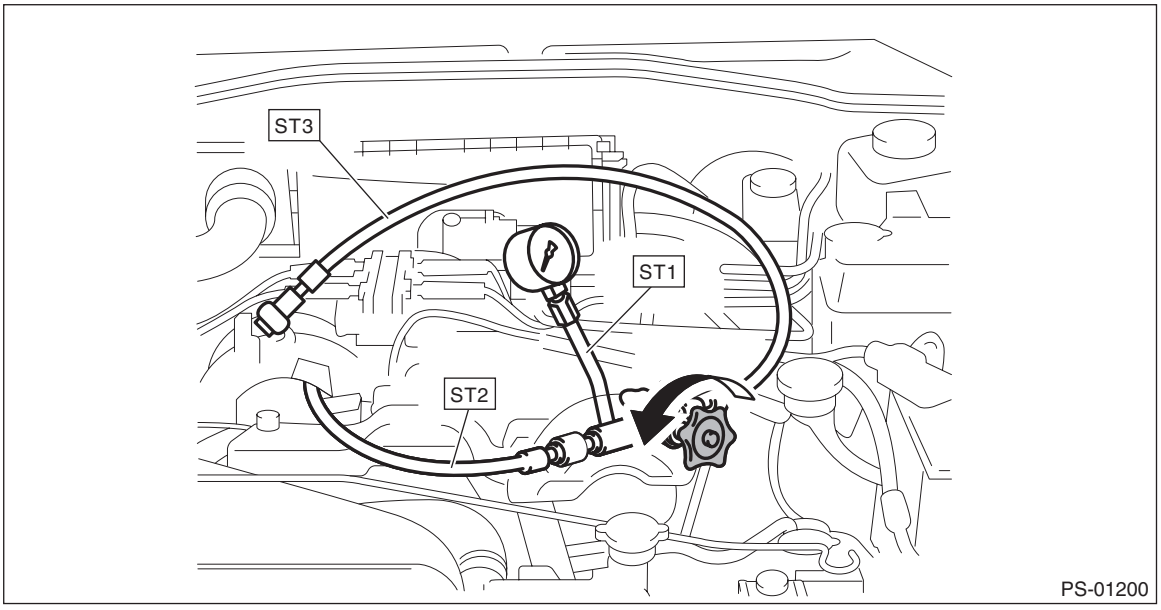

8) Measure the regular pressure.

Service limit:
981 kPa (10 kgf/cm^2, 142 psi) or less

9) If it is not within the specification, replace the faulty part for the following problems. (Pipe or hose clogged, leaks from fluid line, and mixture of foreign matter in fluid line)

Relief pressure measurement

1) Attach ST1, ST2 and ST3 to the vehicle body in the same way as for regular pressure measurement.

PREPARATION TOOL:
ST1: PRESSURE GAUGE (925711000)
ST2: ADAPTER HOSE B (34099AC020)
ST3: ADAPTER HOSE A (34099AC010)

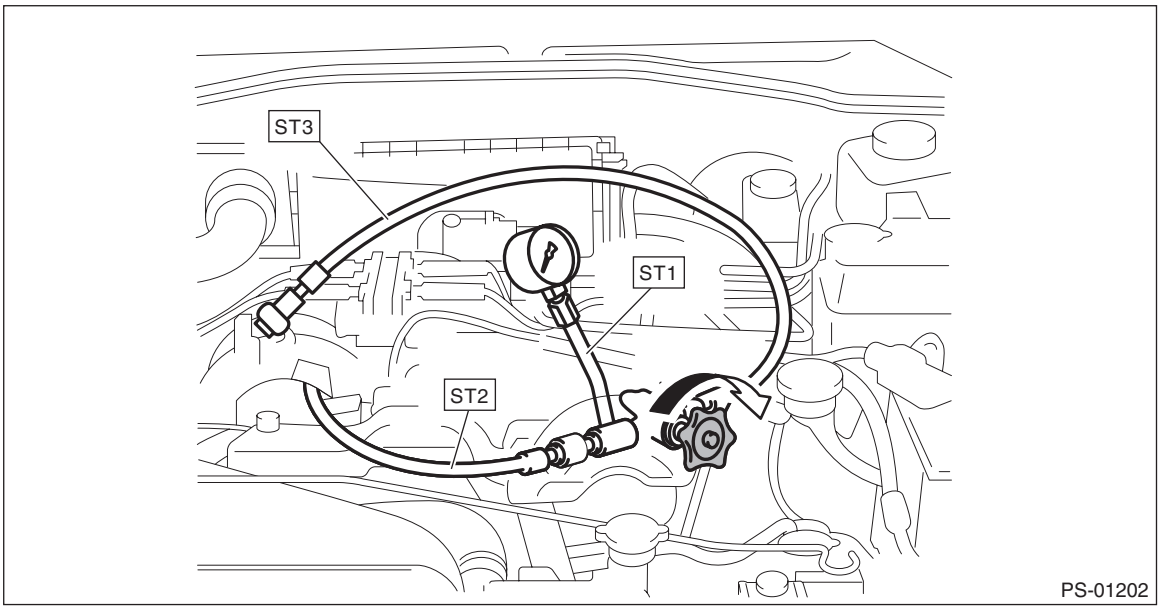

2) Close the valve.
3) Measure the relief pressure.

Service limit:
H4 non-turbo model:
8,300 — 9,000 kPa (85 — 92 kgf/cm^2, 1,203 — 1,305 psi)
H6, H4 turbo model:
8,900 — 9,600 kPa (91 — 98 kgf/cm^2, 1,290 — 1,392 psi)
4) If the torque is not within specified range, replace the oil pump.

Working pressure measurement

1) Attach ST1, ST2 and ST3 to the vehicle body in the same way as for regular pressure measurement.

PREPARATION TOOL:
ST1: PRESSURE GAUGE (925711000)
ST2: ADAPTER HOSE B (34099AC020)
ST3: ADAPTER HOSE A (34099AC010)

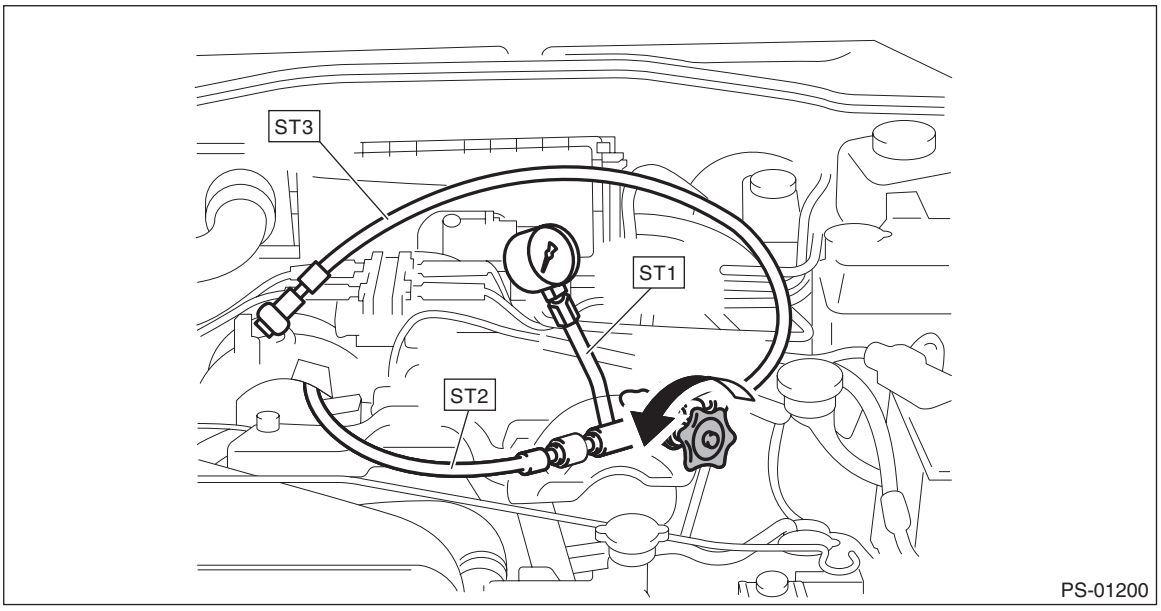

2) Open the valve.
3) Measure the working pressure of control valve by turning steering wheel from stop to stop.

Service limit:
H4 non-turbo model:
8,300 — 9,000 kPa (85 — 92 kgf/cm^2, 1,203 — 1,305 psi)
H6, H4 turbo model:
8,900 — 9,600 kPa (91 — 98 kgf/cm^2, 1,290 — 1,392 psi)

4) If it is out of specification, measure the steering effort. <Ref. to PS-82, MEASUREMENT OF STEERING EFFORT, INSPECTION, General Diagnostic Table.>
If the steering wheel effort is not within specification, replace the control valve itself or control valve and pinion as a single unit, using new parts.

8. Reservoir Tank

A: REMOVAL

1) Drain fluid from the reservoir tank.
2) Disconnect the hose from reservoir tank.

CAUTION:
Plug the ends of the hose and pipe to prevent foreign matter from entering.
3) Remove the reservoir tank from the body.

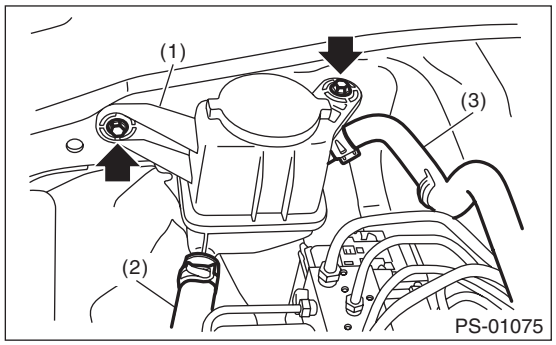

(1) Reservoir tank
(2) Suction hose
(3) Return hose

B: INSTALLATION

1) Install the reservoir tank to the body.

Tightening torque:
13 N·m (1.33 kgf-m, 9.6 ft-lb)
2) Connect the hose to the reservoir tank.

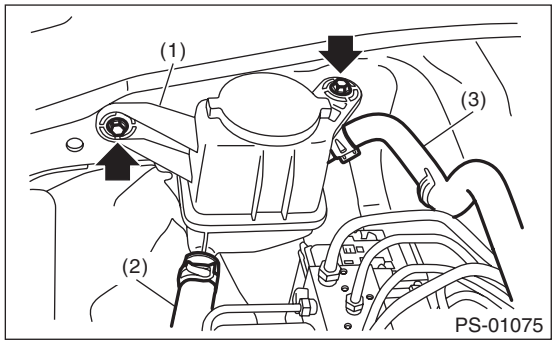

(1) Reservoir tank
(2) Suction hose
(3) Return hose

3) Replenish power steering fluid up to the specified level. <Ref. to PS-77, INSPECTION, Power Steering Fluid.>

C: INSPECTION

Check the reservoir tank for cracks, breakage or damage. If a failure is found, replace the reservoir tank.

9. Power Steering Fluid

A: SPECIFICATION

Recommended power steering fluid:
SUBARU ATF or DEXRON III

B: INSPECTION

1) Check the power steering fluid for deterioration or contamination. If the fluid is highly deteriorated or contaminated, drain it and refill with new fluid.
2) Check the joints and units for oil leakage. If any oil leaks are found, repair or replace the applicable part.
3) Inspect the fluid level of reservoir tank with vehicle on level surface and engine stopped.
If the level is at “MIN.” point or below, add fluid to keep the level in the specified range of the indicator. If at “MAX”. point or above, drain fluid by using a syringe or the like.
(1) Check at power steering fluid temperature 20°C (68°F); read the fluid level on the “COLD” side.
(2) Check at power steering fluid temperature 80°C (176°F); read the fluid level on the “HOT” side.

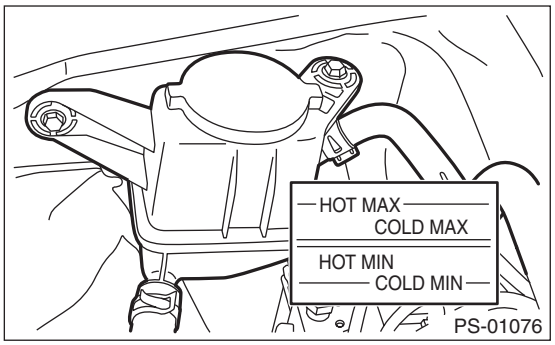

C: REPLACEMENT

1) Lift up the vehicle.
2) Drain the power steering fluid.
3) Add the specified fluid to reservoir tank at “MAX” level.
4) Continue to turn the steering wheel slowly from lock to lock until the bubbles stop appearing on oil surface while keeping the fluid at the level in the Step 3).
5) If the steering wheel is turned in a low fluid level condition, air will be sucked into the pipe. If air has entered, leave it for about half an hour and then repeat step 4) again.
6) Start the engine and let it idle.
7) Continue to turn the steering wheel slowly from lock to lock again until the bubbles stop appearing on oil surface, while keeping the fluid at the level in Step 3).
Normally bubbles will stop appearing after turning the steering wheel from lock to lock three times.
8) In case bubbles do not stop appearing in the tank, leave it for about half an hour and then repeat from step 3) again.
9) Lower the vehicle, and then idle the engine.
10) Continue to turn the steering wheel from lock to lock until the bubbles stop appearing and change of the fluid level is within 3 mm (0.12 in).
11) In case the following happens, leave it about half an hour and then perform step 7) to 10) again.
(1) The fluid level changes by 3 mm (0.12 in) or more.
(2) Bubbles remain on the upper surface of the fluid.
(3) Grinding noise is generated from oil pump.
12) Check the fluid leakage after turning steering wheel from lock to lock with engine running.

10.General Diagnostic Table

A: INSPECTION

Trouble	Possible cause	Corrective action
• Steering effort is heavy in all ranges. • Steering effort is heavy at stand still. • Steering wheel vibrates when turning.	1. Tire and wheel • Improper tire out of specifications*1 • Improper wheel out of specifications*1 • Tires not properly inflated	Replace or reinflate the tire and wheel. Perform above or instruct customer.
	2. Idle speed • Lower idle speed • Excessive drop of idle speed at start or when turning the steering wheel *3	Adjust the idle speed or instruct customer.
	3. Fluid • Low fluid level • Air entry in fluid • Dust entry in fluid • Fluid deterioration • Inadequate warm up of fluid *2	Refill the fluid, bleed air, replace or instruct customer.
	4. Pulley belt • Unequal length of pulley belts • Contact with oil or grease • Looseness or damage of the pulley belt • Poor uniformity of the pulley belt cross section • Pulley belt touches to pulley bottom • Poor revolution of pulleys (except oil pump pulley) • Poor revolution of oil pump pulley	Adjust or replace the faulty parts.
	5. Fluid line Fluid leakage from fluid line	Replace the faulty parts.
	6. Measure the hydraulic pressure. <Ref. to PS-70, INSPECTION, Oil Pump.>	Replace the faulty parts.
	7. Measure the steering wheel effort. <Ref. to PS-82, MEASUREMENT OF STEERING EFFORT, INSPECTION, General Diagnostic Table.>	Adjust or replace.
• Vehicle leads to one side or the other. • Returning force of steering wheel to center is poor. • Steering wheel vibrates when turning.	1. Tire and wheel • Flat tire • Mixed use of different tires • Mixed use of different wheels • Abnormal wear of tire • Unequal tread remaining • Unequal pressure of tire	Adjust, fix or replace.
	2. Front alignment • Improper or unequal caster • Improper or unequal toe-in • Loose suspension connections	Adjust or retighten.
	3. Others • Damaged joint assembly • Unbalance of ground clearance • Unbalance of load	Replace, adjust or instruct customer.
	4. Measure the steering wheel effort. <Ref. to PS-82, MEASUREMENT OF STEERING EFFORT, INSPECTION, General Diagnostic Table.>	Adjust or replace.

*1 If the tires or wheels are wider than standard, the load to power steering system is increased. Accordingly, in a condition, for example before fluid warms-up, relief valve may work before reaching maximum turning angle. In this case, steering effort may be heavy. When the measured hydraulic pressure is normal, there is no abnormal thing.
*2 In cold weather, steering effort may be heavy due to increased flow resistance of cold fluid. After warming-up engine, turn the steering wheel from stop to stop several times to warm up fluid. If steering effort reduces normally, function is normal.

*3 In cold weather or with insufficient warm up of the engine, steering effort may be heavy due to excessive drop of idling when turning the steering wheel. In this case, start the vehicle with increasing engine speed than usual. If steering effort reduces normally, function is normal.

1. NOISE AND VIBRATION

CAUTION:
Do not keep the relief valve operated for five seconds or more at any time or inner parts of the oil pump may be damaged due to rapid increase of fluid temperature.

NOTE:
• A screeching noise may be heard immediately after the engine start in extremely cold conditions. In this case, if the noise goes off during warm up there is no abnormal function in the system. This is due to the fluid characteristics in extremely cold condition.
• The oil pump normally makes a small whining noise due to its mechanism. Even if a noise is heard when steering wheel is turned at stand still, there is no abnormal function in the system provided that the noise eliminates when the vehicle is driving.
• When turning the steering wheel with the brake applied when the vehicle is parked, a screeching noise may be generated by the brake disc and pads. This is not a fault in the steering system.
• There may be a small vibration around the steering devices when turning the steering wheel at standstill, even though the component parts are operating properly.
Hydraulic systems are likely to generate this kind of vibration as well as working noise and fluid noise because of combined conditions, i.e., road surface and tire surface, engine speed and turning speed of steering wheel, fluid temperature and braking condition.
These conditions do not indicate a problem in the system.
Confirm vibration for an AT model, by applying the parking brake on a concrete surface, shifting into the “D” range, and turning the steering wheel repeatedly from slow to rapid, step by step.

Trouble	Possible cause	Corrective action
Hiss noise (continuous) While engine is running.	Relief valve emits operating sound when steering wheel is completely turned in either direction. (Do not keep this condition for 5 seconds or more.)	Normal
	Relief valve emits operating sound when steering wheel is not turned. This means that the relief valve is defective.	Replace the oil pump.
Rattling noise (intermittent) While engine is running.	Interference with adjacent parts	Check the parts for deformation. Replace or adjust if necessary.
	Loosened installation of oil pump, oil tank, pump bracket, gearbox or crossmember	Retighten.
	Loose oil pump pulley or other pulley(s)	Retighten.
	Looseness of linkage, play of steering, improper tightening (looseness) of suspension joint or steering column	Retighten or replace.
	Sound generates from the inside of gearbox or oil pump.	Replace faulty parts in the gearbox or oil pump.
Knocking When turning steering wheel in both directions with small angle repeatedly at engine ON or OFF.	Excessive backlash Loosened lock nut for adjusting backlash	Adjust and retighten.
	Insufficient tightening or play in the tie-rod or tie-rod end	Retighten or replace.
Grinding noise (continuous) While engine is running.	Air in vane pump	Inspect and retighten the fluid line connection. Refill the fluid and vent air.
	Vane pump seizing	Replace the oil pump.
	Oil pump pulley bearing seized	Replace the oil pump.
	Folded hose, flattened pipe	Replace.
Squeal, squeak (intermittent or continuous) While engine is running.	Improper adjustment of pulley belt Damaged or over tensioned pulley belt Unequal length of pulley belts	Adjust or replace.
	Runout or dirty V-groove surface of oil pump pulley	Clean or replace.

Trouble	Possible cause	Corrective action
Sizzling noise (continuous) While engine is running.	Fluid aeration	Fix the faulty part causing aeration. Replace the fluid and vent air.
	Damaged pipe of gearbox	Replace the pipe.
	Faulty inside of hose or pipe Flattened hose or pipe	Repair or replace.
	Abnormal inside of oil tank	Replace.
	Removed oil tank cap	Install cap.
Whistle (continuous) While engine is running.	Faulty pipe of gearbox or faulty hose	Replace the faulty parts of the gearbox or the hose.
Whine or growl (intermittent or continuous) While engine is running with/ without steering turned.	Looseness of oil pump, oil pump bracket attachment	Retighten.
	Fault inside of oil pump or hose	Replace the oil pump or hose, if the noise can be heard when vehicle is running as well as being stopped.
	Torque converter growl, air conditioner compression growl	Remove the power steering pulley belt and check.
Grinding noise (continuous) When engine operates (when operating steering wheel)	Fault inside of gearbox	Replace the faulty parts of gearbox.
	Faulty steering shaft bearing	Apply grease or replace.
	Occurs when turning the steering wheel with brakes (service or parking) applied.	If the noise goes off when brake is released, it is normal.
Vibration While engine is running with/ without steering turned.	Engine speed is too low.	Adjust, and notify customer.
	Air in vane pump	Repair faulty part Vent air.
	Damaged valve in oil pump or gearbox	Replace the faulty parts in gearbox and oil pump.
	Excessive play in steering, looseness of suspension parts	Retighten.

2. MEASUREMENT OF STEERING EFFORT

	Step	Check	Yes	No
1	**CHECK STEERING EFFORT.** 1) Stop the vehicle on paved road. 2) Start the engine. 3) Run the engine at idle. 4) Install a spring scale on the steering wheel. 5) Pull the spring scale at a right angle to the steering wheel, and measure both right and left steering wheel efforts. 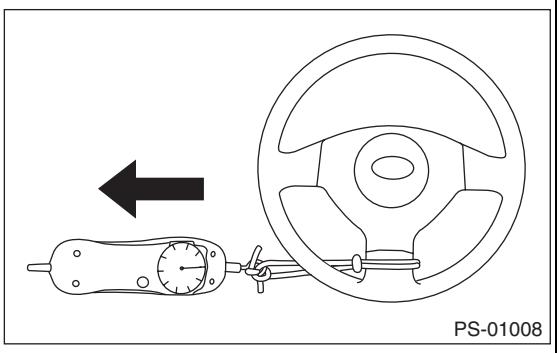 PS-01008 NOTE: When turning the steering more quickly than necessary from a direction to the other direction at an engine speed of 2,000 rpm or higher, steering effort may be heavy. This is caused by flow characteristic of the fluid in the oil pump and is not a defect.	Is the steering effort less than 29.4 N (3.0 kgf, 6.6 lbf)?	Steering effort is normal. (Finish the diagnosis)	Go to step **2**.
2	**CHECK STEERING EFFORT.** 1) Stop the engine and lift it up. 2) Pull the spring scale at a right angle to the steering wheel, and measure both right and left steering wheel efforts.	Is the steering effort less than 30 N (3.1 kgf, 6.7 lbf)?	Go to step **3**.	Perform the backlash adjustment.
3	**CHECK STEERING WHEEL EFFORT.** 1) Remove the universal joint. 2) Measure the steering wheel effort.	Is the steering effort less than 2.26 N (0.23 kgf, 0.51 lbf)?	Go to step **4**.	Replace the steering column.
4	**CHECK STEERING WHEEL EFFORT.** Measure the steering wheel effort.	Is the difference of steering effort between right and left less than 20%?	Go to step **5**.	Replace the steering column.
5	**CHECK UNIVERSAL JOINT.** Measure the swing torque of joint. (Yoke of steering column side) <Ref. to PS-23, INSPECTION, Universal Joint.>	Is the swing torque of the universal joint less than 7.3 N (0.74 kgf, 1.64 lbf)?	Go to step **6**.	Replace the universal joint.
6	**CHECK UNIVERSAL JOINT.** Measure the swing torque of joint. (Yoke of gearbox side) <Ref. to PS-23, INSPECTION, Universal Joint.>	Is the swing torque of the universal joint less than 3.8 N (0.39 kgf, 0.86 lbf)?	Go to step **7**.	Replace the universal joint.
7	**CHECK FRONT WHEEL.** Check the front wheels.	Does the front wheels have unsteady revolution or rattling, or does the brake drag?	Inspect, readjust and replace if necessary.	Go to step **8**.
8	**CHECK TIE-ROD ENDS.** Remove the tie-rod end from the front housing.	Does the tie-rod and tie-rod end have unsteady revolution or rattling?	Inspect and replace if necessary.	Go to step **9**.
9	**CHECK GEARBOX.** Measure the rotating of gearbox. <Ref. to PS-56, SERVICE LIMIT, INSPECTION, Steering Gearbox.>	Is the rotational resistance of the steering gearbox less than 13 N (1.3 kgf, 2.9 lbf)? Is the difference between the right and left rotational resistances less than 24%?	Go to step **10**.	Readjust the backlash, and if ineffective, replace the faulty parts.

Step		Check	Yes	No
10	**CHECK GEARBOX.** Measure the sliding of gearbox. <Ref. to PS-56, SERVICE LIMIT, INSPECTION, Steering Gearbox.>	Is the sliding resistance of the steering gearbox less than 314 N (32 kgf, 71 lbf)? Is the difference between the right and left sliding resistances less than 20%?	Steering effort is normal. Check the front suspension.	Readjust the backlash, and if ineffective, replace the faulty parts.

BODY SECTION

This service manual has been prepared to provide SUBARU service personnel with the necessary information and data for the correct maintenance and repair of SUBARU vehicles.
This manual includes the procedures for maintenance, disassembling, reassembling, inspection and adjustment of components and diagnostics for guidance of experienced mechanics.
Please peruse and utilize this manual fully to ensure complete repair work for satisfying our customers by keeping their vehicle in optimum condition. When replacement of parts during repair work is needed, be sure to use SUBARU genuine parts.

All information, illustration and specifications contained in this manual are based on the latest product information available at the time of publication approval.

HVAC SYSTEM (HEATER, VENTILATOR AND A/C)	AC
HVAC SYSTEM (DIAGNOSTICS)	AC(diag)
AIRBAG SYSTEM	AB
AIRBAG SYSTEM (DIAGNOSTICS)	AB(diag)
OCCUPANT DETECTION SYSTEM (DIAGNOSTICS)	OD(diag)
SEAT BELT SYSTEM	SB
LIGHTING SYSTEM	LI
WIPER AND WASHER SYSTEMS	WW
ENTERTAINMENT	ET
COMMUNICATION SYSTEM	COM
GLASS/WINDOWS/MIRRORS	GW
BODY STRUCTURE	BS
INSTRUMENTATION/DRIVER INFO	IDI
SEATS	SE
SECURITY AND LOCKS	SL
SUNROOF/T-TOP/CONVERTIBLE TOP (SUNROOF)	SR
EXTERIOR/INTERIOR TRIM	EI

FUJI HEAVY INDUSTRIES LTD.

G2480BE7

BODY SECTION

EXTERIOR BODY PANELS	EB
CRUISE CONTROL SYSTEM	CC
CRUISE CONTROL SYSTEM (DIAGNOSTICS)	CC(diag)
IMMOBILIZER (DIAGNOSTICS)	IM(diag)
LAN SYSTEM (DIAGNOSTICS)	LAN(diag)
BODY CONTROL SYSTEM (DIAGNOSTICS)	BC(diag)

HVAC SYSTEM (HEATER, VENTILATOR AND A/C)

AC

		Page
1.	General Description	2
2.	Air Conditioning System	19
3.	Refrigerant Pressure with Manifold Gauge Set	20
4.	Refrigerant Recovery Procedure	24
5.	Refrigerant Charging Procedure	25
6.	Refrigerant Leak Check	28
7.	Relay and Fuse	30
8.	Compressor Oil	31
9.	Blower Motor Unit Assembly	32
10.	Blower Motor	36
11.	Power Transistor (Auto A/C Model)	38
12.	Blower Resistor (Manual A/C Model)	39
13.	Heater Core	41
14.	Control Panel	46
15.	Control Unit	54
16.	Compressor	55
17.	Condenser	58
18.	Heater and Cooling Unit	62
19.	Evaporator	66
20.	Expansion Valve	74
21.	Hose and Pipe	76
22.	Pressure Sensor	77
23.	Ambient Sensor (Auto A/C Model)	78
24.	Sunload Sensor (Auto A/C Model)	80
25.	In-Vehicle Sensor (Auto A/C Model)	82
26.	Evaporator Sensor	87
27.	FRESH/RECIRC Door Actuator	90
28.	Mode Door Actuator	92
29.	Air Mix Door Actuator	95
30.	Air Vent Grille	99
31.	Heater Duct	102
32.	Heater Vent Duct	103
33.	A/C Filter	104
34.	Diagnostics with Phenomenon	106

1. General Description

A: SPECIFICATION

1. HEATER SYSTEM

Item		Specifications	Condition
Heating capacity		4.8 kW (4,127 kcal/h, 16,377 BTU/h) or more	• Air flow control switch: FOOT • Temperature control switch or dial: HI (MAX HOT) • Temperature difference between hot water and inlet air: 65°C (149°F) • Hot water flow rate: 360 ℓ (95.1 US gal, 79.2 Imp gal)/h
Air flow rate		300 m^3 (10,596 cu ft)/h	FOOT mode (FRESH), MAX HOT at 12.5 V
Max air flow rate		495 m^3 (17,483 cu ft)/h	• Temperature control switch or dial: LO (MAX COOL) • Airflow adjustment switch or dial: HI (MAX) Auto A/C model: 6th position Manual A/C model: 4th position • FRESH/RECIRC switch: RECIRC
Heater core size (height × length × width)		264 × 100 × 27 mm (10.4 × 3.94 × 1.06 in)	—
Blower motor	Type	Magnet motor 260 W or less	12 V
	Fan type and size (diameter × width)	Sirocco fan type 150 × 75 mm (5.91 × 2.95 in)	—

2. A/C SYSTEM

Item			Specifications
Type of air conditioner			Reheat air-mix type
Cooling capacity			4.18 kW [at 500 m^3 (17,660 cu ft)/h] (3,594 kcal/h, 14,262 BTU/h)
Refrigerant			HFC-134a (CH_2FCF_3) [0.425±0.025 kg (0.94±0.06 lb)]
Compressor		Type	Swash plate, variable capacity (TSE14C)
		Discharge	140.6 cc (8.58 cu in)/rev
		Max. permissible speed	6,000 rpm
Pulley		Type of belt	V-belt 6 PK
		Pulley dia. (effective dia.)	110 mm (4.33 in)
		Pulley ratio	H4 model: 1.21 H6 model: 1.30
Condenser		Type	Corrugated fin (Sub cool type)
		Core face area	0.186 m^2 (2.002 sq ft)
		Core thickness	16 mm (0.63 in)
		Radiation area	5.49 m^2 (59.09 sq ft)
Receiver drier		Effective inner capacity	190 cm^3 (11.6 cu in)
Expansion valve		Type	Internally equalizing
Evaporator		Type	Double tank
		Dimensions (W × H × T)	293.1 × 171 × 38 mm (11.54 × 6.73 × 1.50 in)
Blower fan		Fan type	Sirocco fan
		Outer diameter × width	150 × 75 mm (5.91 × 2.95 in)
		Power consumption	260 W
Condenser fan (Sub fan)		Motor type	Magnet
		Power consumption	H4 non-turbo model: 90 W H4 turbo model: 120 W H6 model: 200 W
		Fan outer diameter	H4 non-turbo model: 300 mm (11.8 in) H4 turbo model: 318.5 mm (12.5 in) H6 model: 320 mm (12.6 in)
Radiator fan (Main fan)		Motor type	Magnet
		Power consumption	H4 non-turbo model: 90 W H4 turbo model: 120 W H6 model: 200 W
		Fan outer diameter	H4 non-turbo model: 300 mm (11.8 in) H4 turbo model: 318.5 mm (12.5 in) H6 model: 320 mm (12.6 in)
Idle speed	MPFI model	No load	H4 non-turbo model (MT): 650±100 rpm H4 non-turbo model (CVT): 675±100 rpm H4 turbo model: 700±100 rpm H6 model: 700±100 rpm
		A/C ON	H4 model: 700 — 850±100 rpm H6 model: 700 — 910±100 rpm

3. BASIC OPERATION

The cooling system cools down the compartment by using the pipes connecting parts and cycling the evaporable liquid (refrigerant) within the sealed system in a repeated process of “vaporization — liquefaction — re-vaporization”.

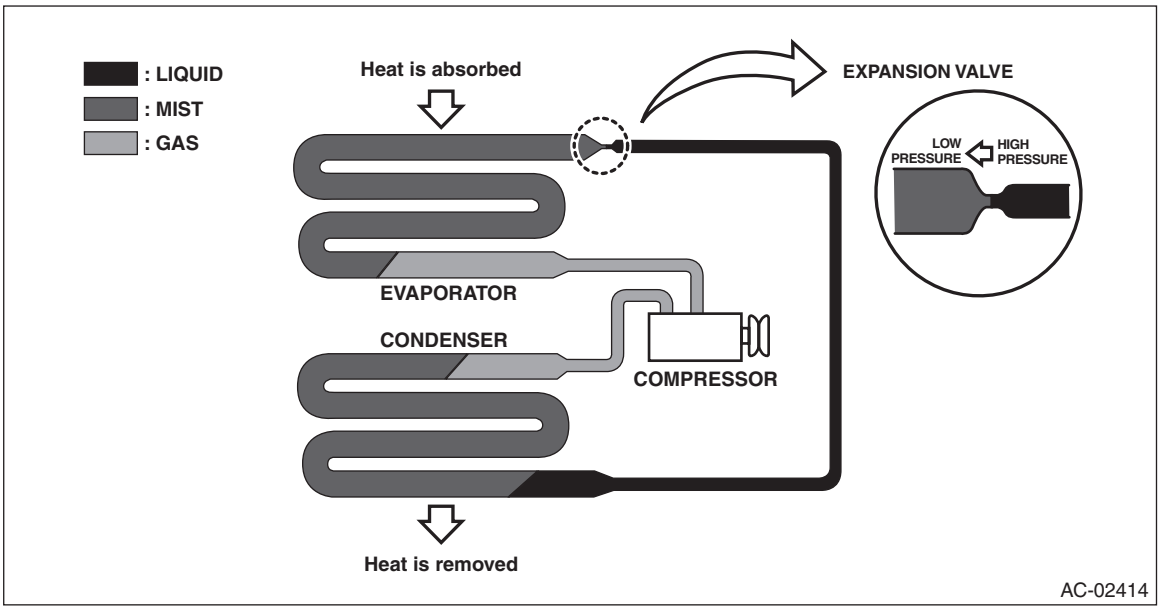

Item	Operation
Compressor	Sucks and pressurizes the low temperature, low pressure refrigerant gas that was vaporized at the evaporator by absorbing heat from the compartment, and sends the high temperature, high pressure refrigerant gas to the condenser.
Condenser	Cools the high temperature, high pressure refrigerant gas sent from the compressor for condense and liquefaction.
Expansion valve	• Sprays the high temperature, high pressure liquid refrigerant from the small hole in order to let the refrigerant expand rapidly to turn it into low temperature, low pressure mist. • The refrigerant amount is adjusted according to the refrigerant vaporization condition in the evaporator.
Evaporator	The evaporator turns into a low temperature condition when the mist refrigerant that was turned into a low temperature, low pressure condition at the expansion valve is vaporized in large quantity in the evaporator. Passing air flow through the low temperature evaporator emits cold air.

B: LOCATION

1. ELECTRICAL PARTS (ACTUATORS AND SENSORS)

- Engine compartment

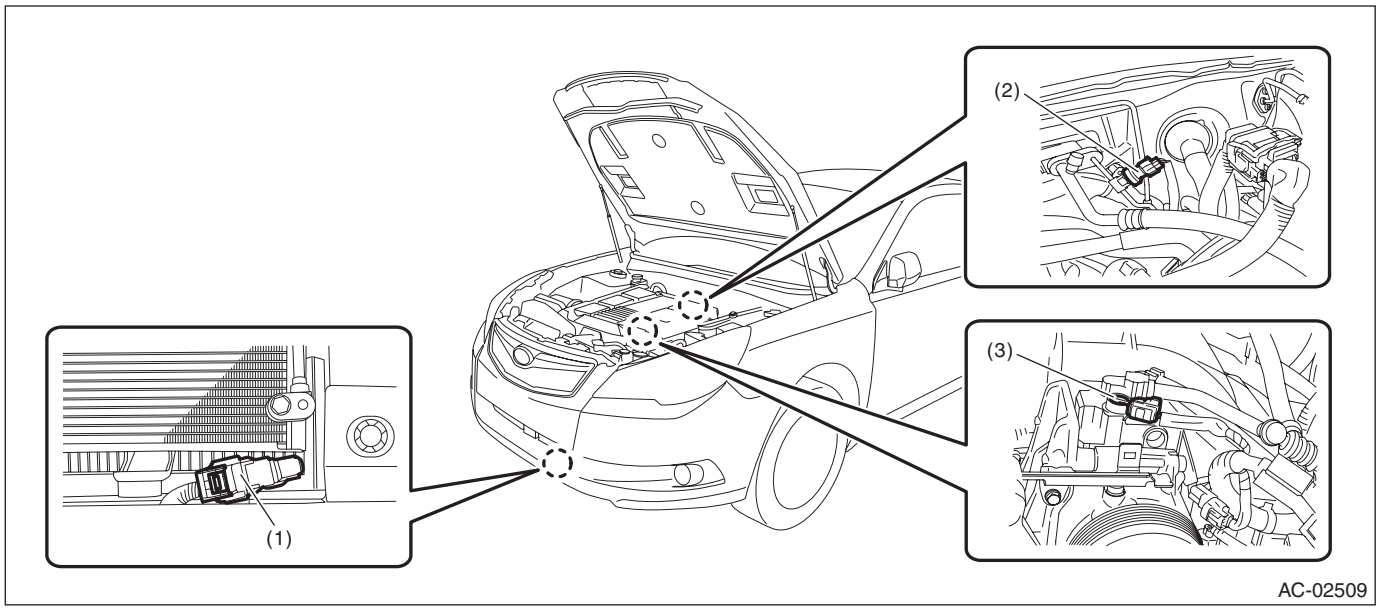

(1) Ambient sensor
(2) Pressure sensor
(3) Flow sensor

- Compartment

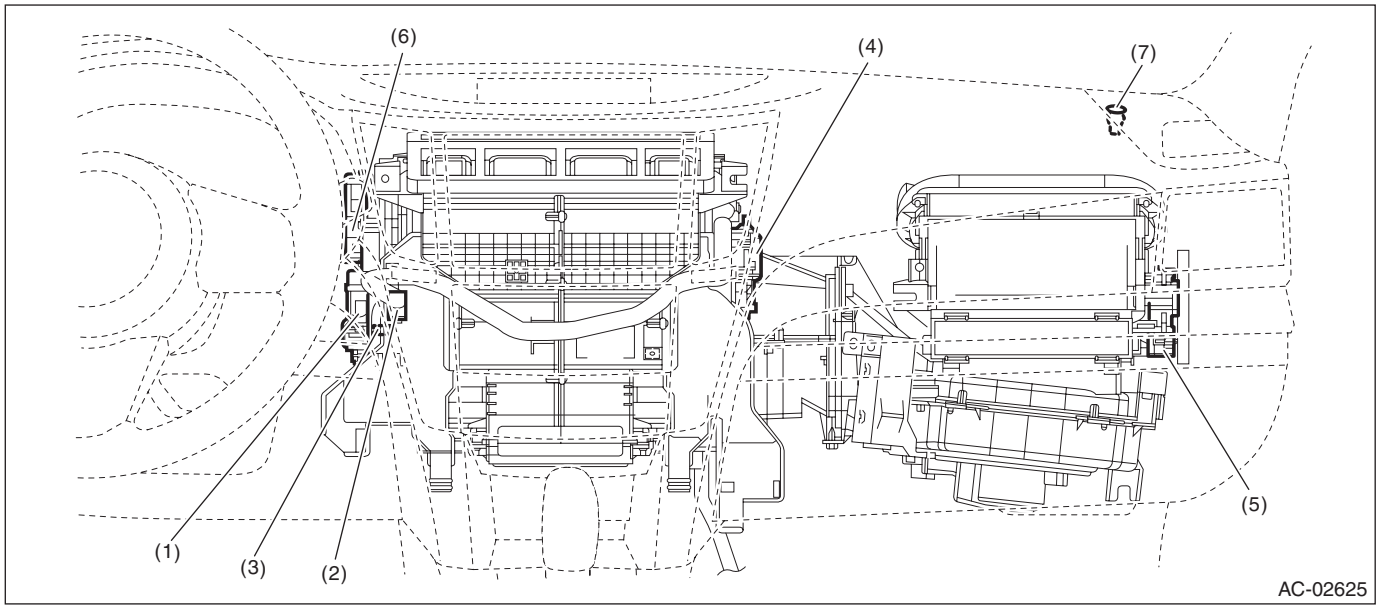

(1) Air mix door actuator (driver's seat)
(2) In-vehicle sensor
(3) Evaporator sensor
(4) Air mix door actuator (passenger's seat)
(5) Intake door actuator
(6) Mode door actuator
(7) Sunload sensor

C: COMPONENT

1. HEATER COOLING UNIT

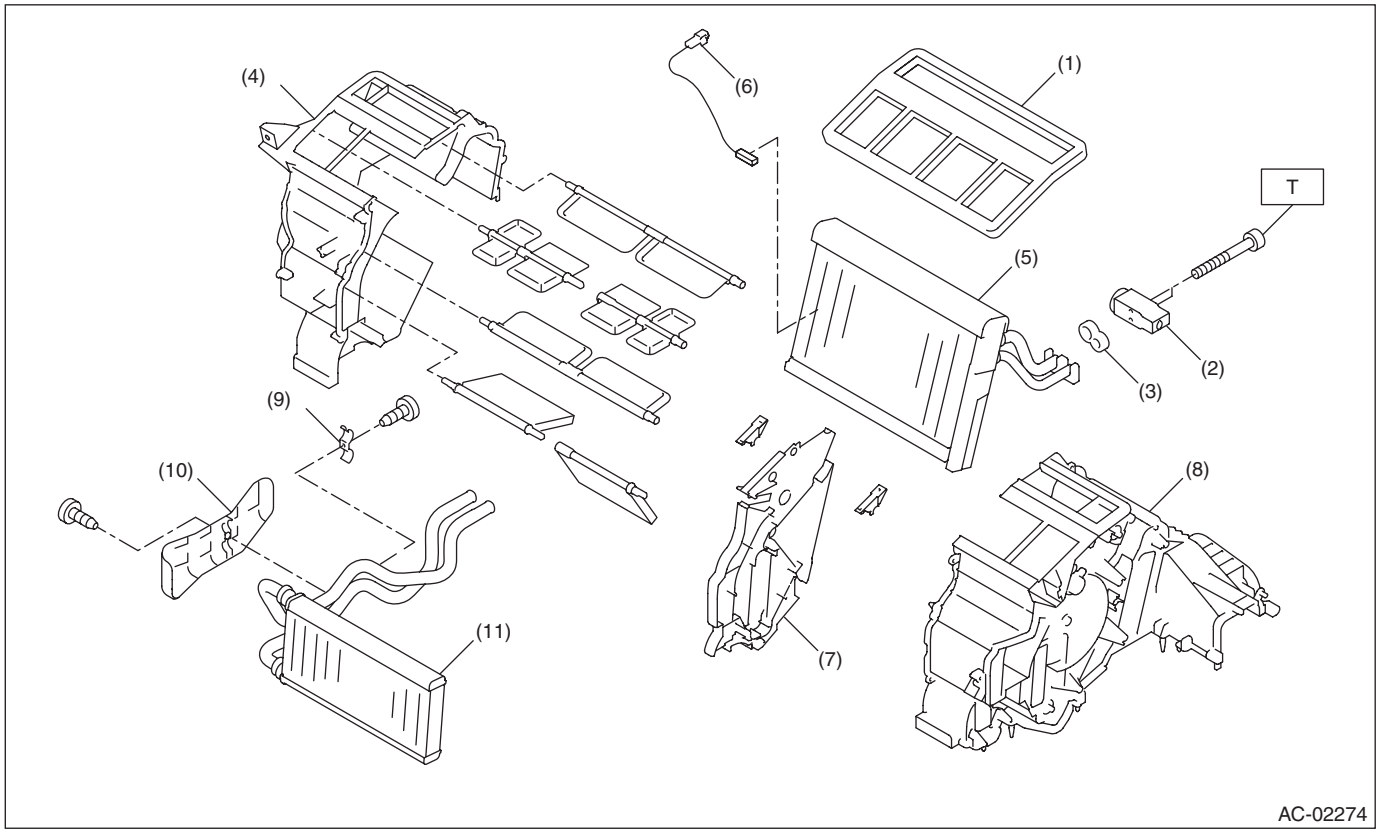

(1) Lining
(2) Expansion valve
(3) Gasket
(4) Heater case LH
(5) Evaporator
(6) Evaporator sensor
(7) Center plate
(8) Heater case RH
(9) Heater pipe clamp
(10) Heater pipe cover
(11) Heater core ASSY

Tightening torque:N·m (kgf-m, ft-lb)
T: 3.5 (0.36, 2.6)

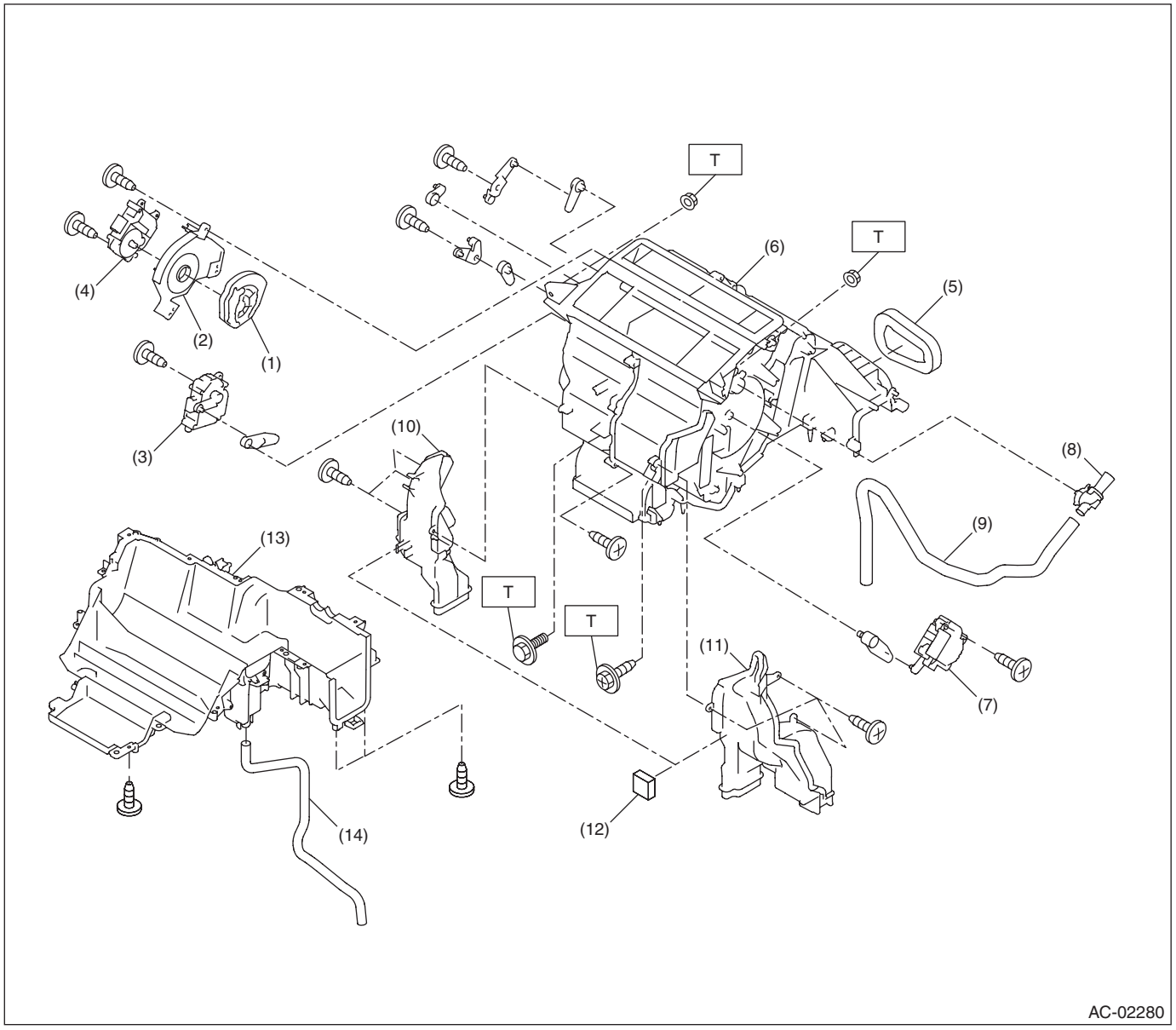

(1)	Mode main lever	(7)	Air mix actuator (passenger's seat)	(13)	Heater case lower
(2)	Cover	(8)	Aspirator	(14)	Drain hose
(3)	Air mix actuator (driver's seat)	(9)	Aspirator hose		
(4)	Mode actuator	(10)	Foot duct LH		
(5)	Gasket	(11)	Foot duct RH		
(6)	Unit ASSY	(12)	Gasket		

Tightening torque:N·m (kgf-m, ft-lb)
T: 7.5 (0.76, 5.5)

2. BLOWER MOTOR UNIT

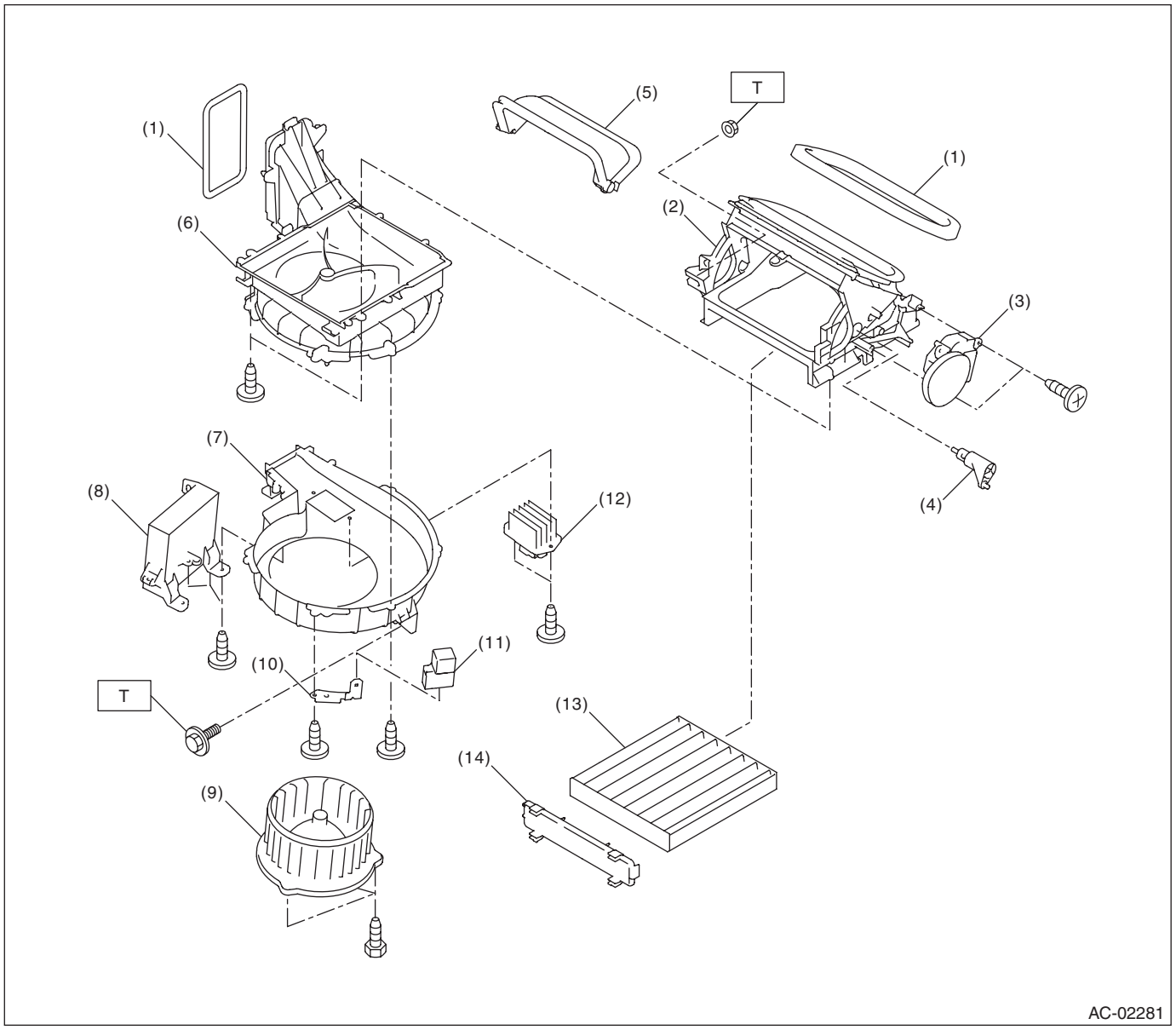

(1) Gasket
(2) Air duct cover ASSY
(3) Intake door actuator
(4) Intake door link
(5) FRESH/RECIRC door
(6) Upper case
(7) Lower case
(8) Control module
(9) Blower motor ASSY
(10) Relay holder bracket
(11) Blower motor relay
(12) Power transistor (auto A/C model) or resistor (manual A/C)
(13) Filter
(14) Filter cover

Tightening torque:N·m (kgf-m, ft-lb)
T: 7.5 (0.76, 5.5)

3. CONTROL MODULE

- AUTO A/C MODEL

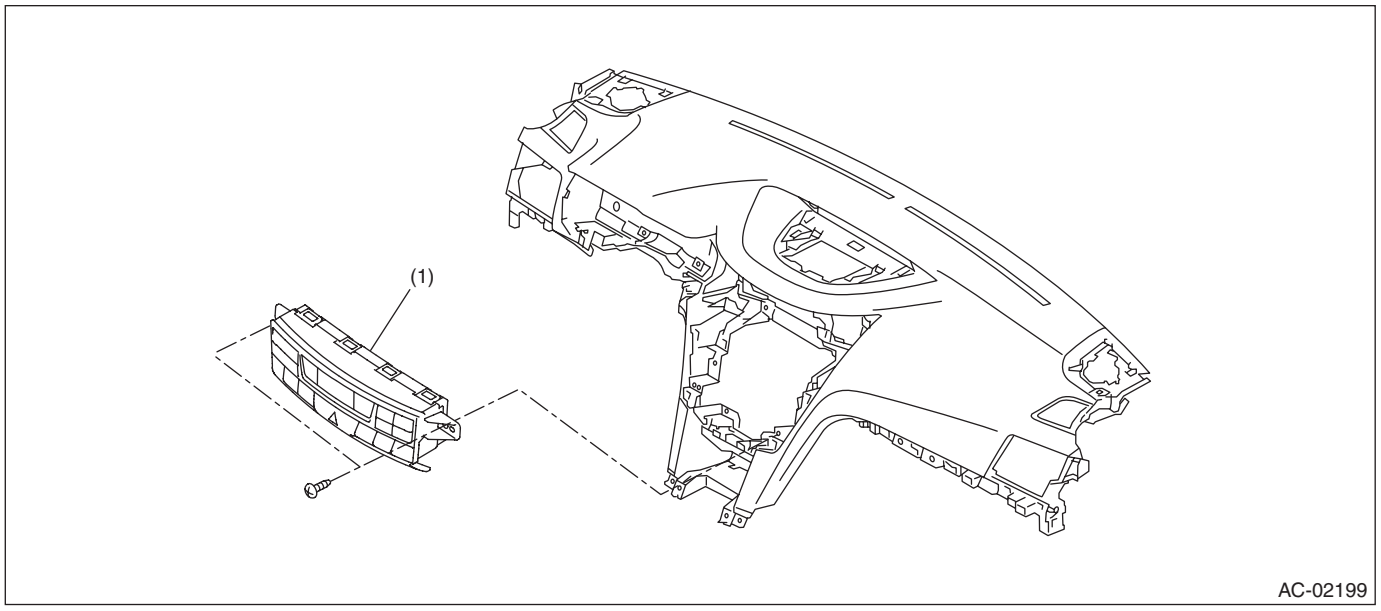

(1) Control module

- MANUAL A/C MODEL

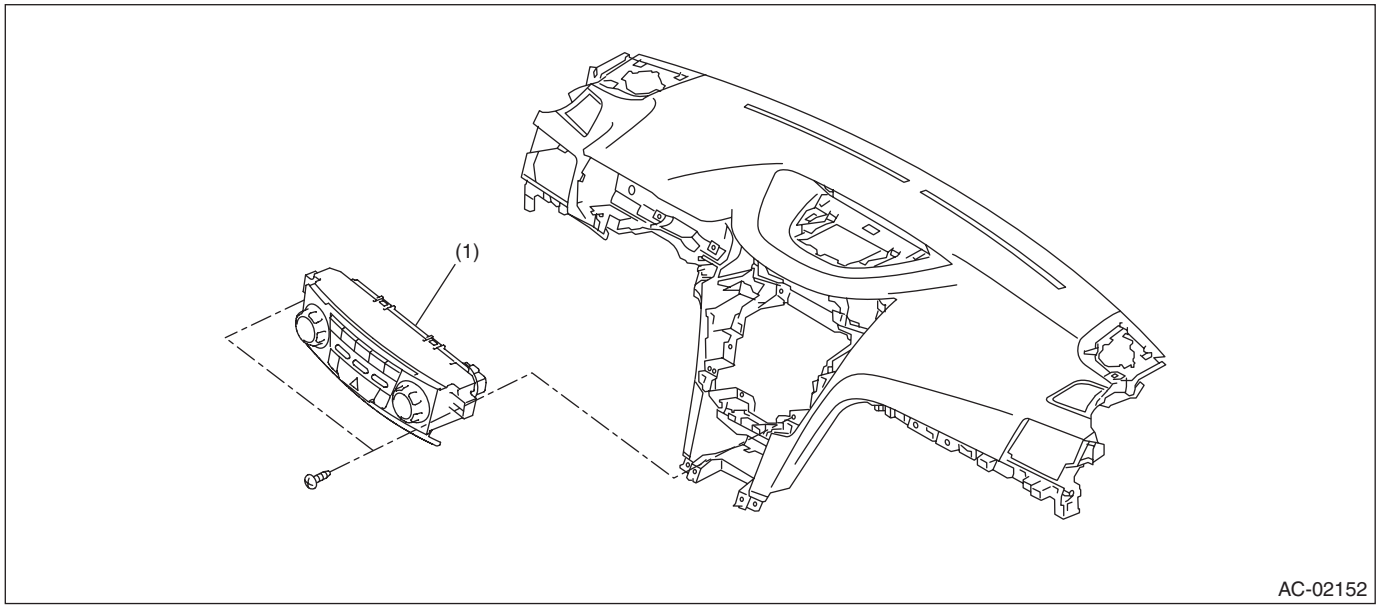

(1) Control module

4. AIR CONDITIONING UNIT

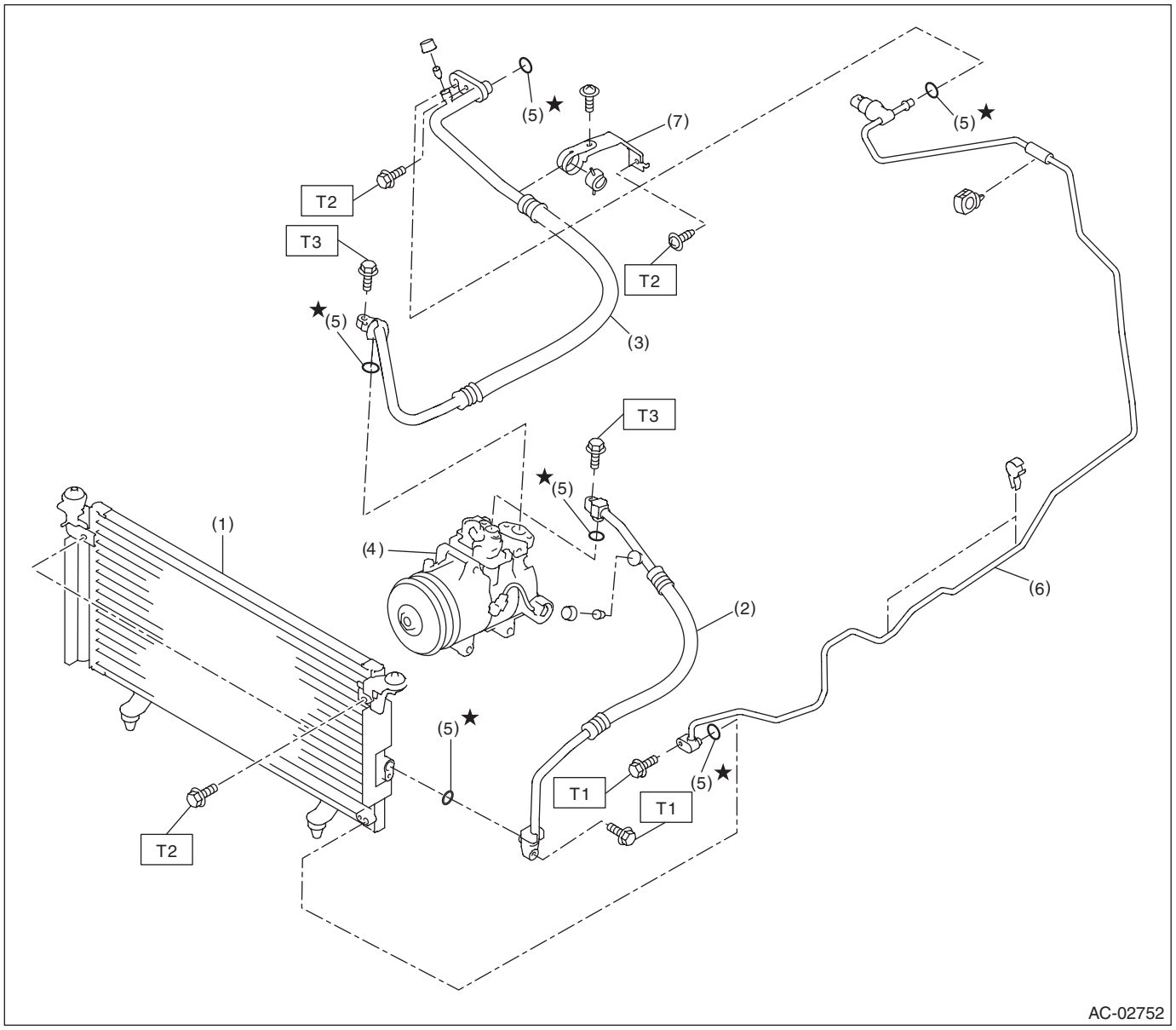

(1)	Condenser	(5)	O-ring
(2)	Hose (high-pressure)	(6)	Pipe
(3)	Hose (low-pressure)	(7)	Bracket
(4)	Compressor		

Tightening torque:N·m (kgf-m, ft-lb)
T1: 5 (0.51, 3.7)
T2: 7.5 (0.76, 5.5)
T3: 10 (1.02, 7.4)

5. COMPRESSOR

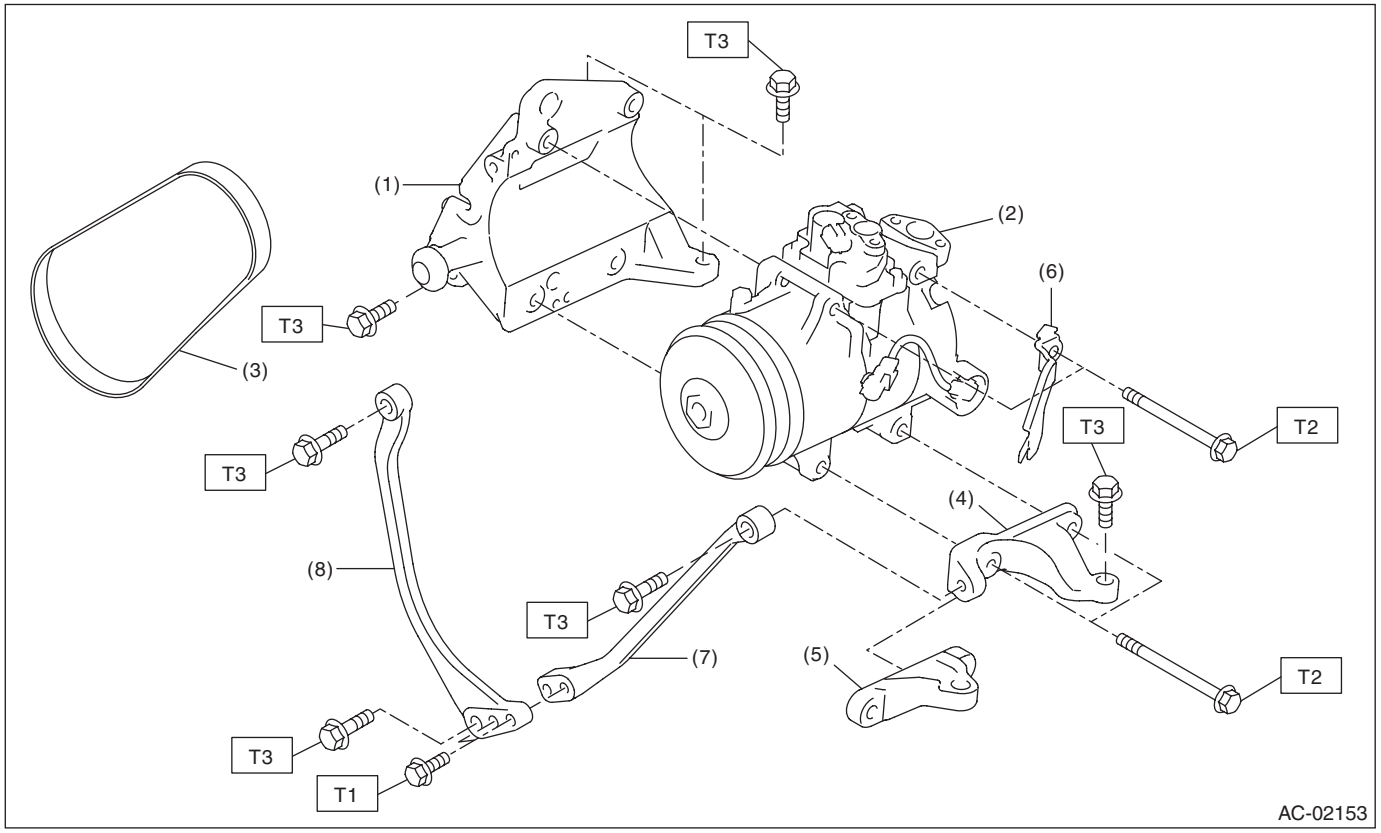

(1)	A/C compressor stay	(5)	Compressor bracket (H6 model)	***Tightening torque:N·m (kgf-m, ft-lb)***
(2)	Compressor	(6)	Connector bracket	***T1: 22 (2.24, 16.2)***
(3)	V-belt (6 PK)	(7)	Stopper rod LH (H4 model)	***T2: 26.5 (2.70, 19.5)***
(4)	Compressor bracket (H4 model)	(8)	Stopper rod RH (H4 model)	***T3: 36 (3.67, 26.6)***

6. HEATER DUCT

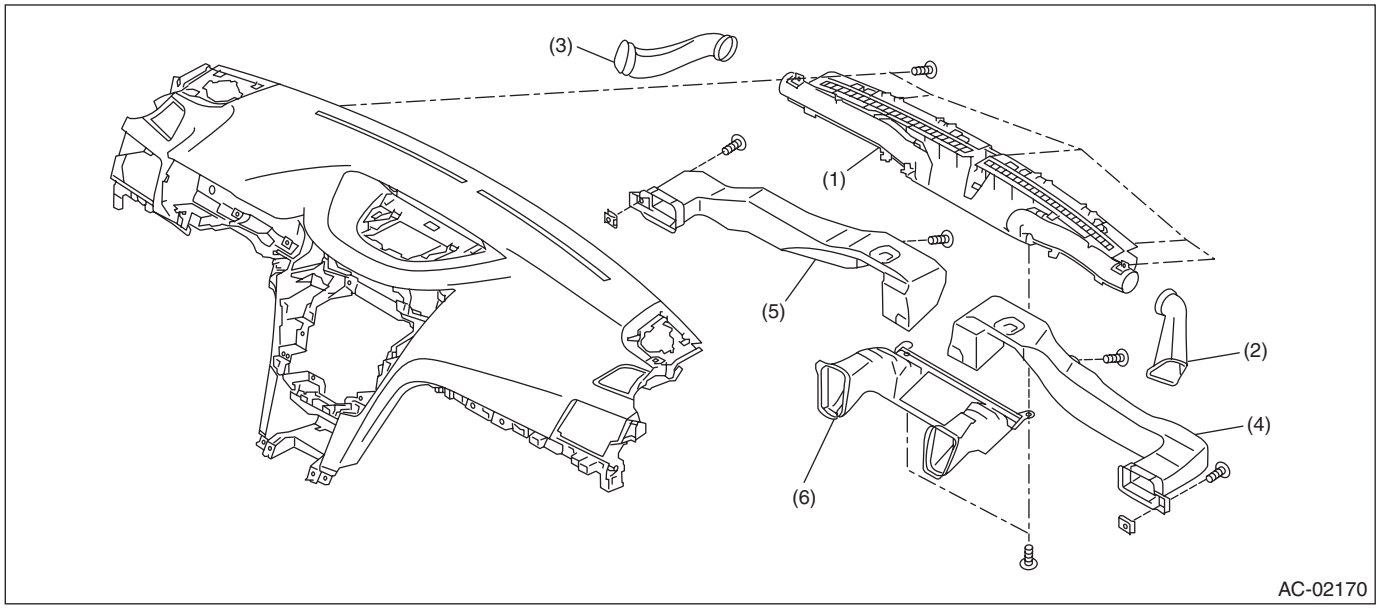

(1) Defroster nozzle ASSY
(2) Side defroster duct RH
(3) Side defroster duct LH
(4) Side vent duct RH
(5) Side vent duct LH
(6) Front vent duct

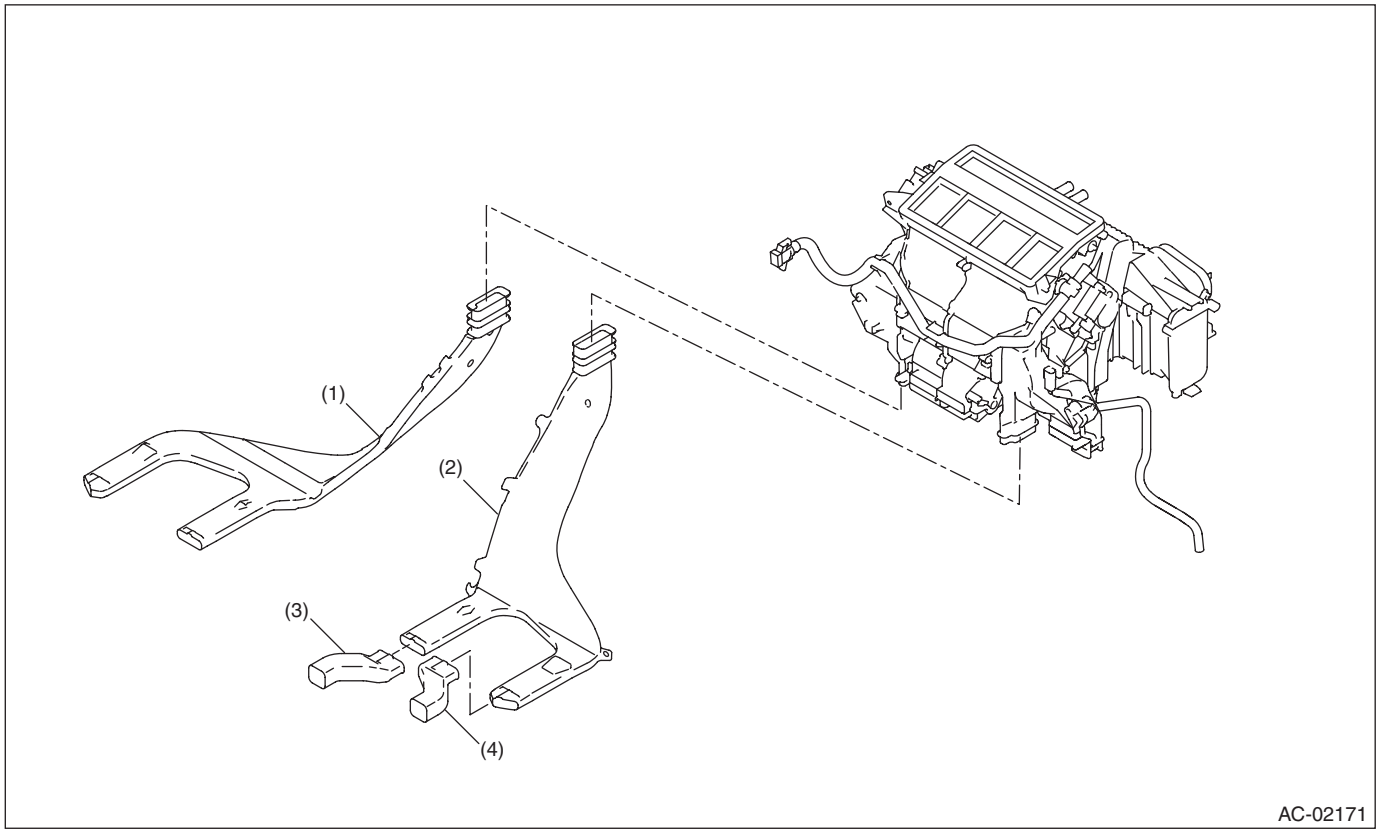

(1) Rear heater duct LH
(2) Rear heater duct RH
(3) Extension duct LH
(4) Extension duct RH

D: CAUTION

• Before disassembling or reassembling parts, always disconnect the battery ground cable from battery. When replacing the radio, control module, and other parts provided with memory functions, record the memory contents before disconnecting the battery ground cable. Otherwise, the memory is cleared.
• Reassemble the parts in the reverse order of disassembly procedure unless otherwise indicated.
• Connect the connectors securely during reassembly.
• After reassembly, make sure that the functional parts operate normally.

1. HFC-134A A/C SYSTEM

• The cooling system components for the HFC-134a system such as the refrigerant and compressor oil are different from the conventional CFC-12 system components and they are incompatible with each other.
• Vehicles with the HFC-134a system can be identified by the label (A) attached to the vehicle.
Before maintenance, check which A/C system is installed to the vehicle.

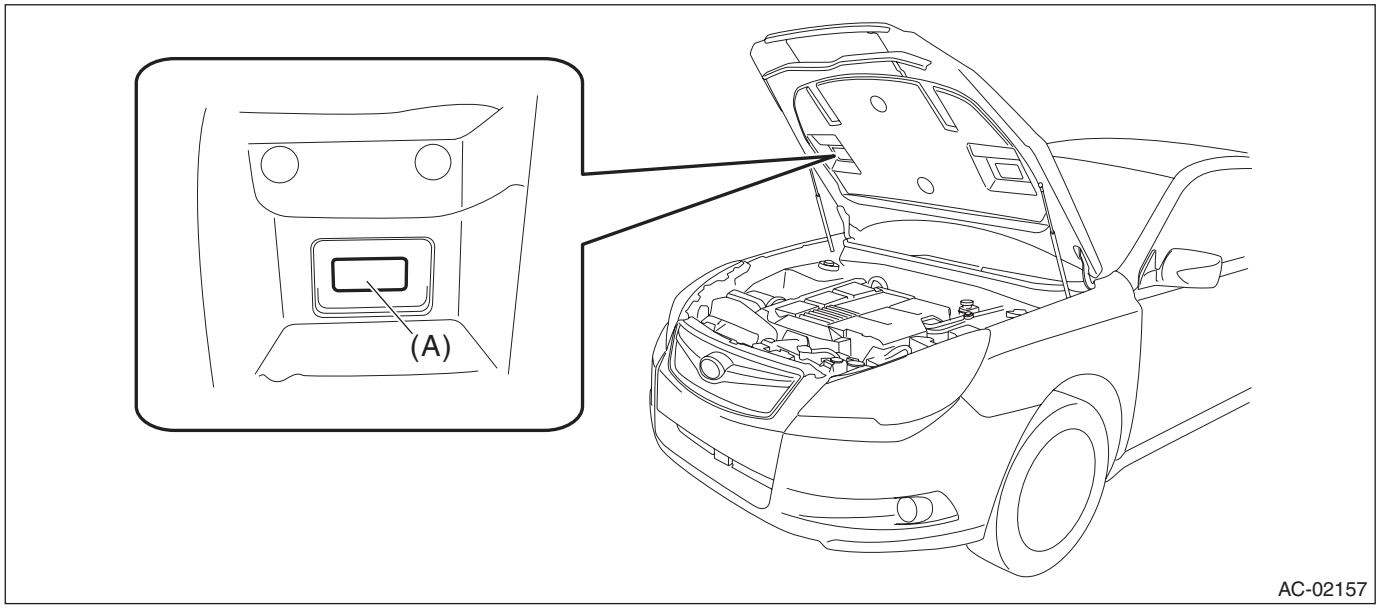

2. COMPRESSOR OIL

• HFC-134a compressor oil has no compatibility with that of CFC-12 system.
• Use only the manufacturer-authorized compressor oil, ND-OIL8, for the HFC-134a system.
• Do not mix multiple compressor oils.
If CFC-12 compressor oil is used in the HFC-134a A/C system, the compressor may become stuck due to poor lubrication, or the refrigerant may leak due to swelling of rubber parts.
On the other hand, if HFC-134a compressor oil is used in a CFC-12 A/C system, the durability of the A/C system will be lowered.
• HFC-134a compressor oil is very hygroscopic. When replacing or installing/removing A/C parts, immediately isolate the oil from atmosphere using a plug or tape. In order to avoid moisture, store the oil in a container with its cap tightly closed.

3. REFRIGERANT

• CFC-12 refrigerant cannot be used in a HFC-134a A/C system. HFC-134a refrigerant, also cannot be used in a CFC-12 A/C system.
• If an incorrect or no refrigerant is used, it will result in poor lubrication and the compressor itself may be damaged.

4. HANDLING OF REFRIGERANT

• The refrigerant boils at approx. –30°C (–22°F). When handling it, be sure to wear protective goggles and protective gloves. Direct contact of the refrigerant with skin may cause frostbite.
If the refrigerant gets into your eye, avoid rubbing your eyes with your hands. Wash your eye with plenty of water, and receive medical treatment from an eye doctor.
• Do not heat a service can. If a service can is directly heated, or put into boiling water, the inside pressure will become extremely high. This may cause the can to explode. If a service can must be warmed up, use warm water of 40°C (104°F) or less.
• Do not drop or impact a service can. (Observe the precautions and operation procedure described on the refrigerant can.)
• When the engine is running, do not open the high-pressure valve of manifold gauge. The high-pressure gas will back-flow resulting in an explosion of the can.
• Provide good ventilation and do not work in a closed area.
• In order to prevent global warming, avoid releasing HFC-134a into the atmosphere. Using a refrigerant recovery system, discharge and recycle the gas.

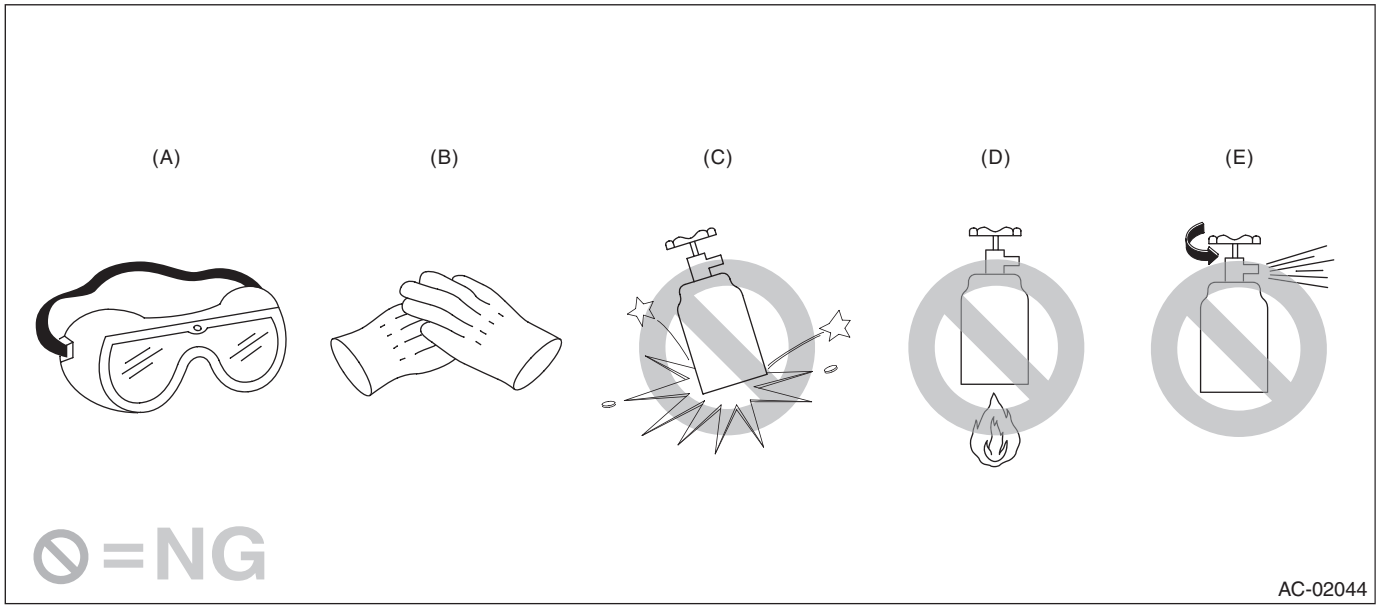

(A) Goggles
(B) Gloves
(C) Do not apply impact.
(D) No direct heat on container
(E) Do not discharge

5. O-RING CONNECTIONS

• Always use a new O-ring.
• In order to keep the O-rings free of lint which will cause a refrigerant gas leak, perform work without using gloves or waste cloths.
• Apply compressor oil to O-rings to avoid sticking, before installation.
• Use a torque wrench to tighten the O-ring fittings. Over-tightening will result in damage of the O-ring and deformation of the pipe end.
• If the work is interrupted before completing pipe connections, recap the pipes, components and fittings with a plug or tape to prevent foreign matter from entering.
• Visually check the surfaces and mating surfaces of O-rings, threads and connecting points. If a failure is found, replace the applicable parts.

- Install the O-rings straight against the pipe groove.

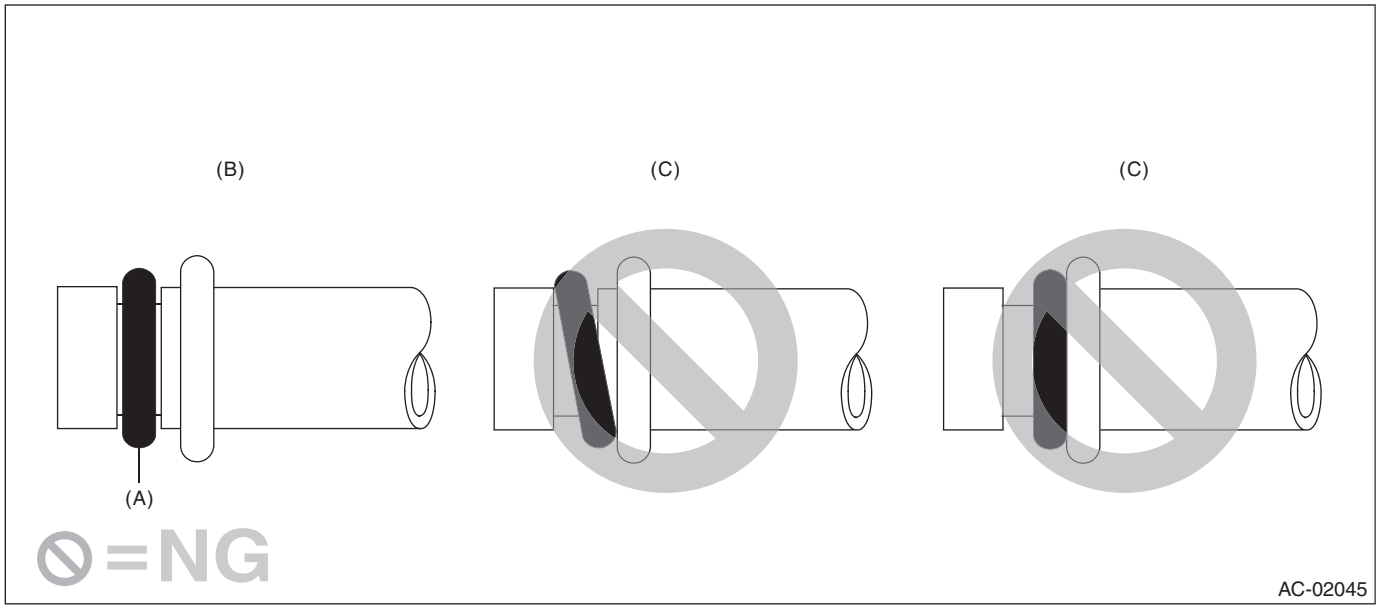

(A) O-ring (B) OK (C) NG

- Use compressor oil specified in the service manual to lubricate the O-rings.

Apply oil to the top and sides of O-rings before installation.
Apply compressor oil to the pipe grooves.

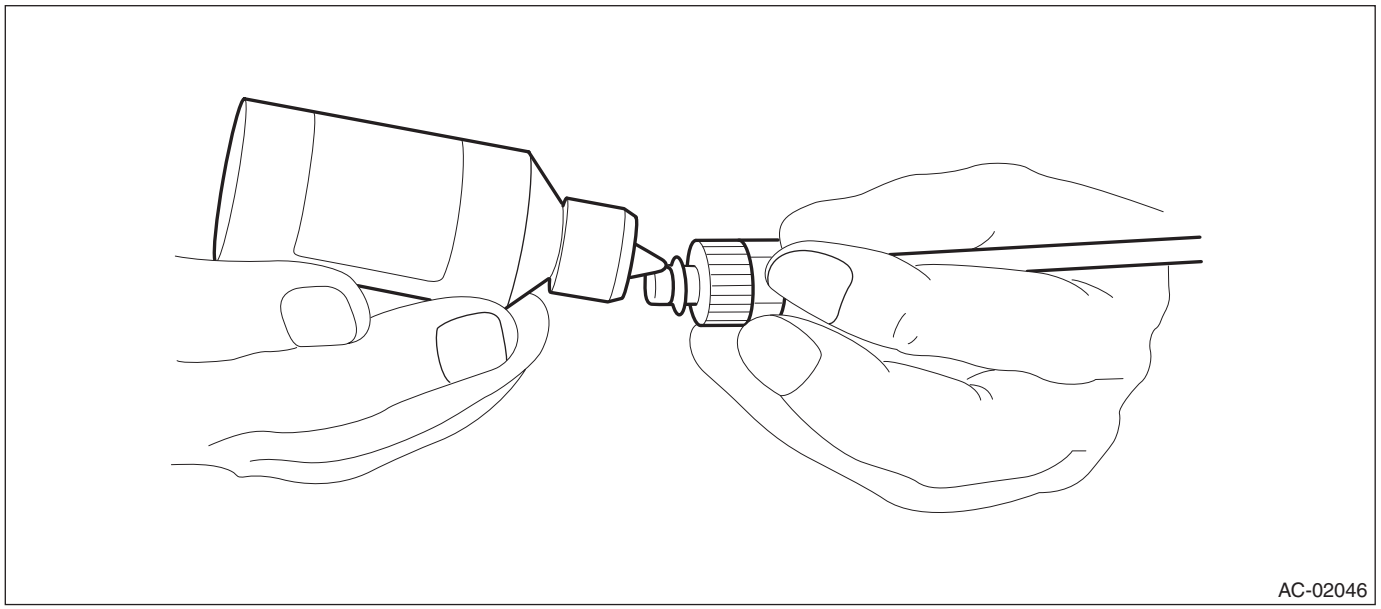

- After tightening, use a clean cloth to remove excess compressor oil from the connections and any oil which may have run on the vehicle body or other parts.
- If any leakage is suspected after tightening, do not tighten the connections further, but disconnect the connections, remove the O-rings, and check the O-rings, threads, and connections.

E: PREPARATION TOOL

1. SPECIAL TOOL

ILLUSTRATION	TOOL NUMBER	DESCRIPTION	REMARKS
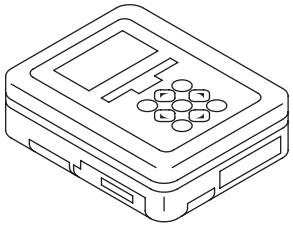 ST1B022XU0	1B022XU0	SUBARU SELECT MONITOR III KIT	Used for troubleshooting the electrical system.

2. GENERAL TOOL

CAUTION:
When working on vehicles with a HFC-134a system, only use HFC-134a specified tools and parts. Do not mix CFC-12 tools and parts. If HFC-134a and CFC-12 refrigerant or compressor oil is mixed, it will result in poor lubrication and the compressor itself may be damaged.
In order to prevent the mixture of HFC-134a and CFC-12 parts and liquid, the type of tool and screw, and the replacement valves used are different. The gas leak detectors for the HFC-134a and CFC-12 systems must also not be interchanged.

	HFC-134a	CFC-12
Tool & screw type	Millimeter size	Inch size
Valve type	Quick joint type	Screw-in type

Illustration	Tools and Equipment
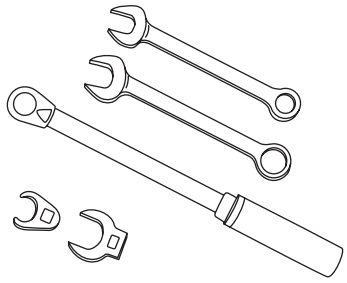 AC-00213	Wrench Various **WRENCHES** will be required to service any A/C system.7 — 40 N·m (0.7 to 4.1 kgf-m, 5 to 30 ft-lb) torque wrench and various crow-foot wrenches will be needed. Open end or flare nut wrenches will be needed to affix the pipe and hose fittings.
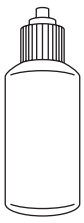 AC-00012	Applicator bottle A small **APPLICATOR BOTTLE** is recommended to apply compressor oil to the various parts. It can be available at a hardware store.

Illustration	Tools and Equipment
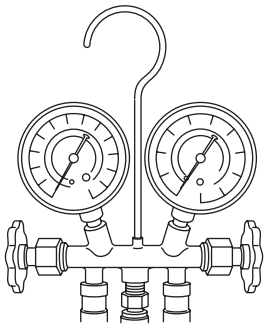 AC-00013	Manifold gauge set A **MANIFOLD GAUGE SET** (with hoses) is available at either a refrigerant supplier or an automotive equipment supplier.
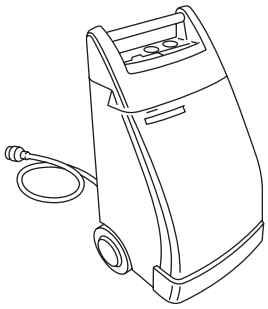 AC-00014	Refrigerant recovery system A **REFRIGERANT RECOVERY SYSTEM** is used for the recovery and recycling of A/C system refrigerant after contaminants and moisture have been removed from the refrigerant.
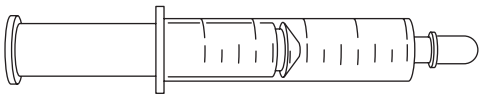 AC-00015	Syringe A graduated plastic **SYRINGE** will be needed to add oil into the system again. A syringe can be available at a pharmacy or drug store.
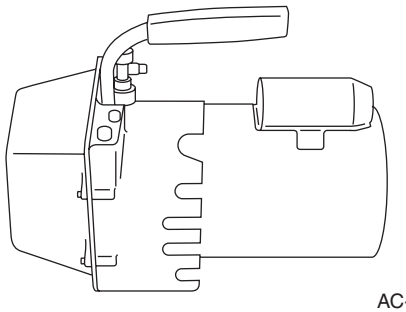 AC-00016	Vacuum pump A **VACUUM PUMP** is necessary (for a good working condition), and may be available at either a refrigerant supplier or an automotive equipment supplier.
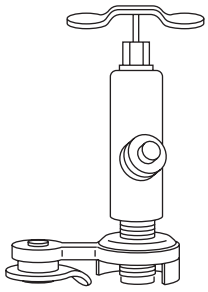 AC-00017	Can tap A **CAN TAP** for the 397 g (14 oz.) can is available at an automotive equipment supplier.

Illustration	Tools and Equipment
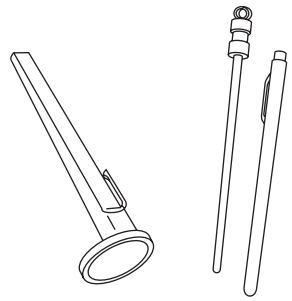 AC-00018	Thermometer A Pocket **THERMOMETER** is available at either a industrial hardware store or a refrigerant supplier.
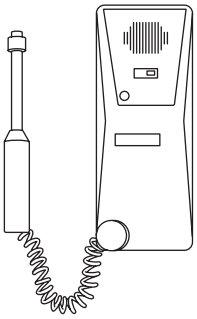 AC-00019	Electronic leak detector An **ELECTRONIC LEAK DETECTOR** can be available at either a specialty tool supplier or an A/C equipment supplier.
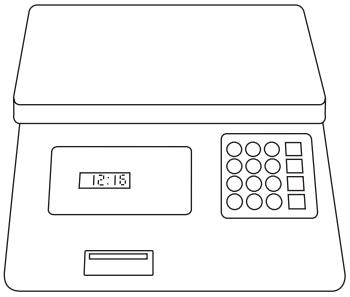 AC-00020	Weight scale A **WEIGHT SCALE** such as an electronic charging scale or a bathroom scale with digital display will be needed, if a 13.6 kg (30 lb) refrigerant container is used.

2. Air Conditioning System

A: WIRING DIAGRAM

Refer to “Air Conditioning System” in the wiring diagram. <Ref. to WI-53, WIRING DIAGRAM, Air Conditioning System.>

B: ELECTRICAL SPECIFICATION

Refer to “Auto A/C Control Module I/O Signal” of “HVAC SYSTEM (DIAGNOSTICS)” section. <Ref. to AC(diag)-6, ELECTRICAL SPECIFICATION, Control Module I/O Signal.>

C: INSPECTION

Refer to “Basic Diagnostic Procedure” of “HVAC SYSTEM (DIAGNOSTICS)” section. <Ref. to AC(diag)-2, Basic Diagnostic Procedure.>

D: NOTE

For procedure of each component in the air conditioning system, refer to the respective section.

- Blower motor unit assembly: <Ref. to AC-32, Blower Motor Unit Assembly.>
- Blower motor: <Ref. to AC-36, Blower Motor.>
- Power transistor (auto A/C model): <Ref. to AC-38, Power Transistor (Auto A/C Model).>
- Blower resistor (manual A/C model): <Ref. to AC-39, Blower Resistor (Manual A/C Model).>
- Control panel: <Ref. to AC-46, Control Panel.>
- Control module: <Ref. to AC-54, Control Unit.>
- Compressor: <Ref. to AC-55, Compressor.>
- Condenser: <Ref. to AC-58, Condenser.>
- Heater and cooling unit: <Ref. to AC-62, Heater and Cooling Unit.>
- Evaporator: <Ref. to AC-66, Evaporator.>
- Expansion valve: <Ref. to AC-74, Expansion Valve.>
- Hose & pipe: <Ref. to AC-76, Hose and Pipe.>
- Ambient sensor (auto A/C model): <Ref. to AC-78, Ambient Sensor (Auto A/C Model).>
- Sunload sensor (auto A/C model): <Ref. to AC-80, Sunload Sensor (Auto A/C Model).>
- In-vehicle sensor (auto A/C model): <Ref. to AC-82, In-Vehicle Sensor (Auto A/C Model).>
- Evaporator sensor: <Ref. to AC-87, Evaporator Sensor.>
- Intake door actuator: <Ref. to AC-90, FRESH/RECIRC Door Actuator.>
- Mode door actuator: <Ref. to AC-92, Mode Door Actuator.>
- Air mix door actuator: <Ref. to AC-95, Air Mix Door Actuator.>

3. Refrigerant Pressure with Manifold Gauge Set

A: PROCEDURE

1. CHECK REFRIGERANT GAS PRESSURE

Preparation tool:
Manifold gauge set
Thermometer

1) Prepare the vehicle.

NOTE:
Check that the ambient temperature is 25 — 40°C (77 — 104°F) and that the humidity is 30% — 80%.

- Place the vehicle in the shade and windless condition, and open the front hood.
- Open the front windows and close all doors.

2) Connect the manifold gauge set, and then check the refrigerant pressure.
   (1) Connect the manifold gauge set, and start the engine.
   (2) Set the vehicle to the following conditions.

Item	Condition
Engine	Warmed up (Engine coolant temperature indicator light: OFF)
Air vent grille	Shutter is fully open.
AC switch	ON
Temperature control switch or dial	LO (MAX COOL)
FRESH/RECIRC switch	RECIRC
Mode change switch	VENT
Fan switch (auto A/C model)	4 — 6 levels
Fan dial (manual A/C model)	3 — 4 levels

   (3) In the condition of step (2), idle the engine for 30 minutes.
   (4) Read the gauge values on both high pressure side and low pressure side for manifold gauge.

3) Measure the air vent grille outlet opening temperature, ambient temperature and humidity.

NOTE:
For outlet opening temperature, measure the average temperature of center grille assembly and side grille assembly.

4) Check that the high and low pressures and outlet opening temperature for ambient temperature and humidity is within the standard value described in the chart below.

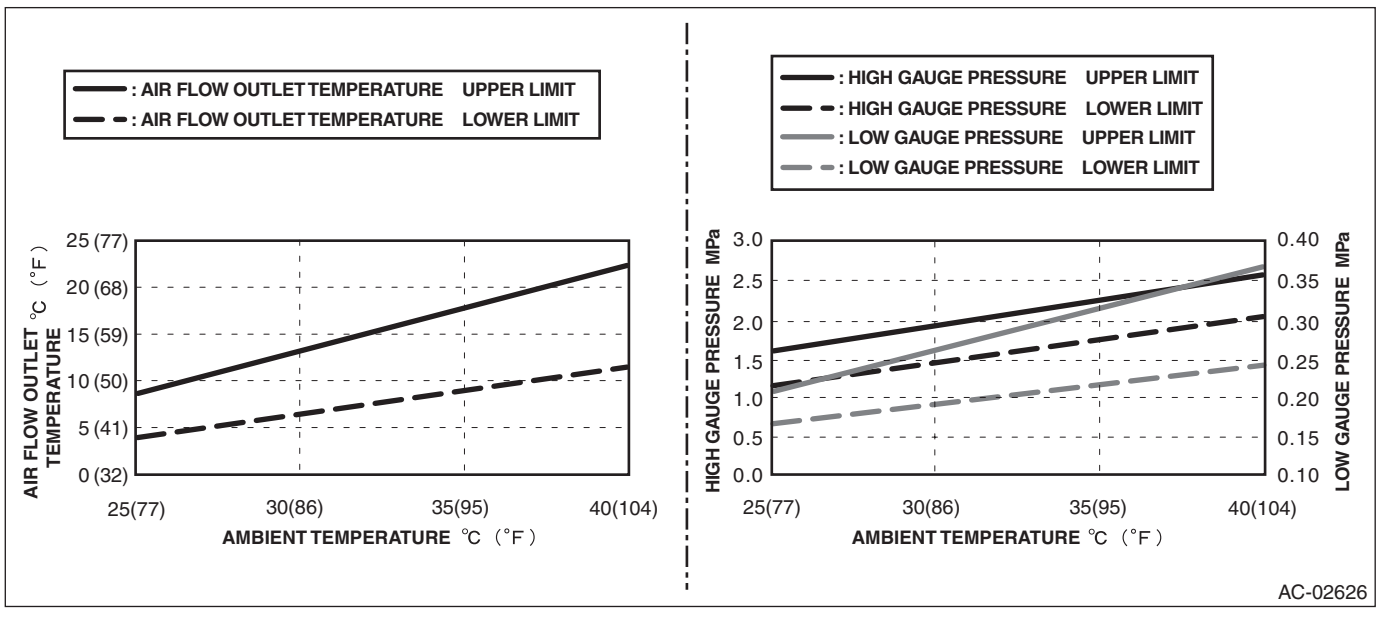

5) Refer to “DIAGNOSIS WITH SYMPTOM” if the inspection result is not within the standard value. <Ref. to AC-21, INSPECTION WITH PRESSURE SYMPTOM, INSPECTION, Refrigerant Pressure with Manifold Gauge Set.>

B: INSPECTION

1. INSPECTION WITH PRESSURE SYMPTOM

Symptoms	Reference
Both high and low pressure sides are low	<Ref. to AC-21, BOTH HIGH AND LOW PRESSURE SIDES ARE LOW, INSPECTION, Refrigerant Pressure with Manifold Gauge Set.>
Both high and low pressure sides are high	<Ref. to AC-21, BOTH HIGH AND LOW PRESSURE SIDES ARE HIGH, INSPECTION, Refrigerant Pressure with Manifold Gauge Set.>
High and low pressure sides are equal, high-pressure side is low	<Ref. to AC-22, HIGH AND LOW PRESSURE SIDES ARE EQUAL, OR HIGH-PRESSURE SIDE IS LOW, INSPECTION, Refrigerant Pressure with Manifold Gauge Set.>
High-pressure side is high	<Ref. to AC-22, HIGH-PRESSURE SIDE IS HIGH, INSPECTION, Refrigerant Pressure with Manifold Gauge Set.>
Low-pressure side is low	<Ref. to AC-23, LOW-PRESSURE SIDE IS LOW, INSPECTION, Refrigerant Pressure with Manifold Gauge Set.>
Low-pressure side is high	<Ref. to AC-23, LOW-PRESSURE SIDE IS HIGH, INSPECTION, Refrigerant Pressure with Manifold Gauge Set.>

2. BOTH HIGH AND LOW PRESSURE SIDES ARE LOW

	Step	Check	Yes	No
1	**CHECK REFRIGERANT LEAKS.** Check the refrigerant for leaks. <Ref. to AC-28, INSPECTION, Refrigerant Leak Check.> NOTE: When high-pressure side is less than 0.69Mpa: Go to step 2.	Are there refrigerant leaks?	Repair the refrigerant leaking points.	Go to step **2**.
2	**FILL PROPER AMOUNT OF REFRIGERANT.** Drain all refrigerant, and refill proper amount of refrigerant. • Recovery: <Ref. to AC-24, PROCEDURE, Refrigerant Recovery Procedure.> • Fill: <Ref. to AC-25, PROCEDURE, Refrigerant Charging Procedure.>	Is refrigerant pressure within the standard value?	Refrigerant pressure is normal.	Perform corresponding “INSPECTION WITH PRESSURE SYMPTOM”.

3. BOTH HIGH AND LOW PRESSURE SIDES ARE HIGH

	Step	Check	Yes	No
1	**FILL PROPER AMOUNT OF REFRIGERANT.** Drain all refrigerant, and refill proper amount of refrigerant. • Recovery: <Ref. to AC-24, PROCEDURE, Refrigerant Recovery Procedure.> • Fill: <Ref. to AC-25, PROCEDURE, Refrigerant Charging Procedure.>	Is refrigerant pressure within the standard value?	Refrigerant pressure is normal.	Perform corresponding “INSPECTION WITH PRESSURE SYMPTOM”.

4. HIGH AND LOW PRESSURE SIDES ARE EQUAL, OR HIGH-PRESSURE SIDE IS LOW

	Step	Check	Yes	No
1	**CHECK REFRIGERANT LEAKS.** Check the refrigerant for leaks. <Ref. to AC-28, INSPECTION, Refrigerant Leak Check.> NOTE: When high-pressure side is less than 0.69Mpa: Go to step 2.	Are there refrigerant leaks?	Repair the refrigerant leaking points.	Go to step **2**.
2	**FILL PROPER AMOUNT OF REFRIGERANT.** Drain all refrigerant, and refill proper amount of refrigerant. • Recovery: <Ref. to AC-24, PROCEDURE, Refrigerant Recovery Procedure.> • Fill: <Ref. to AC-25, PROCEDURE, Refrigerant Charging Procedure.>	Is refrigerant pressure within the standard value?	Refrigerant pressure is normal.	Inspect the compressor. <Ref. to AC(diag)-38, COLD AIR DOES NOT COME OUT EVEN WHEN THE A/C SWITCH IS PRESSED. THE GLASS CANNOT BE DEFOGGED. (COMPRESSOR DOES NOT OPERATE. (VARIABLE)), DIAGNOSTIC PROCEDURE WITH PHENOMENON, Diagnostics with Phenomenon.>

5. HIGH-PRESSURE SIDE IS HIGH

	Step	Check	Yes	No
1	**CHECK CONDENSER.** Check the condenser. <Ref. to AC-61, INSPECTION, Condenser.>	Is condenser OK?	Go to step **2**.	Clean or replace the condenser.
2	**CHECK RADIATOR FAN.** Check the radiator fan system. • H4 non-turbo model: <Ref. to CO(H4SO)-7, Radiator Fan System.> • H4 turbo model: <Ref. to CO(H4DOTC)-7, Radiator Fan System.> • H6 model: <Ref. to CO(H6DO)-8, Radiator Fan System.>	Is radiator fan system normal?	Go to step **3**.	Repair the radiator fan system or replace the faulty parts.
3	**FILL PROPER AMOUNT OF REFRIGERANT.** Drain all refrigerant, and refill proper amount of refrigerant. • Recovery: <Ref. to AC-24, PROCEDURE, Refrigerant Recovery Procedure.> • Fill: <Ref. to AC-25, PROCEDURE, Refrigerant Charging Procedure.>	Is refrigerant pressure within the standard value?	Refrigerant pressure is normal.	Check the high-pressure hose and condenser for kinks or clogging, and replace if defective.

6. LOW-PRESSURE SIDE IS LOW

	Step	Check	Yes	No
1	**CHECK REFRIGERANT LEAKS.** Check the refrigerant for leaks. <Ref. to AC-28, INSPECTION, Refrigerant Leak Check.> NOTE: When high-pressure side is less than 0.69Mpa: Go to step 2.	Are there refrigerant leaks?	Repair the refrigerant leaking points.	Go to step **2**.
2	**FILL PROPER AMOUNT OF REFRIGERANT.** Drain all refrigerant, and refill proper amount of refrigerant. • Recovery: <Ref. to AC-24, PROCEDURE, Refrigerant Recovery Procedure.> • Fill: <Ref. to AC-25, PROCEDURE, Refrigerant Charging Procedure.>	Is refrigerant pressure within the standard value?	Refrigerant pressure is normal.	Go to step **3**.
3	**REPLACE EXPANSION VALVE.** Replace the expansion valve. <Ref. to AC-74, REMOVAL, Expansion Valve.>	Is refrigerant pressure within the standard value?	Refrigerant pressure is normal.	Inspect the compressor. <Ref. to AC(diag)-38, COLD AIR DOES NOT COME OUT EVEN WHEN THE A/C SWITCH IS PRESSED. THE GLASS CANNOT BE DEFOGGED. (COMPRESSOR DOES NOT OPERATE. (VARIABLE)), DIAGNOSTIC PROCEDURE WITH PHENOMENON, Diagnostics with Phenomenon.>

7. LOW-PRESSURE SIDE IS HIGH

	Step	Check	Yes	No
1	**FILL PROPER AMOUNT OF REFRIGERANT.** Drain all refrigerant, and refill proper amount of refrigerant. • Recovery: <Ref. to AC-24, PROCEDURE, Refrigerant Recovery Procedure.> • Fill: <Ref. to AC-25, PROCEDURE, Refrigerant Charging Procedure.>	Is refrigerant pressure within the standard value?	Refrigerant pressure is normal.	Go to step **2**.
2	**REPLACE EXPANSION VALVE.** Replace the expansion valve. <Ref. to AC-74, REMOVAL, Expansion Valve.>	Is refrigerant pressure within the standard value?	Refrigerant pressure is normal.	Replace the evaporator. <Ref. to AC-66, REMOVAL, Evaporator.>

4. Refrigerant Recovery Procedure

A: PROCEDURE

Preparation tool:
Manifold gauge set
Refrigerant recovery system

CAUTION:
• During operation, be sure to wear protective goggles and protective gloves.
• Connect the refrigerant recovery system with the manifold gauge set to discharge the refrigerant from the A/C system and recycle the gas.
• When recycling the discharged refrigerant, keep service cans on hand. Because the recovery rate with the recovery system is approx. 90%, service cans are necessary to charge the refrigerant.
• Follow the detailed operation procedure described in the operation manual attached to the refrigerant recovery system.

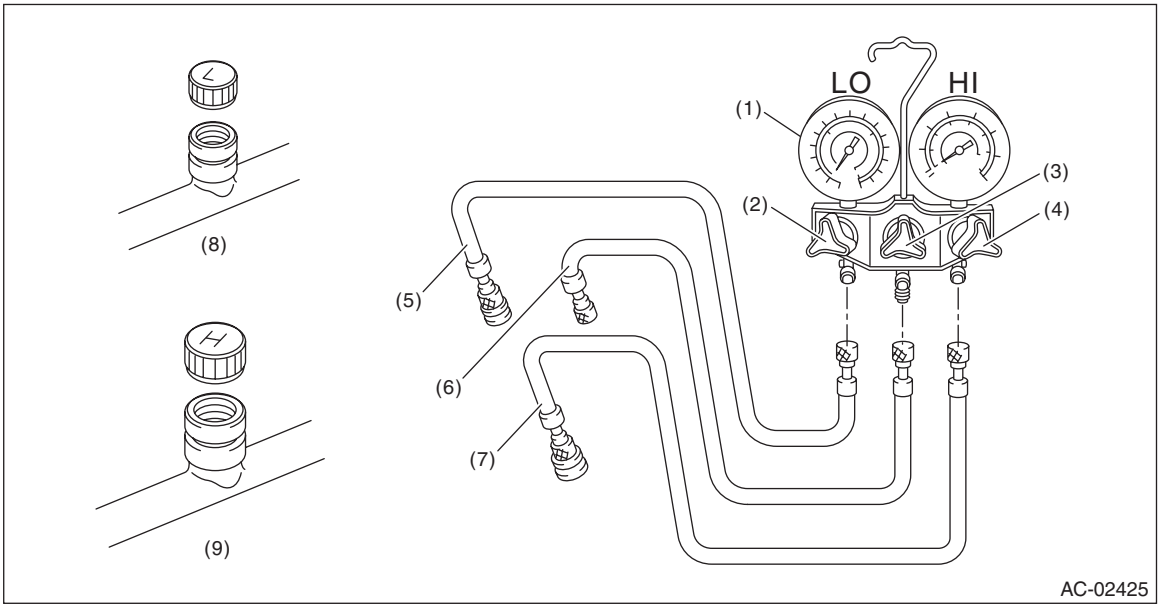

(1)	Manifold gauge	(4)	High pressure valve	(7)	High-pressure hose
(2)	Low pressure valve	(5)	Low-pressure hose	(8)	Low-pressure side service port
(3)	Center valve	(6)	Center manifold hose (vacuum pump and refill)	(9)	High-pressure side service port

1) Perform compressor oil return operation. <Ref. to AC-31, PROCEDURE, Compressor Oil.>
2) Stop the engine.
3) Attach the manifold gauge set.
   (1) Check that all valves are fully closed.
   (2) Install the low/high pressure hoses to the service ports on the low/high pressure sides of the vehicle respectively.

CAUTION:
Confirm that the connections are secure.
   (3) Connect the center hose to the refrigerant recovery system.
4) Follow the operation manual attached to the refrigerant recovery system to collect the refrigerant.

5. Refrigerant Charging Procedure

A: PROCEDURE

Preparation tool:
Manifold gauge set
Vacuum pump
Can tap
Weight scale

CAUTION:
• While working, be sure to wear protective goggles and protective gloves.
• Air in the cycle can cause insufficient air conditioning, and water in the cycle can cause clogging in the cycle (icing) and rust. To remove this air and water content, use a vacuum pump to perform evacuation before filling with refrigerant. By making the inside of the cycle a vacuum, the water content will evaporate even at normal temperatures, and can be removed.

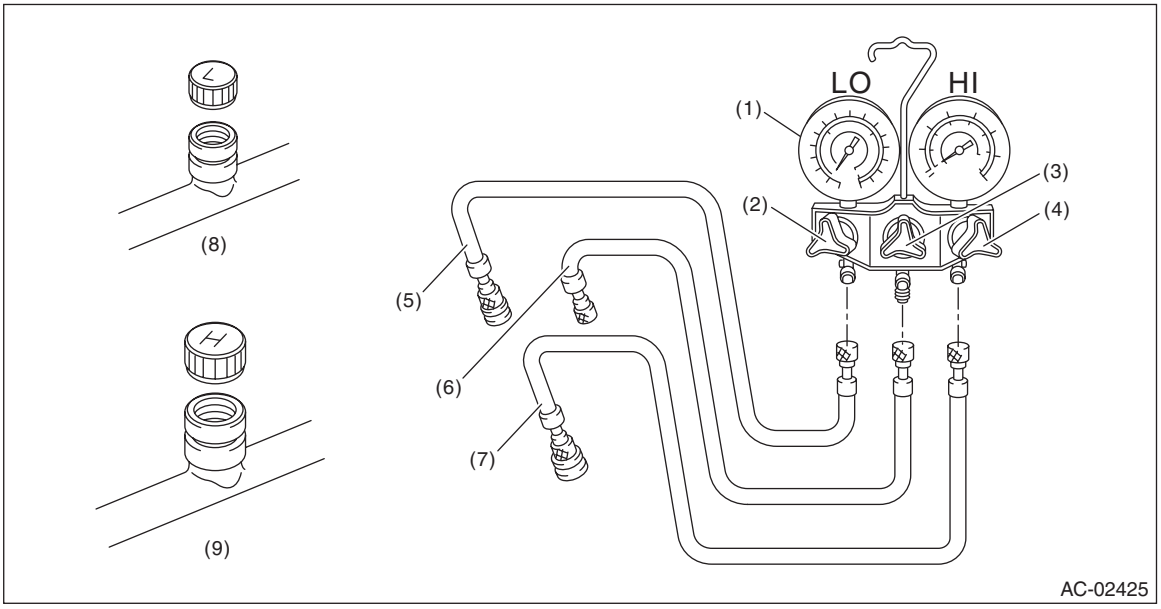

(1)	Manifold gauge	(4)	High pressure valve	(7)	High-pressure hose
(2)	Low pressure valve	(5)	Low-pressure hose	(8)	Low-pressure side service port
(3)	Center valve	(6)	Center manifold hose (vacuum pump and refill)	(9)	High-pressure side service port

1) Attach the manifold gauge set.
(1) Check that all valves are fully closed.
(2) Install the low/high pressure hoses to the service ports on the low/high pressure sides of the vehicle respectively.

CAUTION:
Confirm that the connections are secure.
(3) Connect the center manifold hose of the manifold gauge to the vacuum pump.
2) Perform evacuation.

CAUTION:
Make sure to perform evacuation using a vacuum pump.
(1) Open the low-pressure valve, high-pressure valve and center valve.
(2) Operate the vacuum pump.
(3) Perform evacuation for 5 minutes or more, and when the low pressure gauge needle reaches -0.1 MPa (1.0 kgf/cm^2, 14 psi), close the center manifold hose valve, and stop the vacuum pump.

(4) Leave alone for 5 to 10 minutes after closing the low pressure side and high pressure side valves, and check whether there is any change in the low pressure gauge needle indication. If the needle position changes, this indicates a leak. Check the pipe and hose connections, and repair the location with the problem. In this case, repeat again from step 1).
(5) If there is no leakage, continue evacuation for additional 20 — 30 minutes, close all valves and then stop the vacuum pump.

3) Charge refrigerant.
(1) Follow the can tap operation manual, install to the refrigerant can.
(2) Disconnect the center manifold hose from the vacuum pump, and connect the hose to the tap valve.

NOTE:
When a 13.6 kg (30 lb) refrigerant container (1) is used, measure the amount of refrigerant with a refrigerant charging scale (2), and connect with the center manifold hose.

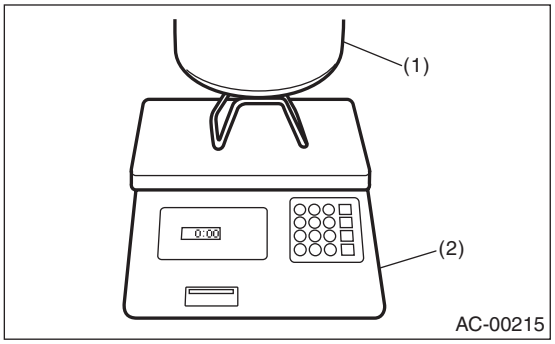

(3) Open the tap valve of HFC-134a supply container (refrigerant can or refrigerant container).
(4) Loosen the center manifold hose connection on the manifold gauge for a few seconds (if there is a purge valve on the manifold gauge, push this instead) to allow the air in the center manifold hose to be bled by the refrigerant pressure.
(5) Open the low-pressure side and high-pressure side valves of the manifold gauge to fill with refrigerant.

NOTE:
If the HFC-134a supply container is empty, close all valves of manifold gauge and tap valve of HFC-134a supply container, and replace the empty container. After replacing with a new HFC-134a supply container, perform air purge, and resume the filling operation.

(6) If the low pressure gauge indicates approximately 0.2 MPa (2.0 kgf/cm^2, 29 psi) or refrigerant filling efficiency drops, close the low-pressure side valve and high-pressure side valve.
(7) Check that the low-pressure side valve and high-pressure side valve are closed, turn off the A/C switch and start the engine.

CAUTION:
When filling with the engine running, do not open the high pressure side valve. Always fill from the low pressure side.

(8) To prevent damage to the compressor, push the A/C switch ON-OFF quickly a few times.
(9) Set the vehicle to the following conditions.

Item	Condition
Engine speed	1,500 rpm
AC switch	ON
Temperature control switch or dial	LO (MAX COOL)
Fan switch or dial	HI (MAX)
FRESH/RECIRC switch	RECIRC
Mode change switch	VENT
WINDOW	Open

(10) Open the low-pressure side valve, check the refrigerant pressure with a manifold gauge and fill with refrigerant up to the specified amount. <Ref. to AC-21, INSPECTION WITH PRESSURE SYMPTOM, INSPECTION, Refrigerant Pressure with Manifold Gauge Set.>

4) Using an electronic leak detector (leak tester), check for refrigerant leaks in the system. <Ref. to AC-28, INSPECTION, Refrigerant Leak Check.>
5) After filling with refrigerant, close all valves and remove the manifold gauge set.
6) Attach cap to the service port of the low-pressure side and high-pressure side.

6. Refrigerant Leak Check

A: INSPECTION

Preparation tool:
Manifold gauge set
Electronic leak detector (leak tester)

1) Attach the manifold gauge set.
   (1) Check that all valves are fully closed.
   (2) Install the low/high pressure hoses to the service ports on the low/high pressure sides of the vehicle respectively.

CAUTION:
Confirm that the connections are secure.

   (3) Start the engine, operate the A/C system for approx. 10 minutes, and check that the high-pressure side indicates 0.69 MPa (7.0 kgf/cm^2, 100 psi) or more.

2) Stop the engine to start the leak test.

Items	Condition	Corrective action
Pipe	Check the connections of pipe and expansion valve.	Check the O-ring at connection and tightening torque. If necessary, replace each part.
	Check the connection between pressure switch or pressure sensor and high-pressure pipe.	Replace the pressure switch or pressure sensor.
	Check the connection between pipe and condenser.	Check the O-ring at connection and tightening torque. If necessary, replace each part.
Condenser	Check the welded part of condenser and core.	Replace the condenser.
Hose (high-pressure)	Check the connection between hose (high-pressure) and compressor.	Check the O-ring at connection and tightening torque. If necessary, replace each part.
	Check the connection between hose (high-pressure) and condenser.	Check the O-ring at connection and tightening torque. If necessary, replace each part.
	Check the rubber part of the flexible hose and pipe seam. **CAUTION:** **Carefully check the external surface of flexible hoses and pipes at approx. 25 mm (0.98 in) per second.**	Replace the hose (high pressure).
	Check the valve and cap in the service port.	Check the rubber seal of the valve and cap. If necessary, replace the hose (high pressure).
Compressor	Check the compressor pulley and vicinity of shaft seal. **CAUTION:** **Some shaft seals will show a slight amount of leakage, about 3 g (0.1 oz) per year. This is not a problem.**	Replace the compressor.
Hose (low-pressure)	Check the connection between hose (low pressure) and expansion valve.	Check the O-ring at connection and tightening torque. If necessary, replace each part.
	Check the connection between hose (low pressure) and compressor.	Check the O-ring at connection and tightening torque. If necessary, replace each part.
	Check the rubber part of the flexible hose and pipe seam. **CAUTION:** **Carefully check the external surface of flexible hoses and pipes at approx. 25 mm (0.98 in) per second.**	Replace the hose (low pressure).
	Check the valve and cap in the service port.	Check the rubber seal of the valve and cap. If necessary, replace the hose (low pressure).

Items	Condition	Corrective action
Evaporator	Remove the drain hose from the heater case, and check the end part for 10 seconds or more.	Replace the evaporator.
	Check the air vent grille. NOTE: Turn the ignition switch to ON, and run the blower at high speed for approx. 1 minute. Stop the blower to check the air vent grille on the instrument panel. While moving the tester closer to the grille, run the blower for 1 or 2 seconds, then stop it. Check the grille at that position for at least 10 seconds.	Replace the evaporator.

7. Relay and Fuse

A: LOCATION

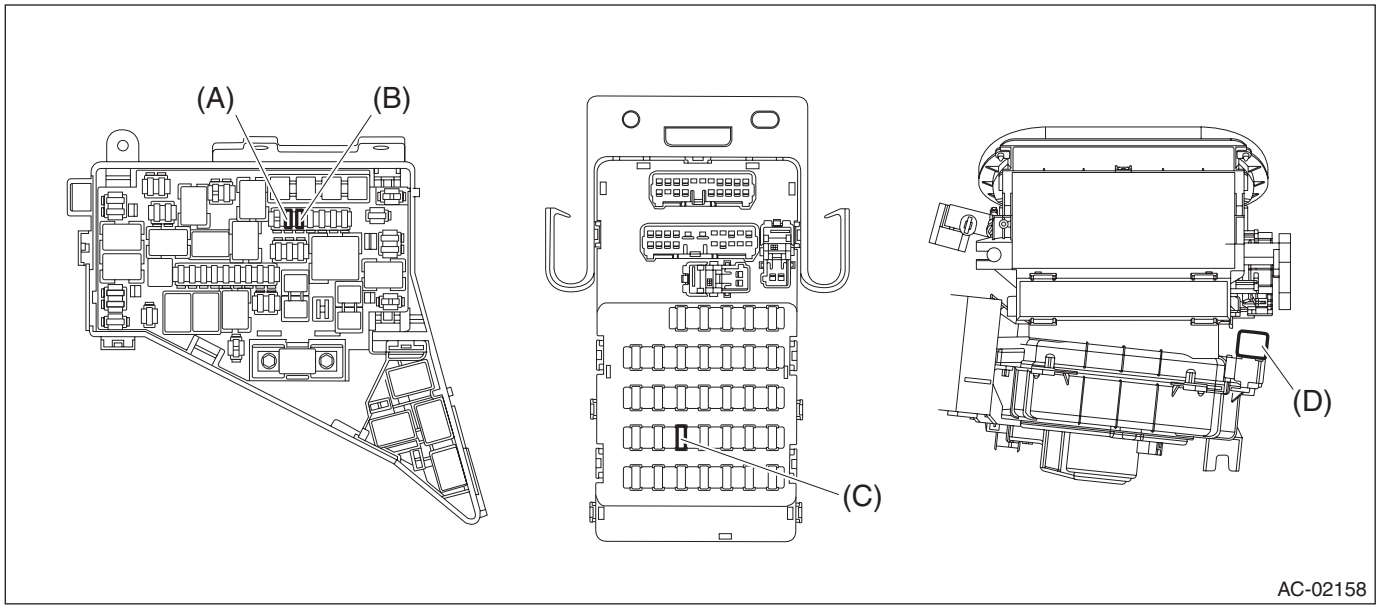

Main fuse box	Fuse 15A	(A)
	Fuse 15A	(B)
Relay & fuse box	Fuse 15A	(C)
Blower motor unit	Blower motor relay	(D)

NOTE:
For other related fuses, refer to the wiring diagram. <Ref. to WI-15, Power Supply Circuit.>

B: INSPECTION

1. CHECK FUSE.

1) Remove the fuse and inspect visually.
2) If the fuse is blown out, replace the fuse.

NOTE:
If the fuse is blown again, check the system wiring harness.

2. CHECK RELAY

1) Measure the resistance between blower motor relay terminals.

Terminal No.	Inspection conditions	Standard	Circuit
1 — 4	Always	1 MΩ or more	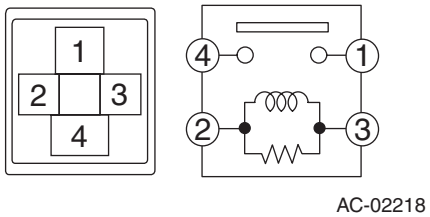
1 — 4	Apply battery voltage between terminals 2 and 3.	Less than 1 Ω	

2) Replace the blower motor relay if the inspection result is not within the standard value.

8. Compressor Oil

A: PROCEDURE

NOTE:
Before making repairs, perform the oil return operation to return the compressor oil in circulation with the refrigerant to the compressor.
1) Increase the engine to 1,500 rpm.
2) Turn the A/C switch to ON.
3) Set the temperature control switch or dial to LO (MAX COOL).
4) Turn the FRESH/RECIRC switch to RECIRC position.
5) Turn the airflow adjustment switch or dial to HI (MAX).
6) Leave in this condition for 10 minutes.

B: REPLACEMENT

NOTE:
• If a component has been replaced, add an appropriate amount of compressor oil (same as the amount of remaining oil in removed component).
• When replacing the compressor, the new compressor will already have the specified amount of oil in it. Install the new compressor so that the amount of oil becomes the same as the amount of remaining oil in the removed compressor.
• Since the hygroscopicity of compressor oil is high, perform this series of works quickly.

9. Blower Motor Unit Assembly

A: REMOVAL

1) Disconnect the ground cable from battery.
2) Using the refrigerant recovery system, discharge refrigerant. <Ref. to AC-24, PROCEDURE, Refrigerant Recovery Procedure.>
3) Drain the coolant from the radiator.
• H4 non-turbo model: <Ref. to CO(H4SO)-14, DRAINING OF ENGINE COOLANT, REPLACEMENT, Engine Coolant.>
• H4 turbo model: <Ref. to CO(H4DOTC)-14, DRAINING OF ENGINE COOLANT, REPLACEMENT, Engine Coolant.>
• H6 model: <Ref. to CO(H6DO)-12, DRAINING OF ENGINE COOLANT, REPLACEMENT, Engine Coolant.>
4) Remove the connector and bolts, and remove the high-pressure hose and AC pipe from the expansion valve.
5) Loosen the heater hose clamps and remove the hoses.

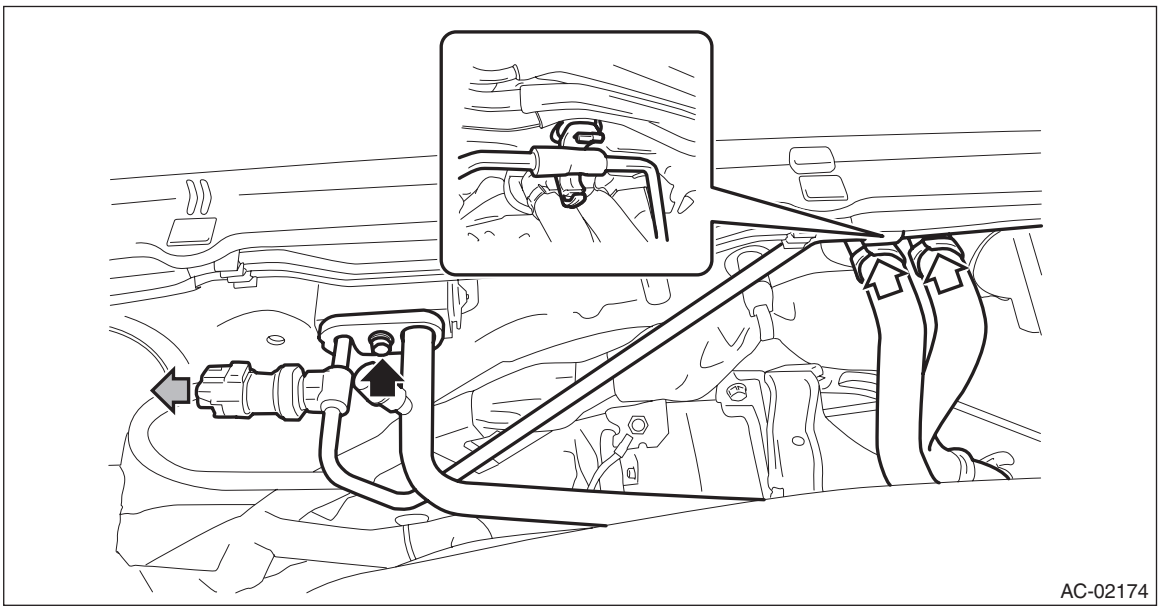

6) Remove the instrument panel assembly. <Ref. to EI-76, REMOVAL, Instrument Panel Assembly.>

7) Remove the engine control module (ECM).
   (1) Release the lock and remove the relay holder.
   (2) Remove the nuts, and remove the engine control module (ECM).

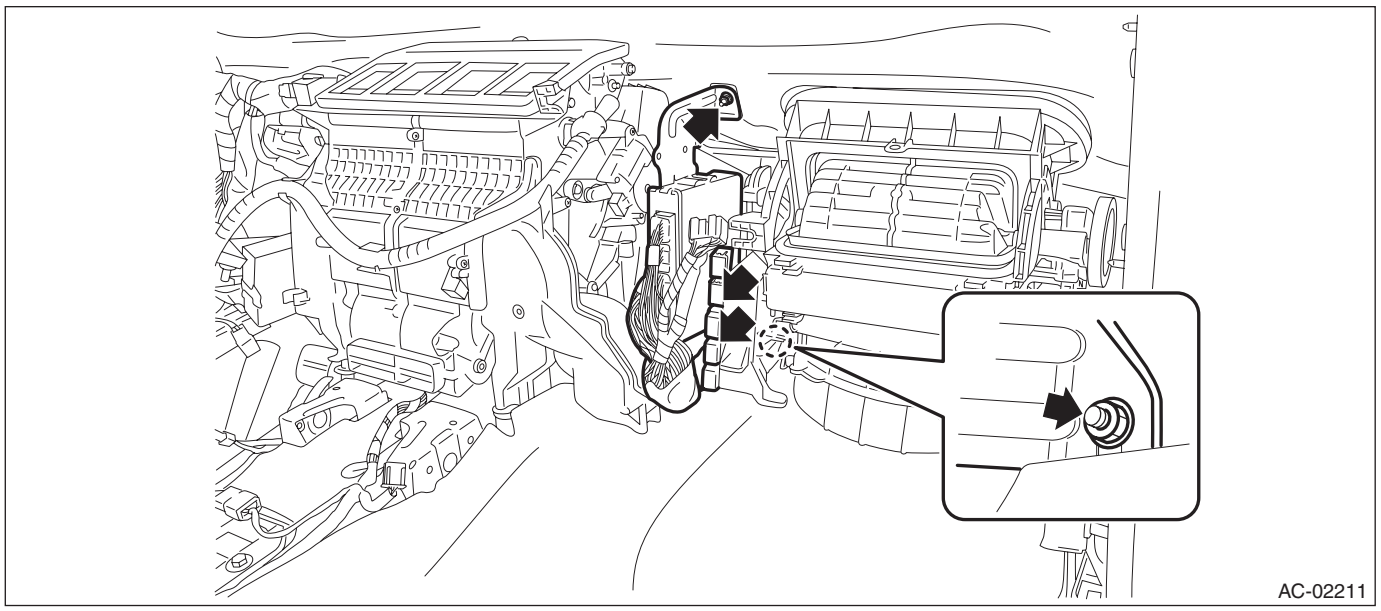

8) Remove the heater and cooling unit.
   (1) Remove the bolt and remove the heater and cooling unit.

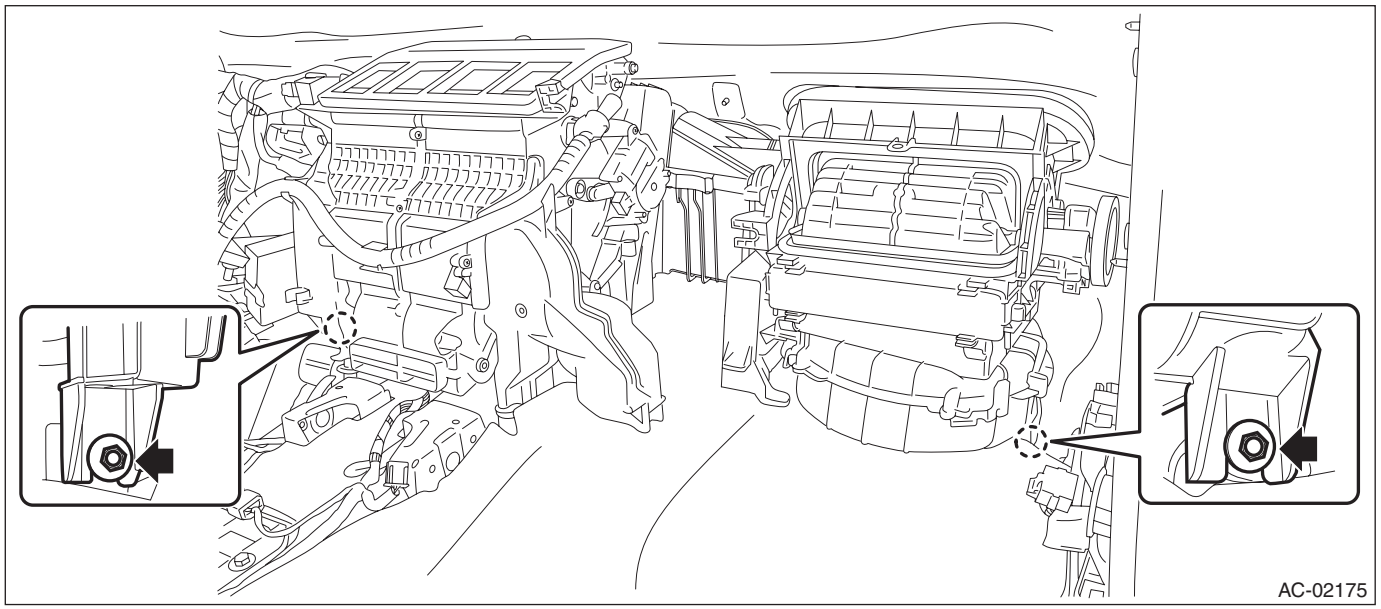

9) Remove the blower motor unit assembly.
(1) Release the claws and remove the bolts.

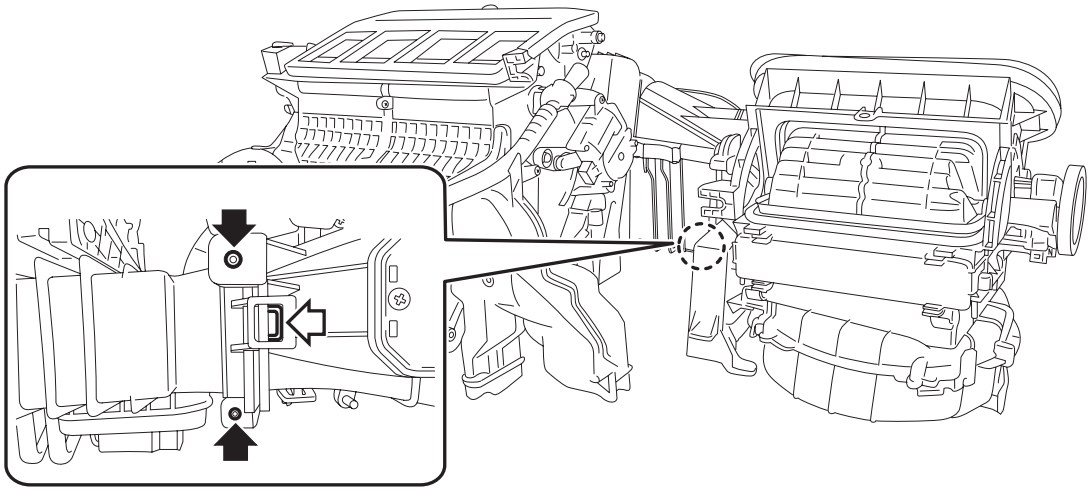
AC-02159

(2) Remove the blower motor unit assembly as shown in the figure.

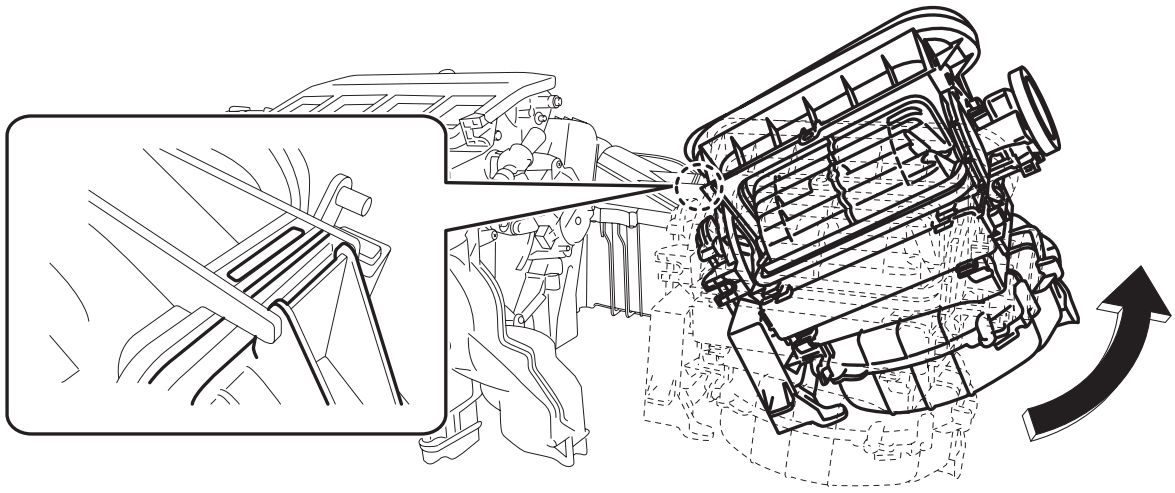
AC-02160

B: INSTALLATION

CAUTION:
• After installing the compressor, do not start the engine until the A/C system is charged with refrigerant.
• If the engine is started with no refrigerant charge, replace the compressor.
• Replace O-rings and pipe clamps with new parts and install securely.
1) Install each part in the reverse order of removal.

NOTE:
Refer to “INSTALLATION” of “Instrument Panel Assembly”. <Ref. to EI-95, INSTALLATION, Instrument Panel Assembly.>
2) Fill engine coolant.
• H4 non-turbo model: <Ref. to CO(H4SO)-14, FILLING OF ENGINE COOLANT, REPLACEMENT, Engine Coolant.>
• H4 turbo model: <Ref. to CO(H4DOTC)-14, FILLING OF ENGINE COOLANT, REPLACEMENT, Engine Coolant.>
• H6 model: <Ref. to CO(H6DO)-12, FILLING OF ENGINE COOLANT, REPLACEMENT, Engine Coolant.>
3) Charge refrigerant. <Ref. to AC-25, PROCEDURE, Refrigerant Charging Procedure.>

Tightening torque:
Heater cooling unit: <Ref. to AC-6, HEATER COOLING UNIT, COMPONENT, General Description.>
Blower motor unit: <Ref. to AC-8, BLOWER MOTOR UNIT, COMPONENT, General Description.>

10.Blower Motor

A: REMOVAL

1) Disconnect the ground cable from battery.
2) Remove the clips, and remove the glove box under cover.

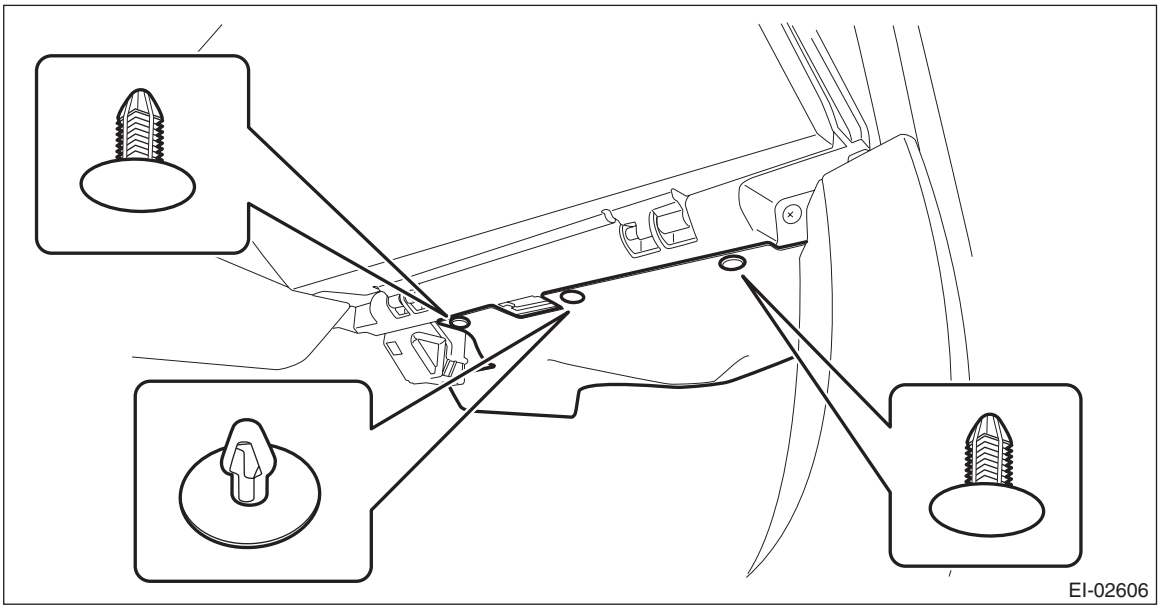

3) Remove the blower motor.
   (1) Disconnect the connector.
   (2) Remove the screw and remove the blower motor.

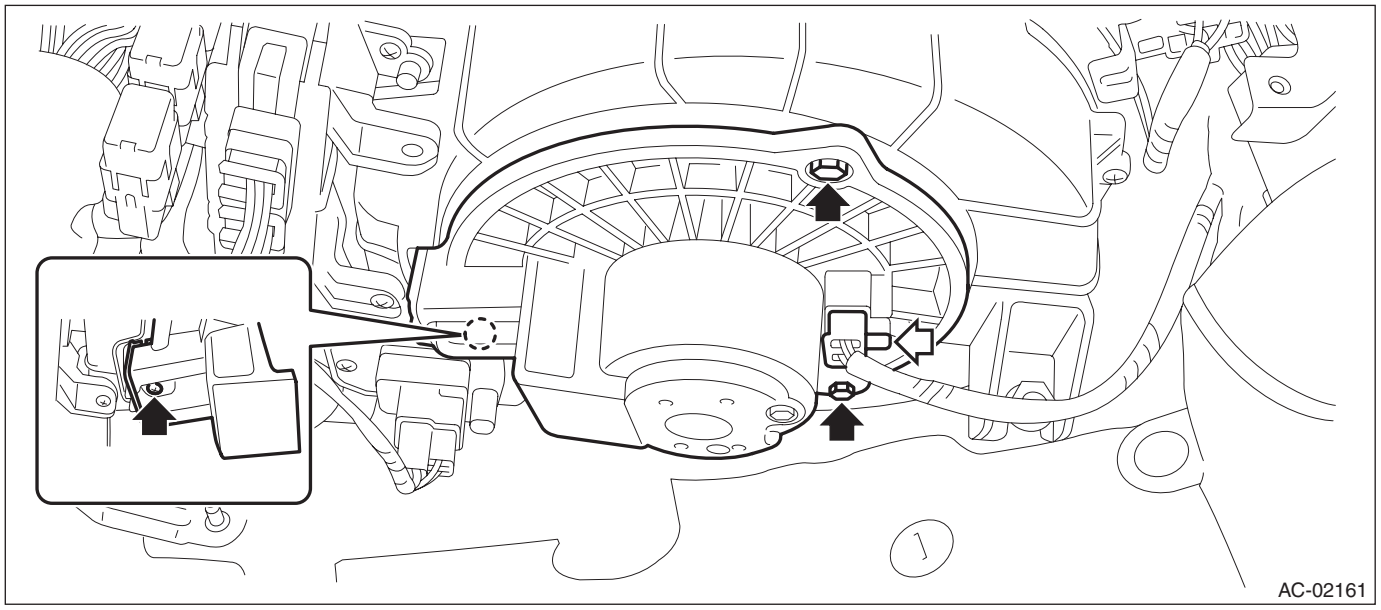

B: INSTALLATION

Install each part in the reverse order of removal.

C: INSPECTION

1) Check the blower motor operation when battery voltage is applied between the terminals of blower motor.

Terminal No.	Inspection conditions	Specification	Connection diagram
2 (+) — 1 (–)	Connect battery to the terminals	Rotation	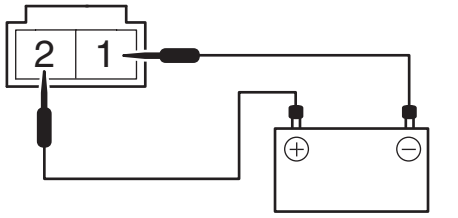 AC-02576

2) If the blower motor does not operate normally, replace the blower motor.

11.Power Transistor (Auto A/C Model)

A: REMOVAL

1) Disconnect the ground cable from battery.
2) Remove the clips, and remove the glove box under cover.

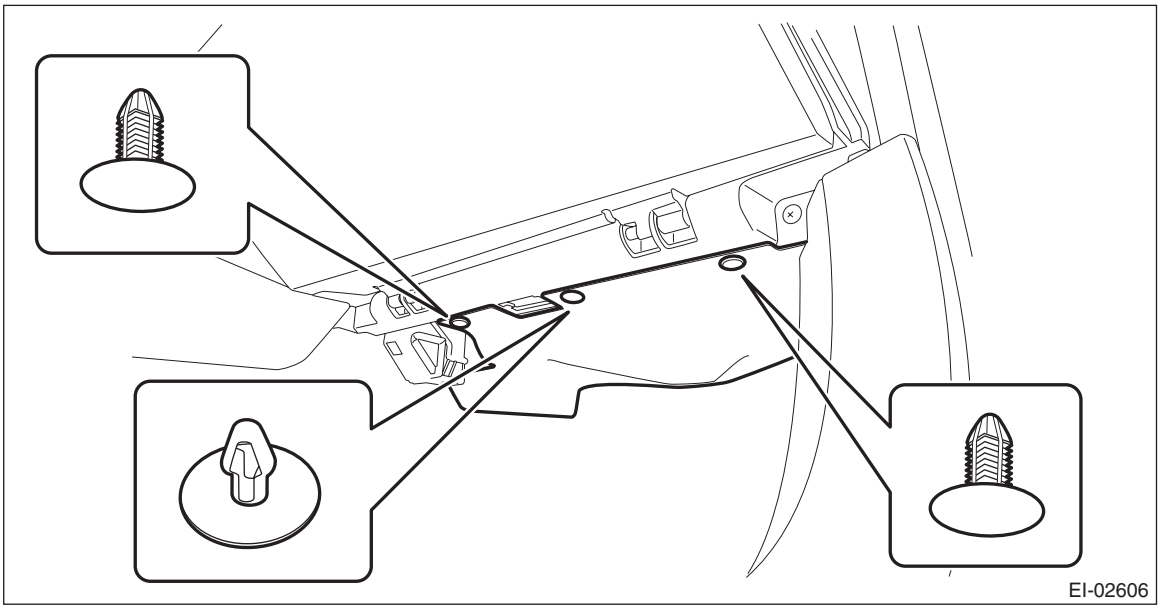

3) Remove the power transistor.
   (1) Disconnect the connector.
   (2) Remove the screws and remove the power transistor.

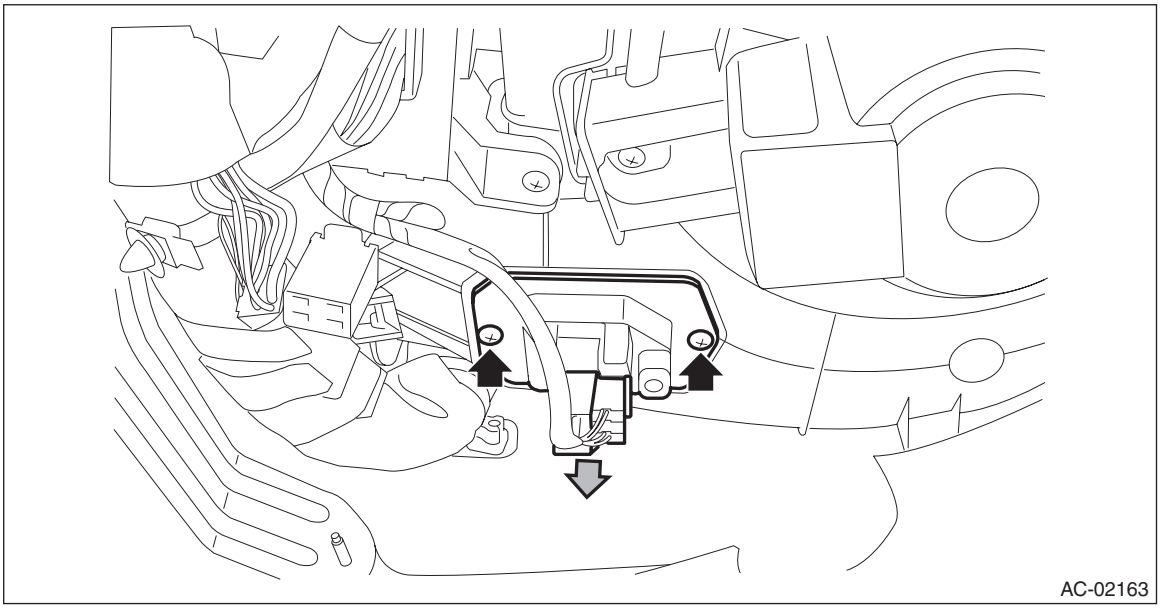

B: INSTALLATION

Install each part in the reverse order of removal.

12.Blower Resistor (Manual A/C Model)

A: REMOVAL

1) Disconnect the ground cable from battery.
2) Remove the clips, and remove the glove box under cover.

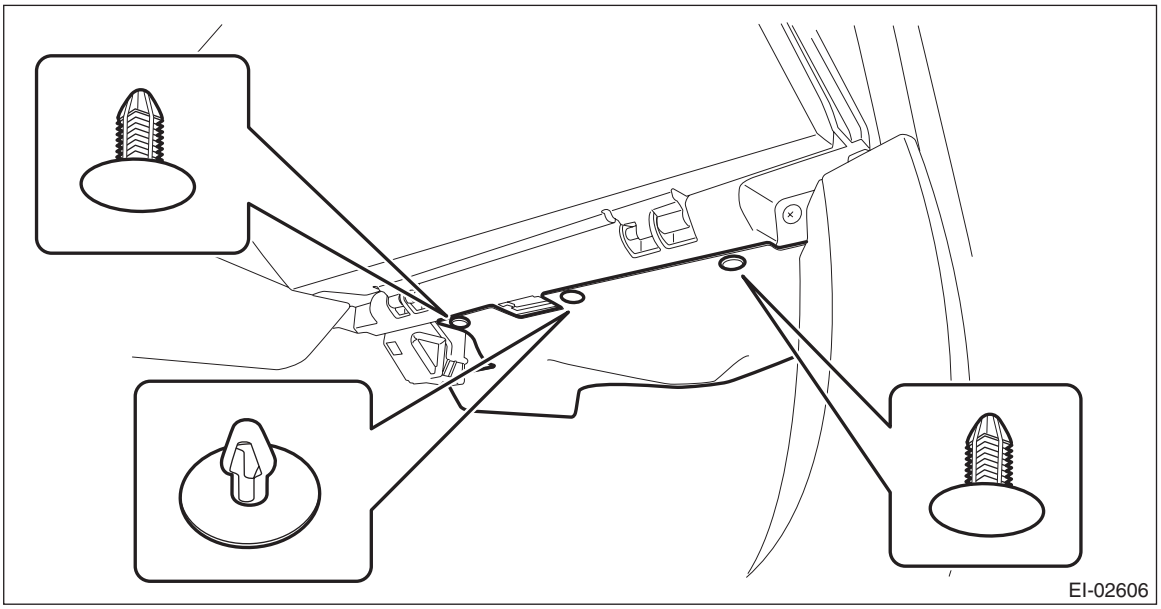

3) Remove the blower resistor.
   (1) Disconnect the connector.
   (2) Remove the screw and remove the blower resistor.

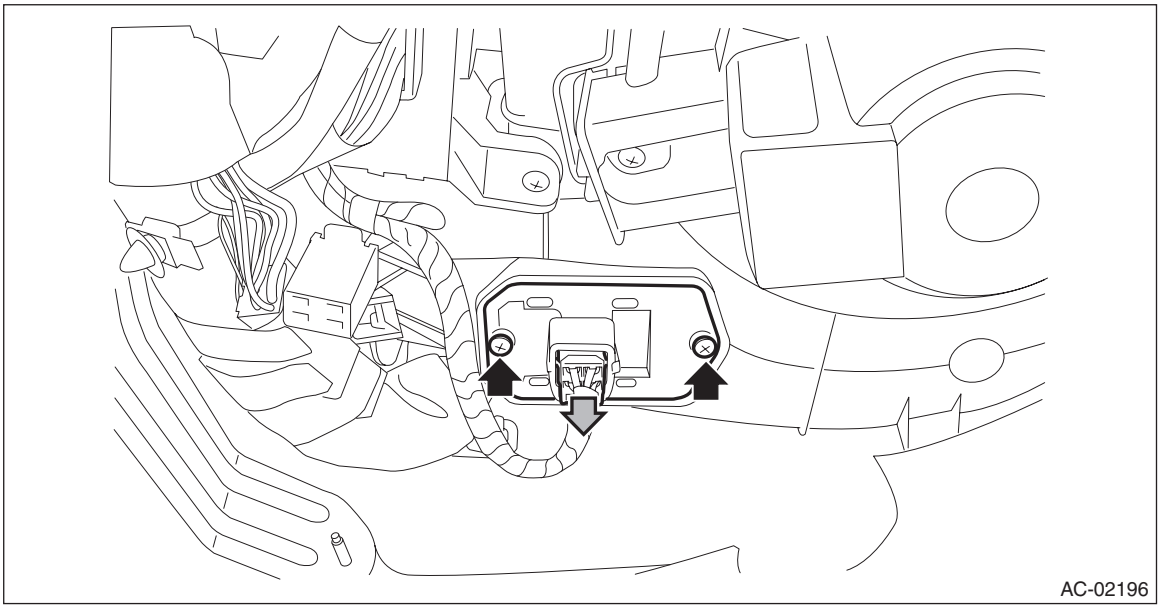

B: INSTALLATION

Install each part in the reverse order of removal.

C: INSPECTION

1) Disconnect the blower resistor connector.
2) Check the resistance between blower resistor terminals.

Preparation tool: Circuit tester

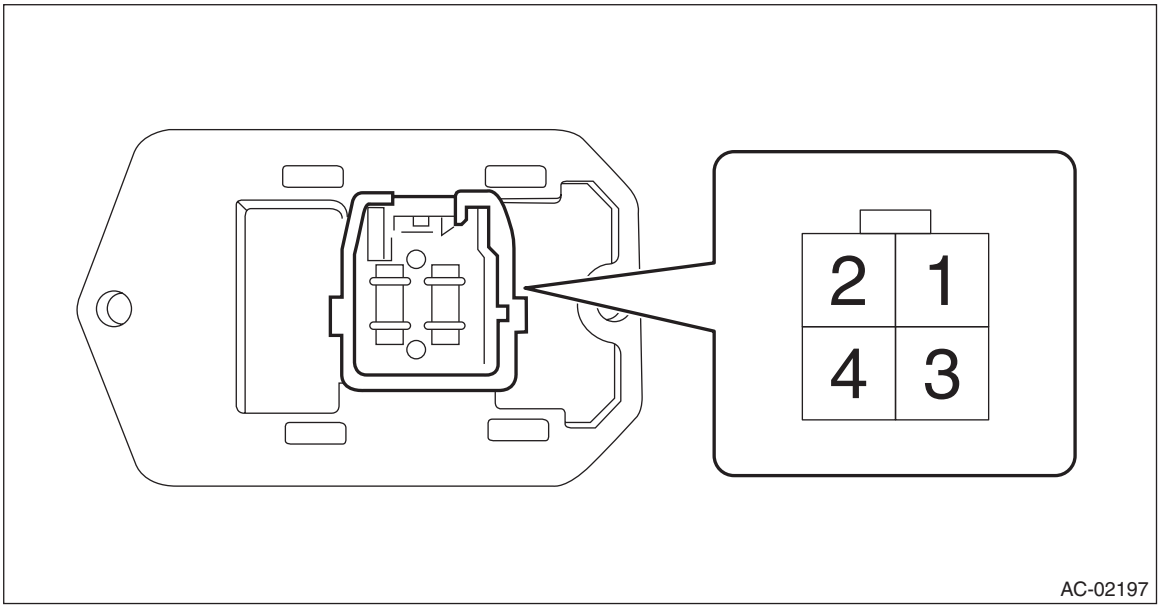

Terminal No.	Standard
4 — 2	Approx. 0.44 Ω
4 — 3	Approx. 1.12 Ω
4 — 1	Approx. 2.92 Ω

3) Replace the blower resistor if the inspection result is not within the standard value.

13.Heater Core

A: REMOVAL

1) Disconnect the ground cable from battery.
2) Using the refrigerant recovery system, discharge refrigerant. <Ref. to AC-24, PROCEDURE, Refrigerant Recovery Procedure.>
3) Drain the coolant from the radiator.
• H4 non-turbo model: <Ref. to CO(H4SO)-14, DRAINING OF ENGINE COOLANT, REPLACEMENT, Engine Coolant.>
• H4 turbo model: <Ref. to CO(H4DOTC)-14, DRAINING OF ENGINE COOLANT, REPLACEMENT, Engine Coolant.>
• H6 model: <Ref. to CO(H6DO)-12, DRAINING OF ENGINE COOLANT, REPLACEMENT, Engine Coolant.>
4) Remove the connector and bolts, and remove the high-pressure hose and AC pipe from the expansion valve.
5) Loosen the heater hose clamps and remove the hoses.

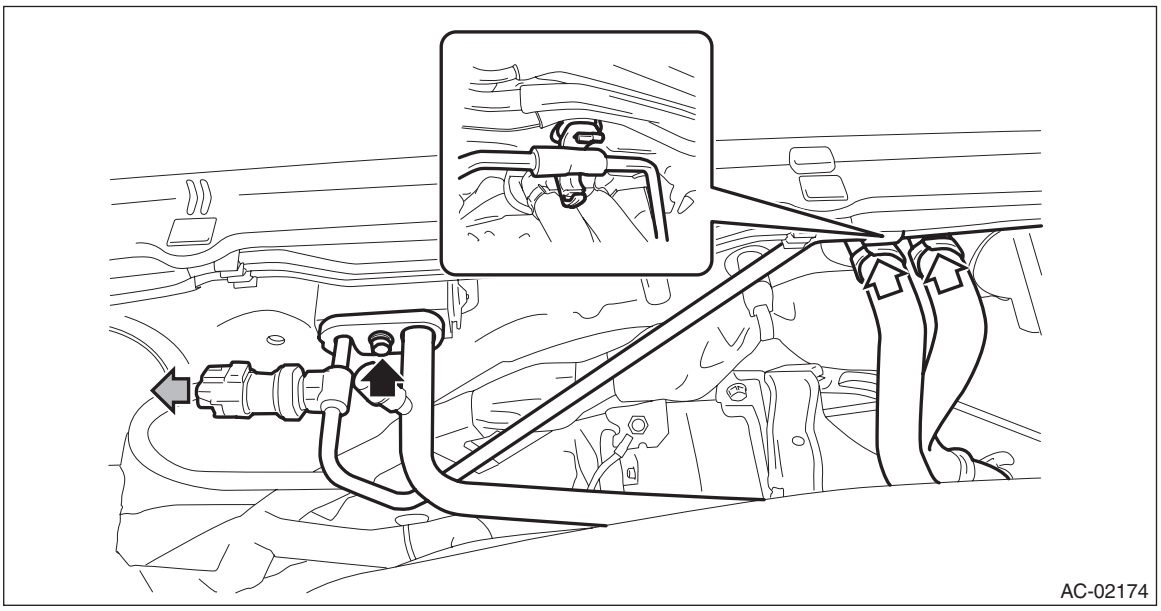

6) Remove the instrument panel assembly. <Ref. to EI-76, REMOVAL, Instrument Panel Assembly.>

7) Remove the engine control module (ECM).
   (1) Release the lock and remove the relay holder.
   (2) Remove the nuts, and remove the engine control module (ECM).

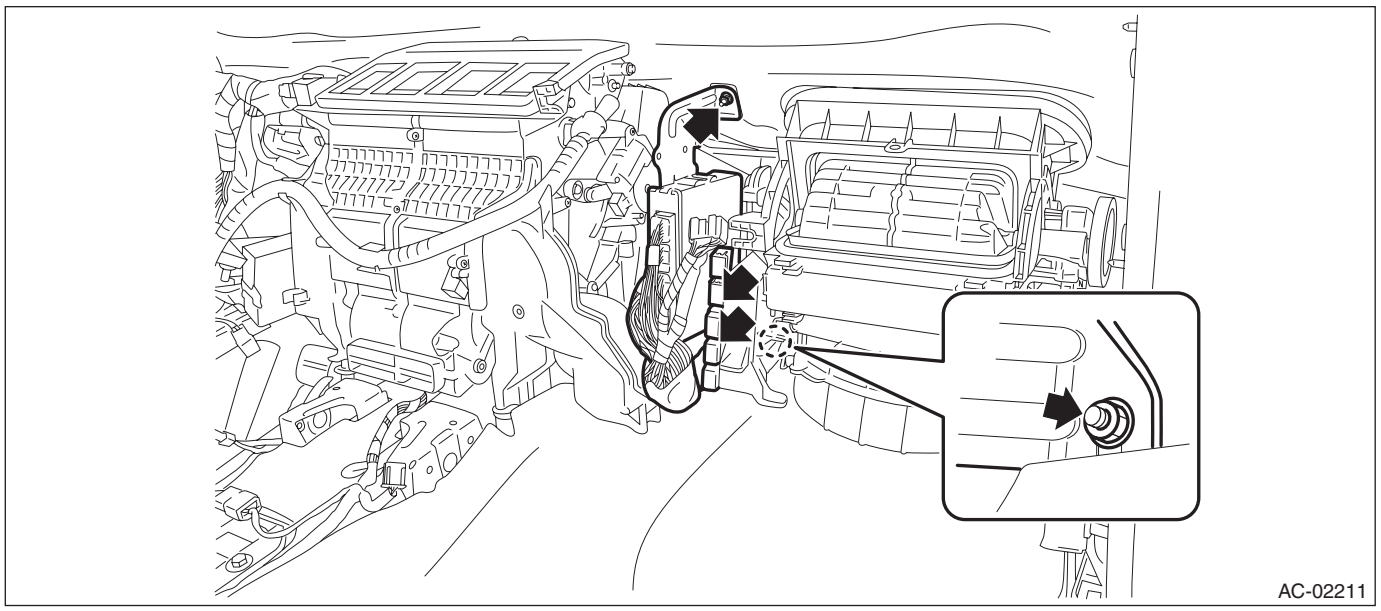

8) Remove the heater and cooling unit.
   (1) Remove the bolt and remove the heater and cooling unit.

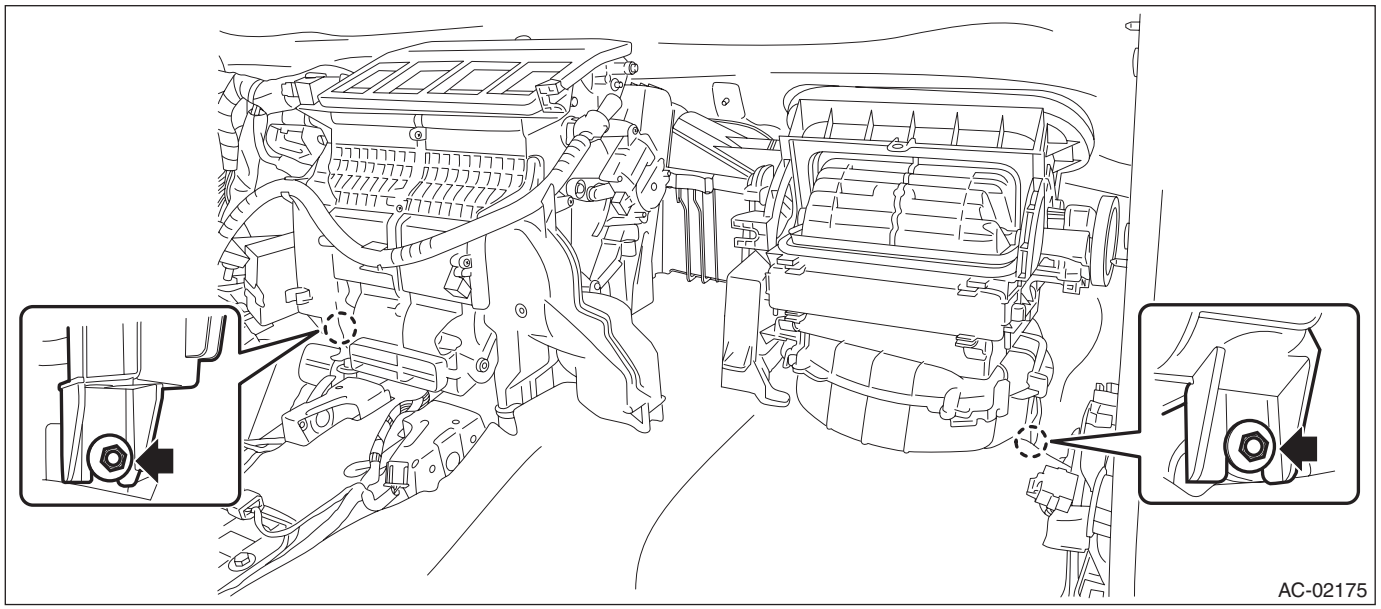

9) Disconnect the claws and then remove the aspirator hose.

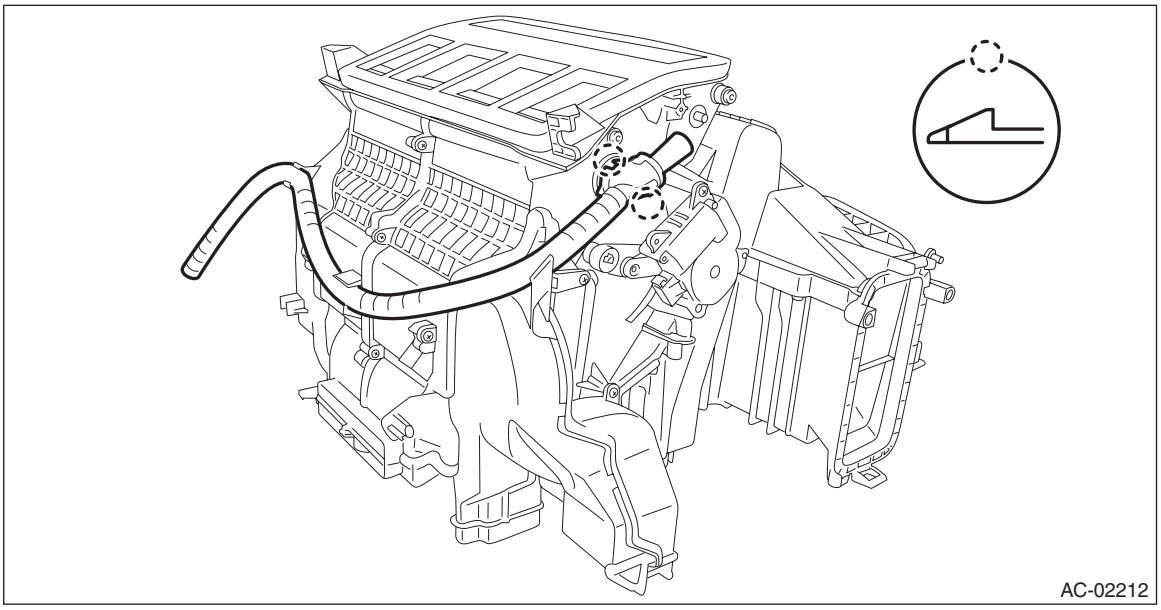

10) Remove the screws and remove the foot duct (LH).

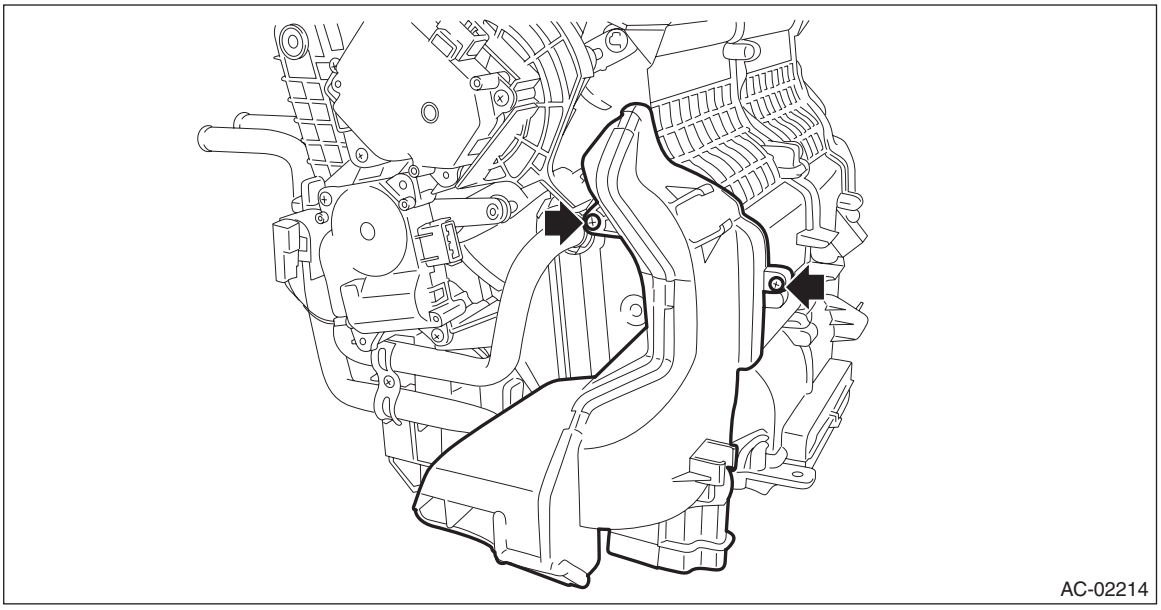

11) Remove the heater core.
(1) Remove the screw and remove the heater pipe clamp.

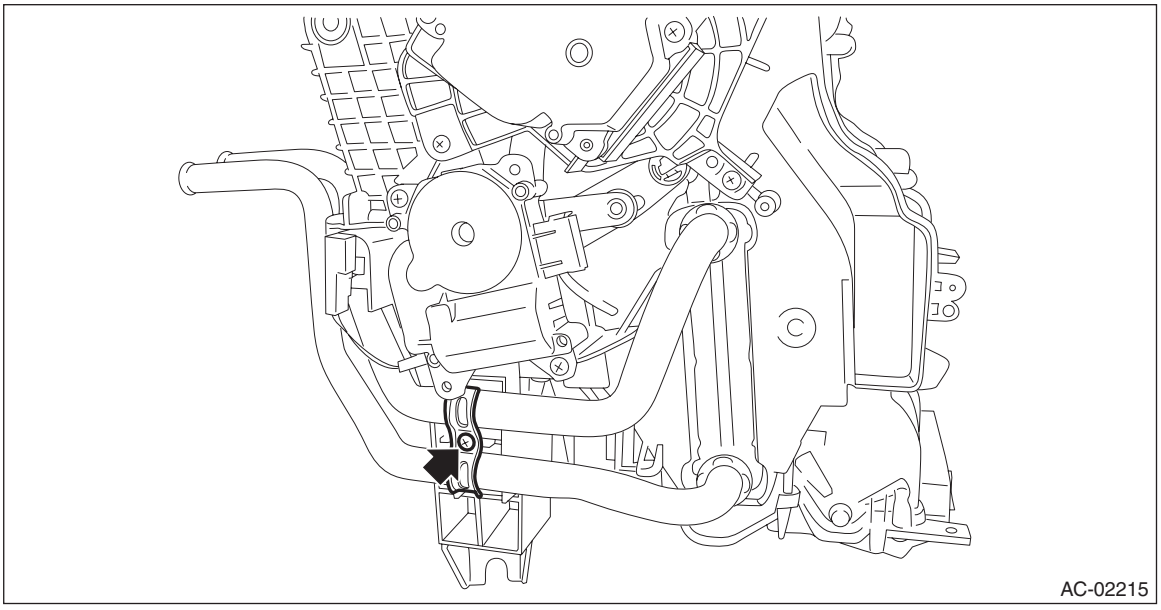

(2) Pull out the heater core from the heater and cooling unit assembly.

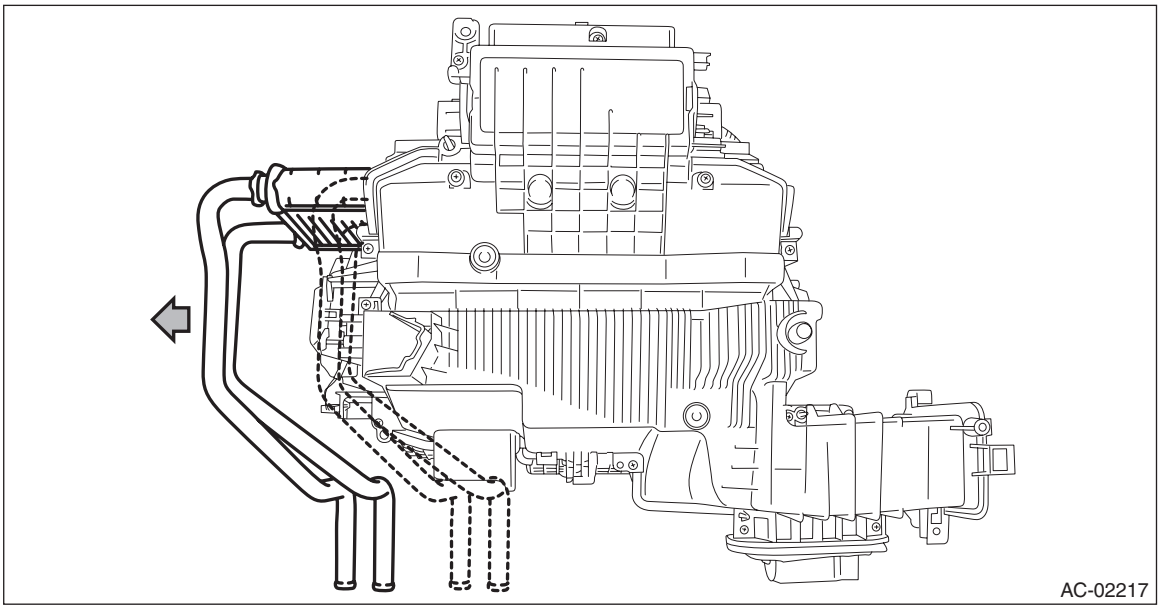

B: INSTALLATION

CAUTION:
- **Do not start the engine before charging refrigerant.**
- **If the engine is started with no refrigerant charge, replace the compressor.**
- **Replace O-rings and pipe clamps with new parts and install securely.**

1) Install each part in the reverse order of removal.

NOTE:
Refer to “INSTALLATION” of “Instrument Panel Assembly”. <Ref. to EI-95, INSTALLATION, Instrument Panel Assembly.>

2) Fill engine coolant.
- H4 non-turbo model: <Ref. to CO(H4SO)-14, FILLING OF ENGINE COOLANT, REPLACEMENT, Engine Coolant.>
- H4 turbo model: <Ref. to CO(H4DOTC)-14, FILLING OF ENGINE COOLANT, REPLACEMENT, Engine Coolant.>
- H6 model: <Ref. to CO(H6DO)-12, FILLING OF ENGINE COOLANT, REPLACEMENT, Engine Coolant.>

3) Charge refrigerant. <Ref. to AC-25, PROCEDURE, Refrigerant Charging Procedure.>

Tightening torque:
Heater cooling unit: <Ref. to AC-6, HEATER COOLING UNIT, COMPONENT, General Description.>
Blower motor unit: <Ref. to AC-8, BLOWER MOTOR UNIT, COMPONENT, General Description.>

14.Control Panel

A: REMOVAL

1. AUTO A/C MODEL

1) Disconnect the ground cable from battery.
2) Remove the center panel assembly.

CAUTION:
Do not put your finger on the fin of the air vent grille. Doing so may damage the fin.

(1) Attach the protective tape (a) to the meter visor.

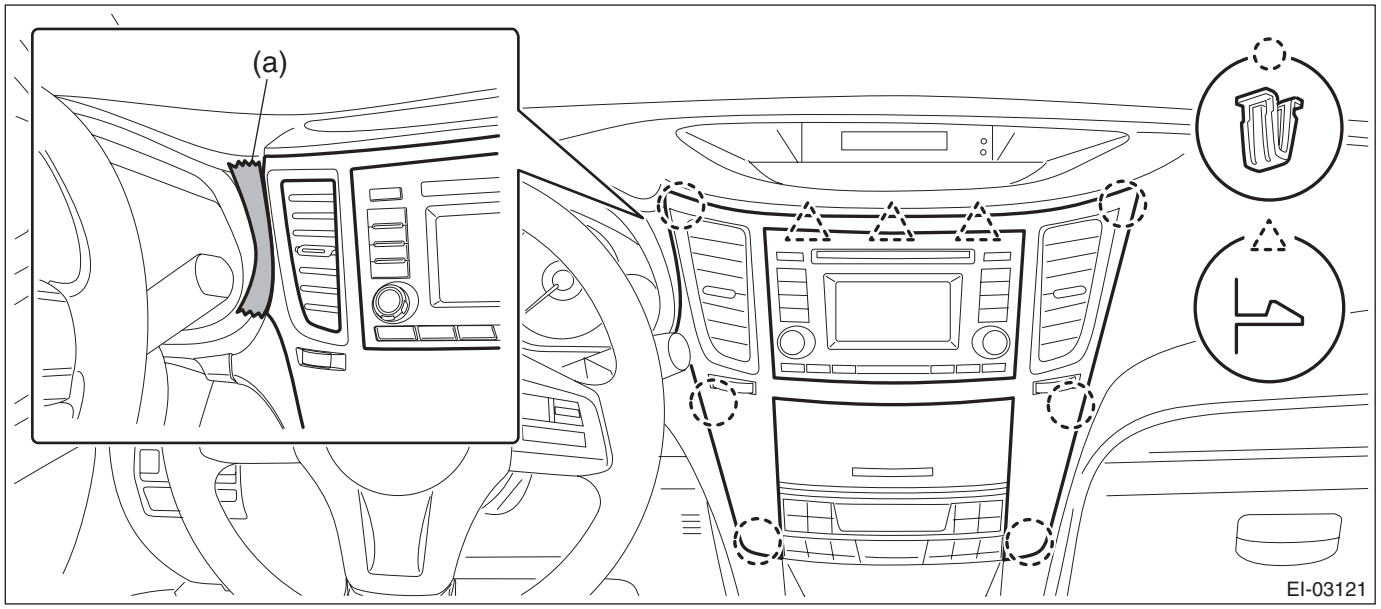

(2) Insert a finger into the air vent grille and release the left and right clips at the top of the center panel. (A), (B)
(3) Insert a finger into the air vent grille and release the left and right clips at the center of the center panel. (C), (D)

(4) Release the clips at the bottom of the center panel and remove the center panel assembly.

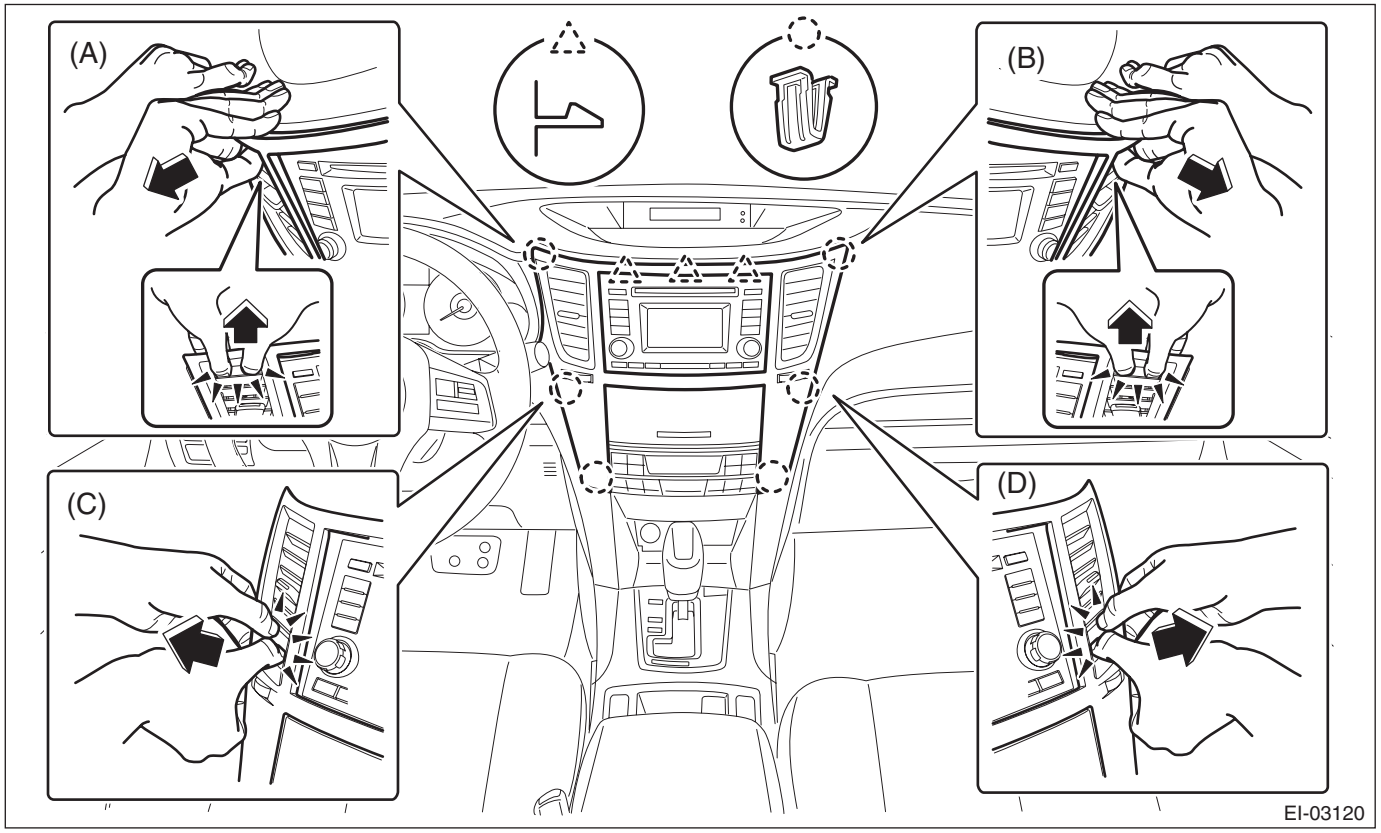

3) Remove the audio assembly.
(1) Remove the left and right screws, and partially pull the audio out from center console.
(2) Disconnect the connectors, and remove the audio assembly.

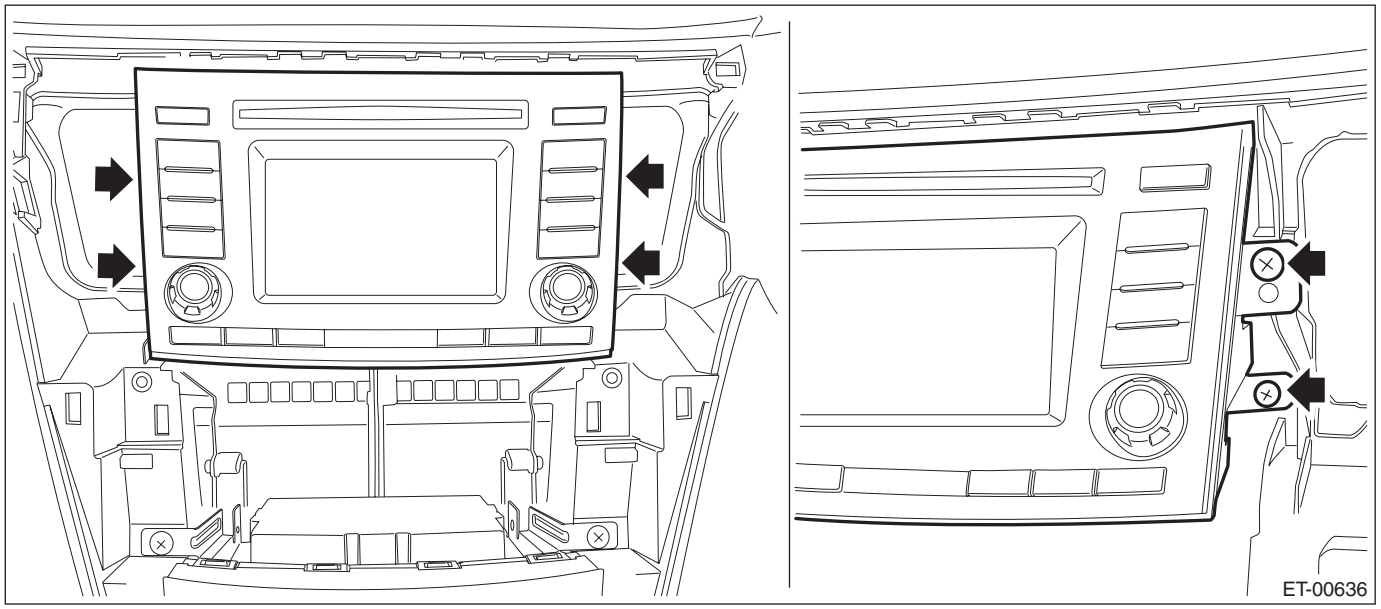

4) Remove the navigation assembly. (model with navigation)
   (1) Remove the left and right screws.
   (2) Disconnect the connectors, and remove the navigation assembly.

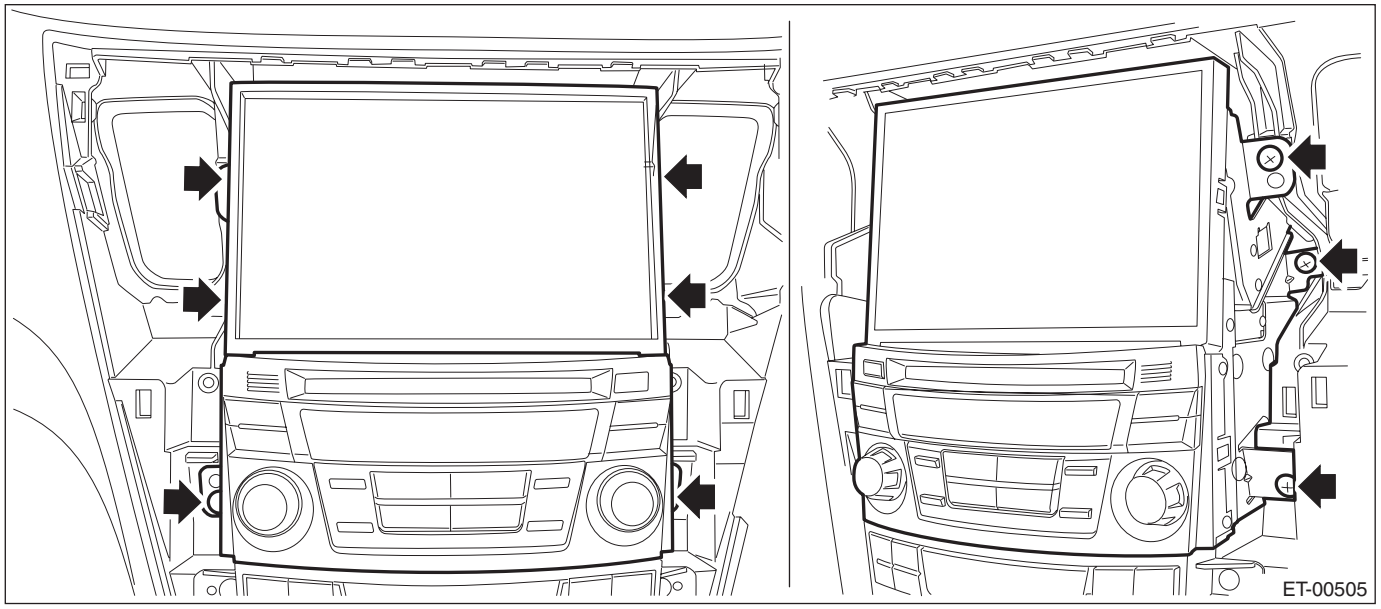

5) Remove the control panel.
   (1) Remove the screws and release the clip.

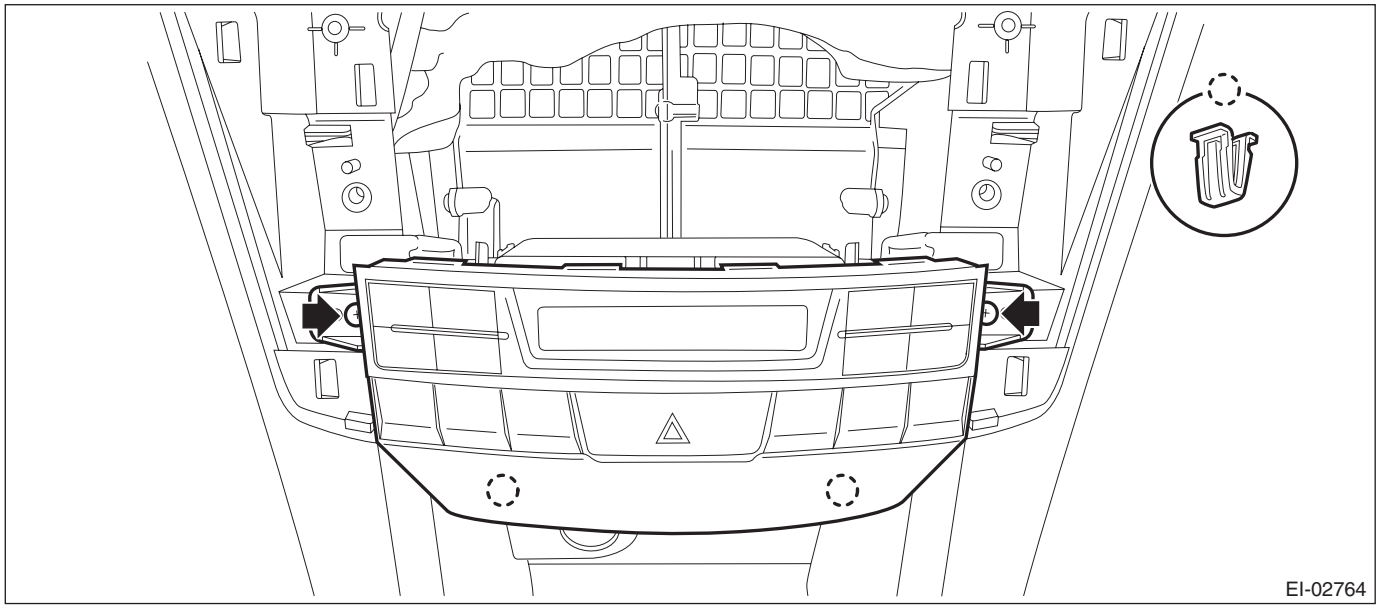

(2) Pull forward the control module and disconnect the connector.

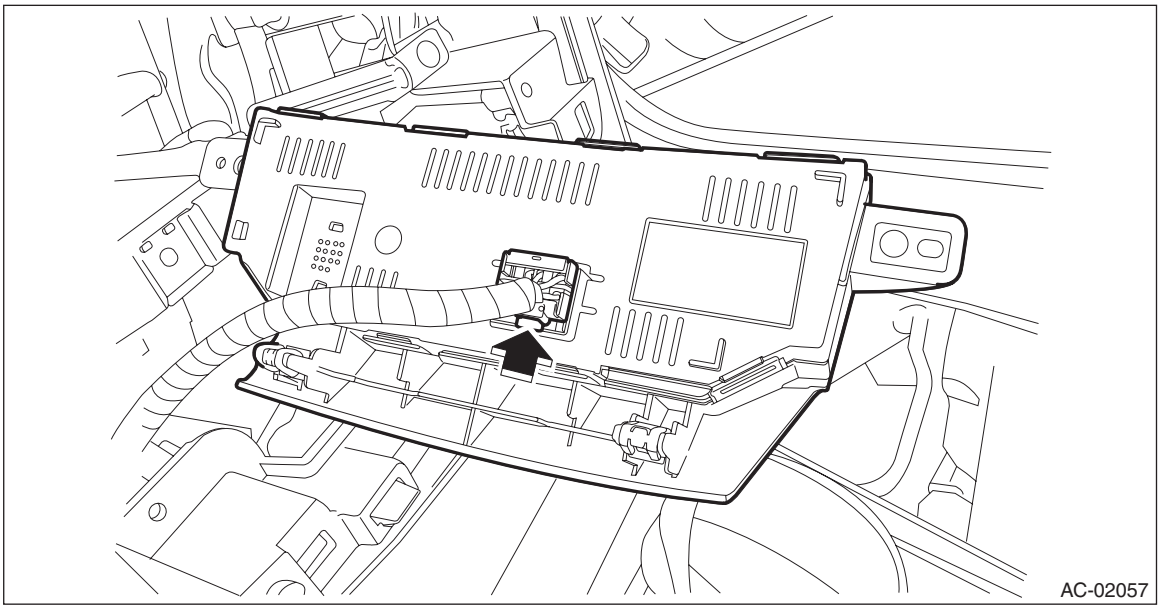

2. MANUAL A/C MODEL

1) Disconnect the ground cable from battery.
2) Remove the center panel assembly.

CAUTION:
Do not put your finger on the fin of the air vent grille. Doing so may damage the fin.

(1) Attach the protective tape (a) to the meter visor.

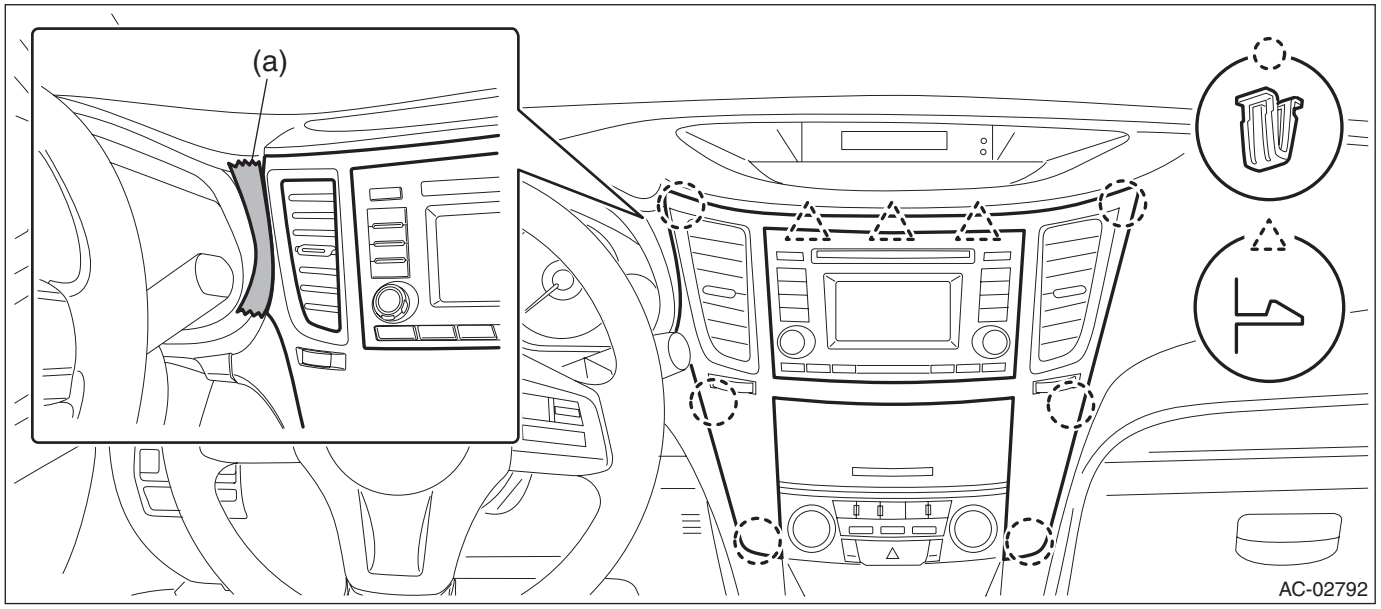

(2) Insert a finger into the air vent grille and release the left and right clips at the top of the center panel. (A), (B)
(3) Insert a finger into the air vent grille and release the left and right clips at the center of the center panel. (C), (D)

(4) Release the clips at the bottom of the center panel and remove the center panel assembly.

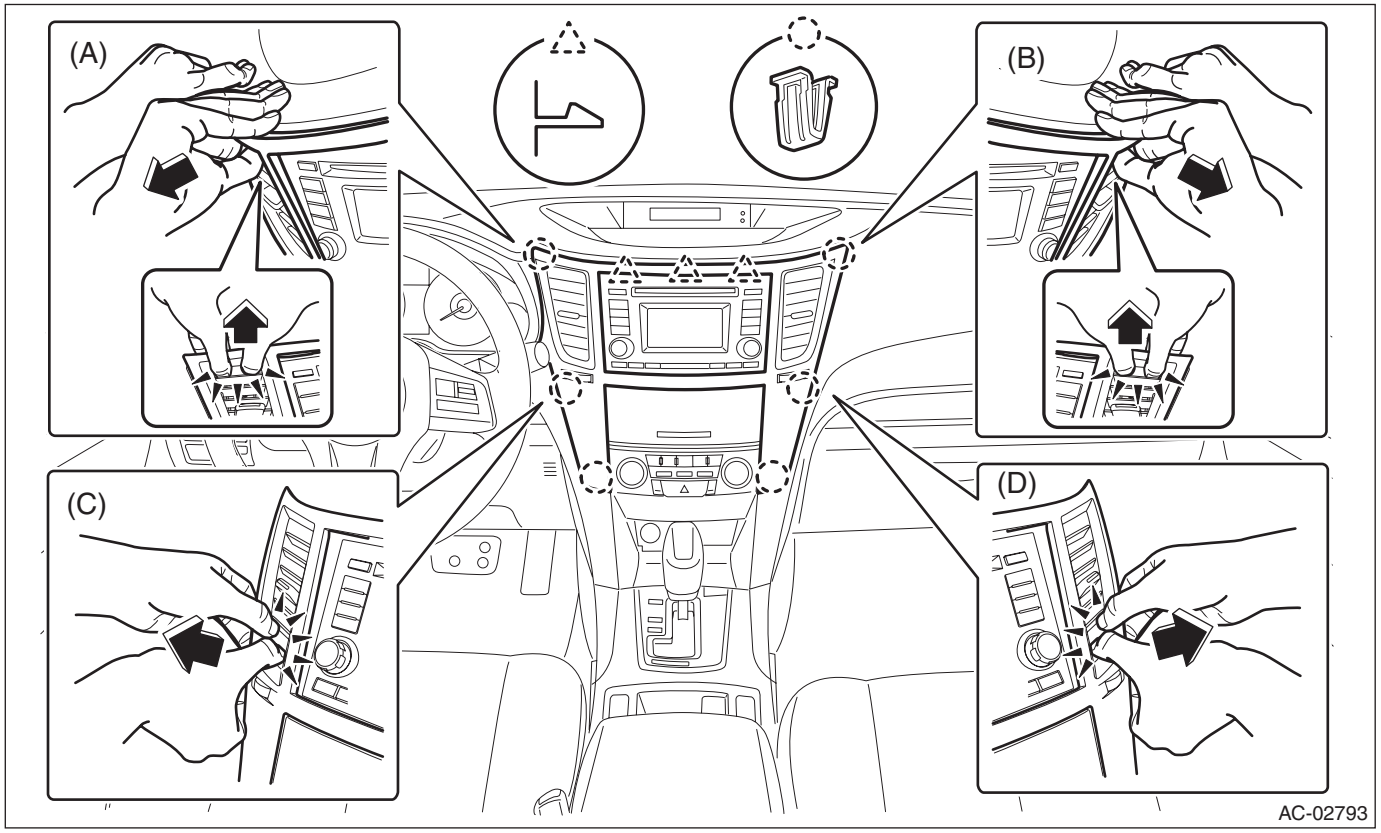

3) Remove the audio assembly.
(1) Remove the left and right screws, and partially pull the audio out from center console.
(2) Disconnect the connectors, and remove the audio assembly.

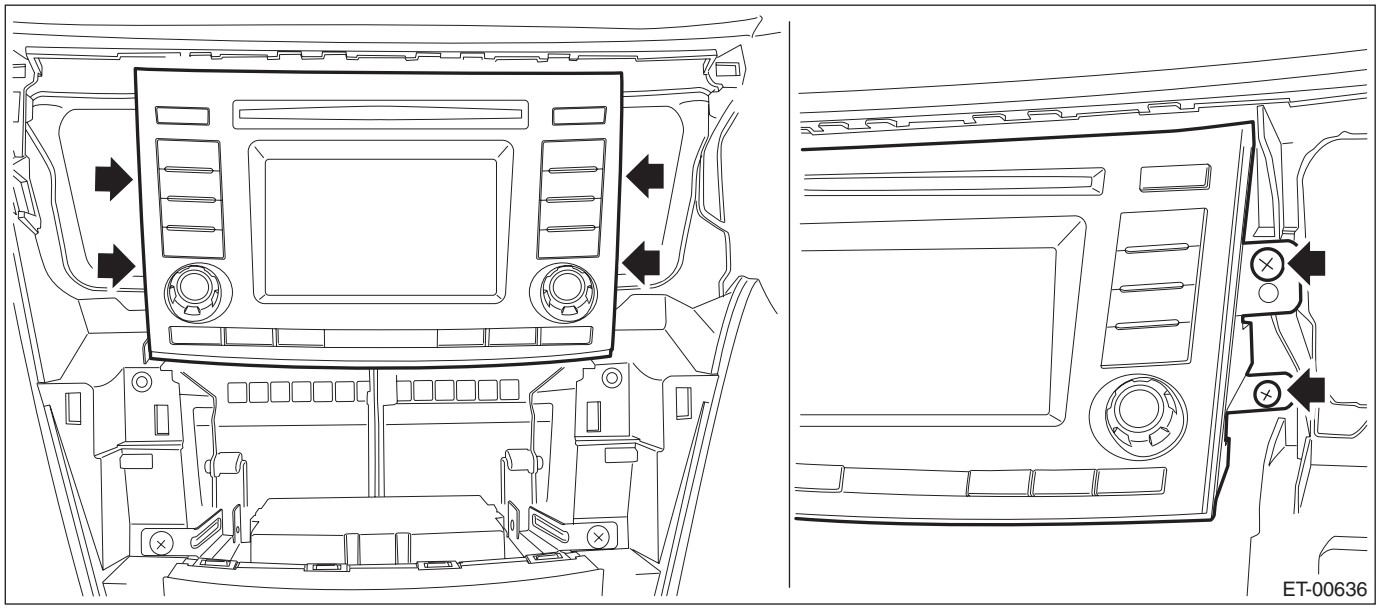

4) Remove the navigation assembly. (model with navigation)
   (1) Remove the left and right screws.
   (2) Disconnect the connectors, and remove the navigation assembly.

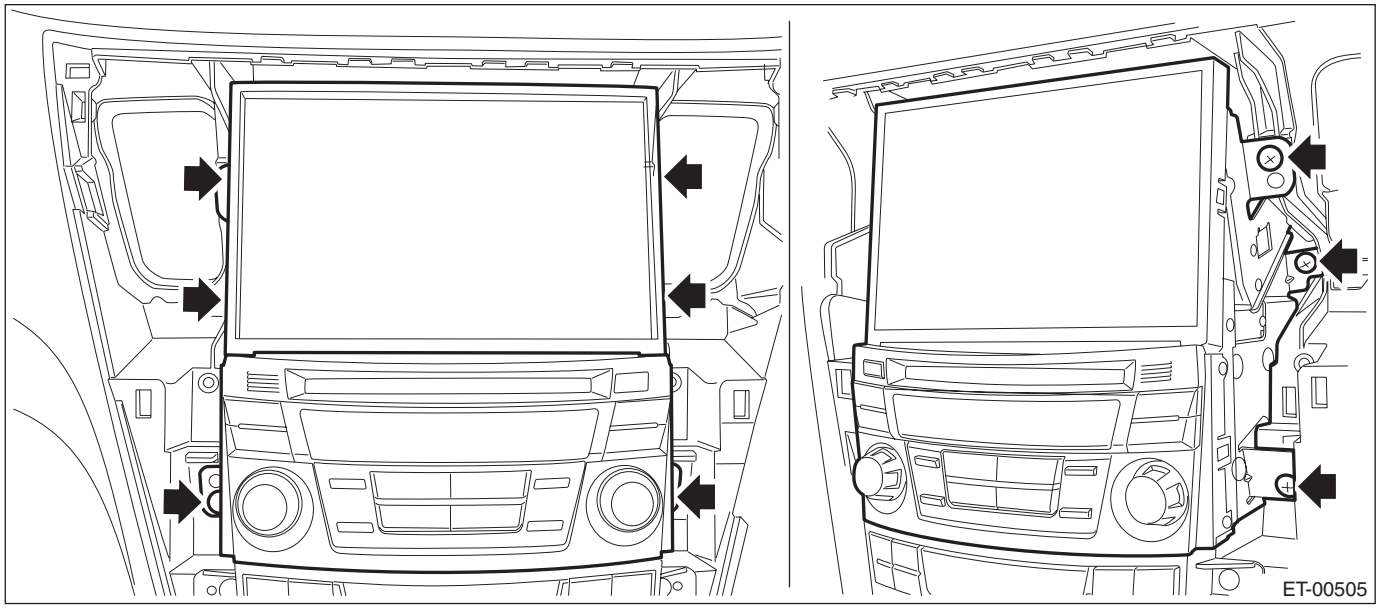

5) Remove the control panel.
   (1) Remove the screws and release the clip.

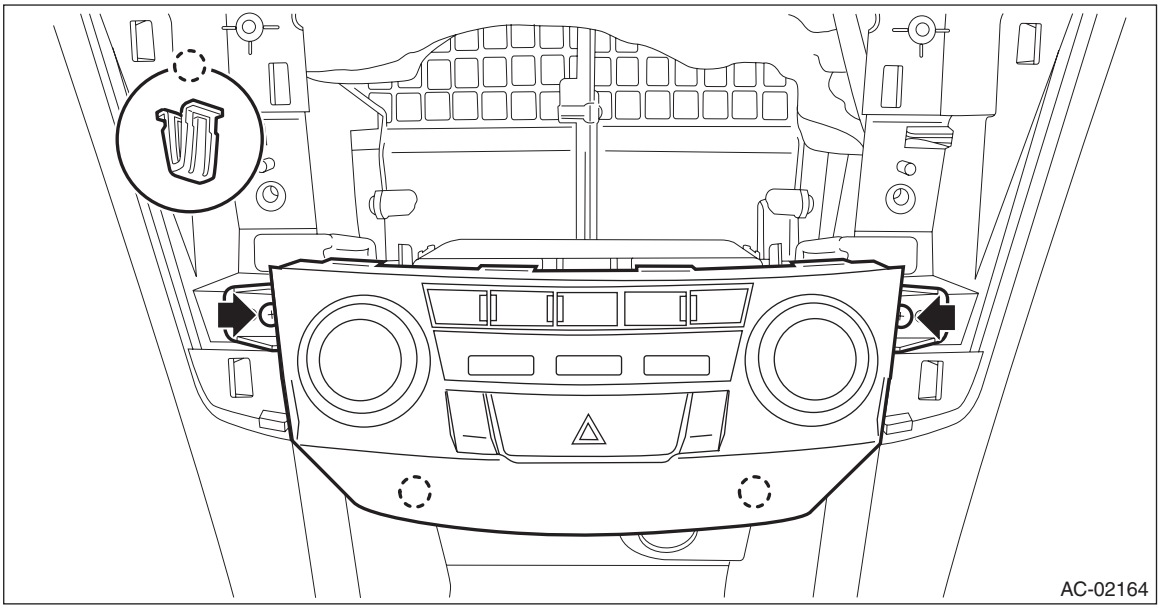

(2) Pull the control panel and disconnect the connector.

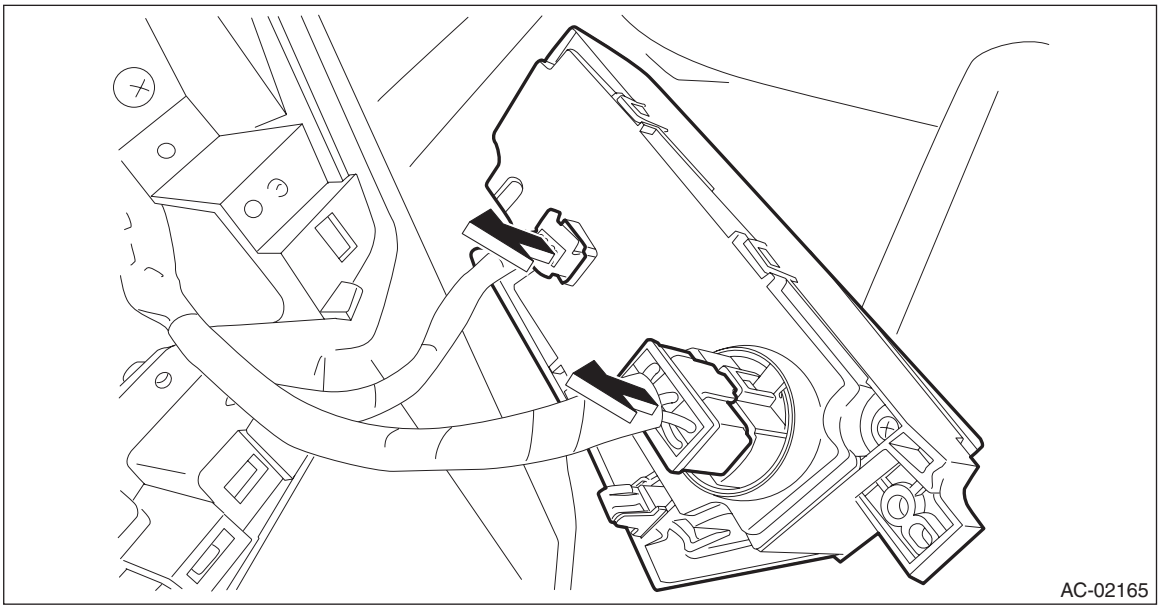

B: INSTALLATION

Install each part in the reverse order of removal.

C: INSPECTION

1. CHECK ILLUMINATION

1) Check the illumination operation when battery voltage is applied between the terminals of control panel.

- Auto A/C model

Terminal No.	Inspection conditions	Specification	Connection diagram
3 (+) — 9 (–)	Connect battery to the terminals	Light ON	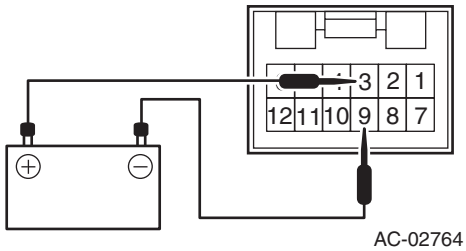

- Manual A/C model

Terminal No.	Inspection conditions	Specification	Connection diagram
2 (+) — 10 (–)	Connect battery to the terminals	Light ON	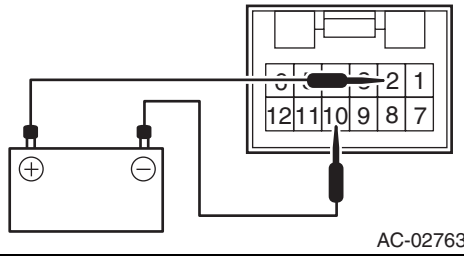

2) If the illumination does not operate normally, replace the control panel.

2. BLOWER SWITCH (MANUAL A/C MODEL)

Preparation tool: Circuit tester

1) Check the resistance between terminals of the control panel.

Terminal No.	Inspection conditions	Standard	Connection diagram
—	OFF	—	—
1 — 2, 4	1 (LO)	Less than 1 Ω	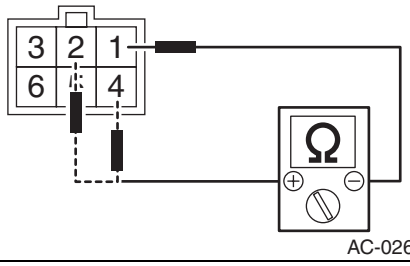 AC-02628
1 — 3, 4	2 (M1)	Less than 1 Ω	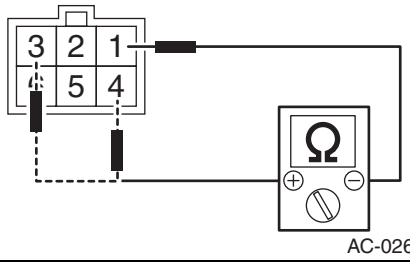 AC-02629
1 — 4, 6	3 (M2)	Less than 1 Ω	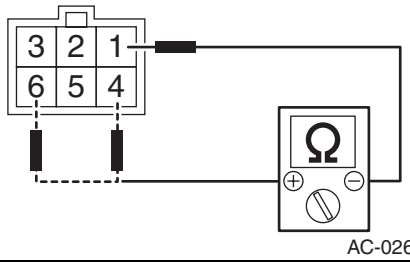 AC-02630
1 — 4, 5	4 (HI)	Less than 1 Ω	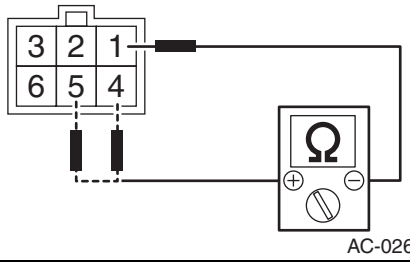 AC-02631

2) Replace the control panel if the inspection result is not within the standard value.

15.Control Unit

A: REMOVAL

1) Disconnect the ground cable from battery.
2) Remove the glove box. <Ref. to EI-66, REMOVAL, Glove Box.>
3) Remove the control module.
   (1) Release the lock and remove the relay bracket.

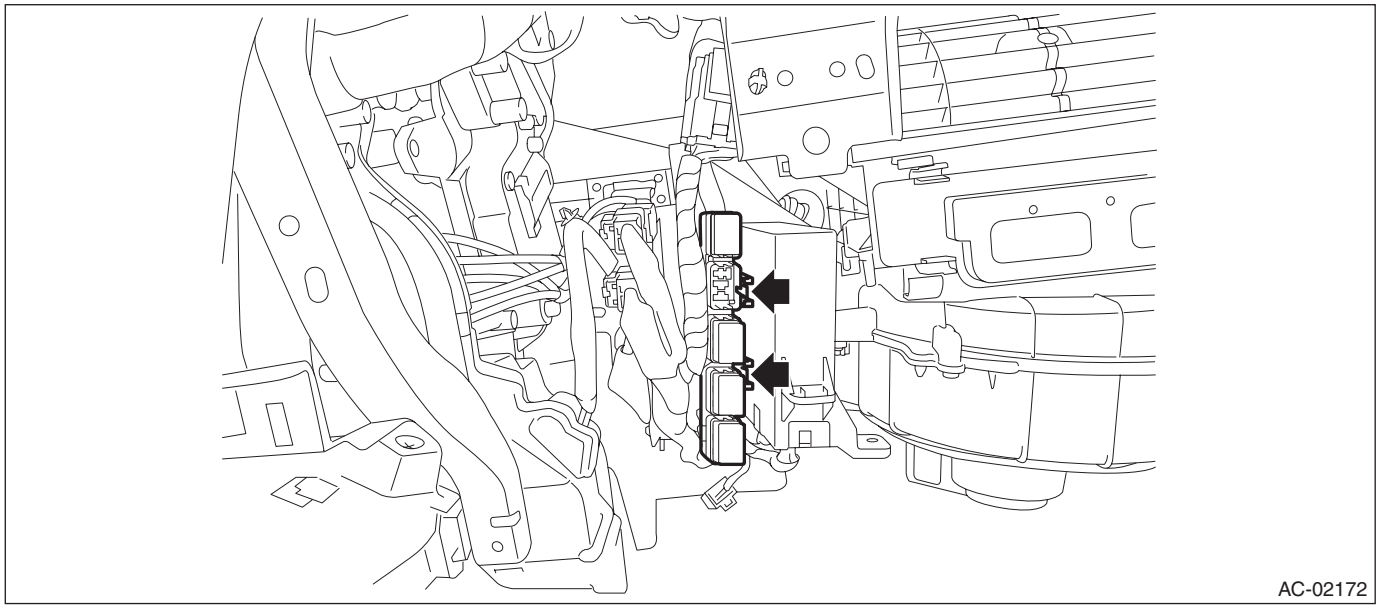
AC-02172

   (2) Disconnect the connector.
   (3) Remove the screws, and remove the control module.

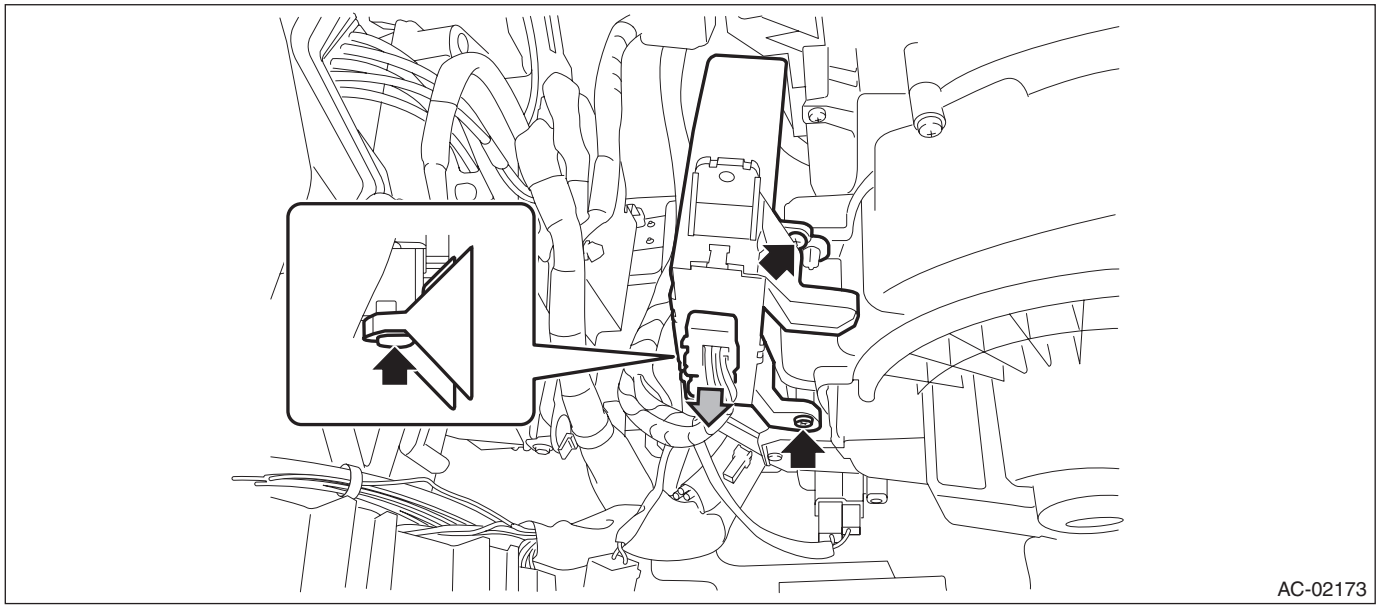
AC-02173

B: INSTALLATION

Install each part in the reverse order of removal.

16.Compressor

A: REMOVAL

1) Perform compressor oil return operation. <Ref. to AC-31, PROCEDURE, Compressor Oil.>
2) Turn the A/C switch to OFF and stop the engine.
3) Using the refrigerant recovery system, discharge refrigerant. <Ref. to AC-24, PROCEDURE, Refrigerant Recovery Procedure.>
4) Disconnect the ground cable from battery.
5) Remove the V-belts.
- H4 non-turbo model: <Ref. to ME(H4SO)-43, REMOVAL, V-belt.>
- H4 turbo model: <Ref. to ME(H4DOTC)-42, REMOVAL, V-belt.>
- H6 model: <Ref. to ME(H6DO)-51, REMOVAL, V-belt.>

6) Move the alternator harness to the right.
   (1) Remove the nuts and connector.
   (2) Release the lock and move the alternator harness to the right.

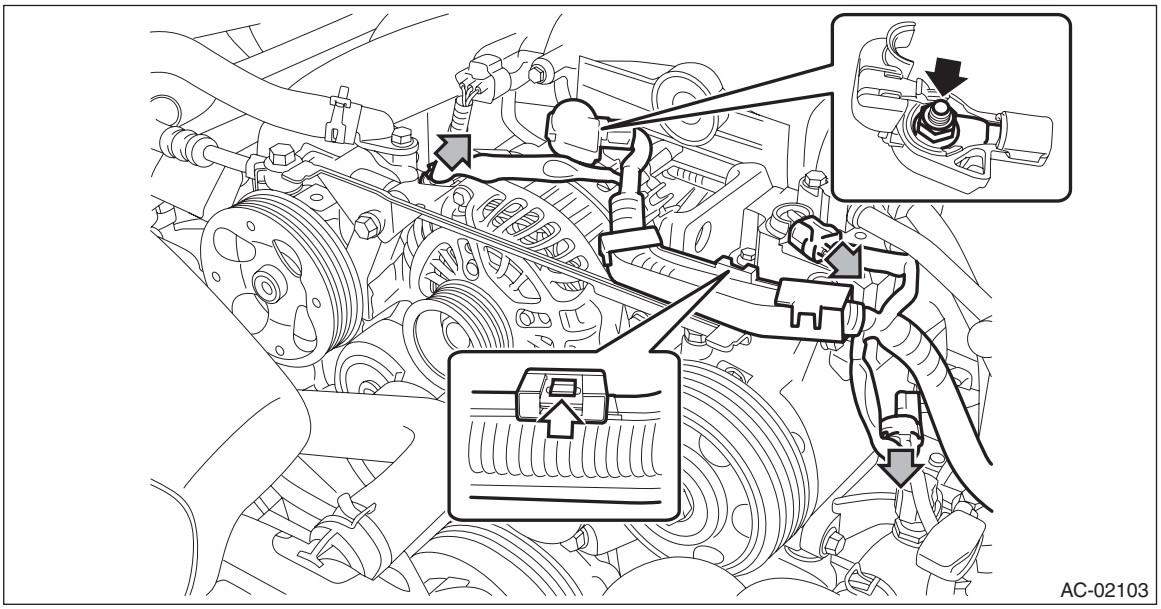
AC-02103

7) Remove the bolts and then remove the collector cover bracket.

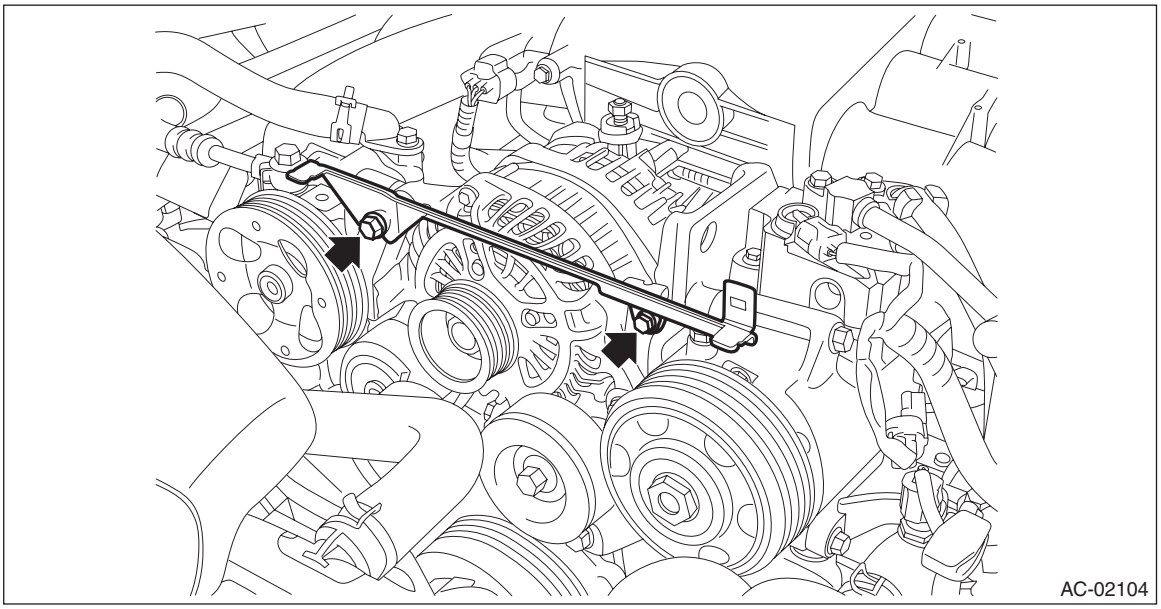
AC-02104

8) Remove the bolt and remove the low-pressure hose and high-pressure hose.

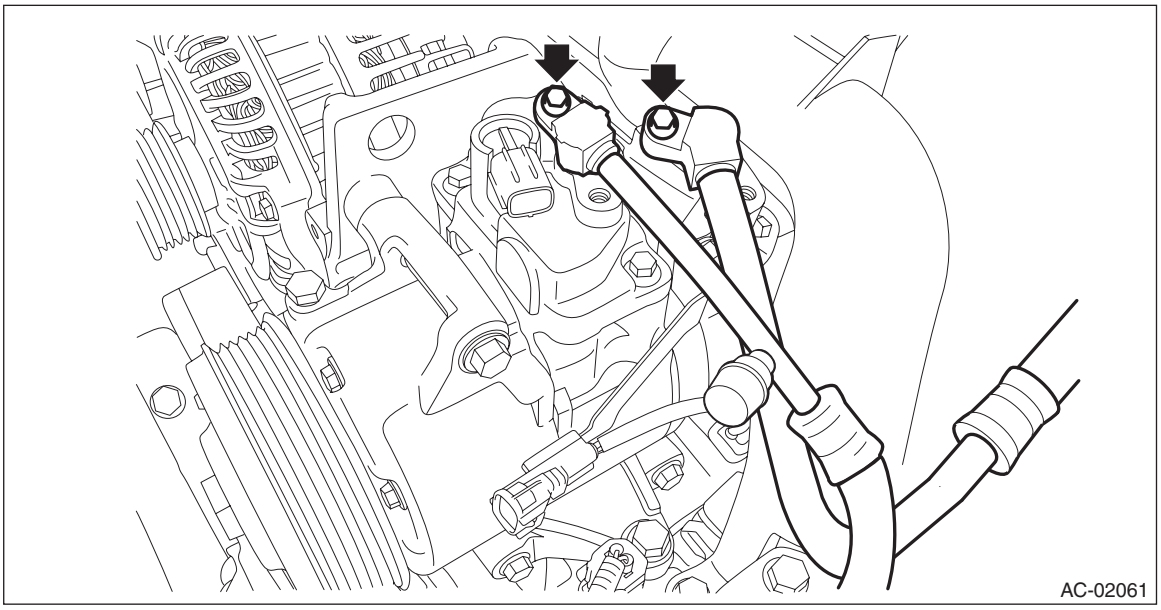

9) Remove the compressor.
   (1) Disconnect the water temperature sensor connector.
   (2) Remove the bolts and remove the compressor.

NOTE:
• Since the compressor cannot be removed by itself, remove it with the loosened bolts inserted in the bracket.
• Be careful not to damage the pulley and sensor.

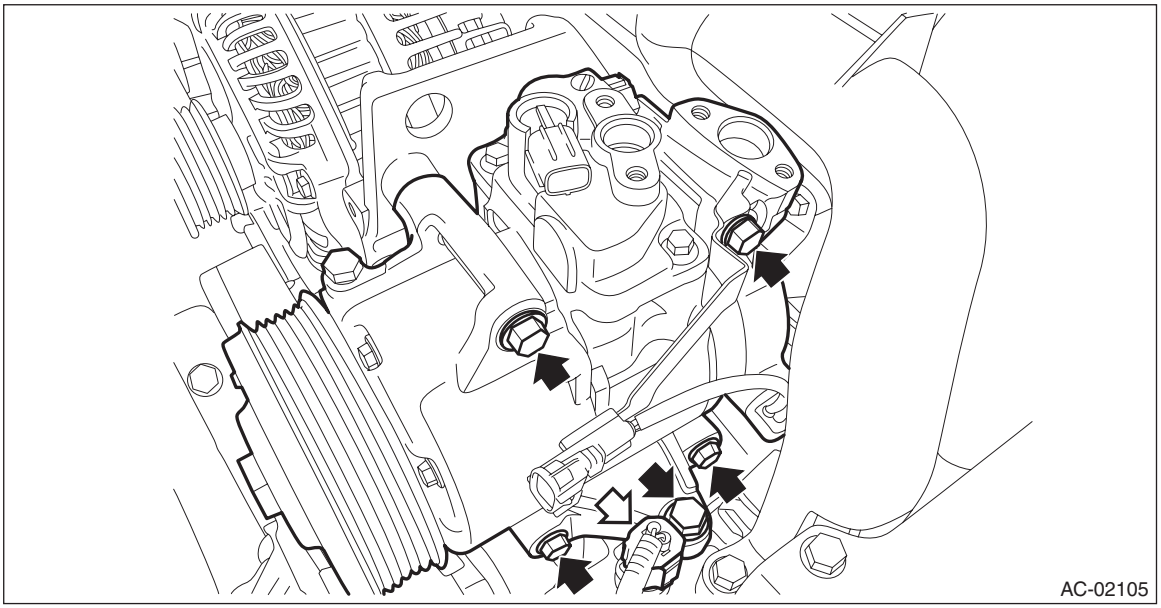

B: INSTALLATION

CAUTION:
• Replace the O-rings on low/high pressure hoses with new parts, and apply compressor oil.
• If the compressor is replaced, adjust the amount of the compressor oil. <Ref. to AC-31, PROCEDURE, Compressor Oil.>
• After installing the compressor, do not start the engine until the A/C system is charged with refrigerant.
• If the engine is started with no refrigerant charge, replace the compressor.

1) Install each part in the reverse order of removal.
2) Charge refrigerant. <Ref. to AC-25, PROCEDURE, Refrigerant Charging Procedure.>
3) After installing the compressor, perform a break-in operation according to the following steps.

NOTE:
Do not increase the engine speed to and above 4,000 rpm unless the break-in operation finishes.
(1) Check that all connectors are locked securely.
(2) Reset the control module. (Disconnect and then connect the connector)
(3) Attach a delivery (test) mode fuse to the main fuse box.
(4) Set the airflow adjustment dial to MAX (4th position). (manual A/C model)
(5) Connect the Subaru Select Monitor, select {Variable compressor break-in drive} mode and display the current data {Variable compressor break-in drive finish status} by following the procedure.
(6) Start and idle the engine at or below 1,800 rpm. (The compressor operation is automatically changed to the break-in operation mode.)
(7) When {Variable compressor break-in drive finish status} changes from “incomplete” to “Finished”, stop the engine.

CAUTION:
If the engine may have been started with no refrigerant charge, check for any diagnosis code (DTC) using Subaru Select Monitor. If the code B1644 (Refrigerant not sealed drive error) is output, replace the compressor.

(8) Remove the delivery (test) mode fuse from the main fuse box.
(9) The break-in operation finishes.

Tightening torque:
Air conditioning unit: <Ref. to AC-10, AIR CONDITIONING UNIT, COMPONENT, General Description.>
Compressor: <Ref. to AC-11, COMPRESSOR, COMPONENT, General Description.>

17.Condenser

A: REMOVAL

1) Using the refrigerant recovery system, drain the refrigerant. <Ref. to AC-24, PROCEDURE, Refrigerant Recovery Procedure.>
2) Remove the clips and remove the air intake duct.

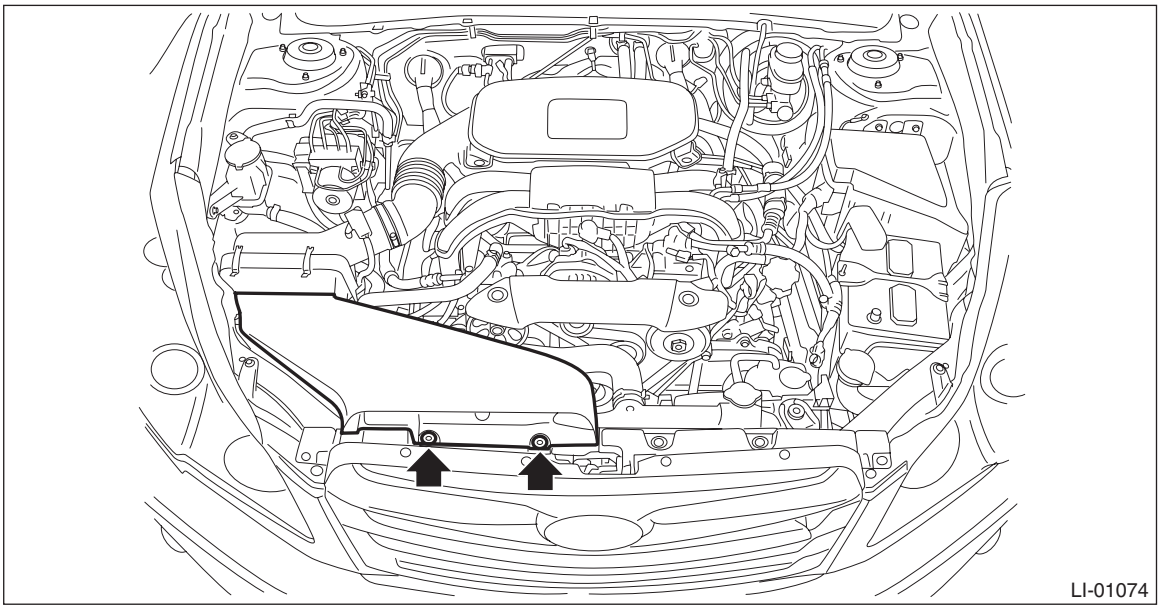

3) Remove the clips and remove the grille bracket.

NOTE:
To prevent damage to the grille bracket, make sure to remove all clips.

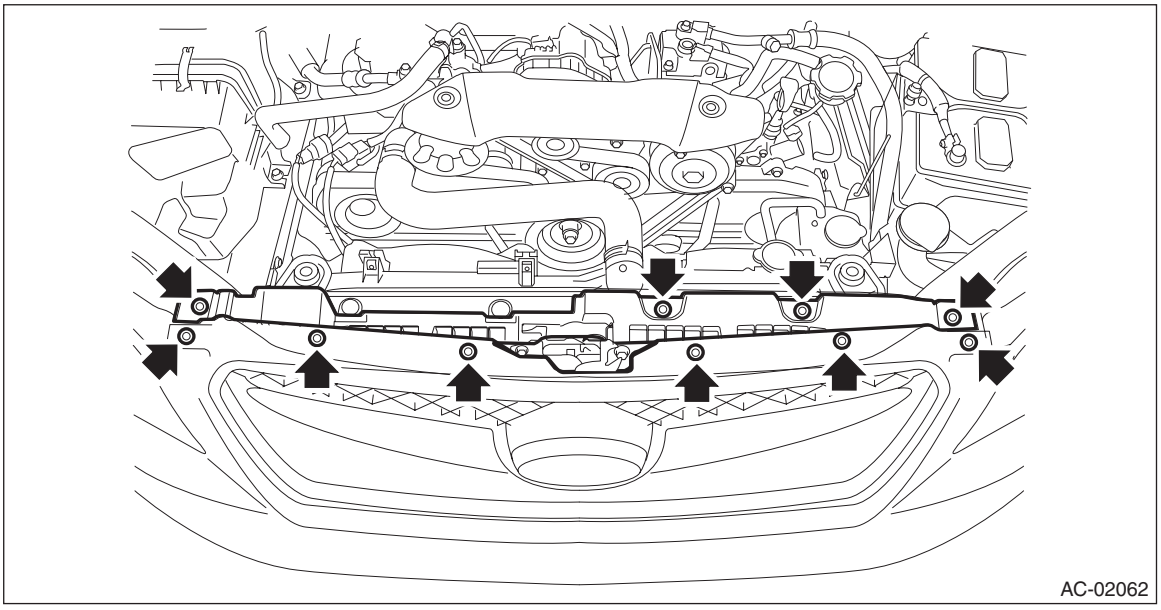

4) Remove the bolts and disconnect the high pressure hose and A/C pipe from the condenser.

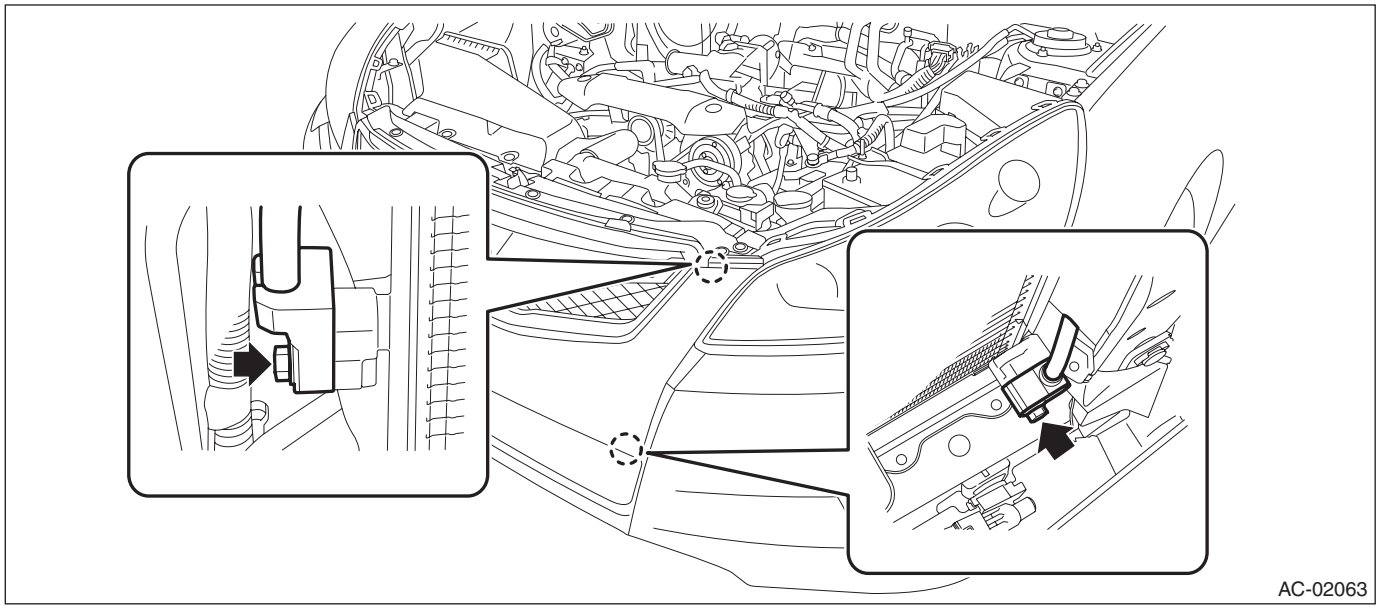

5) Remove the bolts and remove the radiator upper bracket.

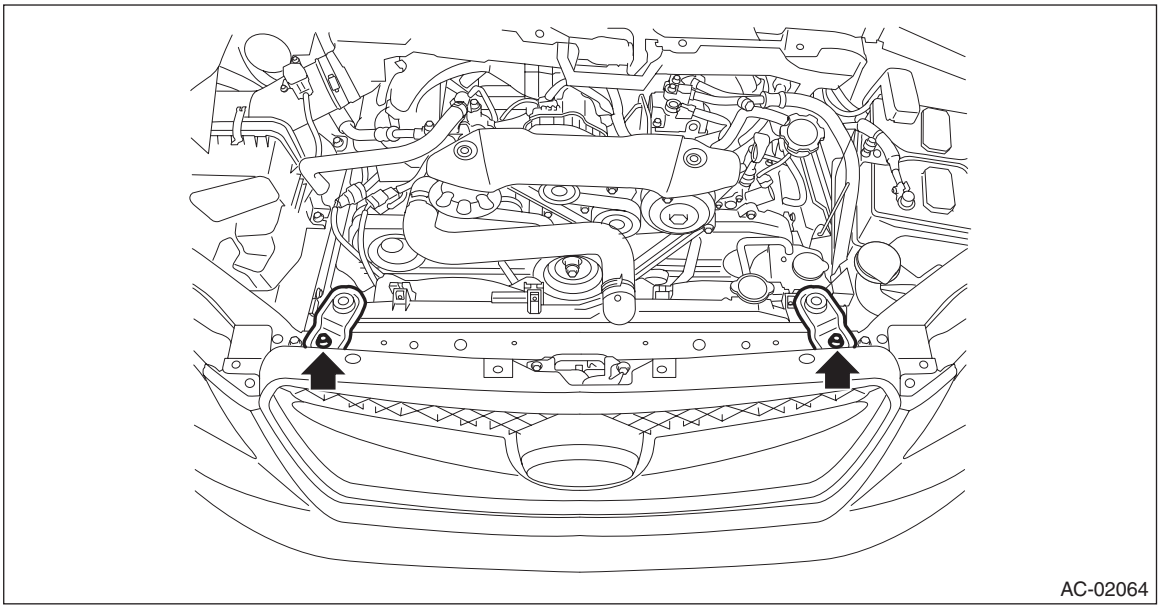

6) Remove the condenser.
(1) Remove the bolt.

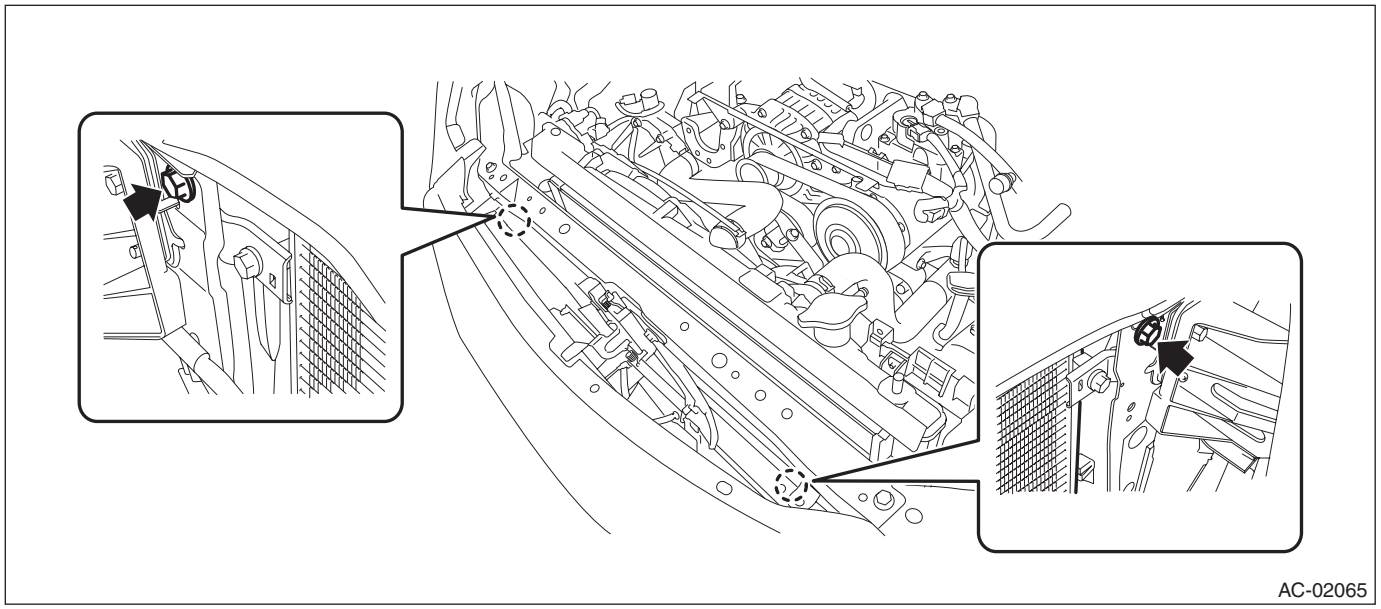
AC-02065

(2) By lifting the condenser, pull it out through the space between the radiator and the radiator panel.

CAUTION:
Be careful not to damage the condenser fins. If a damaged fin is found, repair it using a thin screwdriver.

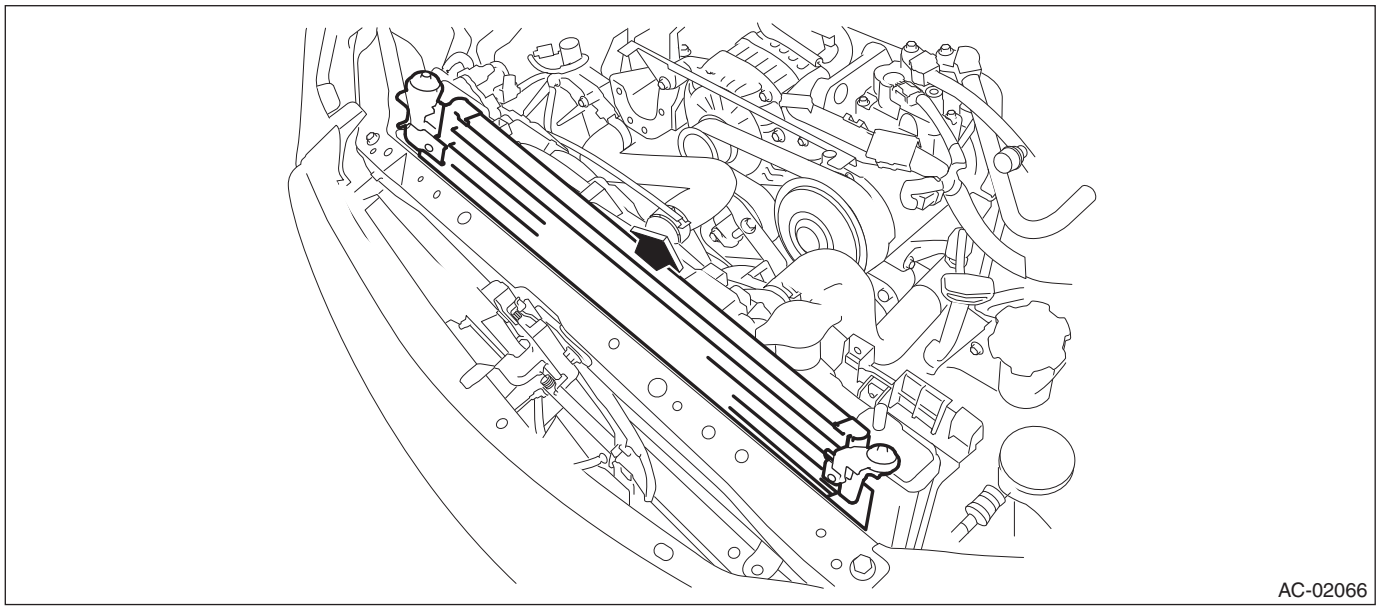
AC-02066

B: INSTALLATION

CAUTION:
- **Do not start the engine before charging refrigerant.**
- **If the engine is started with no refrigerant charge, replace the compressor.**
- **If the condenser has been replaced, add an appropriate amount of compressor oil to the compressor. <Ref. to AC-31, REPLACEMENT, Compressor Oil.>**
- **Replace the O-rings with new parts, and then apply compressor oil.**
- **Confirm that lower guide (A) of condenser fits into holes on radiator panel.**

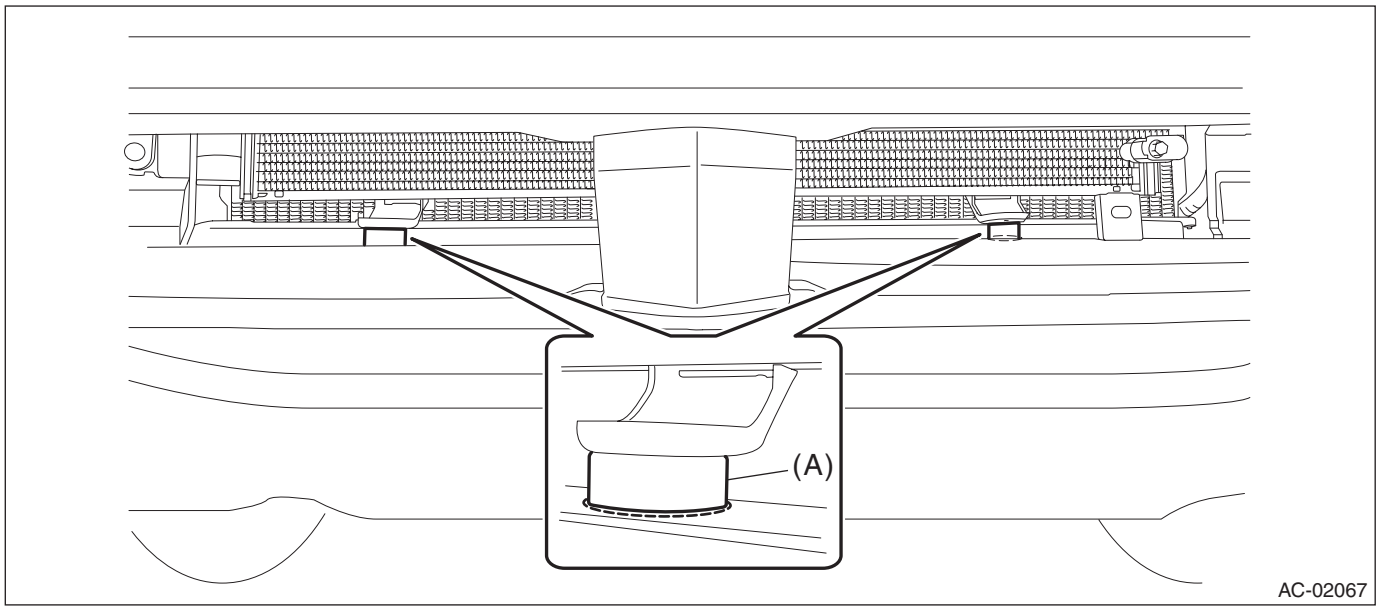

1) Install each part in the reverse order of removal.
2) Charge refrigerant. <Ref. to AC-25, PROCEDURE, Refrigerant Charging Procedure.>

Tightening torque:
Air conditioning unit: <Ref. to AC-10, AIR CONDITIONING UNIT, COMPONENT, General Description.>
Radiator bracket: <Ref. to CO(H4DOTC)-4, RADIATOR AND RADIATOR FAN, COMPONENT, General Description.>

C: INSPECTION

1) Check to see that the condenser fins are not clogged with debris or insects. Blow with compressed air or flush fins with water as needed.
2) If any oil leak is found from the condenser, replace the condenser.

18.Heater and Cooling Unit

A: REMOVAL

1) Disconnect the ground cable from battery.
2) Using the refrigerant recovery system, discharge refrigerant. <Ref. to AC-24, PROCEDURE, Refrigerant Recovery Procedure.>
3) Drain the coolant from the radiator.
• H4 non-turbo model: <Ref. to CO(H4SO)-14, DRAINING OF ENGINE COOLANT, REPLACEMENT, Engine Coolant.>
• H4 turbo model: <Ref. to CO(H4DOTC)-14, DRAINING OF ENGINE COOLANT, REPLACEMENT, Engine Coolant.>
• H6 model: <Ref. to CO(H6DO)-12, DRAINING OF ENGINE COOLANT, REPLACEMENT, Engine Coolant.>
4) Remove the connector and bolts, and remove the high-pressure hose and AC pipe from the expansion valve.
5) Loosen the heater hose clamps and remove the hoses.

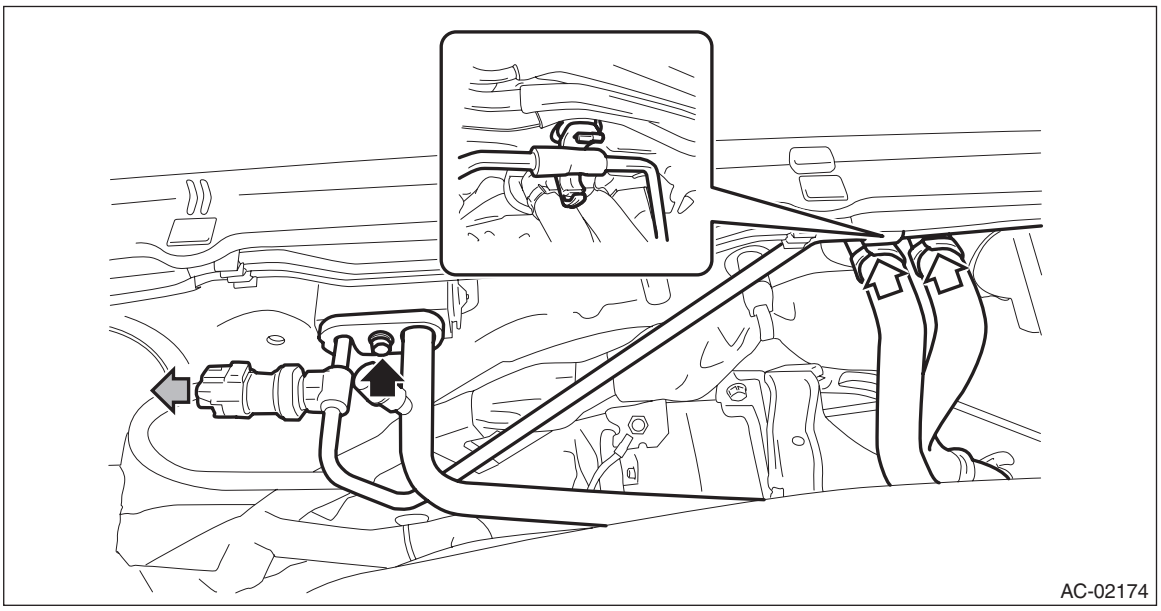

6) Remove the instrument panel assembly. <Ref. to EI-76, REMOVAL, Instrument Panel Assembly.>

7) Remove the engine control module (ECM).
   (1) Release the lock and remove the relay holder.
   (2) Remove the nuts, and remove the engine control module (ECM).

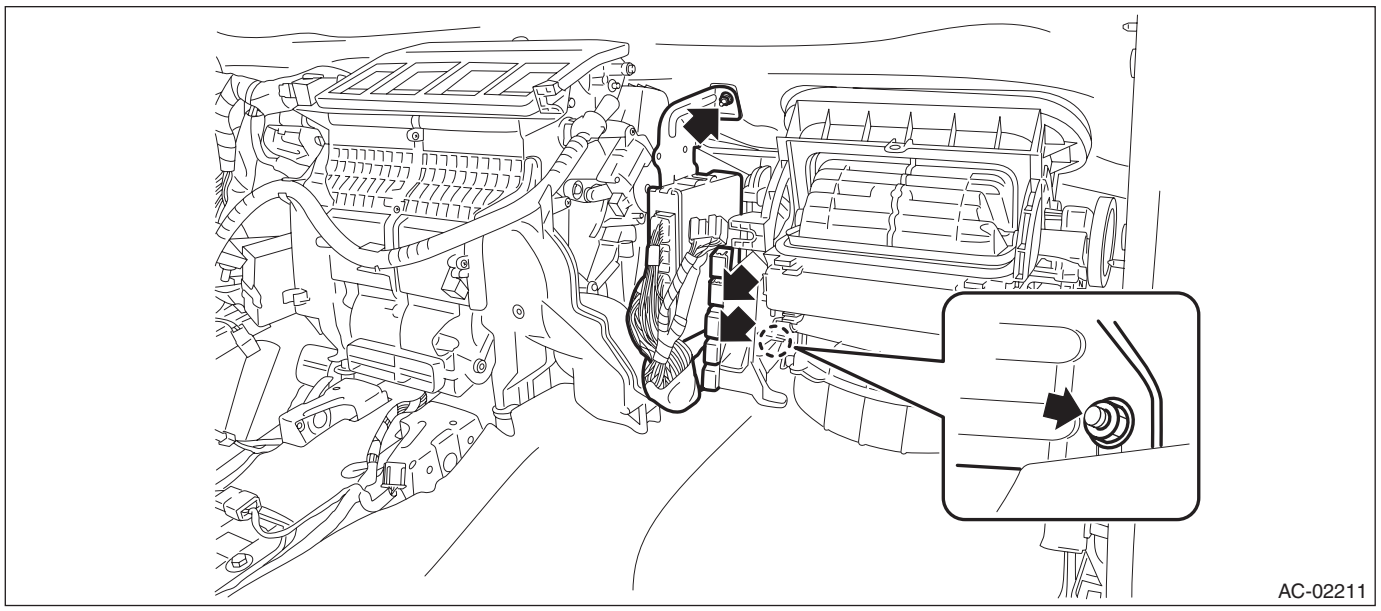

8) Remove the heater and cooling unit.
   (1) Remove the bolt and remove the heater and cooling unit.

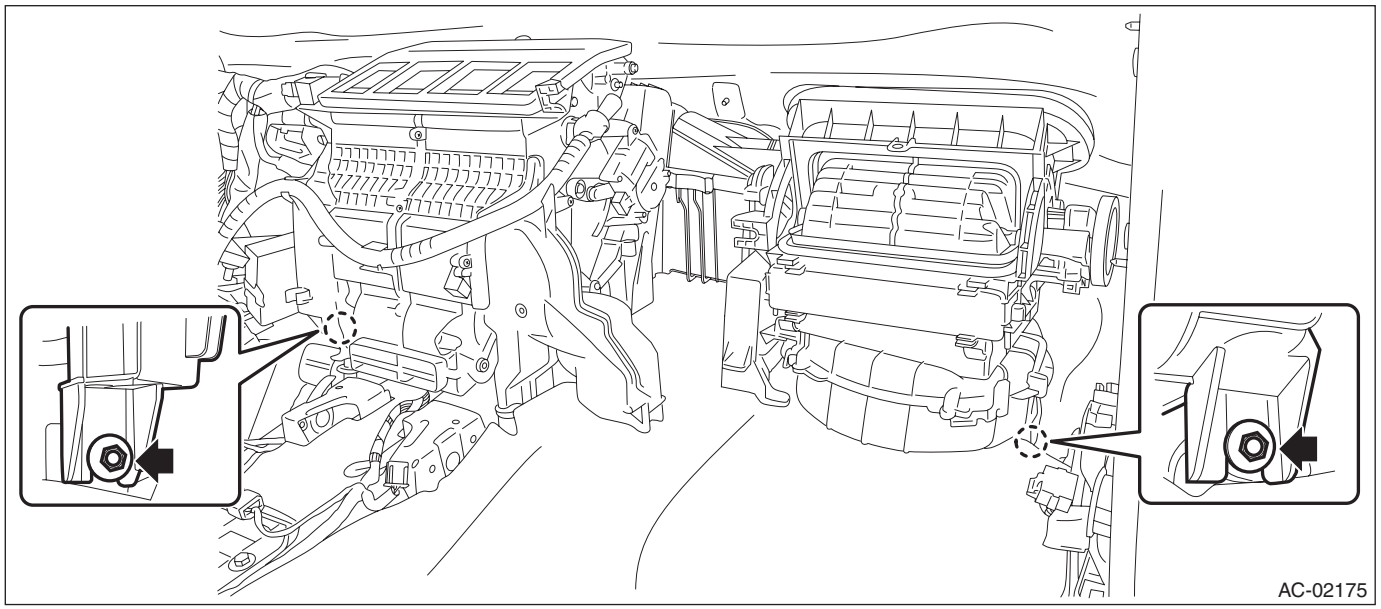

9) Remove the blower motor unit assembly.
(1) Release the claws and remove the bolts.

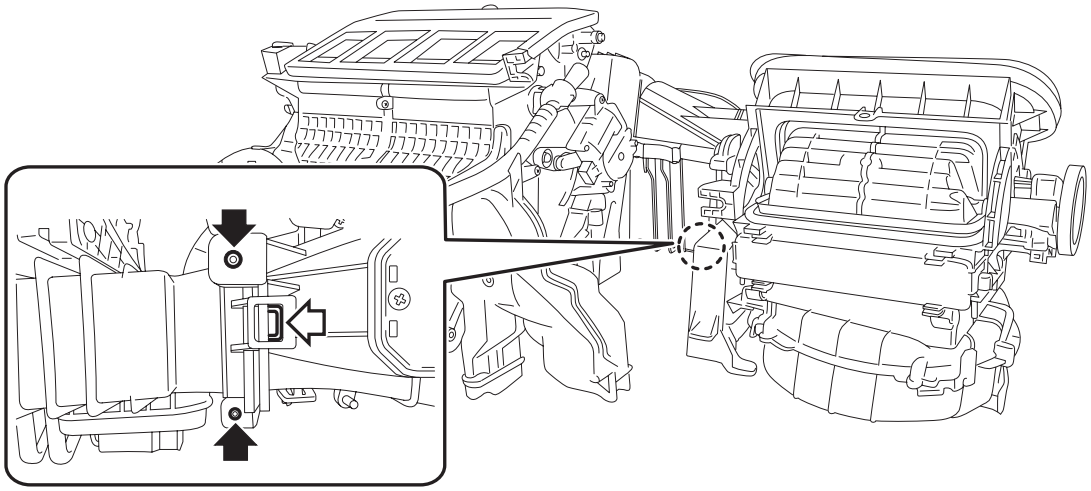
AC-02159

(2) Remove the blower motor unit assembly as shown in the figure.

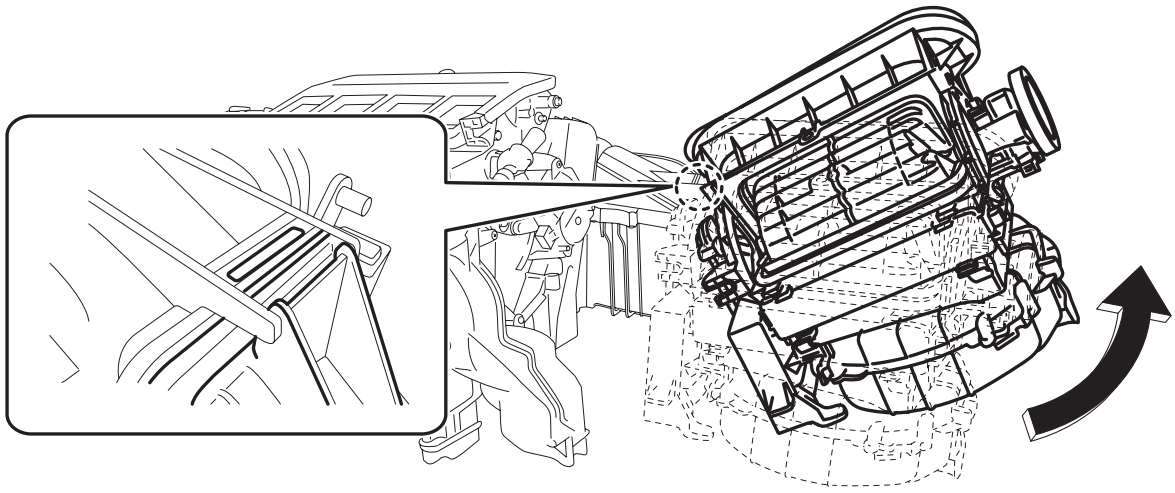
AC-02160

B: INSTALLATION

CAUTION:
- **Do not start the engine before charging refrigerant.**
- **If the engine is started with no refrigerant charge, replace the compressor.**
- **Replace O-rings and pipe clamps with new parts and install securely.**

1) Install each part in the reverse order of removal.

NOTE:
Refer to “INSTALLATION” of “Instrument Panel Assembly”. <Ref. to EI-95, INSTALLATION, Instrument Panel Assembly.>

2) Fill engine coolant.
- H4 non-turbo model: <Ref. to CO(H4SO)-14, FILLING OF ENGINE COOLANT, REPLACEMENT, Engine Coolant.>
- H4 turbo model: <Ref. to CO(H4DOTC)-14, FILLING OF ENGINE COOLANT, REPLACEMENT, Engine Coolant.>
- H6 model: <Ref. to CO(H6DO)-12, FILLING OF ENGINE COOLANT, REPLACEMENT, Engine Coolant.>

3) Charge refrigerant. <Ref. to AC-25, PROCEDURE, Refrigerant Charging Procedure.>

Tightening torque:
Heater cooling unit: <Ref. to AC-6, HEATER COOLING UNIT, COMPONENT, General Description.>
Blower motor unit: <Ref. to AC-8, BLOWER MOTOR UNIT, COMPONENT, General Description.>

19.Evaporator

A: REMOVAL

1) Disconnect the ground cable from battery.
2) Using the refrigerant recovery system, discharge refrigerant. <Ref. to AC-24, PROCEDURE, Refrigerant Recovery Procedure.>
3) Drain the coolant from the radiator.
• H4 non-turbo model: <Ref. to CO(H4SO)-14, DRAINING OF ENGINE COOLANT, REPLACEMENT, Engine Coolant.>
• H4 turbo model: <Ref. to CO(H4DOTC)-14, DRAINING OF ENGINE COOLANT, REPLACEMENT, Engine Coolant.>
• H6 model: <Ref. to CO(H6DO)-12, DRAINING OF ENGINE COOLANT, REPLACEMENT, Engine Coolant.>
4) Remove the connector and bolts, and remove the high-pressure hose and AC pipe from the expansion valve.
5) Loosen the heater hose clamps and remove the hoses.

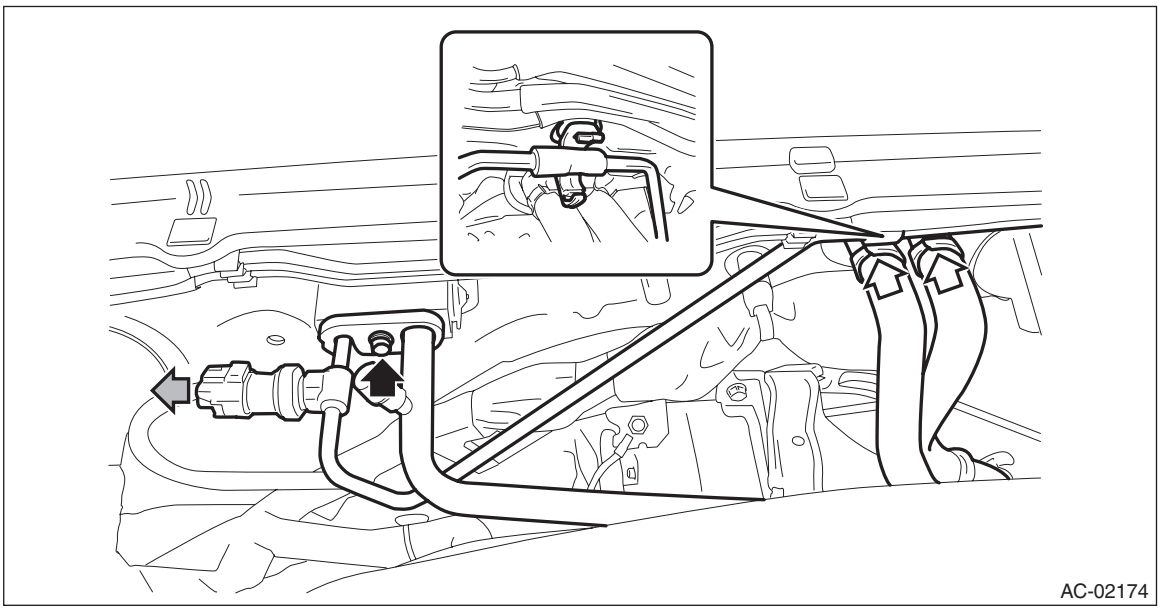

6) Remove the instrument panel assembly. <Ref. to EI-76, REMOVAL, Instrument Panel Assembly.>

7) Remove the engine control module (ECM).
   (1) Release the lock and remove the relay holder.
   (2) Remove the nuts, and remove the engine control module (ECM).

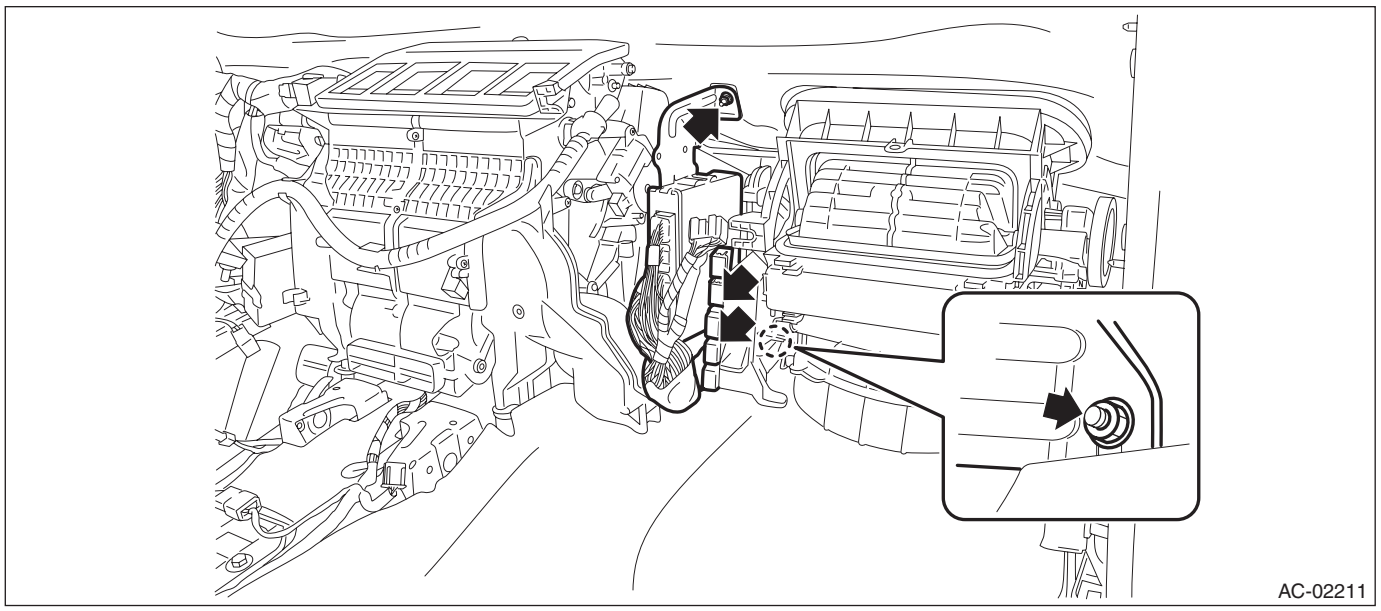

8) Remove the heater and cooling unit.
   (1) Remove the bolt and remove the heater and cooling unit.

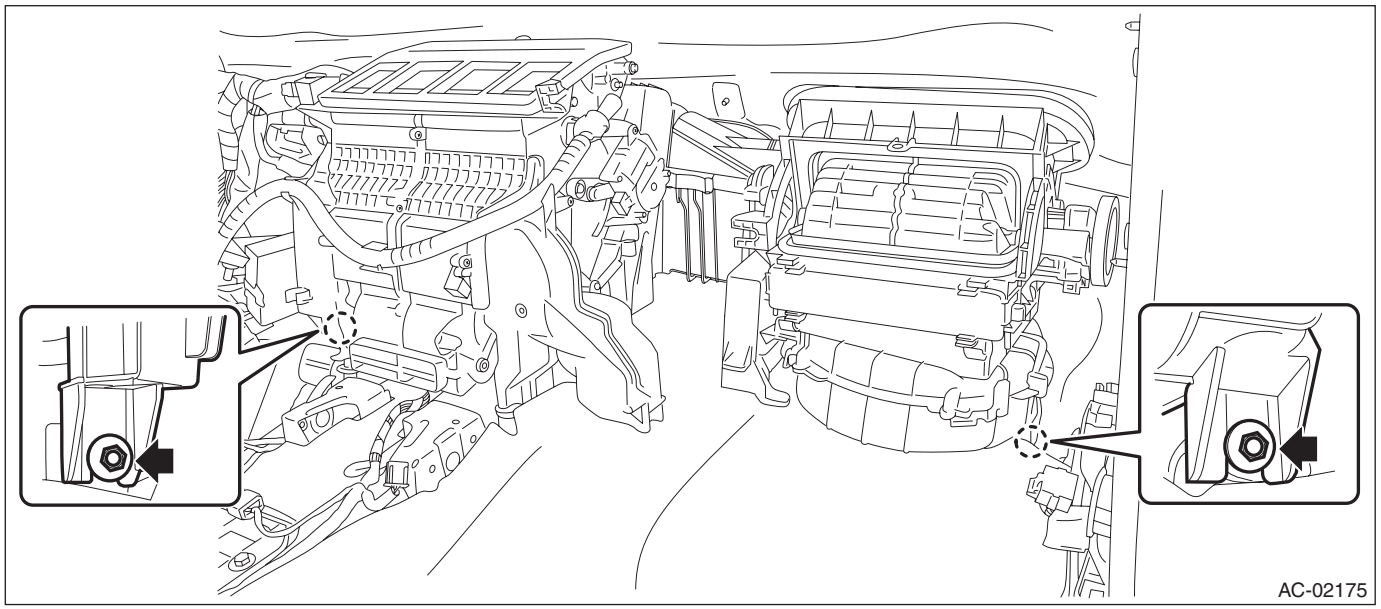

9) Remove the blower motor unit assembly.
(1) Release the claws and remove the bolts.

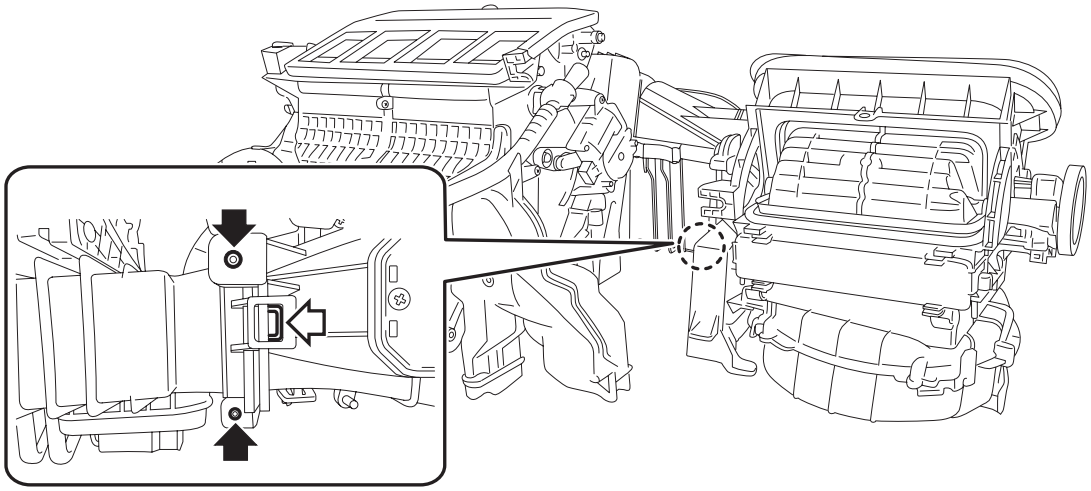
AC-02159

(2) Remove the blower motor unit assembly as shown in the figure.

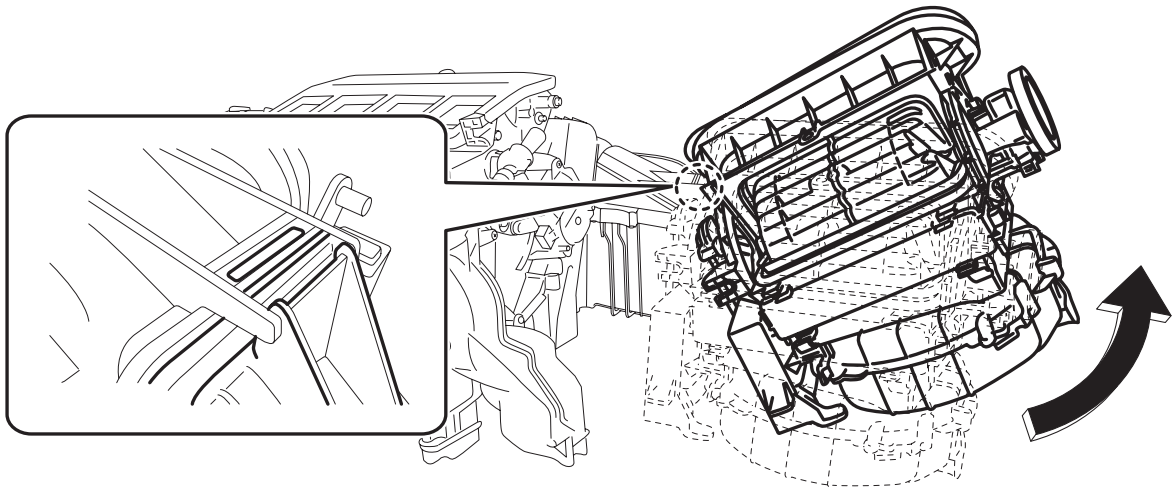
AC-02160

10) Disconnect the claws and then remove the aspirator hose.

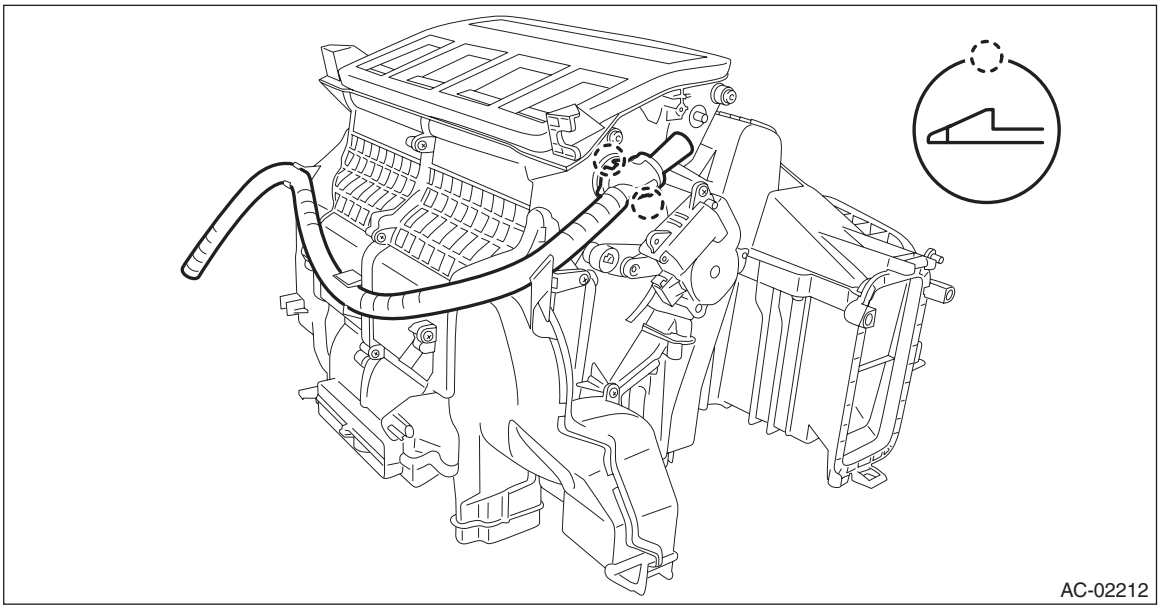

11) Remove the screw, and then remove the foot duct (RH).

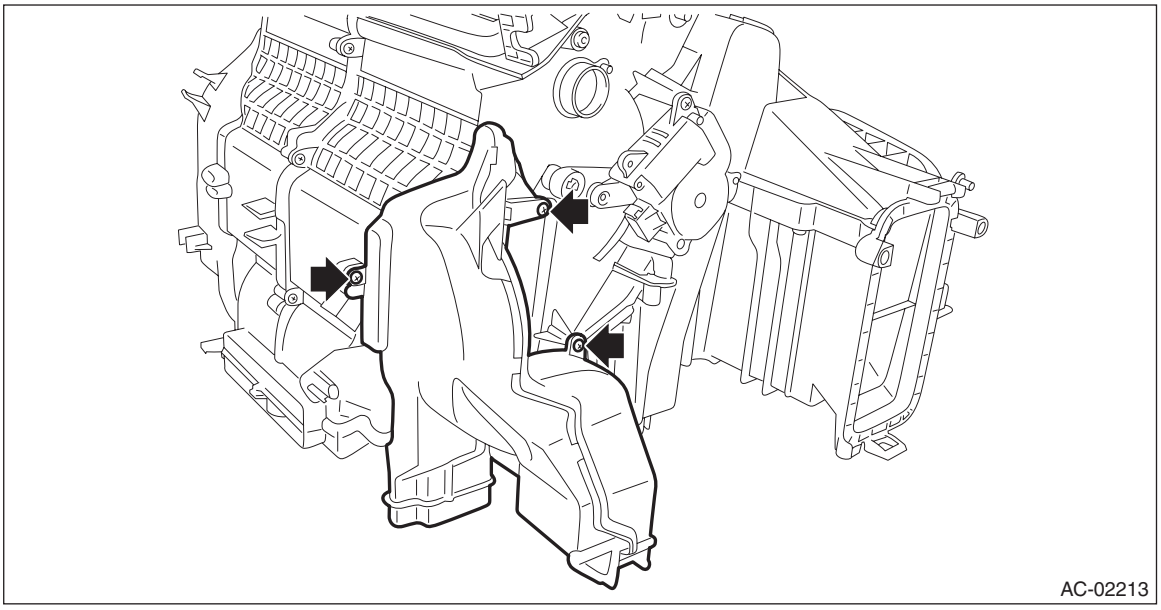

12) Remove the screws and remove the foot duct (LH).

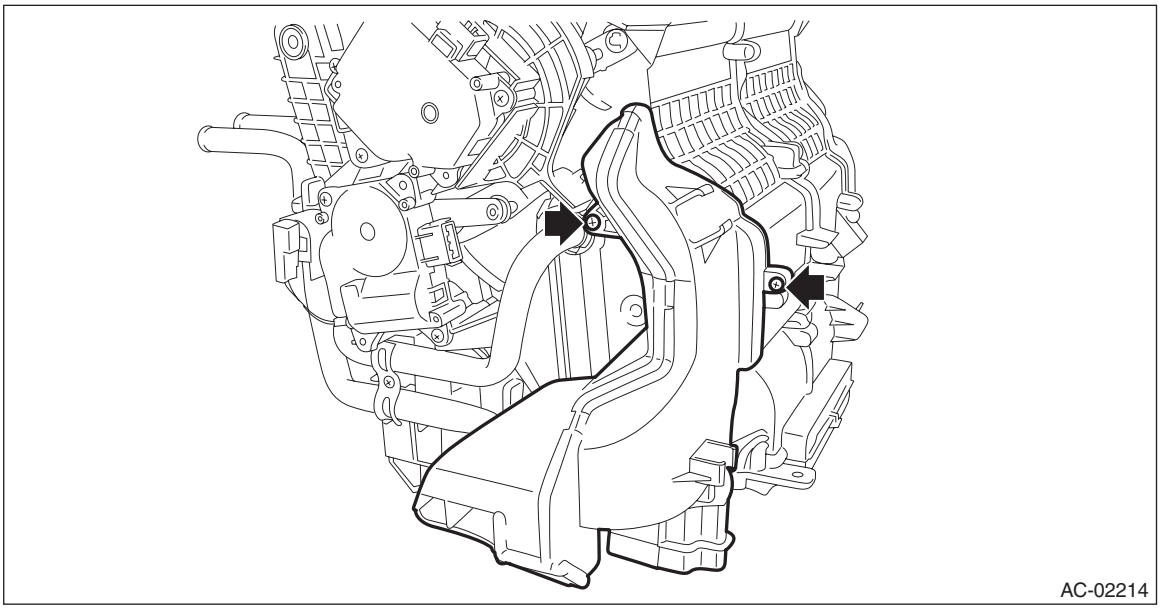

13) Pull out the heater core.
(1) Remove the screw and remove the heater pipe clamp.

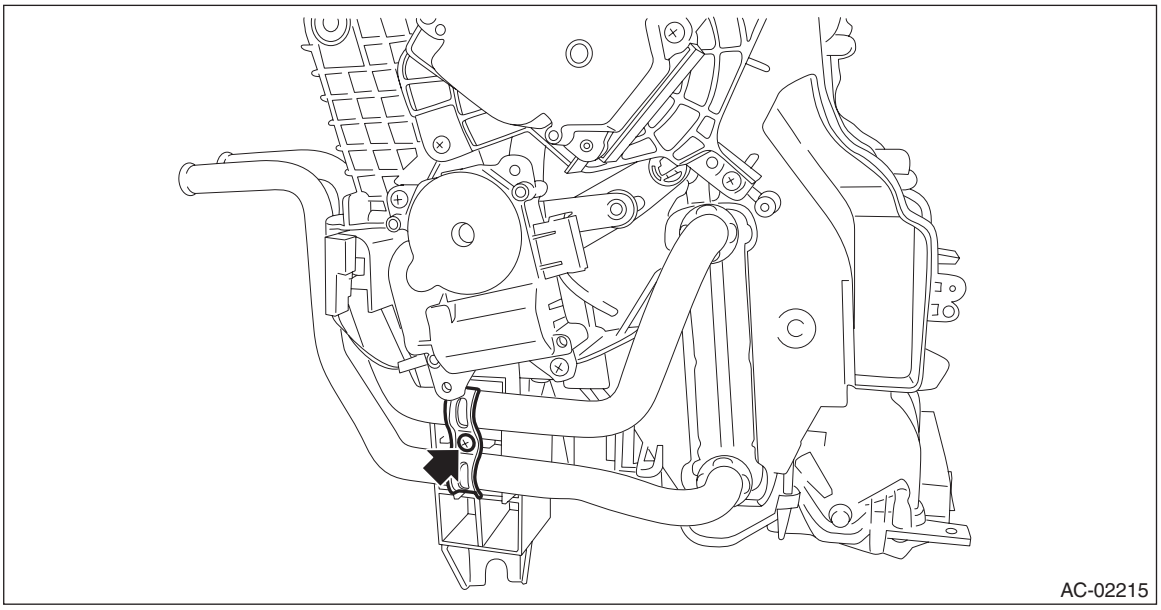

(2) Pull out the heater core from the heater and cooling unit assembly.

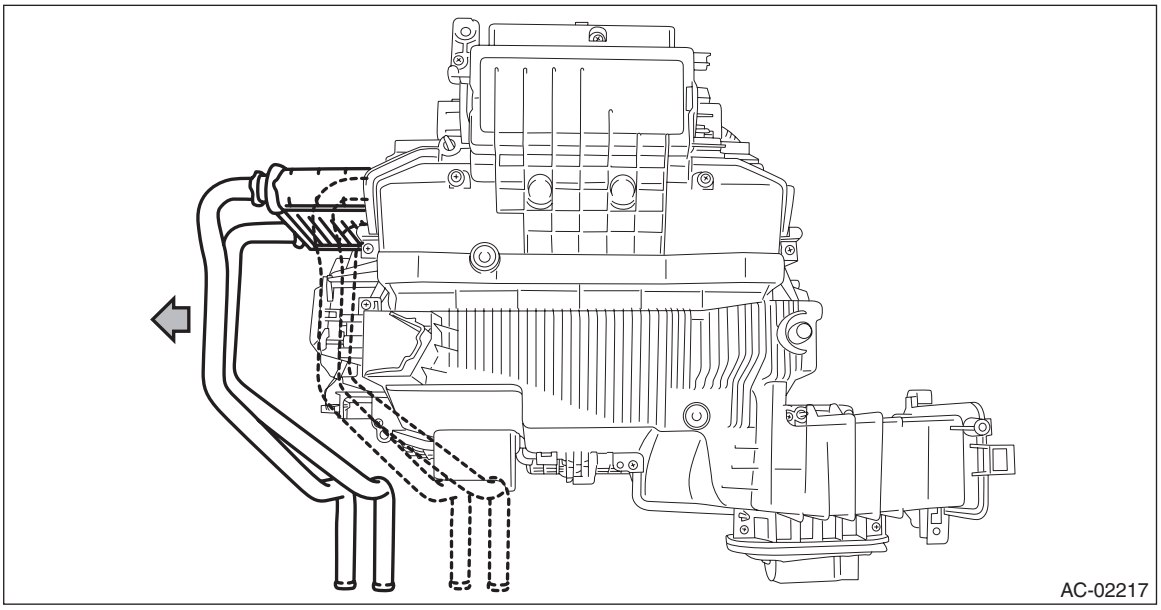

14) Remove the heater case lower.
(1) Remove the clip, and remove the evaporator connector.
(2) Remove the gasket.
(3) Remove the screw and lock, then remove the heater case lower.

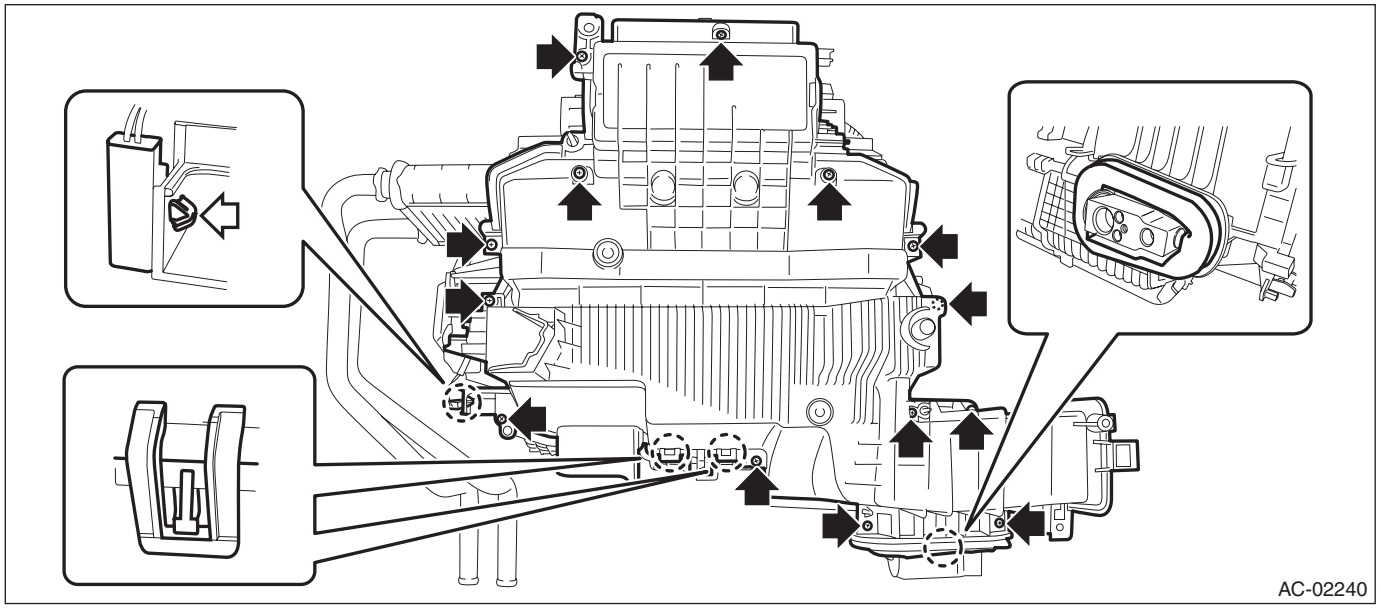

15) Remove the evaporator.

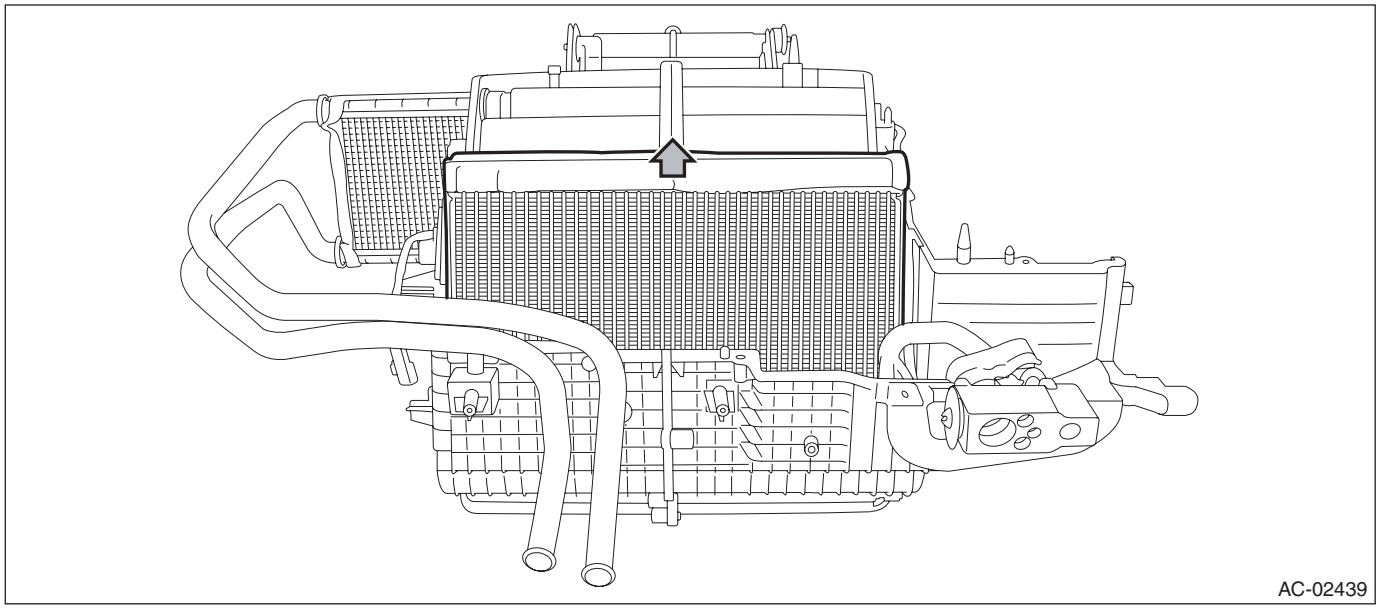

16) Remove the bolt and detach the expansion valve from the evaporator. <Ref. to AC-74, REMOVAL, Expansion Valve.>

17) Remove the evaporator sensor from the evaporator.

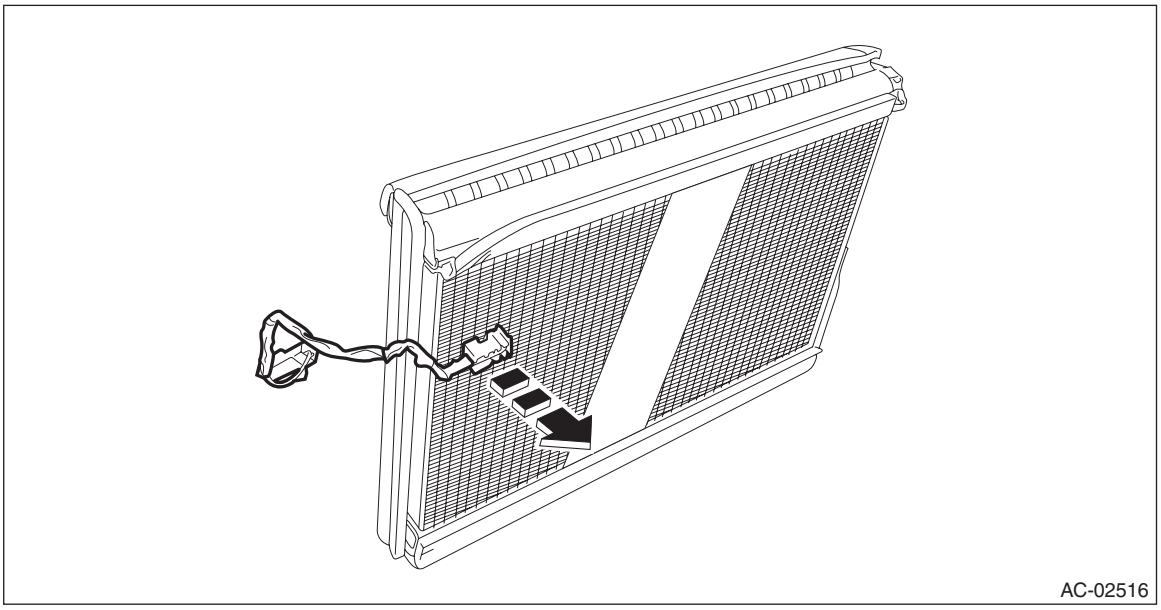

B: INSTALLATION

CAUTION:
- **Do not start the engine before charging refrigerant.**
- **If the engine is started with no refrigerant charge, replace the compressor.**
- **If the evaporator has been replaced, add an appropriate amount of compressor oil to the evaporator. <Ref. to AC-31, REPLACEMENT, Compressor Oil.>**
- **When the evaporator has been replaced, always replace the expansion valve gasket with a new one and apply the compressor oil on it.**
- **Make sure that the water seal gasket on the cover attachment area is securely attached.**
- **Replace the O-rings with new parts, and then apply compressor oil.**
- **Install the evaporator sensor at the position shown in the figure below.**

1) Install the evaporator sensor to the specified location. <Ref. to AC-87, INSTALLATION, Evaporator Sensor.>
2) Install each part in the reverse order of removal.

NOTE:
Refer to “INSTALLATION” of “Instrument Panel Assembly”. <Ref. to EI-95, INSTALLATION, Instrument Panel Assembly.>
3) Fill engine coolant.
- H4 non-turbo model: <Ref. to CO(H4SO)-14, FILLING OF ENGINE COOLANT, REPLACEMENT, Engine Coolant.>
- H4 turbo model: <Ref. to CO(H4DOTC)-14, FILLING OF ENGINE COOLANT, REPLACEMENT, Engine Coolant.>
- H6 model: <Ref. to CO(H6DO)-12, FILLING OF ENGINE COOLANT, REPLACEMENT, Engine Coolant.>

4) Charge refrigerant. <Ref. to AC-25, PROCEDURE, Refrigerant Charging Procedure.>

Tightening torque:
Heater cooling unit: <Ref. to AC-6, HEATER COOLING UNIT, COMPONENT, General Description.>
Blower motor unit: <Ref. to AC-8, BLOWER MOTOR UNIT, COMPONENT, General Description.>

C: INSPECTION

1) Check the evaporator fin for dust. Blow with compressed air or flush fins with water as needed.
2) If any oil leak is found from the evaporator, replace the evaporator.

20.Expansion Valve

A: REMOVAL

1) Disconnect the ground cable from battery.
2) Using the refrigerant recovery system, discharge refrigerant. <Ref. to AC-24, PROCEDURE, Refrigerant Recovery Procedure.>
3) Remove the connector and bolts, and remove the high-pressure hose and AC pipe from the expansion valve.

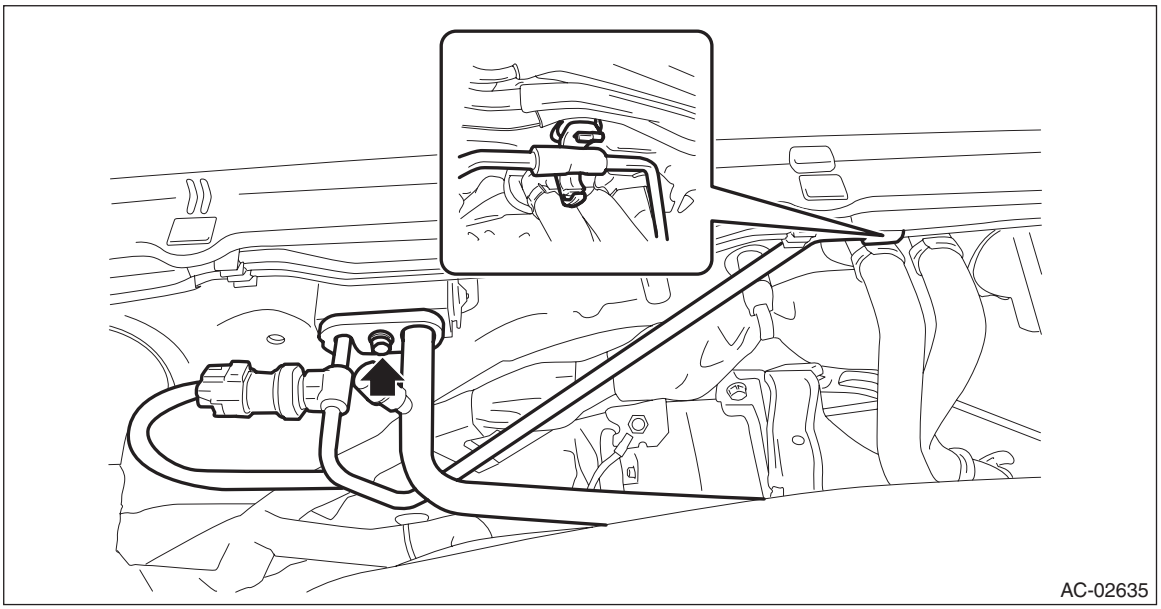

4) Remove the bolts, then remove the expansion valve.

Preparation tool: Hexagon wrench (4 mm)

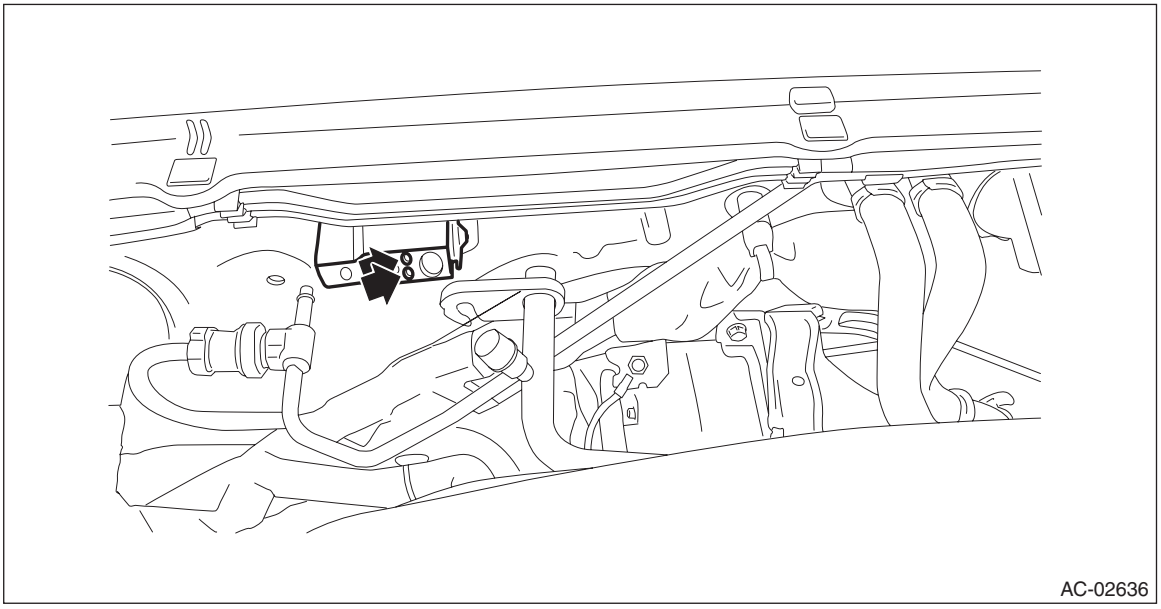

B: INSTALLATION

CAUTION:
- **Do not start the engine before charging refrigerant.**
- **If the engine is started with no refrigerant charge, replace the compressor.**
- **Replace the gasket and O-rings with new parts, and then apply compressor oil.**

1) Install each part in the reverse order of removal.
2) Charge refrigerant. <Ref. to AC-25, PROCEDURE, Refrigerant Charging Procedure.>

Tightening torque:
Air conditioning unit: <Ref. to AC-10, AIR CONDITIONING UNIT, COMPONENT, General Description.>

21.Hose and Pipe

A: REMOVAL

CAUTION:
- **When disconnecting hoses, do not apply excessive force.**
- **Seal the disconnected hose with a plug or vinyl tape to prevent foreign matter from entering.**

1) Disconnect the ground cable from battery.
2) Using the refrigerant recovery system, discharge refrigerant. <Ref. to AC-24, PROCEDURE, Refrigerant Recovery Procedure.>
3) Remove the bolts and screws and detach the hoses and pipes.

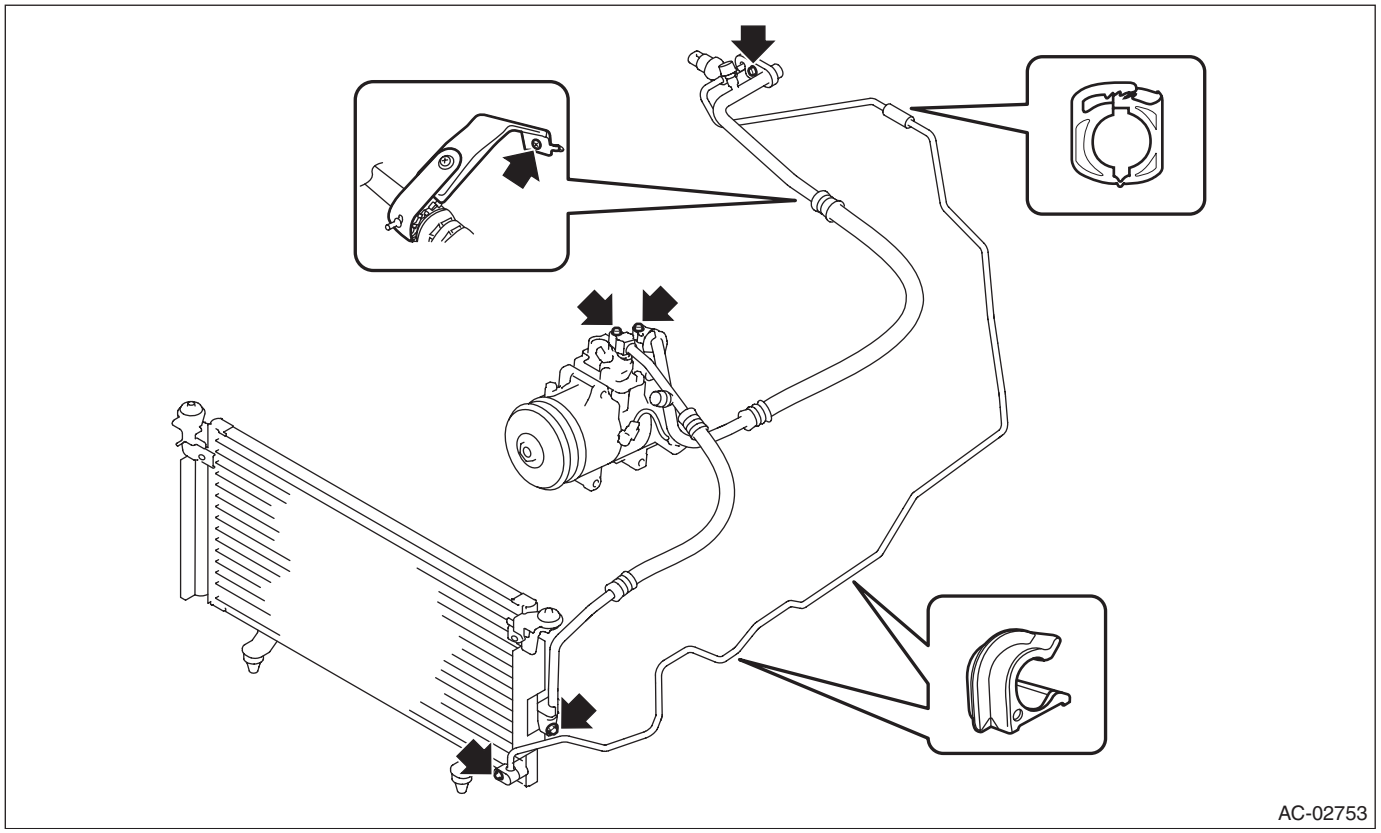

B: INSTALLATION

CAUTION:
- **Do not start the engine before charging refrigerant.**
- **If the engine is started with no refrigerant charge, replace the compressor.**
- **Replace the O-rings with new parts, and then apply compressor oil.**
- **When connecting hoses, do not apply an excessive force to them. After installing, check that no torsion or excessive tension applied to the hoses.**

1) Install each part in the reverse order of removal.
2) Charge refrigerant. <Ref. to AC-25, PROCEDURE, Refrigerant Charging Procedure.>

Tightening torque:
Refer to "COMPONENT" of "General Description". <Ref. to AC-10, AIR CONDITIONING UNIT, COMPONENT, General Description.>

C: INSPECTION

1) Check the hoses for cracks, damage and expansion. Replace the hose if faulty.
2) Check the pipes for crack or damage. Replace the pipe if faulty.

22.Pressure Sensor

A: INSPECTION

1) Perform a diagnosis code (DTC) check by connecting the Subaru Select Monitor.
2) If any diagnosis code (DTC) is displayed, refer to “List of Diagnostic Trouble Code (DTC)” in “HVAC SYSTEM (DIAGNOSTICS)” section. <Ref. to AC(diag)-53, LIST, List of Diagnostic Trouble Code (DTC).>

23.Ambient Sensor (Auto A/C Model)

A: REMOVAL

1) Disconnect the ground cable from battery.
2) Remove the clips and remove the grille bracket. (Sedan model)

NOTE:
To prevent damage to the grille bracket, make sure to remove all clips.

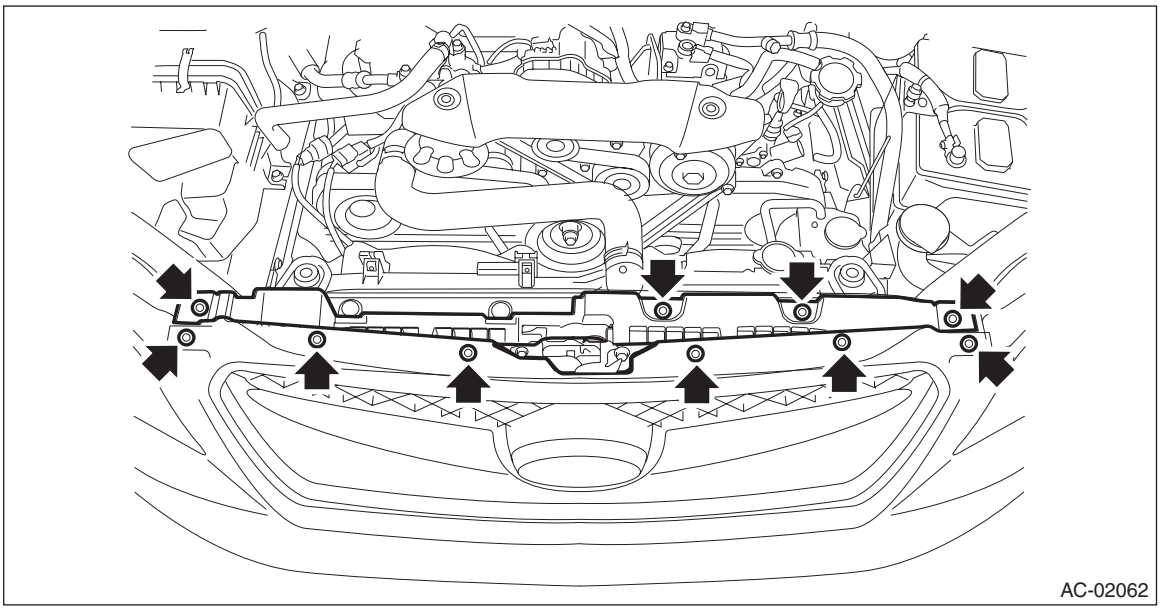

3) Remove the ambient sensor.
   (1) Disconnect the connector.
   (2) Remove the ambient sensor from the radiator lower panel.

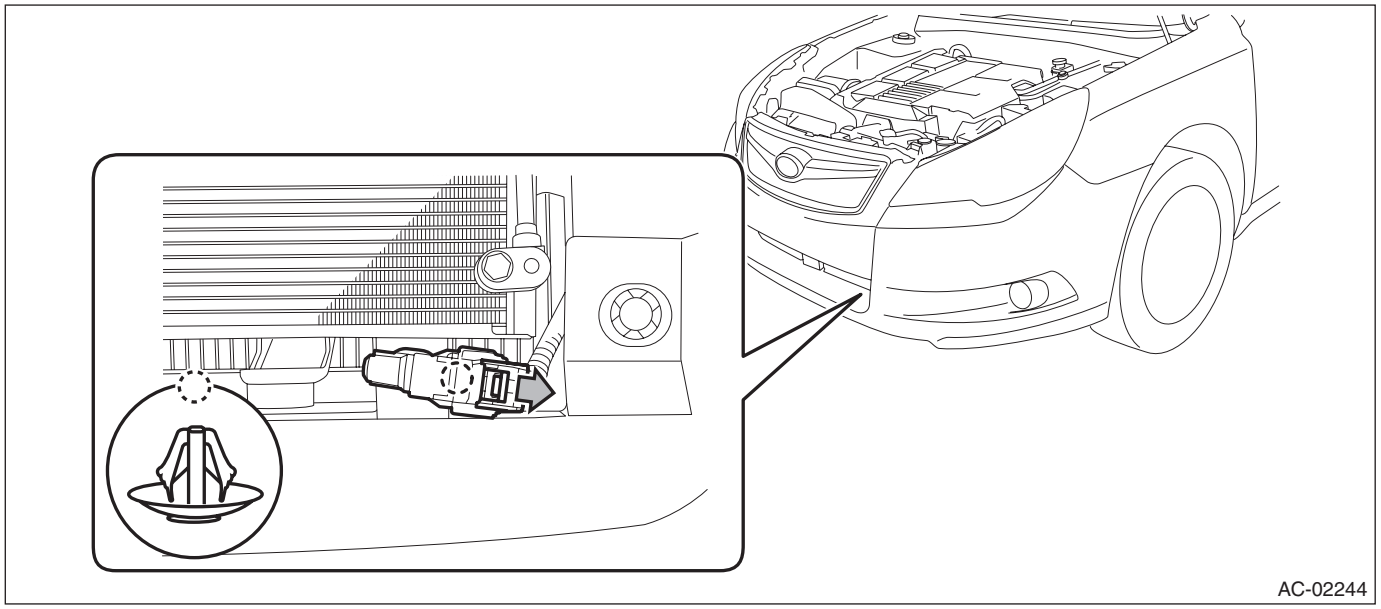

B: INSTALLATION

Install each part in the reverse order of removal.

C: INSPECTION

Preparation tool: Circuit tester

1) Visually check the ambient sensor for dirt or damage, and clean or replace as necessary.
2) Check the resistance between ambient sensor terminals.

CAUTION:
During inspection, be careful not to touch the sensor end in order to avoid misjudgment due to body temperature.

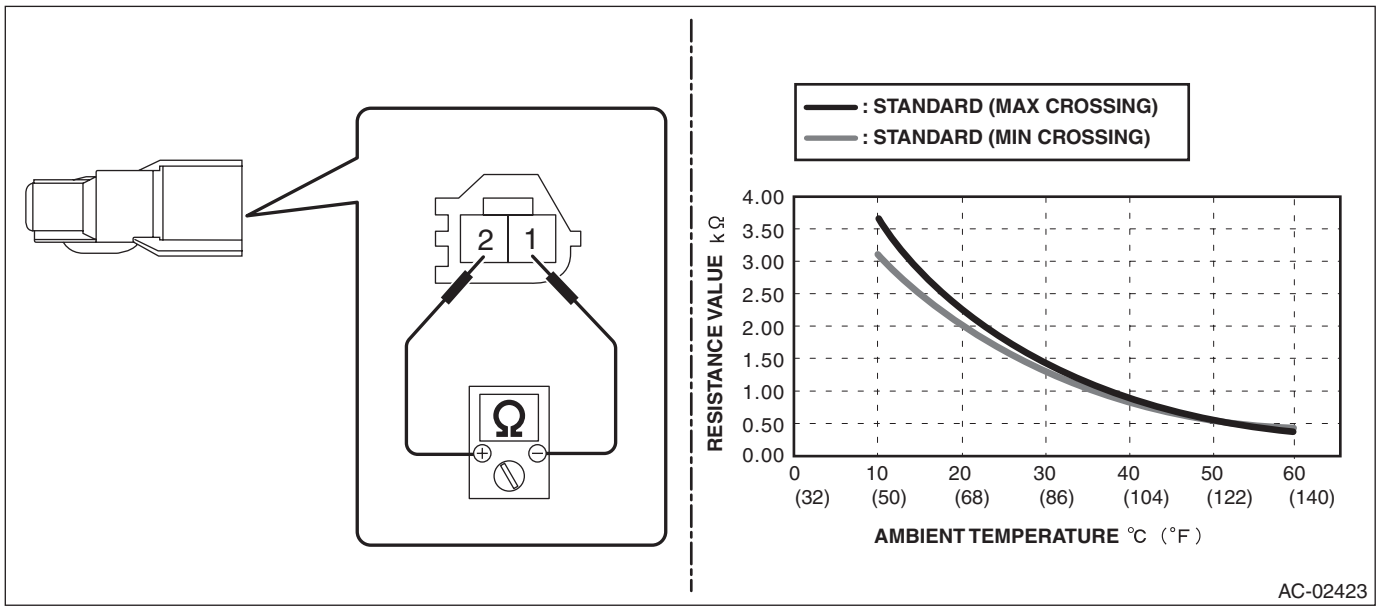

Terminal No.	Inspection conditions	Standard
1 — 2	10°C	3.12 — 3.70 kΩ
	15°C	2.49 — 2.88 kΩ
	20°C	2.00 — 2.26 kΩ
	25°C	1.62 — 1.79 kΩ
	30°C	1.32 — 1.42 kΩ
	35°C	1.08 — 1.14 kΩ
	40°C	0.89 — 0.92 kΩ
	45°C	0.74 — 0.75 kΩ
	50°C	0.62 — 0.62 kΩ
	55°C	0.52 — 0.51 kΩ
	60°C	0.44 — 0.42 kΩ

3) Replace the ambient sensor if the inspection result is not within the standard value.

24.Sunload Sensor (Auto A/C Model)

A: REMOVAL

NOTE:
The sunload sensor is integrated with the light control sensor.
1) Disconnect the ground cable from battery.
2) Remove the sunload sensor.

CAUTION:
Be careful not to damage the sensors and interior trims when removing.

(1) Release the claws and clips, then detach the side speaker cover (RH).

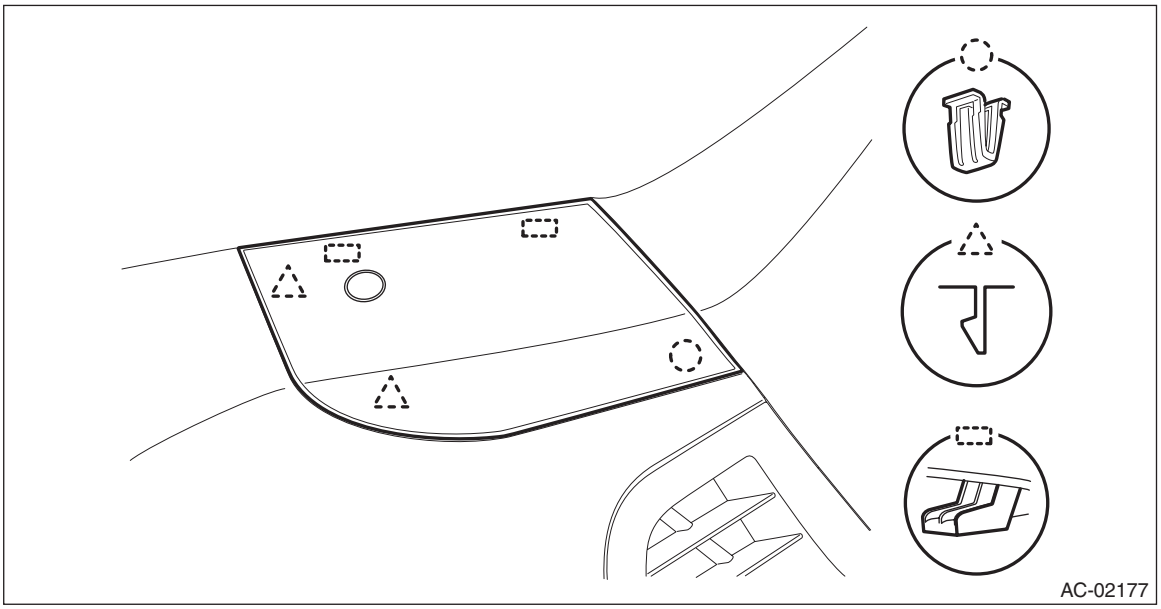

(2) Push out the sunload sensor by pressing the left and right claws.
(3) Disconnect the connector and remove the sunload sensor.

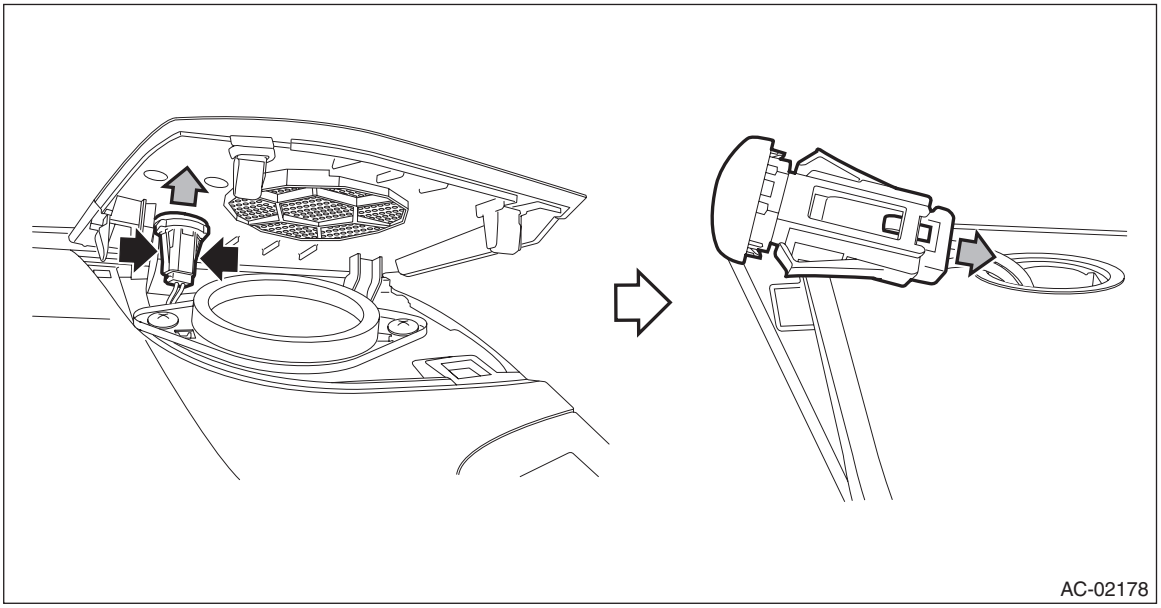

B: INSTALLATION

Install each part in the reverse order of removal.

C: INSPECTION

Preparation tool: Subaru Select Monitor III KIT

1) Check if there is anything that affects sensing, around the sunload sensor.
   (1) Is there anything placed on the sunload sensor that disturbs sensing?
   (2) Is there anything on the windshield glass, such as sticker and film, that disturbs sensing?
   - **No** → Go to step 2).
   - **Yes** → Remove everything that affects sensing.
2) Check the sunload sensor using the Subaru Select Monitor.
   (1) Prepare the Subaru Select Monitor kit.
   (2) Run the “PC application for Subaru Select Monitor”.
   (3) On «Main Menu» display, select {Each System Check}.
   (4) On «System Selection Menu» display, select {Air Condition System}.
   (5) On «Air Conditioning Diagnosis» display, select {Current Data Display & Save}.
   (6) Select {Quantity of Sunload} with UP/DOWN key and set with the [OK] key.
   (7) Cover the sunload sensor with cloth and the like to avoid direct light. Does {Quantity of Sunload} indicate 0 W/m^2?
   - **Yes** → Go to step 3).
   - **No** → Replace the sunload sensor.
3) From step 2), expose the sunload sensor to light.
   (1) Place intense light such as incandescent light at 30 cm or less from the sunload sensor.
   (2) Does the {Quantity of Sunload} indicate 2000 W/m^2 or less?

CAUTION:
The value changes depending on the angle of light.

- **Yes** → The sunload sensor is normal.
- **No** → Replace the sunload sensor.

25.In-Vehicle Sensor (Auto A/C Model)

A: REMOVAL

CAUTION:
Be careful not to damage the sensors and interior trims when removing.

1) Disconnect the ground cable from battery.
2) Remove the clips, and remove the instrument panel side cover LH.

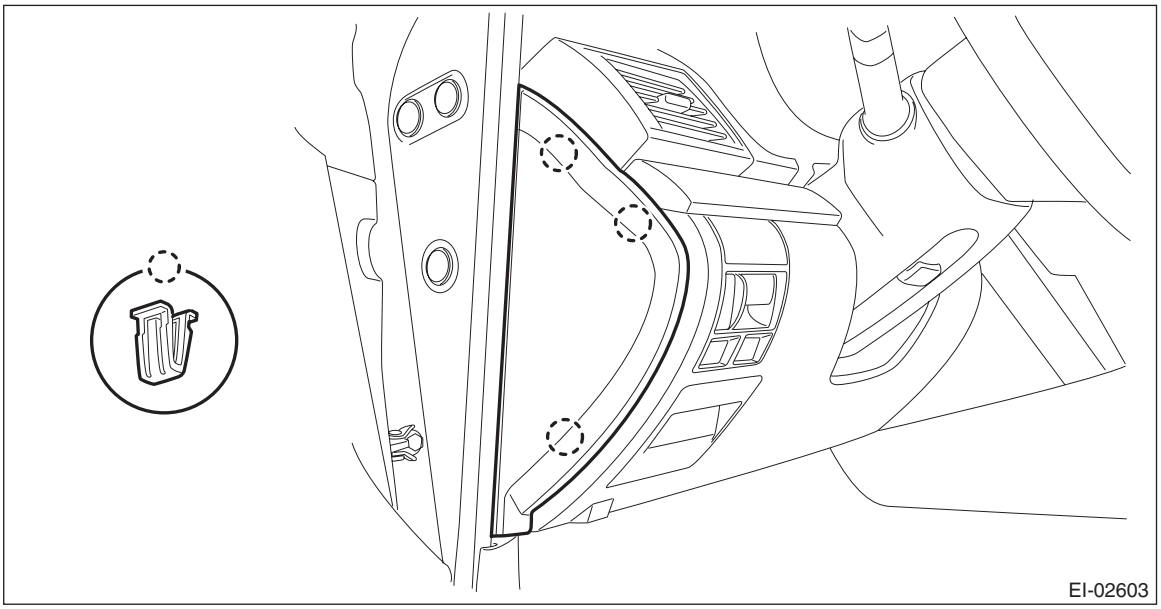

3) Remove the instrument panel lower cover.
   (1) Remove the clip.
   (2) Remove the data link connector, and remove the instrument panel lower cover under.

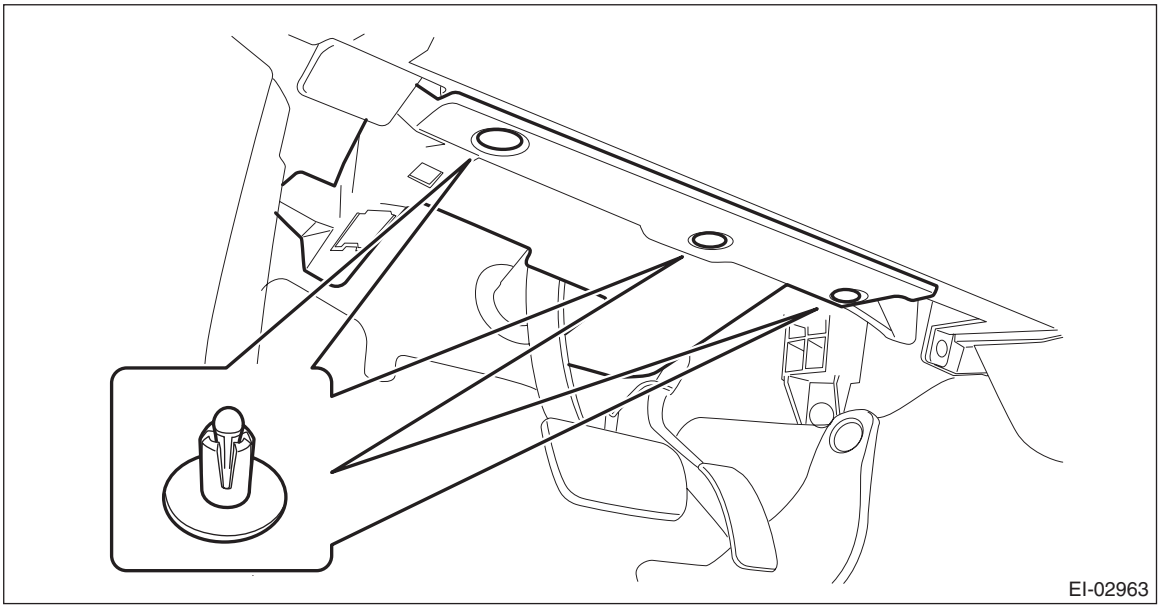

(3) Remove the screws and clips and release the claws, and remove the instrument panel lower cover while disconnecting the harness connectors.

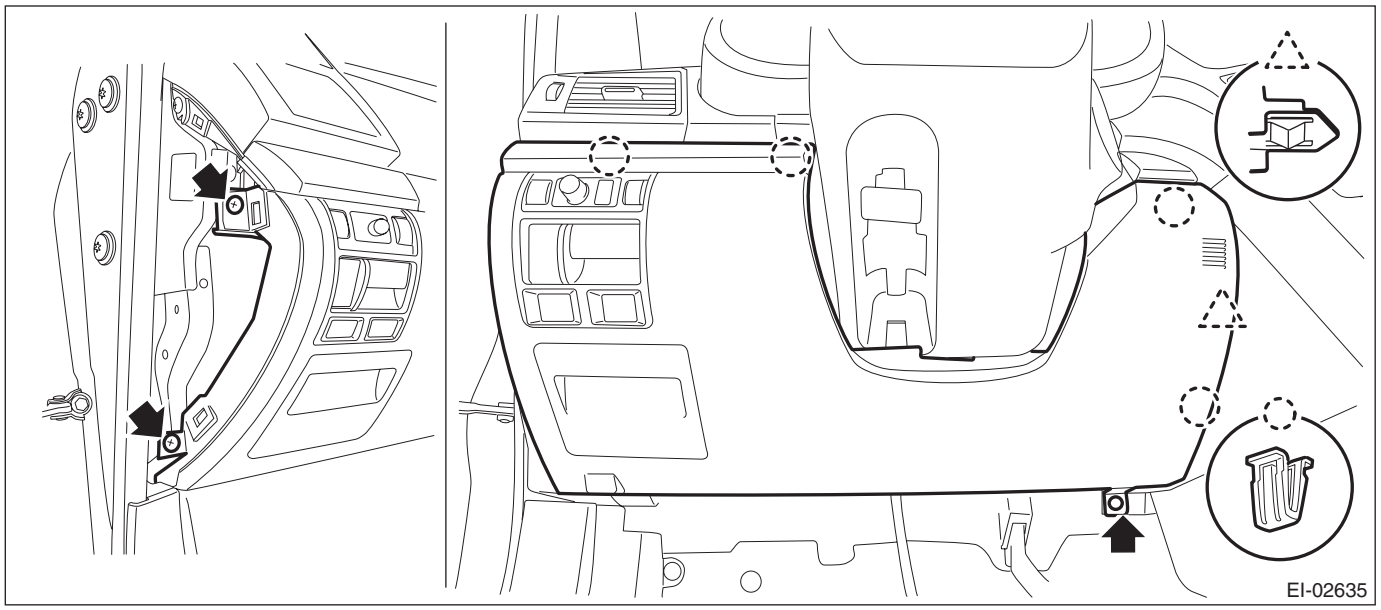

4) Remove the screw and remove the in-vehicle sensor from the instrument lower cover.

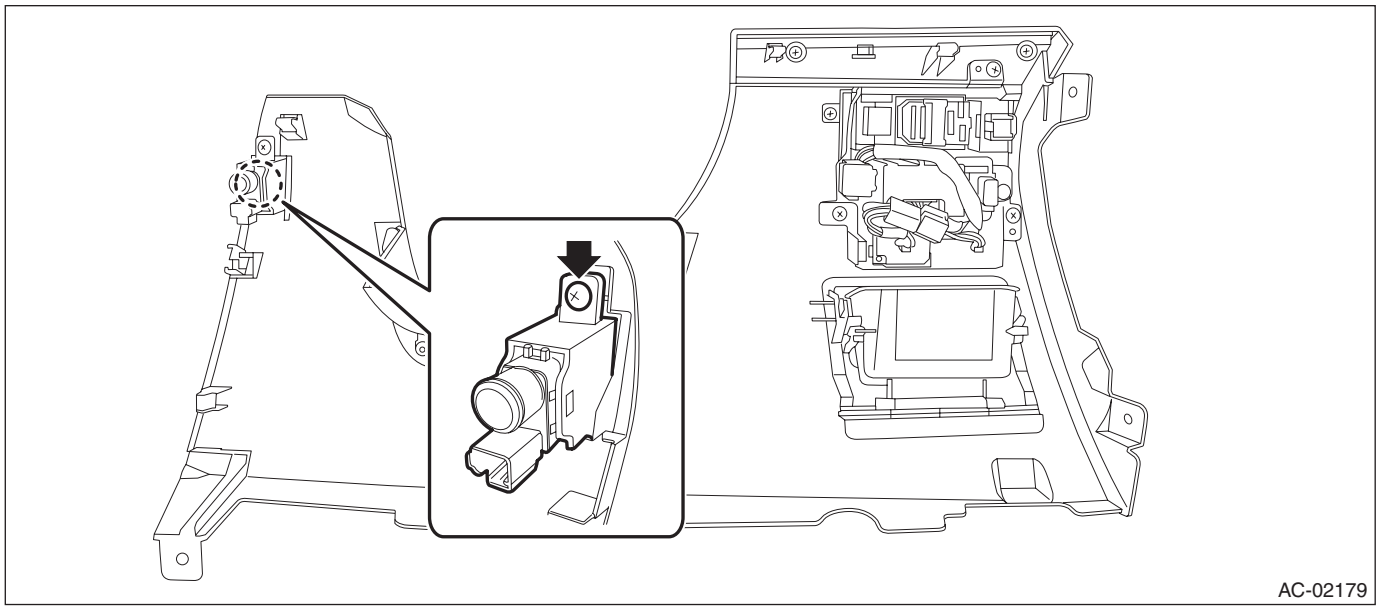

B: INSTALLATION

Install each part in the reverse order of removal.

C: INSPECTION

Preparation tool: Circuit tester

1) Set the vehicle to the following conditions.

Item	Condition
Ignition switch	ON
AC switch	ON
Temperature control switch	HI (MAX HOT)
Mode change switch	DEF
Fan switch or dial	HI (MAX)

2) Check the suction port (A) for in-vehicle sensor provided on the instrument panel lower cover.

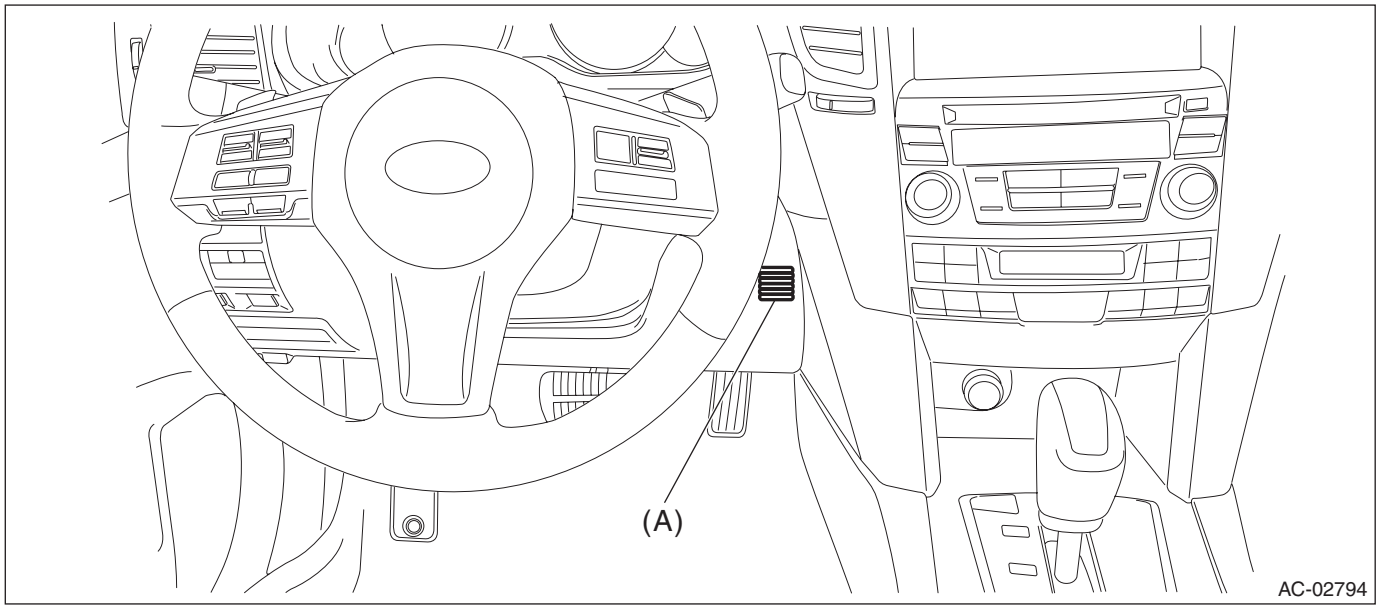

(1) Put a strip of paper close to the front side of the suction port (A).
(2) Can you see the paper moving towards the port and the air being sucked into the port?

CAUTION:
Be careful not to let the paper get sucked into the port.

- **Yes** → Go to step 5).
- **No** → Go to step 3).

3) Remove the instrument panel lower cover, and check the aspirator hose (A).

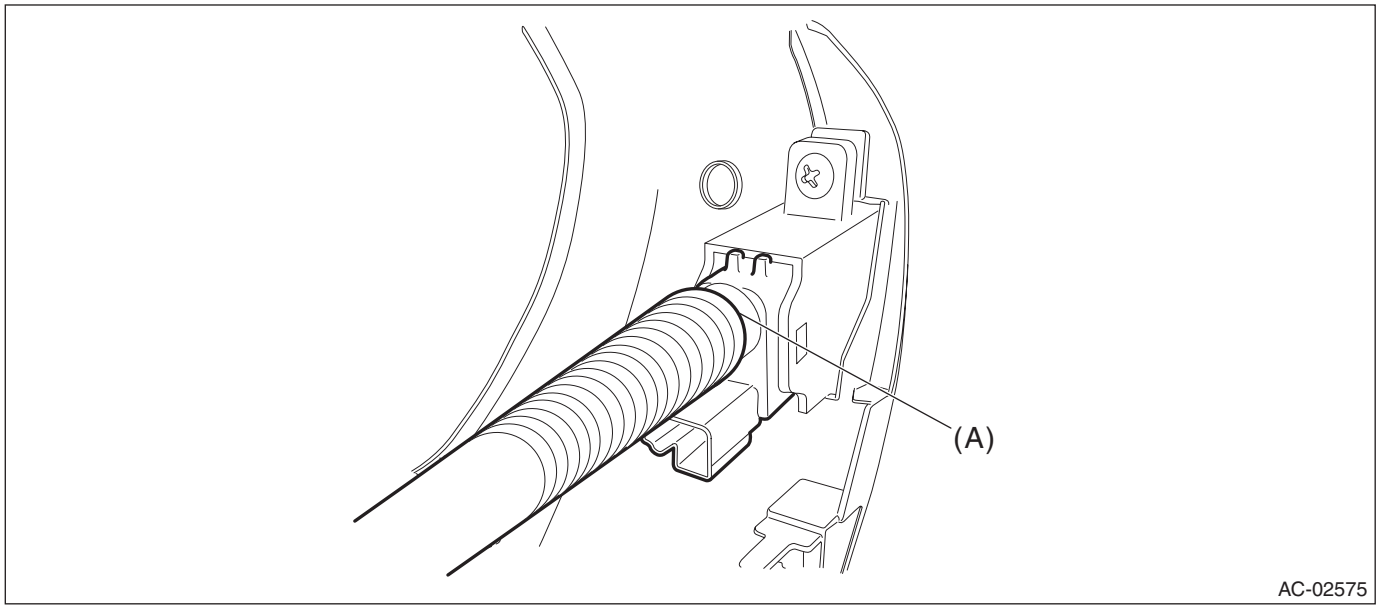

(1) Is the aspirator hose on both sides of case and sensor disconnected?
(2) Are there any kinks or cracks on the aspirator hose?
- **No** → Go to step 4).
- **Yes** → Repair or replace the aspirator hose if necessary.

4) Check if there is anything that affects sensing, around the in-vehicle sensor.
(1) Is the in-vehicle sensor hole plugged?
(2) Is there any heat-producing part (audio or navigation system, etc.) around in-vehicle sensor?
- **No** → Go to step 5).
- **Yes** → Remove everything that affects sensing.

5) Perform the inspection of in-vehicle sensor unit.
(1) Disconnect the in-vehicle sensor connector.
(2) Is the resistance between terminals of in-vehicle sensor within standard value?

CAUTION:
During inspection, be careful not to touch the sensor end in order to avoid misjudgment due to body temperature.

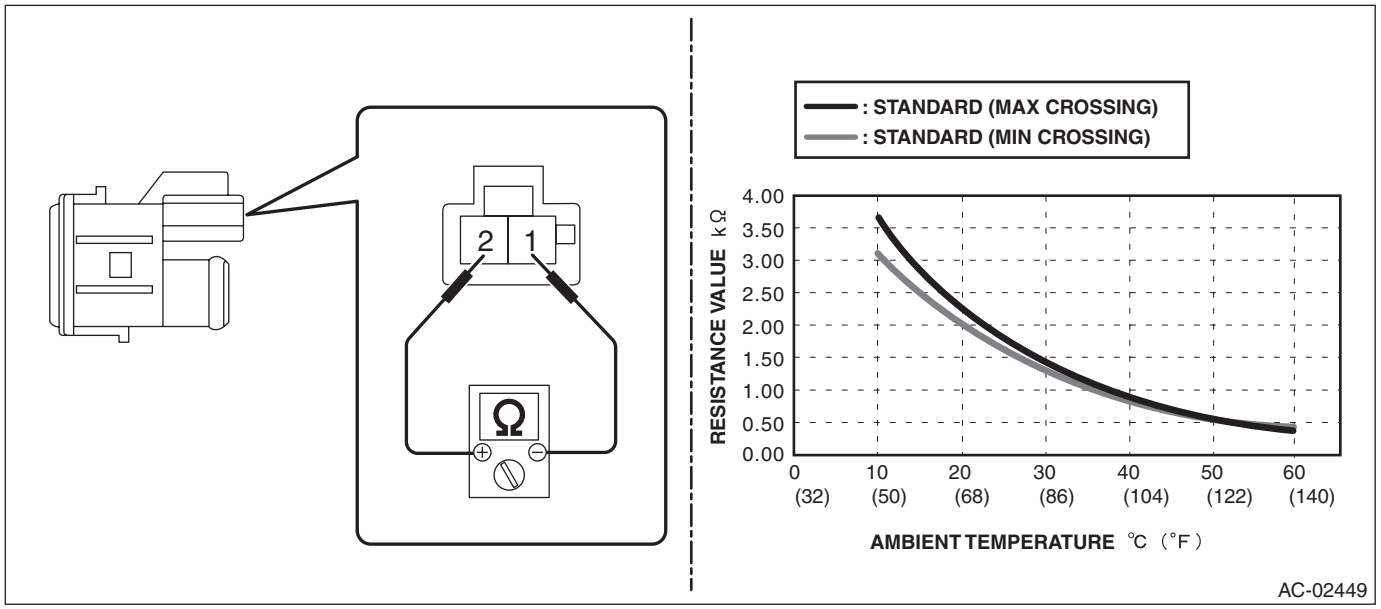

Terminal No.	Inspection conditions	Standard
1 — 2	10°C	3.12 — 3.70 kΩ
	15°C	2.49 — 2.88 kΩ
	20°C	2.00 — 2.26 kΩ
	25°C	1.62 — 1.79 kΩ
	30°C	1.32 — 1.42 kΩ
	35°C	1.08 — 1.14 kΩ
	40°C	0.89 — 0.92 kΩ
	45°C	0.74 — 0.75 kΩ
	50°C	0.62 — 0.62 kΩ
	55°C	0.52 — 0.51 kΩ
	60°C	0.44 — 0.42 kΩ

- **Yes** → The in-vehicle sensor is normal.
- **No** → Replace the in-vehicle sensor.

26.Evaporator Sensor

A: REMOVAL

1) Remove the evaporator. <Ref. to AC-66, REMOVAL, Evaporator.>
2) Remove the evaporator sensor from the evaporator.

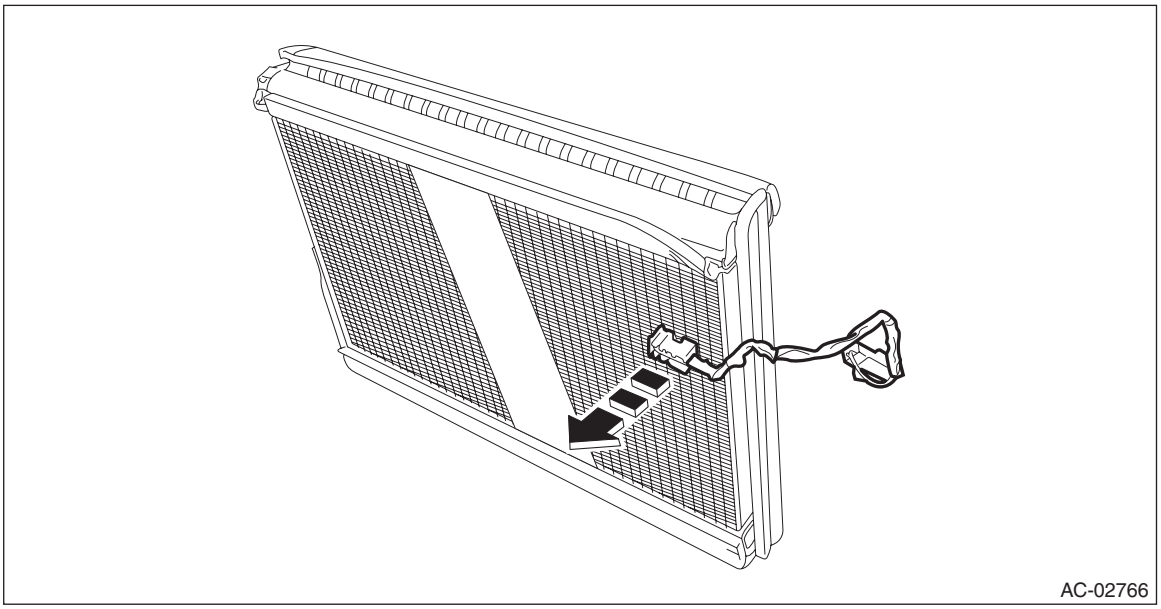

B: INSTALLATION

CAUTION:
- **Do not start the engine before charging refrigerant.**
- **If the engine is started with no refrigerant charge, replace the compressor.**
- **Make sure that the water seal gasket on the cover attachment area is securely attached.**
- **Replace the O-rings with new parts, and then apply compressor oil.**

1) Install the evaporator sensor at the position shown in the figure below.

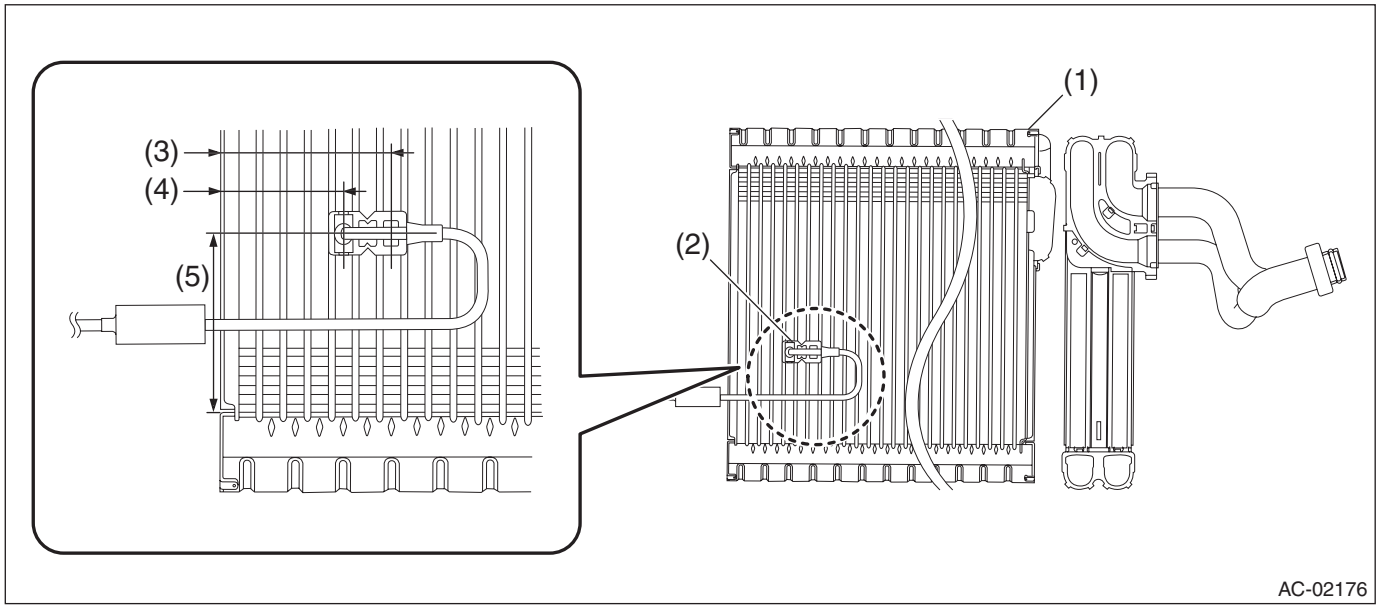

(1) Evaporator
(2) Evaporator sensor
(3) 47.7 mm (1.88 in)
(4) 34.3 mm (1.35 in)
(5) 50 mm (1.97 in)

2) Install each part in the reverse order of removal.

NOTE:
Refer to “INSTALLATION” of “Instrument Panel Assembly”. <Ref. to EI-95, INSTALLATION, Instrument Panel Assembly.>
3) Fill engine coolant.
• H4 non-turbo model: <Ref. to CO(H4SO)-14, FILLING OF ENGINE COOLANT, REPLACEMENT, Engine Coolant.>
• H4 turbo model: <Ref. to CO(H4DOTC)-14, FILLING OF ENGINE COOLANT, REPLACEMENT, Engine Coolant.>
• H6 model: <Ref. to CO(H6DO)-12, FILLING OF ENGINE COOLANT, REPLACEMENT, Engine Coolant.>
4) Charge refrigerant. <Ref. to AC-25, PROCEDURE, Refrigerant Charging Procedure.>

Tightening torque:
Heater cooling unit: <Ref. to AC-6, HEATER COOLING UNIT, COMPONENT, General Description.>
Blower motor unit: <Ref. to AC-8, BLOWER MOTOR UNIT, COMPONENT, General Description.>

C: INSPECTION

Preparation tool:
Subaru Select Monitor III KIT
Circuit tester
Thermometer
1) Prepare the vehicle.

NOTE:
Check that the ambient temperature is 25 — 40°C (77 — 104°F) and that the humidity is 30% — 80%.
• Place the vehicle in the workshop or in the shade and windless condition.
• Open all windows.
2) Set the vehicle to the following conditions.

Item	Condition
Engine	Idling
Air vent grille	Shutter is fully open.
AC switch	OFF
Temperature control switch or dial	LO (MAX COOL)
FRESH/RECIRC switch	CIRC
Mode change switch	VENT
Fan switch (auto A/C model)	4 — 6 levels
Fan dial (manual A/C model)	3 — 4 levels

3) Using the Subaru Select Monitor, check the evaporator sensor.
(1) Prepare the Subaru Select Monitor kit.
(2) Run the “PC application for Subaru Select Monitor”.
(3) On «Main Menu» display, select {Each System Check}.
(4) On «System Selection Menu» display, select {Air Condition System}.
(5) On «Air Conditioning Diagnosis» display, select {Current Data Display & Save}.
(6) Select {Evaporator Temperature} with UP/DOWN key and set with the [OK] key.
(7) Idle the engine for 15 minutes, and then compare the outlet opening temperature with {Evaporator Temperature Target}.

NOTE:
For outlet opening temperature, measure the average temperature of center grille assembly and side grille assembly.
(8) Is the difference between outlet opening temperature and {Evaporator Temperature Target} by 3°C (5.4°F) or more?
• **Yes** → Go to step 4).
• **No** → Evaporator sensor is normal.

4) Perform the inspection of evaporator sensor unit.
(1) Disconnect the evaporator sensor connector.
(2) Is the resistance between terminals of evaporator sensor within standard value?

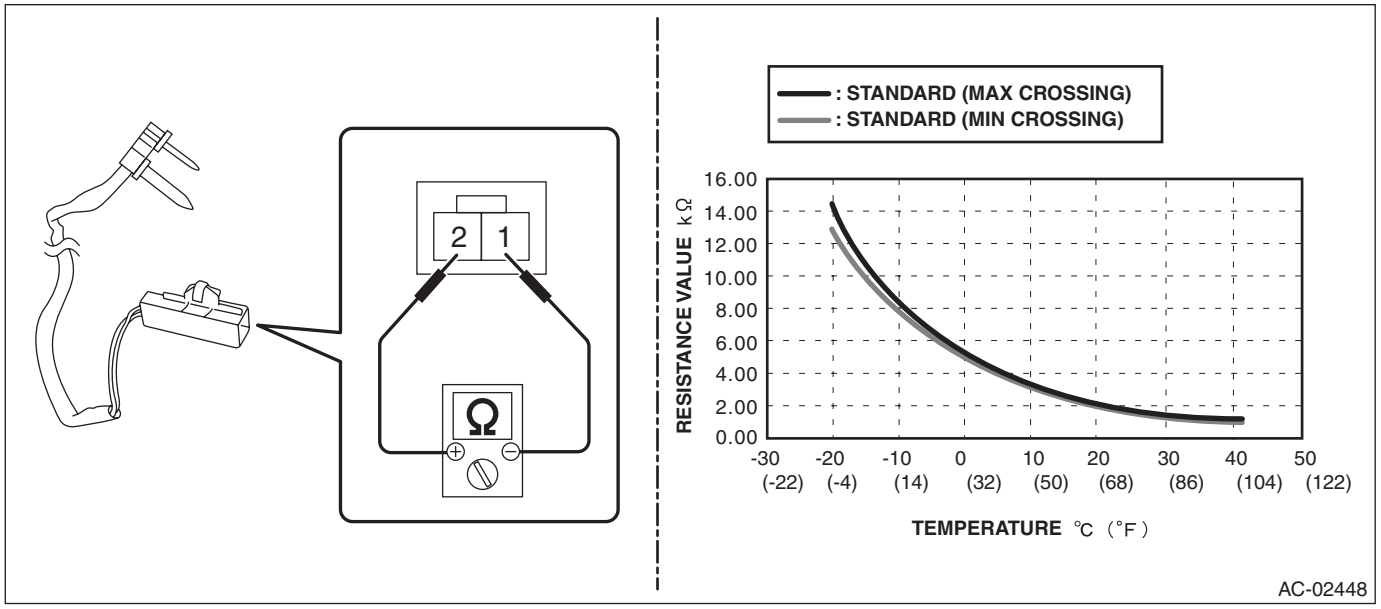

Terminal No.	Inspection conditions	Standard
1 — 2	-20°C	13.584 — 14.541 kΩ
	-15°C	10.34 — 10.946 kΩ
	-10°C	7.938 — 8.313 kΩ
	-5°C	6.143 — 6.366 kΩ
	0°C	4.79 — 4.914 kΩ
	5°C	3.718 — 3.829 kΩ
	10°C	2.889 — 3.031 kΩ
	15°C	2.247 — 2.435 kΩ
	20°C	1.785 — 1.952 kΩ
	25°C	1.427 — 1.574 kΩ
	30°C	1.149 — 1.278 kΩ
	35°C	0.931 — 1.044 kΩ
	40°C	0.759 — 0.858 kΩ

- **Yes** → Evaporator sensor is normal.
- **No** → Replace the evaporator sensor.

27.FRESH/RECIRC Door Actuator

A: REMOVAL

1) Set the intake door actuator to RECIRC position.
   (1) Turn the ignition switch to ON.
   (2) Operate the control panel and switch to RECIRC mode.
   (3) In the condition of step (2), turn the ignition switch to OFF.
2) Remove the instrument panel assembly. <Ref. to EI-76, REMOVAL, Instrument Panel Assembly.>
3) Remove the screw, and remove the intake door actuator.

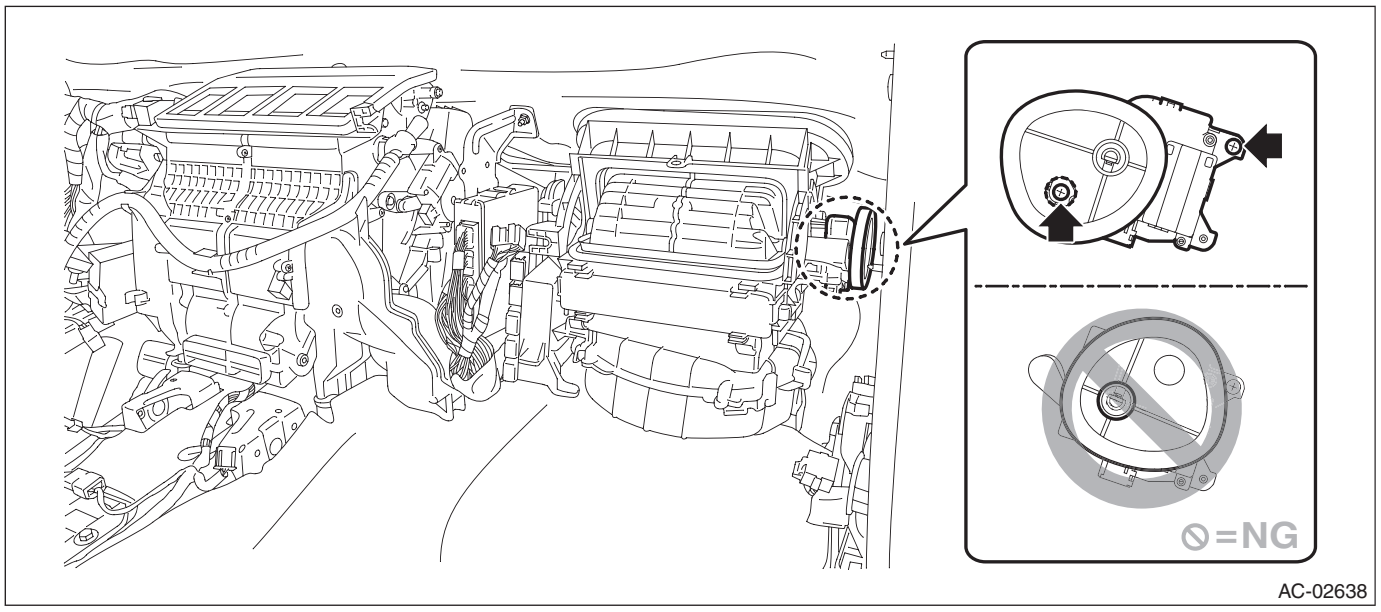

B: INSTALLATION

Install each part in the reverse order of removal.

NOTE:
Refer to “INSTALLATION” of “Instrument Panel Assembly”. <Ref. to EI-95, INSTALLATION, Instrument Panel Assembly.>

C: INSPECTION

1. ACTUATOR LINK

1) Visually check the operating range of the link, and remove the foreign matter if any.
2) Operate the FRESH/RECIRC switch, and check that the link operates normally.
3) If the actuator does not operate normally, check the intake door actuator unit.

2. CHECK ACTUATOR OPERATION

1) Check the actuator operation when battery voltage is applied between the terminals of intake door actuator.

CAUTION:
Disconnect the battery immediately after the actuator stops operation. Otherwise, the motor may be damaged.

<table>
<tr><th>Terminal No.</th><th>Inspection conditions</th><th>Operating position</th><th>Connection diagram</th></tr>
<tr><td>7 (+) — 1 (–)</td><td rowspan="2">Connect battery to the terminals</td><td>FRESH</td><td rowspan="2"> 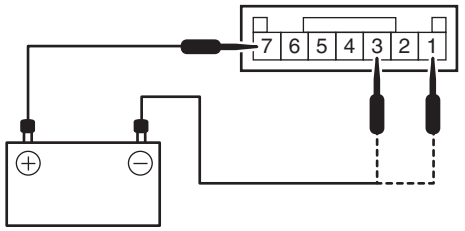

AC-02578</td></tr>
<tr><td>7 (+) — 3 (–)</td><td>RECIRC</td></tr>
</table>

2) If the actuator does not operate normally, replace the intake door actuator.

28.Mode Door Actuator

A: REMOVAL

1) Remove the instrument panel lower cover. <Ref. to EI-64, REMOVAL, Instrument Panel Lower Cover.>
2) Remove the bolt and detach the knee protector.

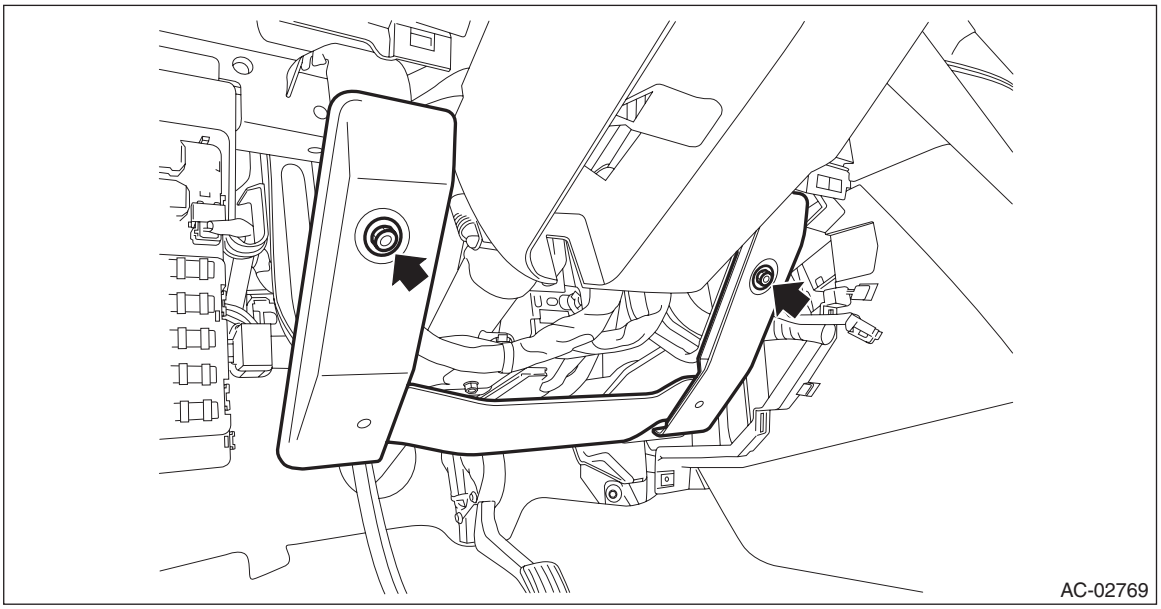

3) Remove the body integrated unit.

CAUTION:
Be careful to keep water and other foreign materials away from body integrated unit.

(1) Remove the harness clip and connector.
(2) Remove the bolts, and remove the body integrated unit.

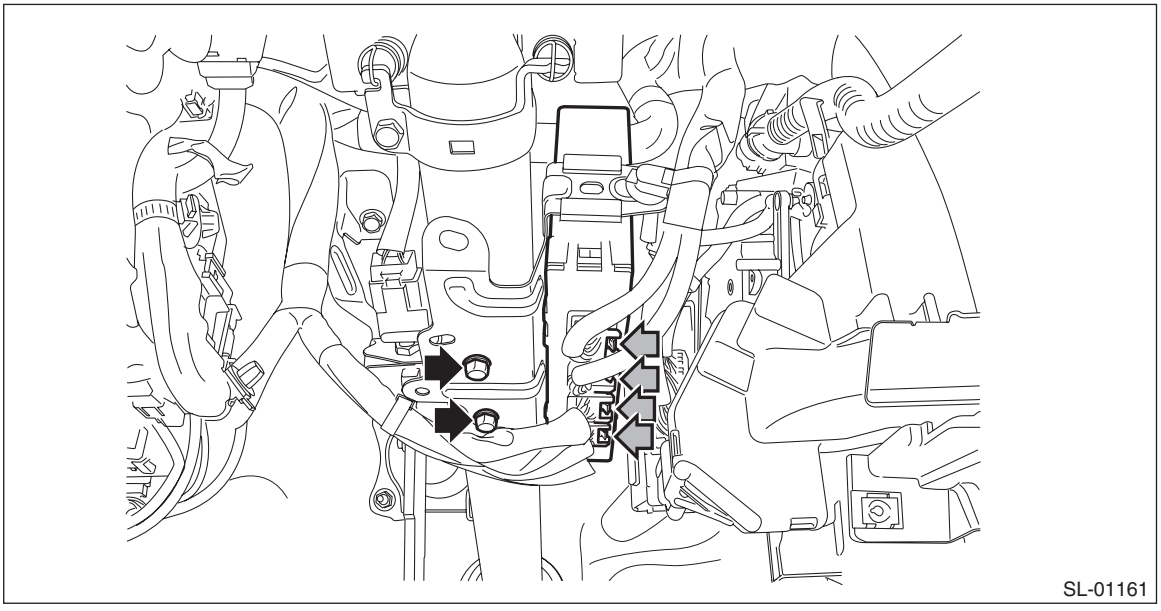

4) Remove the mode door actuator.
   (1) Disconnect the connector.
   (2) Remove the screws, and remove the mode door actuator.

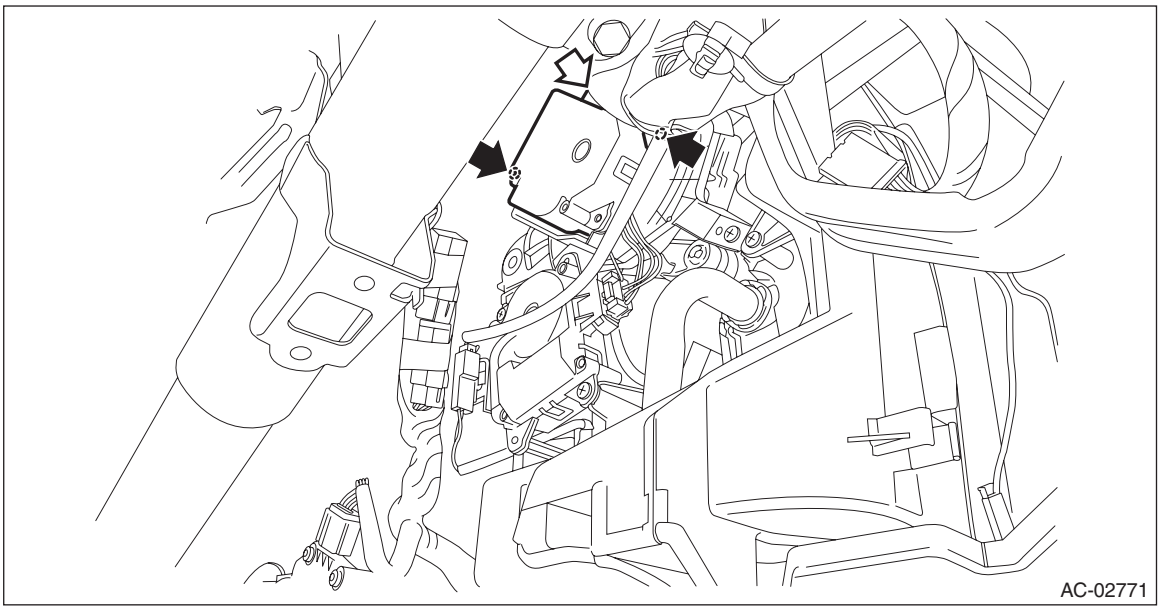

B: INSTALLATION

Install each part in the reverse order of removal.

C: INSPECTION

1. ACTUATOR LINK

1) Visually check the operating range of the link, and remove the foreign matter if any.
2) Operate the mode change switch, and check that the link operates normally.
3) If the actuator does not operate normally, check the mode door actuator unit.

2. CHECK ACTUATOR OPERATION

Preparation tool: Circuit tester

1) Check the actuator operation when battery voltage is applied between the terminals of mode door actuator.

CAUTION:
Disconnect the battery immediately after the actuator stops operation. Otherwise, the motor may be damaged.

Terminal No.	Inspection conditions	Operating position	Connection diagram
4 (+) — 5 (–)	Connect battery to the terminals	FACE	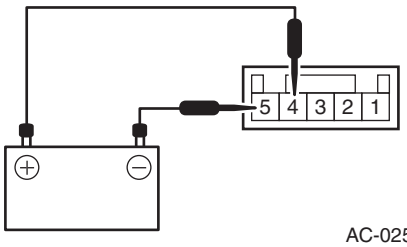 AC-02579
5 (+) — 4 (–)		DEF	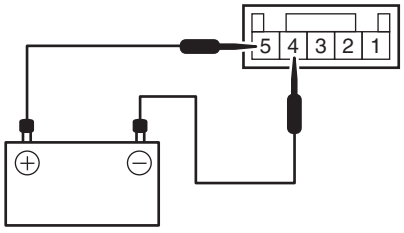 AC-02580

2) Check the resistance between terminals of the mode door actuator.

Terminal No.	Inspection conditions	Standard	Connection diagram
1 — 2	Always	4.2 — 7.8 Ω	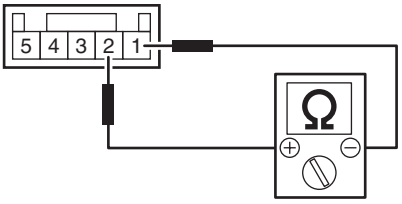 AC-02581

3) Connect the mode door actuator connector, turn the ignition switch to ON and check the voltage between terminals of the mode door actuator.

Terminal No.	Inspection conditions	Standard	Connection diagram
3 (+) — 2 (–)	FACE	Approx. 4.0 V	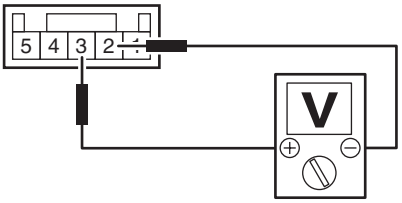 AC-02582
	DEF	Approx. 1.0 V	

4) Replace the mode door actuator if it is found defective.

29.Air Mix Door Actuator

A: REMOVAL

1. DRIVER'S SEAT

1) Remove the instrument panel lower cover. <Ref. to EI-64, REMOVAL, Instrument Panel Lower Cover.>
2) Remove the bolts, and remove the knee guard panel.

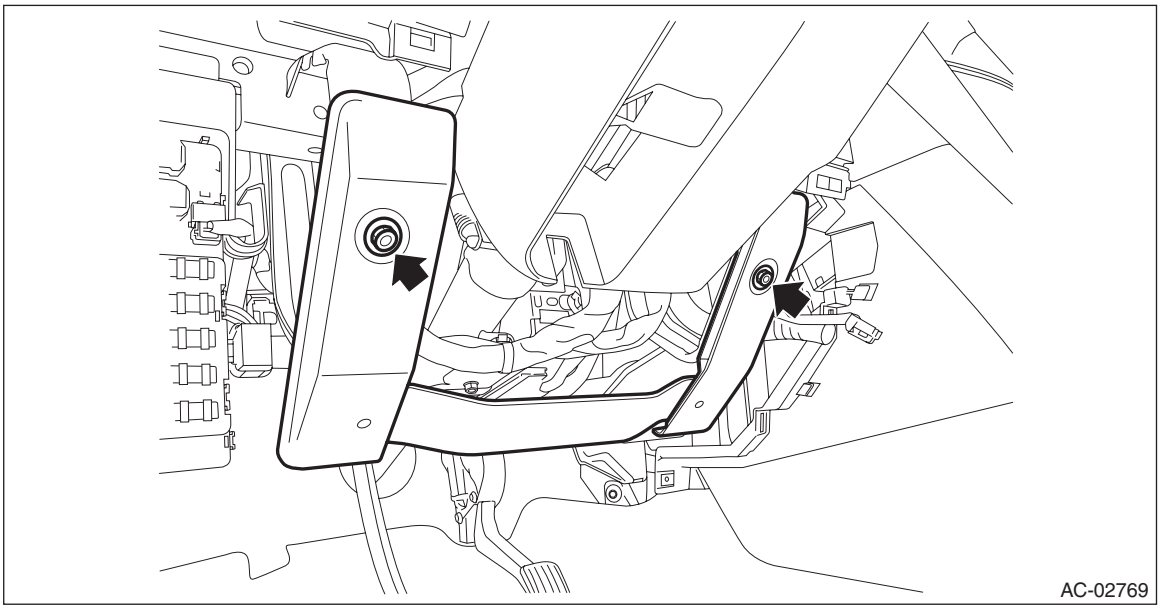

3) Remove the body integrated unit.

CAUTION:
Be careful to keep water and other foreign materials away from body integrated unit.

(1) Remove the harness clip and connector.
(2) Remove the bolts, and remove the body integrated unit.

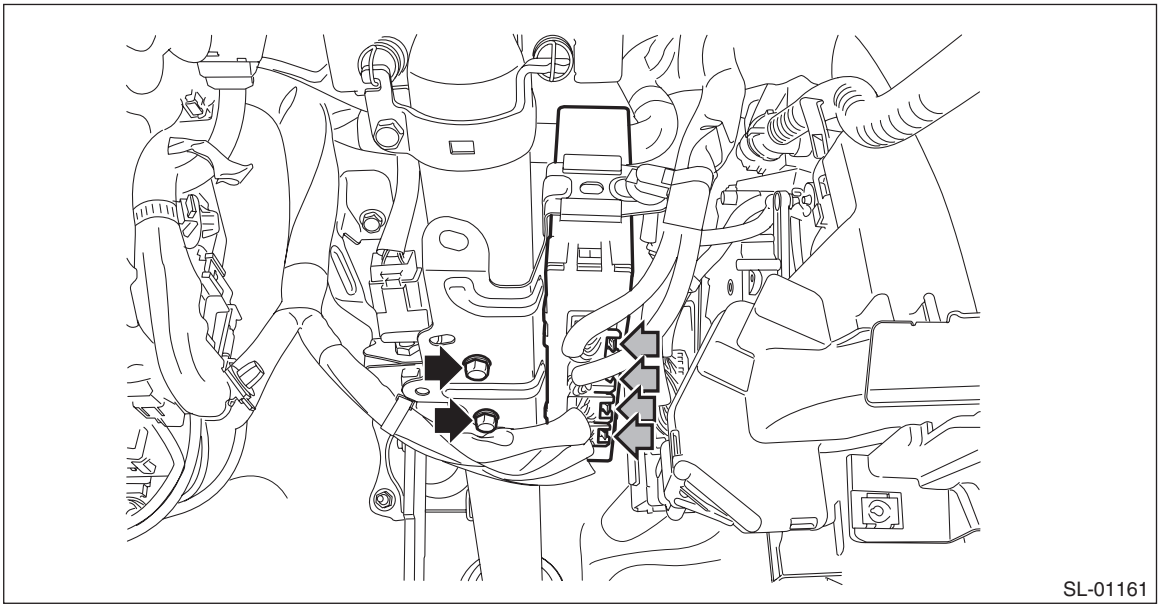

4) Remove the air mix door actuator.
   (1) Disconnect the connector.
   (2) Remove the screw, and remove the air mix door actuator.

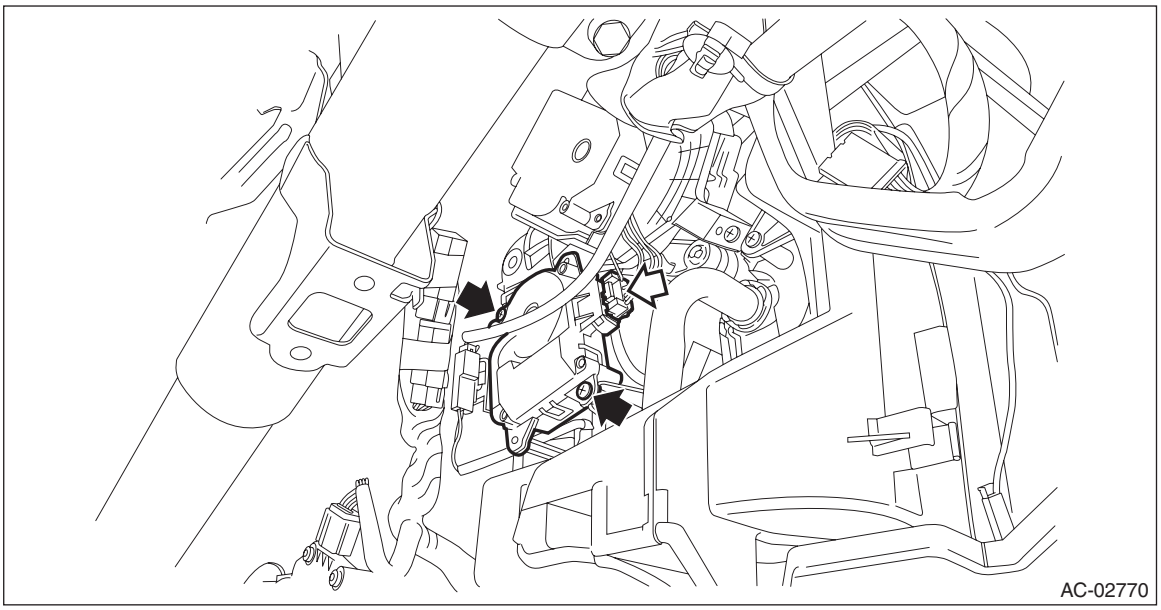

2. PASSENGER'S SEAT

1) Remove the glove box. <Ref. to EI-66, REMOVAL, Glove Box.>
2) Remove the nuts, and remove the engine control module (ECM).

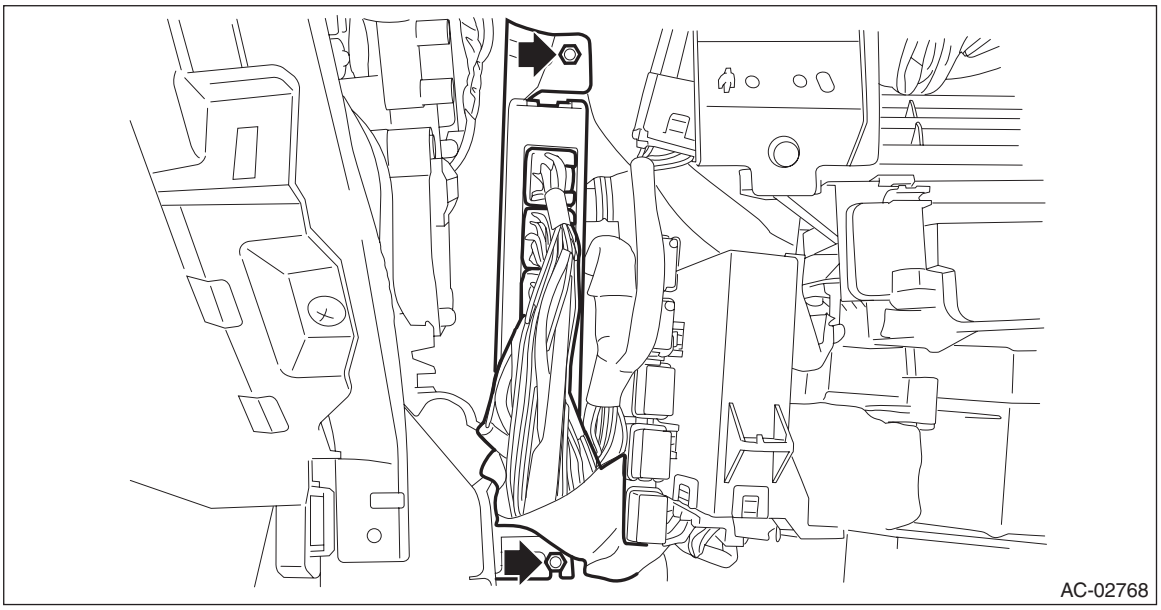

3) Remove the air mix door actuator.
(1) Disconnect the connector.
(2) Remove the screw, and remove the air mix door actuator.

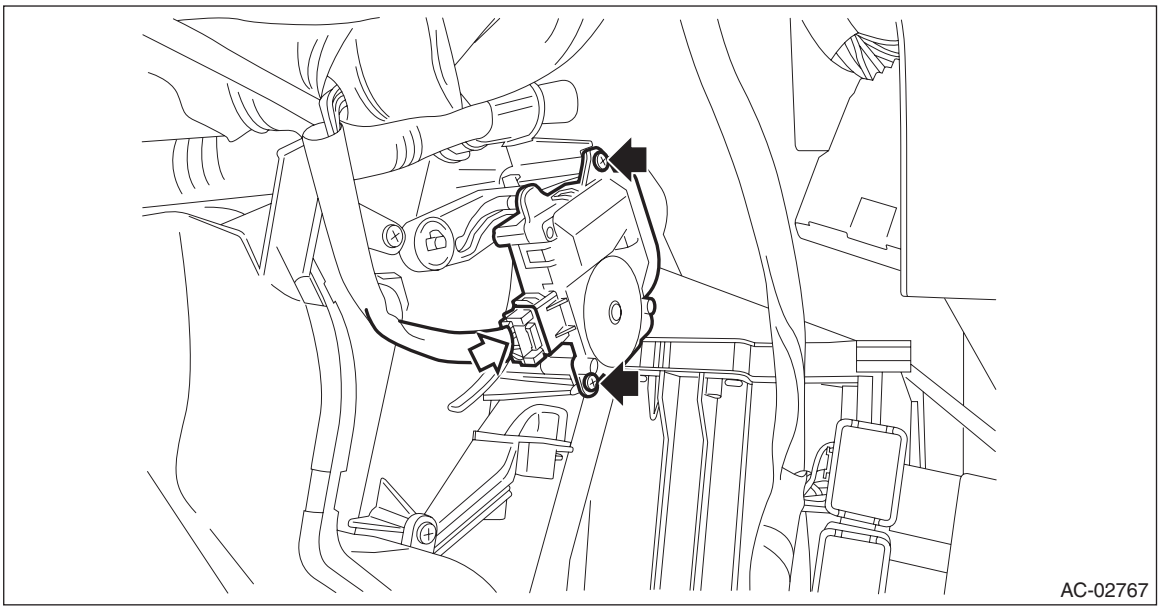

B: INSTALLATION

Install each part in the reverse order of removal.

C: INSPECTION

1. ACTUATOR LINK

1) Visually check the operating range of the link, and remove the foreign matter if any.
2) Operate the temperature control switch, and check that the link operates normally.
3) If the actuator does not operate normally, check the air mix door actuator unit.

2. CHECK ACTUATOR OPERATION

Preparation tool: Circuit tester

1) Check the actuator operation when battery voltage is applied between the terminals of air mix door actuator.

CAUTION:
Disconnect the battery immediately after the actuator stops operation. Otherwise, the motor may be damaged.

Terminal No.	Inspection conditions	Operating position	Connection diagram
6 (+) — 7 (–)	Connect battery to the terminals	•Driver's seat: COOL •Passenger's seat: HOT	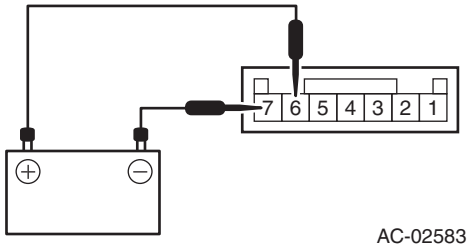
7 (+) — 6 (–)		•Driver's seat: HOT •Passenger's seat: COOL	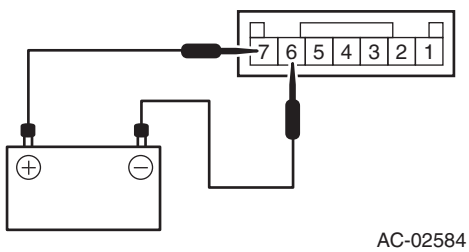

2) Check the resistance between terminals of the air mix door actuator.

Terminal No.	Inspection conditions	Standard	Connection diagram
1 — 3	Always	4.2 — 7.8 Ω	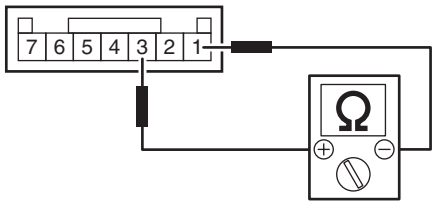 AC-02585

3) Connect the air mix door actuator connector, turn the ignition switch to ON and check the voltage between terminals of the air mix door actuator.

- Driver's seat

Terminal No.	Inspection conditions	Standard	Connection diagram
5 (+) — 3 (–)	HOT	Approx. 1.0 V	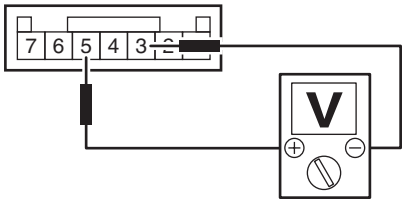 AC-02587
	COOL	Approx. 4.0 V	

- Passenger's seat

Terminal No.	Inspection conditions	Standard	Connection diagram
5 (+) — 1 (–)	HOT	Approx. 1.0 V	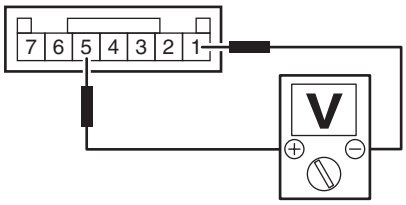 AC-02586
	COOL	Approx. 4.0 V	

4) Replace the air mix door actuator if it is found defective.

30.Air Vent Grille

A: REMOVAL

1. CENTER GRILLE ASSEMBLY

1) Remove the center panel assembly.

CAUTION:
Do not put your finger on the fin of the air vent grille. Doing so may damage the fin.

(1) Attach the protective tape (a) to the meter visor.

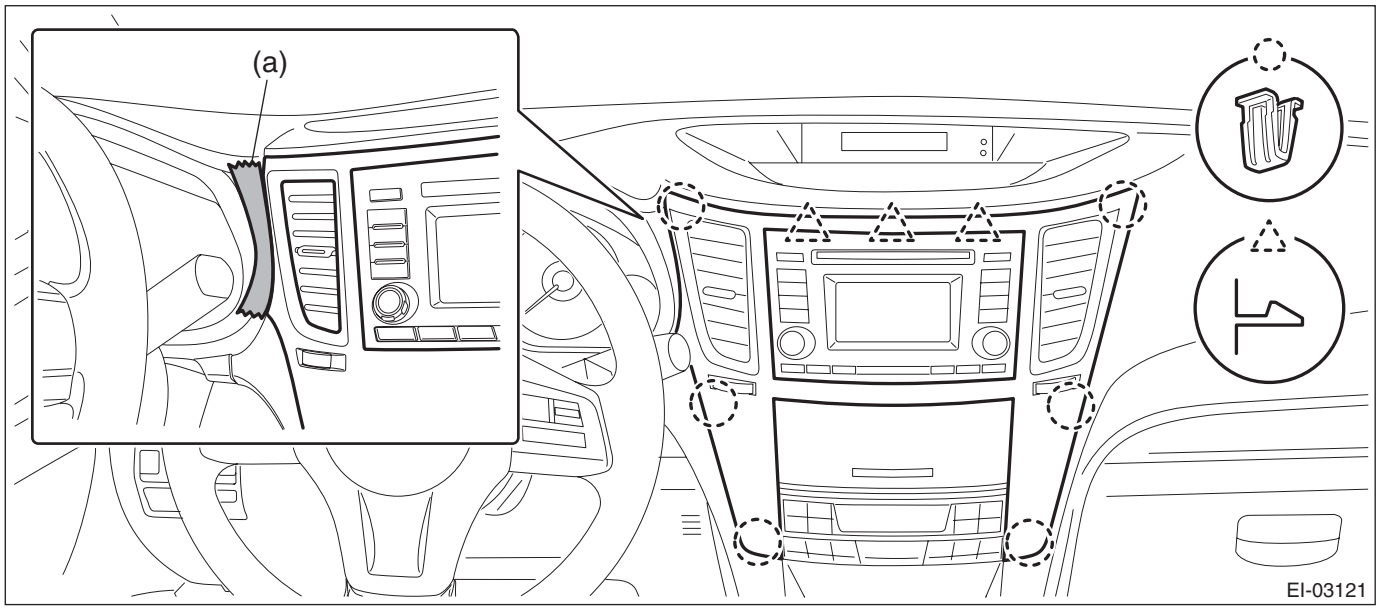

(2) Insert a finger into the air vent grille and release the left and right clips at the top of the center panel. (A), (B)

(3) Insert a finger into the air vent grille and release the left and right clips at the center of the center panel. (C), (D)

(4) Release the clips at the bottom of the center panel and remove the center panel assembly.

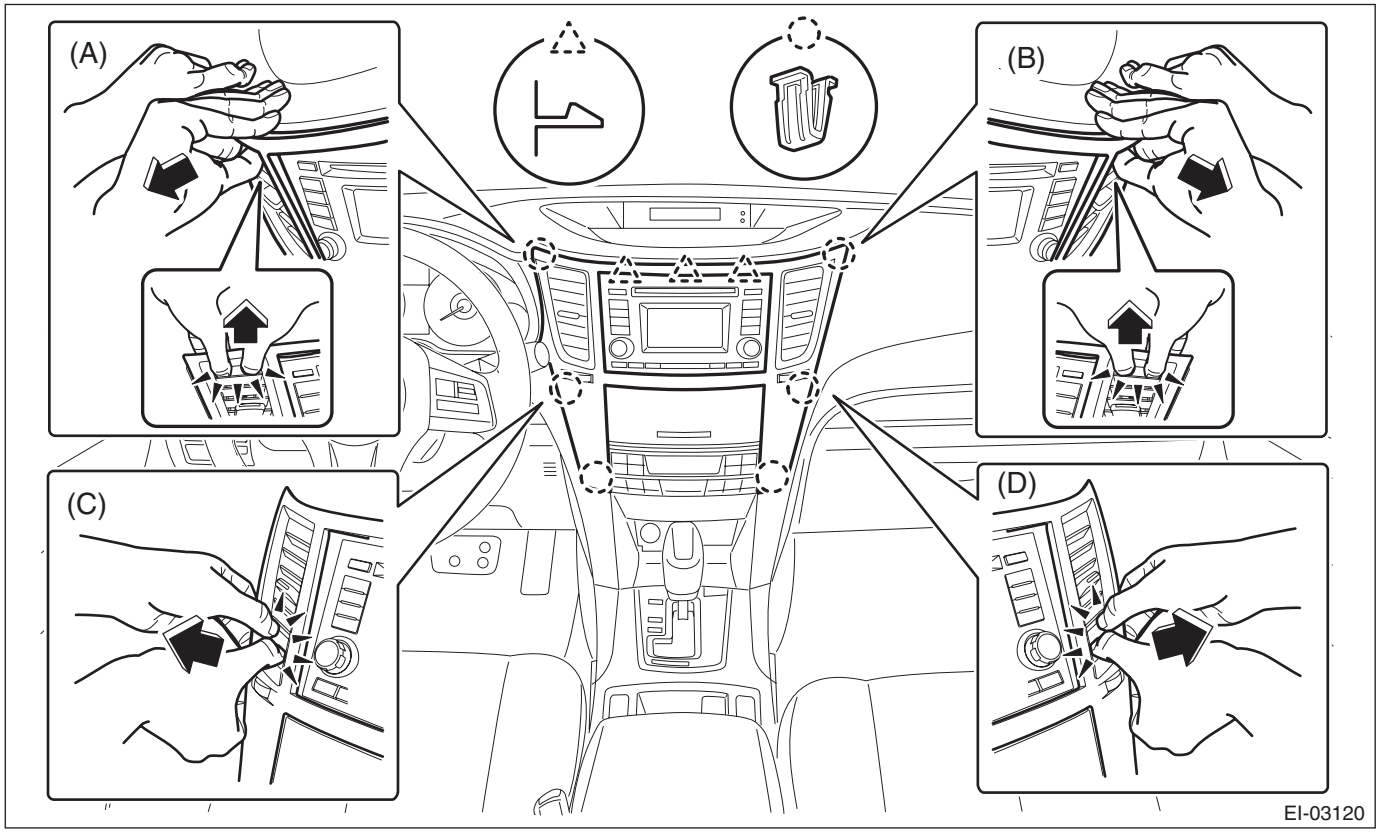

2) Release the claws, and then remove the center grille assembly.

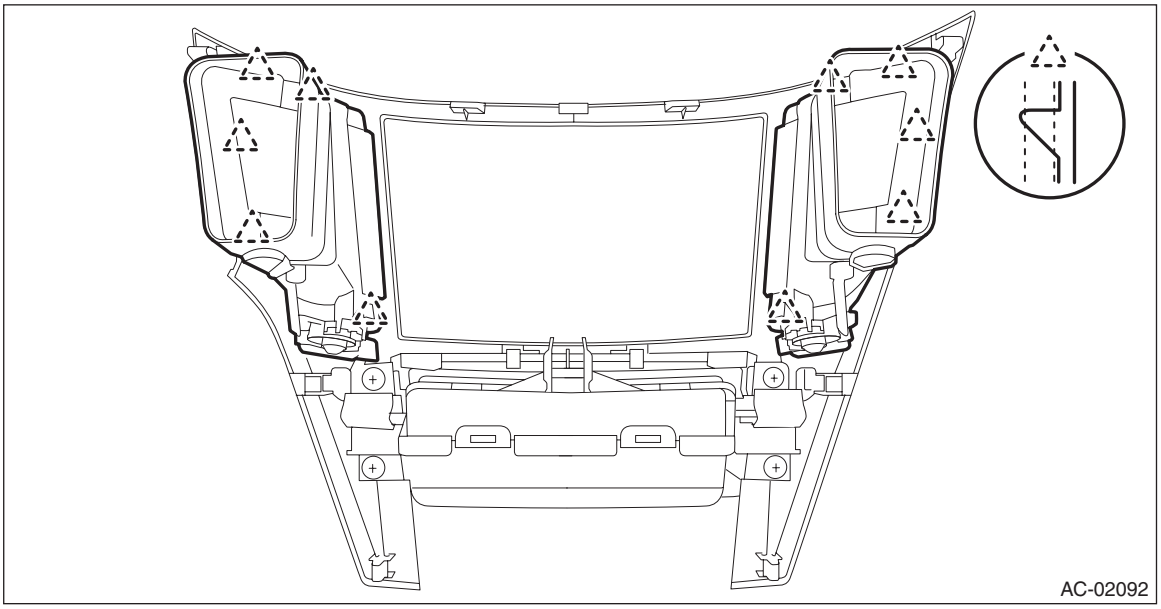

2. SIDE GRILLE ASSEMBLY RH

1) Remove the instrument panel lower cover. <Ref. to EI-64, REMOVAL, Instrument Panel Lower Cover.>
2) Remove the side vent grille assembly RH.
   (1) Remove the screws.
   (2) Release the claws and clips, then detach the side grille assembly RH.

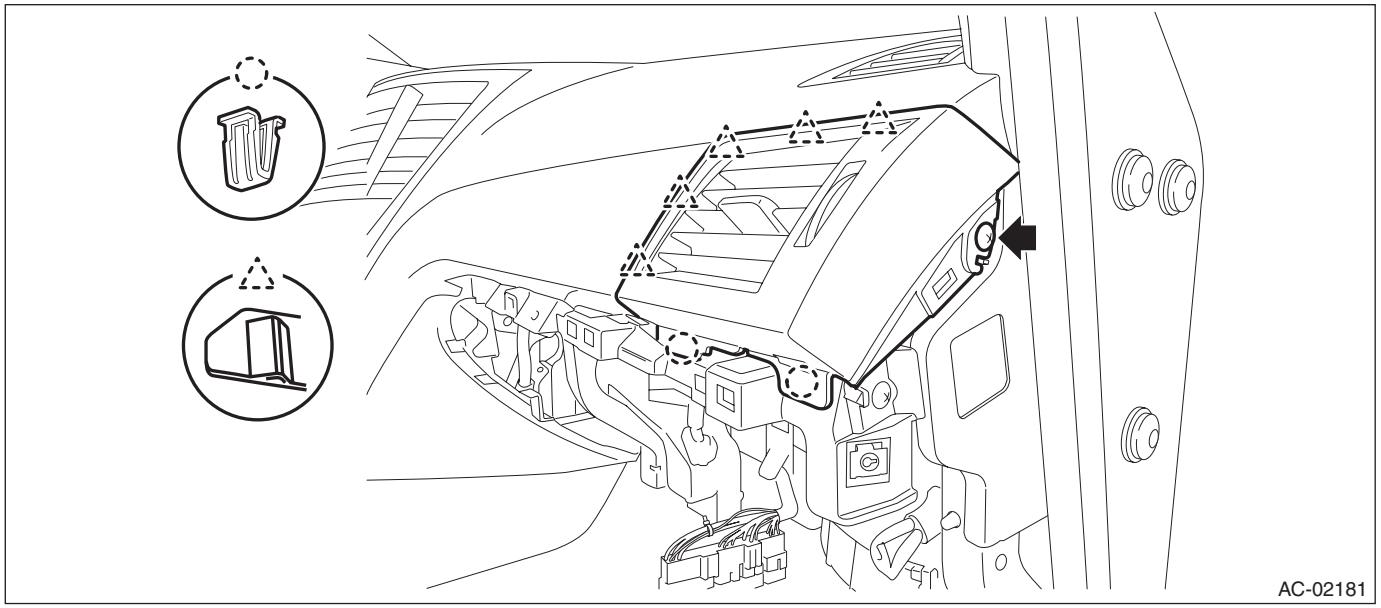

3. SIDE GRILLE ASSEMBLY LH

1) Remove the glove box. <Ref. to EI-66, REMOVAL, Glove Box.>
2) Remove the side vent grille assembly LH.
   (1) Remove the screws.
   (2) Release the claws and clips, then detach the side grille assembly LH.

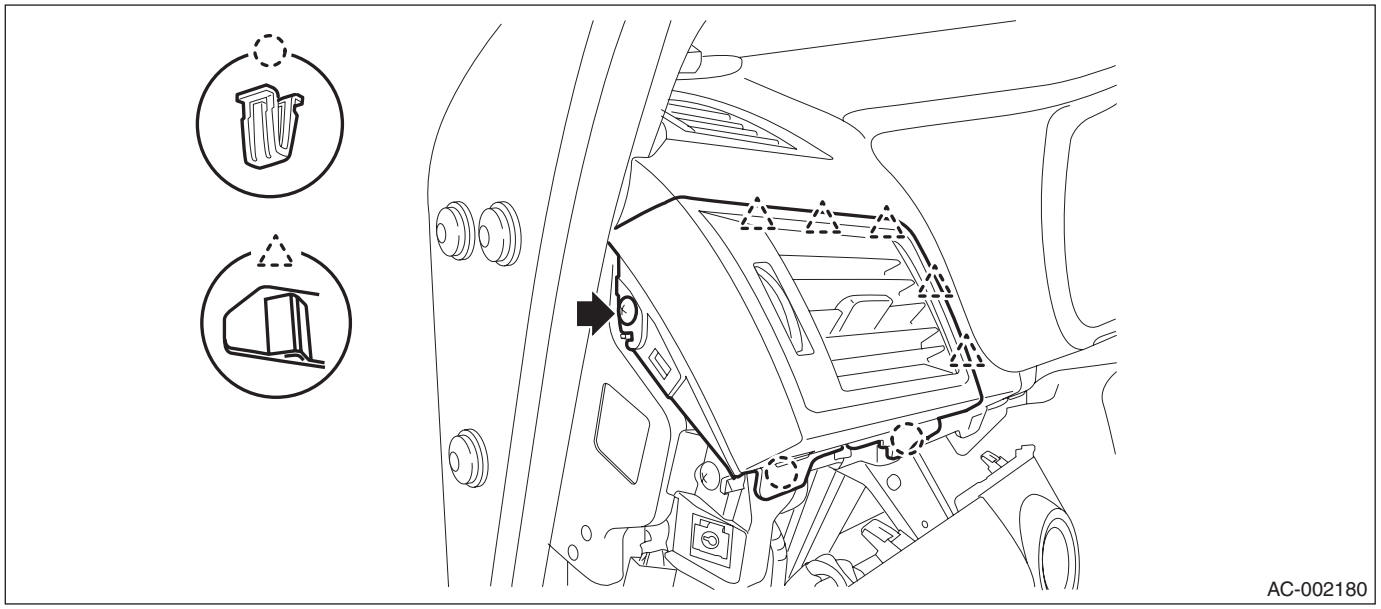

B: INSTALLATION

Install each part in the reverse order of removal.

C: INSPECTION

1) Check that the direction and amount of air can be adjusted smoothly. Replace the air vent grille if faulty.
2) Check that the adjustment can be maintained in each position. Replace the air vent grille if faulty.

31.Heater Duct

A: REMOVAL

1) Remove the front seats. <Ref. to SE-10, REMOVAL, Front Seat.>
2) Remove the instrument panel face assembly. <Ref. to EI-76, REMOVAL, Instrument Panel Assembly.>
3) Remove the rear heater duct.
   (1) Pull off the floor carpet to disengage the rear heater duct slide lock.
   (2) Release the claws, and then remove the rear heater duct LH and RH.

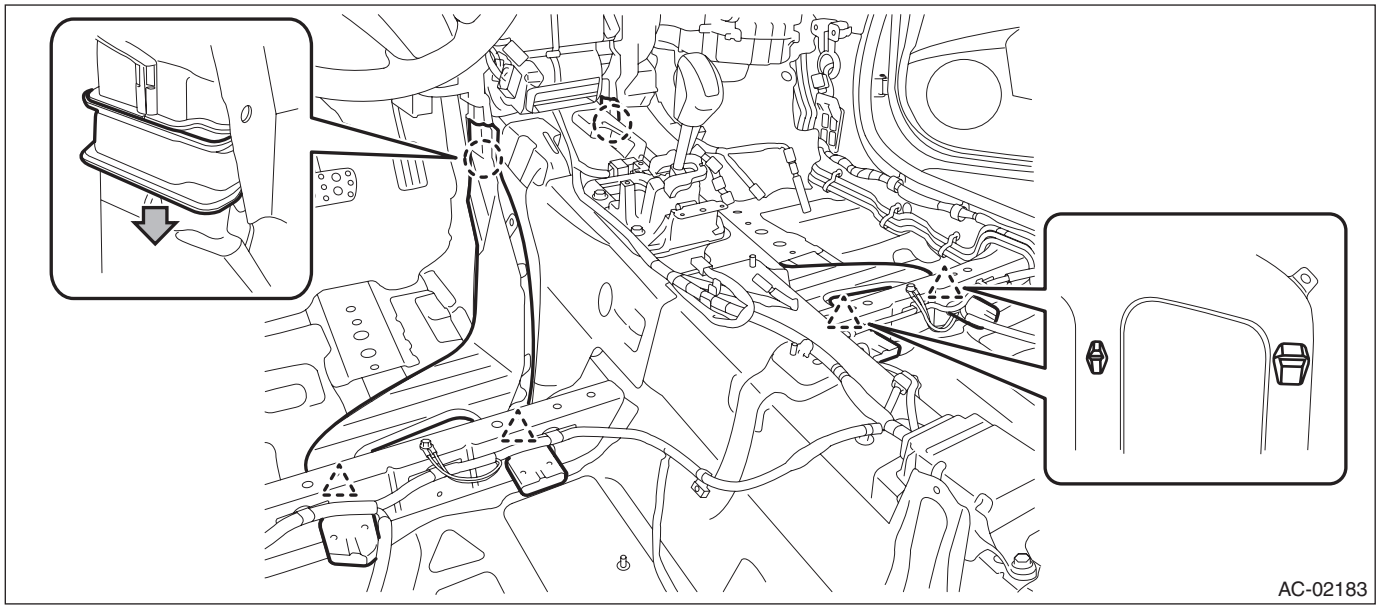

B: INSTALLATION

Install each part in the reverse order of removal.

C: INSPECTION

1) Check installation condition of duct. Connect the duct properly if defective.
2) Check that no foreign matter is mixed in the duct. Remove the foreign matter if any.

32.Heater Vent Duct

A: REMOVAL

1) Remove the instrument panel face assembly. <Ref. to EI-76, REMOVAL, Instrument Panel Assembly.>
2) Remove the heater vent duct.
   (1) Remove the screws, and then remove the front vent duct.

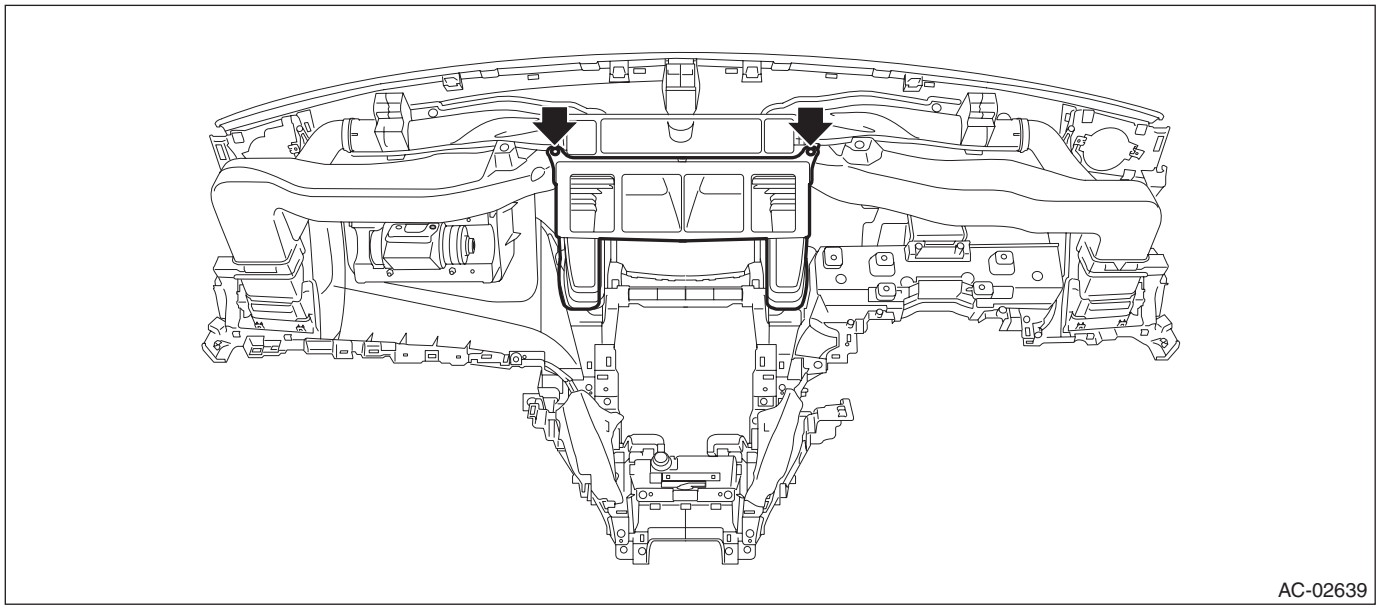
AC-02639

   (2) Release the claws and remove the screws, then detach the side vent duct LH and RH.

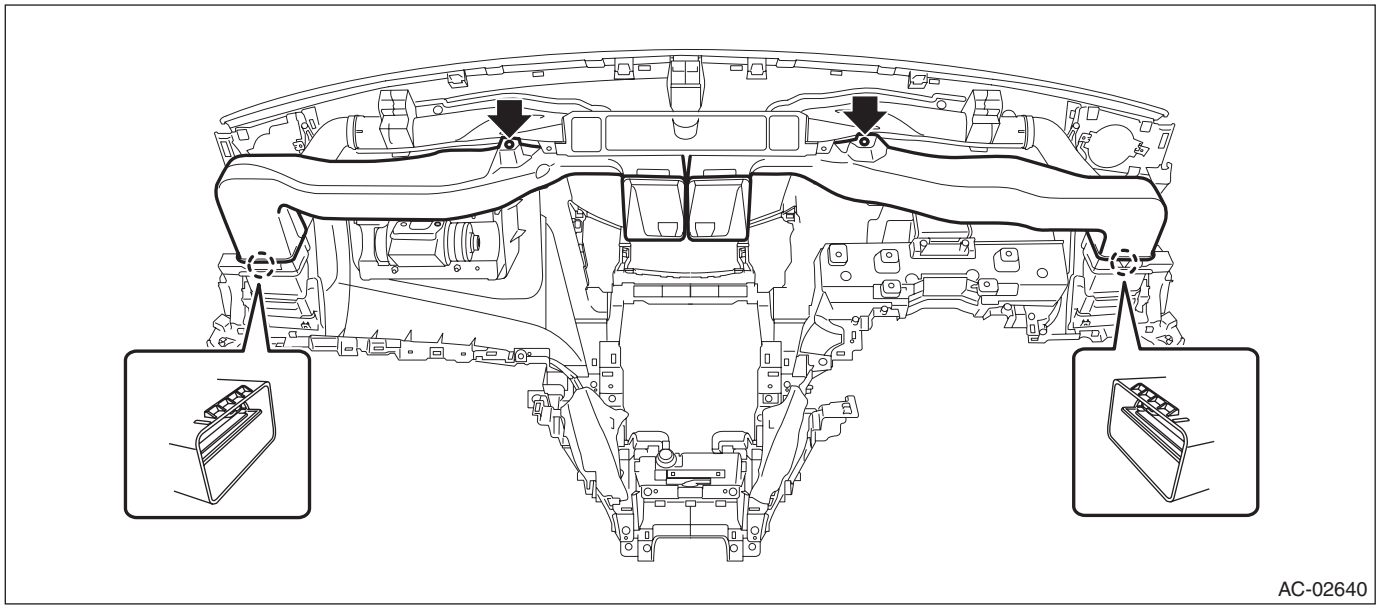
AC-02640

B: INSTALLATION

Install each part in the reverse order of removal.

C: INSPECTION

1) Check installation condition of duct. Connect the duct properly if defective.
2) Check that no foreign matter is mixed in the duct. Remove the foreign matter if any.

33.A/C Filter

A: REPLACEMENT

1) Remove the glove box lid assembly.
   (1) Remove the glove box damper.
   (2) Release the stoppers and remove the glove box lid assembly by pulling it toward you.

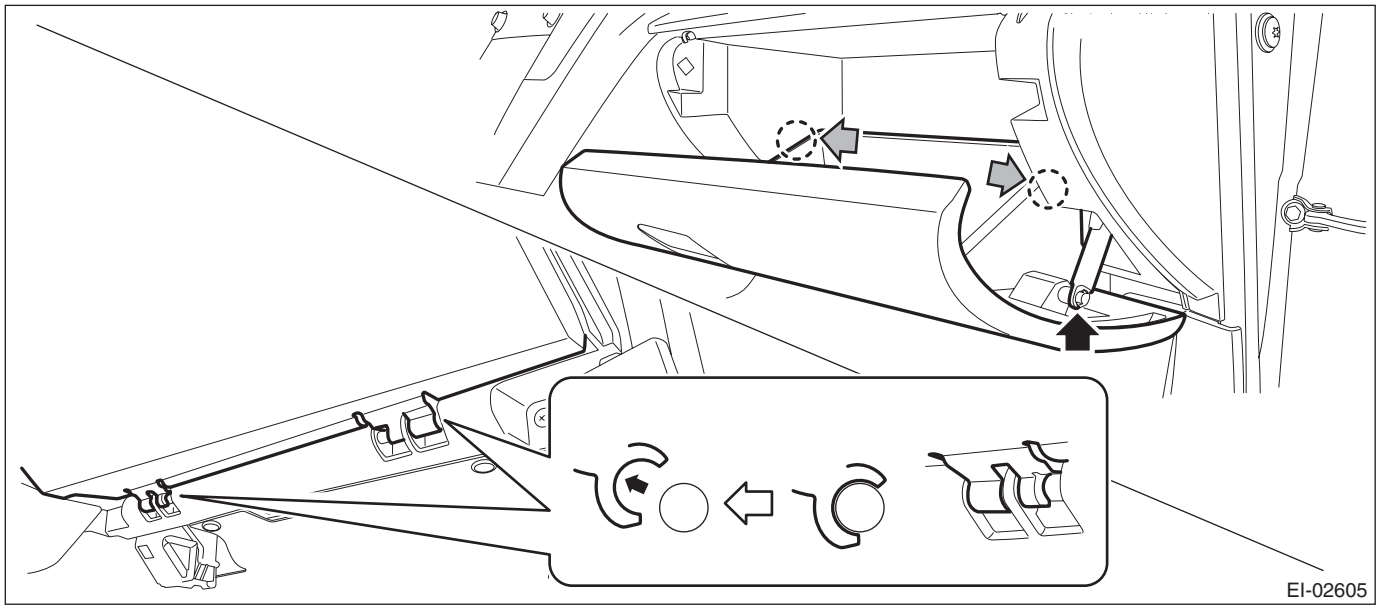

2) Remove the A/C filter.
   (1) Release the lock and remove the A/C filter cover.

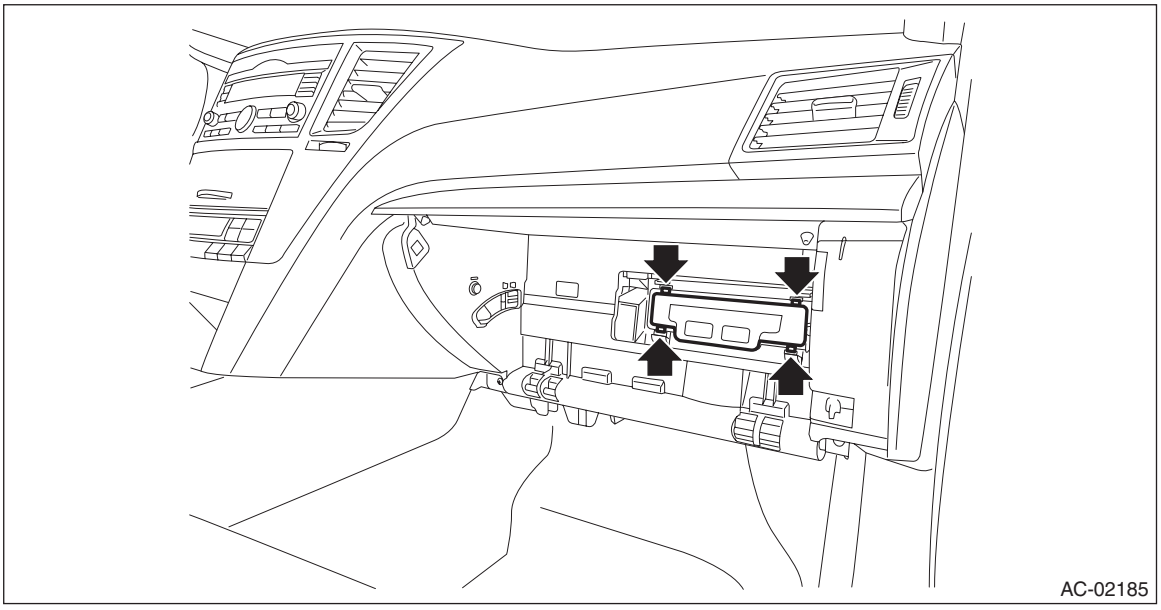

(2) Remove the A/C filter.

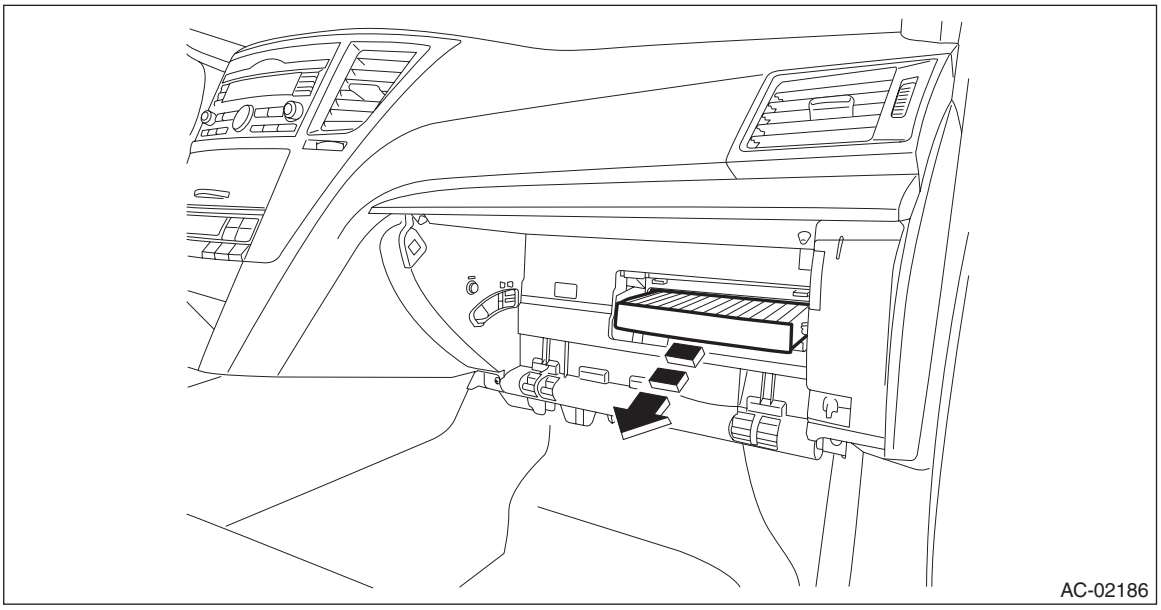

3) Install each part in the reverse order of removal.

B: INSPECTION

Check the A/C filter for dust or dirt, and clean or replace as necessary.

34.Diagnostics with Phenomenon

A: INSPECTION

Refer to “Diagnostics with Phenomenon” of “HVAC SYSTEM (DIAGNOSTICS)” section. <Ref. to AC(diag)-13, Diagnostics with Phenomenon.>

HVAC SYSTEM (DIAGNOSTICS)

AC(diag)

Page

1. Basic Diagnostic Procedure 2
2. General Description 3
3. Electrical Component Location 4
4. Control Module I/O Signal 6
5. Diagnostic Chart for Self-Diagnosis 8
6. Diagnostics with Phenomenon 13
7. Diagnostic Procedure for Sensors 44
8. Subaru Select Monitor 46
9. Read Diagnostic Trouble Code (DTC) 47
10. Clear Memory Mode 48
11. Read Current Data 49
12. Diagnostic Procedure for Subaru Select Monitor Communication 51
13. List of Diagnostic Trouble Code (DTC) 53
14. Diagnostic Procedure with Diagnostic Trouble Code (DTC) 55

1. Basic Diagnostic Procedure

A: PROCEDURE

NOTE:
When the sunload sensor check is performed indoors or in the shade, it could be diagnosed as sensor having an open circuit. Always perform the inspection in direct sunlight.

	Step	Check	Yes	No
1	**START INSPECTIONS.** 1) Prepare the tools. <Ref. to AC-16, PREPARATION TOOL, General Description.> 2) Perform the pre-inspection. <Ref. to AC(diag)-3, INSPECTION, General Description.>	Is any malfunction found in pre-inspection?	Fix the malfunction found in pre-inspection, and go to the next inspection step. Go to step **2**.	Go to step **2**.
2	**PREPARE SUBARU SELECT MONITOR.** Prepare the Subaru Select Monitor.	Is the Subaru Select Monitor ready?	Go to step **3**.	Go to step **4**.
3	**CHECK DTC.** 1) Under the failure condition, leave the vehicle for one minute or more. 2) Read the DTC using Subaru Select Monitor. NOTE: • If the communication function of the Subaru Select Monitor cannot be executed properly, check the communication circuit. <Ref. to AC(diag)-51, COMMUNICATION FOR INITIALIZING IMPOSSIBLE, Diagnostic Procedure for Subaru Select Monitor Communication.> • Record the freeze frame data recorded together with the DTC.	Is DTC displayed?	<Ref. to AC(diag)-53, LIST, List of Diagnostic Trouble Code (DTC).>	Refer to Diagnostics with Phenomenon. <Ref. to AC(diag)-13, INSPECTION, Diagnostics with Phenomenon.>
4	**A/C CONTROL PANEL SELF-DIAGNOSIS.** 1) Under the failure condition, leave the vehicle for one minute or more. 2) Perform the self-diagnosis of A/C control panel. <Ref. to AC(diag)-8, OPERATION, Diagnostic Chart for Self-Diagnosis.>	Are other codes except “20” displayed?	<Ref. to AC(diag)-10, SENSOR CHECK TABLE, OPERATION, Diagnostic Chart for Self-Diagnosis.>	Refer to Diagnostics with Phenomenon. <Ref. to AC(diag)-13, INSPECTION, Diagnostics with Phenomenon.>

2. General Description

A: CAUTION

1) Never connect the battery in reverse polarity.
• Doing so may immediately damage the A/C CM.
2) Do not disconnect the battery terminals while the engine is running.
• A large counter electromotive force will be generated in the generator, and this voltage may damage electronic parts such as A/C CM etc.
3) Before disconnecting the connectors of sensors and the A/C CM, be sure to turn off the ignition switch.
• A/C CM may be damaged.
4) Every A/C-related part is a precision part. Do not drop them.
5) Airbag system wiring harness is routed near the A/C control panel and junction box.

CAUTION:
• Do not use electrical test equipment on the airbag system wiring harness and connector.
• Be careful not to damage the airbag system wiring harness when servicing the A/C control panel and junction box.

B: INSPECTION

Before performing the diagnosis, check the following items which may cause problems in the A/C system.

1. BATTERY

Check the battery. <Ref. to SC(H4SO)-28, INSPECTION, Battery.>

NOTE:
If the battery voltage does not reach the specified value, recharge or replace the battery.

C: PREPARATION TOOL

1. SPECIAL TOOL

ILLUSTRATION	TOOL NUMBER	DESCRIPTION	REMARKS
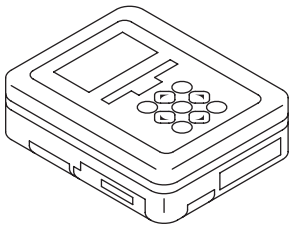 ST1B022XU0	1B022XU0	SUBARU SELECT MONITOR III KIT	Used for troubleshooting the electrical system.

2. GENERAL TOOL

TOOL NAME	REMARKS
Circuit tester	Used for measuring resistance, voltage and current.

3. Electrical Component Location

A: LOCATION

1. ENGINE COMPARTMENT

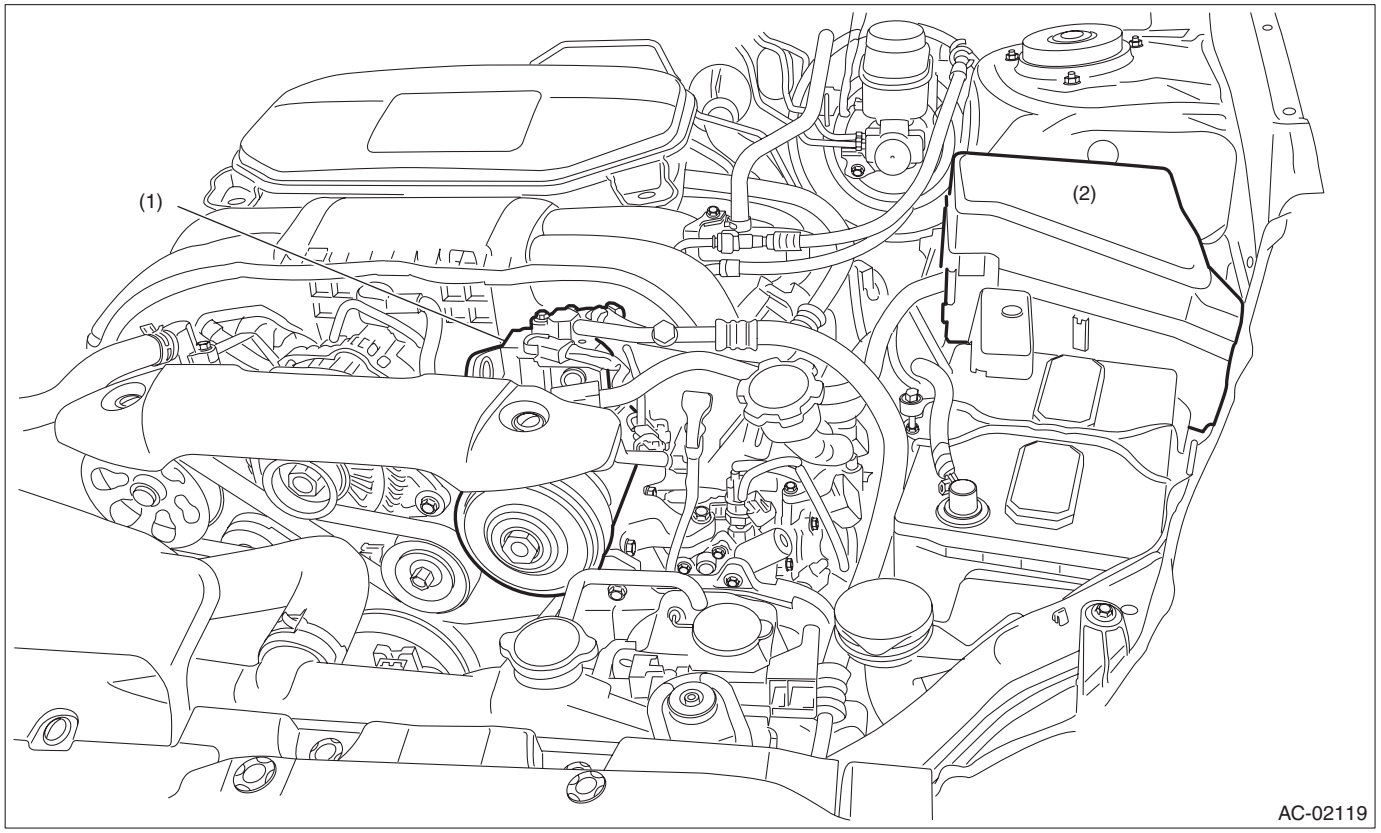

(1) A/C compressor
(2) A/C relay
(3) Pressure sensor
(4) Ambient sensor

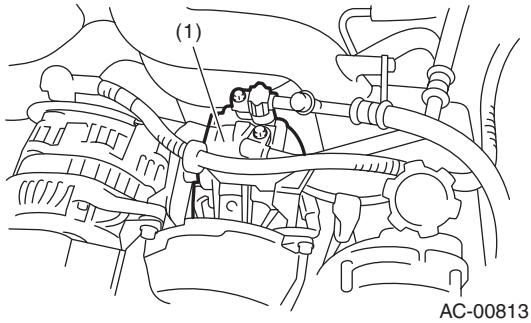

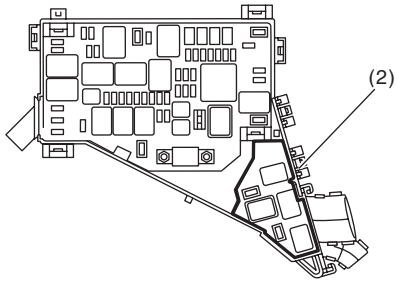

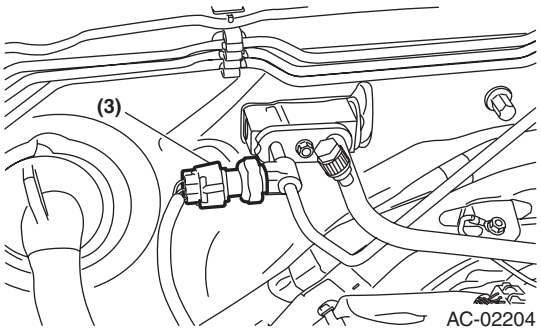

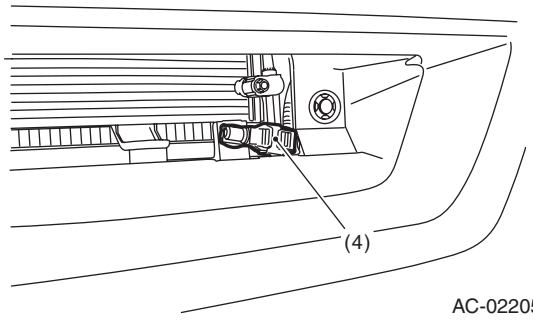

2. COMPARTMENT

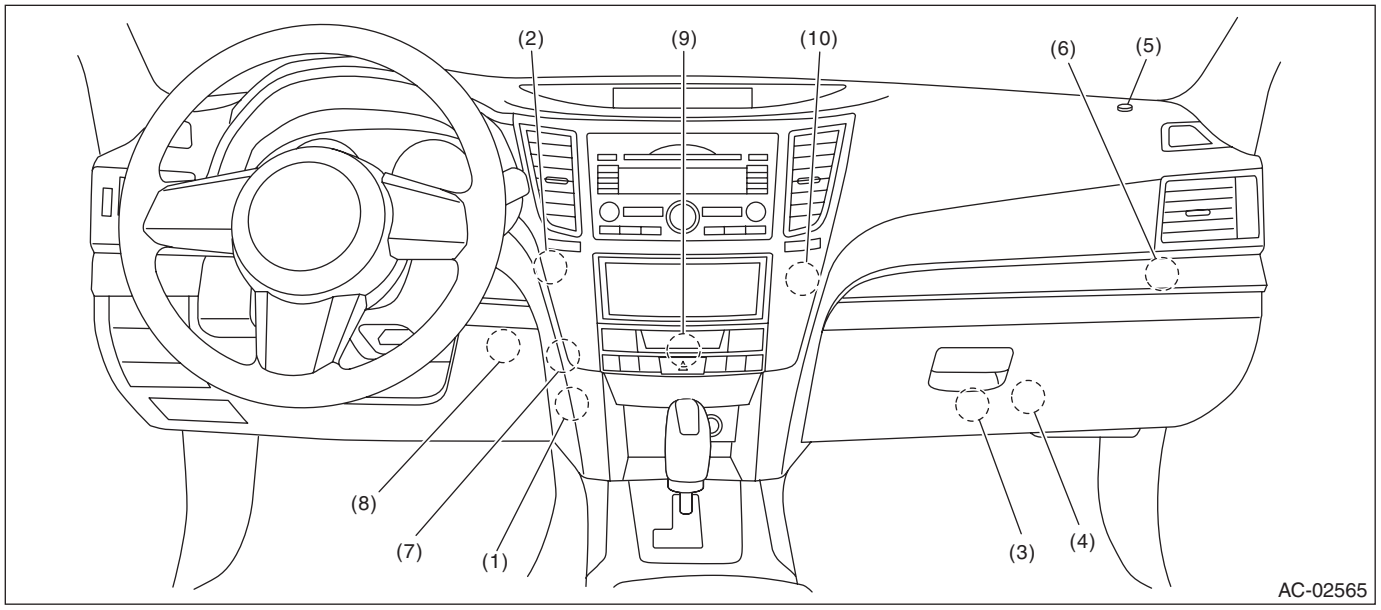

(1) Evaporator sensor
(2) Air mix door actuator*1 or air mix door actuator (driver's seat)*2
(3) A/C CM
(4) Blower motor
(5) Sunload sensor
(6) Intake door actuator
(7) Mode door actuator
(8) In-vehicle sensor
(9) A/C control panel
(10) Air mix door actuator (passenger's seat)*2

*1: Manual A/C
*2: Auto A/C

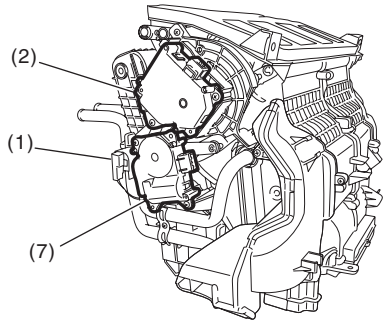

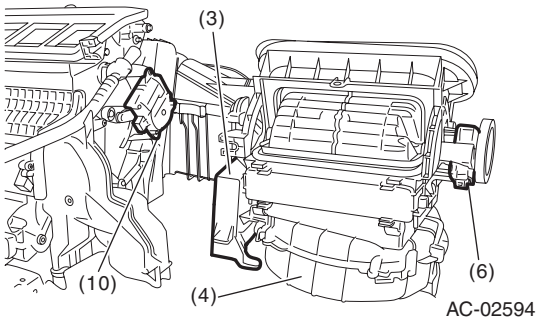

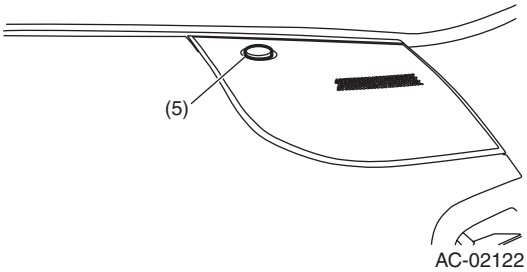

4. Control Module I/O Signal

A: ELECTRICAL SPECIFICATION

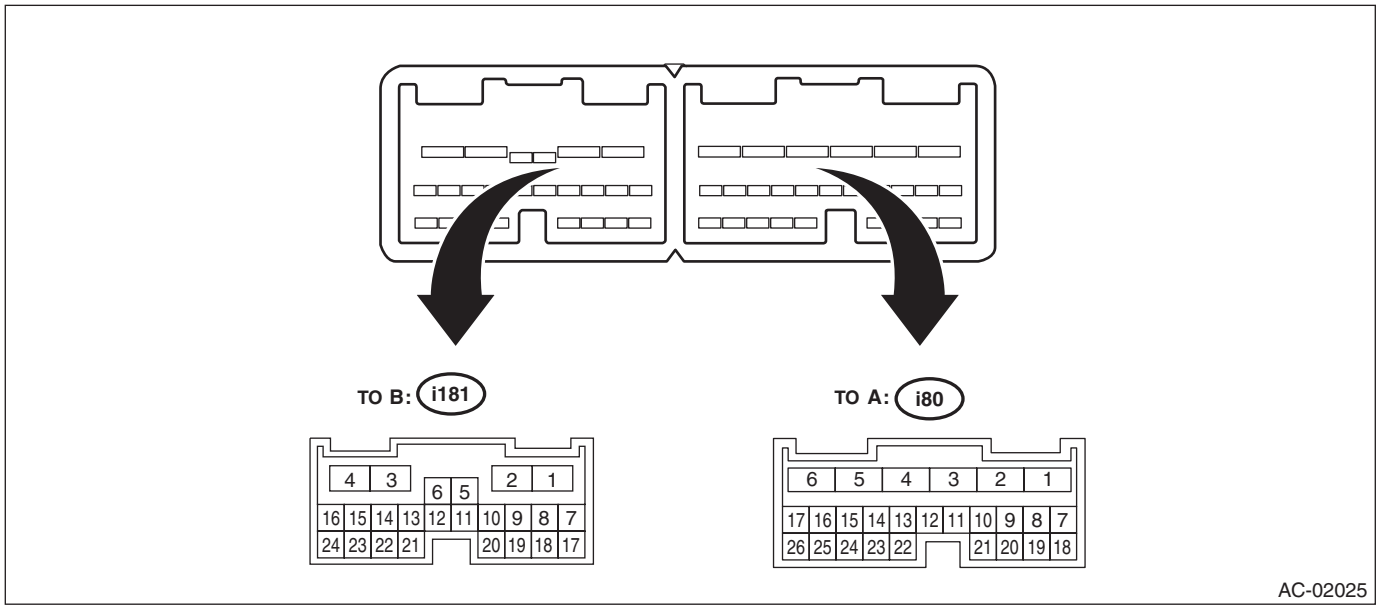

Terminal No.	Description	Measuring condition	Standard
A1	Battery power supply	Always	Battery voltage
A2	Ignition power supply	Ignition switch: ON	Battery voltage
A3	ACC power supply	Ignition switch: ACC	Battery voltage
A4	CAN communication (Hi)	Digital signal; can not be measured	*1
A5	CAN communication (Lo)	Digital signal; can not be measured	*1
A6	Ground	Always	0V
A7	A/C control panel communication	Digital signal; can not be measured	*1
A11	In-vehicle sensor	Ignition switch: ON	25°C: Approx. 1.5 V 40°C: Approx. 1.0 V
A13	Flow sensor	Ignition switch: ON	0.3 — 4.7 V
A14	Air mix door position signal*2 or air mix door (driver's seat) position signal*3	Ignition switch: ON, Air mix door: maximum cool position	4 V
		Ignition switch: ON, Air mix door: maximum hot position	1 V
A16	Each potentiometer and sensor power supply	Ignition switch: ON	5 V
A18	A/C control panel communication	Digital signal; can not be measured	*1
A21	After-evaporator sensor signal	Ignition switch: ON, fluctuates depending on temperature after the evaporator.	1 — 4.5 V
A22	Pressure sensor	Ignition switch: ON	0.5 — 4.9 V
A24	Sunload sensor (with automatic light)*3	Ignition switch: ON (0V: No sunload)	0 — 4.9 V
A25	Air mix door actuator (passenger's seat) position signal*3	Ignition switch: ON, Air mix door: maximum cool position	4 V
		Ignition switch: ON, Air mix door: maximum hot position	1 V
A26	Mode door actuator position signal	Ignition switch: ON, Mode door: FACE position	4 V
		Ignition switch: ON, Mode door: DEF position	1 V
B1	Sensor GND	Always	Less than 0.5 V
B2	Variable compressor solenoid valve	Ignition switch: ON, Blower switch: ON, A/C switch: ON	2 — 12 V
B3	Intake door actuator drive signal (FRESH)	Intake door actuator operating on the FRESH side	0.7 V or less

Terminal No.	Description	Measuring condition	Standard
B4	Air mix door actuator (passenger's seat) drive signal (HOT)*3	Turning towards HOT side: B4 is 12 V, B16 is GND	While operating: 12 V While not operating: 0 V
B16	Air mix door actuator (passenger's seat) drive signal (COOL)*3	Turning towards COOL side: B16 is 12 V, B4 is GND	
B6	Intake door actuator drive signal (RECIRC)	Intake door actuator operating on the RECIRC side	0.7 V or less
B8	Blower motor voltage feedback*3	Ignition switch: ON, Blower switch: ON	0.45 — 10 V
B9	Blower motor control signal*3	Ignition switch: ON, Blower switch: ON	9.05 V
B11	Mode servo drive signal (FACE)	When turning towards FACE side: B11 is 12 V, B13 is GND	While operating: 12 V While not operating: 0 V
B13	Mode servo drive signal (DEF)	When turning towards DEF side: B13 is 12 V, B11 is GND	
B20	Heater main relay drive signal*3	Ignition switch: ON, Blower switch: ON	0.7 V or less
B21	Air mix door actuator drive signal (COOL)*2 or air mix door actuator (driver's seat) drive signal (COOL)*3	Turning towards COOL side: B21 is 12 V, B22 is GND	While operating: 12 V While not operating: 0 V
B22	Air mix door actuator drive signal (HOT)*2 or air mix door actuator (driver's seat) drive signal (HOT)*3	Turning towards HOT side: B22 is 12 V, B21 is GND	

*1: Battery voltage cannot be measured because of digital signal.
*2: Manual A/C
*3: Auto A/C

B: WIRING DIAGRAM

<Ref. to WI-53, WIRING DIAGRAM, Air Conditioning System.>

5. Diagnostic Chart for Self-Diagnosis

A: OPERATION

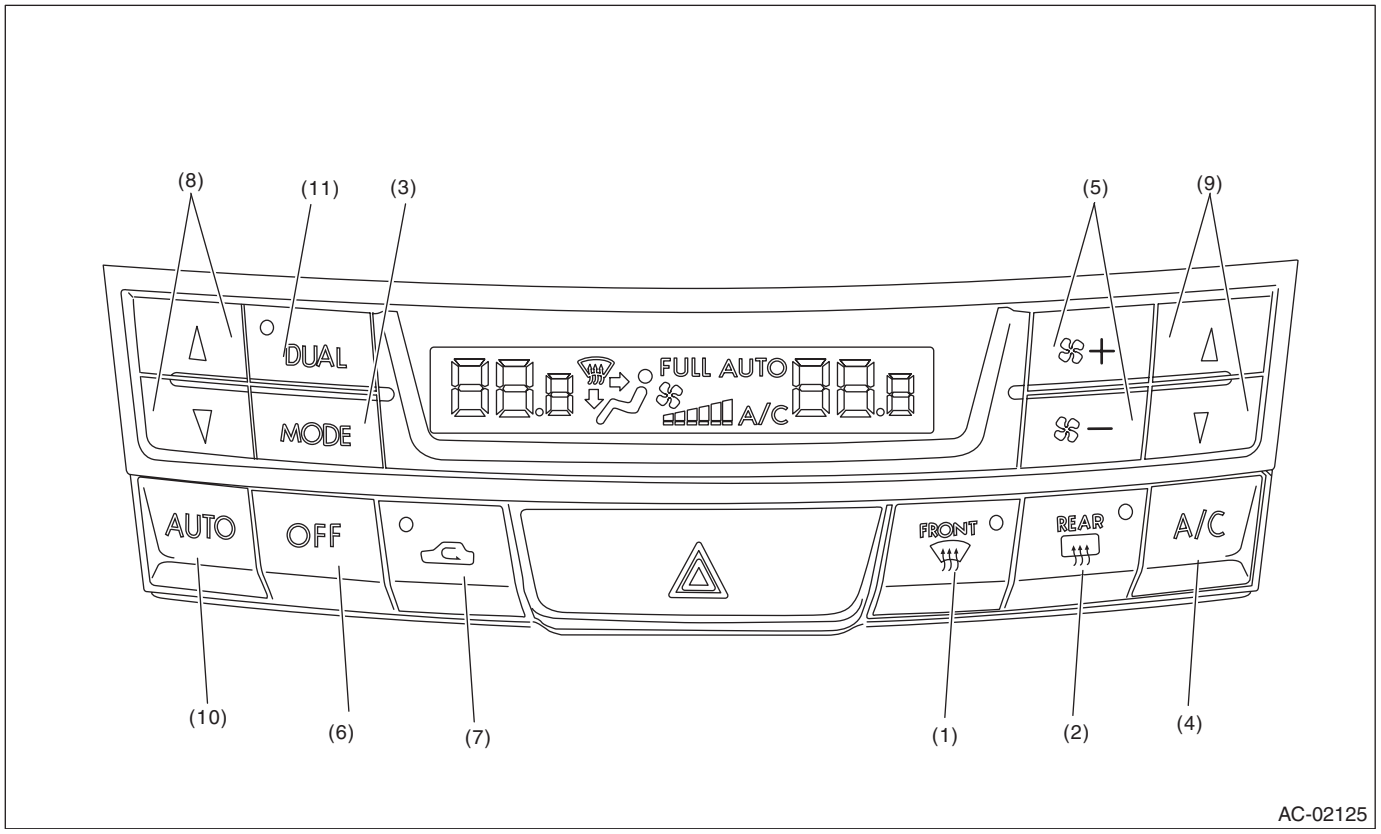

(1) Defroster switch
(2) Rear window defogger switch
(3) Mode change switch
(4) A/C switch
(5) FAN switch
(6) OFF switch
(7) FRESH/RECIRC switch
(8) Temperature control switch (for driver's seat)
(9) Temperature control switch (for passenger's seat)
(10) AUTO switch
(11) DUAL switch

1. A/C CONTROL SYSTEM SELF-DIAGNOSIS

	Step	Check	Yes	No
1	**SET SELF-DIAGNOSIS MODE BY OPERATING A/C CONTROL PANEL.** 1) Turn the ignition switch to OFF. 2) Start the engine while holding down the AUTO switch and FRESH/RECIRC switch. NOTE: Self-diagnosis can also be performed with ignition switch ON, but start the engine because observing the compressor operation is difficult. 3) All the indicators blink four times.	Does the self-diagnosis function operate and do all the indicators flash four times?	Go to step **2**.	<Ref. to AC(diag)-12, DIAGNOSTIC PROCEDURE WHEN SELF DIAGNOSIS USING A/C CONTROL PANEL DOES NOT OPERATE, OPERATION, Diagnostic Chart for Self-Diagnosis.>
2	**CHECK EACH SENSOR AND POTENTIOMETER.** 1) After the indicators stop blinking, automatically change to the Inspection Mode of sensor and potentiometer. NOTE: Display items can be changed each time the A/C switch is pressed. (Step Operation) 2) Read the code appeared on the display. When no open circuit or short-circuit is found in each sensor and potentiometer, code “20” is displayed on the screen. When open circuit or short-circuit is found in each sensor and potentiometer, codes except “20” are displayed on the screen. NOTE: It takes one minute or more to complete all diagnostic steps after the engine has started.	Are other codes except “20” displayed?	Repair the defective circuit. <Ref. to AC(diag)-10, SENSOR CHECK TABLE, OPERATION, Diagnostic Chart for Self-Diagnosis.>	Go to step **3**.
3	**CHECK EACH ACTUATOR, BLOWER FAN AND COMPRESSOR.** 1) After completing each sensor and potentiometer inspection, change to the Inspection Mode of actuator, blower fan and compressor by pressing the defroster switch. 2) Each mode will change and operate automatically every four seconds. NOTE: Operation mode items can be changed each time the A/C switch is pressed. (Step Operation) 3) Check the operation of actuator, blower fan and compressor in each mode according to the operating mode table. <Ref. to AC(diag)-12, OPERATING MODE TABLE, OPERATION, Diagnostic Chart for Self-Diagnosis.>	Do the actuator, blower fan and compressor operate as described in the operating mode table?	A/C control system is normal. Press the OFF switch and complete the self-diagnosis function.	Repair each defective part.

2. SENSOR CHECK TABLE

NOTE:
• When the sunload sensor check is performed indoors or in the shade, it could be diagnosed as having an open circuit. Always check the sunload sensor with the sun shining on it.
• When currently malfunctioning, AUTO flashes on display.
• Past malfunction can be cleared by disconnecting the battery ground cable.

Display screen	Sensor	Trouble contents	Note
21	Open circuit in in-vehicle sensor	In-vehicle sensor circuit is open.	<Ref. to AC(diag)-56, DTC B1602 IN-VEHICLE SENSOR OPEN, Diagnostic Procedure with Diagnostic Trouble Code (DTC).>
–21	Short-circuit in in-vehicle sensor	In-vehicle sensor circuit is shorted.	<Ref. to AC(diag)-55, DTC B1601 IN-VEHICLE SENSOR SHORT, Diagnostic Procedure with Diagnostic Trouble Code (DTC).>
22	Ambient sensor trouble or communication failure	Sensor trouble or communication failure	<Ref. to AC(diag)-44, AMBIENT SENSOR, Diagnostic Procedure for Sensors.>
23	Open circuit in evaporator sensor	Post evaporator sensor circuit is open.	<Ref. to AC(diag)-58, DTC B1604 EVAPORATOR SENSOR OPEN, Diagnostic Procedure with Diagnostic Trouble Code (DTC).>
–23	Short-circuit in evaporator sensor	Post evaporator sensor circuit is shorted.	<Ref. to AC(diag)-57, DTC B1603 EVAPORATOR SENSOR SHORT, Diagnostic Procedure with Diagnostic Trouble Code (DTC).>
24	Engine coolant temperature sensor trouble or communication failure	Sensor trouble or communication failure	—
25	Open circuit in sunload sensor	Sunload sensor circuit is open.*1	<Ref. to AC(diag)-63, DTC B1608 SUNLOAD SENSOR OPEN, Diagnostic Procedure with Diagnostic Trouble Code (DTC).>
–25	Short-circuit in sunload sensor	Sunload sensor circuit is shorted.	<Ref. to AC(diag)-62, DTC B1607 SUNLOAD SENSOR SHORT, Diagnostic Procedure with Diagnostic Trouble Code (DTC).>
26	Open circuit in air mix door actuator — potentiometer (driver's)	Air mix door actuator potentiometer circuit is open.	<Ref. to AC(diag)-65, DTC B1610 AIRMIX DOOR ACTUATOR POTENTIOMETER CIRCUIT OPEN (DRIVER'S), Diagnostic Procedure with Diagnostic Trouble Code (DTC).>
–26	Open circuit in air mix door actuator — potentiometer (passenger's)	Air mix door actuator potentiometer circuit is open.	<Ref. to AC(diag)-70, DTC B1613 AIRMIX DOOR ACTUATOR POTENTIOMETER CIRCUIT OPEN (PASSENGER'S), Diagnostic Procedure with Diagnostic Trouble Code (DTC).>
27	Short-circuit in air mix door actuator — potentiometer (driver's)	Air mix door actuator potentiometer circuit is shorted.	<Ref. to AC(diag)-67, DTC B1611 AIRMIX DOOR ACTUATOR POTENTIOMETER CIRCUIT SHORT (DRIVER'S), Diagnostic Procedure with Diagnostic Trouble Code (DTC).>

Display screen	Sensor	Trouble contents	Note
–27	Short-circuit in air mix door actuator — potentiometer (passenger's)	Air mix door actuator potentiometer circuit is shorted.	<Ref. to AC(diag)-72, DTC B1614 AIRMIX DOOR ACTUATOR POTENTIOMETER CIRCUIT SHORT (PASSENGER'S), Diagnostic Procedure with Diagnostic Trouble Code (DTC).>
28	Open circuit in mode door actuator — potentiometer	Mode door actuator potentiometer circuit is open.	<Ref. to AC(diag)-76, DTC B1620 MODE DOOR ACTUATOR POTENTIOMETER CIRCUIT OPEN, Diagnostic Procedure with Diagnostic Trouble Code (DTC).>
29	Short-circuit in mode door actuator — potentiometer	Mode door actuator potentiometer circuit is shorted.	<Ref. to AC(diag)-77, DTC B1621 MODE DOOR ACTUATOR POTENTIOMETER CIRCUIT SHORT, Diagnostic Procedure with Diagnostic Trouble Code (DTC).>
42	Open circuit in refrigerant pressure sensor	Pressure sensor circuit is open.*1	<Ref. to AC(diag)-59, DTC B1605 REFRIGERANT FLOW SENSOR CIRCUIT OPEN, Diagnostic Procedure with Diagnostic Trouble Code (DTC).>
–42	Short-circuit in refrigerant pressure sensor	Pressure sensor circuit is shorted.*1	<Ref. to AC(diag)-61, DTC B1606 REFRIGERANT FLOW SENSOR CIRCUIT SHORT, Diagnostic Procedure with Diagnostic Trouble Code (DTC).>
43	Open circuit in refrigerant flow sensor	Refrigerant flow circuit is open.*1	<Ref. to AC(diag)-85, DTC B1642 REFRIGERANT FLOW SENSOR CIRCUIT OPEN, Diagnostic Procedure with Diagnostic Trouble Code (DTC).>
–43	Short-circuit in refrigerant flow sensor	Refrigerant flow sensor circuit is shorted.*1	<Ref. to AC(diag)-84, DTC B1641 REFRIGERANT FLOW SENSOR CIRCUIT SHORT, Diagnostic Procedure with Diagnostic Trouble Code (DTC).>
44	Refrigerant flow sensor circuit failure	Malfunction occurs in refrigerant flow sensor.	—
45	Open circuit in sunload sensor (auto light control)	Sunload sensor circuit is open.	<Ref. to AC(diag)-63, DTC B1608 SUNLOAD SENSOR OPEN, Diagnostic Procedure with Diagnostic Trouble Code (DTC).>
-45	Short-circuit in sunload sensor (auto light control)	Sunload sensor circuit is shorted.*1	<Ref. to AC(diag)-62, DTC B1607 SUNLOAD SENSOR SHORT, Diagnostic Procedure with Diagnostic Trouble Code (DTC).>
46	Variable flow change solenoid duty circuit failure	Variable flow change solenoid duty circuit is open or shorted.*1	<Ref. to AC(diag)-87, DTC B1643 VARIABLE FLOW CHANGE SOLENOID DUTY CIRCUIT ABNORMAL, Diagnostic Procedure with Diagnostic Trouble Code (DTC).>
47	Air mix door actuator — lock (driver's)	Air mix door actuator does not operate due to being stuck or other reasons.	<Ref. to AC(diag)-68, DTC B1612 AIRMIX DOOR ACTUATOR LOCK (DRIVER'S), Diagnostic Procedure with Diagnostic Trouble Code (DTC).>

Display screen	Sensor	Trouble contents	Note
48	Air mix door actuator — lock (passenger's)	Air mix door actuator does not operate due to being stuck or other reasons.	<Ref. to AC(diag)-74, DTC B1615 AIRMIX DOOR ACTUATOR LOCK (PASSENGER'S), Diagnostic Procedure with Diagnostic Trouble Code (DTC).>
49	Mode door actuator — lock	Mode door actuator does not operate due to being stuck or other reasons.	<Ref. to AC(diag)-78, DTC B1622 MODE DOOR ACTUATOR LOCK, Diagnostic Procedure with Diagnostic Trouble Code (DTC).>
53	Heater control panel communication failure	Communication with heater control panel is impossible.*1	<Ref. to AC(diag)-80, DTC U0028 HEATER CONTROL PANEL COMMUNICATION ERROR, Diagnostic Procedure with Diagnostic Trouble Code (DTC).>
54	CAN communication bus off	Bus off*1:	<Ref. to AC(diag)-83, DTC U0001 CAN COMMUNICATION BUS OFF, Diagnostic Procedure with Diagnostic Trouble Code (DTC).>
55	CAN communication error	Communication error*1	<Ref. to AC(diag)-83, DTC U0002 CAN COMMUNICATION ERROR, Diagnostic Procedure with Diagnostic Trouble Code (DTC).>
20 blinking	When all conditions are normal		—

*1: Displays current malfunction only.

3. OPERATING MODE TABLE

Display screen	Blower fan	Mode door	FRESH/RECIRC door	A/C compressor	Air mix door
31	LO	FACE	FRESH	OFF	Maximum cool
32	LO	FACE	RECIRC	ON	Maximum cool
33	M1	FACE	RECIRC	ON	Maximum cool
34	M1	B/L	FRESH	ON	50%
35	M1	FOOT	FRESH	ON	50%
36	M3	FOOT	FRESH	ON	Maximum hot
37	M3	F/D	FRESH	ON	Maximum hot
38	HI	DEF	FRESH	ON	Maximum hot

4. DIAGNOSTIC PROCEDURE WHEN SELF DIAGNOSIS USING A/C CONTROL PANEL DOES NOT OPERATE

NOTE:
For diagnostic procedure, refer to "Nothing is displayed on the screen or indicators do not illuminate." in Diagnostics with Phenomenon. <Ref. to AC(diag)-14, NOTHING IS DISPLAYED ON THE SCREEN OR INDICATORS DO NOT ILLUMINATE., DIAGNOSTIC PROCEDURE WITH PHENOMENON, Diagnostics with Phenomenon.>

6. Diagnostics with Phenomenon

A: INSPECTION

1. Perform diagnosis according to the diagnosis procedure for the corresponding symptom listed in the symptom table.
2. If there are multiple symptoms, perform the diagnosis in the order of symptom number (1 → 2 →... → 13).

1. SYMPTOM TABLE

Symptoms		Diagnosis procedure
1	Nothing is displayed on the screen or indicators do not illuminate.	<Ref. to AC(diag)-14, NOTHING IS DISPLAYED ON THE SCREEN OR INDICATORS DO NOT ILLUMINATE., DIAGNOSTIC PROCEDURE WITH PHENOMENON, Diagnostics with Phenomenon.>
2	Air conditioner does not stop even when the OFF switch is pressed. (vehicles with fully automatic air conditioner)	<Ref. to AC(diag)-17, AIR CONDITIONER DOES NOT STOP EVEN WHEN THE OFF SWITCH IS PRESSED. (VEHICLES WITH FULLY AUTOMATIC AIR CONDITIONER), DIAGNOSTIC PROCEDURE WITH PHENOMENON, Diagnostics with Phenomenon.>
3	The windshield glass is not cleared even when the DEF switch is pressed. (vehicles with fully automatic air conditioner)	<Ref. to AC(diag)-18, THE WINDSHIELD GLASS IS NOT CLEARED EVEN WHEN THE DEF SWITCH IS PRESSED. (VEHICLES WITH FULLY AUTOMATIC AIR CONDITIONER), DIAGNOSTIC PROCEDURE WITH PHENOMENON, Diagnostics with Phenomenon.>
4	Cold air not emitted.	<Ref. to AC(diag)-19, COLD AIR NOT EMITTED, DIAGNOSTIC PROCEDURE WITH PHENOMENON, Diagnostics with Phenomenon.>
5	Warm air not emitted.	<Ref. to AC(diag)-22, WARM AIR NOT EMITTED, DIAGNOSTIC PROCEDURE WITH PHENOMENON, Diagnostics with Phenomenon.>
6	Compartment temperature is excessively lower than setting temperature.	<Ref. to AC(diag)-24, COMPARTMENT TEMPERATURE IS EXCESSIVELY LOWER THAN SETTING TEMPERATURE, DIAGNOSTIC PROCEDURE WITH PHENOMENON, Diagnostics with Phenomenon.>
7	Compartment temperature is excessively higher than setting temperature.	<Ref. to AC(diag)-27, COMPARTMENT TEMPERATURE IS EXCESSIVELY HIGHER THAN SETTING TEMPERATURE, DIAGNOSTIC PROCEDURE WITH PHENOMENON, Diagnostics with Phenomenon.>
8	Air does not come out, or airflow capacity is insufficient. (Blower motor does not rotate.)	<Ref. to AC(diag)-30, AIR DOES NOT COME OUT, OR AIRFLOW CAPACITY IS INSUFFICIENT, DIAGNOSTIC PROCEDURE WITH PHENOMENON, Diagnostics with Phenomenon.>
9	Air goes out of control. (Blower motor rotates at high speed.)	<Ref. to AC(diag)-35, AIR GOES OUT OF CONTROL, DIAGNOSTIC PROCEDURE WITH PHENOMENON, Diagnostics with Phenomenon.>
10	Cold air does not come out even when the A/C switch is pressed. The glass cannot be defogged. (Compressor does not operate. (variable))	<Ref. to AC(diag)-38, COLD AIR DOES NOT COME OUT EVEN WHEN THE A/C SWITCH IS PRESSED. THE GLASS CANNOT BE DEFOGGED. (COMPRESSOR DOES NOT OPERATE. (VARIABLE)), DIAGNOSTIC PROCEDURE WITH PHENOMENON, Diagnostics with Phenomenon.>
11	Unable to switch suction vents.	<Ref. to AC(diag)-40, UNABLE TO SWITCH SUCTION VENTS, DIAGNOSTIC PROCEDURE WITH PHENOMENON, Diagnostics with Phenomenon.>
12	Unable to switch blow vents.	<Ref. to AC(diag)-42, UNABLE TO SWITCH VENTS, DIAGNOSTIC PROCEDURE WITH PHENOMENON, Diagnostics with Phenomenon.>
13	Illumination does not come on, or cannot dim.	<Ref. to AC(diag)-43, ILLUMINATION DOES NOT COME ON OR CANNOT DIM, DIAGNOSTIC PROCEDURE WITH PHENOMENON, Diagnostics with Phenomenon.>

B: DIAGNOSTIC PROCEDURE WITH PHENOMENON

1. NOTHING IS DISPLAYED ON THE SCREEN OR INDICATORS DO NOT ILLUMINATE.

TROUBLE SYMPTOM:

- When the AUTO button is pressed with IGN ON, nothing is displayed on the screen or indicators do not illuminate.
- Self diagnosis using A/C control panel does not operate.

Trouble causes:

- Control module power supply circuit failure
- A/C control panel power supply failure
- UART communication failure

WIRING DIAGRAM:

- Auto A/C

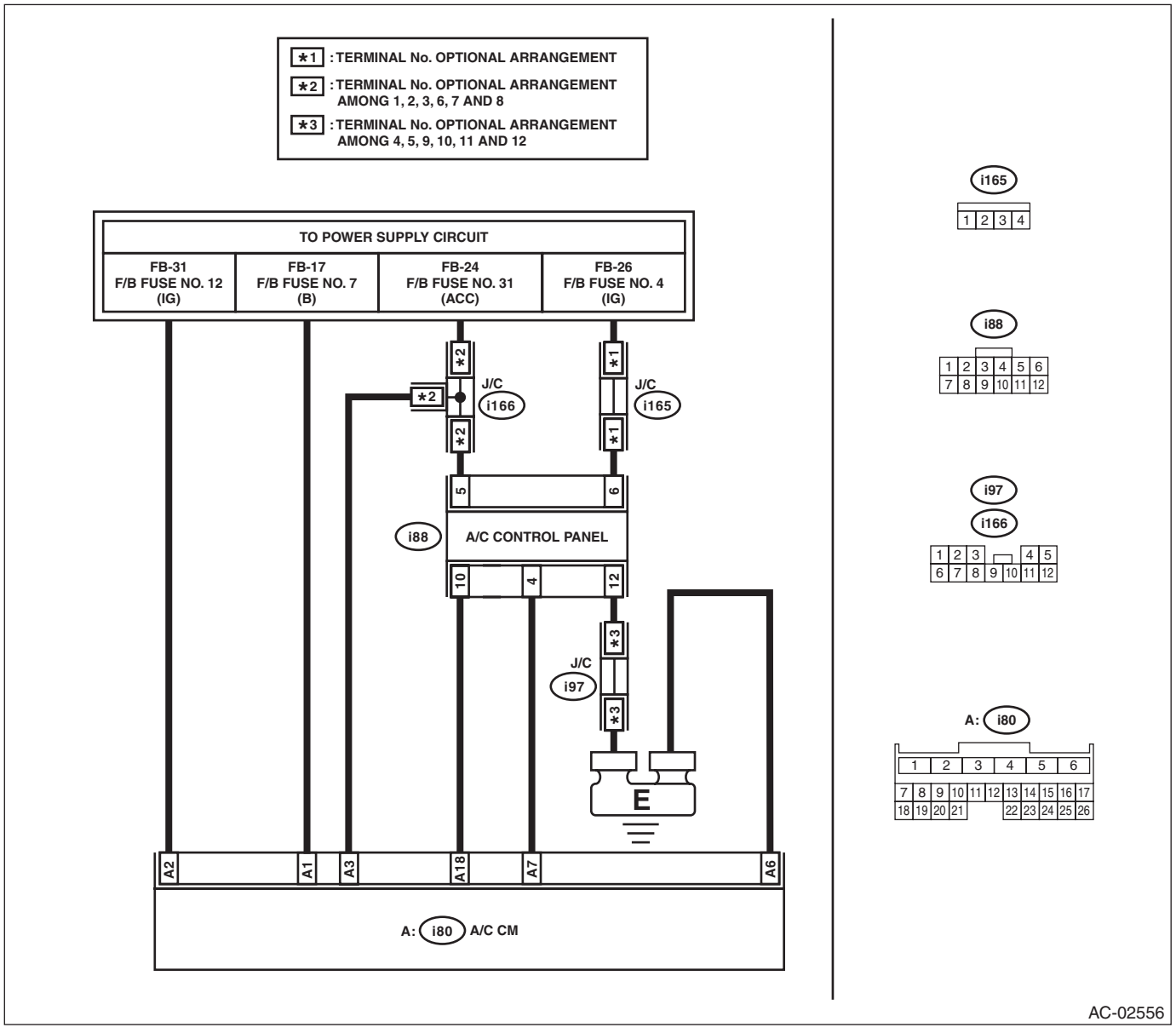

- Manual A/C

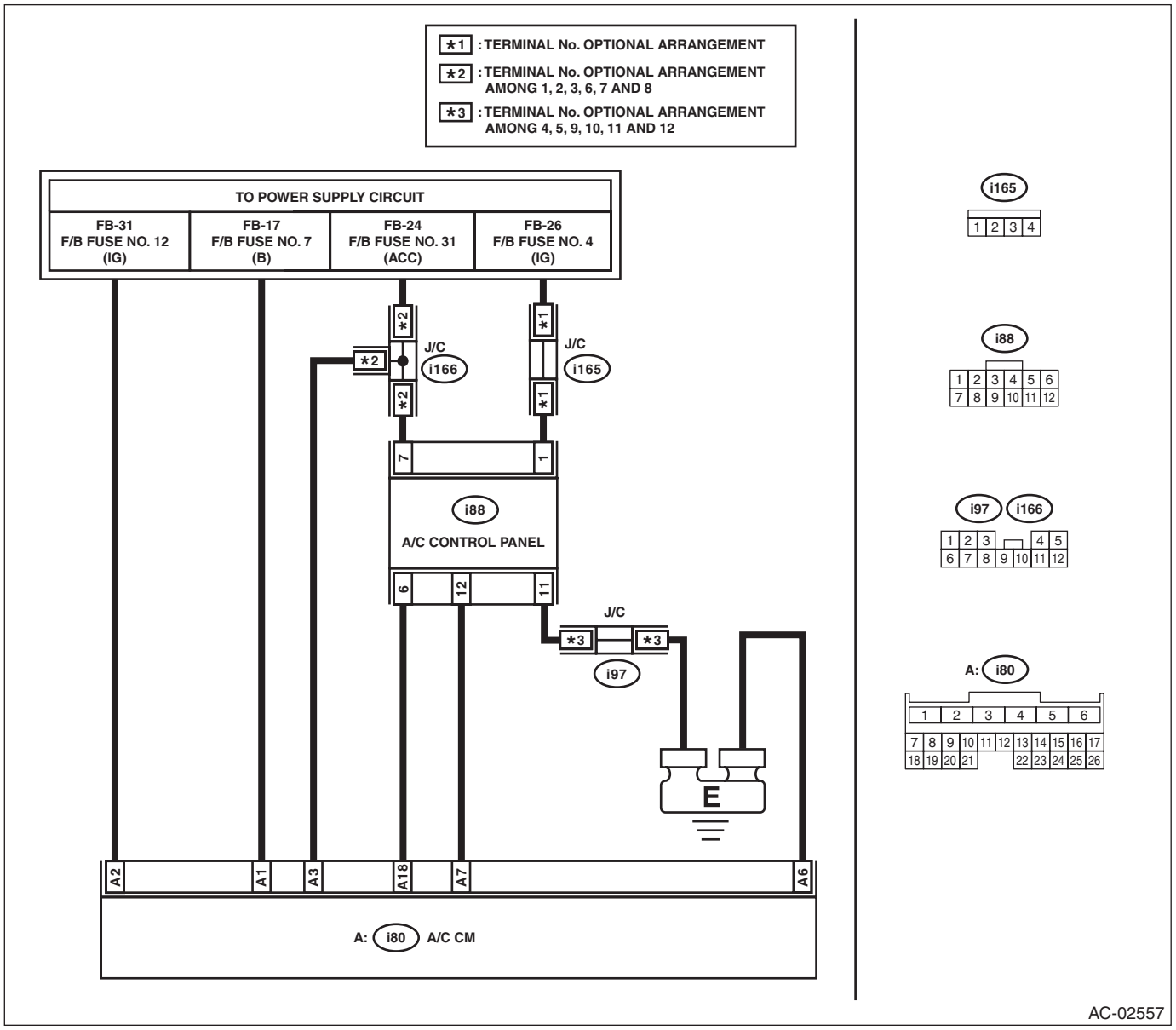

Step		Check	Yes	No
1	**CHECK FUSE.** 1) Turn the ignition switch to OFF. 2) Remove fuse No. 4, 31, 7 and 12 from the fuse & relay box. 3) Check the condition of fuse.	Is the fuse blown out?	Replace the fuse.	Go to step **2**.
2	**CHECK CONNECTOR.** Check the connectors (i166), (i165), (i88), (i97) and (i80) for poor contact.	Is there poor contact of connector?	Repair the connector.	Go to step **3**.

	Step	Check	Yes	No
3	**CHECK A/C CONTROL PANEL POWER CIRCUIT.** 1) Remove the A/C control panel. 2) Disconnect the A/C control panel connector. 3) Measure the voltage between A/C control panel connector terminal and chassis ground after turning the ignition switch to ON. ***Connector & terminal*** ***Auto A/C*** ***(i88) No. 5 (+) — Chassis ground (–):*** ***(i88) No. 6 (+) — Chassis ground (–):*** ***Manual A/C*** ***(i88) No. 1 (+) — Chassis ground (–):*** ***(i88) No. 7 (+) — Chassis ground (–):***	Is the voltage 10 V or more?	Go to step **4**.	Check for open or short circuit in the harness between A/C control panel and fuse.
4	**CHECK A/C CONTROL PANEL GROUND CIRCUIT.** Measure the resistance of harness between A/C control panel and chassis ground after turning the ignition switch to OFF. ***Connector & terminal*** ***Auto A/C*** ***(i88) No. 12 — Chassis ground:*** ***Manual A/C*** ***(i88) No. 11 — Chassis ground:***	Is the resistance less than 10 Ω?	Go to step **5**.	Repair the harness for ground line.
5	**CHECK A/C CM POWER SUPPLY CIRCUIT.** 1) Install the A/C control panel. 2) Disconnect the A/C CM connector. 3) Measure the voltage between A/C CM connector terminal and chassis ground after turning the ignition switch to ON. ***Connector & terminal*** ***(i80) No. 1 (+) — Chassis ground (–):*** ***(i80) No. 2 (+) — Chassis ground (–):*** ***(i80) No. 3 (+) — Chassis ground (–):***	Is the voltage 10 V or more?	Go to step **6**.	Check for open or short circuit in the harness between A/C CM and fuse.
6	**CHECK A/C CM GROUND CIRCUIT.** Measure the resistance of harness between A/C CM and chassis ground. ***Connector & terminal*** ***(i80) No. 6 — Chassis ground:***	Is the resistance less than 5 Ω?	Go to step **7**.	Repair the harness for ground line.
7	**CHECK COMMUNICATION CIRCUIT.** Measure the resistance of harness between A/C control panel and air conditioner control module. ***Connector & terminal*** ***Auto A/C*** ***(i88) No. 10 — (i80) No. 18:*** ***(i88) No. 4 — (i80) No. 7:*** ***Manual A/C*** ***(i88) No. 6 — (i80) No. 18:*** ***(i88) No. 12 — (i80) No. 7:***	Is there continuity?	Go to step **8**.	Repair the harness.
8	**CHECK COMMUNICATION CIRCUIT HARNESS.** Measure the resistance between communication circuit harness and chassis ground. ***Connector & terminal*** ***(i80) No. 18 — Chassis ground:*** ***(i80) No. 7 — Chassis ground:***	Is there continuity?	Repair or replace the short circuit of the harness.	Go to step **9**.

	Step	Check	Yes	No
9	**CHECK HARNESS.** Using a tester, check continuity between terminals. ***Connector & terminal (i80) No. 18 — No. 7:***	Is there continuity?	Repair or replace the short circuit of the harness.	Go to step **10**.
10	**CHECK A/C CONTROL PANEL.** 1) Turn the ignition switch to OFF. 2) Replace the A/C control panel with a properly functioning part.	Does the A/C control panel operate normally?	Since the A/C control panel has an internal error, replace A/C control panel with a new one. <Ref. to AC-46, REMOVAL, Control Panel.>	Since the A/C CM has an internal error, replace A/C CM with a new one. <Ref. to AC-54, REMOVAL, Control Unit.>

2. AIR CONDITIONER DOES NOT STOP EVEN WHEN THE OFF SWITCH IS PRESSED. (VEHICLES WITH FULLY AUTOMATIC AIR CONDITIONER)

TROUBLE SYMPTOM:

Even when the OFF switch is pressed, the blower fan does not turn off, the inlet opening remains in FRESH mode, and the compressor does not turn off.

Trouble causes:

- UART communication failure
- A/C control panel failure
- Blower motor failure
- Intake door actuator failure
- Compressor failure

	Step	Check	Yes	No
1	**CHECK A/C CONTROL PANEL.** 1) Turn the ignition switch to ON. 2) Press the OFF switch of the A/C control panel. 3) Using Subaru Select Monitor, check the following data in “Read Current Data”. • Blower Fan Level • Variable Flow Change Solenoid Duty (vehicles with variable air conditioner) • Fresh/Recircle Air Door Actuator Position Target	Does “Blower Fan Level” indicate 0, “Variable Flow Change Solenoid Duty” indicate 0% and “Fresh/Recircle Air Door Actuator Position Target” indicate 100% respectively?	Go to step **2**.	Replace the A/C control panel. <Ref. to AC-46, REMOVAL, Control Panel.>
2	**CHECK BLOWER MOTOR.** With the OFF switch pressed, check the blower motor operation.	Is the blower motor stopped?	Go to step **3**.	<Ref. to AC(diag)-35, AIR GOES OUT OF CONTROL, DIAGNOSTIC PROCEDURE WITH PHENOMENON, Diagnostics with Phenomenon.>
3	**CHECK INTAKE DOOR ACTUATOR.** With the OFF switch pressed, check the FRESH/RECIRC door operation.	Does the FRESH/RECIRC door set to FRESH?	Go to step **4**.	<Ref. to AC(diag)-40, UNABLE TO SWITCH SUCTION VENTS, DIAGNOSTIC PROCEDURE WITH PHENOMENON, Diagnostics with Phenomenon.>

	Step	Check	Yes	No
4	**CHECK COMPRESSOR.** With the OFF switch pressed, check the compressor operation.	Is the compressor stopped?	System is normal.	<Ref. to AC(diag)-38, COLD AIR DOES NOT COME OUT EVEN WHEN THE A/C SWITCH IS PRESSED. THE GLASS CANNOT BE DEFOGGED. (COMPRESSOR DOES NOT OPERATE. (VARIABLE)), DIAGNOSTIC PROCEDURE WITH PHENOMENON, Diagnostics with Phenomenon.>

3. THE WINDSHIELD GLASS IS NOT CLEARED EVEN WHEN THE DEF SWITCH IS PRESSED. (VEHICLES WITH FULLY AUTOMATIC AIR CONDITIONER)

TROUBLE SYMPTOM:

Even when the DEF switch is pressed, the defroster indicator does not illuminate, the outlet opening is not set to DEF, the compressor does not turn on and the outlet opening is not set to FRESH.

Trouble causes:

- UART communication failure
- A/C control panel failure
- Mode door actuator failure
- Compressor failure
- Intake door actuator failure

	Step	Check	Yes	No
1	**CHECK A/C CONTROL PANEL.** 1) Turn the ignition switch to ON. 2) Press the DEF switch of the A/C control panel. 3) Using Subaru Select Monitor, check the following data in “Read Current Data”. • Mode Door Actuator Position Target • Variable Flow Change Solenoid Duty (vehicles with variable air conditioner) • Fresh/Recircle Air Door Actuator Position Target	Does “Mode Door Actuator Position Target” indicate 100%, “Variable Flow Change Solenoid Duty” indicate 0% or more and “Fresh/Recircle Air Door Actuator Position Target” indicate 100% respectively?	Go to step **2**.	Replace the A/C control panel. <Ref. to AC-46, REMOVAL, Control Panel.>
2	**CHECK MODE DOOR ACTUATOR.** With the DEF switch ON, check the mode door operation.	Does the air come out from the DEF outlet opening?	Go to step **3**.	<Ref. to AC(diag)-42, UNABLE TO SWITCH VENTS, DIAGNOSTIC PROCEDURE WITH PHENOMENON, Diagnostics with Phenomenon.>

	Step	Check	Yes	No
3	**CHECK INTAKE DOOR ACTUATOR.** With the DEF switch ON, check the FRESH/RECIRC door operation.	Does the FRESH/RECIRC door operate normally?	Go to step **4**.	<Ref. to AC(diag)-40, UNABLE TO SWITCH SUCTION VENTS, DIAGNOSTIC PROCEDURE WITH PHENOMENON, Diagnostics with Phenomenon.>
4	**CHECK COMPRESSOR.** With the DEF switch ON, check the compressor operation.	Does the compressor operate?	System is normal.	<Ref. to AC(diag)-38, COLD AIR DOES NOT COME OUT EVEN WHEN THE A/C SWITCH IS PRESSED. THE GLASS CANNOT BE DEFOGGED. (COMPRESSOR DOES NOT OPERATE. (VARIABLE)), DIAGNOSTIC PROCEDURE WITH PHENOMENON, Diagnostics with Phenomenon.>

4. COLD AIR NOT EMITTED

TROUBLE SYMPTOM:

Cold air not emitted.

Trouble causes:

- Airflow capacity failure
- Refrigerant pressure failure
- Air mix actuator (driver's) failure
- Air mix actuator (passenger's) failure (with left/right independent air conditioner only)
- Intake door actuator failure
- Evaporator sensor failure (vehicles with automatic air conditioner only)
- In-vehicle sensor failure (vehicles with automatic air conditioner only)
- Ambient sensor failure (vehicles with automatic air conditioner only)
- Sunload sensor failure (vehicles with automatic air conditioner only)

	Step	Check	Yes	No
1	**CHECK MAX COOL.** Set the A/C control panel switch as described below. Temperature control switch: MAX COOL FRESH/RECIRC switch: RECIRC Mode switch: VENT A/C switch: ON	Does no cold air come out?	Go to step **2**.	Go to step **4**.
2	**CHECK AIRFLOW CAPACITY.** Check the airflow capacity. <Ref. to AC(diag)-30, AIR DOES NOT COME OUT, OR AIRFLOW CAPACITY IS INSUFFICIENT, DIAGNOSTIC PROCEDURE WITH PHENOMENON, Diagnostics with Phenomenon.>	Is the airflow capacity normal?	Go to step **3**.	Perform repair according to inspection procedure.

	Step	Check	Yes	No
3	**CHECK AMOUNT OF REFRIGERANT PRESSURE.** Check the refrigerant pressure. <Ref. to AC-20, CHECK REFRIGERANT GAS PRESSURE, PROCEDURE, Refrigerant Pressure with Manifold Gauge Set.>	Is the refrigerant pressure normal?	For vehicles with automatic air conditioner Go to step **4**. For vehicles with manual air conditioner Go to step **6**.	Perform repair according to refrigerant pressure inspection.
4	**CHECK A/C CONTROL PANEL (VEHICLES WITH AUTOMATIC AIR CONDITIONER).** 1) Continue clicking the temperature control switch ▽ (driver's) and (passenger's). 2) Using Subaru Select Monitor, display the following data in "Read Current Data". • Heater Control Panel Setting Value (Driver's) • Heater Control Panel Setting Value (Passenger's)	Do "Heater Control Panel Setting Value (Driver's)" and "Heater Control Panel Setting Value (Passenger's)" indicate "60"?	Go to step **5**.	Replace the A/C control panel. <Ref. to AC-46, REMOVAL, Control Panel.>
5	**CHECK A/C CONTROL PANEL (VEHICLES WITH AUTOMATIC AIR CONDITIONER).** 1) Continue clicking the temperature control switch △ (driver's). 2) Using Subaru Select Monitor, display the following data in "Read Current Data". • Heater Control Panel Setting Value (Driver's) • Heater Control Panel Setting Value (Passenger's)	Do "Heater Control Panel Setting Value (Driver's)" and "Heater Control Panel Setting Value (Passenger's)" indicate "90"?	Go to step **8**.	Replace the A/C control panel. <Ref. to AC-46, REMOVAL, Control Panel.>
6	**CHECK A/C CONTROL PANEL (VEHICLES WITH MANUAL AIR CONDITIONER).** 1) Set the temperature control switch dial to MAX COOL. 2) Using Subaru Select Monitor, display the following data in "Read Current Data". • Target air mix door actuator position (driver's side)	Does "Target air mix door actuator position (driver's side)" indicate "0%"?	Go to step **7**.	Replace the A/C control panel. <Ref. to AC-46, REMOVAL, Control Panel.>
7	**CHECK A/C CONTROL PANEL (VEHICLES WITH MANUAL AIR CONDITIONER).** 1) Set the temperature control switch dial to MAX HOT. 2) Using Subaru Select Monitor, display the following data in "Read Current Data". • Target air mix door actuator position (driver's side)	Does "Target air mix door actuator position (driver's side)" indicate "100%"?	Go to step **8**.	Replace the A/C control panel. <Ref. to AC-46, REMOVAL, Control Panel.>
8	**CHECK DTC.** 1) Turn the ignition switch to ON. 2) Set the temperature control switch to MAX COOL, and wait for 16 seconds or more. (For vehicles with left/right independent air conditioner, perform setting on both sides.) 3) Read the DTC using Subaru Select Monitor.	Are DTCs B1610, B1611, B1612, B1613, B1614 and B1615 displayed?	Perform the diagnosis according to DTC.	Go to step **9**.
9	**CHECK DTC.** 1) Turn the ignition switch to ON. 2) Set the temperature control switch to MAX HOT, and wait for 16 seconds or more. (For vehicles with left/right independent air conditioner, perform setting on both sides.) 3) Read the DTC using Subaru Select Monitor.	Are DTCs B1610, B1611, B1612, B1613, B1614 and B1615 displayed?	Perform the diagnosis according to DTC.	Go to step **10**.

	Step	Check	Yes	No
10	**CHECK INTAKE DOOR ACTUATOR.** Visually check the intake door actuator operation.	Is the intake door actuator normal?	Go to step **11**.	Check the intake door actuator. <Ref. to AC(diag)-40, UNABLE TO SWITCH SUCTION VENTS, DIAGNOSTIC PROCEDURE WITH PHENOMENON, Diagnostics with Phenomenon.>
11	**CHECK EVAPORATOR SENSOR UNIT (VEHICLES WITH AUTOMATIC AIR CONDITIONER ONLY).** Perform the inspection of evaporator sensor unit. <Ref. to AC-88, INSPECTION, Evaporator Sensor.>	Is the evaporator sensor normal?	Go to step **12**.	Replace the evaporator sensor. <Ref. to AC-87, REMOVAL, Evaporator Sensor.>
12	**CHECK IN-VEHICLE SENSOR UNIT (VEHICLES WITH AUTOMATIC AIR CONDITIONER ONLY).** Check in-vehicle sensor. <Ref. to AC-84, INSPECTION, In-Vehicle Sensor (Auto A/C Model).>	Is the in-vehicle sensor normal?	Go to step **13**.	Replace the in-vehicle sensor. <Ref. to AC-82, REMOVAL, In-Vehicle Sensor (Auto A/C Model).>
13	**CHECK AMBIENT SENSOR (VEHICLES WITH AUTOMATIC AIR CONDITIONER ONLY).** 1) Turn the ignition switch to ON. 2) Using Subaru Select Monitor, check “Heater Water Temperature” in “Read Current Data”, and check that the temperature indicates 50°C (122°F) or less. NOTE: • Do not start engine. • If the temperature is more than 50°C (122°F), turn the ignition switch to OFF, and wait until the water temperature decreases. 3) Using Subaru Select Monitor, check “Ambient Air Temperature” in “Read Current Data”. 4) Using a thermometer, check the temperature at the installation area of the ambient sensor.	Are the data value and the one measured with a thermometer the same?	Go to step **15**.	Go to step **14**.
14	**CHECK AMBIENT SENSOR CIRCUIT (VEHICLES WITH AUTOMATIC AIR CONDITIONER ONLY).** Check ambient sensor circuit. <Ref. to AC(diag)-44, AMBIENT SENSOR, Diagnostic Procedure for Sensors.>	Is the ambient sensor circuit normal?	Go to step **15**.	Repair the faulty circuit.
15	**CHECK SUNLOAD SENSOR UNIT (VEHICLES WITH AUTOMATIC AIR CONDITIONER ONLY).** Check the sunload sensor unit. <Ref. to AC-81, INSPECTION, Sunload Sensor (Auto A/C Model).>	Is the sunload sensor normal?	System is normal.	Replace the sunload sensor. <Ref. to AC-80, REMOVAL, Sunload Sensor (Auto A/C Model).>

5. WARM AIR NOT EMITTED

TROUBLE SYMPTOM:
Warm air not emitted.
Trouble causes:
- Airflow capacity failure
- Coolant failure
- UART communication failure
- A/C control panel failure
- Air mix actuator (driver's) failure
- Air mix actuator (passenger's) failure (with left/right independent air conditioner only)
- Intake door actuator failure
- Evaporator sensor failure (vehicles with automatic air conditioner only)
- In-vehicle sensor failure (vehicles with automatic air conditioner only)
- Ambient sensor failure (vehicles with automatic air conditioner only)
- Sunload sensor failure (vehicles with automatic air conditioner only)

	Step	Check	Yes	No
1	**CHECK MAX HOT.** Set the A/C control panel switch as described below. Temperature control switch: MAX HOT FRESH/RECIRC switch: FRESH Mode switch: HEAT A/C switch: OFF	Does no warm air come out?	Go to step **2**.	Go to step **4**.
2	**CHECK AIRFLOW CAPACITY.** Check the airflow capacity. <Ref. to AC(diag)-30, AIR DOES NOT COME OUT, OR AIRFLOW CAPACITY IS INSUFFICIENT, DIAGNOSTIC PROCEDURE WITH PHENOMENON, Diagnostics with Phenomenon.>	Is the airflow capacity normal?	Go to step **3**.	Perform repair according to inspection procedure.
3	**CHECK ENGINE COOLANT.** Check engine coolant amount.	Is the engine coolant amount normal?	For vehicles with automatic air conditioner Go to step **4**. For vehicles with manual air conditioner Go to step **6**.	Fill engine coolant. If there is coolant leakage, repair the leaks according to Engine Cooling System Trouble in General. <Ref. to CO(H4DOTC)-30, Engine Cooling System Trouble in General.> <Ref. to CO(H6DO)-27, Engine Cooling System Trouble in General.> <Ref. to CO(H4SO)-27, Engine Cooling System Trouble in General.>
4	**CHECK A/C CONTROL PANEL (VEHICLES WITH AUTOMATIC AIR CONDITIONER).** 1) Continue clicking the temperature control switch ▽ (driver's) and (passenger's). 2) Using Subaru Select Monitor, display the following data in "Read Current Data". • Heater Control Panel Setting Value (Driver's) • Heater Control Panel Setting Value (Passenger's)	Do "Heater Control Panel Setting Value (Driver's)" and "Heater Control Panel Setting Value (Passenger's)" indicate "60"?	Go to step **5**.	Replace the A/C control panel. <Ref. to AC-46, REMOVAL, Control Panel.>

	Step	Check	Yes	No
5	**CHECK A/C CONTROL PANEL (VEHICLES WITH AUTOMATIC AIR CONDITIONER).** 1) Continue clicking the temperature control switch △ (driver's). 2) Using Subaru Select Monitor, display the following data in "Read Current Data". • Heater Control Panel Setting Value (Driver's) • Heater Control Panel Setting Value (Passenger's)	Do "Heater Control Panel Setting Value (Driver's)" and "Heater Control Panel Setting Value (Passenger's)" indicate "90"?	Go to step **8**.	Replace the A/C control panel. <Ref. to AC-46, REMOVAL, Control Panel.>
6	**CHECK A/C CONTROL PANEL (VEHICLES WITH MANUAL AIR CONDITIONER).** 1) Set the temperature control switch dial to MAX COOL. 2) Using Subaru Select Monitor, display the following data in "Read Current Data". • Target air mix door actuator position (driver's side)	Does "Target air mix door actuator position (driver's side)" indicate "0%"?	Go to step **7**.	Replace the A/C control panel. <Ref. to AC-46, REMOVAL, Control Panel.>
7	**CHECK A/C CONTROL PANEL (VEHICLES WITH MANUAL AIR CONDITIONER).** 1) Set the temperature control switch dial to MAX HOT. 2) Using Subaru Select Monitor, display the following data in "Read Current Data". • Target air mix door actuator position (driver's side)	Does "Target air mix door actuator position (driver's side)" indicate "100%"?	Go to step **8**.	Replace the A/C control panel. <Ref. to AC-46, REMOVAL, Control Panel.>
8	**CHECK DTC.** 1) Turn the ignition switch to ON. 2) Set the temperature control switch to MAX COOL, and wait for 16 seconds or more. (For vehicles with left/right independent air conditioner, perform setting on both sides.) 3) Read the DTC using Subaru Select Monitor.	Are DTCs B1610, B1611, B1612, B1613, B1614 and B1615 displayed?	Perform the diagnosis according to DTC.	Go to step **9**.
9	**CHECK DTC.** 1) Turn the ignition switch to ON. 2) Set the temperature control switch to MAX HOT, and wait for 16 seconds or more. (For vehicles with left/right independent air conditioner, perform setting on both sides.) 3) Read the DTC using Subaru Select Monitor.	Are DTCs B1610, B1611, B1612, B1613, B1614 and B1615 displayed?	Perform the diagnosis according to DTC.	Go to step **10**.
10	**CHECK INTAKE DOOR ACTUATOR.** Visually check the intake door actuator operation.	Is the intake door actuator normal?	Go to step **11**.	Check the intake door actuator. <Ref. to AC(diag)-40, UNABLE TO SWITCH SUCTION VENTS, DIAGNOSTIC PROCEDURE WITH PHENOMENON, Diagnostics with Phenomenon.>
11	**CHECK EVAPORATOR SENSOR UNIT (VEHICLES WITH AUTOMATIC AIR CONDITIONER ONLY).** Perform the inspection of evaporator sensor unit. <Ref. to AC-88, INSPECTION, Evaporator Sensor.>	Is the evaporator sensor normal?	Go to step **12**.	Replace the evaporator sensor. <Ref. to AC-87, REMOVAL, Evaporator Sensor.>

	Step	Check	Yes	No
12	**CHECK IN-VEHICLE SENSOR UNIT (VEHICLES WITH AUTOMATIC AIR CONDITIONER ONLY).** Check in-vehicle sensor circuit. <Ref. to AC-84, INSPECTION, In-Vehicle Sensor (Auto A/C Model).>	Is the in-vehicle sensor circuit normal?	Go to step **13**.	Replace the in-vehicle sensor. <Ref. to AC-82, REMOVAL, In-Vehicle Sensor (Auto A/C Model).>
13	**CHECK AMBIENT SENSOR (VEHICLES WITH AUTOMATIC AIR CONDITIONER ONLY).** 1) Turn the ignition switch to ON. 2) Using Subaru Select Monitor, check "Heater Water Temperature" in "Read Current Data", and check that the temperature indicates 50°C (122°F) or less. NOTE: • Do not start engine. • If the temperature is more than 50°C (122°F), turn the ignition switch to OFF, and wait until the water temperature decreases. 3) Using Subaru Select Monitor, check "Ambient Air Temperature" in "Read Current Data". 4) Using a thermometer, check the temperature at the installation area of the ambient sensor.	Are the data value and the one measured with a thermometer the same?	Go to step **15**.	Go to step **14**.
14	**CHECK AMBIENT SENSOR CIRCUIT (VEHICLES WITH AUTOMATIC AIR CONDITIONER ONLY).** Check ambient sensor circuit. <Ref. to AC(diag)-44, AMBIENT SENSOR, Diagnostic Procedure for Sensors.>	Is the ambient sensor circuit normal?	Go to step **15**.	Repair the faulty circuit.
15	**CHECK SUNLOAD SENSOR UNIT (VEHICLES WITH AUTOMATIC AIR CONDITIONER ONLY).** Check the sunload sensor unit. <Ref. to AC-81, INSPECTION, Sunload Sensor (Auto A/C Model).>	Is the sunload sensor normal?	System is normal.	Replace the sunload sensor. <Ref. to AC-80, REMOVAL, Sunload Sensor (Auto A/C Model).>

6. COMPARTMENT TEMPERATURE IS EXCESSIVELY LOWER THAN SETTING TEMPERATURE

TROUBLE SYMPTOM:

Compartment temperature is excessively lower than setting temperature.

Trouble causes:

- Large airflow capacity
- Refrigerant pressure failure
- UART communication failure
- A/C control panel failure
- Air mix actuator (driver's) failure
- Air mix actuator (passenger's) failure (with left/right independent air conditioner only)
- Evaporator sensor failure (vehicles with automatic air conditioner only)
- In-vehicle sensor failure (vehicles with automatic air conditioner only)
- Ambient sensor failure (vehicles with automatic air conditioner only)
- Sunload sensor failure (vehicles with automatic air conditioner only)

	Step	Check	Yes	No
1	**CHECK AIRFLOW CAPACITY.** Check the airflow capacity. <Ref. to AC(diag)-35, AIR GOES OUT OF CONTROL, DIAGNOSTIC PROCEDURE WITH PHENOMENON, Diagnostics with Phenomenon.>	Is the airflow capacity normal?	Go to step **2**.	Perform repair according to inspection procedure.
2	**CHECK AMOUNT OF REFRIGERANT PRESSURE.** Check the refrigerant pressure. <Ref. to AC-20, CHECK REFRIGERANT GAS PRESSURE, PROCEDURE, Refrigerant Pressure with Manifold Gauge Set.>	Is the refrigerant pressure normal?	For vehicles with automatic air conditioner Go to step **3**. For vehicles with manual air conditioner Go to step **5**.	Perform repair according to refrigerant pressure inspection.
3	**CHECK A/C CONTROL PANEL (VEHICLES WITH AUTOMATIC AIR CONDITIONER).** 1) Continue clicking the temperature control switch ▽ (driver's) and (passenger's). 2) Using Subaru Select Monitor, display the following data in "Read Current Data". • Heater Control Panel Setting Value (Driver's) • Heater Control Panel Setting Value (Passenger's)	Do "Heater Control Panel Setting Value (Driver's)" and "Heater Control Panel Setting Value (Passenger's)" indicate "60"?	Go to step **4**.	Replace the A/C control panel. <Ref. to AC-46, REMOVAL, Control Panel.>
4	**CHECK A/C CONTROL PANEL (VEHICLES WITH AUTOMATIC AIR CONDITIONER).** 1) Continue clicking the temperature control switch △ (driver's). 2) Using Subaru Select Monitor, display the following data in "Read Current Data". • Heater Control Panel Setting Value (Driver's) • Heater Control Panel Setting Value (Passenger's)	Do "Heater Control Panel Setting Value (Driver's)" and "Heater Control Panel Setting Value (Passenger's)" indicate "90"?	Go to step **5**.	Replace the A/C control panel. <Ref. to AC-46, REMOVAL, Control Panel.>
5	**CHECK A/C CONTROL PANEL (VEHICLES WITH MANUAL AIR CONDITIONER).** 1) Set the temperature control switch dial to MAX COOL. 2) Using Subaru Select Monitor, display the following data in "Read Current Data". • Target air mix door actuator position (driver's side)	Does "Target air mix door actuator position (driver's side)" indicate "0%"?	Go to step **6**.	Replace the A/C control panel. <Ref. to AC-46, REMOVAL, Control Panel.>
6	**CHECK A/C CONTROL PANEL (VEHICLES WITH MANUAL AIR CONDITIONER).** 1) Set the temperature control switch dial to MAX HOT. 2) Using Subaru Select Monitor, display the following data in "Read Current Data". • Target air mix door actuator position (driver's side)	Does "Target air mix door actuator position (driver's side)" indicate "100%"?	Go to step **7**.	Replace the A/C control panel. <Ref. to AC-46, REMOVAL, Control Panel.>
7	**CHECK DTC.** 1) Turn the ignition switch to ON. 2) Set the temperature control switch to MAX COOL, and wait for 16 seconds or more. (For vehicles with left/right independent air conditioner, perform setting on both sides.) 3) Read the DTC using Subaru Select Monitor.	Are DTCs B1610, B1611, B1612, B1613, B1614 and B1615 displayed?	Perform the diagnosis according to DTC.	Go to step **8**.

	Step	Check	Yes	No
8	**CHECK DTC.** 1) Turn the ignition switch to ON. 2) Set the temperature control switch to MAX HOT, and wait for 16 seconds or more. (For vehicles with left/right independent air conditioner, perform setting on both sides.) 3) Read the DTC using Subaru Select Monitor.	Are DTCs B1610, B1611, B1612, B1613, B1614 and B1615 displayed?	Perform the diagnosis according to DTC.	Go to step **9**.
9	**CHECK EVAPORATOR SENSOR UNIT (VEHICLES WITH AUTOMATIC AIR CONDITIONER ONLY).** Perform the inspection of evaporator sensor unit. <Ref. to AC-88, INSPECTION, Evaporator Sensor.>	Is the evaporator sensor normal?	Go to step **10**.	Replace the evaporator sensor. <Ref. to AC-87, REMOVAL, Evaporator Sensor.>
10	**CHECK IN-VEHICLE SENSOR UNIT (VEHICLES WITH AUTOMATIC AIR CONDITIONER ONLY).** Check in-vehicle sensor circuit. <Ref. to AC-84, INSPECTION, In-Vehicle Sensor (Auto A/C Model).>	Is the in-vehicle sensor circuit normal?	Go to step **11**.	Replace the in-vehicle sensor. <Ref. to AC-82, REMOVAL, In-Vehicle Sensor (Auto A/C Model).>
11	**CHECK AMBIENT SENSOR (VEHICLES WITH AUTOMATIC AIR CONDITIONER ONLY).** 1) Turn the ignition switch to ON. 2) Using Subaru Select Monitor, check “Heater Water Temperature” in “Read Current Data”, and check that the temperature indicates 50°C (122°F) or less. NOTE: • Do not start engine. • If the temperature is more than 50°C (122°F), turn the ignition switch to OFF, and wait until the water temperature decreases. 3) Using Subaru Select Monitor, check “Ambient Air Temperature” in “Read Current Data”. 4) Using a thermometer, check the temperature at the installation area of the ambient sensor.	Are the data value and the one measured with a thermometer the same?	Go to step **13**.	Go to step **12**.
12	**CHECK AMBIENT SENSOR CIRCUIT (VEHICLES WITH AUTOMATIC AIR CONDITIONER ONLY).** Check ambient sensor circuit. <Ref. to AC(diag)-44, AMBIENT SENSOR, Diagnostic Procedure for Sensors.>	Is the ambient sensor circuit normal?	Go to step **13**.	Repair the faulty circuit.
13	**CHECK SUNLOAD SENSOR UNIT (VEHICLES WITH AUTOMATIC AIR CONDITIONER ONLY).** Check the sunload sensor unit. <Ref. to AC-81, INSPECTION, Sunload Sensor (Auto A/C Model).>	Is the sunload sensor normal?	System is normal.	Replace the sunload sensor. <Ref. to AC-80, REMOVAL, Sunload Sensor (Auto A/C Model).>

7. COMPARTMENT TEMPERATURE IS EXCESSIVELY HIGHER THAN SETTING TEMPERATURE

TROUBLE SYMPTOM:
Compartment temperature is excessively higher than setting temperature.
Trouble causes:
- Large airflow capacity
- UART communication failure
- A/C control panel failure
- Air mix actuator (driver's) failure
- Air mix actuator (passenger's) failure (with left/right independent air conditioner only)
- Intake door actuator failure
- Evaporator sensor failure (vehicles with automatic air conditioner only)
- In-vehicle sensor failure (vehicles with automatic air conditioner only)
- Ambient sensor failure (vehicles with automatic air conditioner only)
- Sunload sensor failure (vehicles with automatic air conditioner only)

	Step	Check	Yes	No
1	**CHECK AIRFLOW CAPACITY.** Check the airflow capacity. <Ref. to AC(diag)-35, AIR GOES OUT OF CONTROL, DIAGNOSTIC PROCEDURE WITH PHENOMENON, Diagnostics with Phenomenon.>	Is the airflow capacity normal?	For vehicles with automatic air conditioner Go to step **2**. For vehicles with manual air conditioner Go to step **4**.	Perform repair according to inspection procedure.
2	**CHECK A/C CONTROL PANEL (VEHICLES WITH AUTOMATIC AIR CONDITIONER).** 1) Continue clicking the temperature control switch ▽ (driver's) and (passenger's). 2) Using Subaru Select Monitor, display the following data in "Read Current Data". • Heater Control Panel Setting Value (Driver's) • Heater Control Panel Setting Value (Passenger's)	Do "Heater Control Panel Setting Value (Driver's)" and "Heater Control Panel Setting Value (Passenger's)" indicate "60"?	Go to step **3**.	Replace the A/C control panel. <Ref. to AC-46, REMOVAL, Control Panel.>
3	**CHECK A/C CONTROL PANEL (VEHICLES WITH AUTOMATIC AIR CONDITIONER).** 1) Continue clicking the temperature control switch △ (driver's). 2) Using Subaru Select Monitor, display the following data in "Read Current Data". • Heater Control Panel Setting Value (Driver's) • Heater Control Panel Setting Value (Passenger's)	Do "Heater Control Panel Setting Value (Driver's)" and "Heater Control Panel Setting Value (Passenger's)" indicate "90"?	Go to step **4**.	Replace the A/C control panel. <Ref. to AC-46, REMOVAL, Control Panel.>
4	**CHECK A/C CONTROL PANEL (VEHICLES WITH MANUAL AIR CONDITIONER).** 1) Set the temperature control switch dial to MAX COOL. 2) Using Subaru Select Monitor, display the following data in "Read Current Data". • Target air mix door actuator position (driver's side)	Does "Target air mix door actuator position (driver's side)" indicate "0%"?	Go to step **5**.	Replace the A/C control panel. <Ref. to AC-46, REMOVAL, Control Panel.>
5	**CHECK A/C CONTROL PANEL (VEHICLES WITH MANUAL AIR CONDITIONER).** 1) Set the temperature control switch dial to MAX HOT. 2) Using Subaru Select Monitor, display the following data in "Read Current Data". • Target air mix door actuator position (driver's side)	Does "Target air mix door actuator position (driver's side)" indicate "100%"?	Go to step **6**.	Replace the A/C control panel. <Ref. to AC-46, REMOVAL, Control Panel.>

	Step	Check	Yes	No
6	**CHECK DTC.** 1) Turn the ignition switch to ON. 2) Set the temperature control switch to MAX COOL, and wait for 16 seconds or more. (For vehicles with left/right independent air conditioner, perform setting on both sides.) 3) Read the DTC using Subaru Select Monitor.	Are DTCs B1610, B1611, B1612, B1613, B1614 and B1615 displayed?	Perform the diagnosis according to DTC.	Go to step **7**.
7	**CHECK DTC.** 1) Turn the ignition switch to ON. 2) Set the temperature control switch to MAX HOT, and wait for 16 seconds or more. (For vehicles with left/right independent air conditioner, perform setting on both sides.) 3) Read the DTC using Subaru Select Monitor.	Are DTCs B1610, B1611, B1612, B1613, B1614 and B1615 displayed?	Perform the diagnosis according to DTC.	Go to step **8**.
8	**CHECK INTAKE DOOR ACTUATOR.** Visually check the intake door actuator operation.	Is the intake door actuator normal?	Go to step **9**.	Check the intake door actuator. <Ref. to AC(diag)-40, UNABLE TO SWITCH SUCTION VENTS, DIAGNOSTIC PROCEDURE WITH PHENOMENON, Diagnostics with Phenomenon.>
9	**CHECK EVAPORATOR SENSOR UNIT (VEHICLES WITH AUTOMATIC AIR CONDITIONER ONLY).** Perform the inspection of evaporator sensor unit. <Ref. to AC-88, INSPECTION, Evaporator Sensor.>	Is the evaporator sensor normal?	Go to step **10**.	Replace the evaporator sensor. <Ref. to AC-87, REMOVAL, Evaporator Sensor.>
10	**CHECK IN-VEHICLE SENSOR UNIT (VEHICLES WITH AUTOMATIC AIR CONDITIONER ONLY).** Check in-vehicle sensor circuit. <Ref. to AC-84, INSPECTION, In-Vehicle Sensor (Auto A/C Model).>	Is the in-vehicle sensor circuit normal?	Go to step **11**.	Replace the in-vehicle sensor. <Ref. to AC-82, REMOVAL, In-Vehicle Sensor (Auto A/C Model).>
11	**CHECK AMBIENT SENSOR (VEHICLES WITH AUTOMATIC AIR CONDITIONER ONLY).** 1) Turn the ignition switch to ON. 2) Using Subaru Select Monitor, check “Heater Water Temperature” in “Read Current Data”, and check that the temperature indicates 50°C (122°F) or less. NOTE: • Do not start engine. • If the temperature is more than 50°C (122°F), turn the ignition switch to OFF, and wait until the water temperature decreases. 3) Using Subaru Select Monitor, check “Ambient Air Temperature” in “Read Current Data”. 4) Using a thermometer, check the temperature at the installation area of the ambient sensor.	Are the data value and the one measured with a thermometer the same?	Go to step **13**.	Go to step **12**.

	Step	Check	Yes	No
12	**CHECK AMBIENT SENSOR CIRCUIT (VEHICLES WITH AUTOMATIC AIR CONDITIONER ONLY).** Check the ambient sensor circuit. <Ref. to AC(diag)-44, AMBIENT SENSOR, Diagnostic Procedure for Sensors.>	Is the ambient sensor circuit normal?	Go to step **13**.	Repair the faulty circuit.
13	**CHECK SUNLOAD SENSOR UNIT (VEHICLES WITH AUTOMATIC AIR CONDITIONER ONLY).** Check the sunload sensor unit. <Ref. to AC-81, INSPECTION, Sunload Sensor (Auto A/C Model).>	Is the sunload sensor normal?	System is normal.	Replace the sunload sensor. <Ref. to AC-80, REMOVAL, Sunload Sensor (Auto A/C Model).>

8. AIR DOES NOT COME OUT, OR AIRFLOW CAPACITY IS INSUFFICIENT

TROUBLE SYMPTOM:

- Airflow capacity is insufficient.
- No air comes out even when the fan switch or fan dial is operated.
- There is a fan speed at which no air comes out.

Trouble causes:

- Airflow capacity failure
- UART communication failure
- A/C control panel failure
- Blower motor failure

Auto A/C

WIRING DIAGRAM:

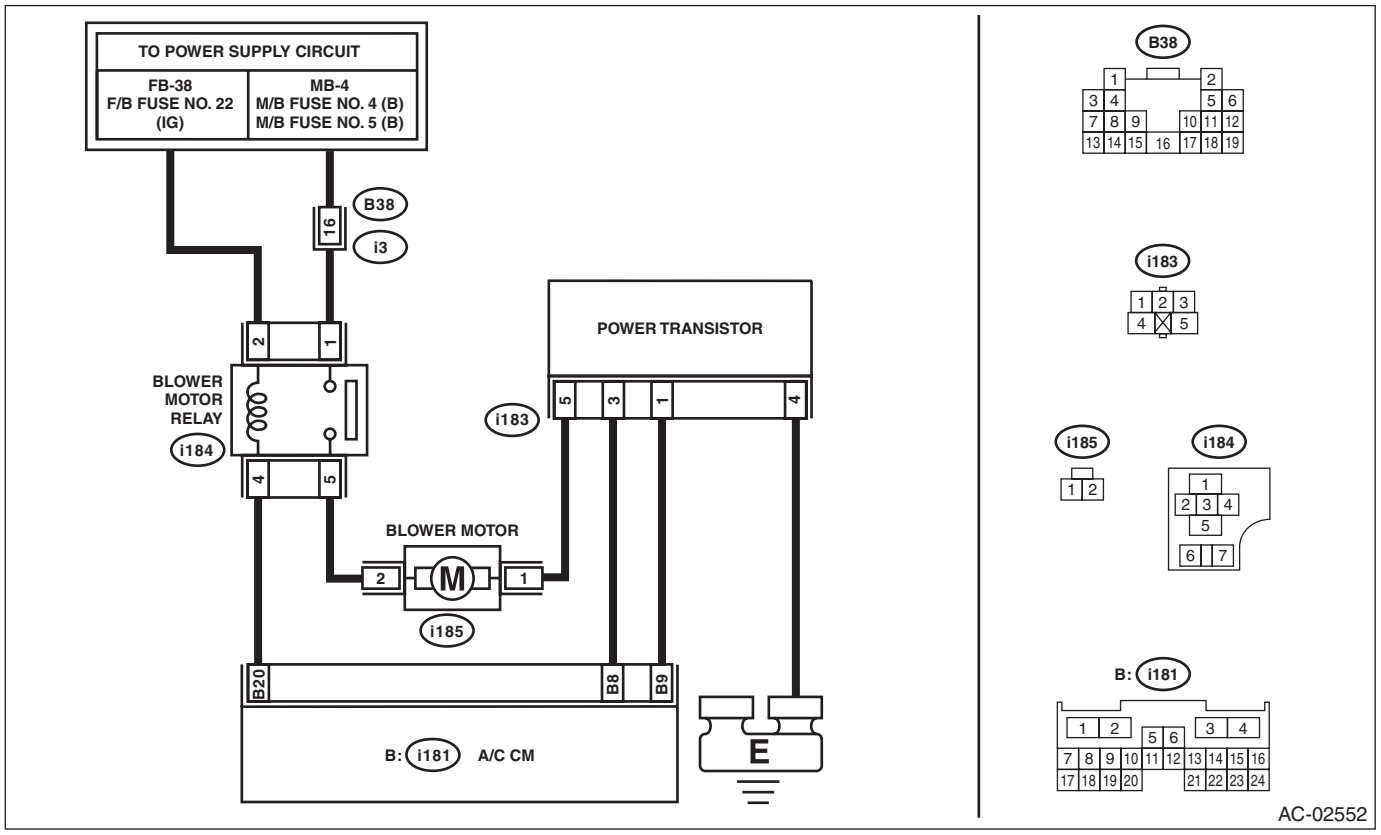

Step		Check	Yes	No
1	**CHECK BLOWER OPERATION.** 1) Using Subaru Select Monitor, display the following data in "Read Current Data". • Air mix door actuator position (driver's side) • Air mix door actuator position (passenger's side) (with left/right independent air conditioner) • Blower Fan Level 2) Set the temperature control switch to MAX COOL, and increase or decrease the A/C control panel fan switch. (For vehicles with left/right independent air conditioner, perform setting on both sides.)	Do "Air mix door actuator position (driver's side)" and "Air mix door actuator position (passenger's side)" (with left/right independent air conditioner) indicate "0%"? Does "Blower Fan Level" increase or decrease in accordance with the fan switch operation?	Go to step **2**.	Go to step **5**.

	Step	Check	Yes	No
2	**CHECK AIRFLOW CAPACITY.** Set the temperature control switch to LO (For vehicles with left/right independent air conditioner, perform setting on both seats.), and set the fan switch of the A/C control panel to MAX and set the FRESH/RECIRC switch to RECIRC.	Is the airflow capacity insufficient for the same model?	Go to step **3**.	System is normal.
3	**CHECK A/C FILTER.** Check the A/C filter. <Ref. to AC-105, INSPECTION, A/C Filter.>	Is the A/C filter normal?	Go to step **4**.	Clean or replace the A/C filter.
4	**CHECK EACH DUCT.** Check each duct joint for disconnection or clogging. <Ref. to AC-101, INSPECTION, Air Vent Grille.> <Ref. to AC-102, INSPECTION, Heater Duct.> <Ref. to AC-103, INSPECTION, Heater Vent Duct.>	Is each duct normal?	Go to step **5**.	Repair the faulty duct.
5	**CHECK A/C CONTROL PANEL.** 1) Turn the ignition switch to ON. 2) Set the fan switch to maximum position. 3) Using the Subaru Select Monitor, check "Blower Fan Level" of the current data from the A/C diagnosis.	Does "Blower Fan Level" indicate "31"?	Go to step **6**.	Replace the A/C control panel. <Ref. to AC-46, REMOVAL, Control Panel.>
6	**CHECK A/C CONTROL PANEL.** 1) Set the fan switch to minimum position. 2) Using the Subaru Select Monitor, check "Blower Fan Level" of the current data from the A/C diagnosis.	Does "Blower Fan Level" indicate "1"?	Go to step **7**.	Replace the A/C control panel. <Ref. to AC-46, REMOVAL, Control Panel.>
7	**CHECK CONNECTOR.** Check the connectors (i80) and (i181) for poor contact.	Is there poor contact of connector?	Repair the connector.	Go to step **8**.
8	**CHECK FUSE.** 1) Remove fuse No. 22 and 7 from fuse & relay box, and fuse No. 4 and 5 from the main fuse box. 2) Check the condition of fuse.	Is the fuse blown out?	Replace the fuse.	Go to step **9**.
9	**CHECK BLOWER MOTOR RELAY ON SIGNAL.** 1) Stop the engine. 2) Turn the fan switch to OFF. 3) Turn the ignition switch to ON. 4) Using a tester, measure the voltage between the A/C CM connector (i181) and chassis ground. ***Connector & terminal*** ***(i181) No. 20 (+) — Chassis ground (–):***	Is the voltage 10 V or more?	Go to step **10**.	• Check for an open or short circuit in the harness between the F/B fuse No. 22 and ECM. • Check the blower relay connector and relay unit. <Ref. to AC-30, CHECK RELAY, INSPECTION, Relay and Fuse.>
10	**CHECK BLOWER MOTOR RELAY ON SIGNAL.** 1) Start the engine. 2) Turn the fan switch to ON. 3) Using a tester, measure the voltage between the A/C CM connector (i181) and chassis ground. ***Connector & terminal*** ***(i181) No. 20 (+) — Chassis ground (–):***	Is the voltage 0 V?	Go to step **11**.	Replace the A/C CM. <Ref. to AC-54, REMOVAL, Control Unit.>

	Step	Check	Yes	No
11	**CHECK BLOWER MOTOR POWER SUPPLY CIRCUIT.** 1) Turn the ignition switch to ON. 2) Turn the fan switch to ON. 3) Use a tester, measure the voltage between the blower motor connector (i185) and chassis ground. ***Connector & terminal*** ***(i185) No. 2 (+) — Chassis ground (–):***	Is the voltage 10 V or more?	Go to step **12**.	• Check for an open in the blower motor power supply line harness and for disconnection of the connectors (B38) and (i3). • Check the blower relay connector and relay unit. <Ref. to AC-30, CHECK RELAY, INSPECTION, Relay and Fuse.>
12	**CHECK BLOWER MOTOR UNIT.** Check the blower motor. <Ref. to AC-37, INSPECTION, Blower Motor.>	Is the blower motor OK?	Go to step **13**.	Replace the blower motor. <Ref. to AC-36, REMOVAL, Blower Motor.>
13	**CHECK HARNESS.** 1) Disconnect the power transistor and A/C CM connector. 2) Using a tester, measure the resistance between harness terminals. ***Connector & terminal*** ***(i185) No. 1 — (i183) No. 5:*** ***(i183) No. 3 — (i181) No. 8:*** ***(i183) No. 1 — (i181) No. 9:*** ***(i183) No. 4 — Chassis ground:***	Is the resistance less than 1 Ω?	Go to step **14**.	Repair or replace the open circuit of harness.
14	**CHECK HARNESS.** Use a tester to measure the resistance of harness between the power transistor connector (i183) and chassis ground. ***Connector & terminal*** ***(i183) No. 1 — Chassis ground:*** ***(i183) No. 3 — Chassis ground:***	Is the resistance less than 1 Ω?	Repair or replace the short circuit of the harness.	Go to step **15**.
15	**CHECK POWER TRANSISTOR.** Replace the power transistor with a properly functioning part.	Does the blower motor rotate?	Replace the power transistor. <Ref. to AC-38, REMOVAL, Power Transistor (Auto A/C Model).>	Replace the A/C CM<Ref. to AC-54, REMOVAL, Control Unit.>

Manual A/C

WIRING DIAGRAM:

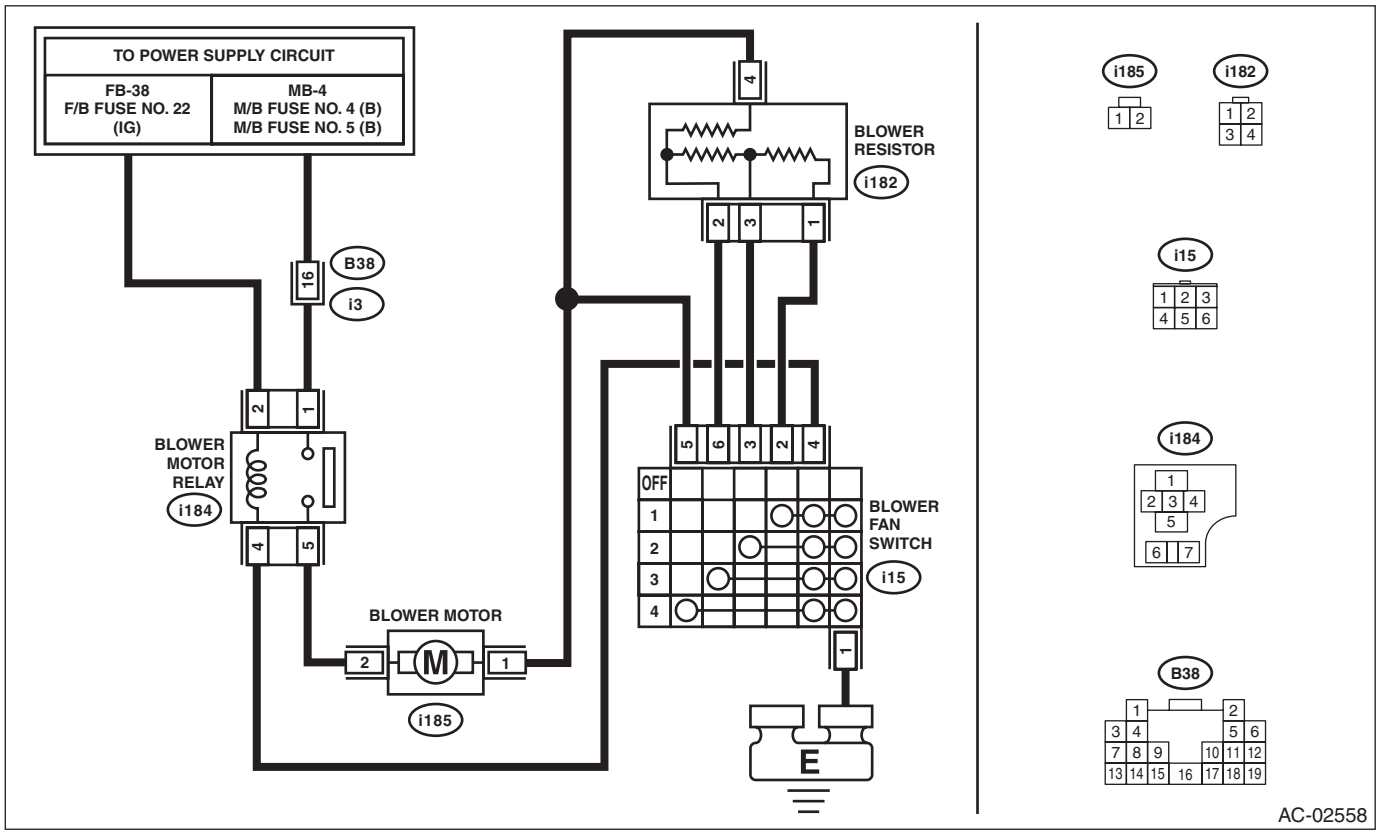

Step		Check	Yes	No
1	**CHECK BLOWER OPERATION.** Set the temperature control dial to MAX COOL, and increase or decrease the fan dial.	Does the airflow capacity increase or decrease in accordance with the dial operation?	Go to step **2**.	Go to step **5**.
2	**CHECK AIRFLOW CAPACITY.** Set the temperature control switch to MAX COOL, set the fan switch to MAX and set the FRESH/RECIRC switch to RECIRC.	Is the airflow capacity insufficient for the same model?	Go to step **3**.	System is normal.
3	**CHECK A/C FILTER.** Check the A/C filter. <Ref. to AC-105, INSPECTION, A/C Filter.>	Is the A/C filter normal?	Go to step **4**.	Clean or replace the A/C filter.
4	**CHECK EACH DUCT.** Check each duct joint for disconnection or clogging. <Ref. to AC-101, INSPECTION, Air Vent Grille.> <Ref. to AC-102, INSPECTION, Heater Duct.> <Ref. to AC-103, INSPECTION, Heater Vent Duct.>	Is each duct normal?	Go to step **5**.	Repair the faulty duct.
5	**CHECK CONNECTOR.** Check the connectors (i184), (i185), (i182), (i15) and (B38) for poor contact.	Is there poor contact of connector?	Repair the connector.	Go to step **6**.
6	**CHECK FUSE.** 1) Remove the fuse No. 22 of the fuse & relay box and the fuses No. 4 and No. 5 of the main fuse box. 2) Check the condition of fuse.	Is the fuse blown out?	Replace the fuse.	Go to step **7**.

	Step	Check	Yes	No
7	**CHECK BLOWER MOTOR RELAY ON SIGNAL.** 1) Stop the engine. 2) Turn the fan switch to OFF. 3) Turn the ignition switch to ON. 4) Use a tester to measure the voltage between the blower fan switch and chassis ground. ***Connector & terminal*** ***(i15) No. 4 (+) — Chassis ground (–):***	Is the voltage 10 V or more?	Go to step **8**.	• Check for an open or short circuit between the F/B fuse No. 22 and blower fan switch. • Check the blower relay connector and relay unit.
8	**CHECK BLOWER MOTOR RELAY ON SIGNAL.** 1) Start the engine. 2) Turn the fan switch to OFF. 3) Turn the ignition switch to ON. 4) Use a tester to measure the voltage between the blower fan switch and chassis ground. ***Connector & terminal*** ***(i15) No. 4 (+) — Chassis ground (–):***	Is the voltage 0 V?	Go to step **9**.	Replace the A/C control panel. <Ref. to AC-49, MANUAL A/C MODEL, REMOVAL, Control Panel.>
9	**CHECK BLOWER MOTOR POWER SUPPLY.** 1) Turn the ignition switch to ON. 2) Turn the blower switch to ON. 3) Use a tester to measure the voltage between the blower motor connector and chassis ground. ***Connector & terminal*** ***(i185) No. 2 (+) — Chassis ground (–):***	Is the voltage 10 V or more?	Go to step **10**.	• Check for an open in the blower motor power supply harness, and check the connectors (B38) and (i3). • Check the blower relay connector and relay unit.
10	**CHECK BLOWER MOTOR.** Check the blower motor. <Ref. to AC-37, INSPECTION, Blower Motor.>	Is the blower motor OK?	Go to step **11**.	Replace the blower motor. <Ref. to AC-36, REMOVAL, Blower Motor.>
11	**CHECK HARNESS.** 1) Disconnect the connector from blower motor, blower resistor and blower fan switch. 2) Use a tester to measure the resistance of the harness between terminals. ***Connector & terminal*** ***(i185) No. 1 — (i182) No. 4:*** ***(i185) No. 1 — (i15) No. 4:*** ***(i182) No. 1 — (i15) No. 2:*** ***(i182) No. 2 — (i15) No. 6:*** ***(i182) No. 1 — (i15) No. 3:***	Is the resistance less than 1 Ω?	Go to step **12**.	Repair or replace the open circuit of harness.
12	**CHECK BLOWER RESISTOR.** Check the blower resistor. <Ref. to AC-40, INSPECTION, Blower Resistor (Manual A/C Model).>	Is the blower resistor OK?	Replace the A/C control panel. <Ref. to AC-49, MANUAL A/C MODEL, REMOVAL, Control Panel.>	Replace the blower resistor. <Ref. to AC-39, REMOVAL, Blower Resistor (Manual A/C Model).>

9. AIR GOES OUT OF CONTROL

TROUBLE SYMPTOM:

- The blower rotates even though the blower switch is not turned on.
- The blower motor continues to rotate at high speed. (Not adjustable.)

Trouble causes:

- Airflow capacity failure
- UART communication failure
- A/C control panel failure
- Blower motor failure

Auto A/C

WIRING DIAGRAM:

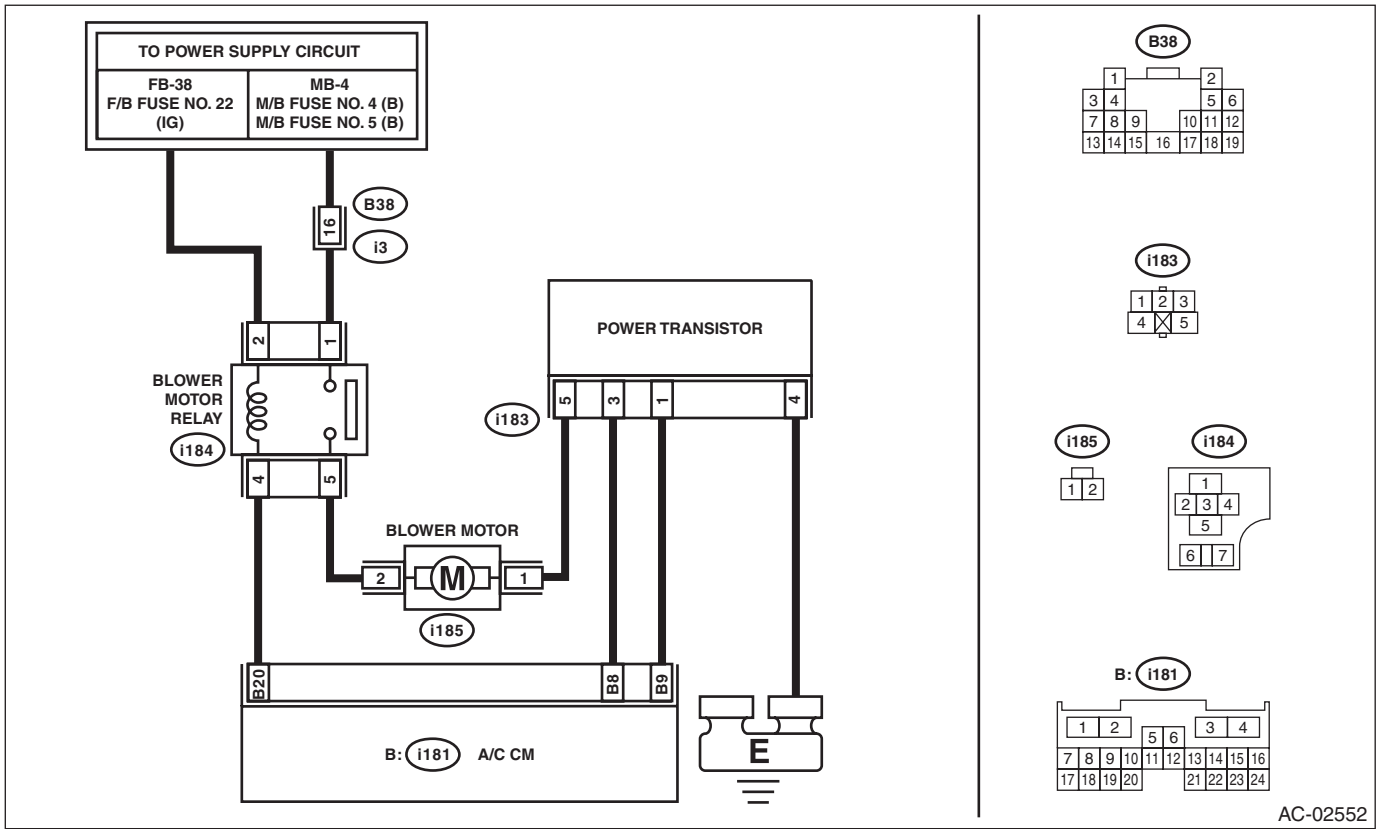

Step		Check	Yes	No
1	**CHECK A/C CONTROL PANEL.** 1) Turn the ignition switch to ON. 2) Set the fan switch to maximum position. 3) Using the Subaru Select Monitor, check "Blower Fan Level" of the current data from the A/C diagnosis.	Does "Blower Fan Level" indicate "31"?	Go to step **2**.	Replace the A/C control panel. <Ref. to AC-46, REMOVAL, Control Panel.>
2	**CHECK A/C CONTROL PANEL.** 1) Set the fan switch to minimum position. 2) Using the Subaru Select Monitor, check "Blower Fan Level" of the current data from the A/C diagnosis.	Does "Blower Fan Level" indicate "1"?	Go to step **3**.	Replace the A/C control panel. <Ref. to AC-46, REMOVAL, Control Panel.>

	Step	Check	Yes	No
3	**CHECK HARNESS.** 1) Turn the ignition switch to OFF. 2) Disconnect the power transistor connector. 3) Use a tester to measure the resistance between the power transistor connector and chassis ground. ***Connector & terminal*** ***(i183) No. 5 — Chassis ground:***	Is the resistance less than 1 Ω?	Repair or replace the short circuit portion of the harness (i183) No. 5 — (i185) No. 1 between blower motor and power transistor.	Go to step **4**.
4	**CHECK HARNESS.** 1) Remove the A/C CM. 2) Turn the ignition switch to ON. 3) Use a tester to measure the resistance between the power transistor connector and chassis ground. ***Connector & terminal*** ***(i183) No. 1 — Chassis ground:***	Is the resistance less than 1 Ω?	Repair or replace the short circuit portion of the harness (i183) No. 1 — (i181) No. 9 between A/C CM and power transistor.	Go to step **5**.
5	**CHECK HARNESS.** 1) Connect the disconnected connectors. 2) Turn the ignition switch to ON. 3) Use a tester to measure the voltage between the power transistor connector and chassis ground. ***Connector & terminal*** ***(i183) No. 1 (+) — Chassis ground (–):***	Is the voltage approx. 10 V when the fan switch is set to 1st, and approx. 1 V when set to 6th?	Replace the power transistor. <Ref. to AC-38, REMOVAL, Power Transistor (Auto A/C Model).>	Go to step **6**.
6	**CHECK A/C CM.** 1) Turn the fan switch to OFF. 2) Disconnect the power transistor connector. 3) Use a tester to measure the resistance between the power transistor connector and chassis ground. ***Connector & terminal*** ***(i183) No. 1 — Chassis ground:***	When the fan switch is OFF and other than OFF, does the resistance change?	Replace the power transistor. <Ref. to AC-38, REMOVAL, Power Transistor (Auto A/C Model).>	Replace the A/C CM. <Ref. to AC-54, REMOVAL, Control Unit.>

Manual A/C

WIRING DIAGRAM:

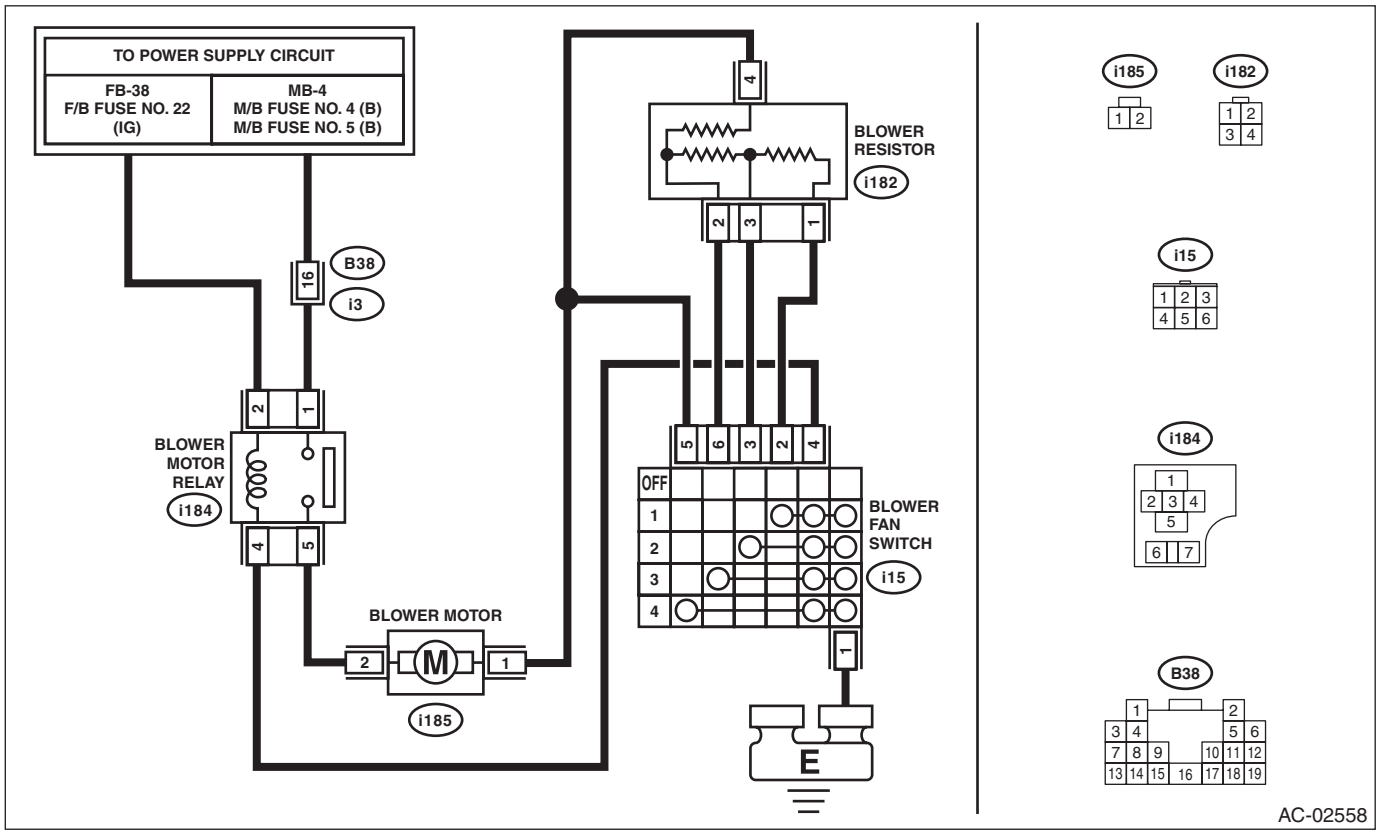

Step		Check	Yes	No
1	**CHECK BLOWER MOTOR CIRCUIT.** 1) Turn the ignition switch to OFF. 2) Disconnect the blower fan switch connector and blower resistor connector. 3) Use a tester to measure the resistance between each terminal and chassis ground. ***Connector & terminal*** ***(i182) No. 4 — Chassis ground:*** ***(i15) No. 5 — Chassis ground:*** ***(i15) No. 6 — Chassis ground:*** ***(i15) No. 3 — Chassis ground:*** ***(i15) No. 2 — Chassis ground:***	Is the resistance less than 1 Ω?	Repair or replace the short circuit of the harness.	Go to step **2**.
2	**CHECK BLOWER RESISTOR.** Check the blower resistor. <Ref. to AC-40, INSPECTION, Blower Resistor (Manual A/C Model).>	Is the blower resistor OK?	Replace the A/C control panel. <Ref. to AC-49, MANUAL A/C MODEL, REMOVAL, Control Panel.>	Replace the blower resistor. <Ref. to AC-39, REMOVAL, Blower Resistor (Manual A/C Model).>

10.COLD AIR DOES NOT COME OUT EVEN WHEN THE A/C SWITCH IS PRESSED. THE GLASS CANNOT BE DEFOGGED. (COMPRESSOR DOES NOT OPERATE. (VARIABLE))

TROUBLE SYMPTOM:
Compressor does not operate even when the A/C switch is turned on and the fan switch is set to LO — HI.
Trouble causes:
Compressor failure
WIRING DIAGRAM:

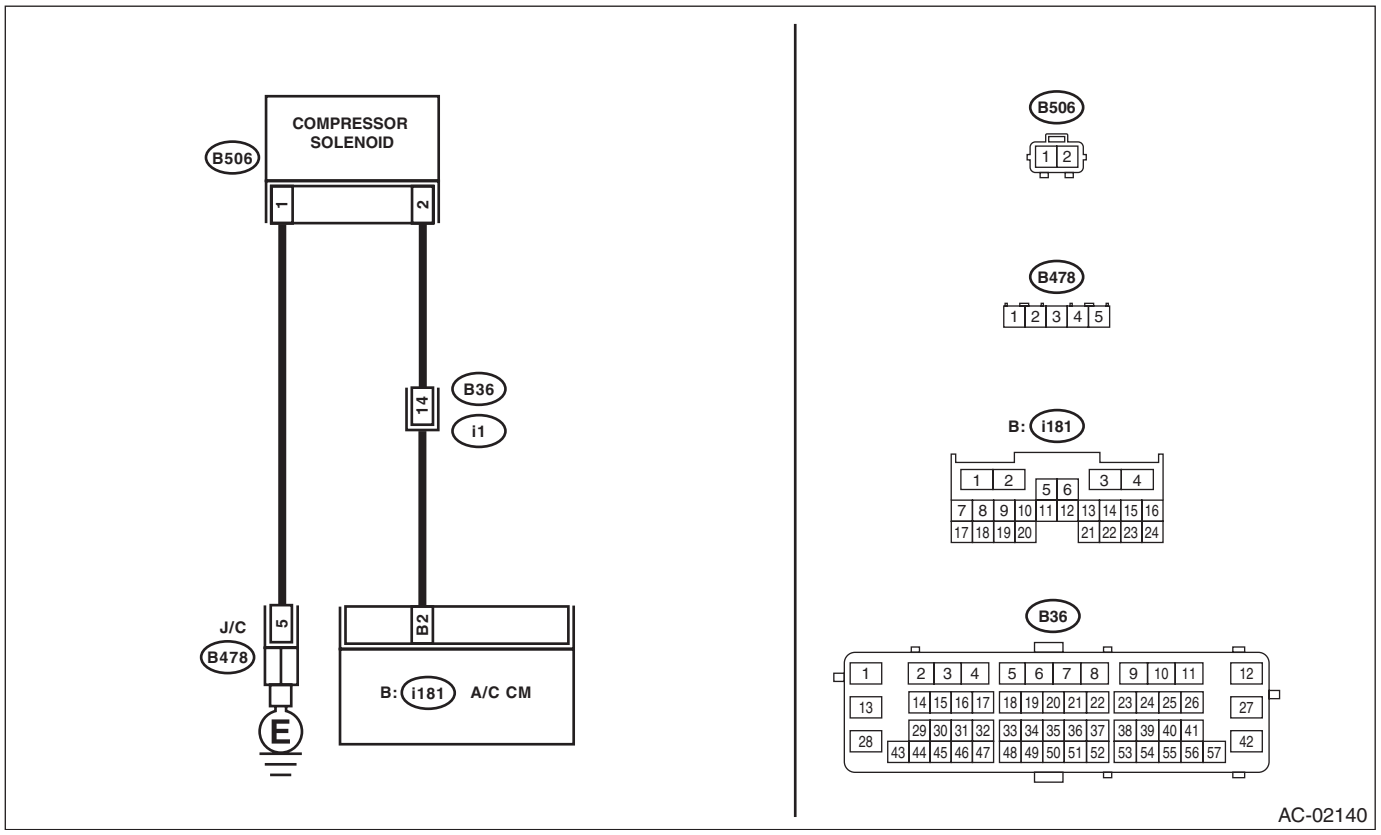

Step		Check	Yes	No
1	**CHECK A/C CONTROL PANEL.** 1) Leave the vehicle under the condition at ambient temperature of 15°C (59°F) or more. 2) Turn the ignition switch to ON. 3) Set the fan switch to maximum position. 4) Press the A/C switch.	Is "A/C" displayed on the A/C control panel? Or does the A/C switch indicator illuminate?	Go to step **2**.	Replace the A/C control panel. <Ref. to AC-46, REMOVAL, Control Panel.>
2	**CHECK VARIABLE FLOW CHANGE SOLENOID DUTY VALUE.** Using the Subaru Select Monitor, check "Variable Flow Change Solenoid Duty" of the current data from the A/C diagnosis.	Does the data indicate the value greater than zero?	Go to step **7**.	Go to step **3**.
3	**CHECK EVAPORATOR SENSOR.** Using the Subaru Select Monitor, check "Evaporator Temp." of the current data from the A/C diagnosis.	Does the data indicate -0.5 degree or more?	Go to step **5**.	Go to step **4**.
4	**CHECK EVAPORATOR SENSOR.** Check the evaporator sensor. <Ref. to AC-88, INSPECTION, Evaporator Sensor.>	Is the sensor normal?	Go to step **5**.	Replace the evaporator sensor.
5	**CHECK REFRIGERANT PRESSURE SENSOR.** Using the Subaru Select Monitor, check "Refrigerant Pressure" of the current data from the A/C diagnosis.	Does the data indicate 0.21 Mpa — 3.03 Mpa?	Go to step **7**.	Go to step **6**.

	Step	Check	Yes	No
6	**CHECK AMOUNT OF REFRIGERANT PRESSURE.** Check the refrigerant pressure. <Ref. to AC-20, CHECK REFRIGERANT GAS PRESSURE, PROCEDURE, Refrigerant Pressure with Manifold Gauge Set.>	Is the refrigerant pressure normal?	Go to step **7**.	Perform repair according to refrigerant pressure inspection.
7	**CHECK FLOW SENSOR CIRCUIT.** 1) Turn the ignition switch to ON. 2) Wait at least 1 seconds. 3) Read the DTC using Subaru Select Monitor.	Are B1641 and B1642 displayed?	Perform the diagnosis according to DTC.	Go to step **8**.
8	**CHECK VARIABLE SOLENOID CIRCUIT.** 1) Start the engine. 2) Turn the A/C switch to ON. 3) Set the fan switch to maximum position. 4) Set the temperature control switch to LO, and wait for 30 seconds or more. 5) Read the DTC using Subaru Select Monitor.	Is B1643 displayed?	Perform the diagnosis according to DTC.	Replace the compressor. <Ref. to AC-55, REMOVAL, Compressor.>

11.UNABLE TO SWITCH SUCTION VENTS

TROUBLE SYMPTOM:

Even when the FRESH/RECIRC switch is pressed, the inlet opening does not switch to RECIRC → FRESH or FRESH → RECIRC.

Trouble causes:

Intake door actuator failure

WIRING DIAGRAM:

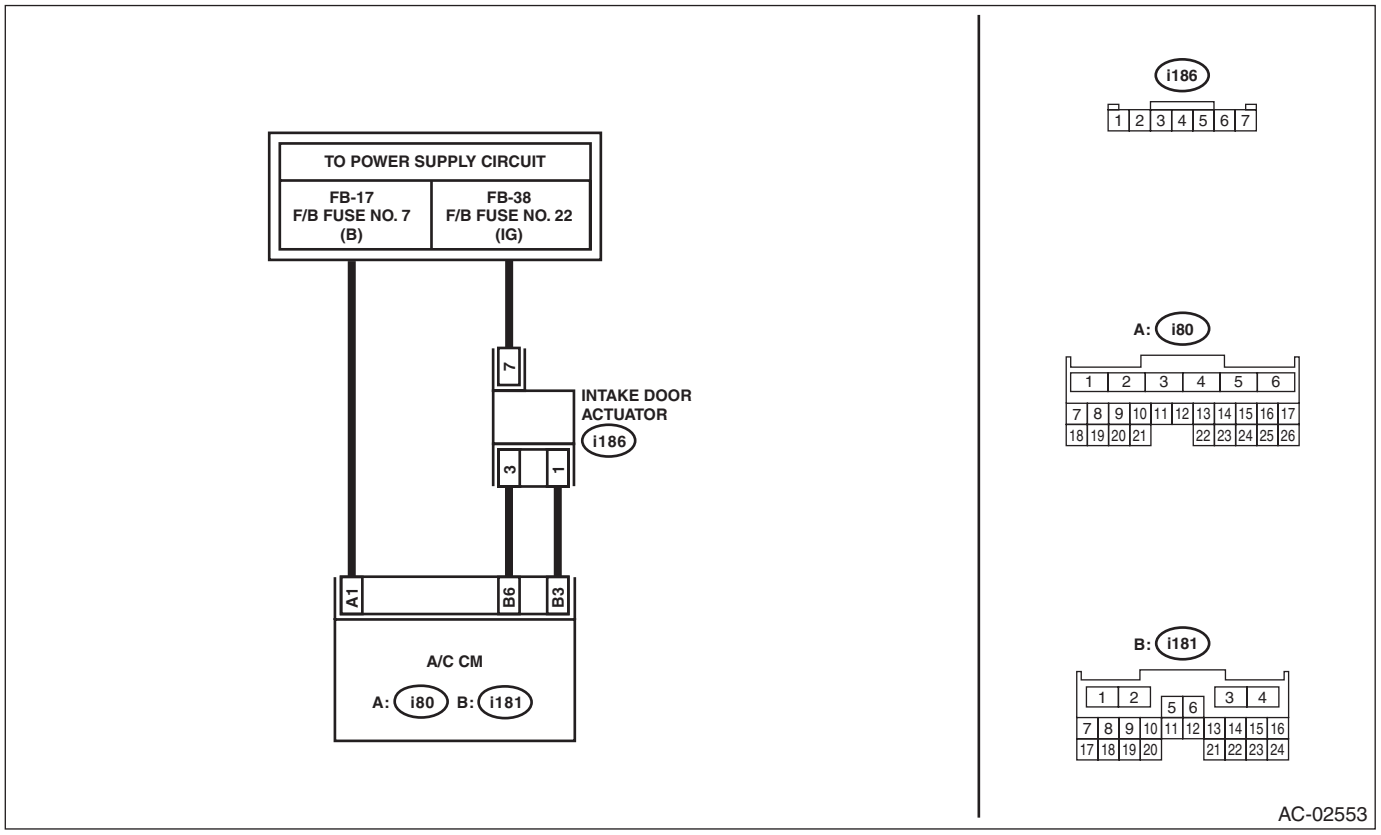

Step		Check	Yes	No
1	**VISUALLY CHECK FRESH/RECIRC DOOR OPERATION.** 1) Remove the glove box. <Ref. to EI-66, REMOVAL, Glove Box.> 2) Operate the FRESH/RECIRC switch, and visually check the intake door operation.	Does the intake door operate normally? Are the intake door and intake door case sealed tightly without gap?	System is normal.	Go to step **2**.
2	**CHECK A/C CONTROL PANEL.** 1) Turn the ignition switch to ON. 2) Using the Subaru Select Monitor, check “Fresh/Recircle Air Door Actuator Position Target” of the current data from the A/C diagnosis. 3) Operate the FRESH/RECIRC switch.	Does “Fresh/Recircle Air Door Actuator Position Target” indicate 0 ←→ 100?	Go to step **3**.	Replace the A/C control panel. <Ref. to AC-46, REMOVAL, Control Panel.>
3	**CHECK CONNECTOR.** Check the connecting condition of connectors (i186), (i181) and (i80).	Is there poor contact?	Repair the connector.	Go to step **4**.
4	**CHECK FUSE.** 1) Remove the fuse No. 7 and No. 22 from fuse & relay box. 2) Check the fuse.	Is the fuse OK?	Go to step **5**.	Replace the fuse.

	Step	Check	Yes	No
5	**CHECK POWER SUPPLY FOR INTAKE DOOR ACTUATOR.** 1) Turn the ignition switch to OFF. 2) Disconnect the intake door actuator connector (i186). 3) Turn the ignition switch to ON. 4) Measure the voltage between intake door actuator connector (i186) and chassis ground. ***Connector & terminal*** ***(i186) No. 7 (+) — Chassis ground (–):***	Is the voltage 10 V or more?	Go to step **6**.	Check for open or short circuit in the harness between intake door actuator and fuse.
6	**CHECK HARNESS BETWEEN A/C CM AND INTAKE DOOR ACTUATOR.** 1) Turn the ignition switch to OFF. 2) Disconnect the A/C CM connector (i181). 3) Measure the resistance between intake door actuator connector (i186) and A/C CM connector (i181). ***Connector & terminal*** ***(i186) No. 1 — (i181) No. 3:*** ***(i186) No. 3 — (i181) No. 6:***	Is the resistance less than 10 Ω?	Go to step **7**.	Repair the open circuit of harness between A/C CM and intake door actuator.
7	**CHECK OPERATION OF INTAKE DOOR ACTUATOR.** 1) Connect the intake door actuator connector (i186). 2) Ground the A/C CM connector (i181) with a suitable wire. 3) Turn the ignition switch to ON, and check the operation of intake door actuator. ***Connector & terminal*** ***(i181) No. 3 — Chassis ground:***	Does the actuator move to the FRESH side?	Go to step **8**.	Replace the intake door actuator. <Ref. to AC-90, REMOVAL, FRESH/RECIRC Door Actuator.>
8	**CHECK OPERATION OF INTAKE DOOR ACTUATOR.** 1) Turn the ignition switch to OFF. 2) Ground the A/C CM connector (i181) with a suitable wire. 3) Turn the ignition switch to ON, and check the operation of intake door actuator. ***Connector & terminal:*** ***(i181) No. 6 — Chassis ground:***	Does the actuator move to the RECIRC side?	Replace the A/C CM. <Ref. to AC-54, REMOVAL, Control Unit.>	Replace the intake door actuator. <Ref. to AC-90, REMOVAL, FRESH/RECIRC Door Actuator.>

12.UNABLE TO SWITCH VENTS

TROUBLE SYMPTOM:

Unable to switch blow vents.

- Auto dual

Even when the mode switch is operated, outlet opening does not switch to FACE → B/L → FOOT → F/D.

- Manual A/C

Selected mode does not work even when each mode switch is operated.

Trouble causes:

Mode door actuator failure

	Step	Check	Yes	No
1	**CHECK A/C CONTROL PANEL.** 1) Turn the ignition switch to ON. 2) Using the Subaru Select Monitor, check "Mode Door Actuator Position Target" of the current data from the A/C diagnosis. 3) Operate the mode change switch.	Does the value for "Mode Door Actuator Position Target" change?	Go to step **2**.	Replace the A/C control panel. <Ref. to AC-46, REMOVAL, Control Panel.>
2	**CHECK DTC.** 1) Set the mode change switch to DEF, and wait for 16 seconds or more. 2) Read the DTC using Subaru Select Monitor.	Are B1620, B1621 and B1622 displayed?	Perform the diagnosis according to DTC.	Go to step **3**.
3	**CHECK DTC.** 1) Set the mode change switch to VENT, and wait for 16 seconds or more. 2) Using the Subaru Select Monitor, read DTC of A/C CM.	Are B1620, B1621 and B1622 displayed?	Perform the diagnosis according to DTC.	System is normal.

13.ILLUMINATION DOES NOT COME ON OR CANNOT DIM

TROUBLE SYMPTOM:

Even when the lighting switch is operated, the illumination does not come on. Even when the illumination control is operated, the illumination does not dim.

TROUBLE SYMPTOM:

Open circuit in illumination circuit

WIRING DIAGRAM:

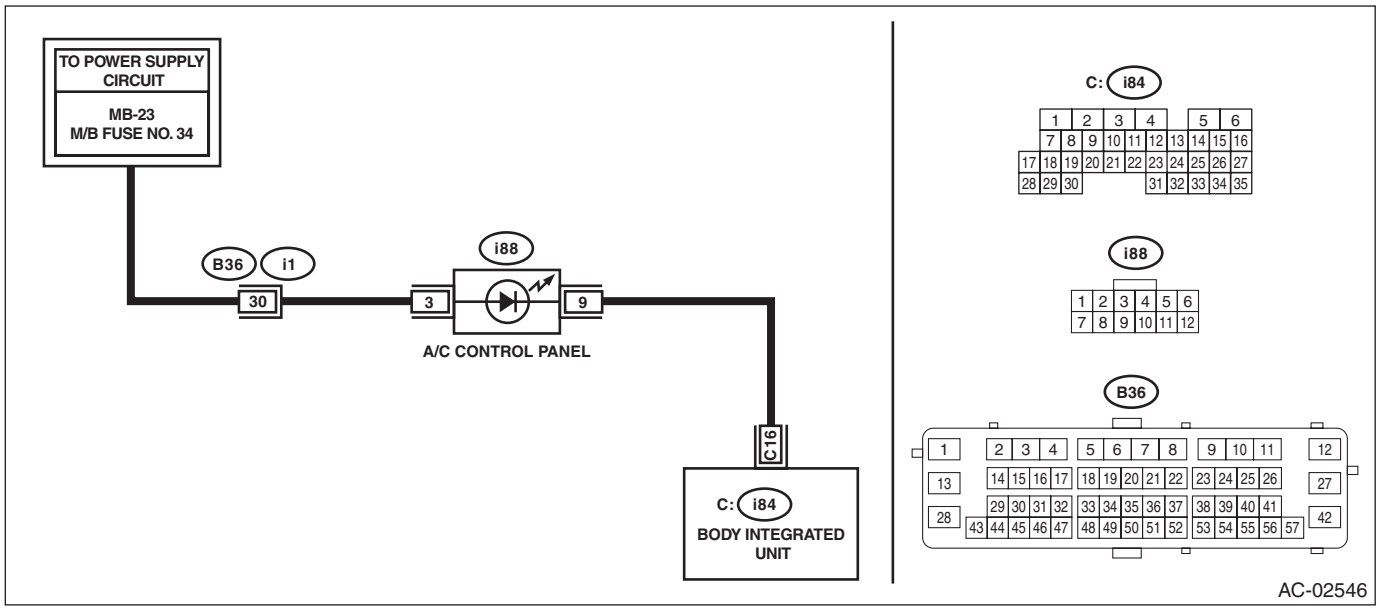

Step		Check	Yes	No
1	**CHECK CONNECTOR.** Check the connectors (i88), (i84) and (B36) for poor contact.	Is there poor contact?	Repair the connector.	Go to step **2**.
2	**CHECK HARNESS.** 1) Turn the ignition switch to ON. 2) Using a tester, measure the voltage between the A/C control panel connector (i88) and chassis ground. ***Connector & terminal*** ***(i88) No. 3 (+) — Chassis ground (–):***	Is the voltage 10 V or more?	Go to step **3**.	Repair or replace the open circuit of harness.
3	**CHECK HARNESS.** 1) Turn the ignition switch to OFF. 2) Measure the resistance between A/C control panel connector (i88) and body integrated unit connector (i84). ***Connector & terminal*** ***(i88) No. 9 — (i84) No. 16:***	Is the resistance less than 10 Ω?	Go to step **4**.	Repair or replace the open circuit of harness.
4	**CHECK A/C CONTROL PANEL UNIT.** Check the A/C control panel. <Ref. to AC-52, INSPECTION, Control Panel.>	Is A/C control panel OK?	A/C control panel illumination circuit is normal.	Replace the A/C control panel. <Ref. to AC-46, REMOVAL, Control Panel.>

7. Diagnostic Procedure for Sensors

A: AMBIENT SENSOR

TROUBLE SYMPTOM:

- Ambient temperature is falsely recognized as 15.2°C, and the compartment temperature is adjusted.
- DTC“22” Faulty ambient sensor, or communication failure is detected.

Trouble causes:

- Ambient sensor failure
- Ambient sensor circuit failure
- CAN communication circuit failure

WIRING DIAGRAM:

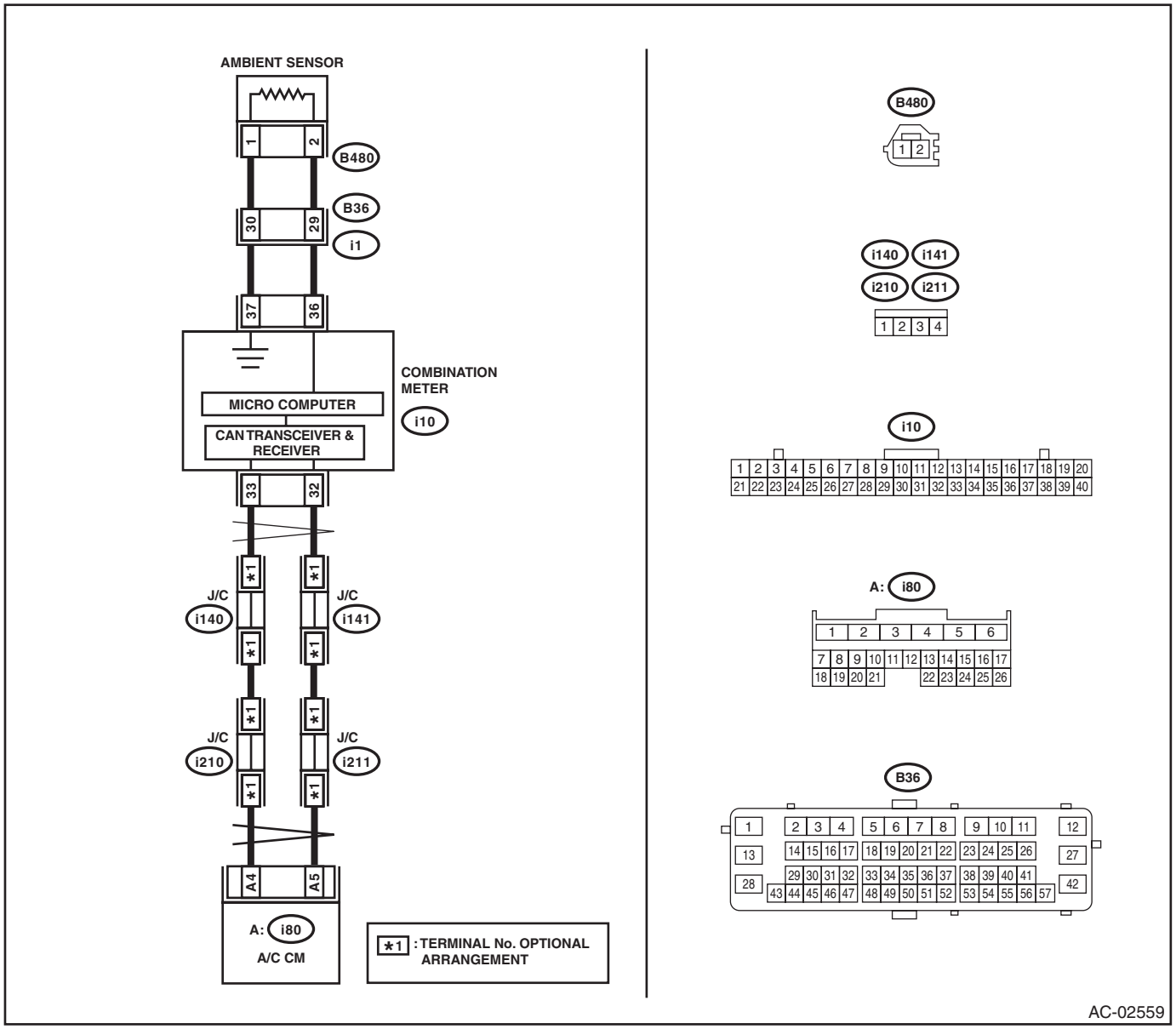

Step		Check	Yes	No
1	**CHECK FOR POOR CONTACT.** Check the A/C CM connector (i80) for poor contact.	Is there poor contact of connector?	Repair the connector.	Go to step **2**.

	Step	Check	Yes	No
2	**CHECK DTC.** 1) Connect the disconnected connectors. 2) Turn the ignition switch to ON. 3) Read the DTC of the CAN system using the Subaru Select Monitor.	Is DTC displayed?	Perform the diagnosis according to the DTC. <Ref. to LAN(diag)-32, List of Diagnostic Trouble Code (DTC).>	Go to step **3**.
3	**CHECK CAN COMMUNICATION CIRCUIT.** Check the CAN communication circuit. <Ref. to LAN(diag)-12, CAN Communication Circuit Check.>	Is the CAN communication circuit normal?	Go to step **4**.	Repair the CAN communication circuit. <Ref. to LAN(diag)-4, LAN SYSTEM, CAUTION, General Description.>
4	**CHECK INPUT SIGNAL FOR AMBIENT SENSOR.** 1) Turn the ignition switch to ON. 2) Measure the voltage between terminals of ambient sensor connector (F138). Disconnect the connector. ***Connector & terminal*** ***(B480) No. 2 (+) — No. 1 (–):***	Is the voltage approx. 5 V?	Go to step **5**.	Check the ambient sensor. <Ref. to AC-79, INSPECTION, Ambient Sensor (Auto A/C Model).>
5	**CHECK COMBINATION METER OUTPUT SIGNAL.** 1) Turn the ignition switch to OFF. 2) Pull out the combination meter. 3) Disconnect the ambient sensor connector (F138). 4) Turn the ignition switch to ON. 5) Measure the voltage between terminals of combination meter connector (i10). ***Connector & terminal*** ***(i10) No. 36 (+) — No. 37 (–):***	Is the voltage approx. 5 V?	Go to step **6**.	Check the combination meter. <Ref. to IDI-5, Combination Meter System.>
6	**CHECK HARNESS CONNECTOR BETWEEN COMBINATION METER AND AMBIENT SENSOR.** 1) Turn the ignition switch to OFF. 2) Disconnect the combination meter connector (i10). 3) Measure the resistance of harness between combination meter connector (i10) and ambient sensor connector (B480). ***Connector & terminal*** ***(B480) No. 2 — (i10) No. 36:*** ***(B480) No. 1 — (i10) No. 37:***	Is the resistance less than 1 Ω?	Ambient sensor circuit is normal.	Repair the open circuit of the harness between the combination meter and ambient sensor.

8. Subaru Select Monitor

A: OPERATION

For details of basic operations, refer to “PC application help for Subaru Select Monitor”.

NOTE:
When initialization communication using Select Monitor is impossible, perform diagnosis according to “Diagnostic Procedure Used When Abnormal Communication with Subaru Select Monitor Occurs”.

9. Read Diagnostic Trouble Code (DTC)

A: OPERATION

For details concerning the operation procedure, refer to “PC application help for Subaru Select Monitor”.

10.Clear Memory Mode

A: OPERATION

For details concerning the operation procedure, refer to “PC application help for Subaru Select Monitor”.

11.Read Current Data

A: OPERATION

For details concerning the operation procedure, refer to “PC application help for Subaru Select Monitor”.

B: LIST

Items to be displayed	Unit of measure	Remarks	Note
Engine Speed	rpm	Data value received by CAN	—
Heater Control Panel Setting Value (Driver’s)	LO: 18°C (64°F) HI: 32°C (90°F)	Control panel display value	Auto A/C
Heater Control Panel Setting Value (Passenger’s)	LO: 18°C (64°F) HI: 32°C (90°F)	Control panel display value	Auto A/C
Blower outlet Door Request Temperature	°C (°F)	A/C CM internal setting value	Auto A/C
Blower outlet request temperature (Driver’s)	°C (°F)	A/C CM internal setting value	Auto A/C
Blower outlet request temperature (Passenger’s)	°C (°F)	A/C CM internal setting value	Auto A/C
Blower Fan Operating Condition	MANU/AUTO	A/C CM input value	Auto A/C
A/C Operating Condition	MANU/AUTO	A/C CM input value	Auto A/C
Fresh/Recircle Air Operating Condition	MANU/AUTO	A/C CM input value	Auto A/C
Mode Operating Condition	MANU/AUTO	A/C CM input value	Auto A/C
Rear Defogger	ON/OFF	A/C CM input value	—
In-vehicle Sensor Temperature	°C (°F)	A/C CM input value	Auto A/C
Evaporator Temperature	°C (°F)	A/C CM input value	—
Quantity of Sunload	W/m^2	A/C CM input value	Auto A/C
Refrigerant Pressure	MPa	A/C CM input value	—
Refrigerant Flow	kg/h	A/C CM input value	—
Air mix door actuator position (driver’s side)	%	A/C CM input value	—
Air mix door actuator position (passenger’s side)	%	A/C CM input value	Auto A/C
Fresh/Recircle Air Door Actuator Position	%	A/C CM input value	—
Mode Door Actuator Position	%	A/C CM input value	—
Heater Water Temperature	°C (°F)	Data value received by CAN	—
Ambient Air Temperature	°C (°F)	Data value received by CAN	—
Vehicle Speed	km/h	Data value received by CAN	—
Accel. Opening Angle	%	Data value received by CAN	—
Target air mix door actuator position (driver’s side)	%	A/C CM input value	—
Target air mix door actuator position (passenger’s side)	%	A/C CM input value	Auto A/C
Fresh/Recircle Air Door Actuator Position Target	%	A/C CM input value	—
Mode Door Actuator Position Target	%	A/C CM input value	—
Blower Fan Level	Level	A/C CM output value	Auto A/C
Variable Flow Change Solenoid Duty	%	A/C CM output value	—
Evaporator Temperature Target	°C (°F)	A/C CM input value	—
Variable Load Compressor Torque Value	Nm	A/C CM input value	—
Request idle engine speed	rpm	A/C CM output value	—

Items to be displayed	Unit of measure	Remarks	Note
Request engine speed	0: Without Request 1: Cooler H 2: Heater H 3: Cooler L 4: Heater L	A/C CM output value	—
Discharge pressure	MPa	A/C CM input value	—
Intake pressure	MPa	A/C CM input value	—
Cooler request distinction	Without Request/With Request	A/C CM output value	—
Heater request distinction	Without Request/With Request	A/C CM output value	—

NOTE:
For detailed operation procedures, refer to “PC application help for Subaru Select Monitor”.

12.Diagnostic Procedure for Subaru Select Monitor Communication

A: COMMUNICATION FOR INITIALIZING IMPOSSIBLE

DIAGNOSIS:
Defective CAN communication circuit
TROUBLE SYMPTOM:
- LAN system is abnormal.
- Communication failure between Subaru Select Monitor and A/C CM

WIRING DIAGRAM:

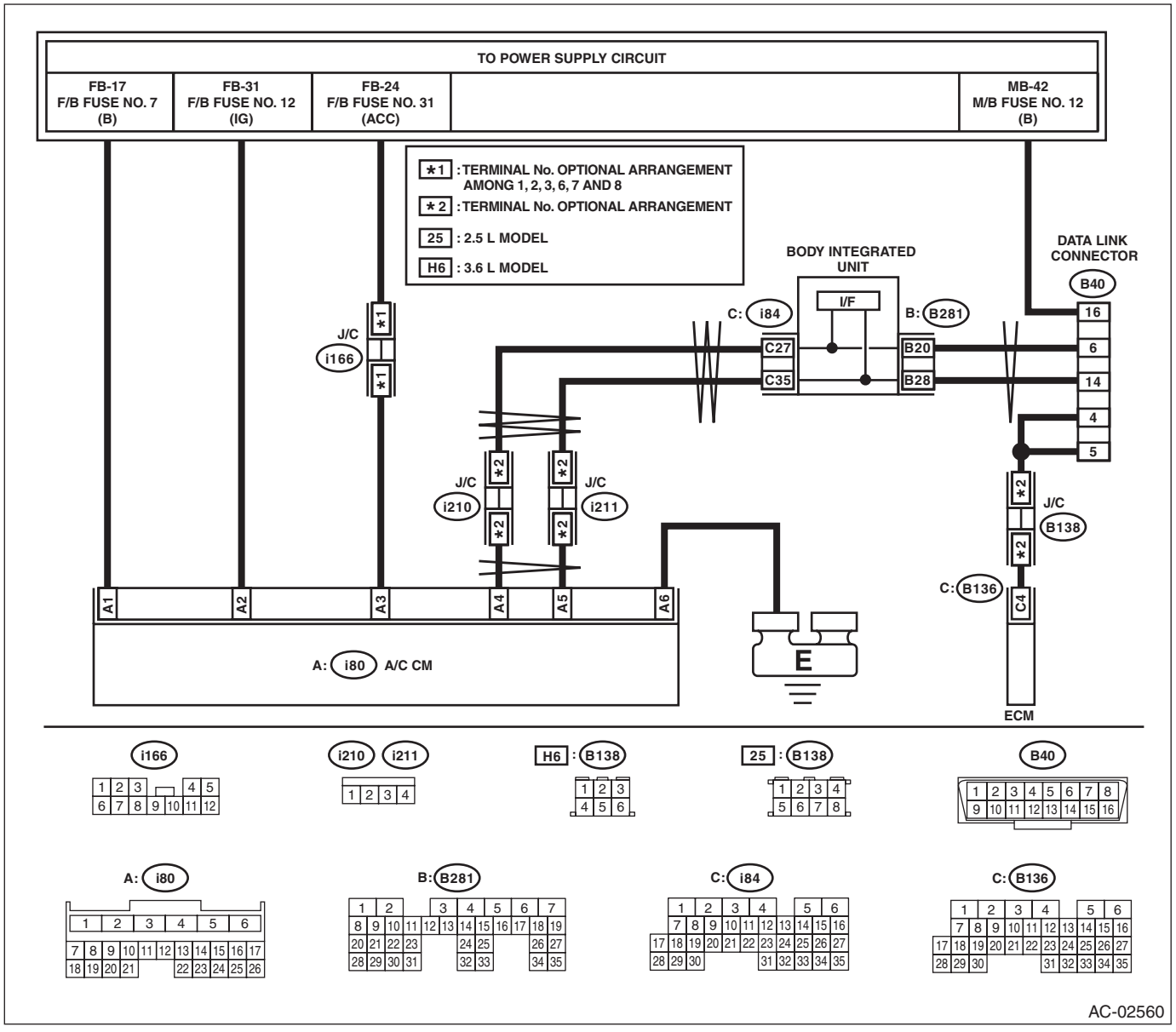

AC-02560

Step		Check	Yes	No
1	**CHECK POWER SUPPLY CIRCUIT.** Connect SDI (Subaru Diagnosis Interface) to the data link connector.	Is SDI powered on?	Go to step **4**.	Go to step **2**.

	Step	Check	Yes	No
2	**CHECK POWER SUPPLY CIRCUIT.** Measure the voltage between data link connector and chassis ground. ***Connector & terminal*** ***(B40) No. 16 (+) — Chassis ground (–):***	Is the voltage 10 V or more?	Go to step **3**.	Repair the power supply circuit. NOTE: In this case, repair the following item: • Open or ground short circuit of harness between battery and data link connector • Blown out of fuse (M/B No. 12)
3	**CHECK HARNESS BETWEEN DATA LINK CONNECTOR AND CHASSIS GROUND.** 1) Turn the ignition switch to OFF. 2) Measure the resistance of harness between data link connector and chassis ground. ***Connector & terminal*** ***(B40) No. 4 — Chassis ground:*** ***(B40) No. 5 — Chassis ground:***	Is the resistance less than 5 Ω?	Repair the poor contact of data link connector.	Repair the harness and connector.
4	**CHECK SUBARU SELECT MONITOR.** 1) Connect the Subaru Select Monitor to a normal vehicle. 2) Start the engine and perform communication between the Subaru Select Monitor and vehicle.	Is communication possible?	Go to step **5**.	Use another Subaru Select Monitor because the CAN communication circuit of the Subaru Select Monitor is faulty.
5	**CHECK CAN COMMUNICATION CIRCUIT.** Check the CAN communication circuit. <Ref. to LAN(diag)-12, CAN Communication Circuit Check.>	Is the CAN communication circuit normal?	Go to step **6**.	Repair the CAN communication circuit.
6	**CHECK CONNECTOR.** Check the power supply circuit connectors (i166) and (i80) for poor contact.	Is there poor contact of connector?	Repair the connector.	Go to step **7**.
7	**CHECK FUSE.** 1) Turn the ignition switch to OFF. 2) Remove the fuses No. 7, No. 12 and No. 31 from main fuse box. 3) Check the fuse.	Is the fuse blown out?	Replace the fuse.	Go to step **8**.
8	**CHECK A/C CM POWER SUPPLY CIRCUIT.** 1) Install the A/C control panel. 2) Disconnect the A/C CM connector. 3) Measure the voltage between A/C CM connector terminal and chassis ground after turning the ignition switch to ON. ***Connector & terminal*** ***(i80) No. 1 (+) — Chassis ground (–):*** ***(i80) No. 2 (+) — Chassis ground (–):*** ***(i80) No. 3 (+) — Chassis ground (–):***	Is the voltage 10 V or more?	Go to step **9**.	Check for open or short circuit in the harness between A/C CM and fuse.
9	**CHECK A/C CM GROUND CIRCUIT.** Measure the resistance of harness between A/C CM and chassis ground. ***Connector & terminal*** ***(i80) No. 6 — Chassis ground:***	Is the resistance less than 5 Ω?	Check the connection between the data link connector and Subaru Select Monitor.	Repair the harness for ground line.

13.List of Diagnostic Trouble Code (DTC)

A: LIST

NOTE:
When the sunload sensor check is performed indoors or in the shade, it could be diagnosed as having an open circuit. Always check the sunload sensor in direct sunlight.

DTC	Item	Content of diagnosis	Note
B1601	In-Vehicle Sensor Short	In-vehicle air temperature sensor circuit is shorted.	<Ref. to AC(diag)-55, DTC B1601 IN-VEHICLE SENSOR SHORT, Diagnostic Procedure with Diagnostic Trouble Code (DTC).>
B1602	In-Vehicle Sensor Open	In-vehicle air temperature sensor circuit is open.	<Ref. to AC(diag)-56, DTC B1602 IN-VEHICLE SENSOR OPEN, Diagnostic Procedure with Diagnostic Trouble Code (DTC).>
B1603	Evaporator Sensor Short	Post evaporator sensor circuit is shorted.	<Ref. to AC(diag)-57, DTC B1603 EVAPORATOR SENSOR SHORT, Diagnostic Procedure with Diagnostic Trouble Code (DTC).>
B1604	Evaporator Sensor Open	Post evaporator sensor circuit is open.	<Ref. to AC(diag)-58, DTC B1604 EVAPORATOR SENSOR OPEN, Diagnostic Procedure with Diagnostic Trouble Code (DTC).>
B1605	Refrigerant Flow Sensor Circuit Open	Pressure sensor circuit is open.	*2 <Ref. to AC(diag)-59, DTC B1605 REFRIGERANT FLOW SENSOR CIRCUIT OPEN, Diagnostic Procedure with Diagnostic Trouble Code (DTC).>
B1606	Refrigerant Flow Sensor Circuit Short	Pressure sensor circuit is shorted.	*2 <Ref. to AC(diag)-61, DTC B1606 REFRIGERANT FLOW SENSOR CIRCUIT SHORT, Diagnostic Procedure with Diagnostic Trouble Code (DTC).>
B1607	Sunload Sensor Short	Sunload sensor circuit is shorted.	*1 <Ref. to AC(diag)-62, DTC B1607 SUNLOAD SENSOR SHORT, Diagnostic Procedure with Diagnostic Trouble Code (DTC).>
B1608	Sunload Sensor Open	Sunload sensor circuit is open.	*1, *2 <Ref. to AC(diag)-63, DTC B1608 SUNLOAD SENSOR OPEN, Diagnostic Procedure with Diagnostic Trouble Code (DTC).>
B1610	Airmix Door Actuator Potentiometer Circuit Open (Driver's)	Airmix door actuator potentiometer circuit is open.	<Ref. to AC(diag)-65, DTC B1610 AIRMIX DOOR ACTUATOR POTENTIOMETER CIRCUIT OPEN (DRIVER'S), Diagnostic Procedure with Diagnostic Trouble Code (DTC).>
B1611	Airmix Door Actuator Potentiometer Circuit Short (Driver's)	Airmix door actuator potentiometer circuit is shorted.	<Ref. to AC(diag)-67, DTC B1611 AIRMIX DOOR ACTUATOR POTENTIOMETER CIRCUIT SHORT (DRIVER'S), Diagnostic Procedure with Diagnostic Trouble Code (DTC).>
B1612	Airmix Door Actuator Lock (Driver's)	Mode door actuator is locked.	<Ref. to AC(diag)-68, DTC B1612 AIRMIX DOOR ACTUATOR LOCK (DRIVER'S), Diagnostic Procedure with Diagnostic Trouble Code (DTC).>
B1613	Airmix Door Actuator Potentiometer Circuit Open (Passenger's)	Airmix door actuator potentiometer circuit is open.	<Ref. to AC(diag)-70, DTC B1613 AIRMIX DOOR ACTUATOR POTENTIOMETER CIRCUIT OPEN (PASSENGER'S), Diagnostic Procedure with Diagnostic Trouble Code (DTC).>
B1614	Airmix Door Actuator Potentiometer Circuit Short (Passenger's)	Airmix door actuator potentiometer circuit is shorted.	<Ref. to AC(diag)-72, DTC B1614 AIRMIX DOOR ACTUATOR POTENTIOMETER CIRCUIT SHORT (PASSENGER'S), Diagnostic Procedure with Diagnostic Trouble Code (DTC).>
B1615	Airmix Door Actuator Lock (Passenger's)	Mode door actuator is locked.	<Ref. to AC(diag)-74, DTC B1615 AIRMIX DOOR ACTUATOR LOCK (PASSENGER'S), Diagnostic Procedure with Diagnostic Trouble Code (DTC).>
B1620	Mode Door Actuator Potentiometer Circuit Open	Mode door actuator potentiometer circuit is open.	<Ref. to AC(diag)-76, DTC B1620 MODE DOOR ACTUATOR POTENTIOMETER CIRCUIT OPEN, Diagnostic Procedure with Diagnostic Trouble Code (DTC).>

DTC	Item	Content of diagnosis	Note
B1621	Mode Door Actuator Potentiometer Circuit Short	Mode door actuator potentiometer circuit is shorted.	<Ref. to AC(diag)-77, DTC B1621 MODE DOOR ACTUATOR POTENTIOMETER CIRCUIT SHORT, Diagnostic Procedure with Diagnostic Trouble Code (DTC).>
B1622	Mode Door Actuator Lock	Mode door actuator is locked.	<Ref. to AC(diag)-78, DTC B1622 MODE DOOR ACTUATOR LOCK, Diagnostic Procedure with Diagnostic Trouble Code (DTC).>
U0001	CAN Communication Bus Off	CAN communication bus off	*2 <Ref. to AC(diag)-83, DTC U0001 CAN COMMUNICATION BUS OFF, Diagnostic Procedure with Diagnostic Trouble Code (DTC).>
U0002	CAN Communication Error	CAN communication error	*2 <Ref. to AC(diag)-83, DTC U0002 CAN COMMUNICATION ERROR, Diagnostic Procedure with Diagnostic Trouble Code (DTC).>
U0028	Heater Control Panel Communication Error	Communication with heater control panel is faulty.	*2 <Ref. to AC(diag)-80, DTC U0028 HEATER CONTROL PANEL COMMUNICATION ERROR, Diagnostic Procedure with Diagnostic Trouble Code (DTC).>
B1641	Refrigerant Flow Sensor Circuit Short	Refrigerant flow sensor circuit is shorted.	*2 <Ref. to AC(diag)-84, DTC B1641 REFRIGERANT FLOW SENSOR CIRCUIT SHORT, Diagnostic Procedure with Diagnostic Trouble Code (DTC).>
B1642	Refrigerant Flow Sensor Circuit Open	Refrigerant flow sensor circuit is open.	*2 <Ref. to AC(diag)-85, DTC B1642 REFRIGERANT FLOW SENSOR CIRCUIT OPEN, Diagnostic Procedure with Diagnostic Trouble Code (DTC).>
B1643	Variable Flow Change Solenoid Duty Circuit Abnormal	Variable flow change solenoid duty circuit is open or shorted.	*2 <Ref. to AC(diag)-87, DTC B1643 VARIABLE FLOW CHANGE SOLENOID DUTY CIRCUIT ABNORMAL, Diagnostic Procedure with Diagnostic Trouble Code (DTC).>
B1644	Refrigerant Not Sealed Drive Error	Compressor is rotated before filling refrigerant.	Displays when delivery mode only. <Ref. to AC(diag)-89, DTC B1644 REFRIGERANT NOT SEALED DRIVE ERROR, Diagnostic Procedure with Diagnostic Trouble Code (DTC).>

NOTE:
*1: When the sunload sensor inspection is performed indoors or in the shade, it may be diagnosed as having an open circuit due to an insufficient light volume. In this case, check the sunload sensor at a location exposed to direct sunlight.
*2: Displays current malfunction only.

14.Diagnostic Procedure with Diagnostic Trouble Code (DTC)

A: DTC B1601 IN-VEHICLE SENSOR SHORT

DTC DETECTING CONDITION:
In-vehicle sensor circuit is shorted.
TROUBLE SYMPTOM:
- In-vehicle air temperature is falsely recognized as 25°C (77°F), and the compartment temperature is adjusted.
- DTC “B1601” Short-circuit in in-vehicle sensor was detected.
- DTC “-21” Short-circuit in in-vehicle sensor was detected.

WIRING DIAGRAM:

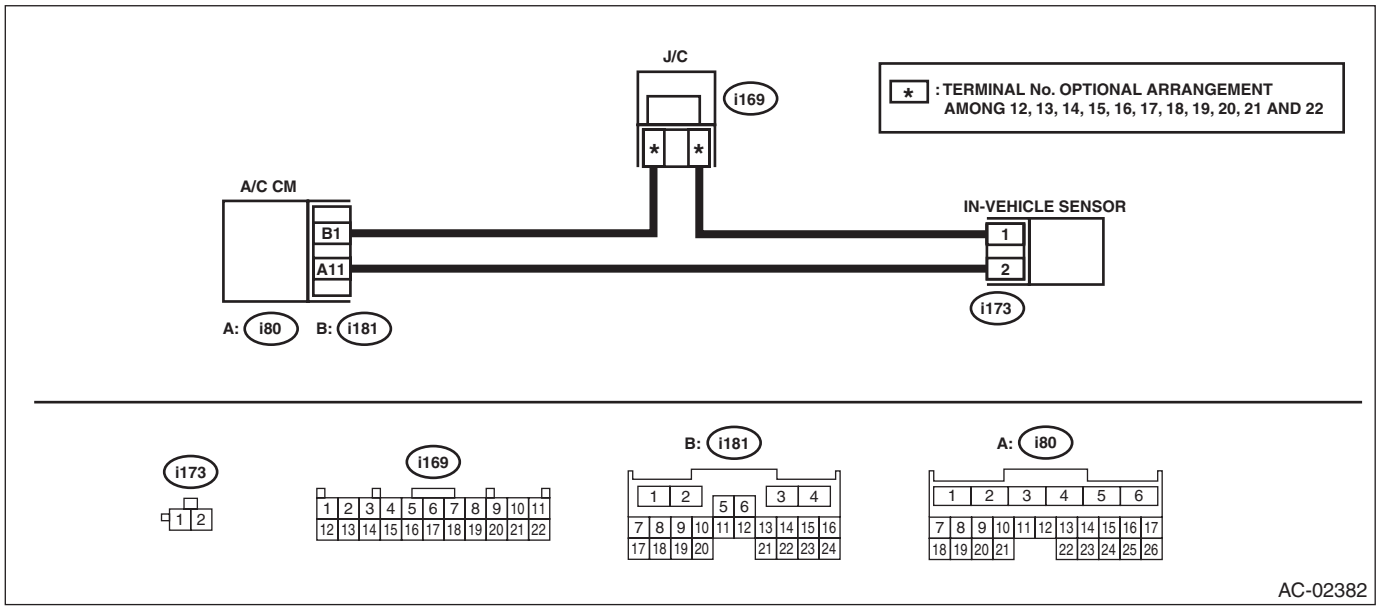

Step		Check	Yes	No
1	**CHECK CONNECTOR.** 1) Check the condition of connector connection. 2) Read the DTC using Subaru Select Monitor.	Is B1601 displayed?	Go to step **2**.	Check the connection of the in-vehicle sensor circuit.
2	**CHECK IN-VEHICLE SENSOR.** 1) Disconnect the in-vehicle sensor. <Ref. to AC-82, REMOVAL, In-Vehicle Sensor (Auto A/C Model).> 2) Read the DTC of the A/C ECM using the Subaru Select Monitor.	Is B1602 displayed?	Replace the in-vehicle sensor. <Ref. to AC-82, REMOVAL, In-Vehicle Sensor (Auto A/C Model).>	Go to step **3**.
3	**CHECK HARNESS.** 1) Turn the ignition switch to ON. 2) Using the tester, measure the voltage between terminals. ***Connector & terminal*** ***(i173) No. 2 (+) — No. 1 (–):***	Is the voltage 4.5 — 5.0 V?	Check the connection of the in-vehicle sensor circuit.	Go to step **4**.
4	**CHECK HARNESS.** 1) Disconnect the connector from A/C CM. 2) Using a tester, check continuity between terminals. ***Connector & terminal*** ***(i173) No. 1 — No. 2:***	Is there continuity?	Repair or replace the short circuit of the harness.	Replace the A/C CM. <Ref. to AC-54, REMOVAL, Control Unit.>

B: DTC B1602 IN-VEHICLE SENSOR OPEN

DTC DETECTING CONDITION:
In-vehicle sensor circuit is open.
TROUBLE SYMPTOM:
- In-vehicle air temperature is falsely recognized as 25°C (77°F), and the compartment temperature is adjusted.
- DTC “B1602” Open circuit in in-vehicle sensor was detected.
- DTC “21” Open circuit in in-vehicle sensor was detected.

WIRING DIAGRAM:

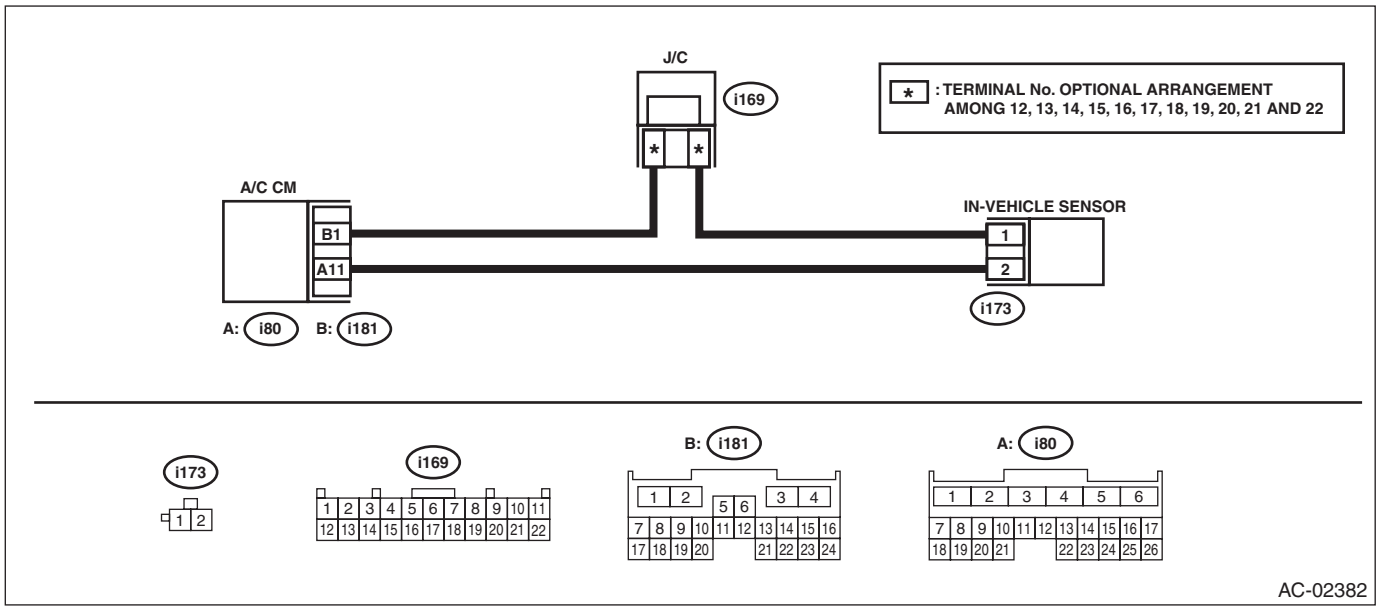

Step		Check	Yes	No
1	**CHECK CONNECTOR.** 1) Check the condition of connector connection. 2) Read the DTC using Subaru Select Monitor.	Is B1602 displayed?	Go to step **2**.	Check the connection of the in-vehicle sensor circuit.
2	**CHECK IN-VEHICLE SENSOR.** 1) Disconnect the in-vehicle sensor. 2) Short the connector i173. 3) Read the DTC of the A/C ECM using the Subaru Select Monitor.	Is B1601 displayed?	Replace the in-vehicle sensor. <Ref. to AC-82, REMOVAL, In-Vehicle Sensor (Auto A/C Model).>	Go to step **3**.
3	**CHECK HARNESS.** 1) Turn the ignition switch to ON. 2) Using the tester, measure the voltage between terminals. ***Connector & terminal*** ***(i173) No. 2 (+) — No. 1 (–):***	Is the voltage 4.5 — 5.0 V?	Go to step **4**.	Repair or replace the open circuit of harness.
4	**CHECK HARNESS.** 1) Disconnect the connector from A/C CM. 2) Using a tester, check continuity between terminals. ***Connector & terminal*** ***(i173) No. 1 — (i181) No. 1:*** ***(i173) No. 2 — (i80) No. 11:***	Is there continuity?	Replace the A/C CM. <Ref. to AC-54, REMOVAL, Control Unit.>	Repair or replace the open circuit of harness.

C: DTC B1603 EVAPORATOR SENSOR SHORT

DTC DETECTING CONDITION:
Evaporator sensor circuit is shorted.

TROUBLE SYMPTOM:
- Compressor does not operate. (Variable compressor)
- Evaporator temperature is falsely recognized as high, and the compartment temperature is adjusted.
- DTC “B1603” Short-circuit in evaporator sensor was detected.
- DTC “-23” Short-circuit in evaporator sensor was detected.

WIRING DIAGRAM:

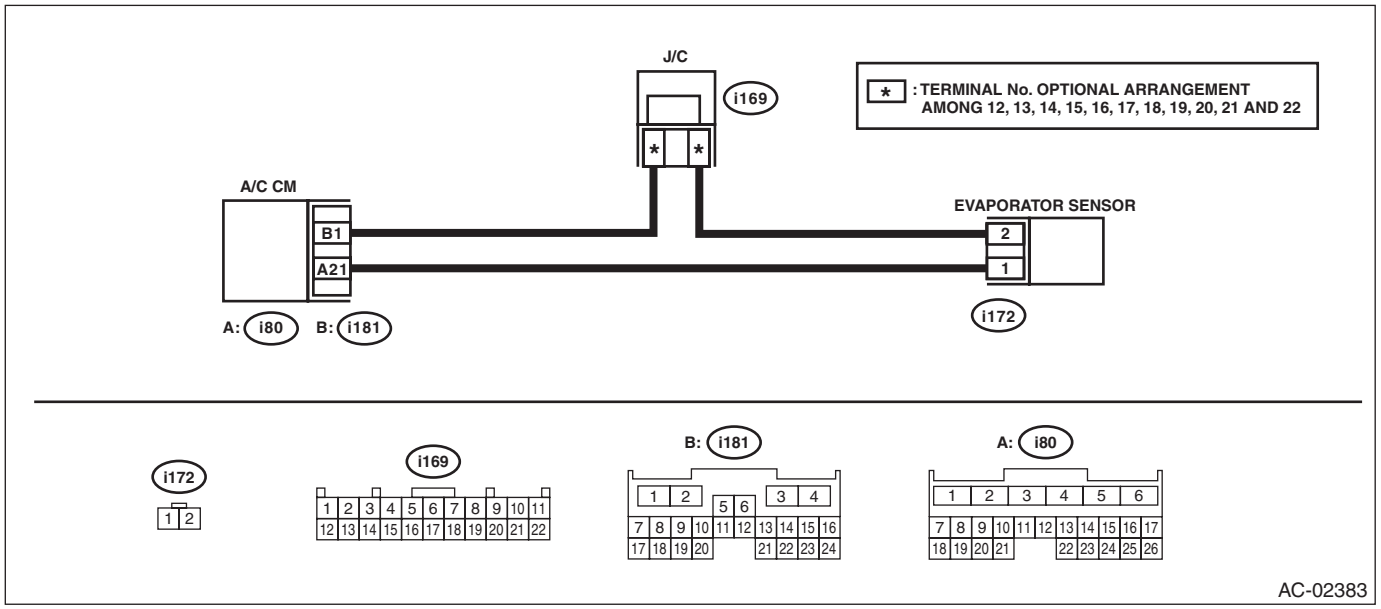

	Step	Check	Yes	No
1	**CHECK CONNECTOR.** 1) Check the condition of connector connection. 2) Read the DTC using Subaru Select Monitor.	Is B1603 displayed?	Go to step **2**.	Check the connection of the evaporator sensor circuit.
2	**CHECK EVAPORATOR SENSOR.** 1) Disconnect the evaporator sensor. 2) Read the DTC of the A/C ECM using the Subaru Select Monitor.	Is B1604 displayed?	Replace the evaporator sensor. <Ref. to AC-66, REMOVAL, Evaporator.>	Go to step **3**.
3	**CHECK HARNESS.** 1) Turn the ignition switch to ON. 2) Using the tester, measure the voltage between terminals. ***Connector & terminal (i172) No. 1 (+) — No. 2 (–):***	Is the voltage 4.5 — 5.0 V?	Check the connection of the evaporator sensor circuit.	Go to step **4**.
4	**CHECK HARNESS.** 1) Disconnect the connector from A/C CM. 2) Using a tester, check continuity between terminals. ***Connector & terminal (i172) No. 1 — No. 2:***	Is there continuity?	Repair or replace the short circuit of the harness.	Replace the A/C CM. <Ref. to AC-54, REMOVAL, Control Unit.>

D: DTC B1604 EVAPORATOR SENSOR OPEN

DTC DETECTING CONDITION:
Evaporator sensor circuit is open.
TROUBLE SYMPTOM:
- Compressor does not operate.
- Evaporator temperature is falsely recognized as low, and the compartment temperature is adjusted.
- DTC “B1604” Open circuit in evaporator sensor was detected.
- DTC “23” Open circuit in evaporator sensor was detected.

WIRING DIAGRAM:

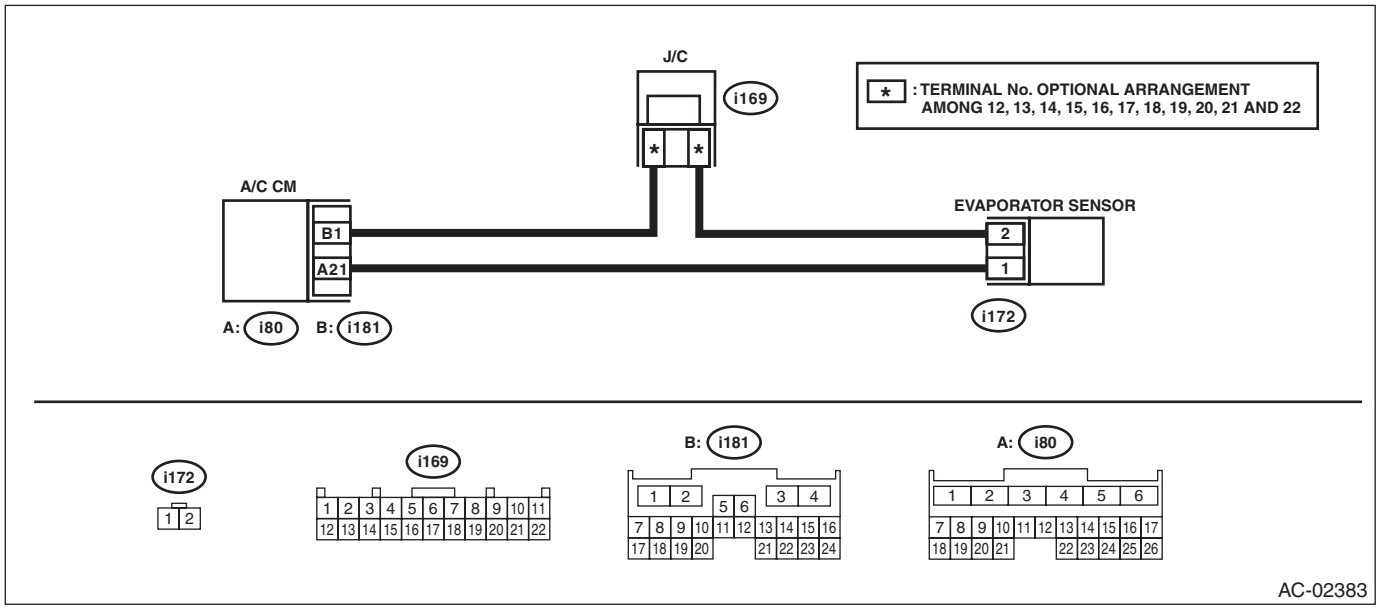

	Step	Check	Yes	No
1	**CHECK CONNECTOR.** 1) Check the condition of connector connection. 2) Read the DTC using Subaru Select Monitor.	Is B1604 displayed?	Go to step **2**.	Check the connection of the evaporator sensor circuit.
2	**CHECK EVAPORATOR SENSOR.** 1) Disconnect the evaporator sensor. 2) Short the i172 connector. 3) Read the DTC of the A/C ECM using the Subaru Select Monitor.	Is B1603 displayed?	Replace the evaporator sensor. <Ref. to AC-66, REMOVAL, Evaporator.>	Go to step **3**.
3	**CHECK HARNESS.** 1) Turn the ignition switch to ON. 2) Using the tester, measure the voltage between terminals. ***Connector & terminal*** ***(i172) No. 1 (+) — No. 2 (–):***	Is the voltage 4.5 — 5.0 V?	Go to step **4**.	Repair or replace the open circuit of harness.
4	**CHECK HARNESS.** 1) Disconnect the connector from A/C CM. 2) Using a tester, check continuity between terminals. ***Connector & terminal*** ***(i172) No. 1 — (i80) No. 21:*** ***(i172) No. 2 — (i181) No. 1:***	Is there continuity?	Replace the A/C CM. <Ref. to AC-54, REMOVAL, Control Unit.>	Repair or replace the open circuit of harness.

E: DTC B1605 REFRIGERANT FLOW SENSOR CIRCUIT OPEN

DTC DETECTING CONDITION:
Refrigerant pressure sensor circuit is open.

TROUBLE SYMPTOM:
- Compressor does not operate. (Variable compressor)
- DTC “B1605” Open circuit in refrigerant pressure sensor was detected.
- DTC “42” Open circuit in refrigerant pressure sensor was detected.

WIRING DIAGRAM:

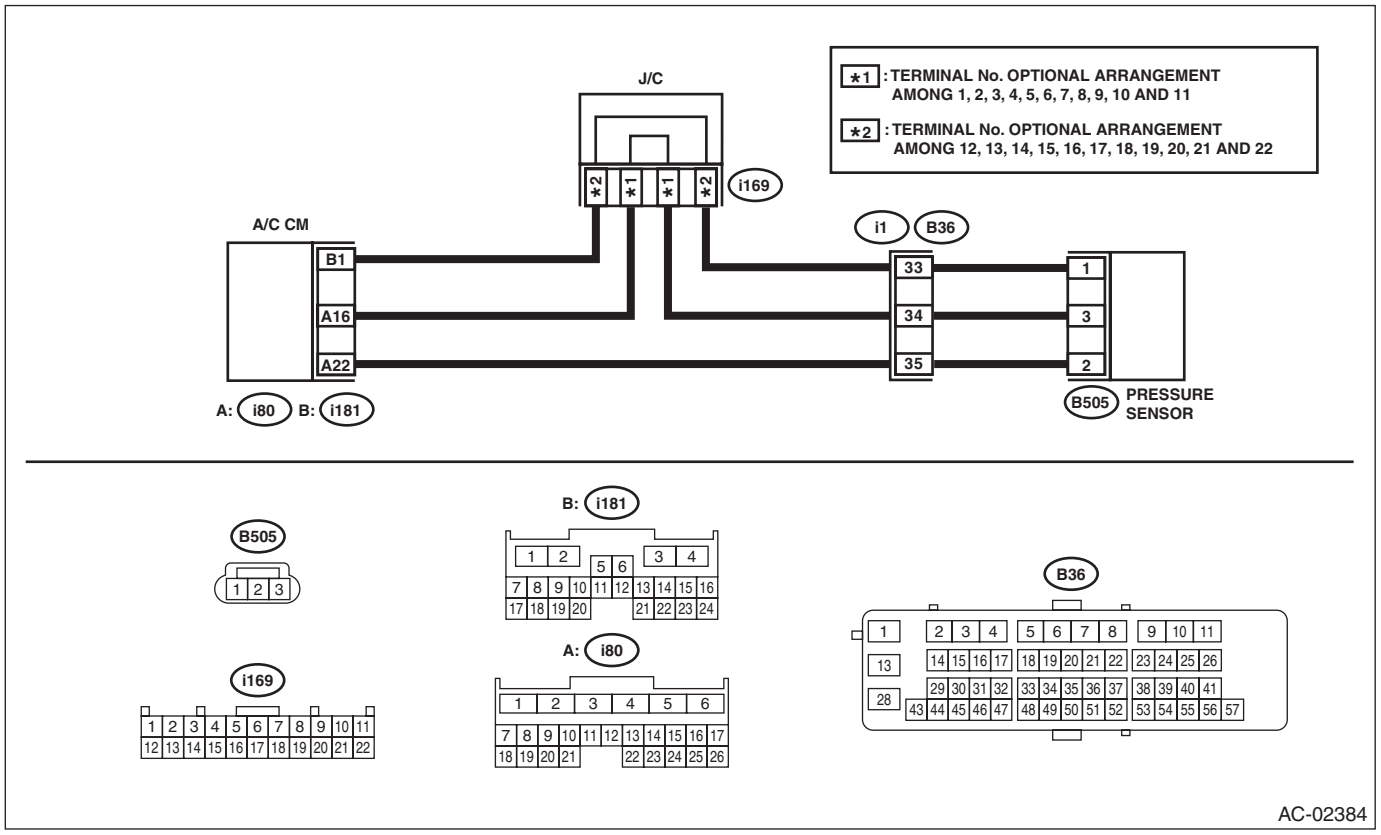

AC-02384

Step		Check	Yes	No
1	**CHECK CONNECTOR.** 1) Check the condition of connector connection. 2) Read the DTC using Subaru Select Monitor.	Is B1605 displayed?	Go to step **2**.	Check the connection of the refrigerant pressure sensor circuit.
2	**CHECK PRESSURE SENSOR.** 1) Disconnect the pressure sensor. 2) Short No. 1 and No. 2 of B505 connector. 3) Read the DTC of the A/C ECM using the Subaru Select Monitor.	Is B1606 displayed?	Replace the refrigerant pressure sensor. <Ref. to AC-76, REMOVAL, Hose and Pipe.>	Go to step **3**.
3	**CHECK HARNESS.** 1) Turn the ignition switch to ON. 2) Using the tester, measure the voltage between terminals. ***Connector & terminal (B505) No. 3 (+) — No. 1 (–):***	Is the voltage 4.5 — 5.0 V?	Go to step **4**.	Repair or replace the open circuit of harness.

Step		Check	Yes	No
4	**CHECK HARNESS.** 1) Disconnect the connector from A/C CM. 2) Using a tester, check continuity between terminals. ***Connector & terminal*** ***(B505) No. 1 — (i181) No. 1:*** ***(B505) No. 2 — (i80) No. 22:*** ***(B505) No. 3 — (i80) No. 16:***	Is there continuity?	Replace the A/C CM. <Ref. to AC-54, REMOVAL, Control Unit.>	Repair or replace the open circuit of harness.

F: DTC B1606 REFRIGERANT FLOW SENSOR CIRCUIT SHORT

DTC DETECTING CONDITION:
Refrigerant pressure sensor circuit is shorted.

TROUBLE SYMPTOM:
- Compressor does not operate. (Variable compressor)
- DTC “B1606” Short-circuit in refrigerant pressure sensor was detected.
- DTC “-42” Short-circuit in refrigerant pressure sensor was detected.

WIRING DIAGRAM:

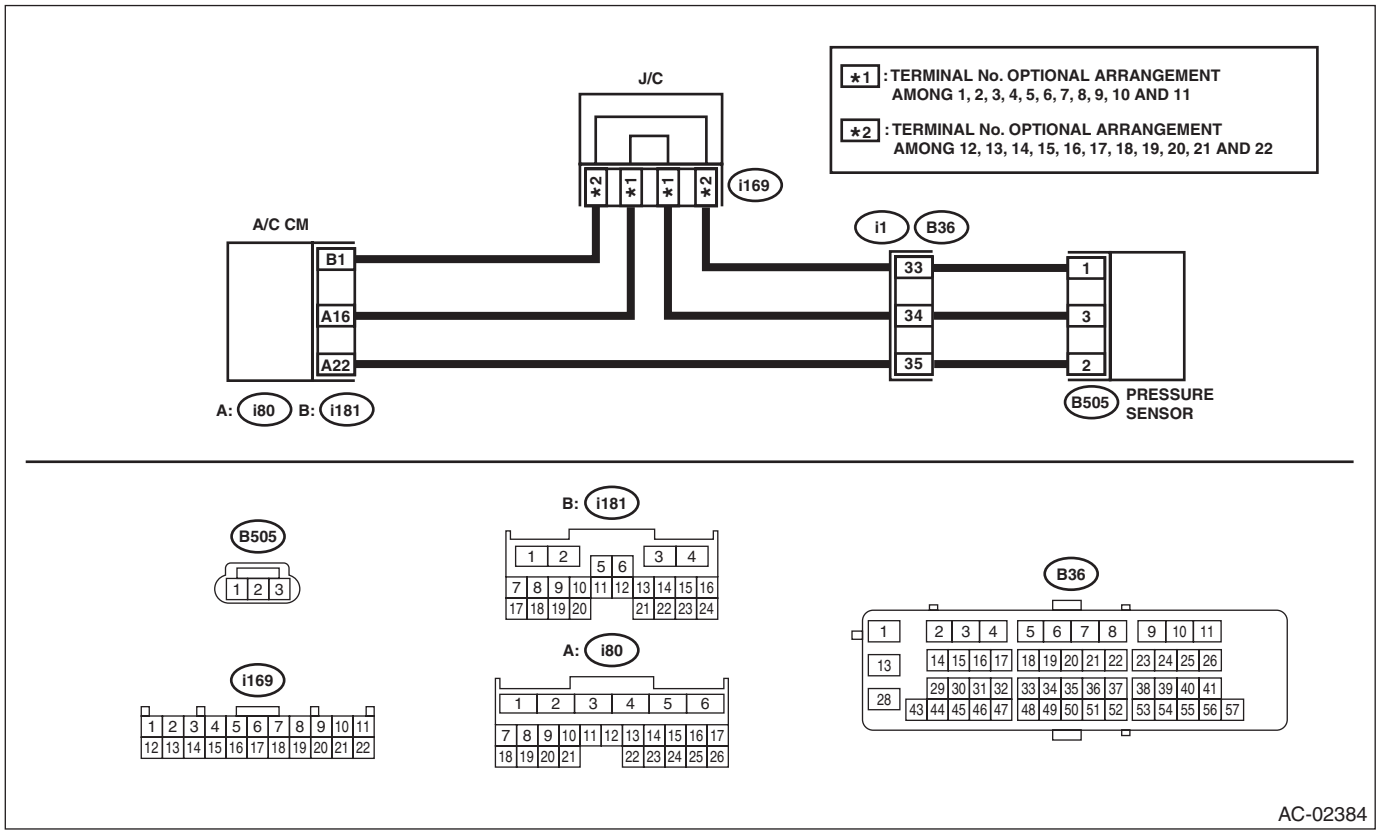

AC-02384

Step		Check	Yes	No
1	**CHECK CONNECTOR.** 1) Check the condition of connector connection. 2) Read the DTC using Subaru Select Monitor.	Is B1606 displayed?	Go to step **2**.	Check the connection of the refrigerant pressure sensor circuit.
2	**CHECK REFRIGERANT PRESSURE SENSOR.** 1) Disconnect the refrigerant pressure sensor. 2) Read the DTC of the A/C ECM using the Subaru Select Monitor.	Is B1605 displayed?	Replace the refrigerant pressure sensor. <Ref. to AC-76, REMOVAL, Hose and Pipe.>	Go to step **3**.
3	**CHECK HARNESS.** 1) Disconnect the connector from A/C CM. 2) Using a tester, check continuity between terminals. ***Connector & terminal*** ***(B505) No. 1 — No. 2:*** ***(B505) No. 2 — Chassis ground:***	Is there continuity?	Repair or replace the short circuit of the harness.	Replace the A/C CM. <Ref. to AC-54, REMOVAL, Control Unit.>

G: DTC B1607 SUNLOAD SENSOR SHORT

DTC DETECTING CONDITION:
Sunload sensor circuit is shorted.

TROUBLE SYMPTOM:
- Operation is performed as no sunload.
- DTC “B1607” Short-circuit in sunload sensor was detected.
- DTC “-25” Short-circuit in sunload sensor was detected.
- DTC “-45” Short-circuit in sunload sensor (auto light control) was detected.

WIRING DIAGRAM:

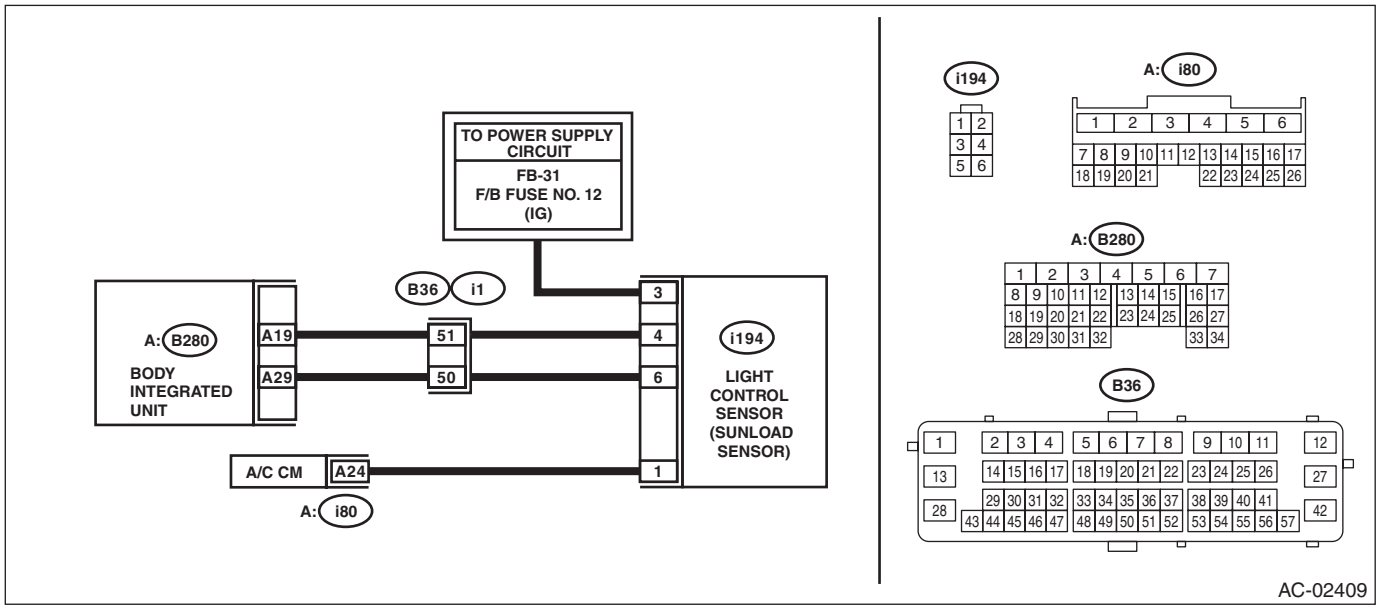

Step		Check	Yes	No
1	**CHECK CONNECTOR.** 1) Check the condition of connector connection. 2) Read the DTC using Subaru Select Monitor.	Is B1607 displayed?	Go to step **2**.	Check the connection of the sunload sensor circuit.
2	**CHECK SUNLOAD SENSOR.** 1) Disconnect the sunload sensor. 2) Read the DTC of the A/C ECM using the Subaru Select Monitor.	Is B1608 displayed?	Replace the sunload sensor. <Ref. to AC-80, REMOVAL, Sunload Sensor (Auto A/C Model).>	Go to step **3**.
3	**CHECK HARNESS.** 1) Turn the ignition switch to ON. 2) Using the tester, measure the voltage between terminals. ***Connector & terminal*** ***(i194) No. 3 (+) — No. 1 (–):***	Is the voltage 10 V or more?	Check the connection of the sunload sensor circuit.	Go to step **4**.
4	**CHECK HARNESS.** 1) Disconnect the connector from A/C CM. 2) Using a tester, check continuity between terminals. ***Connector & terminal*** ***(i194) No. 3 — 1:***	Is there continuity?	Repair or replace the short circuit of the harness.	Replace the A/C CM. <Ref. to AC-54, REMOVAL, Control Unit.>

H: DTC B1608 SUNLOAD SENSOR OPEN

DTC DETECTING CONDITION:
Sunload sensor circuit is open. (Displayed for current malfunction)

NOTE:
When the sunload sensor check is performed indoors or in the shade, it could be diagnosed as having an open circuit. Always check the sunload sensor in direct sunlight.

TROUBLE SYMPTOM:
- Operation is performed as no sunload.
- DTC “B1608” Open circuit in sunload sensor was detected.
- DTC “25” Open circuit in sunload sensor was detected.
- DTC “45” Open circuit in sunload sensor (auto light control) was detected.

WIRING DIAGRAM:

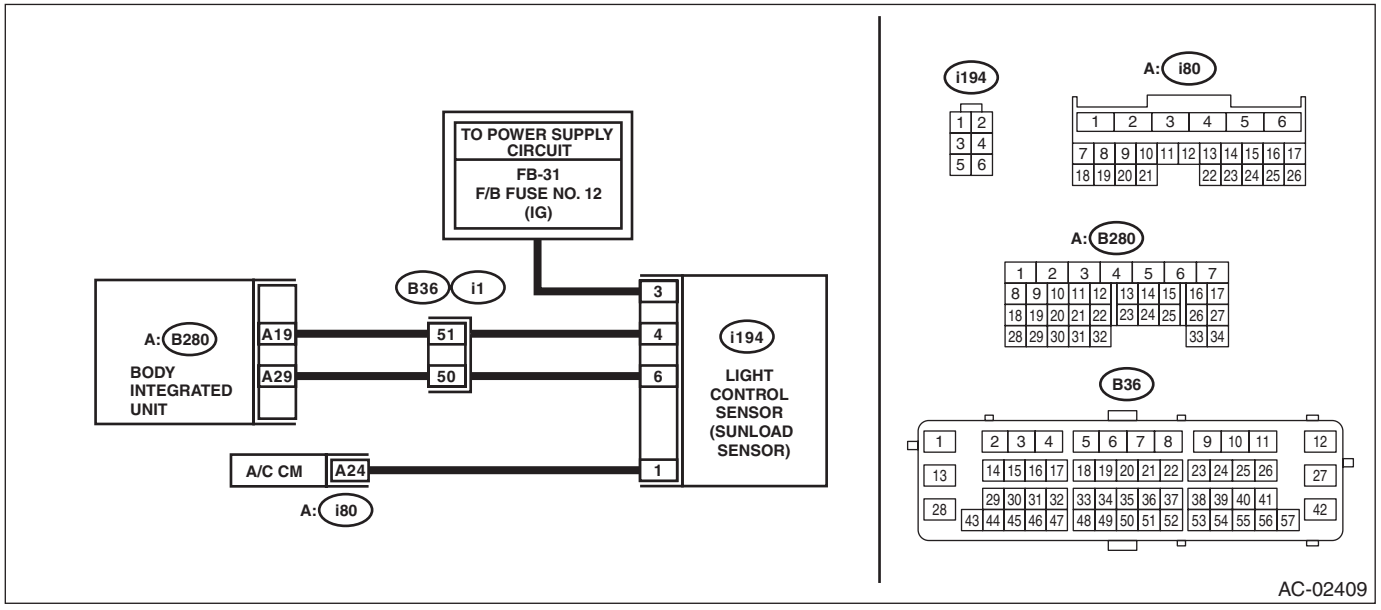

Step		Check	Yes	No
1	**CHECK CONNECTOR.** Read the DTC of the A/C CM using the Subaru Select Monitor.	Is B1608 displayed?	Go to step **2**.	Check the connection of the sunload sensor circuit.
2	**CHECK HARNESS.** 1) Disconnect the sunload sensor. 2) Using a tester, check continuity between terminals. ***Connector & terminal*** ***(i194) No. 6 — Chassis ground:***	Is there continuity?	Go to step **3**.	Repair or replace the open circuit of harness.
3	**CHECK HARNESS.** 1) Turn the ignition switch to ON. 2) Using the tester, measure the voltage between terminals. ***Connector & terminal*** ***(i194) No. 3 (+) — No. 6 (–):***	Is the voltage 10.0 — 14.0 V?	Go to step **4**.	Repair or replace the open circuit of harness.

	Step	Check	Yes	No
4	**CHECK SUNLOAD SENSOR.** 1) Connect the sunload sensor. 2) Turn the ignition switch to ON. 3) Using the tester, measure the voltage between terminals. **CAUTION:** **Because the sensor may not respond if the light intensity is weak, use the incandescent light for check and bring it in 30 cm or less from the sensor to measure the voltage.** ***Connector & terminal*** ***(i194) No. 1 (+) — No. 6 (–):***	When the sunlight does not directly shine on (sensor covered with cloth): 0.8 V or less, and when the incandescent light for check is close to the sensor: 0.8 — 4.3 V±0.3 V (depending on light intensity)	Go to step **5**.	Replace the sunload sensor. <Ref. to AC-80, REMOVAL, Sunload Sensor (Auto A/C Model).>
5	**CHECK HARNESS.** 1) Disconnect the sunload sensor. 2) Disconnect the connector from A/C CM. 3) Using a tester, check continuity between terminals. ***Connector & terminal*** ***(i194) No. 1 — (i80) No. 24:***	Is there continuity?	Go to step **6**.	Repair or replace the open circuit of harness.
6	**CHECK HARNESS.** 1) Using a tester, check continuity between terminals. ***Connector & terminal*** ***(i194) No. 3 — (B280) No. 9:***	Is there continuity?	Repair or replace the open circuit of harness.	Replace the A/C CM. <Ref. to AC-54, REMOVAL, Control Unit.>

I: DTC B1610 AIRMIX DOOR ACTUATOR POTENTIOMETER CIRCUIT OPEN (DRIVER'S)

DTC DETECTING CONDITION:
Air mix door actuator potentiometer circuit is open.
TROUBLE SYMPTOM:
- Temperature cannot be adjusted.
- Temperature of the driver's side cannot be adjusted for model with left/right independent air conditioner.
- DTC "B1610" Open circuit in air mix door actuator — potentiometer (driver's) was detected.
- DTC "26" Open circuit in air mix door actuator — potentiometer (driver's) was detected.

WIRING DIAGRAM:

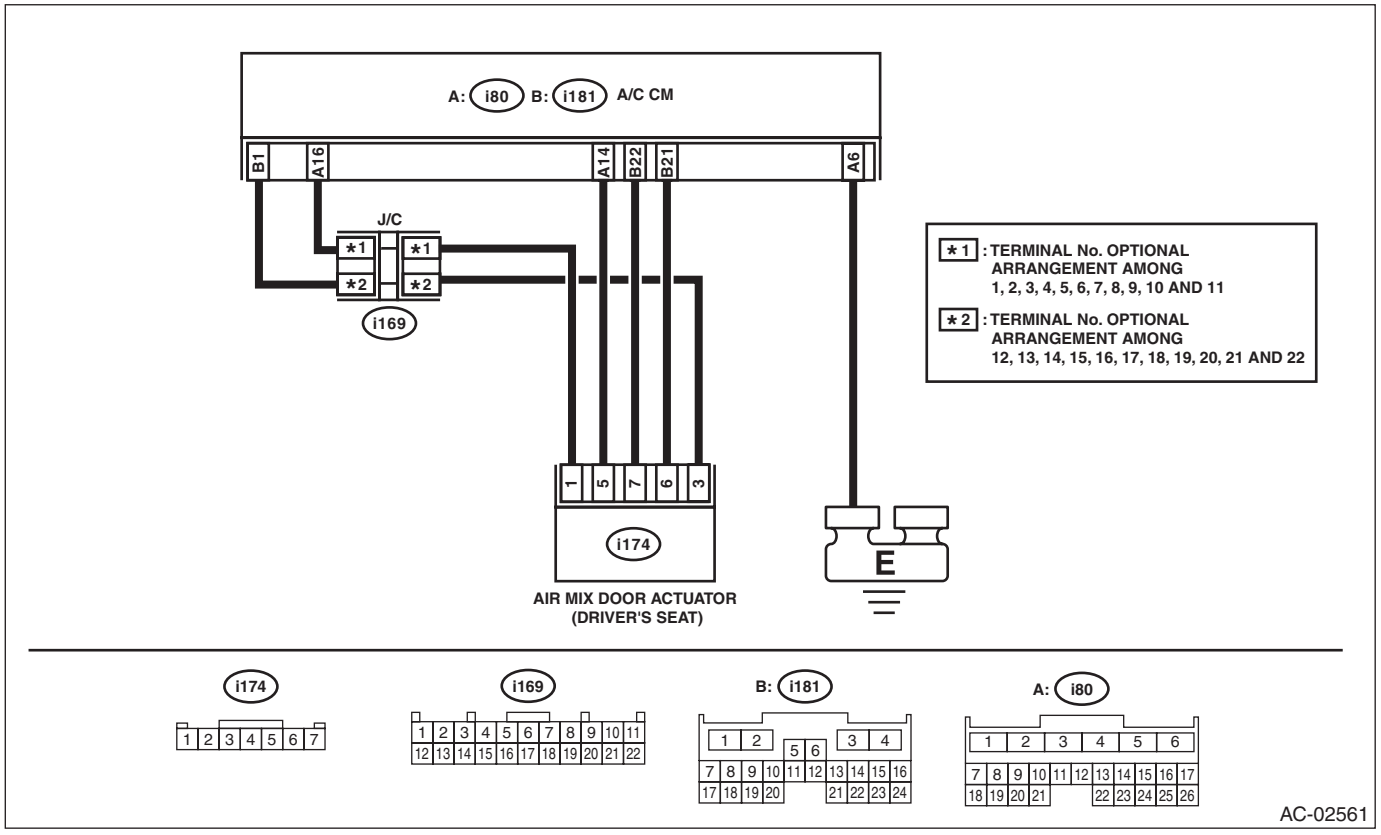

Step		Check	Yes	No
1	**CHECK CONNECTOR.** 1) Check the condition of connector connection. 2) Read the DTC using Subaru Select Monitor.	Is B1610 displayed?	Go to step **2**.	Repair the poor connection of the connector.
2	**CHECK ACTUATOR.** 1) Disconnect the air mix door actuator (driver's). 2) Short No. 3 and No. 5 of i174 connector. 3) Read the DTC using Subaru Select Monitor.	Is B1611 displayed?	Replace the air mix door actuator (driver's). <Ref. to AC-95, REMOVAL, Air Mix Door Actuator.>	Go to step **3**.
3	**CHECK HARNESS.** 1) Turn the ignition switch to ON. 2) Using the tester, measure the voltage between terminals. ***Connector & terminal*** ***(i174) No. 1 (+) — No. 3 (–):***	Is the voltage 4.5 — 5.0 V?	Go to step **4**.	Repair or replace the open circuit of harness.

Step		Check	Yes	No
4	**CHECK HARNESS.** 1) Disconnect the connector from A/C CM. 2) Using a tester, check continuity between terminals. ***Connector & terminal*** ***(i174) No. 1 — (i80) No. 16:*** ***(i174) No. 3 — (i80) No. 1:*** ***(i174) No. 5 — (i80) No. 14:***	Is there continuity?	Replace the A/C CM. <Ref. to AC-54, REMOVAL, Control Unit.>	Repair or replace the open circuit of harness.

J: DTC B1611 AIRMIX DOOR ACTUATOR POTENTIOMETER CIRCUIT SHORT (DRIVER'S)

DTC DETECTING CONDITION:

Air mix door actuator potentiometer circuit is shorted.

TROUBLE SYMPTOM:

- Temperature cannot be adjusted.
- Temperature of the driver's side cannot be adjusted for model with left/right independent air conditioner.
- DTC "B1611" Short circuit in air mix door actuator — potentiometer (driver's) was detected.
- "27" Short circuit in air mix door actuator — potentiometer (driver's) was detected.

WIRING DIAGRAM:

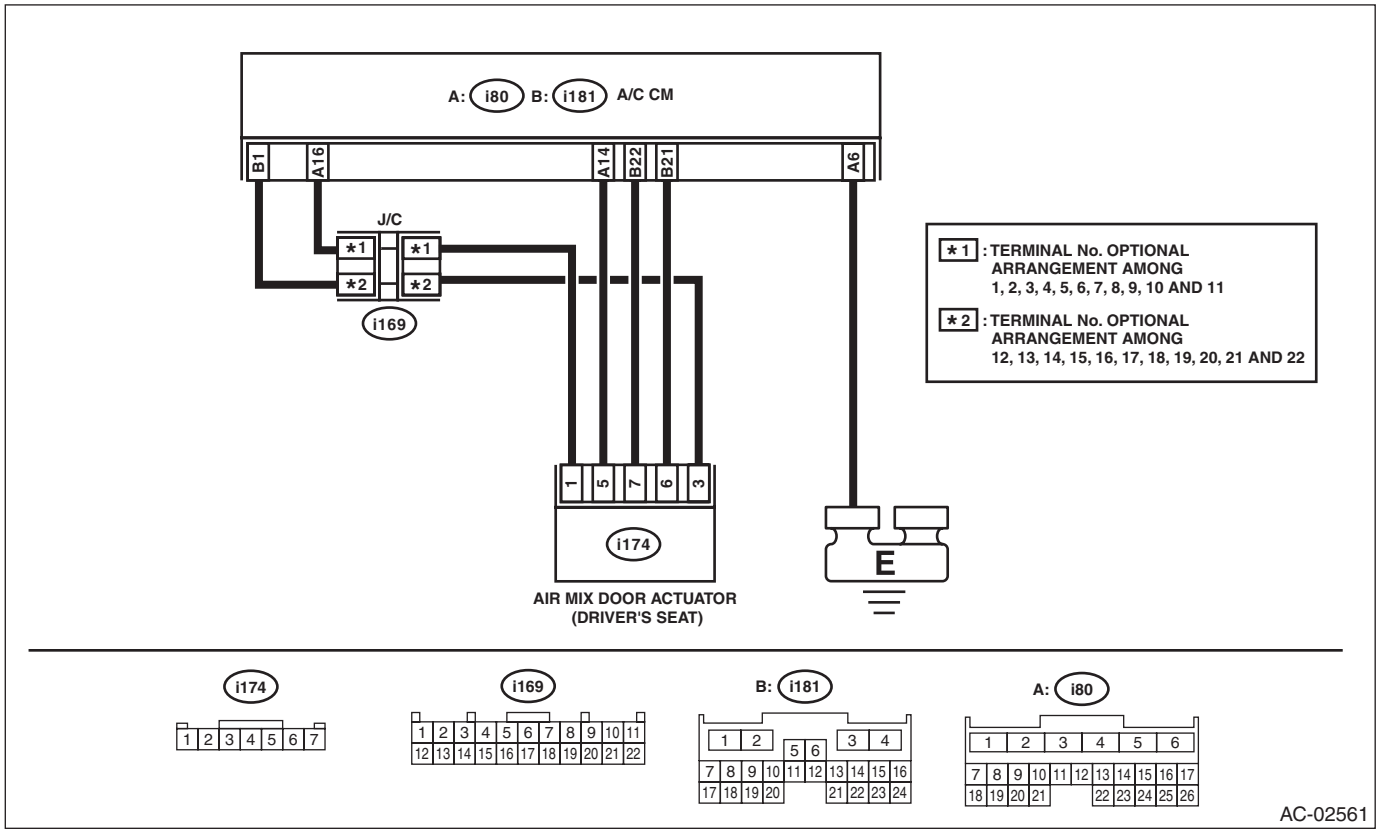

Step		Check	Yes	No
1	**CHECK CONNECTOR.** 1) Check the condition of connector connection. 2) Read the DTC using Subaru Select Monitor.	Is B1611 displayed?	Go to step **2**.	Repair the poor contact of connector.
2	**CHECK ACTUATOR.** 1) Disconnect the air mix door actuator (driver's). 2) Read the DTC using Subaru Select Monitor.	Is B1610 displayed?	Replace the air mix door actuator (driver's). <Ref. to AC-95, REMOVAL, Air Mix Door Actuator.>	Go to step **3**.
3	**CHECK HARNESS.** 1) Disconnect the connector from A/C CM. 2) Using a tester, check continuity between terminals. ***Connector & terminal*** ***(i174) No. 3 — (i174) No. 5:*** ***(i174) No. 5 — Chassis ground:***	Is there continuity?	Repair or replace the short circuit of the harness.	Replace the A/C CM. <Ref. to AC-54, REMOVAL, Control Unit.>

K: DTC B1612 AIRMIX DOOR ACTUATOR LOCK (DRIVER'S)

DTC DETECTING CONDITION:

- Driver's air mix door actuator is locked.
- The potentiometer value of the actuator does not change.

TROUBLE SYMPTOM:

Temperature of the driver's side cannot be adjusted for model with left/right independent air conditioner.

WIRING DIAGRAM:

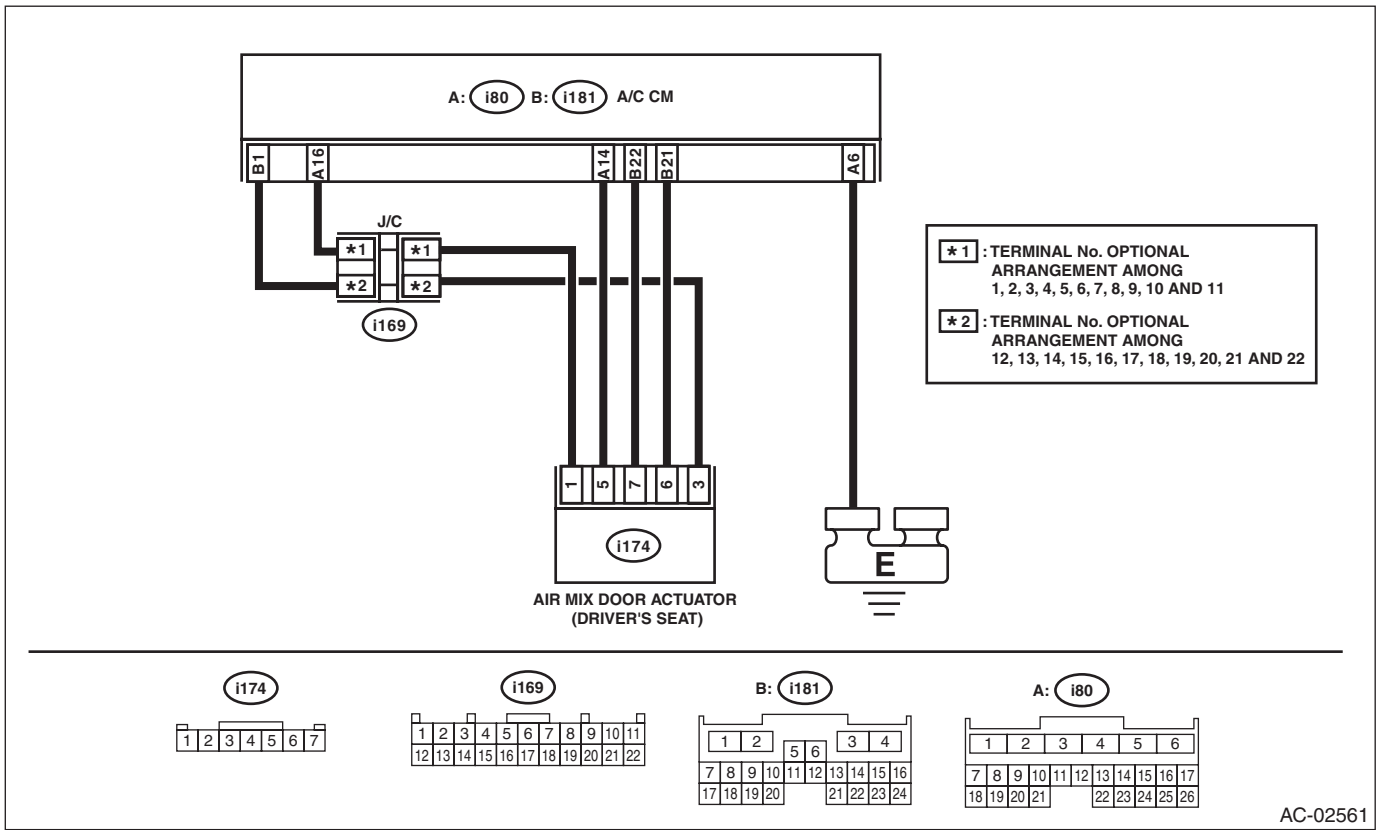

Step		Check	Yes	No
1	**CHECK CONNECTOR.** 1) Check the condition of connector connection. 2) Read the DTC using Subaru Select Monitor.	Is B1612 displayed?	Go to step **2**.	Repair the poor contact of connector.
2	**CHECK CURRENT DATA.** Using the Subaru Select Monitor, change the setting of "Airmix Dr Act Trgt Open Angle (Driver's)" from the A/C diagnosis and perform the active test.	Did the actuator move to the specified target opening angle?	Air mix door actuator circuit is normal.	Go to step **3**.
3	**CHECK HARNESS.** 1) Turn the ignition switch to ON. 2) Using the tester, measure the voltage between terminals. ***Connector & terminal*** ***(i174) No. 1 (+) — No. 3 (–):***	Is the voltage 4.5 — 5.0 V?	Go to step **4**.	Repair or replace the open, short circuit of the harness.

	Step	Check	Yes	No
4	**CHECK HARNESS.** 1) Disconnect the connector from A/C CM. 2) Using a tester, check continuity between terminals. ***Connector & terminal*** ***(i174) No. 5 — (i80) No. 14:*** ***(i174) No. 1 — (i80) No. 16:*** ***(i174) No. 3 — (i181) No. 1:*** ***(i174) No. 6 — (i181) No. 21:*** ***(i174) No. 7 — (i181) No. 22:***	Is there continuity?	Go to step **5**.	Repair or replace the open circuit of harness.
5	**CHECK AIR MIX DOOR ACTUATOR.** Check the air mix door actuator parts. <Ref. to AC-97, INSPECTION, Air Mix Door Actuator.>	Is air mix door actuator normal?	Replace the A/C CM. <Ref. to AC-54, REMOVAL, Control Unit.>	Replace the air mix door actuator. <Ref. to AC-95, REMOVAL, Air Mix Door Actuator.>

L: DTC B1613 AIRMIX DOOR ACTUATOR POTENTIOMETER CIRCUIT OPEN (PASSENGER'S)

DTC DETECTING CONDITION:
Air mix door actuator potentiometer circuit is open.
TROUBLE SYMPTOM:
- Temperature of the passenger's side cannot be adjusted for model with left/right independent air conditioner.
- DTC "B1613" Open circuit in air mix door actuator — potentiometer (passenger's) was detected.
- DTC "-26" Open circuit in air mix door actuator — potentiometer (passenger's) was detected.

WIRING DIAGRAM:

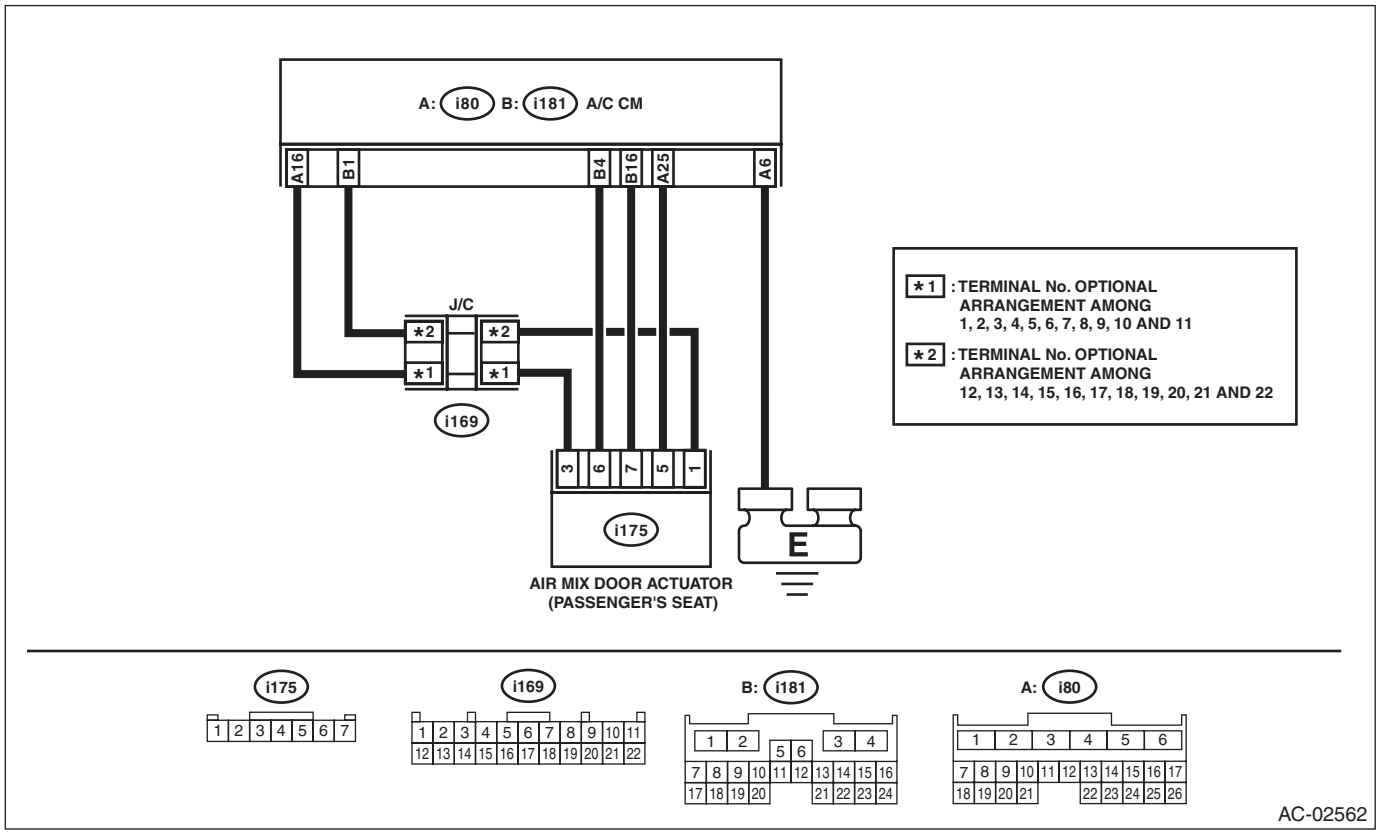

Step		Check	Yes	No
1	**CHECK CONNECTOR.** 1) Check the condition of connector connection. 2) Read the DTC using Subaru Select Monitor.	Is B1613 displayed?	Go to step **2**.	Repair the poor contact of connector.
2	**CHECK ACTUATOR.** 1) Disconnect the air mix door actuator (passenger's). 2) Short No. 1 and No. 5 of connector i175. 3) Read the DTC using Subaru Select Monitor.	Is B1614 displayed?	Replace the air mix door actuator (passenger's). <Ref. to AC-95, REMOVAL, Air Mix Door Actuator.>	Go to step **3**.
3	**CHECK HARNESS.** 1) Turn the ignition switch to ON. 2) Using the tester, measure the voltage between terminals. ***Connector & terminal*** ***(i175) No. 3 (+) — No. 1 (–):***	Is the voltage 4.5 — 5.0 V?	Go to step **4**.	Repair or replace the open circuit of harness.

	Step	Check	Yes	No
4	**CHECK HARNESS.** 1) Disconnect the connector from A/C CM. 2) Using the tester, measure the voltage between terminals. ***Connector & terminal*** ***(i175) No. 1 — (i181) No. 1:*** ***(i175) No. 3 — (i80) No. 16:*** ***(i175) No. 5 — (i80) No. 25:***	Is there continuity?	Replace the A/C CM. <Ref. to AC-54, REMOVAL, Control Unit.>	Repair or replace the open circuit of harness.

M: DTC B1614 AIRMIX DOOR ACTUATOR POTENTIOMETER CIRCUIT SHORT (PASSENGER'S)

DTC DETECTING CONDITION:
Air mix door actuator potentiometer circuit is shorted.
TROUBLE SYMPTOM:
- Temperature of the passenger's side cannot be adjusted for model with left/right independent air conditioner.
- DTC "B1614" Short circuit in air mix door actuator — potentiometer (passenger's) was detected.
- DTC "-27" Short circuit in air mix door actuator — potentiometer (passenger's) was detected.

WIRING DIAGRAM:

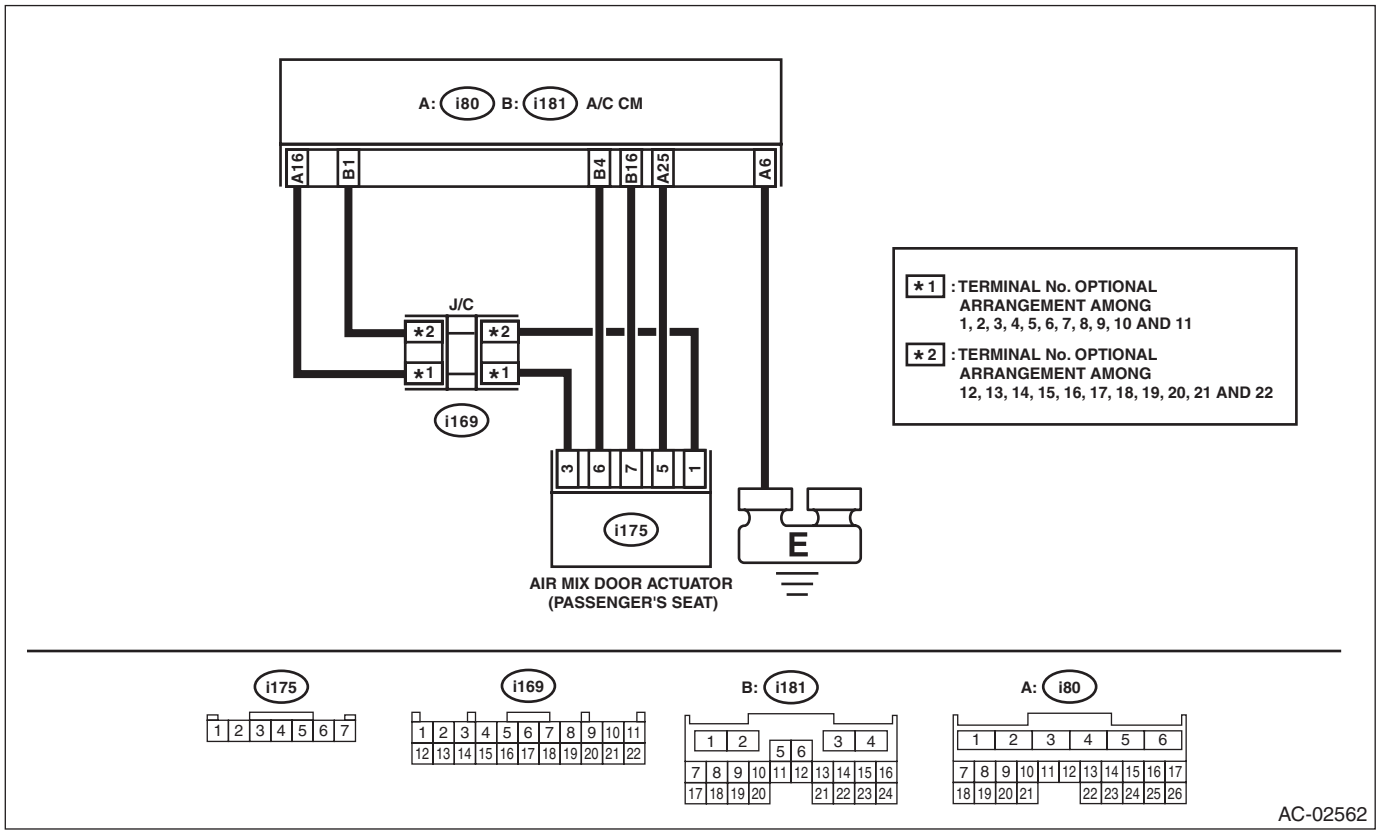

Step		Check	Yes	No
1	**CHECK CONNECTOR.** 1) Check the condition of connector connection. 2) Read the DTC using Subaru Select Monitor.	Is B1614 displayed?	Go to step **2**.	Repair the poor contact of connector.
2	**CHECK ACTUATOR.** 1) Disconnect the air mix door actuator (passenger's). 2) Read the DTC of the A/C ECM using the Subaru Select Monitor.	Is B1613 displayed?	Replace the air mix door actuator (passenger's). <Ref. to AC-95, REMOVAL, Air Mix Door Actuator.>	Go to step **3**.
3	**CHECK HARNESS.** 1) Turn the ignition switch to ON. 2) Using the tester, measure the voltage between terminals. ***Connector & terminal*** ***(i175) No. 3 (+) — No. 1 (–):***	Is the voltage 4.5 — 5.0 V?	Go to step **4**.	Repair or replace the open circuit of harness.

	Step	Check	Yes	No
4	**CHECK HARNESS.** 1) Disconnect the connector from A/C CM. 2) Using a tester, check continuity between terminals. ***Connector & terminal*** ***(i175) No. 1 — No. 5:*** ***(i175) No. 5 — Chassis ground:***	Is there continuity?	Repair or replace the short circuit of the harness.	Replace the A/C CM. <Ref. to AC-54, REMOVAL, Control Unit.>

N: DTC B1615 AIRMIX DOOR ACTUATOR LOCK (PASSENGER'S)

DTC DETECTING CONDITION:
Passenger's air mix door actuator is locked.

TROUBLE SYMPTOM:
- Temperature of the passenger's side cannot be adjusted for model with left/right independent air conditioner.
- DTC "B1615" Air mix door actuator — lock (passenger's) was detected.
- DTC "48" Air mix door actuator — lock (passenger's) was detected.

WIRING DIAGRAM:

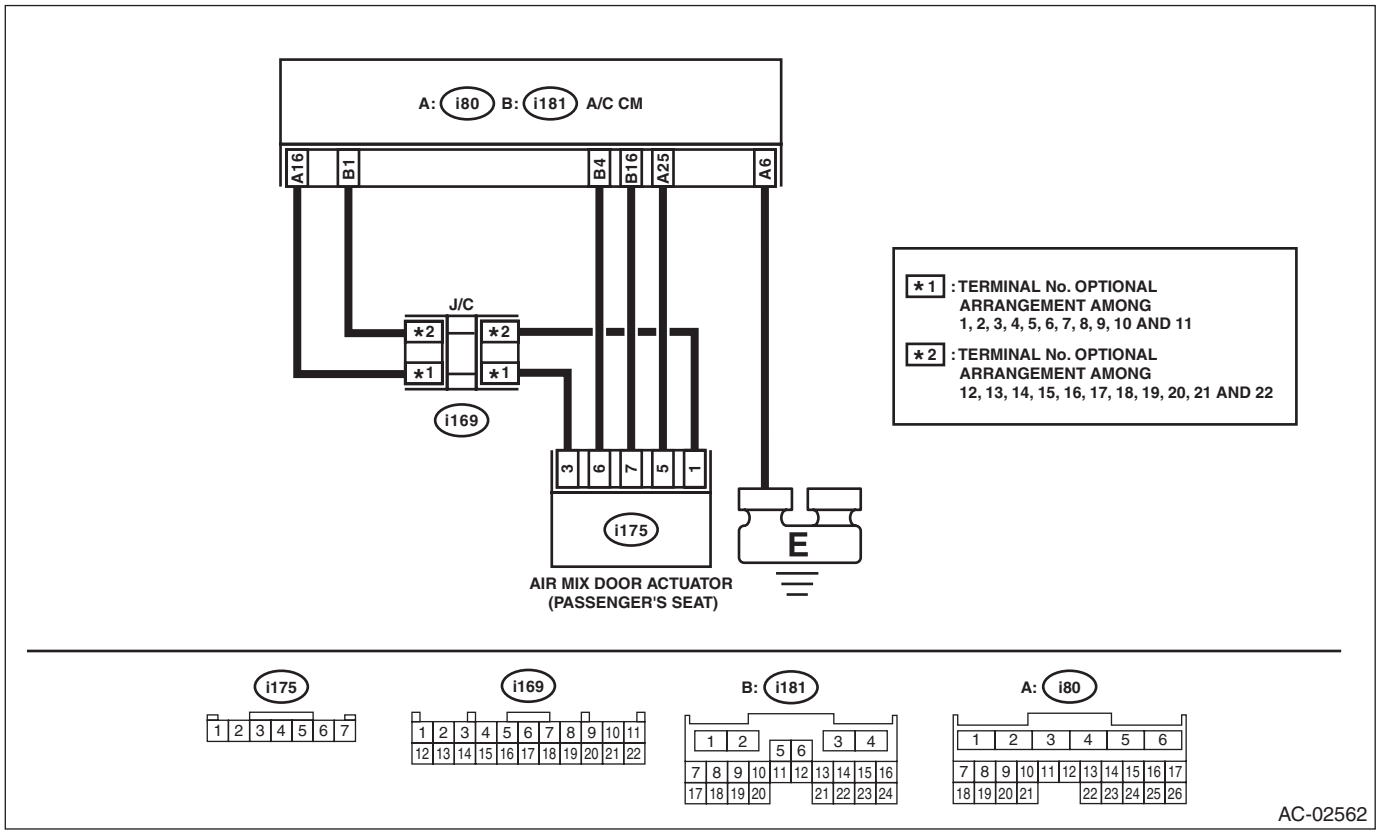

Step		Check	Yes	No
1	**CHECK CONNECTOR.** 1) Check the condition of connector connection. 2) Read the DTC using Subaru Select Monitor.	Is B1615 displayed?	Go to step **2**.	Repair the poor contact of connector.
2	**CHECK CURRENT DATA.** Using the Subaru Select Monitor, change the setting of "Airmix Dr Act Trgt Open Angle (Pas's)" from the A/C diagnosis and perform the active test.	Did the actuator move to the specified target opening angle?	Air mix door actuator circuit is normal.	Go to step **3**.
3	**CHECK HARNESS.** 1) Turn the ignition switch to ON. 2) Using the tester, measure the voltage between terminals. ***Connector & terminal*** ***(i175) No. 3 (+) — No. 1 (–):***	Is the voltage 4.5 — 5.0 V?	Go to step **4**.	Repair or replace the open, short circuit of the harness.

	Step	Check	Yes	No
4	**CHECK HARNESS.** 1) Disconnect the connector from A/C CM. 2) Using a tester, check continuity between terminals. ***Connector & terminal*** ***(i175) No. 5 — (i80) No. 25:*** ***(i175) No. 3 — (i80) No. 16:*** ***(i175) No. 1 — (i181) No. 1:*** ***(i175) No. 7 — (i181) No. 16:*** ***(i175) No. 6 — (i181) No. 4:***	Is there continuity?	Go to step **5**.	Repair or replace the open circuit of harness.
5	**CHECK AIR MIX DOOR ACTUATOR.** Check the air mix door actuator parts. <Ref. to AC-97, INSPECTION, Air Mix Door Actuator.>	Is air mix door actuator normal?	Replace the A/C CM. <Ref. to AC-54, REMOVAL, Control Unit.>	Replace the air mix door actuator. <Ref. to AC-95, REMOVAL, Air Mix Door Actuator.>

O: DTC B1620 MODE DOOR ACTUATOR POTENTIOMETER CIRCUIT OPEN

DTC DETECTING CONDITION:
Mode door actuator potentiometer circuit is open.

TROUBLE SYMPTOM:
- Vent does not change.
- DTC “B1620” Open circuit in mode door actuator potentiometer was detected.
- DTC “28” Open circuit in mode door actuator potentiometer was detected.

WIRING DIAGRAM:

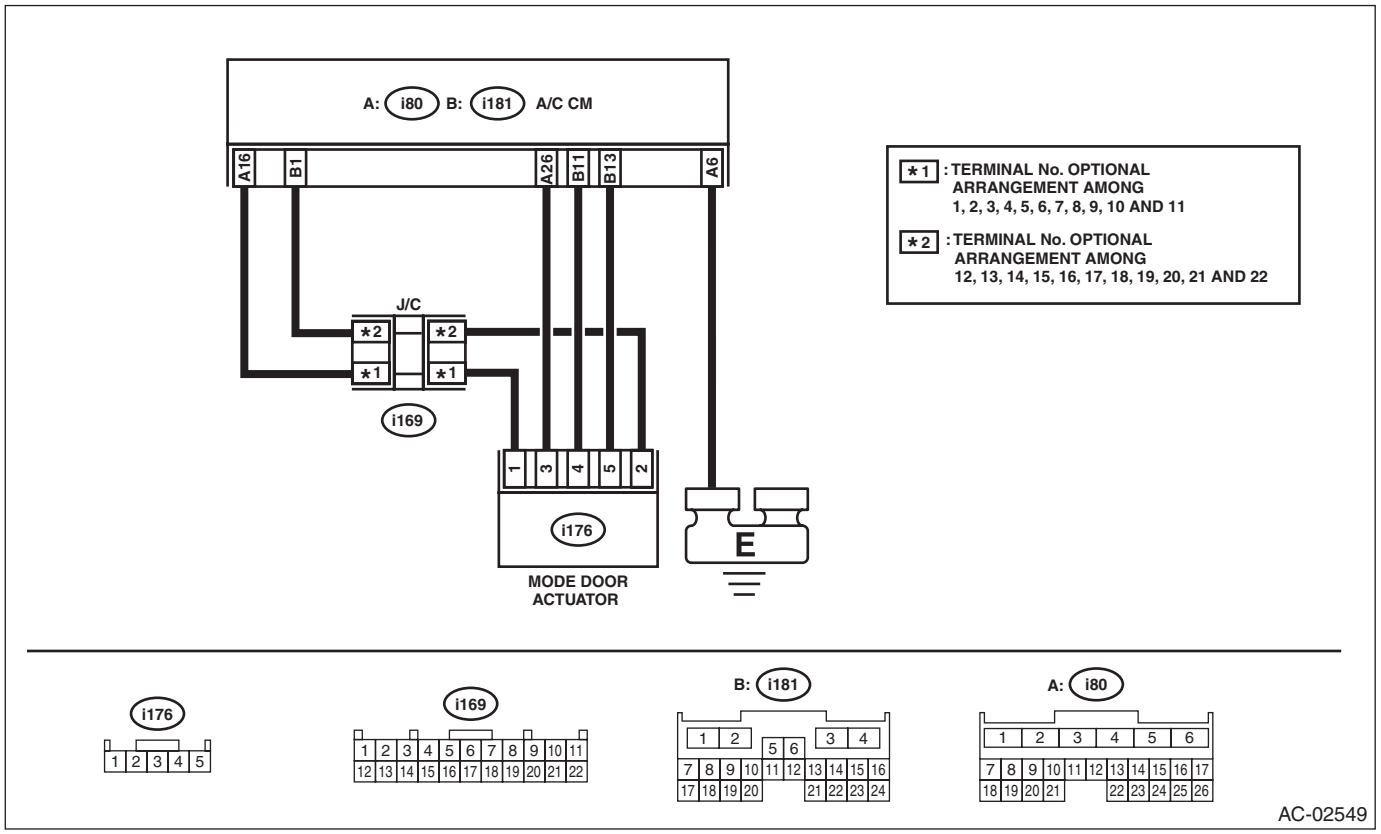

Step		Check	Yes	No
1	**CHECK CONNECTOR.** 1) Check the condition of connector connection. 2) Read the DTC using Subaru Select Monitor.	Is B1620 displayed?	Go to step **2**.	Repair the poor contact of connector.
2	**CHECK ACTUATOR.** 1) Disconnect the mode door actuator. 2) Short No. 2 and No. 3 of (i176) connector. 3) Read the DTC using Subaru Select Monitor.	Is B1621 displayed?	Replace the mode door actuator. <Ref. to AC-92, REMOVAL, Mode Door Actuator.>	Go to step **3**.
3	**CHECK HARNESS.** 1) Turn the ignition switch to ON. 2) Using the tester, measure the voltage between terminals. ***Connector & terminal*** ***(i176) No. 1 (+) — No. 2 (–):***	Is the voltage 4.5 — 5.0 V?	Go to step **4**.	Repair the open circuit of harness.
4	**CHECK HARNESS.** Using a tester, check continuity between terminals. ***Connector & terminal*** ***(i176) No. 1 — (i80) No. 16:*** ***(i176) No. 2 — (i181) No. 1:*** ***(i176) No. 3 — (i80) No. 26:***	Is there continuity?	Replace the A/C CM. <Ref. to AC-54, REMOVAL, Control Unit.>	Repair or replace the open circuit of harness.

P: DTC B1621 MODE DOOR ACTUATOR POTENTIOMETER CIRCUIT SHORT

DTC DETECTING CONDITION:
Mode door actuator potentiometer circuit is shorted.

TROUBLE SYMPTOM:
- Vent does not change.
- DTC “B1621” Short circuit in mode door actuator potentiometer was detected.
- DTC “29” Short circuit in mode door actuator potentiometer was detected.

WIRING DIAGRAM:

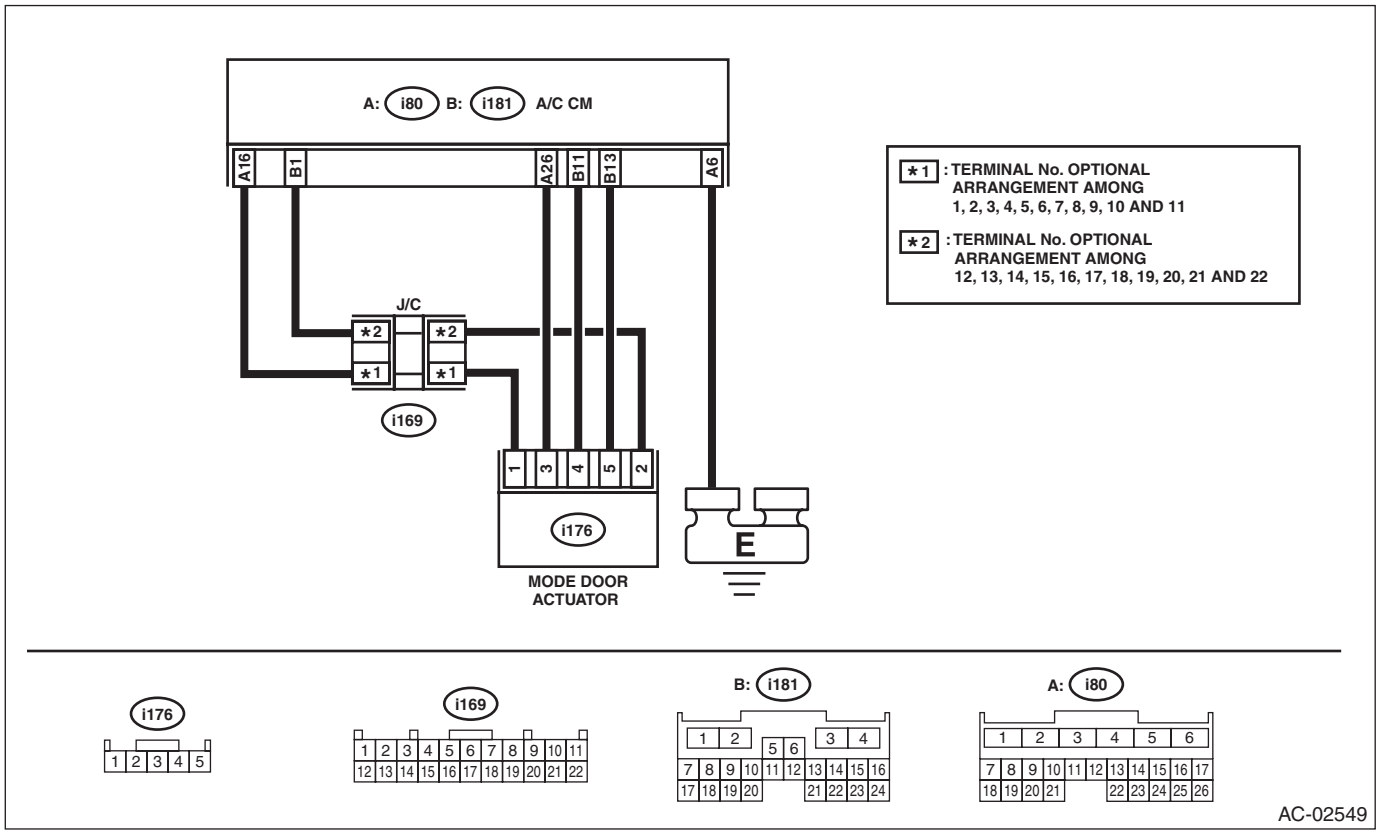

Step		Check	Yes	No
1	**CHECK CONNECTOR.** 1) Check the condition of connector connection. 2) Read the DTC using Subaru Select Monitor.	Is B1621 displayed?	Go to step **2**.	Repair the poor contact of connector.
2	**CHECK ACTUATOR.** 1) Disconnect the mode door actuator. 2) Read the DTC using Subaru Select Monitor.	Is B1620 displayed?	Replace the mode door actuator. <Ref. to AC-92, REMOVAL, Mode Door Actuator.>	Go to step **3**.
3	**CHECK HARNESS.** Using a tester, check continuity between terminals. ***Connector & terminal*** ***(i176) No. 2 — No. 3:*** ***(i176) No. 3 — Chassis ground:***	Is there continuity?	Repair or replace the short circuit of the harness.	Replace the A/C CM. <Ref. to AC-54, REMOVAL, Control Unit.>

Q: DTC B1622 MODE DOOR ACTUATOR LOCK

DTC DETECTING CONDITION:
Mode door actuator locked.
TROUBLE SYMPTOM:
- DTC “B1622” Mode door actuator lock was detected.
- DTC “49” Mode door actuator lock was detected.

WIRING DIAGRAM:

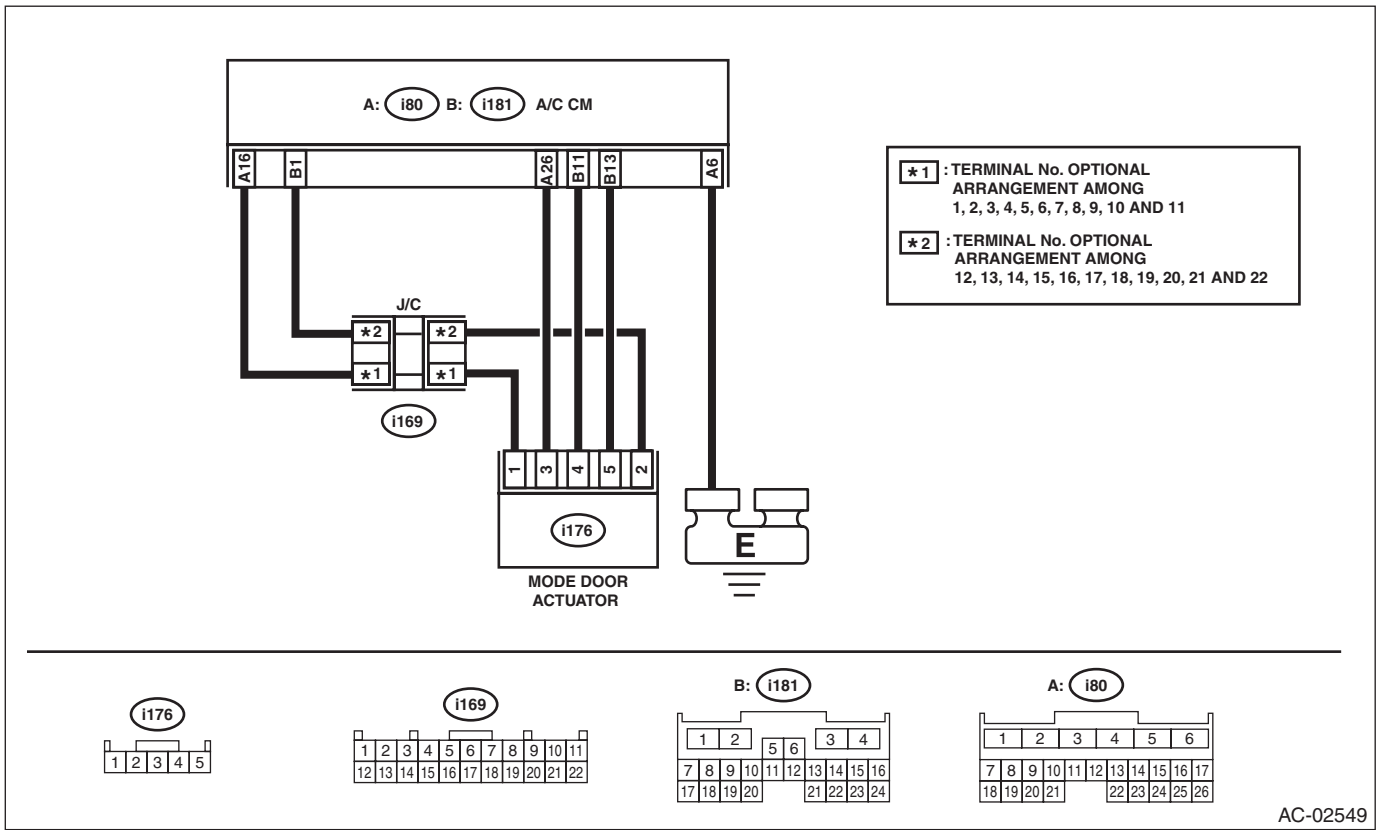

Step		Check	Yes	No
1	**CHECK CONNECTOR.** 1) Check the condition of connector connection. 2) Read the DTC using Subaru Select Monitor.	Is B1622 displayed?	Go to step **2**.	Repair the poor contact of connector.
2	**CHECK CURRENT DATA.** Using the Subaru Select Monitor, change the setting of “Mode Door Actuator Position Target” from the A/C diagnosis and perform the active test.	Did the actuator move to the specified target opening angle?	Mode door actuator circuit is normal.	Go to step **3**.
3	**CHECK HARNESS.** 1) Turn the ignition switch to ON. 2) Using the tester, measure the voltage between terminals. ***Connector & terminal*** ***(i176) No. 1 (+) — No. 2 (–):***	Is the voltage 4.5 — 5.0 V?	Go to step **4**.	Repair or replace the open, short circuit of the harness.

	Step	Check	Yes	No
4	**CHECK HARNESS.** 1) Disconnect the connector from A/C CM. 2) Using a tester, check continuity between terminals. ***Connector & terminal*** ***(i176) No. 3 — (i80) No. 26:*** ***(i176) No. 1 — (i80) No. 16:*** ***(i176) No. 2 — (i181) No. 1:*** ***(i176) No. 4 — (i181) No. 11:*** ***(i176) No. 5 — (i181) No. 13:***	Is there continuity?	Go to step **5**.	Repair or replace the open circuit of harness.
5	**CHECK MODE DOOR ACTUATOR.** Check the mode door actuator parts. <Ref. to AC-93, INSPECTION, Mode Door Actuator.>	Is the mode door actuator OK?	Replace the A/C CM. <Ref. to AC-54, REMOVAL, Control Unit.>	Replace the mode door actuator. <Ref. to AC-92, REMOVAL, Mode Door Actuator.>

R: DTC U0028 HEATER CONTROL PANEL COMMUNICATION ERROR

DTC DETECTING CONDITION:

UART communication failure

TROUBLE SYMPTOM:

- Unable to operate A/C.
- DTC “U0028” Heater control panel communication failure was detected.
- DTC “53” Heater control panel communication failure was detected.

WIRING DIAGRAM:

- Auto A/C

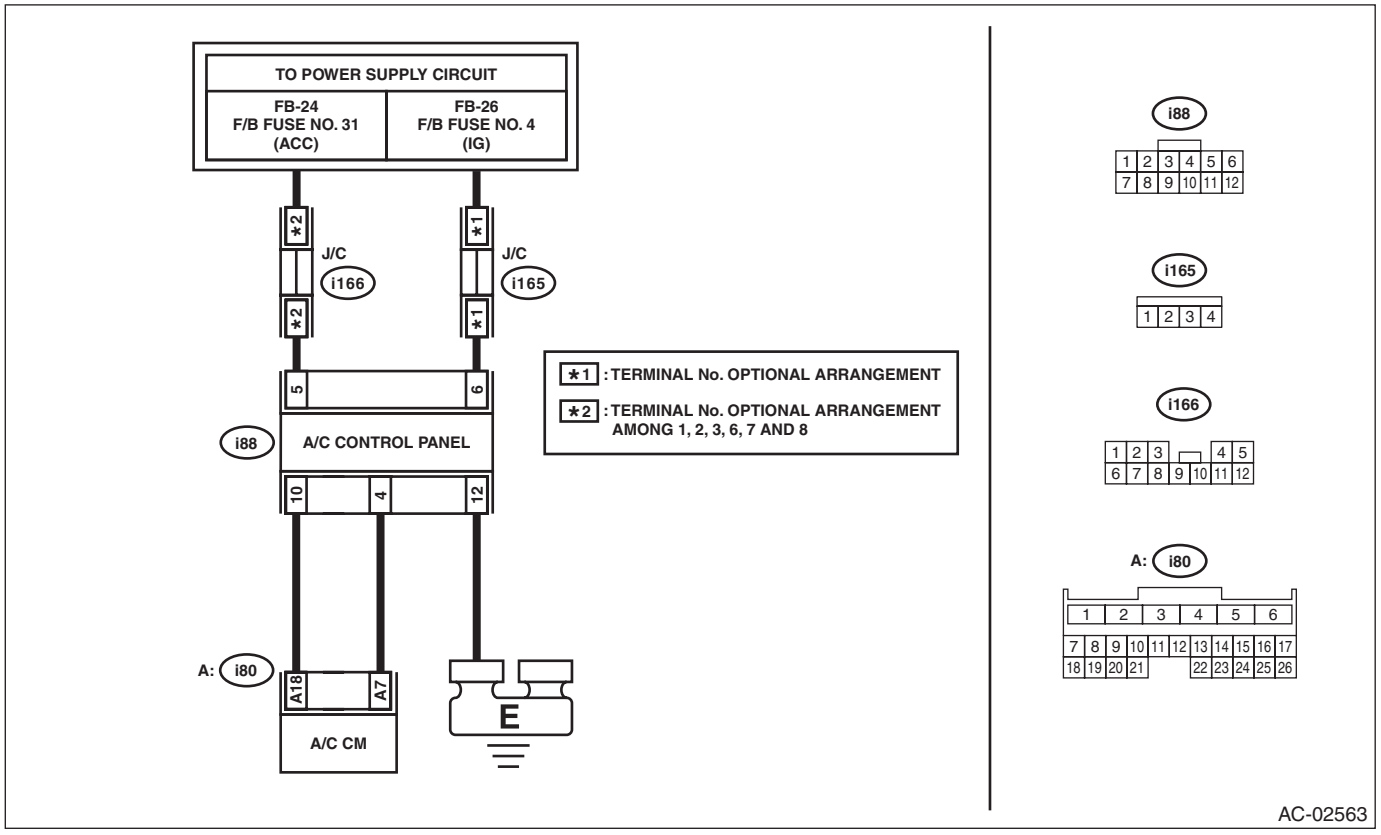

- Manual A/C

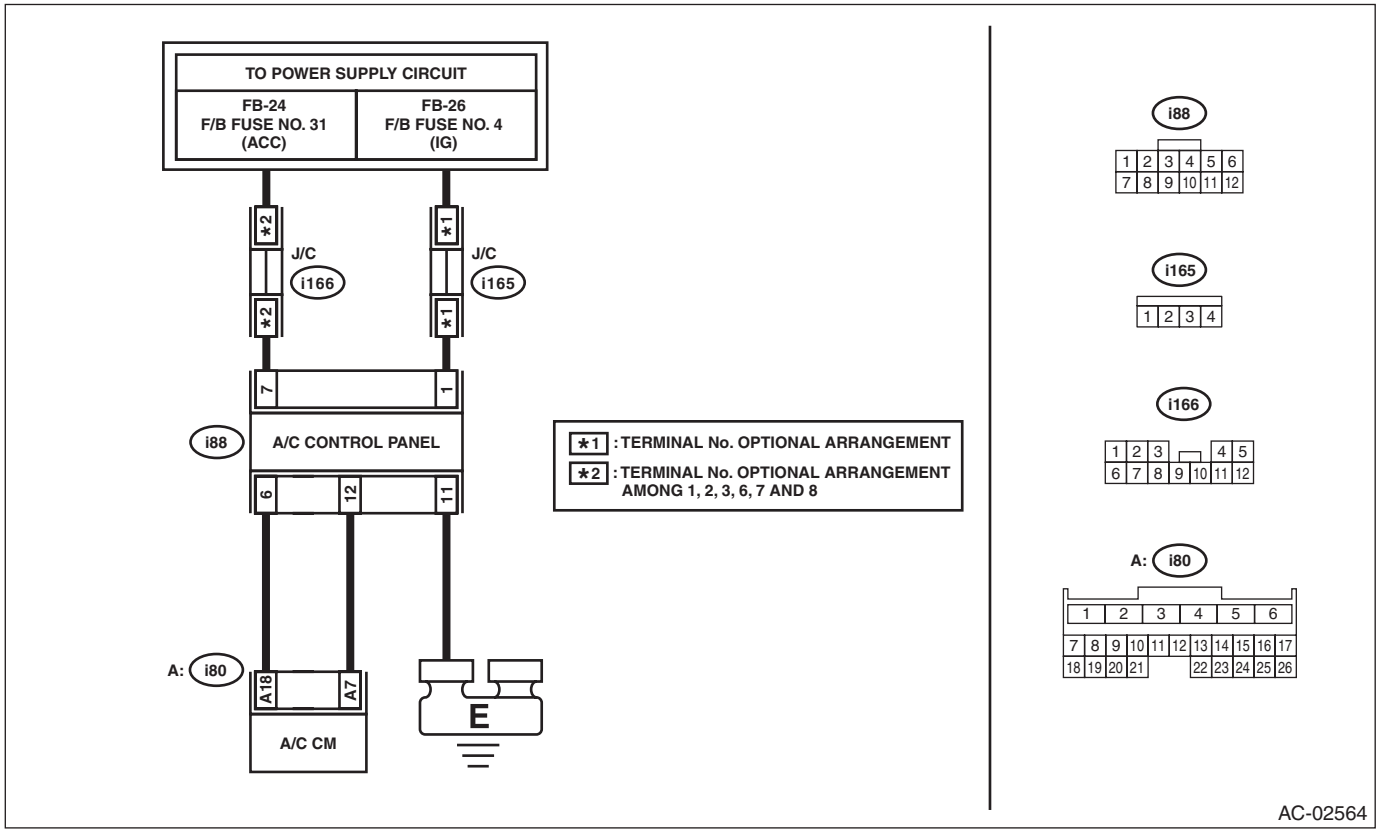

Step		Check	Yes	No
1	**CHECK CONNECTOR.** Check the power supply circuit connectors for poor contact.	Is there poor contact?	Repair the connector.	Go to step **2**.
2	**CHECK FUSE.** 1) Turn the ignition switch to OFF. 2) Remove the fuse No. 4 and No. 31 from the main fuse box or fuse & relay box. 3) Check the condition of fuse.	Is the fuse blown out?	Replace the fuse.	Go to step **3**.
3	**CHECK A/C CONTROL PANEL POWER CIRCUIT.** 1) Remove the A/C control panel. 2) Disconnect the A/C control panel connector. 3) Measure the voltage between A/C control panel connector terminal and chassis ground after turning the ignition switch to ON. ***Connector & terminal*** ***Auto A/C*** ***(i88) No. 5 (+) — Chassis ground (–):*** ***(i88) No. 6 (+) — Chassis ground (–):*** ***Manual A/C*** ***(i88) No. 1 (+) — Chassis ground (–):*** ***(i88) No. 7 (+) — Chassis ground (–):***	Is the voltage 10 V or more?	Go to step **4**.	Check for open or short circuit in the harness between A/C control panel and fuse.

	Step	Check	Yes	No
4	**CHECK A/C CONTROL PANEL GROUND CIRCUIT.** Measure the resistance of harness between A/C control panel and chassis ground after turning the ignition switch to OFF. ***Connector & terminal*** ***Auto A/C*** ***(i88) No. 12 — Chassis ground:*** ***Manual A/C*** ***(i88) No. 11 — Chassis ground:***	Is the resistance less than 10 Ω?	Go to step **5**.	Repair the harness for ground line.
5	**CHECK COMMUNICATION CIRCUIT HARNESS.** 1) Disconnect the connector from A/C control panel and A/C CM. 2) Using a tester, check for continuity between the harness terminals. ***Connector & terminal*** ***Auto A/C*** ***(i80) No. 18 — (i88) No. 10:*** ***(i80) No. 7 — (i88) No. 4:*** ***Manual A/C*** ***(i80) No. 18 — (i88) No. 6:*** ***(i80) No. 7 — (i88) No. 12:***	Is there continuity?	Go to step **6**.	Repair or replace the open circuit of harness.
6	**CHECK HARNESS.** Using a tester, check continuity between terminals. ***Connector & terminal*** ***(i80) No. 18 — No. 7:*** ***(i80) No. 18 — Chassis ground:*** ***(i80) No. 7 — Chassis ground:***	Is there continuity?	Repair or replace the short circuit of the harness.	Replace the A/C control panel. <Ref. to AC-46, REMOVAL, Control Panel.>

S: DTC U0001 CAN COMMUNICATION BUS OFF

DTC DETECTING CONDITION:

- Data to be received via CAN communication do not arrive.
- A/C cooperation control does not operate.

TROUBLE SYMPTOM:

A/C does not operate fully automatically.

Step		Check	Yes	No
1	**CHECK DTC.** Read the DTC of the CAN system using the Subaru Select Monitor.	Is a DTC of the CAN system detected?	Perform the diagnosis according to DTC.	Go to step **2**.
2	**CHECK A/C CM.** 1) Replace with a normally operating A/C CM. 2) Read the DTC using Subaru Select Monitor.	Is U0001 detected?	Go to step **3**.	Replace the A/C CM. <Ref. to AC-54, REMOVAL, Control Unit.>
3	**CHECK CAN COMMUNICATION CIRCUIT.** Check the CAN communication circuit. <Ref. to LAN(diag)-14, LIST, CAN Communication Circuit Check.>	Is the CAN communication circuit normal?	It is possible that temporary poor communication occurs. Clear the memory.	Repair or replace the CAN communication circuit.

T: DTC U0002 CAN COMMUNICATION ERROR

DTC DETECTING CONDITION:

- Data to be received via CAN communication do not arrive.
- A/C cooperation control does not operate.

TROUBLE SYMPTOM:

A/C does not operate fully automatically.

Step		Check	Yes	No
1	**CHECK CURRENT DATA.** Read the DTC of the CAN system using the Subaru Select Monitor.	Is a DTC of the CAN system detected?	Perform the diagnosis according to DTC.	Go to step **2**.
2	**CHECK A/C CM.** 1) Replace with a normally operating A/C CM. 2) Read the DTC using Subaru Select Monitor.	Is U0002 detected?	Go to step **3**.	Replace the A/C CM. <Ref. to AC-54, REMOVAL, Control Unit.>
3	**CHECK CAN COMMUNICATION CIRCUIT.** Check the CAN communication circuit. <Ref. to LAN(diag)-14, LIST, CAN Communication Circuit Check.>	Is the CAN communication circuit normal?	It is possible that temporary poor communication occurs. Clear the memory.	Repair or replace the CAN communication circuit.

U: DTC B1641 REFRIGERANT FLOW SENSOR CIRCUIT SHORT

DTC DETECTING CONDITION:

- The voltage of the sensor signal line decreased to 0.3 V or less.
- Short-circuit in flow sensor circuit

TROUBLE SYMPTOM:

- A/C does not function because refrigerant flow amount cannot be measured.
- DTC “B1641” Short-circuit in refrigerant flow sensor was detected.
- DTC “-43” Short-circuit in refrigerant flow sensor was detected.

WIRING DIAGRAM:

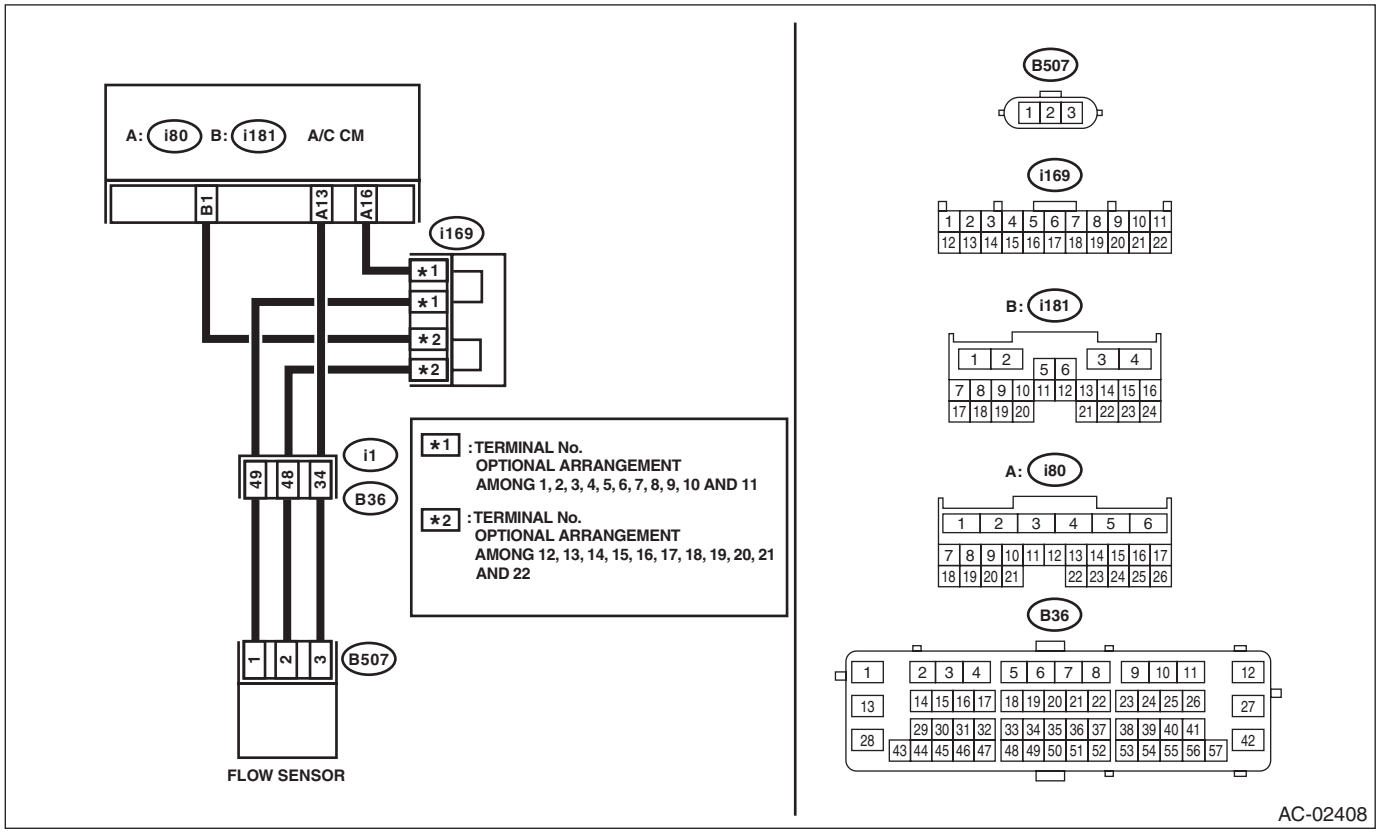

Step		Check	Yes	No
1	**CHECK CONNECTOR.** 1) Check the connecting condition of connector. 2) Read the DTC using Subaru Select Monitor.	Is B1641 displayed?	Go to step **2**.	Repair the poor connection of the connector.
2	**CHECK FLOW SENSOR.** 1) Disconnect the refrigerant flow sensor connector. 2) Read the DTC using Subaru Select Monitor.	Is B1642 displayed?	Replace the compressor. <Ref. to AC-55, REMOVAL, Compressor.>	Go to step **3**.
3	**CHECK HARNESS.** 1) Disconnect the A/C CM connector. 2) Using a tester, check continuity between terminals. ***Connector & terminal*** ***(B507) No. 2 — (B507) No. 3:*** ***(B507) No. 3 — Chassis ground:***	Is there continuity?	Repair or replace the short circuit of the harness.	Replace the A/C CM. <Ref. to AC-54, REMOVAL, Control Unit.>

V: DTC B1642 REFRIGERANT FLOW SENSOR CIRCUIT OPEN

DTC DETECTING CONDITION:

- The voltage of the sensor signal line increased to 4.7 V or more.
- Short-circuit in flow sensor circuit

TROUBLE SYMPTOM:

- A/C does not function because refrigerant flow amount cannot be measured.
- DTC “B1642” Open circuit in refrigerant flow sensor was detected.
- DTC “43” Open circuit in refrigerant flow sensor was detected.

WIRING DIAGRAM:

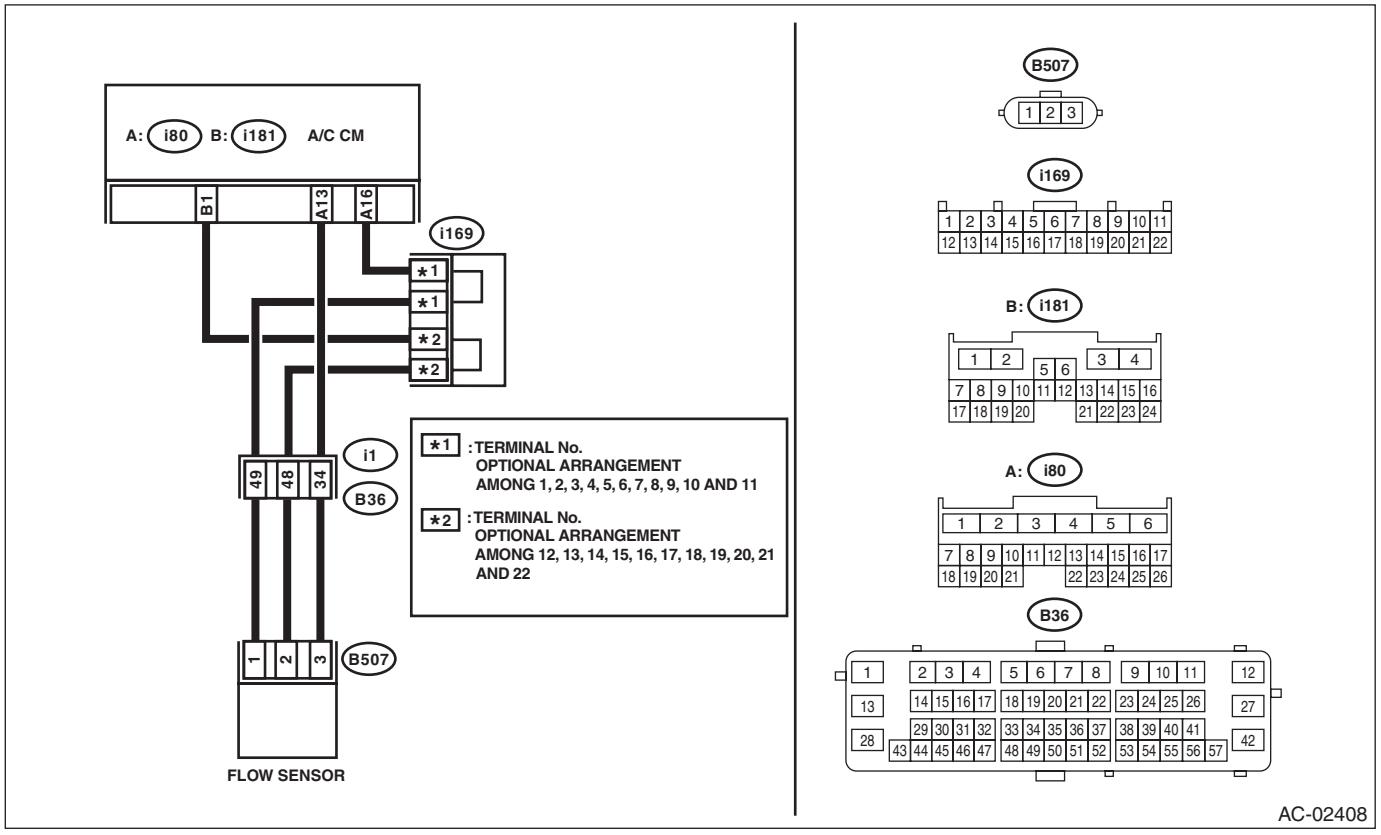

Step		Check	Yes	No
1	**CHECK CONNECTOR.** 1) Check the connecting condition of connector. 2) Read the DTC using Subaru Select Monitor.	Is B1642 displayed?	Go to step **2**.	Repair the poor connection of the connector.
2	**CHECK FLOW SENSOR.** 1) Disconnect the flow sensor connector. 2) Short No. 2 and No. 3 of the flow sensor connector (B507). 3) Read the DTC using Subaru Select Monitor.	Is B1641 displayed?	Replace the compressor. <Ref. to AC-55, REMOVAL, Compressor.>	Go to step **3**.
3	**CHECK HARNESS.** 1) Turn the ignition switch to ON. 2) Using the tester, measure the voltage between terminals. ***Connector & terminal (B507) No. 1 (+) — No. 2 (–):***	Is the voltage 4.5 — 5.0 V?	Go to step **4**.	Repair or replace the open circuit of harness.

Step		Check	Yes	No
4	**CHECK HARNESS.** 1) Disconnect the A/C CM connector. 2) Using a tester, check continuity between terminals. ***Connector & terminal*** ***(B507) No. 3 — (i80) No. 13:*** ***(B507) No. 2 — (i181) No. 1:*** ***(B507) No. 1 — (i80) No. 16:***	Is there continuity?	Replace the A/C CM. <Ref. to AC-54, REMOVAL, Control Unit.>	Repair or replace the open circuit of harness.

W: DTC B1643 VARIABLE FLOW CHANGE SOLENOID DUTY CIRCUIT ABNORMAL

DTC DETECTING CONDITION:
Open or short circuit in variable solenoid valve
TROUBLE SYMPTOM:
- Refrigerant pressure cannot be changed.
- DTC “B1643” Variable flow change solenoid duty circuit failure was detected.
- DTC “46” Variable flow change solenoid duty circuit failure was detected.

WIRING DIAGRAM:

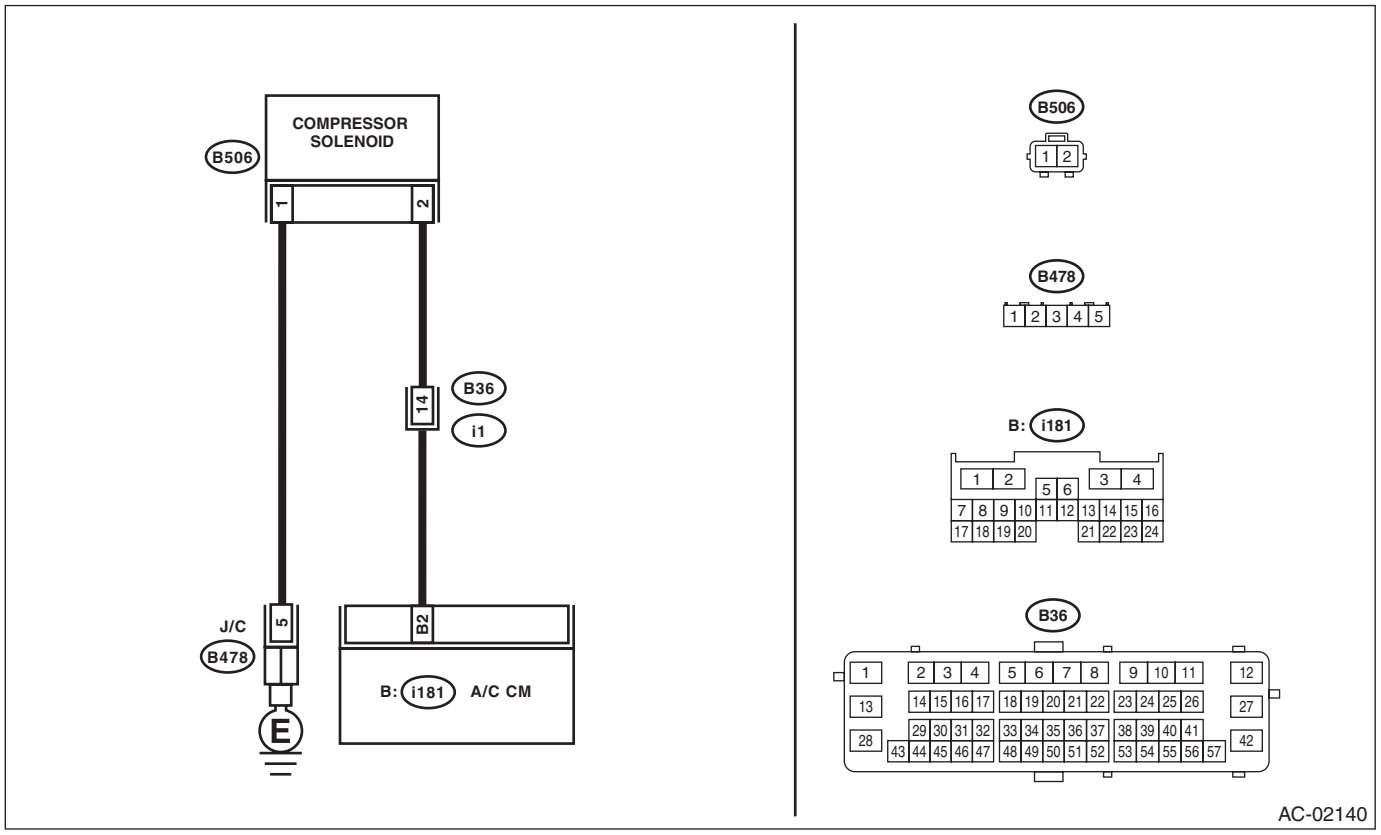

	Step	Check	Yes	No
1	**CHECK CONNECTOR.** Check the connecting condition of connectors (B506), (B36), (i181) and (B479).	Is there poor contact?	Repair the poor contact of connector.	Go to step **2**.
2	**ACTIVE TEST.** 1) Attach the manifold gauge. 2) Using the Subaru Select Monitor, change the setting of “Variable Solenoid Output Duty” from the A/C diagnosis and perform the active test.	Did the actuator operate to the specified target, and the pressure change?	Variable flow change solenoid circuit is normal.	Go to step **3**.
3	**CHECK VARIABLE FLOW CHANGE SOLENOID.** 1) Disconnect the variable flow change solenoid connector. 2) Using a tester, measure the resistance between terminals of the solenoid. ***Connector & terminal*** ***(B506) No. 1 — No. 2:***	Is the resistance 10 — 12 Ω?	Go to step **4**.	Replace the compressor. <Ref. to AC-55, REMOVAL, Compressor.>

	Step	Check	Yes	No
4	**CHECK HARNESS.** 1) Disconnect the A/C CM connector. 2) Using a tester, check for continuity between the harness terminals. ***Connector & terminal*** ***(B506) No. 2 — (i181) No. 2:*** ***(B506) No. 1 — Chassis ground:***	Is there continuity?	Go to step **5**.	Repair or replace the open circuit of harness.
5	**CHECK HARNESS.** Using a tester, check for continuity between the harness terminals. ***Connector & terminal*** ***(B506) No. 2 — Chassis ground:*** ***(B506) No. 1 — (B506) No. 2:***	Is there continuity?	Repair or replace the short circuit of the harness.	Replace the A/C CM. <Ref. to AC-54, REMOVAL, Control Unit.>

X: DTC B1644 REFRIGERANT NOT SEALED DRIVE ERROR

DTC DETECTING CONDITION:

- Compressor was operated while refrigerant was low.
- Compressor was operated while refrigerant pressure was extremely low.
- Judgment is made only when the delivery mode fuse is installed.

TROUBLE SYMPTOM:

A/C does not operate.

WIRING DIAGRAM:

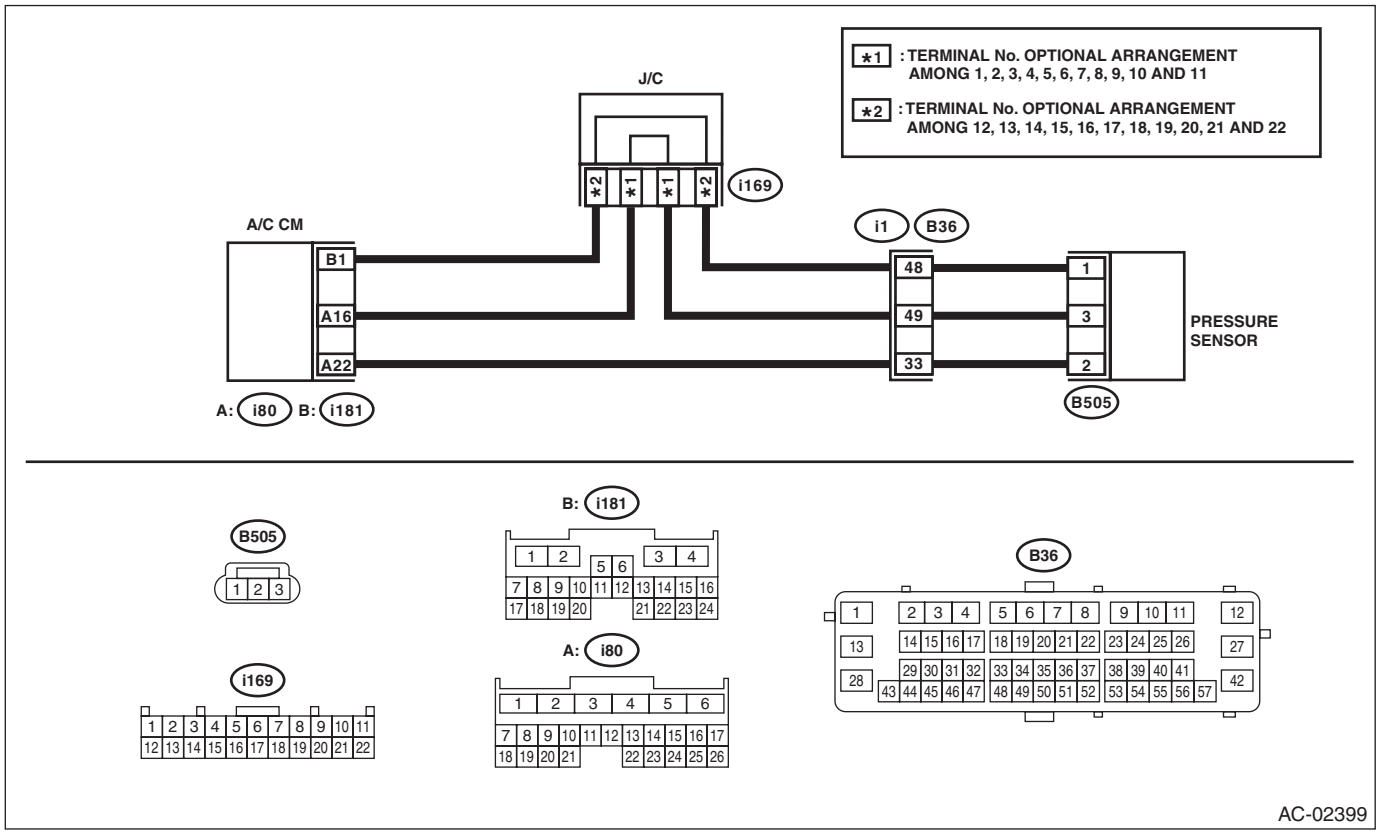

Step		Check	Yes	No
1	**CHECK AMOUNT OF REFRIGERANT.** Check the refrigerant pressure and filling amount. <Ref. to AC-20, PROCEDURE, Refrigerant Pressure with Manifold Gauge Set.>	Is the filling amount a standard value?	Check the refrigerant pressure sensor or refrigerant flow sensor for defect.	Replace the compressor. <Ref. to AC-55, REMOVAL, Compressor.>

AIRBAG SYSTEM

AB

		Page
1.	General Description	2
2.	Airbag Connector	18
3.	Inspection Locations after a Collision	29
4.	Driver's Airbag Module	35
5.	Passenger's Airbag Module	37
6.	Side Airbag Module	55
7.	Curtain Airbag Module	65
8.	Airbag Control Module	68
9.	Front Sub Sensor	71
10.	Front Door Impact Sensor	78
11.	Side Airbag Sensor	81
12.	Curtain Airbag Sensor	87
13.	Roll Connector	96

1. General Description

A: COMPONENT

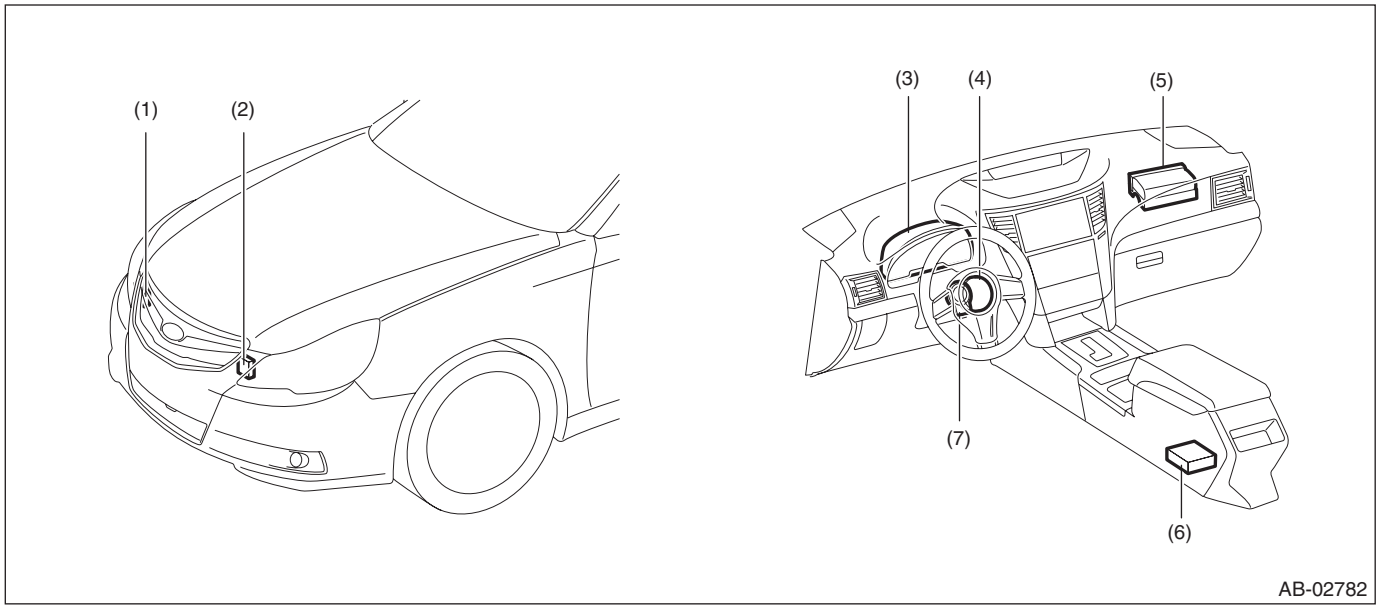

(1) Front sub sensor RH
(2) Front sub sensor LH
(3) Airbag warning light (in combination meter)
(4) Airbag module ASSY (driver)
(5) Airbag module ASSY (passenger)
(6) Airbag control module
(7) Steering roll connector

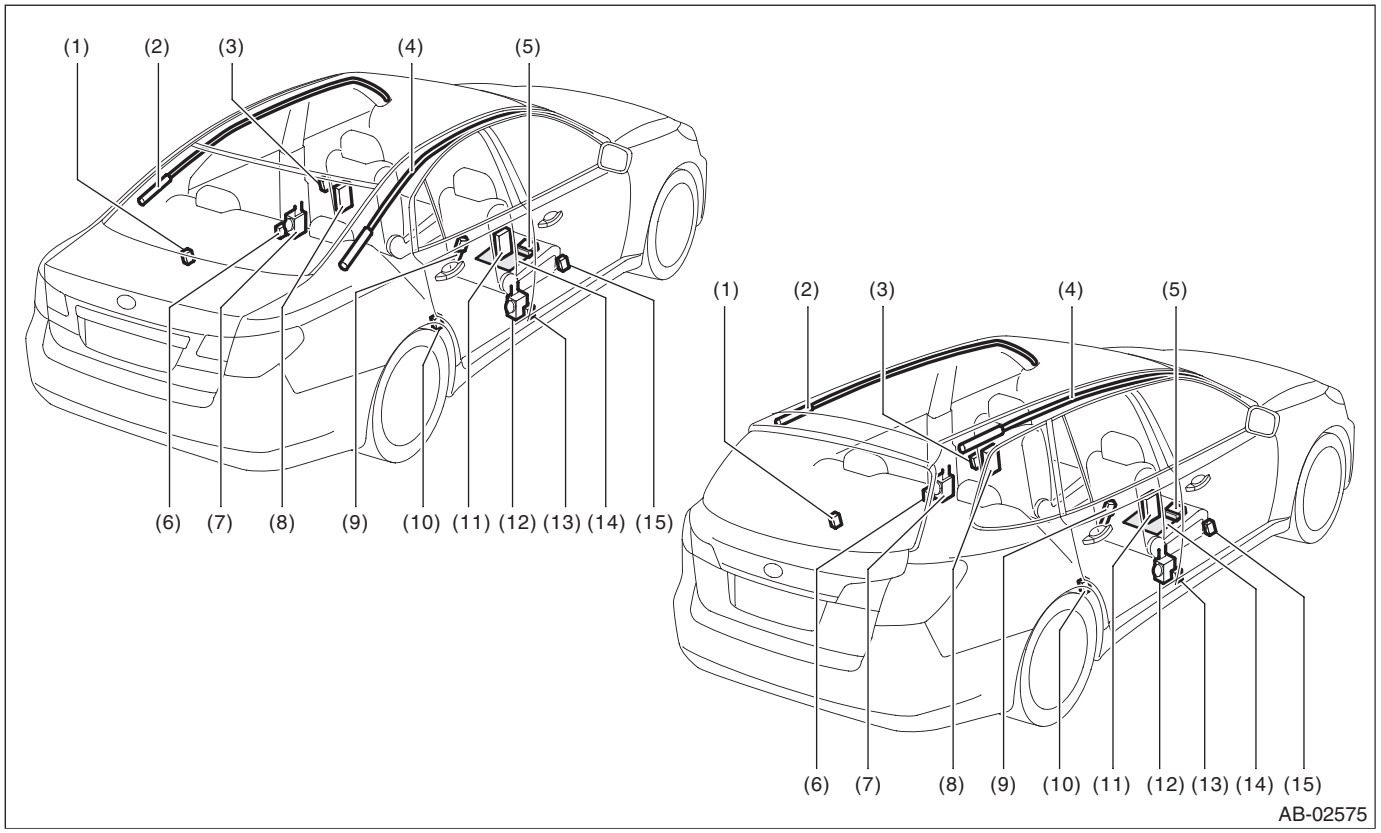

(1) Curtain airbag sensor LH
(2) Curtain airbag module LH
(3) Front door impact sensor LH
(4) Curtain airbag module RH
(5) Occupant detection control module
(6) Side airbag sensor LH
(7) Seat belt pretensioner LH
(8) Side airbag module LH
(9) Buckle switch RH
(10) Curtain airbag sensor RH
(11) Side airbag module RH
(12) Seat belt pretensioner RH
(13) Side airbag sensor RH
(14) Occupant detection sensor
(15) Front door impact sensor RH

1. DRIVER'S AIRBAG MODULE

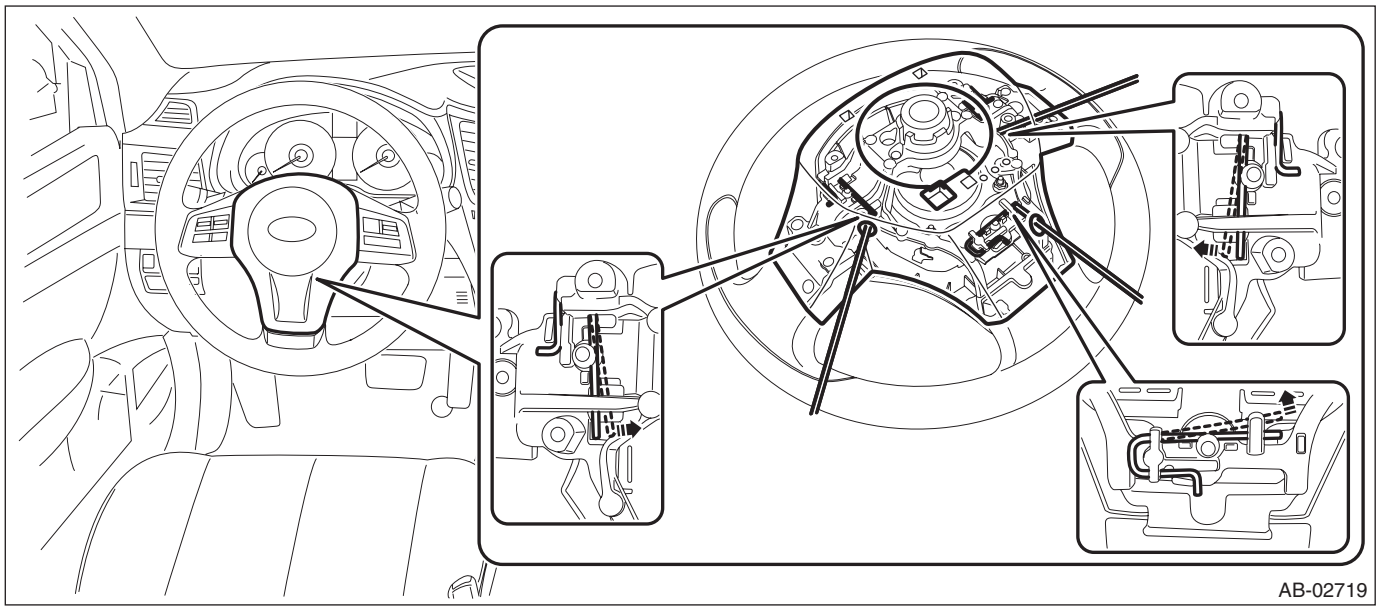

2. PASSENGER'S AIRBAG MODULE

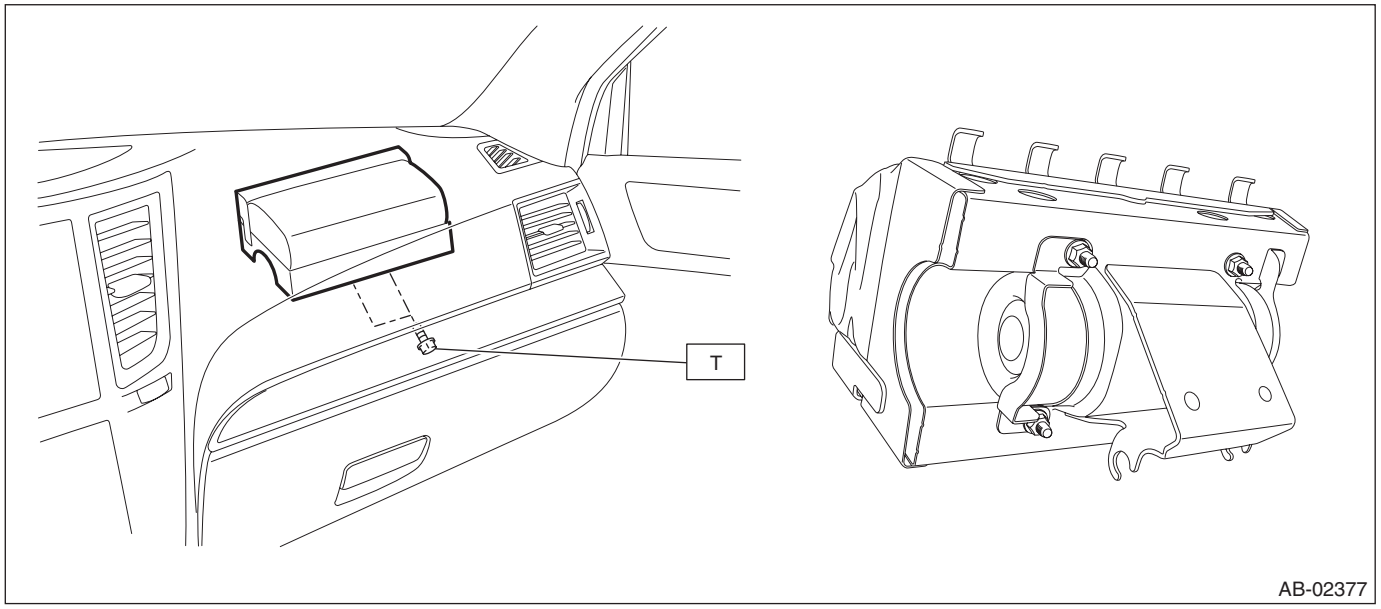

Tightening torque:
7.5 N·m (0.76 kgf-m, 5.5 ft-lb)

3. SIDE AIRBAG MODULE

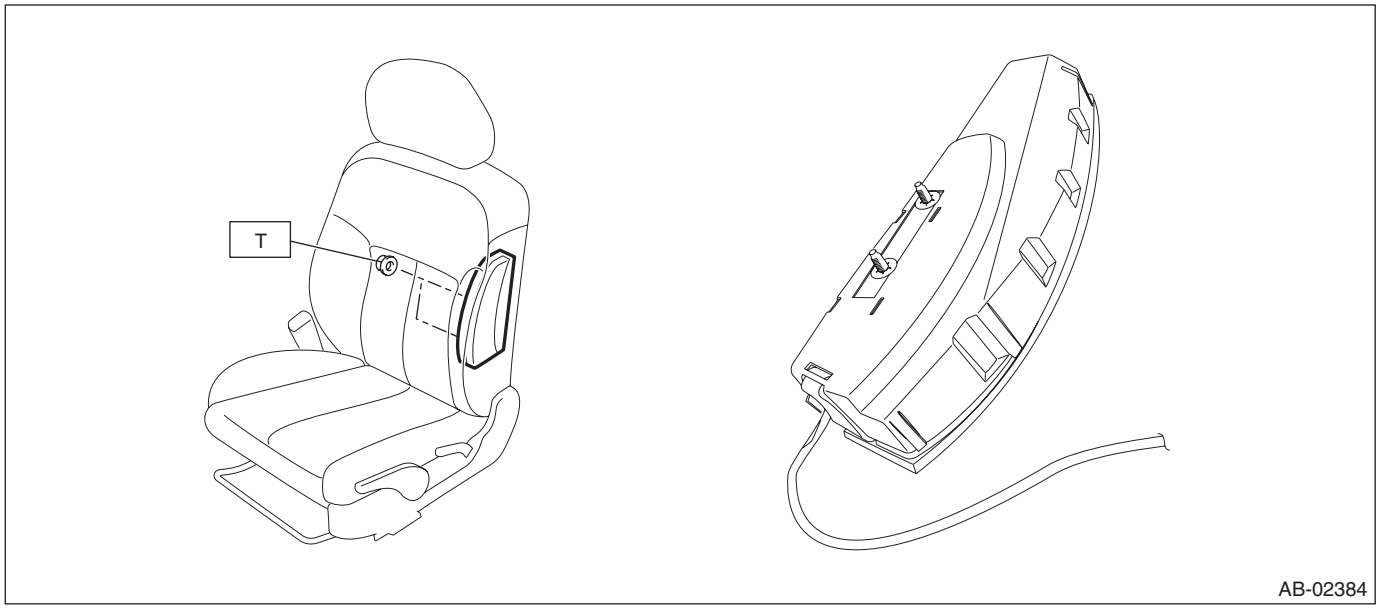

Tightening torque:
6 N·m (0.61 kgf-m, 4.4 ft-lb)

4. CURTAIN AIRBAG MODULE

- Sedan model

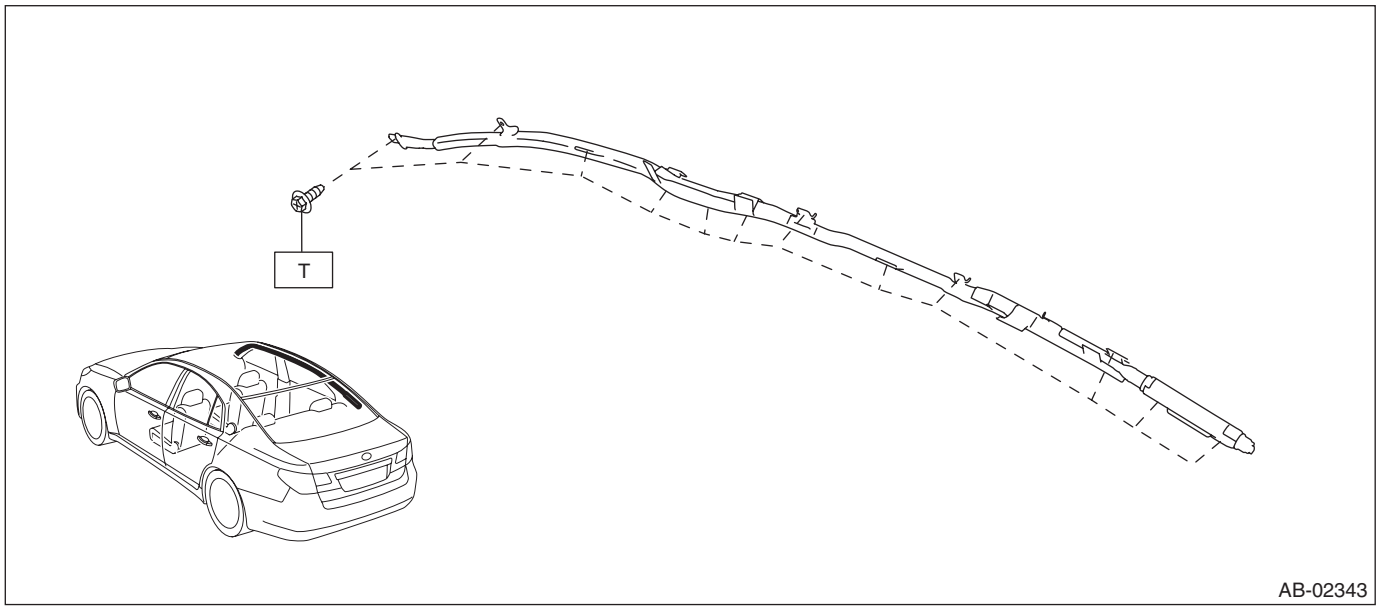

- OUTBACK model

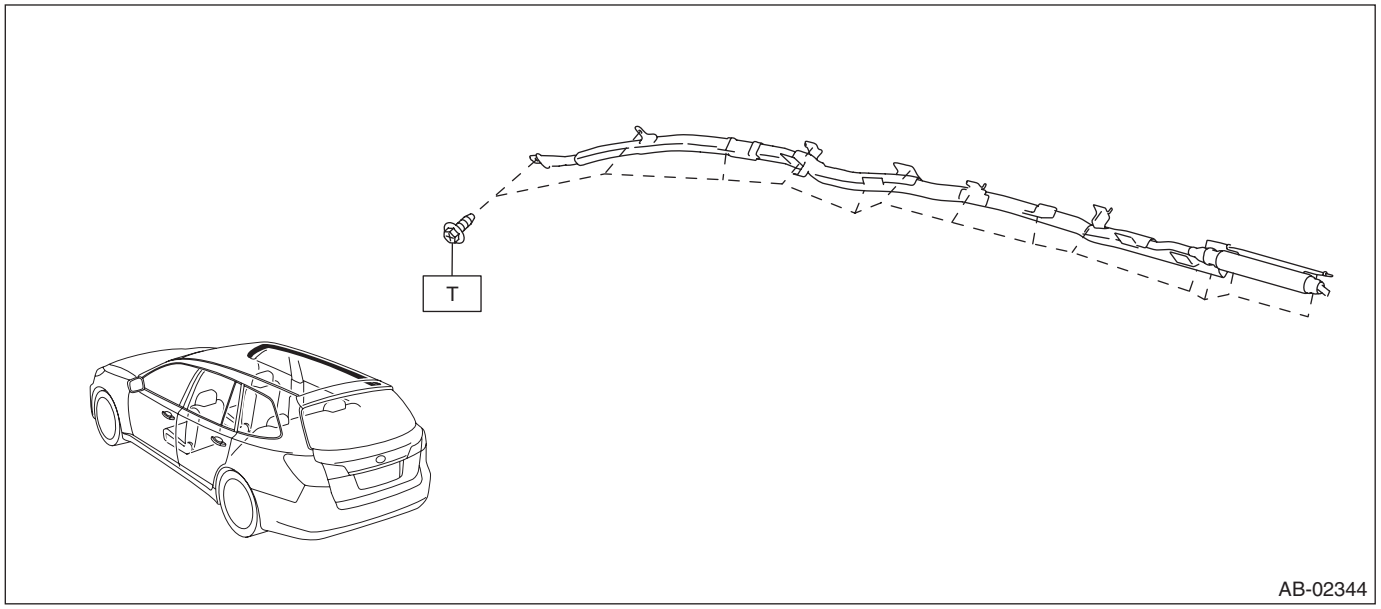

Tightening torque:
7.5 N·m (0.76 kgf-m, 5.5 ft-lb)

5. AIRBAG CONTROL MODULE

CAUTION:
Do not reuse mounting bolts and nuts.

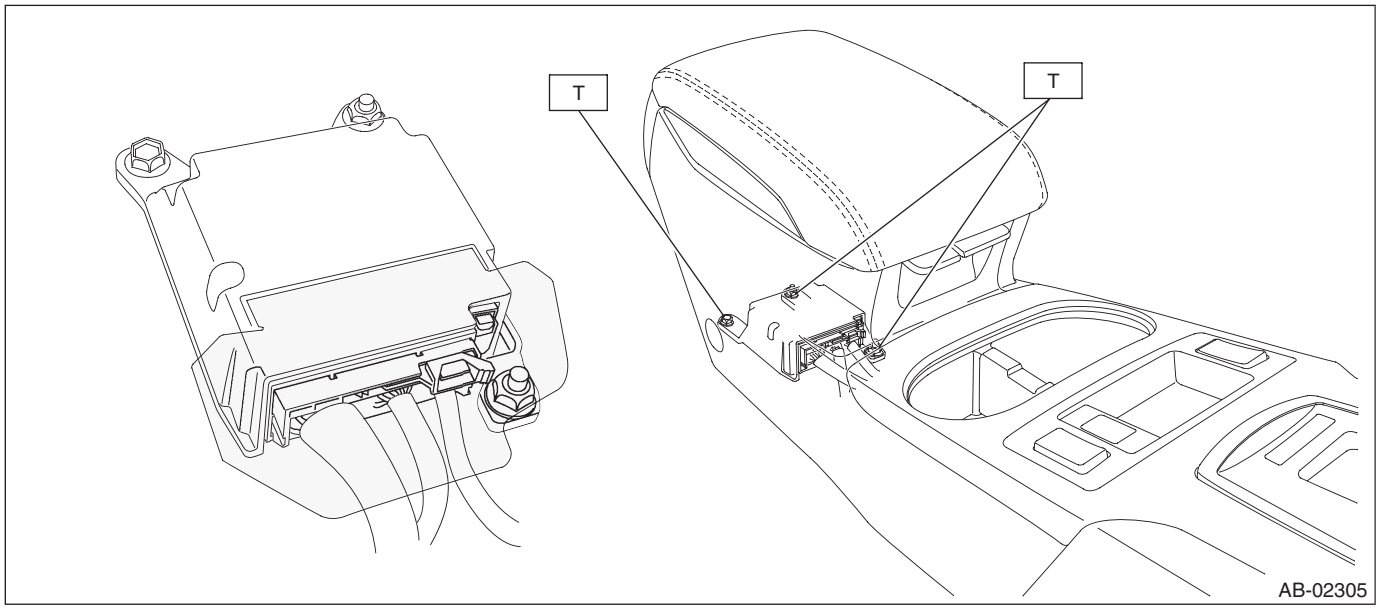

Tightening torque:
25 N·m (2.55 kgf-m, 18.4 ft-lb)

6. FRONT SUB SENSOR

CAUTION:
Do not reuse mounting bolts and nuts.

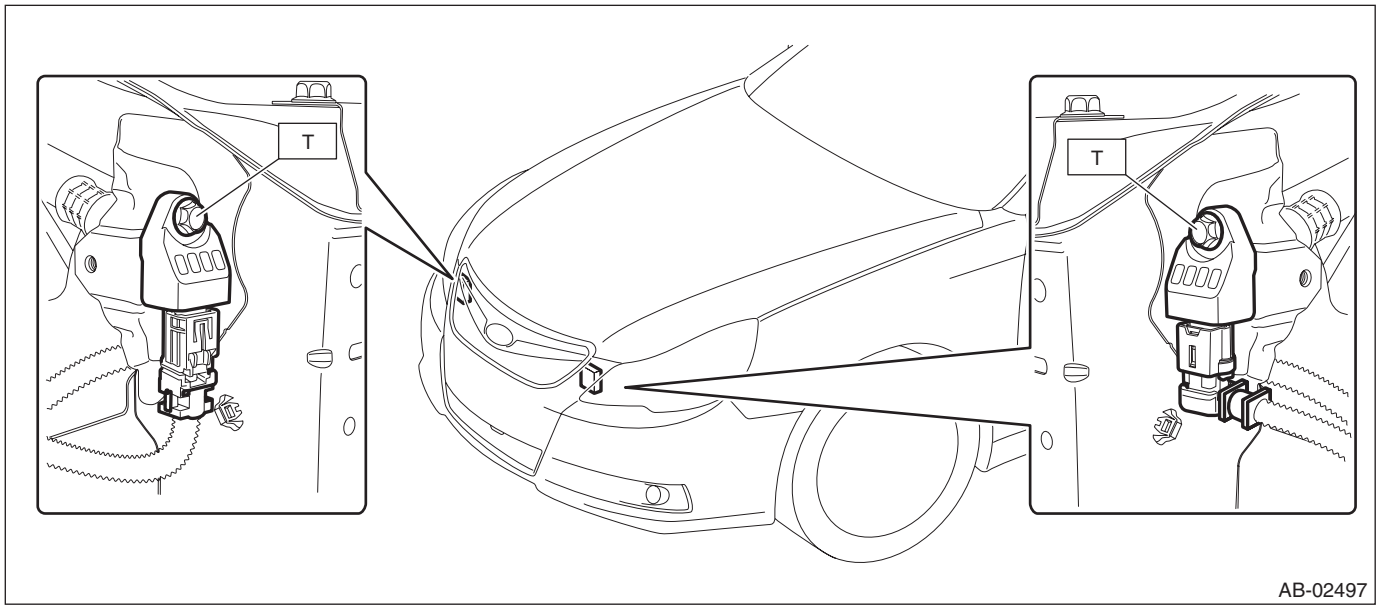

Tightening torque:
13 N·m (1.33 kgf-m, 9.6 ft-lb)

7. FRONT DOOR IMPACT SENSOR

CAUTION:
Do not reuse mounting bolts and nuts.

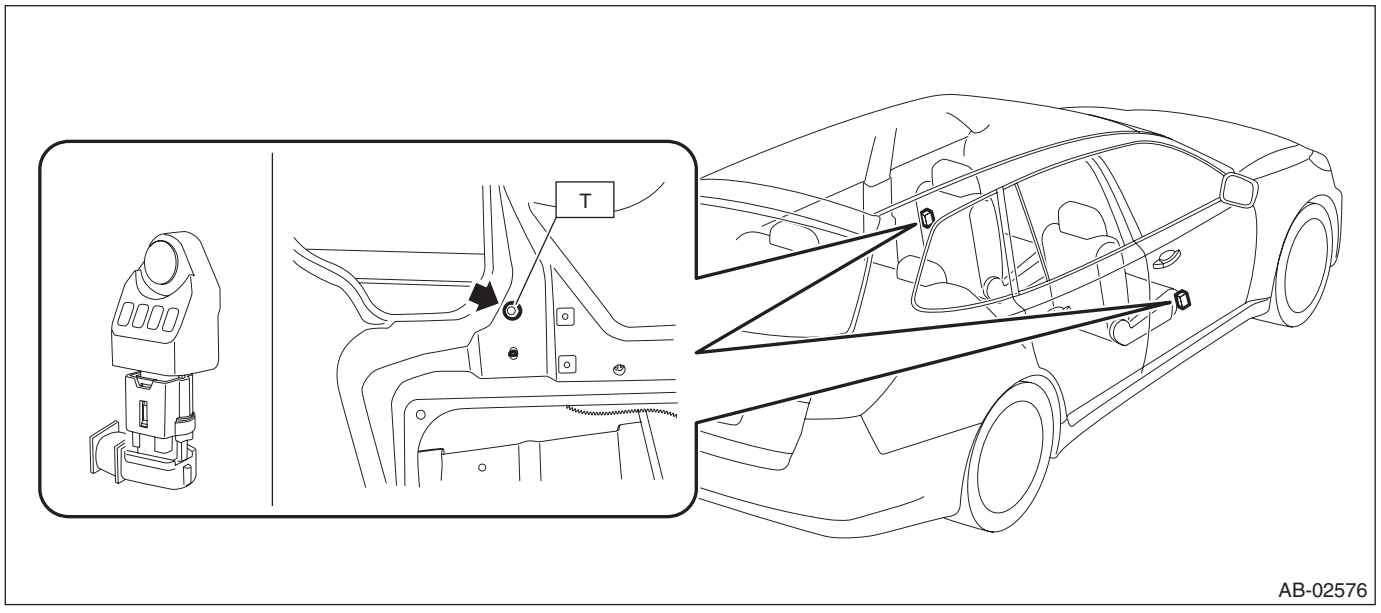

Tightening torque:
7.5 N·m (0.76 kgf-m, 5.5 ft-lb)

8. SIDE AIRBAG SENSOR

CAUTION:
Do not reuse mounting bolts and nuts.

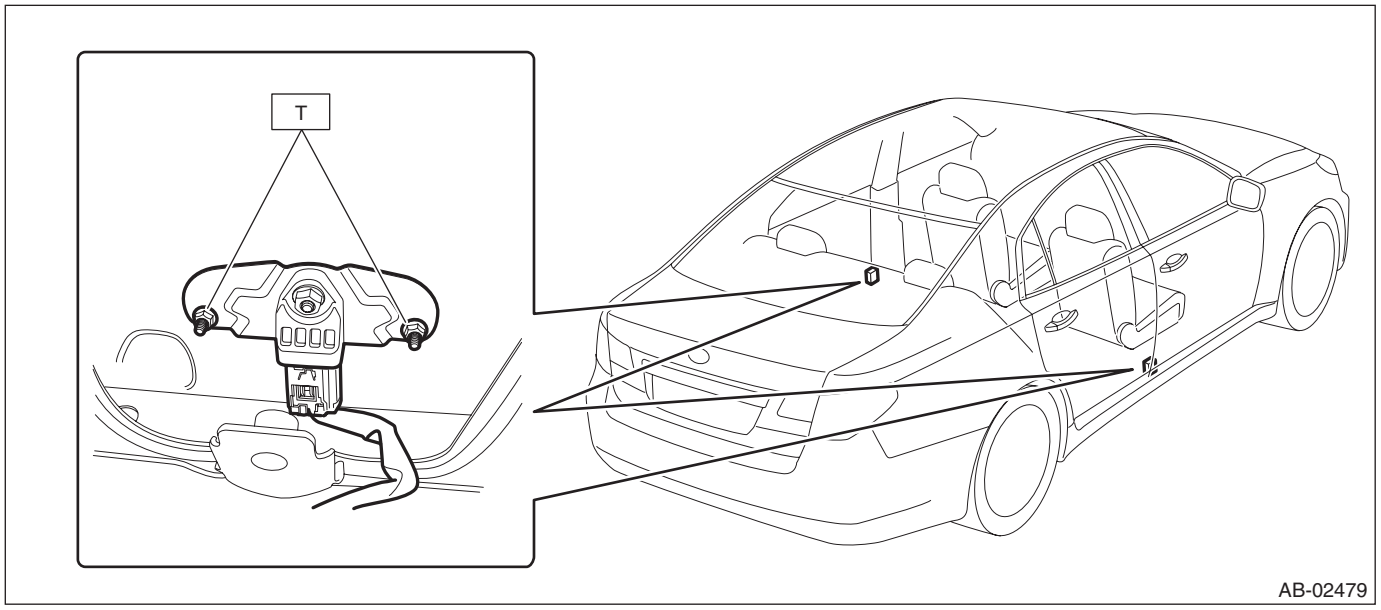

Tightening torque:
7.5 N·m (0.76 kgf-m, 5.5 ft-lb)

9. CURTAIN AIRBAG SENSOR

CAUTION:
Do not reuse mounting bolts and nuts.

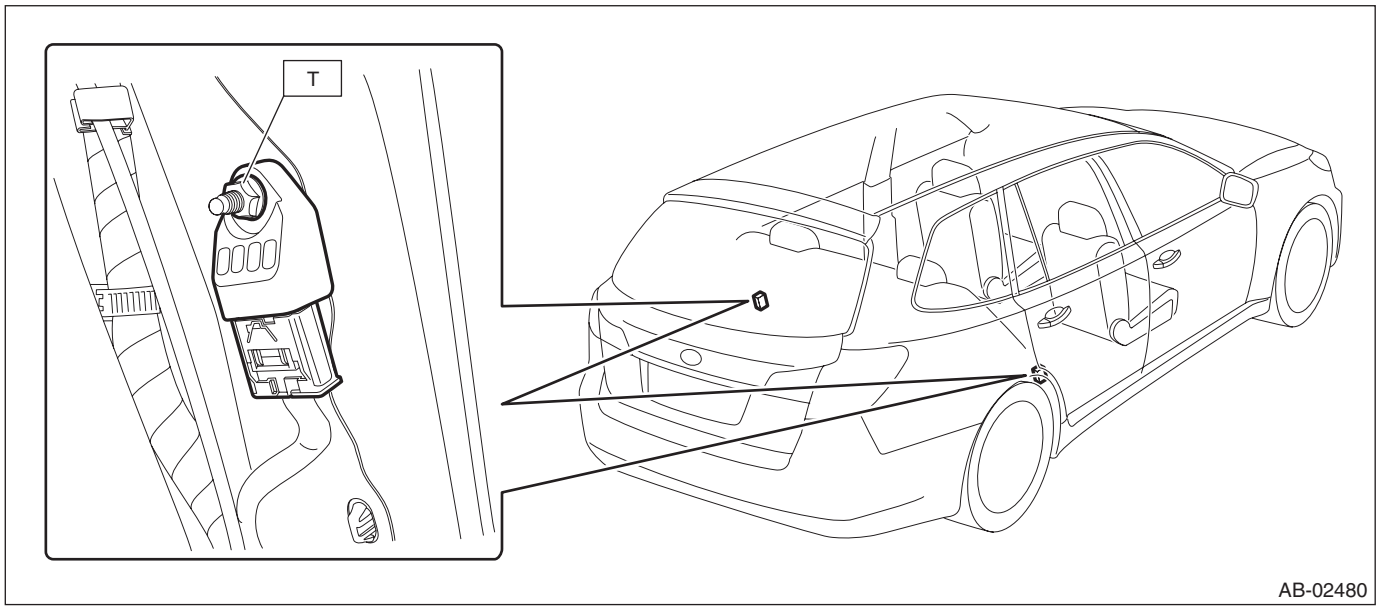

Tightening torque:
7.5 N·m (0.76 kgf-m, 5.5 ft-lb)

10.STEERING ROLL CONNECTOR

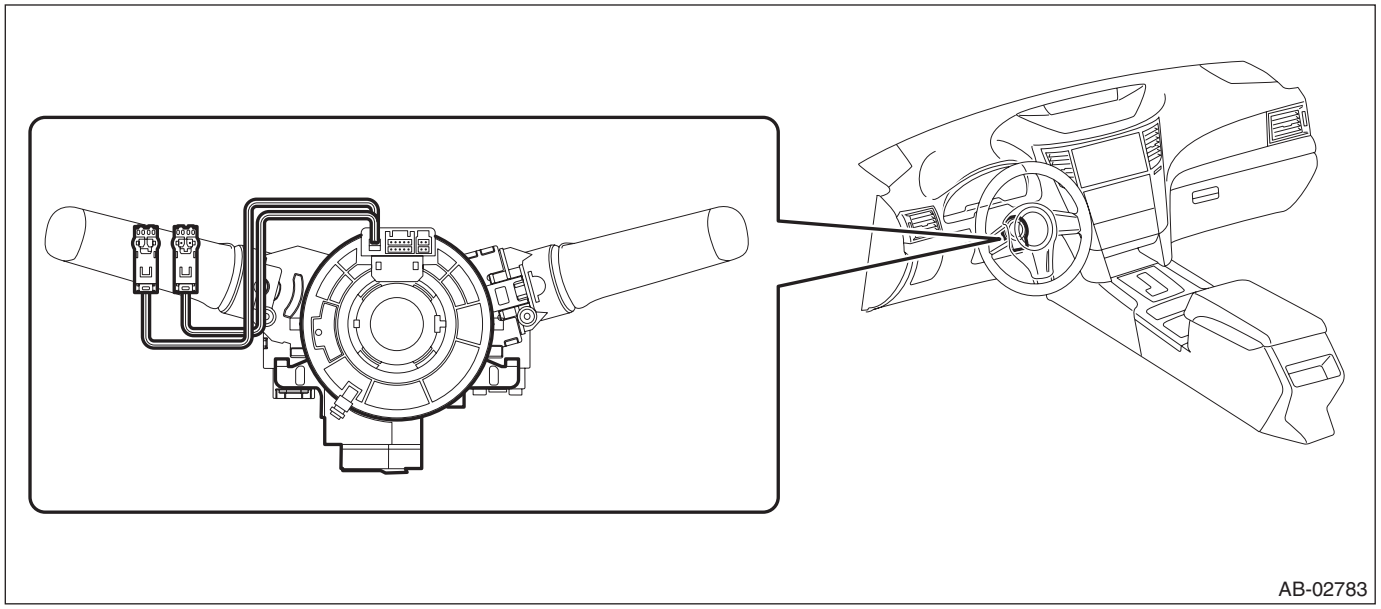

B: CAUTION

1. BEFORE STARTING ALL WORKS

• The airbag system is fitted with a backup power supply. After disconnecting the battery ground cable, the airbag may operate if you do not wait for 60 seconds or more before starting the service of airbag system.

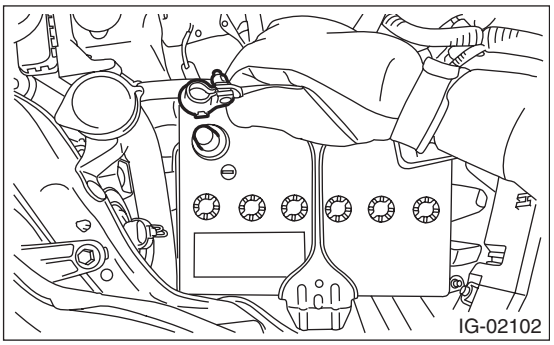

• When servicing a vehicle, be sure to turn the ignition switch to OFF, disconnect the ground cable from battery, and wait for 60 seconds or more before starting work.
• Once the airbag warning light lights up, immediately inspect or repair the vehicle. Otherwise, the airbag system may malfunction.
• Do not allow water or oil to come in contact with the connector terminals. Also, do not touch the connector terminals directly.

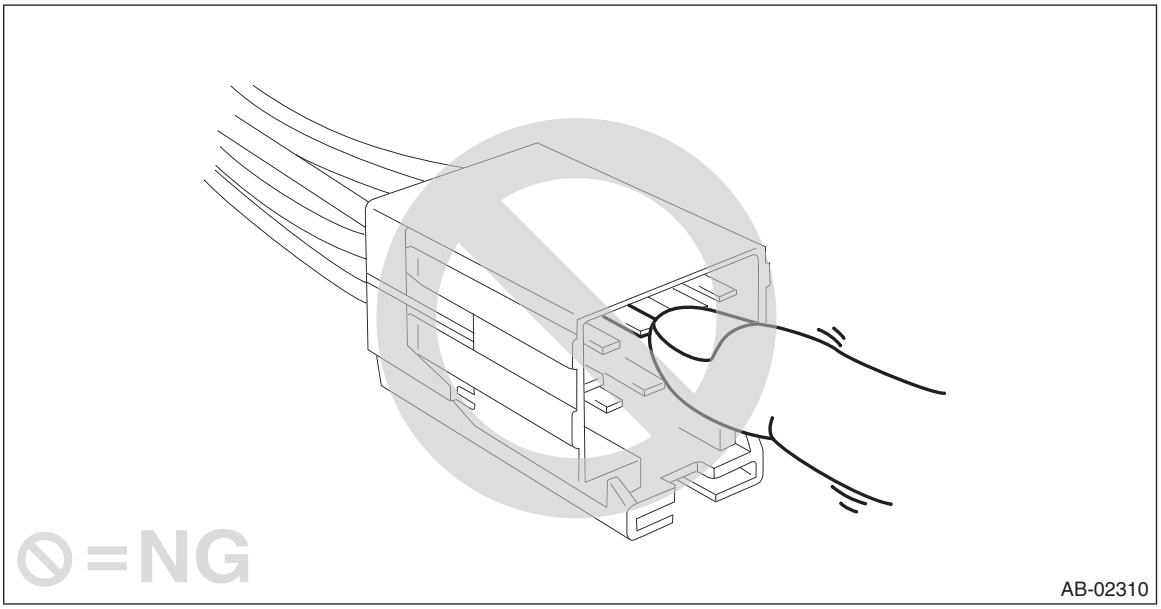

• If damage, open circuit or rust is found on airbag system wiring harness, do not repair the harness. Always replace the faulty harness with a new genuine part.

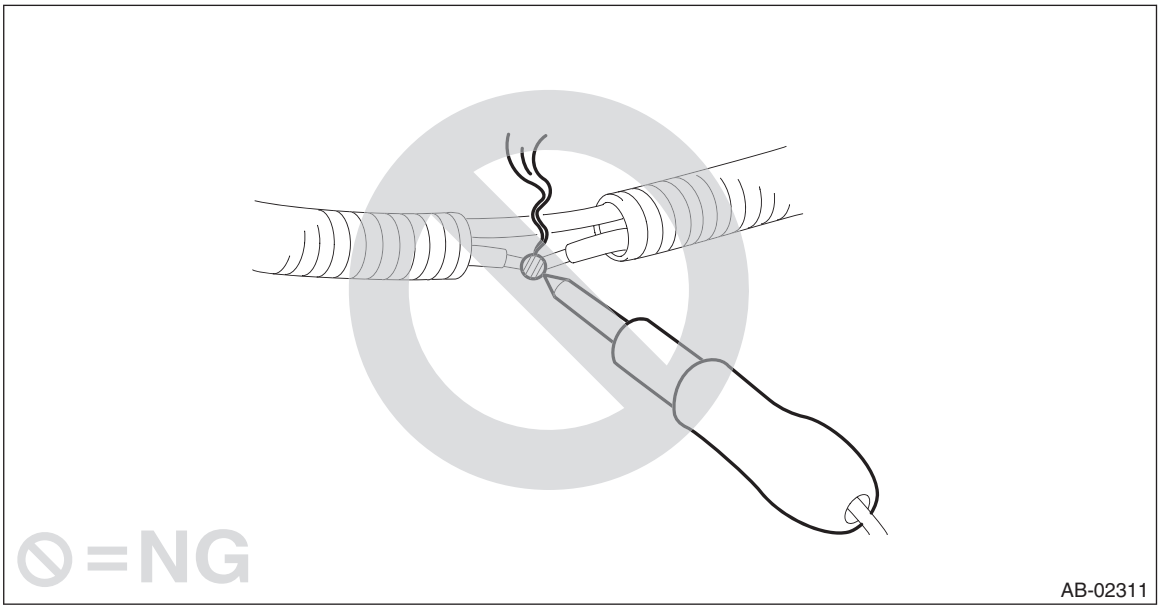

• When painting or performing sheet metal work on the front part of the vehicle, including the front wheel apron, front fender and radiator panel side, remove the front sub sensors and wiring harness of airbag system.
• When painting or performing sheet metal work on the side of the vehicle, including the side sill, center pillar and front and rear doors, remove the side airbag sensors, curtain airbag sensor, and wiring harness of the airbag system.

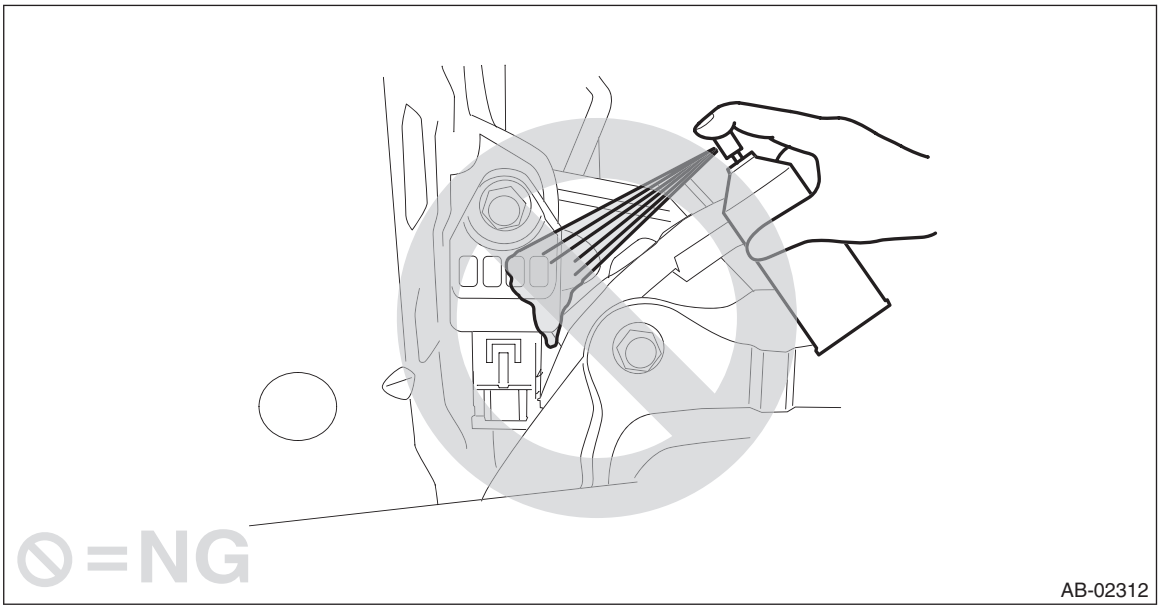

• When installing steering wheel and steering roll connector, be sure to adjust the steering roll connector.

2. BEFORE STARTING PARTS REPLACEMENT

• If airbag sensors, airbag module, airbag control module, pretensioners, or harnesses are deformed or damaged, replace with new parts.

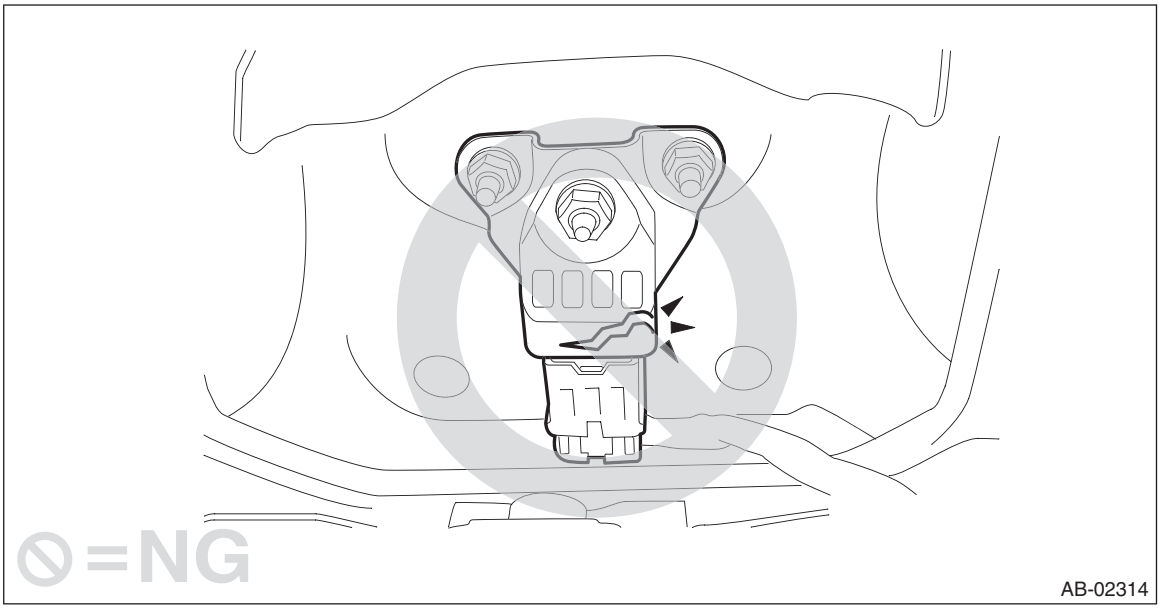

• Install the wiring harness securely with the specified clips to avoid interference or tangled with other parts.

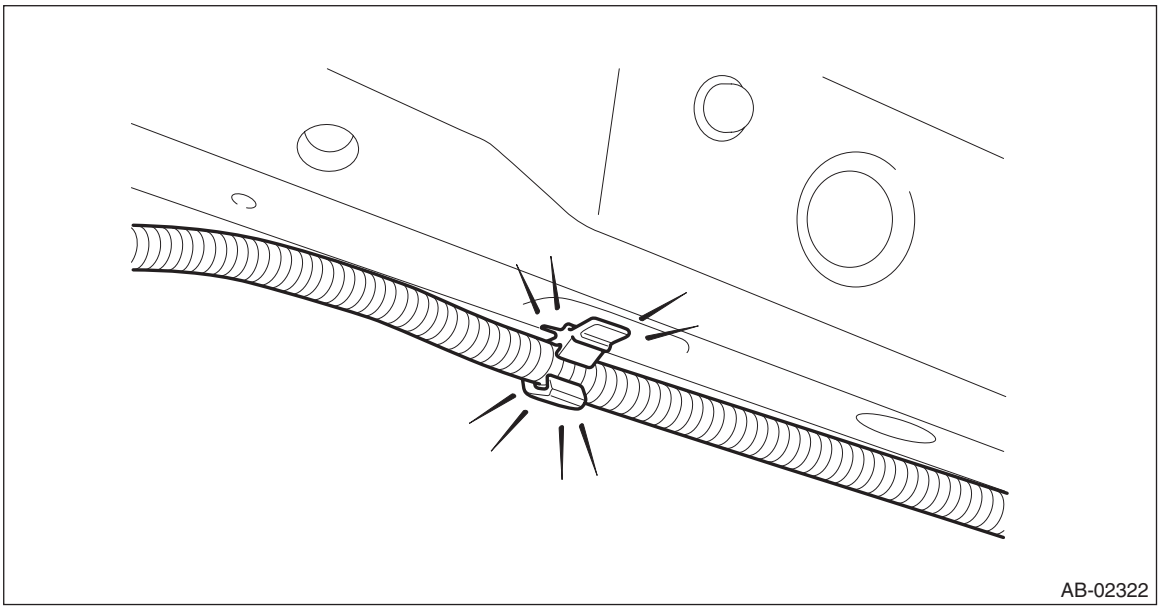

• Do not use the airbag or pretensioner parts from other vehicles. Always replace the defective parts with new parts.
• Never reuse any activated airbag module and pretensioner.
• Do not discard undeployed airbag or pretensioner.
• When airbag control module, front sub sensor, side airbag sensor and curtain airbag sensor are removed, do not reuse the bolts and nuts of them. Always use new bolts and nuts for them.
• When installing steering wheel and steering roll connector, be sure to adjust the steering roll connector.

• After removal of each parts for airbag system, keep them with the pad facing upward on a dry, clean and flat surface without heat, light sources, moisture and dust.

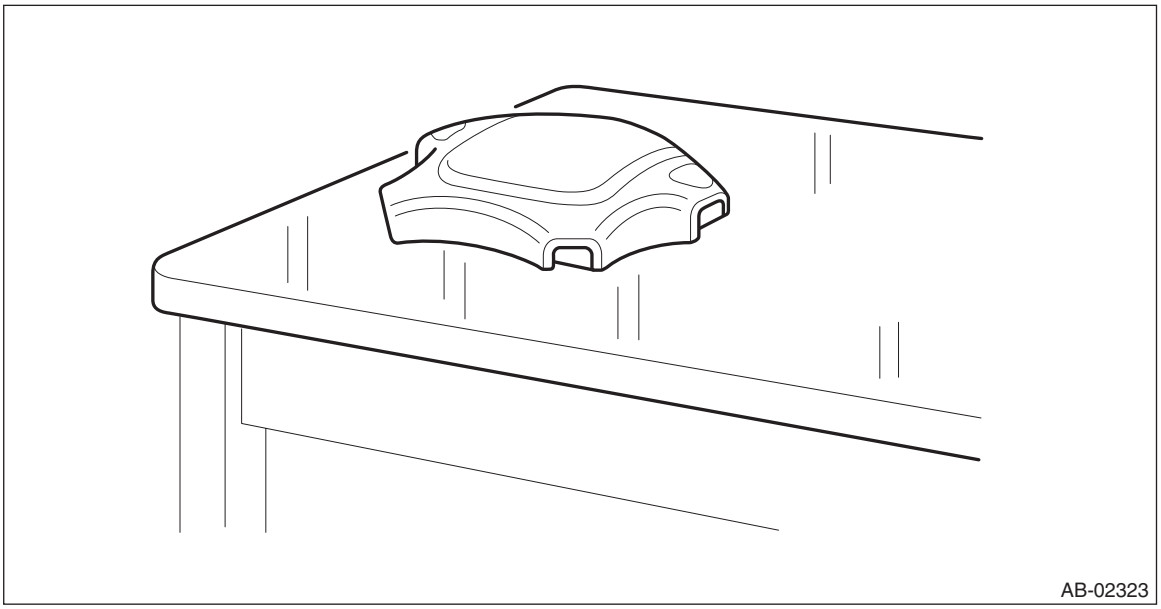

• Do not drop any airbag component, store them under high temperature of 85°C (185°F) or more, or let water, oil or grease get on them; the internal parts may be damaged or the reliability may be greatly lowered.

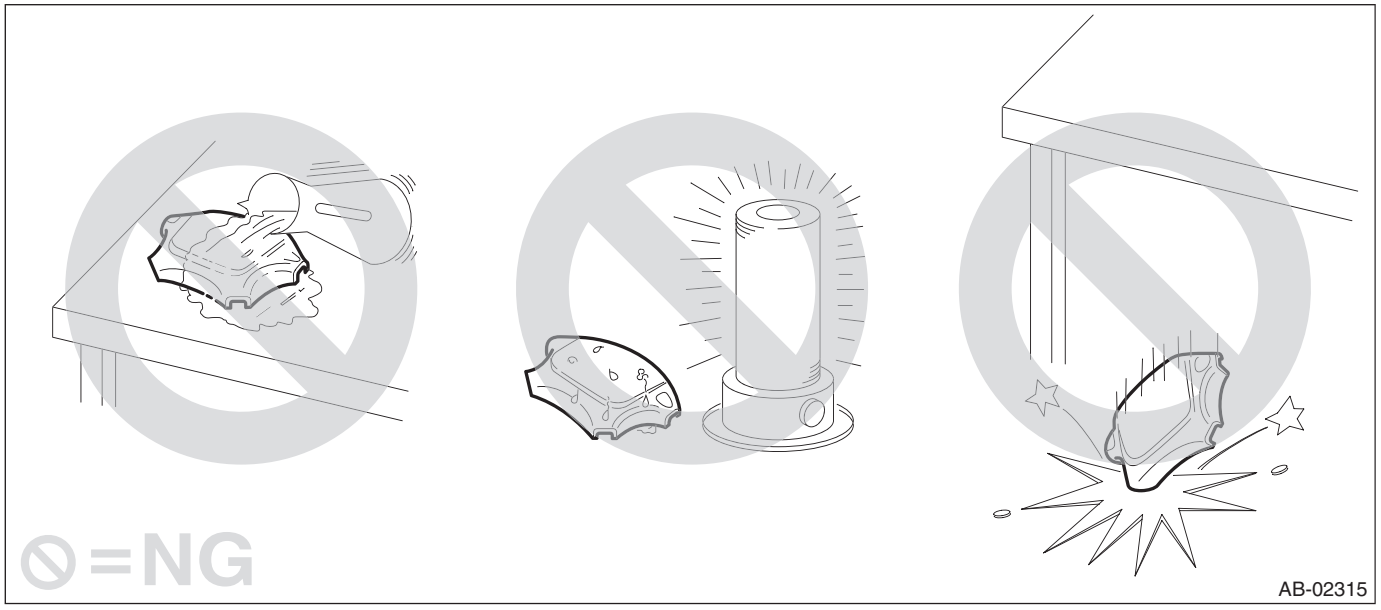

• When storing a removed airbag module, do not place it with the pad side of airbag facing downward. Do not place any objects on the airbag module. Do not pile up the airbag module. If the pad of the airbag module is in contact with other objects, it may cause a serious accident if the airbag accidentally operates.

- Driver's airbag module

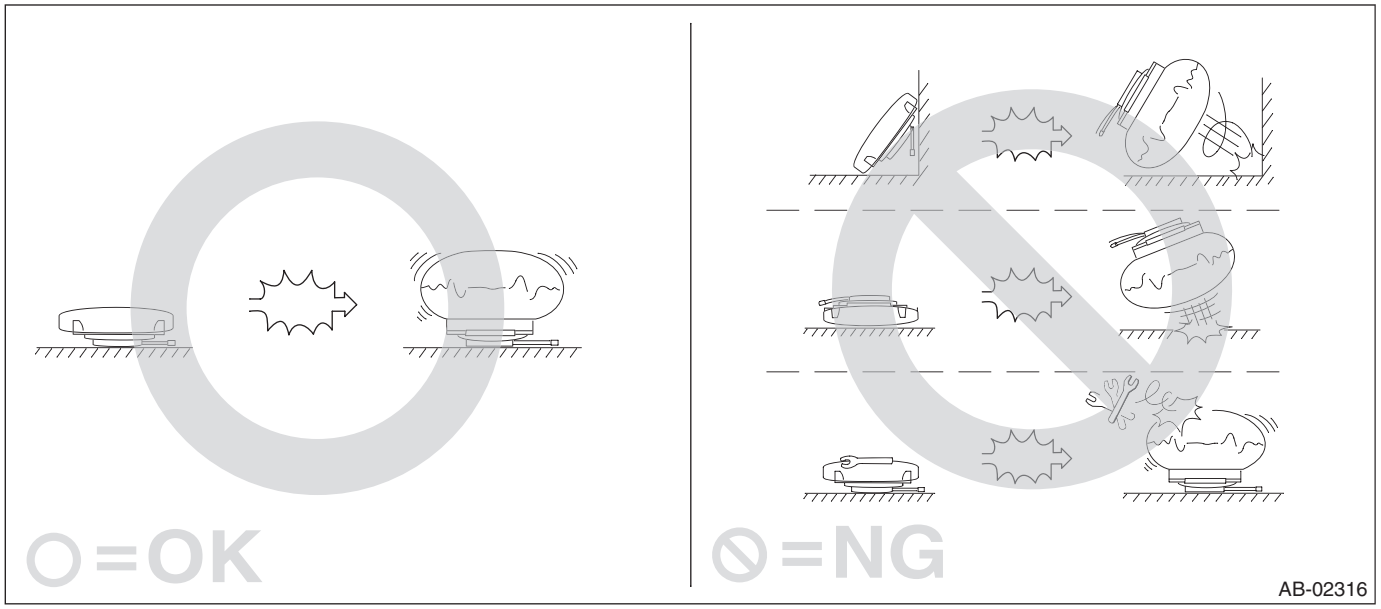

- Passenger's airbag module & side airbag module

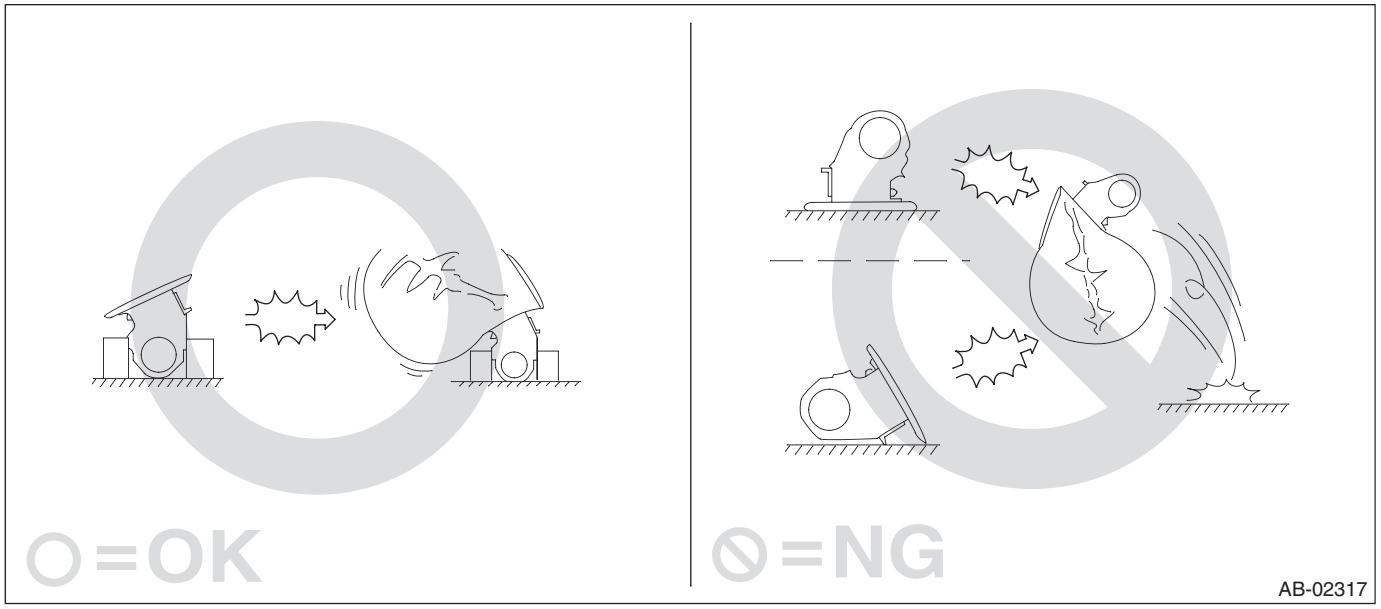

• Do not disassemble driver's airbag module, passenger's airbag module, side or curtain airbag modules, or pretensioner.

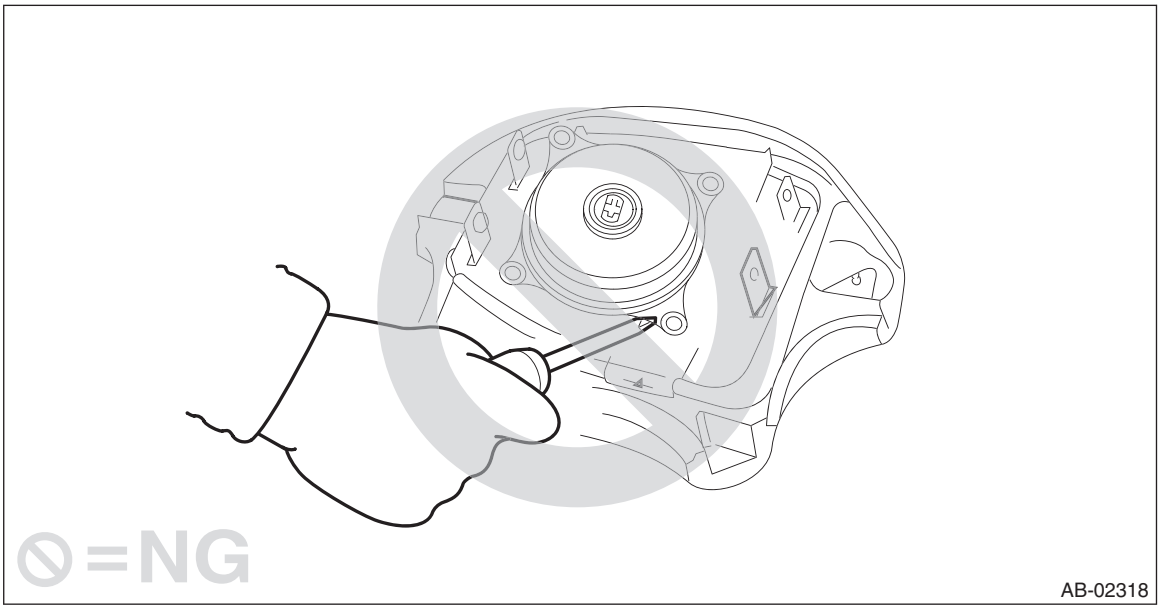

• The removed front seat with airbag module must be kept at least 200 mm (8 in) away from walls and other objects.

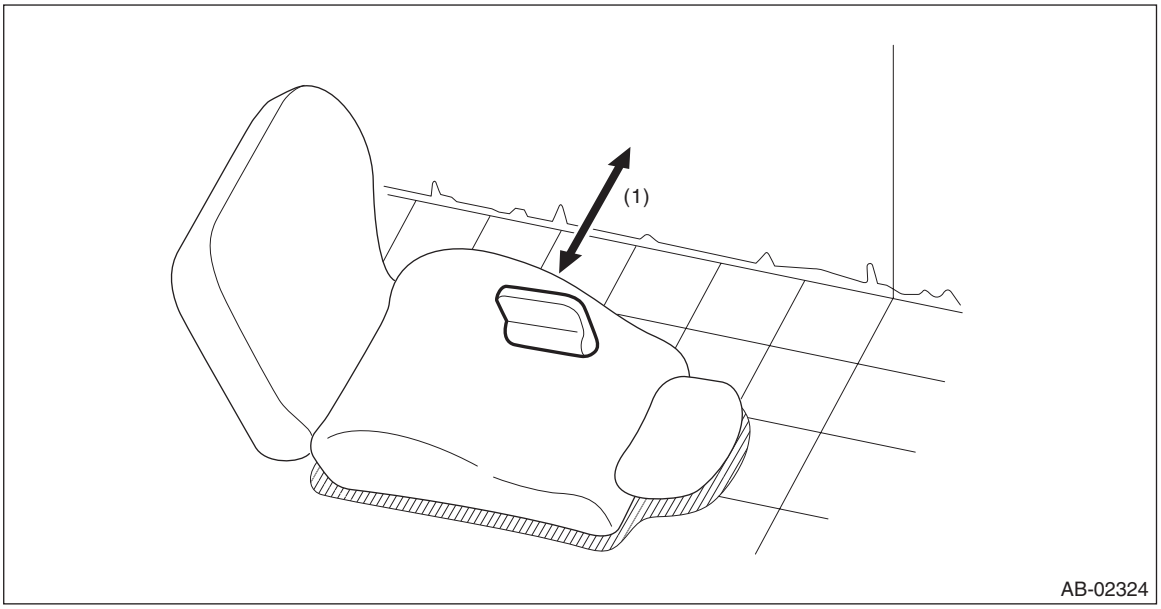

(1) 200 mm (8 in) or more

3. BEFORE STARTING TROUBLESHOOTING

• Even if any part is to be replaced as the result of diagnosis, do not use airbag parts or pretensioner parts from other vehicles. Always replace the defective parts with new parts.
• When checking the airbag system, be sure to use a digital circuit tester. Use of an analog circuit tester may cause the airbag to activate erroneously due to a minimal current inside tester.

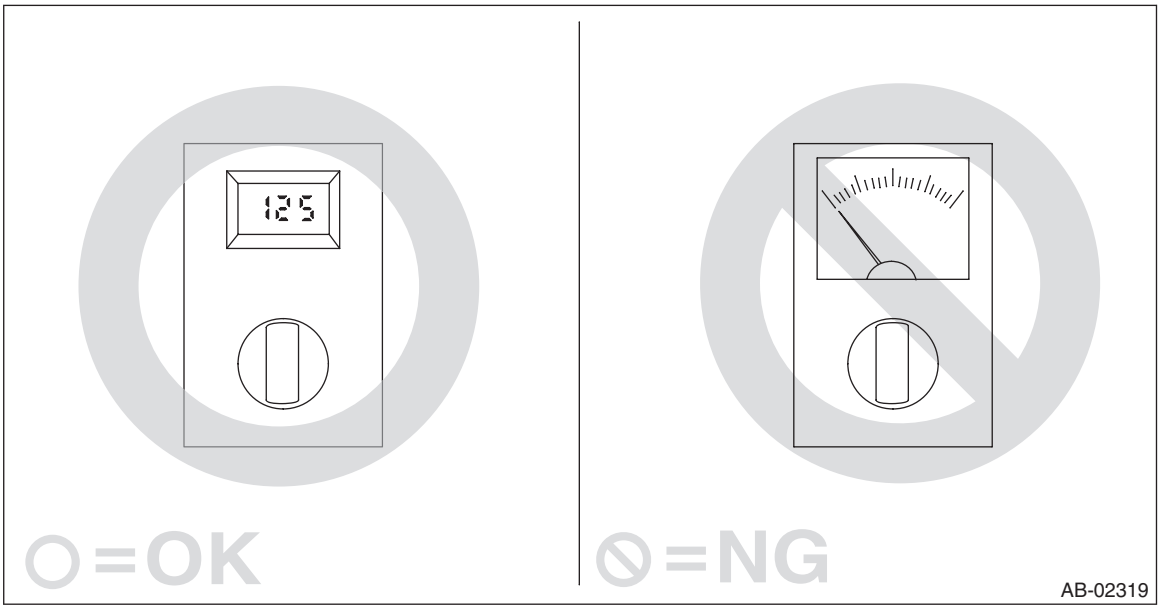

• Do not allow water or oil to come in contact with the connector terminals. Also, do not touch the connector terminals directly.

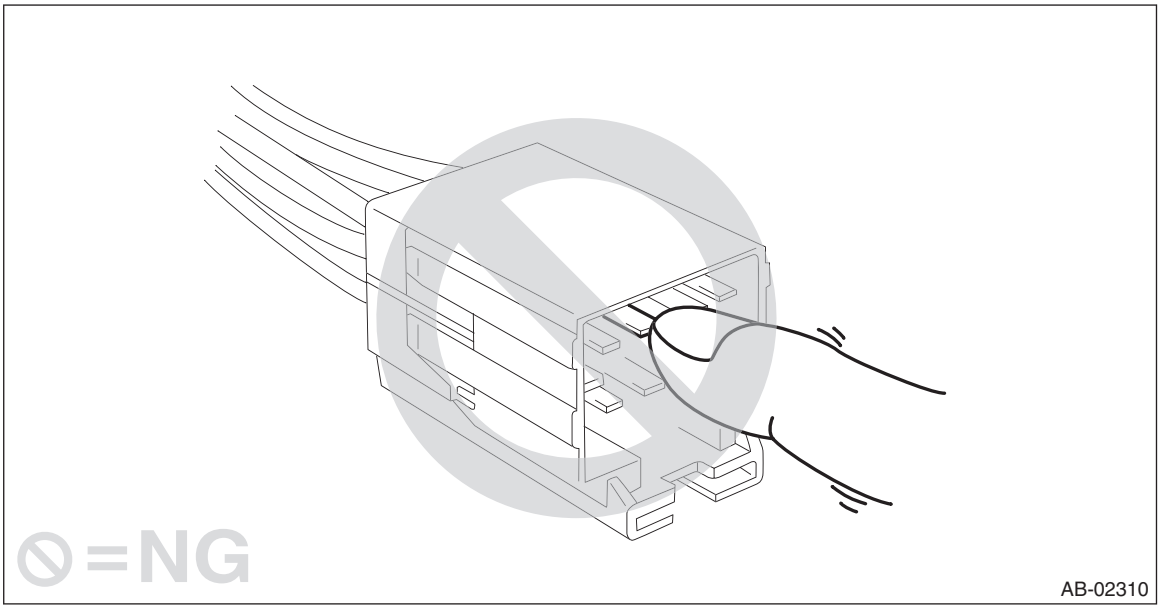

• When checking, use a test harness (1). Damage to connector terminal cause malfunction. Do not directly apply the tester probe to connector terminal of airbag.

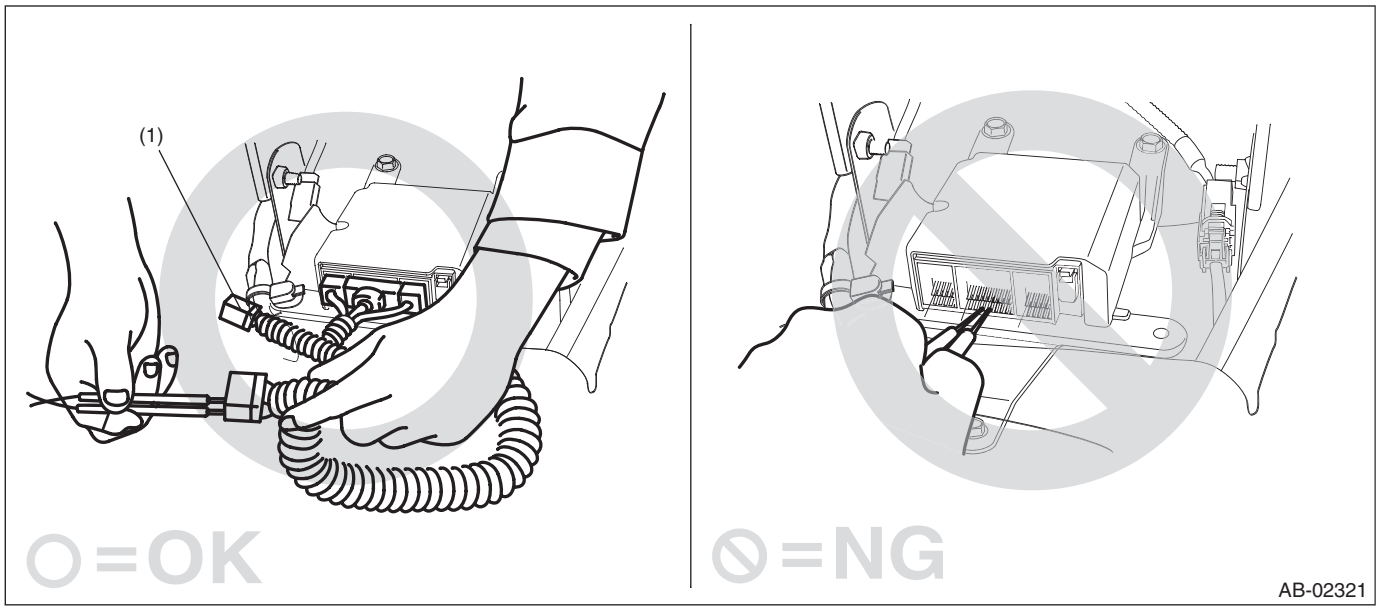

• Do not check continuity of the airbag modules for driver's side, passenger's side and curtain, or the pretensioner.

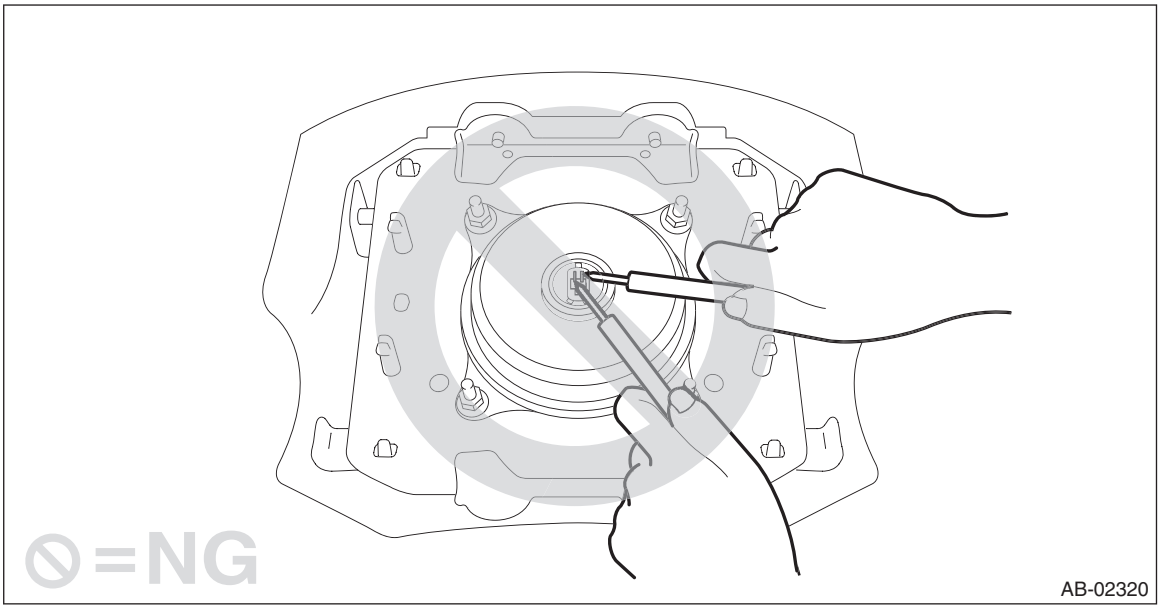

• If damage, open circuit or rust is found on airbag system wiring harness, do not repair the harness. Always replace the faulty harness with a new genuine part.

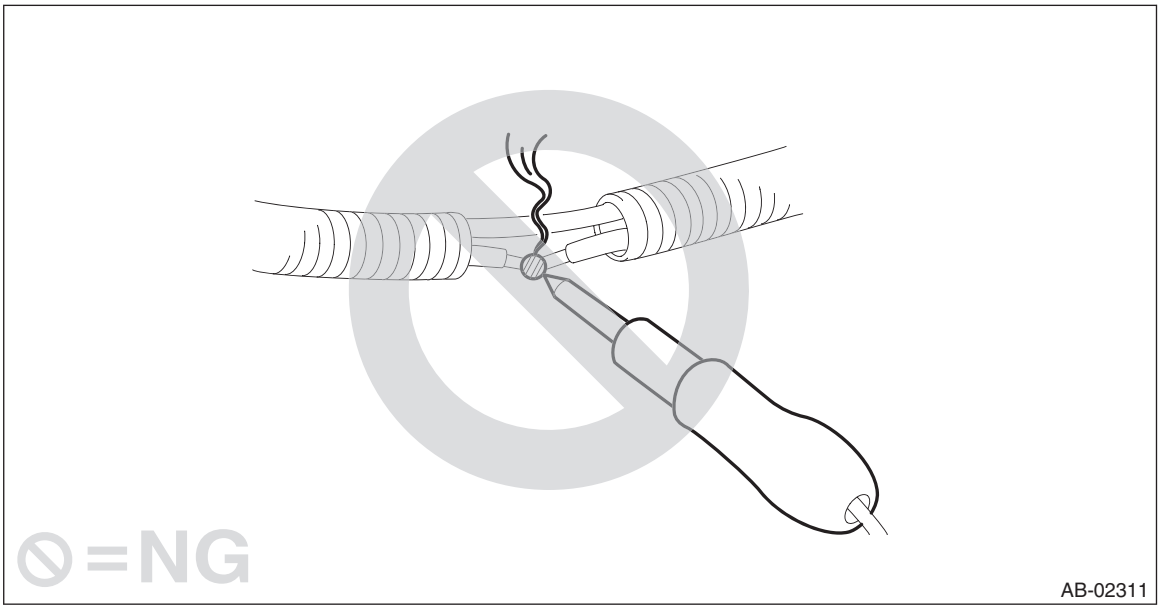

C: PREPARATION TOOL

1. SPECIAL TOOL

ILLUSTRATION	TOOL NUMBER	DESCRIPTION	REMARKS
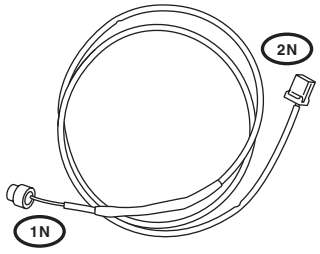 ST98299SA000	98299SA000	TEST HARNESS N	Used for unit inspection of steering roll connector.
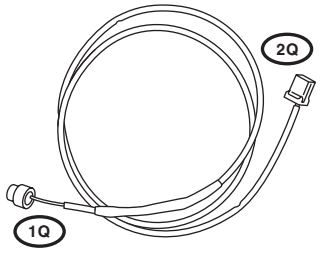 ST98299SA040	98299SA040	TEST HARNESS Q	Used for unit inspection of steering roll connector.

2. GENERAL TOOL

TOOL NAME	REMARKS
Steering wheel puller	Used for removing the steering wheel.

2. Airbag Connector

A: PROCEDURE

1. POWER SUPPLY

1) How to disconnect:

CAUTION:
When pulling the slide lock or disconnecting connector, be sure to hold the connector, not the harness.

(1) Push the lock (A).
(2) While holding down the lock (A), disconnect the connector.

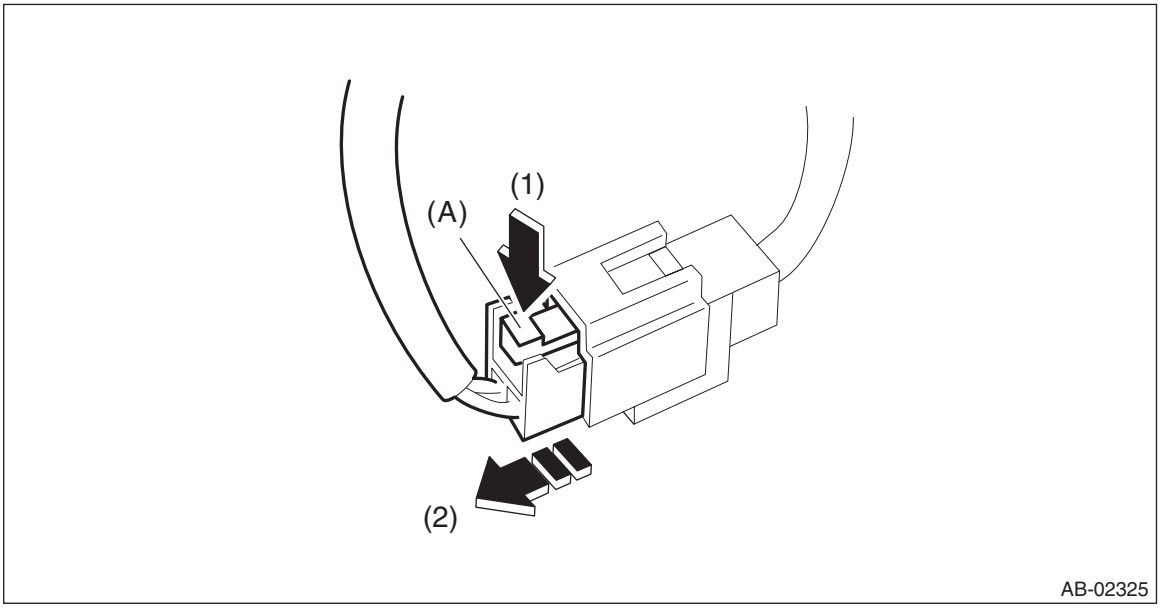

2) How to connect:

CAUTION:
Be sure to insert the connector in until it is locked. Then pull it gently to make sure that it is locked.
Holding the connector, push it in securely until a clicking sound is heard.

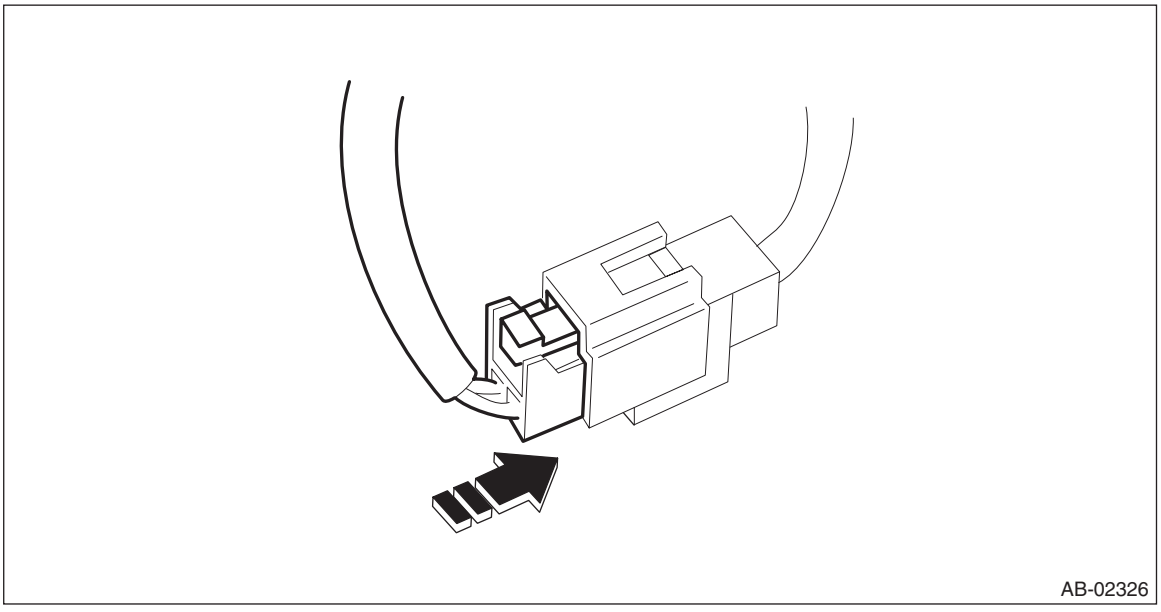

2. AIRBAG CONTROL MODULE

1) How to disconnect:
   (1) Push the lock lever plate (A).
   (2) While holding down the lock lever plate (A), pull the lever toward you.

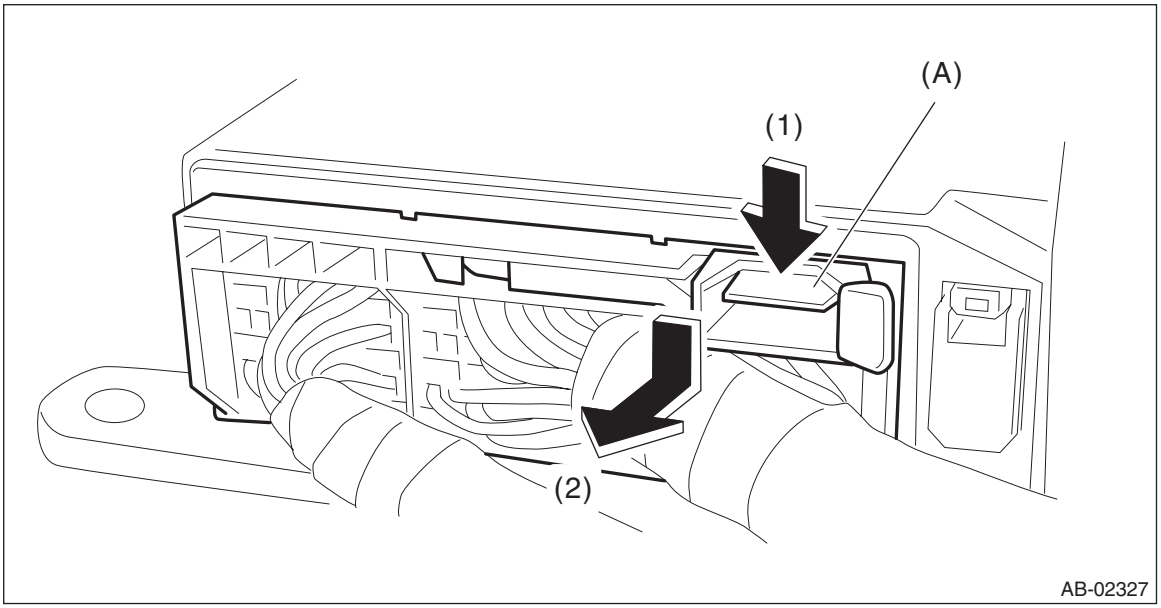

2) How to connect:

CAUTION:
Be sure to insert the connector in until it is locked. Then pull it gently to make sure that it is locked.
Insert the connector and push the lock lever in securely.

3. DRIVER'S AIRBAG MODULE (ROLL CONNECTOR)

1) How to disconnect:

CAUTION:
When pulling the slide lock or disconnecting connector, be sure to hold the connector, not the harness.
   (1) Push the slide lock (A) in the direction of arrow.
   (2) With the slide lock pushed, disconnect the connector.

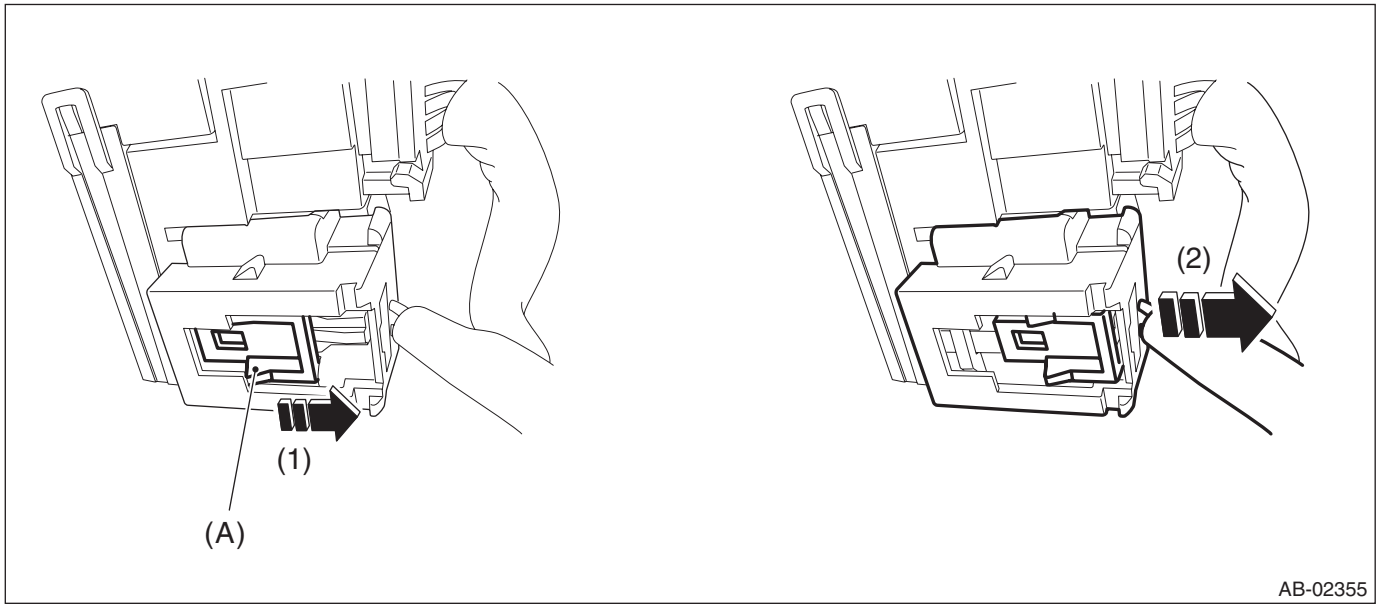

2) How to connect:

CAUTION:
Be sure to insert the connector in until it is locked. Then pull it gently to make sure that it is locked.
Holding the connector, push it in securely until a clicking sound is heard.

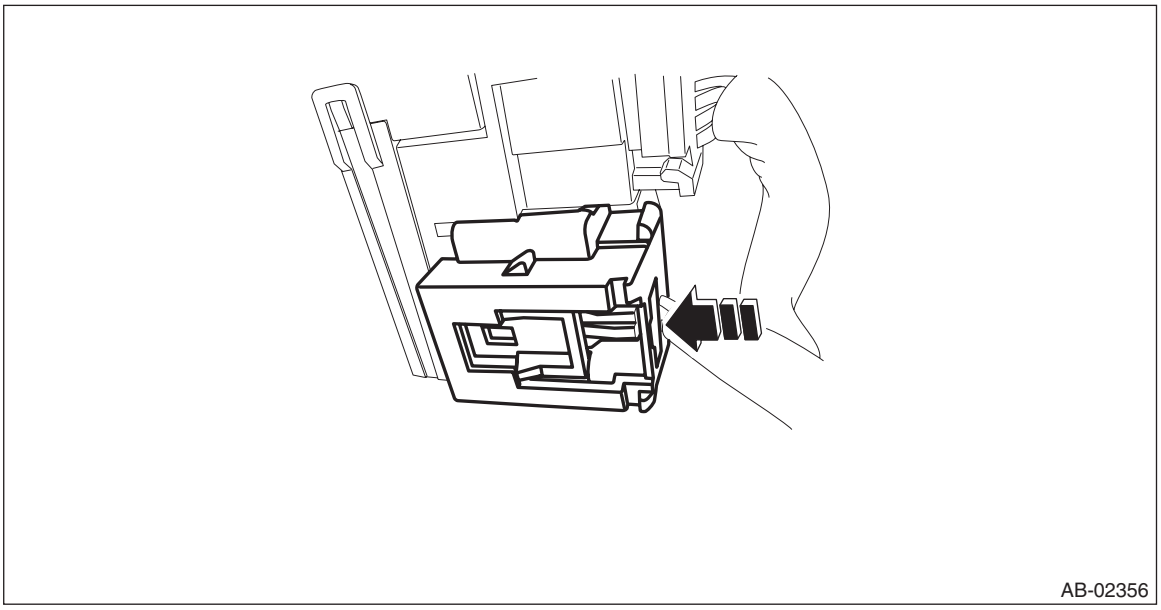

4. PASSENGER'S AIRBAG MODULE

1) How to disconnect:

CAUTION:
When pulling the slide lock or disconnecting connector, be sure to hold the connector, not the harness.

(1) Push the slide lock (A) in the direction of arrow.
(2) With the slide lock pushed, disconnect the connector.

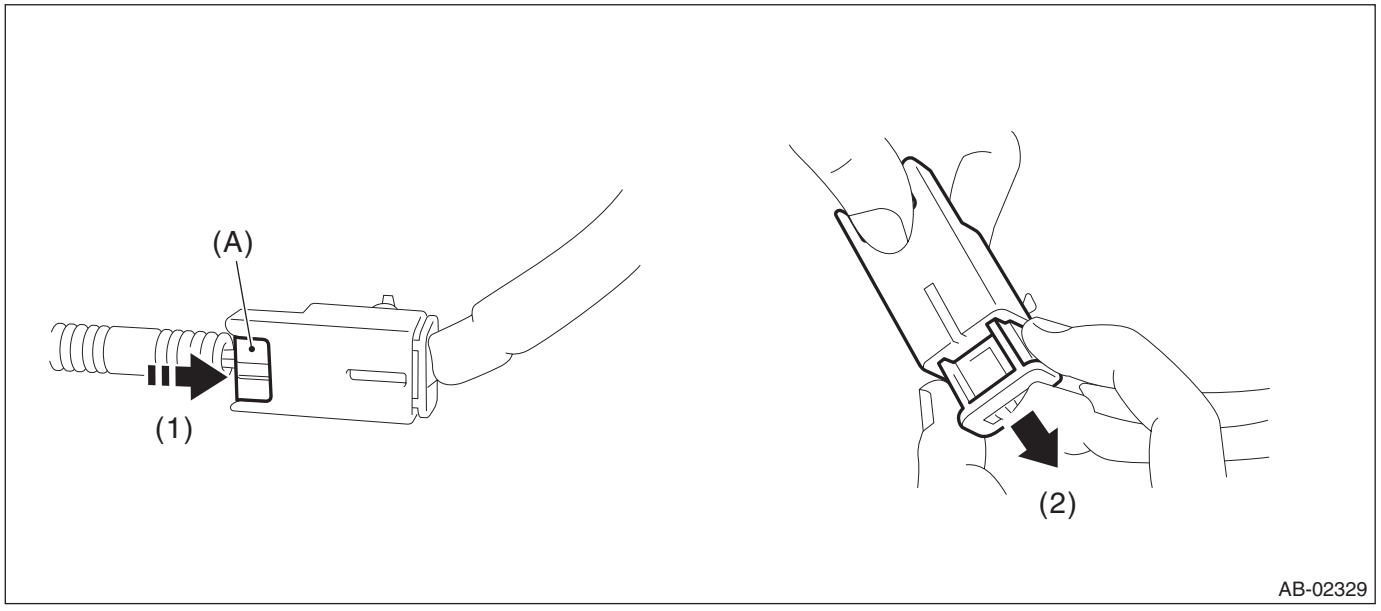

2) How to connect:

CAUTION:
Be sure to insert the connector in until it is locked. Then pull it gently to make sure that it is locked.
Holding the connector, push it in securely until a clicking sound is heard.

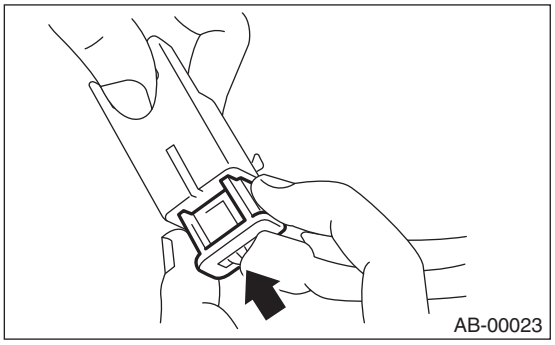

5. DRIVER'S AIRBAG MODULE, CURTAIN AIRBAG MODULE & PRETENSIONER

1) How to disconnect:
(1) Using a flat tip screwdriver, pry the push lock upward to unlock.
(2) Pull the connector to disconnect from the driver's airbag module assembly or the retractor assembly.

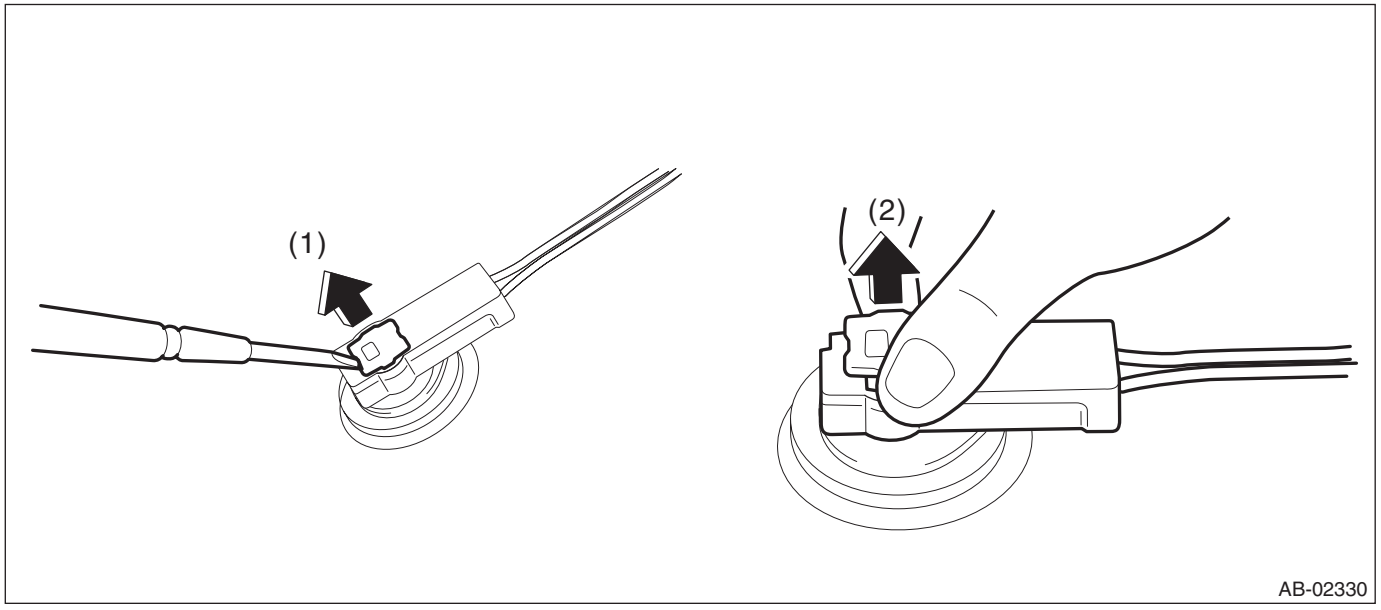

2) How to connect:

CAUTION:
- **Be sure to insert the connector in until it is locked.**
- **Be sure to push the push lock in securely. Then pull it gently to make sure that it is locked.**

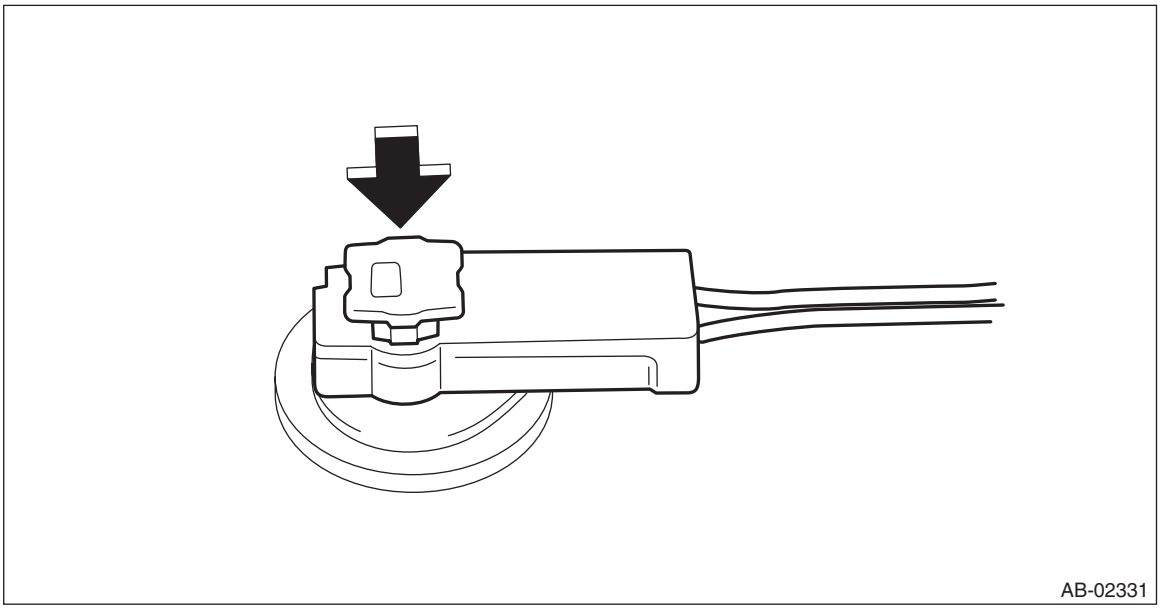

Connect the connector in the reverse order of disconnecting. At this time, be sure to insert it until a clicking sound is heard.

6. FRONT SUB SENSOR RH

1) How to disconnect:

CAUTION:
When pulling the slide lock or disconnecting connector, be sure to hold the connector, not the harness.

(1) Push the lock arm.
(2) Holding outer part, pull it one step in the direction of arrow.

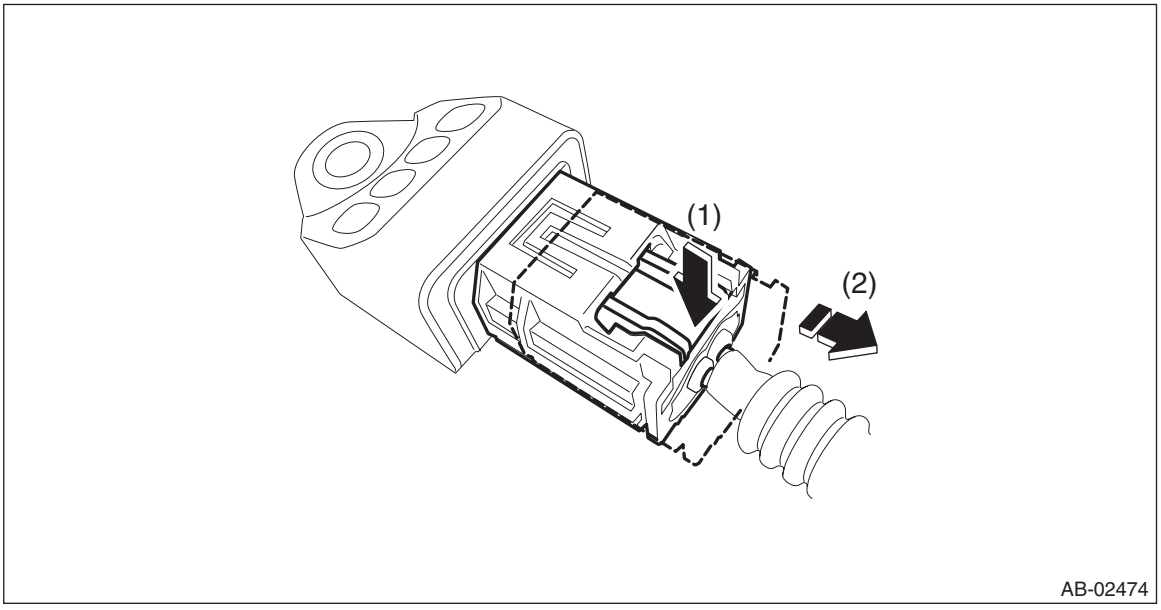

(3) Push the lock arm again.

(4) Holding outer part, pull it in the direction of arrow to disconnect the connector.

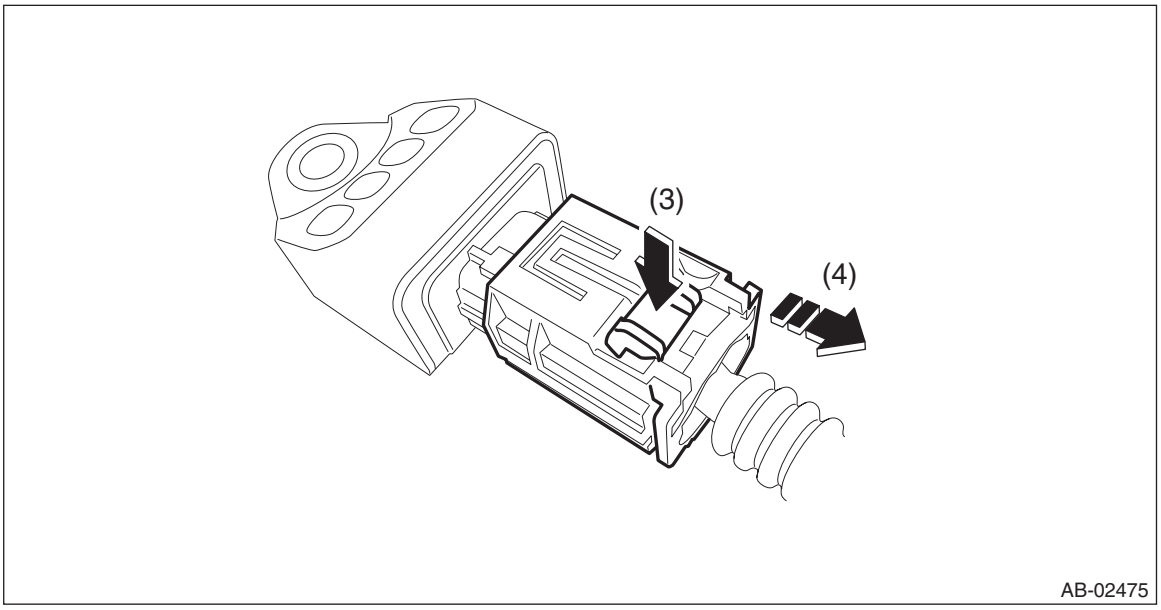

2) How to connect:

CAUTION:
Be sure to insert the connector in until it is locked. Then pull it gently to make sure that it is locked.
Holding the connector, push it in securely until a clicking sound is heard.

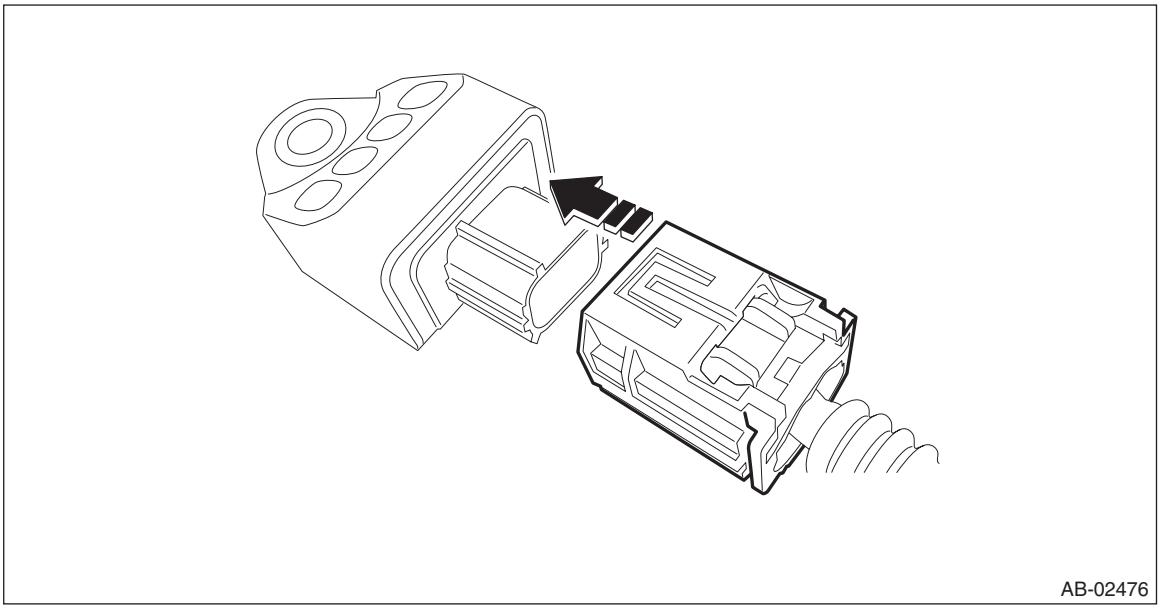

7. FRONT SUB SENSOR LH AND FRONT DOOR IMPACT SENSOR

1) How to disconnect:

CAUTION:
When pulling the slide lock or disconnecting connector, be sure to hold the connector, not the harness.
Holding outer part (A), pull it in the direction of arrow.

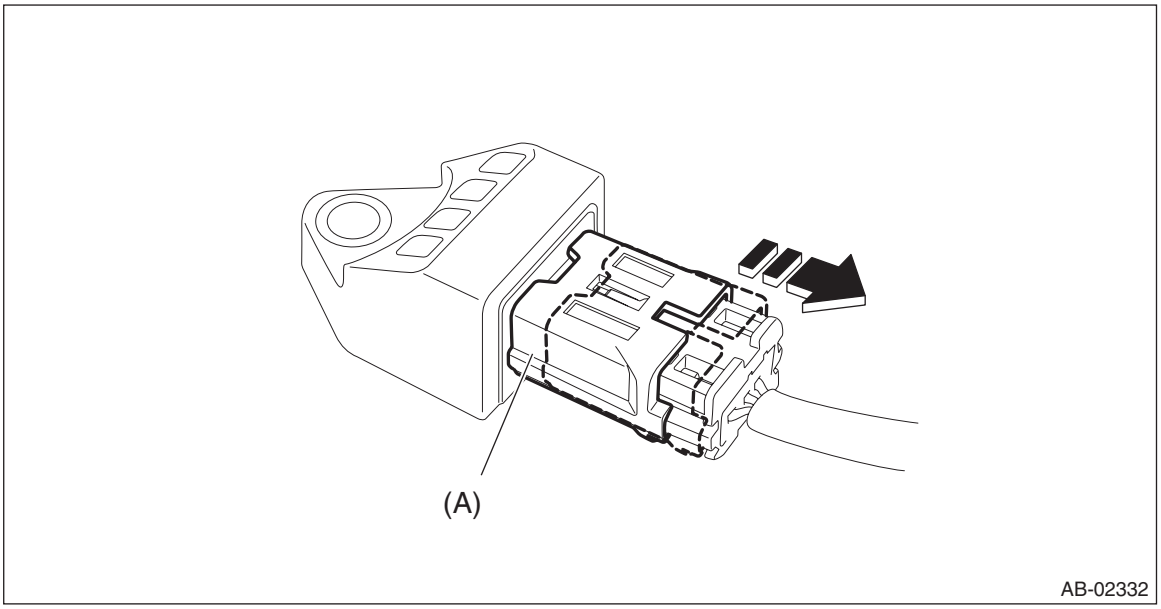

2) How to connect:

CAUTION:
- **Do not touch the outer side section or else the outer side (A) will move back.**
- **Be sure to insert the connector in until it is locked. Then pull it gently to make sure that it is locked.**

Holding the connector, push it in securely until a clicking sound is heard.

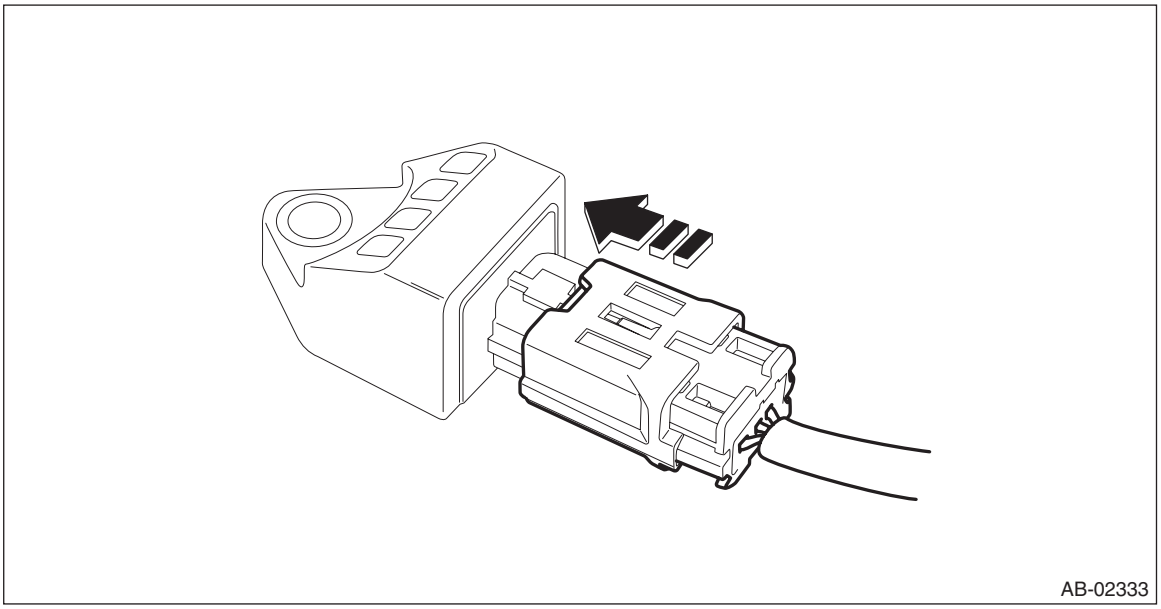

8. SIDE AIRBAG SENSOR AND CURTAIN AIRBAG SENSOR

1) How to disconnect:

CAUTION:
When pulling the slide lock or disconnecting connector, be sure to hold the connector, not the harness.

(1) Push the lock arm.
(2) Holding outer part, pull it one step in the direction of arrow.

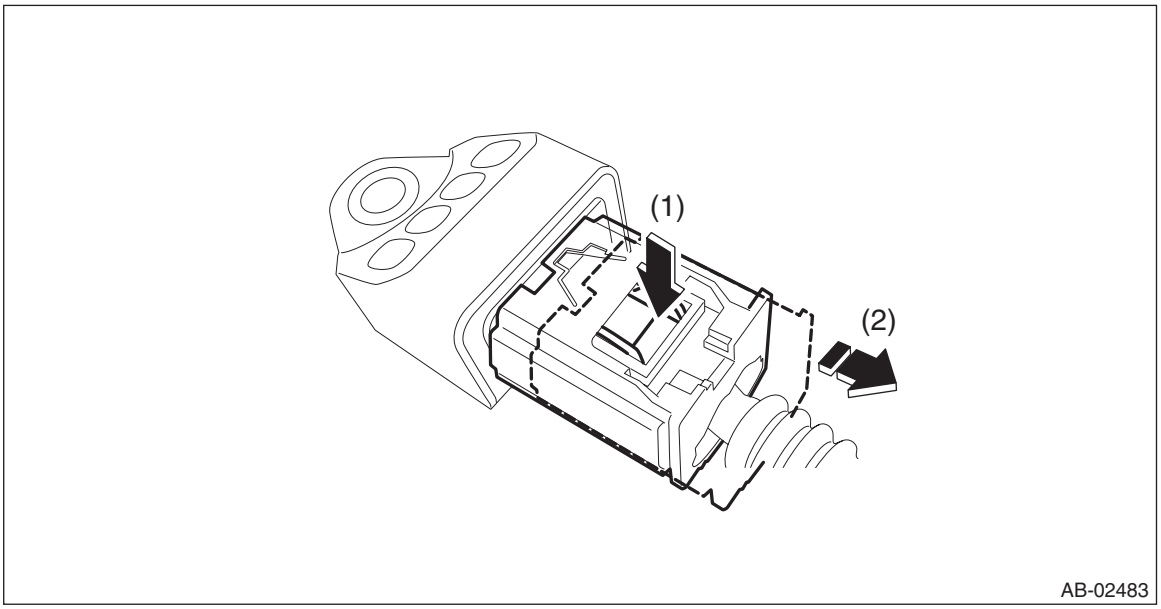

(3) Push the lock arm again.
(4) Holding outer part, pull it in the direction of arrow to disconnect the connector.

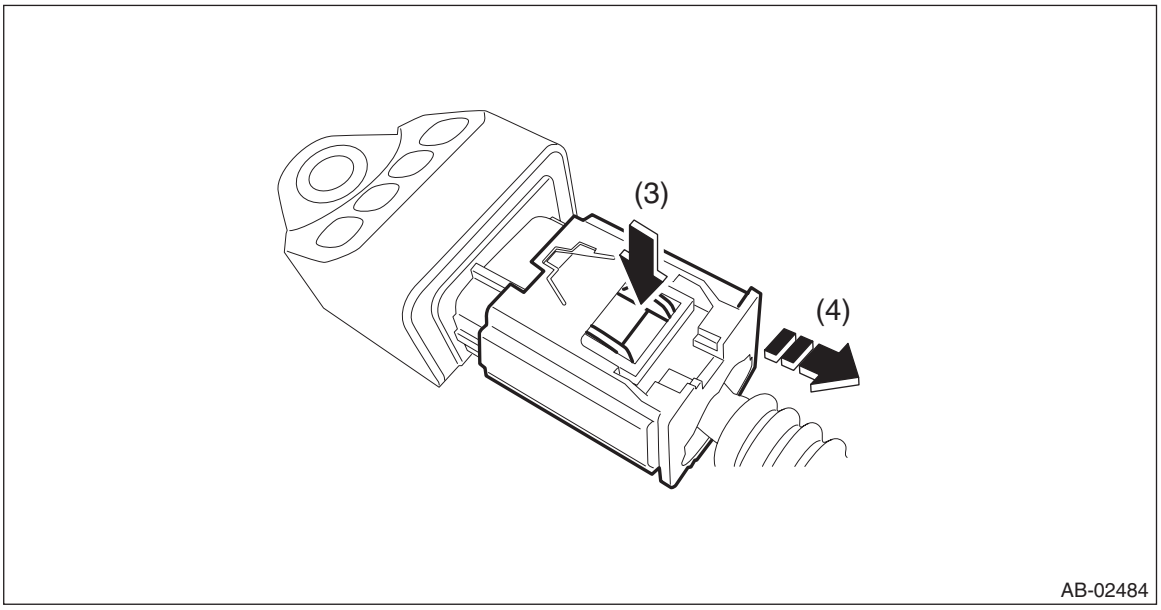

2) How to connect:

CAUTION:
Be sure to insert the connector in until it is locked. Then pull it gently to make sure that it is locked.
Holding the connector, push it in securely until a clicking sound is heard.

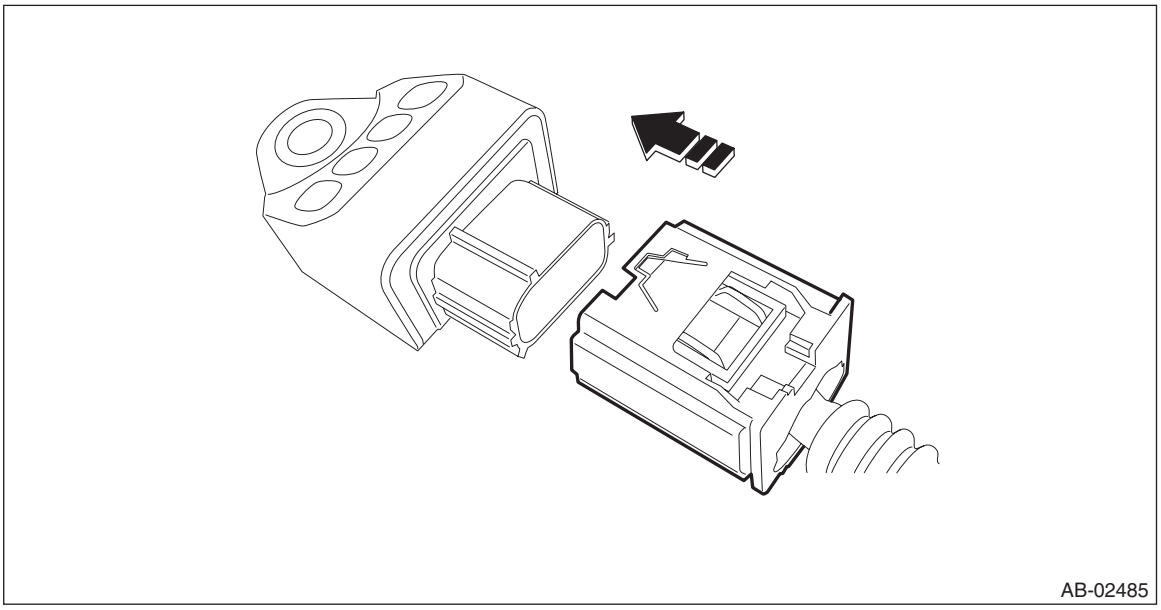

9. SIDE AIRBAG MODULE

1) How to disconnect:

CAUTION:
When pulling the slide lock or disconnecting connector, be sure to hold the connector, not the harness.

(1) Move the slide lock (A) in the direction of arrow and hold it.
(2) While holding the slide lock (A) in place, pull the connector (B) to the direction of arrow.

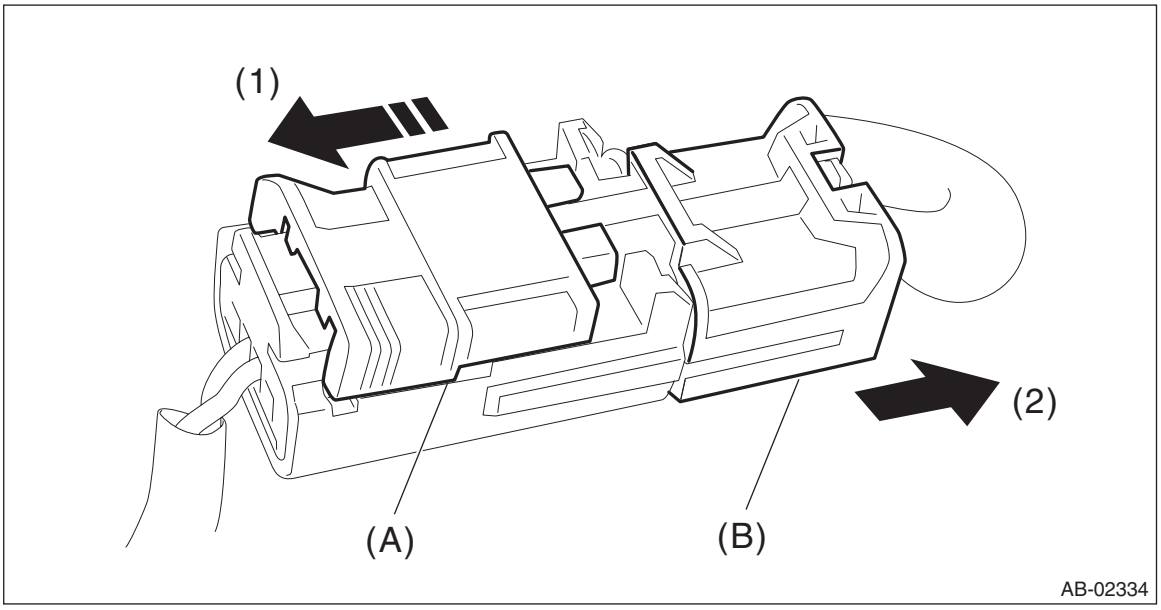

2) How to connect:

CAUTION:
Be sure to insert the connector in until it is locked. Then pull it gently to make sure that it is locked.
Holding the connector, push it in securely until a clicking sound is heard.

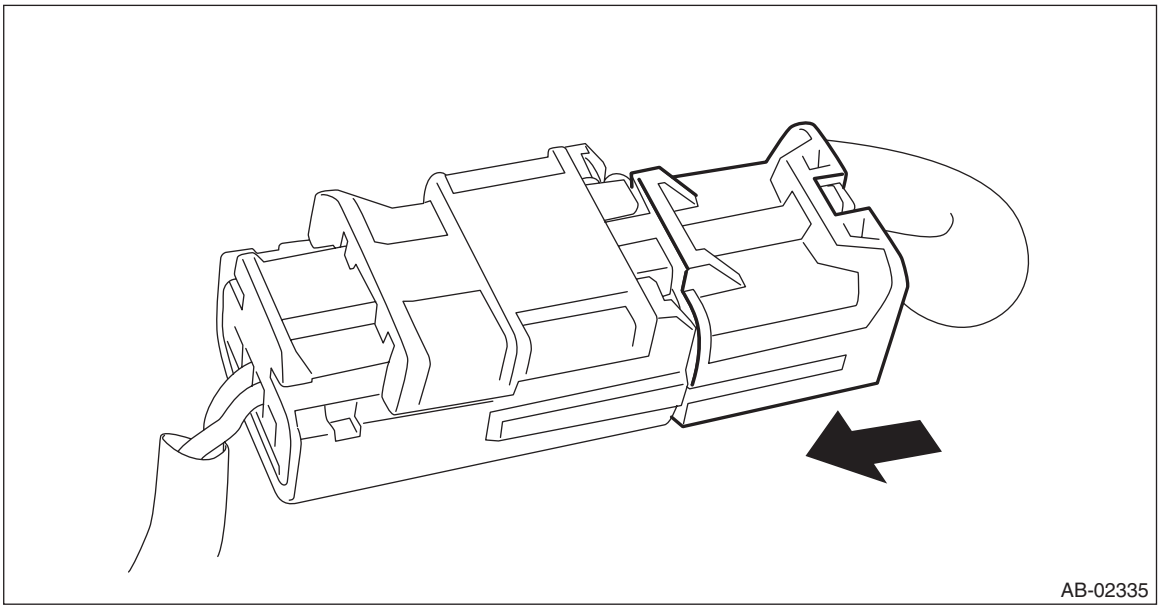

10.BUCKLE SWITCH RH

1) How to disconnect:

CAUTION:
When pulling the slide lock or disconnecting connector, be sure to hold the connector, not the harness.

(1) Move the slide lock (A) in the direction of arrow and hold it.
(2) While holding the slide lock (A) in place, pull the connector (B) to the direction of arrow.

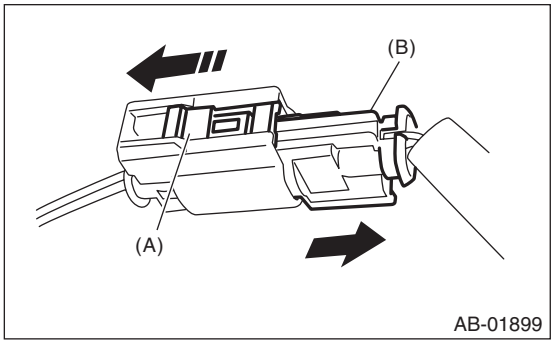

2) How to connect:

CAUTION:
Be sure to insert the connector in until it is locked. Then pull it gently to make sure that it is locked.
Holding the connector, push it in securely until a clicking sound is heard.

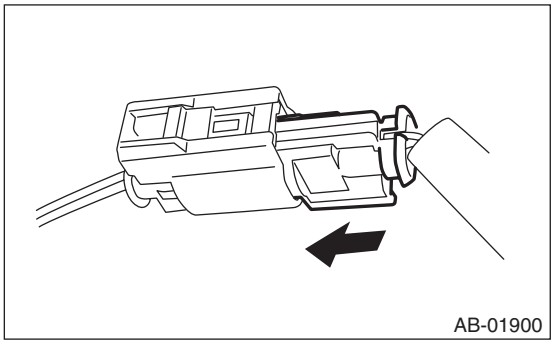

11.OCCUPANT DETECTION SYSTEM (BETWEEN AIRBAG REAR HARNESS AND SEAT HARNESS)

Refer to “Occupant Detection System”. <Ref. to OD(diag)-8, OCCUPANT DETECTION SYSTEM (BETWEEN AIRBAG REAR HARNESS AND SEAT HARNESS), PROCEDURE, Airbag Connector.>

3. Inspection Locations after a Collision

A: REPLACEMENT

Replace the following parts if the airbag has been activated.

1. FRONT COLLISION

1) Driver's airbag module
2) Passenger's airbag module
3) Driver's seat belt (pretensioner)
4) Passenger's seat belt (pretensioner)
5) Airbag control module
6) Front sub sensor (right and left)
7) Roll connector
8) Passenger's side seat cushion pad and frame assembly
9) Instrument panel (for integrating with passenger's airbag module)

2. SIDE COLLISION

1) Airbag control module
2) Side airbag module (operating side)
3) Side airbag sensor (operating side)
4) Front door impact sensor (operating side)
5) Curtain airbag module (operating side)
6) Curtain airbag sensor (operating side)

3. INSPECTION OF OTHER PARTS

Check for the following parts, and replace the damaged parts with new parts.
1) Steering wheel and steering shaft
Check the steering shaft for mounting conditions and deflection of front and rear, upward and downward directions, and deflection of front and rear direction with tilt lever released. (After a collision, absorbing part of steering shaft may have been operated.)
2) Check the direct type connector of driver's airbag module, curtain airbag module, and pretensioner for damage, and also check each harness for pinching and connector damage. Replace the main harness as an assembly if damage is found.
3) Check the seat cushion, backrest, seat rail and headrest for installing condition and play.
4) If any break or fray is found in the backrest cover of the driver's seat or passenger's seat, replace the backrest cover with a new part because the side airbag system may not operate normally if no care is made.
5) For the passenger's seat, replace the seat cushion pad frame assembly with a new part if the seat cushion frame assembly is deformed or cracked.
6) If there are tears or loosening in the passenger side seat cushion cover, it may interfere with the proper operation of the occupant detection system. Replace with a new cushion cover.
7) Be sure to perform the system calibration for the occupant detection system after removing or replacing the passenger seat cushion cover. If system adjustment is not performed, the occupant detection system may not function properly. <Ref. to OD(diag)-15, OPERATION, System Calibration (Rezeroing).>
8) Use the Subaru Select Monitor to check the front right seat belt buckle switch is operating normally.

B: INSPECTION

If the vehicle is involved in a collision, even if it is a slight collision, be sure to check the following systems.

1. DRIVER'S AIRBAG MODULE

1) Frontal collision (driver's airbag module activated)
1. Replace the following parts with new ones.
   - Airbag control module
   - Driver's airbag module ASSY
   - Passenger's airbag module assembly
   - Seat belt pretensioner assembly (left and right)
   - Front sub sensor (right and left)
   - Sensor cover plate (left and right)
   - Steering shaft assembly

2. Visually inspect the following items and replace any damaged part with a new one.
   - Steering wheel assembly
   - Steering support beam assembly
   - Instrument panel harness and connector on body side

2) Frontal collision (driver's airbag module not activated)
Visually inspect the following items and replace any damaged or cracked part with a new one.
Specially inspect the damage of airbag module body, mounting bracket and harness connector.
- Driver's airbag module assembly
- Passenger's airbag module assembly
- Seat belt pretensioner assembly (left and right)
- Front sub sensor (right and left)
- Sensor cover plate (left and right)
- Instrument panel assembly (because it is integrated with passenger's airbag module)

3) No frontal collision
Visually inspect the airbag modules for damage or contamination and replace any faulty part with a new one.

2. KNEE AIRBAG MODULE

1) Frontal collision (knee airbag module activated)
1. Replace the following parts with new ones.
   - Airbag control module
   - Driver's airbag module
   - Knee airbag module
   - Passenger's airbag module
   - Seat belt pretensioner (right and left)
   - Front sub sensor (right and left)
   - Steering shaft assembly
2. Visually inspect the following items and replace any damaged part with a new one.
   - Steering wheel assembly
   - Steering support beam
   - Instrument panel harness and connector on body side

2) Frontal collision (driver's airbag module not activated)
Visually inspect the following items and replace any damaged or cracked part with a new one.
Specially inspect the damage of airbag module body, mounting bracket and harness connector.
- Driver's airbag module assembly
- Knee airbag module assembly
- Passenger's airbag module ASSY
- Seat belt pretensioner assembly (left and right)
- Front sub sensor (right and left)
- Instrument panel assembly (because it is integrated with passenger's airbag module)

3) No frontal collision
Visually inspect the airbag modules for damage or contamination and replace any faulty part with a new one.

3. PASSENGER'S AIRBAG MODULE

1) Frontal collision (passenger's airbag module activated)
1. Replace the following parts with new ones.
   - Airbag control module
   - Driver's airbag module assembly
   - Passenger's airbag module assembly
   - Seat belt pretensioner assembly (left and right)
   - Front sub sensor (right and left)
   - Sensor cover plate (left and right)
   - Instrument panel assembly (because it is integrated with passenger's airbag module)
2. Visually inspect the following items and replace any damaged part with a new one.
   - Steering support beam assembly
   - Instrument panel harness and connector on body side

2) Frontal collision (passenger's airbag module not activated)
Visually inspect the following items and replace any damaged or cracked part with a new one.
Specially inspect the damage of airbag module body, mounting bracket and harness connector.
- Driver's airbag module assembly
- Passenger's airbag module assembly
- Seat belt pretensioner assembly (left and right)
- Front sub sensor (right and left)
- Sensor cover plate (left and right)
- Instrument panel assembly (because it is integrated with passenger's airbag module)

3) No frontal collision
Visually inspect the airbag modules for damage or contamination and replace any faulty part with a new one.

4. SIDE AIRBAG MODULE

1) Side impact (side airbag activated)
1. Replace the following parts with new ones.
   - Airbag control module
   - Front door impact sensor
   - Side airbag module assembly
   - Side airbag sensor
   - Curtain airbag module assembly
   - Curtain airbag sensor
   - Backrest pad assembly
   - Backrest frame assembly
   - Backrest cover assembly
2. Visually inspect the following items and replace any damaged part with a new one.
   - Headrest assembly
   - Headrest lock bushing
   - Outer slide rail
   - Inner slide rail
   - Seat hinge cover
   - Seat lifter lever
   - Reclining lever
   - Side airbag harness and connector on body side

2) Side impact (side airbag not activated)
Visually inspect the following items and replace any damaged or cracked part with a new one.
Specially inspect the damage of airbag module body, mounting bracket and harness connector.
- Backrest pad assembly
- Backrest frame assembly
- Backrest cover assembly
- Front door impact sensor
- Side airbag module assembly
- Side airbag sensor
- Curtain airbag module assembly
- Curtain airbag sensor

3) No side impact
Visually inspect the airbag modules for contamination and replace any faulty part with a new one.

5. CURTAIN AIRBAG MODULE

1) Side impact (curtain airbag activated)
1. Replace the following parts with new ones.
   - Airbag control module
   - Curtain airbag module assembly
   - Front door impact sensor
   - Side airbag sensor
   - Curtain airbag sensor

- Roof trim
- Each pillar trim
- Airbag bracket (models with sunroof)

2. Visually inspect the following items and replace any damaged part with a new one.
   - Assist grip
   - Assist grip bracket
   - Curtain airbag harness and connector on body side.

2) Side impact (side airbag not activated)
Visually inspect the following items and replace any damaged or cracked part with a new one.
Specially inspect the damage of airbag module body, mounting bracket and harness connector.
- Roof trim
- Each pillar trim
- Curtain airbag module assembly
- Front door impact sensor
- Side airbag sensor
- Curtain airbag sensor

3) No side impact
Visually inspect the airbag covers for damage or contamination and replace any faulty part with a new one.

6. AIRBAG CONTROL MODULE

Check for the following, and replace the damaged parts with new parts.
- Control module is cracked or deformed.
- Mounting bracket is cracked or deformed.
- Connector is scratched, cracked or deformed.
- Driver's airbag has been activated.
- Passenger's airbag has been activated.
- Side airbag has been activated.
- Curtain airbag has been activated.
- Seat belt pretensioner has been activated.

7. FRONT SUB SENSOR

If the section of vehicle as shown in the figure is damaged, check the following items and replace the damaged parts with new parts.

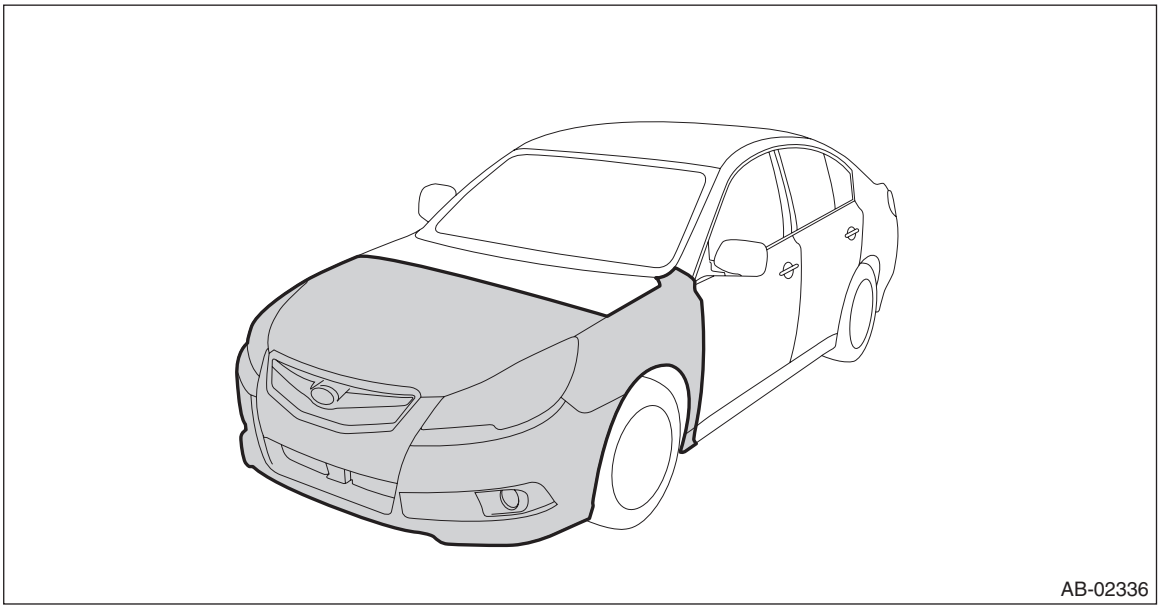

- Front sub sensor is cracked or deformed.
- Connector is scratched, cracked or deformed.
- Airbag has been activated.

8. FRONT DOOR IMPACT SENSOR, SIDE AIRBAG SENSOR AND CURTAIN AIRBAG SENSOR

If the section of vehicle as shown in the figure is damaged, check the following items and replace the damaged parts with new parts.

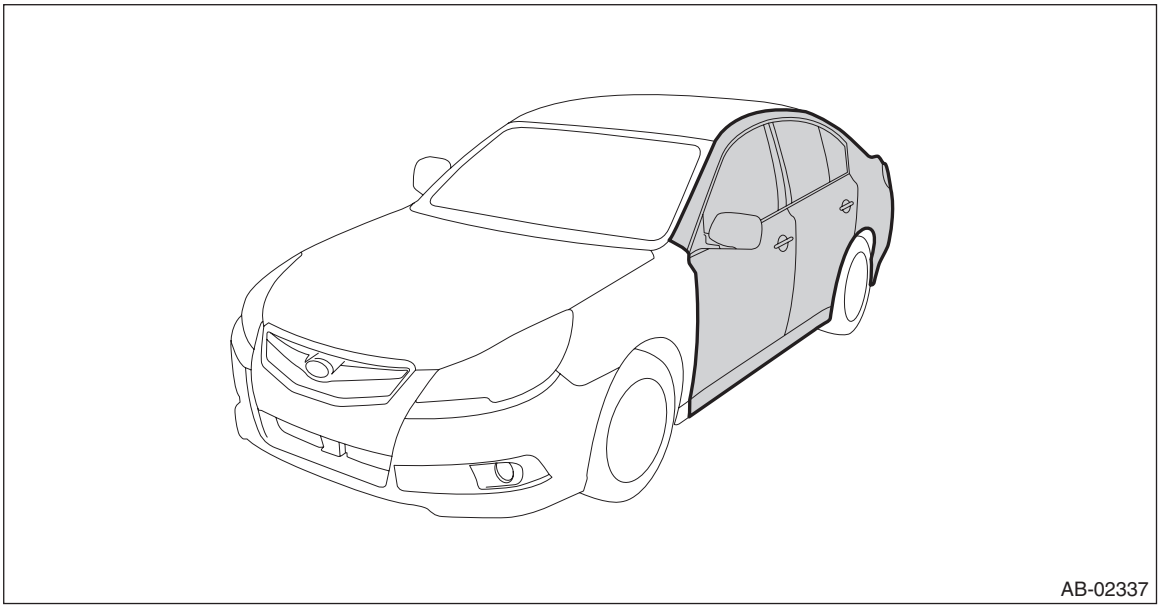

- Front door impact sensor, side airbag sensor and curtain airbag sensor are cracked or deformed.
- Mounting bracket is cracked or deformed.
- Connector is scratched, cracked or deformed.
- Front door impact sensor, side airbag or curtain airbag has been activated. (operating side)

9. ROLL CONNECTOR

Check the following items and replace any damaged, cracked, or deformed parts with new parts.
- Combination switch
- Steering roll connector

10.STEERING SHAFT AND STEERING WHEEL

Check the following items, and if there is anything out of standard value, it is considered to be damaged. If so, replace it with a new part.
- Measure the whole length of the steering column.

Standard: Overall length L

Tilt and telescopic column (measure while minimized)
$816.9^{+1.5}_{-1.5}$ mm ($32.16^{+0.059}_{-0.059}$ in)

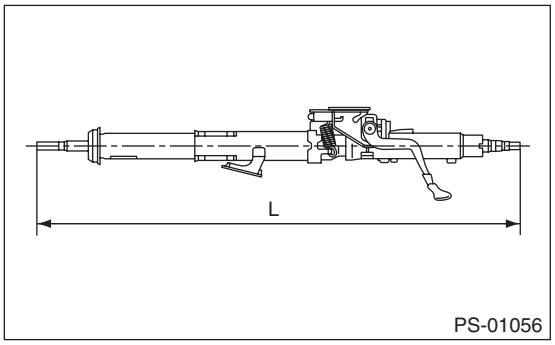

- Check the steering wheel deflection in axial and vertical directions.

Specification:
Axial deflection A (deflection of steering wheel)
Less than 6 mm (0.24 in)
Vertical deflection L (runout of steering wheel)
Less than 17 mm (0.68 in)

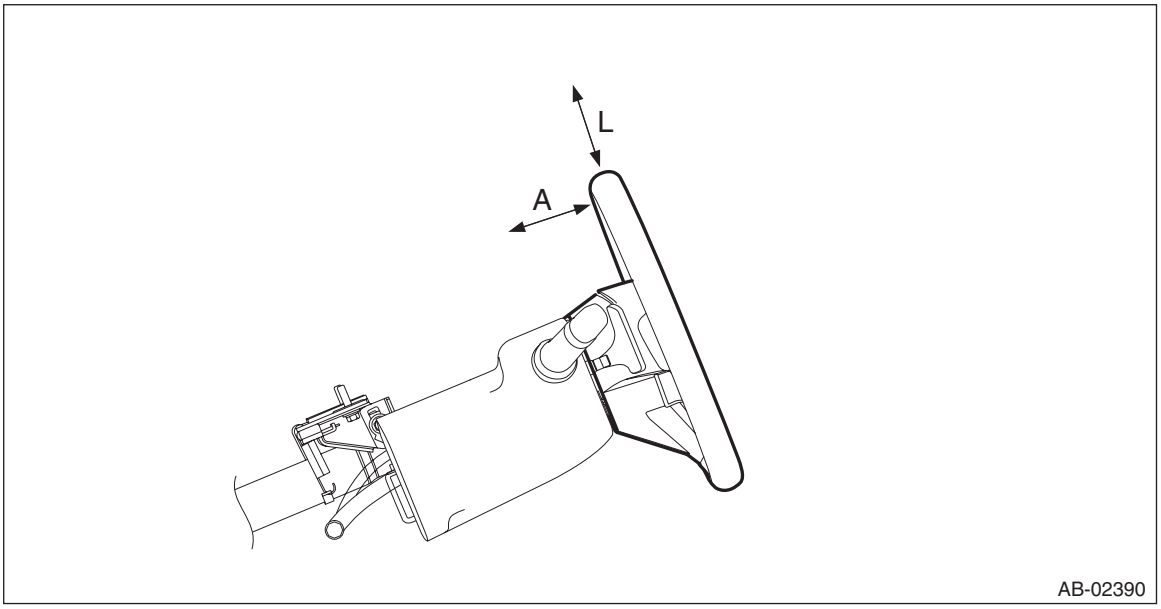

11.PASSENGER'S SEAT

1) Check for the following, and replace the damaged parts with new parts.
- Seat belt buckle body or bracket is scratched, cracked or deformed.
- Backrest frame for crack or deformation
- Headrest for deformation or play
- If the seat cushion cover and seat backrest cover is scratched or coming loose, replace with a new cover and readjust the system. <Ref. to OD(diag)-15, OPERATION, System Calibration (Rezeroing).>

CAUTION:
If any of the following applies, replace the seat cushion pad and frame assembly. Do not disassemble.
- **Cracks or deformation found in the seat cushion frame or seat cushion pad.**
- **Scratches, cracks, or deformation found on the occupant detection system sensor mat or occupant detection control module, or attachment brackets of the control module.**
- **Harness and/or connector is cracked, deformed or open. Harness wire is exposed.**

2) After checking the installing condition of passenger's seat, perform the system adjustment of occupant detection system. <Ref. to OD(diag)-15, OPERATION, System Calibration (Rezeroing).>

4. Driver's Airbag Module

A: REMOVAL

CAUTION:
Refer to "CAUTION" of "General Description" before handling the airbag module. <Ref. to AB-9, CAUTION, General Description.>

1) Position the front wheels straight ahead. (After moving a vehicle 5 m (16 ft) or more with front wheels positioned straight ahead, make sure that the vehicle moves straight ahead.)
2) Turn the ignition switch to OFF.
3) Disconnect the ground cable from battery and wait for at least 60 seconds before starting work.
4) Remove the driver's airbag module assembly.
   (1) Using a hexagon wrench etc. wrapped by protective tape, insert the snap pins and release the locks (3 locations).

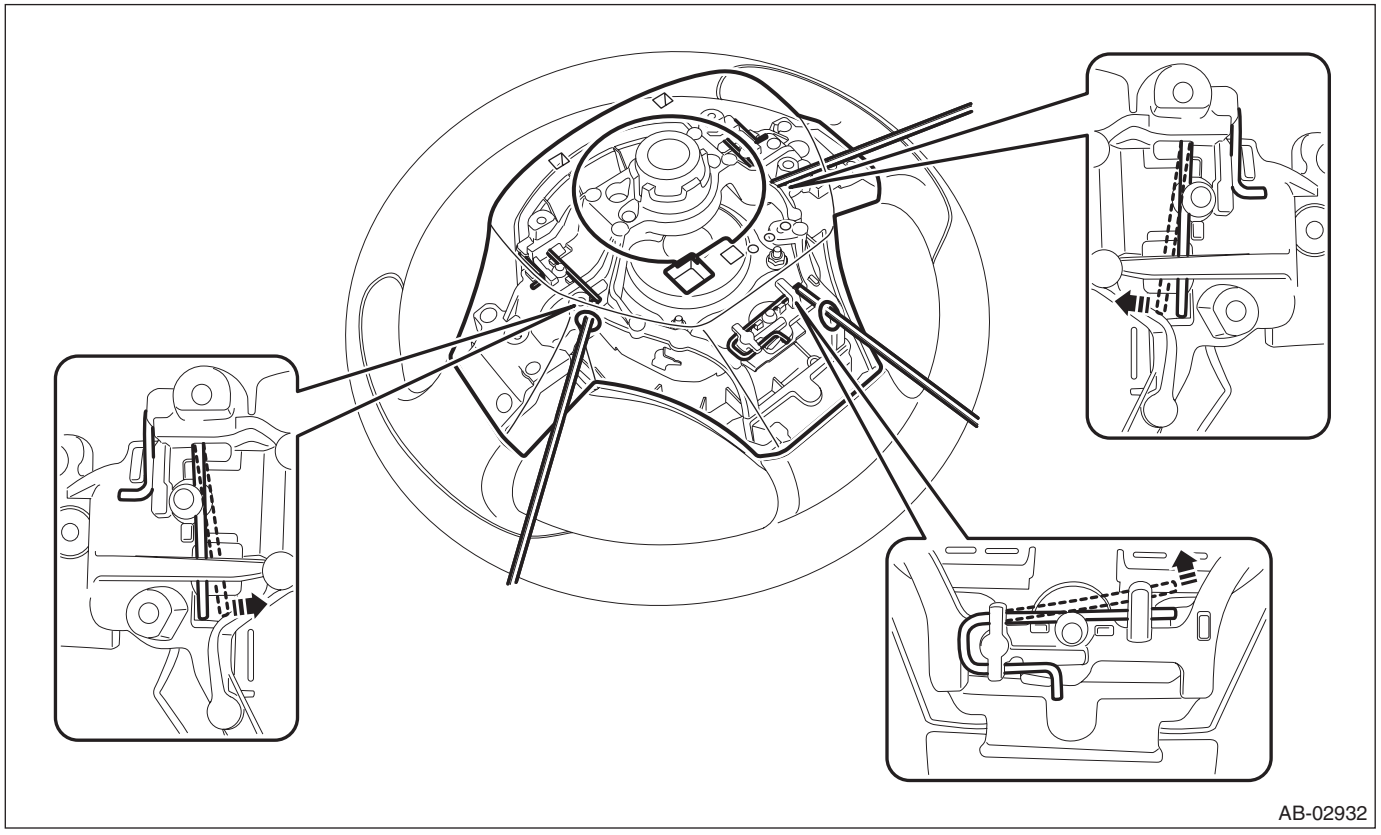

(2) Disconnect the horn harness and airbag connector and remove the airbag module assembly. <Ref. to AB-21, DRIVER'S AIRBAG MODULE, CURTAIN AIRBAG MODULE & PRETENSIONER, PROCEDURE, Airbag Connector.>

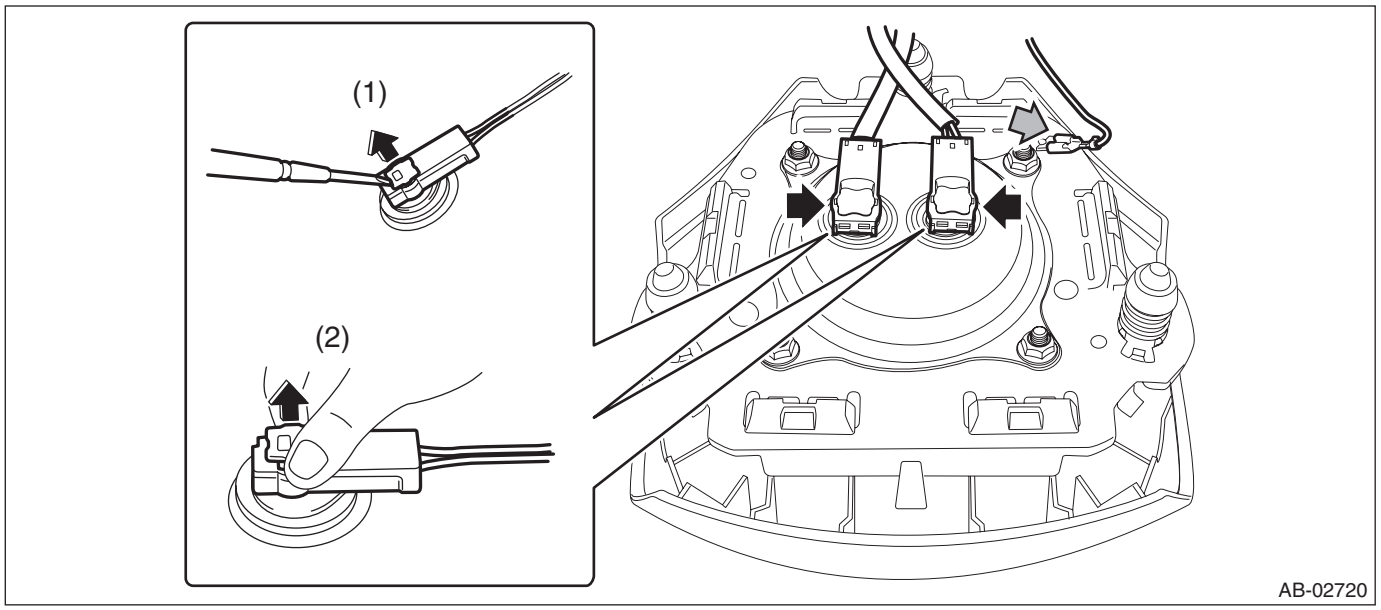

B: INSTALLATION

CAUTION:
• Refer to "CAUTION" of "General Description" before handling the airbag module. <Ref. to AB-9, CAUTION, General Description.>
• Do not allow harness and connectors to interfere or get tangled up with other parts.

1) Before installation, inspect the following items and replace any faulty part with a new one.
- Airbag module is cracked or deformed.
- Harness and/or connector is cracked, deformed or open.
- Harness wire is exposed.
- The steering wheel is in the way, making it difficult to install the airbag module.
- The clearance between the driver's airbag module and steering wheel is not constant.

2) Install each part in the reverse order of removal.

5. Passenger's Airbag Module

A: REMOVAL

CAUTION:
Refer to "CAUTION" of "General Description" before handling the airbag module. <Ref. to AB-9, CAUTION, General Description.>

1) Turn the ignition switch to OFF.
2) Disconnect the ground cable from battery and wait for at least 60 seconds before starting work.
3) Remove the console front cover assembly.

- MT model
  1. Remove the shift knob.
  2. Release the clips and claws, then pull up the console front cover assembly.

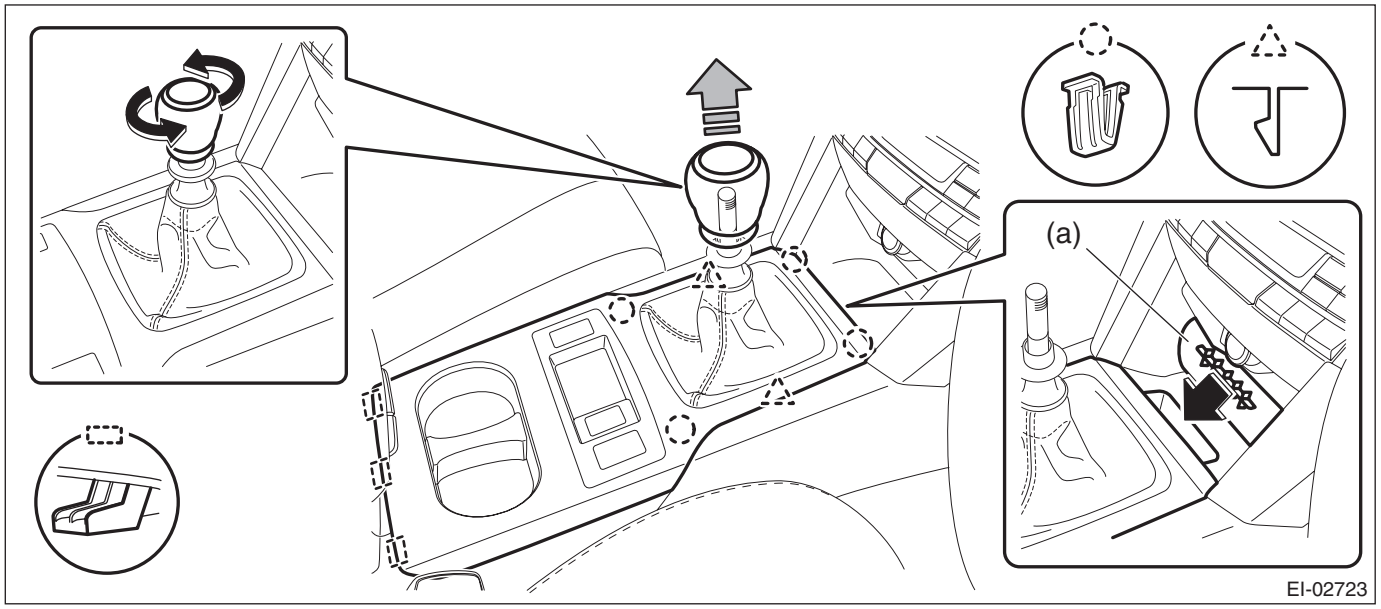

NOTE:
Turn over the front center pocket mat (a) and pull up the console front cover from the slit.

  3. Disconnect the harness connector and remove the console front cover assembly.

- AT model
  1. Remove the select lever knob.
     a. Lower the cover grip AT.
     b. Remove the clamp grip pin, then remove the select lever knob.
  2. Release the clips and claws, then pull up the console front cover assembly.

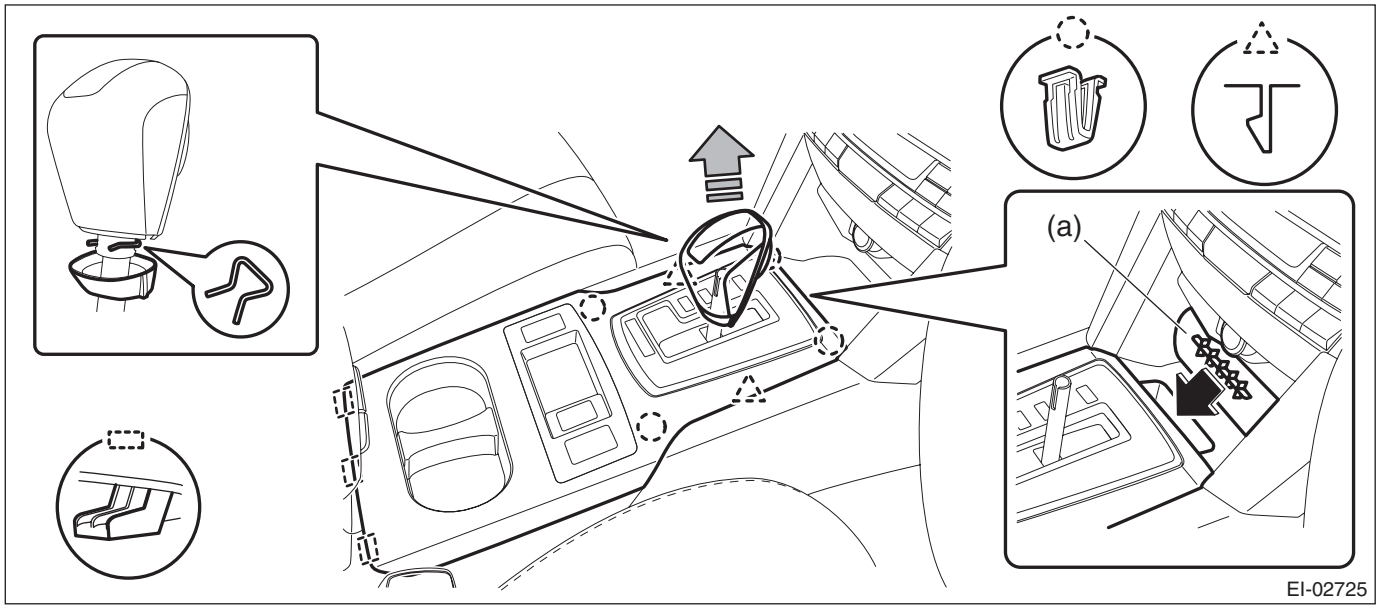

NOTE:
Turn over the front center pocket mat (a) and pull up the console front cover from the slit.

  3. Disconnect the harness connector and remove the console front cover assembly.

4) Remove the left and right console front side cover assembly.
   (1) Remove the screws and release the clips (A) to (D) in order.
   (2) Remove the console front side cover assembly by pulling it up.

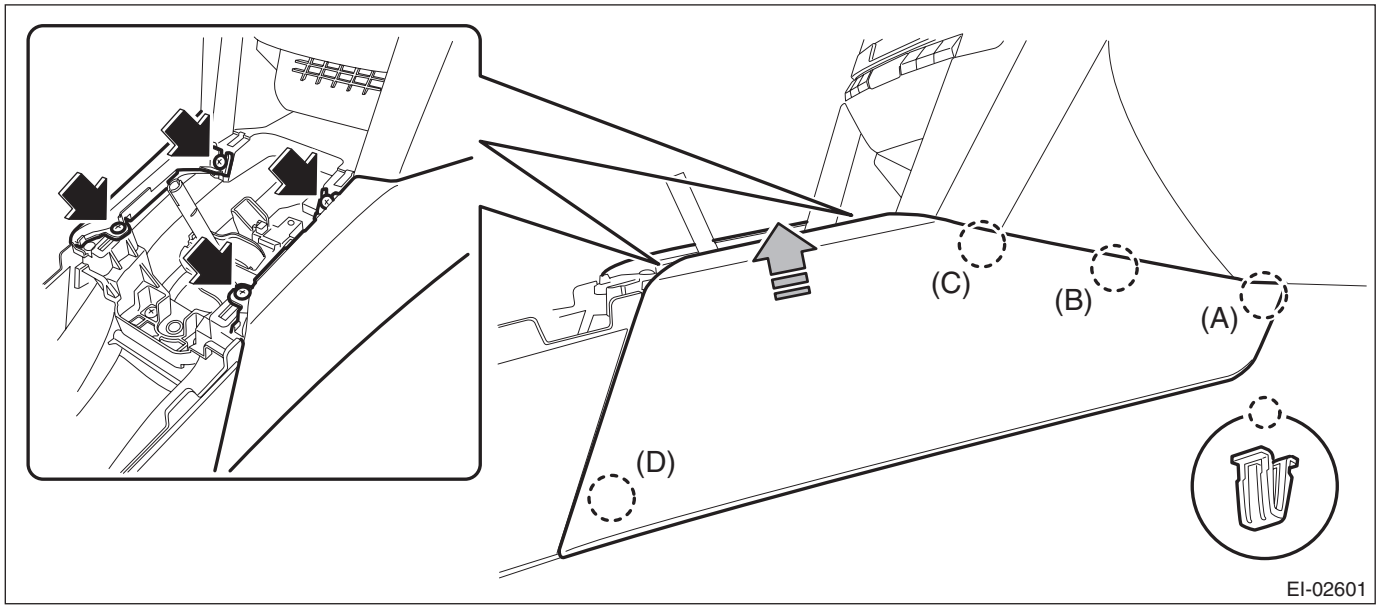

5) Remove the console box assembly.
(1) Move the seat forward, and remove the bolts after detaching the left and right caps.

NOTE:
For a model with power seat, connect the battery ground cable and move the seat. Then, disconnect the battery ground cable again and wait for 60 seconds at least before restarting the work.

(2) Remove the screws, disconnect the harness connector and remove the console box assembly.

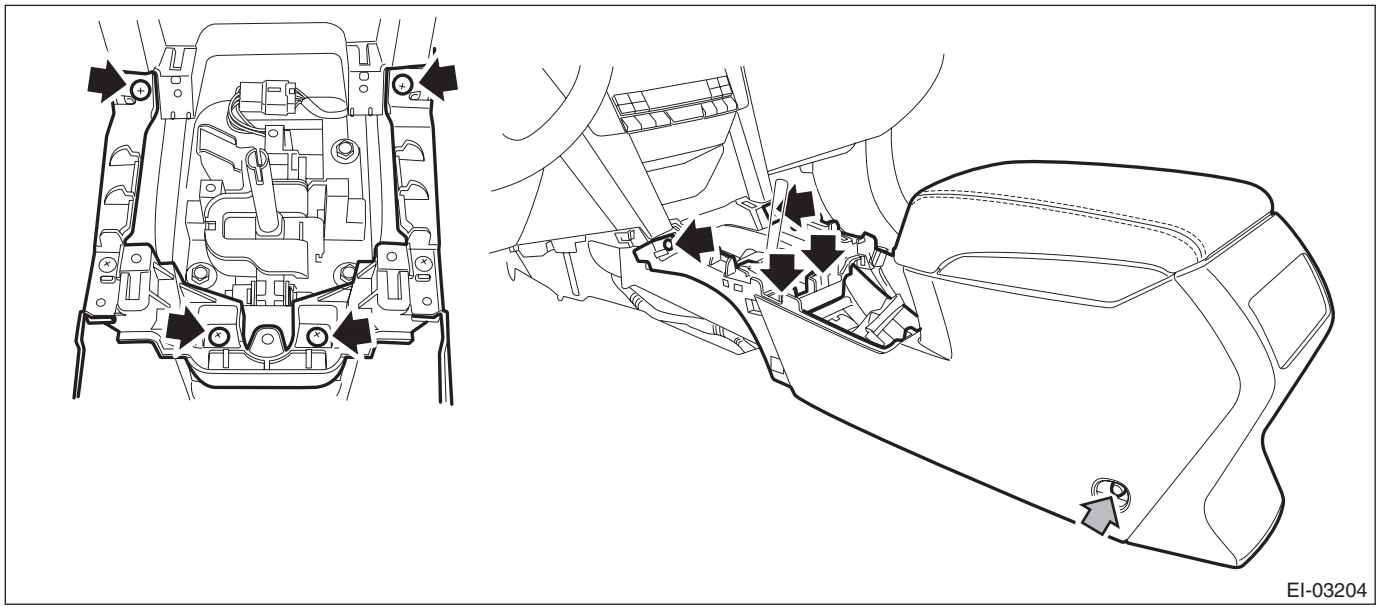

6) Remove the instrument panel lower cover.
(1) Remove the clips, and remove the instrument panel side cover LH.

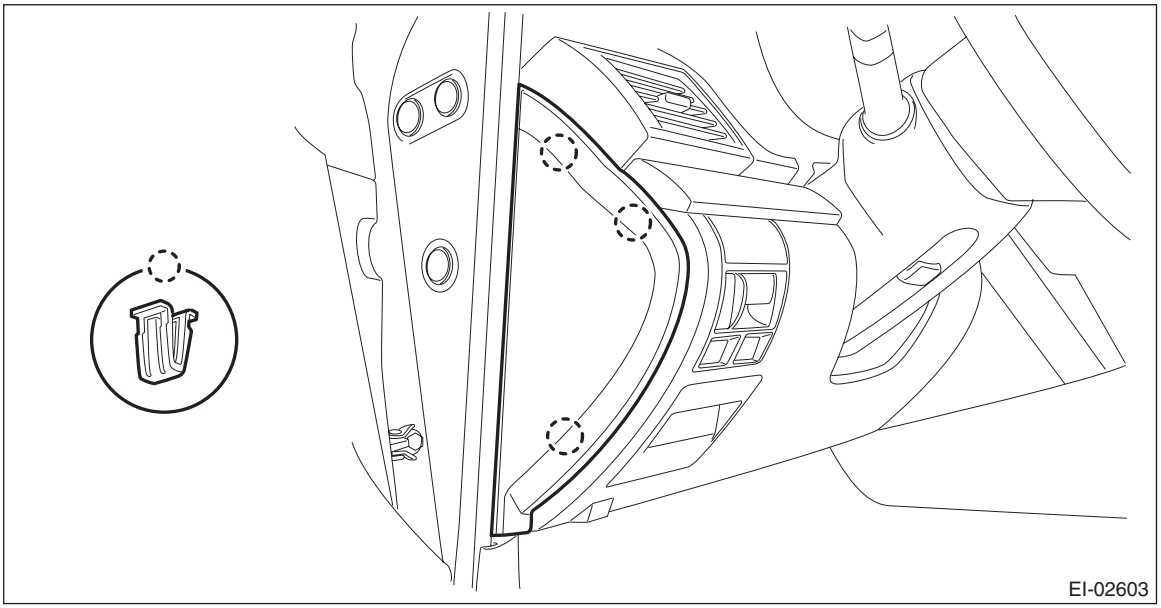

(2) Remove the clips and data link connector, and remove the instrument panel lower cover under.

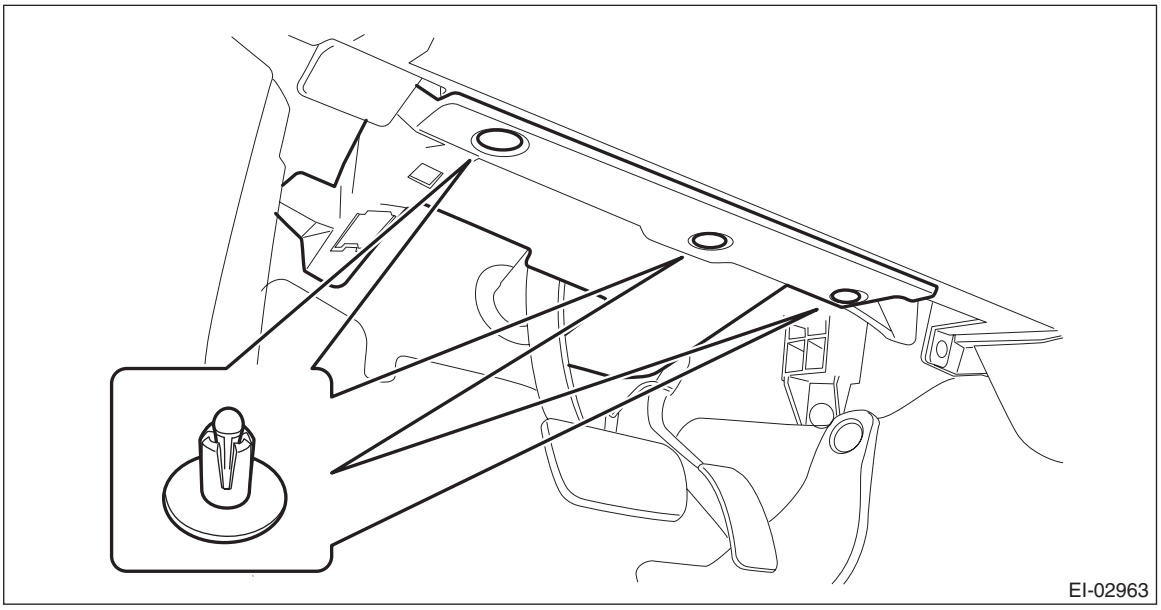

(3) Remove the screws and clips and release the claws, and remove the instrument panel lower cover while disconnecting the harness connectors.

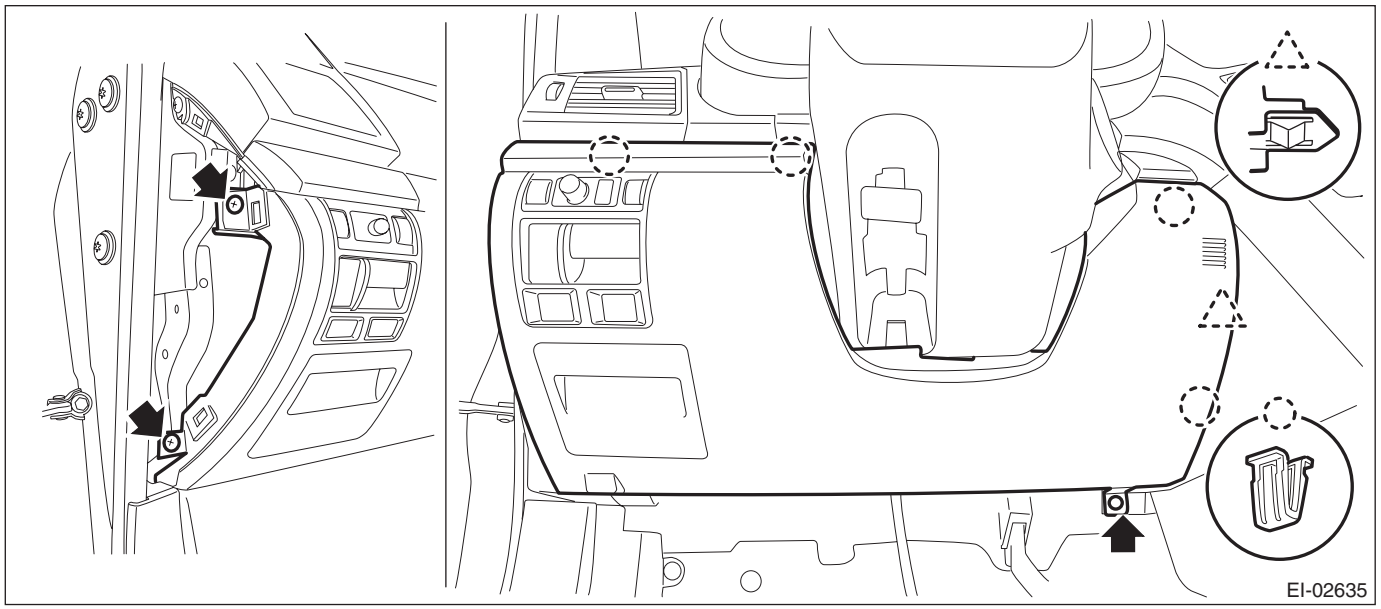

7) Remove the center panel assembly.

CAUTION:
Do not put your finger on the fin of the air vent grille. Doing so may damage the fin.

(1) Attach the protective tape (a) to the meter visor.

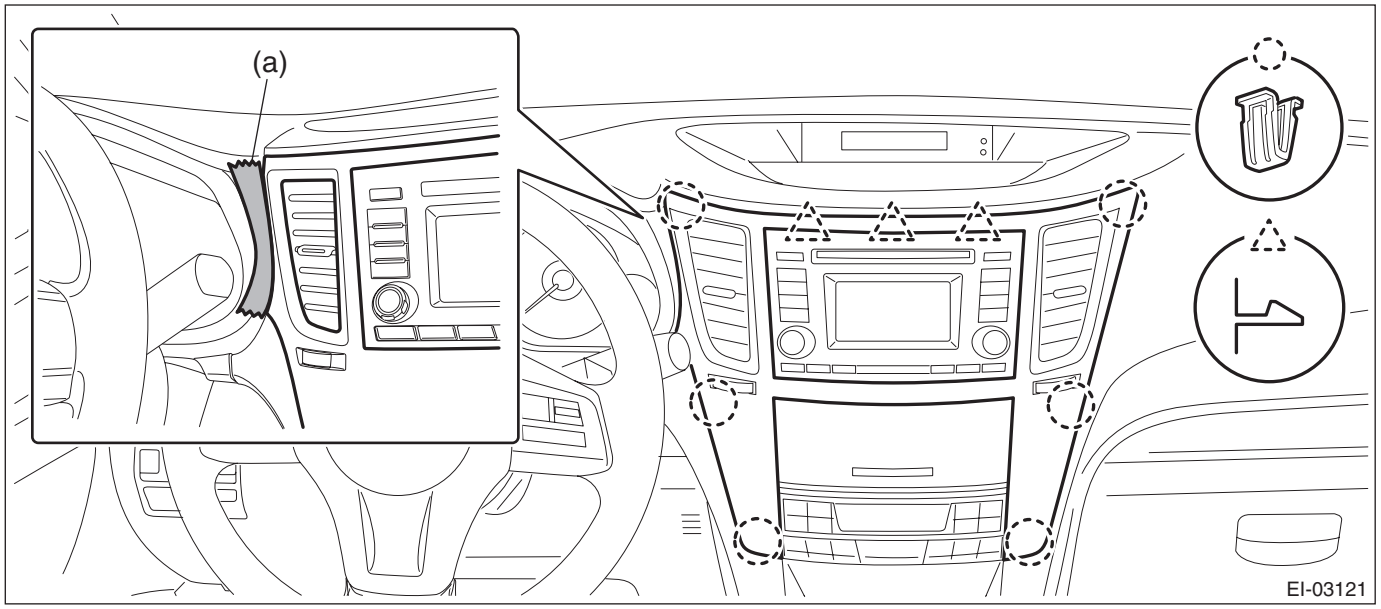

(2) Insert a finger into the air vent grille and release the left and right clips at the top of the center panel. (A), (B)

(3) Insert a finger into the air vent grille and release the left and right clips at the center of the center panel. (C), (D)

(4) Release the clips at the bottom of the center panel and remove the center panel assembly.

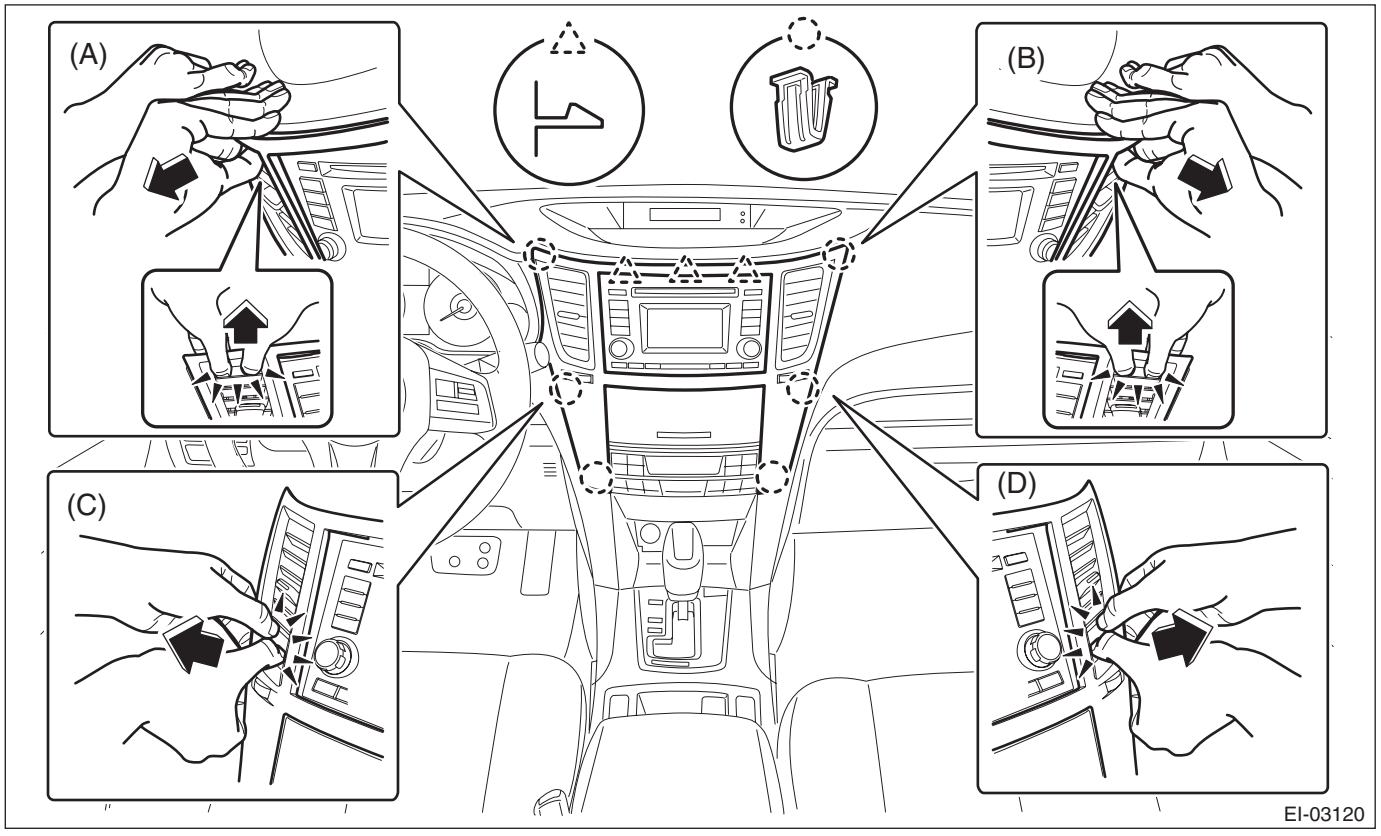

8) Remove the combination meter assembly.

CAUTION:
- **Be careful not to damage the meter or instrument panel.**
- **Pay particular attention to avoid damaging the meter glass.**

(1) Remove the screws and release the claws, then detach the starter cover assembly.

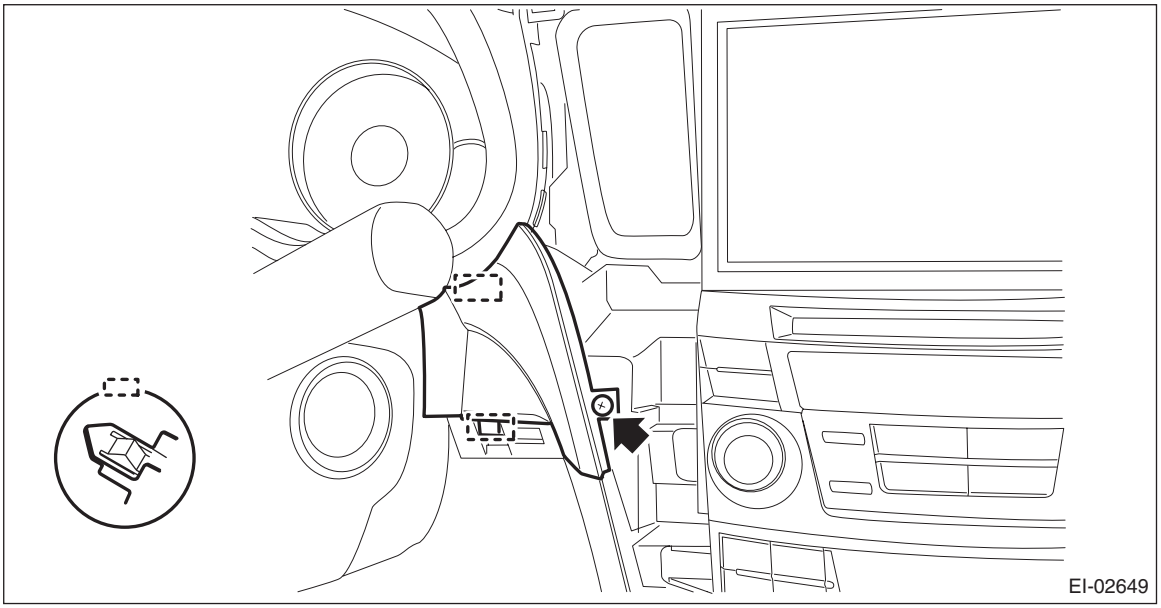

(2) Release the lock, tilt the steering column to the lowest end and fully extend the column by the telescopic system.

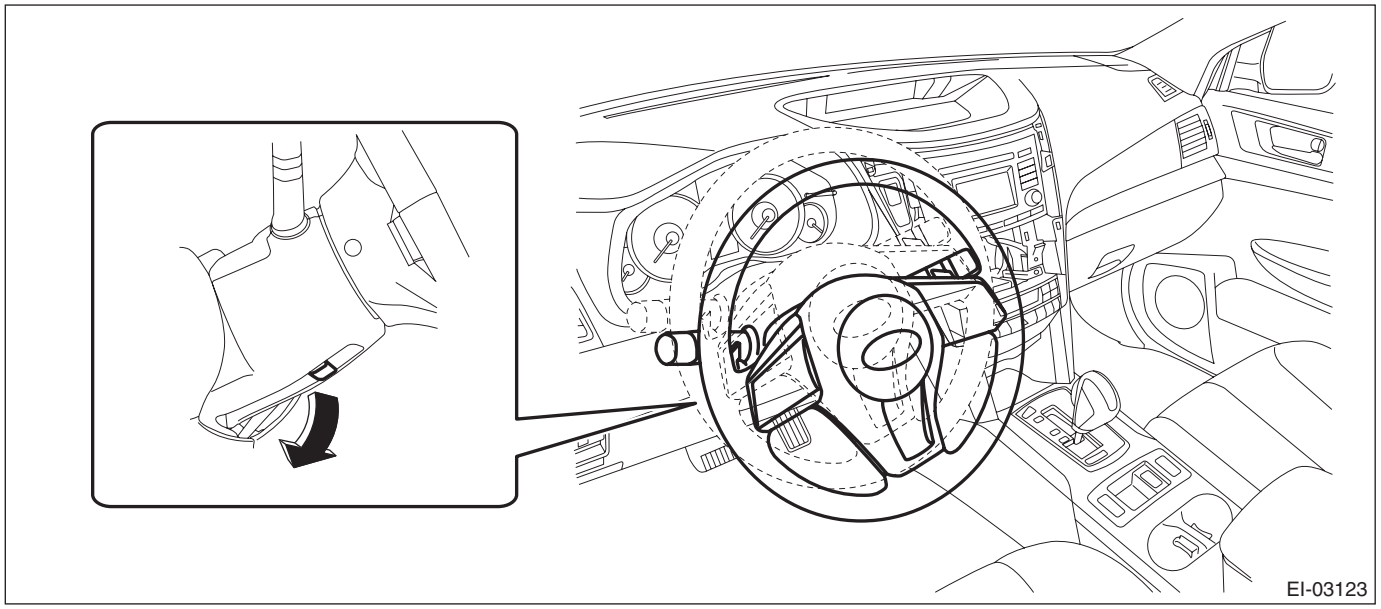

(3) Release the screws and clips, then detach the meter visor assembly.

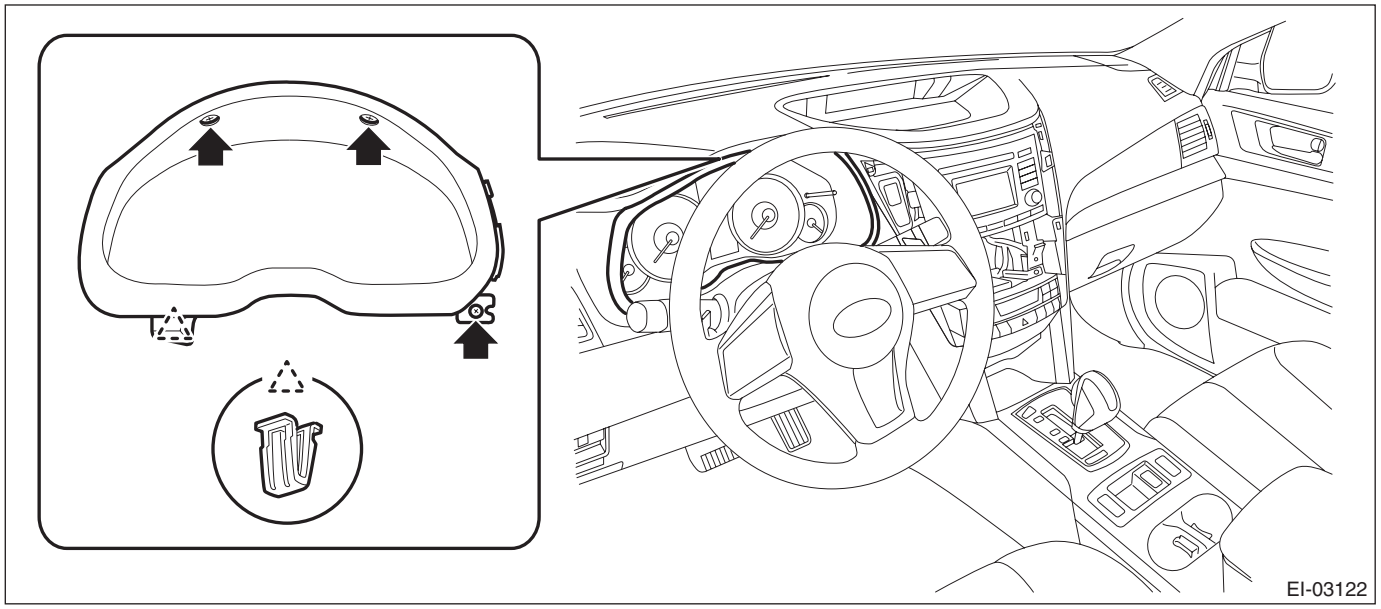

(4) Remove the screws and pull the steering COMPL upper cover toward you.

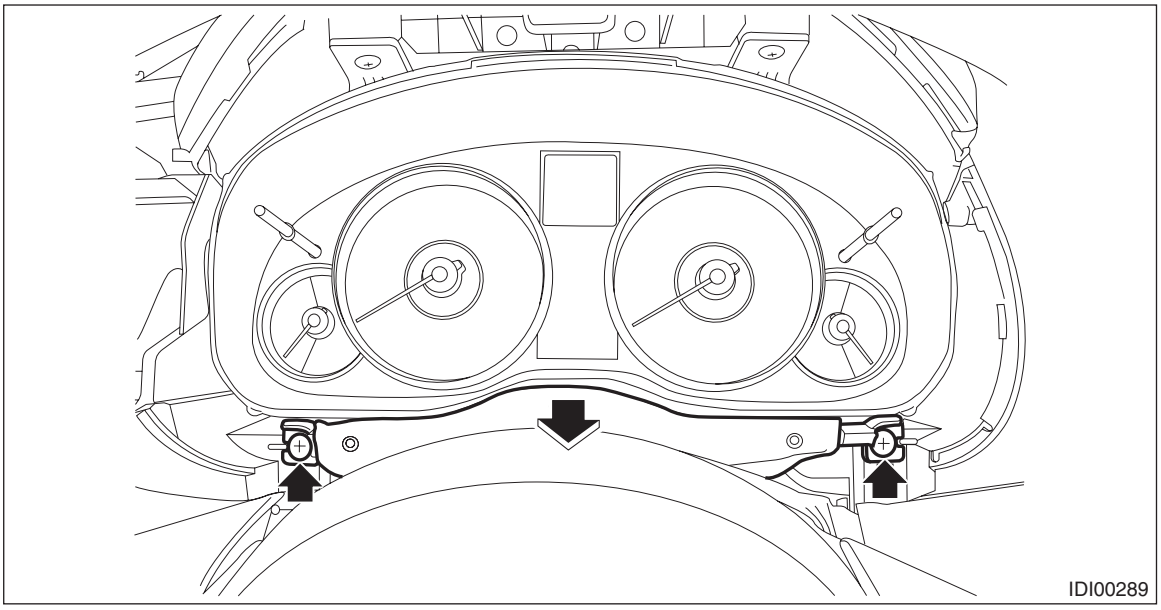

(5) Remove the screws and pull out the combination meter toward you to disconnect the connectors.

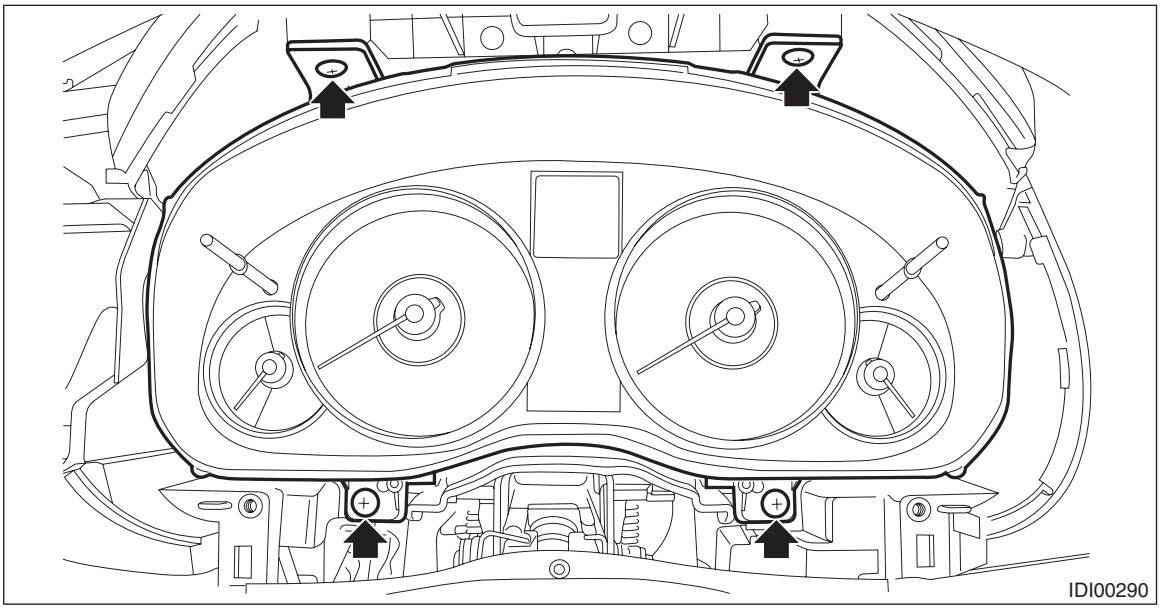

(6) Remove the combination meter assembly as shown in the figure.

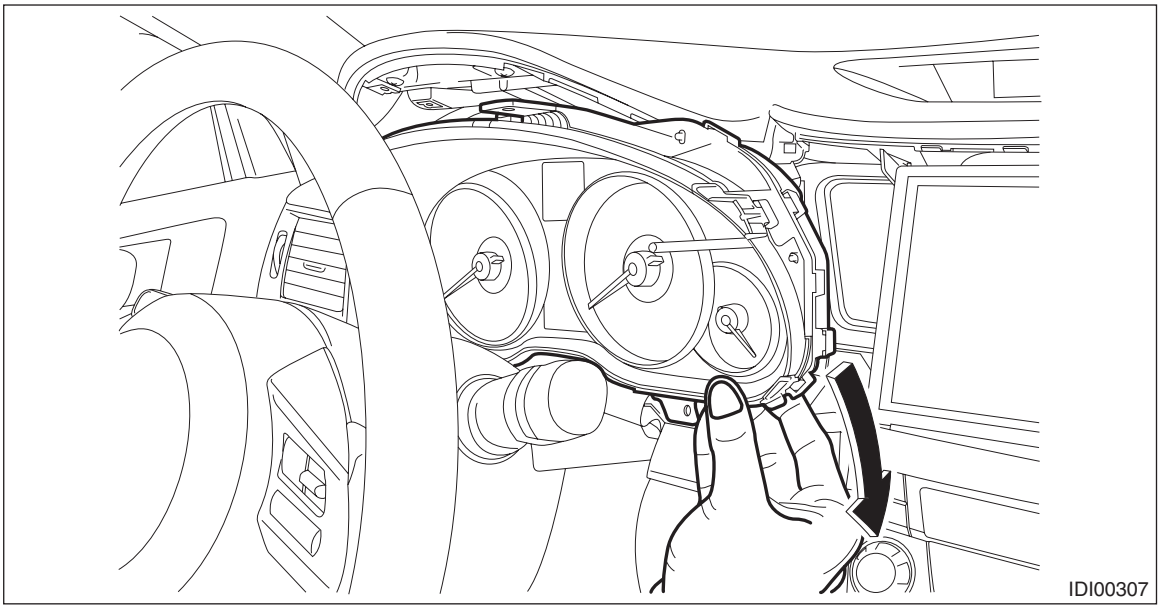

9) Remove the audio assembly.
(1) Remove the left and right screws, and partially pull the audio out from center console.
(2) Disconnect the connectors, and remove the audio assembly.

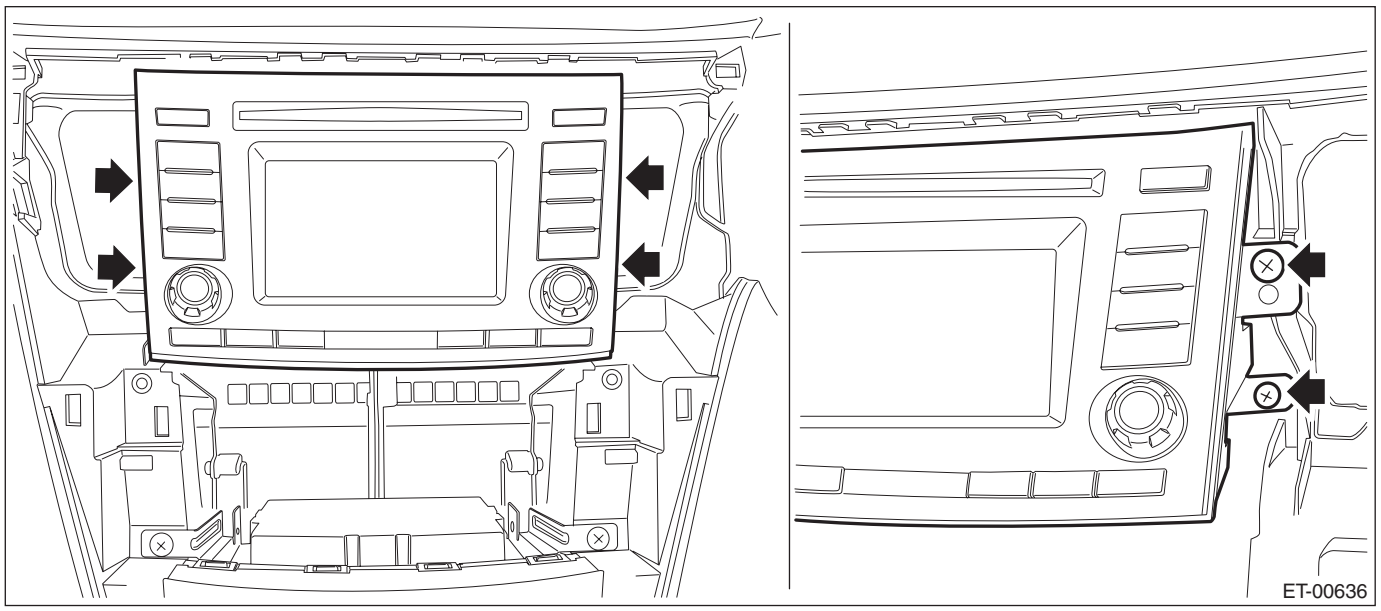

10) Remove the navigation assembly. (model with navigation)
(1) Remove the left and right screws.
(2) Disconnect the connectors, and remove the navigation assembly.

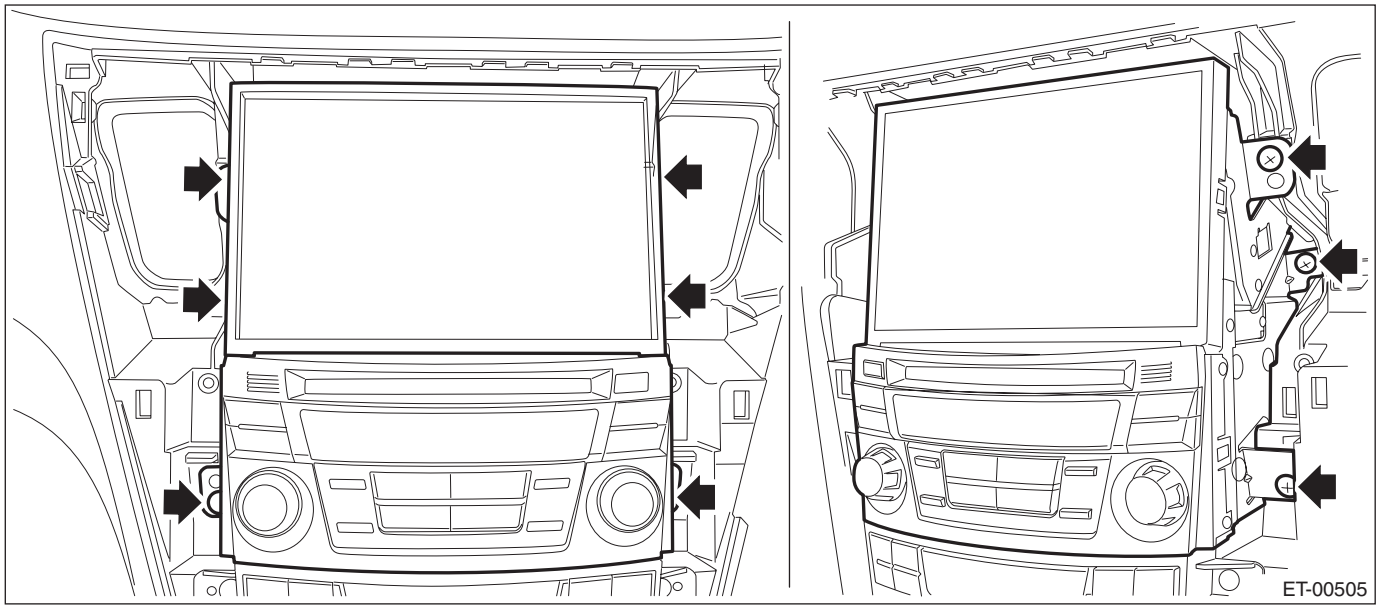

11) Remove the control panel assembly.
(1) Remove the screws, and pull out the control panel assembly toward you.
(2) Disconnect the connector, and remove the control panel assembly.

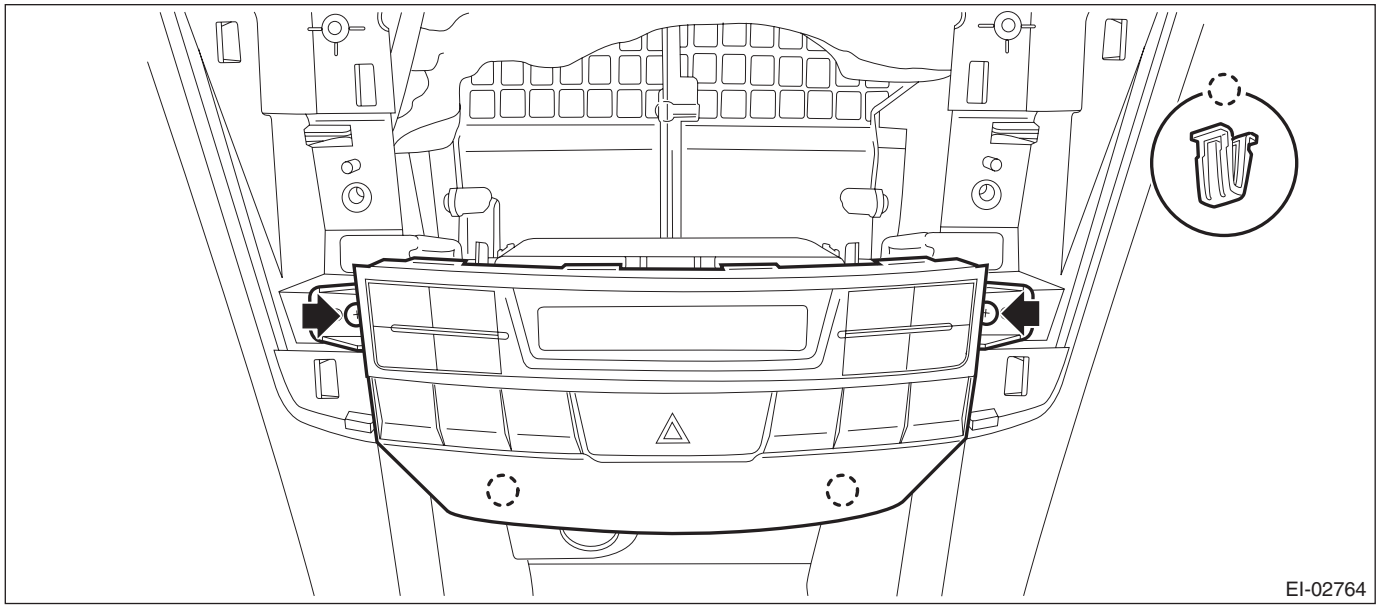

12) Remove the multi display assembly.

CAUTION:
Be careful not to damage the multi display or instrument panel.
(1) Detach the center speaker cover by releasing the claws and hooks.

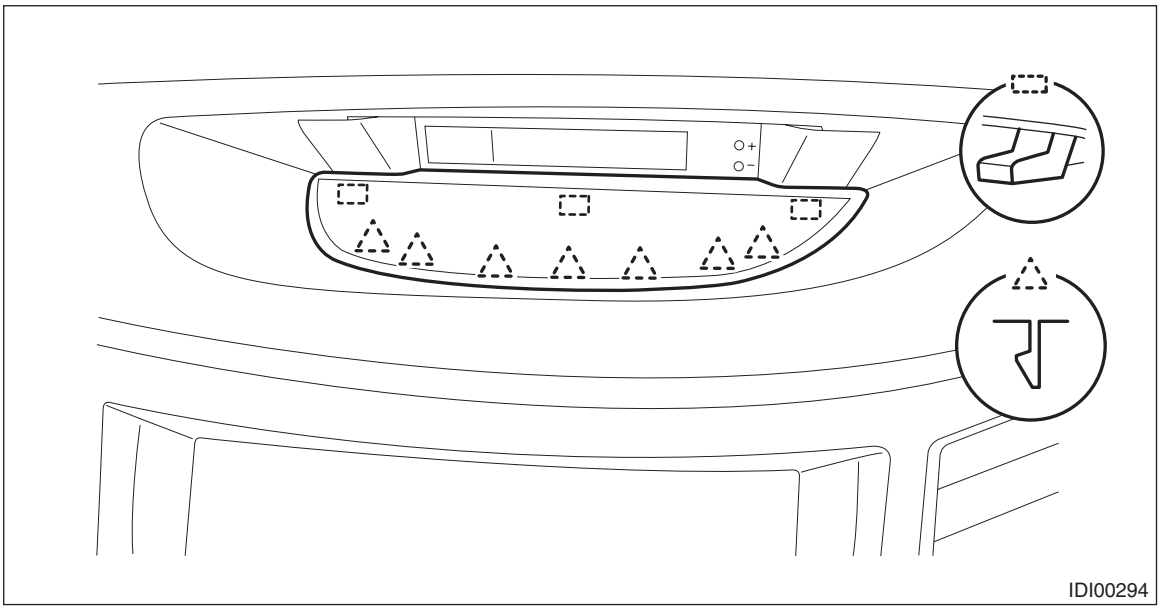

NOTE:
An easy way of removal is to first remove the audio assembly or navigation assembly and push up the cover from the backside.
(2) Release the clips and claws, detach the multi display panel LWR.

(3) Remove the screws and pull out the multi display toward you to disconnect the connectors.

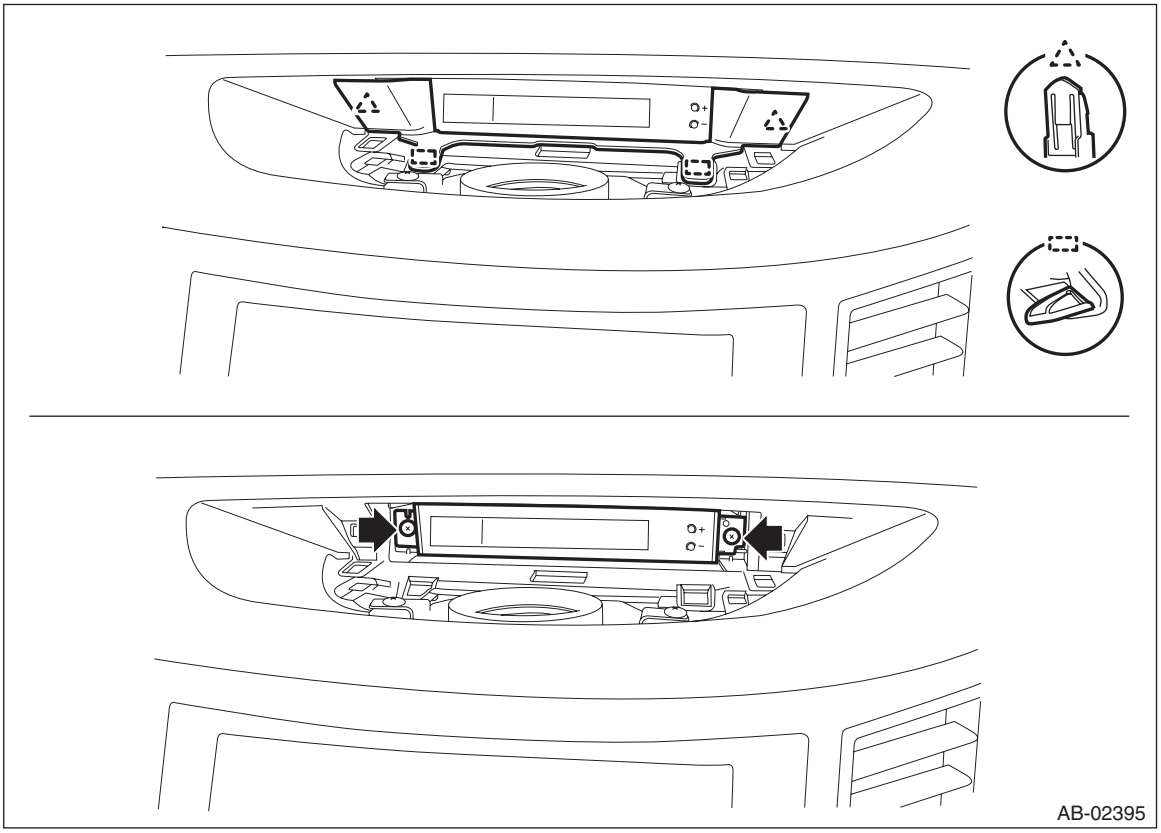

13) Remove the left and right front side speaker assembly. (Models with front side speaker)
(1) Release the clips and claws, then detach the side speaker cover.

CAUTION:
To remove the cover, use a plastic clip remover or equivalent tool.

(2) Remove the screws.

Preparation tool: Stubby screwdriver

(3) Disconnect the connector and remove the front side speaker assembly.

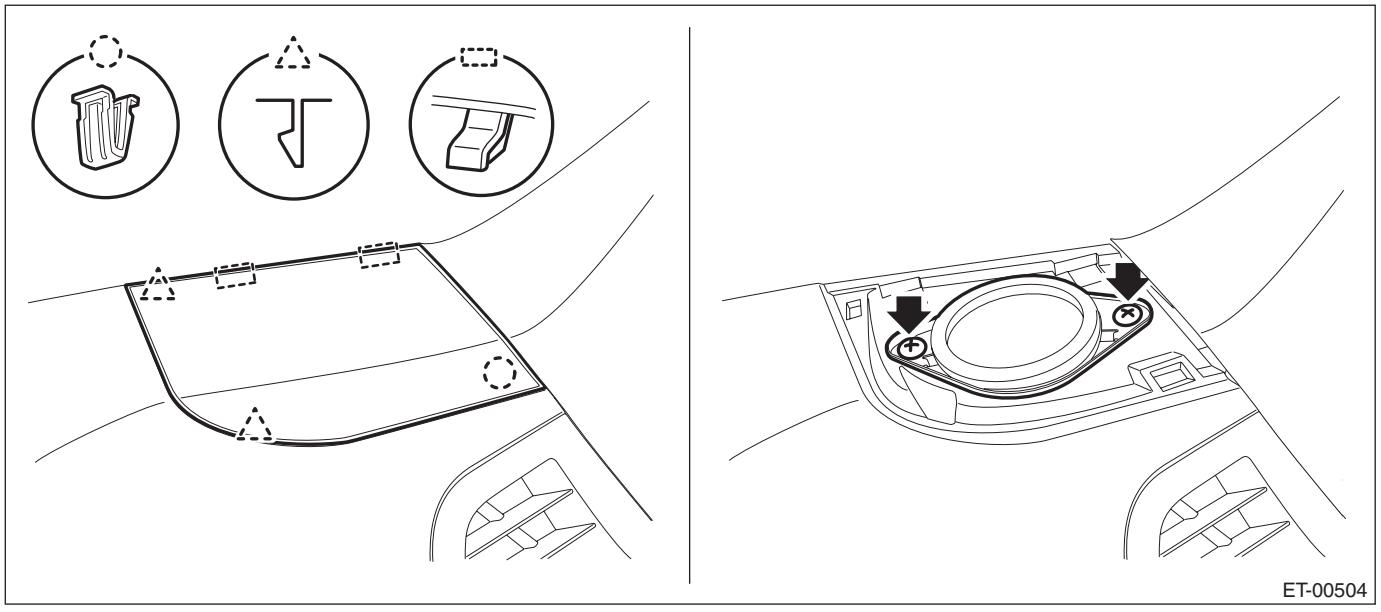

NOTE:
On the passenger's side, also disconnect the sunload sensor connector.

14) Remove the left and right front pillar trims.
(1) Pull the upper part of the front pillar trim towards the center of the vehicle.
(2) Insert long-nose pliers into the top part of the trim, grip the clip with the pliers and twist 90° in that position.

CAUTION:
Be careful not to damage the pillar trim surface and curtain airbag module when inserting the pliers.
(3) Holding the clip twisted as in the previous step, remove the front pillar trim from the clip.
(4) Remove the clip and the front pillar trim.

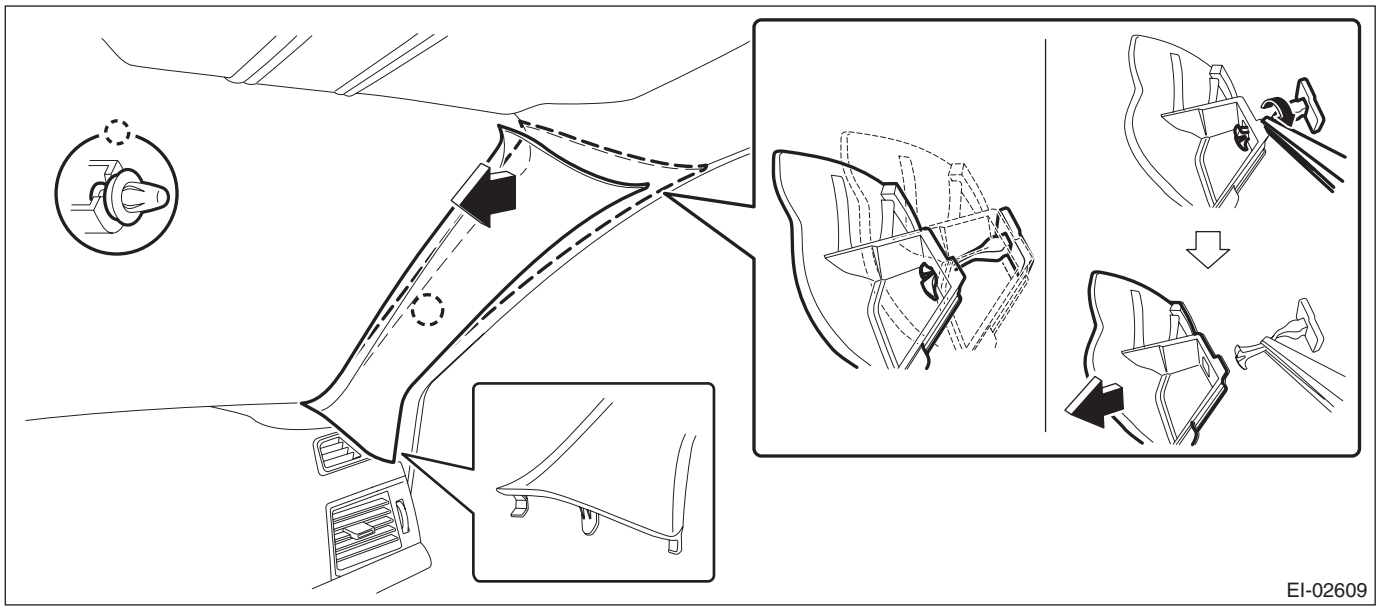
EI-02609

15) Remove the glove box lid assembly.
(1) Remove the glove box damper.
(2) Release the stoppers and remove the glove box lid assembly by pulling it toward you.

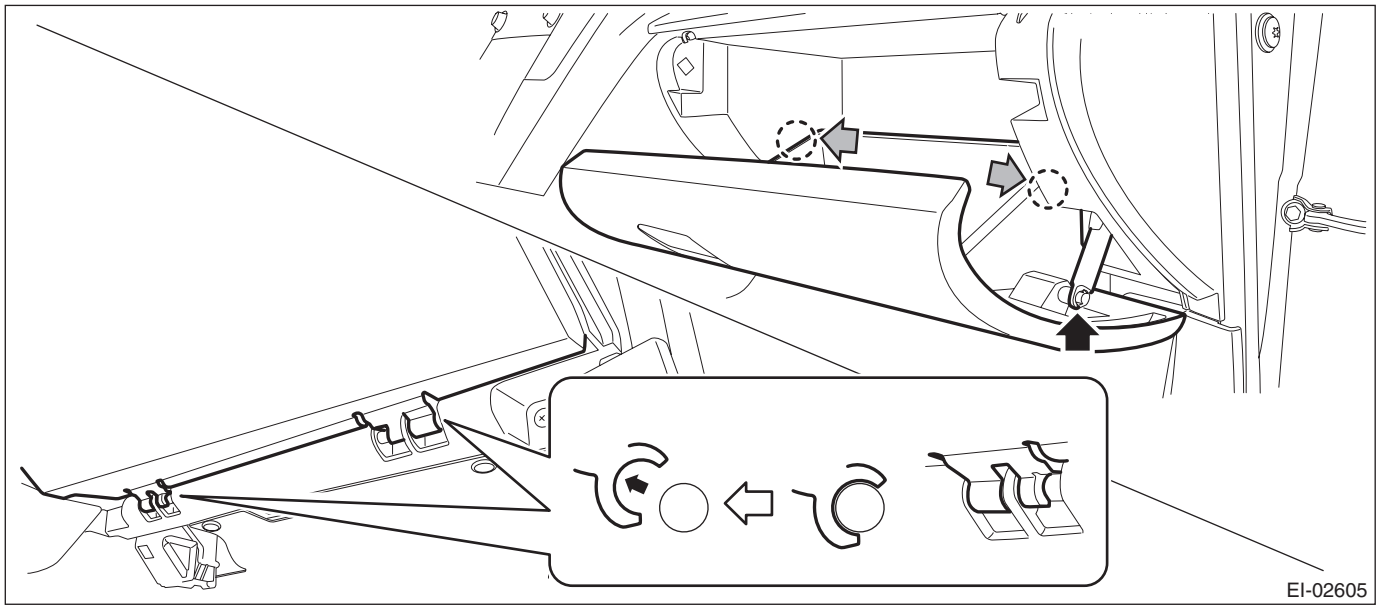
EI-02605

16) Remove the glove box back panel.
(1) Release the clips, and remove the instrument panel side cover RH.

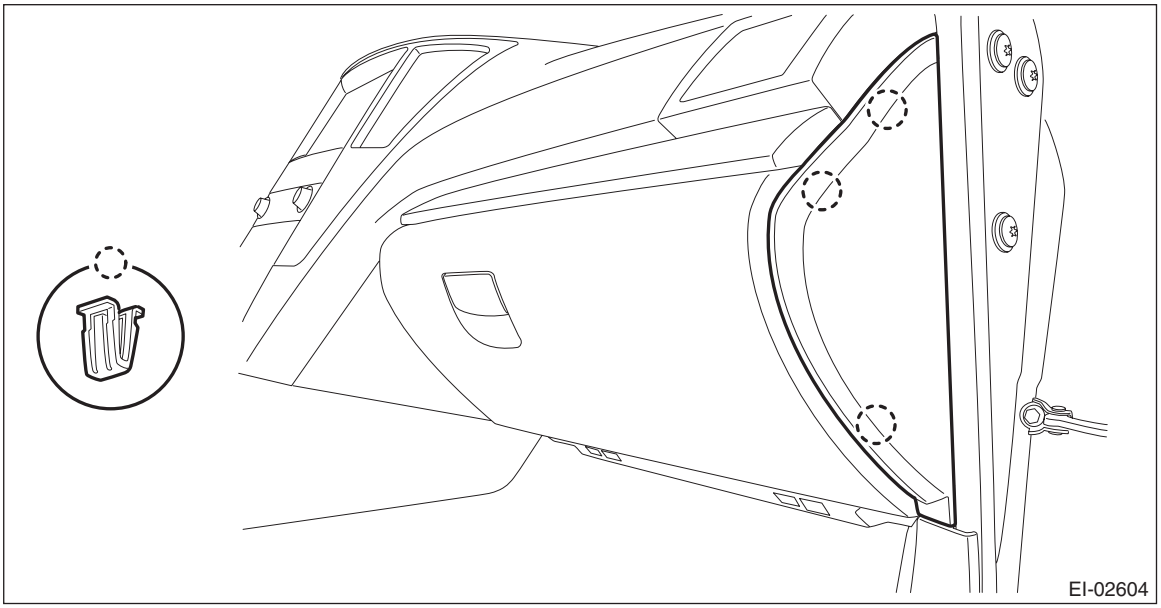

(2) Release the clips, and remove the glove box under cover.

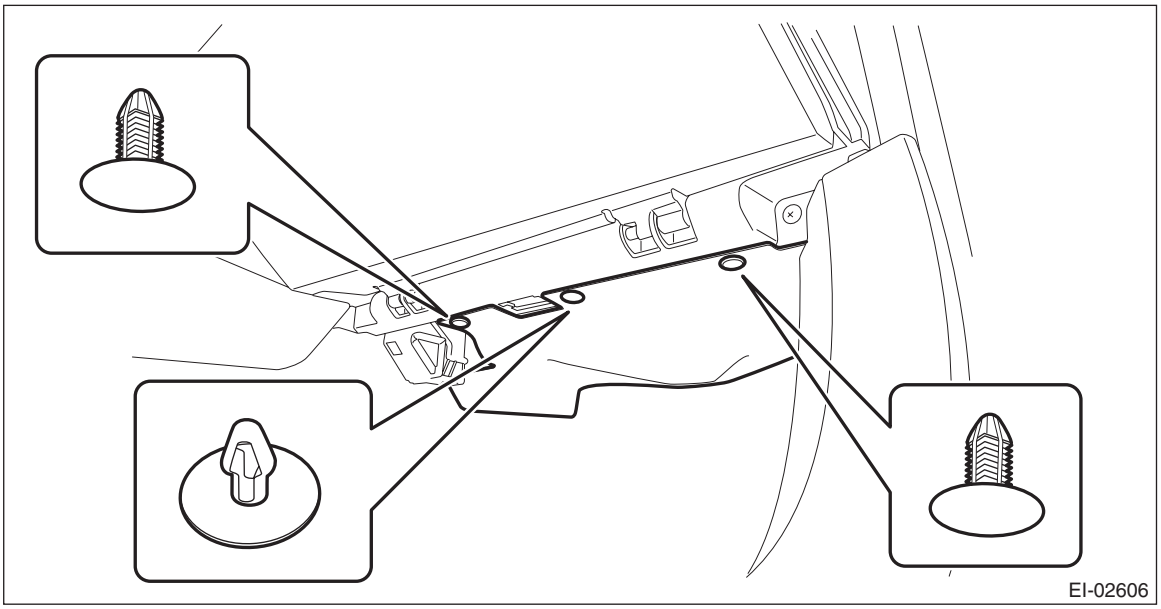

(3) Release the clips and claws, and remove the ornament panel assembly P.

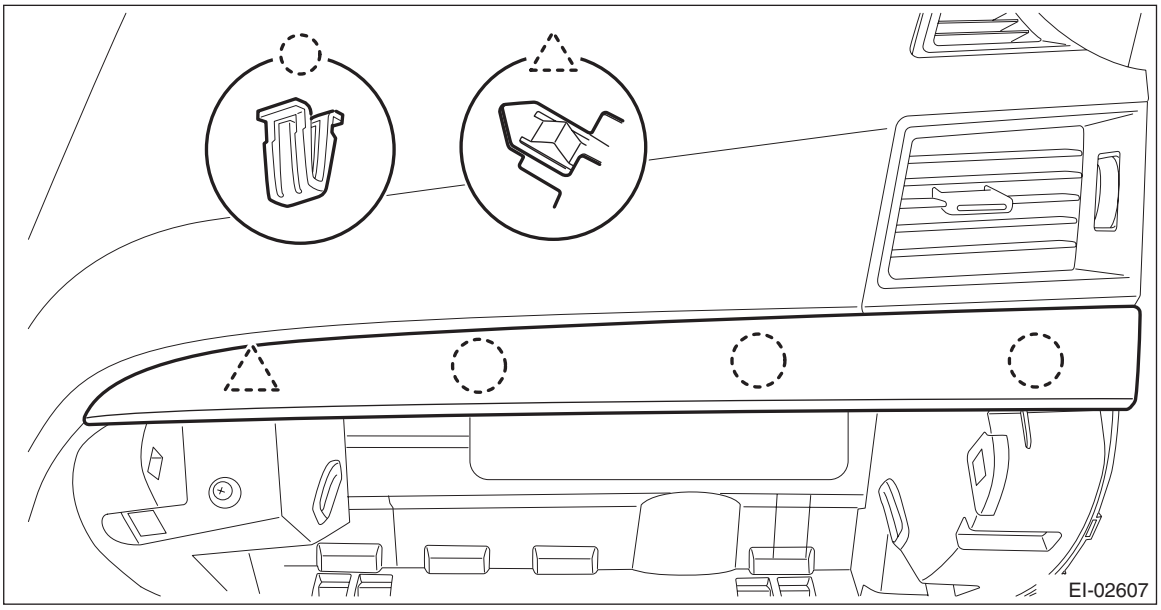

(4) Remove the screws and release the claws, then detach the glove box back panel.

CAUTION:
Pay attention to the glove box light LED harness.

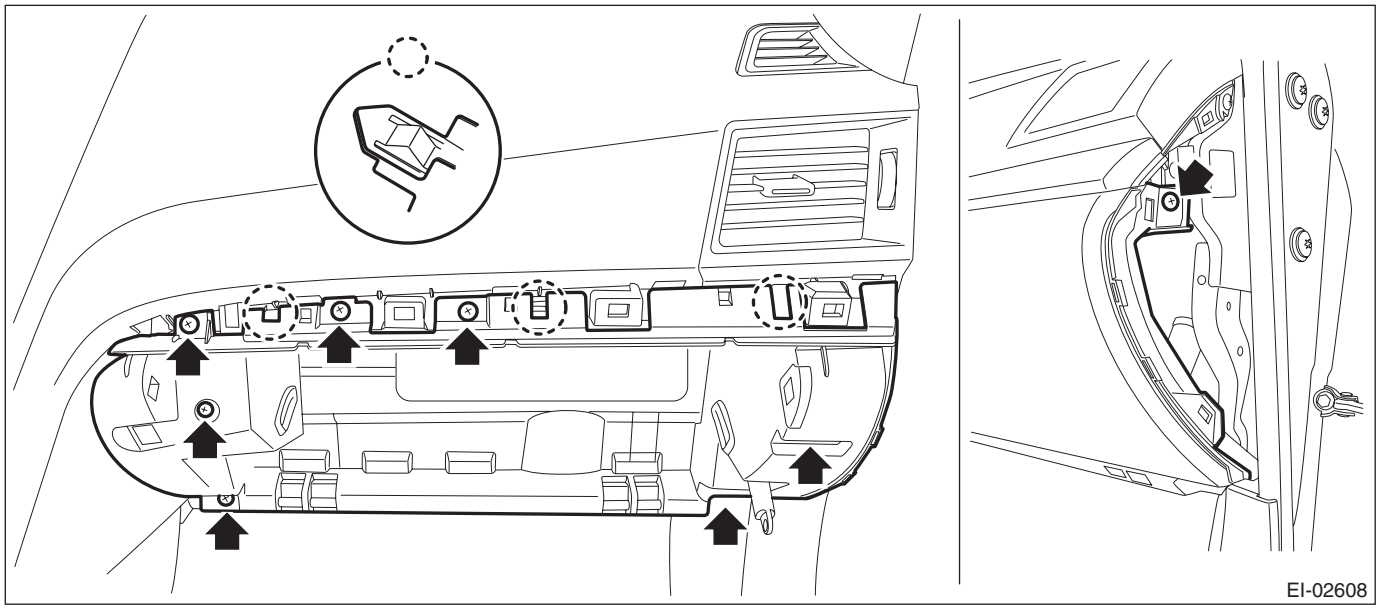

(5) Disconnect the glove box light LED connector.

17) Disconnect the connector from the passenger's airbag module assembly and remove the bolt.
(1) Release the connector and harness clamps and disconnect the airbag connector.

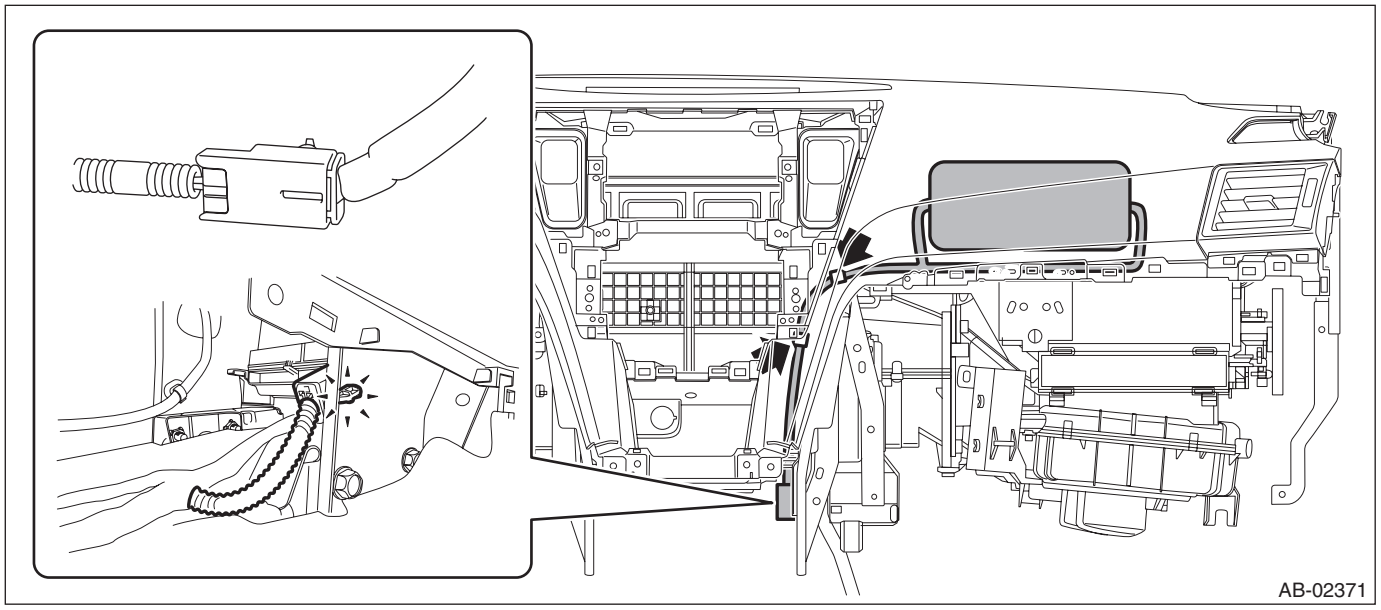

(2) Remove passenger's airbag module assembly bolts.

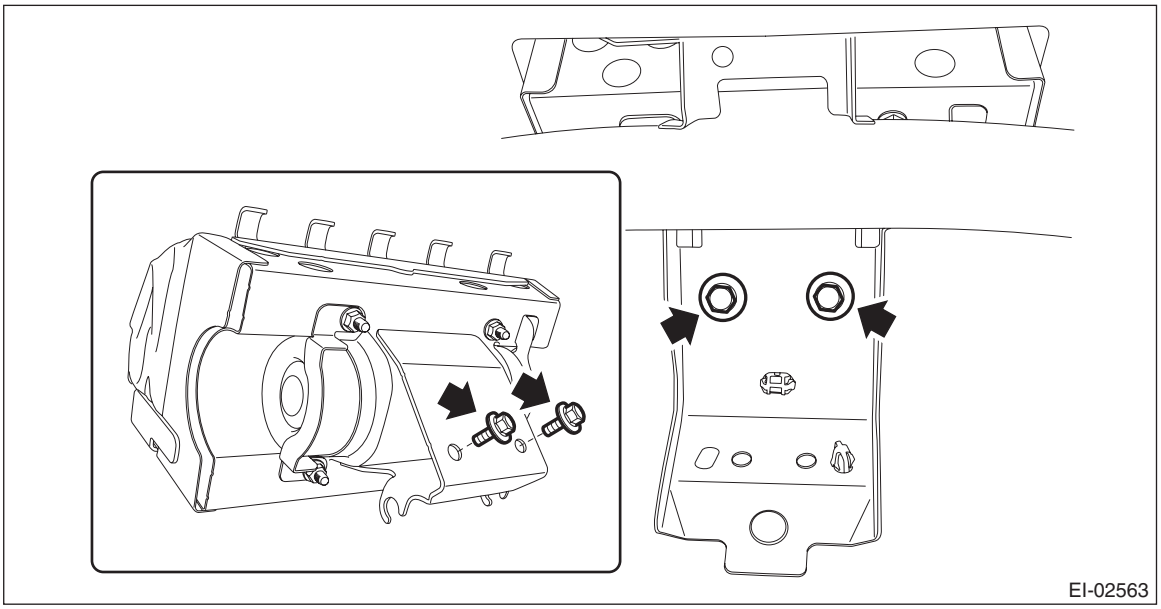

18) Remove the steering shaft assembly. <Ref. to PS-26, REMOVAL, Steering Column.>

19) Remove the instrument panel assembly.
(1) Remove the screws. (A), (B), (C), (D), (E), (F), (G), (H), (I)

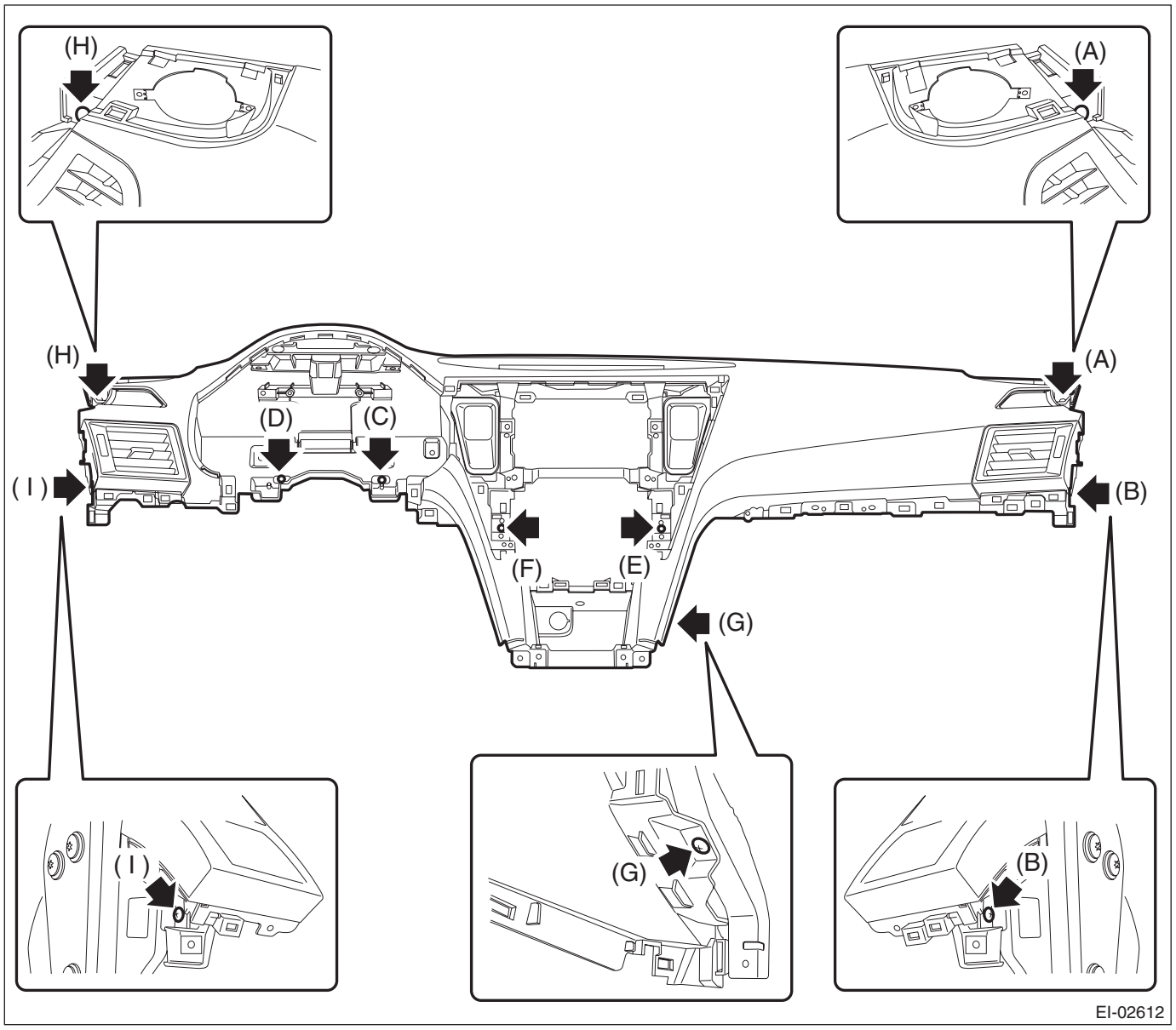

(2) Pull out the instrument panel assembly toward you and release the clamps of the left and right front side speakers.

Preparation tool: Stubby screwdriver

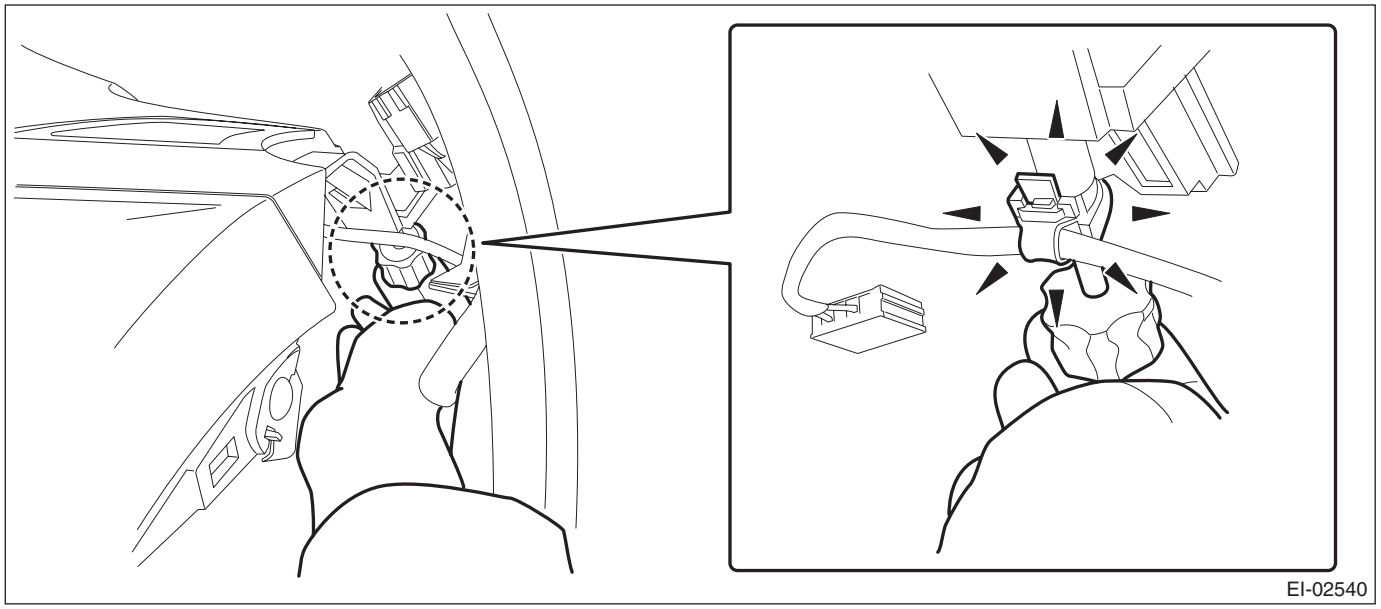
EI-02540

(3) After checking that all harness clamps and connectors are released and disconnected, remove the instrument panel assembly.

CAUTION:
Be careful not to damage the instrument panel surface and interior trims.

20) Remove the heater vent duct.
(1) Remove the screws, and remove the center vent duct.
(2) Release the claws and remove the screws, then detach the side vent duct RH.

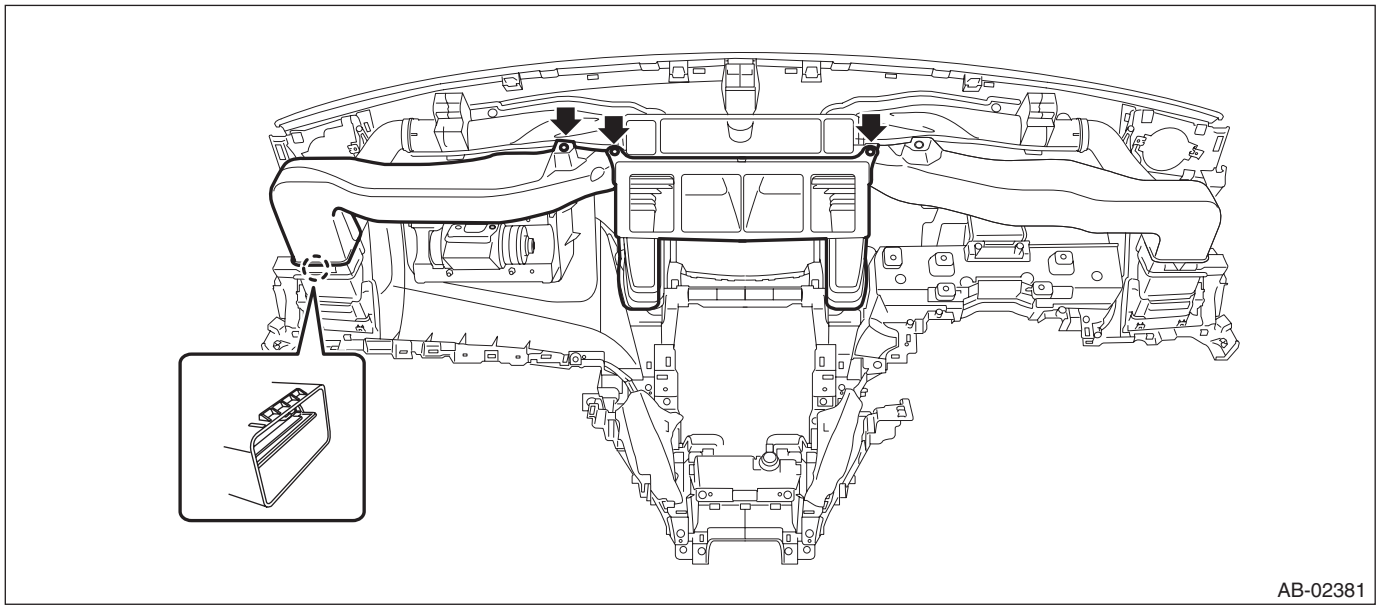
AB-02381

21) Remove the claws, and remove the passenger's airbag module.

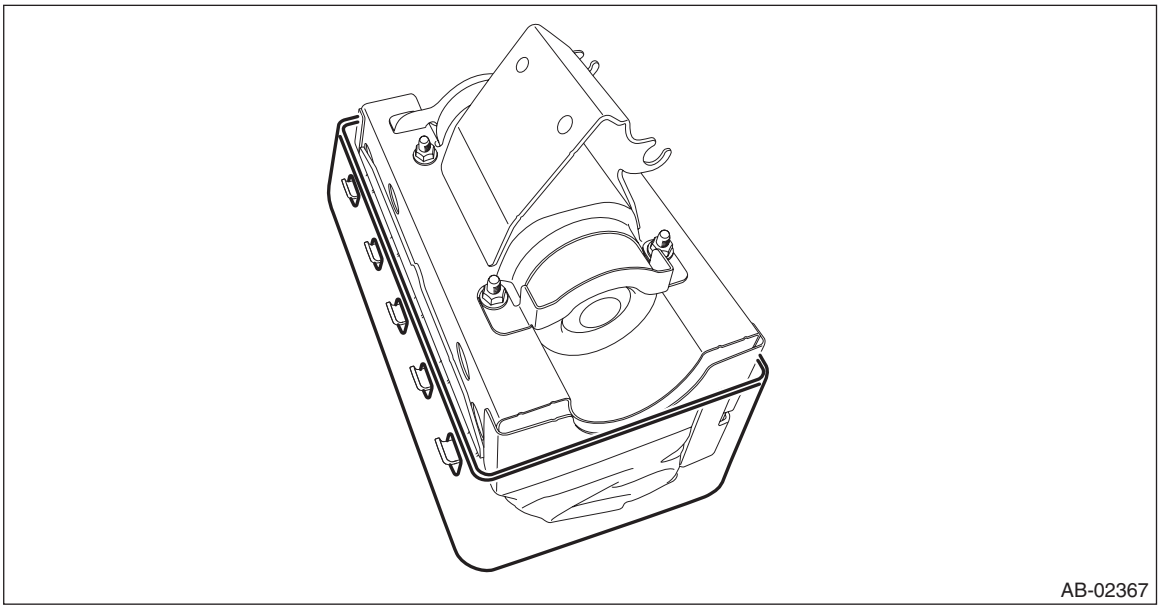

22) For handling of the removed airbag module, refer to "CAUTION". <Ref. to AB-9, CAUTION, General Description.>

B: INSTALLATION

CAUTION:
• Refer to "CAUTION" of "General Description" before handling the airbag module. <Ref. to AB-9, CAUTION, General Description.>
• Do not allow harness and connectors to interfere or get tangled up with other parts.
• Do not reuse the clips in the upper section of the front pillar trim. Always replace them with new ones.
Once removed from the pillar trim, the clip retention power deteriorates and the front pillar trim may come off.

1) Before installation, inspect the following items and replace any faulty part with a new one.
- Passenger's airbag lid (instrument panel surface) is cracked or deformed.
- Airbag module is cracked or deformed.
- Harness and/or connector is cracked, deformed or open.
- Harness wire is exposed.
- Mounting bracket is cracked or deformed.

2) Install each part in the reverse order of removal.

Tightening torque:
Passenger's airbag module: 7.5 N·m (0.76 kgf-m, 5.5 ft-lb)
Console box: 6.5 N·m (0.66 kgf-m, 4.8 ft-lb)

6. Side Airbag Module

A: REMOVAL

CAUTION:
Refer to "CAUTION" of "General Description" before handling the airbag module. <Ref. to AB-9, CAUTION, General Description.>

NOTE:
Remove the passenger's side by referring to driver's side.
1) Remove the headrest.

NOTE:
For models with headrest monitor, remove the headrest in the following procedures.
1. Fold the backrest all the way backward, and then remove the headrest.
2. Place the headrest on the seating face.
3. Return the backrest to the original position.

2) Disconnect the ground cable from battery and wait for at least 60 seconds before starting work.

NOTE:
For the power seat, remove the slide rail installing bolt before removing the battery ground.
3) Remove the front seats.
(1) Remove the slide rail installing bolt.
a) Tilt the backrest forward and move the seat to the front most position.
b) Remove the rear bolt cover (A) and remove the two bolts.
c) Move the seat to the rearmost position.
d) Remove the front bolt cover (B) and remove the two bolts.

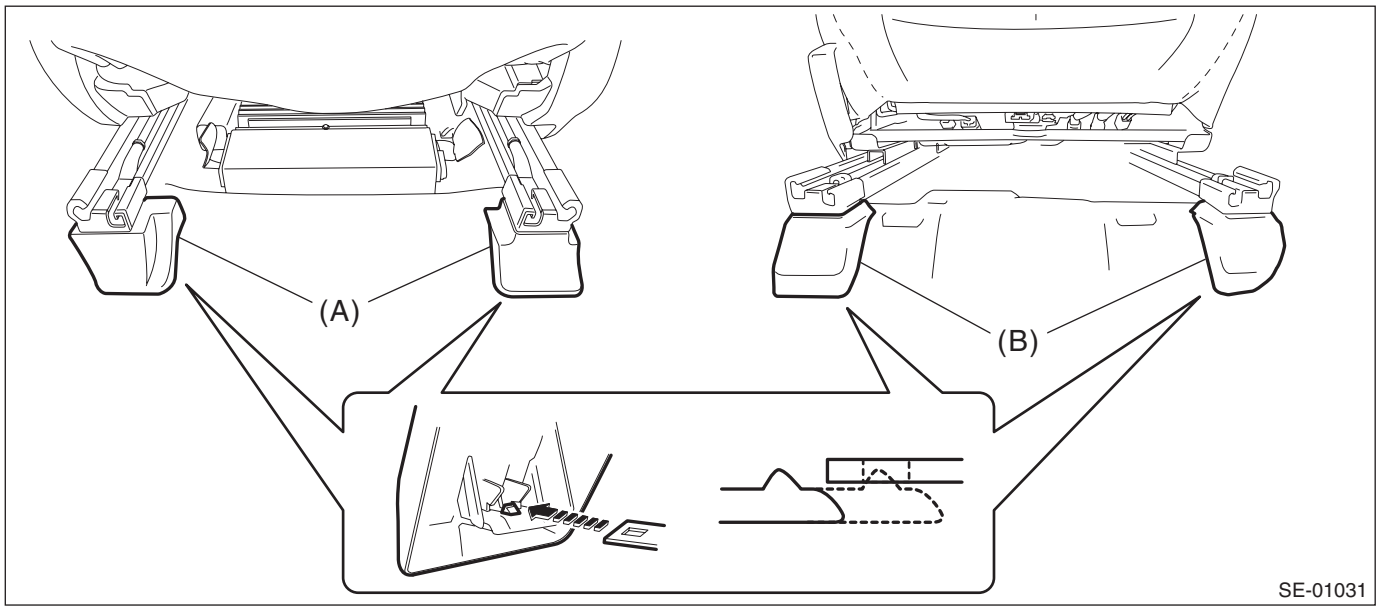

(2) Disconnect the connector under the seat.

CAUTION:
Disconnect the ground cable from battery, and wait 60 seconds before disconnecting the connector.
- Seat belt warning light connector (driver's seat)
- Occupant detection system harness connector (passenger's seat)
- Side airbag connector
- Seat heater connector (model with seat heater)
- Power seat connector (model with power seats)
- Headrest monitor connector (model with headrest monitor)

(3) Take out the front seat from the vehicle.

CAUTION:
Be careful not to damage the body.

4) Remove the seat lifter lever. (Manual seat)
(1) Using a flat tip screwdriver, remove the seat lifter lever cover (a).
(2) Remove the screw and remove the seat lifter lever.

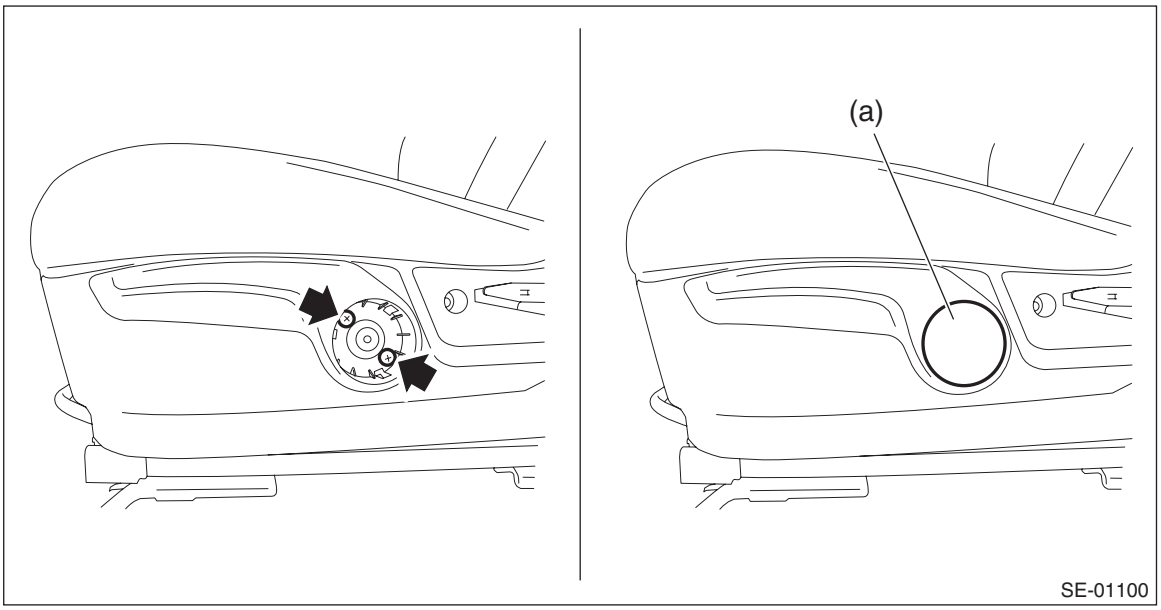

5) Remove the reclining lever cover. (Manual seat)
(1) Pull up the reclining lever and release the claws on the back.
(2) Pull out the reclining lever cover.

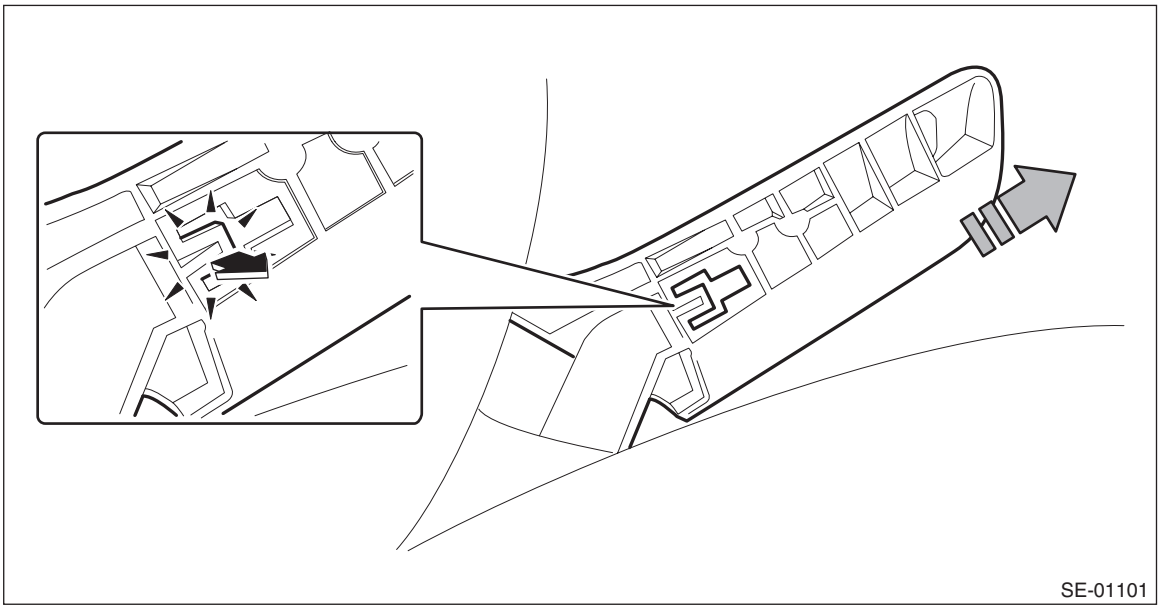

6) Remove the seat side cover OUT.

- MANUAL SEAT
  1. Remove the screws.
  2. Release the claw in the upper section of the seat side cover.
  3. Release the claw in the rear section of the seat side cover.
  4. Release the claw in the front section of the seat side cover, then remove the seat side cover OUT.

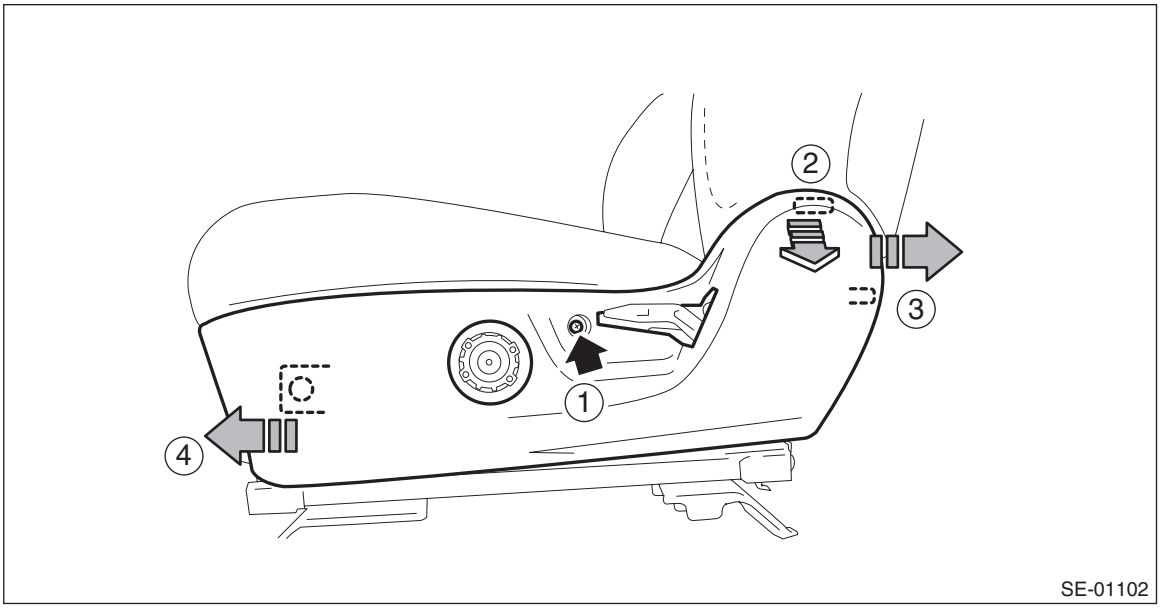

- POWER SEAT
  1. Release the claw in the rear section of the seat side cover.
  2. Release the claw in the upper section of the seat side cover.
  3. Remove the clip and release the claw in the front section of the seat side cover
  4. Disconnect the power seat switch connector and remove the seat side cover OUT.

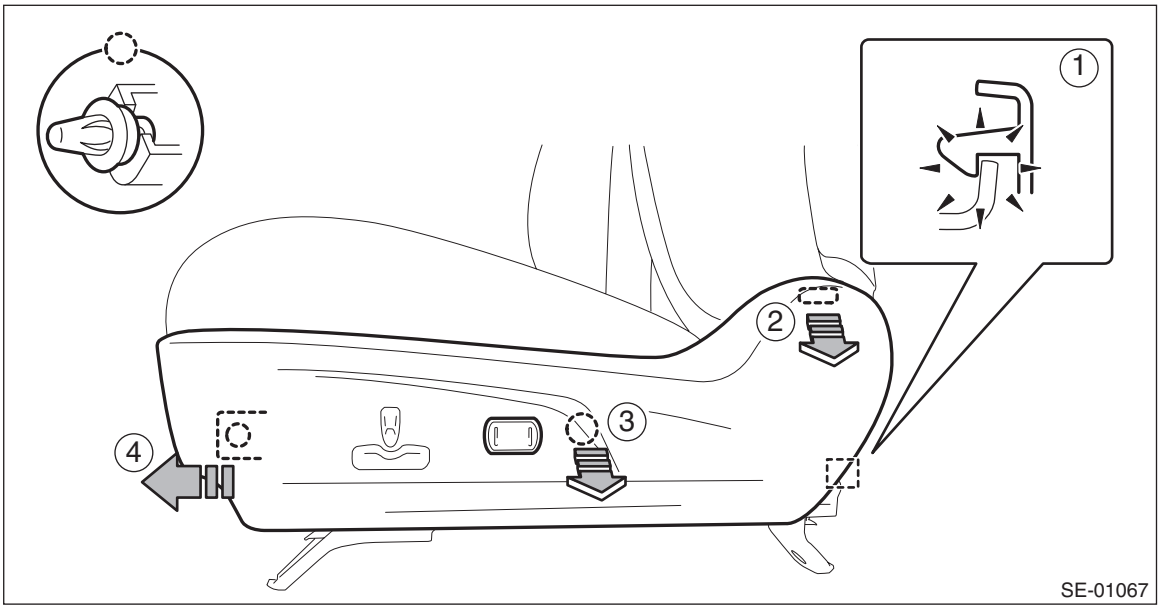

7) Remove the inner seat belt assembly.
(1) Remove the nut and remove the inner seat belt assembly.
(2) Remove the clip for the inner seat belt harness located under the seat cushion.

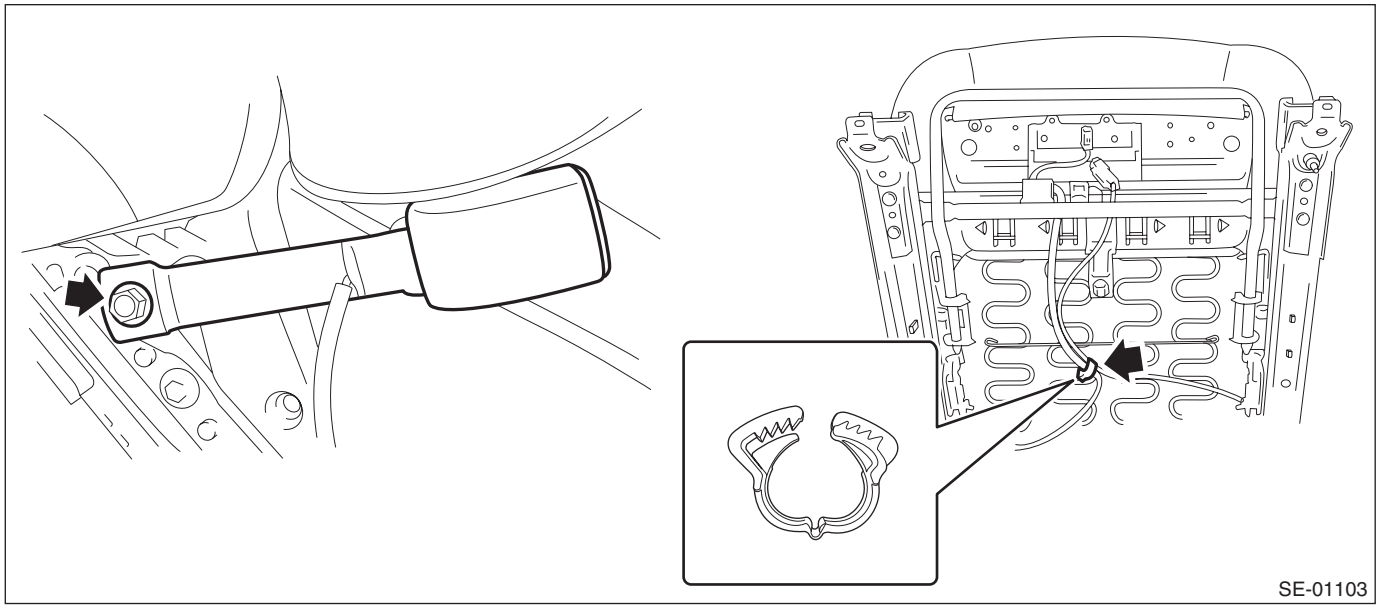
SE-01103

8) Remove the seat side cover IN.
- MANUAL SEAT
  1. Remove the screws.
  2. Release the claw in the upper section of the seat side cover.
  3. Release the claw in the rear section of the seat side cover, then remove the seat side cover IN.

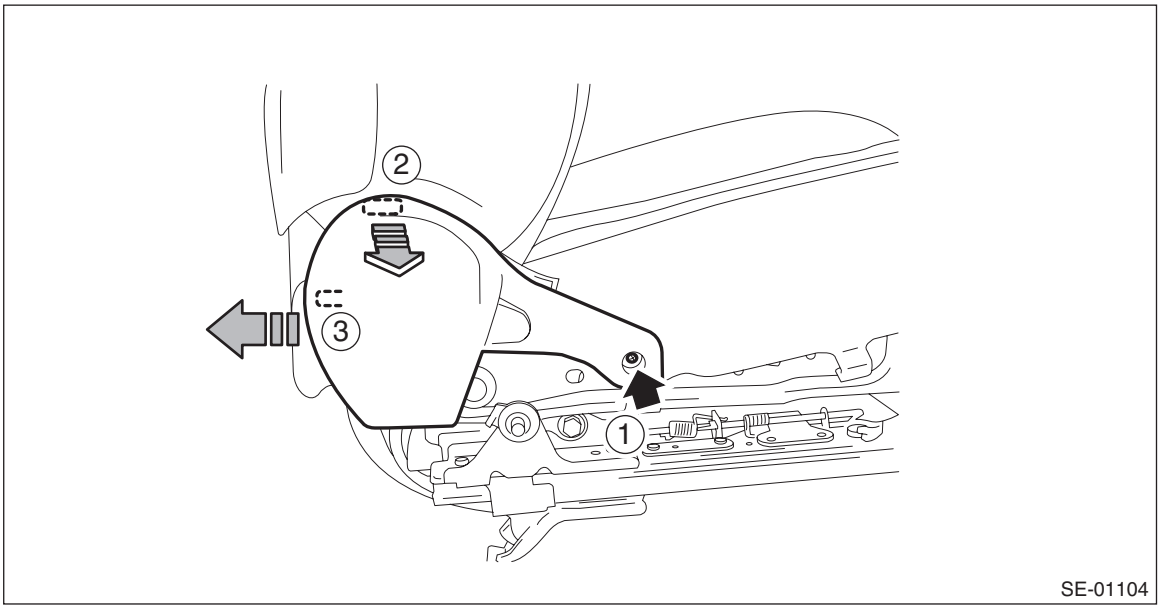

SE-01104

- POWER SEAT
  1. Remove the screws.
  2. Release the claw in the rear section of the seat side cover.
  3. Release the claw in the upper section of the seat side cover, then remove the seat side cover IN.

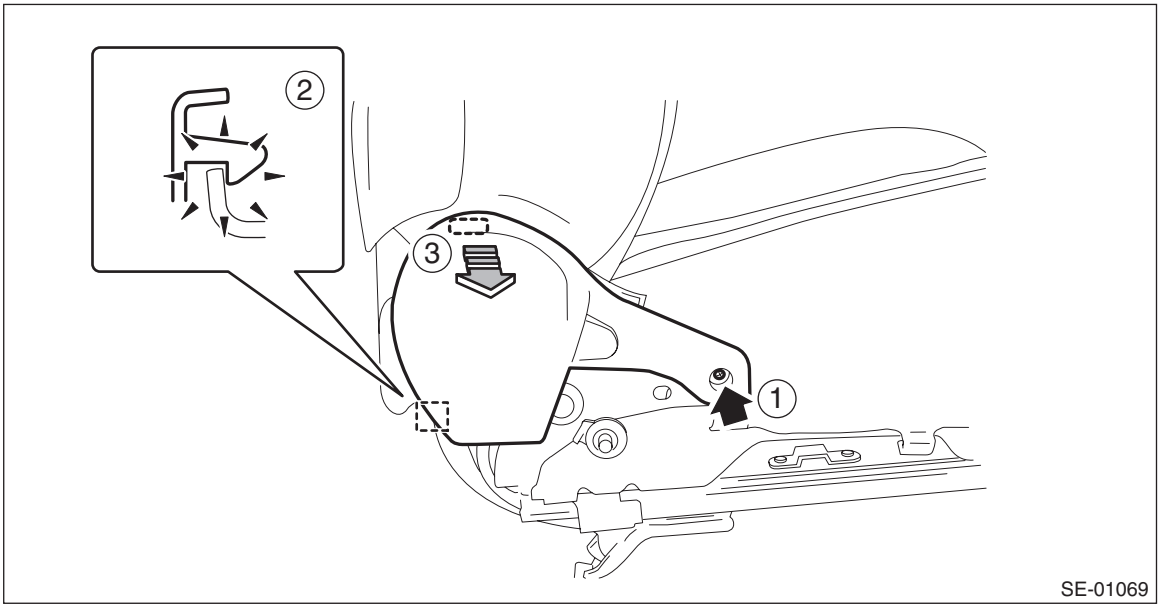

9) Separate the backrest assembly and the seat cushion assembly.
   (1) Remove the clip for the side airbag harness located under the seat cushion.
   (2) Remove the bolts from reclining hinge of both sides.
   (3) While taking care not to damage the airbag harness, separate the backrest assembly and the seat cushion assembly.
   - MANUAL SEAT

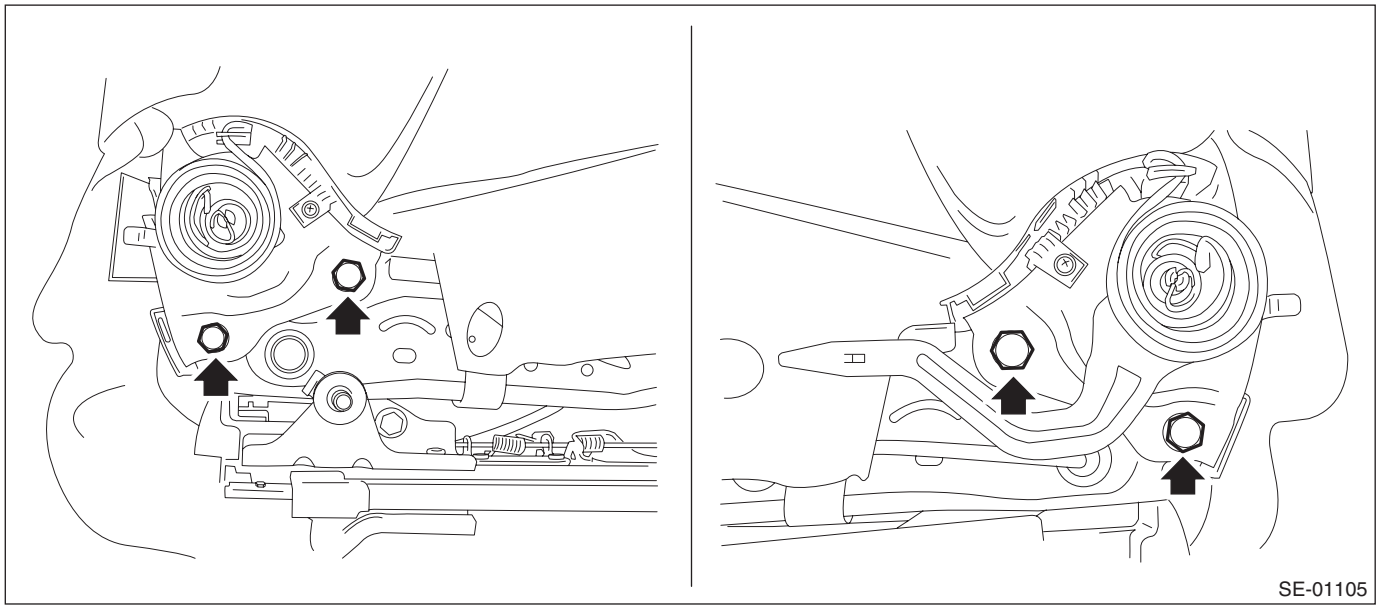

- POWER SEAT

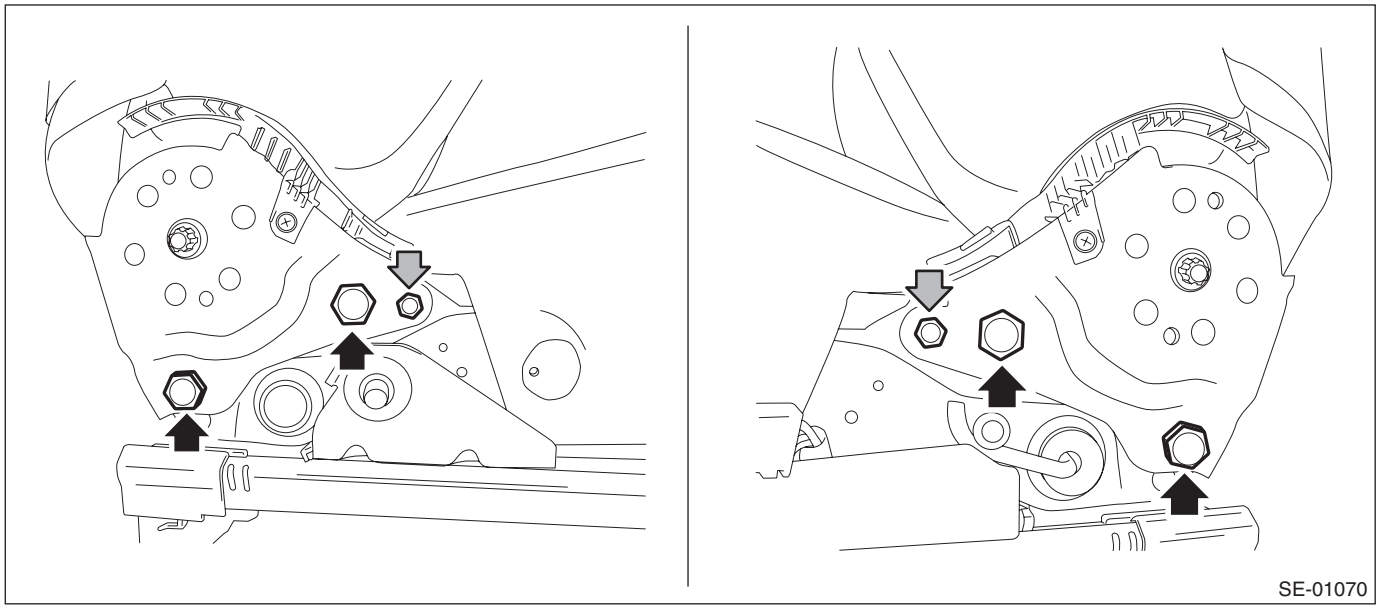

10) Remove the backrest back cover.
(1) Remove the screws.
(2) Release the hooks by pulling down the back cover and remove the backrest back cover.

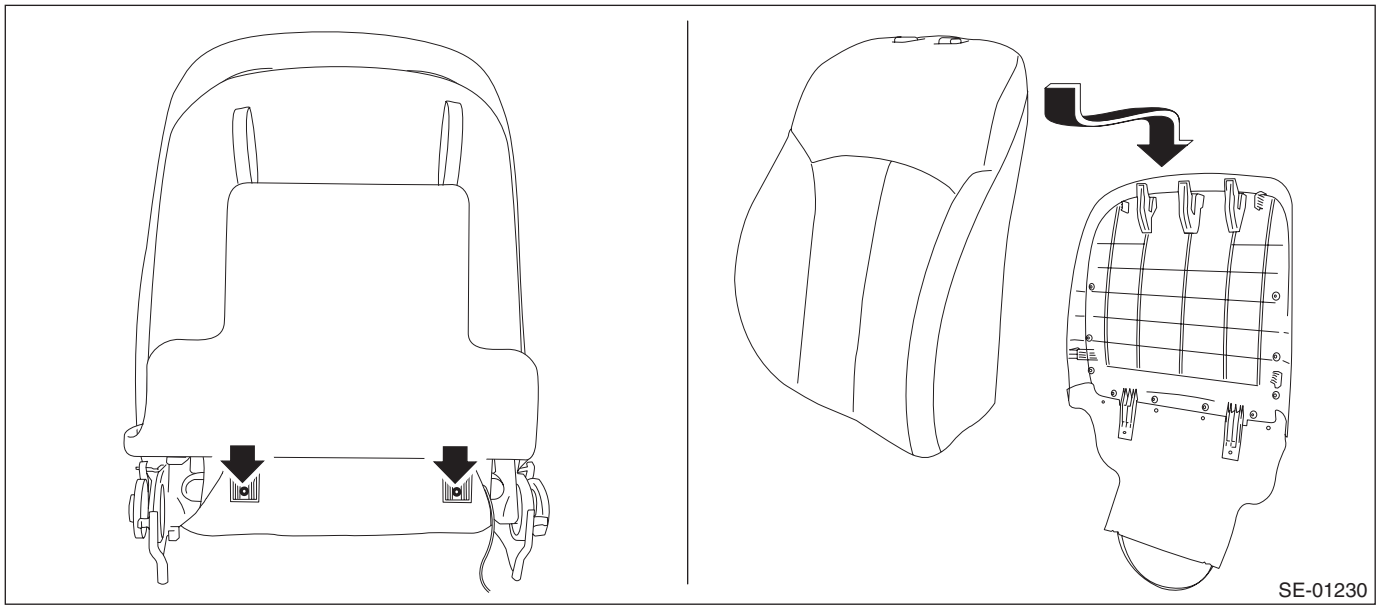

11) Remove the side airbag module assembly.

CAUTION:
• Be careful not to tear the vinyl inside the seat when removing the hog rings. If torn, replace with a new part.
• Do not open the (plastic) protective cover of the airbag. If any damage is present in the protective cover (such as airbag module cloth coming out), replace the side airbag module assembly with a new one.

(1) Remove the hooks and hog rings.

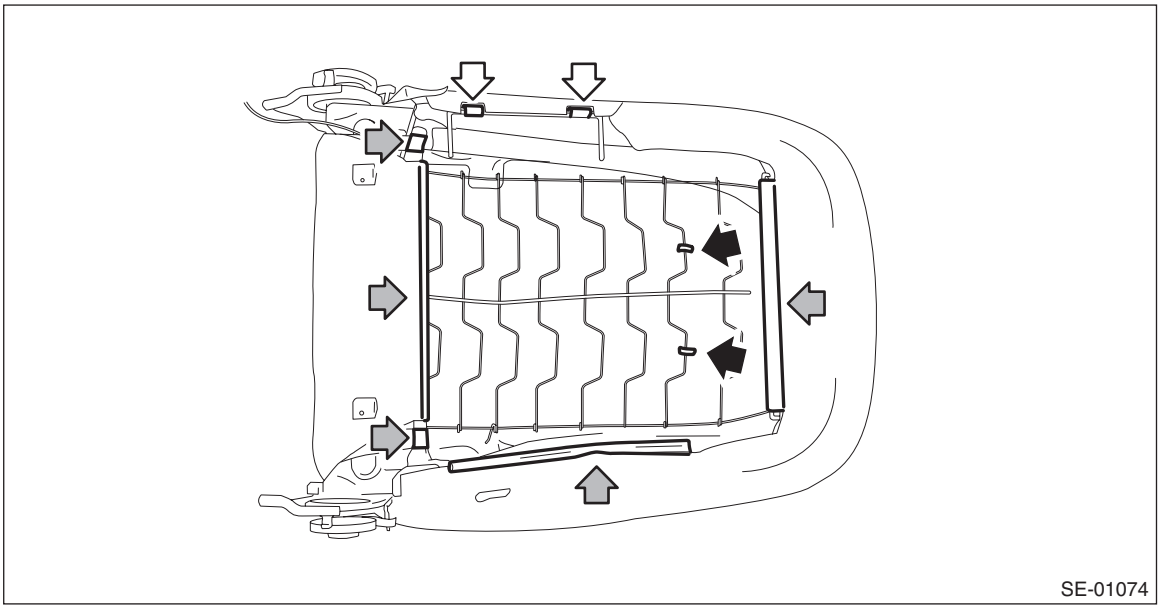
SE-01074

(2) Remove the backrest pad & cover from backrest assembly.
(3) Remove the mounting nuts of the side airbag module.

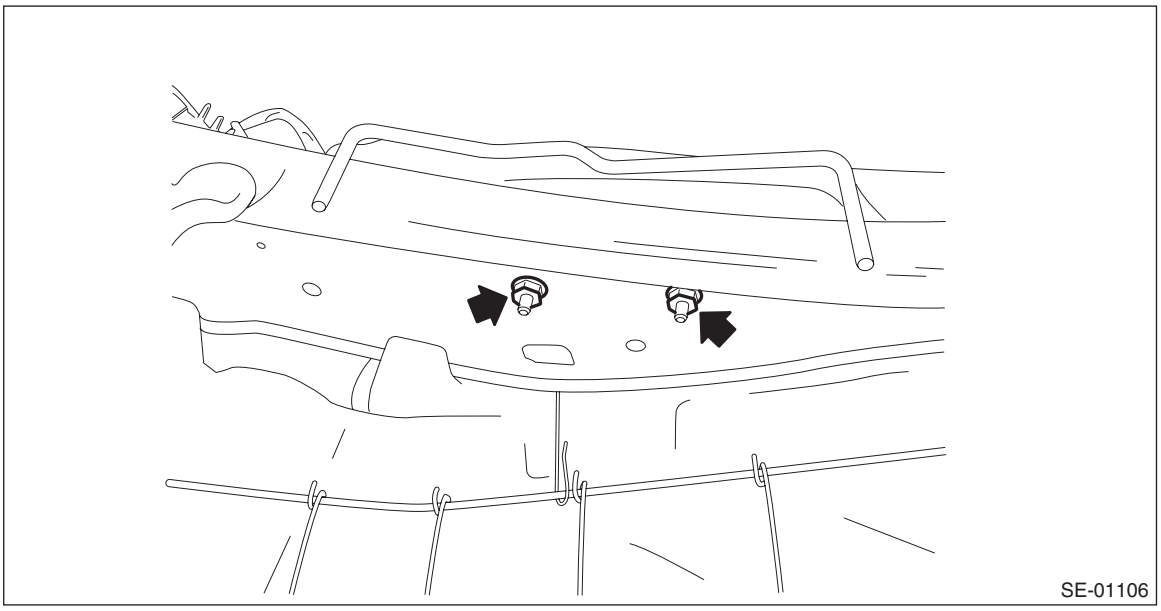
SE-01106

(4) Remove the side airbag harness from backrest frame assembly.
(5) While taking care not to damage the airbag (plastic) protective cover, remove the side airbag module assembly.

B: INSTALLATION

CAUTION:
• Refer to "CAUTION" of "General Description" before handling the airbag module. <Ref. to AB-9, CAUTION, General Description.>
• Be sure to perform the system calibration for occupant detection system after passenger's seat installation. <Ref. to OD(diag)-15, OPERATION, System Calibration (Rezeroing).>
• Make sure that the side airbag module assembly is installed as shown in the figure.

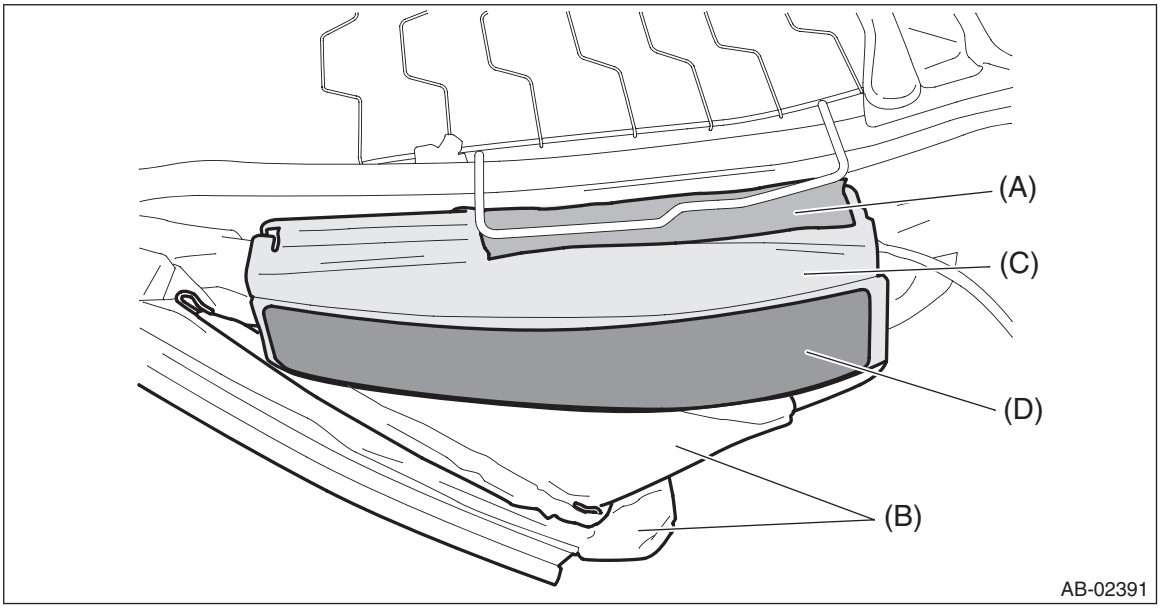

(A) Side airbag guide cloth
(B) Backrest cover
(C) Side airbag module ASSY
(D) Side airbag tape

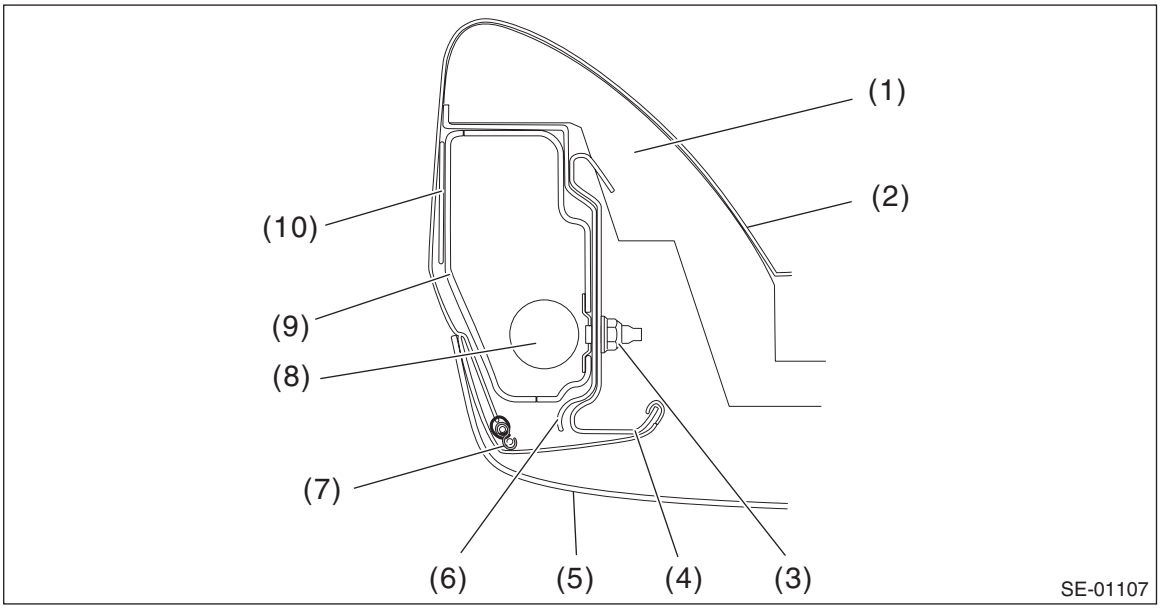

(1) Backrest pad
(2) Backrest cover
(3) Nut
(4) Backrest frame
(5) Backrest back cover
(6) Side airbag guide cloth
(7) S hook
(8) Side airbag module inflator
(9) Side airbag module case
(10) Side airbag tape

- **When replacing the side airbag assembly with new one, be sure to attach the side airbag tape.**
- **Be careful not to stain or damage the backrest cover during assembly.**
- **Do not reuse hog rings and S hooks.**
- **Secure the hog ring using hog ring pliers.**
- **Install the hog rings to the specified points securely and make sure that no wrinkle or twisting on backrest cover.**

1) Before installation, inspect the following items and replace any faulty part with a new one.
- Make sure that there is no foreign matter on side airbag module.
- Front seat, airbag module and mounting bracket are damaged or deformed.
- Harness and/or connector is cracked, deformed or open.
- Harness wire is exposed.

2) Install the side airbag module to the backrest frame assembly.

Tightening torque:
6 N·m (0.61 kgf-m, 4.4 ft-lb)

3) Install the side airbag harness to backrest frame assembly.
4) Install the backrest cover.
5) Secure the backrest hinge.
- MANUAL SEAT

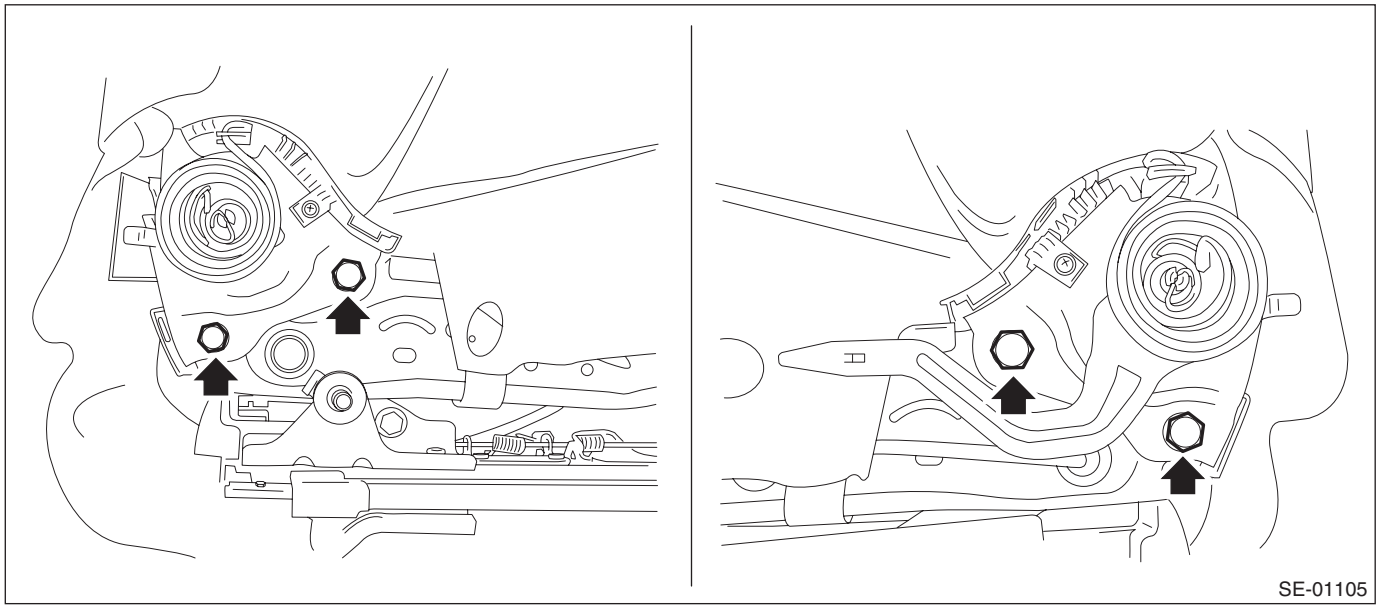
SE-01105

- POWER SEAT

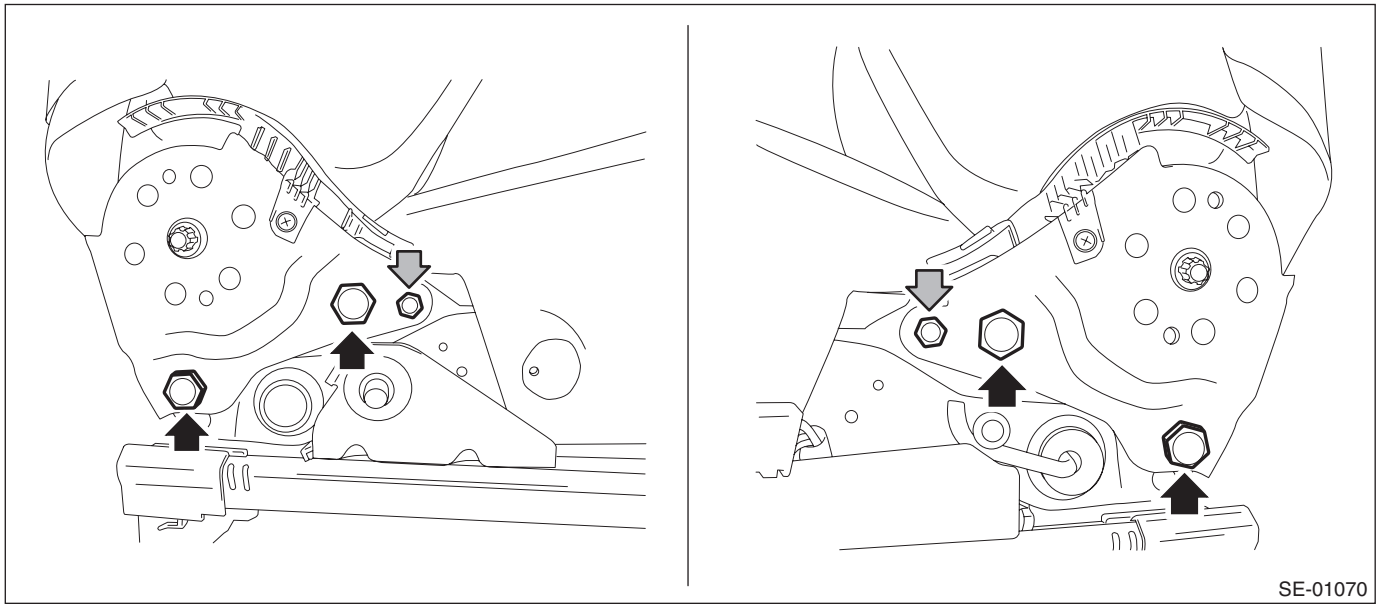
SE-01070

Tightening torque:
Refer to "COMPONENT" of "General Description". <Ref. to SE-2, FRONT SEAT, COMPONENT, General Description.>

6) Install the side airbag harness to the back of the seat cushion assembly using a cable clip.

CAUTION:
After restoring the seat, operate the reclining and sliding mechanisms to check that the side airbag harness is not caught.

7) Install the front seat to the body.

CAUTION:
• The seat mounting bolts differ between the front mounting points and the rear mounting points. Make sure that you are using correct bolts at correct positions.
• Tighten the slide rail installing bolt gradually in several steps to the specified torque in the order as shown in the figure.

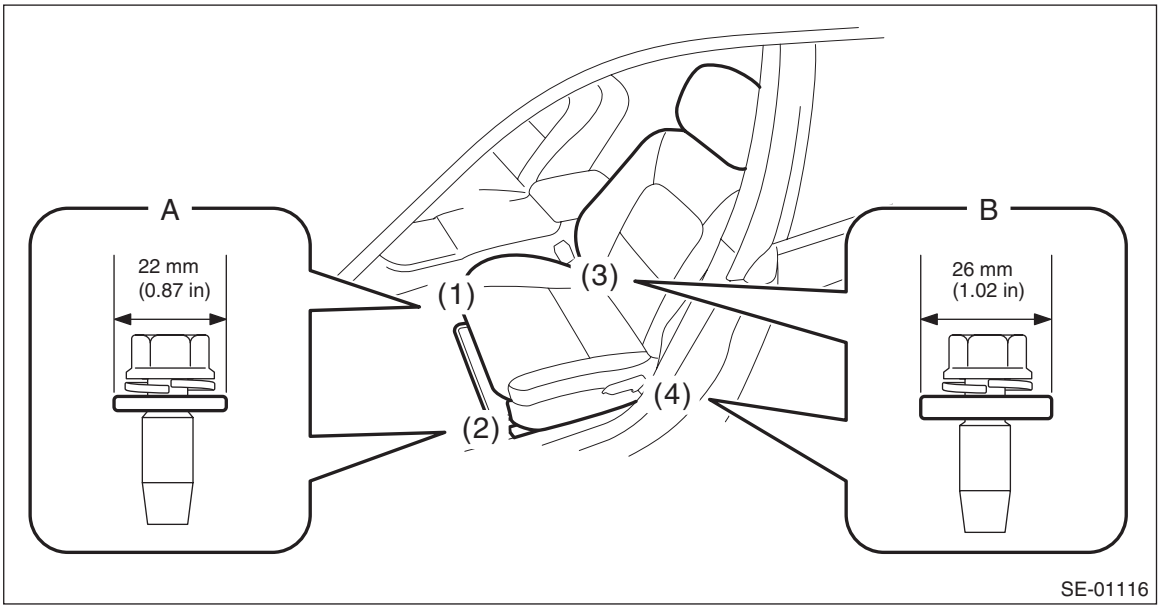

- **Front (bolt A): Washer diameter 22 mm (0.87 in)**
- **Rear (bolt B): Washer diameter 26 mm (1.02 in)**

Tightening torque:
Front seat assembly: 53 N·m (5.4 kgf-m, 39.1 ft-lb)

7. Curtain Airbag Module

A: REMOVAL

1. SEDAN MODEL

CAUTION:
Refer to "CAUTION" of "General Description" before handling the airbag module. <Ref. to AB-9, CAUTION, General Description.>
1) Turn the ignition switch to OFF.
2) Disconnect the ground cable from battery and wait for at least 60 seconds before starting work.
3) Remove the roof trim. <Ref. to EI-131, SEDAN MODEL, REMOVAL, Roof Trim.>
4) Remove the curtain airbag module assembly.

CAUTION:
- **Be careful not to damage the curtain airbag module during removal.**
- **Never open the curtain airbag module before activation. Never reuse the deployed curtain airbag module.**
- **Remove the modules in order starting from the vehicle front.**

(1) Remove all bolts and clips, and remove the curtain airbag module assembly.

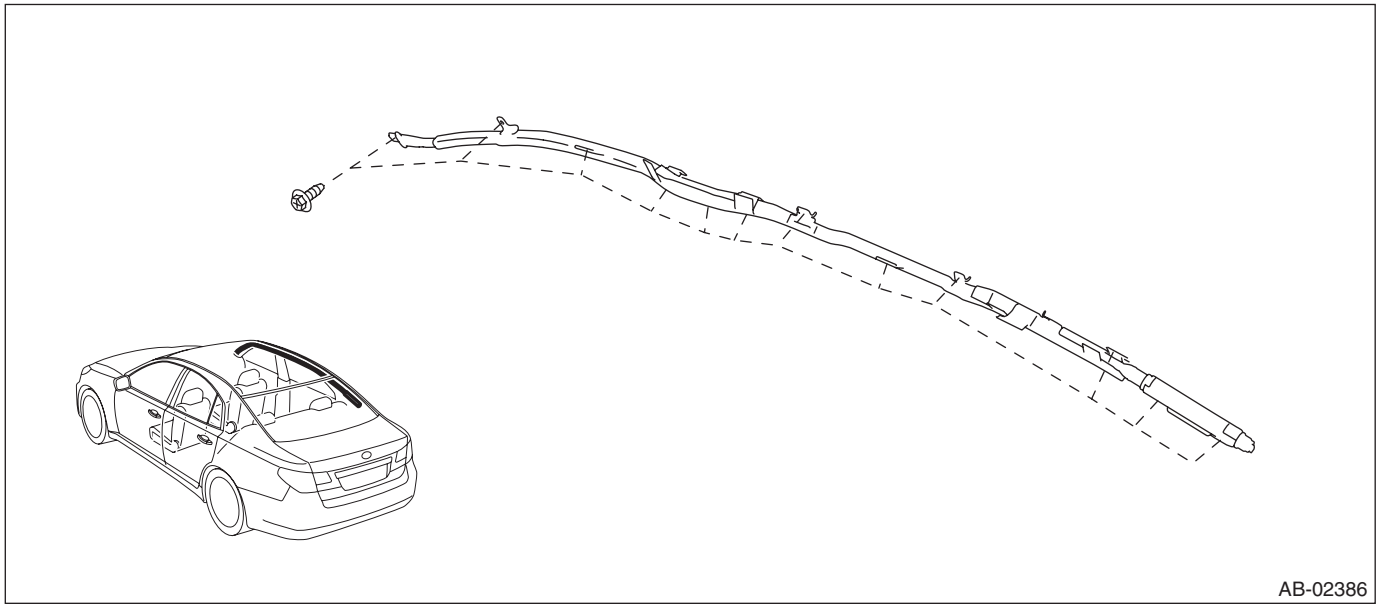

(2) Disconnect the curtain airbag module connector.

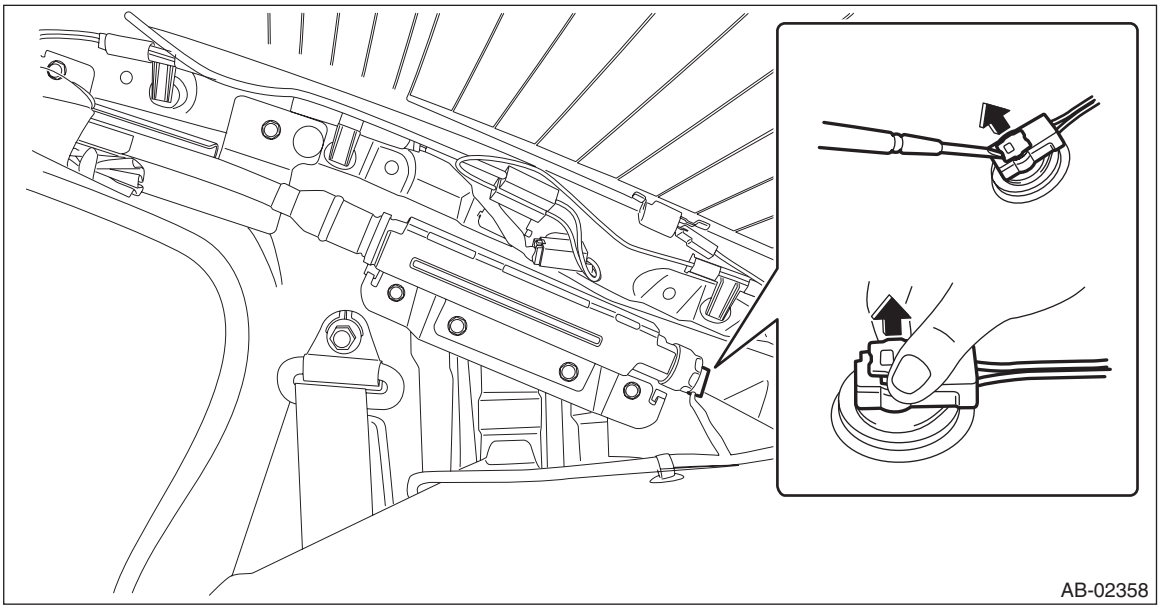

2. OUTBACK MODEL

CAUTION:
Refer to "CAUTION" of "General Description" before handling the airbag module. <Ref. to AB-9, CAUTION, General Description.>

1) Turn the ignition switch to OFF.
2) Disconnect the ground cable from battery and wait for at least 60 seconds before starting work.
3) Remove the roof trim. <Ref. to EI-145, OUTBACK MODEL, REMOVAL, Roof Trim.>
4) Remove the curtain airbag module assembly.

CAUTION:
- **Be careful not to damage the curtain airbag module during removal.**
- **Never open the curtain airbag module before activation. Never reuse the deployed curtain airbag module.**
- **Remove the modules in order starting from the vehicle front.**

(1) Remove all bolts and clips, and remove the curtain airbag module assembly.

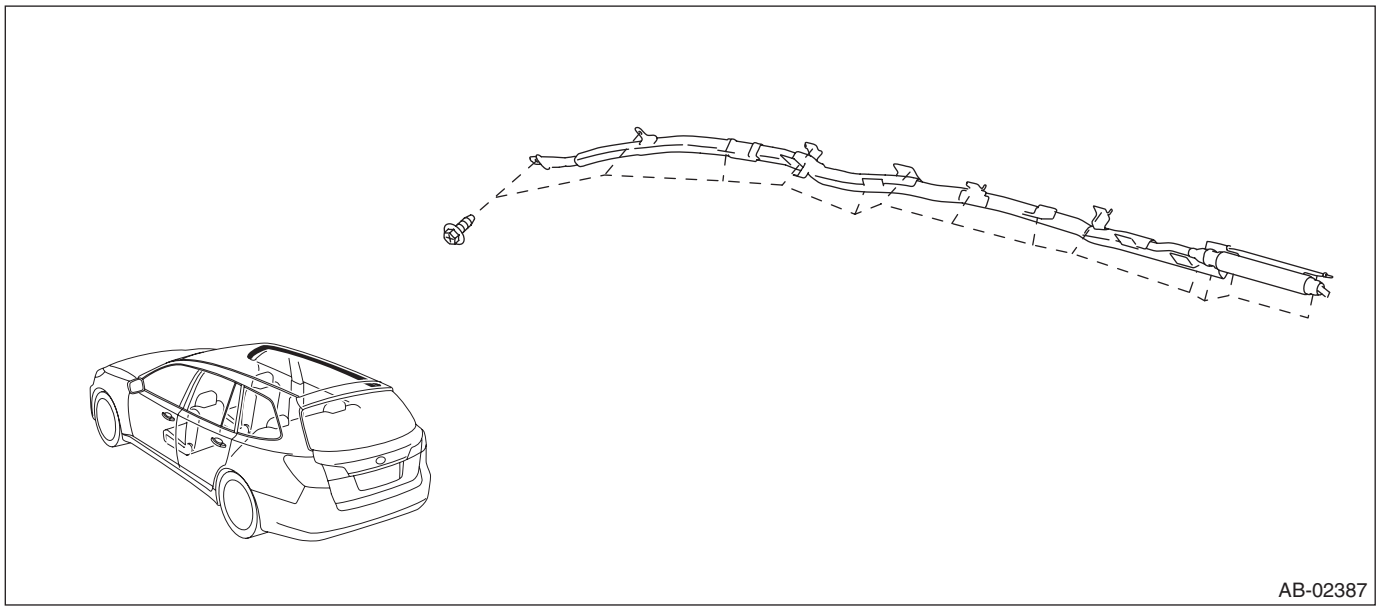

(2) Disconnect the curtain airbag module connector.

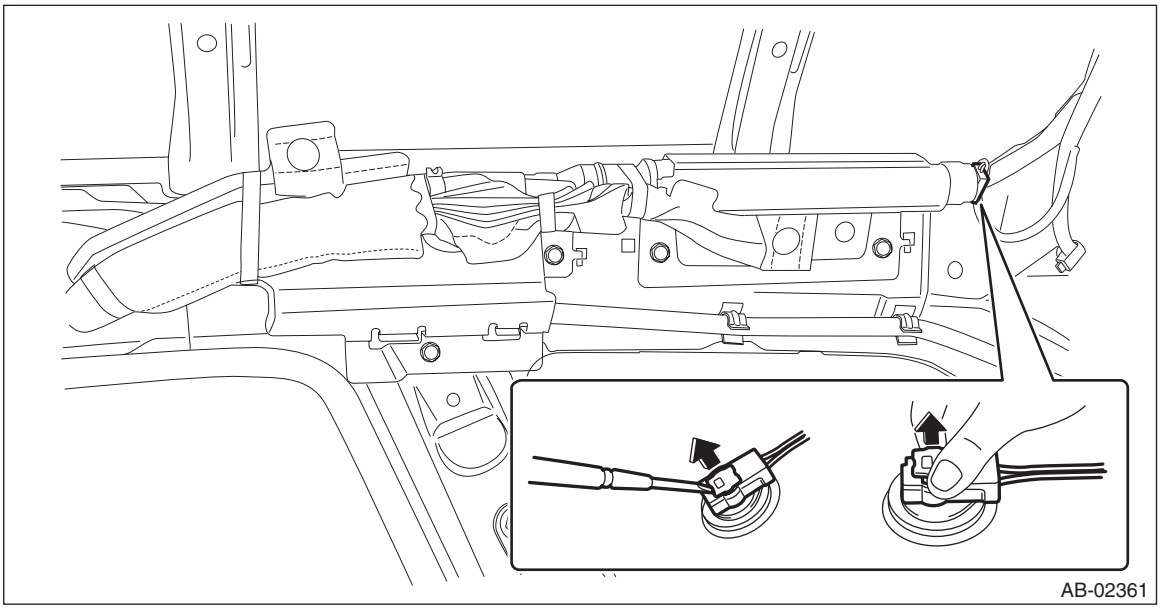

B: INSTALLATION

CAUTION:
• Refer to "CAUTION" of "General Description" before handling the airbag module. <Ref. to AB-9, CAUTION, General Description.>
• When installing the curtain airbag module, install a specified part at specified place.
• Be careful not to damage the curtain airbag module during removal.
• Never open the curtain airbag module before activation. Never reuse the deployed curtain airbag module.
• Make sure that there are no foreign matter on airbag module.

1) Before installation, inspect the following items and replace any faulty part with a new one.
- Airbag cover is scratched or torn.
- Harness and/or connector is cracked, deformed or open.
- Harness wire is exposed.
- Mounting bracket and securing clip are cracked or deformed.

2) Install each part in the reverse order of removal.

Tightening torque:
7.5 N·m (0.76 kgf-m, 5.5 ft-lb)

8. Airbag Control Module

A: REMOVAL

CAUTION:
• Do not disassemble the airbag control module.
• If the airbag control module is deformed or if the damage from water is suspected, replace the airbag control module with a new part.
• Do not drop the airbag control module.
• After removal, keep the airbag control module on a dry, clean surface away from moisture, heat and dust.

1) Turn the ignition switch to OFF.

CAUTION:
Disconnect the ground cable from battery and wait for at least 60 seconds before starting work.

NOTE:
For a model with power seat, remove the console box assembly before disconnecting the battery ground cable.

2) Remove the console front cover assembly.

• MT model
  1. Remove the shift knob.
  2. Release the clips and claws, then pull up the console front cover assembly.

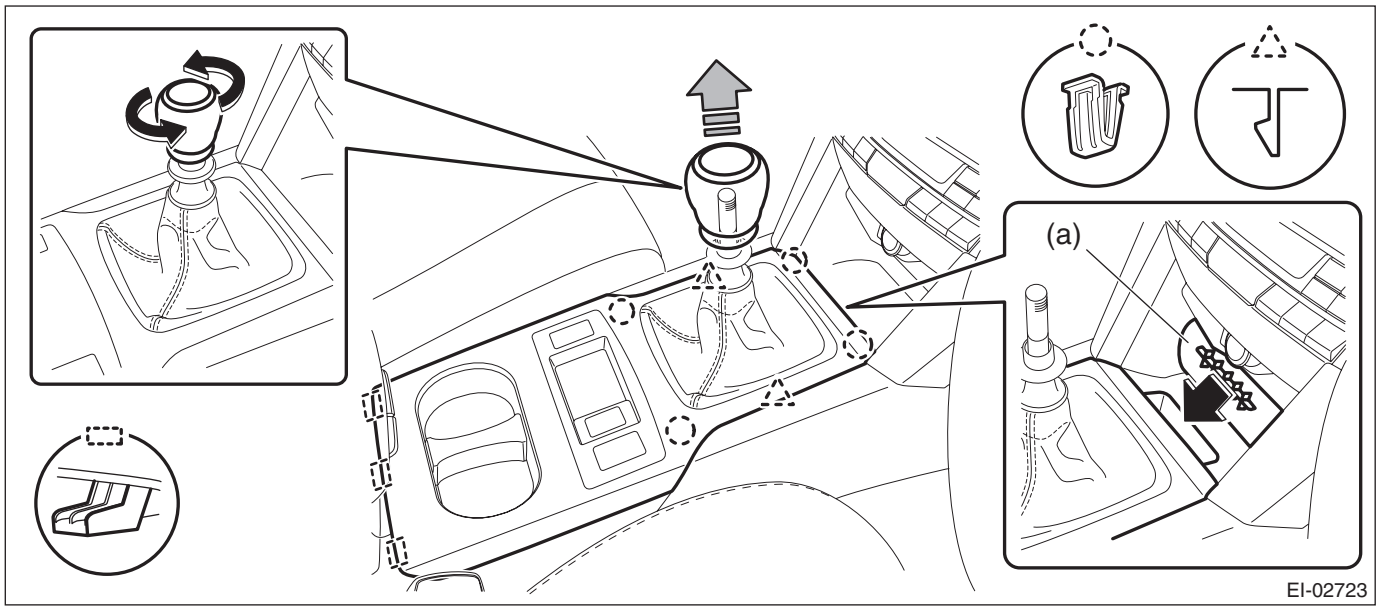

NOTE:
Turn over the front center pocket mat (a) and pull up the console front cover from the slit.

  3. Disconnect the harness connector and remove the console front cover assembly.

- AT model
  1. Remove the select lever knob.
     a. Lower the cover grip AT.
     b. Remove the clamp grip pin, then remove the select lever knob.
  2. Release the clips and claws, then pull up the console front cover assembly.

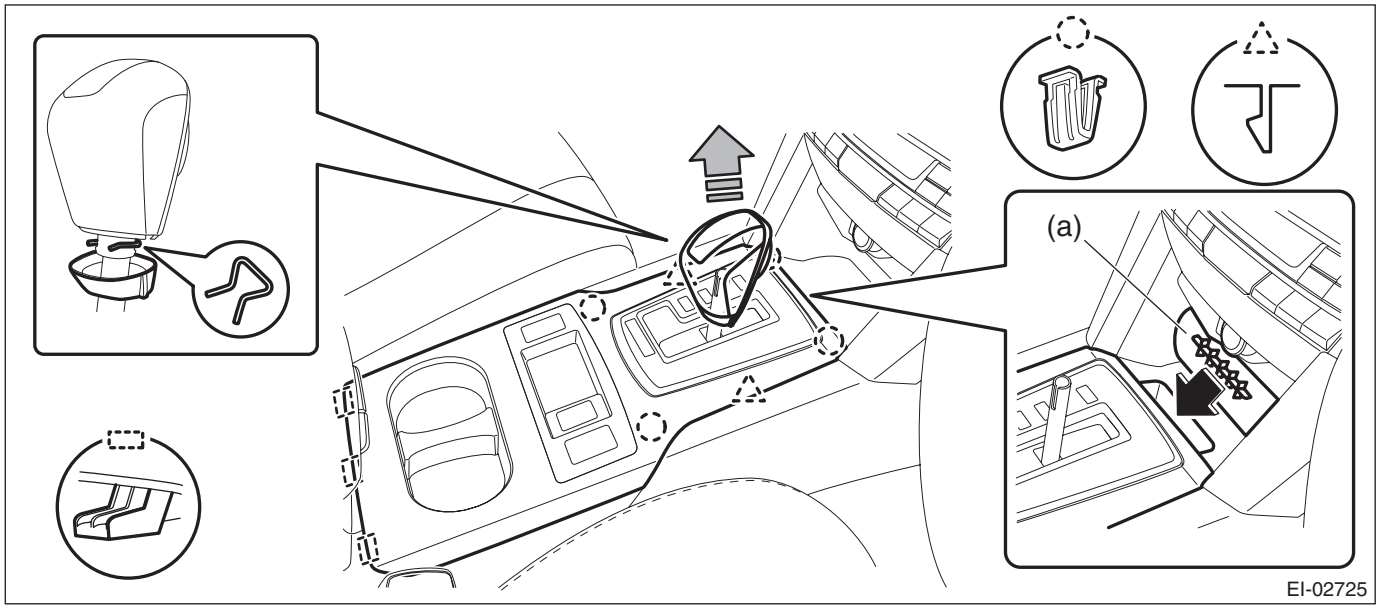

NOTE:
Turn over the front center pocket mat (a) and pull up the console front cover from the slit.

  3. Disconnect the harness connector and remove the console front cover assembly.

3) Remove the left and right console front side cover assembly.
   (1) Remove the screws and release the clips (A) to (D) in order.
   (2) Remove the console front side cover assembly by pulling it up.

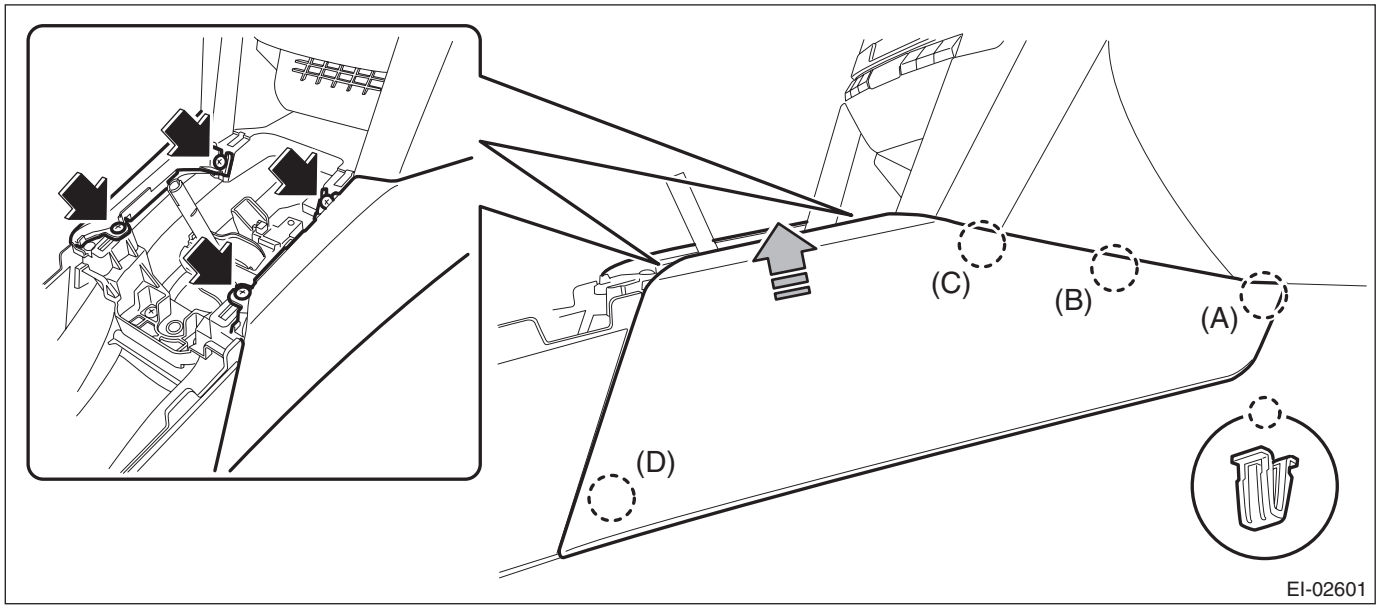

4) Remove the console box assembly.
   (1) Move the seat forward, and remove the bolts after detaching the left and right caps.

NOTE:
For a model with power seat, connect the battery ground cable and move the seat. Then, disconnect the battery ground cable again and wait for 60 seconds at least before restarting the work.

(2) Remove the screws, disconnect the harness connector and remove the console box assembly.

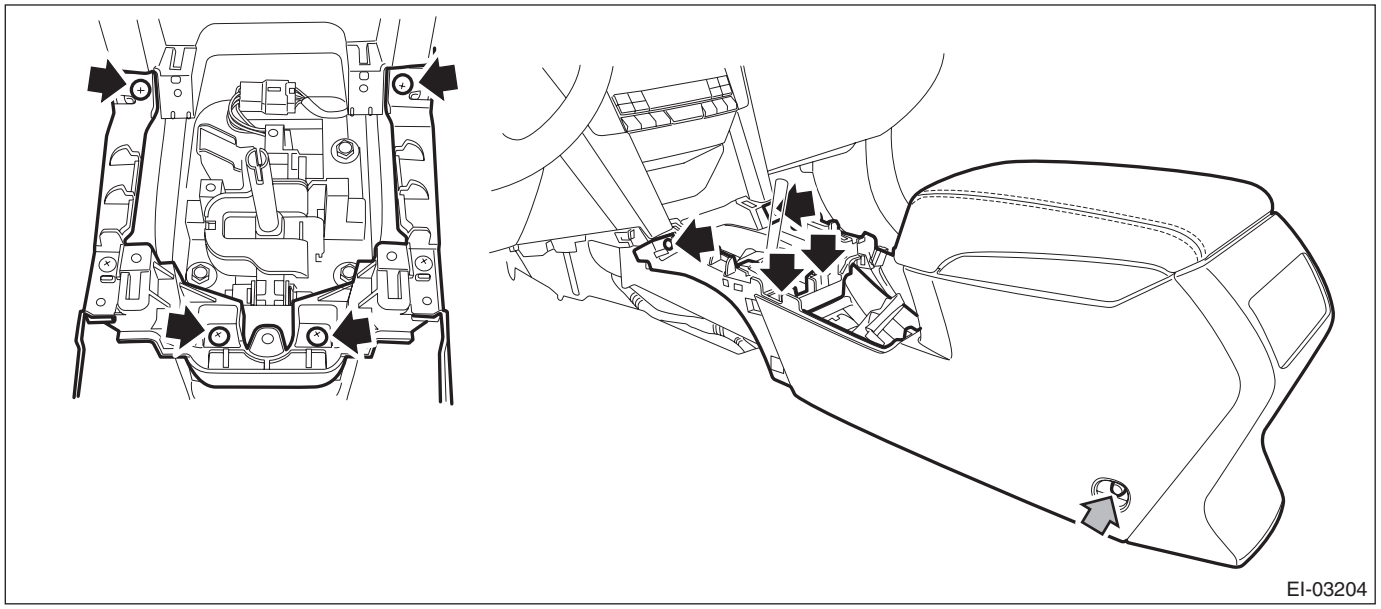

5) Remove the airbag control module.
(1) Disconnect the connector from airbag control module.
(2) Remove the bolt and nuts and remove the airbag control module.

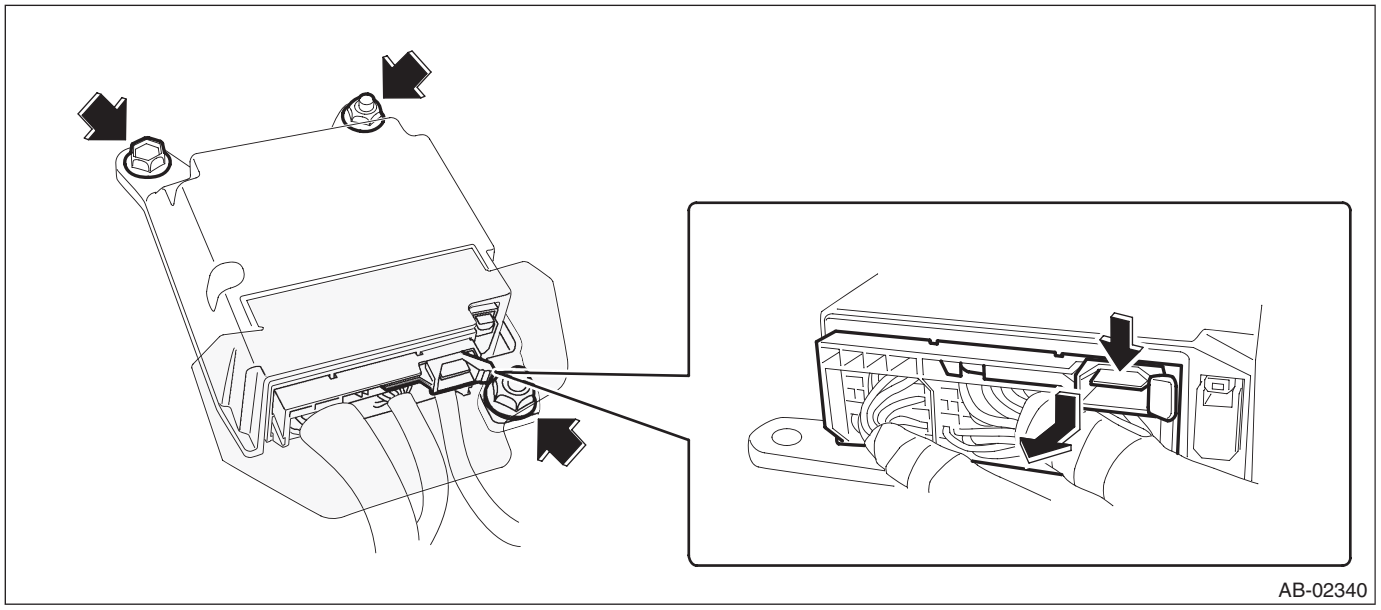

B: INSTALLATION

CAUTION:
Do not reuse the bolt and nut.
Always use new bolts and nuts for them.

1) Before installation, inspect the following items and replace any faulty part with a new one.
- Control module is deformed.
- Control module connector is damaged.
- Control module mounting bracket is damaged.

2) Install each part in the reverse order of removal.

Tightening torque:
Airbag control module: 25 N·m (2.55 kgf-m, 18.4 ft-lb)
Console box assembly: 6.5 N·m (0.66 kgf-m, 4.8 ft-lb)

9. Front Sub Sensor

A: REMOVAL

1) Disconnect the ground cable from battery and wait for at least 60 seconds before starting work.
2) Remove the front bumper face assembly.
   (1) Remove the clips, turn over the front mud guard, and disconnect the fog light connector. (Model with fog light)

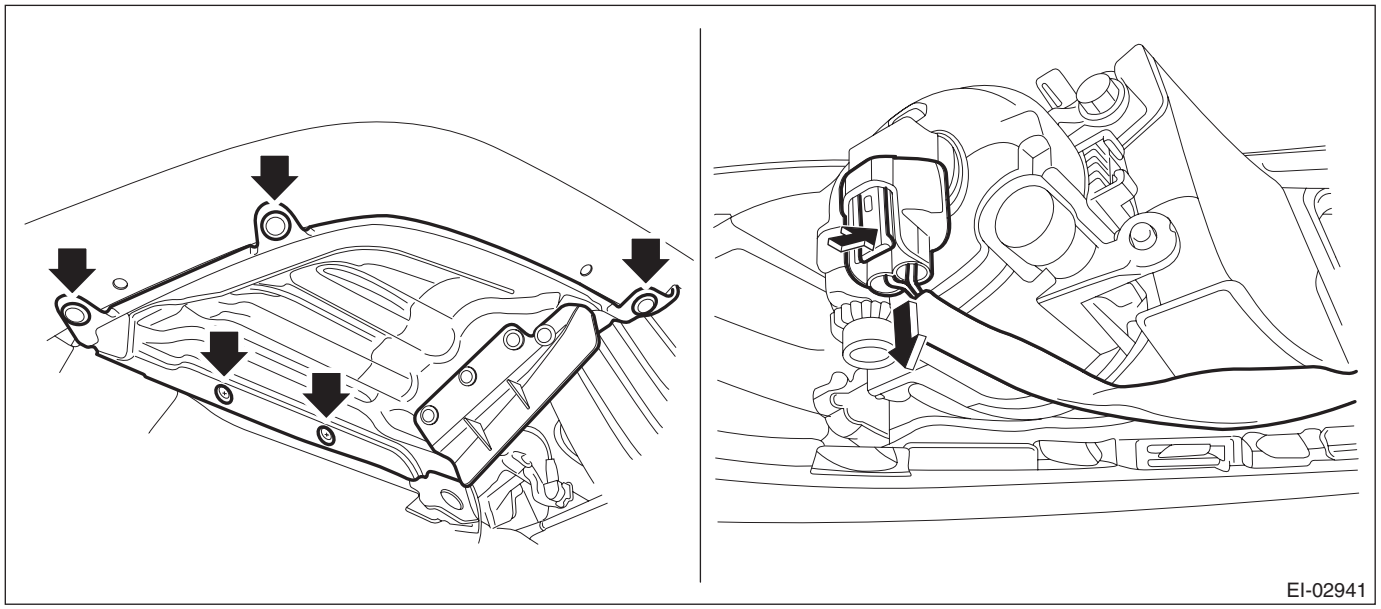

   (2) Remove the clips at the upper side of the bumper.
   (3) Remove the clips from the fender.

(4) Remove the clips at the lower side of bumper.

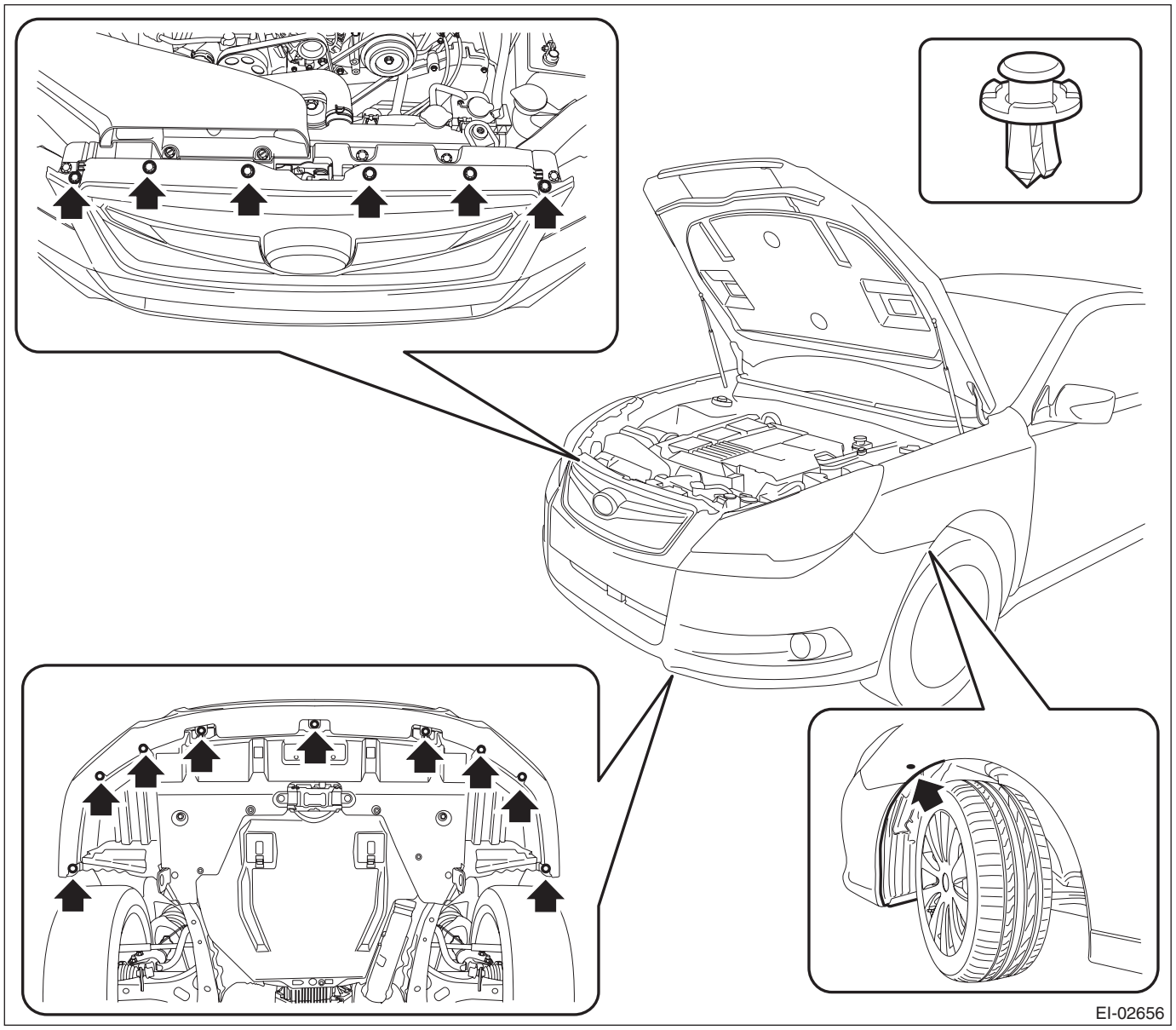

(5) Detach the flange section on the bumper face side from the bracket side front UPR.

CAUTION:
Do not pull forcibly. It may damage the flange sections of the bumper face.

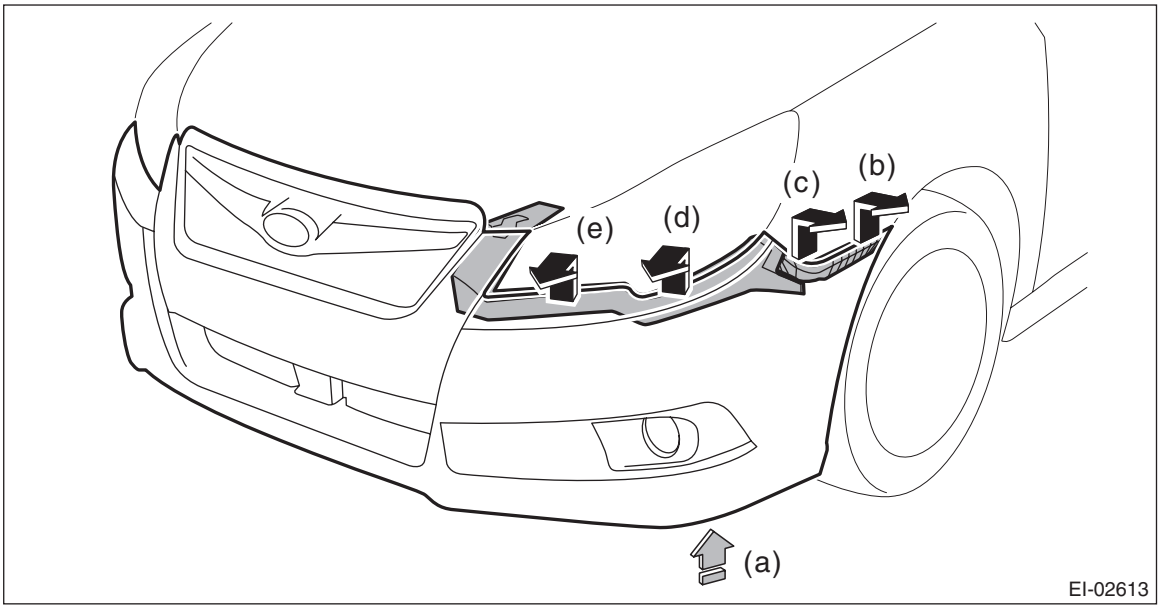

NOTE:
Pushing up the lower side (a) of the fog light, remove from (b) to (e).
Detach the opposite side in the same manner.

3) Remove the headlight assembly.
(1) Remove the fender cover assembly UPR.
a) Remove the clip.
b) Release the claws of the fender cover assembly UPR by pulling it forward and remove the fender cover.

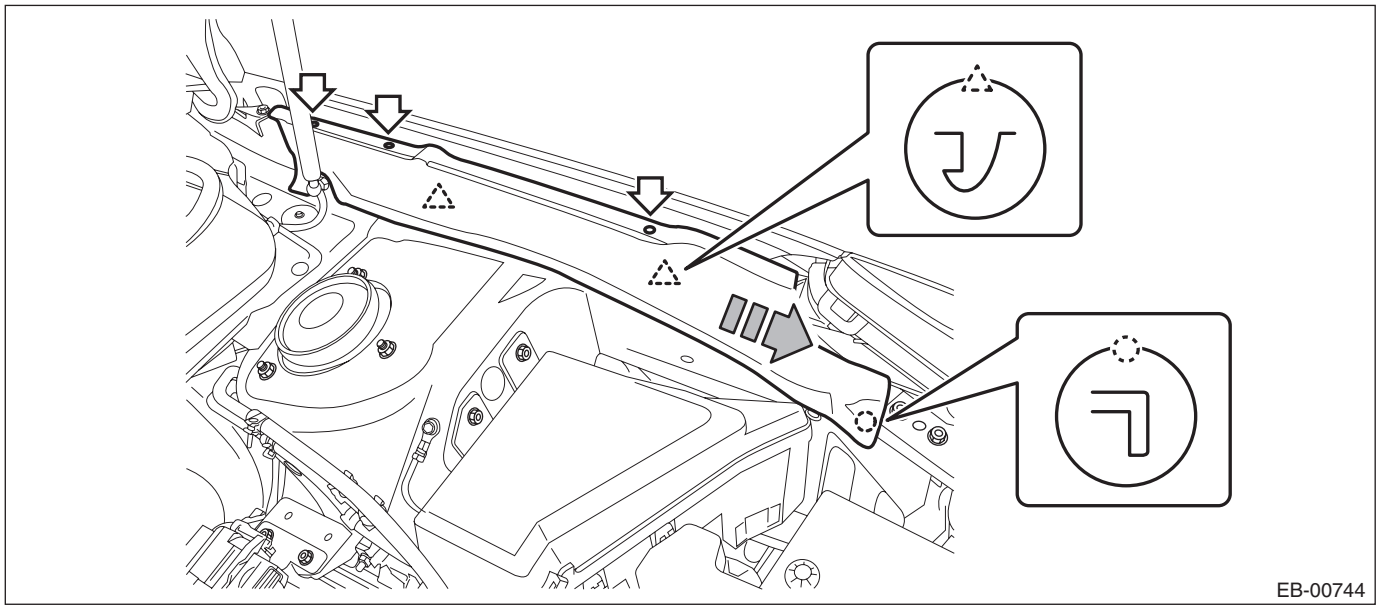

(2) Remove the headlight assembly.

NOTE:
When removing the RH headlight, remove the air intake duct.

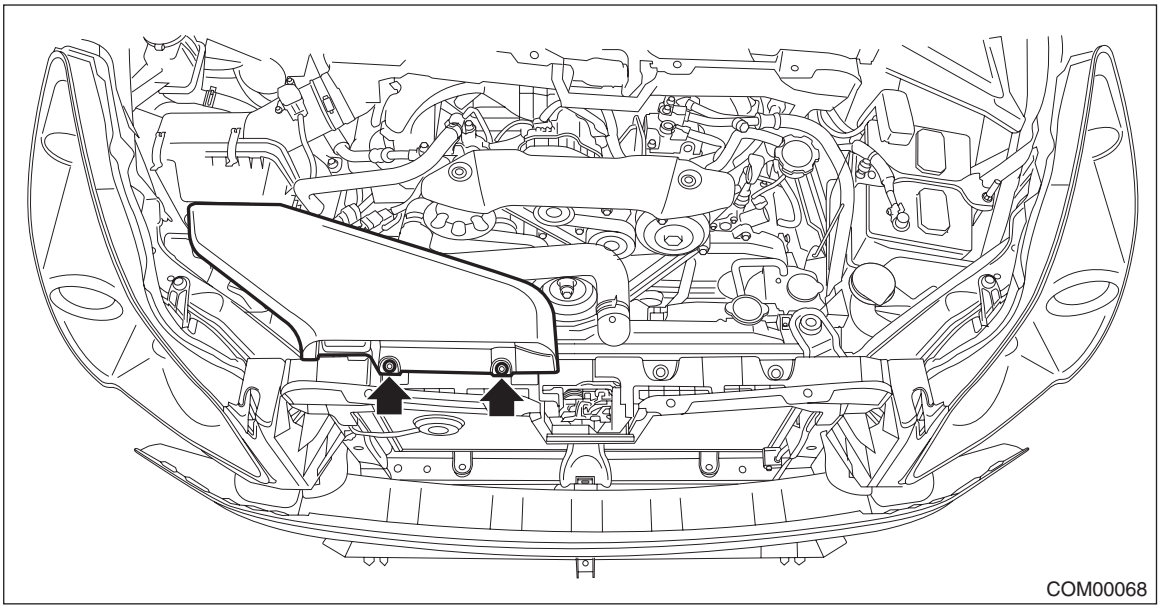

a) Remove the bolts and clips, and pull out the headlight assembly to the front of the vehicle.

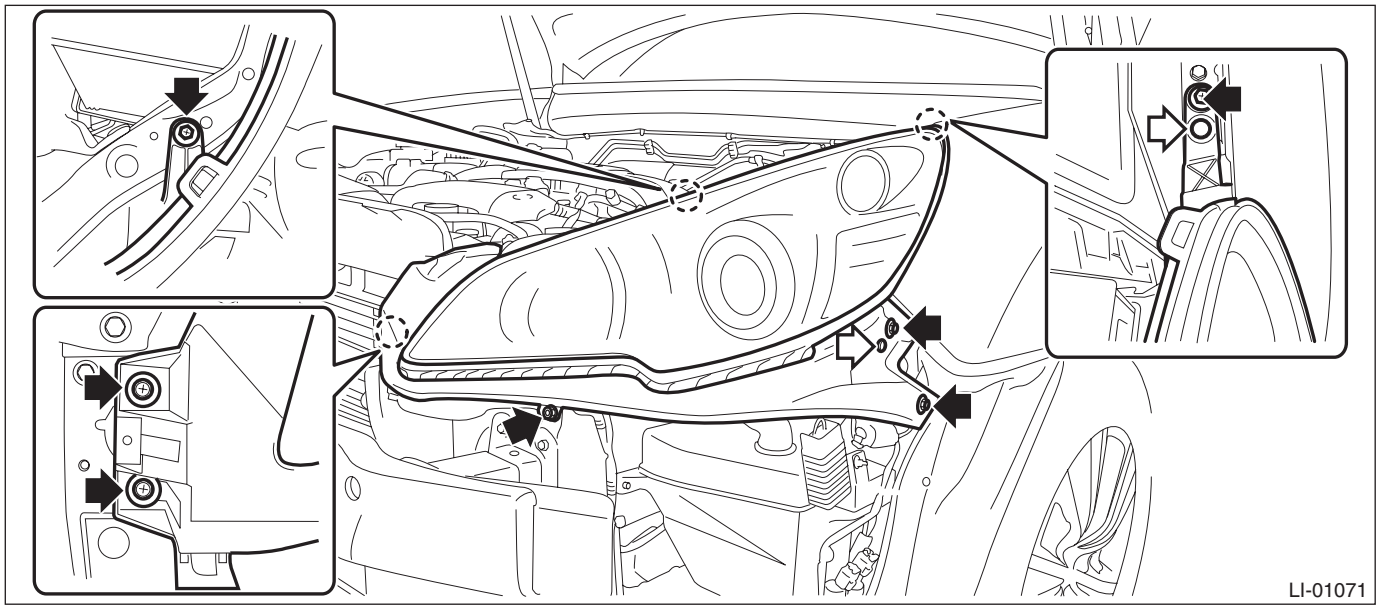

b) Disconnect the connector and remove the headlight assembly.

- RH headlight connector

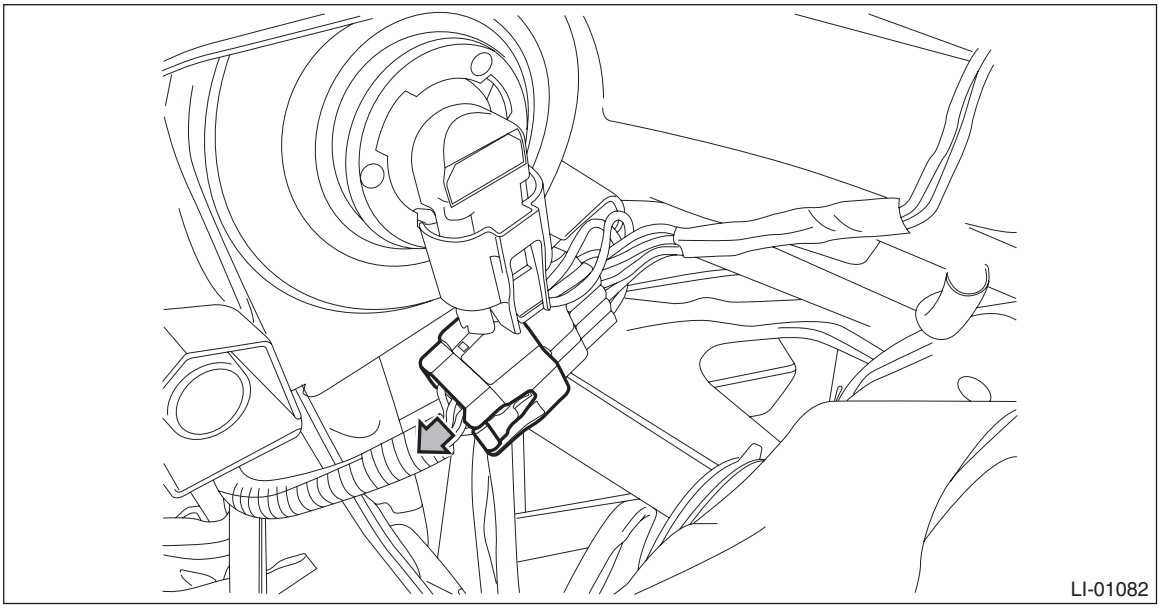

- LH headlight connector

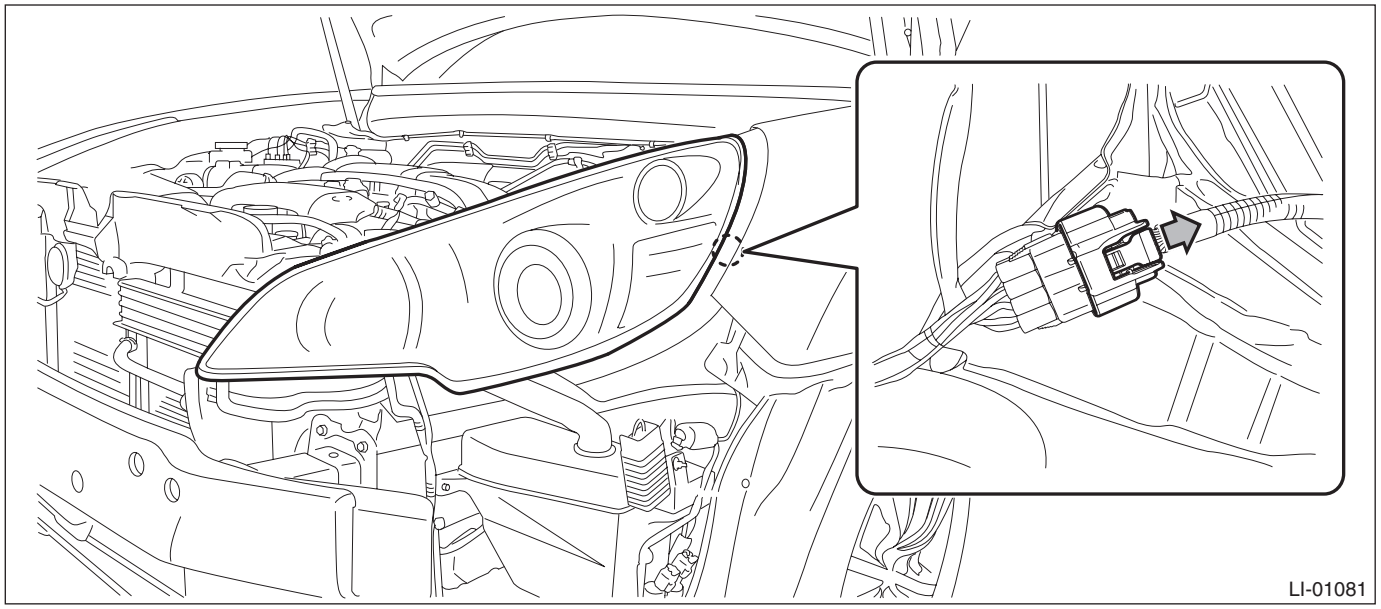

4) Remove the front sub sensor assembly.
(1) Remove the bolt, and remove the sensor cover plate.

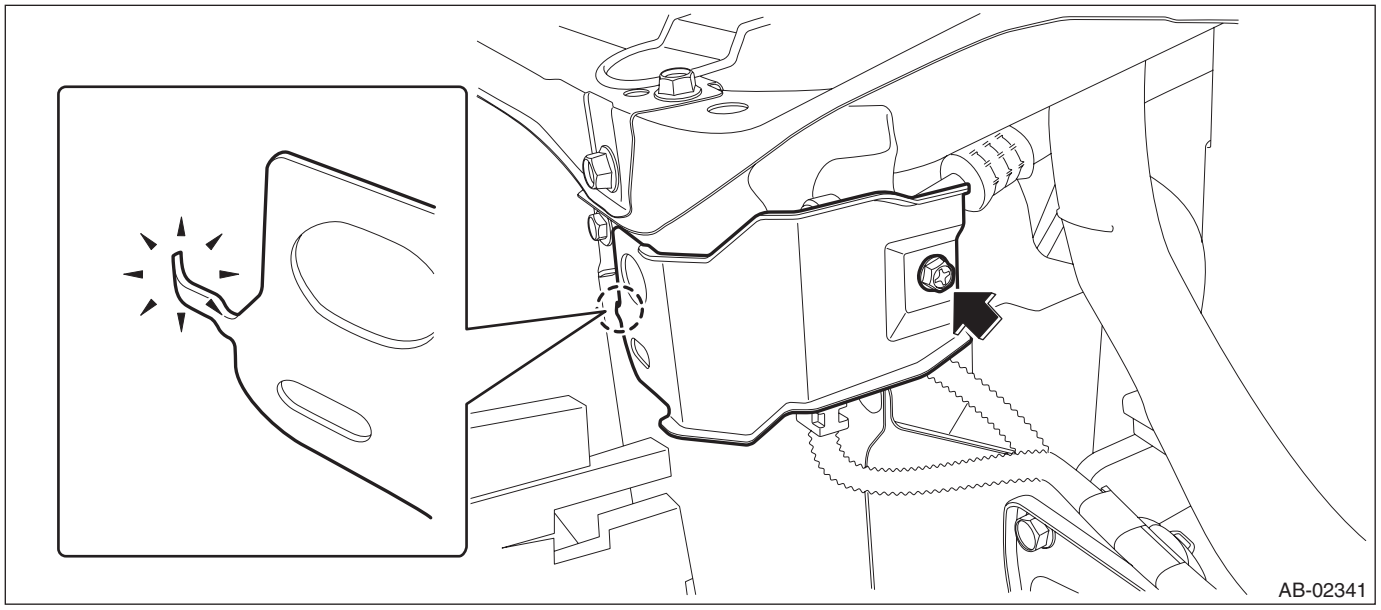

(2) Remove the front sub sensor by removing the bolt and disconnect the connector.
• LH side
Holding outer part of the slide lock, pull it in the direction of arrow.
• RH side
1. Push the lock arm.
2. Holding outer part, pull it one step in the direction of arrow.
3. Push the lock arm again.
4. Holding outer part, pull it in the direction of arrow to disconnect the connector.

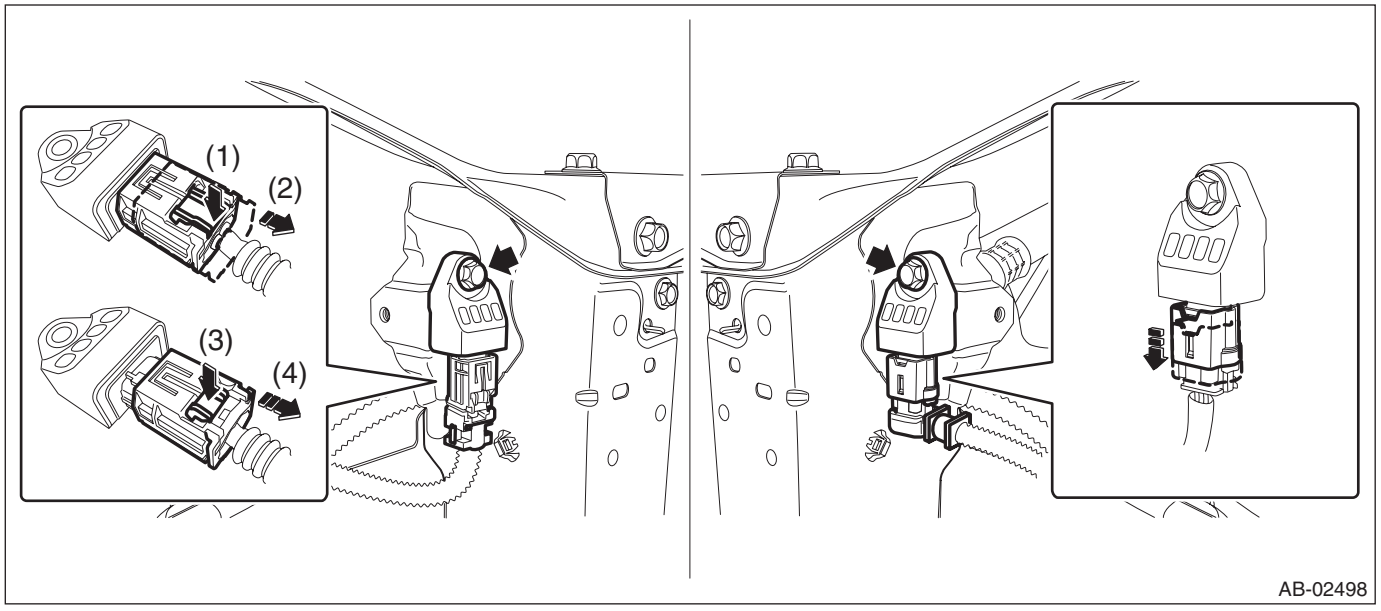

B: INSTALLATION

CAUTION:
- **If the airbag has been activated, replace the front sub sensor assembly with a new part.**
- **Do not reuse the bolt and nut.**

Always replace with the specified new bolts and nuts.
- **When installing the sensor, insert the set pin on the backside of the sensor into the hole on the body side securely.**
- **After the installation of headlight assembly, be sure to perform headlight beam adjustment.**

1) Before installation, inspect the following items and replace any faulty part with a new part.
- Front sub sensor damage
- Connector damage
- Sensor cover plate deformation or damage

2) Install each part in the reverse order of removal.

CAUTION:
Install the bumper face so that the under cover front end (b) comes inside the front bumper face (a).

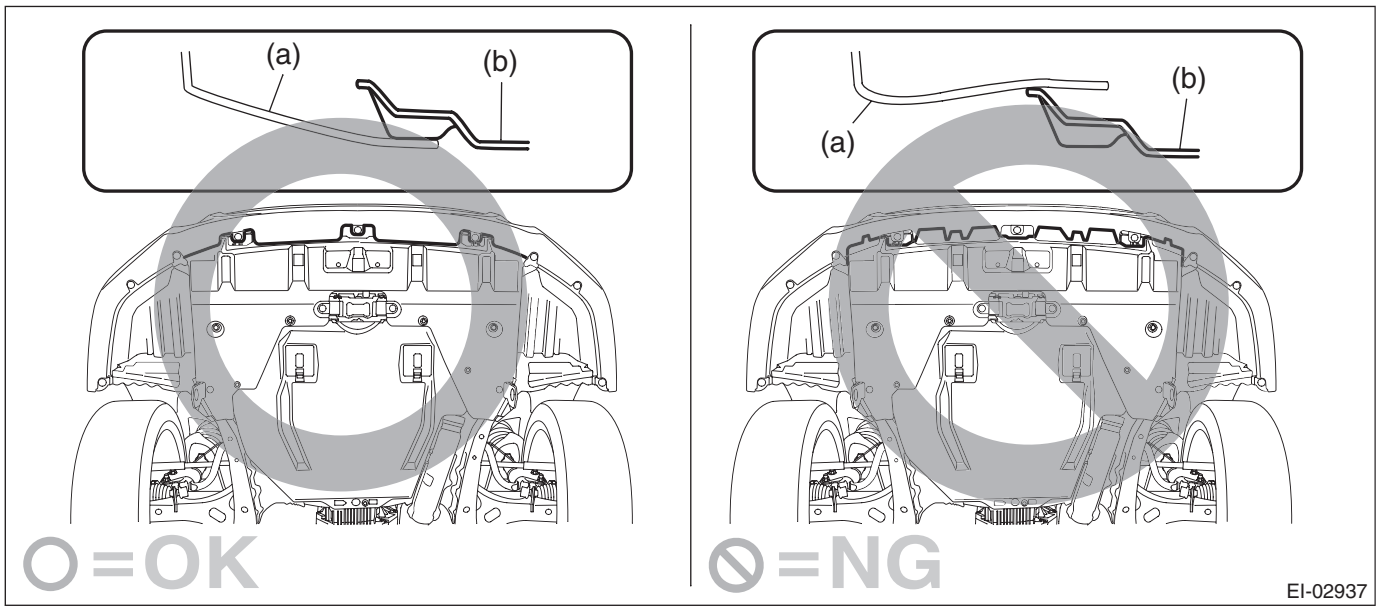

Tightening torque:
Front sub sensor: 13 N·m (1.33 kgf-m, 9.6 ft-lb)
Headlight assembly: 7.5 N·m (0.76 kgf-m, 5.5 ft-lb)

3) Adjust the fog light beam. (Model with fog light) <Ref. to LI-41, FOG LIGHT AIMING, ADJUSTMENT, Front Fog Light Assembly.>

10.Front Door Impact Sensor

A: REMOVAL

1) Operate the power window switch to close the front door glass.
2) Turn the ignition switch to OFF.
3) Disconnect the ground cable from battery and wait for at least 60 seconds before starting work.
4) Remove the gusset cover.
   (1) Attach the protective tape (a) to the door trim.
   (2) Release the clips and claws, then detach the gusset cover.

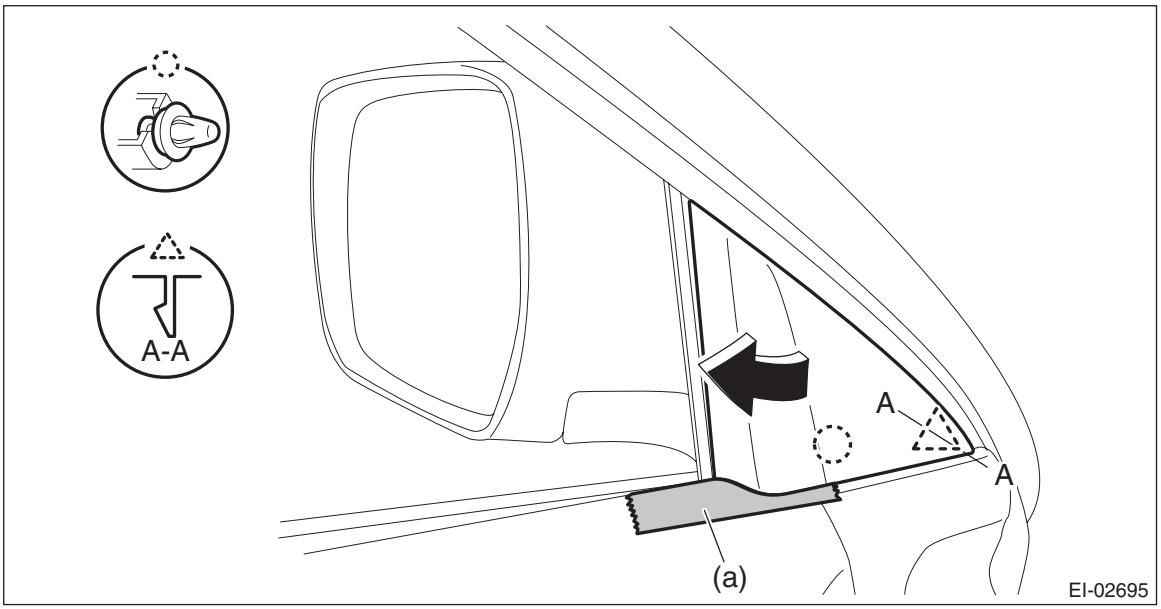

5) Remove the door trim assembly.
   (1) Open the cover and remove the screw.
   (2) Remove the clips in the order of (A) to (J) and remove the door trim assembly from the door panel.

CAUTION:
When removing the door trim, be sure to remove the clips in the correct order. Forcibly removing clips may damage the door panel assembly.

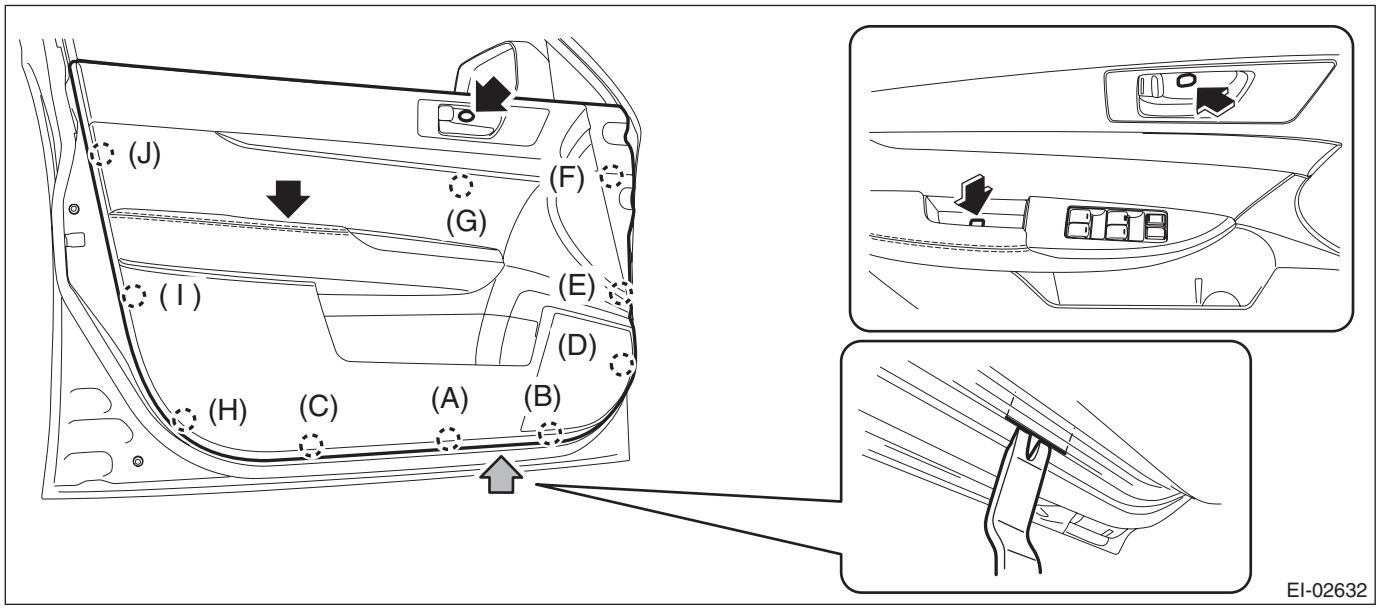

NOTE:
Insert a plastic clip remover into the slit at the bottom of the door trim, to lift the door trim.

(3) Remove the cables (a) and (b) from the cable holder of inner remote.

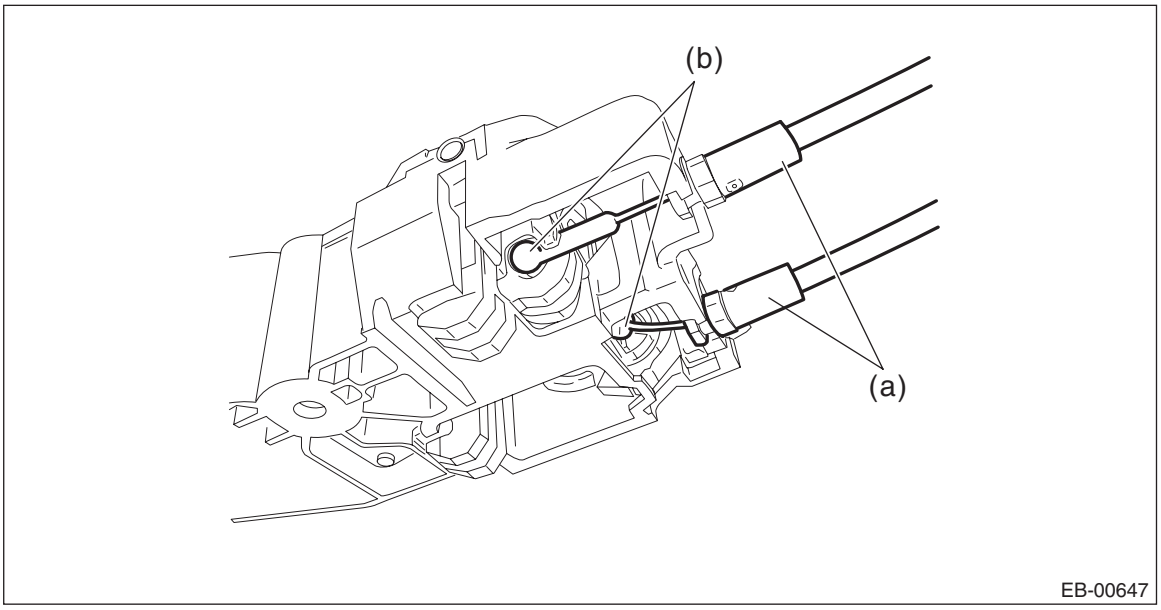

(4) Disconnect the harness connector and remove the door trim assembly.

6) Remove the sealing cover.

CAUTION:

- **Carefully remove the butyl tape. Excessive force will easily break the cover.**
- **If the sealing cover gets broken, replace it with a new part.**

(1) Remove the screw to remove the door trim bracket.

(2) Carefully remove the butyl tape to remove the sealing cover.

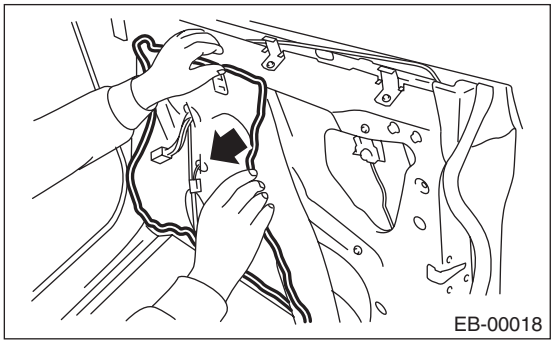

7) Remove the front door impact sensor.
(1) Remove the front door inner pad (a).
(2) Remove the nut, and then remove the center assembly.
(3) Pull outer part of slide lock in the direction of arrow to disconnect the connector, and remove the front door impact sensor.

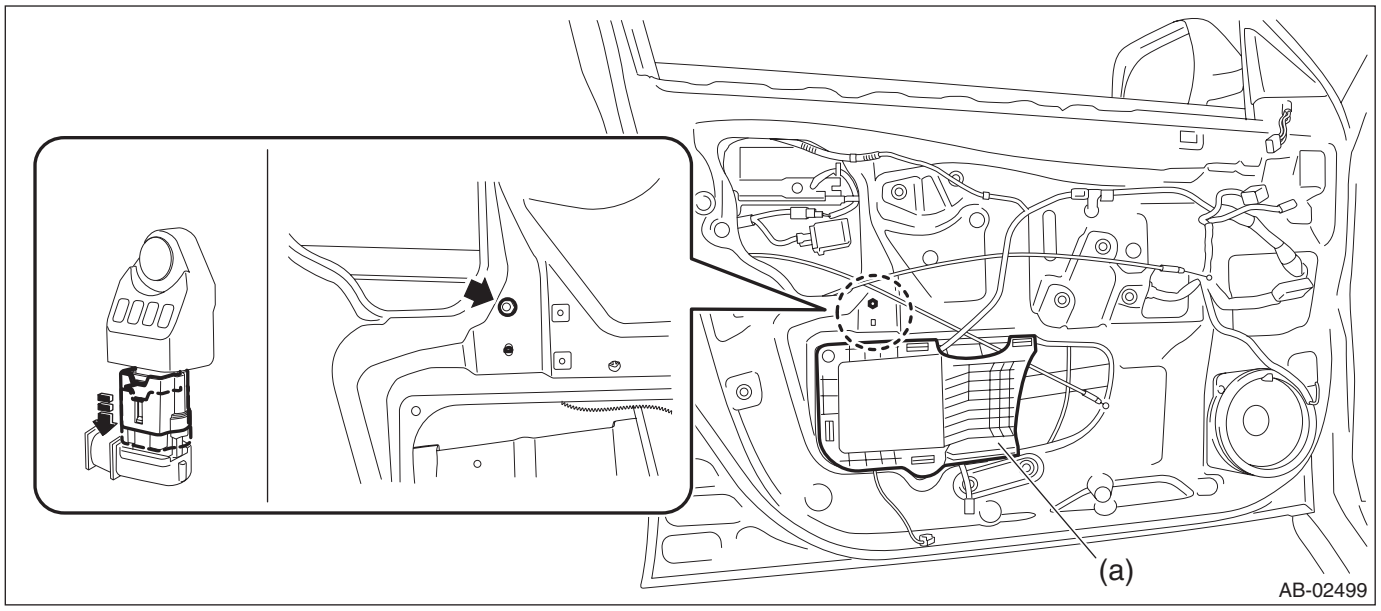

B: INSTALLATION

CAUTION:
Do not reuse the bolt and nut.
Always replace with the specified new bolts and nuts.

1) Before installation, inspect the following items and replace any faulty part with a new part.
- The front door impact sensor or connector is damaged.
- Front door inner panel area is deformed.
- Side airbag has been activated.

Tightening torque:
Front door impact sensor: 7.5 N·m (0.76 kgf-m, 5.5 ft-lb)

2) Install each part in the reverse order of removal.

11.Side Airbag Sensor

A: REMOVAL

1) Move the seat all the way forward, from which the airbag sensor is to be removed.

NOTE:
To remove the seat belt retractor assembly.
2) Turn the ignition switch to OFF.
3) Disconnect the ground cable from battery and wait for at least 60 seconds before starting work.
4) Release the claws, and then remove the side sill cover-front INN. (On the side where airbag sensor is removed)

CAUTION:
Do not pull with excessive force. Doing so may damage the claws of the side sill cover INN.

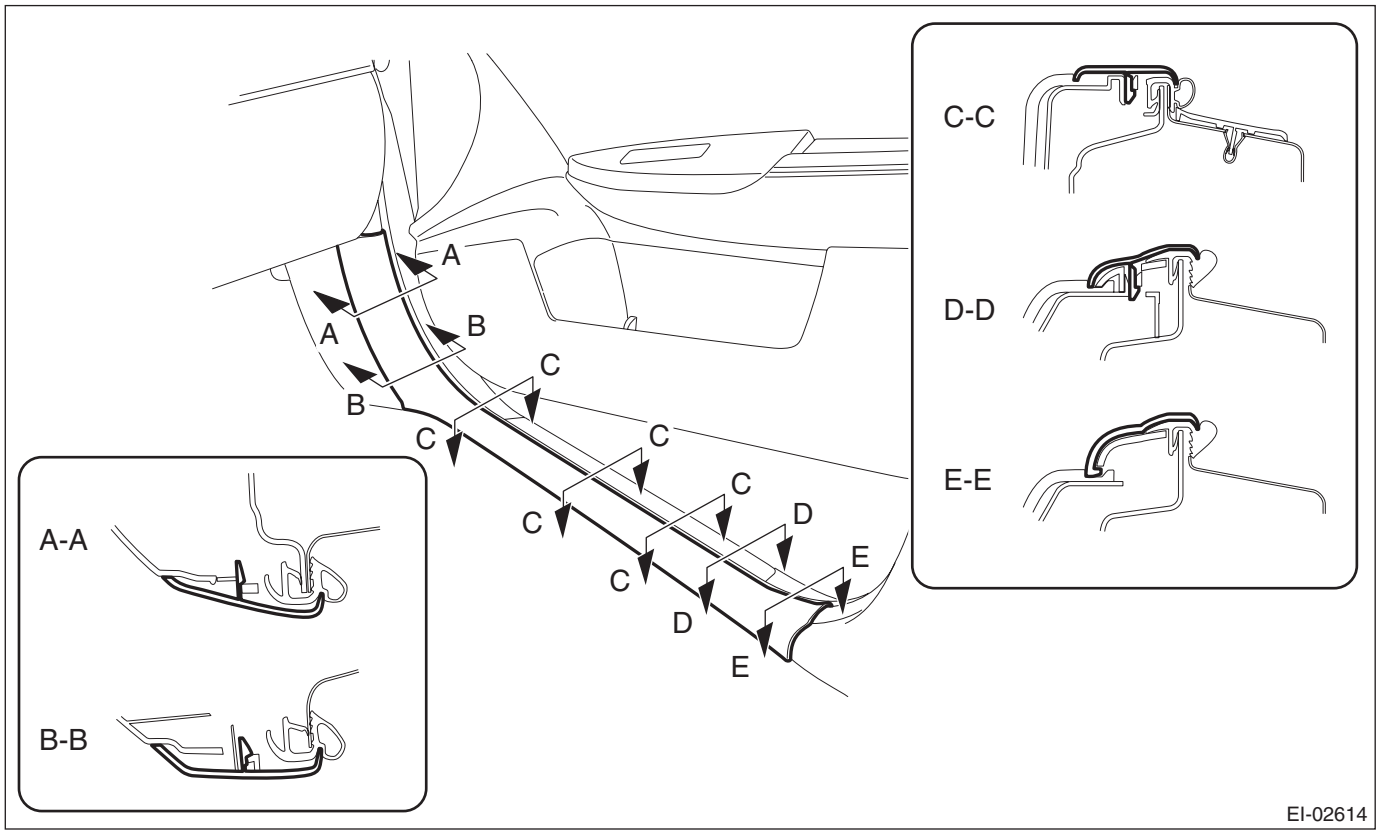

NOTE:
To release the claws of the side sill cover INN, the following steps are recommended.
1. Take out the weather strip from under the side sill cover INN.
2. Turn over the floor mat and release the claw (C-C) by accessing from behind the side sill cover INN.

5) Remove the rear seat cushion assembly.
(1) Pull up the seat cushion and release the hook.

CAUTION:
If the hook is disconnected from the vehicle body, replace the hook with the new part to prevent the decline of the fixed force of the seat.

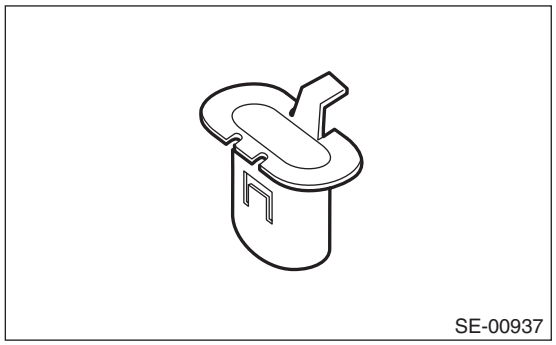
SE-00937

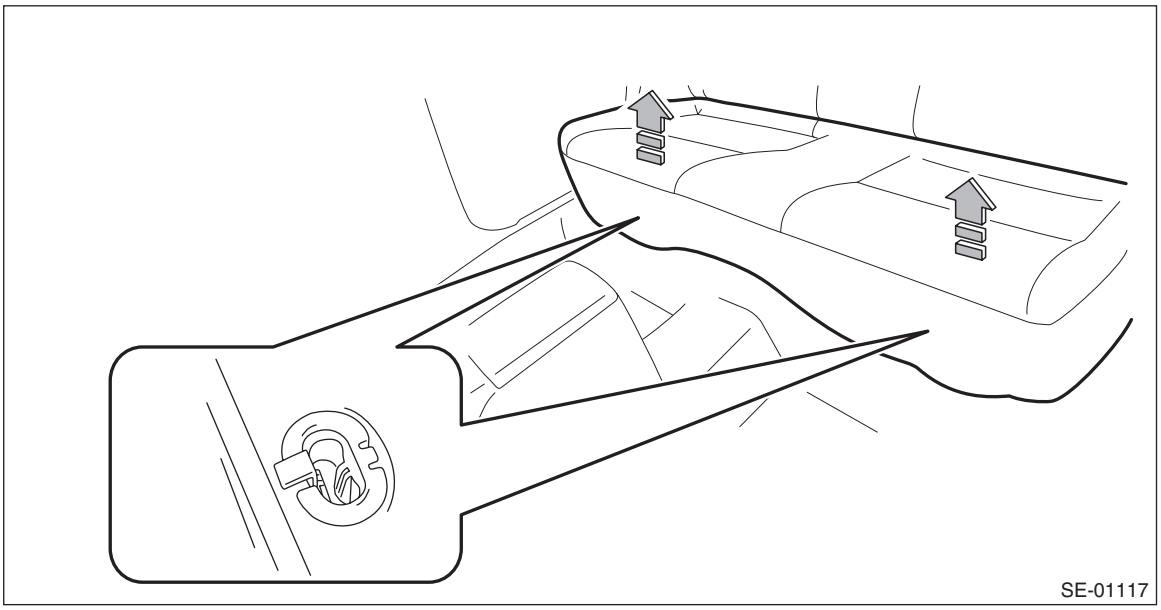
SE-01117

(2) Remove the hook (A) by pushing it back while lifting the front side of the seat cushion, and remove the seat cushion assembly.

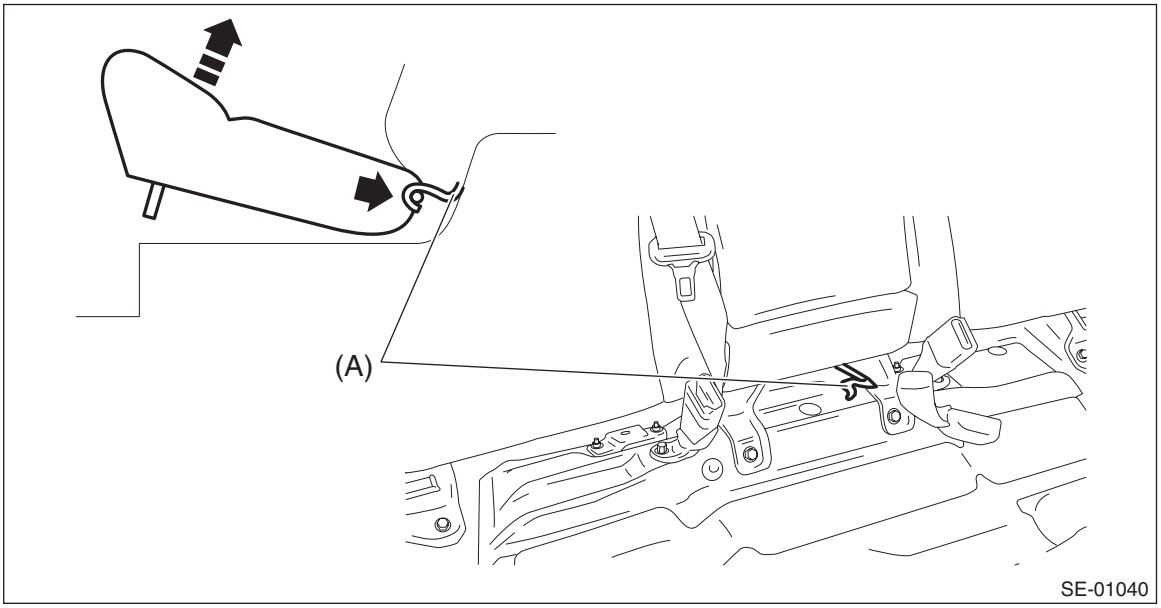

SE-01040

6) Release the clips and claws, and then remove the side sill cover - rear INN. (On the side where airbag sensor is removed)

CAUTION:
Do not pull with excessive force. Doing so may damage the claws of the side sill cover INN.

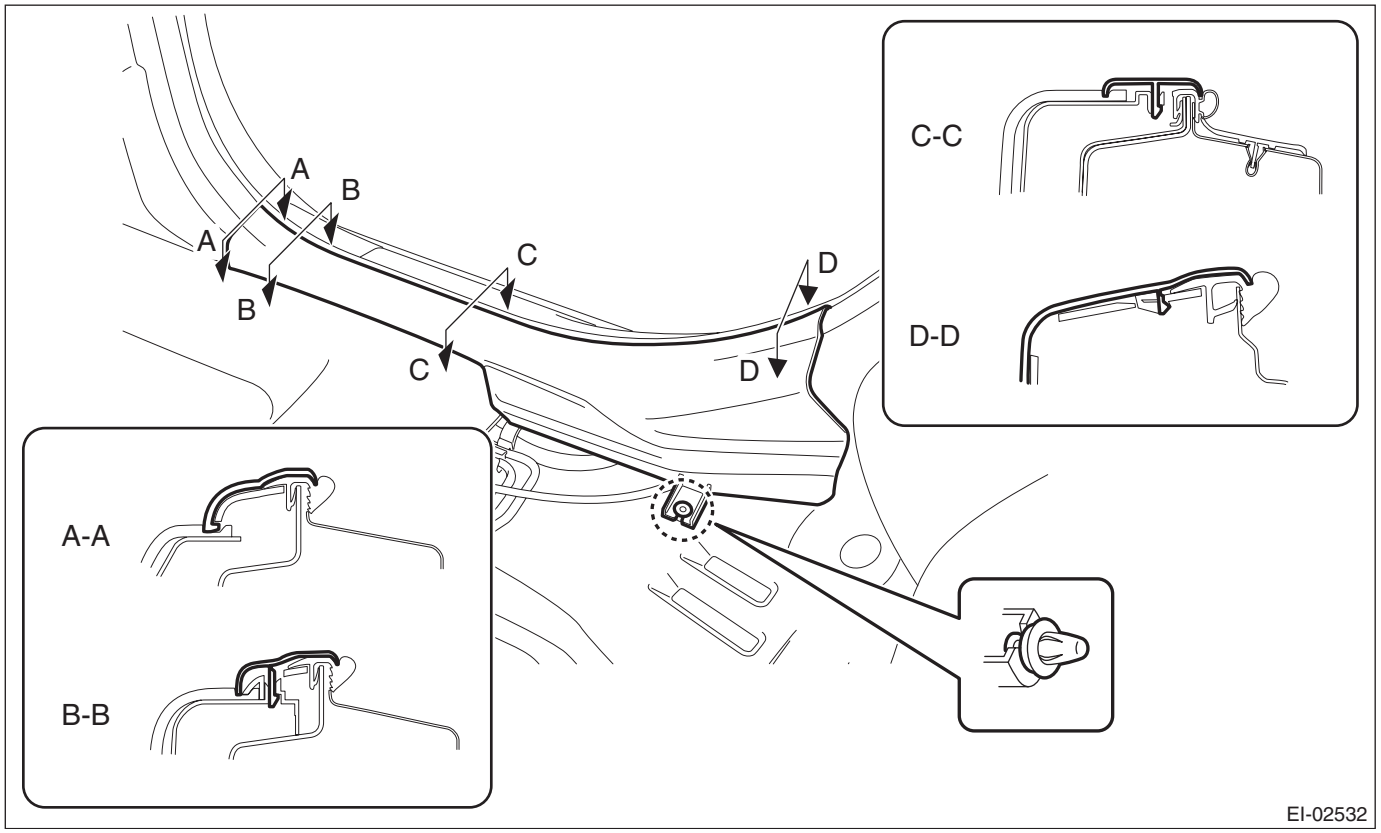

NOTE:
To release the claws of the side sill cover INN, the following steps are recommended.
1. Take out the weather strip from under the side sill cover INN.
2. Turn over the floor mat and release the claw (C-C and D-D) by accessing from behind the side sill cover INN.

7) Remove the center pillar trim LWR. (On the side where airbag sensor is removed)
   (1) Release the clip by pulling the center pillar trim LWR toward you.
   (2) Expand the claws of center pillar trim LWR outward and remove it from the center pillar trim UPR.

CAUTION:
Do not expand the center pillar trim LWR excessively. Doing so may damage the trim.

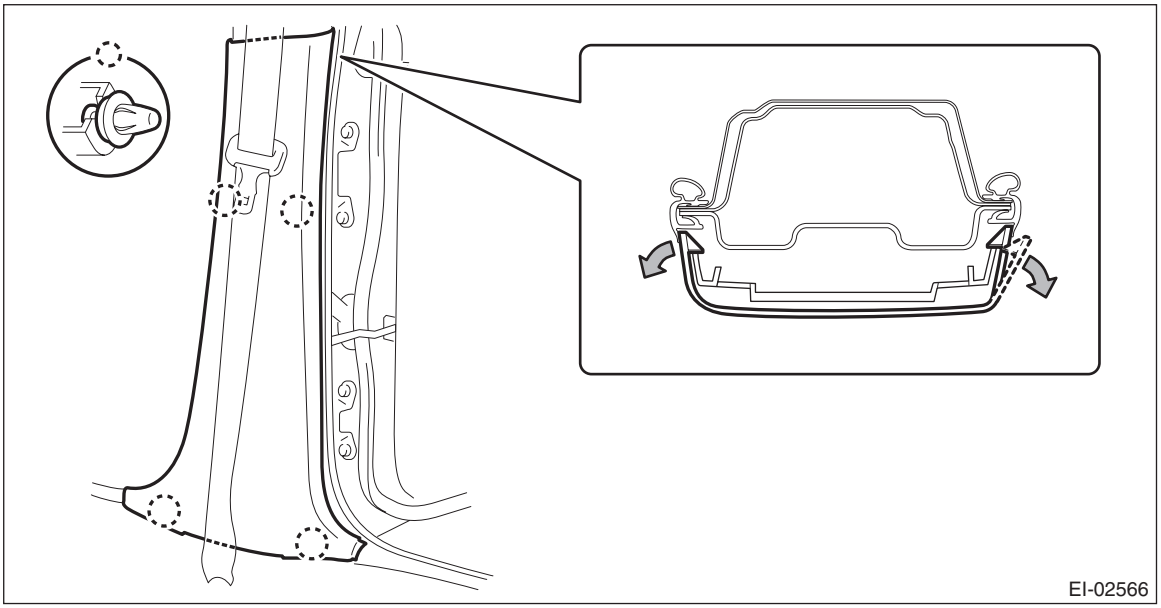
EI-02566

NOTE:
First release the claw located to the rear of the vehicle.

8) Remove the seat belt retractor. (On the side where airbag sensor is removed)
   (1) Turn over the floor mat to disconnect the belt tension sensor connector.
   (2) Remove the bolt to remove the seat belt retractor.

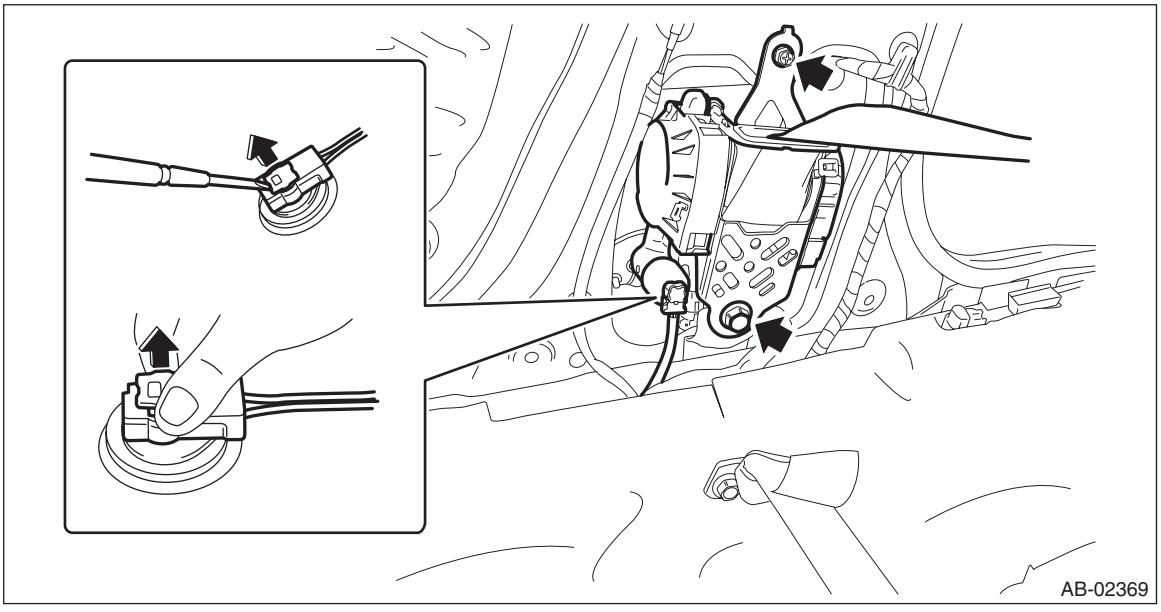
AB-02369

9) Remove the nuts and then remove the side airbag sensor assembly.

CAUTION:
- **Do not separate the side airbag sensor and bracket. It cause the airbag system malfunction.**
- **If the sensor is removed from the bracket, be sure to replace with a new part.**
  (1) Push the lock arm.
  (2) Holding outer part, pull it one step in the direction of arrow.
  (3) Push the lock arm again.
  (4) Holding outer part, pull it in the direction of arrow to disconnect the connector.

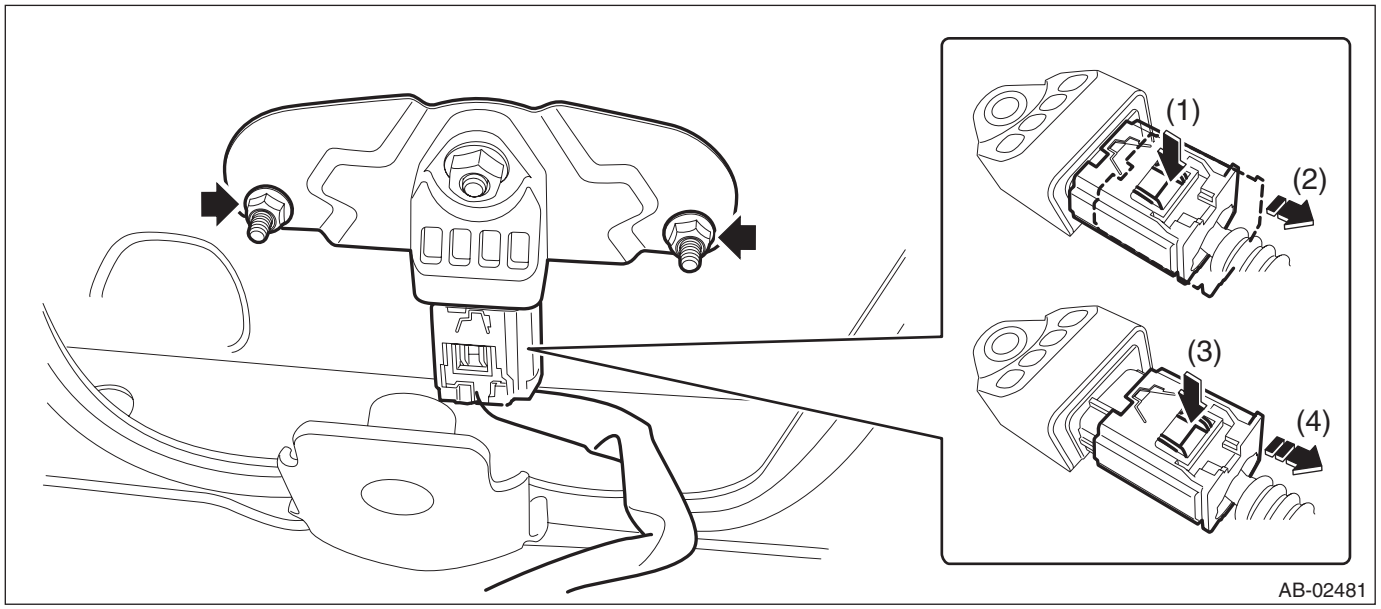

B: INSTALLATION

CAUTION:
Do not reuse the bolt and nut.
Always replace with the specified new bolts and nuts.

1) Before installation, inspect the following items and replace any faulty part with a new part.
- The side airbag sensor, sensor bracket, or connector are damaged.
- Side airbag has been activated.

Tightening torque:
Side airbag sensor: 7.5 N·m (0.76 kgf-m, 5.5 ft-lb)

2) Install each part in the reverse order of removal.

CAUTION:
If the hook is disconnected from the vehicle body, replace the hook with the new part to prevent the decline of the fixed force of the seat.

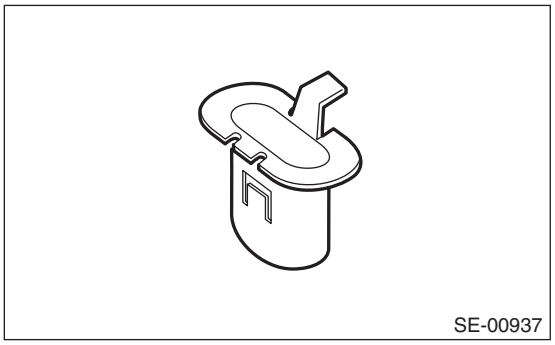

NOTE:
Assemble the center pillar trim LWR to the center pillar trim UPR securely.

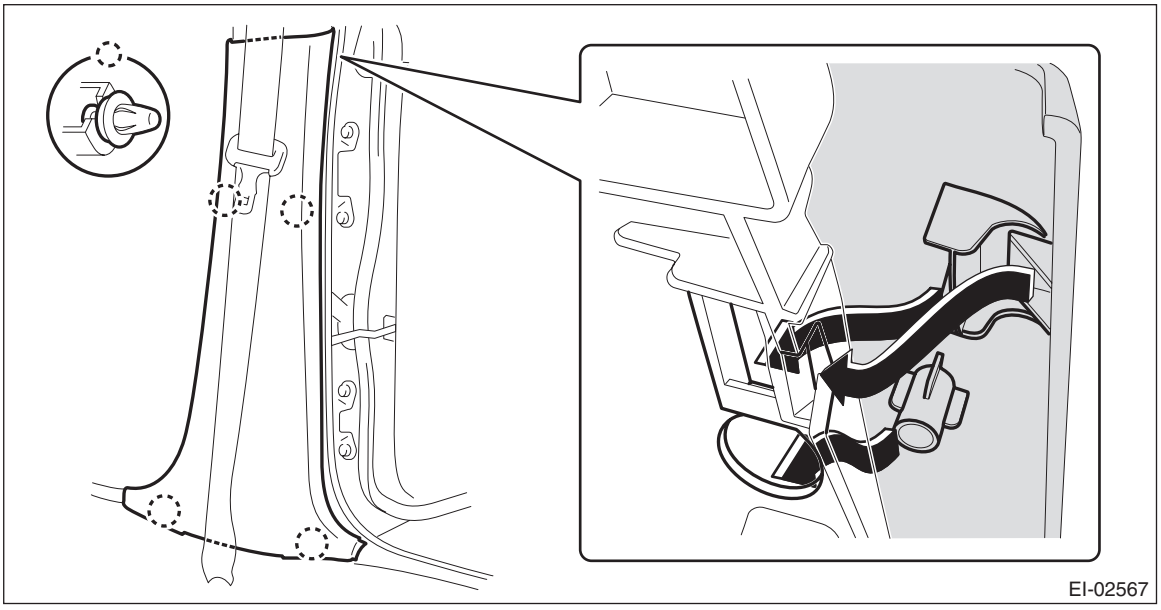

Tightening torque:
Front seat belt: <Ref. to SB-2, FRONT SEAT BELT, COMPONENT, General Description.>

12.Curtain Airbag Sensor

A: REMOVAL

1. SEDAN MODEL

1) Disconnect the ground cable from battery and wait for at least 60 seconds before starting work.

CAUTION:
The airbag system is fitted with a backup power supply. After disconnecting the battery ground cable, the airbag may operate if you do not wait for 60 seconds before starting the service of airbag system.

2) Remove the rear seat cushion assembly.
   (1) Pull up the seat cushion and release the hook.

CAUTION:
If the hook is disconnected from the vehicle body, replace the hook with the new part to prevent the decline of the fixed force of the seat.

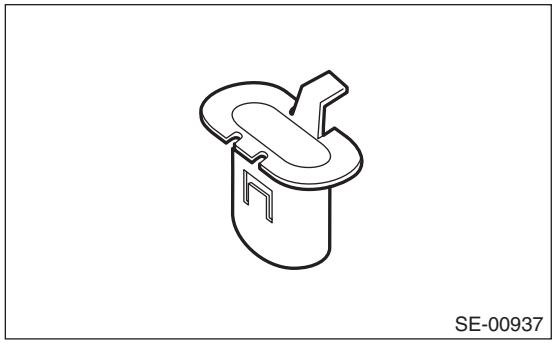
SE-00937

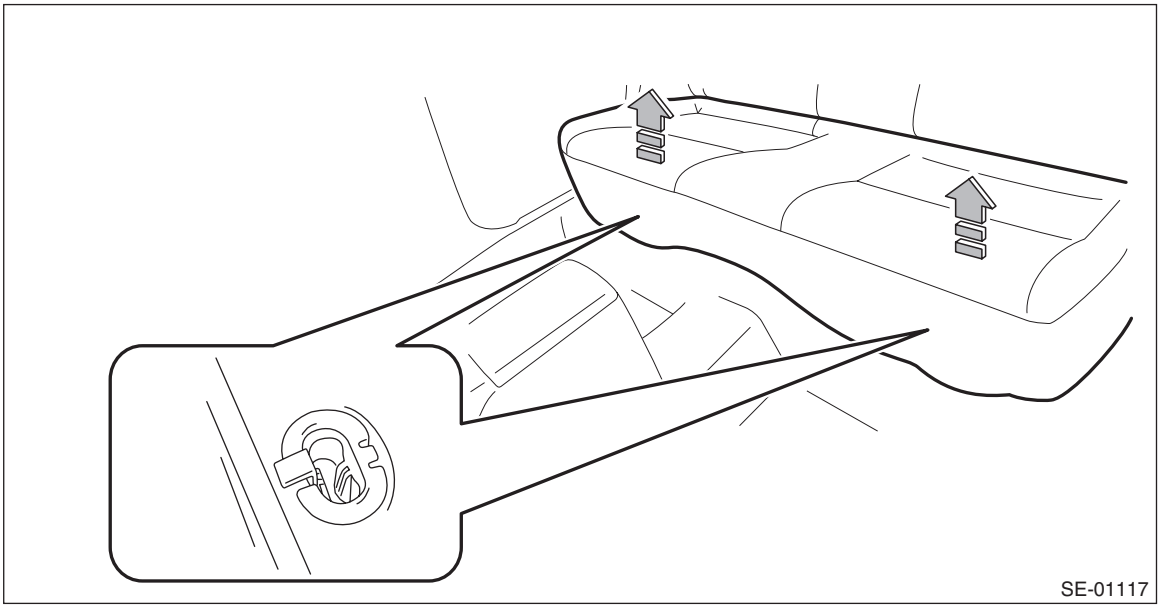
SE-01117

(2) Remove the hook (A) by pushing it back while lifting the front side of the seat cushion, and remove the seat cushion assembly.

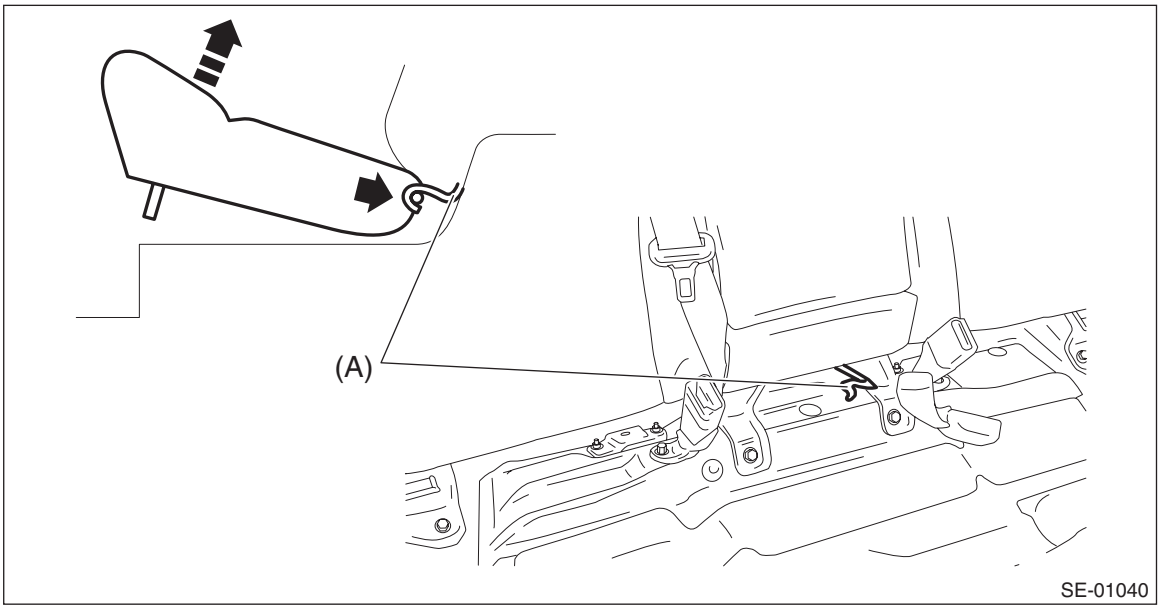

3) Release the clips and claws, and then remove the side sill cover - rear INN. (On the side where airbag sensor is removed)

CAUTION:
Do not pull with excessive force. Doing so may damage the claws of the side sill cover INN.

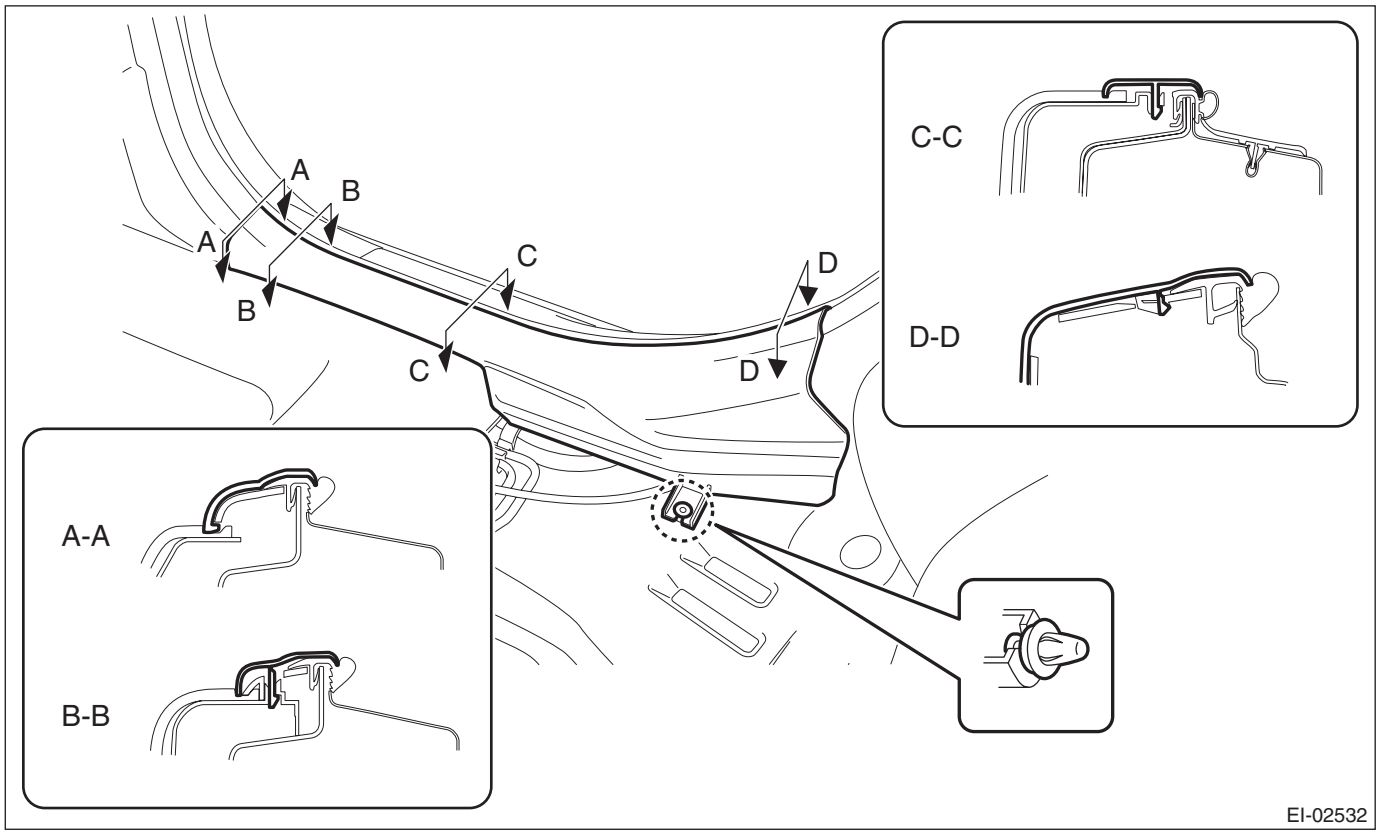

NOTE:
To release the claws of the side sill cover INN, the following steps are recommended.
1. Take out the weather strip from under the side sill cover INN.
2. Turn over the floor mat and release the claw (C-C and D-D) by accessing from behind the side sill cover INN.

4) Remove the rear quarter trim LWR. (On the side where airbag sensor is removed)
(1) Remove the backrest side pad.
a) Remove the screws.

Preparation tool: Stubby screwdriver

b) Turn over the bottom end of the backrest side pad in the forward direction so that the claws are released.
c) Remove the backrest side pad by pulling it up.

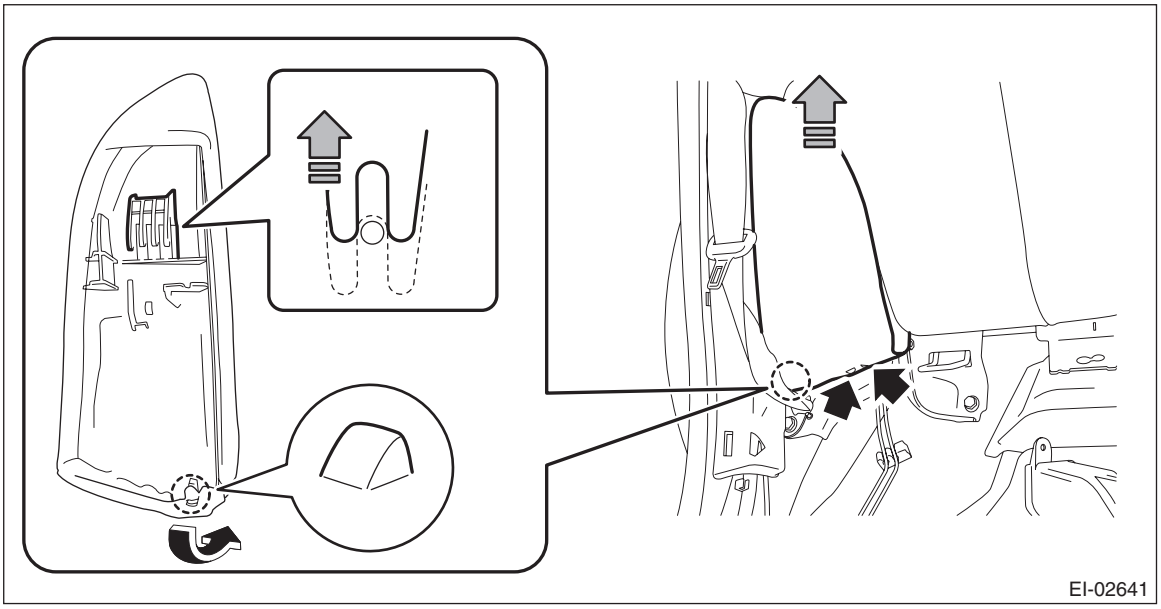

(2) Pull the release lever in the trunk room, and then tilt the backrest forward.

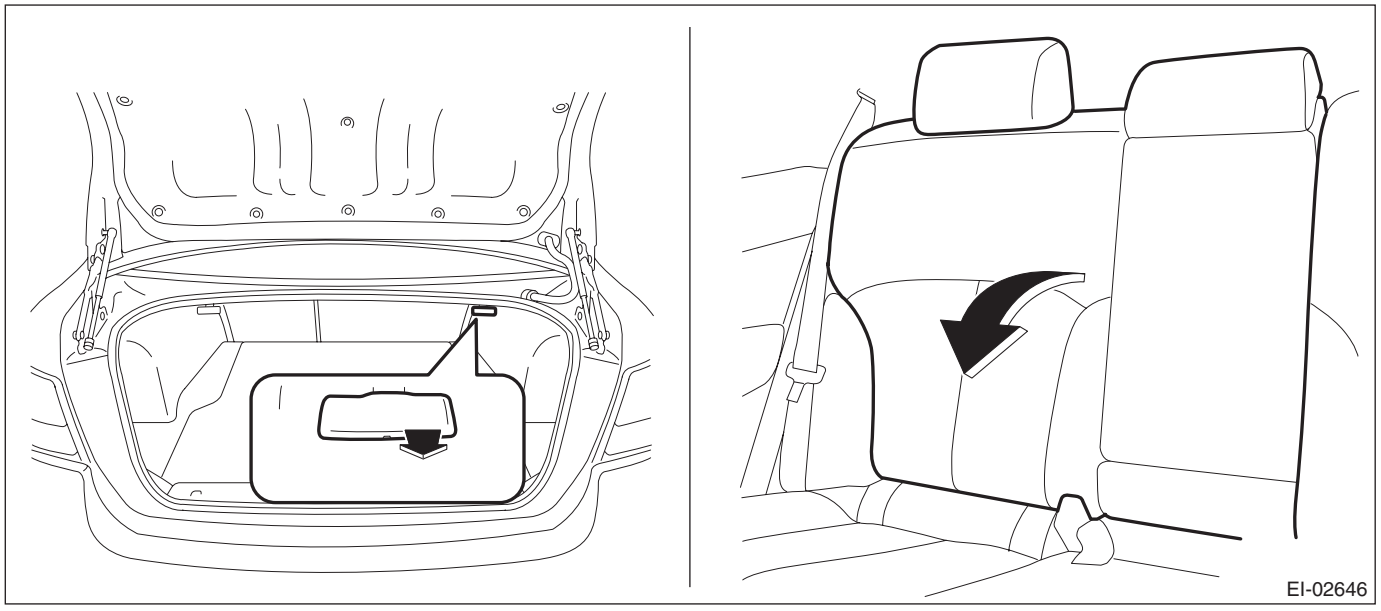

(3) Release the clips of the trunk trim panel assembly - side.

(4) Remove the clips, and remove the rear quarter trim LWR.

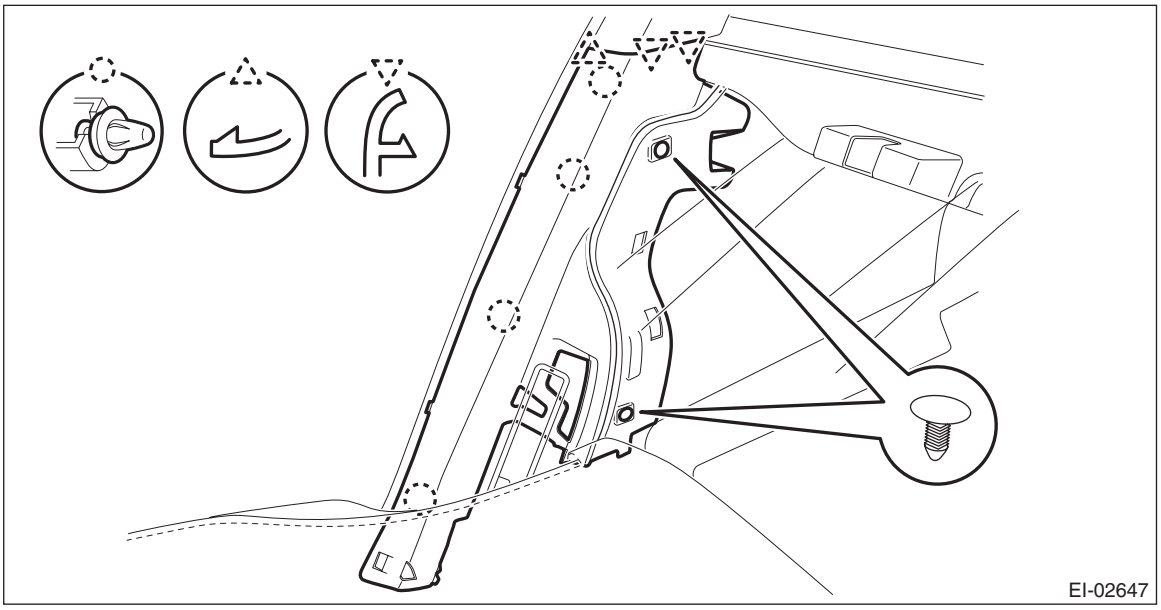

5) Remove the nut and then remove the curtain airbag sensor assembly.
(1) Push the lock arm.
(2) Holding outer part, pull it one step in the direction of arrow.
(3) Push the lock arm again.
(4) Holding outer part, pull it in the direction of arrow to disconnect the connector.

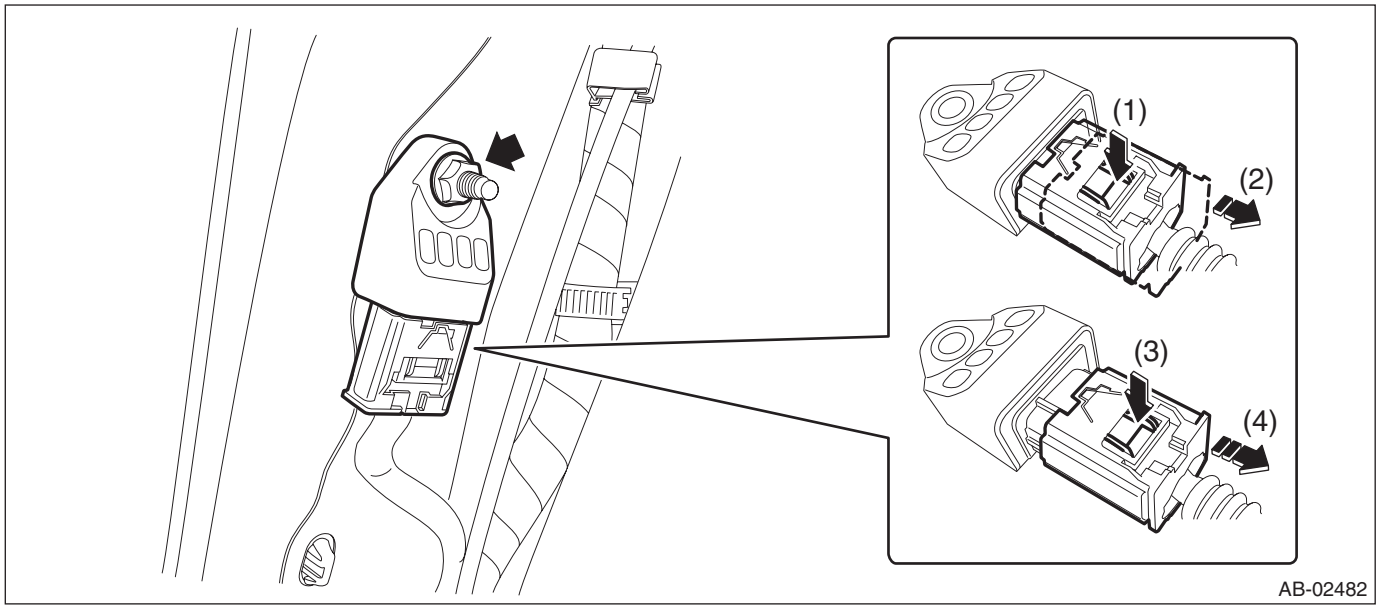

2. OUTBACK MODEL

1) Disconnect the ground cable from battery and wait for at least 60 seconds before starting work.

CAUTION:
The airbag system is fitted with a backup power supply. After disconnecting the battery ground cable, the airbag may operate if you do not wait for 60 seconds before starting the service of airbag system.

2) Remove the rear seat cushion assembly.
(1) Pull up the seat cushion and release the hook.

CAUTION:
If the hook is disconnected from the vehicle body, replace the hook with the new part to prevent the decline of the fixed force of the seat.

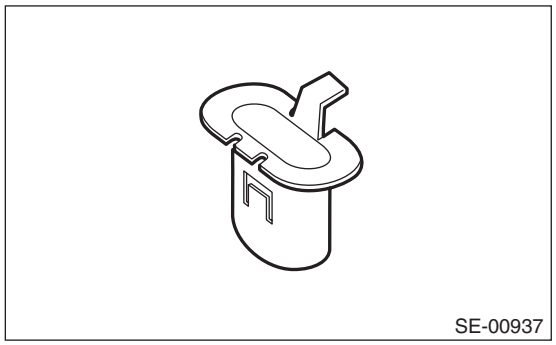
SE-00937

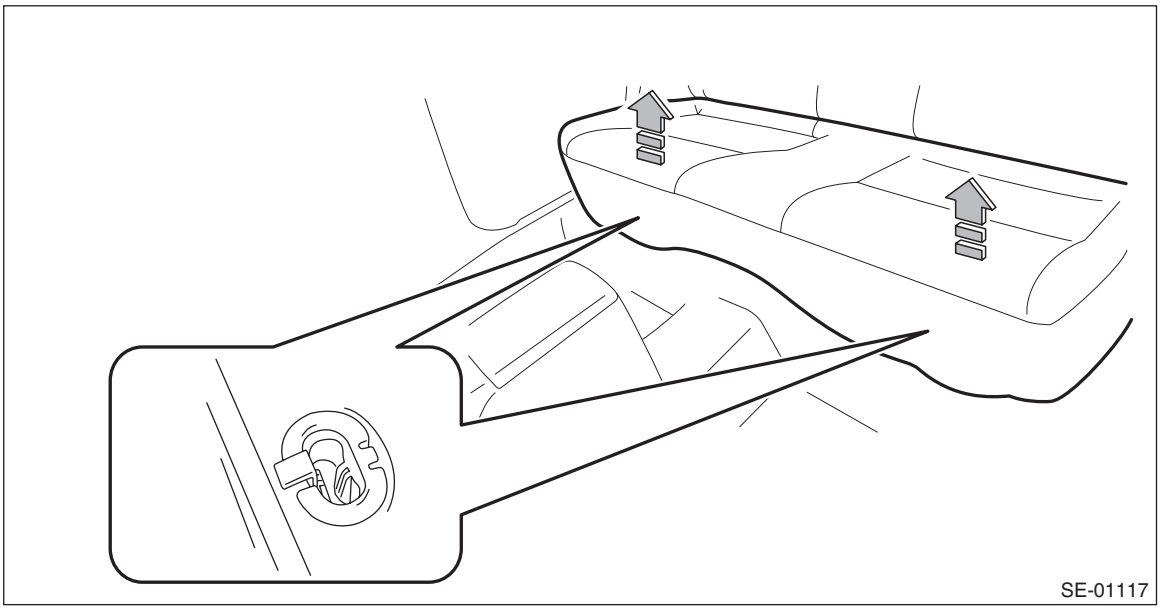
SE-01117

(2) Remove the hook (A) by pushing it back while lifting the front side of the seat cushion, and remove the seat cushion assembly.

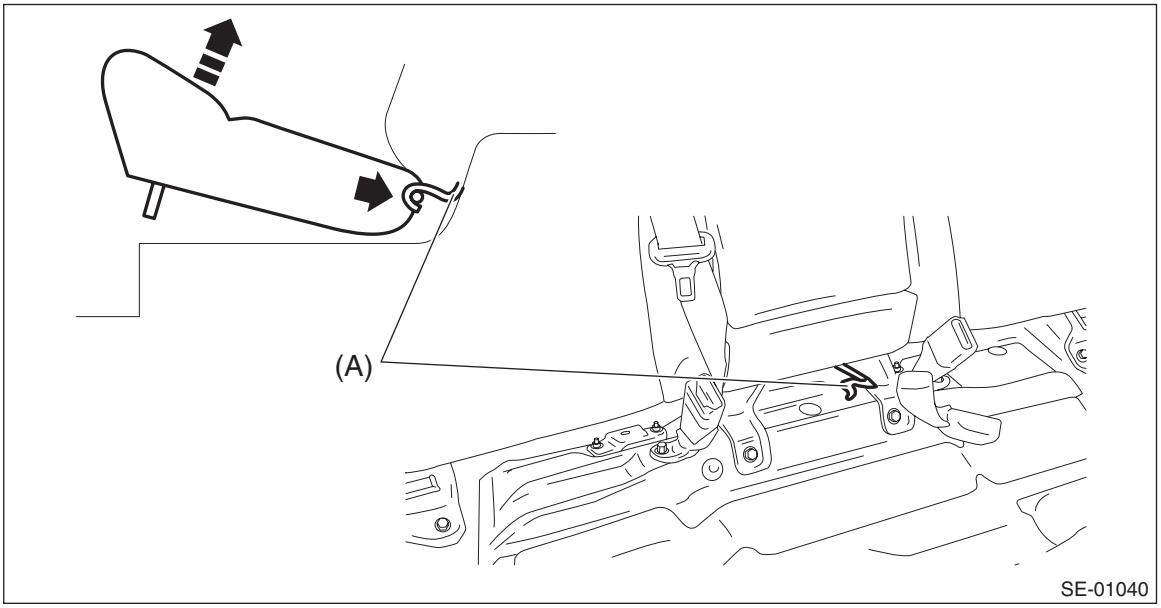

SE-01040

3) Release the clips and claws, and then remove the side sill cover - rear INN. (On the side where airbag sensor is removed)

CAUTION:
Do not pull with excessive force. Doing so may damage the claws of the side sill cover INN.

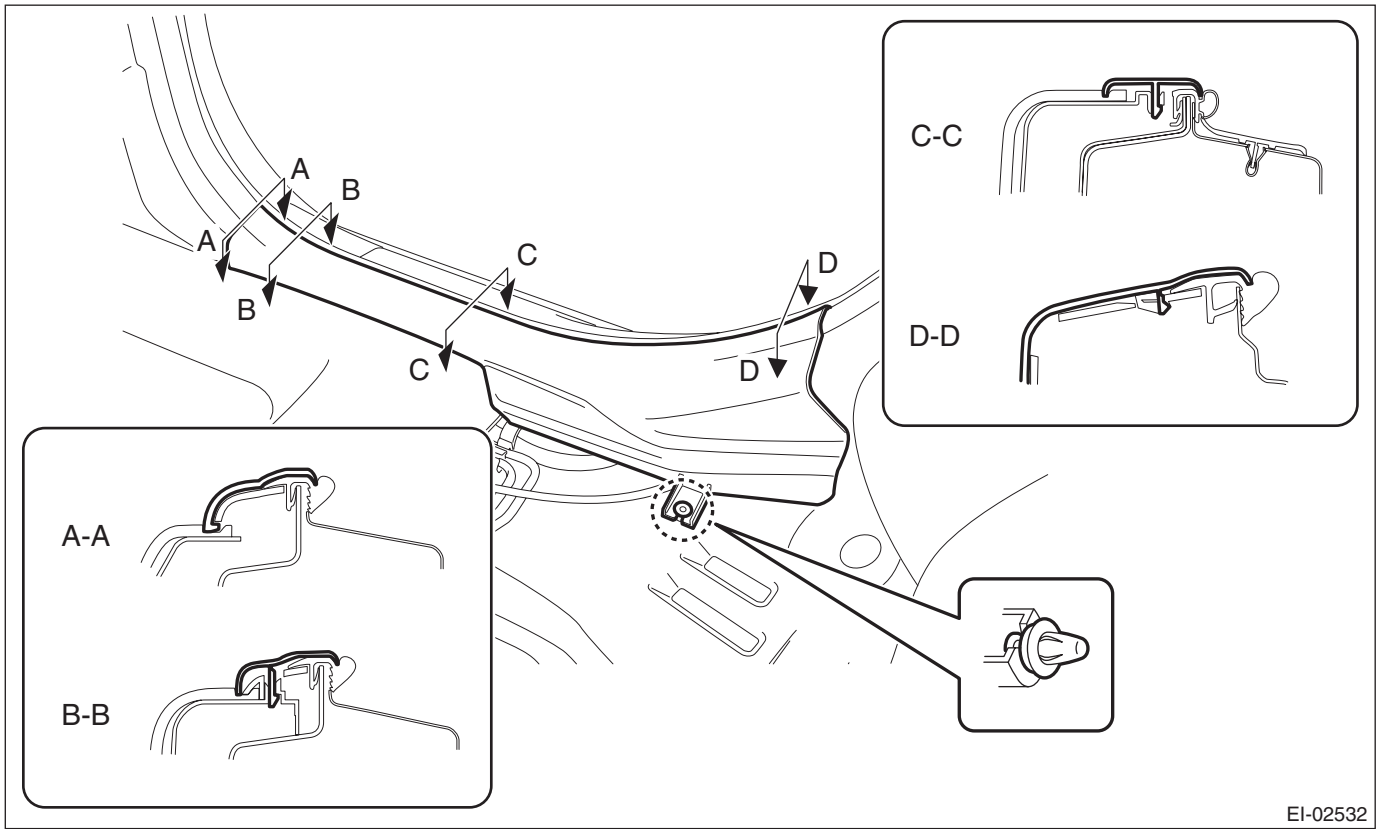

NOTE:
To release the claws of the side sill cover INN, the following steps are recommended.
1. Take out the weather strip from under the side sill cover INN.
2. Turn over the floor mat and release the claw (C-C and D-D) by accessing from behind the side sill cover INN.
4) Tilt the backrest forward, and then turn over the backrest backside mat.

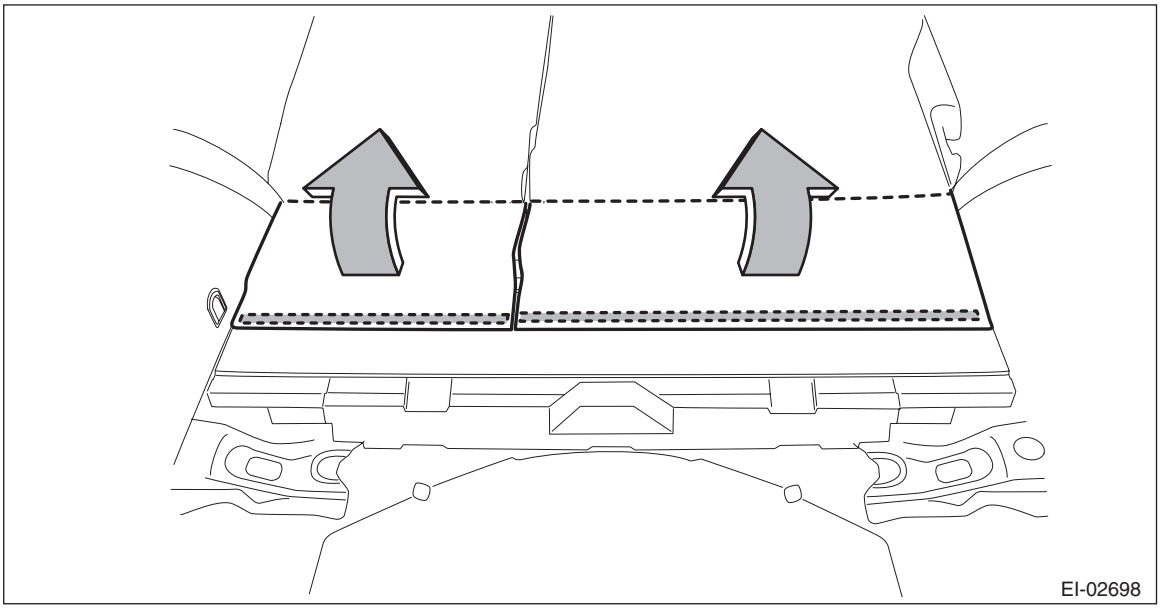

5) Remove the backrest side pad assembly. (On the side where airbag sensor is removed)
(1) Disconnect the backrest cable and reclining lever cable.
(2) Remove the screws and remove the reclining lever assembly by pulling it downward.

Preparation tool: Stubby screwdriver

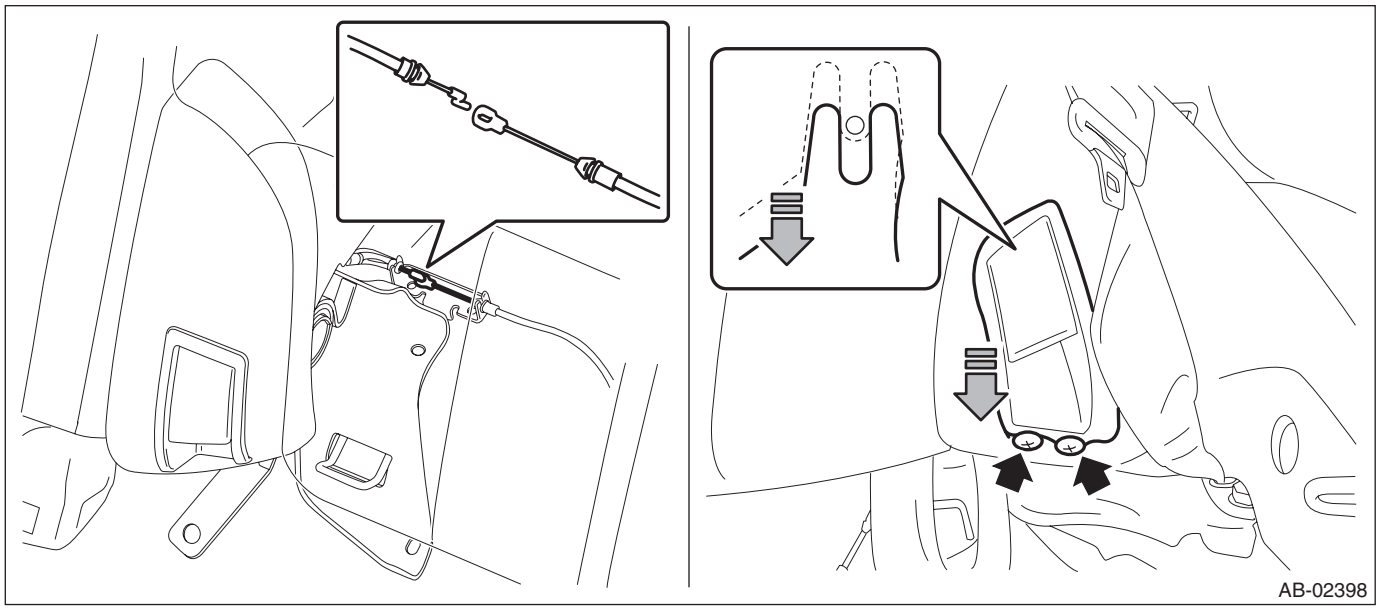

(3) Turn over the bottom end of the backrest side pad in the forward direction so that the claws are released.
(4) Remove the backrest side pad by pulling it up.

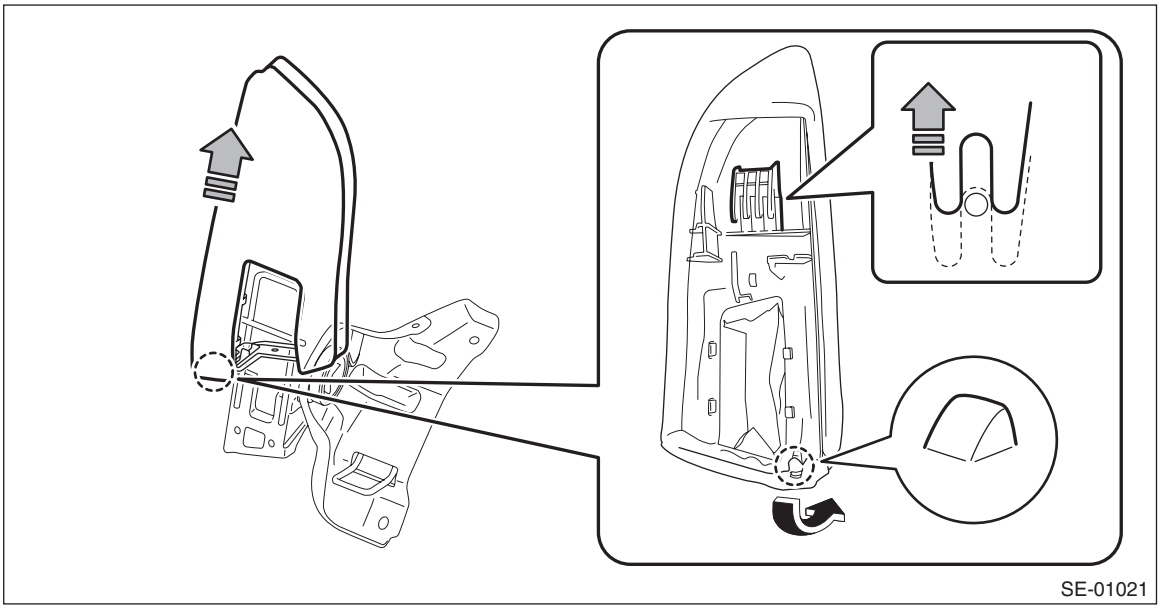

6) Remove the clips, and remove the luggage floor box and rear floor edge cover.

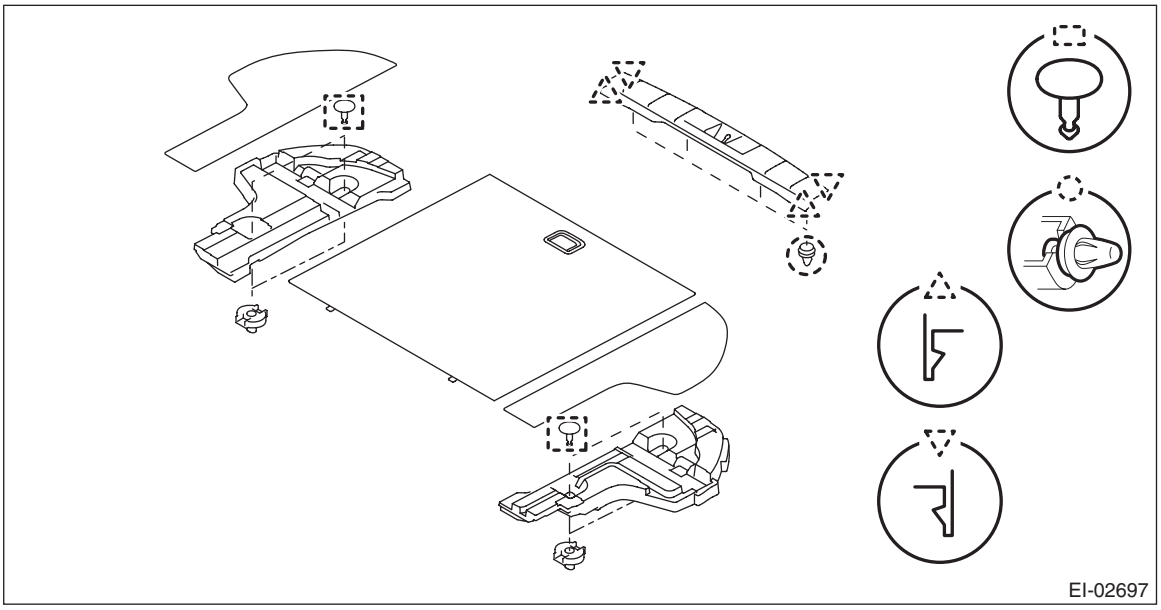

7) Remove the rear quarter trim LWR. (On the side where airbag sensor is removed)
   (1) Remove the caps, screws, and bolts. (A), (C)
   (2) Take out the hook and remove the screw inside. (B)
   (3) Remove the clips, and remove the rear quarter trim LWR.

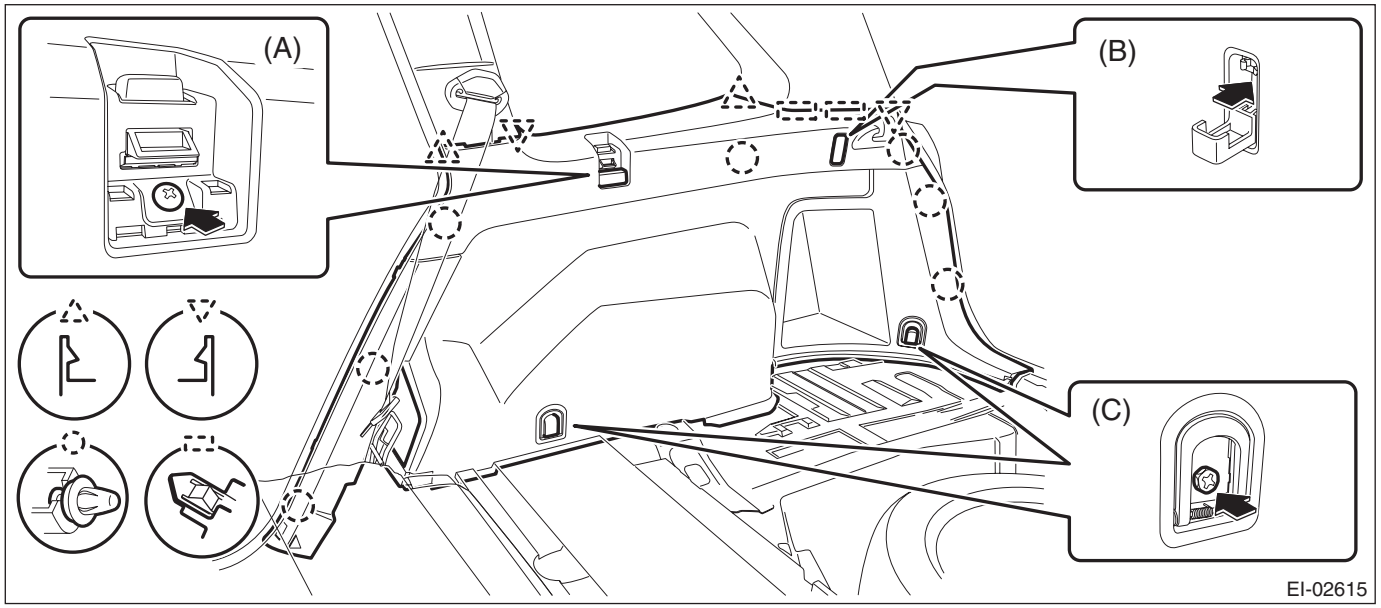

8) Remove the nut and then remove the curtain airbag sensor assembly.
(1) Push the lock arm.
(2) Holding outer part, pull it one step in the direction of arrow.
(3) Push the lock arm again.
(4) Holding outer part, pull it in the direction of arrow to disconnect the connector.

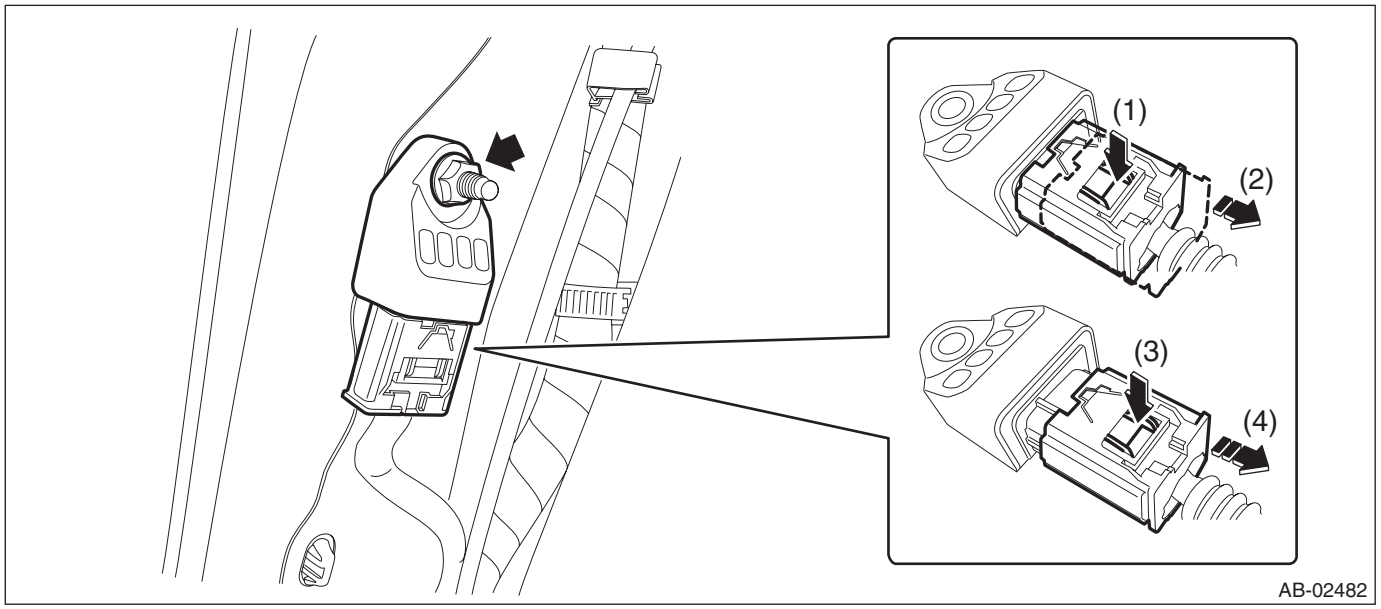

B: INSTALLATION

CAUTION:
• Do not reuse the bolt and nut.
Always replace with the specified new bolts and nuts.
• When installing the sensor, insert the set pin on the backside of the sensor into the hole on the body side securely.

1) Before installation, inspect the following items and replace any faulty part with a new one.
• Curtain airbag sensor or connector is damaged.
• Curtain airbag has been activated.
2) Install each part in the reverse order of removal.

CAUTION:
If the hook is disconnected from the vehicle body, replace the hook with the new part to prevent the decline of the fixed force of the seat.

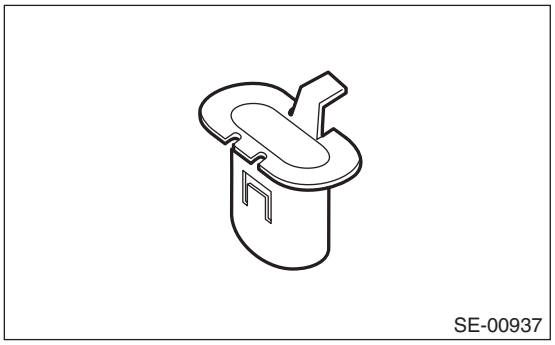

Tightening torque:
Curtain airbag sensor: 7.5 N·m (0.76 kgf-m, 5.5 ft-lb)

13.Roll Connector

A: REMOVAL

1) Position the front wheels straight ahead. (After moving a vehicle 5 m (16 ft) or more with front wheels positioned straight ahead, make sure that the vehicle moves straight ahead.)
2) Turn the ignition switch to OFF.
3) Disconnect the ground cable from battery and wait for at least 60 seconds before starting work.
4) Remove the driver's airbag module assembly.
   (1) Using a hexagon wrench etc. wrapped by protective tape, insert the snap pins and release the locks (3 locations).

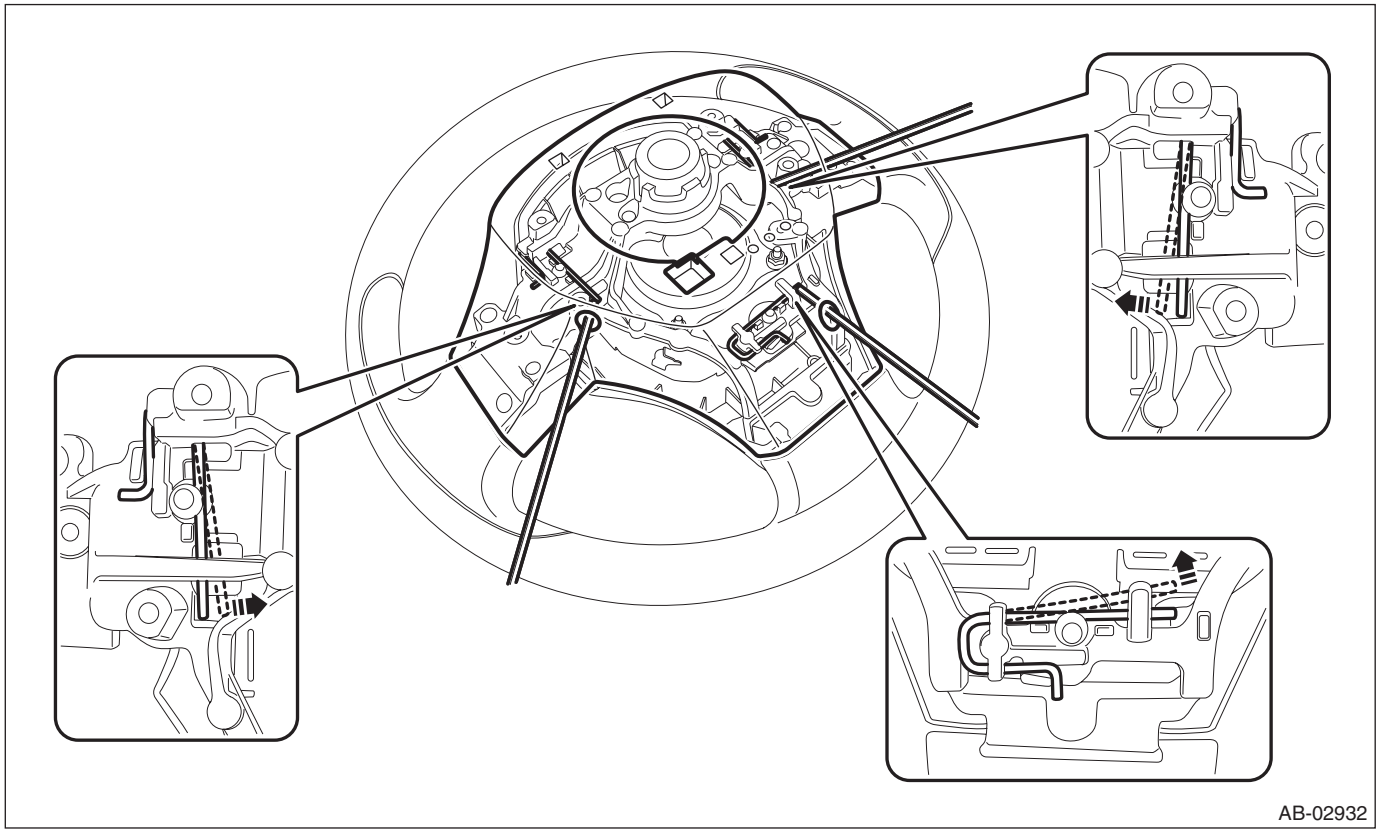

(2) Disconnect the horn harness and airbag connector and remove the airbag module assembly. <Ref. to AB-21, DRIVER'S AIRBAG MODULE, CURTAIN AIRBAG MODULE & PRETENSIONER, PROCEDURE, Airbag Connector.>

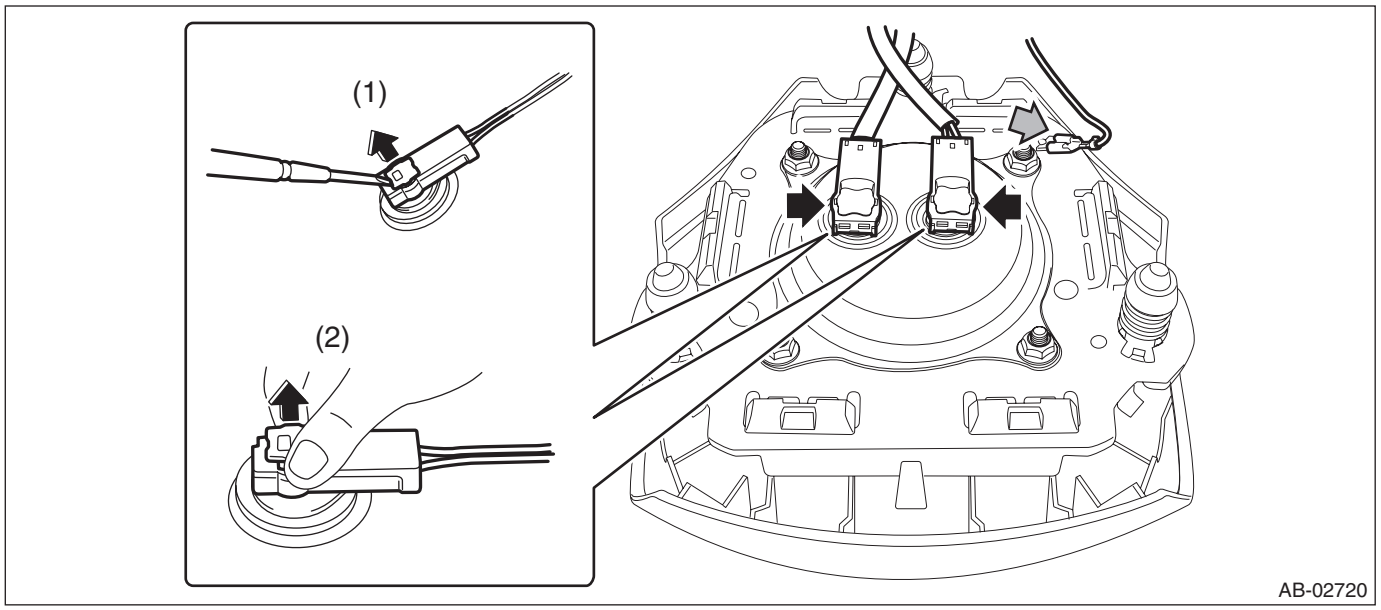

5) Remove the steering wheel.

CAUTION:
- **Always use the steering wheel puller for removal to avoid deforming the steering wheel.**
- **If the steering wheel has been removed, make sure that the roll connector is not turned from the original position.**

(1) Disconnect the connector and remove the nut.
(2) Put alignment marks and remove the steering wheel.

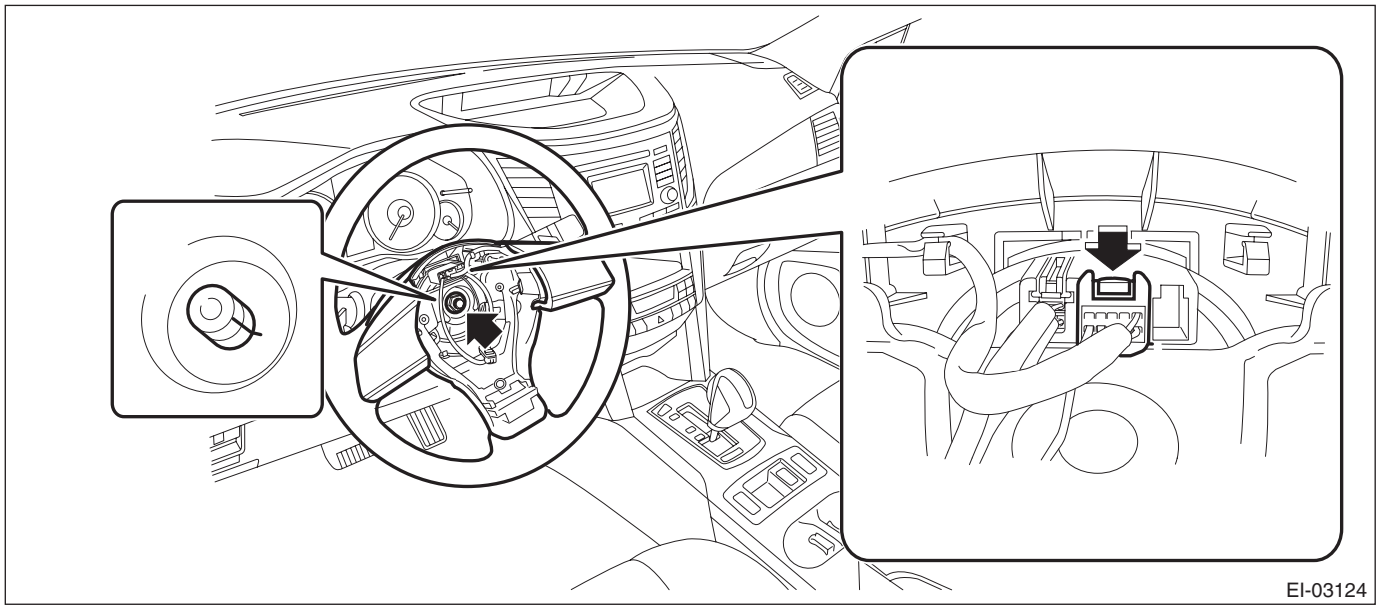

6) Remove the steering column cover.
(1) Lower the lever of the steering column.
(2) Release the claws and remove the screws, then detach the steering column lower cover.

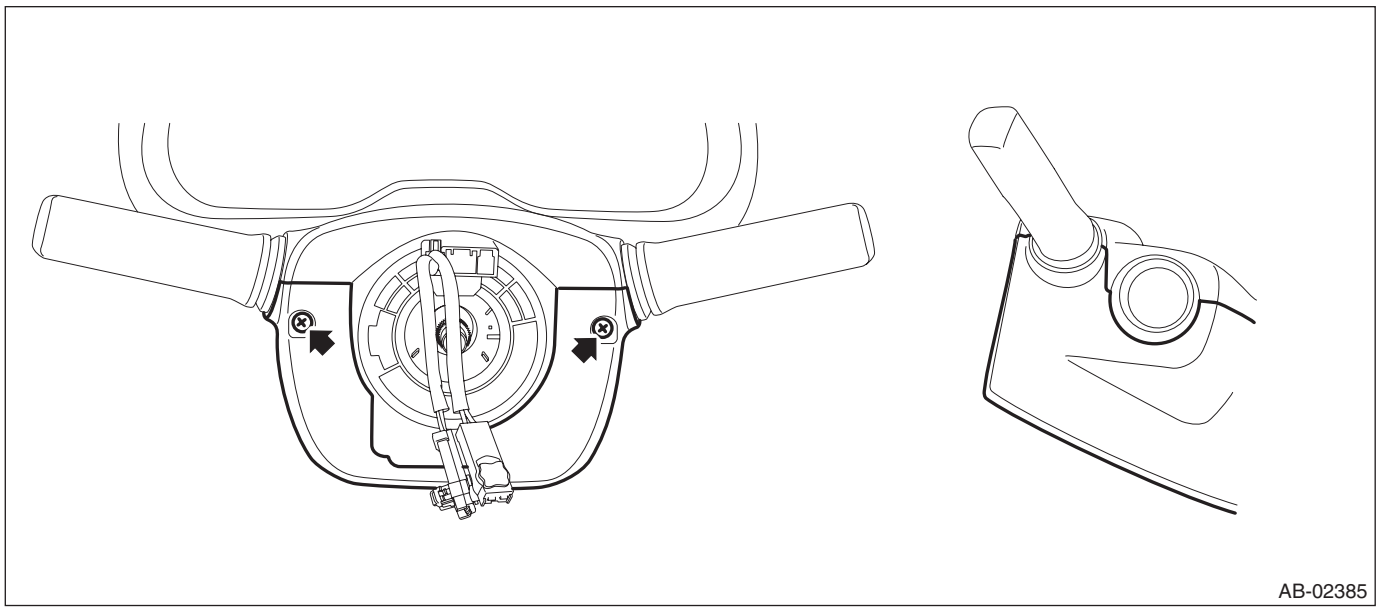

(3) Separate the steering column upper cover and steering upper cover, and remove the steering column upper cover.

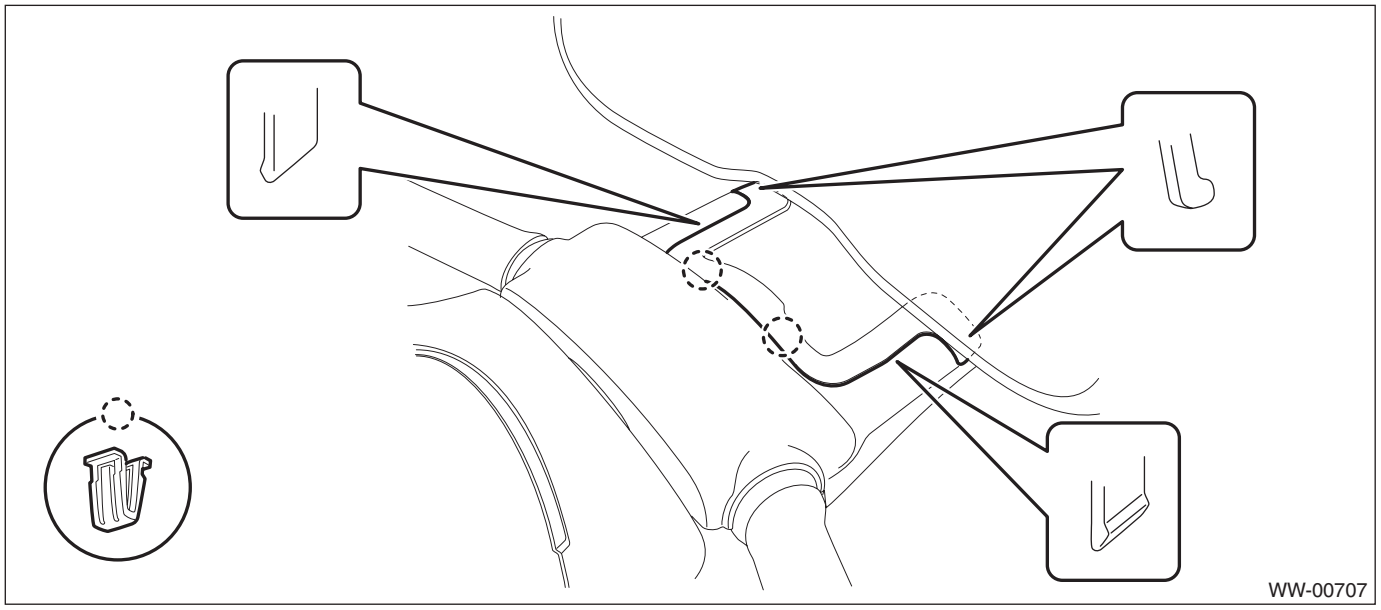

7) Remove the roll connector.

CAUTION:
Make sure that the roll connector is not turned from the original position.

(1) Disconnect the connector under the roll connector.
(2) Release the claws and remove the roll connector.

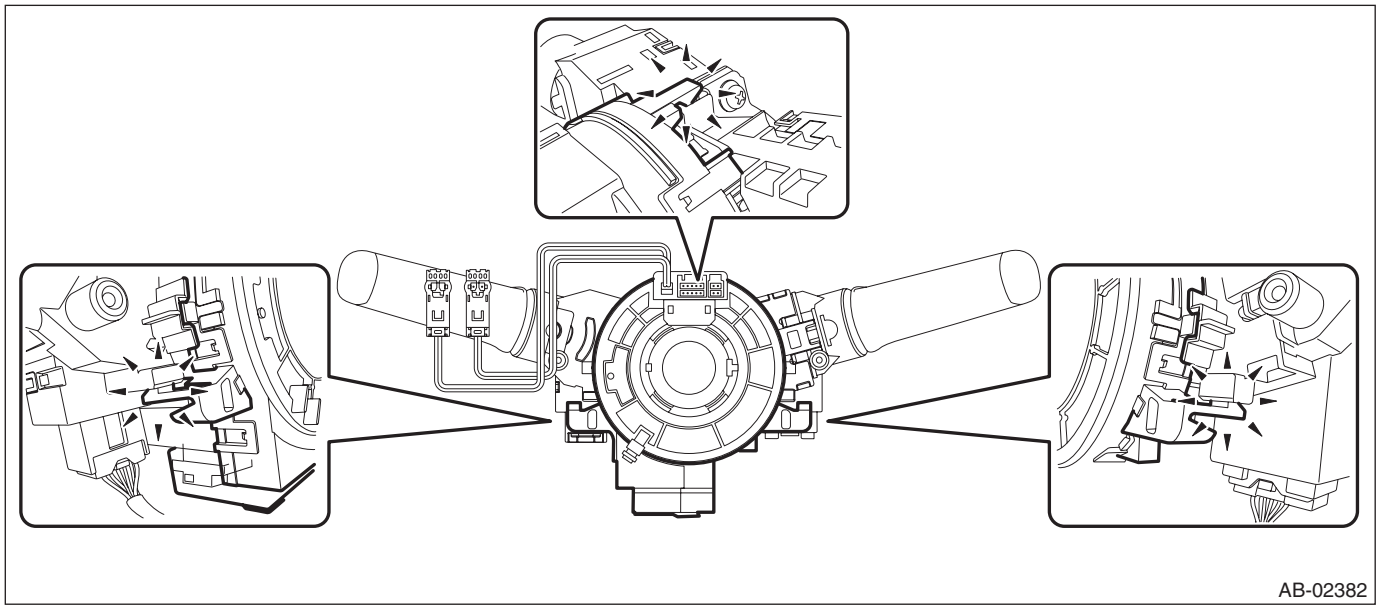

B: INSTALLATION

1) Before attaching a new roll connector, apply a thin coat of grease contained in the connector onto the areas shown by the arrows.

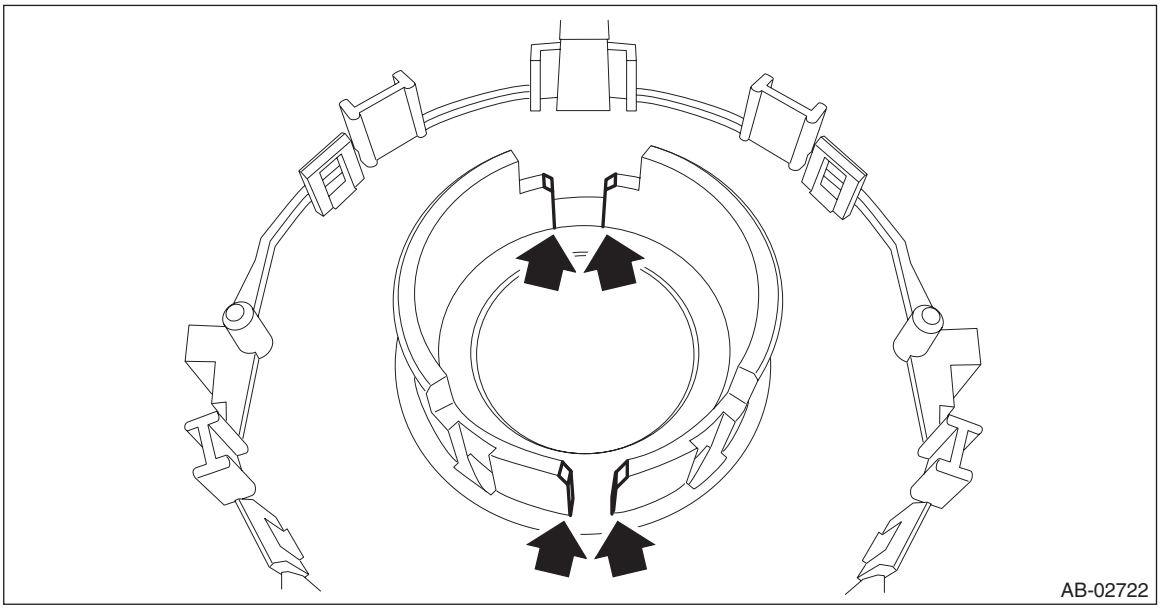

2) Install each part in the reverse order of removal.
3) Before installing steering wheel, be sure to adjust the direction of roll connector with steering. <Ref. to AB-101, ADJUSTMENT, Roll Connector.>

Tightening torque:
Steering wheel: 39 N·m (3.98 kgf-m, 28.8 ft-lb)

Clearance:
Between column cover and steering wheel: 2 — 4 mm (0.08 — 0.16 in)

C: INSPECTION

1. VISUAL INSPECTION

Check for the following, and replace the damaged parts with new parts.
- Combination switch is cracked or deformed.
- Roll connector is cracked or deformed.

2. UNIT INSPECTION OF ROLL CONNECTOR

CAUTION:
• Do not rotate the roll connector to more than the specified number of turns. Otherwise, the roll connector internal wire may be broken.
• When determining the end stop, rotate the connector slowly without applying excessive force. Applying excessive force at the end stop may break the internal wire.

1) Adjust the roll connector. <Ref. to AB-101, ADJUSTMENT, Roll Connector.>
2) Set the roll connector to the central position.
3) Connect the test harness to the connector E and connector F.

Preparation tool: Test harness N (98299SA000), Test harness Q (98299SA040)
- Connector E - Test harness N (1N)
- Connector F - Test harness Q (1Q)

4) With the following conditions, check the resistance between the test harness connector terminals.
- Perform the check with the roll connector centered (front wheels direct straightforward).
- Rotate the roll connector counterclockwise from the center (front wheels direct straightforward) to an end stop. Then, perform the check while rotating it clockwise to approximately 4.5 turns.

Preparation tool: Circuit tester

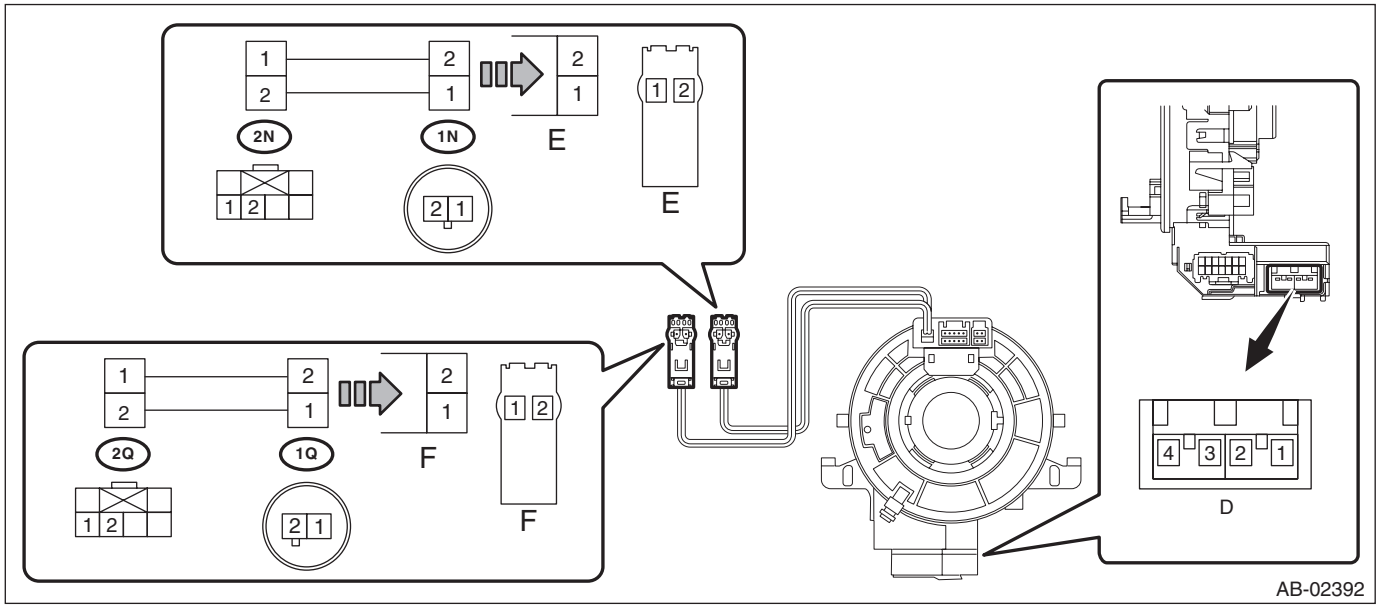

Terminal No.	Inspection conditions	Standard
(2N) No. 1 — (2N) No. 2	Always	Less than 1 Ω
(2Q) No. 1 — (2Q) No. 2	Always	Less than 1 Ω

NOTE:
The connector D is designed to short the terminals D1/D2 and D3/D4 when disconnected.

5) Replace the roll connector with a new part if the inspection result is not within the standard value.

D: ADJUSTMENT

CAUTION:
• Do not rotate the roll connector to more than the specified number of turns. Otherwise, the roll connector internal wire may be broken.
• When determining the end stop, rotate the connector slowly without applying excessive force. Applying excessive force at the end stop may break the internal wire.
1) Check that front wheels are positioned in straight ahead direction.
2) Rotate the roll connector counterclockwise until it stops.
3) Rotate the roll connector clockwise approx. 3 turns until "▲" marks are aligned.

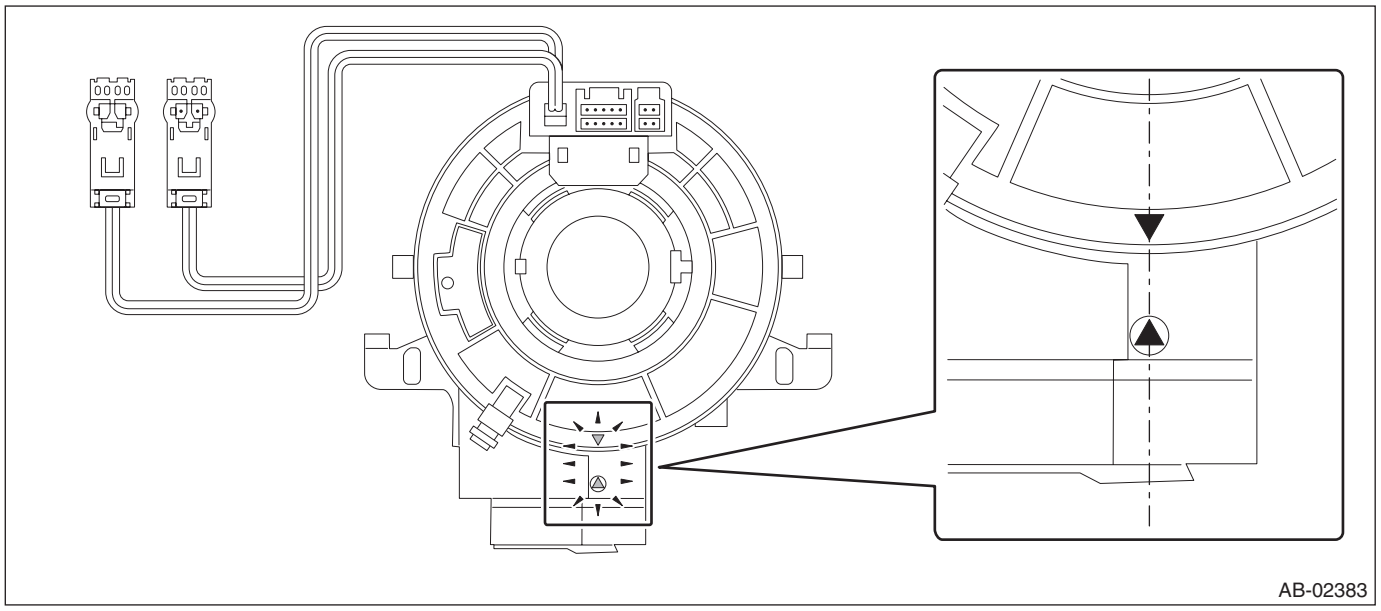

AIRBAG SYSTEM (DIAGNOSTICS)

AB(diag)

		Page
1.	Basic Diagnostic Procedure	2
2.	Check List for Interview	3
3.	Identification	4
4.	General Description	5
5.	Electrical Component Location	19
6.	Airbag Connector	23
7.	Airbag Control Module I/O Signal	24
8.	Subaru Select Monitor	28
9.	Read Diagnostic Trouble Code (DTC)	32
10.	Inspection Mode	33
11.	Clear Memory Mode	34
12.	Display of Status Information	35
13.	Airbag Warning Light Illumination Pattern	36
14.	Airbag Warning Light Failure	37
15.	List of Diagnostic Trouble Code (DTC)	41
16.	Diagnostic Chart with Trouble Code	49

1. Basic Diagnostic Procedure

A: PROCEDURE

Step		Check	Yes	No
1	**CHECK WARNING LIGHT.** Check whether the airbag warning light in the combination meter is lit.	Does the airbag warning light illuminate?	Go to step **2**.	Perform the diagnosis according to phenomenon of the problem.
2	**READ DTC.** 1) Turn the ignition switch to OFF. 2) Connect the Subaru Select Monitor to data link connector. 3) Turn the ignition switch to ON and run the Subaru Select Monitor. 4) Read the DTC. <Ref. to AB(diag)-32, OPERATION, Read Diagnostic Trouble Code (DTC).> NOTE: If the communication function of the Subaru Select Monitor cannot be executed properly, check the communication circuit. <Ref. to AB(diag)-29, COMMUNICATION FOR INITIALIZING IMPOSSIBLE, INSPECTION, Subaru Select Monitor.> 5) Record all DTCs and freeze frame data.	Is DTC displayed?	Go to step **3**.	Go to "Airbag Warning Light Failure" <Ref. to AB(diag)-37, Airbag Warning Light Failure.>.
3	**PERFORM DIAGNOSIS.** 1) Verify the identification of the vehicle. <Ref. to AB(diag)-4, Identification.> 2) Determine the possible cause from "List of Diagnostic Trouble Code (DTC)" <Ref. to AB(diag)-41, List of Diagnostic Trouble Code (DTC).>. 3) Inspect the DTC using "List of Diagnostic Trouble Code (DTC)". 4) Repair the trouble cause. 5) Perform the Clear Memory Mode. <Ref. to AB(diag)-34, Clear Memory Mode.> 6) Perform the Inspection Mode. <Ref. to AB(diag)-33, Inspection Mode.> 7) Read any other DTCs displayed.	Is DTC displayed?	Perform the procedure 1) to 5) in step 3.	Finish the diagnosis.

2. Check List for Interview

A: CHECK

Customer's Name		Inspector's Name	
Date Vehicle Brought in	/ /	Registration No.	
Odometer Reading	km miles	V.I.N.	
Date Problem Occurred	/ /	Registration Year	/ /
Weather	❑ Fine ❑ Cloudy ❑ Rainy ❑ Snowy ❑ Others:		
Temperature	°C (°F)		
Road Condition	❑ Flat road ❑ Uphill ❑ Downhill ❑ Gravel road ❑ Others:		
Vehicle Operation	❑ Starting ❑ Idling ❑ Driving ❑ Constant speed ❑ Accelerating ❑ Decelerating ❑ Turning ❑ Others:		
Details of Problem			
Airbag Warning Light Operation	❑ Normal (After turning the ignition switch to ON, lit for approximately 6 seconds and goes off.) ❑ Remains ON ❑ Remains OFF		
DTC output	❑ OK code ❑ DTC: (Code:)		

3. Identification

A: PROCEDURE

Identify the vehicle using the chassis number, part number of the airbag control module or Subaru Select Monitor.

NOTE:
Proper identification is necessary to ensure proper diagnosis. Components are not interchangeable between Airbag system Type A and Airbag System Type B.

1. IDENTIFICATION METHOD USING CHASSIS NUMBER

Type A	OUTBACK model	Chassis number: From #200013
	Sedan model	Chassis number: From #002017
Type B	OUTBACK model	Chassis number: Before #200012
	Sedan model	Chassis number: Before #002016

2. IDENTIFICATION METHOD USING PART NUMBER OF AIRBAG CONTROL MODULE

Type A	OUTBACK model	98221AJ25A
	Sedan model	98221AJ24A
Type B	OUTBACK model	98221AJ09A
	Sedan model	98221AJ08A

3. IDENTIFICATION METHOD USING SUBARU SELECT MONITOR

1) Connect the Subaru Select Monitor, and display the main menu screen.
2) On the main menu screen, select “Each System Check”.
3) Check and identify the description of the airbag system displayed on the system selection menu.

Type A	Airbag system
Type B	Airbag system B

4. General Description

A: CAUTION

Refer to “CAUTION” in “General Description” in Airbag System. <Ref. to AB-9, CAUTION, General Description.>

B: INSPECTION

Measure the battery voltage and check electrolyte.

Standard voltage: 12 V

Specific gravity: 1.260 or more

C: PREPARATION TOOL

CAUTION:
To measure the voltage and resistance of airbag system component, be sure to use the specified test harness.

1. SPECIAL TOOL

- Subaru Select Monitor

ILLUSTRATION	TOOL NUMBER	DESCRIPTION	REMARKS
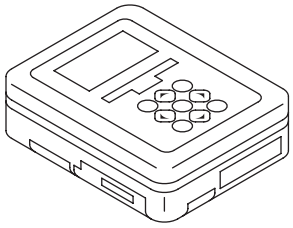 ST1B022XU0	1B022XU0	SUBARU SELECT MONITOR III KIT	Used for troubleshooting the electrical system.

- TEST HARNESS H

ILLUSTRATION	TOOL NUMBER	DESCRIPTION	REMARKS
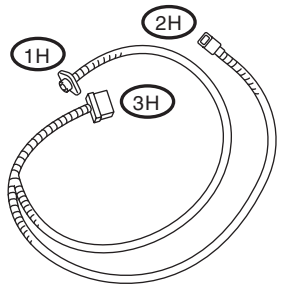 ST98299FA030	98299FA030	TEST HARNESS H	Used when measuring voltage and resistance of front sub sensor and front door impact sensor.

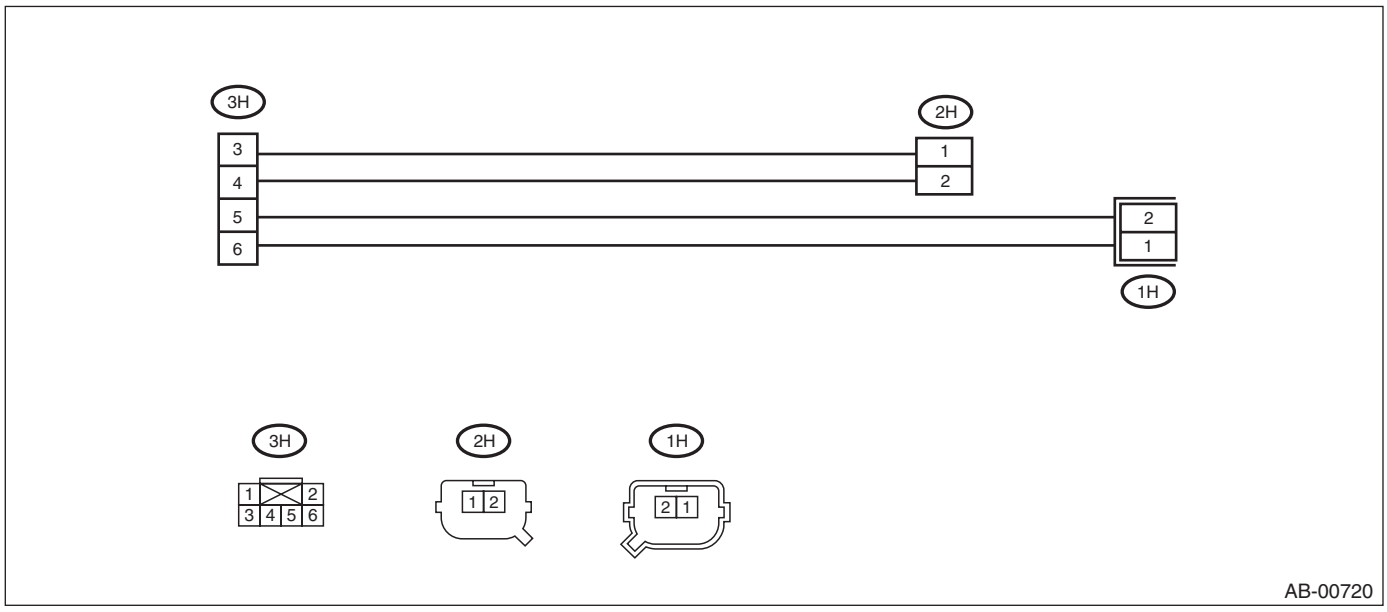

AB-00720

- TEST HARNESS N

ILLUSTRATION	TOOL NUMBER	DESCRIPTION	REMARKS
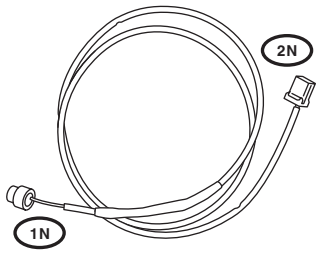 ST98299SA000	98299SA000	TEST HARNESS N	Used when measuring voltage and resistance of driver's airbag module, seat belt pretensioner and curtain airbag module.

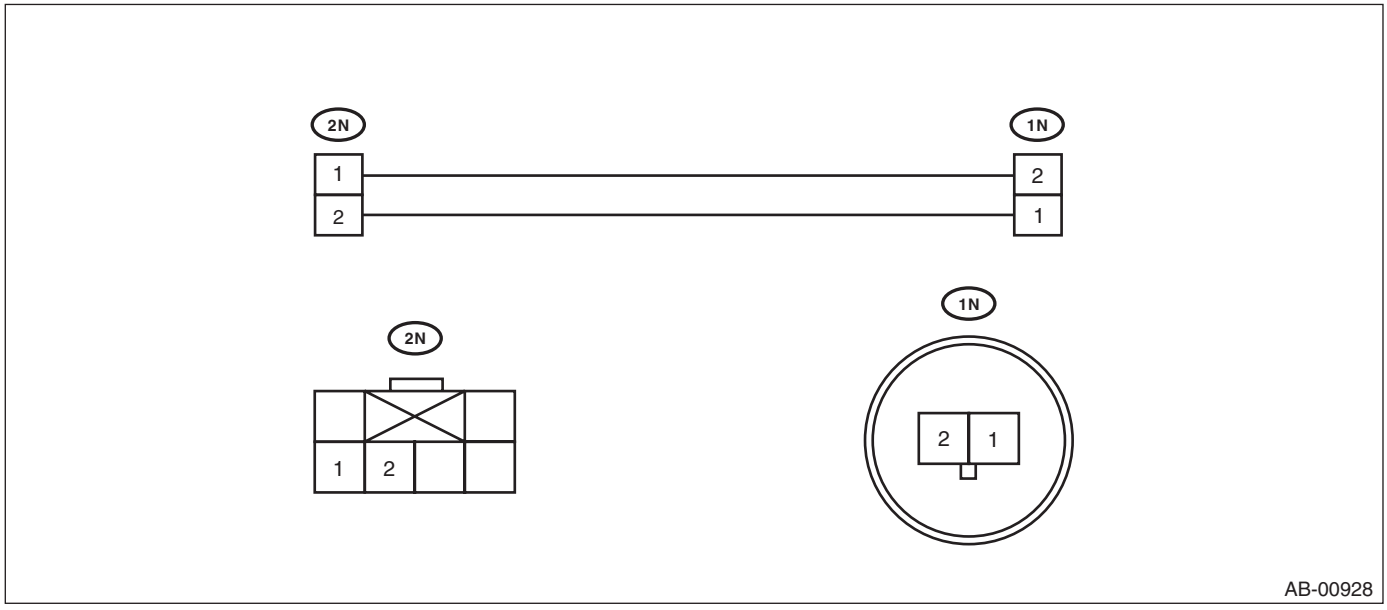

AB-00928

- TEST HARNESS P

ILLUSTRATION	TOOL NUMBER	DESCRIPTION	REMARKS
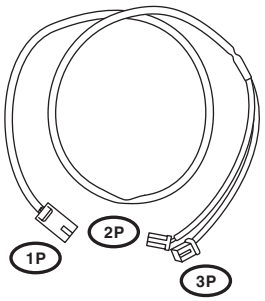 ST98299SA020	98299SA020	TEST HARNESS P	Used when measuring voltage and resistance of passenger's airbag module harness.

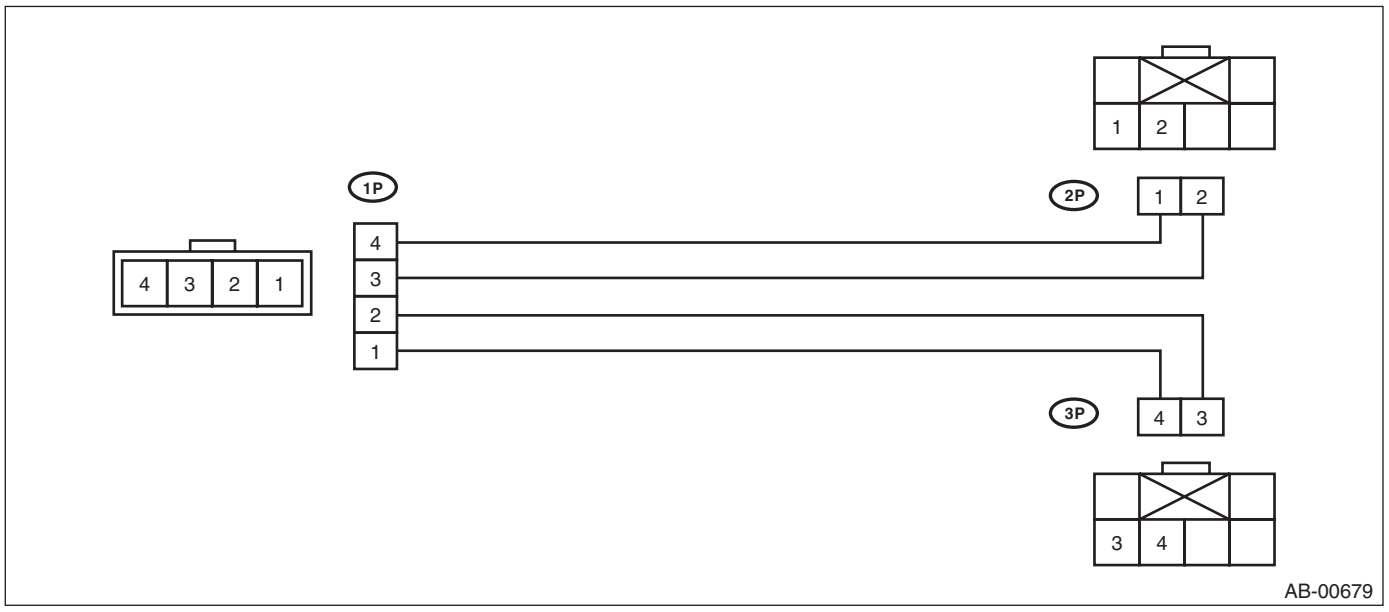

- TEST HARNESS Q

ILLUSTRATION	TOOL NUMBER	DESCRIPTION	REMARKS
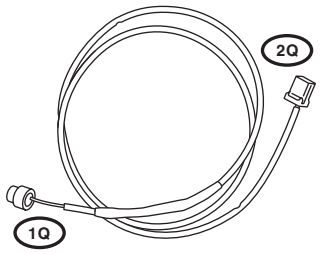 ST98299SA040	98299SA040	TEST HARNESS Q	Used when measuring voltage and resistance of driver's airbag module.

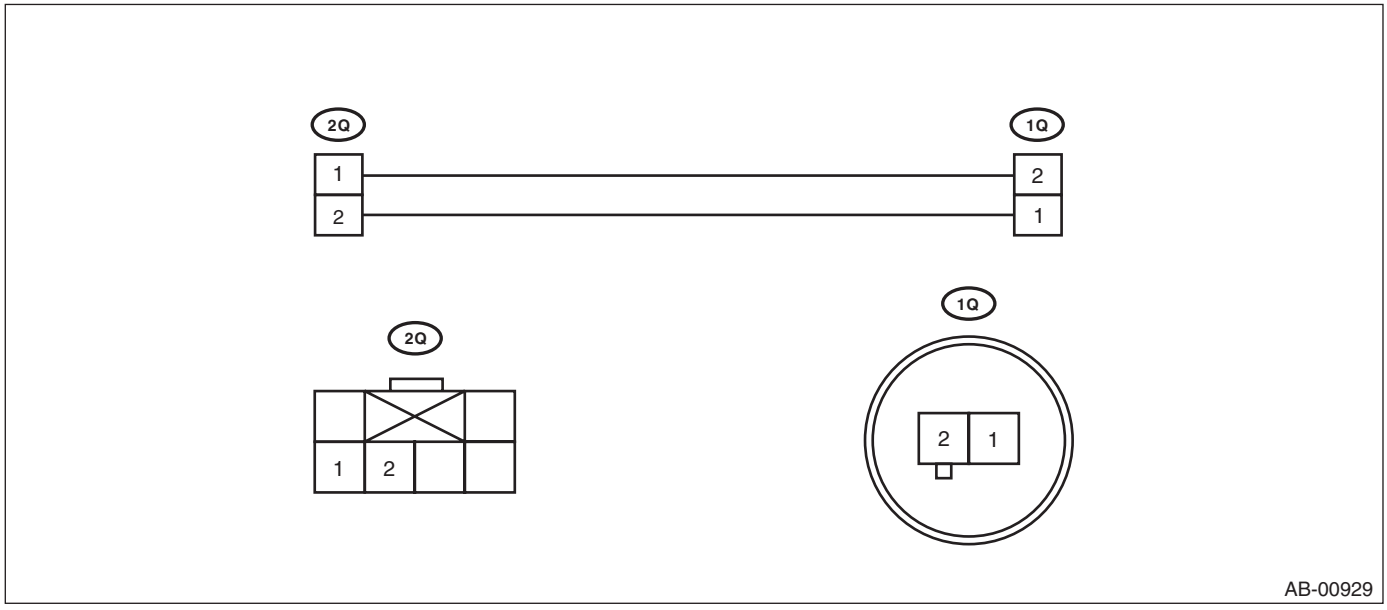

AB-00929

- TEST HARNESS AG

ILLUSTRATION	TOOL NUMBER	DESCRIPTION	REMARKS
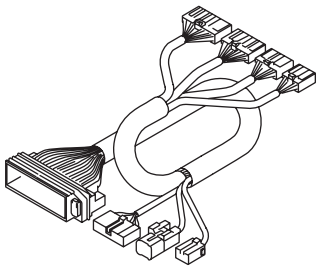 ST98299AG070	98299AG070	TEST HARNESS AG	Used when measuring voltage and resistance of airbag control module.

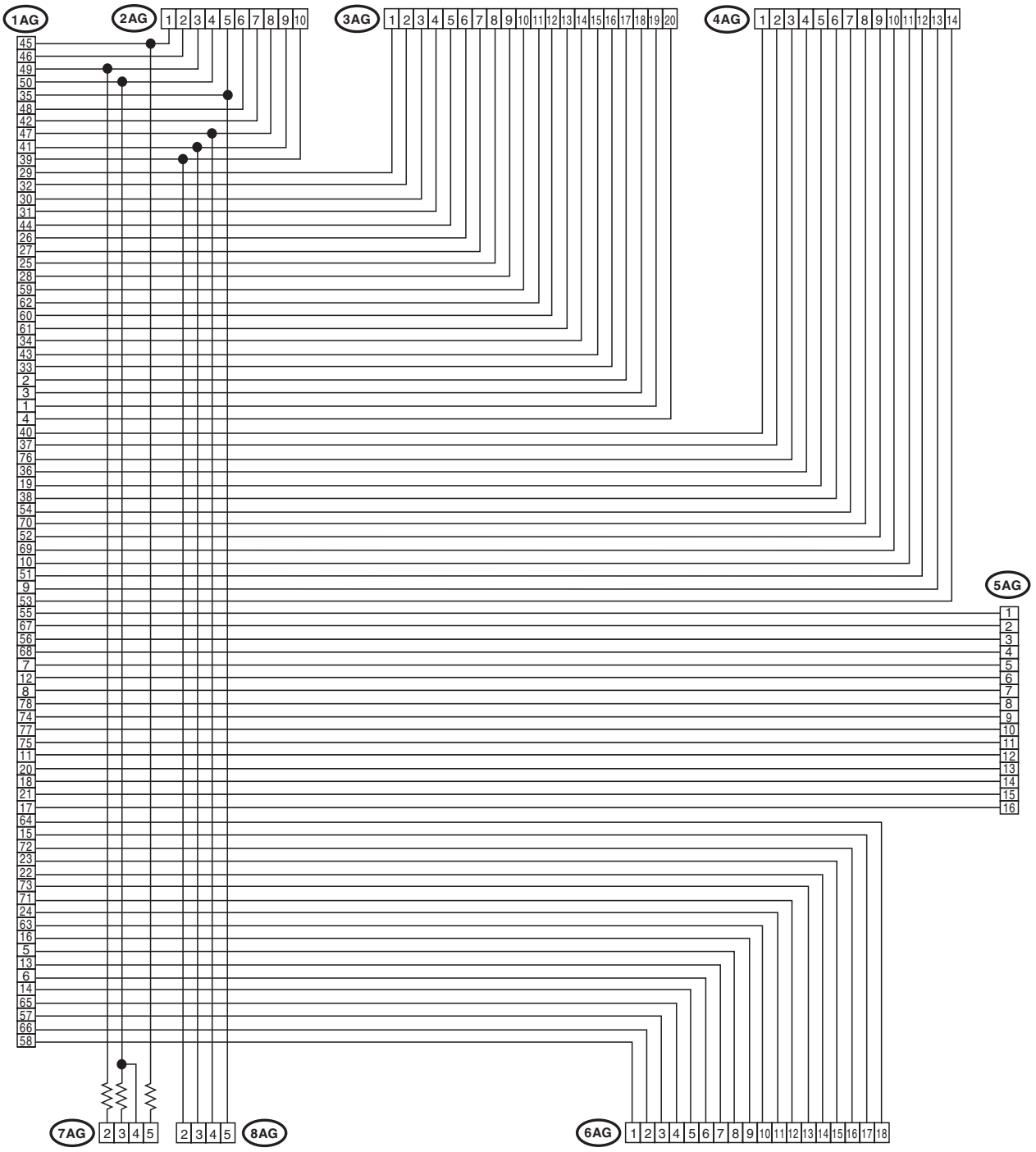
1AG
2AG
3AG
4AG
5AG
6AG
7AG
8AG
45 46 49 50 35 48 42 47 41 39 29 32 30 31 44 26 27 25 28 59 62 60 61 34 43 33 2 3 1 4 40 37 76 36 19 38 54 70 52 69 10 51 9 53 55 67 56 68 7 12 8 78 74 77 75 11 20 18 21 17 64 15 72 23 22 73 71 24 63 16 5 13 6 14 65 57 66 58
1 2 3 4 5 6 7 8 9 10
1 2 3 4 5 6 7 8 9 10 11 12 13 14 15 16 17 18 19 20
1 2 3 4 5 6 7 8 9 10 11 12 13 14
1 2 3 4 5 6 7 8 9 10 11 12 13 14 15 16
1 2 3 4 5 6 7 8 9 10 11 12 13 14 15 16 17 18
2 3 4 5
2 3 4 5

AB-01902

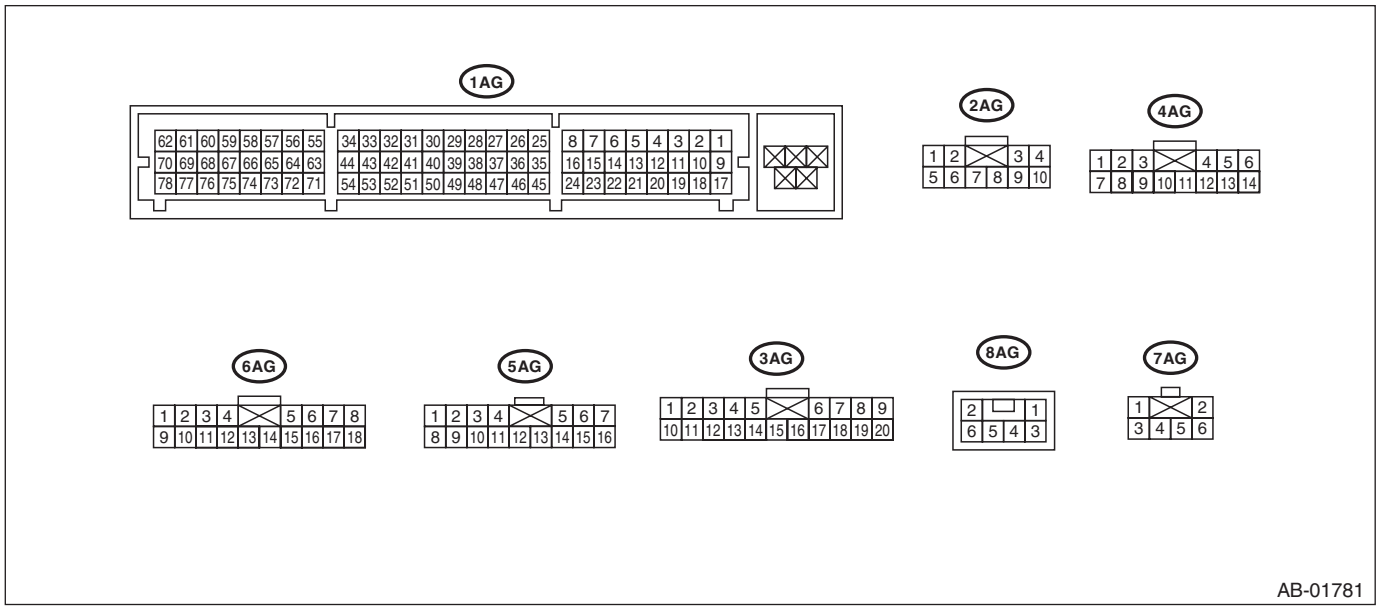
1AG
62 61 60 59 58 57 56 55
70 69 68 67 66 65 64 63
78 77 76 75 74 73 72 71
34 33 32 31 30 29 28 27 26 25
44 43 42 41 40 39 38 37 36 35
54 53 52 51 50 49 48 47 46 45
8 7 6 5 4 3 2 1
16 15 14 13 12 11 10 9
24 23 22 21 20 19 18 17
2AG
1 2 3 4
5 6 7 8 9 10
4AG
1 2 3 4 5 6
7 8 9 10 11 12 13 14
6AG
1 2 3 4 5 6 7 8
9 10 11 12 13 14 15 16 17 18
5AG
1 2 3 4 5 6 7
8 9 10 11 12 13 14 15 16
3AG
1 2 3 4 5 6 7 8 9
10 11 12 13 14 15 16 17 18 19 20
8AG
2 1
6 5 4 3
7AG
1 2
3 4 5 6
AB-01781

- TEST HARNESS AH

ILLUSTRATION	TOOL NUMBER	DESCRIPTION	REMARKS
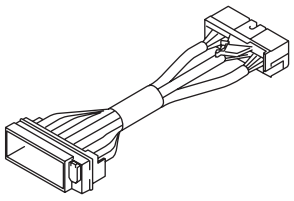 ST98299AG080	98299AG080	TEST HARNESS AH	Used together with test harness AG when measuring voltage and resistance of the airbag control module.

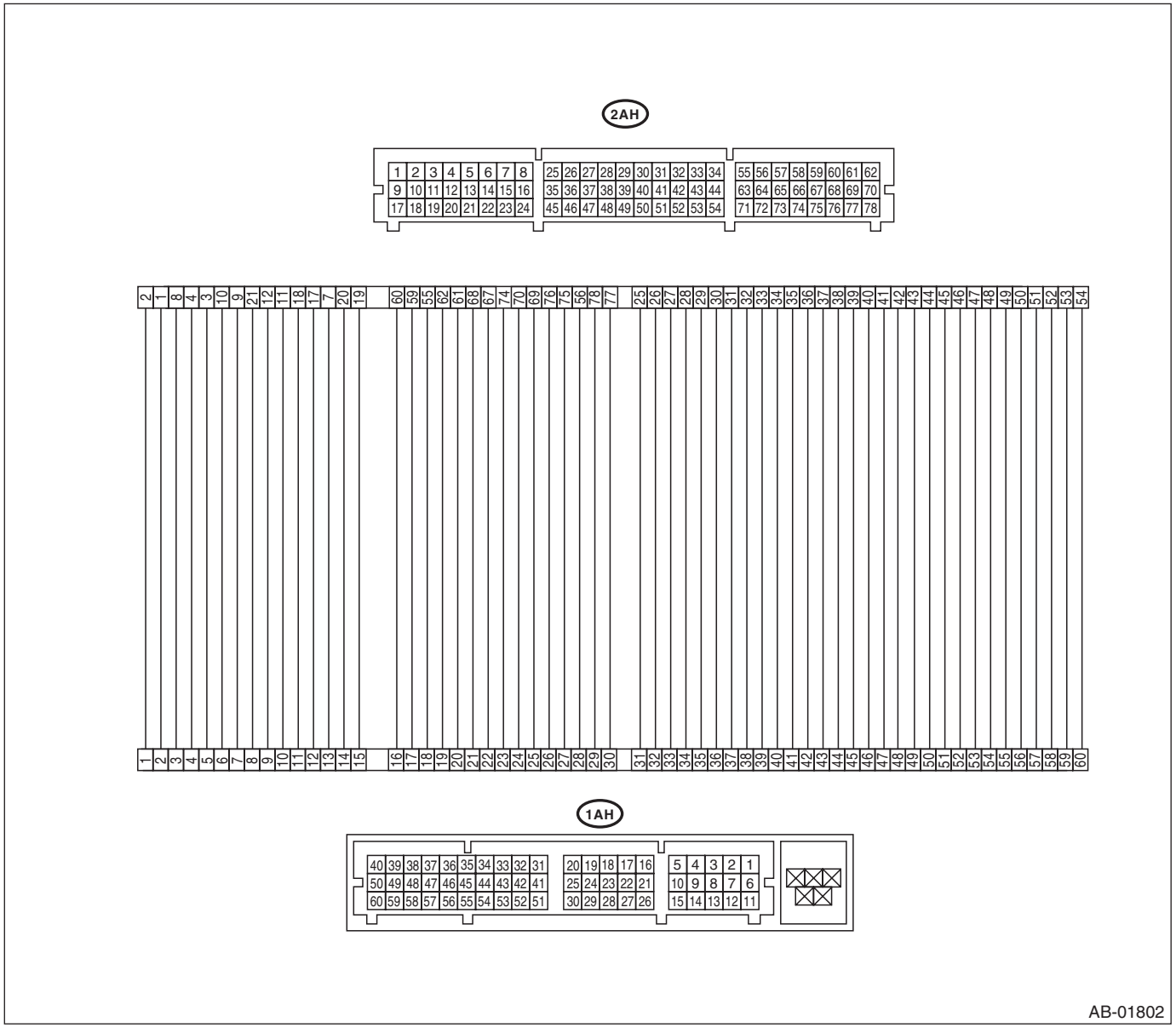

- TEST HARNESS V

ILLUSTRATION	TOOL NUMBER	DESCRIPTION	REMARKS
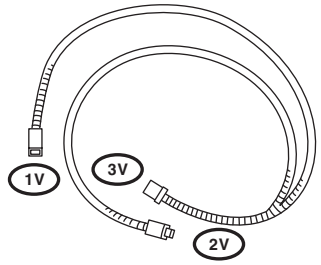 ST98299AG010	98299AG010	TEST HARNESS V	Used when measuring voltage and resistance of side airbag sensor and curtain airbag sensor.

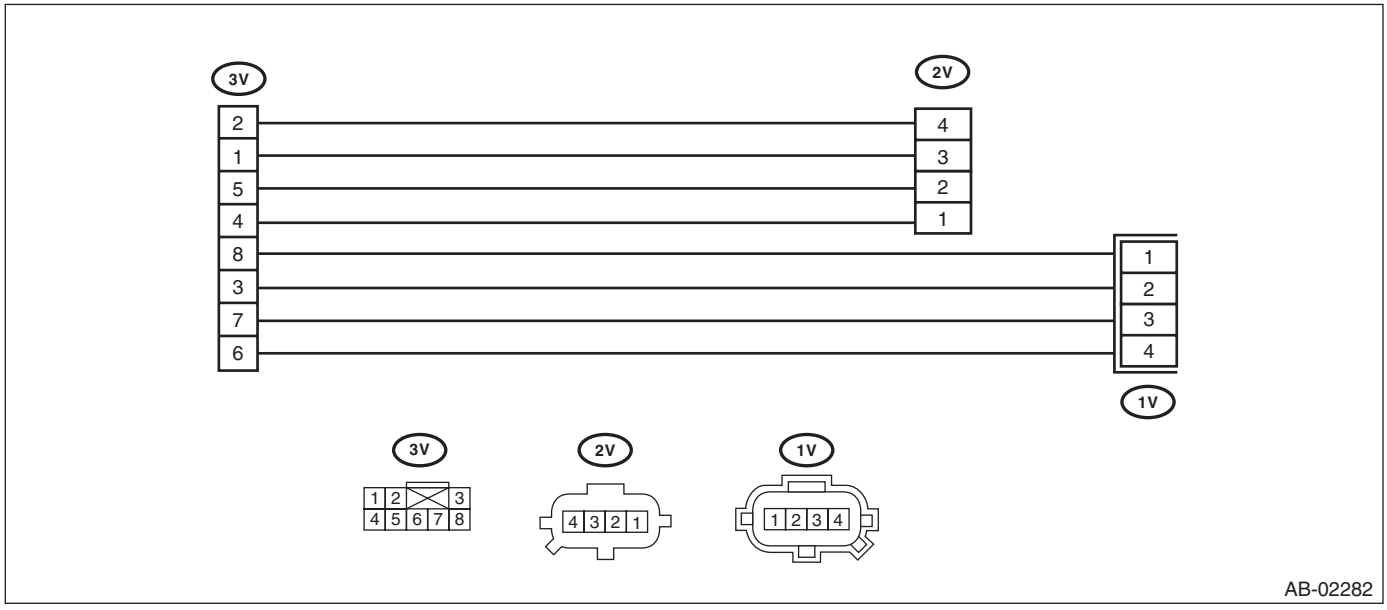

- AIRBAG RESISTOR

ILLUSTRATION	TOOL NUMBER	DESCRIPTION	REMARKS
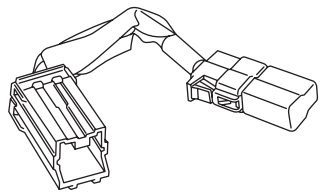 ST98299PA040	98299PA040	AIRBAG RESISTOR	Used in replacement of airbag module for which resistance value is same as airbag module. Two STs are required for diagnosis of two-stage inflator type airbag module.

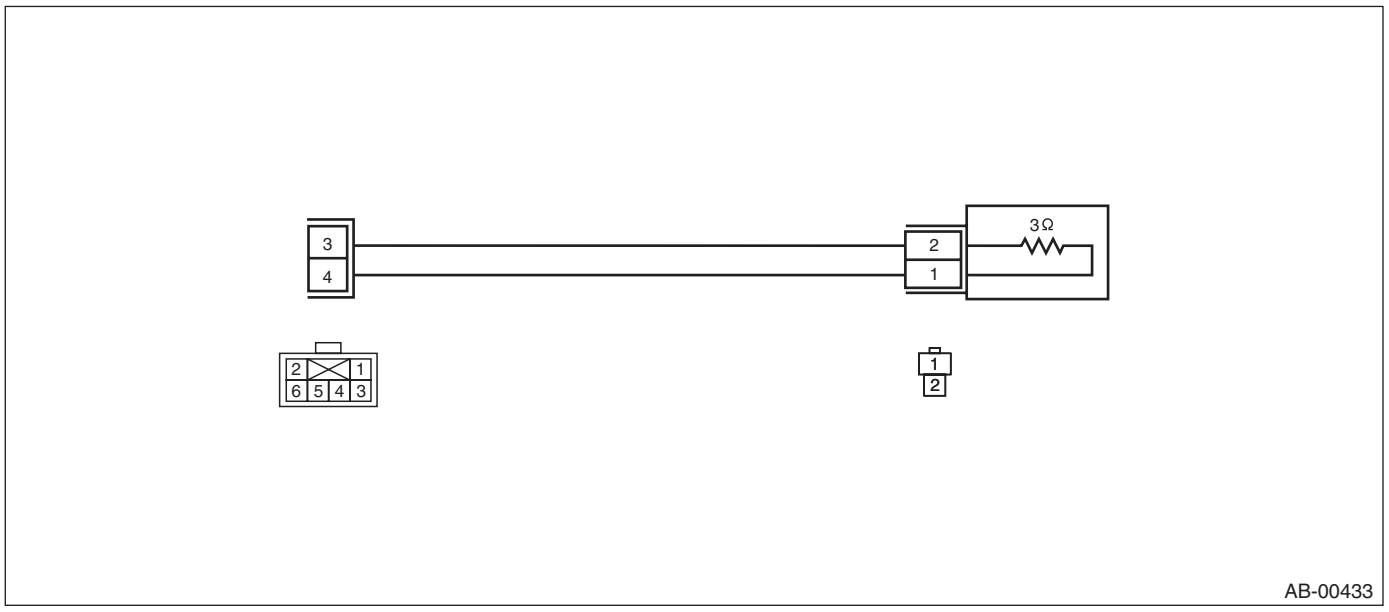

- TEST HARNESS AJ

ILLUSTRATION	TOOL NUMBER	DESCRIPTION	REMARKS
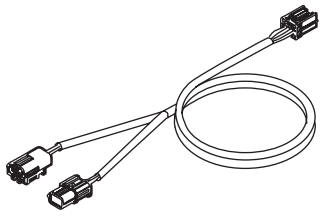 ST98299FG000	98299FG000	TEST HARNESS AJ	Used when measuring power supply and resistance of side airbag harness.

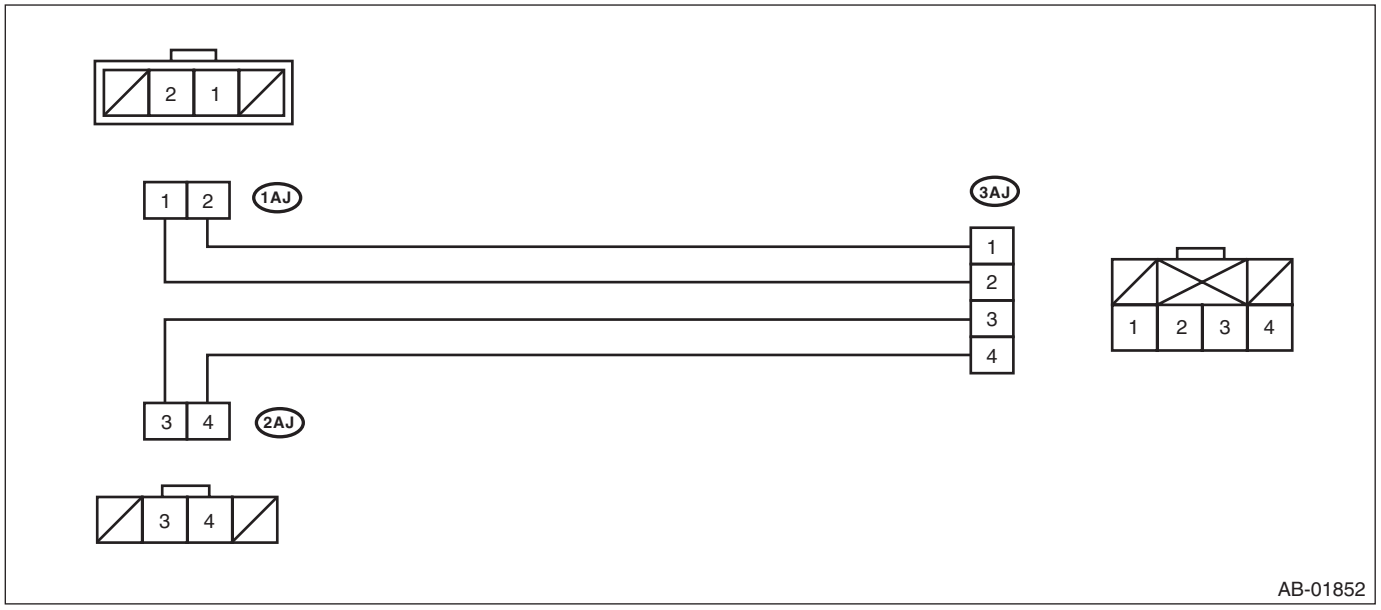

- TEST HARNESS AI

ILLUSTRATION	TOOL NUMBER	DESCRIPTION	REMARKS
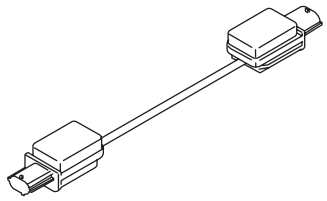 ST98299AG090	98299AG090	TEST HARNESS AI	• Used for diagnoses of side airbag sensor and curtain airbag sensor. • Used together with test harness V.

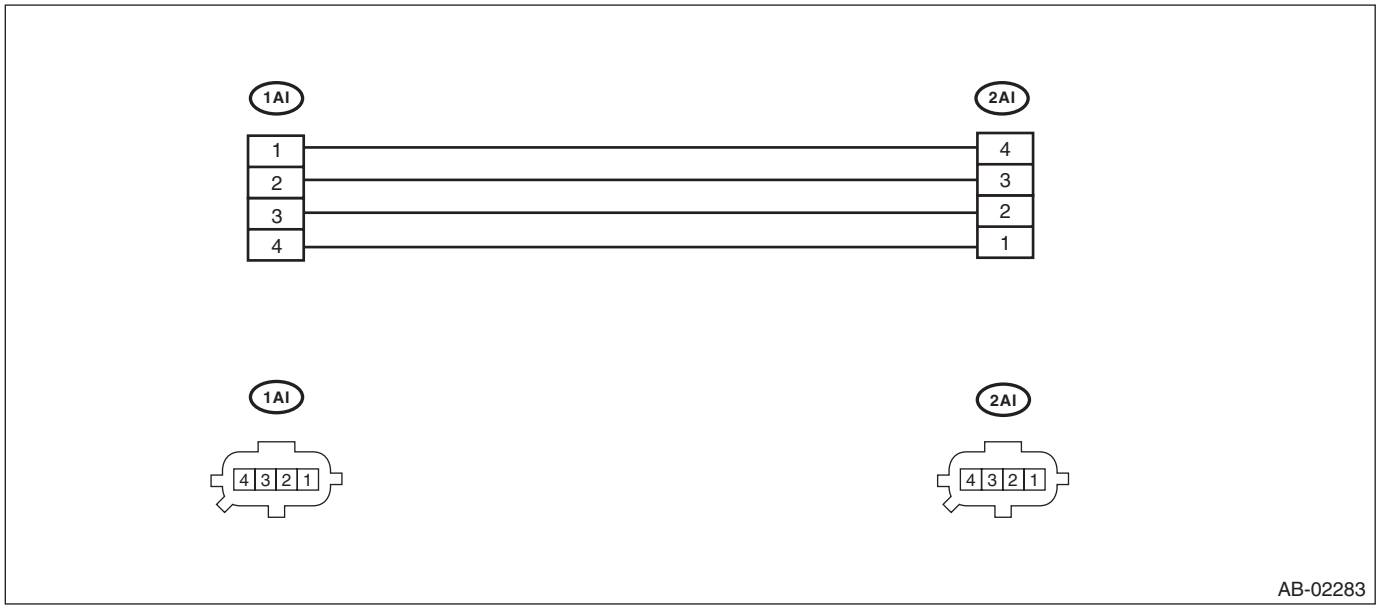

- TEST HARNESS AD

ILLUSTRATION	TOOL NUMBER	DESCRIPTION	REMARKS
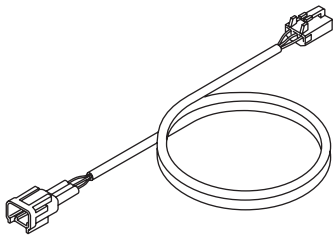 ST98299XA020	98299XA020	TEST HARNESS AD	Used when measuring voltage and resistance of occupant detection system.

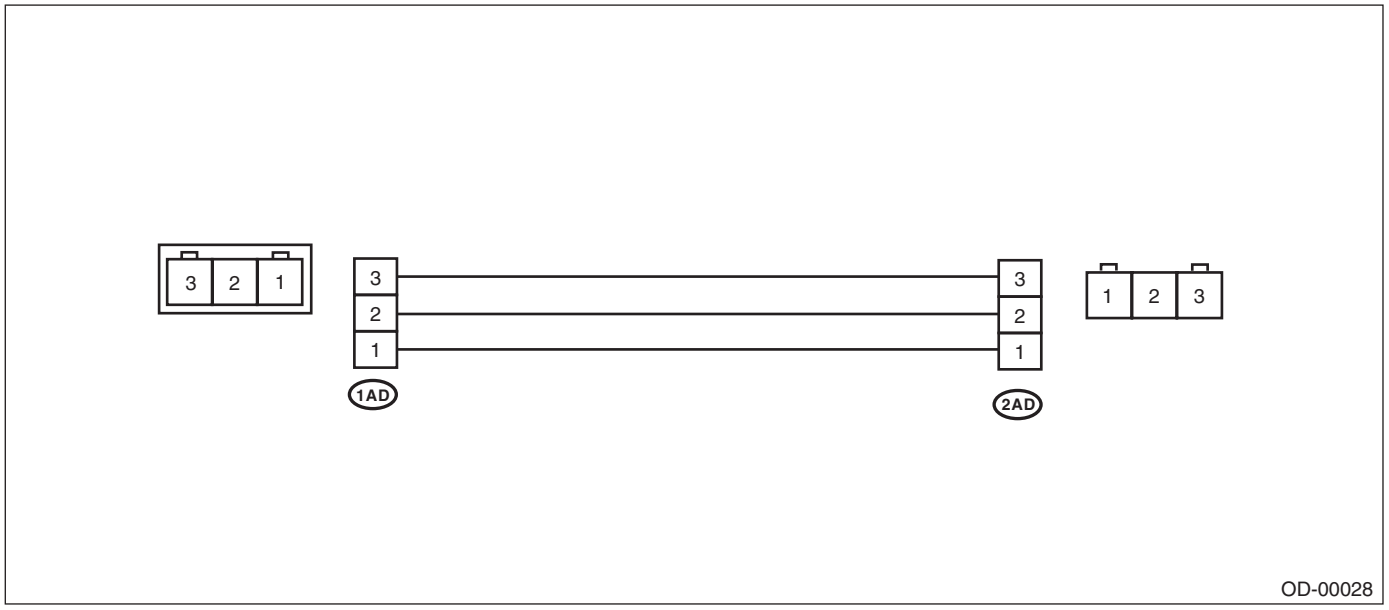

2. GENERAL TOOL

TOOL NAME	REMARKS
Circuit tester	Used for measuring resistance, voltage and current.
Oscilloscope	Used for measuring the sensor.

5. Electrical Component Location

A: LOCATION

- Type A

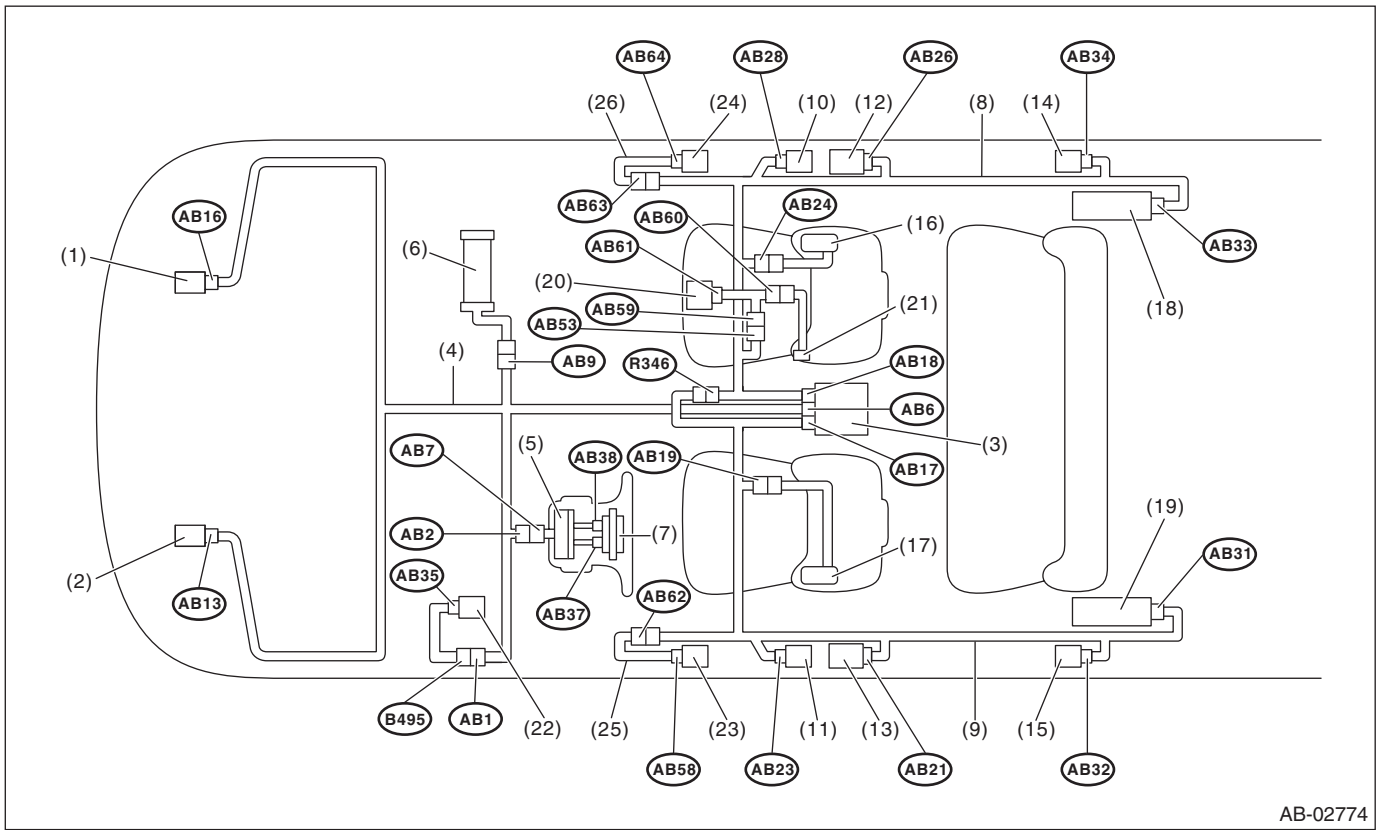

- Type B (OUTBACK model)

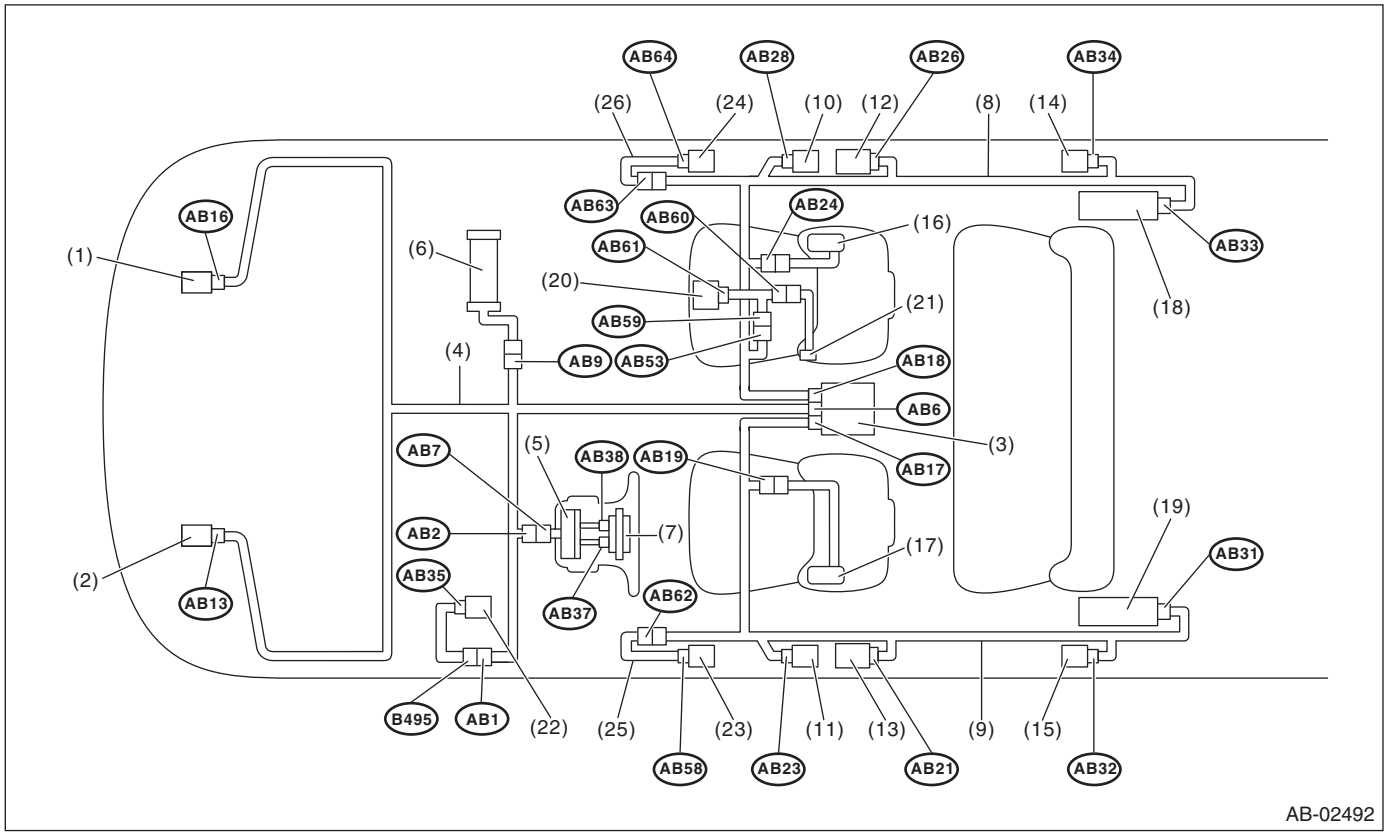

- Type B (Sedan model)

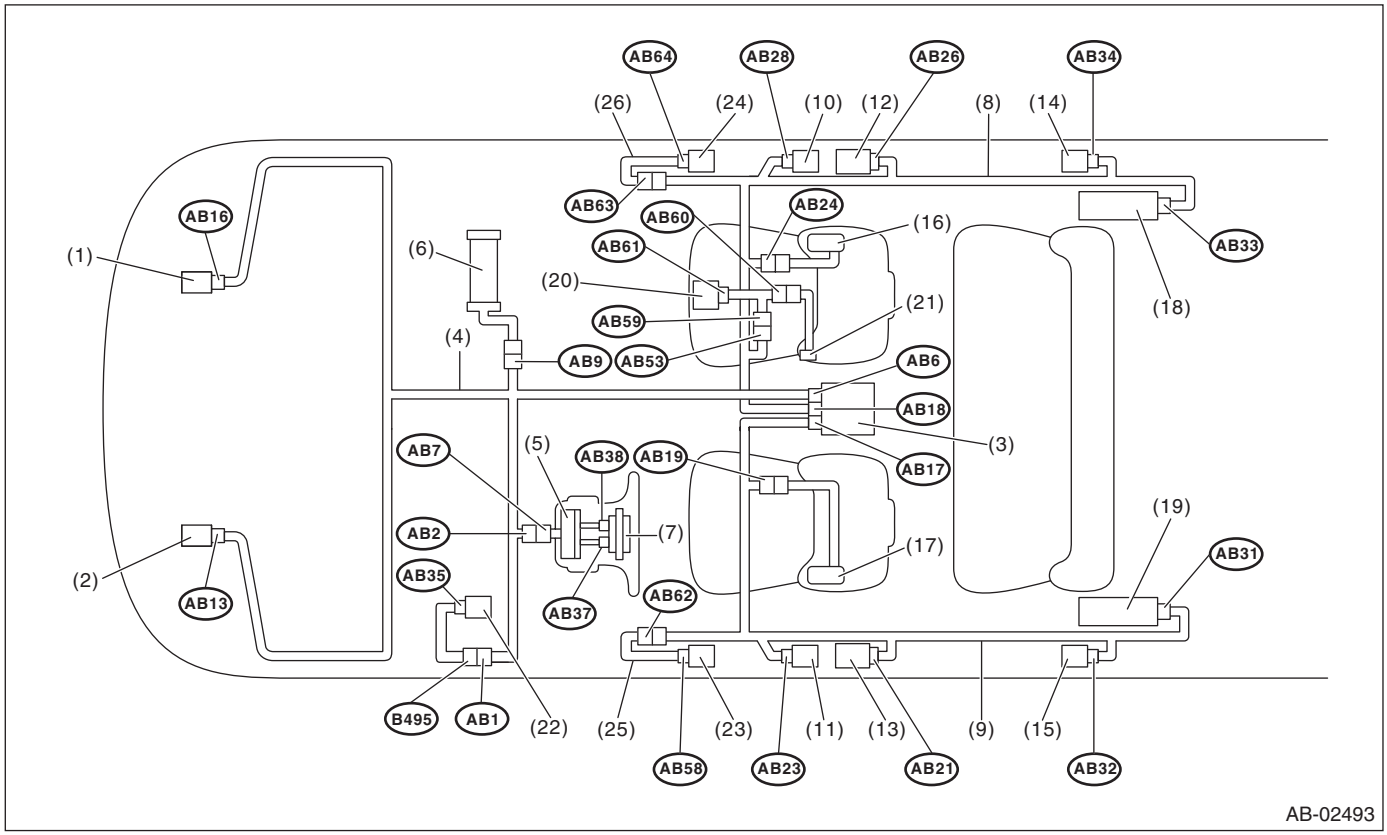

(1) Front sub sensor (RH)
(2) Front sub sensor (LH)
(3) Airbag control module
(4) Airbag main harness
(5) Roll connector
(6) Passenger's airbag inflator
(7) Driver's airbag inflator
(8) Airbag rear harness (RH)
(9) Airbag rear harness (LH)
(10) Side airbag sensor (RH)
(11) Side airbag sensor (LH)
(12) Seat belt pretensioner (RH)
(13) Seat belt pretensioner (LH)
(14) Curtain airbag sensor (RH)
(15) Curtain airbag sensor (LH)
(16) Side airbag inflator (RH)
(17) Side airbag inflator (LH)
(18) Curtain airbag inflator (RH)
(19) Curtain airbag inflator (LH)
(20) Occupant detection control module
(21) Buckle switch (RH)
(22) Fuse box
(23) Front door impact sensor (LH)
(24) Front door impact sensor (RH)
(25) Door harness (LH)
(26) Door harness (RH)

Connector No.	(AB1)	(AB2)	(AB6)	(AB7)	(AB9)	(AB13)	(AB16)	(AB17)	(AB18)	(AB19)	(AB21)	(AB23)
Pin	10	4	30	4	4	2	2	15 or 24	15 or 24	4	2	4
Color	Gray	Yellow	Yellow	Yellow	Yellow	Yellow	Yellow	Yellow	Yellow	Yellow	Black	Yellow
Male/Female	Female	Female	Female	Male	Female	Female	Female	Female	Female	Female	Female	Female
Connector No.	(AB24)	(AB26)	(AB28)	(AB31)	(AB32)	(AB33)	(AB34)	(AB35)	(AB37)	(AB38)	(AB53)	(AB58)
Pin	4	2	4	2	4	2	4	2	2	2	3	2
Color	Yellow	Black	Yellow	Black	Yellow	Black	Yellow	★	Orange	Black	Brown	Yellow
Male/Female	Female	Female	Female	Female	Female	Female	Female	Female	Female	Female	Female	Female
Connector No.	(AB59)	(AB60)	(AB61)	(AB62)	(AB63)	(AB64)	(R346)					
Pin	3	2	10	2	2	2	6					
Color	Brown	Yellow	Black	Yellow	Yellow	Yellow	★					
Male/Female	Male	Male	Female	Female	Female	Female	Female					
★: White or natural color												

6. Airbag Connector

A: PROCEDURE

For operation procedures, refer to “Airbag Connector” of Airbag System. <Ref. to AB-18, Airbag Connector.>

7. Airbag Control Module I/O Signal

A: ELECTRICAL SPECIFICATION

- Type A

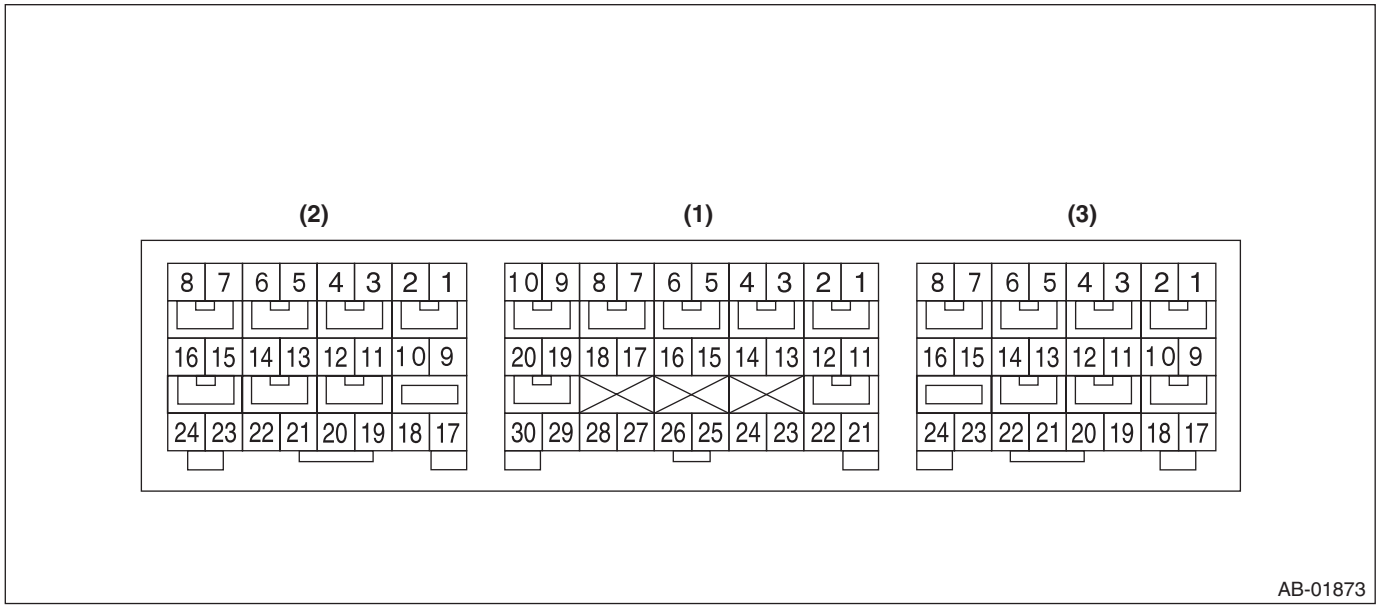

- Terminal numbers in airbag control module connector are shown in the figure.
- The airbag warning light illuminates when the connector is removed from the airbag control module.

Item		Control module terminal No.
Data link connector		(1) — 16
Combination meter		(1) — 11
Ignition power supply	Dedicated fuse	(1) — 21
Passenger's airbag module level one	+	(1) — 4
	–	(1) — 3
Passenger's airbag module level two	+	(1) — 1
	–	(1) — 2
Driver's airbag module level one	+	(1) — 5
	–	(1) — 6
Driver's airbag module level two	+	(1) — 8
	–	(1) — 7
Front sub sensor LH	+	(1) — 30
	–	(1) — 28
Front sub sensor RH	+	(1) — 29
	–	(1) — 27
Ground line (GND)		(1) — 25
		(1) — 26
Passenger's airbag ON indicator		(1) — 23
Passenger's airbag OFF indicator		(1) — 17
Passenger's seat belt warning		(1) — 15
Side airbag sensor LH Curtain airbag sensor LH Front door impact sensor LH	+	(3) — 17
	–	(3) — 18
Side airbag module LH	+	(3) — 8
	–	(3) — 7
Curtain airbag module LH	+	(3) — 5
	–	(3) — 6

Item		Control module terminal No.
Seat belt pretensioner LH	+	(3) — 4
	–	(3) — 3
Side airbag sensor RH Curtain airbag sensor RH Front door impact sensor RH	+	(2) — 24
	–	(2) — 23
Seat belt pretensioner RH	+	(2) — 5
	–	(2) — 6
Side airbag module RH	+	(2) — 1
	–	(2) — 2
Curtain airbag module RH	+	(2) — 4
	–	(2) — 3
Occupant detection control module	+	(3) — 16
	–	(3) — 24

- Type B (OUTBACK model)

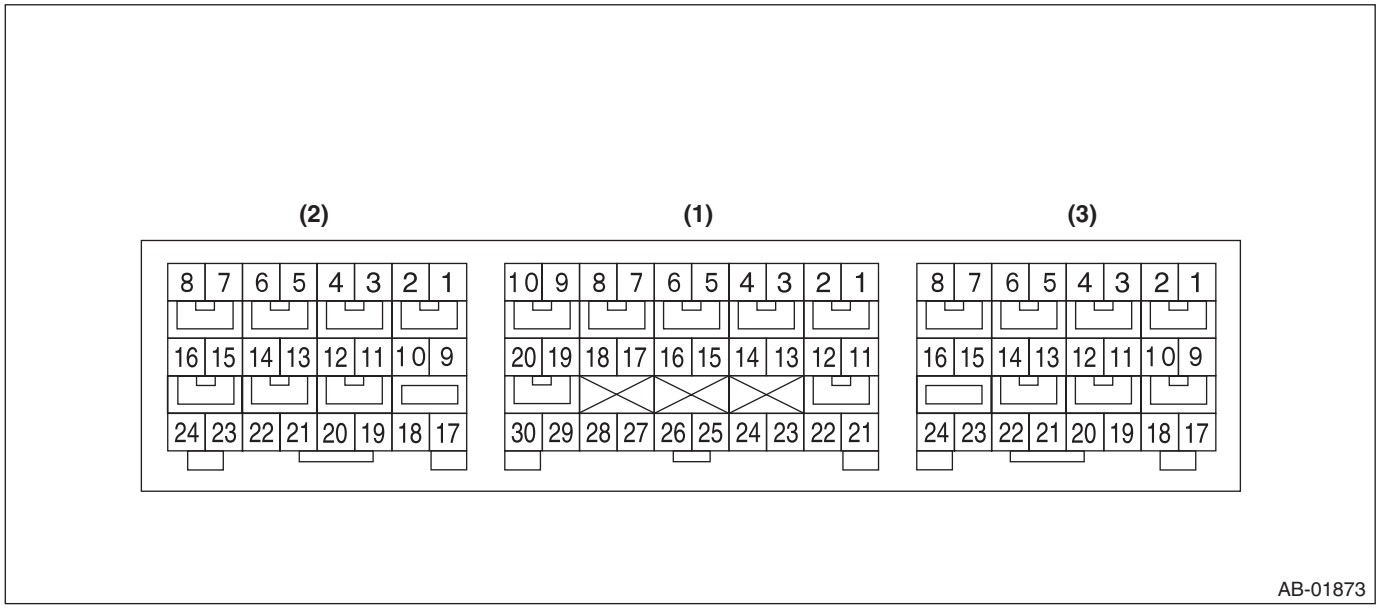

- Terminal numbers in airbag control module connector are shown in the figure.
- The airbag warning light illuminates when the connector is removed from the airbag control module.

Item		Control module terminal No.
Data link connector		(1) — 16
Combination meter		(1) — 11
Ignition power supply	Dedicated fuse	(1) — 21
Passenger's airbag module level one	+	(1) — 4
	–	(1) — 3
Passenger's airbag module level two	+	(1) — 1
	–	(1) — 2
Driver's airbag module level one	+	(1) — 5
	–	(1) — 6
Driver's airbag module level two	+	(1) — 8
	–	(1) — 7
Front sub sensor LH	+	(1) — 30
	–	(1) — 28
Front sub sensor RH	+	(1) — 29
	–	(1) — 27

Item		Control module terminal No.
Ground line (GND)		(1) — 25
		(1) — 26
Passenger's airbag ON indicator		(1) — 23
Passenger's airbag OFF indicator		(1) — 17
Passenger's seat belt warning		(1) — 15
Side airbag sensor LH Curtain airbag sensor LH Front door impact sensor LH	+	(3) — 17
	–	(3) — 18
Side airbag module LH	+	(3) — 8
	–	(3) — 7
Curtain airbag module LH	+	(3) — 5
	–	(3) — 6
Seat belt pretensioner LH	+	(3) — 4
	–	(3) — 3
Side airbag sensor RH Curtain airbag sensor RH Front door impact sensor RH	+	(2) — 24
	–	(2) — 23
Seat belt pretensioner RH	+	(2) — 5
	–	(2) — 6
Side airbag module RH	+	(2) — 1
	–	(2) — 2
Curtain airbag module RH	+	(2) — 4
	–	(2) — 3
Occupant detection control module	+	(2) — 9
	–	(2) — 17

- Type B (Sedan model)

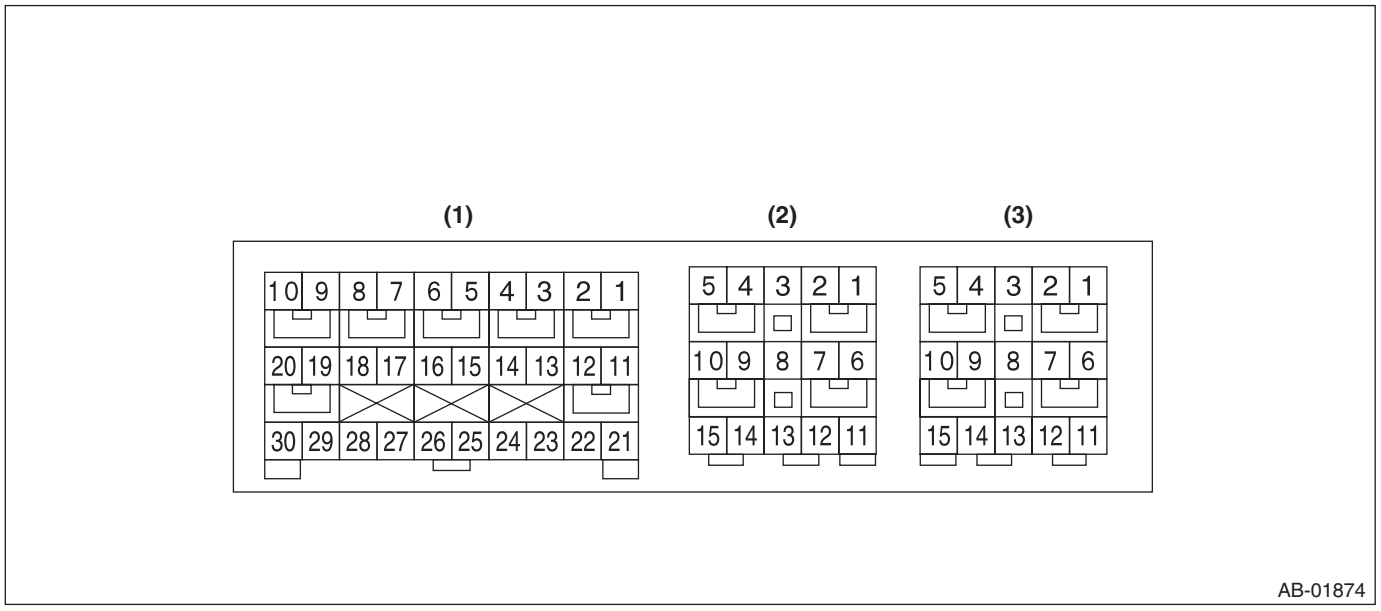

- Terminal numbers in airbag control module connector are shown in the figure.
- The airbag warning light illuminates when the connector is removed from the airbag control module.

Item		Control module terminal No.
Data link connector		(1) — 16
Combination meter		(1) — 11
Ignition power supply	Dedicated fuse	(1) — 21

Item		Control module terminal No.
Passenger's airbag module level one	+	(1) — 4
	–	(1) — 3
Passenger's airbag module level two	+	(1) — 1
	–	(1) — 2
Driver's airbag module level one	+	(1) — 5
	–	(1) — 6
Driver's airbag module level two	+	(1) — 8
	–	(1) — 7
Front sub sensor LH	+	(1) — 30
	–	(1) — 28
Front sub sensor RH	+	(1) — 29
	–	(1) — 27
Ground line (GND)		(1) — 25
		(1) — 26
Passenger's airbag ON indicator		(1) — 23
Passenger's airbag OFF indicator		(1) — 17
Passenger's seat belt warning		(1) — 15
Seat belt pretensioner LH	+	(3) — 4
	–	(3) — 5
Side airbag sensor LH Curtain airbag sensor LH Front door impact sensor LH	+	(3) — 8
	–	(3) — 11
Side airbag module LH	+	(3) — 7
	–	(3) — 6
Curtain airbag module LH	+	(3) — 9
	–	(3) — 10
Seat belt pretensioner RH	+	(2) — 2
	–	(2) — 1
Side airbag sensor RH Curtain airbag sensor RH Front door impact sensor RH	+	(2) — 8
	–	(2) — 15
Side airbag module RH	+	(2) — 9
	–	(2) — 10
Curtain airbag module RH	+	(2) — 7
	–	(2) — 6
Occupant detection control module	+	(2) — 14
	–	(2) — 13

B: WIRING DIAGRAM

Refer to the WI section wiring diagram. <Ref. to WI-45, WIRING DIAGRAM, Airbag System.>

8. Subaru Select Monitor

A: OPERATION

For operation procedures, refer to the “PC application help for Subaru Select Monitor”.

B: INSPECTION

1. COMMUNICATION FOR INITIALIZING IMPOSSIBLE

DTC DETECTING CONDITION:
Defective harness connector
TROUBLE SYMPTOM:
Communication is impossible between the airbag control module and the Subaru Select Monitor.

CAUTION:
Before performing diagnosis, refer to "CAUTION" in "General Description". <Ref. to AB(diag)-5, CAUTION, General Description.>
WIRING DIAGRAM:

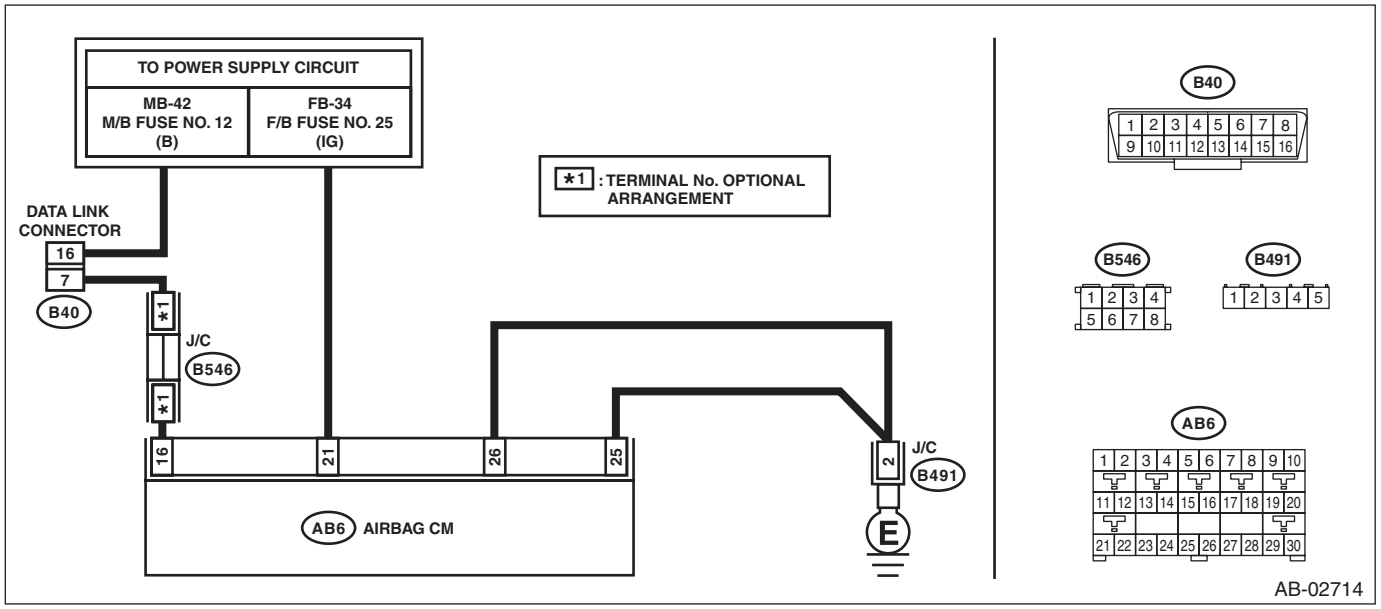

	Step	Check	Yes	No
1	**CHECK IGNITION SWITCH.**	Is the ignition switch ON?	Go to step **2**.	Turn the ignition switch to ON, and select the airbag mode using the Subaru Select Monitor.
2	**CHECK BATTERY.** 1) Turn the ignition switch to OFF. 2) Measure the battery voltage.	Is the voltage 11 V or more?	Go to step **3**.	Charge or replace the battery.
3	**CHECK BATTERY TERMINAL.**	Is there poor contact at battery terminal?	Repair or tighten the battery terminal.	Go to step **4**.
4	**CHECK SUBARU SELECT MONITOR COMMUNICATION.** 1) Turn the ignition switch to ON. 2) Using the Subaru Select Monitor, check whether communication to other systems can be executed normally.	Is the system name displayed on Subaru Select Monitor?	Go to step **11**.	Go to step **5**.
5	**CHECK SUBARU SELECT MONITOR.**	Is Subaru Select Monitor powered on?	Go to step **7**.	Go to step **6**.
6	**CHECK FUSE.** Remove fuse No. 12 from the fuse & relay box, and perform visual inspection.	Is the fuse OK?	Repair the harness between the battery and the data link connector.	Replace the fuse. If the fuse is blown out again, check the power supply circuit.

	Step	Check	Yes	No
7	**CHECK AIRBAG CONTROL MODULE CONNECTOR.** 1) Turn the ignition switch to OFF, disconnect the battery ground cable, and wait for 60 seconds or more. 2) Confirm that the connectors of airbag control module (AB6, AB17, AB18) are securely connected.	Is the connector of the airbag control module securely connected?	Go to step **8**.	Connect the connector of the airbag control module.
8	**CHECK SUBARU SELECT MONITOR COMMUNICATION.** 1) Disconnect the airbag control module connector. 2) Connect the battery ground terminal. 3) Turn the ignition switch to ON. 4) Check whether communication to other systems can be executed normally.	Is the system name displayed on Subaru Select Monitor?	Replace the airbag control module. <Ref. to AB-68, Airbag Control Module.>	Go to step **9**.
9	**CHECK HARNESS CONNECTOR BETWEEN EACH CONTROL MODULE AND DATA LINK CONNECTOR.** 1) Turn the ignition switch to OFF. 2) Disconnect the airbag control module, VDCCM&H/U, body integrated unit, impact sensor, TPMS CM, power steering CM, ECM and TCM. 3) Measure the resistance between data link connector and chassis ground. ***Connector & terminal*** ***(B40) No. 7 — Chassis ground:***	Is the resistance 1 MΩ or more?	Go to step **10**.	Repair the harness and connector between each control module and data link connector. (Replace the entire harness if repair is necessary for airbag harness.)
10	**CHECK OUTPUT SIGNAL TO THE AIRBAG CONTROL MODULE.** 1) Turn the ignition switch to ON in the condition of step 9. 2) Measure the voltage between data link connector and chassis ground. ***Connector & terminal*** ***(B40) No. 7 (+) — Chassis ground (–):***	Is the voltage less than 1 V?	Repair each control module.	Repair the harness and connector between each control module and data link connector. (Replace the entire harness if repair is necessary for airbag harness.)
11	**CHECK FUSE.** Remove fuse No. 25 from the fuse & relay box, and perform visual inspection.	Is the fuse OK?	Go to step **12**.	Replace the fuse. If the fuse is blown out again, check the power supply circuit.
12	**CHECK AIRBAG CONTROL MODULE CONNECTOR.** 1) Turn the ignition switch to OFF, disconnect the battery ground cable, and wait for 60 seconds or more. 2) Confirm that the connectors of airbag control module (AB6, AB17, AB18) are securely connected.	Is the connector of the airbag control module securely connected?	Go to step **13**.	Connect the connector of the airbag control module.

	Step	Check	Yes	No
13	**CHECK THE HARNESS BETWEEN THE AIRBAG CONTROL MODULE AND DATA LINK CONNECTOR.** 1) Disconnect the connectors (AB6, AB17, AB18) from airbag control module. 2) Connect the connector (1AG) in the test harness AG to the connectors (AB6, AB17, AB18). NOTE: For type B (sedan models), connect test harness AH between the connectors (AB6, AB17, AB18) and (1AG). 3) Measure the resistance between connector (4AG) in the test harness AG and the data link connector. ***Connector & terminal*** ***(4AG) No. 1 — (B40) No. 7:***	Is the resistance less than 10 Ω?	Go to step **14**.	Repair the harness between the airbag control module and the data link connector. Or replace the airbag main harness along with the bulkhead harness.
14	**CHECK POWER SUPPLY CIRCUIT.** 1) Turn the ignition switch to ON. 2) Measure the voltage between connector (2AG) in the test harness AG and chassis ground. ***Connector & terminal*** ***(2AG) No. 1 (+) — Chassis ground (–):***	Is the voltage 10 V or more?	Go to step **15**.	Repair the harness between the airbag control module and the battery. Or replace the airbag main harness along with the bulkhead harness.
15	**CHECK BETWEEN AIRBAG CONTROL MODULE AND CHASSIS GROUND.** 1) Turn the ignition switch to OFF. 2) Measure the resistance between connector (2AG) in the test harness AG and chassis ground. ***Connector & terminal*** ***(2AG) No. 4 — Chassis ground:*** ***(2AG) No. 3 — Chassis ground:***	Is the resistance less than 10 Ω?	Go to step **16**.	Repair the harness between the airbag control module and the chassis ground. Or replace the airbag main harness along with the bulkhead harness.
16	**CHECK POOR CONTACT OF CONNECTOR.**	Is there poor contact of the control module power supply, ground circuit and data link connector?	Repair the connector. (Replace the harness instead of repairing the airbag system connector.)	Replace the airbag control module. <Ref. to AB-68, REMOVAL, Airbag Control Module.>

9. Read Diagnostic Trouble Code (DTC)

A: OPERATION

For operation procedures, refer to the “PC application help for Subaru Select Monitor”.

NOTE:
For details concerning DTCs, refer to List of Diagnostic Trouble Codes (DTC). <Ref. to AB(diag)-41, List of Diagnostic Trouble Code (DTC).>

10.Inspection Mode

A: PROCEDURE

Recreate the circumstance by referring to the conditions described in the checklist.

11.Clear Memory Mode

A: OPERATION

For operation procedures, refer to the “PC application help for Subaru Select Monitor”.

NOTE:
Clear the DTC stored in the airbag control module after repairing the airbag system.

12.Display of Status Information

A: OPERATION

Check the operating condition of each sensor in the event of malfunction in the seat belt buckle switch, or when the seat belt buckle switch has been replaced.
1) On «Main Menu» display, select {Each System Check}.
2) On «System Selection Menu» display, select {Airbag System}.
3) On «Airbag System» display, select {Status Data}.
The following table is for support data.

Item	Display
Seat position sensor LH	—*2
Seat position sensor RH	—*2
Seat belt buckle switch LH	—*6
Seat belt buckle switch RH	Latched*3 / Not Latched*4 / Others*5 / Initial setting*1 /—*6
Passenger's airbag control status	ON*7 / OFF*8 / Initial setting*1

*1: Displayed when it is initial.
*2: Seat position sensor not supported
*3: Seat belt fastened
*4: Seat belt not fastened
*5: Displayed when data other than belt fastened or not fastened, such as breakdowns is input.
*6: Seat belt buckle switch not supported
*7: Passenger's airbag operating state
*8: Passenger's airbag non-operating state

NOTE:
For detailed operation procedures, refer to "PC application help for Subaru Select Monitor".

13.Airbag Warning Light Illumination Pattern

A: INSPECTION

Turn the ignition switch to ON, and confirm that the airbag warning light remains on for approx. 6 seconds then turns off afterwards.

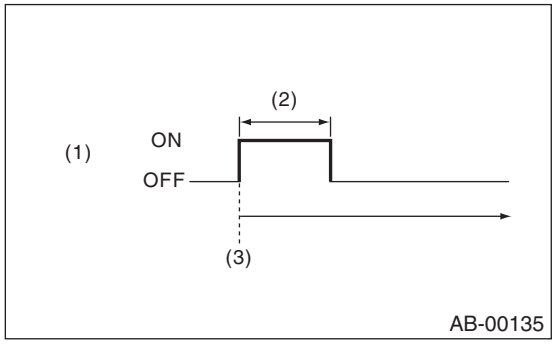

(1) Airbag warning light
(2) Approx. 6 sec.
(3) Ignition switch ON

14.Airbag Warning Light Failure

A: AIRBAG WARNING LIGHT REMAINS ON

DETECTING CONDITION:

- Airbag warning light is faulty.
- Airbag control module to airbag warning light circuit is shorted or open.
- Grounding circuit is faulty.
- Airbag control module is faulty.
- Connector connection is improper.
- Connections of (AB6, AB17, AB18) to airbag control module are improper.

CAUTION:
Before performing diagnosis, refer to "CAUTION" in "General Description". <Ref. to AB(diag)-5, CAUTION, General Description.>
WIRING DIAGRAM:

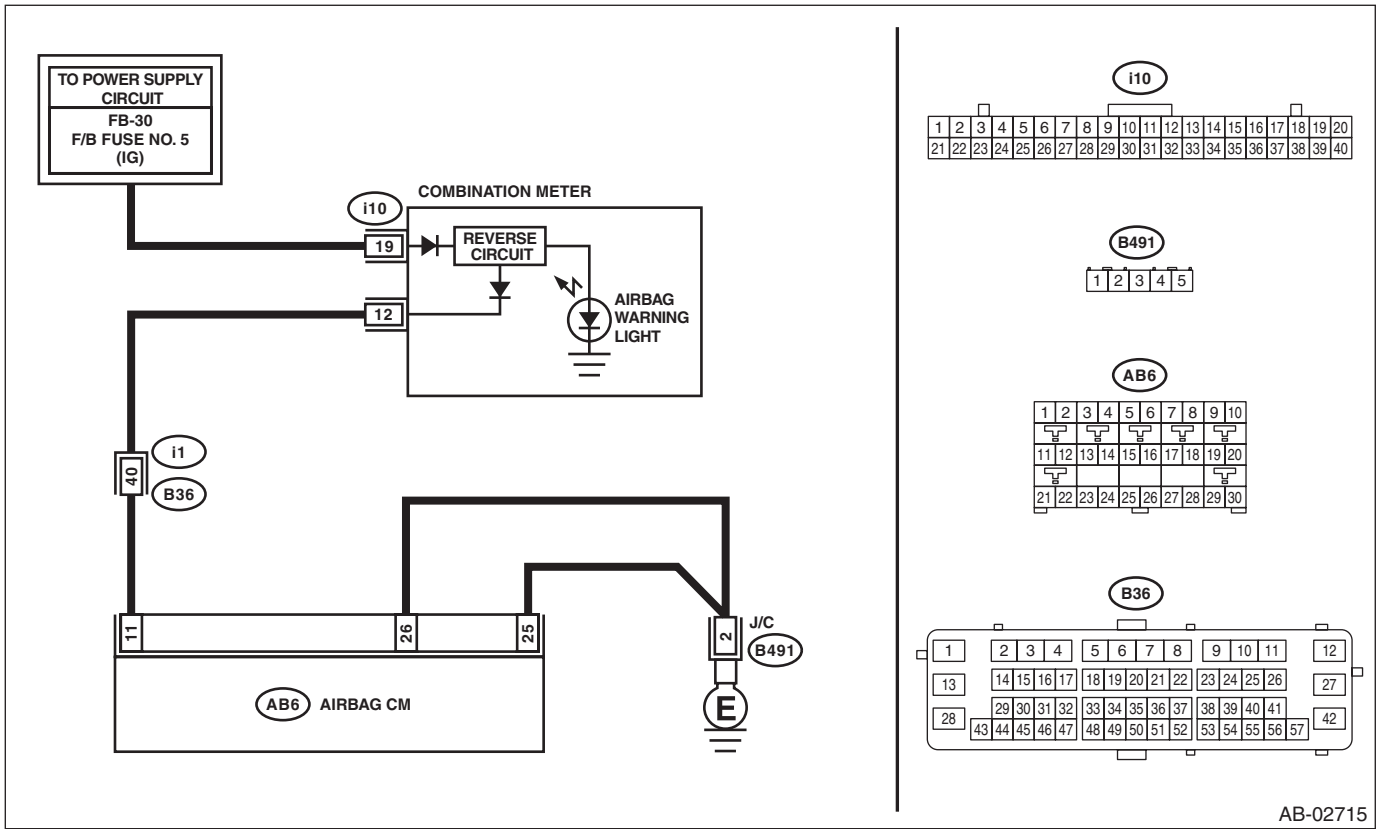

Step		Check	Yes	No
1	**READ DTC.** Read the DTC. <Ref. to AB(diag)-32, Read Diagnostic Trouble Code (DTC).>	Is DTC displayed?	Perform the diagnosis according to DTC.	Go to step **2**.
2	**CHECK FOR POOR CONTACT.** 1) Turn the ignition switch to OFF, disconnect the battery ground cable, and wait for 60 seconds or more. 2) Check that the airbag control module and the connectors (AB6, AB17, AB18) are securely connected.	Are there poor contact of connectors (AB6, AB17, AB18)?	If the faulty connector contact remains, replace the airbag main harness along with body harness or replace the airbag control module. <Ref. to AB-68, Airbag Control Module.>	Go to step **3**.

	Step	Check	Yes	No
3	**CHECK AIRBAG MAIN HARNESS.** 1) Remove the instrument panel lower cover and column cover, and disconnect the connectors (AB7) and (AB2). 2) Remove the console front panel and disconnect the connector (AB9). 3) Disconnect the connectors (AB6, AB17, AB18) from the airbag control module, and connect the connector (1AG) in the test harness AG. NOTE: For type B (sedan models), connect test harness AH between the connectors (AB6, AB17, AB18) and (1AG). 4) Connect the battery ground terminal and turn the ignition switch to ON. 5) Connect the connectors (7AG) and (8AG) in the test harness AG. NOTE: After the fault has been cleared, disconnect the connectors (7AG) and (8AG).	Does the airbag warning light go off?	Go to step **4**.	Go to step **5**.
4	**CHECK GROUND CIRCUIT.** Measure the resistance between connector (2AG) in the test harness AG and chassis ground. ***Connector & terminal*** ***(2AG) No. 4 — Chassis ground:*** ***(2AG) No. 3 — Chassis ground:***	Is the resistance less than 10 Ω?	Replace the airbag control module. <Ref. to AB-68, Airbag Control Module.>	Repair the chassis ground circuit.
5	**CHECK AIRBAG MAIN HARNESS AND BULKHEAD HARNESS.** 1) Disconnect the connectors (7AG) and (8AG). 2) Remove the combination meter. 3) Measure the resistance between the combination meter connector and test harness AG connector (2AG). ***Connector & terminal*** ***(2AG) No. 5 — (i10) No. 12:***	Is the resistance less than 10 Ω?	Check the combination meter.	Go to step **6**.
6	**CHECK POOR CONTACT OF CONNECTOR.** 1) Turn the ignition switch to OFF, disconnect the battery ground terminal, and wait 60 seconds or more. 2) Confirm that there is a firm contact between connectors (AB1) and (B495).	Is there poor contact of connector?	Repair the bulkhead harness or replace the airbag main harness along with bulkhead harness.	Go to step **7**.
7	**CHECK AIRBAG MAIN HARNESS.** Check the airbag main harness for defect.	Is there any defect in the airbag main harness?	Replace the airbag main harness along with bulkhead harness.	Repair the bulkhead harness.

B: AIRBAG WARNING LIGHT REMAINS OFF

DETECTING CONDITION:

- Fuse No. 5 (in fuse & relay box) is blown out.
- Body harness circuit is open.
- Airbag warning light is faulty.
- Airbag main harness is faulty.
- Airbag control module is faulty.

CAUTION:
Before performing diagnosis, refer to "CAUTION" in "General Description". <Ref. to AB(diag)-5, CAUTION, General Description.>
WIRING DIAGRAM:

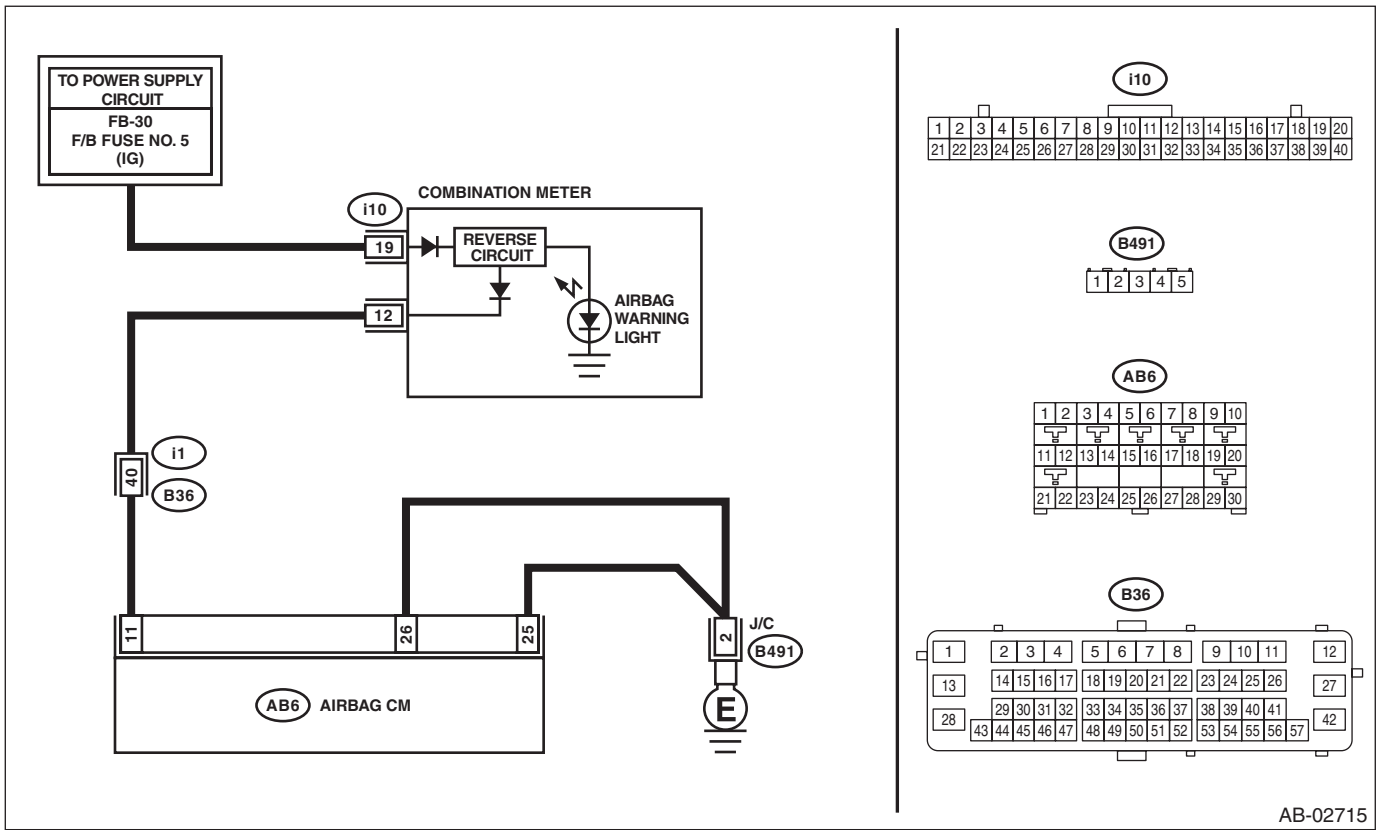

	Step	Check	Yes	No
1	**CHECK COMBINATION METER.** Turn the ignition switch to ON, and confirm that warning lights of combination meter illuminate.	Do warning lights except for airbag illuminate?	Go to step **2**.	Check the combination meter.
2	**CHECK DTC.** Read the DTC. <Ref. to AB(diag)-32, Read Diagnostic Trouble Code (DTC).>	Is DTC displayed?	Perform the diagnosis according to DTC.	Go to step **3**.
3	**CHECK FUSE.** Remove fuse No. 5 from the fuse & relay box, and perform visual inspection.	Is the fuse OK?	Go to step **4**.	Replace the fuse. If the fuse is blown out again, go to step 4.
4	**CHECK AIRBAG WARNING LIGHT CIRCUIT (IN COMBINATION METER).** 1) Turn the ignition switch to OFF, disconnect the battery ground cable, and wait for 60 seconds or more. 2) Disconnect the connectors (i1) and (B36). 3) Connect the battery ground terminal and turn the ignition switch to ON.	Does airbag warning light illuminate?	Go to step **5**.	Check the combination meter and instrument panel harness.

	Step	Check	Yes	No
5	**CHECK AIRBAG MAIN HARNESS.** 1) Turn the ignition switch to OFF, disconnect the battery ground cable, and wait for 60 seconds or more. 2) Connect the connectors (i1) and (B36). 3) Disconnect the connectors (AB6, AB17, AB18) from airbag control module. 4) Connect the battery ground terminal and turn the ignition switch to ON.	Does airbag warning light illuminate?	Replace the airbag control module. <Ref. to AB-68, Airbag Control Module.>	Replace the airbag main harness along with bulkhead harness.

15.List of Diagnostic Trouble Code (DTC)

A: LIST

DTC	Item	Content of diagnosis	Reference
11	Driver's Airbag failure	A type • Airbag main harness circuit is open, shorted or shorted to ground. • Airbag module harness (Driver's side) circuit is open, shorted or shorted to ground. • Roll connector circuit is open, shorted or shorted to ground. • Airbag control module is faulty. • Driver's airbag module is faulty. B type • Airbag main harness circuit is shorted to ground. • Airbag module harness (driver's side) circuit is shorted to ground. • Roll connector circuit is shorted to ground. • Driver's airbag module is faulty. • Airbag control module is faulty.	<Ref. to AB(diag)-49, DTC 11 DRIVER'S AIRBAG FAILURE, Diagnostic Chart with Trouble Code.>
12	Passenger's Airbag failure	A type • Airbag main harness circuit is open, shorted or shorted to ground. • Airbag module harness (passenger's side) circuit is open, shorted or shorted to ground. • Airbag control module is faulty. • Passenger's airbag module is faulty. B type • Airbag main harness circuit is shorted to ground. • Airbag module harness (passenger's side) circuit is shorted to ground. • Passenger's airbag module is faulty. • Airbag control module is faulty.	<Ref. to AB(diag)-54, DTC 12 PASSENGER'S AIRBAG FAILURE, Diagnostic Chart with Trouble Code.>
15	Driver's Airbag failure	• Airbag main harness circuit is shorted to power supply. • Airbag module harness circuit (driver's side) is shorted to power supply. • Roll connector circuit is shorted to power supply. • Driver's airbag module is faulty. • Airbag control module is faulty.	<Ref. to AB(diag)-58, DTC 15 DRIVER'S AIRBAG FAILURE, Diagnostic Chart with Trouble Code.>
16	Passenger's Airbag failure	• Airbag main harness circuit is shorted to power supply. • Airbag module harness (passenger's side) circuit is shorted to power supply. • Passenger's airbag module is faulty. • Airbag control module is faulty.	<Ref. to AB(diag)-60, DTC 16 PASSENGER'S AIRBAG FAILURE, Diagnostic Chart with Trouble Code.>
1A	Driver's Airbag failure	• Airbag main harness circuit is shorted. • Airbag module harness (driver's side) circuit is shorted. • Roll connector circuit is shorted. • Driver's airbag module is faulty. • Airbag control module is faulty.	<Ref. to AB(diag)-62, DTC 1A DRIVER'S AIRBAG FAILURE, Diagnostic Chart with Trouble Code.>
1B	Passenger's Airbag failure	• Airbag main harness circuit is shorted. • Airbag module harness circuit (passenger's side) is shorted. • Passenger's airbag module is faulty. • Airbag control module is faulty.	<Ref. to AB(diag)-64, DTC 1B PASSENGER'S AIRBAG FAILURE, Diagnostic Chart with Trouble Code.>

List of Diagnostic Trouble Code (DTC)

DTC	Item	Content of diagnosis	Reference
1D	Driver's Airbag failure	• Airbag main harness circuit is open. • Airbag module harness circuit (driver's side) is open. • Roll connector circuit is open. • Driver's airbag module is faulty. • Airbag control module is faulty.	<Ref. to AB(diag)-66, DTC 1D DRIVER'S AIRBAG FAILURE, Diagnostic Chart with Trouble Code.>
1E	Passenger's Airbag failure	• Airbag main harness circuit is open. • Airbag module harness circuit (passenger's side) is open. • Passenger's airbag module is faulty. • Airbag control module is faulty.	<Ref. to AB(diag)-68, DTC 1E PASSENGER'S AIRBAG FAILURE, Diagnostic Chart with Trouble Code.>
21	Airbag ECU failure	Airbag control module is faulty.	<Ref. to AB(diag)-69, DTC 21 AIRBAG ECM FAILURE, Diagnostic Chart with Trouble Code.>
22	Front Airbag: Firing output	Front airbag module and seat belt pretensioner (LH/RH) are inflated.	<Ref. to AB(diag)-70, DTC 22 FRONT AIRBAG FIRING OUTPUT, Diagnostic Chart with Trouble Code.>
26	Passenger's Airbag indicator failure	• Passenger's airbag indicator is faulty. • Airbag control module is faulty. • Airbag main harness circuit is open, shorted or shorted to ground. • Body harness circuit is open.	<Ref. to AB(diag)-71, DTC 26 PASSENGER'S AIRBAG INDICATOR FAILURE, Diagnostic Chart with Trouble Code.>
27	ODS Communication error	• Occupant detection control module communication is faulty. • Airbag rear harness circuit is open, shorted, shorted to ground or shorted to power supply. • Occupant detection harness is faulty. • Airbag control module is faulty. • Occupant detection system is faulty.	<Ref. to AB(diag)-73, DTC 27 ODS COMMUNICATION ERROR, Diagnostic Chart with Trouble Code.>
29	ODS failure	• Occupant detection sensor is faulty. • Occupant detection control module is faulty. • Occupant detection harness is faulty. • Fuse is blown.	<Ref. to OD(diag)-21, DTC 29 ODS FAILURE, Diagnostic Procedure with Diagnostic Trouble Code (DTC).>
2A	ODS Calibration error	• Occupant detection control module is faulty. • Calibration of occupant detection control module is initial setting or faulty.	<Ref. to AB(diag)-78, DTC 2A ODS CALIBRATION ERROR, Diagnostic Chart with Trouble Code.>
2B	ODS System wrong parts	• Specification of occupant detection control module is improper. • Occupant detection control module is faulty.	<Ref. to AB(diag)-78, DTC 2B ODS SYSTEM WRONG PARTS, Diagnostic Chart with Trouble Code.>
2D	Airbag warning light circuit failure	• Airbag warning light is faulty. • Open or short circuit in harness between airbag control module and airbag warning light. • Poor contact of airbag main harness and instrument panel harness. • Ground circuit is faulty. • Airbag control module is faulty.	<Ref. to AB(diag)-78, DTC 2D AIRBAG WARNING INDICATOR FAILURE, Diagnostic Chart with Trouble Code.>
33	FrontSubSensor RH failure	Front sub sensor (RH) is faulty.	<Ref. to AB(diag)-78, DTC 33 FRONT SUB SENSOR RH FAILURE, Diagnostic Chart with Trouble Code.>
34	FrontSubSensor LH failure	Front sub sensor (LH) is faulty.	<Ref. to AB(diag)-78, DTC 34 FRONT SUB SENSOR LH FAILURE, Diagnostic Chart with Trouble Code.>
37	Buckle Switch RH failure	• Passenger's buckle switch circuit is open, shorted or shorted to ground. • Occupant detection system is faulty. • Occupant detection harness is faulty.	<Ref. to OD(diag)-23, DTC 37 BUCKLE SWITCH RH FAILURE, Diagnostic Procedure with Diagnostic Trouble Code (DTC).>

DTC	Item	Content of diagnosis	Reference
39	Seatbelt Warning failure	• Airbag control module is faulty. • Body integrated unit is faulty. • Harness circuits between body integrated unit and airbag control module are open, shorted or shorted to ground.	<Ref. to AB(diag)-79, DTC 39 SEAT BELT WARNING FAILURE, Diagnostic Chart with Trouble Code.>
3A	Front Sub Sensor RH false installation	• Front sensor (RH) is misinstalled. • Airbag control module is faulty.	<Ref. to AB(diag)-80, DTC 3A FRONT SUB SENSOR RH FALSE INSTALLATION, Diagnostic Chart with Trouble Code.>
3B	Front Sub Sensor LH false installation	• Front sensor (LH) is misinstalled. • Airbag control module is faulty.	<Ref. to AB(diag)-80, DTC 3B FRONT SUB SENSOR LH FALSE INSTALLATION, Diagnostic Chart with Trouble Code.>
41	Side Airbag RH failure	A type • Side airbag harness (RH) circuit is faulty. • Side airbag module (RH) is faulty. • Airbag control module is faulty. B type • Side airbag harness (RH) circuit is shorted to ground. • Side airbag module (RH) is faulty. • Airbag control module is faulty.	<Ref. to AB(diag)-81, DTC 41 SIDE AIRBAG RH FAILURE, Diagnostic Chart with Trouble Code.>
42	Side Airbag LH failure	A type • Side airbag harness (LH) circuit is faulty. • Side airbag module (LH) is faulty. • Airbag control module is faulty. B type • Side airbag harness (LH) circuit is shorted to ground. • Side airbag module (LH) is faulty. • Airbag control module is faulty.	<Ref. to AB(diag)-85, DTC 42 SIDE AIRBAG LH FAILURE, Diagnostic Chart with Trouble Code.>
45	Side Airbag RH failure	• Side airbag harness (RH) circuit is shorted to power supply. • Side airbag module (RH) is faulty. • Airbag control module is faulty.	<Ref. to AB(diag)-89, DTC 45 SIDE AIRBAG RH FAILURE, Diagnostic Chart with Trouble Code.>
46	Side Airbag LH failure	• Side airbag harness (LH) circuit is shorted to power supply. • Side airbag module (LH) is faulty. • Airbag control module is faulty.	<Ref. to AB(diag)-91, DTC 46 SIDE AIRBAG LH FAILURE, Diagnostic Chart with Trouble Code.>
4A	Side Airbag RH failure	• Side airbag harness (RH) circuit is shorted. • Side airbag module (RH) is faulty. • Airbag control module is faulty.	<Ref. to AB(diag)-93, DTC 4A SIDE AIRBAG RH FAILURE, Diagnostic Chart with Trouble Code.>
4B	Side Airbag LH failure	• Side airbag harness (LH) circuit is shorted. • Side airbag module (LH) is faulty. • Airbag control module is faulty.	<Ref. to AB(diag)-95, DTC 4B SIDE AIRBAG LH FAILURE, Diagnostic Chart with Trouble Code.>
4D	Side Airbag RH failure	• Side airbag harness (RH) circuit is open. • Side airbag module (RH) is faulty. • Airbag control module is faulty.	<Ref. to AB(diag)-97, DTC 4D SIDE AIRBAG RH FAILURE, Diagnostic Chart with Trouble Code.>
4E	Side Airbag LH failure	• Side airbag harness (LH) circuit is open. • Side airbag module (LH) is faulty. • Airbag control module is faulty.	<Ref. to AB(diag)-99, DTC 4E SIDE AIRBAG LH FAILURE, Diagnostic Chart with Trouble Code.>
53	Side Airbag Sensor RH failure	Side airbag sensor (RH) is faulty.	<Ref. to AB(diag)-101, DTC 53 SIDE AIRBAG SENSOR RH FAILURE, Diagnostic Chart with Trouble Code.>
54	Side Airbag Sensor LH failure	Side airbag sensor (LH) is faulty.	<Ref. to AB(diag)-101, DTC 54 SIDE AIRBAG SENSOR LH FAILURE, Diagnostic Chart with Trouble Code.>
55	Side/Curtain Airbag: Firing output	• Side airbag module and curtain airbag module are deployed. • Curtain airbag module is deployed.	<Ref. to AB(diag)-101, DTC 55 SIDE CURTAIN AIRBAG FIRING OUTPUT, Diagnostic Chart with Trouble Code.>

DTC	Item	Content of diagnosis	Reference
58	Curtain Airbag Sensor RH failure	Curtain airbag sensor (RH) is faulty.	<Ref. to AB(diag)-101, DTC 58 CURTAIN AIRBAG SENSOR RH FAILURE, Diagnostic Chart with Trouble Code.>
59	Curtain Airbag Sensor LH failure	Curtain airbag sensor (LH) is faulty.	<Ref. to AB(diag)-101, DTC 59 CURTAIN AIRBAG SENSOR LH FAILURE, Diagnostic Chart with Trouble Code.>
5A	Side Airbag Sensor RH false installation	• Side airbag sensor (RH) is misinstalled. • Airbag control module is faulty.	<Ref. to AB(diag)-102, DTC 5A SIDE AIRBAG SENSOR RH FALSE INSTALLATION, Diagnostic Chart with Trouble Code.>
5B	Side Airbag Sensor LH false installation	• Side airbag sensor (LH) is misinstalled. • Airbag control module is faulty.	<Ref. to AB(diag)-102, DTC 5B SIDE AIRBAG SENSOR LH FALSE INSTALLATION, Diagnostic Chart with Trouble Code.>
5C	Curtain Airbag Sensor RH false installation	• Curtain airbag sensor (RH) is misinstalled. • Airbag control module is faulty.	<Ref. to AB(diag)-102, DTC 5C CURTAIN AIRBAG SENSOR RH FALSE INSTALLATION, Diagnostic Chart with Trouble Code.>
5D	Curtain Airbag Sensor LH false installation	• Curtain airbag sensor (LH) is misinstalled. • Airbag control module is faulty.	<Ref. to AB(diag)-102, DTC 5D CURTAIN AIRBAG SENSOR LH FALSE INSTALLATION, Diagnostic Chart with Trouble Code.>
61	Belt Pretensioner RH failure	A type • Seat belt pretensioner (RH) circuit is open, shorted or shorted to ground. • Airbag control module is faulty. • Pretensioner is faulty. • Pretensioner harness is faulty. B type • Seat belt pretensioner (RH) circuit is shorted to ground. • Pretensioner (RH) is faulty. • Pretensioner harness is shorted to ground. • Airbag control module is faulty.	<Ref. to AB(diag)-103, DTC 61 BELT PRETENSIONER RH FAILURE, Diagnostic Chart with Trouble Code.>
62	Belt Pretensioner LH failure	A type • Seat belt pretensioner (LH) circuit is open, shorted or shorted to ground. • Airbag control module is faulty. • Pretensioner is faulty. • Pretensioner harness is faulty. B type • Seat belt pretensioner (LH) circuit is shorted to ground. • Pretensioner (LH) is faulty. • Pretensioner harness is shorted to ground. • Airbag control module is faulty.	<Ref. to AB(diag)-107, DTC 62 BELT PRETENSIONER LH FAILURE, Diagnostic Chart with Trouble Code.>
65	Belt Pretensioner RH failure	• Seat belt pretensioner (RH) circuit is shorted to power supply. • Pretensioner (RH) is faulty. • Pretensioner harness is shorted to power supply. • Airbag control module is faulty.	<Ref. to AB(diag)-111, DTC 65 BELT PRETENSIONER RH FAILURE, Diagnostic Chart with Trouble Code.>
66	Belt Pretensioner LH failure	• Seat belt pretensioner (LH) circuit is shorted to power supply. • Pretensioner (LH) is faulty. • Pretensioner harness is shorted to power supply. • Airbag control module is faulty.	<Ref. to AB(diag)-113, DTC 66 BELT PRETENSIONER LH FAILURE, Diagnostic Chart with Trouble Code.>

DTC	Item	Content of diagnosis	Reference
6A	Belt Pretensioner RH failure	• Seat belt pretensioner (RH) circuit is shorted. • Pretensioner (RH) is faulty. • Pretensioner harness is shorted. • Airbag control module is faulty.	<Ref. to AB(diag)-115, DTC 6A BELT PRETENSIONER RH FAILURE, Diagnostic Chart with Trouble Code.>
6B	Belt Pretensioner LH failure	• Seat belt pretensioner (LH) circuit is shorted. • Pretensioner (LH) is faulty. • Pretensioner harness is shorted. • Airbag control module is faulty.	<Ref. to AB(diag)-117, DTC 6B BELT PRETENSIONER LH FAILURE, Diagnostic Chart with Trouble Code.>
6D	Belt Pretensioner RH failure	• Seat belt pretensioner (RH) circuit is open. • Pretensioner (RH) is faulty. • Pretensioner harness is open. • Airbag control module is faulty.	<Ref. to AB(diag)-119, DTC 6D BELT PRETENSIONER RH FAILURE, Diagnostic Chart with Trouble Code.>
6E	Belt Pretensioner LH failure	• Seat belt pretensioner (LH) circuit is open. • Pretensioner (LH) is faulty. • Pretensioner harness is open. • Airbag control module is faulty.	<Ref. to AB(diag)-121, DTC 6E BELT PRETENSIONER LH FAILURE, Diagnostic Chart with Trouble Code.>
71	Driver's Airbag failure	A type • Airbag main harness circuit is open, shorted or shorted to ground. • Airbag module harness (Driver's side) circuit is open, shorted or shorted to ground. • Roll connector circuit is open, shorted or shorted to ground. • Airbag control module is faulty. • Driver's airbag module is faulty. B type • Airbag main harness circuit is shorted to ground. • Airbag module harness (driver's side) circuit is shorted to ground. • Roll connector circuit is shorted to ground. • Driver's airbag module is faulty. • Airbag control module is faulty.	<Ref. to AB(diag)-123, DTC 71 DRIVER'S AIRBAG FAILURE, Diagnostic Chart with Trouble Code.>
72	Passenger's Airbag failure	A type • Airbag main harness circuit is open, shorted or shorted to ground. • Airbag module harness (passenger's side) circuit is open, shorted or shorted to ground. • Airbag control module is faulty. • Passenger's airbag module is faulty. B type • Airbag main harness circuit is shorted to ground. • Airbag module harness (passenger's side) circuit is shorted to ground. • Passenger's airbag module is faulty. • Airbag control module is faulty.	<Ref. to AB(diag)-128, DTC 72 PASSENGER'S AIRBAG FAILURE, Diagnostic Chart with Trouble Code.>
75	Driver's Airbag failure	• Airbag main harness circuit is shorted to power supply. • Airbag module harness circuit (driver's side) is shorted to power supply. • Roll connector circuit is shorted to power supply. • Driver's airbag module is faulty. • Airbag control module is faulty.	<Ref. to AB(diag)-132, DTC 75 DRIVER'S AIRBAG FAILURE, Diagnostic Chart with Trouble Code.>

DTC	Item	Content of diagnosis	Reference
76	Passenger's Airbag failure	• Airbag main harness circuit is shorted to power supply. • Airbag module harness (passenger's side) circuit is shorted to power supply. • Passenger's airbag module is faulty. • Airbag control module is faulty.	<Ref. to AB(diag)-134, DTC 76 PASSENGER'S AIRBAG FAILURE, Diagnostic Chart with Trouble Code.>
7A	Driver's Airbag failure	• Airbag main harness circuit is shorted. • Airbag module harness (driver's side) circuit is shorted. • Roll connector circuit is shorted to power supply. • Driver's airbag module is faulty. • Airbag control module is faulty.	<Ref. to AB(diag)-136, DTC 7A DRIVER'S AIRBAG FAILURE, Diagnostic Chart with Trouble Code.>
7B	Passenger's Airbag failure	• Airbag main harness circuit is shorted. • Airbag module harness circuit (passenger's side) is shorted. • Passenger's airbag module is faulty. • Airbag control module is faulty.	<Ref. to AB(diag)-138, DTC 7B PASSENGER'S AIRBAG FAILURE, Diagnostic Chart with Trouble Code.>
7D	Driver's Airbag failure	• Airbag main harness circuit is open. • Airbag module harness circuit (driver's side) is open. • Roll connector circuit is open. • Driver's airbag module is faulty. • Airbag control module is faulty.	<Ref. to AB(diag)-140, DTC 7D DRIVER'S AIRBAG FAILURE, Diagnostic Chart with Trouble Code.>
7E	Passenger's Airbag failure	• Airbag main harness circuit is open. • Airbag module harness circuit (passenger's side) is open. • Passenger's airbag module is faulty. • Airbag control module is faulty.	<Ref. to AB(diag)-142, DTC 7E PASSENGER'S AIRBAG FAILURE, Diagnostic Chart with Trouble Code.>
91	Curtain Airbag RH failure	A type • Curtain airbag harness (RH) circuit is faulty. • Curtain airbag module (RH) is faulty. • Airbag control module is faulty. B type • Curtain airbag harness (RH) circuit is shorted to ground. • Curtain airbag module (RH) is faulty. • Airbag control module is faulty.	<Ref. to AB(diag)-144, DTC 91 CURTAIN AIRBAG MODULE RH FAILURE, Diagnostic Chart with Trouble Code.>
92	Curtain Airbag LH failure	A type • Curtain airbag harness (LH) circuit is faulty. • Curtain airbag module (LH) is faulty. • Airbag control module is faulty. B type • Curtain airbag harness (LH) circuit is shorted to ground. • Curtain airbag module (LH) is faulty. • Airbag control module is faulty.	<Ref. to AB(diag)-148, DTC 92 CURTAIN AIRBAG MODULE LH FAILURE, Diagnostic Chart with Trouble Code.>
95	Curtain Airbag RH failure	• Curtain airbag harness (RH) is shorted to power supply. • Curtain airbag module (RH) is faulty. • Airbag control module is faulty.	<Ref. to AB(diag)-152, DTC 95 CURTAIN AIRBAG MODULE RH FAILURE, Diagnostic Chart with Trouble Code.>
96	Curtain Airbag LH failure	• Curtain airbag harness (LH) is shorted to power supply. • Curtain airbag module (LH) is faulty. • Airbag control module is faulty.	<Ref. to AB(diag)-154, DTC 96 CURTAIN AIRBAG MODULE LH FAILURE, Diagnostic Chart with Trouble Code.>
9A	Curtain Airbag RH failure	• Curtain airbag harness (RH) circuit is shorted. • Curtain airbag module (RH) is faulty. • Airbag control module is faulty.	<Ref. to AB(diag)-156, DTC 9A CURTAIN AIRBAG MODULE RH FAILURE, Diagnostic Chart with Trouble Code.>

DTC	Item	Content of diagnosis	Reference
9B	Curtain Airbag LH failure	• Curtain airbag harness (LH) circuit is shorted. • Curtain airbag module (LH) is faulty. • Airbag control module is faulty.	<Ref. to AB(diag)-158, DTC 9B CURTAIN AIRBAG MODULE LH FAILURE, Diagnostic Chart with Trouble Code.>
9D	Curtain Airbag RH failure	• Curtain airbag harness (RH) circuit is open. • Curtain airbag module (RH) is faulty. • Airbag control module is faulty.	<Ref. to AB(diag)-160, DTC 9D CURTAIN AIRBAG MODULE RH FAILURE, Diagnostic Chart with Trouble Code.>
9E	Curtain Airbag LH failure	• Curtain airbag harness (LH) circuit is open. • Curtain airbag module (LH) is faulty. • Airbag control module is faulty.	<Ref. to AB(diag)-162, DTC 9E CURTAIN AIRBAG MODULE LH FAILURE, Diagnostic Chart with Trouble Code.>
A1	Front sensor Bus communication error	• Open or short circuit in harness between airbag control module and front sub sensor. • Front sub sensor is faulty. • Airbag control module is faulty.	<Ref. to AB(diag)-164, DTC A1 FRONT SENSOR BUS COMMUNICATION ERROR, Diagnostic Chart with Trouble Code.>
A2 A3	Door sensor Bus RH communication error	• Open or short circuit in harness between curtain airbag sensor and front door impact sensor. • Front door impact sensor (RH) is faulty. • Curtain airbag sensor (RH) is faulty. • Airbag control module is faulty.	<Ref. to AB(diag)-166, DTC A2 DOOR SENSOR BUS RH COMMUNICATION ERROR, Diagnostic Chart with Trouble Code.> <Ref. to AB(diag)-167, DTC A3 DOOR SENSOR BUS RH COMMUNICATION ERROR, Diagnostic Chart with Trouble Code.>
A4 A5	Door sensor Bus LH communication error	• Open or short circuit in harness between curtain airbag sensor and front door impact sensor. • Front door impact sensor (LH) is faulty. • Curtain airbag sensor (LH) is faulty. • Airbag control module is faulty.	<Ref. to AB(diag)-169, DTC A4 DOOR SENSOR BUS LH COMMUNICATION ERROR, Diagnostic Chart with Trouble Code.> <Ref. to AB(diag)-170, DTC A5 DOOR SENSOR BUS LH COMMUNICATION ERROR, Diagnostic Chart with Trouble Code.>
AA	Door sensor RH failure	Front door impact sensor (RH) is faulty.	<Ref. to AB(diag)-173, DTC AA DOOR SENSOR RH FAILURE, Diagnostic Chart with Trouble Code.>
AB	Door sensor LH failure	Front door impact sensor (LH) is faulty.	<Ref. to AB(diag)-173, DTC AB DOOR SENSOR LH FAILURE, Diagnostic Chart with Trouble Code.>
AC	Door sensor RH false installation	• Front door impact sensor (RH) is misinstalled. • Airbag control module is faulty.	<Ref. to AB(diag)-173, DTC AC DOOR SENSOR RH FALSE INSTALLATION, Diagnostic Chart with Trouble Code.>
AD	Door sensor LH failure	• Front door impact sensor (LH) is misinstalled. • Airbag control module is faulty.	<Ref. to AB(diag)-173, DTC AD DOOR SENSOR LH FALSE INSTALLATION, Diagnostic Chart with Trouble Code.>
BB	Roll Over : Firing output	Curtain airbag module (LH/RH) and seat belt pretensioner (LH/RH) are deployed.	<Ref. to AB(diag)-173, DTC BB ROLL OVER: FIRING OUTPUT, Diagnostic Chart with Trouble Code.>
E2 E3 E4	Front Sensor Bus RH Communication error	• Open or short circuit in harness (RH) between airbag control module and front sub sensor. • Front sub sensor (RH) is faulty. • Airbag control module is faulty.	<Ref. to AB(diag)-173, DTC E2 FRONT SENSOR BUS RH COMMUNICATION ERROR, Diagnostic Chart with Trouble Code.> <Ref. to AB(diag)-174, DTC E3 FRONT SENSOR BUS RH COMMUNICATION ERROR, Diagnostic Chart with Trouble Code.> <Ref. to AB(diag)-175, DTC E4 FRONT SENSOR BUS RH COMMUNICATION ERROR, Diagnostic Chart with Trouble Code.>

DTC	Item	Content of diagnosis	Reference
E6 E7 E8	Front Sensor Bus LH Communication error	• Open or short circuit in harness (LH) between airbag control module and front sub sensor. • Front sub sensor (LH) is faulty. • Airbag control module is faulty.	<Ref. to AB(diag)-177, DTC E6 FRONT SENSOR BUS LH COMMUNICATION ERROR, Diagnostic Chart with Trouble Code.> <Ref. to AB(diag)-178, DTC E7 FRONT SENSOR BUS LH COMMUNICATION ERROR, Diagnostic Chart with Trouble Code.> <Ref. to AB(diag)-181, DTC E8 FRONT SENSOR BUS LH COMMUNICATION ERROR, Diagnostic Chart with Trouble Code.>
E9 EA	Side Sensor Bus RH Communication error	• Open or short circuit in harness (RH) between airbag control module and front door impact sensor. • Side airbag sensor (RH) is faulty. • Curtain airbag sensor (RH) is faulty. • Front door impact sensor (RH) is faulty. • Airbag control module is faulty.	<Ref. to AB(diag)-183, DTC E9 SIDE SENSOR BUS RH COMMUNICATION ERROR, Diagnostic Chart with Trouble Code.> <Ref. to AB(diag)-188, DTC EA SIDE SENSOR BUS RH COMMUNICATION ERROR, Diagnostic Chart with Trouble Code.>
EB EC	Side Sensor Bus RH Communication error	• Open or short circuit in harness (RH) between airbag control module and side airbag sensor. • Side airbag sensor (RH) is faulty. • Airbag control module is faulty.	<Ref. to AB(diag)-188, DTC EB SIDE SENSOR BUS RH COMMUNICATION ERROR, Diagnostic Chart with Trouble Code.> <Ref. to AB(diag)-189, DTC EC SIDE SENSOR BUS RH COMMUNICATION ERROR, Diagnostic Chart with Trouble Code.>
ED EE	Side Sensor Bus RH Communication error	• Open or short circuit in harness (RH) between airbag control module and curtain airbag sensor. • Side airbag sensor (RH) is faulty. • Curtain airbag sensor (RH) is faulty. • Airbag control module is faulty.	<Ref. to AB(diag)-191, DTC ED SIDE SENSOR BUS RH COMMUNICATION ERROR, Diagnostic Chart with Trouble Code.> <Ref. to AB(diag)-192, DTC EE SIDE SENSOR BUS RH COMMUNICATION ERROR, Diagnostic Chart with Trouble Code.>
F1 F2	Side Sensor Bus LH Communication error	• Open or short circuit in harness (LH) between airbag control module and front door impact sensor. • Side airbag sensor (LH) is faulty. • Curtain airbag sensor (LH) is faulty. • Front door impact sensor (LH) is faulty. • Airbag control module is faulty.	<Ref. to AB(diag)-195, DTC F1 SIDE SENSOR BUS LH COMMUNICATION ERROR, Diagnostic Chart with Trouble Code.> <Ref. to AB(diag)-200, DTC F2 SIDE SENSOR BUS LH COMMUNICATION ERROR, Diagnostic Chart with Trouble Code.>
F3 F4	Side Sensor Bus LH Communication error	• Open or short circuit in harness (LH) between airbag control module and side airbag sensor. • Side airbag sensor (LH) is faulty. • Airbag control module is faulty.	<Ref. to AB(diag)-200, DTC F3 SIDE SENSOR BUS LH COMMUNICATION ERROR, Diagnostic Chart with Trouble Code.> <Ref. to AB(diag)-201, DTC F4 SIDE SENSOR BUS LH COMMUNICATION ERROR, Diagnostic Chart with Trouble Code.>
F5 F6	Side Sensor Bus LH Communication error	• Open or short circuit in harness (LH) between airbag control module and curtain airbag sensor. • Side airbag sensor (LH) is faulty. • Curtain airbag sensor (LH) is faulty. • Airbag control module is faulty.	<Ref. to AB(diag)-203, DTC F5 SIDE SENSOR BUS LH COMMUNICATION ERROR, Diagnostic Chart with Trouble Code.> <Ref. to AB(diag)-204, DTC F6 SIDE SENSOR BUS LH COMMUNICATION ERROR, Diagnostic Chart with Trouble Code.>

16.Diagnostic Chart with Trouble Code

A: DTC 11 DRIVER'S AIRBAG FAILURE

NOTE:
Be sure to properly identify the Airbag system type prior to performing any diagnostics.

1. TYPE A

DTC DETECTING CONDITION:

- Airbag main harness circuit is open, shorted or shorted to ground.
- Airbag module harness (Driver's side) circuit is open, shorted or shorted to ground.
- Roll connector circuit is open, shorted or shorted to ground.
- Airbag control module is faulty.
- Driver's airbag module is faulty.

CAUTION:
Before performing diagnosis, refer to "CAUTION" in "General Description". <Ref. to AB(diag)-5, CAUTION, General Description.>

NOTE:
Prior to starting work, prepare two AIRBAG RESISTORs (98299PA040).
WIRING DIAGRAM:

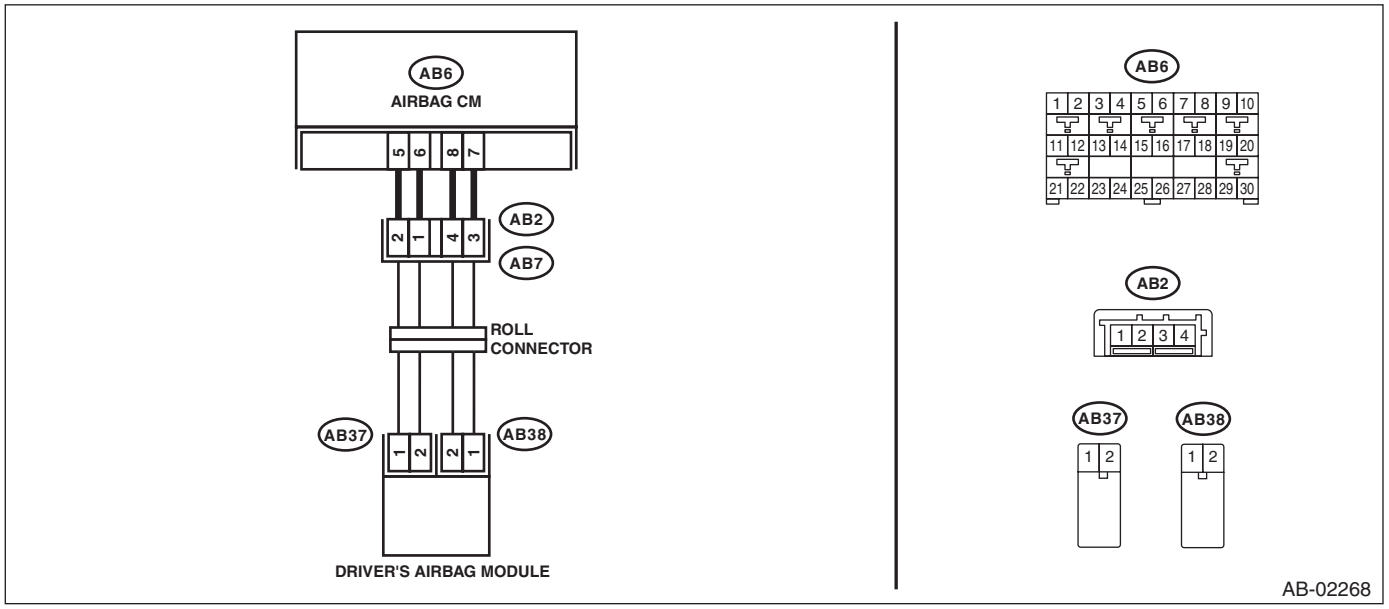

Step		Check	Yes	No
1	**CHECK POOR CONTACT OF CONNECTORS.** Check for poor contact of the connectors between the airbag control module and the driver's airbag module.	Is there poor contact?	Replace the airbag harness.	Go to step **2**.

	Step	Check	Yes	No
2	**CHECK DRIVER'S AIRBAG MODULE.** 1) Turn the ignition switch to OFF, disconnect the battery ground cable, and wait for 60 seconds or more. 2) Remove the driver's airbag module. 3) Connect the connector (1N) in the test harness N to the connector (AB38). 4) Connect the airbag resistor to the connector (2N) of test harness N. 5) Connect the connector (1Q) in the test harness Q to connector (AB37). 6) Connect the airbag resistor to the connector (2Q) in the test harness Q. 7) Connect the battery ground terminal and turn the ignition switch to ON.	Does the airbag warning light illuminate for six seconds and go off?	Replace the driver's airbag module. <Ref. to AB-35, Driver's Airbag Module.>	Go to step **3**.
3	**CHECK ROLL CONNECTOR AND AIRBAG MAIN HARNESS (DRIVER'S AIRBAG HARNESS).** 1) Turn the ignition switch to OFF, disconnect the battery ground cable, and wait for 60 seconds or more. 2) Remove the console front panel and disconnect the connector (AB9). 3) Disconnect the airbag resistor from the connector (2N) in test harness N. 4) Disconnect the airbag resistor from the connector (2Q) of test harness Q. 5) Disconnect the connectors (AB6, AB17, AB18) from airbag control module. 6) Measure the resistance between connector (2Q) terminals in test harness Q. ***Connector & terminal*** ***(2Q) No. 1 — (2Q) No. 2:***	Is the resistance less than 10 Ω?	Go to step **5**.	Go to step **4**.
4	**CHECK ROLL CONNECTOR.** 1) Remove the instrument panel lower cover and column cover, and disconnect the connector (AB7) from (AB2). 2) Measure the resistance between connector (2Q) terminals in test harness Q. ***Connector & terminal*** ***(2Q) No. 1 — (2Q) No. 2:***	Is the resistance less than 10 Ω?	Replace the airbag main harness along with body harness.	Replace the roll connector. <Ref. to AB-96, Roll Connector.>
5	**CHECK ROLL CONNECTOR AND AIRBAG MAIN HARNESS (DRIVER'S AIRBAG HARNESS).** 1) Remove the instrument panel lower cover and column cover, and disconnect the connector (AB7) from (AB2). 2) Measure the resistance between connector (2Q) in the test harness Q and chassis ground. ***Connector & terminal*** ***(2Q) No. 1 — Chassis ground:*** ***(2Q) No. 2 — Chassis ground:***	Is the resistance 1 MΩ or more?	Go to step **8**.	Go to step **6**.

	Step	Check	Yes	No
6	**CHECK ROLL CONNECTOR.** 1) Remove the instrument panel lower cover and column cover, and disconnect the connector (AB7) from (AB2). 2) Measure the resistance between connector (2Q) in the test harness Q and chassis ground. ***Connector & terminal*** ***(2Q) No. 1 — Chassis ground:*** ***(2Q) No. 2 — Chassis ground:***	Is the resistance 1 MΩ or more?	Go to step **7**.	Replace the roll connector. <Ref. to AB-96, Roll Connector.>
7	**CHECK AIRBAG MAIN HARNESS (DRIVER'S AIRBAG HARNESS).** 1) Connect the test harness AG connector (1AG) to the connectors (AB6, AB17, AB18). 2) Measure the resistance between connector (3AG) in the test harness AG and chassis ground. ***Connector & terminal*** ***(3AG) No. 1 — Chassis ground:*** ***(3AG) No. 3 — Chassis ground:***	Is the resistance 1 MΩ or more?	Go to step **10**.	Replace the airbag main harness along with body harness.
8	**CHECK ROLL CONNECTOR AND AIRBAG MAIN HARNESS (DRIVER'S AIRBAG HARNESS).** 1) Connect the test harness AG connector (1AG) to the connectors (AB6, AB17, AB18). 2) Measure the resistance between connector (2Q) terminals in test harness Q. ***Connector & terminal*** ***(2Q) No. 1 — (2Q) No. 2:***	Is the resistance 1 MΩ or more?	Go to step **10**.	Go to step **9**.
9	**CHECK ROLL CONNECTOR AND AIRBAG MAIN HARNESS (DRIVER'S AIRBAG HARNESS).** 1) Remove the instrument panel lower cover and column cover, and disconnect the connector (AB7) from (AB2). 2) Measure the resistance between connector (3AG) terminals in test harness AG. ***Connector & terminal*** ***(3AG) No. 1 — (3AG) No. 3:***	Is the resistance 1 MΩ or more?	Replace the roll connector. <Ref. to AB-96, Roll Connector.>	Replace the airbag main harness along with body harness.
10	**CHECK AIRBAG CONTROL MODULE.** 1) Connect all connectors. 2) Clear the memory. 3) Perform the Inspection Mode. 4) Read the DTC.	Is the same DTC displayed?	Replace the airbag control module. <Ref. to AB-68, Airbag Control Module.>	Go to step **11**.
11	**CHECK FOR ANY OTHER DTC ON DISPLAY.**	Is any other DTC displayed?	Check DTC using "List of Diagnostic Trouble Code (DTC)". <Ref. to AB(diag)-41, List of Diagnostic Trouble Code (DTC).>	Finish the diagnosis.

2. TYPE B

DTC DETECTING CONDITION:

- Airbag main harness circuit is shorted to ground.
- Airbag module harness (driver's side) circuit is shorted to ground.
- Roll connector circuit is shorted to ground.
- Driver's airbag module is faulty.
- Airbag control module is faulty.

CAUTION:

Before performing diagnosis, refer to "CAUTION" in "General Description". <Ref. to AB(diag)-5, CAUTION, General Description.>

NOTE:

Prior to starting work, prepare two AIRBAG RESISTORs (98299PA040).

WIRING DIAGRAM:

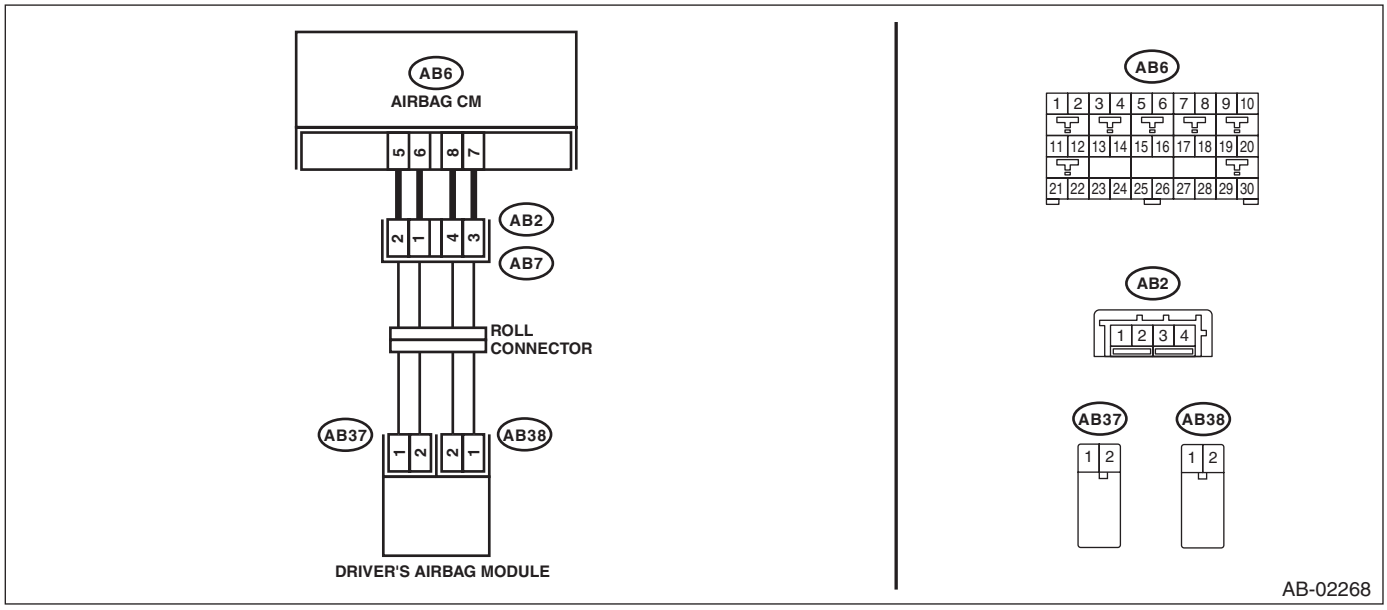

Step		Check	Yes	No
1	**CHECK POOR CONTACT OF CONNECTORS.** Check for poor contact of the connectors between the airbag control module and the driver's airbag module.	Is there poor contact?	Replace the airbag harness.	Go to step **2**.
2	**CHECK DRIVER'S AIRBAG MODULE.** 1) Turn the ignition switch to OFF, disconnect the battery ground cable, and wait for 60 seconds or more. 2) Remove the driver's airbag module. 3) Connect the connector (1N) in the test harness N to the connector (AB38). 4) Connect the airbag resistor to the connector (2N) of test harness N. 5) Connect the connector (1Q) in the test harness Q to connector (AB37). 6) Connect the airbag resistor to the connector (2Q) in the test harness Q. 7) Connect the battery ground terminal and turn the ignition switch to ON.	Does the airbag warning light illuminate for six seconds and go off?	Replace the driver's airbag module. <Ref. to AB-35, Driver's Airbag Module.>	Go to step **3**.

	Step	Check	Yes	No
3	**CHECK ROLL CONNECTOR.** 1) Turn the ignition switch to OFF, disconnect the battery ground cable, and wait for 60 seconds or more. 2) Remove the instrument panel lower cover and column cover, and disconnect the connector (AB7) from (AB2). 3) Disconnect the airbag resistor from the connector (2N) in test harness N and from the connector (2Q) in test harness Q. 4) Measure the resistance between connector (2Q) in the test harness Q and chassis ground. ***Connector & terminal*** ***(2Q) No. 1 — Chassis ground:*** ***(2Q) No. 2 — Chassis ground:***	Is the resistance 1 MΩ or more?	Go to step **4**.	Replace the roll connector. <Ref. to AB-96, Roll Connector.>
4	**CHECK AIRBAG MAIN HARNESS (DRIVER'S AIRBAG HARNESS).** 1) Disconnect the test harness N from connector (AB38). 2) Disconnect the test harness Q from connector (AB37). 3) Remove the console front panel and disconnect the connector (AB9). 4) Disconnect the connectors (AB6, AB17, AB18) from the airbag control module, and connect the connector (1AG) in the test harness AG. NOTE: For sedan models, connect test harness AH between the connectors (AB6, AB17, AB18) and (1AG). 5) Measure the resistance between connector (3AG) in the test harness AG and chassis ground. ***Connector & terminal*** ***(3AG) No. 1 — Chassis ground:*** ***(3AG) No. 3 — Chassis ground:***	Is the resistance 1 MΩ or more?	Go to step **5**.	Replace the airbag main harness along with body harness.
5	**CHECK AIRBAG CONTROL MODULE.** 1) Connect all connectors. 2) Clear the memory. 3) Perform the Inspection Mode. 4) Read the DTC.	Is the same DTC displayed?	Replace the airbag control module. <Ref. to AB-68, Airbag Control Module.>	Go to step **6**.
6	**CHECK FOR ANY OTHER DTC ON DISPLAY.**	Is any other DTC displayed?	Check DTC using "List of Diagnostic Trouble Code (DTC)". <Ref. to AB(diag)-41, List of Diagnostic Trouble Code (DTC).>	Finish the diagnosis.

B: DTC 12 PASSENGER'S AIRBAG FAILURE

NOTE:
Be sure to properly identify the Airbag system type prior to performing any diagnostics.

1. TYPE A

DTC DETECTING CONDITION:

- Airbag main harness circuit is open, shorted or shorted to ground.
- Airbag module harness (Passenger's side) circuit is open, shorted or shorted to ground.
- Passenger's airbag module is faulty.
- Airbag control module is faulty.

CAUTION:
Before performing diagnosis, refer to "CAUTION" in "General Description". <Ref. to AB(diag)-5, CAUTION, General Description.>

NOTE:
Prior to starting work, prepare two AIRBAG RESISTORs (98299PA040).
WIRING DIAGRAM:

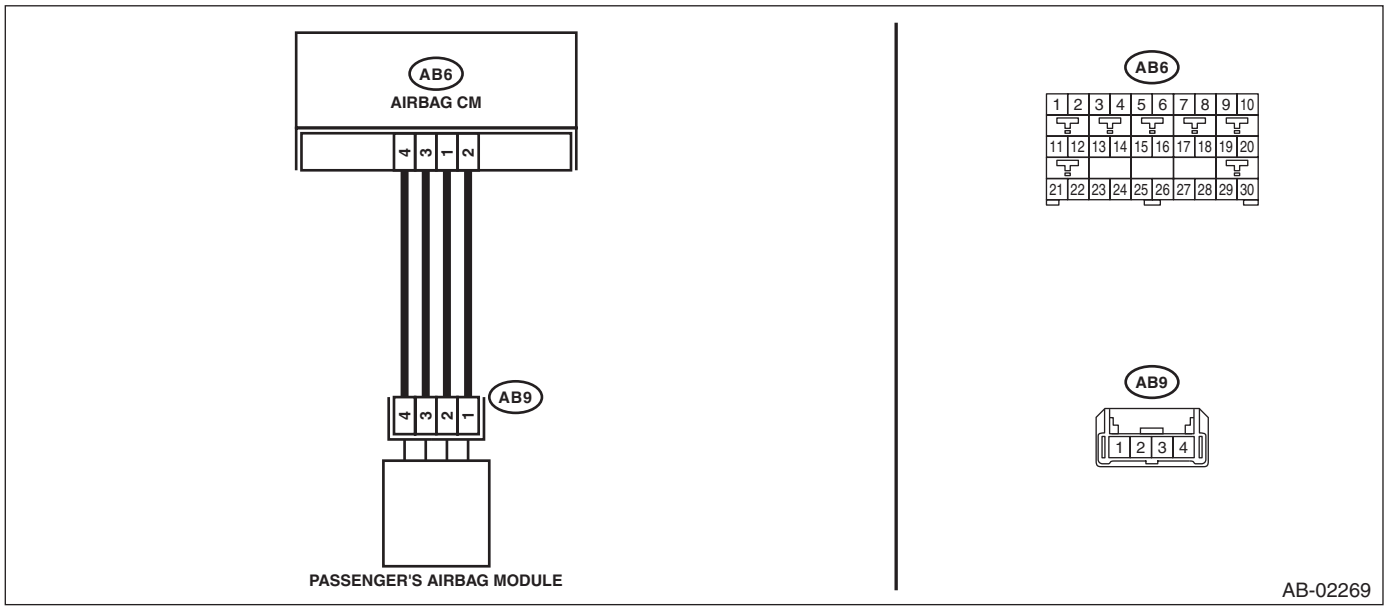

	Step	Check	Yes	No
1	**CHECK POOR CONTACT OF CONNECTORS.** Check for poor contact of the connectors between the airbag control module and the passenger's airbag module.	Is there poor contact?	Replace the airbag harness.	Go to step **2**.
2	**CHECK PASSENGER'S AIRBAG MODULE.** 1) Turn the ignition switch to OFF, disconnect the battery ground cable, and wait for 60 seconds or more. 2) Remove the console front panel and disconnect the connectors (AB10) from (AB9). 3) Connect the connector (1P) in the test harness P to connector (AB9). 4) Connect the airbag resistor to the connectors (2P) and (3P) of test harness P. 5) Connect the battery ground terminal and turn the ignition switch to ON.	Does the airbag warning light illuminate for six seconds and go off?	Replace the passenger's airbag module. <Ref. to AB-37, Passenger's Airbag Module.>	Go to step **3**.

	Step	Check	Yes	No
3	**CHECK AIRBAG MAIN HARNESS (PASSENGER'S AIRBAG HARNESS).** 1) Turn the ignition switch to OFF, disconnect the battery ground cable, and wait for 60 seconds or more. 2) Disconnect the airbag resistor from the connectors (2P) and (3P) of test harness P. 3) Remove the instrument panel lower cover and disconnect the connector (AB7) from (AB2). 4) Disconnect the connectors (AB6, AB17, AB18) from the airbag control module, and connect the connector (1AG) in the test harness AG. 5) Measure the resistance between connectors (3AG) in the test harness AG, and between connector (3AG) and chassis ground. ***Connector & terminal*** ***(3AG) No. 9 — (3AG) No. 7:*** ***(3AG) No. 9 — Chassis ground:*** ***(3AG) No. 7 — Chassis ground:***	Is the resistance 1 MΩ or more?	Go to step **4**.	Replace the airbag main harness along with body harness.
4	**CHECK AIRBAG MAIN HARNESS (PASSENGER'S AIRBAG HARNESS).** Measure the resistance between connector (3AG) of test harness AG and connector (2P) of test harness P. ***Connector & terminal*** ***(3AG) No. 9 — (2P) No. 1:*** ***(3AG) No. 7 — (2P) No. 2:***	Is the resistance less than 10 Ω?	Go to step **5**.	Replace the airbag main harness along with body harness.
5	**CHECK AIRBAG CONTROL MODULE.** 1) Connect all connectors. 2) Clear the memory. 3) Perform the Inspection Mode. 4) Read the DTC.	Is the same DTC displayed?	Replace the airbag control module. <Ref. to AB-68, Airbag Control Module.>	Go to step **6**.
6	**CHECK FOR ANY OTHER DTC ON DISPLAY.**	Is any other DTC displayed?	Check DTC using "List of Diagnostic Trouble Code (DTC)". <Ref. to AB(diag)-41, List of Diagnostic Trouble Code (DTC).>	Finish the diagnosis.

2. TYPE B

DTC DETECTING CONDITION:

- Airbag main harness circuit is shorted to ground.
- Airbag module harness (passenger's side) circuit is shorted to ground.
- Passenger's airbag module is faulty.
- Airbag control module is faulty.

CAUTION:
Before performing diagnosis, refer to "CAUTION" in "General Description". <Ref. to AB(diag)-5, CAUTION, General Description.>

NOTE:
Prior to starting work, prepare two AIRBAG RESISTORs (98299PA040).

WIRING DIAGRAM:

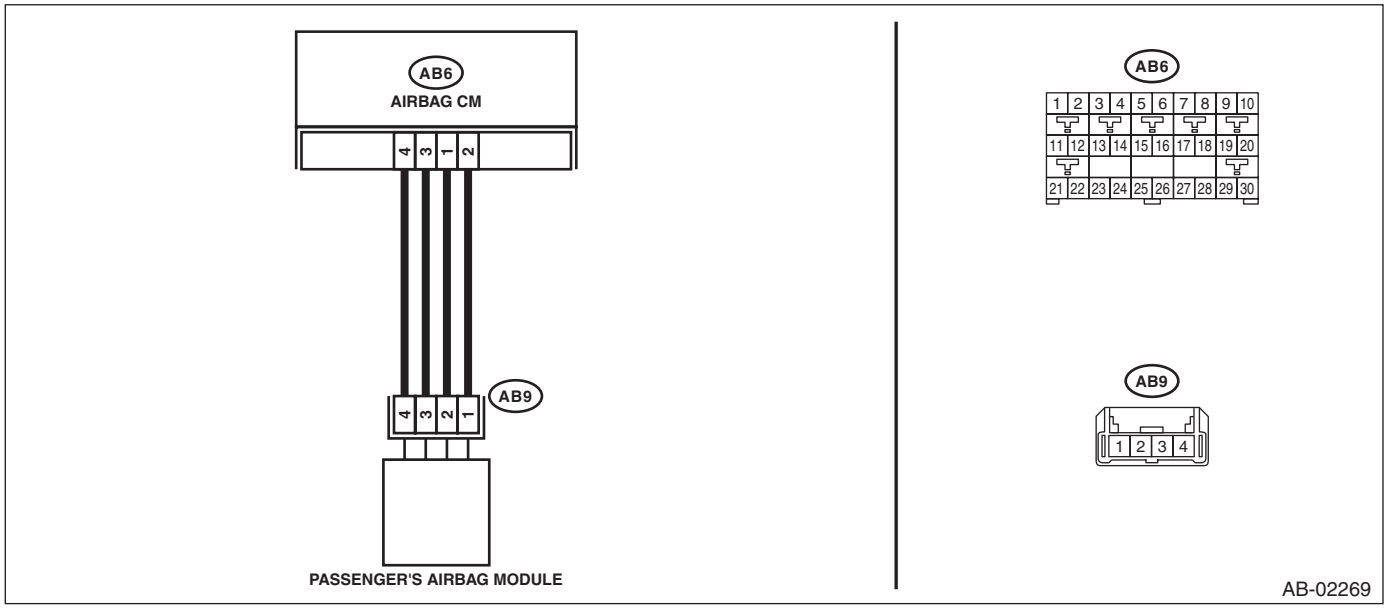

	Step	Check	Yes	No
1	**CHECK POOR CONTACT OF CONNECTORS.** Check for poor contact of the connectors between the airbag control module and the passenger's airbag module.	Is there poor contact?	Replace the airbag harness.	Go to step **2**.
2	**CHECK PASSENGER'S AIRBAG MODULE.** 1) Turn the ignition switch to OFF, disconnect the battery ground cable, and wait for 60 seconds or more. 2) Remove the console front panel and disconnect (AB9). 3) Connect the connector (1P) in the test harness P to connector (AB9). 4) Connect the airbag resistor to the connectors (2P) and (3P) of test harness P. 5) Connect the battery ground terminal and turn the ignition switch to ON.	Does the airbag warning light illuminate for six seconds and go off?	Replace the passenger's airbag module. <Ref. to AB-37, Passenger's Airbag Module.>	Go to step **3**.

	Step	Check	Yes	No
3	**CHECK AIRBAG MAIN HARNESS (PASSENGER'S AIRBAG HARNESS).** 1) Turn the ignition switch to OFF, disconnect the battery ground cable, and wait for 60 seconds or more. 2) Disconnect the airbag resistor from the connectors (2P) and (3P) of test harness P. 3) Remove the instrument panel lower cover and column cover, and disconnect the connector (AB7) from (AB2). 4) Disconnect the connectors (AB6, AB17, AB18) from the airbag control module, and connect the connector (1AG) in the test harness AG. NOTE: For sedan models, connect test harness AH between the connectors (AB6, AB17, AB18) and (1AG). 5) Measure the resistance between connector (3AG) in the test harness AG and chassis ground. ***Connector & terminal*** ***(3AG) No. 9 — Chassis ground:*** ***(3AG) No. 7 — Chassis ground:***	Is the resistance 1 MΩ or more?	Go to step **4**.	Replace the airbag main harness along with body harness.
4	**CHECK AIRBAG CONTROL MODULE.** 1) Connect all connectors. 2) Clear the memory. 3) Perform the Inspection Mode. 4) Read the DTC.	Is the same DTC displayed?	Replace the airbag control module. <Ref. to AB-68, Airbag Control Module.>	Go to step **5**.
5	**CHECK FOR ANY OTHER DTC ON DISPLAY.**	Is any other DTC displayed?	Check DTC using "List of Diagnostic Trouble Code (DTC)". <Ref. to AB(diag)-41, List of Diagnostic Trouble Code (DTC).>	Finish the diagnosis.

C: DTC 15 DRIVER'S AIRBAG FAILURE

DTC DETECTING CONDITION:

- Airbag main harness circuit is shorted to power supply.
- Airbag module harness (driver's side) circuit is shorted to power supply.
- Roll connector circuit is shorted to power supply.
- Driver's airbag module is faulty.
- Airbag control module is faulty.

CAUTION:

Before performing diagnosis, refer to "CAUTION" in "General Description". <Ref. to AB(diag)-5, CAUTION, General Description.>

NOTE:

Prior to starting work, prepare two AIRBAG RESISTORs (98299PA040).

WIRING DIAGRAM:

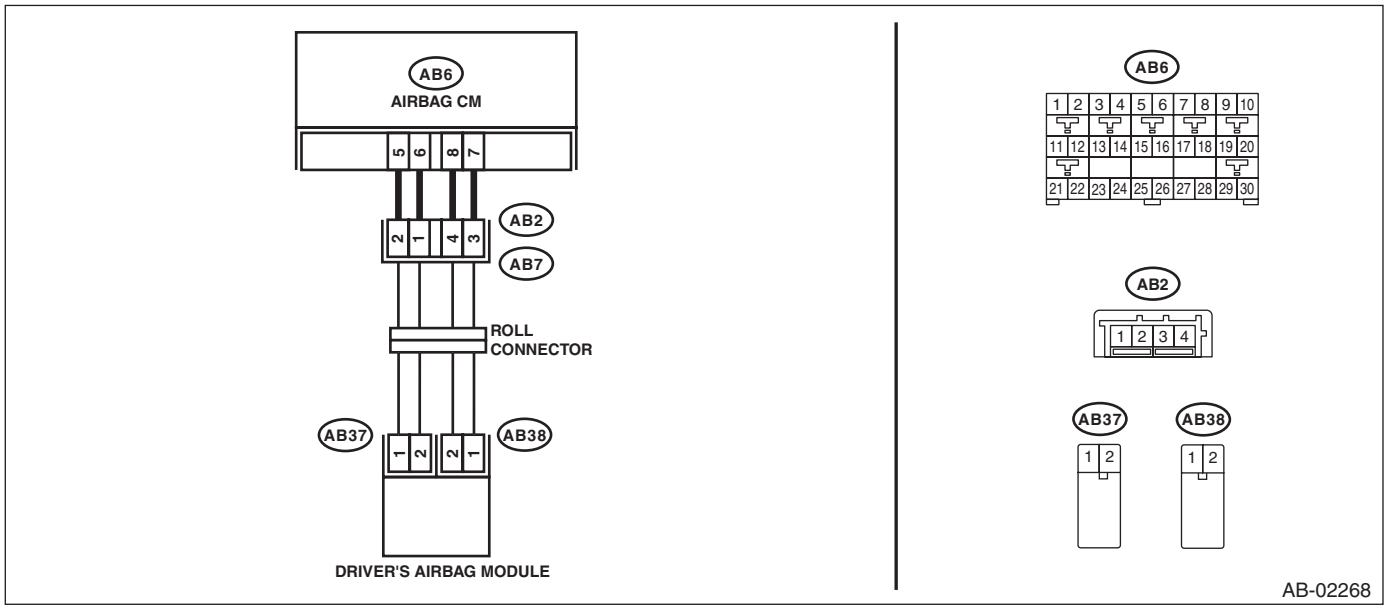

Step		Check	Yes	No
1	**CHECK POOR CONTACT OF CONNECTORS.** Check for poor contact of the connectors between the airbag control module and the driver's airbag module.	Is there poor contact?	Replace the airbag harness.	Go to step **2**.
2	**CHECK DRIVER'S AIRBAG MODULE.** 1) Turn the ignition switch to OFF, disconnect the battery ground cable, and wait for 60 seconds or more. 2) Remove the driver's airbag module. 3) Connect the connector (1N) in the test harness N to the connector (AB38). 4) Connect the airbag resistor to the connector (2N) of test harness N. 5) Connect the connector (1Q) in the test harness Q to connector (AB37). 6) Connect the airbag resistor to the connector (2Q) in the test harness Q. 7) Connect the battery ground terminal and turn the ignition switch to ON.	Does the airbag warning light illuminate for six seconds and go off?	Replace the driver's airbag module. <Ref. to AB-35, Driver's Airbag Module.>	Go to step **3**.

	Step	Check	Yes	No
3	**CHECK ROLL CONNECTOR.** 1) Turn the ignition switch to OFF, disconnect the battery ground cable, and wait for 60 seconds or more. 2) Remove the instrument panel lower cover and column cover, and disconnect the connector (AB7) from (AB2). 3) Disconnect the airbag resistor from the connector (2N) in test harness N and from the connector (2Q) in test harness Q. 4) Measure the voltage between connector (2Q) in the test harness Q and chassis ground. ***Connector & terminal*** ***(2Q) No. 1 (+) — Chassis ground (–):*** ***(2Q) No. 2 (+) — Chassis ground (–):***	Is the voltage less than 1 V?	Go to step **4**.	Replace the roll connector. <Ref. to AB-96, Roll Connector.>
4	**CHECK AIRBAG MAIN HARNESS (DRIVER'S AIRBAG HARNESS).** 1) Disconnect the test harness N from connector (AB38). 2) Disconnect the test harness Q from connector (AB37). 3) Remove the console front panel and disconnect the connector (AB9). 4) Disconnect the connectors (AB6, AB17, AB18) from the airbag control module, and connect the connector (1AG) in the test harness AG. NOTE: For type B (sedan models), connect test harness AH between the connectors (AB6, AB17, AB18) and (1AG). 5) Connect the battery ground terminal and turn the ignition switch to ON. 6) Measure the voltage between connector (3AG) in the test harness AG and chassis ground. ***Connector & terminal*** ***(3AG) No. 1 (+) — Chassis ground (–):*** ***(3AG) No. 3 (+) — Chassis ground (–):***	Is the voltage less than 1 V?	Go to step **5**.	Replace the airbag main harness along with body harness.
5	**CHECK AIRBAG CONTROL MODULE.** 1) Connect all connectors. 2) Clear the memory. 3) Perform the Inspection Mode. 4) Read the DTC.	Is the same DTC displayed?	Replace the airbag control module. <Ref. to AB-68, Airbag Control Module.>	Go to step **6**.
6	**CHECK FOR ANY OTHER DTC ON DISPLAY.**	Is any other DTC displayed?	Check DTC using "List of Diagnostic Trouble Code (DTC)". <Ref. to AB(diag)-41, List of Diagnostic Trouble Code (DTC).>	Finish the diagnosis.

D: DTC 16 PASSENGER'S AIRBAG FAILURE

DTC DETECTING CONDITION:

- Airbag main harness circuit is shorted to power supply.
- Airbag module harness (passenger's side) circuit is shorted to power supply.
- Passenger's airbag module is faulty.
- Airbag control module is faulty.

CAUTION:

Before performing diagnosis, refer to "CAUTION" in "General Description". <Ref. to AB(diag)-5, CAUTION, General Description.>

NOTE:

Prior to starting work, prepare two AIRBAG RESISTORs (98299PA040).

WIRING DIAGRAM:

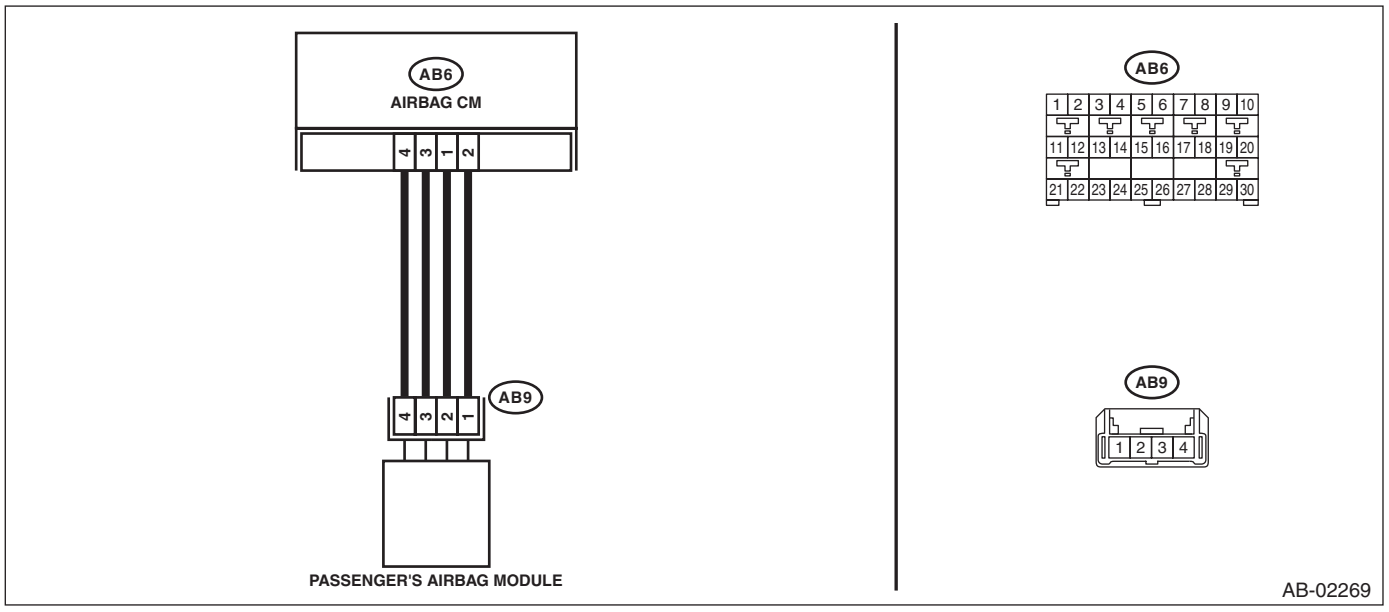

	Step	Check	Yes	No
1	**CHECK POOR CONTACT OF CONNECTORS.** Check for poor contact of the connectors between the airbag control module and the passenger's airbag module.	Is there poor contact?	Replace the airbag harness along with chassis harness.	Go to step **2**.
2	**CHECK PASSENGER'S AIRBAG MODULE.** 1) Turn the ignition switch to OFF, disconnect the battery ground cable, and wait for 60 seconds or more. 2) Remove the console front panel and disconnect the connector (AB9). 3) Connect the connector (1P) in the test harness P to connector (AB9). 4) Connect the airbag resistor to the connectors (2P) and (3P) of test harness P. 5) Connect the battery ground terminal and turn the ignition switch to ON.	Does the airbag warning light illuminate for six seconds and go off?	Replace the passenger's airbag module. <Ref. to AB-37, Passenger's Airbag Module.>	Go to step **3**.

	Step	Check	Yes	No
3	**CHECK AIRBAG MAIN HARNESS (PASSENGER'S AIRBAG HARNESS).** 1) Turn the ignition switch to OFF, disconnect the battery ground cable, and wait for 60 seconds or more. 2) Disconnect the airbag resistor from the connectors (2P) and (3P) of test harness P. 3) Remove the instrument panel lower cover and column cover, and disconnect the connector (AB7) from (AB2). 4) Disconnect the connectors (AB6, AB17, AB18) from the airbag control module, and connect the connector (1AG) in the test harness AG. NOTE: For type B (sedan models), connect test harness AH between the connectors (AB6, AB17, AB18) and (1AG). 5) Connect the battery ground terminal and turn the ignition switch to ON. 6) Measure the voltage between connector (3AG) in the test harness AG and chassis ground. ***Connector & terminal*** ***(3AG) No. 9 (+) — Chassis ground (–):*** ***(3AG) No. 7 (+) — Chassis ground (–):***	Is the voltage less than 1 V?	Go to step **4**.	Replace the airbag main harness along with body harness.
4	**CHECK AIRBAG CONTROL MODULE.** 1) Connect all connectors. 2) Clear the memory. 3) Perform the Inspection Mode. 4) Read the DTC.	Is the same DTC displayed?	Replace the airbag control module. <Ref. to AB-68, Airbag Control Module.>	Go to step **5**.
5	**CHECK FOR ANY OTHER DTC ON DISPLAY.**	Is any other DTC displayed?	Check DTC using "List of Diagnostic Trouble Code (DTC)". <Ref. to AB(diag)-41, List of Diagnostic Trouble Code (DTC).>	Finish the diagnosis.

E: DTC 1A DRIVER'S AIRBAG FAILURE

DTC DETECTING CONDITION:

- Airbag main harness circuit is shorted.
- Airbag module harness (driver's side) circuit is shorted.
- Roll connector circuit is shorted.
- Driver's airbag module is faulty.
- Airbag control module is faulty.

CAUTION:

Before performing diagnosis, refer to "CAUTION" in "General Description". <Ref. to AB(diag)-5, CAUTION, General Description.>

NOTE:

Prior to starting work, prepare two AIRBAG RESISTORs (98299PA040).

WIRING DIAGRAM:

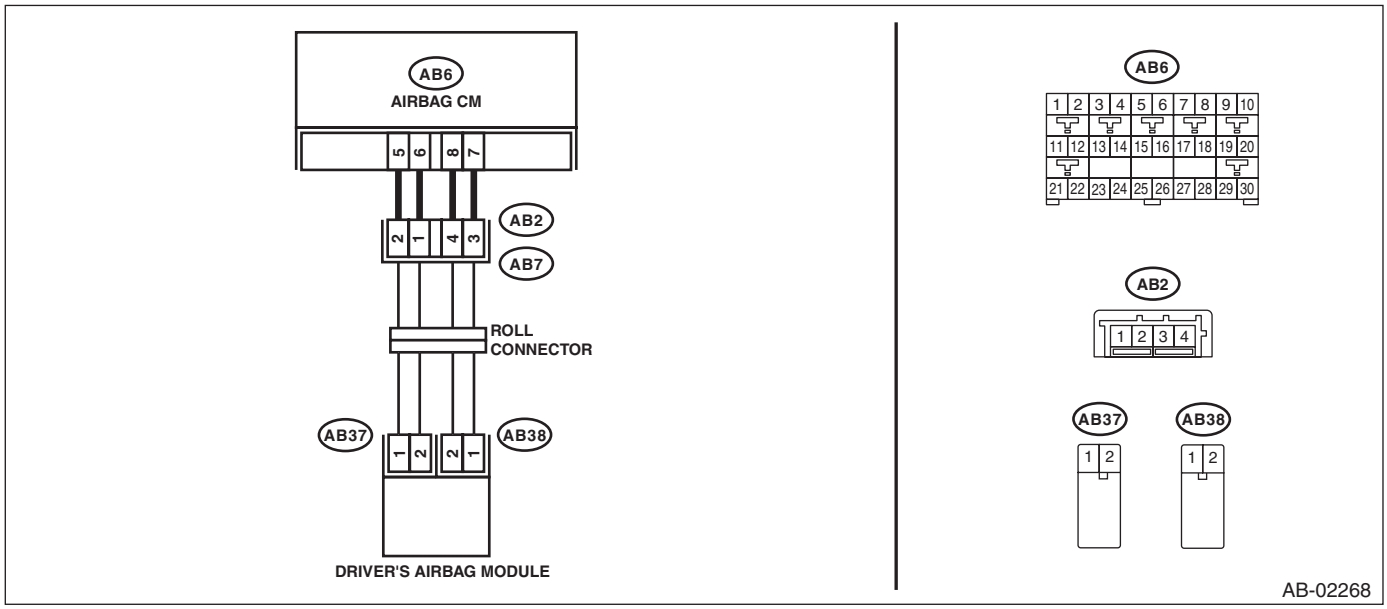

Step		Check	Yes	No
1	**CHECK POOR CONTACT OF CONNECTORS.** Check for poor contact of the connectors between the airbag control module and the driver's airbag module.	Is there poor contact?	Replace the airbag harness.	Go to step **2**.
2	**CHECK DRIVER'S AIRBAG MODULE.** 1) Turn the ignition switch to OFF, disconnect the battery ground cable, and wait for 60 seconds or more. 2) Remove the driver's airbag module. 3) Connect the connector (1N) in the test harness N to the connector (AB38). 4) Connect the airbag resistor to the connector (2N) of test harness N. 5) Connect the connector (1Q) in the test harness Q to connector (AB37). 6) Connect the airbag resistor to the connector (2Q) in the test harness Q. 7) Connect the battery ground terminal and turn the ignition switch to ON.	Does the airbag warning light illuminate for six seconds and go off?	Replace the driver's airbag module. <Ref. to AB-35, Driver's Airbag Module.>	Go to step **3**.

	Step	Check	Yes	No
3	**CHECK ROLL CONNECTOR AND AIRBAG MAIN HARNESS (DRIVER'S AIRBAG HARNESS).** 1) Turn the ignition switch to OFF, disconnect the battery ground cable, and wait for 60 seconds or more. 2) Remove the console front panel and disconnect the connector (AB9). 3) Disconnect the airbag resistor from the connector (2N) in test harness N and from the connector (2Q) in test harness Q. 4) Disconnect the connectors (AB6, AB17, AB18) from the airbag control module, and connect the connector (1AG) in the test harness AG. NOTE: For sedan models, connect test harness AH between the connectors (AB6, AB17, AB18) and (1AG). 5) Measure the resistance between connector (2Q) terminals in test harness Q. ***Connector & terminal*** ***(2Q) No. 1 — (2Q) No. 2:***	Is the resistance 1 MΩ or more?	Go to step **5**.	Go to step **4**.
4	**CHECK AIRBAG MAIN HARNESS (DRIVER'S AIRBAG HARNESS).** 1) Remove the instrument panel lower cover and column cover, and disconnect the connector (AB7) from (AB2). 2) Measure the resistance between connector (3AG) terminals in test harness AG. ***Connector & terminal*** ***(3AG) No. 1 — (3AG) No. 3:***	Is the resistance 1 MΩ or more?	Replace the roll connector. <Ref. to AB-96, Roll Connector.>	Replace the airbag main harness along with body harness.
5	**CHECK AIRBAG CONTROL MODULE.** 1) Connect all connectors. 2) Clear the memory. 3) Perform the Inspection Mode. 4) Read the DTC.	Is the same DTC displayed?	Replace the airbag control module. <Ref. to AB-68, Airbag Control Module.>	Go to step **6**.
6	**CHECK FOR ANY OTHER DTC ON DISPLAY.**	Is any other DTC displayed?	Check DTC using "List of Diagnostic Trouble Code (DTC)". <Ref. to AB(diag)-41, List of Diagnostic Trouble Code (DTC).>	Finish the diagnosis.

F: DTC 1B PASSENGER'S AIRBAG FAILURE

DTC DETECTING CONDITION:

- Airbag main harness circuit is shorted.
- Airbag module harness circuit (passenger's side) is shorted.
- Roll connector circuit is shorted.
- Passenger's airbag module is faulty.
- Airbag control module is faulty.

CAUTION:
Before performing diagnosis, refer to "CAUTION" in "General Description". <Ref. to AB(diag)-5, CAUTION, General Description.>

NOTE:
Prior to starting work, prepare two AIRBAG RESISTORs (98299PA040).

WIRING DIAGRAM:

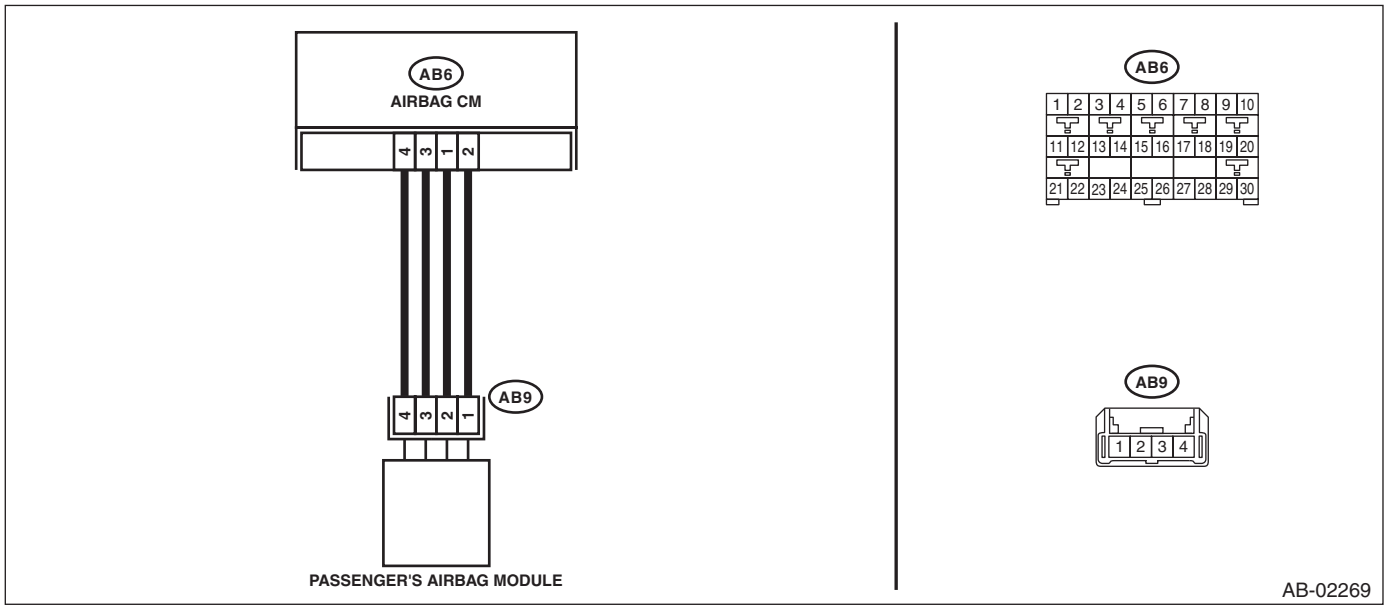

	Step	Check	Yes	No
1	**CHECK POOR CONTACT OF CONNECTORS.** Check for poor contact of the connectors between the airbag control module and the passenger's airbag module.	Is there poor contact?	Replace the airbag harness.	Go to step **2**.
2	**CHECK PASSENGER'S AIRBAG MODULE.** 1) Turn the ignition switch to OFF, disconnect the battery ground cable, and wait for 60 seconds or more. 2) Remove the console front panel and disconnect the connector (AB9). 3) Connect the connector (1P) in the test harness P to connector (AB9). 4) Connect the airbag resistor to the connectors (2P) and (3P) of test harness P. 5) Connect the battery ground terminal and turn the ignition switch to ON.	Does the airbag warning light illuminate for six seconds and go off?	Replace the passenger's airbag module. <Ref. to AB-37, Passenger's Airbag Module.>	Go to step **3**.

	Step	Check	Yes	No
3	**CHECK AIRBAG MAIN HARNESS (PASSENGER'S AIRBAG HARNESS).** 1) Turn the ignition switch to OFF, disconnect the battery ground cable, and wait for 60 seconds or more. 2) Disconnect the airbag resistor from the connectors (2P) and (3P) of test harness P. 3) Remove the instrument panel lower cover and column cover, and disconnect the connector (AB7) from (AB2). 4) Disconnect the connectors (AB6, AB17, AB18) from the airbag control module, and connect the connector (1AG) in the test harness AG. NOTE: For sedan models, connect test harness AH between the connectors (AB6, AB17, AB18) and (1AG). 5) Measure the resistance between connector (3AG) terminals in test harness AG. ***Connector & terminal*** ***(3AG) No. 7 — (3AG) No. 9:***	Is the resistance 1 MΩ or more?	Go to step **4**.	Replace the airbag main harness along with body harness.
4	**CHECK AIRBAG CONTROL MODULE.** 1) Connect all connectors. 2) Clear the memory. 3) Perform the Inspection Mode. 4) Read the DTC.	Is the same DTC displayed?	Replace the airbag control module. <Ref. to AB-68, Airbag Control Module.>	Go to step **5**.
5	**CHECK FOR ANY OTHER DTC ON DISPLAY.**	Is any other DTC displayed?	Check DTC using "List of Diagnostic Trouble Code (DTC)". <Ref. to AB(diag)-41, List of Diagnostic Trouble Code (DTC).>	Finish the diagnosis.

G: DTC 1D DRIVER'S AIRBAG FAILURE

DTC DETECTING CONDITION:

- Airbag main harness circuit is open.
- Airbag module harness (driver's side) circuit is open.
- Roll connector is open.
- Driver's airbag module is faulty.
- Airbag control module is faulty.

CAUTION:

Before performing diagnosis, refer to "CAUTION" in "General Description". <Ref. to AB(diag)-5, CAUTION, General Description.>

NOTE:

Prior to starting work, prepare two AIRBAG RESISTORs (98299PA040).

WIRING DIAGRAM:

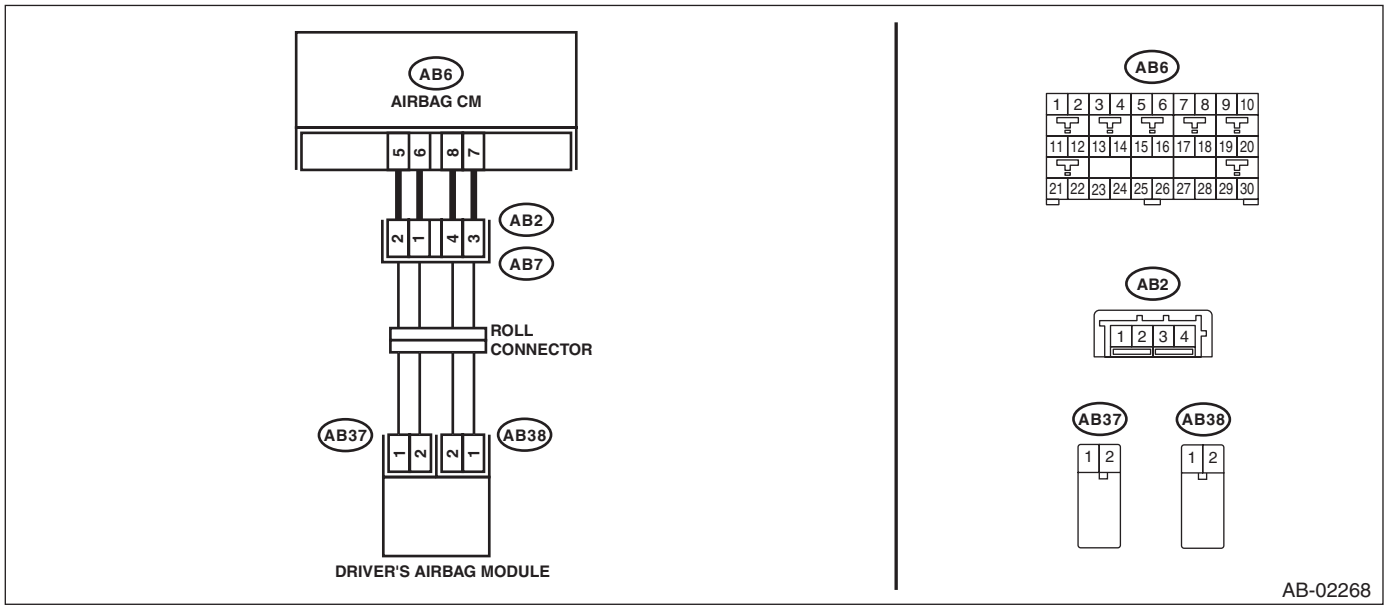

Step		Check	Yes	No
1	**CHECK POOR CONTACT OF CONNECTORS.** Check for poor contact of the connectors between the airbag control module and the driver's airbag module.	Is there poor contact?	Replace the airbag harness.	Go to step **2**.
2	**CHECK DRIVER'S AIRBAG MODULE.** 1) Turn the ignition switch to OFF, disconnect the battery ground cable, and wait for 60 seconds or more. 2) Remove the driver's airbag module. 3) Connect the connector (1N) in the test harness N to the connector (AB38). 4) Connect the airbag resistor to the connector (2N) of test harness N. 5) Connect the connector (1Q) in the test harness Q to connector (AB37). 6) Connect the airbag resistor to the connector (2Q) in the test harness Q. 7) Connect the battery ground terminal and turn the ignition switch to ON.	Does the airbag warning light illuminate for six seconds and go off?	Replace the driver's airbag module. <Ref. to AB-35, Driver's Airbag Module.>	Go to step **3**.

	Step	Check	Yes	No
3	**CHECK ROLL CONNECTOR AND AIRBAG MAIN HARNESS (DRIVER'S AIRBAG HARNESS).** 1) Turn the ignition switch to OFF, disconnect the battery ground cable, and wait for 60 seconds or more. 2) Remove the console front panel and disconnect the connector (AB9). 3) Disconnect the airbag resistor from the connector (2N) in test harness N. 4) Disconnect the airbag resistor from the connector (2Q) of test harness Q. 5) Disconnect the connectors (AB6, AB17, AB18) from airbag control module. 6) Measure the resistance between connector (2Q) terminals in test harness Q. ***Connector & terminal (2Q) No. 1 — (2Q) No. 2:***	Is the resistance less than 10 Ω?	Go to step **5**.	Go to step **4**.
4	**CHECK ROLL CONNECTOR.** 1) Remove the instrument panel lower cover and column cover, and disconnect the connector (AB7) from (AB2). 2) Measure the resistance between connector (2Q) terminals in test harness Q. ***Connector & terminal (2Q) No. 1 — (2Q) No. 2:***	Is the resistance less than 10 Ω?	Replace the airbag main harness along with body harness.	Replace the roll connector. <Ref. to AB-96, Roll Connector.>
5	**CHECK AIRBAG CONTROL MODULE.** 1) Connect all connectors. 2) Clear the memory. 3) Perform the Inspection Mode. 4) Read the DTC.	Is the same DTC displayed?	Replace the airbag control module. <Ref. to AB-68, Airbag Control Module.>	Go to step **6**.
6	**CHECK FOR ANY OTHER DTC ON DISPLAY.**	Is any other DTC displayed?	Check DTC using "List of Diagnostic Trouble Code (DTC)". <Ref. to AB(diag)-41, List of Diagnostic Trouble Code (DTC).>	Finish the diagnosis.

H: DTC 1E PASSENGER'S AIRBAG FAILURE

DTC DETECTING CONDITION:

- Airbag main harness circuit is open.
- Airbag module harness (passenger's side) circuit is open.
- Roll connector circuit is shorted.
- Passenger's airbag module is faulty.
- Airbag control module is faulty.

CAUTION:
Before performing diagnosis, refer to "CAUTION" in "General Description". <Ref. to AB(diag)-5, CAUTION, General Description.>

NOTE:
Prior to starting work, prepare two AIRBAG RESISTORs (98299PA040).

WIRING DIAGRAM:

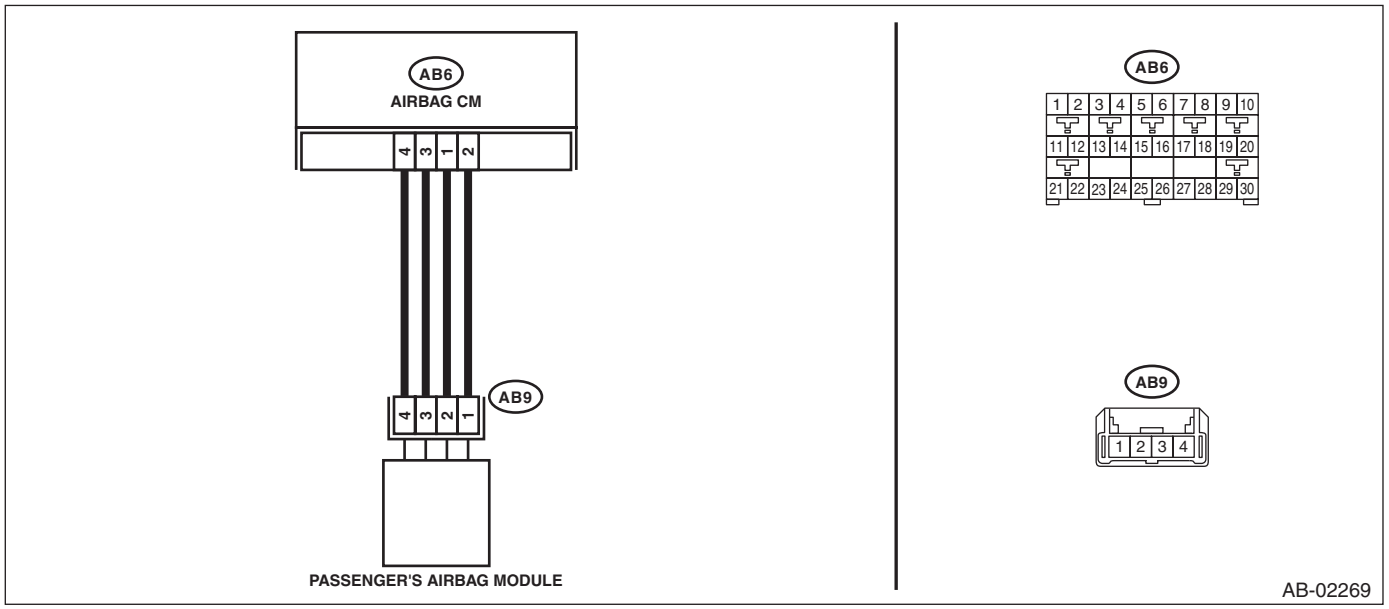

	Step	Check	Yes	No
1	**CHECK POOR CONTACT OF CONNECTORS.** Check for poor contact of the connectors between the airbag control module and the passenger's airbag module.	Is there poor contact?	Replace the airbag harness.	Go to step **2**.
2	**CHECK PASSENGER'S AIRBAG MODULE.** 1) Turn the ignition switch to OFF, disconnect the battery ground cable, and wait for 60 seconds or more. 2) Remove the console front panel and disconnect the connector (AB9). 3) Connect the connector (1P) in the test harness P to connector (AB9). 4) Connect the airbag resistor to the connectors (2P) and (3P) of test harness P. 5) Connect the battery ground terminal and turn the ignition switch to ON.	Does the airbag warning light illuminate for six seconds and go off?	Replace the passenger's airbag module. <Ref. to AB-37, Passenger's Airbag Module.>	Go to step **3**.

	Step	Check	Yes	No
3	**CHECK AIRBAG MAIN HARNESS (PASSENGER'S AIRBAG HARNESS).** 1) Turn the ignition switch to OFF, disconnect the battery ground cable, and wait for 60 seconds or more. 2) Disconnect the airbag resistor from the connectors (2P) and (3P) of test harness P. 3) Remove the instrument panel lower cover and column cover, and disconnect the connector (AB7) from (AB2). 4) Disconnect the connectors (AB6, AB17, AB18) from the airbag control module, and connect the connector (1AG) in the test harness AG. NOTE: For sedan models, connect test harness AH between the connectors (AB6, AB17, AB18) and (1AG). 5) Measure the resistance between connector (3AG) of test harness AG and connector (2P) of test harness P. ***Connector & terminal*** ***(3AG) No. 9 — (2P) No. 1:*** ***(3AG) No. 7 — (2P) No. 2:***	Is the resistance less than 10 Ω?	Go to step **4**.	Replace the airbag main harness along with body harness.
4	**CHECK AIRBAG CONTROL MODULE.** 1) Connect all connectors. 2) Clear the memory. 3) Perform the Inspection Mode. 4) Read the DTC.	Is the same DTC displayed?	Replace the airbag control module. <Ref. to AB-68, Airbag Control Module.>	Go to step **5**.
5	**CHECK FOR ANY OTHER DTC ON DISPLAY.**	Is any other DTC displayed?	Check DTC using "List of Diagnostic Trouble Code (DTC)". <Ref. to AB(diag)-41, List of Diagnostic Trouble Code (DTC).>	Finish the diagnosis.

I: DTC 21 AIRBAG ECM FAILURE

DTC DETECTING CONDITION:
Airbag control module is faulty.

CAUTION:
Before performing diagnosis, refer to "CAUTION" in "General Description". <Ref. to AB(diag)-5, CAUTION, General Description.>

	Step	Check	Yes	No
1	**CHECK IF DTC 21 IS INDICATED.** Read the DTC. <Ref. to AB(diag)-32, Read Diagnostic Trouble Code (DTC).>	Does the Subaru Select Monitor display DTC21?	Replace the airbag control module. <Ref. to AB-68, Airbag Control Module.>	Perform the Clear Memory Mode. <Ref. to AB(diag)-34, Clear Memory Mode.>

J: DTC 22 FRONT AIRBAG FIRING OUTPUT

DTC DETECTING CONDITION:

This DTC is indicated when the front airbag module and the pretensioner are deployed.
Once this DTC is displayed, the memory cannot be cleared. Therefore replace the following parts.

- Airbag control module <Ref. to AB-68, Airbag Control Module.>
- Driver's airbag module <Ref. to AB-35, Driver's Airbag Module.>
- Passenger's airbag module <Ref. to AB-37, Passenger's Airbag Module.>
- Front sub sensor of both sides. <Ref. to AB-71, Front Sub Sensor.>
- Front outer seat belt with pretensioner of both sides. <Ref. to SB-17, Front Seat Belt.>
- Steering roll connector <Ref. to AB-96, Roll Connector.>
- Occupant detection system (passenger's seat cushion & frame assembly) <Ref. to SE-27, PASSENGER'S SEAT, DISASSEMBLY, Front Seat.>

K: DTC 26 PASSENGER'S AIRBAG INDICATOR FAILURE

DTC DETECTING CONDITION:

- Passenger's airbag indicator is faulty.
- Airbag control module is faulty.
- Airbag main harness circuit is open or shorted.
- Body harness circuit is open.

CAUTION:

Before performing diagnosis, refer to "CAUTION" in "General Description". <Ref. to AB(diag)-5, CAUTION, General Description.>

WIRING DIAGRAM:

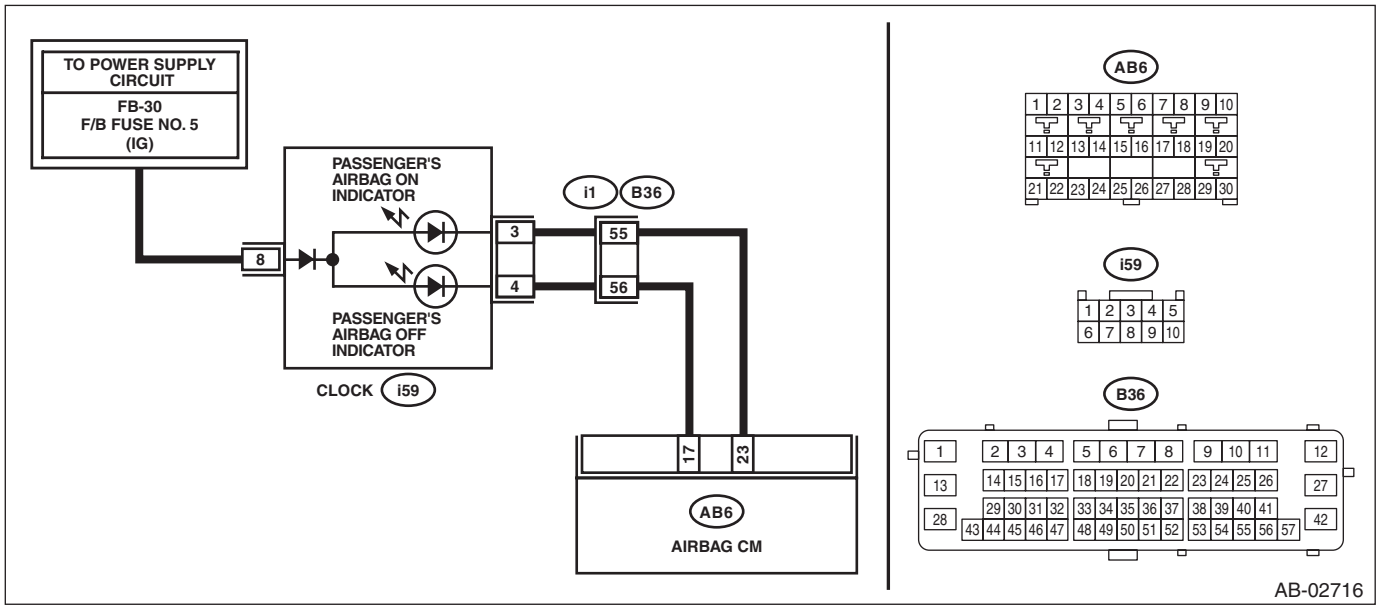

Step		Check	Yes	No
1	**CHECK FOR POOR CONTACT.** 1) Turn the ignition switch to OFF, disconnect the battery ground cable, and wait for 60 seconds or more. 2) Check that the connector between the airbag control module and the clock is securely connected.	Is there poor contact of any connector?	Replace the airbag harness connector.	Go to step **2**.
2	**CHECK AIRBAG MAIN HARNESS.** 1) Disconnect the connectors (AB6, AB17, AB18) from airbag control module. 2) Connect the battery ground terminal and turn the ignition switch to ON. NOTE: Neither of ON/OFF illuminates when it is normal.	Does the passenger's airbag indicator illuminate?	Go to step **3**.	Go to step **4**.

	Step	Check	Yes	No
3	**CHECK AIRBAG MAIN HARNESS.** 1) Turn the ignition switch to OFF. 2) Remove the clock, and disconnect the connector (i59). 3) Connect the connector (1AG) in the test harness AG to the connectors (AB6, AB17, AB18). NOTE: For type B (sedan models), connect test harness AH between the connectors (AB6, AB17, AB18) and (1AG). 4) Measure the resistance between connector (2AG) in the test harness AG and chassis ground, and between connector (2AG) terminals. ***Connector & terminal*** ***(2AG) No. 9 — (2AG) No. 8:*** ***(2AG) No. 9 — Chassis ground:*** ***(2AG) No. 8 — Chassis ground:***	Is the resistance 1 MΩ or more?	Replace the clock.	Repair the bulkhead harness. Or replace the airbag main harness along with body harness.
4	**CHECK AIRBAG HARNESS.** 1) Connect the connectors (7AG) and (8AG) in the test harness AG. 2) Connect the battery ground terminal and turn the ignition switch to ON.	Does the passenger's airbag indicator illuminate?	Replace the airbag control module. <Ref. to AB-68, Airbag Control Module.>	Go to step **5**.
5	**CHECK AIRBAG HARNESS.** 1) Turn the ignition switch to OFF. 2) Disconnect the connectors (7AG) and (8AG) in the test harness AG. 3) Measure the resistance between connector (2AG) in the test harness AG and connector (i59). ***Connector & terminal*** ***(2AG) No. 9 — (i59) No. 4:*** ***(2AG) No. 8 — (i59) No. 3:***	Is the resistance less than 10 Ω?	Go to step **6**.	Repair the bulkhead harness. Or replace the airbag main harness along with body harness.
6	**CHECK BODY HARNESS.** 1) Turn the ignition switch to ON. 2) Measure the voltage between connector (i59) and chassis ground. ***Connector & terminal*** ***(i59) No. 8 — Chassis ground:***	Is the voltage 10 V or more?	Replace the clock.	Check the power supply circuit of the clock.

L: DTC 27 ODS COMMUNICATION ERROR

NOTE:
Be sure to properly identify the Airbag system type prior to performing any diagnostics.

DTC DETECTING CONDITION:

- Communication to the occupant detection control module is faulty.
- Airbag rear harness circuit is open, shorted, shorted to ground or shorted to power supply.
- Occupant detection harness (seat harness) is faulty.
- Occupant detection system is faulty.
- Airbag control module is faulty.

CAUTION:
Before performing diagnosis, refer to "CAUTION" in "General Description". <Ref. to AB(diag)-5, CAUTION, General Description.>

WIRING DIAGRAM:

- Type A

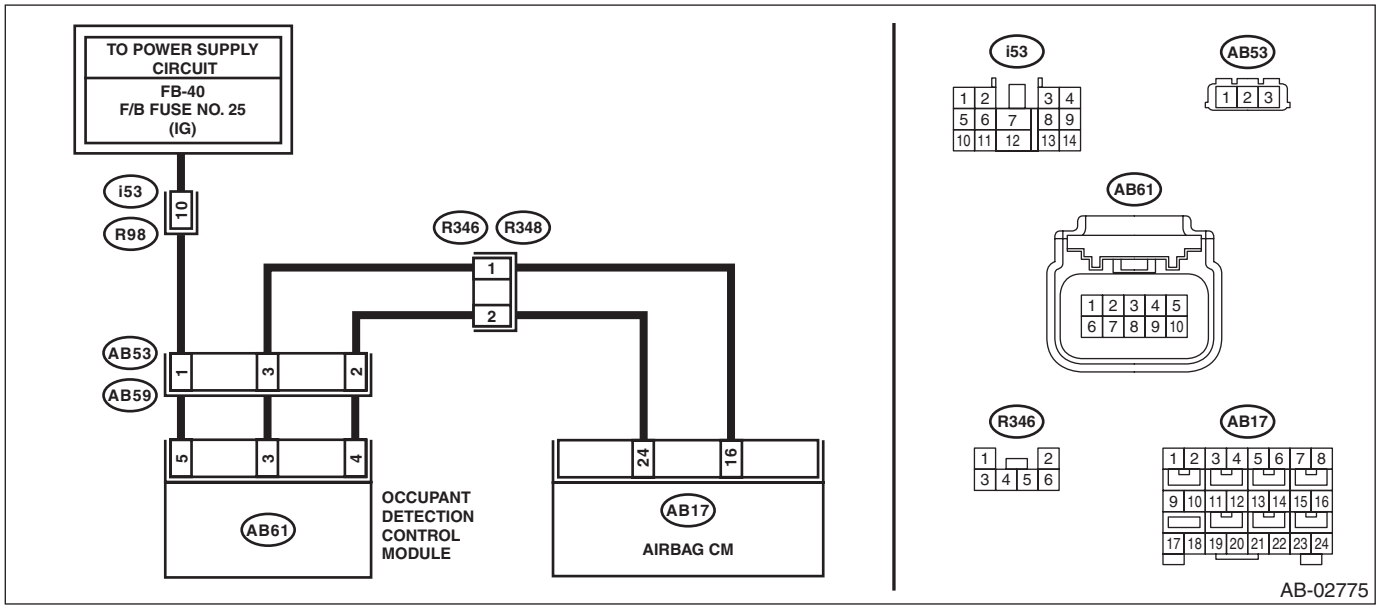

Step		Check	Yes	No
1	**CHECK POOR CONTACT OF CONNECTORS.** Check for poor contact of the connectors between the airbag control module and the occupant detection control module.	Is there poor contact?	Reconnect the connector. If defective is not improved, replace the airbag rear harness along with the body harness or the occupant detection harness (seat harness).	Go to step **2**.

	Step	Check	Yes	No
2	**CHECK AIRBAG HARNESS.** 1) Turn the ignition switch to OFF, disconnect the battery ground cable, and wait for 60 seconds or more. 2) Disconnect the connectors (AB6, AB17, AB18) from airbag control module. 3) Disconnect the connectors (AB59) and (AB53) under the passenger's seat. 4) Connect the connector (1AG) in the test harness AG to the connectors (AB6, AB17, AB18). 5) Connect the connector (1AD) in the test harness AD to the connector (AB53). 6) Measure the resistance between connector (6AG) or (5AG) in the test harness AG and connector (2AD) in the test harness AD. ***Connector & terminal*** ***(6AG) No. 9 — (2AD) No. 3:*** ***(6AG) No. 11 — (2AD) No. 2:***	Is the resistance less than 10 Ω?	Go to step **5**.	Go to step **3**.
3	**CHECK AIRBAG HARNESS.** 1) Disconnect the connectors (R346) and (R348). 2) Measure the resistance between connector (R348) and connector (6AG) in the test harness AG. ***Connector & terminal*** ***(R348) No. 1 — (6AG) No. 9:*** ***(R348) No. 2 — (6AG) No. 11:***	Is the resistance less than 10 Ω?	Replace the airbag rear harness RH.	Go to step **4**.
4	**CHECK AIRBAG HARNESS.** Measure the resistance between connector (R346) and connector (2AD) in the test harness AD. ***Connector & terminal*** ***(R346) No. 1 — (2AD) No. 3:*** ***(R346) No. 2 — (2AD) No. 2:***	Is the resistance less than 10 Ω?	Replace the airbag rear harness LH.	Check for poor contact of connectors (R346) and (R348).
5	**CHECK AIRBAG HARNESS.** Measure the resistance between connector (2AD) in the test harness AD and chassis ground, and between connector (2AD) terminals. ***Connector & terminal*** ***(2AD) No. 2 — Chassis ground:*** ***(2AD) No. 3 — Chassis ground:*** ***(2AD) No. 2 — (2AD) No. 3:***	Is the resistance 1 MΩ or more?	Go to step **7**.	Go to step **6**.
6	**CHECK AIRBAG HARNESS.** 1) Disconnect the connectors (R346) and (R348). 2) Measure the resistance between connector (6AG) in the test harness AG and chassis ground. ***Connector & terminal*** ***(6AG) No. 9 — Chassis ground:*** ***(6AG) No. 11 — Chassis ground:*** ***(6AG) No. 9 — (6AG) No. 11:***	Is the resistance 1 MΩ or more?	Replace the airbag rear harness RH.	Replace the airbag rear harness LH.

	Step	Check	Yes	No
7	**CHECK AIRBAG HARNESS.** 1) Turn the ignition switch to ON. 2) Measure the voltage between connector (2AD) in the test harness AD and chassis ground. ***Connector & terminal*** ***(2AD) No. 1 — chassis ground:***	Is the voltage 9 V or more?	Replace the occupant detection harness (seat harness). If defective is not improved, replace the occupant detection system (seat cushion & frame assembly), and then the airbag control module in this order.	Check the battery voltage and fuse. If there is no fault, replace the airbag rear harness along with body harness or replace the body harness.

- Type B

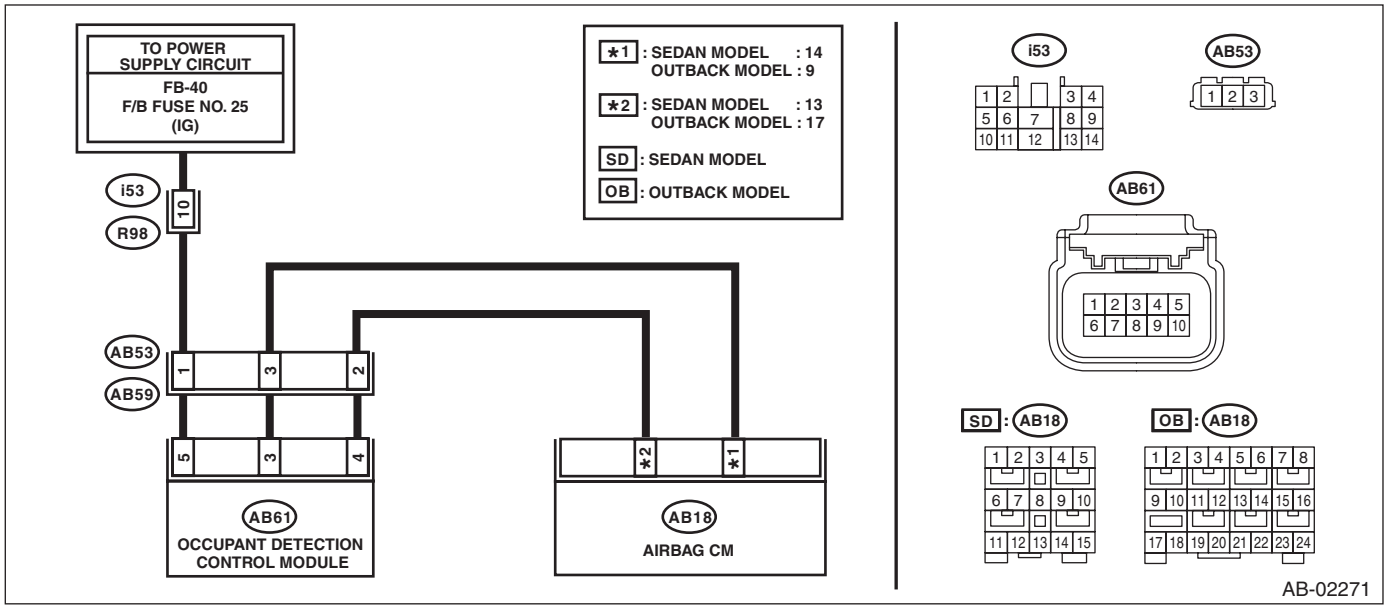

Step		Check	Yes	No
1	**CHECK POOR CONTACT OF CONNECTORS.** Check for poor contact of the connectors between the airbag control module and the occupant detection control module.	Is there poor contact?	Reconnect the connector. If defective is not improved, replace the airbag rear harness along with the body harness or the occupant detection harness (seat harness).	Go to step **2**.
2	**CHECK AIRBAG HARNESS.** 1) Turn the ignition switch to OFF, disconnect the battery ground cable, and wait for 60 seconds or more. 2) Disconnect the connectors (AB6, AB17, AB18) from airbag control module. 3) Disconnect the connectors (AB59) and (AB53) under the passenger's seat. 4) Connect the connector (1AG) in the test harness AG to the connectors (AB6, AB17, AB18). NOTE: For sedan models, connect test harness AH between the connectors (AB6, AB17, AB18) and (1AG). 5) Connect the connector (1AD) in the test harness AD to the connector (AB53). 6) Measure the resistance between connector (6AG) or (5AG) in the test harness AG and connector (2AD) in the test harness AD. ***Connector & terminal*** ***Sedan model*** ***(5AG) No. 3 — (2AD) No. 2:*** ***(5AG) No. 8 — (2AD) No. 3:*** ***OUTBACK model*** ***(6AG) No. 10 — (2AD) No. 3:*** ***(6AG) No. 12 — (2AD) No. 2:***	Is the resistance less than 10 Ω?	Go to step **3**.	Replace the airbag rear harness along with body harness.

	Step	Check	Yes	No
3	**CHECK AIRBAG HARNESS.** Measure the resistance between connector (2AD) in the test harness AD and chassis ground, and between connector (2AD) terminals. ***Connector & terminal*** ***(2AD) No. 2 — Chassis ground:*** ***(2AD) No. 3 — Chassis ground:*** ***(2AD) No. 2 — (2AD) No. 3:***	Is the resistance 1 MΩ or more?	Go to step **4**.	Replace the airbag rear harness along with body harness.
4	**CHECK AIRBAG HARNESS.** 1) Turn the ignition switch to ON. 2) Measure the voltage between connector (2AD) in the test harness AD and chassis ground. ***Connector & terminal*** ***(2AD) No. 1 — chassis ground:***	Is the voltage 9 V or more?	Replace the occupant detection harness (seat harness). If defective is not improved, replace the occupant detection system (seat cushion & frame assembly), and then the airbag control module in this order.	Check the battery voltage and fuse. If there is no fault, replace the airbag rear harness along with body harness or replace the body harness.

M: DTC 29 ODS FAILURE

NOTE:
Refer to “Occupant Detection System” for details on DTC 29. <Ref. to OD(diag)-21, DTC 29 ODS FAILURE, Diagnostic Procedure with Diagnostic Trouble Code (DTC).>

N: DTC 2A ODS CALIBRATION ERROR

NOTE:
Refer to “Occupant Detection System” for details on DTC 2A. <Ref. to OD(diag)-22, DTC 2A ODS CALIBRATION ERROR, Diagnostic Procedure with Diagnostic Trouble Code (DTC).>

O: DTC 2B ODS SYSTEM WRONG PARTS

NOTE:
Refer to “Occupant Detection System” for details on DTC 2B. <Ref. to OD(diag)-22, DTC 2B ODS SYSTEM WRONG PARTS, Diagnostic Procedure with Diagnostic Trouble Code (DTC).>

P: DTC 2D AIRBAG WARNING INDICATOR FAILURE

DTC DETECTING CONDITION:

- Airbag warning light is faulty.
- Harness between airbag control module and airbag warning light is shorted or open.
- Connection of airbag main harness and instrument panel harness is improper.
- Grounding circuit is faulty.
- Airbag control module is faulty.

NOTE:
For the diagnostic procedure, refer to “Airbag Warning Light Failure”. <Ref. to AB(diag)-37, Airbag Warning Light Failure.>

Q: DTC 33 FRONT SUB SENSOR RH FAILURE

DTC DETECTING CONDITION:

Front sub sensor (RH) is faulty.
If DTC 33 is displayed, the circuit within the front sub sensor (RH) is faulty.
Replace the front sub sensor (RH). <Ref. to AB-71, Front Sub Sensor.>

R: DTC 34 FRONT SUB SENSOR LH FAILURE

DTC DETECTING CONDITION:

Front sub sensor (LH) is faulty.
If DTC 34 is displayed, the circuit within the front sub sensor (LH) is faulty.
Replace the front sub sensor (LH). <Ref. to AB-71, Front Sub Sensor.>

S: DTC 37 BUCKLE SWITCH RH FAILURE

NOTE:
Refer to “Occupant Detection System” for details on DTC 37. <Ref. to OD(diag)-23, DTC 37 BUCKLE SWITCH RH FAILURE, Diagnostic Procedure with Diagnostic Trouble Code (DTC).>

T: DTC 39 SEAT BELT WARNING FAILURE

DTC DETECTING CONDITION:

- Airbag control module is faulty.
- Body integrated unit is faulty.
- Harness circuits between body integrated unit and airbag control module are open, shorted or shorted to ground.

CAUTION:
Before performing diagnosis, refer to "CAUTION" in "General Description". <Ref. to AB(diag)-5, CAUTION, General Description.>
WIRING DIAGRAM:

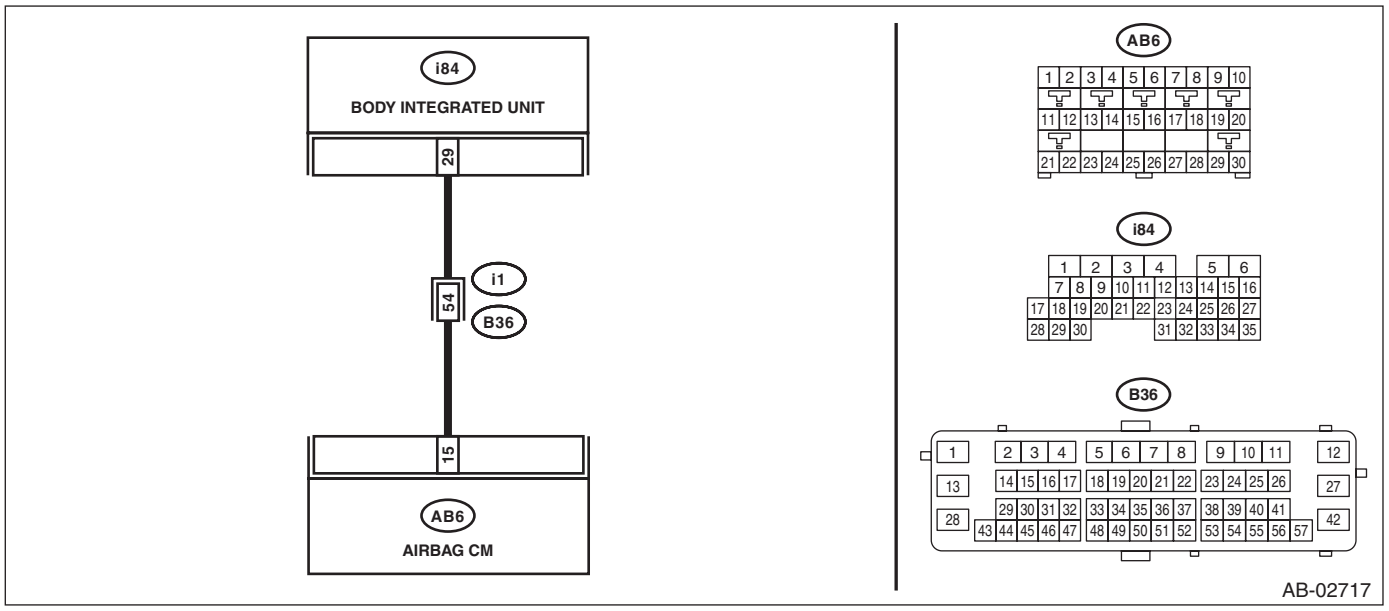

Step		Check	Yes	No
1	**CHECK AIRBAG HARNESS.** 1) Turn the ignition switch to OFF, disconnect the battery ground cable, and wait for 60 seconds or more. 2) Disconnect the connectors (AB6, AB17, AB18) from airbag control module. 3) Connect the battery ground terminal and turn the ignition switch to ON.	Does the passenger's seat belt warning light blink for 6 seconds and go off?	Go to step **3**.	Go to step **2**.
2	**CHECK AIRBAG HARNESS.** 1) Turn the ignition switch to OFF. 2) Connect the connector (1AG) in the test harness AG to the connectors (AB6, AB17, AB18). NOTE: For type B (sedan models), connect test harness AH between the connectors (AB6, AB17, AB18) and (1AG). 3) Measure the resistance between connector (2AG) in the test harness AG and chassis ground. ***Connector & terminal*** ***(2AG) No. 10 — Chassis ground:***	Is the resistance 1 MΩ or more?	Replace the body integrated unit.	Repair the bulkhead harness and instrument panel harness. Or replace the airbag main harness along with body harness.

	Step	Check	Yes	No
3	**CHECK AIRBAG HARNESS.** 1) Turn the ignition switch to OFF. 2) Connect the connector (1AG) in the test harness AG to the connectors (AB6, AB17, AB18). NOTE: For type B (sedan models), connect test harness AH between the connectors (AB6, AB17, AB18) and (1AG). 3) Connect the connectors (7AG) and (8AG) in the test harness AG. 4) Turn the ignition switch to ON.	Does the passenger's seat belt warning light blink for 6 seconds, then repeatedly light and go off?	Replace the airbag control module. <Ref. to AB-68, Airbag Control Module.>	Go to step **4**.
4	**CHECK AIRBAG HARNESS.** 1) Turn the ignition switch to OFF. 2) Disconnect the connectors (7AG) and (8AG) in the test harness AG. 3) Measure the resistance between connector (2AG) in the test harness AG and connector (i84). ***Connector & terminal*** ***(2AG) No. 10 — (i84) No. 29:***	Is the resistance less than 10 Ω?	Replace the body integrated unit.	Repair the bulkhead harness and instrument panel harness. Or replace the airbag main harness along with body harness.

U: DTC 3A FRONT SUB SENSOR RH FALSE INSTALLATION

DTC DETECTING CONDITION:

Front sub sensor (RH) is misinstalled.

	Step	Check	Yes	No
1	**REPLACE FRONT SUB SENSOR.** 1) Turn the ignition switch to OFF, disconnect the battery ground cable, and wait for 60 seconds or more. 2) Replace the front sub sensor (RH) with a genuine sensor. <Ref. to AB-71, REMOVAL, Front Sub Sensor.>	Does the warning light go off?	Finish the diagnosis.	Replace the airbag control module. <Ref. to AB-68, REMOVAL, Airbag Control Module.>

V: DTC 3B FRONT SUB SENSOR LH FALSE INSTALLATION

DTC DETECTING CONDITION:

Front sub sensor (LH) is misinstalled.

	Step	Check	Yes	No
1	**REPLACE FRONT SUB SENSOR.** 1) Turn the ignition switch to OFF, disconnect the battery ground cable, and wait for 60 seconds or more. 2) Replace the front sub sensor (LH) with a genuine sensor. <Ref. to AB-71, REMOVAL, Front Sub Sensor.>	Does the warning light go off?	Finish the diagnosis.	Replace the airbag control module. <Ref. to AB-68, REMOVAL, Airbag Control Module.>

W: DTC 41 SIDE AIRBAG RH FAILURE

NOTE:
Be sure to properly identify the Airbag system type prior to performing any diagnostics.

1. TYPE A

DTC DETECTING CONDITION:

- Side airbag harness (RH) is faulty.
- Side airbag module (RH) is faulty.
- Airbag control module is faulty.

CAUTION:
Before performing diagnosis, refer to "CAUTION" in "General Description". <Ref. to AB(diag)-5, CAUTION, General Description.>
WIRING DIAGRAM:

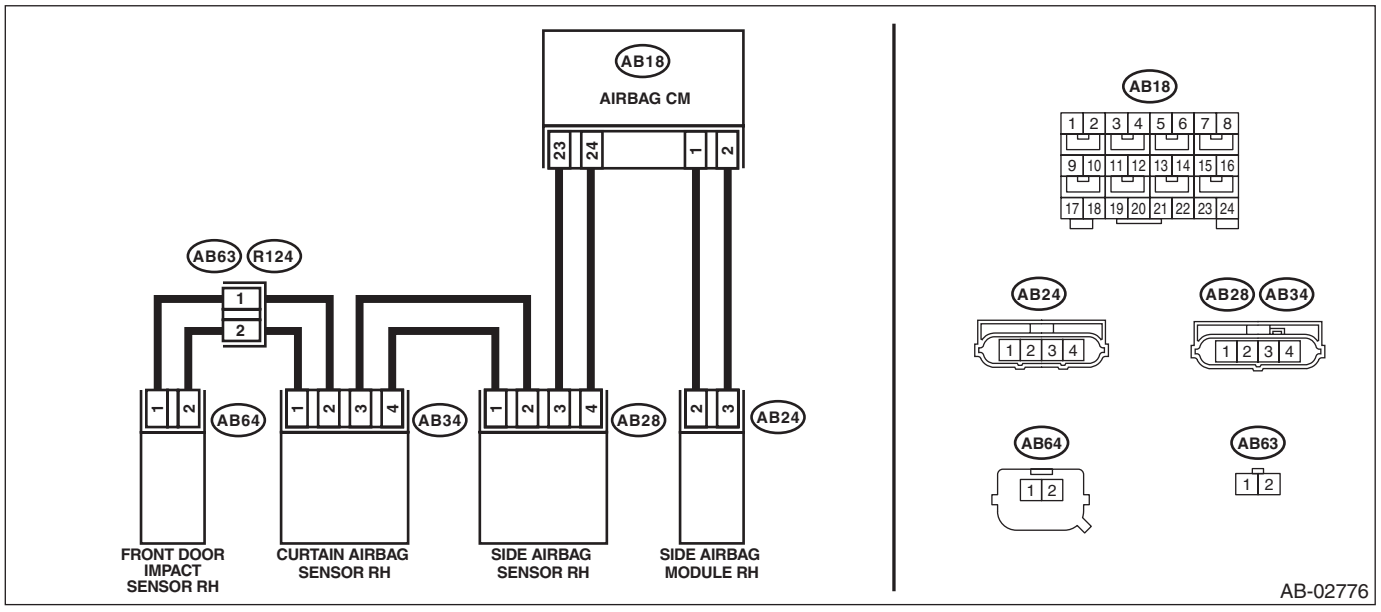

Step		Check	Yes	No
1	**CHECK POOR CONTACT OF CONNECTORS.** Check for poor contact of the connectors between the airbag control module, side airbag module RH and the side airbag sensor RH.	Is there poor contact?	Replace the airbag rear harness along with body harness.	Go to step **2**.
2	**CHECK SIDE AIRBAG MODULE.** 1) Turn the ignition switch to OFF, disconnect the battery ground cable, and wait for 60 seconds or more. 2) Disconnect the connectors (AB25) and (AB24), and connect the test harness AJ connector (1AJ) to connector (AB24). 3) Connect the airbag resistor to the test harness AJ connector (3AJ). 4) Connect the battery ground terminal and turn the ignition switch to ON.	Does the airbag warning light illuminate for six seconds and go off?	Replace the side airbag module (RH). <Ref. to AB-55, REMOVAL, Side Airbag Module.>	Go to step **3**.

	Step	Check	Yes	No
3	**CHECK AIRBAG REAR HARNESS (SIDE AIRBAG MODULE HARNESS RH).** 1) Turn the ignition switch to OFF, disconnect the battery ground cable, and wait for 60 seconds or more. 2) Disconnect the connector (AB26) from seat belt pretensioner (RH). 3) Disconnect the connector (AB33) from curtain airbag module (RH). 4) Disconnect the airbag resistor from test harness AJ. 5) Disconnect the connectors (AB6, AB17, AB18) from airbag control module. 6) Connect the connector (1AG) in the test harness AG to the connectors (AB6, AB17, AB18). 7) Measure the resistance between connector (3AJ) terminals in the test harness AJ, and between connector (3AJ) and chassis ground. ***Connector & terminal*** ***(3AJ) No. 1 — (3AJ) No. 2:*** ***(3AJ) No. 1 — Chassis ground:*** ***(3AJ) No. 2 — Chassis ground:***	Is the resistance 1 MΩ or more?	Go to step **4**.	Replace the airbag rear harness along with body harness.
4	**CHECK AIRBAG REAR HARNESS (SIDE AIRBAG MODULE HARNESS RH).** Measure the resistance between the test harness AJ connector (3AJ) and the test harness AG connector (5AG). ***Connector & terminal*** ***(5AG) No. 1 — (3AJ) No. 2:*** ***(5AG) No. 3 — (3AJ) No. 1:***	Is the resistance less than 10 Ω?	Go to step **5**.	Replace the airbag rear harness along with body harness.
5	**CHECK AIRBAG CONTROL MODULE.** 1) Connect all connectors. 2) Clear the memory. 3) Perform the Inspection Mode. 4) Read the DTC.	Is the same DTC displayed?	Replace the airbag control module. <Ref. to AB-68, Airbag Control Module.>	Go to step **6**.
6	**CHECK FOR ANY OTHER DTC ON DISPLAY.**	Is any other DTC displayed?	Check DTC using "List of Diagnostic Trouble Code (DTC)". <Ref. to AB(diag)-41, List of Diagnostic Trouble Code (DTC).>	Finish the diagnosis.

2. TYPE B

DTC DETECTING CONDITION:

- Side airbag harness (RH) circuit is shorted to ground.
- Side airbag module (RH) is faulty.
- Airbag control module is faulty.

CAUTION:

Before performing diagnosis, refer to "CAUTION" in "General Description". <Ref. to AB(diag)-5, CAUTION, General Description.>

WIRING DIAGRAM:

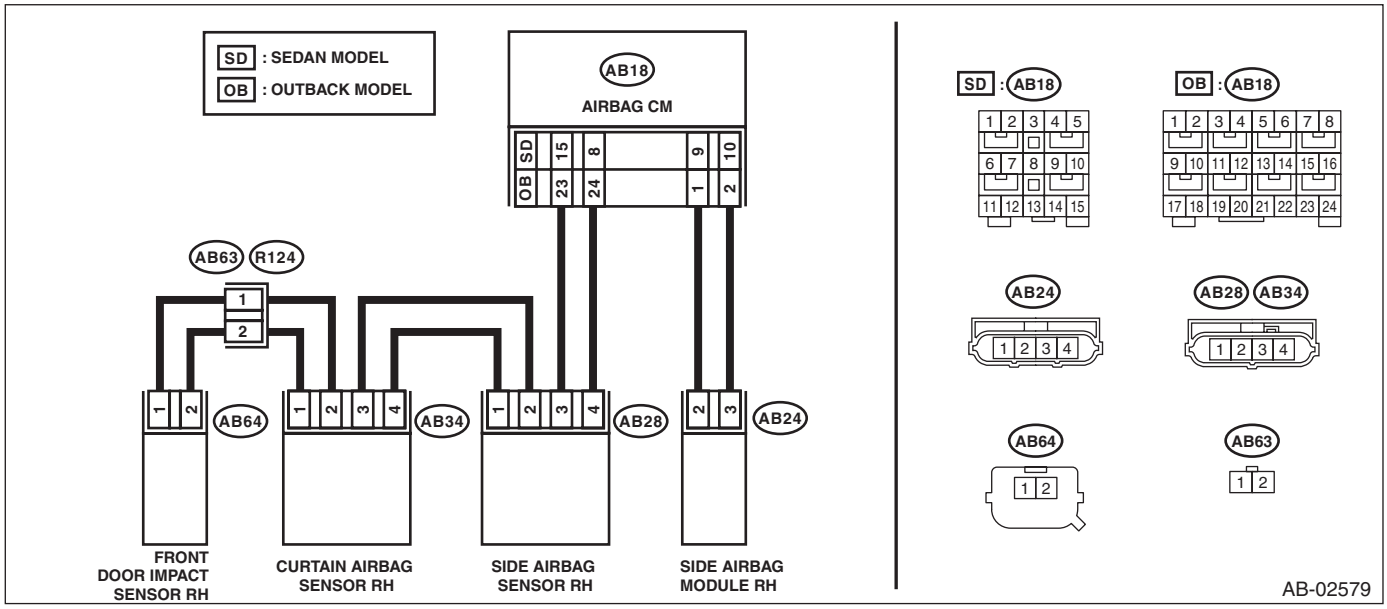

Step		Check	Yes	No
1	**CHECK POOR CONTACT OF CONNECTORS.** Check for poor contact of the connectors between the airbag control module, side airbag module RH and the side airbag sensor RH.	Is there poor contact?	Replace the airbag rear harness along with body harness.	Go to step **2**.
2	**CHECK SIDE AIRBAG MODULE.** 1) Turn the ignition switch to OFF, disconnect the battery ground cable, and wait for 60 seconds or more. 2) Disconnect the connector (AB24) from the side airbag module (RH), and connect the connector (1AJ) in the test harness AJ to connector (AB24). 3) Connect the airbag resistor to the test harness AJ connector (3AJ). 4) Connect the battery ground terminal and turn the ignition switch to ON.	Does the airbag warning light illuminate for six seconds and go off?	Replace the side airbag module (RH). <Ref. to AB-55, REMOVAL, Side Airbag Module.>	Go to step **3**.

	Step	Check	Yes	No
3	**CHECK AIRBAG REAR HARNESS (SIDE AIRBAG MODULE HARNESS RH).** 1) Turn the ignition switch to OFF, disconnect the battery ground cable, and wait for 60 seconds or more. 2) Disconnect the connector (AB26) from seat belt pretensioner (RH). 3) Disconnect the connector (AB33) from curtain airbag module (RH). 4) Disconnect the airbag resistor from test harness AJ. 5) Disconnect the connectors (AB6, AB17, AB18) from airbag control module. 6) Connect the connector (1AG) in the test harness AG to the connectors (AB6, AB17, AB18). NOTE: For sedan models, connect test harness AH between the connectors (AB6, AB17, AB18) and (1AG). 7) Measure the resistance between connector (3AJ) in the test harness AJ and chassis ground. ***Connector & terminal*** ***(3AJ) No. 1 — Chassis ground:*** ***(3AJ) No. 2 — Chassis ground:***	Is the resistance 1 MΩ or more?	Go to step **4**.	Replace the airbag rear harness along with body harness.
4	**CHECK AIRBAG CONTROL MODULE.** 1) Connect all connectors. 2) Clear the memory. 3) Perform the Inspection Mode. 4) Read the DTC.	Is the same DTC displayed?	Replace the airbag control module. <Ref. to AB-68, Airbag Control Module.>	Go to step **5**.
5	**CHECK FOR ANY OTHER DTC ON DISPLAY.**	Is any other DTC displayed?	Check DTC using "List of Diagnostic Trouble Code (DTC)". <Ref. to AB(diag)-41, List of Diagnostic Trouble Code (DTC).>	Finish the diagnosis.

X: DTC 42 SIDE AIRBAG LH FAILURE

NOTE:
Be sure to properly identify the Airbag system type prior to performing any diagnostics.

1. TYPE A

DTC DETECTING CONDITION:

- Side airbag harness (LH) is faulty.
- Side airbag module (LH) is faulty.
- Airbag control module is faulty.

CAUTION:
Before performing diagnosis, refer to "CAUTION" in "General Description". <Ref. to AB(diag)-5, CAUTION, General Description.>
WIRING DIAGRAM:

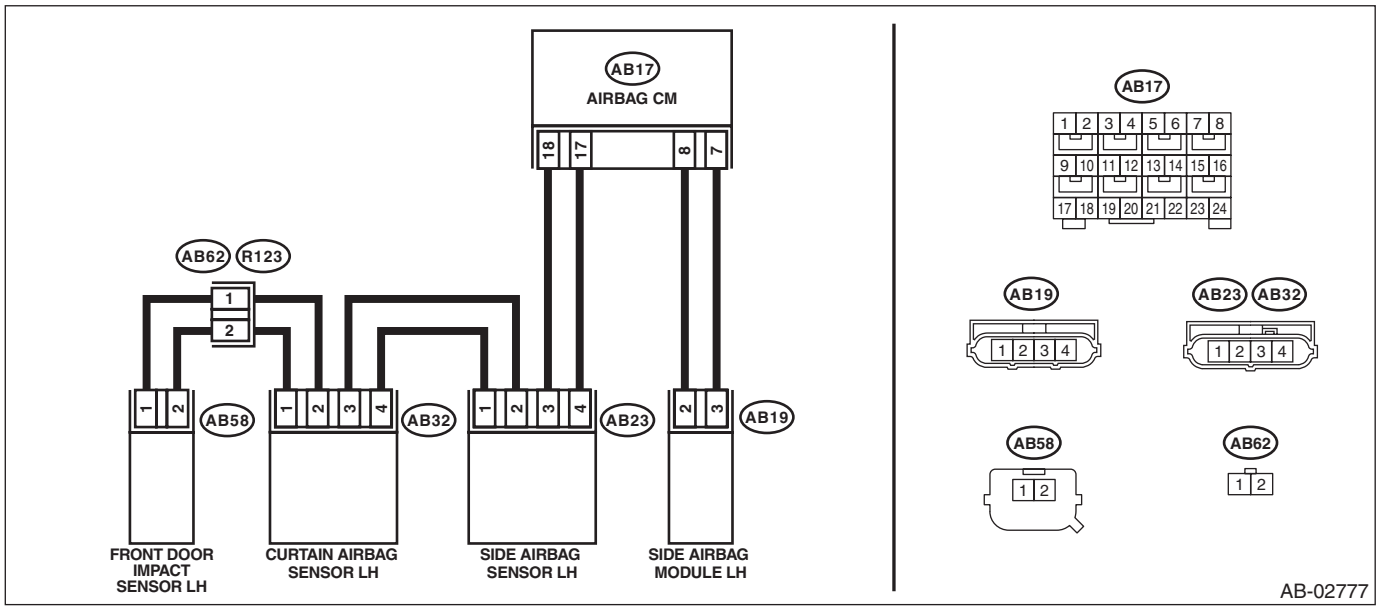

Step		Check	Yes	No
1	**CHECK POOR CONTACT OF CONNECTORS.** Check for poor contact of the connectors between the airbag control module, side airbag module LH and the side airbag sensor LH.	Is there poor contact?	Replace the airbag rear harness along with body harness.	Go to step **2**.
2	**CHECK SIDE AIRBAG MODULE.** 1) Turn the ignition switch to OFF, disconnect the battery ground cable, and wait for 60 seconds or more. 2) Disconnect the connectors (AB20) and (AB19), and connect the test harness AJ connector (1AJ) to the connector (AB19). 3) Connect the airbag resistor to the test harness AJ connector (3AJ). 4) Connect the battery ground terminal and turn the ignition switch to ON.	Does the airbag warning light illuminate for six seconds and go off?	Replace the side airbag module (LH). <Ref. to AB-55, REMOVAL, Side Airbag Module.>	Go to step **3**.

	Step	Check	Yes	No
3	**CHECK AIRBAG REAR HARNESS (SIDE AIRBAG MODULE HARNESS LH).** 1) Turn the ignition switch to OFF, disconnect the battery ground cable, and wait for 60 seconds or more. 2) Disconnect the connector (AB21) from seat belt pretensioner (LH). 3) Disconnect the connector (AB31) from curtain airbag module (LH). 4) Disconnect the airbag resistor from test harness. 5) Disconnect the connectors (AB6, AB17, AB18) from airbag control module. 6) Connect the connector (1AG) in the test harness AG to the connectors (AB6, AB17, AB18). 7) Measure the resistance between connector (3AJ) terminals in the test harness AJ, and between connector (3AJ) and chassis ground. ***Connector & terminal*** ***(3AJ) No. 1 — (3AJ) No. 2:*** ***(3AJ) No. 1 — Chassis ground:*** ***(3AJ) No. 2 — Chassis ground:***	Is the resistance 1 MΩ or more?	Go to step **4**.	Replace the airbag rear harness along with body harness.
4	**CHECK AIRBAG REAR HARNESS (SIDE AIRBAG MODULE HARNESS LH).** Measure the resistance between the test harness AJ connector (3AJ) and the test harness AG connector (5AG). ***Connector & terminal*** ***(5AG) No. 5 — (3AJ) No. 1:*** ***(5AG) No. 7 — (3AJ) No. 2:***	Is the resistance less than 10 Ω?	Go to step **5**.	Replace the airbag rear harness along with body harness.
5	**CHECK AIRBAG CONTROL MODULE.** 1) Connect all connectors. 2) Clear the memory. 3) Perform the Inspection Mode. 4) Read the DTC.	Is the same DTC displayed?	Replace the airbag control module. <Ref. to AB-68, Airbag Control Module.>	Go to step **6**.
6	**CHECK FOR ANY OTHER DTC ON DISPLAY.**	Is any other DTC displayed?	Check DTC using "List of Diagnostic Trouble Code (DTC)". <Ref. to AB(diag)-41, List of Diagnostic Trouble Code (DTC).>	Finish the diagnosis.

2. TYPE B

DTC DETECTING CONDITION:

- Side airbag harness (LH) circuit is shorted to ground.
- Side airbag module (LH) is faulty.
- Airbag control module is faulty.

CAUTION:
Before performing diagnosis, refer to "CAUTION" in "General Description". <Ref. to AB(diag)-5, CAUTION, General Description.>
WIRING DIAGRAM:

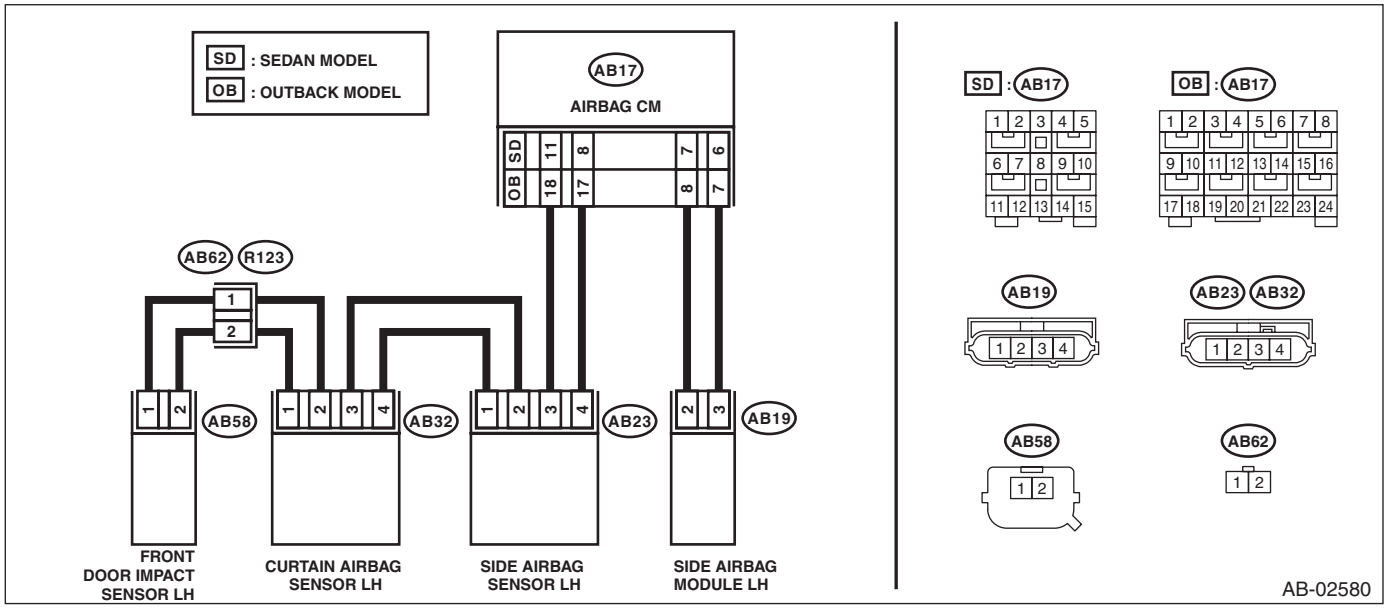

Step		Check	Yes	No
1	**CHECK POOR CONTACT OF CONNECTORS.** Check for poor contact of the connectors between the airbag control module, side airbag module LH and the side airbag sensor LH.	Is there poor contact?	Replace the airbag rear harness along with body harness.	Go to step **2**.
2	**CHECK SIDE AIRBAG MODULE.** 1) Turn the ignition switch to OFF, disconnect the battery ground cable, and wait for 60 seconds or more. 2) Disconnect the connector (AB19) from the side airbag module (LH), and connect the connector (1AJ) in test harness AJ to the connector (AB19). 3) Connect the airbag resistor to the test harness AJ connector (3AJ). 4) Connect the battery ground terminal and turn the ignition switch to ON.	Does the airbag warning light illuminate for six seconds and go off?	Replace the side airbag module (LH). <Ref. to AB-55, REMOVAL, Side Airbag Module.>	Go to step **3**.

	Step	Check	Yes	No
3	**CHECK AIRBAG REAR HARNESS (SIDE AIRBAG MODULE HARNESS LH).** 1) Turn the ignition switch to OFF, disconnect the battery ground cable, and wait for 60 seconds or more. 2) Disconnect the connector (AB21) from seat belt pretensioner (LH). 3) Disconnect the connector (AB31) from curtain airbag module (LH). 4) Disconnect the airbag resistor from test harness AJ. 5) Disconnect the connectors (AB6, AB17, AB18) from airbag control module. 6) Connect the connector (1AG) in the test harness AG to the connectors (AB6, AB17, AB18). NOTE: For sedan models, connect test harness AH between the connectors (AB6, AB17, AB18) and (1AG). 7) Measure the resistance between connector (3AJ) in the test harness AJ and chassis ground. ***Connector & terminal*** ***(3AJ) No. 1 — Chassis ground:*** ***(3AJ) No. 2 — Chassis ground:***	Is the resistance 1 MΩ or more?	Go to step **4**.	Replace the airbag rear harness along with body harness.
4	**CHECK AIRBAG CONTROL MODULE.** 1) Connect all connectors. 2) Clear the memory. 3) Perform the Inspection Mode. 4) Read the DTC.	Is the same DTC displayed?	Replace the airbag control module. <Ref. to AB-68, Airbag Control Module.>	Go to step **5**.
5	**CHECK FOR ANY OTHER DTC ON DISPLAY.**	Is any other DTC displayed?	Check DTC using "List of Diagnostic Trouble Code (DTC)". <Ref. to AB(diag)-41, List of Diagnostic Trouble Code (DTC).>	Finish the diagnosis.

Y: DTC 45 SIDE AIRBAG RH FAILURE

DTC DETECTING CONDITION:

- Side airbag harness (RH) circuit is shorted to power supply.
- Airbag control module is faulty.

CAUTION:

Before performing diagnosis, refer to "CAUTION" in "General Description". <Ref. to AB(diag)-5, CAUTION, General Description.>

WIRING DIAGRAM:

- Type A

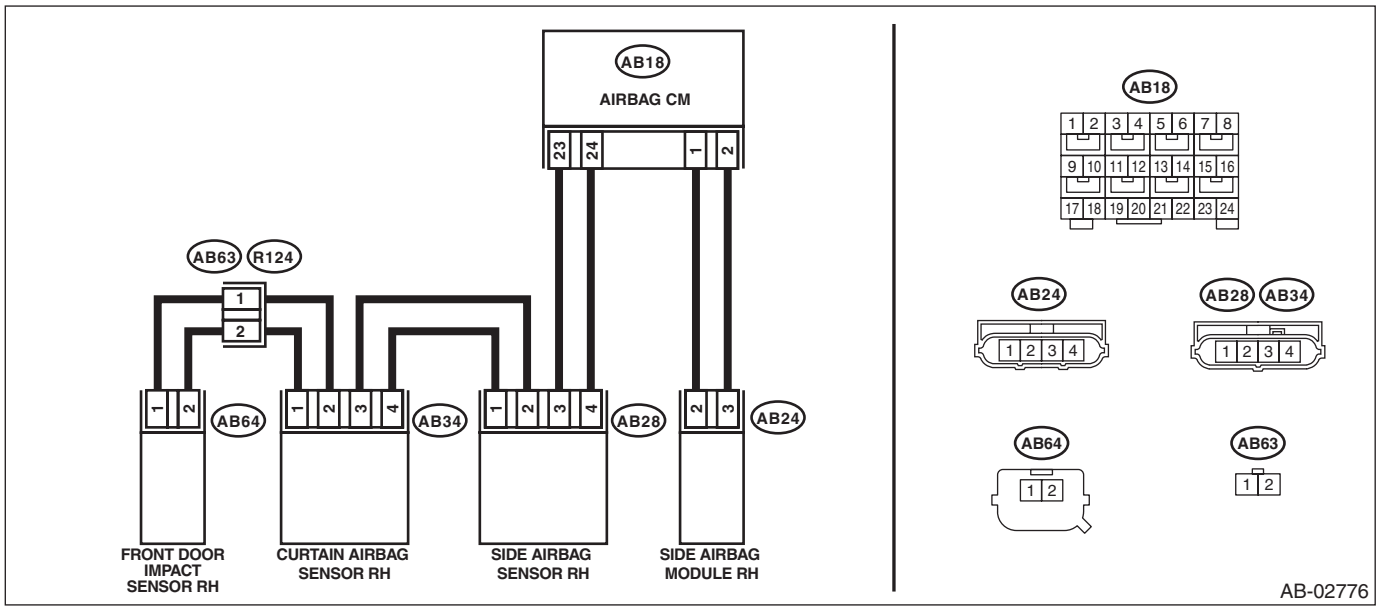

- Type B

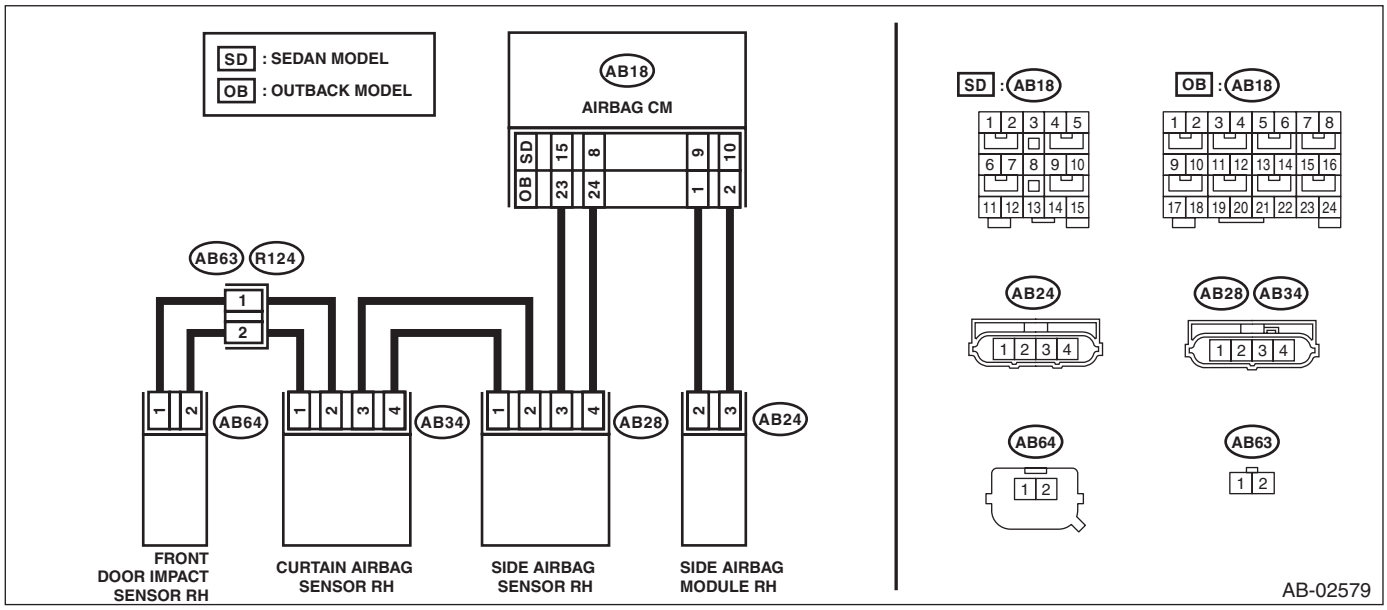

Step		Check	Yes	No
1	**CHECK POOR CONTACT OF CONNECTORS.** Check for poor contact of the connectors between the airbag control module, side airbag module RH and the side airbag sensor RH.	Is there poor contact?	Replace the airbag rear harness along with body harness.	Go to step **2**.

	Step	Check	Yes	No
2	**CHECK SIDE AIRBAG MODULE.** 1) Turn the ignition switch to OFF, disconnect the battery ground cable, and wait for 60 seconds or more. 2) Disconnect the connector (AB24) from the side airbag module (RH), and connect the connector (1AJ) in the test harness AJ to connector (AB24). 3) Connect the airbag resistor to the test harness AJ connector (3AJ). 4) Connect the battery ground terminal and turn the ignition switch to ON.	Does the airbag warning light illuminate for six seconds and go off?	Replace the side airbag module (RH). <Ref. to AB-55, REMOVAL, Side Airbag Module.>	Go to step **3**.
3	**CHECK AIRBAG REAR HARNESS (SIDE AIRBAG MODULE HARNESS RH).** 1) Turn the ignition switch to OFF, disconnect the battery ground cable, and wait for 60 seconds or more. 2) Disconnect the connector (AB26) from seat belt pretensioner (RH). 3) Disconnect the connector (AB33) from curtain airbag module (RH). 4) Disconnect the airbag resistor from test harness AJ. 5) Disconnect the connectors (AB6, AB17, AB18) from airbag control module. 6) Connect the connector (1AG) in the test harness AG to the connectors (AB6, AB17, AB18). NOTE: For type B (sedan models), connect test harness AH between the connectors (AB6, AB17, AB18) and (1AG). 7) Connect the battery ground terminal and turn the ignition switch to ON. 8) Measure the voltage between connector (3AJ) in the test harness AJ and chassis ground. ***Connector & terminal*** ***(3AJ) No. 1 (+) — Chassis ground (–):*** ***(3AJ) No. 2 (+) — Chassis ground (–):***	Is the voltage less than 1 V?	Go to step **4**.	Replace the airbag rear harness along with body harness.
4	**CHECK AIRBAG CONTROL MODULE.** 1) Connect all connectors. 2) Clear the memory. 3) Perform the Inspection Mode. 4) Read the DTC.	Is the same DTC displayed?	Replace the airbag control module. <Ref. to AB-68, Airbag Control Module.>	Go to step **5**.
5	**CHECK FOR ANY OTHER DTC ON DISPLAY.**	Is any other DTC displayed?	Check DTC using "List of Diagnostic Trouble Code (DTC)". <Ref. to AB(diag)-41, List of Diagnostic Trouble Code (DTC).>	Finish the diagnosis.

Z: DTC 46 SIDE AIRBAG LH FAILURE

DTC DETECTING CONDITION:

- Side airbag harness (LH) circuit is shorted to power supply.
- Airbag control module is faulty.

CAUTION:

Before performing diagnosis, refer to "CAUTION" in "General Description". <Ref. to AB(diag)-5, CAUTION, General Description.>

WIRING DIAGRAM:

- Type A

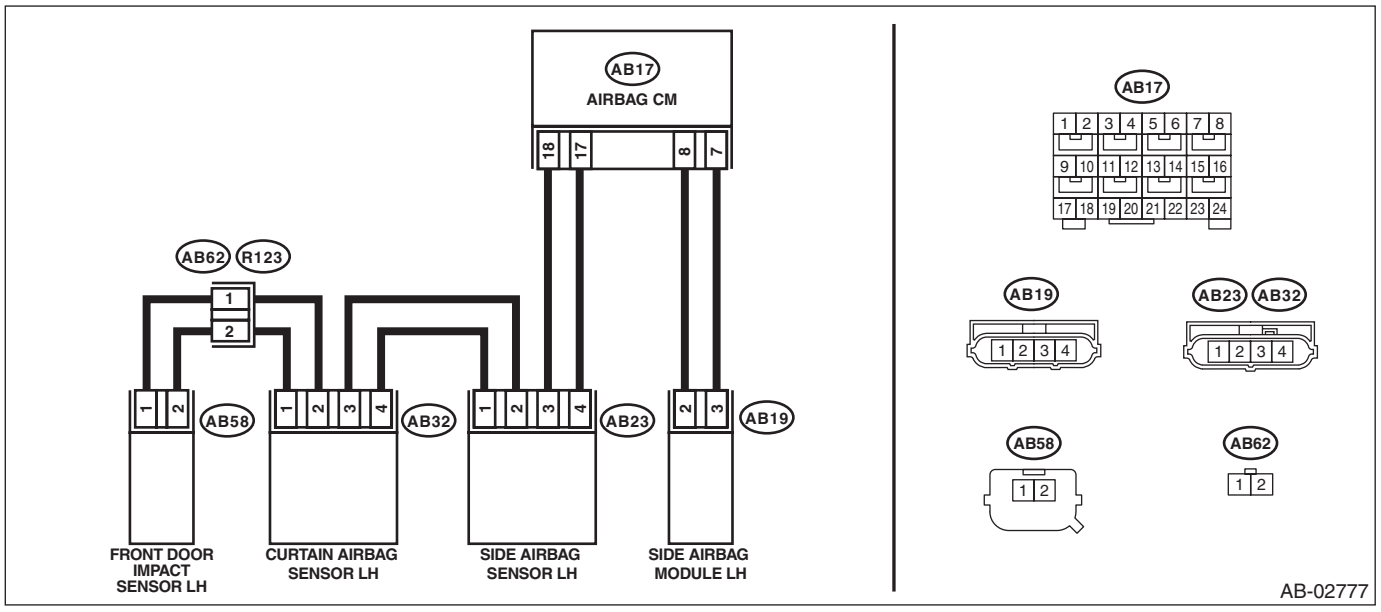

- Type B

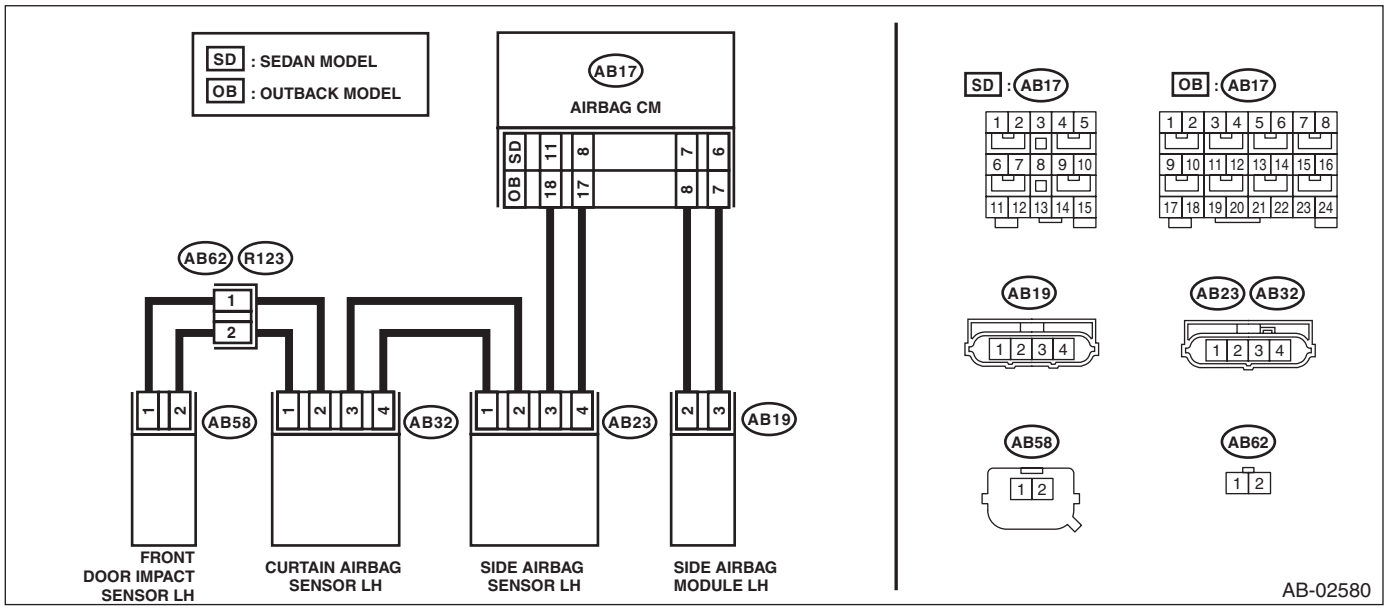

Step		Check	Yes	No
1	**CHECK POOR CONTACT OF CONNECTORS.** Check for poor contact of the connectors between the airbag control module, side airbag module LH and the side airbag sensor LH.	Is there poor contact?	Replace the airbag rear harness along with body harness.	Go to step **2**.

	Step	Check	Yes	No
2	**CHECK SIDE AIRBAG MODULE.** 1) Turn the ignition switch to OFF, disconnect the battery ground cable, and wait for 60 seconds or more. 2) Disconnect the connector (AB19) from the side airbag module (LH), and connect the connector (1AJ) in test harness AJ to the connector (AB19). 3) Connect the airbag resistor to the test harness AJ connector (3AJ). 4) Connect the battery ground terminal and turn the ignition switch to ON.	Does the airbag warning light illuminate for six seconds and go off?	Replace the side airbag module (LH). <Ref. to AB-55, REMOVAL, Side Airbag Module.>	Go to step **3**.
3	**CHECK AIRBAG REAR HARNESS (SIDE AIRBAG MODULE HARNESS LH).** 1) Turn the ignition switch to OFF, disconnect the battery ground cable, and wait for 60 seconds or more. 2) Disconnect the connector (AB21) from seat belt pretensioner (LH). 3) Disconnect the connector (AB31) from curtain airbag module (LH). 4) Disconnect the airbag resistor from test harness AJ. 5) Disconnect the connectors (AB6, AB17, AB18) from airbag control module. 6) Connect the connector (1AG) in the test harness AG to the connectors (AB6, AB17, AB18). NOTE: For type B (sedan models), connect test harness AH between the connectors (AB6, AB17, AB18) and (1AG). 7) Connect the battery ground terminal and turn the ignition switch to ON. 8) Measure the voltage between connector (3AJ) in the test harness AJ and chassis ground. ***Connector & terminal*** ***(3AJ) No. 1 (+) — Chassis ground (–):*** ***(3AJ) No. 2 (+) — Chassis ground (–):***	Is the voltage less than 1 V?	Go to step **4**.	Replace the airbag rear harness along with body harness.
4	**CHECK AIRBAG CONTROL MODULE.** 1) Connect all connectors. 2) Clear the memory. 3) Perform the Inspection Mode. 4) Read the DTC.	Is the same DTC displayed?	Replace the airbag control module. <Ref. to AB-68, Airbag Control Module.>	Go to step **5**.
5	**CHECK FOR ANY OTHER DTC ON DISPLAY.**	Is any other DTC displayed?	Check DTC using "List of Diagnostic Trouble Code (DTC)". <Ref. to AB(diag)-41, List of Diagnostic Trouble Code (DTC).>	Finish the diagnosis.

AA:DTC 4A SIDE AIRBAG RH FAILURE

DTC DETECTING CONDITION:

- Side airbag harness (RH) circuit is shorted.
- Side airbag module is faulty.
- Airbag control module is faulty.

CAUTION:

Before performing diagnosis, refer to "CAUTION" in "General Description". <Ref. to AB(diag)-5, CAUTION, General Description.>

WIRING DIAGRAM:

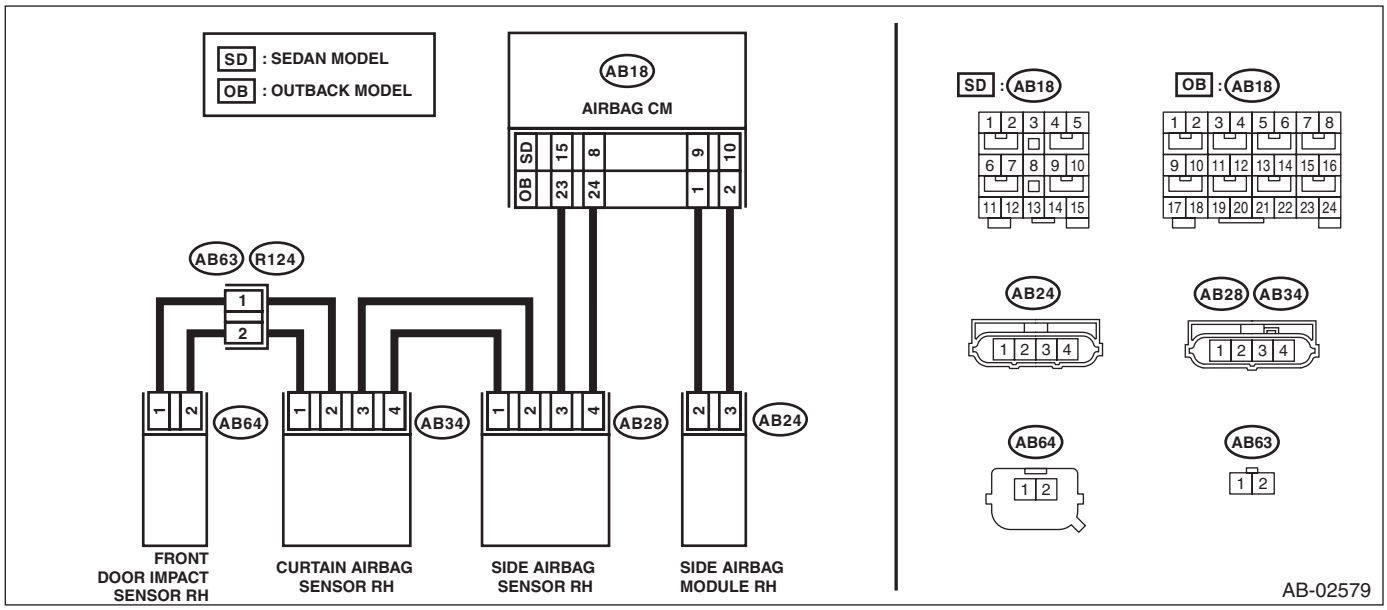

Step		Check	Yes	No
1	**CHECK POOR CONTACT OF CONNECTORS.** Check for poor contact of the connectors between the airbag control module, side airbag module RH and the side airbag sensor RH.	Is there poor contact?	Replace the airbag rear harness along with body harness.	Go to step **2**.
2	**CHECK SIDE AIRBAG MODULE.** 1) Turn the ignition switch to OFF, disconnect the battery ground cable, and wait for 60 seconds or more. 2) Disconnect the connector (AB24) from the side airbag module (RH), and connect the connector (1AJ) in the test harness AJ to connector (AB24). 3) Connect the airbag resistor to the test harness AJ connector (3AJ). 4) Connect the battery ground terminal and turn the ignition switch to ON.	Does the airbag warning light illuminate for six seconds and go off?	Replace the side airbag module (RH). <Ref. to AB-55, REMOVAL, Side Airbag Module.>	Go to step **3**.

	Step	Check	Yes	No
3	**CHECK AIRBAG REAR HARNESS (SIDE AIRBAG MODULE HARNESS RH).** 1) Turn the ignition switch to OFF, disconnect the battery ground cable, and wait for 60 seconds or more. 2) Disconnect the connector (AB26) from seat belt pretensioner (RH). 3) Disconnect the connector (AB33) from curtain airbag module (RH). 4) Disconnect the airbag resistor from test harness AJ. 5) Disconnect the connectors (AB6, AB17, AB18) from airbag control module. 6) Connect the connector (1AG) in the test harness AG to the connectors (AB6, AB17, AB18). NOTE: For sedan models, connect test harness AH between the connectors (AB6, AB17, AB18) and (1AG). 7) Measure the resistance between connector (3AJ) terminals in test harness AJ. ***Connector & terminal (3AJ) No. 1 — (3AJ) No. 2:***	Is the resistance 1 MΩ or more?	Go to step **4**.	Replace the airbag rear harness along with body harness.
4	**CHECK AIRBAG CONTROL MODULE.** 1) Connect all connectors. 2) Clear the memory. 3) Perform the Inspection Mode. 4) Read the DTC.	Is the same DTC displayed?	Replace the airbag control module. <Ref. to AB-68, Airbag Control Module.>	Go to step **5**.
5	**CHECK FOR ANY OTHER DTC ON DISPLAY.**	Is any other DTC displayed?	Check DTC using "List of Diagnostic Trouble Code (DTC)". <Ref. to AB(diag)-41, List of Diagnostic Trouble Code (DTC).>	Finish the diagnosis.

AB:DTC 4B SIDE AIRBAG LH FAILURE

DTC DETECTING CONDITION:

- Side airbag harness (LH) circuit is shorted.
- Side airbag module (LH) is faulty.
- Airbag control module is faulty.

CAUTION:

Before performing diagnosis, refer to "CAUTION" in "General Description". <Ref. to AB(diag)-5, CAUTION, General Description.>

WIRING DIAGRAM:

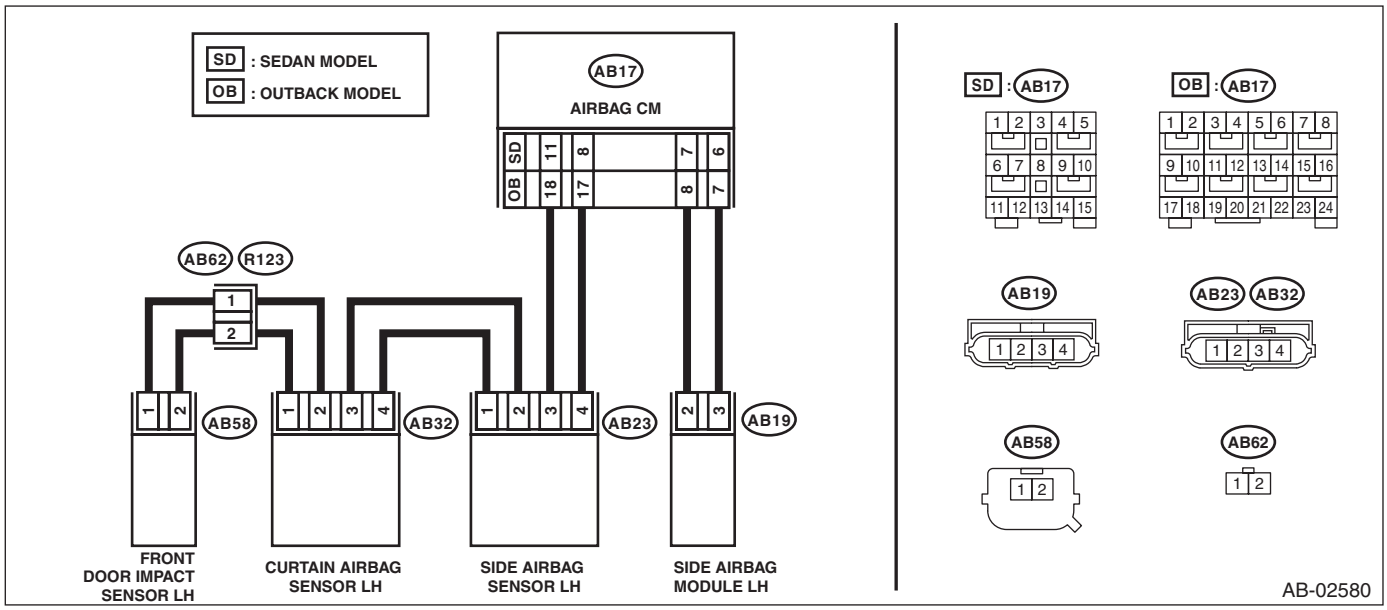

Step		Check	Yes	No
1	**CHECK POOR CONTACT OF CONNECTORS.** Check for poor contact of the connectors between the airbag control module, side airbag module LH and the side airbag sensor LH.	Is there poor contact?	Replace the airbag rear harness along with body harness.	Go to step **2**.
2	**CHECK SIDE AIRBAG MODULE.** 1) Turn the ignition switch to OFF, disconnect the battery ground cable, and wait for 60 seconds or more. 2) Disconnect the connector (AB19) from the side airbag module (LH), and connect the connector (1AJ) in test harness AJ to the connector (AB19). 3) Connect the airbag resistor to the test harness AJ connector (3AJ). 4) Connect the battery ground terminal and turn the ignition switch to ON.	Does the airbag warning light illuminate for six seconds and go off?	Replace the side airbag module (LH). <Ref. to AB-55, REMOVAL, Side Airbag Module.>	Go to step **3**.

	Step	Check	Yes	No
3	**CHECK AIRBAG REAR HARNESS (SIDE AIRBAG MODULE HARNESS LH).** 1) Turn the ignition switch to OFF, disconnect the battery ground cable, and wait for 60 seconds or more. 2) Disconnect the connector (AB21) from seat belt pretensioner (LH). 3) Disconnect the connector (AB31) from curtain airbag module (LH). 4) Disconnect the airbag resistor from test harness AJ. 5) Disconnect the connectors (AB6, AB17, AB18) from airbag control module. 6) Connect the connector (1AG) in the test harness AG to the connectors (AB6, AB17, AB18). NOTE: For sedan models, connect test harness AH between the connectors (AB6, AB17, AB18) and (1AG). 7) Measure the resistance between connector (3AJ) terminals in test harness AJ. ***Connector & terminal*** ***(3AJ) No. 1 — (3AJ) No. 2:***	Is the resistance 1 MΩ or more?	Go to step **4**.	Replace the airbag rear harness along with body harness.
4	**CHECK AIRBAG CONTROL MODULE.** 1) Connect all connectors. 2) Clear the memory. 3) Perform the Inspection Mode. 4) Read the DTC.	Is the same DTC displayed?	Replace the airbag control module. <Ref. to AB-68, Airbag Control Module.>	Go to step **5**.
5	**CHECK FOR ANY OTHER DTC ON DISPLAY.**	Is any other DTC displayed?	Check DTC using "List of Diagnostic Trouble Code (DTC)". <Ref. to AB(diag)-41, List of Diagnostic Trouble Code (DTC).>	Finish the diagnosis.

AC:DTC 4D SIDE AIRBAG RH FAILURE

DTC DETECTING CONDITION:

- Side airbag harness (RH) circuit is open.
- Side airbag module is faulty.
- Airbag control module is faulty.

CAUTION:

Before performing diagnosis, refer to "CAUTION" in "General Description". <Ref. to AB(diag)-5, CAUTION, General Description.>

WIRING DIAGRAM:

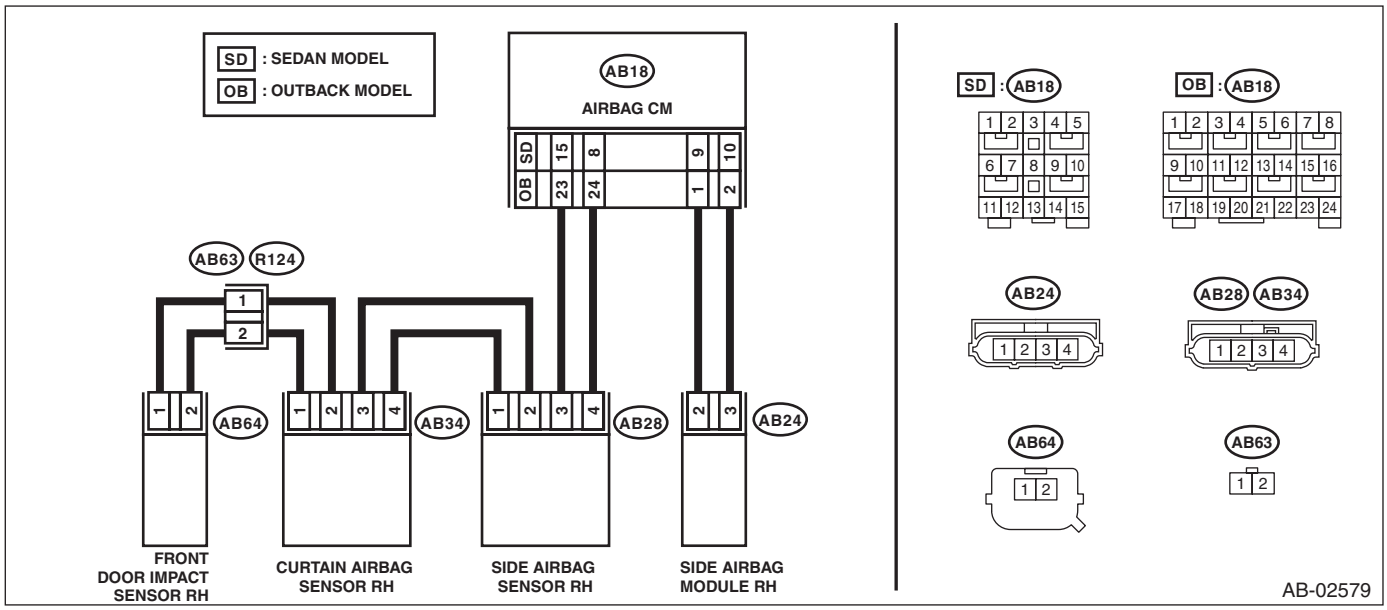

Step		Check	Yes	No
1	**CHECK POOR CONTACT OF CONNECTORS.** Check for poor contact of the connectors between the airbag control module, side airbag module RH and the side airbag sensor RH.	Is there poor contact?	Replace the airbag rear harness along with body harness.	Go to step **2**.
2	**CHECK SIDE AIRBAG MODULE.** 1) Turn the ignition switch to OFF, disconnect the battery ground cable, and wait for 60 seconds or more. 2) Disconnect the connector (AB24) from the side airbag module (RH), and connect the connector (1AJ) in the test harness AJ to connector (AB24). 3) Connect the airbag resistor to the test harness AJ connector (3AJ). 4) Connect the battery ground terminal and turn the ignition switch to ON.	Does the airbag warning light illuminate for six seconds and go off?	Replace the side airbag module (RH). <Ref. to AB-55, REMOVAL, Side Airbag Module.>	Go to step **3**.

	Step	Check	Yes	No
3	**CHECK AIRBAG REAR HARNESS (SIDE AIRBAG MODULE HARNESS RH).** 1) Turn the ignition switch to OFF, disconnect the battery ground cable, and wait for 60 seconds or more. 2) Disconnect the connector (AB26) from seat belt pretensioner (RH). 3) Disconnect the connector (AB33) from curtain airbag module (RH). 4) Disconnect the airbag resistor from test harness AJ. 5) Disconnect the connectors (AB6, AB17, AB18) from airbag control module. 6) Connect the connector (1AG) in the test harness AG to the connectors (AB6, AB17, AB18). NOTE: For sedan models, connect test harness AH between the connectors (AB6, AB17, AB18) and (1AG). 7) Measure the resistance between connector (4AG) or (5AG) in the test harness AG and connector (3AJ) in the test harness AJ. ***Connector & terminal*** ***Sedan model*** ***(4AG) No. 8 — (3AJ) No. 2:*** ***(4AG) No. 10 — (3AJ) No. 1:*** ***OUTBACK model*** ***(5AG) No. 1 — (3AJ) No. 2:*** ***(5AG) No. 3 — (3AJ) No. 1:***	Is the resistance less than 10 Ω?	Go to step **4**.	Replace the airbag rear harness along with body harness.
4	**CHECK AIRBAG CONTROL MODULE.** 1) Connect all connectors. 2) Clear the memory. 3) Perform the Inspection Mode. 4) Read the DTC.	Is the same DTC displayed?	Replace the airbag control module. <Ref. to AB-68, Airbag Control Module.>	Go to step **5**.
5	**CHECK FOR ANY OTHER DTC ON DISPLAY.**	Is any other DTC displayed?	Check DTC using "List of Diagnostic Trouble Code (DTC)". <Ref. to AB(diag)-41, List of Diagnostic Trouble Code (DTC).>	Finish the diagnosis.

AD:DTC 4E SIDE AIRBAG LH FAILURE

DTC DETECTING CONDITION:

- Side airbag harness (LH) circuit is open.
- Side airbag module (LH) is faulty.
- Airbag control module is faulty.

CAUTION:
Before performing diagnosis, refer to "CAUTION" in "General Description". <Ref. to AB(diag)-5, CAUTION, General Description.>
WIRING DIAGRAM:

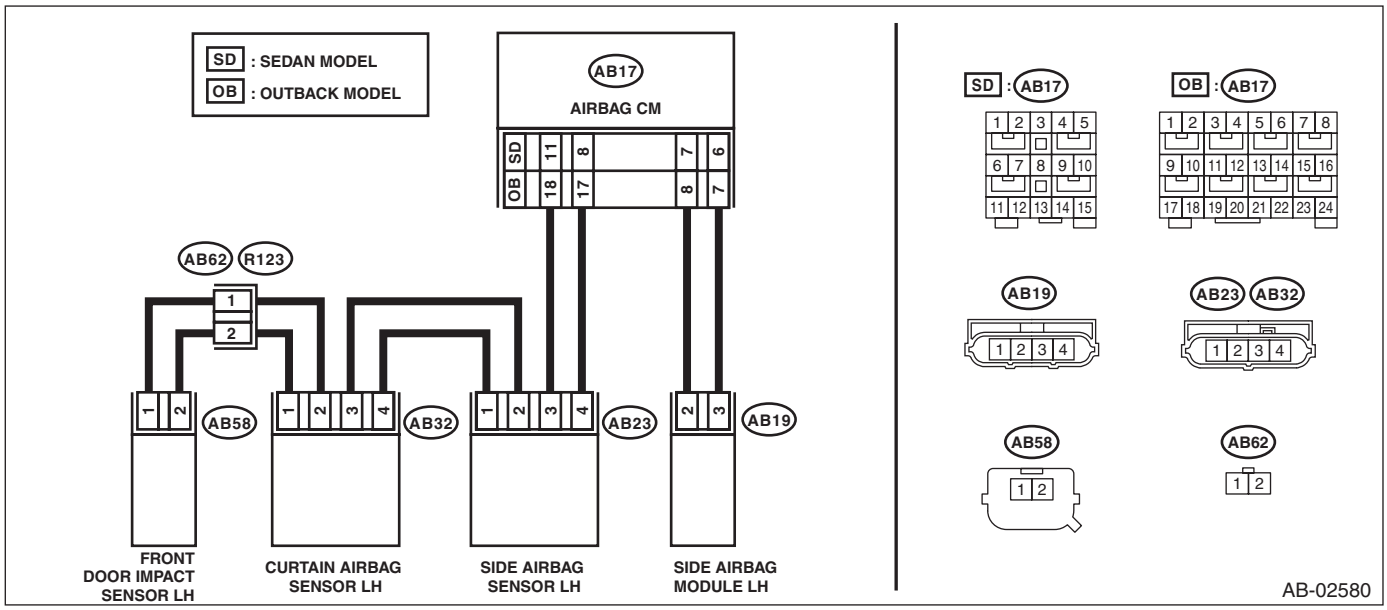

Step		Check	Yes	No
1	**CHECK POOR CONTACT OF CONNECTORS.** Check for poor contact of the connectors between the airbag control module, side airbag module LH and the side airbag sensor LH.	Is there poor contact?	Replace the airbag rear harness along with body harness.	Go to step **2**.
2	**CHECK SIDE AIRBAG MODULE.** 1) Turn the ignition switch to OFF, disconnect the battery ground cable, and wait for 60 seconds or more. 2) Disconnect the connector (AB19) from the side airbag module (LH), and connect the connector (1AJ) in test harness AJ to the connector (AB19). 3) Connect the airbag resistor to the test harness AJ connector (3AJ). 4) Connect the battery ground terminal and turn the ignition switch to ON.	Does the airbag warning light illuminate for six seconds and go off?	Replace the side airbag module (LH). <Ref. to AB-55, REMOVAL, Side Airbag Module.>	Go to step **3**.

	Step	Check	Yes	No
3	**CHECK AIRBAG REAR HARNESS (SIDE AIRBAG MODULE HARNESS LH).** 1) Turn the ignition switch to OFF, disconnect the battery ground cable, and wait for 60 seconds or more. 2) Disconnect the connector (AB21) from seat belt pretensioner (LH). 3) Disconnect the connector (AB31) from curtain airbag module (LH). 4) Disconnect the airbag resistor from test harness AJ. 5) Disconnect the connectors (AB6, AB17, AB18) from airbag control module. 6) Connect the connector (1AG) in the test harness AG to the connectors (AB6, AB17, AB18). NOTE: For sedan models, connect test harness AH between the connectors (AB6, AB17, AB18) and (1AG). 7) Measure the resistance between connector (4AG) or (5AG) in the test harness AG and connector (3AJ) in the test harness AJ. ***Connector & terminal*** ***Sedan model*** ***(4AG) No. 11 — (3AJ) No. 1:*** ***(4AG) No. 13 — (3AJ) No. 2:*** ***OUTBACK model*** ***(5AG) No. 5 — (3AJ) No. 1:*** ***(5AG) No. 7 — (3AJ) No. 2:***	Is the resistance less than 10 Ω?	Go to step **4**.	Replace the airbag rear harness along with body harness.
4	**CHECK AIRBAG CONTROL MODULE.** 1) Connect all connectors. 2) Clear the memory. 3) Perform the Inspection Mode. 4) Read the DTC.	Is the same DTC displayed?	Replace the airbag control module. <Ref. to AB-68, Airbag Control Module.>	Go to step **5**.
5	**CHECK FOR ANY OTHER DTC ON DISPLAY.**	Is any other DTC displayed?	Check DTC using "List of Diagnostic Trouble Code (DTC)". <Ref. to AB(diag)-41, List of Diagnostic Trouble Code (DTC).>	Finish the diagnosis.

AE:DTC 53 SIDE AIRBAG SENSOR RH FAILURE

DTC DETECTING CONDITION:
Side airbag sensor (RH) is faulty.
When DTC 53 is displayed, the circuit within the side airbag sensor (RH) is faulty.
Replace the side airbag sensor (RH). <Ref. to AB-81, Side Airbag Sensor.>

AF:DTC 54 SIDE AIRBAG SENSOR LH FAILURE

DTC DETECTING CONDITION:
Side airbag sensor (LH) is faulty.
When DTC 54 is displayed, the circuit within the side airbag sensor (LH) is faulty.
Replace the side airbag sensor (LH). <Ref. to AB-81, Side Airbag Sensor.>

AG:DTC 55 SIDE CURTAIN AIRBAG FIRING OUTPUT

This DTC is displayed when the side airbag module and curtain airbag module are deployed.
Once this DTC is displayed, the memory cannot be cleared. Replace the following parts.

- Airbag control module <Ref. to AB-68, Airbag Control Module.>
- Side airbag module <Ref. to AB-55, Side Airbag Module.>
- Side airbag sensor <Ref. to AB-81, Side Airbag Sensor.>
- Curtain airbag module <Ref. to AB-65, Curtain Airbag Module.>
- Curtain airbag sensor <Ref. to AB-87, Curtain Airbag Sensor.>
- Front door impact sensor <Ref. to AB-78, Front Door Impact Sensor.>

AH:DTC 58 CURTAIN AIRBAG SENSOR RH FAILURE

DTC DETECTING CONDITION:
Curtain airbag sensor (RH) is faulty.
If DTC 58 is displayed, the circuit within the curtain airbag sensor (RH) is faulty.
Replace the curtain airbag sensor (RH). <Ref. to AB-87, Curtain Airbag Sensor.>

AI: DTC 59 CURTAIN AIRBAG SENSOR LH FAILURE

DTC DETECTING CONDITION:
Curtain airbag sensor (LH) is faulty.
If DTC 59 is displayed, the circuit within the curtain airbag sensor (LH) is faulty.
Replace the curtain airbag sensor (LH). <Ref. to AB-87, Curtain Airbag Sensor.>

AJ:DTC 5A SIDE AIRBAG SENSOR RH FALSE INSTALLATION

DTC DETECTING CONDITION:
Side A/B sensor RH is misinstalled.

	Step	Check	Yes	No
1	**REPLACE SIDE AIRBAG SENSOR (RH).** 1) Turn the ignition switch to OFF, disconnect the battery ground cable, and wait for 60 seconds or more. 2) Replace the side A/B sensor (RH) with a genuine sensor. <Ref. to AB-81, REMOVAL, Side Airbag Sensor.>	Does the warning light go off?	Finish the diagnosis.	Replace the airbag control module. <Ref. to AB-68, REMOVAL, Airbag Control Module.>

AK:DTC 5B SIDE AIRBAG SENSOR LH FALSE INSTALLATION

DTC DETECTING CONDITION:
Side A/B sensor LH is misinstalled.

	Step	Check	Yes	No
1	**REPLACE SIDE AIRBAG SENSOR (LH).** 1) Turn the ignition switch to OFF, disconnect the battery ground cable, and wait for 60 seconds or more. 2) Replace the side A/B sensor (LH) with a genuine sensor. <Ref. to AB-81, REMOVAL, Side Airbag Sensor.>	Does the warning light go off?	Finish the diagnosis.	Replace the airbag control module. <Ref. to AB-68, REMOVAL, Airbag Control Module.>

AL:DTC 5C CURTAIN AIRBAG SENSOR RH FALSE INSTALLATION

DTC DETECTING CONDITION:
Curtain side airbag sensor RH is misinstalled.

	Step	Check	Yes	No
1	**REPLACE CURTAIN AIRBAG SENSOR (RH).** 1) Turn the ignition switch to OFF, disconnect the battery ground cable, and wait for 60 seconds or more. 2) Replace the curtain A/B sensor (RH) with a genuine sensor. <Ref. to AB-87, REMOVAL, Curtain Airbag Sensor.>	Does the warning light go off?	Finish the diagnosis.	Replace the airbag control module. <Ref. to AB-68, REMOVAL, Airbag Control Module.>

AM:DTC 5D CURTAIN AIRBAG SENSOR LH FALSE INSTALLATION

DTC DETECTING CONDITION:
Curtain side airbag sensor LH is misinstalled.

	Step	Check	Yes	No
1	**REPLACE CURTAIN AIRBAG SENSOR (LH).** 1) Turn the ignition switch to OFF, disconnect the battery ground cable, and wait for 60 seconds or more. 2) Replace the curtain A/B sensor (LH) with a genuine sensor. <Ref. to AB-87, REMOVAL, Curtain Airbag Sensor.>	Does the warning light go off?	Finish the diagnosis.	Replace the airbag control module. <Ref. to AB-68, REMOVAL, Airbag Control Module.>

AN:DTC 61 BELT PRETENSIONER RH FAILURE

NOTE:
Be sure to properly identify the Airbag system type prior to performing any diagnostics.

1. TYPE A

DTC DETECTING CONDITION:

- Seat belt pretensioner (RH) circuit is open, shorted or shorted to ground.
- Airbag control module is faulty.
- Pretensioner is faulty.
- Pretensioner harness is faulty.

CAUTION:
Before performing diagnosis, refer to "CAUTION" in "General Description". <Ref. to AB(diag)-5, CAUTION, General Description.>
WIRING DIAGRAM:

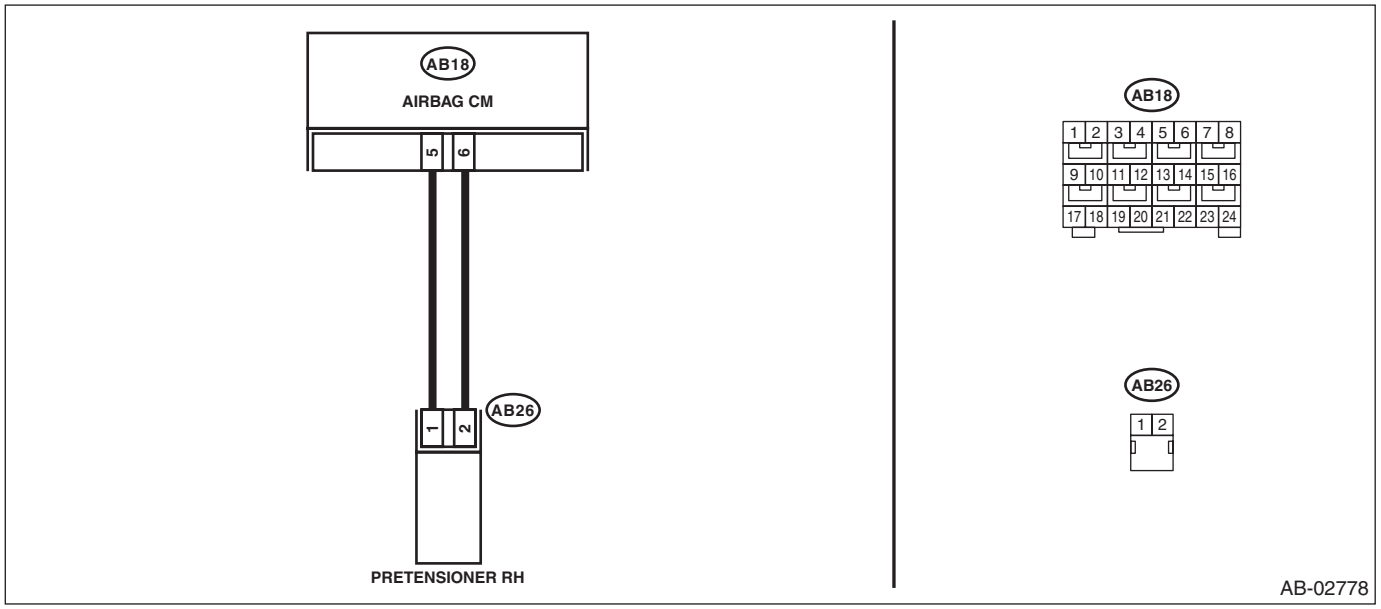

Step		Check	Yes	No
1	**CHECK POOR CONTACT OF CONNECTORS.** Check for poor contact of the connectors between the airbag control module and the seat belt pretensioner RH.	Is there poor contact?	Replace the airbag rear harness along with body harness.	Go to step **2**.
2	**CHECK SEAT BELT PRETENSIONER.** 1) Turn the ignition switch to OFF, disconnect the battery ground cable, and wait for 60 seconds or more. 2) Disconnect the connector (AB26) from seat belt pretensioner (RH). 3) Connect the connector (1N) in the test harness N to the connector (AB26). 4) Connect the airbag resistor to the connector (2N) of test harness N. 5) Connect the battery ground terminal and turn the ignition switch to ON.	Does the airbag warning light illuminate for six seconds and go off?	Replace the seat belt pretensioner (RH). <Ref. to SB-17, Front Seat Belt.>	Go to step **3**.

	Step	Check	Yes	No
3	**CHECK AIRBAG REAR HARNESS (PRETENSIONER HARNESS RH).** 1) Turn the ignition switch to OFF, disconnect the battery ground cable, and wait for 60 seconds or more. 2) Disconnect the airbag resistor from test harness. 3) Disconnect connector (AB24) from side airbag module (RH). 4) Disconnect the connector (AB33) from curtain airbag module (RH). 5) Disconnect the connectors (AB6, AB17, AB18) from airbag control module. 6) Connect the connector (1AG) in the test harness AG to the connectors (AB6, AB17, AB18). 7) Measure the resistance between connectors (3AG) in the test harness AG, and between connector (3AG) and chassis ground. ***Connector & terminal*** ***(3AG) No. 10 — (3AG) No. 12:*** ***(3AG) No. 10 — Chassis ground:*** ***(3AG) No. 12 — Chassis ground:***	Is the resistance 1 MΩ or more?	Go to step **4**.	Replace the airbag rear harness along with body harness.
4	**CHECK AIRBAG REAR HARNESS (PRETENSIONER HARNESS RH).** Measure the resistance between connector (3AG) in the test harness AG and connector (2N) in the test harness N. ***Connector & terminal*** ***(3AG) No. 10 — (2N) No. 2:*** ***(3AG) No. 12 — (2N) No. 1:***	Is the resistance less than 10 Ω?	Go to step **5**.	Replace the airbag rear harness along with body harness.
5	**CHECK AIRBAG CONTROL MODULE.** 1) Connect all connectors. 2) Clear the memory. 3) Perform the Inspection Mode. 4) Read the DTC.	Is the same DTC displayed?	Replace the airbag control module. <Ref. to AB-68, Airbag Control Module.>	Go to step **6**.
6	**CHECK FOR ANY OTHER DTC ON DISPLAY.**	Is any other DTC displayed?	Check DTC using "List of Diagnostic Trouble Code (DTC)". <Ref. to AB(diag)-41, List of Diagnostic Trouble Code (DTC).>	Finish the diagnosis.

2. TYPE B

DTC DETECTING CONDITION:

- Seat belt pretensioner (RH) circuit is shorted to ground.
- Pretensioner (RH) is faulty.
- Pretensioner harness is faulty.
- Airbag control module is faulty.

CAUTION:
Before performing diagnosis, refer to "CAUTION" in "General Description". <Ref. to AB(diag)-5, CAUTION, General Description.>
WIRING DIAGRAM:

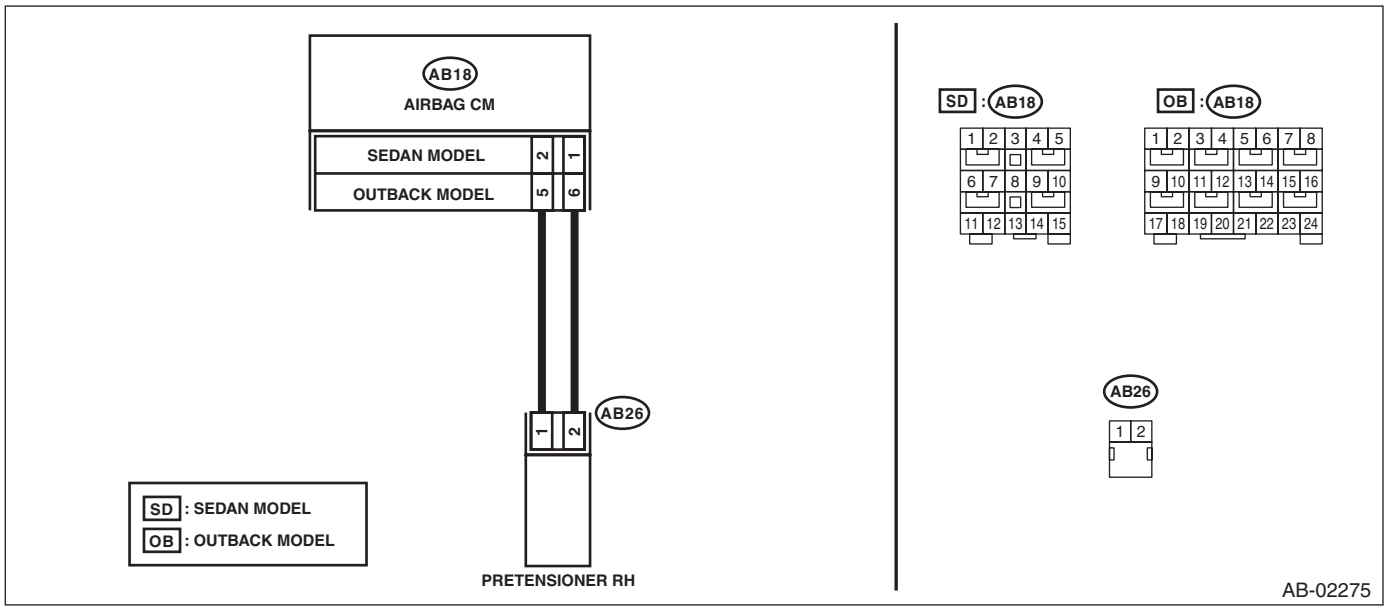

Step		Check	Yes	No
1	**CHECK POOR CONTACT OF CONNECTORS.** Check for poor contact of the connectors between the airbag control module and the seat belt pretensioner RH.	Is there poor contact?	Replace the airbag rear harness along with body harness.	Go to step **2**.
2	**CHECK SEAT BELT PRETENSIONER.** 1) Turn the ignition switch to OFF, disconnect the battery ground cable, and wait for 60 seconds or more. 2) Disconnect the connector (AB26) from seat belt pretensioner (RH). 3) Connect the connector (1N) in the test harness N to the connector (AB26). 4) Connect the airbag resistor to the connector (2N) of test harness N. 5) Connect the battery ground terminal and turn the ignition switch to ON.	Does the airbag warning light illuminate for six seconds and go off?	Replace the seat belt pretensioner (RH). <Ref. to SB-17, Front Seat Belt.>	Go to step **3**.

	Step	Check	Yes	No
3	**CHECK AIRBAG REAR HARNESS (PRETENSIONER HARNESS RH).** 1) Turn the ignition switch to OFF, disconnect the battery ground cable, and wait for 60 seconds or more. 2) Disconnect the airbag resistor from test harness N. 3) Disconnect connector (AB24) from side airbag module (RH). 4) Disconnect the connector (AB33) from curtain airbag module (RH). 5) Disconnect the connectors (AB6, AB17, AB18) from airbag control module. 6) Connect the connector (1AG) in the test harness AG to the connectors (AB6, AB17, AB18). NOTE: For sedan models, connect test harness AH between the connectors (AB6, AB17, AB18) and (1AG). 7) Measure the resistance between connector (3AG) in the test harness AG and chassis ground. ***Connector & terminal*** ***(3AG) No. 10 — Chassis ground:*** ***(3AG) No. 12 — Chassis ground:***	Is the resistance 1 MΩ or more?	Go to step **4**.	Replace the airbag rear harness along with body harness.
4	**CHECK AIRBAG CONTROL MODULE.** 1) Connect all connectors. 2) Clear the memory. 3) Perform the Inspection Mode. 4) Read the DTC.	Is the same DTC displayed?	Replace the airbag control module. <Ref. to AB-68, Airbag Control Module.>	Go to step **5**.
5	**CHECK FOR ANY OTHER DTC ON DISPLAY.**	Is any other DTC displayed?	Check DTC using "List of Diagnostic Trouble Code (DTC)". <Ref. to AB(diag)-41, List of Diagnostic Trouble Code (DTC).>	Finish the diagnosis.

AO:DTC 62 BELT PRETENSIONER LH FAILURE

NOTE:
Be sure to properly identify the Airbag system type prior to performing any diagnostics.

1. TYPE A

DTC DETECTING CONDITION:

- Seat belt pretensioner (LH) circuit is open, shorted or shorted to ground.
- Airbag control module is faulty.
- Pretensioner is faulty.
- Pretensioner harness is faulty.

CAUTION:
Before performing diagnosis, refer to "CAUTION" in "General Description". <Ref. to AB(diag)-5, CAUTION, General Description.>
WIRING DIAGRAM:

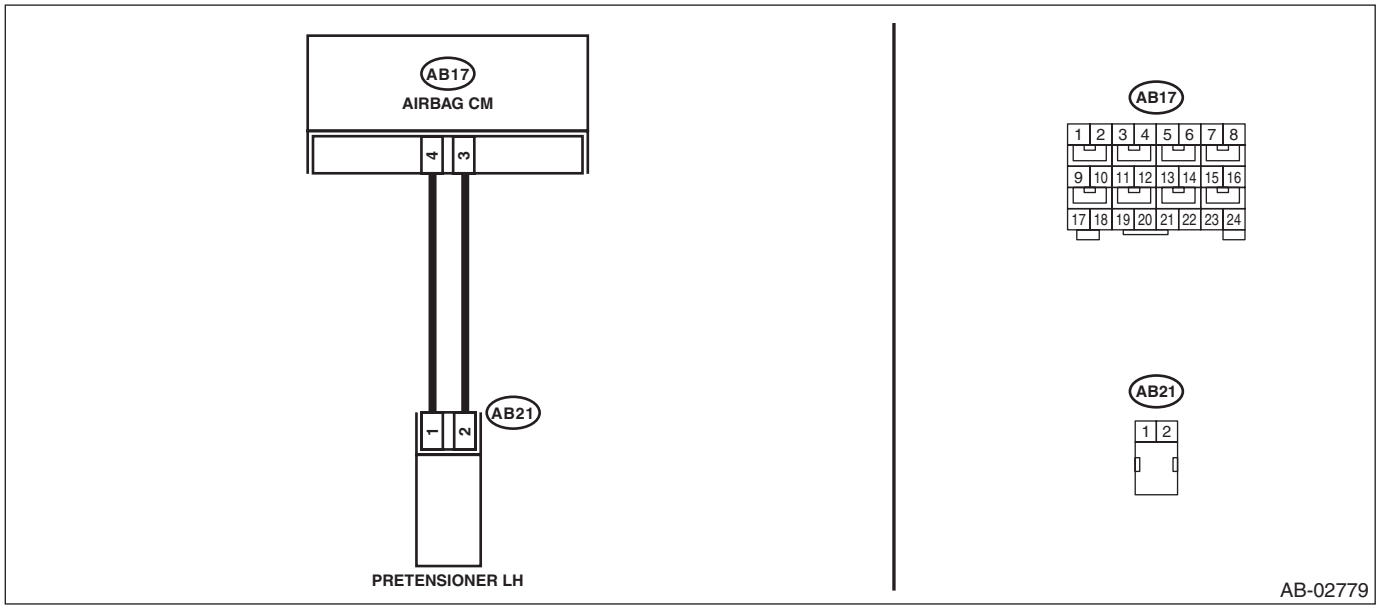

Step		Check	Yes	No
1	**CHECK POOR CONTACT OF CONNECTORS.** Check for poor contact of the connectors between the airbag control module and the seat belt pretensioner LH.	Is there poor contact?	Replace the airbag rear harness along with body harness.	Go to step **2**.
2	**CHECK SEAT BELT PRETENSIONER.** 1) Turn the ignition switch to OFF, disconnect the battery ground cable, and wait for 60 seconds or more. 2) Disconnect the connector (AB21) from seat belt pretensioner (LH). 3) Connect the connector (1N) in the test harness N to the connector (AB21). 4) Connect the airbag resistor to the connector (2N) of test harness N. 5) Connect the battery ground terminal and turn the ignition switch to ON.	Does the airbag warning light illuminate for six seconds and go off?	Replace the seat belt pretensioner (LH). <Ref. to SB-17, Front Seat Belt.>	Go to step **3**.

	Step	Check	Yes	No
3	**CHECK AIRBAG REAR HARNESS (PRETENSIONER HARNESS LH).** 1) Turn the ignition switch to OFF, disconnect the battery ground cable, and wait for 60 seconds or more. 2) Disconnect the airbag resistor from test harness. 3) Disconnect connector (AB19) from side airbag module (LH). 4) Disconnect the connector (AB31) from curtain airbag module (LH). 5) Disconnect the connectors (AB6, AB17, AB18) from airbag control module. 6) Connect the connector (1AG) in the test harness AG to the connectors (AB6, AB17, AB18). 7) Measure the resistance between connectors (3AG) in the test harness AG, and between connector (3AG) and chassis ground. ***Connector & terminal*** ***(3AG) No. 18 — (3AG) No. 20:*** ***(3AG) No. 18 — Chassis ground:*** ***(3AG) No. 20 — Chassis ground:***	Is the resistance 1 MΩ or more?	Go to step **4**.	Replace the airbag rear harness along with body harness.
4	**CHECK AIRBAG REAR HARNESS (PRETENSIONER HARNESS LH).** Measure the resistance between connector (3AG) in the test harness AG and connector (2N) in the test harness N. ***Connector & terminal*** ***(3AG) No. 18 — (2N) No. 1:*** ***(3AG) No. 20 — (2N) No. 2:***	Is the resistance less than 10 Ω?	Go to step **5**.	Replace the airbag rear harness along with body harness.
5	**CHECK AIRBAG CONTROL MODULE.** 1) Connect all connectors. 2) Clear the memory. 3) Perform the Inspection Mode. 4) Read the DTC.	Is the same DTC displayed?	Replace the airbag control module. <Ref. to AB-68, Airbag Control Module.>	Go to step **6**.
6	**CHECK FOR ANY OTHER DTC ON DISPLAY.**	Is any other DTC displayed?	Check DTC using "List of Diagnostic Trouble Code (DTC)". <Ref. to AB(diag)-41, List of Diagnostic Trouble Code (DTC).>	Finish the diagnosis.

2. TYPE B

DTC DETECTING CONDITION:

- Seat belt pretensioner (LH) circuit is shorted to ground.
- Pretensioner (LH) is faulty.
- Pretensioner harness is faulty.
- Airbag control module is faulty.

CAUTION:
Before performing diagnosis, refer to "CAUTION" in "General Description". <Ref. to AB(diag)-5, CAUTION, General Description.>
WIRING DIAGRAM:

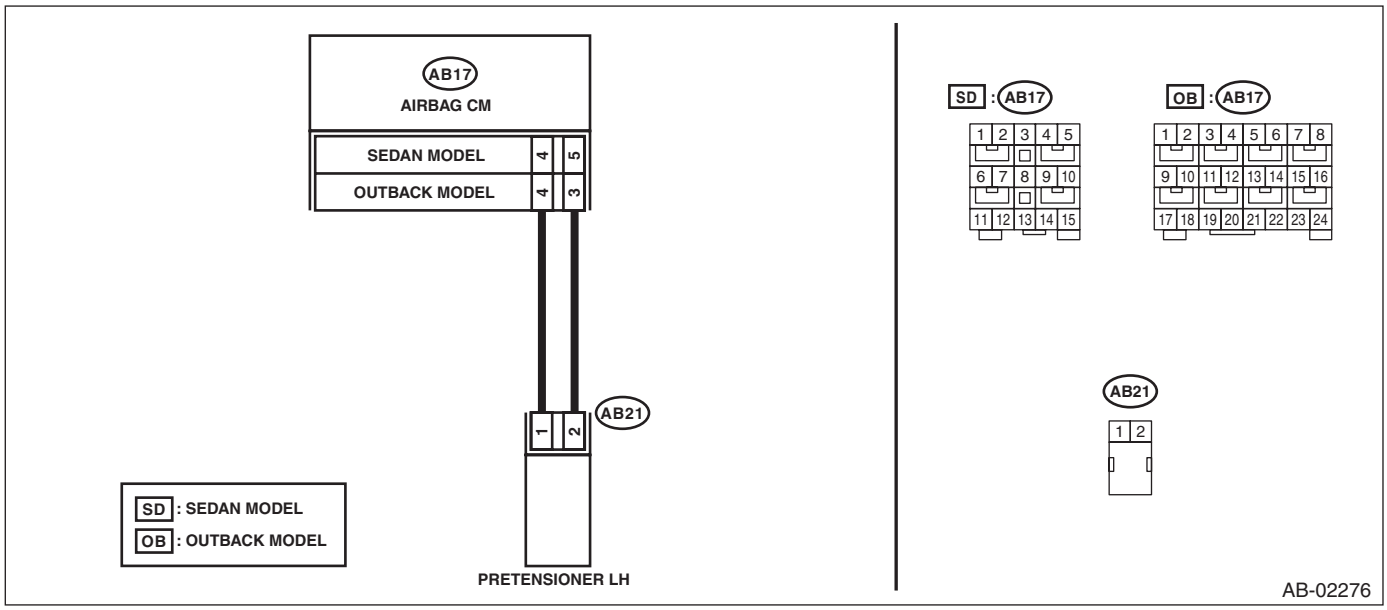

Step		Check	Yes	No
1	**CHECK POOR CONTACT OF CONNECTORS.** Check for poor contact of the connectors between the airbag control module and the seat belt pretensioner LH.	Is there poor contact?	Replace the airbag rear harness along with body harness.	Go to step **2**.
2	**CHECK SEAT BELT PRETENSIONER.** 1) Turn the ignition switch to OFF, disconnect the battery ground cable, and wait for 60 seconds or more. 2) Disconnect the connector (AB21) from seat belt pretensioner (LH). 3) Connect the connector (1N) in the test harness N to the connector (AB21). 4) Connect the airbag resistor to the connector (2N) of test harness N. 5) Connect the battery ground terminal and turn the ignition switch to ON.	Does the airbag warning light illuminate for six seconds and go off?	Replace the seat belt pretensioner (LH). <Ref. to SB-17, Front Seat Belt.>	Go to step **3**.

	Step	Check	Yes	No
3	**CHECK AIRBAG REAR HARNESS (PRETENSIONER HARNESS LH).** 1) Turn the ignition switch to OFF, disconnect the battery ground cable, and wait for 60 seconds or more. 2) Disconnect the airbag resistor from test harness N. 3) Disconnect connector (AB19) from side airbag module (LH). 4) Disconnect the connector (AB31) from curtain airbag module (LH). 5) Disconnect the connectors (AB6, AB17, AB18) from airbag control module. 6) Connect the connector (1AG) in the test harness AG to the connectors (AB6, AB17, AB18). NOTE: For sedan models, connect test harness AH between the connectors (AB6, AB17, AB18) and (1AG). 7) Measure the resistance between connector (3AG) in the test harness AG and chassis ground. ***Connector & terminal*** ***(3AG) No. 18 — Chassis ground:*** ***(3AG) No. 20 — Chassis ground:***	Is the resistance 1 MΩ or more?	Go to step **4**.	Replace the airbag rear harness along with body harness.
4	**CHECK AIRBAG CONTROL MODULE.** 1) Connect all connectors. 2) Clear the memory. 3) Perform the Inspection Mode. 4) Read the DTC.	Is the same DTC displayed?	Replace the airbag control module. <Ref. to AB-68, Airbag Control Module.>	Go to step **5**.
5	**CHECK FOR ANY OTHER DTC ON DISPLAY.**	Is any other DTC displayed?	Check DTC using "List of Diagnostic Trouble Code (DTC)". <Ref. to AB(diag)-41, List of Diagnostic Trouble Code (DTC).>	Finish the diagnosis.

AP:DTC 65 BELT PRETENSIONER RH FAILURE

DTC DETECTING CONDITION:

- Seat belt pretensioner (RH) circuit is shorted to power supply.
- Pretensioner (RH) is faulty.
- Pretensioner harness is faulty.
- Airbag control module is faulty.

CAUTION:

Before performing diagnosis, refer to "CAUTION" in "General Description". <Ref. to AB(diag)-5, CAUTION, General Description.>

WIRING DIAGRAM:

- Type A

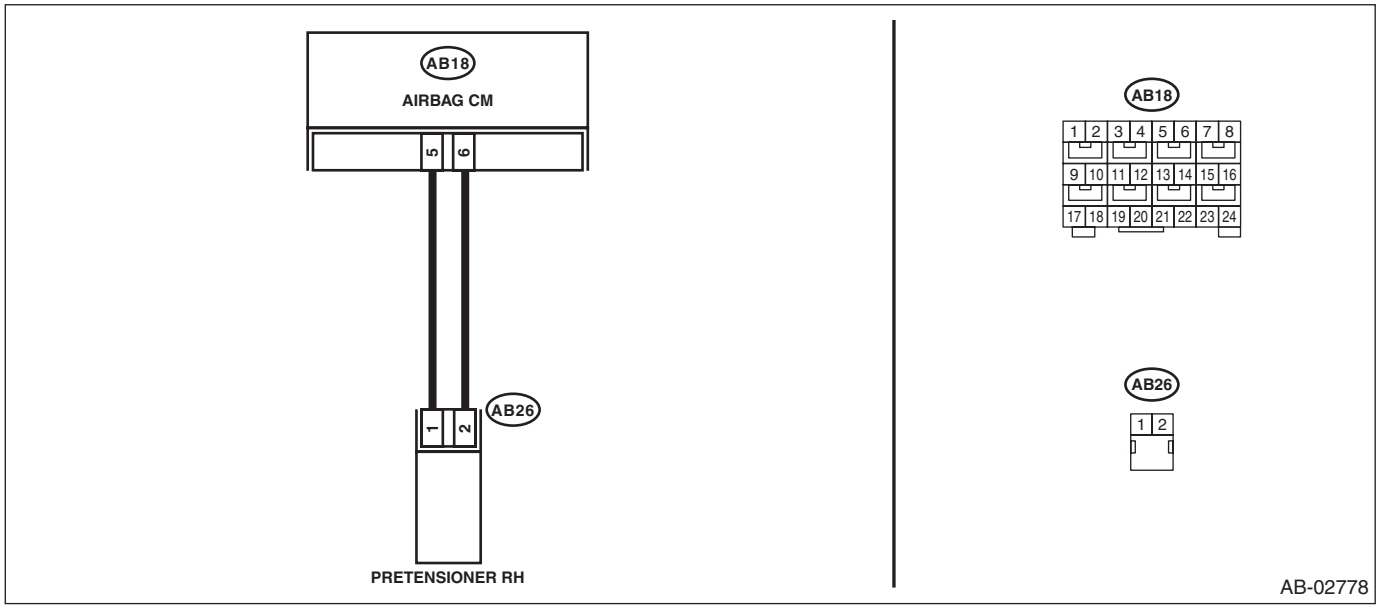

- Type B

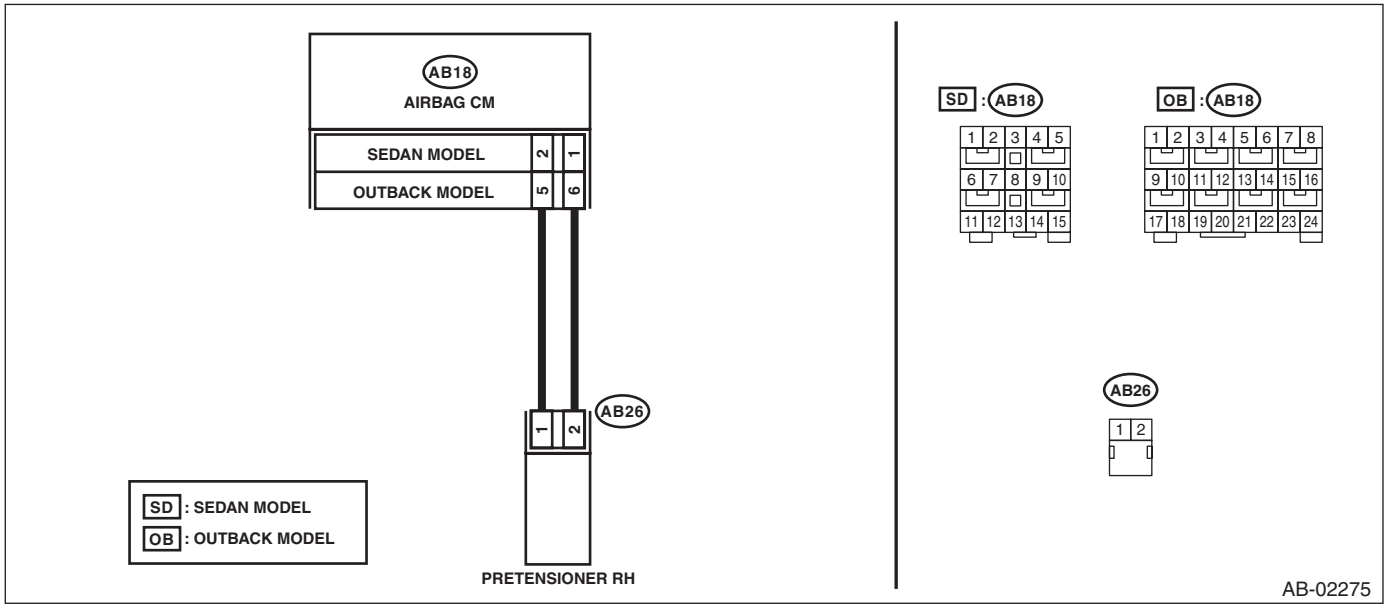

Diagnostic Chart with Trouble Code

	Step	Check	Yes	No
1	**CHECK POOR CONTACT OF CONNECTORS.** Check for poor contact of the connectors between the airbag control module and the seat belt pretensioner RH.	Is there poor contact?	Replace the airbag rear harness along with body harness.	Go to step **2**.
2	**CHECK SEAT BELT PRETENSIONER.** 1) Turn the ignition switch to OFF, disconnect the battery ground cable, and wait for 60 seconds or more. 2) Disconnect the connector (AB26) from seat belt pretensioner (RH). 3) Connect the connector (1N) in the test harness N to the connector (AB26). 4) Connect the airbag resistor to the connector (2N) of test harness N. 5) Connect the battery ground terminal and turn the ignition switch to ON.	Does the airbag warning light illuminate for six seconds and go off?	Replace the seat belt pretensioner (RH). <Ref. to SB-17, Front Seat Belt.>	Go to step **3**.
3	**CHECK AIRBAG REAR HARNESS (PRETENSIONER HARNESS RH).** 1) Turn the ignition switch to OFF, disconnect the battery ground cable, and wait for 60 seconds or more. 2) Disconnect the airbag resistor from test harness N. 3) Disconnect connector (AB24) from side airbag module (RH). 4) Disconnect the connector (AB33) from curtain airbag module (RH). 5) Disconnect the connectors (AB6, AB17, AB18) from airbag control module. 6) Connect the connector (1AG) in the test harness AG to the connectors (AB6, AB17, AB18). NOTE: For type B (sedan models), connect test harness AH between the connectors (AB6, AB17, AB18) and (1AG). 7) Connect the battery ground terminal and turn the ignition switch to ON. 8) Measure the voltage between connector (3AG) in the test harness AG and chassis ground. ***Connector & terminal*** ***(3AG) No. 10 (+) — Chassis ground (–):*** ***(3AG) No. 12 (+) — Chassis ground (–):***	Is the voltage less than 1 V?	Go to step **4**.	Replace the airbag rear harness along with body harness.
4	**CHECK AIRBAG CONTROL MODULE.** 1) Connect all connectors. 2) Clear the memory. 3) Perform the Inspection Mode. 4) Read the DTC.	Is the same DTC displayed?	Replace the airbag control module. <Ref. to AB-68, Airbag Control Module.>	Go to step **5**.
5	**CHECK FOR ANY OTHER DTC ON DISPLAY.**	Is any other DTC displayed?	Check DTC using "List of Diagnostic Trouble Code (DTC)". <Ref. to AB(diag)-41, List of Diagnostic Trouble Code (DTC).>	Finish the diagnosis.

AQ:DTC 66 BELT PRETENSIONER LH FAILURE

DTC DETECTING CONDITION:

- Seat belt pretensioner (LH) circuit is shorted to power supply.
- Pretensioner (LH) is faulty.
- Pretensioner harness is faulty.
- Airbag control module is faulty.

CAUTION:

Before performing diagnosis, refer to "CAUTION" in "General Description". <Ref. to AB(diag)-5, CAUTION, General Description.>

WIRING DIAGRAM:

- Type A

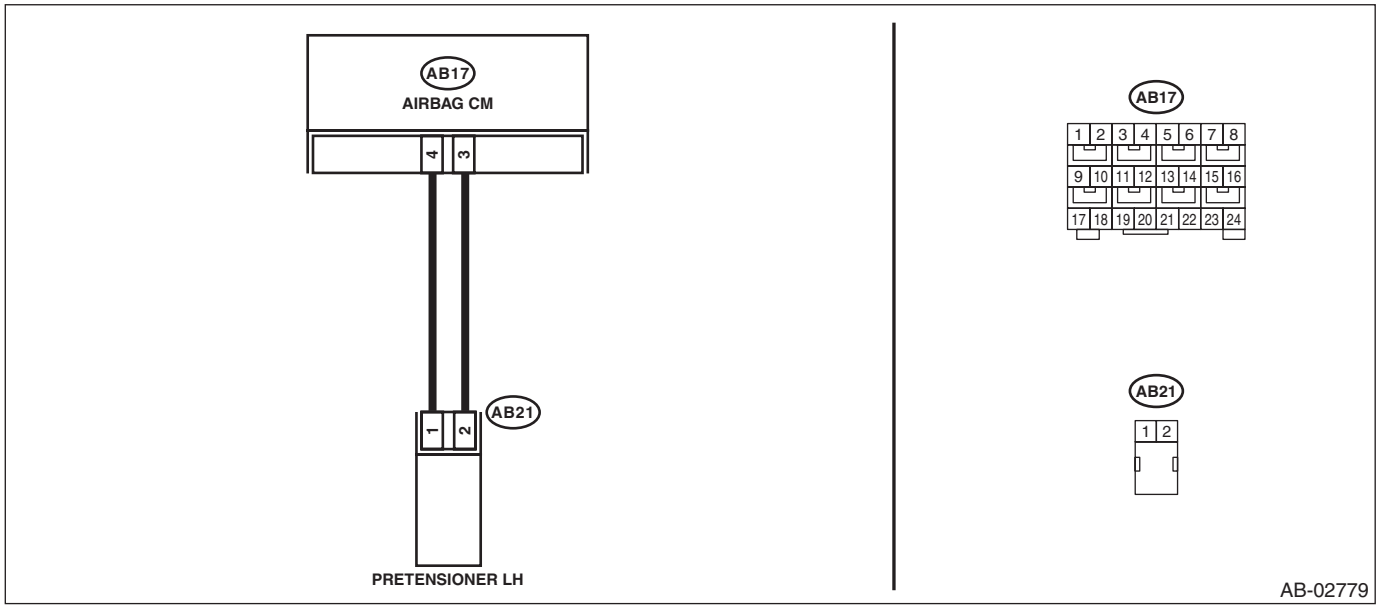

- Type B

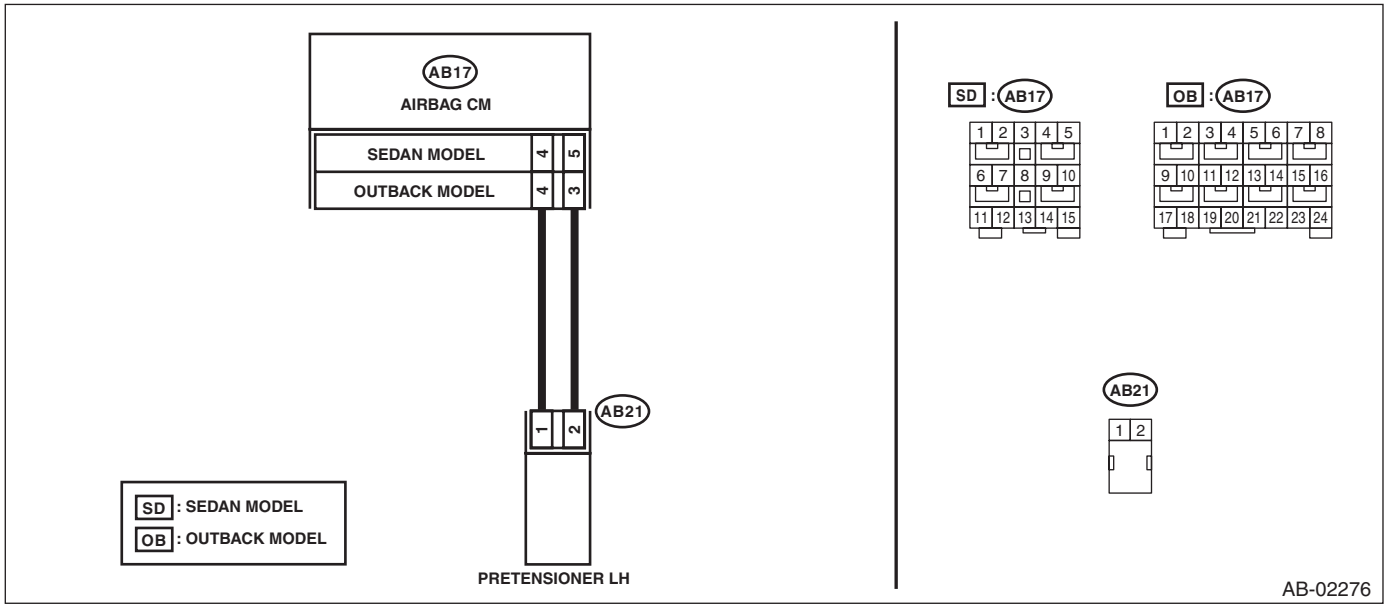

Diagnostic Chart with Trouble Code

	Step	Check	Yes	No
1	**CHECK POOR CONTACT OF CONNECTORS.** Check for poor contact of the connectors between the airbag control module and the seat belt pretensioner LH.	Is there poor contact?	Replace the airbag rear harness along with body harness.	Go to step **2**.
2	**CHECK SEAT BELT PRETENSIONER.** 1) Turn the ignition switch to OFF, disconnect the battery ground cable, and wait for 60 seconds or more. 2) Disconnect the connector (AB21) from seat belt pretensioner (LH). 3) Connect the connector (1N) in the test harness N to the connector (AB21). 4) Connect the airbag resistor to the connector (2N) of test harness N. 5) Connect the battery ground terminal and turn the ignition switch to ON.	Does the airbag warning light illuminate for six seconds and go off?	Replace the seat belt pretensioner (LH). <Ref. to SB-17, Front Seat Belt.>	Go to step **3**.
3	**CHECK AIRBAG REAR HARNESS (PRETENSIONER HARNESS LH).** 1) Turn the ignition switch to OFF, disconnect the battery ground cable, and wait for 60 seconds or more. 2) Disconnect the airbag resistor from test harness N. 3) Disconnect connector (AB19) from side airbag module (LH). 4) Disconnect the connector (AB31) from curtain airbag module (LH). 5) Disconnect the connectors (AB6, AB17, AB18) from airbag control module. 6) Connect the connector (1AG) in the test harness AG to the connectors (AB6, AB17, AB18). NOTE: For type B (sedan models), connect test harness AH between the connectors (AB6, AB17, AB18) and (1AG). 7) Connect the battery ground terminal and turn the ignition switch to ON. 8) Measure the voltage between connector (3AG) in the test harness AG and chassis ground. ***Connector & terminal*** ***(3AG) No. 18 (+) — Chassis ground (–):*** ***(3AG) No. 20 (+) — Chassis ground (–):***	Is the voltage less than 1 V?	Go to step **4**.	Replace the airbag rear harness along with body harness.
4	**CHECK AIRBAG CONTROL MODULE.** 1) Connect all connectors. 2) Clear the memory. 3) Perform the Inspection Mode. 4) Read the DTC.	Is the same DTC displayed?	Replace the airbag control module. <Ref. to AB-68, Airbag Control Module.>	Go to step **5**.
5	**CHECK FOR ANY OTHER DTC ON DISPLAY.**	Is any other DTC displayed?	Check DTC using "List of Diagnostic Trouble Code (DTC)". <Ref. to AB(diag)-41, List of Diagnostic Trouble Code (DTC).>	Finish the diagnosis.

AR:DTC 6A BELT PRETENSIONER RH FAILURE

DTC DETECTING CONDITION:

- Seat belt pretensioner (RH) circuit is shorted.
- Pretensioner (RH) is faulty.
- Pretensioner harness is faulty.
- Airbag control module is faulty.

CAUTION:

Before performing diagnosis, refer to "CAUTION" in "General Description". <Ref. to AB(diag)-5, CAUTION, General Description.>

WIRING DIAGRAM:

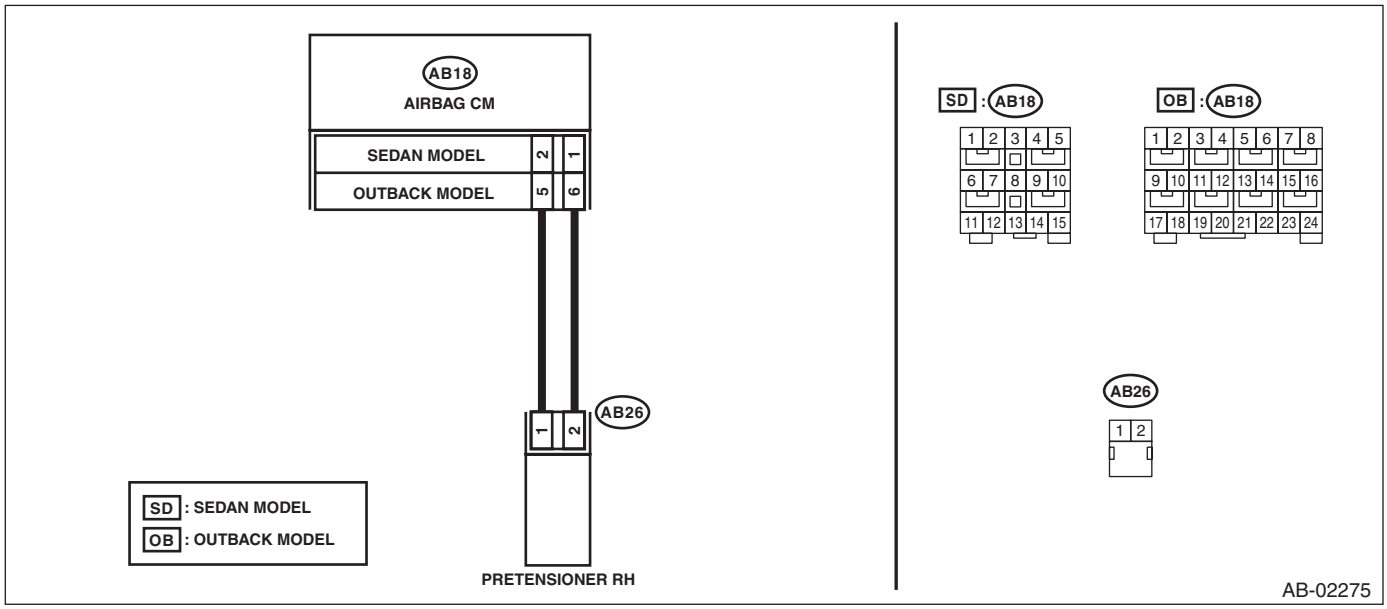

Step		Check	Yes	No
1	**CHECK POOR CONTACT OF CONNECTORS.** Check for poor contact of the connectors between the airbag control module and the seat belt pretensioner RH.	Is there poor contact?	Replace the airbag rear harness along with body harness.	Go to step **2**.
2	**CHECK SEAT BELT PRETENSIONER.** 1) Turn the ignition switch to OFF, disconnect the battery ground cable, and wait for 60 seconds or more. 2) Disconnect the connector (AB26) from seat belt pretensioner (RH). 3) Connect the connector (1N) in the test harness N to the connector (AB26). 4) Connect the airbag resistor to the connector (2N) of test harness N. 5) Connect the battery ground terminal and turn the ignition switch to ON.	Does the airbag warning light illuminate for six seconds and go off?	Replace the seat belt pretensioner (RH). <Ref. to SB-17, Front Seat Belt.>	Go to step **3**.

	Step	Check	Yes	No
3	**CHECK AIRBAG REAR HARNESS (PRETENSIONER HARNESS RH).** 1) Turn the ignition switch to OFF, disconnect the battery ground cable, and wait for 60 seconds or more. 2) Disconnect the airbag resistor from test harness N. 3) Disconnect connector (AB24) from side airbag module (RH). 4) Disconnect the connector (AB33) from curtain airbag module (RH). 5) Disconnect the connectors (AB6, AB17, AB18) from airbag control module. 6) Connect the connector (1AG) in the test harness AG to the connectors (AB6, AB17, AB18). NOTE: For sedan models, connect test harness AH between the connectors (AB6, AB17, AB18) and (1AG). 7) Measure the resistance between connector (3AG) terminals in test harness AG. ***Connector & terminal (3AG) No. 10 — (3AG) No. 12:***	Is the resistance 1 MΩ or more?	Go to step **4**.	Replace the airbag rear harness along with body harness.
4	**CHECK AIRBAG CONTROL MODULE.** 1) Connect all connectors. 2) Clear the memory. 3) Perform the Inspection Mode. 4) Read the DTC.	Is the same DTC displayed?	Replace the airbag control module. <Ref. to AB-68, Airbag Control Module.>	Go to step **5**.
5	**CHECK FOR ANY OTHER DTC ON DISPLAY.**	Is any other DTC displayed?	Check DTC using "List of Diagnostic Trouble Code (DTC)". <Ref. to AB(diag)-41, List of Diagnostic Trouble Code (DTC).>	Finish the diagnosis.

AS:DTC 6B BELT PRETENSIONER LH FAILURE

DTC DETECTING CONDITION:

- Seat belt pretensioner (LH) circuit is shorted.
- Pretensioner (LH) is faulty.
- Pretensioner harness is faulty.
- Airbag control module is faulty.

CAUTION:

Before performing diagnosis, refer to "CAUTION" in "General Description". <Ref. to AB(diag)-5, CAUTION, General Description.>

WIRING DIAGRAM:

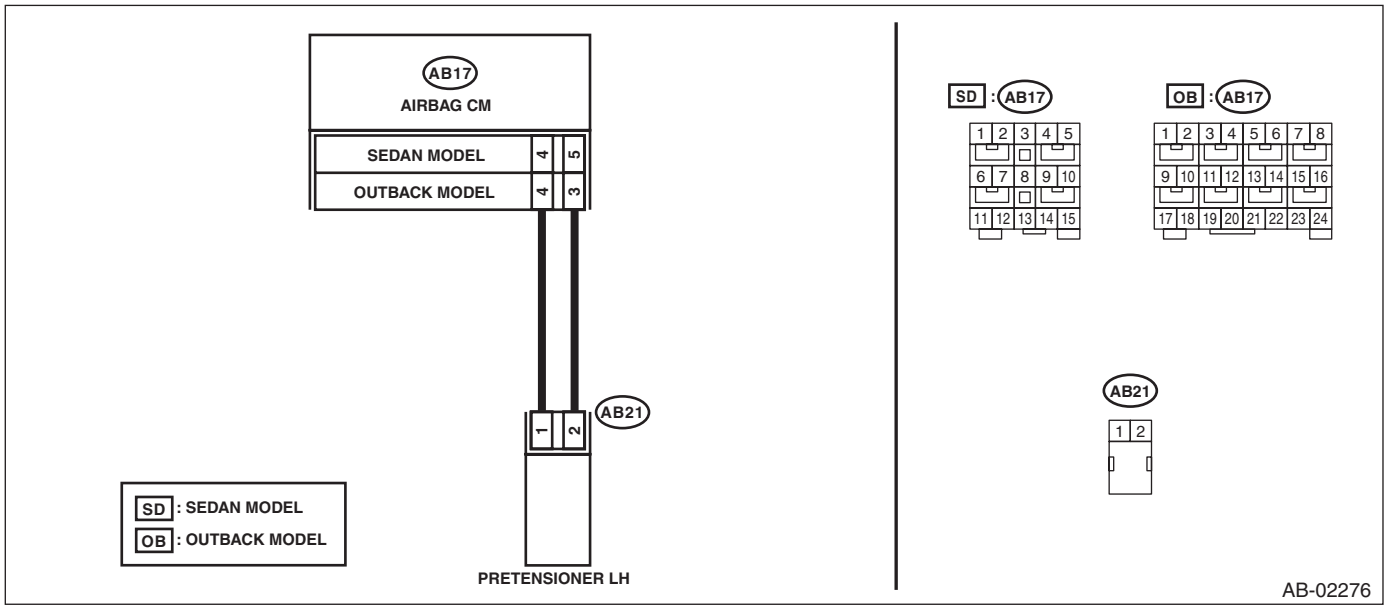

Step		Check	Yes	No
1	**CHECK POOR CONTACT OF CONNECTORS.** Check for poor contact of the connectors between the airbag control module and the seat belt pretensioner LH.	Is there poor contact?	Replace the airbag rear harness along with body harness.	Go to step **2**.
2	**CHECK SEAT BELT PRETENSIONER.** 1) Turn the ignition switch to OFF, disconnect the battery ground cable, and wait for 60 seconds or more. 2) Disconnect the connector (AB21) from seat belt pretensioner (LH). 3) Connect the connector (1N) in the test harness N to the connector (AB21). 4) Connect the airbag resistor to the connector (2N) of test harness N. 5) Connect the battery ground terminal and turn the ignition switch to ON.	Does the airbag warning light illuminate for six seconds and go off?	Replace the seat belt pretensioner (LH). <Ref. to SB-17, Front Seat Belt.>	Go to step **3**.

	Step	Check	Yes	No
3	**CHECK AIRBAG REAR HARNESS (PRETENSIONER HARNESS LH).** 1) Turn the ignition switch to OFF, disconnect the battery ground cable, and wait for 60 seconds or more. 2) Disconnect the airbag resistor from test harness N. 3) Disconnect connector (AB19) from side airbag module (LH). 4) Disconnect the connector (AB31) from curtain airbag module (LH). 5) Disconnect the connectors (AB6, AB17, AB18) from airbag control module. 6) Connect the connector (1AG) in the test harness AG to the connectors (AB6, AB17, AB18). NOTE: For sedan models, connect test harness AH between the connectors (AB6, AB17, AB18) and (1AG). 7) Measure the resistance between connector (3AG) terminals in test harness AG. ***Connector & terminal*** ***(3AG) No. 18 — (3AG) No. 20:***	Is the resistance 1 MΩ or more?	Go to step **4**.	Replace the airbag rear harness along with body harness.
4	**CHECK AIRBAG CONTROL MODULE.** 1) Connect all connectors. 2) Clear the memory. 3) Perform the Inspection Mode. 4) Read the DTC.	Is the same DTC displayed?	Replace the airbag control module. <Ref. to AB-68, Airbag Control Module.>	Go to step **5**.
5	**CHECK FOR ANY OTHER DTC ON DISPLAY.**	Is any other DTC displayed?	Check DTC using "List of Diagnostic Trouble Code (DTC)". <Ref. to AB(diag)-41, List of Diagnostic Trouble Code (DTC).>	Finish the diagnosis.

AT:DTC 6D BELT PRETENSIONER RH FAILURE

DTC DETECTING CONDITION:

- Seat belt pretensioner (RH) circuit is open.
- Pretensioner (RH) is faulty.
- Pretensioner harness is faulty.
- Airbag control module is faulty.

CAUTION:

Before performing diagnosis, refer to "CAUTION" in "General Description". <Ref. to AB(diag)-5, CAUTION, General Description.>

WIRING DIAGRAM:

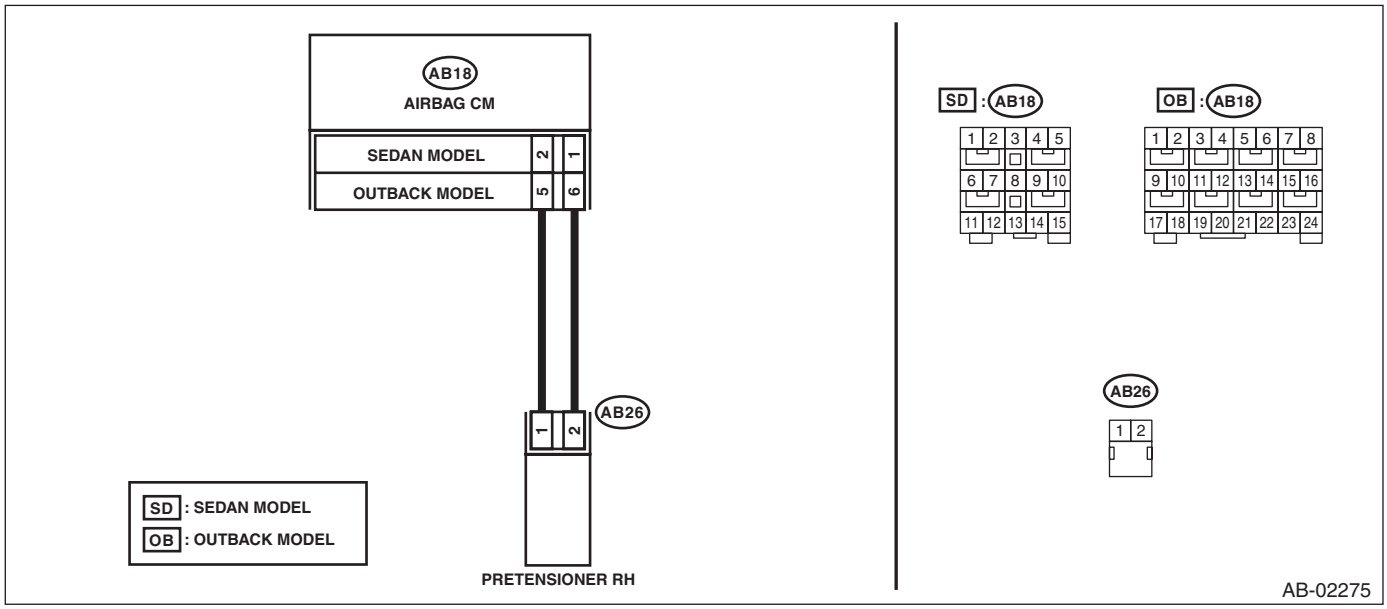

Step		Check	Yes	No
1	**CHECK POOR CONTACT OF CONNECTORS.** Check for poor contact of the connectors between the airbag control module and the seat belt pretensioner RH.	Is there poor contact?	Replace the airbag rear harness along with body harness.	Go to step **2**.
2	**CHECK SEAT BELT PRETENSIONER.** 1) Turn the ignition switch to OFF, disconnect the battery ground cable, and wait for 60 seconds or more. 2) Disconnect the connector (AB26) from seat belt pretensioner (RH). 3) Connect the connector (1N) in the test harness N to the connector (AB26). 4) Connect the airbag resistor to the connector (2N) of test harness N. 5) Connect the battery ground terminal and turn the ignition switch to ON.	Does the airbag warning light illuminate for six seconds and go off?	Replace the seat belt pretensioner (RH). <Ref. to SB-17, Front Seat Belt.>	Go to step **3**.

	Step	Check	Yes	No
3	**CHECK AIRBAG REAR HARNESS (PRETENSIONER HARNESS RH).** 1) Turn the ignition switch to OFF, disconnect the battery ground cable, and wait for 60 seconds or more. 2) Disconnect the airbag resistor from test harness N. 3) Disconnect connector (AB24) from side airbag module (RH). 4) Disconnect the connector (AB33) from curtain airbag module (RH). 5) Disconnect the connectors (AB6, AB17, AB18) from airbag control module. 6) Connect the connector (1AG) in the test harness AG to the connectors (AB6, AB17, AB18). NOTE: For sedan models, connect test harness AH between the connectors (AB6, AB17, AB18) and (1AG). 7) Measure the resistance between connector (3AG) in the test harness AG and connector (2N) in the test harness N. ***Connector & terminal*** ***(3AG) No. 10 — (2N) No. 2:*** ***(3AG) No. 12 — (2N) No. 1:***	Is the resistance less than 10 Ω?	Go to step **4**.	Replace the airbag rear harness along with body harness.
4	**CHECK AIRBAG CONTROL MODULE.** 1) Connect all connectors. 2) Clear the memory. 3) Perform the Inspection Mode. 4) Read the DTC.	Is the same DTC displayed?	Replace the airbag control module. <Ref. to AB-68, Airbag Control Module.>	Go to step **5**.
5	**CHECK FOR ANY OTHER DTC ON DISPLAY.**	Is any other DTC displayed?	Check DTC using "List of Diagnostic Trouble Code (DTC)". <Ref. to AB(diag)-41, List of Diagnostic Trouble Code (DTC).>	Finish the diagnosis.

AU:DTC 6E BELT PRETENSIONER LH FAILURE

DTC DETECTING CONDITION:

- Seat belt pretensioner (LH) circuit is open.
- Pretensioner (LH) is faulty.
- Pretensioner harness is faulty.
- Airbag control module is faulty.

CAUTION:

Before performing diagnosis, refer to "CAUTION" in "General Description". <Ref. to AB(diag)-5, CAUTION, General Description.>

WIRING DIAGRAM:

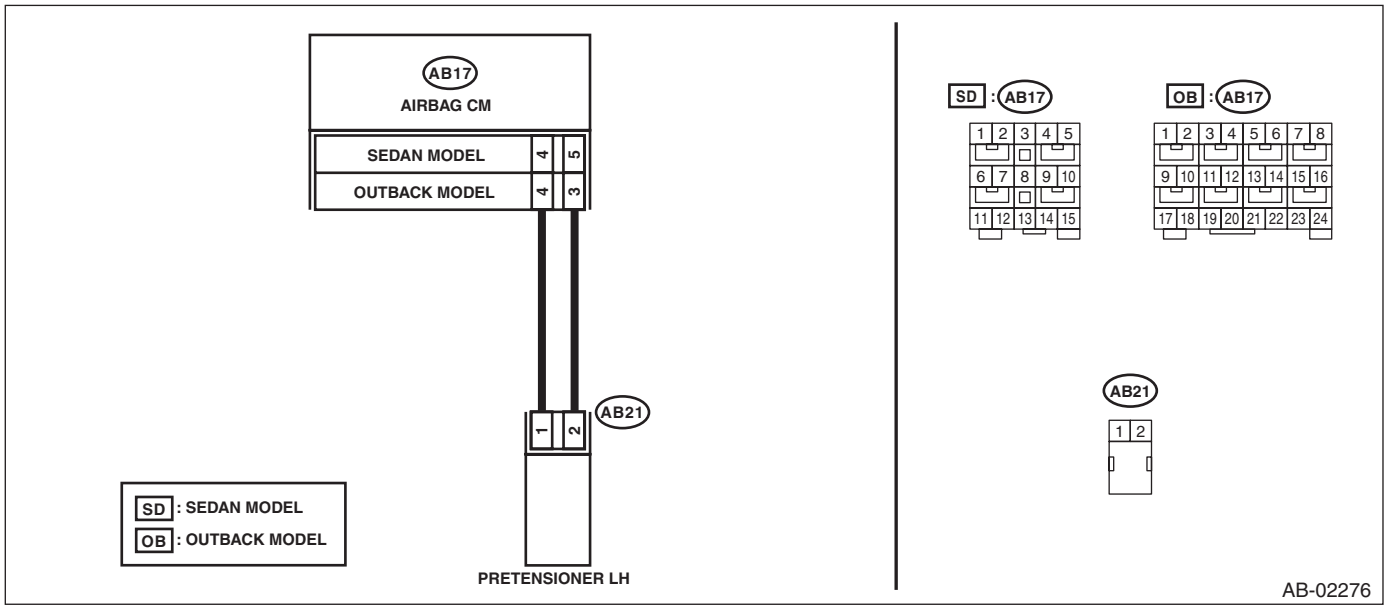

Step		Check	Yes	No
1	**CHECK POOR CONTACT OF CONNECTORS.** Check for poor contact of the connectors between the airbag control module and the seat belt pretensioner LH.	Is there poor contact?	Replace the airbag rear harness along with body harness.	Go to step **2**.
2	**CHECK SEAT BELT PRETENSIONER.** 1) Turn the ignition switch to OFF, disconnect the battery ground cable, and wait for 60 seconds or more. 2) Disconnect the connector (AB21) from seat belt pretensioner (LH). 3) Connect the connector (1N) in the test harness N to the connector (AB21). 4) Connect the airbag resistor to the connector (2N) of test harness N. 5) Connect the battery ground terminal and turn the ignition switch to ON.	Does the airbag warning light illuminate for six seconds and go off?	Replace the seat belt pretensioner (LH). <Ref. to SB-17, Front Seat Belt.>	Go to step **3**.

	Step	Check	Yes	No
3	**CHECK AIRBAG REAR HARNESS (PRETENSIONER HARNESS LH).** 1) Turn the ignition switch to OFF, disconnect the battery ground cable, and wait for 60 seconds or more. 2) Disconnect the airbag resistor from test harness N. 3) Disconnect connector (AB19) from side airbag module (LH). 4) Disconnect the connector (AB31) from curtain airbag module (LH). 5) Disconnect the connectors (AB6, AB17, AB18) from airbag control module. 6) Connect the connector (1AG) in the test harness AG to the connectors (AB6, AB17, AB18). NOTE: For sedan models, connect test harness AH between the connectors (AB6, AB17, AB18) and (1AG). 7) Measure the resistance between connector (3AG) in the test harness AG and connector (2N) in the test harness N. ***Connector & terminal*** ***(3AG) No. 18 — (2N) No. 1:*** ***(3AG) No. 20 — (2N) No. 2:***	Is the resistance less than 10 Ω?	Go to step **4**.	Replace the airbag rear harness along with body harness.
4	**CHECK AIRBAG CONTROL MODULE.** 1) Connect all connectors. 2) Clear the memory. 3) Perform the Inspection Mode. 4) Read the DTC.	Is the same DTC displayed?	Replace the airbag control module. <Ref. to AB-68, Airbag Control Module.>	Go to step **5**.
5	**CHECK FOR ANY OTHER DTC ON DISPLAY.**	Is any other DTC displayed?	Check DTC using "List of Diagnostic Trouble Code (DTC)". <Ref. to AB(diag)-41, List of Diagnostic Trouble Code (DTC).>	Finish the diagnosis.

AV:DTC 71 DRIVER'S AIRBAG FAILURE

NOTE:
Be sure to properly identify the Airbag system type prior to performing any diagnostics.

1. TYPE A

DTC DETECTING CONDITION:

- Airbag main harness circuit is open, shorted or shorted to ground.
- Airbag module harness (Driver's side) circuit is open, shorted or shorted to ground.
- Roll connector circuit is open, shorted or shorted to ground.
- Driver's airbag module is faulty.
- Airbag control module is faulty.

CAUTION:
Before performing diagnosis, refer to "CAUTION" in "General Description". <Ref. to AB(diag)-5, CAUTION, General Description.>

NOTE:
Prior to starting work, prepare two AIRBAG RESISTORs (98299PA040).
WIRING DIAGRAM:

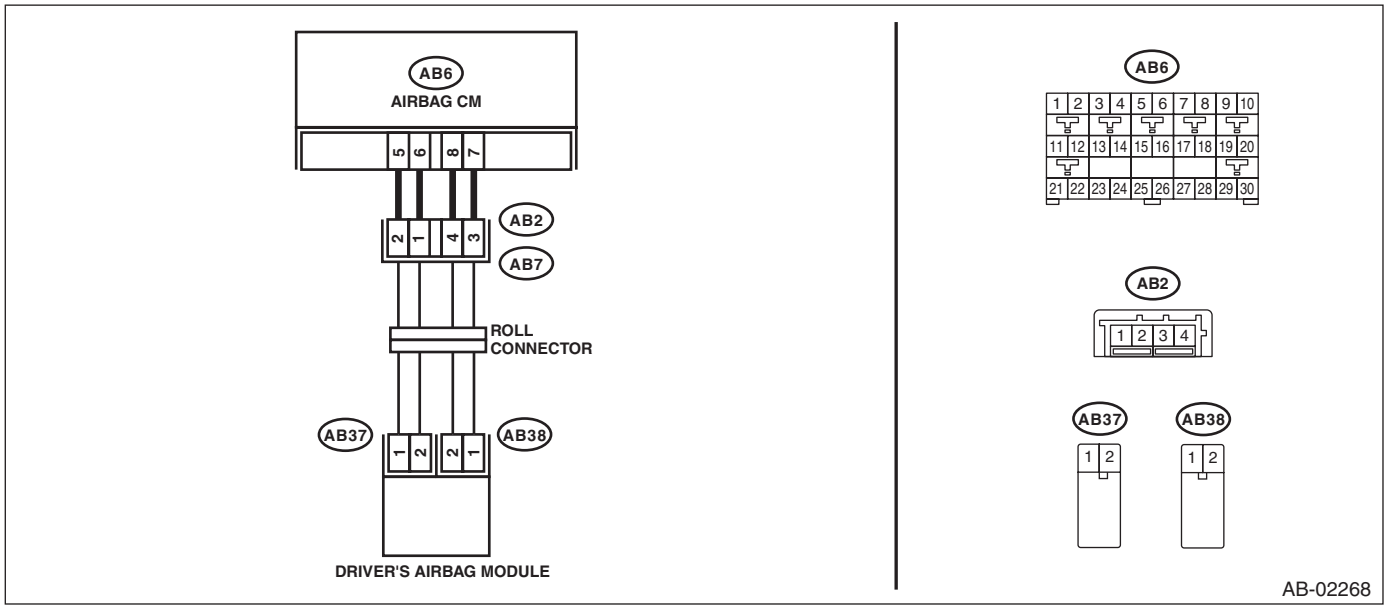

Step		Check	Yes	No
1	**CHECK POOR CONTACT OF CONNECTORS.** Check for poor contact of the connectors between the airbag control module and the driver's airbag module.	Is there poor contact?	Replace the airbag harness.	Go to step **2**.

	Step	Check	Yes	No
2	**CHECK DRIVER'S AIRBAG MODULE.** 1) Turn the ignition switch to OFF, disconnect the battery ground cable, and wait for 60 seconds or more. 2) Remove the driver's airbag module. 3) Connect the connector (1N) in the test harness N to the connector (AB38). 4) Connect the airbag resistor to the connector (2N) of test harness N. 5) Connect the connector (1Q) in the test harness Q to connector (AB37). 6) Connect the airbag resistor to the connector (2Q) in the test harness Q. 7) Connect the battery ground terminal and turn the ignition switch to ON.	Does the airbag warning light illuminate for six seconds and go off?	Replace the driver's airbag module. <Ref. to AB-35, Driver's Airbag Module.>	Go to step **3**.
3	**CHECK ROLL CONNECTOR AND AIRBAG MAIN HARNESS (DRIVER'S AIRBAG HARNESS).** 1) Turn the ignition switch to OFF, disconnect the battery ground cable, and wait for 60 seconds or more. 2) Remove the console front panel and disconnect the connector (AB9). 3) Disconnect the airbag resistor from the connector (2N) in test harness N. 4) Disconnect the airbag resistor from the connector (2Q) of test harness Q. 5) Disconnect the connectors (AB6, AB17, AB18) from airbag control module. 6) Measure the resistance between connector (2N) terminals in test harness N. ***Connector & terminal*** ***(2N) No. 1 — (2N) No. 2:***	Is the resistance less than 10 Ω?	Go to step **5**.	Go to step **4**.
4	**CHECK ROLL CONNECTOR.** 1) Remove the instrument panel lower cover and column cover, and disconnect the connector (AB7) from (AB2). 2) Measure the resistance between connector (2N) terminals in test harness N. ***Connector & terminal*** ***(2N) No. 1 — (2N) No. 2:***	Is the resistance less than 10 Ω?	Replace the airbag main harness along with body harness.	Replace the roll connector. <Ref. to AB-96, Roll Connector.>
5	**CHECK ROLL CONNECTOR AND AIRBAG MAIN HARNESS (DRIVER'S AIRBAG HARNESS).** 1) Remove the instrument panel lower cover and column cover, and disconnect the connector (AB7) from (AB2). 2) Measure the resistance between connector (2N) in the test harness N and chassis ground. ***Connector & terminal*** ***(2N) No. 1 — Chassis ground:*** ***(2N) No. 2 — Chassis ground:***	Is the resistance 1 MΩ or more?	Go to step **8**.	Go to step **6**.

	Step	Check	Yes	No
6	**CHECK ROLL CONNECTOR.** 1) Remove the instrument panel lower cover and column cover, and disconnect the connector (AB7) from (AB2). 2) Measure the resistance between connector (2N) in the test harness N and chassis ground. ***Connector & terminal*** ***(2N) No. 1 — Chassis ground:*** ***(2N) No. 2 — Chassis ground:***	Is the resistance 1 MΩ or more?	Go to step **7**.	Replace the roll connector. <Ref. to AB-96, Roll Connector.>
7	**CHECK AIRBAG MAIN HARNESS (DRIVER'S AIRBAG HARNESS).** 1) Connect the test harness AG connector (1AG) to the connectors (AB6, AB17, AB18). 2) Measure the resistance between connector (3AG) in the test harness AG and chassis ground. ***Connector & terminal*** ***(3AG) No. 2 — Chassis ground:*** ***(3AG) No. 4 — Chassis ground:***	Is the resistance 1 MΩ or more?	Go to step **10**.	Replace the airbag main harness along with body harness.
8	**CHECK ROLL CONNECTOR AND AIRBAG MAIN HARNESS (DRIVER'S AIRBAG HARNESS).** 1) Connect the test harness AG connector (1AG) to the connectors (AB6, AB17, AB18). 2) Measure the resistance between connector (2N) terminals in test harness N. ***Connector & terminal*** ***(2N) No. 1 — (2N) No. 2:***	Is the resistance 1 MΩ or more?	Go to step **10**.	Go to step **9**.
9	**CHECK ROLL CONNECTOR AND AIRBAG MAIN HARNESS (DRIVER'S AIRBAG HARNESS).** 1) Remove the instrument panel lower cover and column cover, and disconnect the connector (AB7) from (AB2). 2) Measure the resistance between connector (3AG) terminals in test harness AG. ***Connector & terminal*** ***(3AG) No. 2 — (3AG) No. 4:***	Is the resistance 1 MΩ or more?	Replace the roll connector. <Ref. to AB-96, Roll Connector.>	Replace the airbag main harness along with body harness.
10	**CHECK AIRBAG CONTROL MODULE.** 1) Connect all connectors. 2) Clear the memory. 3) Perform the Inspection Mode. 4) Read the DTC.	Is the same DTC displayed?	Replace the airbag control module. <Ref. to AB-68, Airbag Control Module.>	Go to step **11**.
11	**CHECK FOR ANY OTHER DTC ON DISPLAY.**	Is any other DTC displayed?	Check DTC using "List of Diagnostic Trouble Code (DTC)". <Ref. to AB(diag)-41, List of Diagnostic Trouble Code (DTC).>	Finish the diagnosis.

2. TYPE B

DTC DETECTING CONDITION:

- Airbag main harness circuit is shorted to ground.
- Airbag module harness (driver's side) circuit is shorted to ground.
- Roll connector circuit is shorted to ground.
- Driver's airbag module is faulty.
- Airbag control module is faulty.

CAUTION:

Before performing diagnosis, refer to "CAUTION" in "General Description". <Ref. to AB(diag)-5, CAUTION, General Description.>

NOTE:

Prior to starting work, prepare two AIRBAG RESISTORs (98299PA040).

WIRING DIAGRAM:

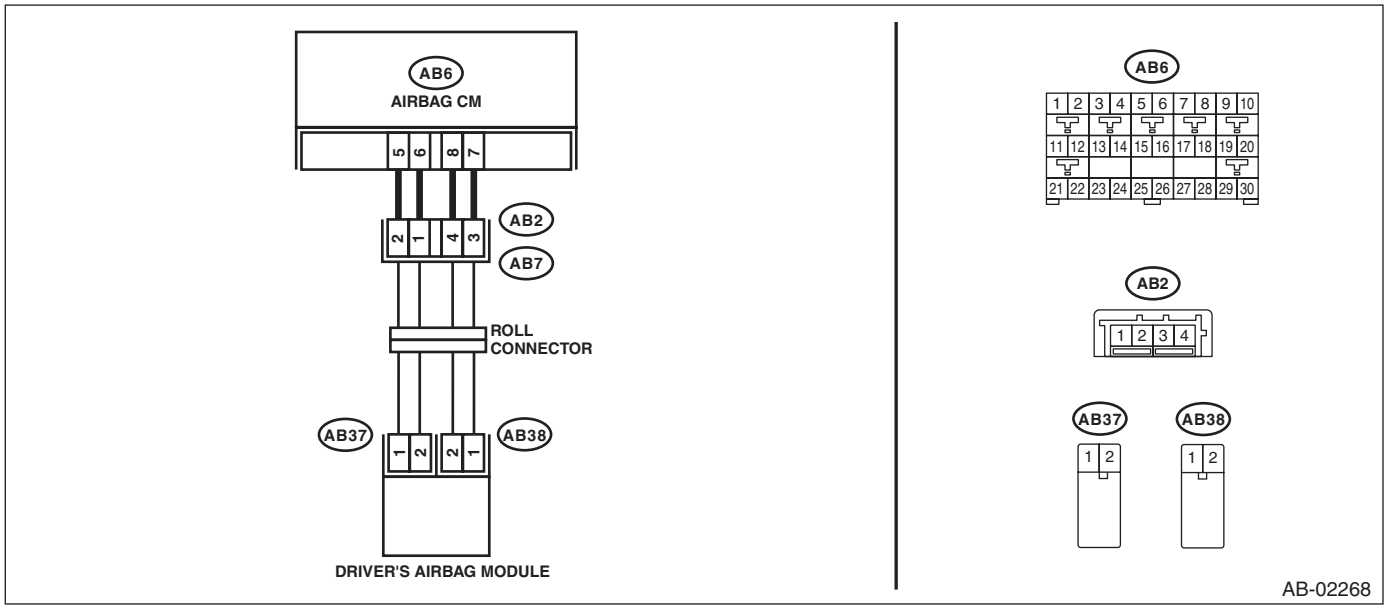

Step		Check	Yes	No
1	**CHECK POOR CONTACT OF CONNECTORS.** Check for poor contact of the connectors between the airbag control module and the driver's airbag module.	Is there poor contact?	Replace the airbag harness.	Go to step **2**.
2	**CHECK DRIVER'S AIRBAG MODULE.** 1) Turn the ignition switch to OFF, disconnect the battery ground cable, and wait for 60 seconds or more. 2) Remove the driver's airbag module. 3) Connect the connector (1N) in the test harness N to the connector (AB38). 4) Connect the airbag resistor to the connector (2N) of test harness N. 5) Connect the connector (1Q) in the test harness Q to connector (AB37). 6) Connect the airbag resistor to the connector (2Q) in the test harness Q. 7) Connect the battery ground terminal and turn the ignition switch to ON.	Does the airbag warning light illuminate for six seconds and go off?	Replace the driver's airbag module. <Ref. to AB-35, Driver's Airbag Module.>	Go to step **3**.

	Step	Check	Yes	No
3	**CHECK ROLL CONNECTOR.** 1) Turn the ignition switch to OFF, disconnect the battery ground cable, and wait for 60 seconds or more. 2) Remove the instrument panel lower cover and column cover, and disconnect the connector (AB7) from (AB2). 3) Disconnect the airbag resistor from the connector (2N) in test harness N and from the connector (2Q) in test harness Q. 4) Measure the resistance between connector (2N) in the test harness N and chassis ground. ***Connector & terminal*** ***(2N) No. 1 — Chassis ground:*** ***(2N) No. 2 — Chassis ground:***	Is the resistance 1 MΩ or more?	Go to step **4**.	Replace the roll connector. <Ref. to AB-96, Roll Connector.>
4	**CHECK AIRBAG MAIN HARNESS (DRIVER'S AIRBAG HARNESS).** 1) Disconnect the test harness N from connector (AB38). 2) Disconnect the test harness Q from connector (AB37). 3) Remove the console front panel and disconnect the connector (AB9). 4) Disconnect the connectors (AB6, AB17, AB18) from the airbag control module, and connect the connector (1AG) in the test harness AG. NOTE: For sedan models, connect test harness AH between the connectors (AB6, AB17, AB18) and (1AG). 5) Measure the resistance between connector (3AG) in the test harness AG and chassis ground. ***Connector & terminal*** ***(3AG) No. 2 — Chassis ground:*** ***(3AG) No. 4 — Chassis ground:***	Is the resistance 1 MΩ or more?	Go to step **5**.	Replace the airbag main harness along with body harness.
5	**CHECK AIRBAG CONTROL MODULE.** 1) Connect all connectors. 2) Clear the memory. 3) Perform the Inspection Mode. 4) Read the DTC.	Is the same DTC displayed?	Replace the airbag control module. <Ref. to AB-68, Airbag Control Module.>	Go to step **6**.
6	**CHECK FOR ANY OTHER DTC ON DISPLAY.**	Is any other DTC displayed?	Check DTC using "List of Diagnostic Trouble Code (DTC)". <Ref. to AB(diag)-41, List of Diagnostic Trouble Code (DTC).>	Finish the diagnosis.

AW:DTC 72 PASSENGER'S AIRBAG FAILURE

NOTE:
Be sure to properly identify the Airbag system type prior to performing any diagnostics.

1. TYPE A

DTC DETECTING CONDITION:

- Airbag main harness circuit is open, shorted or shorted to ground.
- Airbag module harness (Passenger's side) circuit is open, shorted or shorted to ground.
- Passenger's airbag module is faulty.
- Airbag control module is faulty.

CAUTION:
Before performing diagnosis, refer to "CAUTION" in "General Description". <Ref. to AB(diag)-5, CAUTION, General Description.>

NOTE:
Prior to starting work, prepare two AIRBAG RESISTORs (98299PA040).
WIRING DIAGRAM:

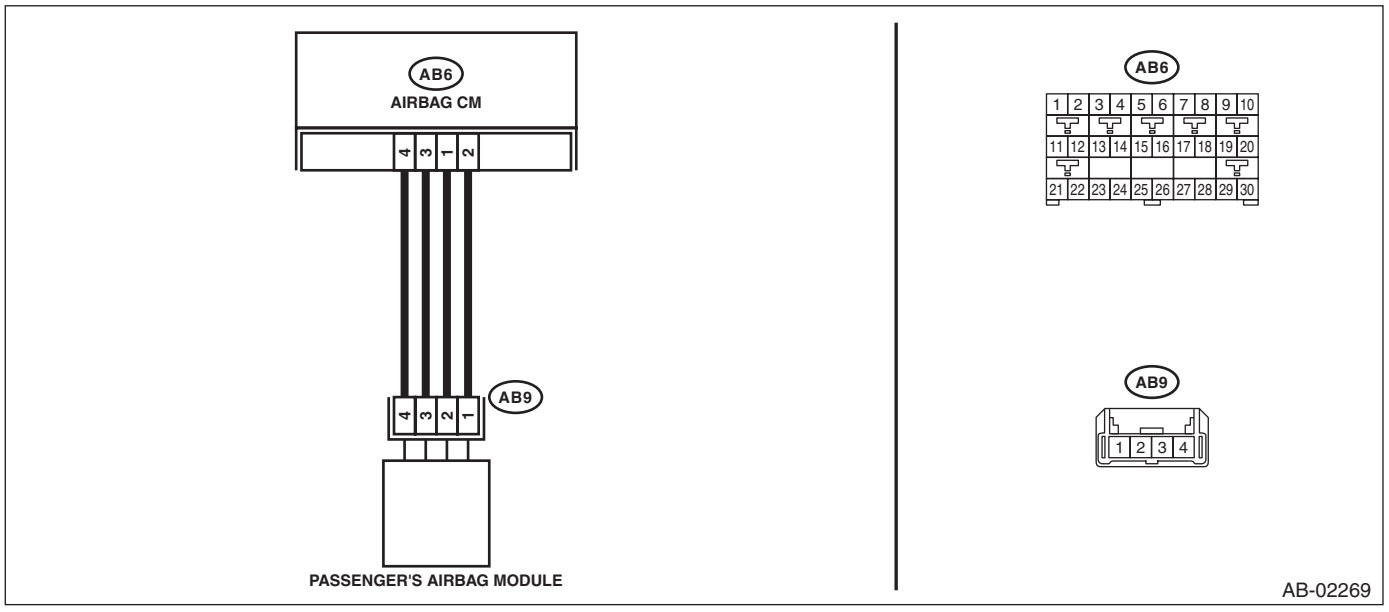

	Step	Check	Yes	No
1	**CHECK POOR CONTACT OF CONNECTORS.** Check for poor contact of the connectors between the airbag control module and the passenger's airbag module.	Is there poor contact?	Replace the airbag main harness along with body harness.	Go to step **2**.
2	**CHECK PASSENGER'S AIRBAG MODULE.** 1) Turn the ignition switch to OFF, disconnect the battery ground cable, and wait for 60 seconds or more. 2) Remove the console front panel and disconnect the connectors (AB10) from (AB9). 3) Connect the connector (1P) in the test harness P to connector (AB9). 4) Connect the airbag resistor to the connectors (2P) and (3P) of test harness P. 5) Connect the battery ground terminal and turn the ignition switch to ON.	Does the airbag warning light illuminate for six seconds and go off?	Replace the passenger's airbag module. <Ref. to AB-37, Passenger's Airbag Module.>	Go to step **3**.

	Step	Check	Yes	No
3	**CHECK AIRBAG MAIN HARNESS (PASSENGER'S AIRBAG HARNESS).** 1) Turn the ignition switch to OFF, disconnect the battery ground cable, and wait for 60 seconds or more. 2) Disconnect the airbag resistor from the connectors (2P) and (3P) of test harness P. 3) Remove the instrument panel lower cover and disconnect the connector (AB7) from (AB2). 4) Disconnect the connectors (AB6, AB17, AB18) from the airbag control module, and connect the connector (1AG) in the test harness AG. 5) Measure the resistance between connectors (3AG) in the test harness AG, and between connector (3AG) and chassis ground. ***Connector & terminal*** ***(3AG) No. 8 — (3AG) No. 6:*** ***(3AG) No. 8 — Chassis ground:*** ***(3AG) No. 6 — Chassis ground:***	Is the resistance 1 MΩ or more?	Go to step **4**.	Replace the airbag main harness along with body harness.
4	**CHECK AIRBAG MAIN HARNESS (PASSENGER'S AIRBAG HARNESS).** Measure the resistance between connector (3AG) of test harness AG and connector (3P) of test harness P. ***Connector & terminal*** ***(3AG) No. 6 — (3P) No. 4:*** ***(3AG) No. 8 — (3P) No. 3:***	Is the resistance less than 10 Ω?	Go to step **5**.	Replace the airbag main harness along with body harness.
5	**CHECK AIRBAG CONTROL MODULE.** 1) Connect all connectors. 2) Clear the memory. 3) Perform the Inspection Mode. 4) Read the DTC.	Is the same DTC displayed?	Replace the airbag control module. <Ref. to AB-68, Airbag Control Module.>	Go to step **6**.
6	**CHECK FOR ANY OTHER DTC ON DISPLAY.**	Is any other DTC displayed?	Check DTC using "List of Diagnostic Trouble Code (DTC)". <Ref. to AB(diag)-41, List of Diagnostic Trouble Code (DTC).>	Finish the diagnosis.

2. TYPE B

DTC DETECTING CONDITION:

- Airbag main harness circuit is shorted to ground.
- Airbag module harness (passenger's side) circuit is shorted to ground.
- Passenger's airbag module is faulty.
- Airbag control module is faulty.

CAUTION:
Before performing diagnosis, refer to "CAUTION" in "General Description". <Ref. to AB(diag)-5, CAUTION, General Description.>

NOTE:
Prior to starting work, prepare two AIRBAG RESISTORs (98299PA040).

WIRING DIAGRAM:

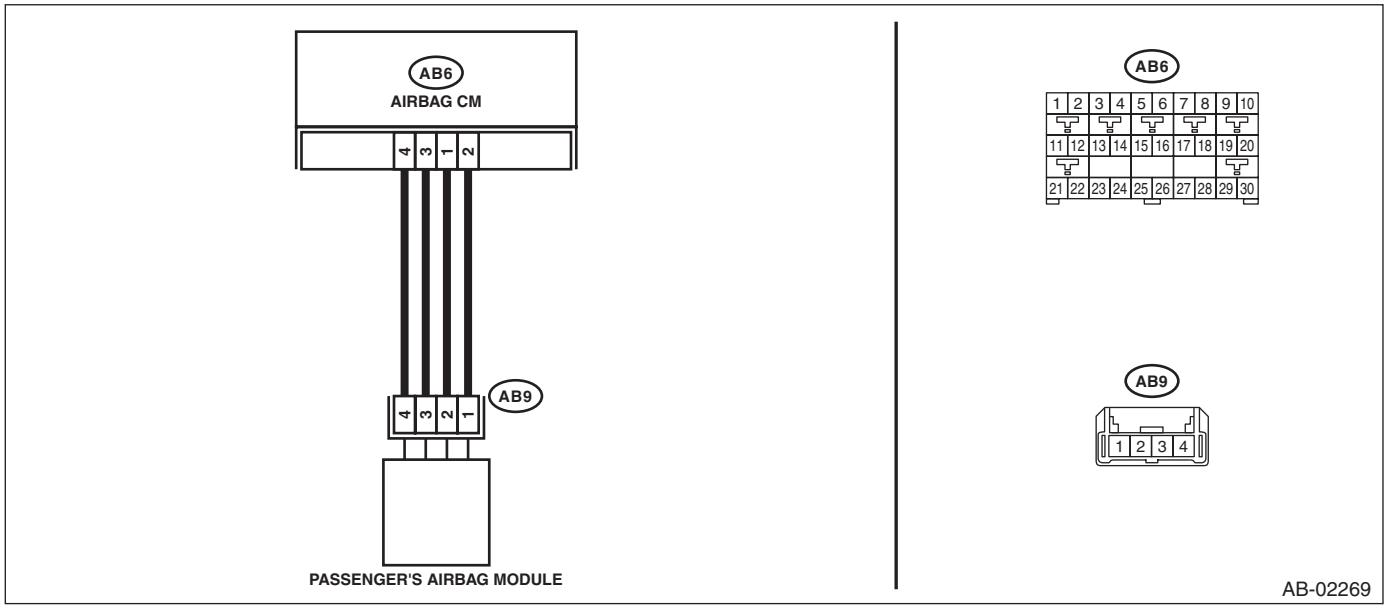

	Step	Check	Yes	No
1	**CHECK POOR CONTACT OF CONNECTORS.** Check for poor contact of the connectors between the airbag control module and the passenger's airbag module.	Is there poor contact?	Replace the airbag harness.	Go to step **2**.
2	**CHECK PASSENGER'S AIRBAG MODULE.** 1) Turn the ignition switch to OFF, disconnect the battery ground cable, and wait for 60 seconds or more. 2) Remove the console front panel and disconnect the connector (AB9). 3) Connect the connector (1P) in the test harness P to connector (AB9). 4) Connect the airbag resistor to the connectors (2P) and (3P) of test harness P. 5) Connect the battery ground terminal and turn the ignition switch to ON.	Does the airbag warning light illuminate for six seconds and go off?	Replace the passenger's airbag module. <Ref. to AB-37, Passenger's Airbag Module.>	Go to step **3**.

	Step	Check	Yes	No
3	**CHECK AIRBAG MAIN HARNESS (PASSENGER'S AIRBAG HARNESS).** 1) Turn the ignition switch to OFF, disconnect the battery ground cable, and wait for 60 seconds or more. 2) Disconnect the airbag resistor from the connectors (2P) and (3P) of test harness P. 3) Remove the instrument panel lower cover and column cover, and disconnect the connector (AB7) from (AB2). 4) Disconnect the connectors (AB6, AB17, AB18) from the airbag control module, and connect the connector (1AG) in the test harness AG. NOTE: For sedan models, connect test harness AH between the connectors (AB6, AB17, AB18) and (1AG). 5) Measure the resistance between connector (3AG) in the test harness AG and chassis ground. ***Connector & terminal*** ***(3AG) No. 8 — Chassis ground:*** ***(3AG) No. 6 — Chassis ground:***	Is the resistance 1 MΩ or more?	Go to step **4**.	Replace the airbag main harness along with body harness.
4	**CHECK AIRBAG CONTROL MODULE.** 1) Connect all connectors. 2) Clear the memory. 3) Perform the Inspection Mode. 4) Read the DTC.	Is the same DTC displayed?	Replace the airbag control module. <Ref. to AB-68, Airbag Control Module.>	Go to step **5**.
5	**CHECK FOR ANY OTHER DTC ON DISPLAY.**	Is any other DTC displayed?	Check DTC using "List of Diagnostic Trouble Code (DTC)". <Ref. to AB(diag)-41, List of Diagnostic Trouble Code (DTC).>	Finish the diagnosis.

AX:DTC 75 DRIVER'S AIRBAG FAILURE

DTC DETECTING CONDITION:

- Airbag main harness circuit is shorted to power supply.
- Airbag module harness (driver's side) circuit is shorted to power supply.
- Roll connector is shorted to power supply.
- Driver's airbag module is faulty.
- Airbag control module is faulty.

CAUTION:

Before performing diagnosis, refer to "CAUTION" in "General Description". <Ref. to AB(diag)-5, CAUTION, General Description.>

NOTE:

Prior to starting work, prepare two AIRBAG RESISTORs (98299PA040).

WIRING DIAGRAM:

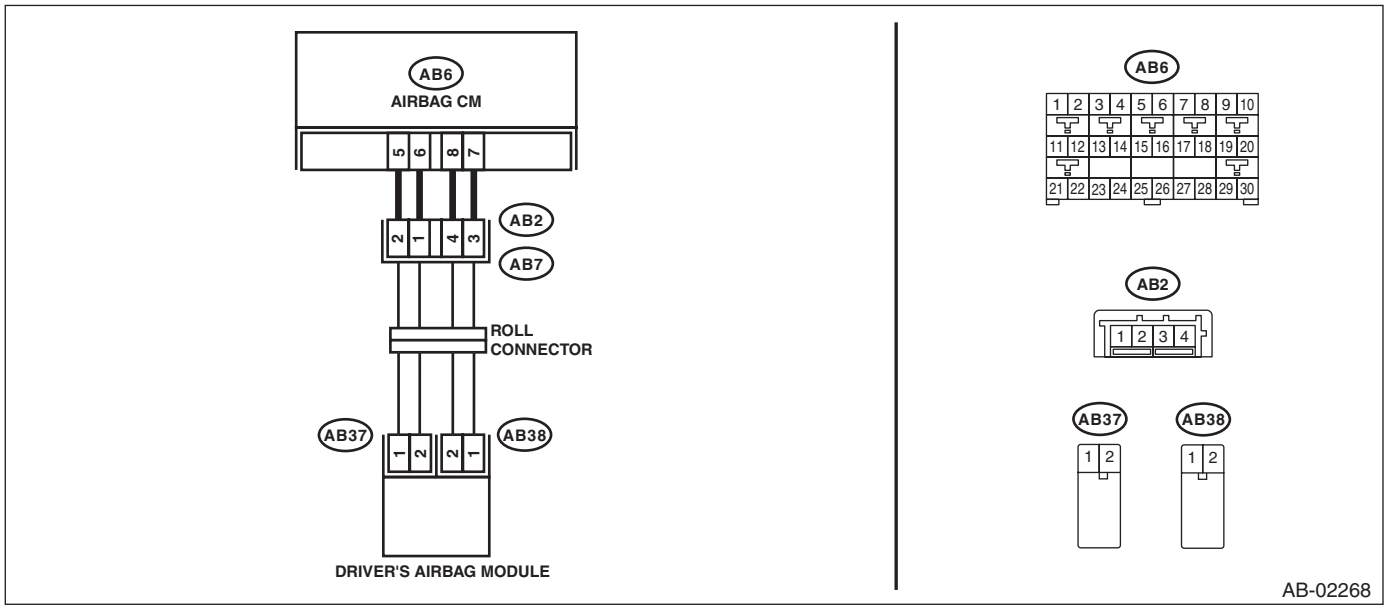

Step		Check	Yes	No
1	**CHECK POOR CONTACT OF CONNECTORS.** Check for poor contact of the connectors between the airbag control module and the driver's airbag module.	Is there poor contact?	Replace the airbag harness.	Go to step **2**.
2	**CHECK DRIVER'S AIRBAG MODULE.** 1) Turn the ignition switch to OFF, disconnect the battery ground cable, and wait for 60 seconds or more. 2) Remove the driver's airbag module. 3) Connect the connector (1N) in the test harness N to the connector (AB38). 4) Connect the airbag resistor to the connector (2N) of test harness N. 5) Connect the connector (1Q) in the test harness Q to connector (AB37). 6) Connect the airbag resistor to the connector (2Q) in the test harness Q. 7) Connect the battery ground terminal and turn the ignition switch to ON.	Does the airbag warning light illuminate for six seconds and go off?	Replace the driver's airbag module. <Ref. to AB-35, Driver's Airbag Module.>	Go to step **3**.

	Step	Check	Yes	No
3	**CHECK ROLL CONNECTOR.** 1) Turn the ignition switch to OFF, disconnect the battery ground cable, and wait for 60 seconds or more. 2) Remove the instrument panel lower cover and column cover, and disconnect the connector (AB7) from (AB2). 3) Disconnect the airbag resistor from the connector (2N) in test harness N and from the connector (2Q) in test harness Q. 4) Measure the voltage between connector (2N) in the test harness N and chassis ground. ***Connector & terminal*** ***(2N) No. 1 (+) — Chassis ground (–):*** ***(2N) No. 2 (+) — Chassis ground (–):***	Is the voltage less than 1 V?	Go to step **4**.	Replace the roll connector. <Ref. to AB-96, Roll Connector.>
4	**CHECK AIRBAG MAIN HARNESS (DRIVER'S AIRBAG HARNESS).** 1) Disconnect the test harness N from connector (AB38). 2) Disconnect the test harness Q from connector (AB37). 3) Remove the console front panel and disconnect the connector (AB9). 4) Disconnect the connectors (AB6, AB17, AB18) from the airbag control module, and connect the connector (1AG) in the test harness AG. NOTE: For type B (sedan models), connect test harness AH between the connectors (AB6, AB17, AB18) and (1AG). 5) Measure the voltage between connector (3AG) in the test harness AG and chassis ground. ***Connector & terminal*** ***(3AG) No. 2 (+) — Chassis ground (–):*** ***(3AG) No. 4 (+) — Chassis ground (–):***	Is the voltage less than 1 V?	Go to step **5**.	Replace the airbag main harness along with body harness.
5	**CHECK AIRBAG CONTROL MODULE.** 1) Connect all connectors. 2) Clear the memory. 3) Perform the Inspection Mode. 4) Read the DTC.	Is the same DTC displayed?	Replace the airbag control module. <Ref. to AB-68, Airbag Control Module.>	Go to step **6**.
6	**CHECK FOR ANY OTHER DTC ON DISPLAY.**	Is any other DTC displayed?	Check DTC using "List of Diagnostic Trouble Code (DTC)". <Ref. to AB(diag)-41, List of Diagnostic Trouble Code (DTC).>	Finish the diagnosis.

AY:DTC 76 PASSENGER'S AIRBAG FAILURE

DTC DETECTING CONDITION:

- Airbag main harness circuit is shorted to power supply.
- Airbag module harness (passenger's side) circuit is shorted to power supply.
- Passenger's airbag module is faulty.
- Airbag control module is faulty.

CAUTION:

Before performing diagnosis, refer to "CAUTION" in "General Description". <Ref. to AB(diag)-5, CAUTION, General Description.>

NOTE:

Prior to starting work, prepare two AIRBAG RESISTORs (98299PA040).

WIRING DIAGRAM:

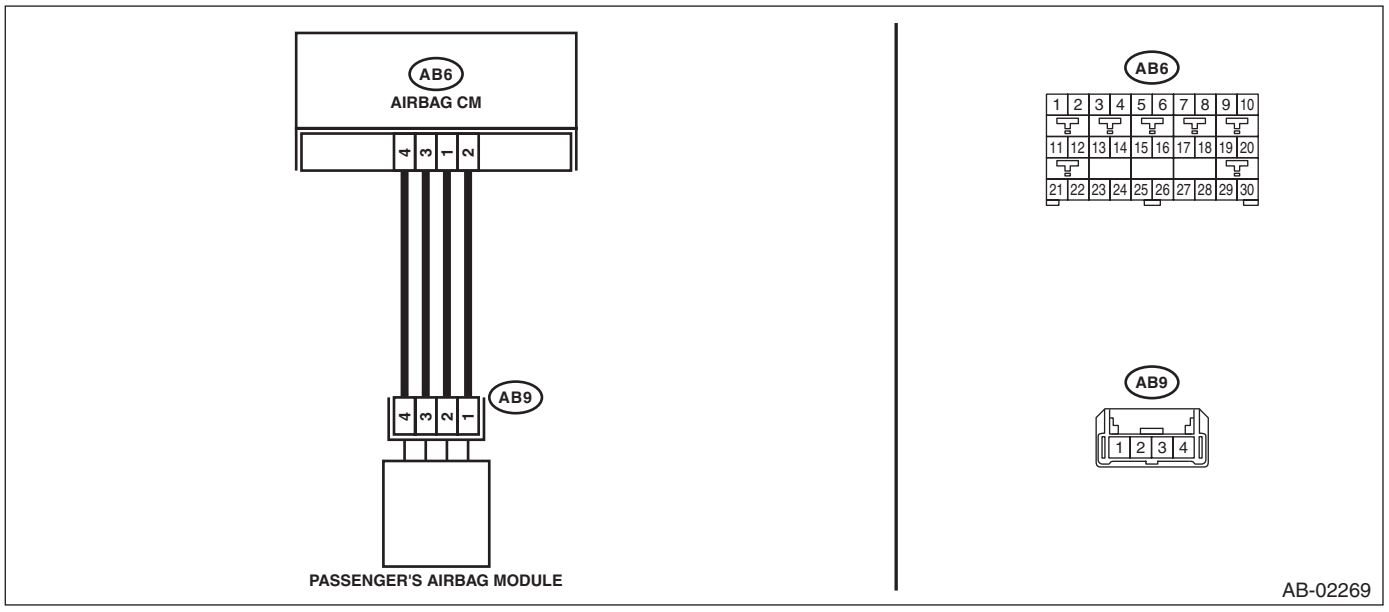

	Step	Check	Yes	No
1	**CHECK POOR CONTACT OF CONNECTORS.** Check for poor contact of the connectors between the airbag control module and the passenger's airbag module.	Is there poor contact?	Replace the airbag harness along with chassis harness.	Go to step **2**.
2	**CHECK PASSENGER'S AIRBAG MODULE.** 1) Turn the ignition switch to OFF, disconnect the battery ground cable, and wait for 60 seconds or more. 2) Remove the console front panel and disconnect the connector (AB9). 3) Connect the connector (1P) in the test harness P to connector (AB9). 4) Connect the airbag resistor to the connectors (2P) and (3P) of test harness P. 5) Connect the battery ground terminal and turn the ignition switch to ON.	Does the airbag warning light illuminate for six seconds and go off?	Replace the passenger's airbag module. <Ref. to AB-37, Passenger's Airbag Module.>	Go to step **3**.

	Step	Check	Yes	No
3	**CHECK AIRBAG MAIN HARNESS (PASSENGER'S AIRBAG HARNESS).** 1) Turn the ignition switch to OFF, disconnect the battery ground cable, and wait for 60 seconds or more. 2) Disconnect the airbag resistor from the connectors (2P) and (3P) of test harness P. 3) Remove the instrument panel lower cover and column cover, and disconnect the connector (AB7) from (AB2). 4) Disconnect the connectors (AB6, AB17, AB18) from the airbag control module, and connect the connector (1AG) in the test harness AG. NOTE: For type B (sedan models), connect test harness AH between the connectors (AB6, AB17, AB18) and (1AG). 5) Measure the voltage between connector (3AG) in the test harness AG and chassis ground. ***Connector & terminal*** ***(3AG) No. 8 (+) — Chassis ground (–):*** ***(3AG) No. 6 (+) — Chassis ground (–):***	Is the voltage less than 1 V?	Go to step **4**.	Replace the airbag main harness along with body harness.
4	**CHECK AIRBAG CONTROL MODULE.** 1) Connect all connectors. 2) Clear the memory. 3) Perform the Inspection Mode. 4) Read the DTC.	Is the same DTC displayed?	Replace the airbag control module. <Ref. to AB-68, Airbag Control Module.>	Go to step **5**.
5	**CHECK FOR ANY OTHER DTC ON DISPLAY.**	Is any other DTC displayed?	Check DTC using "List of Diagnostic Trouble Code (DTC)". <Ref. to AB(diag)-41, List of Diagnostic Trouble Code (DTC).>	Finish the diagnosis.

AZ:DTC 7A DRIVER'S AIRBAG FAILURE

DTC DETECTING CONDITION:

- Airbag main harness circuit is shorted.
- Airbag module harness (driver's side) circuit is shorted.
- Roll connector circuit is shorted.
- Driver's airbag module is faulty.
- Airbag control module is faulty.

CAUTION:

Before performing diagnosis, refer to "CAUTION" in "General Description". <Ref. to AB(diag)-5, CAUTION, General Description.>

NOTE:

Prior to starting work, prepare two AIRBAG RESISTORs (98299PA040).

WIRING DIAGRAM:

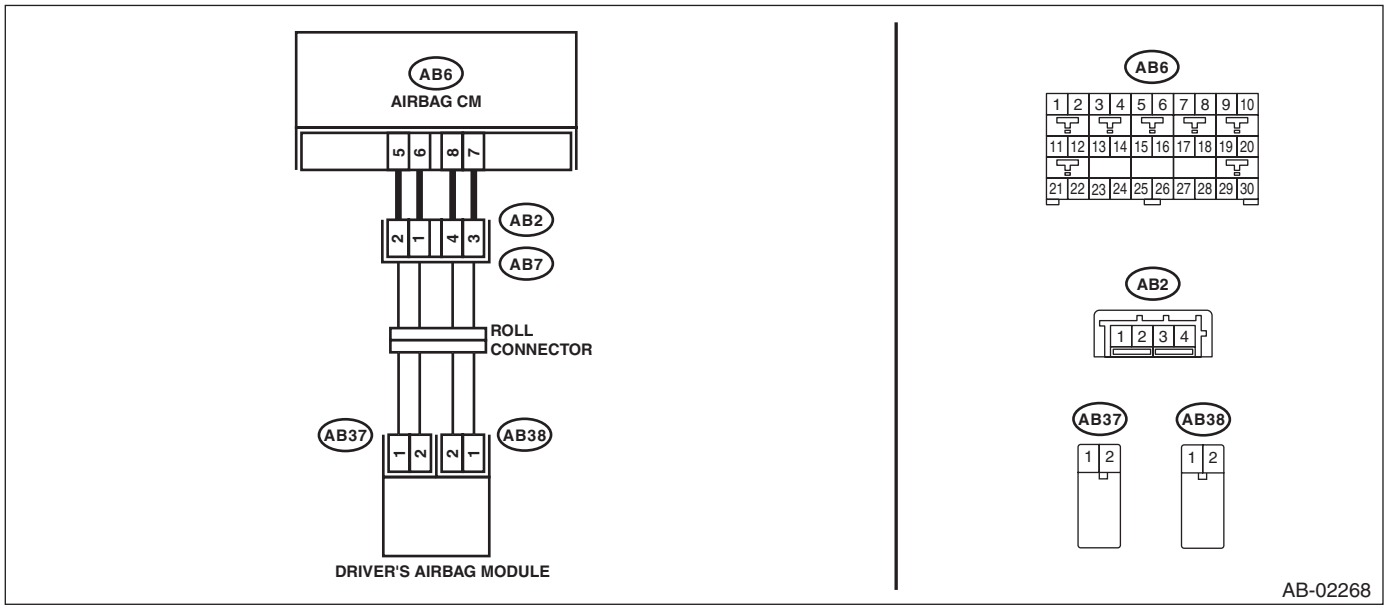

Step		Check	Yes	No
1	**CHECK POOR CONTACT OF CONNECTORS.** Check for poor contact of the connectors between the airbag control module and the driver's airbag module.	Is there poor contact?	Replace the airbag harness.	Go to step **2**.
2	**CHECK DRIVER'S AIRBAG MODULE.** 1) Turn the ignition switch to OFF, disconnect the battery ground cable, and wait for 60 seconds or more. 2) Remove the driver's airbag module. 3) Connect the connector (1N) in the test harness N to the connector (AB38). 4) Connect the airbag resistor to the connector (2N) of test harness N. 5) Connect the connector (1Q) in the test harness Q to connector (AB37). 6) Connect the airbag resistor to the connector (2Q) in the test harness Q. 7) Connect the battery ground terminal and turn the ignition switch to ON.	Does the airbag warning light illuminate for six seconds and go off?	Replace the driver's airbag module. <Ref. to AB-35, Driver's Airbag Module.>	Go to step **3**.

	Step	Check	Yes	No
3	**CHECK ROLL CONNECTOR AND AIRBAG MAIN HARNESS (DRIVER'S AIRBAG HARNESS).** 1) Turn the ignition switch to OFF, disconnect the battery ground cable, and wait for 60 seconds or more. 2) Remove the console front panel and disconnect the connector (AB9). 3) Disconnect the airbag resistor from the connector (2N) in test harness N and from the connector (2Q) in test harness Q. 4) Disconnect the connectors (AB6, AB17, AB18) from the airbag control module, and connect the connector (1AG) in the test harness AG. NOTE: For sedan models, connect test harness AH between the connectors (AB6, AB17, AB18) and (1AG). 5) Measure the resistance between connector (2N) terminals in test harness N. ***Connector & terminal (2N) No. 1 — (2N) No. 2:***	Is the resistance 1 MΩ or more?	Go to step **5**.	Go to step **4**.
4	**CHECK AIRBAG MAIN HARNESS (DRIVER'S AIRBAG HARNESS).** 1) Remove the instrument panel lower cover and column cover, and disconnect the connector (AB7) from (AB2). 2) Disconnect the test harness Q from connector (AB37). 3) Measure the resistance between connector (3AG) terminals in test harness AG. ***Connector & terminal (3AG) No. 2 — (3AG) No. 4:***	Is the resistance 1 MΩ or more?	Replace the roll connector. <Ref. to AB-96, Roll Connector.>	Replace the airbag main harness along with body harness.
5	**CHECK AIRBAG CONTROL MODULE.** 1) Connect all connectors. 2) Clear the memory. 3) Perform the Inspection Mode. 4) Read the DTC.	Is the same DTC displayed?	Replace the airbag control module. <Ref. to AB-68, Airbag Control Module.>	Go to step **6**.
6	**CHECK FOR ANY OTHER DTC ON DISPLAY.**	Is any other DTC displayed?	Check DTC using "List of Diagnostic Trouble Code (DTC)". <Ref. to AB(diag)-41, List of Diagnostic Trouble Code (DTC).>	Finish the diagnosis.

BA:DTC 7B PASSENGER'S AIRBAG FAILURE

DTC DETECTING CONDITION:

- Airbag main harness circuit is shorted.
- Airbag module harness (passenger's side) circuit is shorted.
- Passenger's airbag module is faulty.
- Airbag control module is faulty.

CAUTION:

Before performing diagnosis, refer to "CAUTION" in "General Description". <Ref. to AB(diag)-5, CAUTION, General Description.>

NOTE:

Prior to starting work, prepare two AIRBAG RESISTORs (98299PA040).

WIRING DIAGRAM:

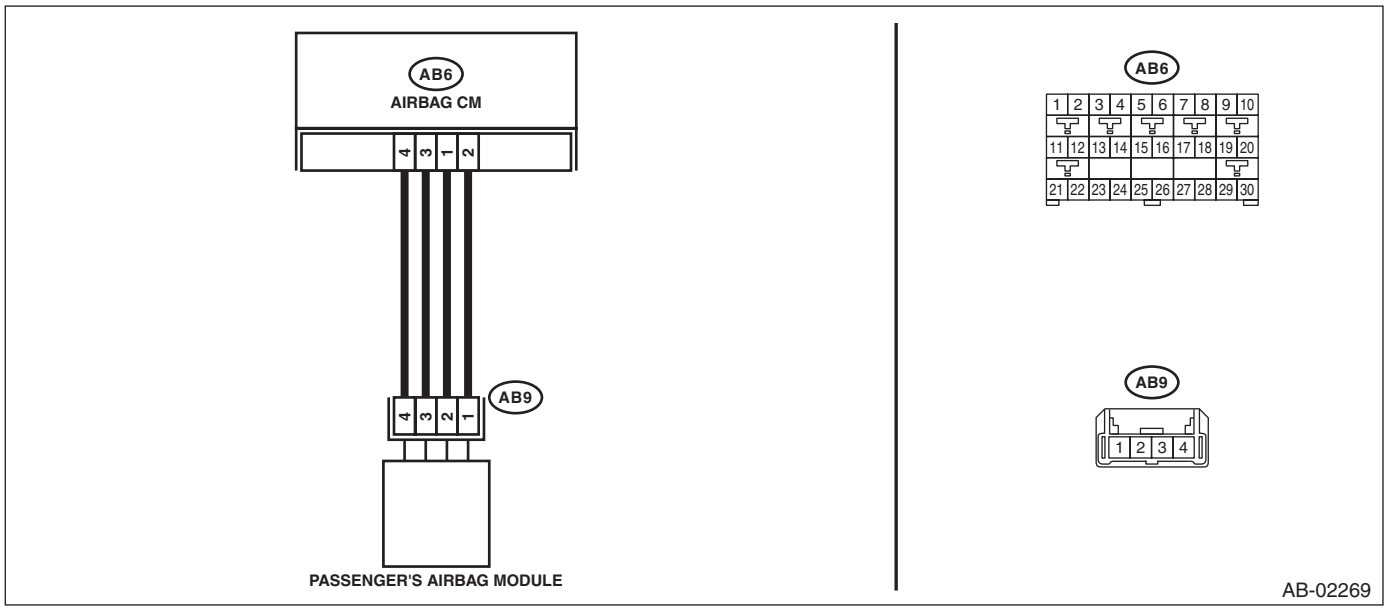

	Step	Check	Yes	No
1	**CHECK POOR CONTACT OF CONNECTORS.** Check for poor contact of the connectors between the airbag control module and the passenger's airbag module.	Is there poor contact?	Replace the airbag harness.	Go to step **2**.
2	**CHECK PASSENGER'S AIRBAG MODULE.** 1) Turn the ignition switch to OFF, disconnect the battery ground cable, and wait for 60 seconds or more. 2) Remove the console front panel and disconnect the connector (AB9). 3) Connect the connector (1P) in the test harness P to connector (AB9). 4) Connect the airbag resistor to the connectors (2P) and (3P) of test harness P. 5) Connect the battery ground terminal and turn the ignition switch to ON.	Does the airbag warning light illuminate for six seconds and go off?	Replace the passenger's airbag module. <Ref. to AB-37, Passenger's Airbag Module.>	Go to step **3**.

	Step	Check	Yes	No
3	**CHECK AIRBAG MAIN HARNESS (PASSENGER'S AIRBAG HARNESS).** 1) Turn the ignition switch to OFF, disconnect the battery ground cable, and wait for 60 seconds or more. 2) Disconnect the airbag resistor from the connectors (2P) and (3P) of test harness P. 3) Remove the instrument panel lower cover and column cover, and disconnect the connector (AB7) from (AB2). 4) Disconnect the connectors (AB6, AB17, AB18) from the airbag control module, and connect the connector (1AG) in the test harness AG. NOTE: For sedan models, connect test harness AH between the connectors (AB6, AB17, AB18) and (1AG). 5) Measure the resistance between connector (3AG) terminals in test harness AG. ***Connector & terminal (3AG) No. 6 — (3AG) No. 8:***	Is the resistance 1 MΩ or more?	Go to step **4**.	Replace the airbag main harness along with body harness.
4	**CHECK AIRBAG CONTROL MODULE.** 1) Connect all connectors. 2) Clear the memory. 3) Perform the Inspection Mode. 4) Read the DTC.	Is the same DTC displayed?	Replace the airbag control module. <Ref. to AB-68, Airbag Control Module.>	Go to step **5**.
5	**CHECK FOR ANY OTHER DTC ON DISPLAY.**	Is any other DTC displayed?	Check DTC using "List of Diagnostic Trouble Code (DTC)". <Ref. to AB(diag)-41, List of Diagnostic Trouble Code (DTC).>	Finish the diagnosis.

BB:DTC 7D DRIVER'S AIRBAG FAILURE

DTC DETECTING CONDITION:

- Airbag main harness circuit is open.
- Airbag module harness (driver's side) circuit is open.
- Roll connector circuit is open.
- Driver's airbag module is faulty.
- Airbag control module is faulty.

CAUTION:

Before performing diagnosis, refer to "CAUTION" in "General Description". <Ref. to AB(diag)-5, CAUTION, General Description.>

NOTE:

Prior to starting work, prepare two AIRBAG RESISTORs (98299PA040).

WIRING DIAGRAM:

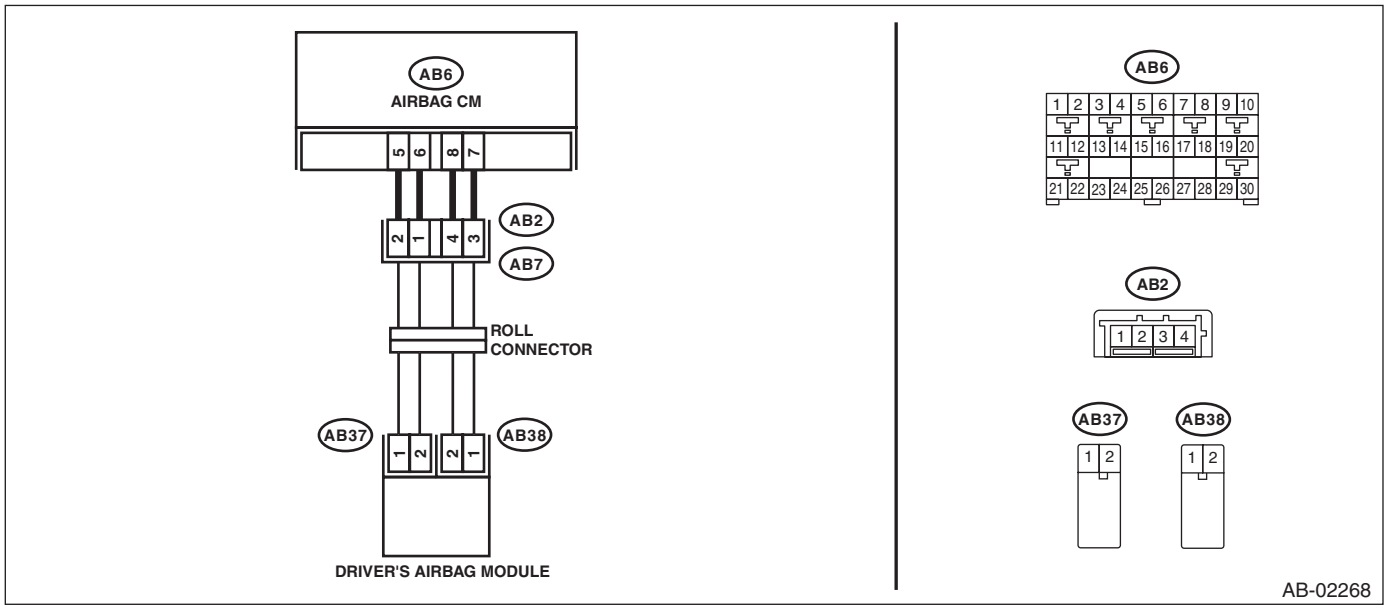

Step		Check	Yes	No
1	**CHECK POOR CONTACT OF CONNECTORS.** Check for poor contact of the connectors between the airbag control module and the driver's airbag module.	Is there poor contact?	Replace the airbag harness.	Go to step **2**.
2	**CHECK DRIVER'S AIRBAG MODULE.** 1) Turn the ignition switch to OFF, disconnect the battery ground cable, and wait for 60 seconds or more. 2) Remove the driver's airbag module. 3) Connect the connector (1N) in the test harness N to the connector (AB38). 4) Connect the airbag resistor to the connector (2N) of test harness N. 5) Connect the connector (1Q) in the test harness Q to connector (AB37). 6) Connect the airbag resistor to the connector (2Q) in the test harness Q. 7) Connect the battery ground terminal and turn the ignition switch to ON.	Does the airbag warning light illuminate for six seconds and go off?	Replace the driver's airbag module. <Ref. to AB-35, Driver's Airbag Module.>	Go to step **3**.

	Step	Check	Yes	No
3	**CHECK ROLL CONNECTOR AND AIRBAG MAIN HARNESS (DRIVER'S AIRBAG HARNESS).** 1) Turn the ignition switch to OFF, disconnect the battery ground cable, and wait for 60 seconds or more. 2) Remove the console front panel and disconnect the connector (AB9). 3) Disconnect the airbag resistor from the connector (2N) in test harness N. 4) Disconnect the airbag resistor from the connector (2Q) of test harness Q. 5) Disconnect the connectors (AB6, AB17, AB18) from airbag control module. 6) Measure the resistance between connector (2N) terminals in test harness N. ***Connector & terminal*** ***(2N) No. 1 — (2N) No. 2:***	Is the resistance less than 10 Ω?	Go to step **5**.	Go to step **4**.
4	**CHECK ROLL CONNECTOR.** 1) Remove the instrument panel lower cover and column cover, and disconnect the connector (AB7) from (AB2). 2) Measure the resistance between connector (2N) terminals in test harness N. ***Connector & terminal*** ***(2N) No. 1 — (2N) No. 2:***	Is the resistance less than 10 Ω?	Replace the airbag main harness along with body harness.	Replace the roll connector. <Ref. to AB-96, Roll Connector.>
5	**CHECK AIRBAG CONTROL MODULE.** 1) Connect all connectors. 2) Clear the memory. 3) Perform the Inspection Mode. 4) Read the DTC.	Is the same DTC displayed?	Replace the airbag control module. <Ref. to AB-68, Airbag Control Module.>	Go to step **6**.
6	**CHECK FOR ANY OTHER DTC ON DISPLAY.**	Is any other DTC displayed?	Check DTC using "List of Diagnostic Trouble Code (DTC)". <Ref. to AB(diag)-41, List of Diagnostic Trouble Code (DTC).>	Finish the diagnosis.

BC:DTC 7E PASSENGER'S AIRBAG FAILURE

DTC DETECTING CONDITION:

- Airbag main harness circuit is open.
- Airbag module harness (passenger's side) circuit is open.
- Passenger's airbag module is faulty.
- Airbag control module is faulty.

CAUTION:

Before performing diagnosis, refer to "CAUTION" in "General Description". <Ref. to AB(diag)-5, CAUTION, General Description.>

NOTE:

Prior to starting work, prepare two AIRBAG RESISTORs (98299PA040).

WIRING DIAGRAM:

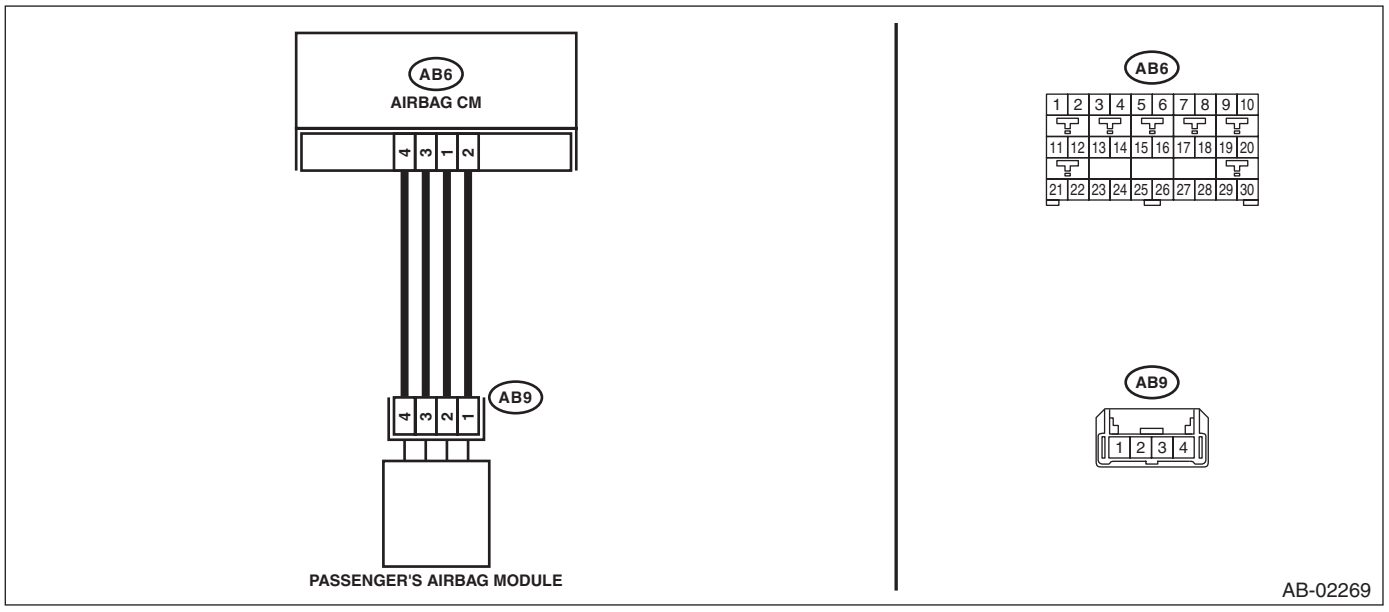

	Step	Check	Yes	No
1	**CHECK POOR CONTACT OF CONNECTORS.** Check for poor contact of the connectors between the airbag control module and the passenger's airbag module.	Is there poor contact?	Replace the airbag harness.	Go to step **2**.
2	**CHECK PASSENGER'S AIRBAG MODULE.** 1) Turn the ignition switch to OFF, disconnect the battery ground cable, and wait for 60 seconds or more. 2) Remove the console front panel and disconnect the connector (AB9). 3) Connect the connector (1P) in the test harness P to connector (AB9). 4) Connect the airbag resistor to the connectors (2P) and (3P) of test harness P. 5) Connect the battery ground terminal and turn the ignition switch to ON.	Does the airbag warning light illuminate for six seconds and go off?	Replace the passenger's airbag module. <Ref. to AB-37, Passenger's Airbag Module.>	Go to step **3**.

	Step	Check	Yes	No
3	**CHECK AIRBAG MAIN HARNESS (PASSENGER'S AIRBAG HARNESS).** 1) Turn the ignition switch to OFF, disconnect the battery ground cable, and wait for 60 seconds or more. 2) Disconnect the airbag resistor from the connectors (2P) and (3P) of test harness P. 3) Remove the instrument panel lower cover and column cover, and disconnect the connector (AB7) from (AB2). 4) Disconnect the connectors (AB6, AB17, AB18) from the airbag control module, and connect the connector (1AG) in the test harness AG. NOTE: For sedan models, connect test harness AH between the connectors (AB6, AB17, AB18) and (1AG). 5) Measure the resistance between connector (3AG) of test harness AG and connector (3P) of test harness P. ***Connector & terminal*** ***(3AG) No. 6 — (3P) No. 4:*** ***(3AG) No. 8 — (3P) No. 3:***	Is the resistance less than 10 Ω?	Go to step **4**.	Replace the airbag main harness along with body harness.
4	**CHECK AIRBAG CONTROL MODULE.** 1) Connect all connectors. 2) Clear the memory. 3) Perform the Inspection Mode. 4) Read the DTC.	Is the same DTC displayed?	Replace the airbag control module. <Ref. to AB-68, Airbag Control Module.>	Go to step **5**.
5	**CHECK FOR ANY OTHER DTC ON DISPLAY.**	Is any other DTC displayed?	Check DTC using "List of Diagnostic Trouble Code (DTC)". <Ref. to AB(diag)-41, List of Diagnostic Trouble Code (DTC).>	Finish the diagnosis.

BD:DTC 91 CURTAIN AIRBAG MODULE RH FAILURE

NOTE:
Be sure to properly identify the Airbag system type prior to performing any diagnostics.

1. TYPE A

DTC DETECTING CONDITION:

- Curtain airbag harness (RH) is faulty.
- Curtain airbag module (RH) is faulty.
- Airbag control module is faulty.

CAUTION:
Before performing diagnosis, refer to "CAUTION" in "General Description". <Ref. to AB(diag)-5, CAUTION, General Description.>
WIRING DIAGRAM:

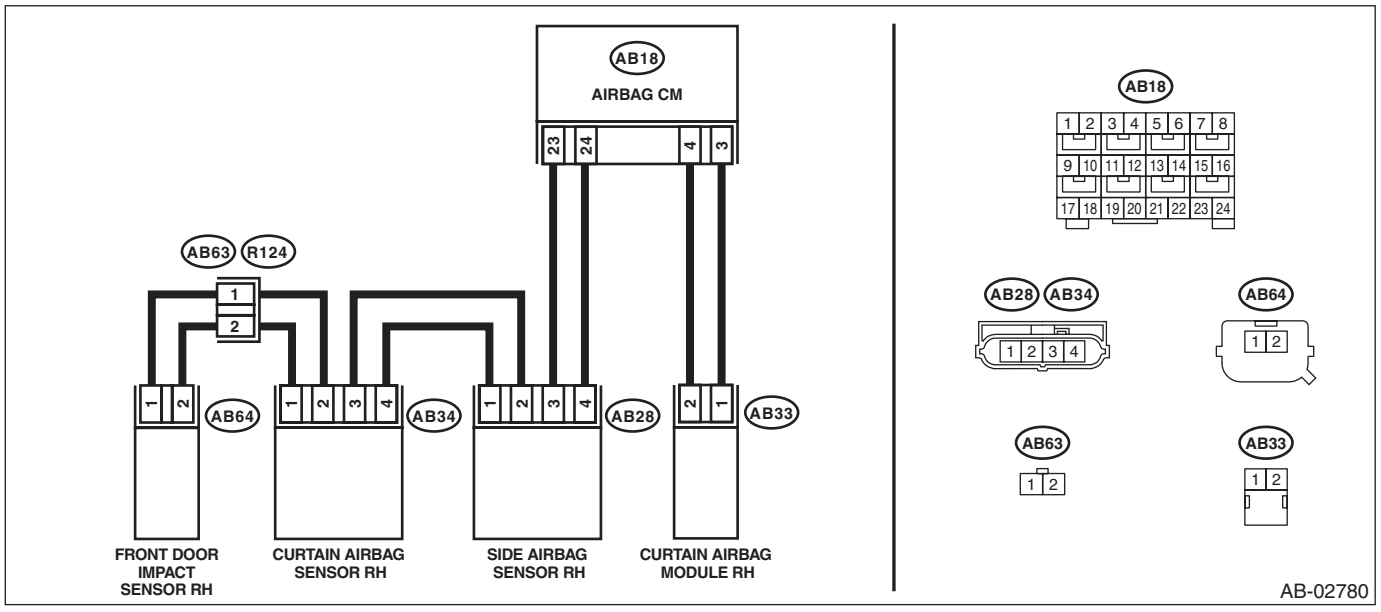

Step		Check	Yes	No
1	**CHECK POOR CONTACT OF CONNECTORS.** Check for poor contact of the connectors between the airbag control module, curtain airbag module RH and the curtain airbag sensor RH.	Is there poor contact?	Replace the airbag rear harness along with body harness.	Go to step **2**.
2	**CHECK CURTAIN AIRBAG MODULE.** 1) Turn the ignition switch to OFF, disconnect the battery ground cable, and wait for 60 seconds or more. 2) Disconnect the connector (AB33), and connect the connector (1N) in test harness N to connector (AB33). 3) Connect the airbag resistor to the connector (2N) of test harness N. 4) Connect the battery ground terminal and turn the ignition switch to ON.	Does the airbag warning light illuminate for six seconds and go off?	Replace the curtain airbag module (RH). <Ref. to AB-65, Curtain Airbag Module.>	Go to step **3**.

	Step	Check	Yes	No
3	**CHECK AIRBAG REAR HARNESS (CURTAIN AIRBAG MODULE HARNESS RH).** 1) Turn the ignition switch to OFF, disconnect the battery ground cable, and wait for 60 seconds or more. 2) Disconnect the connector (AB26) from seat belt pretensioner (RH). 3) Disconnect connector (AB24) from side airbag module (RH). 4) Disconnect the airbag resistor from test harness N. 5) Disconnect the connectors (AB6, AB17, AB18) from airbag control module. 6) Connect the connector (1AG) in the test harness AG to the connectors (AB6, AB17, AB18). 7) Measure the resistance between connector (2N) terminals in the test harness N, and between connector (2N) and chassis ground. ***Connector & terminal*** ***(2N) No. 1 — (2N) No. 2:*** ***(2N) No. 1 — Chassis ground:*** ***(2N) No. 2 — Chassis ground:***	Is the resistance 1 MΩ or more?	Go to step **4**.	Replace the airbag rear harness along with body harness.
4	**CHECK AIRBAG REAR HARNESS (CURTAIN AIRBAG MODULE HARNESS RH).** Measure the resistance between connector (6AG) in the test harness AG and connector (2N) in the test harness N. ***Connector & terminal*** ***(6AG) No. 1 — (2N) No. 1:*** ***(6AG) No. 3 — (2N) No. 2:***	Is the resistance less than 10 Ω?	Go to step **5**.	Replace the airbag rear harness along with body harness.
5	**CHECK AIRBAG CONTROL MODULE.** 1) Connect all connectors. 2) Clear the memory. 3) Perform the Inspection Mode. 4) Read the DTC.	Is the same DTC displayed?	Replace the airbag control module. <Ref. to AB-68, Airbag Control Module.>	Go to step **6**.
6	**CHECK FOR ANY OTHER DTC ON DISPLAY.**	Is any other DTC displayed?	Check DTC using "List of Diagnostic Trouble Code (DTC)". <Ref. to AB(diag)-41, List of Diagnostic Trouble Code (DTC).>	Finish the diagnosis.

2. TYPE B

DTC DETECTING CONDITION:

- Curtain airbag harness (RH) circuit is shorted to ground.
- Curtain airbag module (RH) is faulty.
- Airbag control module is faulty.

CAUTION:
Before performing diagnosis, refer to "CAUTION" in "General Description". <Ref. to AB(diag)-5, CAUTION, General Description.>
WIRING DIAGRAM:

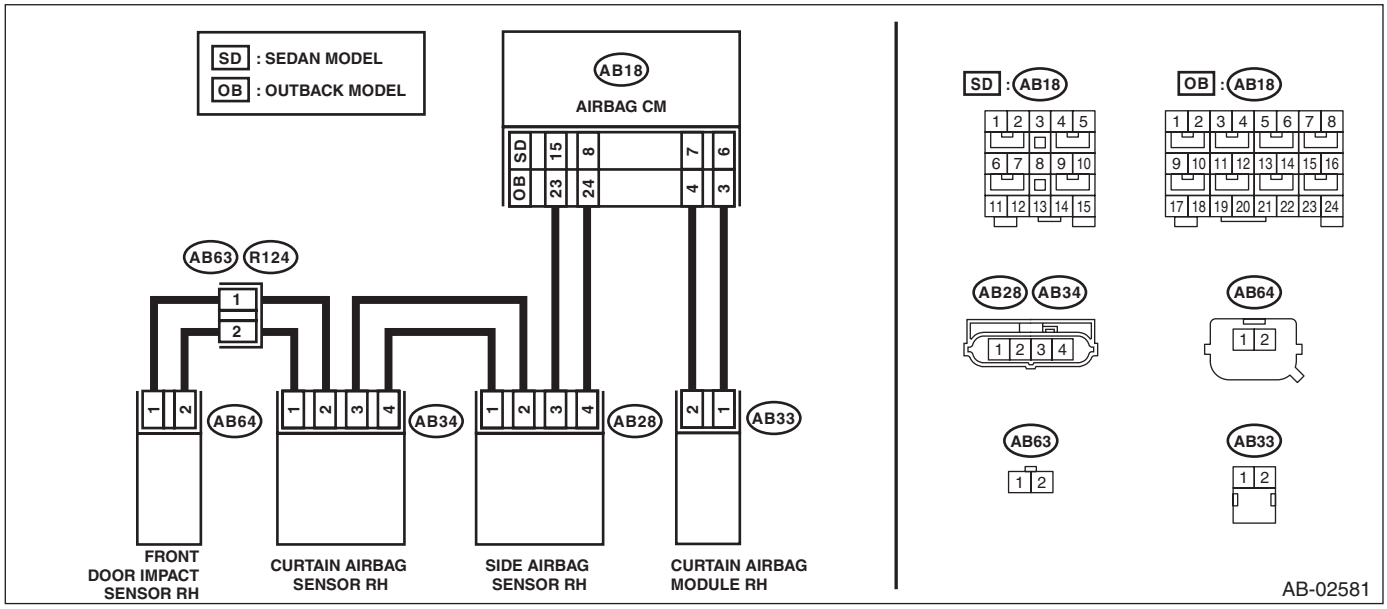

Step		Check	Yes	No
1	**CHECK POOR CONTACT OF CONNECTORS.** Check for poor contact of the connectors between the airbag control module, curtain airbag module RH and the curtain airbag sensor RH.	Is there poor contact?	Replace the airbag rear harness along with body harness.	Go to step **2**.
2	**CHECK CURTAIN AIRBAG MODULE.** 1) Turn the ignition switch to OFF, disconnect the battery ground cable, and wait for 60 seconds or more. 2) Disconnect the connector (AB33) from curtain airbag module (RH). 3) Connect the connector (1N) in the test harness N to the connector (AB33). 4) Connect the airbag resistor to the connector (2N) of test harness N. 5) Connect the battery ground terminal and turn the ignition switch to ON.	Does the airbag warning light illuminate for six seconds and go off?	Replace the curtain airbag module (RH). <Ref. to AB-65, Curtain Airbag Module.>	Go to step **3**.

	Step	Check	Yes	No
3	**CHECK AIRBAG REAR HARNESS (CURTAIN AIRBAG MODULE HARNESS RH).** 1) Turn the ignition switch to OFF, disconnect the battery ground cable, and wait for 60 seconds or more. 2) Disconnect the connector (AB26) from seat belt pretensioner (RH). 3) Disconnect connector (AB24) from side airbag module (RH). 4) Disconnect the airbag resistor from test harness N. 5) Disconnect the connectors (AB6, AB17, AB18) from airbag control module. 6) Connect the connector (1AG) in the test harness AG to the connectors (AB6, AB17, AB18). NOTE: For sedan models, connect test harness AH between the connectors (AB6, AB17, AB18) and (1AG). 7) Measure the resistance between connector (2N) in the test harness N and chassis ground. ***Connector & terminal*** ***(2N) No. 1 — Chassis ground:*** ***(2N) No. 2 — Chassis ground:***	Is the resistance 1 MΩ or more?	Go to step **4**.	Replace the airbag rear harness along with body harness.
4	**CHECK AIRBAG CONTROL MODULE.** 1) Connect all connectors. 2) Clear the memory. 3) Perform the Inspection Mode. 4) Read the DTC.	Is the same DTC displayed?	Replace the airbag control module. <Ref. to AB-68, Airbag Control Module.>	Go to step **5**.
5	**CHECK FOR ANY OTHER DTC ON DISPLAY.**	Is any other DTC displayed?	Check DTC using "List of Diagnostic Trouble Code (DTC)". <Ref. to AB(diag)-41, List of Diagnostic Trouble Code (DTC).>	Finish the diagnosis.

BE:DTC 92 CURTAIN AIRBAG MODULE LH FAILURE

NOTE:
Be sure to properly identify the Airbag system type prior to performing any diagnostics.

1. TYPE A

DTC DETECTING CONDITION:

- Curtain airbag harness (LH) is faulty.
- Curtain airbag module (LH) is faulty.
- Airbag control module is faulty.

CAUTION:
Before performing diagnosis, refer to "CAUTION" in "General Description". <Ref. to AB(diag)-5, CAUTION, General Description.>
WIRING DIAGRAM:

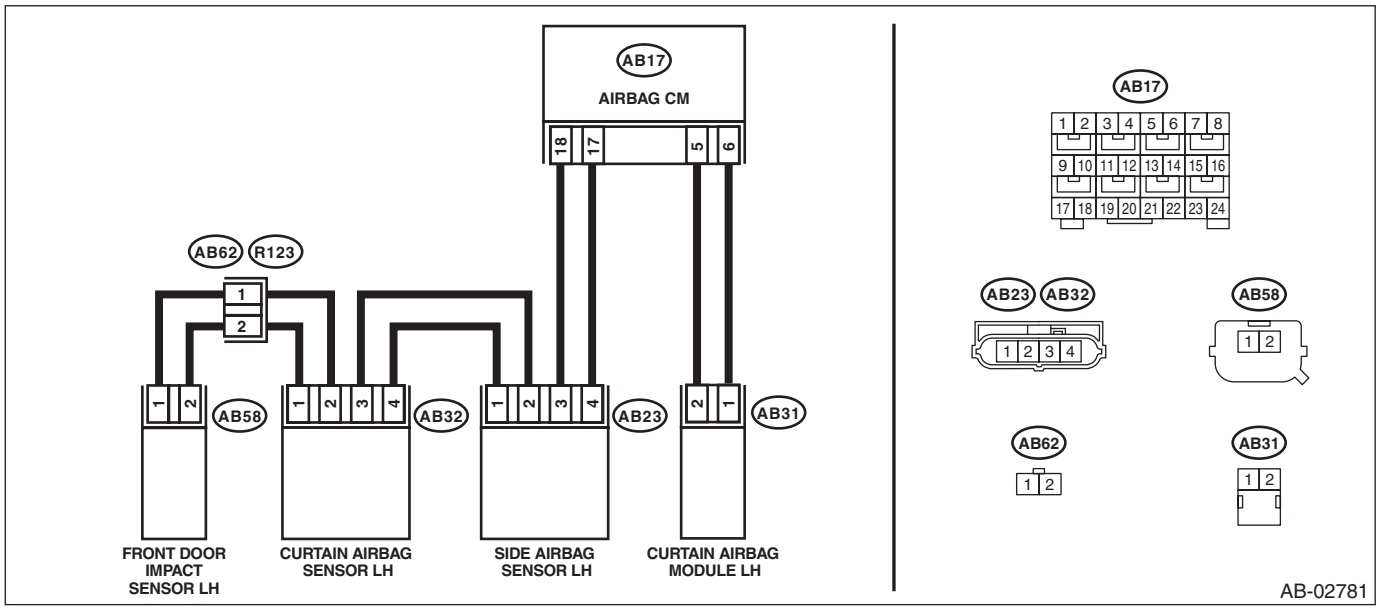

	Step	Check	Yes	No
1	**CHECK POOR CONTACT OF CONNECTORS.** Check for poor contact of the connectors between the airbag control module, curtain airbag module LH and the curtain airbag sensor LH.	Is there poor contact?	Replace the airbag rear harness along with body harness.	Go to step **2**.
2	**CHECK CURTAIN AIRBAG MODULE.** 1) Turn the ignition switch to OFF, disconnect the battery ground cable, and wait for 60 seconds or more. 2) Disconnect the connector (AB31), and connect the connector (1N) in test harness N to connector (AB31). 3) Connect the airbag resistor to the connector (2N) of test harness N. 4) Connect the battery ground terminal and turn the ignition switch to ON.	Does the airbag warning light illuminate for six seconds and go off?	Replace the curtain airbag module (LH). <Ref. to AB-65, Curtain Airbag Module.>	Go to step **3**.

	Step	Check	Yes	No
3	**CHECK AIRBAG REAR HARNESS (CURTAIN AIRBAG MODULE HARNESS LH).** 1) Turn the ignition switch to OFF, disconnect the battery ground cable, and wait for 60 seconds or more. 2) Disconnect the connector (AB21) from seat belt pretensioner (LH). 3) Disconnect connector (AB19) from side airbag module (LH). 4) Disconnect the airbag resistor from test harness N. 5) Disconnect the connectors (AB6, AB17, AB18) from airbag control module. 6) Connect the connector (1AG) in the test harness AG to the connectors (AB6, AB17, AB18). 7) Measure the resistance between connector (2N) terminals in the test harness N, and between connector (2N) and chassis ground. ***Connector & terminal*** ***(2N) No. 1 — (2N) No. 2:*** ***(2N) No. 1 — Chassis ground:*** ***(2N) No. 2 — Chassis ground:***	Is the resistance 1 MΩ or more?	Go to step **4**.	Replace the airbag rear harness along with body harness.
4	**CHECK AIRBAG REAR HARNESS (CURTAIN AIRBAG MODULE HARNESS LH).** Measure the resistance between connector (6AG) in the test harness AG and connector (2N) in the test harness N. ***Connector & terminal*** ***(6AG) No. 8 — (2N) No. 1:*** ***(6AG) No. 6 — (2N) No. 2:***	Is the resistance less than 10 Ω?	Go to step **5**.	Replace the airbag rear harness along with body harness.
5	**CHECK AIRBAG CONTROL MODULE.** 1) Connect all connectors. 2) Clear the memory. 3) Perform the Inspection Mode. 4) Read the DTC.	Is the same DTC displayed?	Replace the airbag control module. <Ref. to AB-68, Airbag Control Module.>	Go to step **6**.
6	**CHECK FOR ANY OTHER DTC ON DISPLAY.**	Is any other DTC displayed?	Check DTC using "List of Diagnostic Trouble Code (DTC)". <Ref. to AB(diag)-41, List of Diagnostic Trouble Code (DTC).>	Finish the diagnosis.

2. TYPE B

DTC DETECTING CONDITION:

- Curtain airbag harness (LH) circuit is shorted to ground.
- Curtain airbag module (LH) is faulty.
- Airbag control module is faulty.

CAUTION:
Before performing diagnosis, refer to "CAUTION" in "General Description". <Ref. to AB(diag)-5, CAUTION, General Description.>
WIRING DIAGRAM:

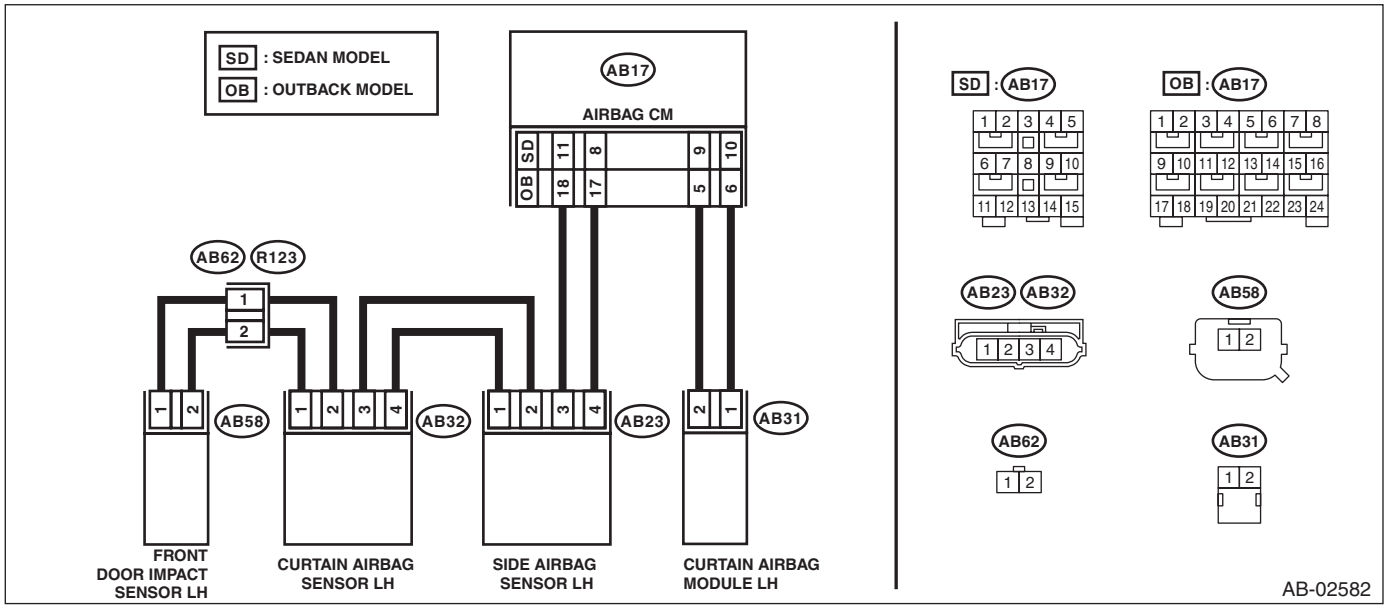

Step		Check	Yes	No
1	**CHECK POOR CONTACT OF CONNECTORS.** Check for poor contact of the connectors between the airbag control module, curtain airbag module LH and the curtain airbag sensor LH.	Is there poor contact?	Replace the airbag rear harness along with body harness.	Go to step **2**.
2	**CHECK CURTAIN AIRBAG MODULE.** 1) Turn the ignition switch to OFF, disconnect the battery ground cable, and wait for 60 seconds or more. 2) Disconnect the connector (AB31) from curtain airbag module (LH). 3) Connect the connector (1N) in the test harness N to the connector (AB31). 4) Connect the airbag resistor to the connector (2N) of test harness N. 5) Connect the battery ground terminal and turn the ignition switch to ON.	Does the airbag warning light illuminate for six seconds and go off?	Replace the curtain airbag module (LH). <Ref. to AB-65, Curtain Airbag Module.>	Go to step **3**.

	Step	Check	Yes	No
3	**CHECK AIRBAG REAR HARNESS (CURTAIN AIRBAG MODULE HARNESS LH).** 1) Turn the ignition switch to OFF, disconnect the battery ground cable, and wait for 60 seconds or more. 2) Disconnect the connector (AB21) from seat belt pretensioner (LH). 3) Disconnect connector (AB19) from side airbag module (LH). 4) Disconnect the airbag resistor from test harness N. 5) Disconnect the connectors (AB6, AB17, AB18) from airbag control module. 6) Connect the connector (1AG) in the test harness AG to the connectors (AB6, AB17, AB18). NOTE: For sedan models, connect test harness AH between the connectors (AB6, AB17, AB18) and (1AG). 7) Measure the resistance between connector (2N) in the test harness N and chassis ground. ***Connector & terminal*** ***(2N) No. 1 — Chassis ground:*** ***(2N) No. 2 — Chassis ground:***	Is the resistance 1 MΩ or more?	Go to step **4**.	Replace the airbag rear harness along with body harness.
4	**CHECK AIRBAG CONTROL MODULE.** 1) Connect all connectors. 2) Clear the memory. 3) Perform the Inspection Mode. 4) Read the DTC.	Is the same DTC displayed?	Replace the airbag control module. <Ref. to AB-68, Airbag Control Module.>	Go to step **5**.
5	**CHECK FOR ANY OTHER DTC ON DISPLAY.**	Is any other DTC displayed?	Check DTC using "List of Diagnostic Trouble Code (DTC)". <Ref. to AB(diag)-41, List of Diagnostic Trouble Code (DTC).>	Finish the diagnosis.

BF:DTC 95 CURTAIN AIRBAG MODULE RH FAILURE

DTC DETECTING CONDITION:

- Curtain airbag harness (RH) is shorted to power supply.
- Curtain airbag module (RH) is faulty.
- Airbag control module is faulty.

CAUTION:

Before performing diagnosis, refer to "CAUTION" in "General Description". <Ref. to AB(diag)-5, CAUTION, General Description.>

WIRING DIAGRAM:

- Type A

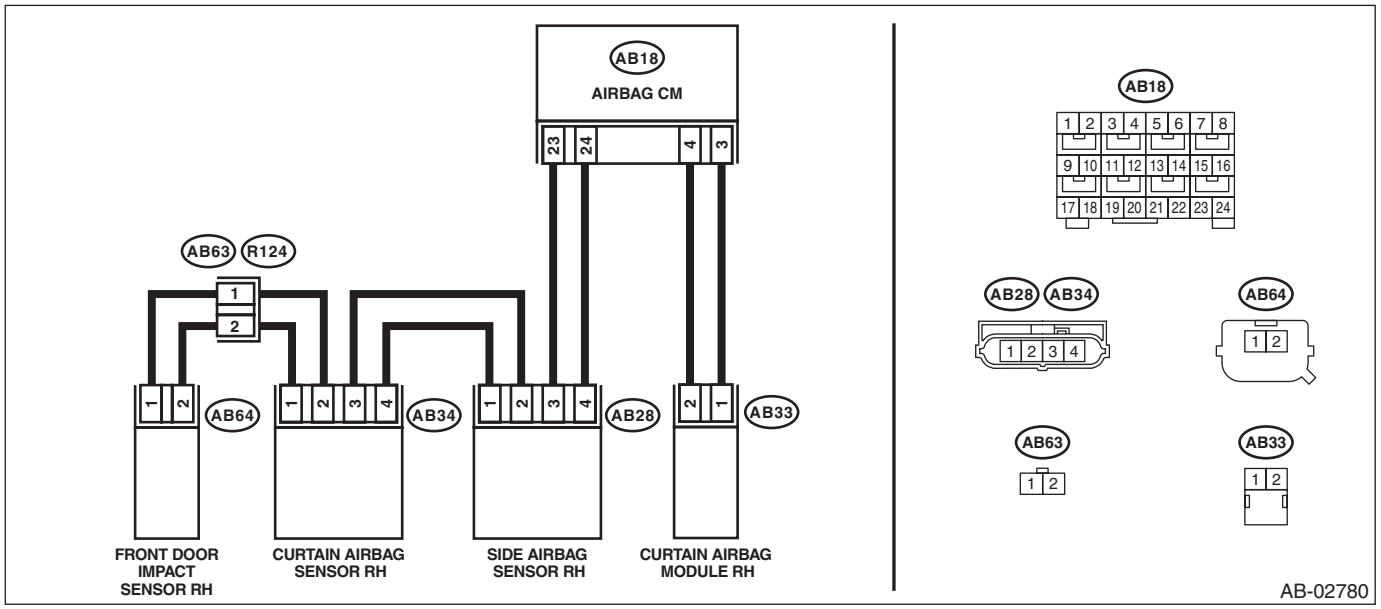

- Type B

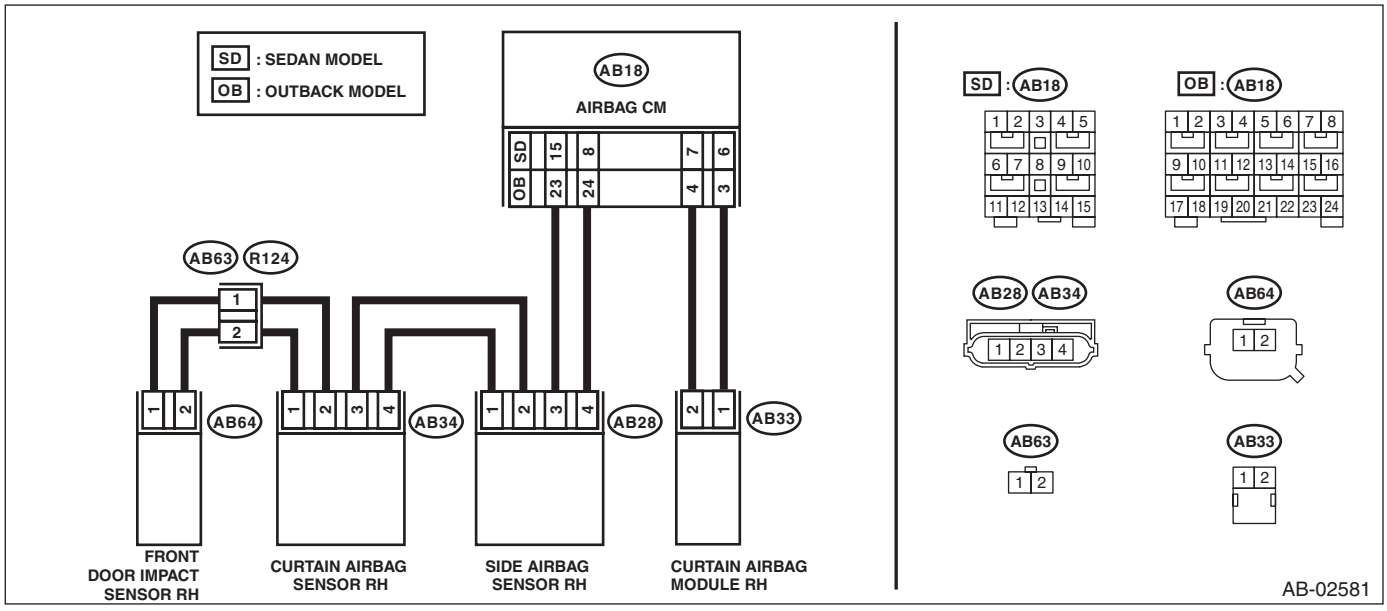

	Step	Check	Yes	No
1	**CHECK POOR CONTACT OF CONNECTORS.** Check for poor contact of the connectors between the airbag control module, curtain airbag module RH and the curtain airbag sensor RH.	Is there poor contact?	Replace the airbag rear harness along with body harness.	Go to step **2**.
2	**CHECK CURTAIN AIRBAG MODULE.** 1) Turn the ignition switch to OFF, disconnect the battery ground cable, and wait for 60 seconds or more. 2) Disconnect the connector (AB33), and connect the connector (1N) in test harness N to connector (AB33). 3) Connect the airbag resistor to the connector (2N) of test harness N. 4) Connect the battery ground terminal and turn the ignition switch to ON.	Does the airbag warning light illuminate for six seconds and go off?	Replace the curtain airbag module (RH). <Ref. to AB-65, Curtain Airbag Module.>	Go to step **3**.
3	**CHECK AIRBAG REAR HARNESS (CURTAIN AIRBAG MODULE HARNESS RH).** 1) Turn the ignition switch to OFF, disconnect the battery ground cable, and wait for 60 seconds or more. 2) Disconnect the connector (AB26) from seat belt pretensioner (RH). 3) Disconnect connector (AB24) from side airbag module (RH). 4) Disconnect the airbag resistor from test harness N. 5) Disconnect the connectors (AB6, AB17, AB18) from airbag control module. 6) Connect the connector (1AG) in the test harness AG to the connectors (AB6, AB17, AB18). NOTE: For type B (sedan models), connect test harness AH between the connectors (AB6, AB17, AB18) and (1AG). 7) Connect the battery ground terminal and turn the ignition switch to ON. 8) Measure the voltage between connector (2N) in the test harness N and chassis ground. ***Connector & terminal*** ***(2N) No. 1 (+) — Chassis ground (–):*** ***(2N) No. 2 (+) — Chassis ground (–):***	Is the voltage less than 1 V?	Go to step **4**.	Replace the airbag rear harness along with body harness.
4	**CHECK AIRBAG CONTROL MODULE.** 1) Connect all connectors. 2) Clear the memory. 3) Perform the Inspection Mode. 4) Read the DTC.	Is the same DTC displayed?	Replace the airbag control module. <Ref. to AB-68, Airbag Control Module.>	Go to step **5**.
5	**CHECK FOR ANY OTHER DTC ON DISPLAY.**	Is any other DTC displayed?	Check DTC using "List of Diagnostic Trouble Code (DTC)". <Ref. to AB(diag)-41, List of Diagnostic Trouble Code (DTC).>	Finish the diagnosis.

BG:DTC 96 CURTAIN AIRBAG MODULE LH FAILURE

DTC DETECTING CONDITION:

- Curtain airbag harness (LH) is shorted to power supply.
- Curtain airbag module (LH) is faulty.
- Airbag control module is faulty.

CAUTION:

Before performing diagnosis, refer to "CAUTION" in "General Description". <Ref. to AB(diag)-5, CAUTION, General Description.>

WIRING DIAGRAM:

- Type A

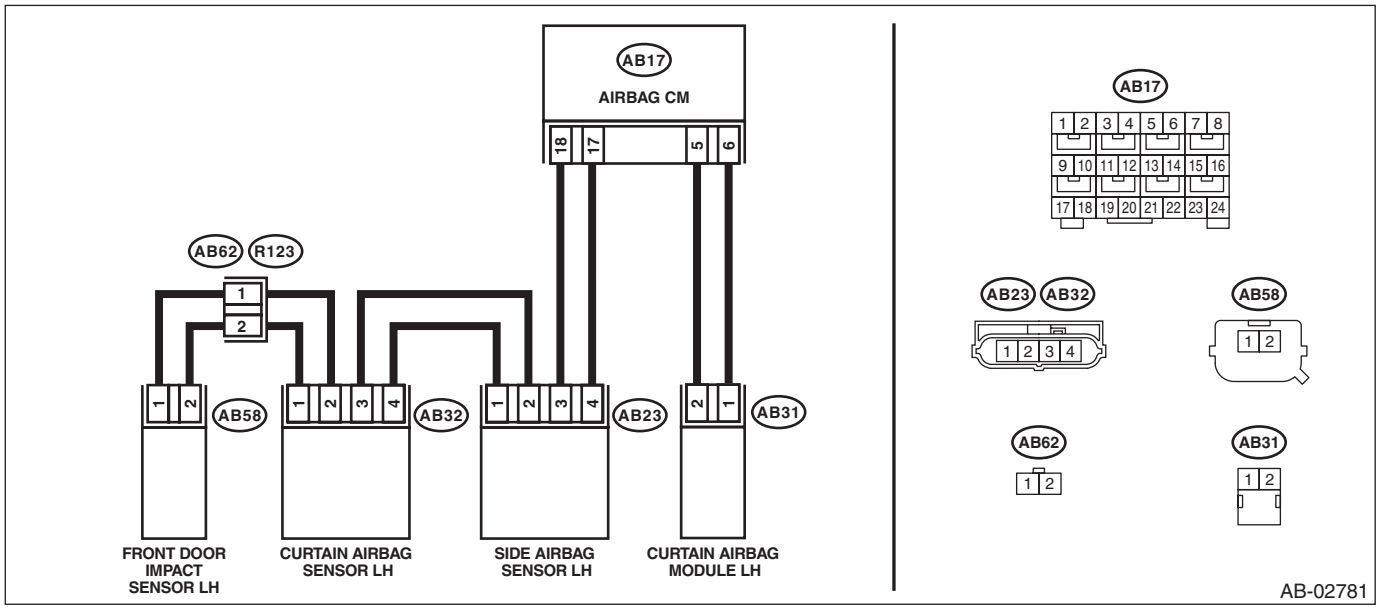

- Type B

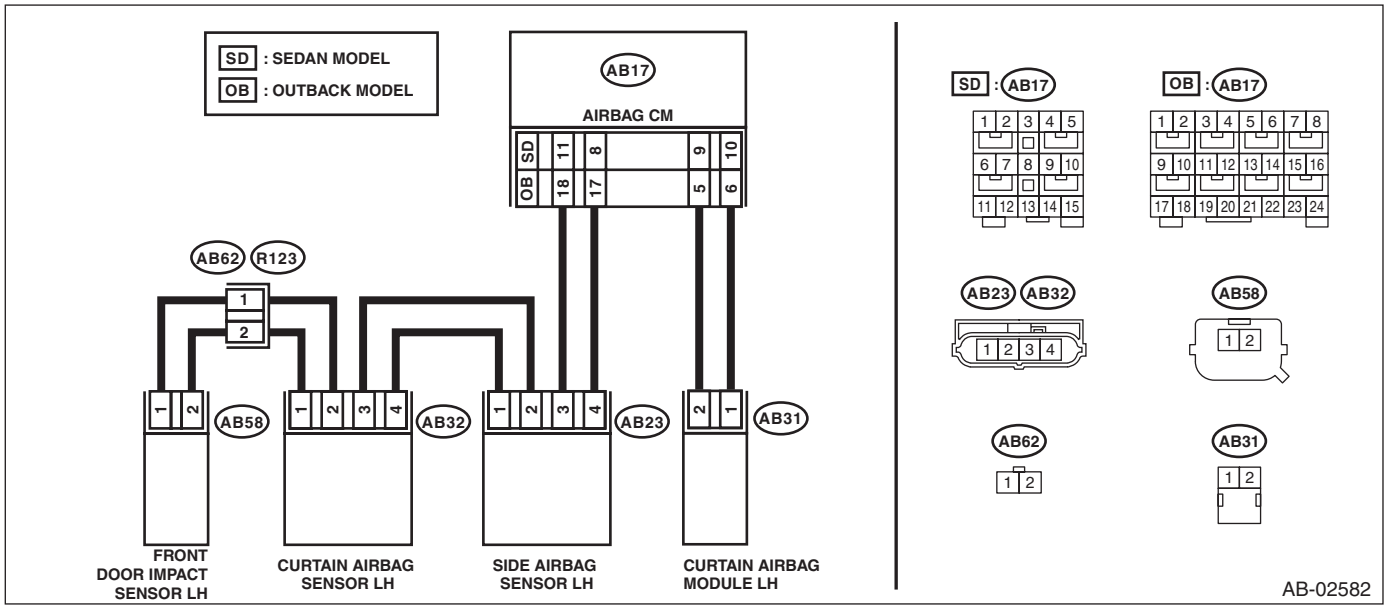

	Step	Check	Yes	No
1	**CHECK POOR CONTACT OF CONNECTORS.** Check for poor contact of the connectors between the airbag control module, curtain airbag module LH and the curtain airbag sensor LH.	Is there poor contact?	Replace the airbag rear harness along with body harness.	Go to step **2**.
2	**CHECK CURTAIN AIRBAG MODULE.** 1) Turn the ignition switch to OFF, disconnect the battery ground cable, and wait for 60 seconds or more. 2) Disconnect the connector (AB31), and connect the connector (1N) in test harness N to connector (AB31). 3) Connect the airbag resistor to the connector (2N) of test harness N. 4) Connect the battery ground terminal and turn the ignition switch to ON.	Does the airbag warning light illuminate for six seconds and go off?	Replace the curtain airbag module (LH). <Ref. to AB-65, Curtain Airbag Module.>	Go to step **3**.
3	**CHECK AIRBAG REAR HARNESS (CURTAIN AIRBAG MODULE HARNESS LH).** 1) Turn the ignition switch to OFF, disconnect the battery ground cable, and wait for 60 seconds or more. 2) Disconnect the connector (AB21) from seat belt pretensioner (LH). 3) Disconnect connector (AB19) from side airbag module (LH). 4) Disconnect the airbag resistor from test harness N. 5) Disconnect the connectors (AB6, AB17, AB18) from airbag control module. 6) Connect the connector (1AG) in the test harness AG to the connectors (AB6, AB17, AB18). NOTE: For type B (sedan models), connect test harness AH between the connectors (AB6, AB17, AB18) and (1AG). 7) Connect the battery ground terminal and turn the ignition switch to ON. 8) Measure the voltage between connector (2N) in the test harness N and chassis ground. ***Connector & terminal*** ***(2N) No. 1 (+) — Chassis ground (–):*** ***(2N) No. 2 (+) — Chassis ground (–):***	Is the voltage less than 1 V?	Go to step **4**.	Replace the airbag rear harness along with body harness.
4	**CHECK AIRBAG CONTROL MODULE.** 1) Connect all connectors. 2) Clear the memory. 3) Perform the Inspection Mode. 4) Read the DTC.	Is the same DTC displayed?	Replace the airbag control module. <Ref. to AB-68, Airbag Control Module.>	Go to step **5**.
5	**CHECK FOR ANY OTHER DTC ON DISPLAY.**	Is any other DTC displayed?	Check DTC using "List of Diagnostic Trouble Code (DTC)". <Ref. to AB(diag)-41, List of Diagnostic Trouble Code (DTC).>	Finish the diagnosis.

BH:DTC 9A CURTAIN AIRBAG MODULE RH FAILURE

DTC DETECTING CONDITION:

- Curtain airbag harness (RH) circuit is shorted.
- Curtain airbag module (RH) is faulty.
- Airbag control module is faulty.

CAUTION:
Before performing diagnosis, refer to "CAUTION" in "General Description". <Ref. to AB(diag)-5, CAUTION, General Description.>
WIRING DIAGRAM:

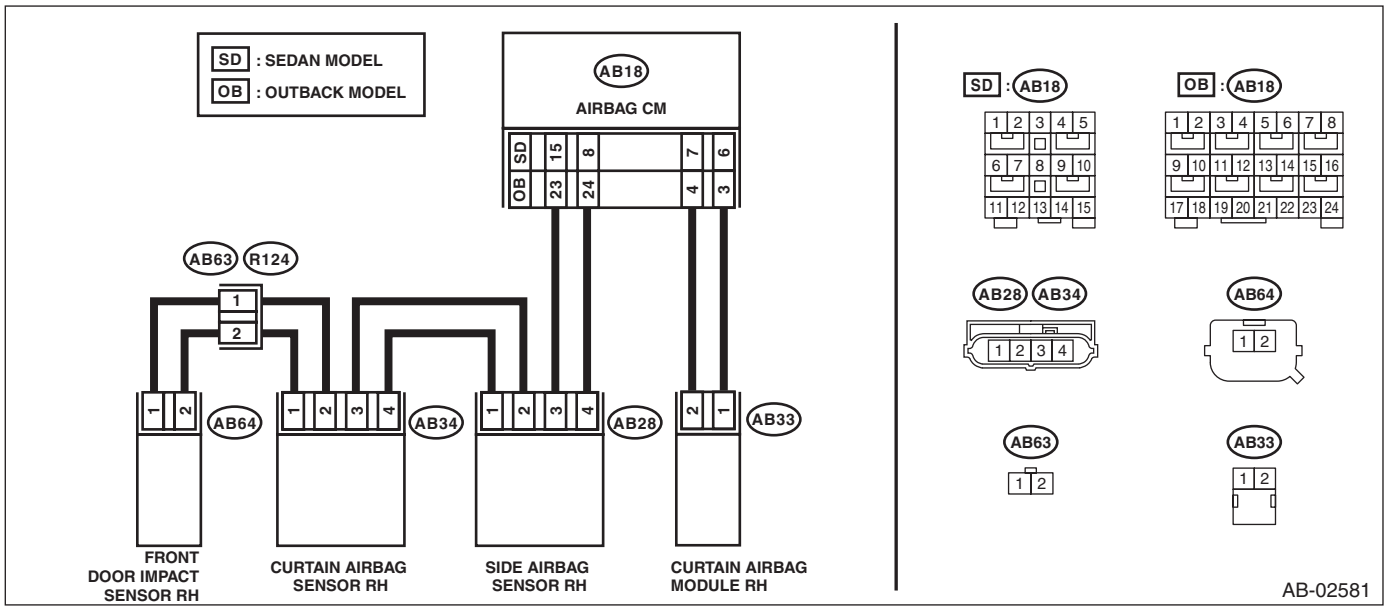

Step		Check	Yes	No
1	**CHECK POOR CONTACT OF CONNECTORS.** Check for poor contact of the connectors between the airbag control module, curtain airbag module RH and the curtain airbag sensor RH.	Is there poor contact?	Replace the airbag rear harness along with body harness.	Go to step **2**.
2	**CHECK CURTAIN AIRBAG MODULE.** 1) Turn the ignition switch to OFF, disconnect the battery ground cable, and wait for 60 seconds or more. 2) Disconnect the connector (AB33) from curtain airbag module (RH), and connect the connector (1N) in test harness N to connector (AB33). 3) Connect the airbag resistor to the connector (2N) of test harness N. 4) Connect the battery ground terminal and turn the ignition switch to ON.	Does the airbag warning light illuminate for six seconds and go off?	Replace the curtain airbag module (RH). <Ref. to AB-65, Curtain Airbag Module.>	Go to step **3**.

	Step	Check	Yes	No
3	**CHECK AIRBAG REAR HARNESS (CURTAIN AIRBAG MODULE HARNESS RH).** 1) Turn the ignition switch to OFF, disconnect the battery ground cable, and wait for 60 seconds or more. 2) Disconnect the connector (AB26) from seat belt pretensioner (RH). 3) Disconnect connector (AB24) from side airbag module (RH). 4) Disconnect the airbag resistor from test harness N. 5) Disconnect the connectors (AB6, AB17, AB18) from airbag control module. 6) Connect the connector (1AG) in the test harness AG to the connectors (AB6, AB17, AB18). NOTE: For sedan models, connect test harness AH between the connectors (AB6, AB17, AB18) and (1AG). 7) Measure the resistance between connector (2N) terminals in test harness N. ***Connector & terminal (2N) No. 1 — (2N) No. 2:***	Is the resistance 1 MΩ or more?	Go to step **4**.	Replace the airbag rear harness along with body harness.
4	**CHECK AIRBAG CONTROL MODULE.** 1) Connect all connectors. 2) Clear the memory. 3) Perform the Inspection Mode. 4) Read the DTC.	Is the same DTC displayed?	Replace the airbag control module. <Ref. to AB-68, Airbag Control Module.>	Go to step **5**.
5	**CHECK FOR ANY OTHER DTC ON DISPLAY.**	Is any other DTC displayed?	Check DTC using "List of Diagnostic Trouble Code (DTC)". <Ref. to AB(diag)-41, List of Diagnostic Trouble Code (DTC).>	Finish the diagnosis.

BI: DTC 9B CURTAIN AIRBAG MODULE LH FAILURE

DTC DETECTING CONDITION:

- Curtain airbag harness (LH) circuit is shorted.
- Curtain airbag module (LH) is faulty.
- Airbag control module is faulty.

CAUTION:
Before performing diagnosis, refer to "CAUTION" in "General Description". <Ref. to AB(diag)-5, CAUTION, General Description.>
WIRING DIAGRAM:

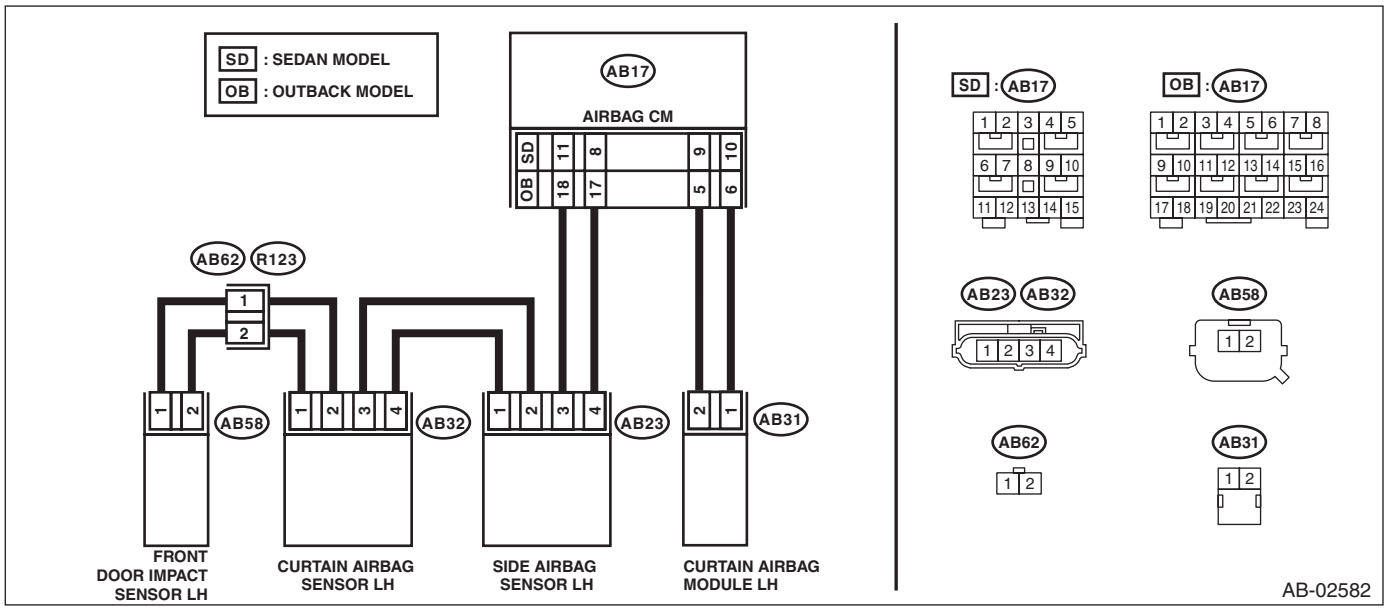

Step		Check	Yes	No
1	**CHECK POOR CONTACT OF CONNECTORS.** Check for poor contact of the connectors between the airbag control module, curtain airbag module LH and the curtain airbag sensor LH.	Is there poor contact?	Replace the airbag rear harness along with body harness.	Go to step **2**.
2	**CHECK CURTAIN AIRBAG MODULE.** 1) Turn the ignition switch to OFF, disconnect the battery ground cable, and wait for 60 seconds or more. 2) Disconnect the connector (AB31) from curtain airbag module (LH), and connect the connector (1N) in test harness N to connector (AB31). 3) Connect the airbag resistor to the connector (2N) of test harness N. 4) Connect the battery ground terminal and turn the ignition switch to ON.	Does the airbag warning light illuminate for six seconds and go off?	Replace the curtain airbag module (LH). <Ref. to AB-65, Curtain Airbag Module.>	Go to step **3**.

	Step	Check	Yes	No
3	**CHECK AIRBAG REAR HARNESS (CURTAIN AIRBAG MODULE HARNESS LH).** 1) Turn the ignition switch to OFF, disconnect the battery ground cable, and wait for 60 seconds or more. 2) Disconnect the connector (AB21) from seat belt pretensioner (LH). 3) Disconnect connector (AB19) from side airbag module (LH). 4) Disconnect the airbag resistor from test harness N. 5) Disconnect the connectors (AB6, AB17, AB18) from airbag control module. 6) Connect the connector (1AG) in the test harness AG to the connectors (AB6, AB17, AB18). NOTE: For sedan models, connect test harness AH between the connectors (AB6, AB17, AB18) and (1AG). 7) Measure the resistance between connector (2N) terminals in test harness N. ***Connector & terminal*** ***(2N) No. 1 — (2N) No. 2:***	Is the resistance 1 MΩ or more?	Go to step **4**.	Replace the airbag rear harness along with body harness.
4	**CHECK AIRBAG CONTROL MODULE.** 1) Connect all connectors. 2) Clear the memory. 3) Perform the Inspection Mode. 4) Read the DTC.	Is the same DTC displayed?	Replace the airbag control module. <Ref. to AB-68, Airbag Control Module.>	Go to step **5**.
5	**CHECK FOR ANY OTHER DTC ON DISPLAY.**	Is any other DTC displayed?	Check DTC using "List of Diagnostic Trouble Code (DTC)". <Ref. to AB(diag)-41, List of Diagnostic Trouble Code (DTC).>	Finish the diagnosis.

BJ:DTC 9D CURTAIN AIRBAG MODULE RH FAILURE

DTC DETECTING CONDITION:

- Curtain airbag harness (RH) circuit is open.
- Curtain airbag module (RH) is faulty.
- Airbag control module is faulty.

CAUTION:
Before performing diagnosis, refer to "CAUTION" in "General Description". <Ref. to AB(diag)-5, CAUTION, General Description.>
WIRING DIAGRAM:

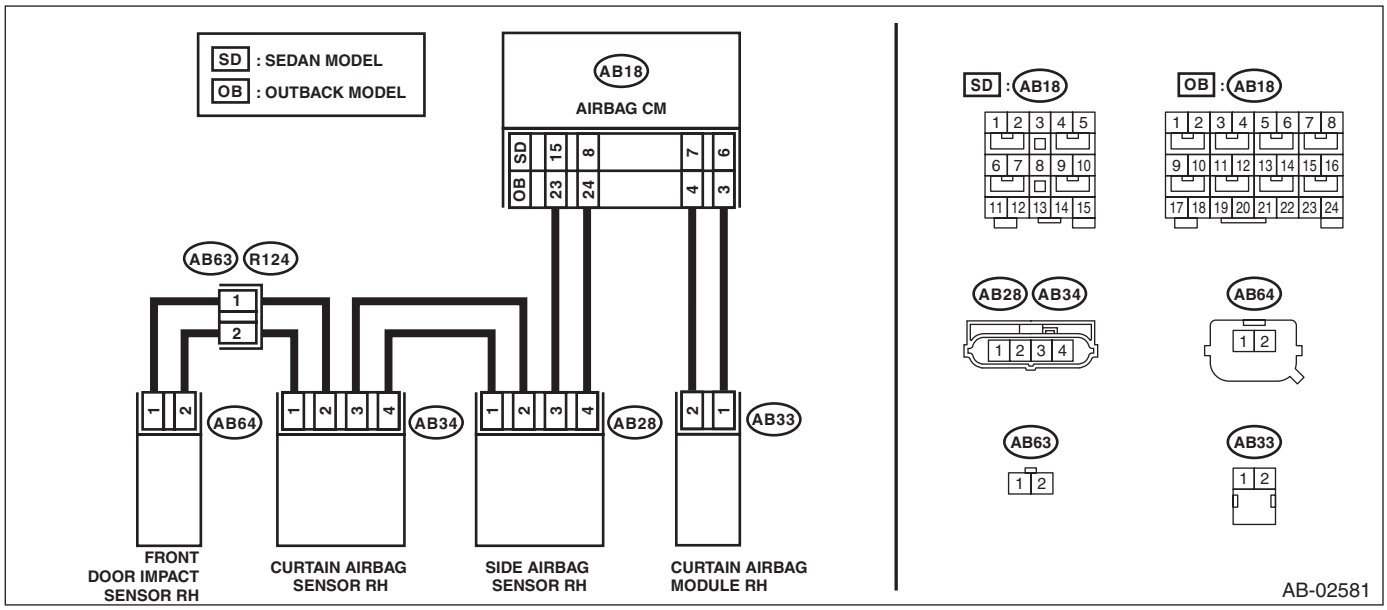

Step		Check	Yes	No
1	**CHECK POOR CONTACT OF CONNECTORS.** Check for poor contact of the connectors between the airbag control module, curtain airbag module RH and the curtain airbag sensor RH.	Is there poor contact?	Replace the airbag rear harness along with body harness.	Go to step **2**.
2	**CHECK CURTAIN AIRBAG MODULE.** 1) Turn the ignition switch to OFF, disconnect the battery ground cable, and wait for 60 seconds or more. 2) Disconnect the connector (AB33) from curtain airbag module (RH), and connect the connector (1N) in test harness N to connector (AB33). 3) Connect the airbag resistor to the connector (2N) of test harness N. 4) Connect the battery ground terminal and turn the ignition switch to ON.	Does the airbag warning light illuminate for six seconds and go off?	Replace the curtain airbag module (RH). <Ref. to AB-65, Curtain Airbag Module.>	Go to step **3**.

	Step	Check	Yes	No
3	**CHECK AIRBAG REAR HARNESS (CURTAIN AIRBAG MODULE HARNESS RH).** 1) Turn the ignition switch to OFF, disconnect the battery ground cable, and wait for 60 seconds or more. 2) Disconnect the connector (AB26) from seat belt pretensioner (RH). 3) Disconnect connector (AB24) from side airbag module (RH). 4) Disconnect the airbag resistor from test harness N. 5) Disconnect the connectors (AB6, AB17, AB18) from airbag control module. 6) Connect the connector (1AG) in the test harness AG to the connectors (AB6, AB17, AB18). NOTE: For sedan models, connect test harness AH between the connectors (AB6, AB17, AB18) and (1AG). 7) Measure the resistance between connector (5AG) or (6AG) in the test harness AG and connector (2N) in the test harness N. ***Connector & terminal*** ***Sedan model*** ***(5AG) No. 2 — (2N) No. 1:*** ***(5AG) No. 4 — (2N) No. 2:*** ***OUTBACK model*** ***(6AG) No. 1 — (2N) No. 1:*** ***(6AG) No. 3 — (2N) No. 2:***	Is the resistance less than 10 Ω?	Go to step **4**.	Replace the airbag rear harness along with body harness.
4	**CHECK AIRBAG CONTROL MODULE.** 1) Connect all connectors. 2) Clear the memory. 3) Perform the Inspection Mode. 4) Read the DTC.	Is the same DTC displayed?	Replace the airbag control module. <Ref. to AB-68, Airbag Control Module.>	Go to step **5**.
5	**CHECK FOR ANY OTHER DTC ON DISPLAY.**	Is any other DTC displayed?	Check DTC using "List of Diagnostic Trouble Code (DTC)". <Ref. to AB(diag)-41, List of Diagnostic Trouble Code (DTC).>	Finish the diagnosis.

BK:DTC 9E CURTAIN AIRBAG MODULE LH FAILURE

DTC DETECTING CONDITION:

- Curtain airbag harness (LH) circuit is open.
- Curtain airbag module (LH) is faulty.
- Airbag control module is faulty.

CAUTION:

Before performing diagnosis, refer to "CAUTION" in "General Description". <Ref. to AB(diag)-5, CAUTION, General Description.>

WIRING DIAGRAM:

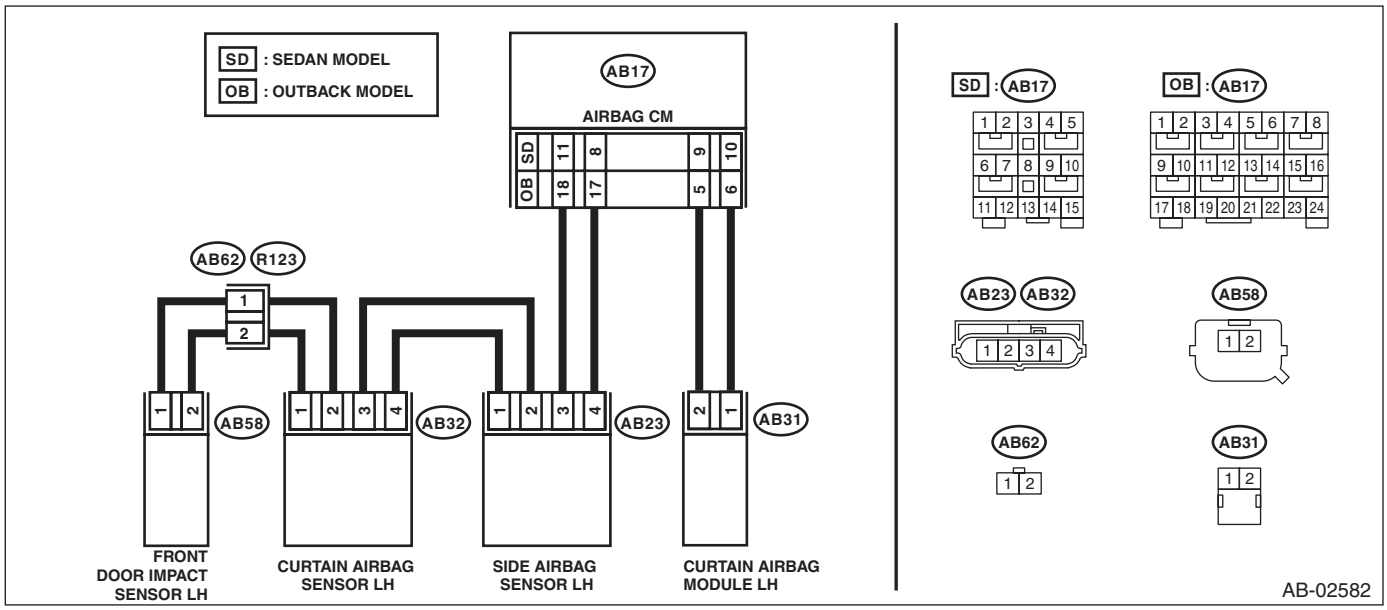

Step		Check	Yes	No
1	**CHECK POOR CONTACT OF CONNECTORS.** Check for poor contact of the connectors between the airbag control module, curtain airbag module LH and the curtain airbag sensor LH.	Is there poor contact?	Replace the airbag rear harness along with body harness.	Go to step **2**.
2	**CHECK CURTAIN AIRBAG MODULE.** 1) Turn the ignition switch to OFF, disconnect the battery ground cable, and wait for 60 seconds or more. 2) Disconnect the connector (AB31) from curtain airbag module (LH), and connect the connector (1N) in test harness N to connector (AB31). 3) Connect the airbag resistor to the connector (2N) of test harness N. 4) Connect the battery ground terminal and turn the ignition switch to ON.	Does the airbag warning light illuminate for six seconds and go off?	Replace the curtain airbag module (LH). <Ref. to AB-65, Curtain Airbag Module.>	Go to step **3**.

	Step	Check	Yes	No
3	**CHECK AIRBAG REAR HARNESS (CURTAIN AIRBAG MODULE HARNESS LH).** 1) Turn the ignition switch to OFF, disconnect the battery ground cable, and wait for 60 seconds or more. 2) Disconnect the connector (AB21) from seat belt pretensioner (LH). 3) Disconnect connector (AB19) from side airbag module (LH). 4) Disconnect the airbag resistor from test harness N. 5) Disconnect the connectors (AB6, AB17, AB18) from airbag control module. 6) Connect the connector (1AG) in the test harness AG to the connectors (AB6, AB17, AB18). NOTE: For sedan models, connect test harness AH between the connectors (AB6, AB17, AB18) and (1AG). 7) Measure the resistance between connector (5AG) or (6AG) in the test harness AG and connector (2N) in the test harness N. ***Connector & terminal*** ***Sedan model*** ***(5AG) No. 6 — (2N) No. 1:*** ***(5AG) No. 12 — (2N) No. 2:*** ***OUTBACK model*** ***(6AG) No. 8 — (2N) No. 1:*** ***(6AG) No. 6 — (2N) No. 2:***	Is the resistance less than 10 Ω?	Go to step **4**.	Replace the airbag rear harness along with body harness.
4	**CHECK AIRBAG CONTROL MODULE.** 1) Connect all connectors. 2) Clear the memory. 3) Perform the Inspection Mode. 4) Read the DTC.	Is the same DTC displayed?	Replace the airbag control module. <Ref. to AB-68, Airbag Control Module.>	Go to step **5**.
5	**CHECK FOR ANY OTHER DTC ON DISPLAY.**	Is any other DTC displayed?	Check DTC using "List of Diagnostic Trouble Code (DTC)". <Ref. to AB(diag)-41, List of Diagnostic Trouble Code (DTC).>	Finish the diagnosis.

BL:DTC A1 FRONT SENSOR BUS COMMUNICATION ERROR

DTC DETECTING CONDITION:

- Harness between airbag control module and front sub sensor is open or shorted.
- Front sub sensor is faulty.
- Airbag control module is faulty.

CAUTION:
Before performing diagnosis, refer to "CAUTION" in "General Description". <Ref. to AB(diag)-5, CAUTION, General Description.>
WIRING DIAGRAM:

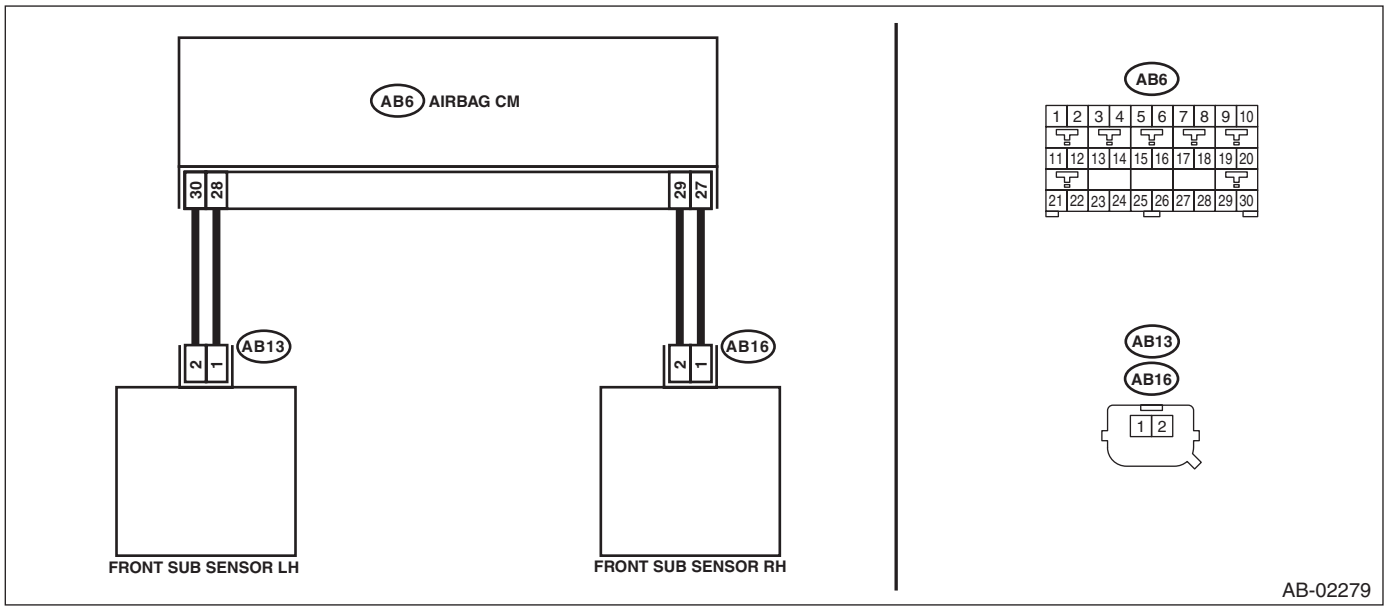

Step		Check	Yes	No
1	**CHECK POOR CONTACT OF CONNECTORS.** Check for poor contact of the connectors between the airbag control module and the front sub sensor.	Is there poor contact?	Replace the airbag main harness along with body harness.	Go to step **2**.

	Step	Check	Yes	No
2	**CHECK AIRBAG MAIN HARNESS (FRONT SENSOR BUS LH).** 1) Turn the ignition switch to OFF, disconnect the battery ground cable, and wait for 60 seconds or more. 2) Remove the instrument panel lower cover and column cover, and disconnect the connectors (AB7) and (AB2). 3) Remove the console front panel and disconnect the connector (AB9). 4) Disconnect the connectors (AB6, AB17, AB18) from airbag control module. 5) Connect the connector (1AG) in the test harness AG to the connectors (AB6, AB17, AB18). NOTE: For sedan models, connect test harness AH between the connectors (AB6, AB17, AB18) and (1AG). 6) Disconnect the connector (AB13) from the front sub sensor (LH), and then connect the connector (1H) in the test harness H to connector (AB13). 7) Measure the resistance between connector (4AG) in the test harness AG and connector (3H) in the test harness H. ***Connector & terminal*** ***(4AG) No. 7 — (3H) No. 5:*** ***(4AG) No. 9 — (3H) No. 6:***	Is the resistance less than 10 Ω?	Go to step **3**.	Replace the airbag main harness along with body harness.
3	**CHECK AIRBAG MAIN HARNESS (FRONT SENSOR BUS LH).** Measure the resistance between connector (4AG) in the test harness AG and chassis ground, and the resistance between connector (4AG) terminals in the test harness AG. ***Connector & terminal*** ***(4AG) No. 7 — Chassis ground:*** ***(4AG) No. 9 — Chassis ground:*** ***(4AG) No. 7 — (4AG) No. 9:***	Is the resistance 1 MΩ or more?	Go to step **4**.	Replace the airbag rear harness along with body harness.
4	**CHECK AIRBAG MAIN HARNESS (FRONT SENSOR BUS RH).** 1) Disconnect the connector (AB16) from the front sub sensor (RH), and then connect the connector (1H) in the test harness H to connector (AB16). 2) Measure the resistance between connector (4AG) in the test harness AG and connector (3H) in the test harness H. ***Connector & terminal*** ***(4AG) No. 14 — (3H) No. 5:*** ***(4AG) No. 12 — (3H) No. 6:***	Is the resistance less than 10 Ω?	Go to step **5**.	Replace the airbag main harness along with body harness.
5	**CHECK AIRBAG MAIN HARNESS (FRONT SENSOR BUS RH).** Measure the resistance between connector (4AG) in the test harness AG and chassis ground, and the resistance between connector (4AG) terminals in the test harness AG. ***Connector & terminal*** ***(4AG) No. 12 — Chassis ground:*** ***(4AG) No. 14 — Chassis ground:*** ***(4AG) No. 12 — (4AG) No. 14:***	Is the resistance 1 MΩ or more?	Go to step **6**.	Replace the airbag rear harness along with body harness.

	Step	Check	Yes	No
6	**CHECK AIRBAG CONTROL MODULE.** 1) Connect all connectors. 2) Clear the memory. 3) Perform the Inspection Mode. 4) Read the DTC.	Is the same DTC displayed?	Replace the front sub sensor (LH) and front sub sensor (RH). <Ref. to AB-71, REMOVAL, Front Sub Sensor.> Replace the airbag control module if not operating normally even after replacing the sensor. <Ref. to AB-68, REMOVAL, Airbag Control Module.>	Go to step **7**.
7	**CHECK FOR ANY OTHER DTC ON DISPLAY.**	Is any other DTC displayed?	Check DTC using "List of Diagnostic Trouble Code (DTC)". <Ref. to AB(diag)-41, List of Diagnostic Trouble Code (DTC).>	Finish the diagnosis.

BM:DTC A2 DOOR SENSOR BUS RH COMMUNICATION ERROR

NOTE:
Refer to DTC A3 for DTC A2. <Ref. to AB(diag)-167, DTC A3 DOOR SENSOR BUS RH COMMUNICATION ERROR, Diagnostic Chart with Trouble Code.>

BN:DTC A3 DOOR SENSOR BUS RH COMMUNICATION ERROR

DTC DETECTING CONDITION:

- Open or short circuit in harness of side sensor bus (RH).
- Front door impact sensor (RH) is faulty.
- Curtain airbag sensor (RH) is faulty.
- Airbag control module is faulty.

CAUTION:

Before performing diagnosis, refer to "CAUTION" in "General Description". <Ref. to AB(diag)-5, CAUTION, General Description.>

WIRING DIAGRAM:

- Type A

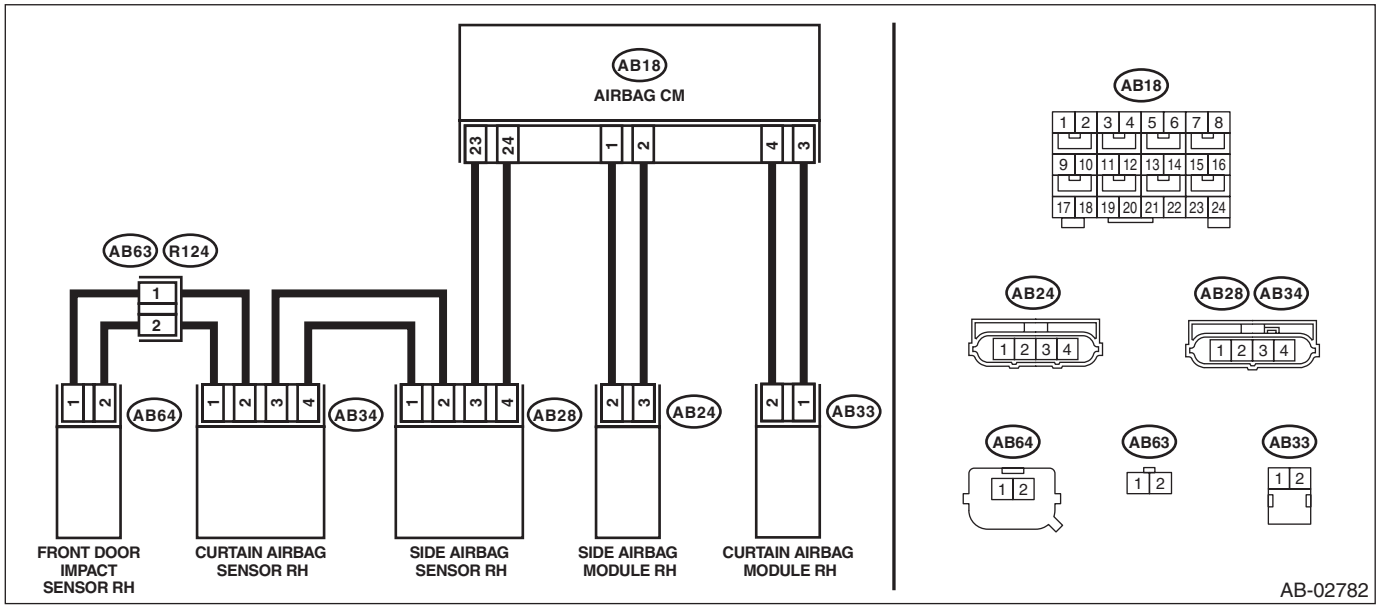

- Type B

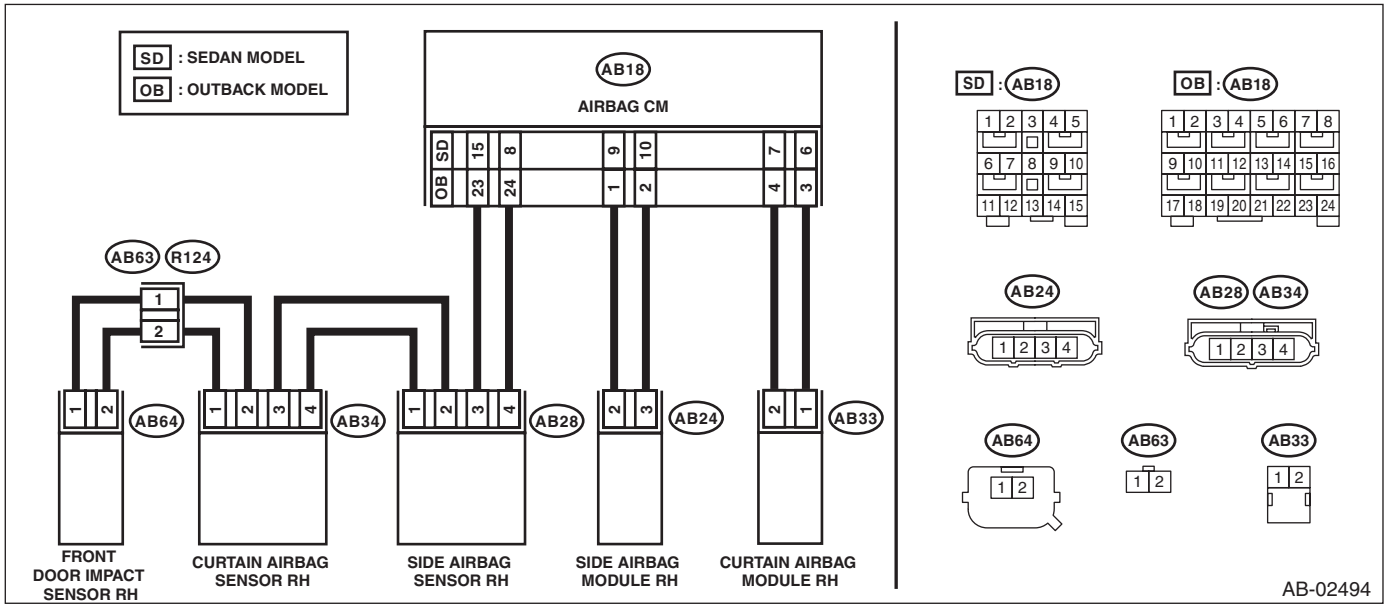

	Step	Check	Yes	No
1	**CHECK DTC.** Read the DTC.	Is DTC EB or EC displayed?	Perform the diagnosis of DTC EC. <Ref. to AB(diag)-189, DTC EC SIDE SENSOR BUS RH COMMUNICATION ERROR, Diagnostic Chart with Trouble Code.>	Go to step **2**.
2	**CHECK DTC.** Read the DTC.	Is DTC ED or EE displayed?	Perform the diagnosis of DTC EE. <Ref. to AB(diag)-192, DTC EE SIDE SENSOR BUS RH COMMUNICATION ERROR, Diagnostic Chart with Trouble Code.>	Go to step **3**.
3	**CHECK POOR CONTACT OF CONNECTORS.** Check for poor contact of the connectors between the airbag control module and the front door impact sensor (RH).	Is there poor contact?	Replace the airbag rear harness and the door harness.	Go to step **4**.
4	**CHECK AIRBAG REAR HARNESS AND DOOR HARNESS (BETWEEN CURTAIN AIRBAG SENSOR RH AND DOOR SENSOR RH).** 1) Turn the ignition switch to OFF, disconnect the battery ground cable, and wait for 60 seconds or more. 2) Disconnect the connector (AB26) from seat belt pretensioner (RH). 3) Disconnect the connector (AB33) from curtain airbag module (RH). 4) Disconnect connector (AB24) from side airbag module (RH). 5) Disconnect the connector (AB34) from curtain airbag sensor (RH), and connect the connector (2V) in test harness V to connector (AB34). 6) Disconnect the connector (AB64) from the front door impact sensor (RH), and connect the connector (1H) in the test harness H to connector (AB64). 7) Measure the resistance between connector (3V) in the test harness V and connector (3H) in the test harness H. ***Connector & terminal*** ***(3V) No. 4 — (3H) No. 5:*** ***(3V) No. 5 — (3H) No. 6:***	Is the resistance less than 10 Ω?	Go to step **5**.	Check the door harness, and if any fault is found, replace the harness. If there is no fault, replace the airbag rear harness together with body harness.

	Step	Check	Yes	No
5	**CHECK AIRBAG REAR HARNESS AND DOOR HARNESS (BETWEEN CURTAIN AIRBAG SENSOR RH AND DOOR SENSOR RH).** Measure the resistance between connector (3V) in test harness V and chassis ground, and the resistance between connector (3V) terminals in test harness V. ***Connector & terminal*** ***(3V) No. 4 — Chassis ground:*** ***(3V) No. 5 — Chassis ground:*** ***(3V) No. 4 — (3V) No. 5:***	Is the resistance 1 MΩ or more?	Go to step **6**.	Check the door harness, and if any fault is found, replace the harness. If there is no fault, replace the airbag rear harness together with body harness.
6	**CHECK AIRBAG CONTROL MODULE.** 1) Connect all connectors. 2) Clear the memory. 3) Perform the Inspection Mode. 4) Read the DTC.	Is the same DTC displayed?	Go to step **7**.	Go to step **9**.
7	**REPLACE FRONT DOOR IMPACT SENSOR (RH) AND CHECK AIRBAG CONTROL MODULE AFTER REPLACEMENT.** 1) Turn the ignition switch to OFF, disconnect the battery ground cable, and wait for 60 seconds or more. 2) Replace the front door impact sensor (RH). <Ref. to AB-78, REMOVAL, Front Door Impact Sensor.> 3) Connect all connectors. 4) Clear the memory. 5) Perform the Inspection Mode. 6) Read the DTC.	Is the same DTC displayed?	Go to step **8**.	Go to step **9**.
8	**REPLACE CURTAIN AIRBAG SENSOR (RH) AND CHECK AIRBAG CONTROL MODULE AFTER REPLACEMENT.** 1) Turn the ignition switch to OFF, disconnect the battery ground cable, and wait for 60 seconds or more. 2) Replace the curtain airbag sensor (RH). <Ref. to AB-87, REMOVAL, Curtain Airbag Sensor.> 3) Connect all connectors. 4) Clear the memory. 5) Perform the Inspection Mode. 6) Read the DTC.	Is the same DTC displayed?	Replace the airbag control module. <Ref. to AB-68, REMOVAL, Airbag Control Module.>	Go to step **9**.
9	**CHECK FOR ANY OTHER DTC ON DISPLAY.**	Is any other DTC displayed?	Check DTC using "List of Diagnostic Trouble Code". <Ref. to AB(diag)-41, LIST, List of Diagnostic Trouble Code (DTC).>	Finish the diagnosis.

BO:DTC A4 DOOR SENSOR BUS LH COMMUNICATION ERROR

NOTE:
Refer to DTC A5 for DTC A4. <Ref. to AB(diag)-170, DTC A5 DOOR SENSOR BUS LH COMMUNICATION ERROR, Diagnostic Chart with Trouble Code.>

BP:DTC A5 DOOR SENSOR BUS LH COMMUNICATION ERROR

DTC DETECTING CONDITION:

- Open or short circuit in harness of side sensor bus (LH).
- Front door impact sensor (LH) is faulty.
- Curtain airbag sensor (LH) is faulty.
- Airbag control module is faulty.

CAUTION:

Before performing diagnosis, refer to "CAUTION" in "General Description". <Ref. to AB(diag)-5, CAUTION, General Description.>

WIRING DIAGRAM:

- Type A

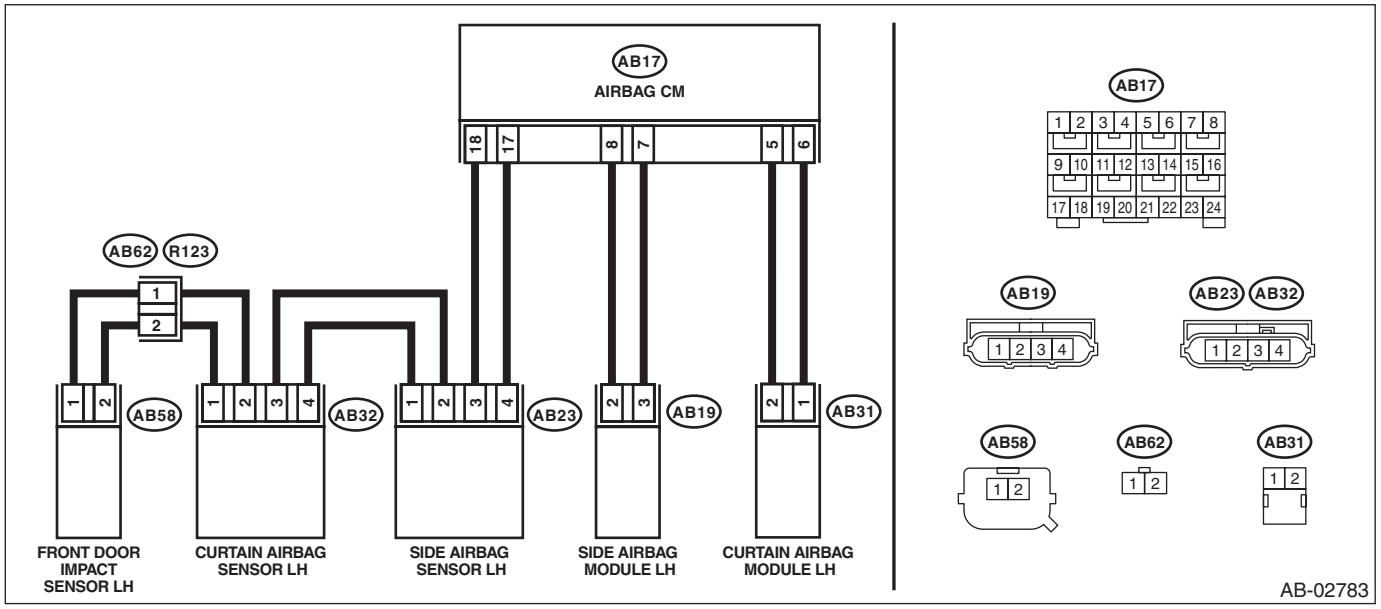

- Type B

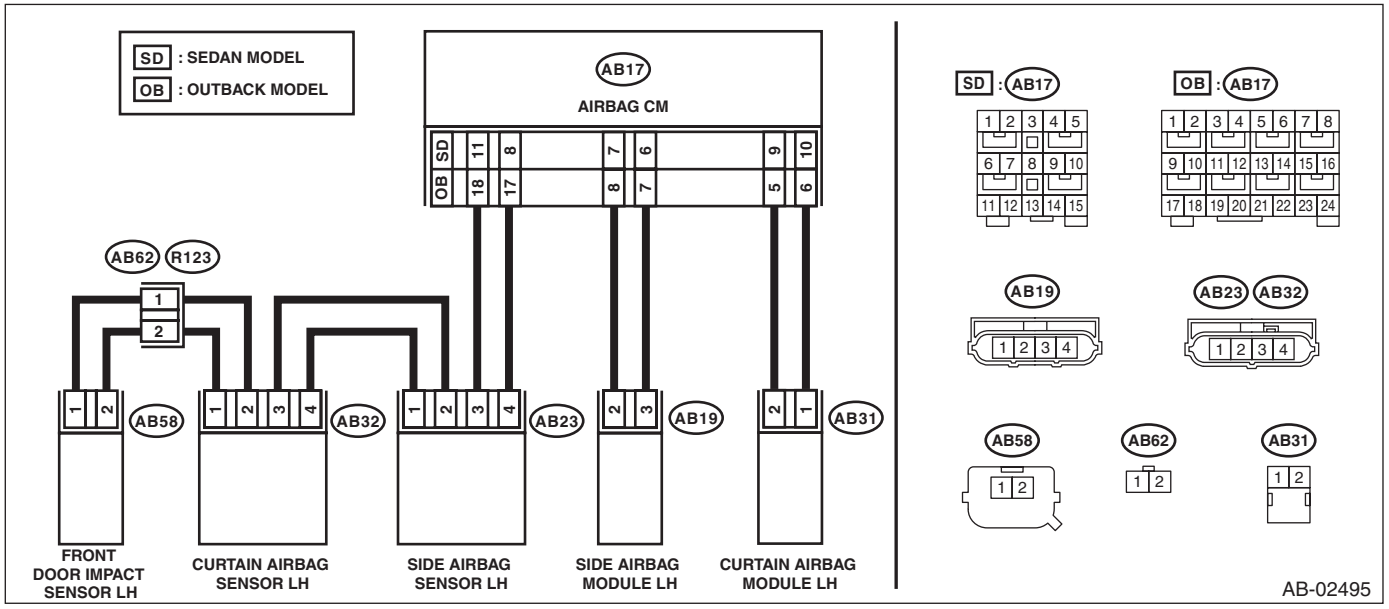

	Step	Check	Yes	No
1	**CHECK DTC.** Read the DTC.	Is DTC F3 or F4 displayed?	Perform the diagnosis of DTC F4. <Ref. to AB(diag)-201, DTC F4 SIDE SENSOR BUS LH COMMUNICATION ERROR, Diagnostic Chart with Trouble Code.>	Go to step **2**.
2	**CHECK DTC.** Read the DTC.	Is DTC F5 or F6 displayed?	Perform the diagnosis of DTC F6. <Ref. to AB(diag)-204, DTC F6 SIDE SENSOR BUS LH COMMUNICATION ERROR, Diagnostic Chart with Trouble Code.>	Go to step **3**.
3	**CHECK POOR CONTACT OF CONNECTORS.** Check for poor contact of the connectors between the airbag control module and the front door impact sensor (LH).	Is there poor contact?	Replace the airbag rear harness and the door harness.	Go to step **4**.
4	**CHECK AIRBAG REAR HARNESS AND DOOR HARNESS (BETWEEN CURTAIN AIRBAG SENSOR LH AND FRONT DOOR IMPACT SENSOR LH).** 1) Turn the ignition switch to OFF, disconnect the battery ground cable, and wait for 60 seconds or more. 2) Disconnect the connector (AB21) from seat belt pretensioner (LH). 3) Disconnect the connector (AB31) from curtain airbag module (LH). 4) Disconnect connector (AB19) from side airbag module (LH). 5) Disconnect the connector (AB32) from curtain airbag sensor (LH), and connect the connector (2V) in test harness V to connector (AB32). 6) Disconnect the connector (AB58) from the front door impact sensor (LH), and connect the connector (1H) in the test harness H to connector (AB58). 7) Measure the resistance between connector (3V) in the test harness V and connector (3H) in the test harness H. ***Connector & terminal*** ***(3V) No. 4 — (3H) No. 5:*** ***(3V) No. 5 — (3H) No. 6:***	Is the resistance less than 10 Ω?	Go to step **5**.	Check the door harness, and if any fault is found, replace the harness. If there is no fault, replace the airbag rear harness together with body harness.

	Step	Check	Yes	No
5	**CHECK AIRBAG REAR HARNESS AND DOOR HARNESS (BETWEEN CURTAIN AIRBAG SENSOR LH AND FRONT DOOR IMPACT SENSOR LH).** Measure the resistance between connector (3V) in test harness V and chassis ground, and the resistance between connector (3V) terminals in test harness V. ***Connector & terminal*** ***(3V) No. 4 — Chassis ground:*** ***(3V) No. 5 — Chassis ground:*** ***(3V) No. 4 — (3V) No. 5:***	Is the resistance 1 MΩ or more?	Go to step **6**.	Check the door harness, and if any fault is found, replace the harness. If there is no fault, replace the airbag rear harness together with body harness.
6	**CHECK AIRBAG CONTROL MODULE.** 1) Connect all connectors. 2) Clear the memory. 3) Perform the Inspection Mode. 4) Read the DTC.	Is the same DTC displayed?	Go to step **7**.	Go to step **9**.
7	**REPLACE FRONT DOOR IMPACT SENSOR (LH) AND CHECK AIRBAG CONTROL MODULE AFTER REPLACEMENT.** 1) Turn the ignition switch to OFF, disconnect the battery ground cable, and wait for 60 seconds or more. 2) Replace the front door impact sensor (LH). <Ref. to AB-78, REMOVAL, Front Door Impact Sensor.> 3) Connect all connectors. 4) Clear the memory. 5) Perform the Inspection Mode. 6) Read the DTC.	Is the same DTC displayed?	Go to step **8**.	Go to step **9**.
8	**REPLACE CURTAIN AIRBAG SENSOR (LH) AND CHECK AIRBAG CONTROL MODULE AFTER REPLACEMENT.** 1) Turn the ignition switch to OFF, disconnect the battery ground cable, and wait for 60 seconds or more. 2) Replace the curtain airbag sensor (LH). <Ref. to AB-87, REMOVAL, Curtain Airbag Sensor.> 3) Connect all connectors. 4) Clear the memory. 5) Perform the Inspection Mode. 6) Read the DTC.	Is the same DTC displayed?	Replace the airbag control module. <Ref. to AB-68, REMOVAL, Airbag Control Module.>	Go to step **9**.
9	**CHECK FOR ANY OTHER DTC ON DISPLAY.** Read the DTC.	Is any other DTC displayed?	Check DTC using "List of Diagnostic Trouble Code". <Ref. to AB(diag)-41, LIST, List of Diagnostic Trouble Code (DTC).>	Finish the diagnosis.

BQ:DTC AA DOOR SENSOR RH FAILURE

DTC DETECTING CONDITION:

Front door impact sensor (RH) is faulty.
If DTC AA is displayed, the circuit within the front door impact sensor (RH) is faulty.
Replace the front door impact sensor (RH). <Ref. to AB-78, REMOVAL, Front Door Impact Sensor.>

BR:DTC AB DOOR SENSOR LH FAILURE

DTC DETECTING CONDITION:

Front door impact sensor (LH) is faulty.
If DTC AB is displayed, the circuit within the front door impact sensor (LH) is faulty.
Replace the front door impact sensor (LH). <Ref. to AB-78, REMOVAL, Front Door Impact Sensor.>

BS:DTC AC DOOR SENSOR RH FALSE INSTALLATION

DTC DETECTING CONDITION:

- Front door impact sensor (RH) is misinstalled.
- Airbag control module is faulty.

	Step	Check	Yes	No
1	**REPLACE FRONT DOOR IMPACT SENSOR (RH).** 1) Turn the ignition switch to OFF, disconnect the battery ground cable, and wait for 60 seconds or more. 2) Replace the front door impact sensor (RH) with a genuine sensor. <Ref. to AB-78, REMOVAL, Front Door Impact Sensor.>	Does the warning light go off?	Finish the diagnosis.	Replace the airbag control module. <Ref. to AB-68, REMOVAL, Airbag Control Module.>

BT:DTC AD DOOR SENSOR LH FALSE INSTALLATION

DTC DETECTING CONDITION:

- Front door impact sensor (LH) is misinstalled.
- Airbag control module is faulty.

	Step	Check	Yes	No
1	**REPLACE FRONT DOOR IMPACT SENSOR (LH).** 1) Turn the ignition switch to OFF, disconnect the battery ground cable, and wait for 60 seconds or more. 2) Replace the front door impact sensor (LH) with a genuine sensor. <Ref. to AB-78, REMOVAL, Front Door Impact Sensor.>	Does the warning light go off?	Finish the diagnosis.	Replace the airbag control module. <Ref. to AB-68, REMOVAL, Airbag Control Module.>

BU:DTC BB ROLL OVER: FIRING OUTPUT

This DTC is indicated when the curtain airbag module and the seat belt pretensioner are deployed.
Once this DTC is displayed, the memory cannot be cleared. Replace the following parts.

- Airbag control module <Ref. to AB-68, Airbag Control Module.>
- Curtain airbag module (operating side) <Ref. to AB-65, Curtain Airbag Module.>
- Curtain airbag sensor (operating side) <Ref. to AB-87, Curtain Airbag Sensor.>
- Front outer seat belt with pretensioner (operating side) <Ref. to SB-17, Front Seat Belt.>

BV:DTC E2 FRONT SENSOR BUS RH COMMUNICATION ERROR

NOTE:
Refer to DTC E4 for details on DTC E2. <Ref. to AB(diag)-175, DTC E4 FRONT SENSOR BUS RH COMMUNICATION ERROR, Diagnostic Chart with Trouble Code.>

BW:DTC E3 FRONT SENSOR BUS RH COMMUNICATION ERROR

NOTE:
Be sure to properly identify the Airbag system type prior to performing any diagnostics.

- Type A

NOTE:
Refer to DTC E4 for details on DTC E3. <Ref. to AB(diag)-175, DTC E4 FRONT SENSOR BUS RH COMMUNICATION ERROR, Diagnostic Chart with Trouble Code.>

- Type B

NOTE:
Refer to DTC A1 for DTC E3. <Ref. to AB(diag)-164, DTC A1 FRONT SENSOR BUS COMMUNICATION ERROR, Diagnostic Chart with Trouble Code.>

BX:DTC E4 FRONT SENSOR BUS RH COMMUNICATION ERROR

NOTE:
Be sure to properly identify the Airbag system type prior to performing any diagnostics.

1. TYPE A

DTC DETECTING CONDITION:

- Open or short circuit in harness of front sensor bus (RH).
- Front sub sensor (RH) is faulty.
- Airbag control module is faulty.

CAUTION:
Before performing diagnosis, refer to "CAUTION" in "General Description". <Ref. to AB(diag)-5, CAUTION, General Description.>
WIRING DIAGRAM:

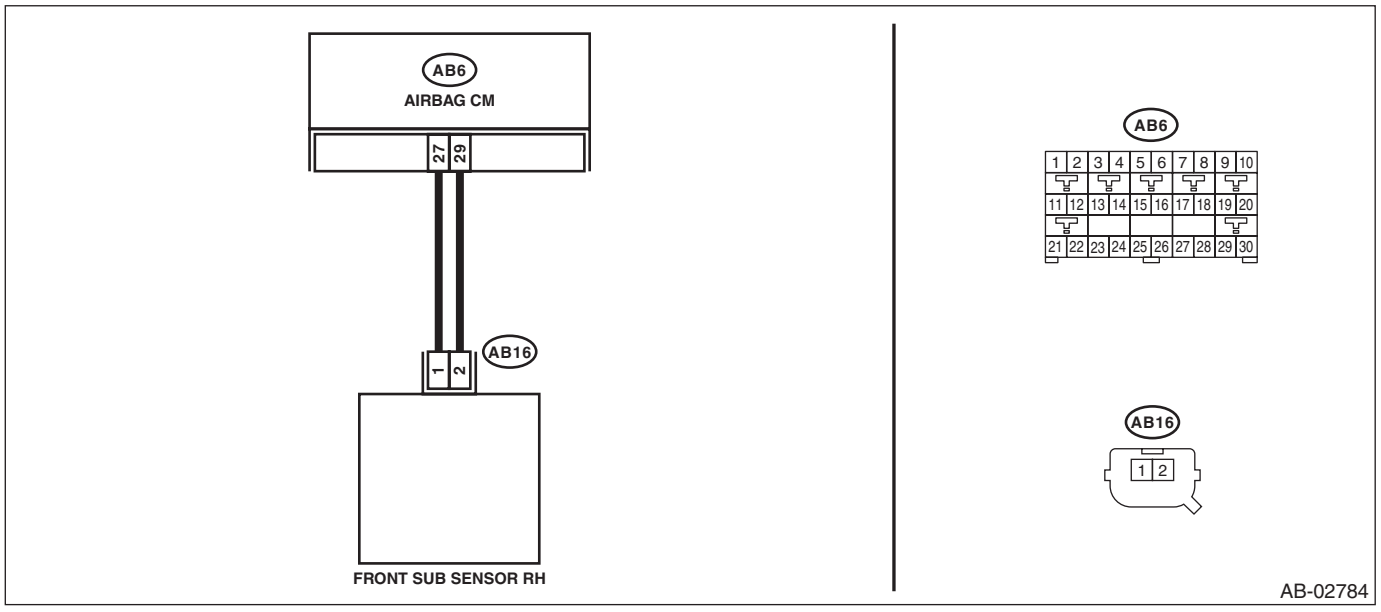

Step		Check	Yes	No
1	**CHECK POOR CONTACT OF CONNECTORS.** Check for poor contact of the connectors between the airbag control module and the front sub sensor (RH).	Is there poor contact?	Replace the airbag main harness along with body harness.	Go to step **2**.

	Step	Check	Yes	No
2	**CHECK AIRBAG MAIN HARNESS (FRONT SENSOR BUS RH).** 1) Turn the ignition switch to OFF, disconnect the battery ground cable, and wait for 60 seconds or more. 2) Remove the instrument panel lower cover and disconnect the connectors (AB7) and (AB2). 3) Remove the console front panel and disconnect the connectors (AB10) and (AB9). 4) Disconnect the connectors (AB17, AB6, AB18) from airbag control module. 5) Connect the connector (1AG) in the test harness AG to the connectors (AB17, AB6, AB18). 6) Disconnect the front sub sensor (RH), and then connect the connector (1H) in the test harness H to connector (AB16). 7) Measure the resistance between connector (4AG) in the test harness AG and connector (3H) in the test harness H. ***Connector & terminal*** ***(4AG) No. 14 — (3H) No. 5:*** ***(4AG) No. 12 — (3H) No. 6:***	Is the resistance less than 10 Ω?	Go to step **3**.	Replace the airbag main harness along with body harness.
3	**CHECK AIRBAG MAIN HARNESS (FRONT SENSOR BUS RH).** Measure the resistance between connector (4AG) in the test harness AG and chassis ground, and the resistance between connector (4AG) in the test harness AG and connector (3H) in test harness H. ***Connector & terminal*** ***(4AG) No. 14 — Chassis ground:*** ***(4AG) No. 12 — Chassis ground:*** ***(4AG) No. 14 — (4AG) No. 12:***	Is the resistance 1 MΩ or more?	Go to step **4**.	Replace the airbag main harness along with body harness.
4	**CHECK AIRBAG CONTROL MODULE.** 1) Connect all connectors. 2) Clear the memory. 3) Perform the Inspection Mode. 4) Read the DTC.	Is the same DTC displayed?	Replace the front sub sensor (RH). <Ref. to AB-71, REMOVAL, Front Sub Sensor.> Replace the airbag control module if not operating normally even after replacing the sensor. <Ref. to AB-68, REMOVAL, Airbag Control Module.>	Go to step **5**.
5	**CHECK FOR ANY OTHER DTC ON DISPLAY.**	Is any other DTC displayed?	Check DTC using "List of Diagnostic Trouble Code". <Ref. to AB(diag)-41, LIST, List of Diagnostic Trouble Code (DTC).>	Finish the diagnosis.

2. TYPE B

NOTE:
Refer to DTC A1 for DTC E4. <Ref. to AB(diag)-164, DTC A1 FRONT SENSOR BUS COMMUNICATION ERROR, Diagnostic Chart with Trouble Code.>

BY:DTC E6 FRONT SENSOR BUS LH COMMUNICATION ERROR

NOTE:
Refer to DTC E8 for details on DTC E6. <Ref. to AB(diag)-181, DTC E8 FRONT SENSOR BUS LH COMMUNICATION ERROR, Diagnostic Chart with Trouble Code.>

BZ:DTC E7 FRONT SENSOR BUS LH COMMUNICATION ERROR

NOTE:
Be sure to properly identify the Airbag system type prior to performing any diagnostics.

1. TYPE A

NOTE:
Refer to DTC E8 for details on DTC E7. <Ref. to AB(diag)-181, DTC E8 FRONT SENSOR BUS LH COMMUNICATION ERROR, Diagnostic Chart with Trouble Code.>

2. TYPE B

DTC DETECTING CONDITION:

- Open or short circuit in harness of front sensor bus (LH).
- Front sub sensor (LH) is faulty.
- Airbag control module is faulty.

CAUTION:
Before performing diagnosis, refer to "CAUTION" in "General Description". <Ref. to AB(diag)-5, CAUTION, General Description.>
WIRING DIAGRAM:

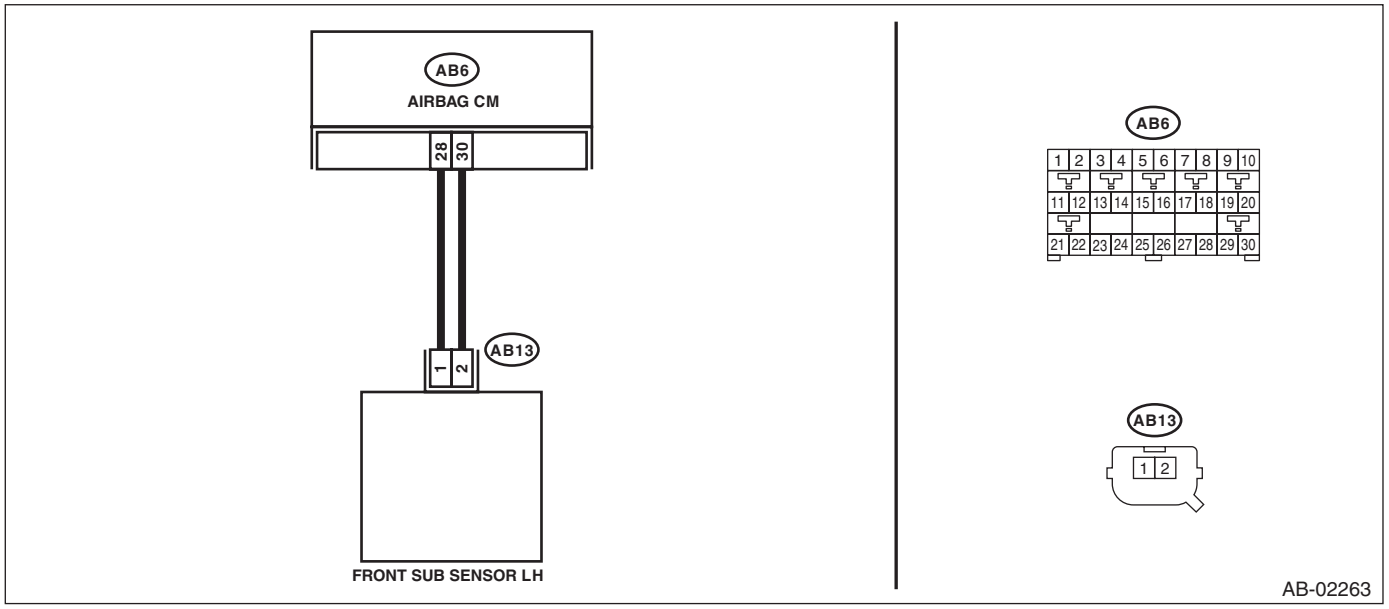

	Step	Check	Yes	No
1	**CHECK POOR CONTACT OF CONNECTORS.** Check for poor contact of the connectors (AB6, AB13) between the airbag control module and the front sub sensor (LH).	Is there poor contact?	Replace the airbag main harness along with body harness.	Go to step **2**.

	Step	Check	Yes	No
2	**CHECK AIRBAG MAIN HARNESS (FRONT SENSOR BUS LH).** 1) Turn the ignition switch to OFF, disconnect the battery ground cable, and wait for 60 seconds or more. 2) Remove the instrument panel lower cover and column cover, and disconnect the connectors (AB7) and (AB2). 3) Remove the console front panel and disconnect the connector (AB9). 4) Disconnect the connectors (AB6, AB17, AB18) from airbag control module. 5) Connect the connector (1AG) in the test harness AG to the connectors (AB6, AB17, AB18). NOTE: For sedan models, connect test harness AH between the connectors (AB6, AB17, AB18) and (1AG). 6) Disconnect the front sub sensor (LH), and then connect the connector (1H) in the test harness H to connector (AB13). 7) Measure the resistance between connector (4AG) in the test harness AG and connector (3H) in the test harness H. ***Connector & terminal*** ***(4AG) No. 7 — (3H) No. 5:*** ***(4AG) No. 9 — (3H) No. 6:***	Is the resistance less than 10 Ω?	Go to step **3**.	Replace the airbag main harness along with body harness.
3	**CHECK AIRBAG MAIN HARNESS (FRONT SENSOR BUS LH).** Measure the resistance between connector (4AG) in the test harness AG and chassis ground, and the resistance between connector (4AG) terminals in the test harness AG. ***Connector & terminal*** ***(4AG) No. 7 — Chassis ground:*** ***(4AG) No. 9 — Chassis ground:*** ***(4AG) No. 7 — (4AG) No. 9:***	Is the resistance 1 MΩ or more?	Go to step **4**.	Replace the airbag main harness along with body harness.
4	**CHECK AIRBAG CONTROL MODULE.** 1) Connect all connectors. 2) Clear the memory. 3) Perform the Inspection Mode. 4) Read the DTC.	Is the same DTC displayed?	Replace the front sub sensor (LH). <Ref. to AB-71, REMOVAL, Front Sub Sensor.> Replace the airbag control module if not operating normally even after replacing the sensor. <Ref. to AB-68, REMOVAL, Airbag Control Module.>	Go to step **5**.
5	**CHECK FOR ANY OTHER DTC ON DISPLAY.**	Is any other DTC displayed?	Check DTC using “List of Diagnostic Trouble Code”. <Ref. to AB(diag)-41, LIST, List of Diagnostic Trouble Code (DTC).>	Finish the diagnosis.

CA:DTC E8 FRONT SENSOR BUS LH COMMUNICATION ERROR

NOTE:
Be sure to properly identify the Airbag system type prior to performing any diagnostics.

1. TYPE A

DTC DETECTING CONDITION:

- Open or short circuit in harness of front sensor bus (LH).
- Front sub sensor (LH) is faulty.
- Airbag control module is faulty.

CAUTION:
Before performing diagnosis, refer to "CAUTION" in "General Description". <Ref. to AB(diag)-5, CAUTION, General Description.>
WIRING DIAGRAM:

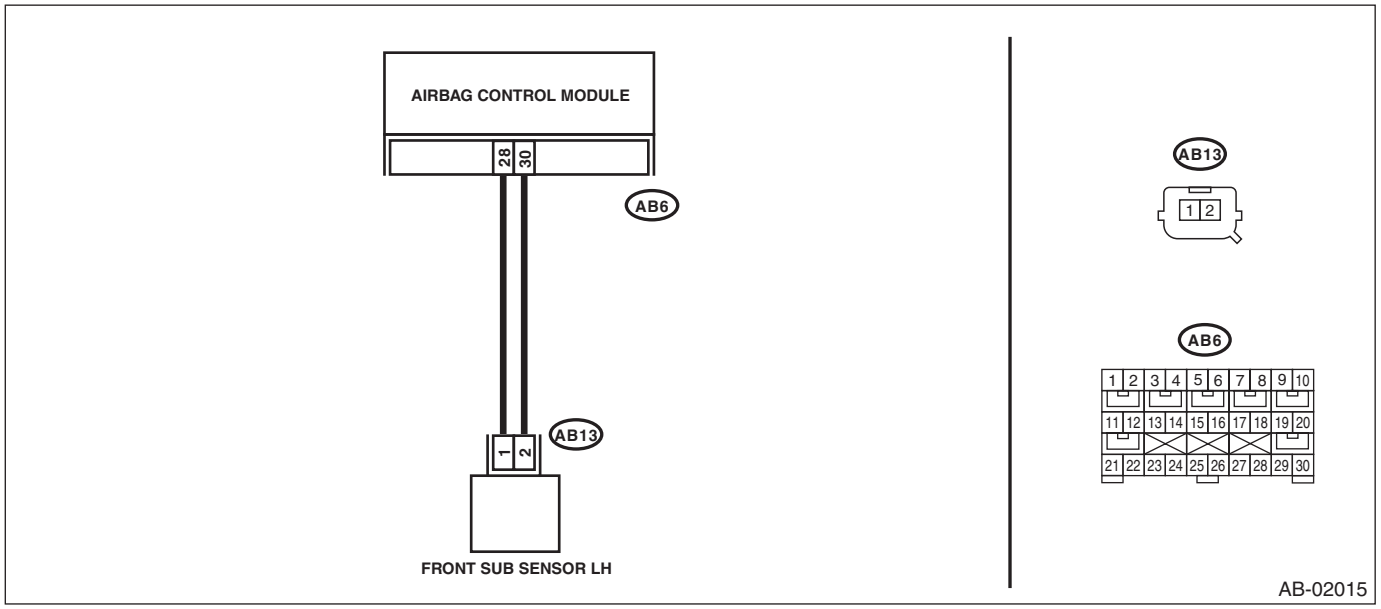

Step		Check	Yes	No
1	**CHECK POOR CONTACT OF CONNECTORS.** Check for poor contact of the connectors (AB6, AB13) between the airbag control module and the front sub sensor (LH).	Is there poor contact?	Replace the airbag main harness along with body harness.	Go to step **2**.

	Step	Check	Yes	No
2	**CHECK AIRBAG MAIN HARNESS (FRONT SENSOR BUS LH).** 1) Turn the ignition switch to OFF, disconnect the battery ground cable, and wait for 60 seconds or more. 2) Remove the instrument panel lower cover and disconnect the connectors (AB7) and (AB2). 3) Remove the console front panel and disconnect the connectors (AB9) and (AB10). 4) Disconnect the connectors (AB17, AB6, AB18) from airbag control module. 5) Connect the connector (1AG) in the test harness AG to the connectors (AB17, AB6, AB18). 6) Disconnect the front sub sensor (LH), and then connect the connector (1H) in the test harness H to connector (AB13). 7) Measure the resistance between connector (4AG) in the test harness AG and connector (3H) in the test harness H. ***Connector & terminal*** ***(4AG) No. 7 — (3H) No. 5:*** ***(4AG) No. 9 — (3H) No. 6:***	Is the resistance less than 10 Ω?	Go to step **3**.	Replace the airbag main harness along with body harness.
3	**CHECK AIRBAG MAIN HARNESS (FRONT SENSOR BUS LH).** Measure the resistance between connector (4AG) in the test harness AG and chassis ground, and the resistance between connector (4AG) terminals in the test harness AG. ***Connector & terminal*** ***(4AG) No. 7 — Chassis ground:*** ***(4AG) No. 9 — Chassis ground:*** ***(4AG) No. 7 — (4AG) No. 9:***	Is the resistance 1 MΩ or more?	Go to step **4**.	Replace the airbag main harness along with body harness.
4	**CHECK AIRBAG CONTROL MODULE.** 1) Connect all connectors. 2) Clear the memory. 3) Perform the Inspection Mode. 4) Read the DTC.	Is the same DTC displayed?	Replace the front sub sensor (LH). <Ref. to AB-71, REMOVAL, Front Sub Sensor.> Replace the airbag control module if not operating normally even after replacing the sensor. <Ref. to AB-68, REMOVAL, Airbag Control Module.>	Go to step **5**.
5	**CHECK FOR ANY OTHER DTC ON DISPLAY.**	Is any other DTC displayed?	Check DTC using "List of Diagnostic Trouble Code". <Ref. to AB(diag)-41, LIST, List of Diagnostic Trouble Code (DTC).>	Finish the diagnosis.

2. TYPE B

NOTE:
Refer to DTC E7 for DTC E8. <Ref. to AB(diag)-178, DTC E7 FRONT SENSOR BUS LH COMMUNICATION ERROR, Diagnostic Chart with Trouble Code.>

CB:DTC E9 SIDE SENSOR BUS RH COMMUNICATION ERROR

NOTE:
Be sure to properly identify the Airbag system type prior to performing any diagnostics.

DTC DETECTING CONDITION:

- Open or short circuit in harness of side sensor bus (RH).
- Side airbag sensor (RH) is faulty.
- Curtain airbag sensor (RH) is faulty.
- Front door impact sensor (RH) is faulty.
- Airbag control module is faulty.

CAUTION:
Before performing diagnosis, refer to "CAUTION" in "General Description". <Ref. to AB(diag)-5, CAUTION, General Description.>

WIRING DIAGRAM:

- Type A

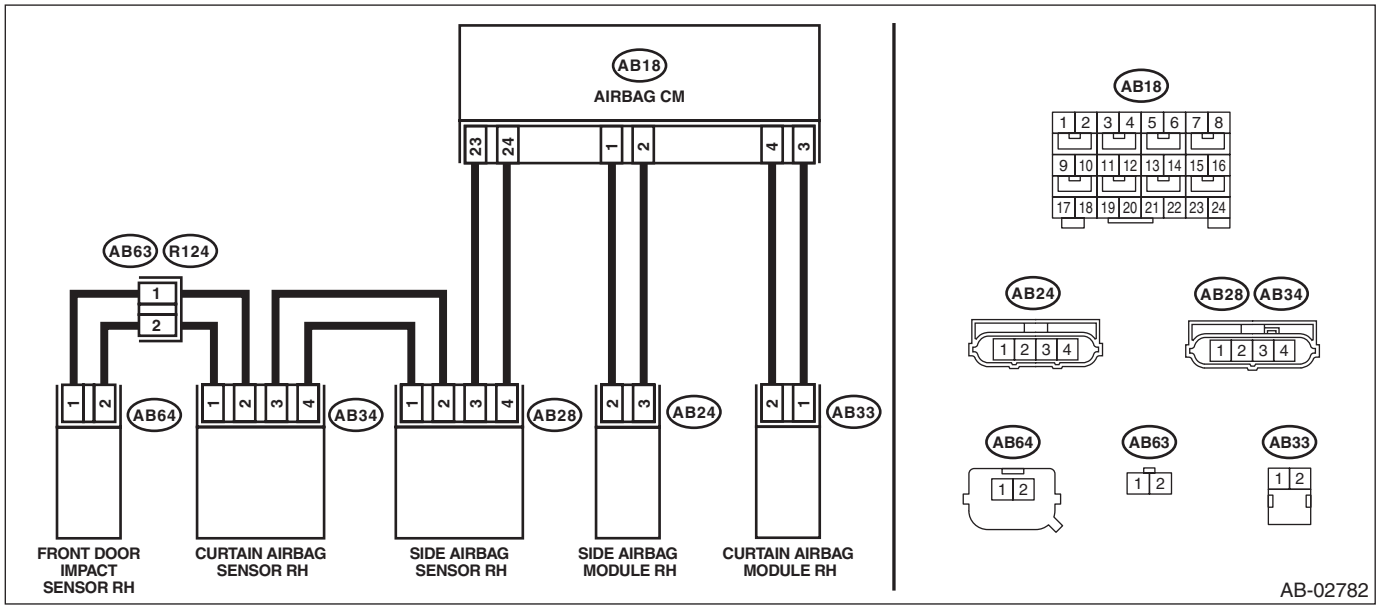

- Type B

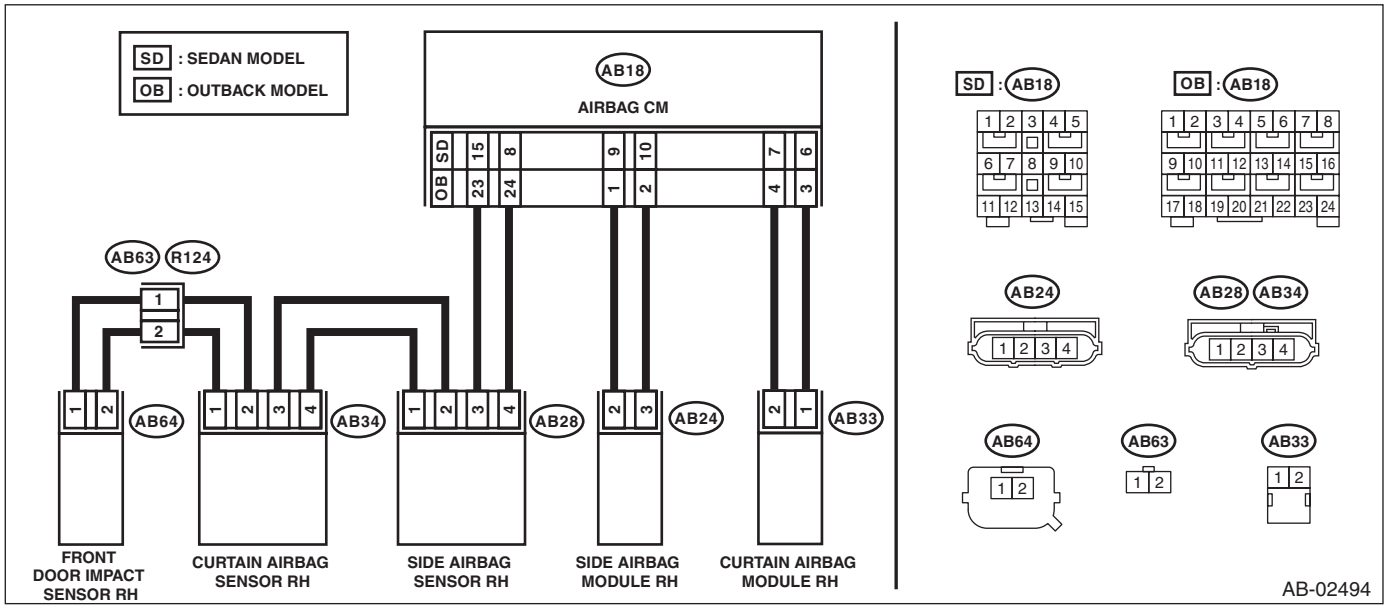

	Step	Check	Yes	No
1	**CHECK DTC.** Read the DTC.	Is DTC EB or EC displayed?	Perform the diagnosis of DTC EC. <Ref. to AB(diag)-189, DTC EC SIDE SENSOR BUS RH COMMUNICATION ERROR, Diagnostic Chart with Trouble Code.>	Go to step **2**.
2	**CHECK DTC.** Read the DTC.	Is DTC ED or EE displayed?	Perform the diagnosis of DTC EE. <Ref. to AB(diag)-192, DTC EE SIDE SENSOR BUS RH COMMUNICATION ERROR, Diagnostic Chart with Trouble Code.>	Go to step **3**.
3	**CHECK DTC.** Read the DTC.	Is DTC A2 or A3 displayed?	Perform the diagnosis of DTC A3. <Ref. to AB(diag)-167, DTC A3 DOOR SENSOR BUS RH COMMUNICATION ERROR, Diagnostic Chart with Trouble Code.>	Go to step **4**.
4	**CHECK POOR CONTACT OF CONNECTORS.** Check for poor contact of the connectors between the airbag control module and the front door impact sensor (RH).	Is there poor contact?	Replace the airbag rear harness and the door harness.	Go to step **5**.

	Step	Check	Yes	No
5	**CHECK AIRBAG REAR HARNESS (BETWEEN AIRBAG CONTROL MODULE AND SIDE AIRBAG SENSOR RH).** 1) Turn the ignition switch to OFF, disconnect the battery ground cable, and wait for 60 seconds or more. 2) Disconnect the connector (AB26) from seat belt pretensioner (RH). 3) Disconnect the connector (AB33) from curtain airbag module (RH). 4) Disconnect connector (AB24) of the side airbag module (RH). 5) Disconnect the connectors (AB6, AB17, AB18) from airbag control module. 6) Connect the connector (1AG) in the test harness AG to the connectors (AB6, AB17, AB18). NOTE: For type B (sedan models), connect test harness AH between the connectors (AB6, AB17, AB18) and (1AG). 7) Disconnect connector (AB28) from side airbag sensor (RH). 8) Connect the connector (2V) in the test harness V to the connector (AB28). 9) Measure the resistance between connector (5AG) in the test harness AG and connector (3V) in the test harness V. ***Connector & terminal*** ***Type A & Type B (OUTBACK model)*** ***(5AG) No. 8 — (3V) No. 2:*** ***(5AG) No. 10 — (3V) No. 1:*** ***Type B (Sedan model)*** ***(5AG) No. 9 — (3V) No. 2:*** ***(5AG) No. 10 — (3V) No. 1:***	Is the resistance less than 10 Ω?	Go to step **6**.	Replace the airbag rear harness along with body harness.
6	**CHECK AIRBAG REAR HARNESS (BETWEEN AIRBAG CONTROL MODULE AND SIDE AIRBAG SENSOR RH).** Measure the resistance between connector (3V) in test harness V and chassis ground, and the resistance between connector (3V) terminals. ***Connector & terminal*** ***(3V) No. 1 — Chassis ground:*** ***(3V) No. 2 — Chassis ground:*** ***(3V) No. 1 — (3V) No. 2:***	Is the resistance 1 MΩ or more?	Go to step **7**.	Replace the airbag rear harness along with body harness.

	Step	Check	Yes	No
7	**CHECK AIRBAG REAR HARNESS (BETWEEN SIDE AIRBAG SENSOR AND CURTAIN AIRBAG SENSOR RH).** 1) Disconnect the connector (2V) in the test harness V from the connector (AB28) of side airbag sensor (RH). 2) Connect the connector (AB28) of side airbag sensor (RH) and the connector (1AI) in the test harness AI. 3) Connect the connector (2AI) in the test harness AI and the connector (1V) in the test harness V. 4) Disconnect the connector (AB34) from curtain airbag sensor (RH), and connect the connector (2V) in test harness V to connector (AB34). 5) Measure the resistance between connector (3V) terminals in the test harness V. ***Connector & terminal*** ***(3V) No. 2 — (3V) No. 6:*** ***(3V) No. 1 — (3V) No. 7:***	Is the resistance less than 10 Ω?	Go to step **8**.	Replace the airbag rear harness along with body harness.
8	**CHECK AIRBAG REAR HARNESS (BETWEEN SIDE AIRBAG SENSOR AND CURTAIN AIRBAG SENSOR RH).** Measure the resistance between connector (3V) in test harness V and chassis ground, and the resistance between connector (3V) terminals in test harness V. ***Connector & terminal*** ***(3V) No. 2 — Chassis ground:*** ***(3V) No. 1 — Chassis ground:*** ***(3V) No. 1 — (3V) No. 2:***	Is the resistance 1 MΩ or more?	Go to step **9**.	Replace the airbag rear harness along with body harness.
9	**CHECK AIRBAG REAR HARNESS AND DOOR HARNESS (BETWEEN CURTAIN AIRBAG SENSOR RH AND DOOR SENSOR RH).** 1) Disconnect the connector (AB64) from the front door impact sensor (RH), and connect the connector (1H) in the test harness H to connector (AB64). 2) Measure the resistance between connector (3V) in the test harness V and connector (3H) in the test harness H. ***Connector & terminal*** ***(3V) No. 4 — (3H) No. 5:*** ***(3V) No. 5 — (3H) No. 6:***	Is the resistance less than 10 Ω?	Go to step **10**.	Check the door harness, and if any fault is found, replace the harness. If there is no fault, replace the airbag rear harness together with body harness.
10	**CHECK AIRBAG REAR HARNESS AND DOOR HARNESS (BETWEEN CURTAIN AIRBAG SENSOR RH AND FRONT DOOR IMPACT SENSOR RH).** Measure the resistance between connector (3V) in test harness V and chassis ground, and the resistance between connector (3V) terminals in test harness V. ***Connector & terminal*** ***(3V) No. 4 — Chassis ground:*** ***(3V) No. 5 — Chassis ground:*** ***(3V) No. 4 — (3V) No. 5:***	Is the resistance 1 MΩ or more?	Go to step **11**.	Check the door harness, and if any fault is found, replace the harness. If there is no fault, replace the airbag rear harness together with body harness.

	Step	Check	Yes	No
11	**CHECK AIRBAG CONTROL MODULE.** 1) Connect all connectors. 2) Clear the memory. 3) Perform the Inspection Mode. 4) Read the DTC.	Is the same DTC displayed?	Go to step **12**.	Go to step **15**.
12	**REPLACE SIDE AIRBAG SENSOR (RH) AND CHECK AIRBAG CONTROL MODULE AFTER REPLACEMENT.** 1) Turn the ignition switch to OFF, disconnect the battery ground cable, and wait for 60 seconds or more. 2) Replace the side airbag sensor (RH). <Ref. to AB-81, REMOVAL, Side Airbag Sensor.> 3) Connect all connectors. 4) Clear the memory. 5) Perform the Inspection Mode. 6) Read the DTC.	Is the same DTC displayed?	Go to step **13**.	Go to step **15**.
13	**REPLACE CURTAIN AIRBAG SENSOR (RH) AND CHECK AIRBAG CONTROL MODULE AFTER REPLACEMENT.** 1) Turn the ignition switch to OFF, disconnect the battery ground cable, and wait for 60 seconds or more. 2) Replace the curtain airbag sensor (RH). <Ref. to AB-87, REMOVAL, Curtain Airbag Sensor.> 3) Connect all connectors. 4) Clear the memory. 5) Perform the Inspection Mode. 6) Read the DTC.	Is the same DTC displayed?	Go to step **14**.	Go to step **15**.
14	**REPLACE FRONT DOOR IMPACT SENSOR (RH) AND CHECK AIRBAG CONTROL MODULE AFTER REPLACEMENT.** 1) Turn the ignition switch to OFF, disconnect the battery ground cable, and wait for 60 seconds or more. 2) Replace the front door impact sensor (RH). <Ref. to AB-78, REMOVAL, Front Door Impact Sensor.> 3) Connect all connectors. 4) Clear the memory. 5) Perform the Inspection Mode. 6) Read the DTC.	Is the same DTC displayed?	Replace the airbag control module. <Ref. to AB-68, REMOVAL, Airbag Control Module.>	Go to step **15**.
15	**CHECK FOR ANY OTHER DTC ON DISPLAY.** Read the DTC.	Is any other DTC displayed?	Check DTC using “List of Diagnostic Trouble Code”. <Ref. to AB(diag)-41, LIST, List of Diagnostic Trouble Code (DTC).>	Finish the diagnosis.

CC:DTC EA SIDE SENSOR BUS RH COMMUNICATION ERROR

NOTE:
Refer to DTC E9 for details on DTC EA. <Ref. to AB(diag)-183, DTC E9 SIDE SENSOR BUS RH COMMUNICATION ERROR, Diagnostic Chart with Trouble Code.>

CD:DTC EB SIDE SENSOR BUS RH COMMUNICATION ERROR

NOTE:
Refer to DTC EC for details on DTC EB. <Ref. to AB(diag)-189, DTC EC SIDE SENSOR BUS RH COMMUNICATION ERROR, Diagnostic Chart with Trouble Code.>

CE:DTC EC SIDE SENSOR BUS RH COMMUNICATION ERROR

NOTE:
Be sure to properly identify the Airbag system type prior to performing any diagnostics.

DTC DETECTING CONDITION:

- Open or short circuit in harness of side sensor bus (RH).
- Side airbag sensor (RH) is faulty.
- Airbag control module is faulty.

CAUTION:

Before performing diagnosis, refer to "CAUTION" in "General Description". <Ref. to AB(diag)-5, CAUTION, General Description.>

WIRING DIAGRAM:

- Type A

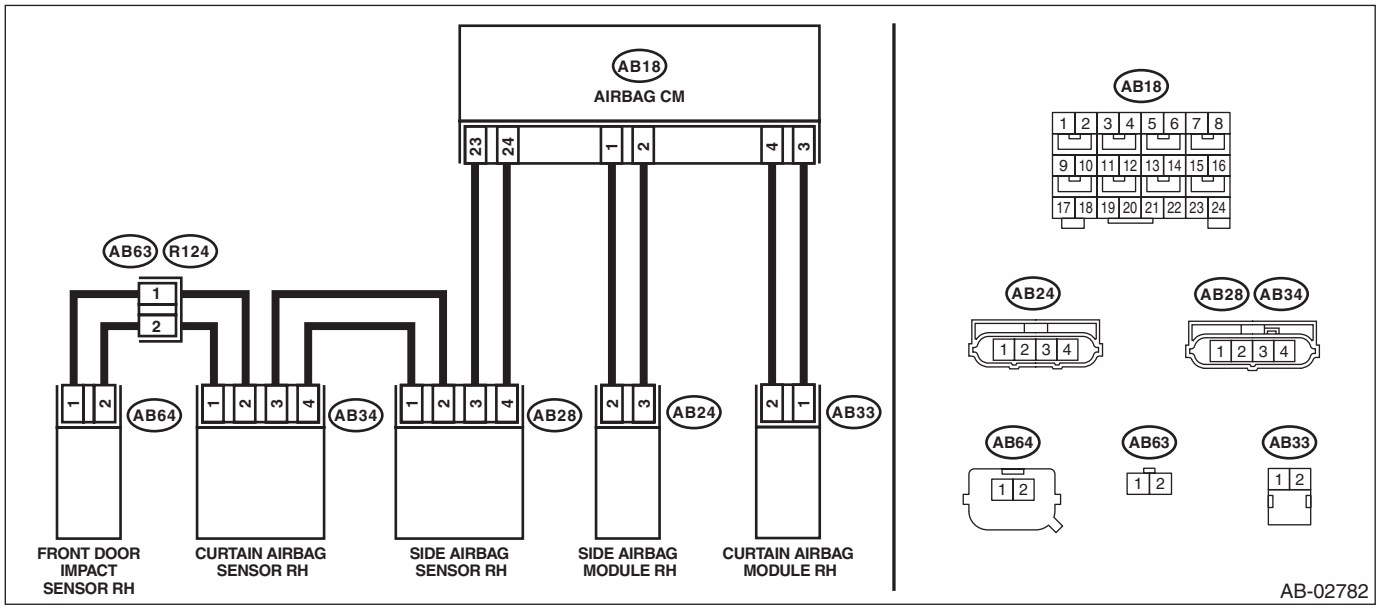

- Type B

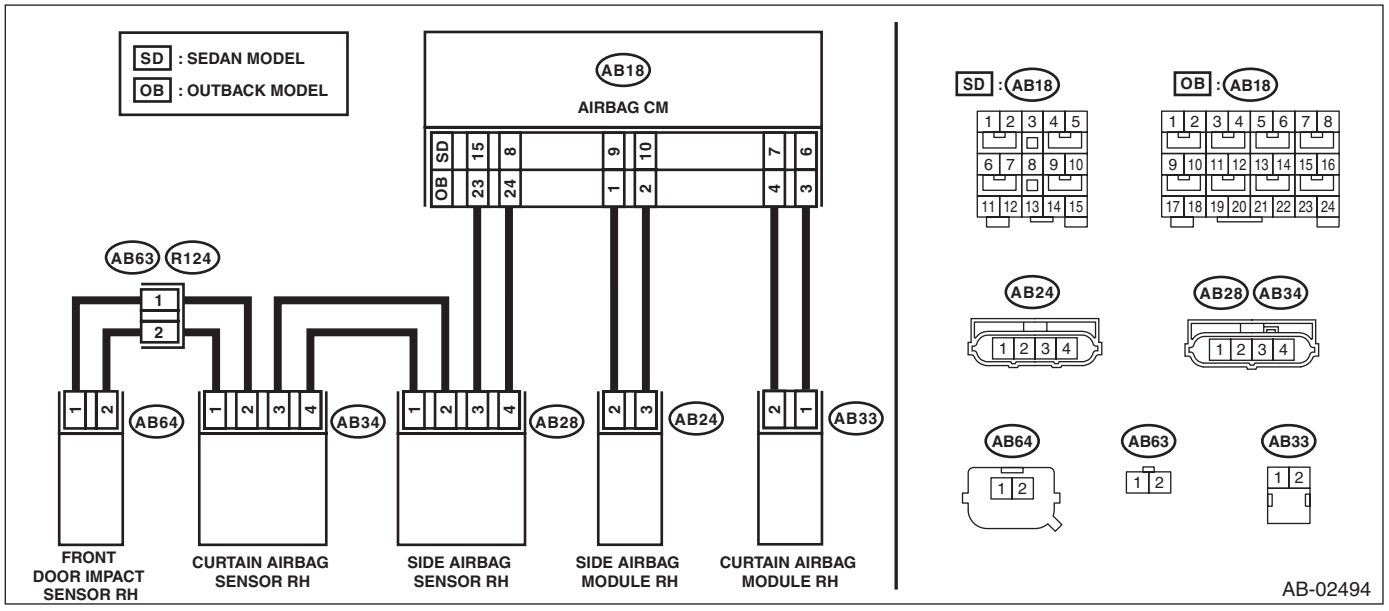

	Step	Check	Yes	No
1	**CHECK POOR CONTACT OF CONNECTORS.** Check for poor contact of the connectors between the airbag control module and the side airbag sensor (RH).	Is there poor contact?	Replace the airbag rear harness and the door harness.	Go to step **2**.
2	**CHECK AIRBAG REAR HARNESS (BETWEEN AIRBAG CONTROL MODULE AND SIDE AIRBAG SENSOR RH).** 1) Turn the ignition switch to OFF, disconnect the battery ground cable, and wait for 60 seconds or more. 2) Disconnect the connector (AB26) from seat belt pretensioner (RH). 3) Disconnect the connector (AB33) from curtain airbag module (RH). 4) Disconnect connector (AB24) of the side airbag module (RH). 5) Disconnect the connectors (AB6, AB17, AB18) from airbag control module. 6) Connect the connector (1AG) in the test harness AG to the connectors (AB6, AB17, AB18). NOTE: For type B (sedan models), connect test harness AH between the connectors (AB6, AB17, AB18) and (1AG). 7) Disconnect the connector (AB28) from side airbag sensor (RH), and connect the connector (2V) in test harness V to connector (AB28). 8) Measure the resistance between connector (5AG) in the test harness AG and connector (3V) in the test harness V. ***Connector & terminal*** ***Type A & Type B (OUTBACK model)*** ***(5AG) No. 8 — (3V) No. 2:*** ***(5AG) No. 10 — (3V) No. 1:*** ***Type B (Sedan model)*** ***(5AG) No. 9 — (3V) No. 2:*** ***(5AG) No. 10 — (3V) No. 1:***	Is the resistance less than 10 Ω?	Go to step **3**.	Replace the airbag rear harness along with body harness.
3	**CHECK AIRBAG REAR HARNESS (BETWEEN AIRBAG CONTROL MODULE AND SIDE AIRBAG SENSOR RH).** Measure the resistance between connector (3V) in test harness V and chassis ground, and the resistance between connector (3V) terminals in test harness V. ***Connector & terminal*** ***(3V) No. 2 — Chassis ground:*** ***(3V) No. 1 — Chassis ground:*** ***(3V) No. 1 — (3V) No. 2:***	Is the resistance 1 MΩ or more?	Go to step **4**.	Replace the airbag rear harness along with body harness.
4	**CHECK AIRBAG CONTROL MODULE.** 1) Connect all connectors. 2) Clear the memory. 3) Perform the Inspection Mode. 4) Read the DTC.	Is the same DTC displayed?	Go to step **5**.	Go to step **6**.

	Step	Check	Yes	No
5	**REPLACE SIDE AIRBAG SENSOR (RH) AND CHECK AIRBAG CONTROL MODULE AFTER REPLACEMENT.** 1) Turn the ignition switch to OFF, disconnect the battery ground cable, and wait for 60 seconds or more. 2) Replace the side airbag sensor (RH). <Ref. to AB-81, REMOVAL, Side Airbag Sensor.> 3) Connect all connectors. 4) Clear the memory. 5) Perform the Inspection Mode. 6) Read the DTC.	Is the same DTC displayed?	Replace the airbag control module. <Ref. to AB-68, REMOVAL, Airbag Control Module.>	Go to step **6**.
6	**CHECK FOR ANY OTHER DTC ON DISPLAY.** Read the DTC.	Is any other DTC displayed?	Check DTC using "List of Diagnostic Trouble Code (DTC)". <Ref. to AB(diag)-41, List of Diagnostic Trouble Code (DTC).>	Finish the diagnosis.

CF:DTC ED SIDE SENSOR BUS RH COMMUNICATION ERROR

NOTE:
Refer to DTC EE for details on DTC ED. <Ref. to AB(diag)-192, DTC EE SIDE SENSOR BUS RH COMMUNICATION ERROR, Diagnostic Chart with Trouble Code.>

CG:DTC EE SIDE SENSOR BUS RH COMMUNICATION ERROR

NOTE:
Be sure to properly identify the Airbag system type prior to performing any diagnostics.

DTC DETECTING CONDITION:

- Open or short circuit in harness of side sensor bus (RH).
- Side airbag sensor (RH) or curtain airbag sensor (RH) are faulty.
- Airbag control module is faulty.

CAUTION:
Before performing diagnosis, refer to "CAUTION" in "General Description". <Ref. to AB(diag)-5, CAUTION, General Description.>

WIRING DIAGRAM:

- Type A

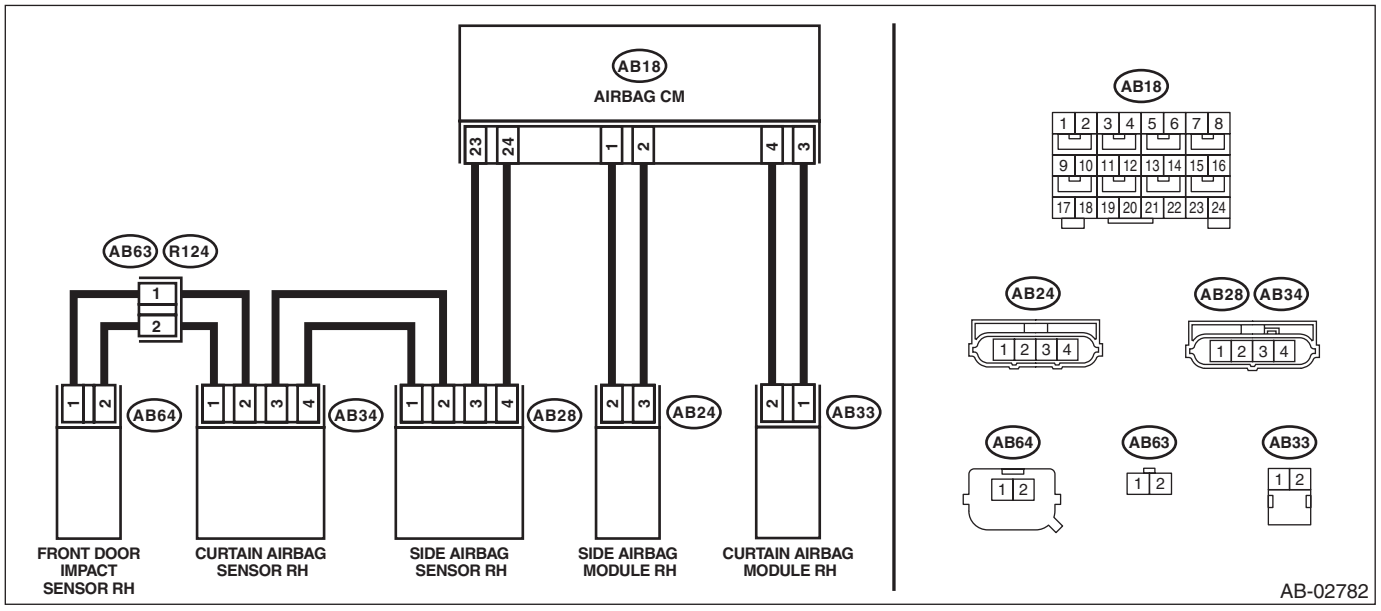

- Type B

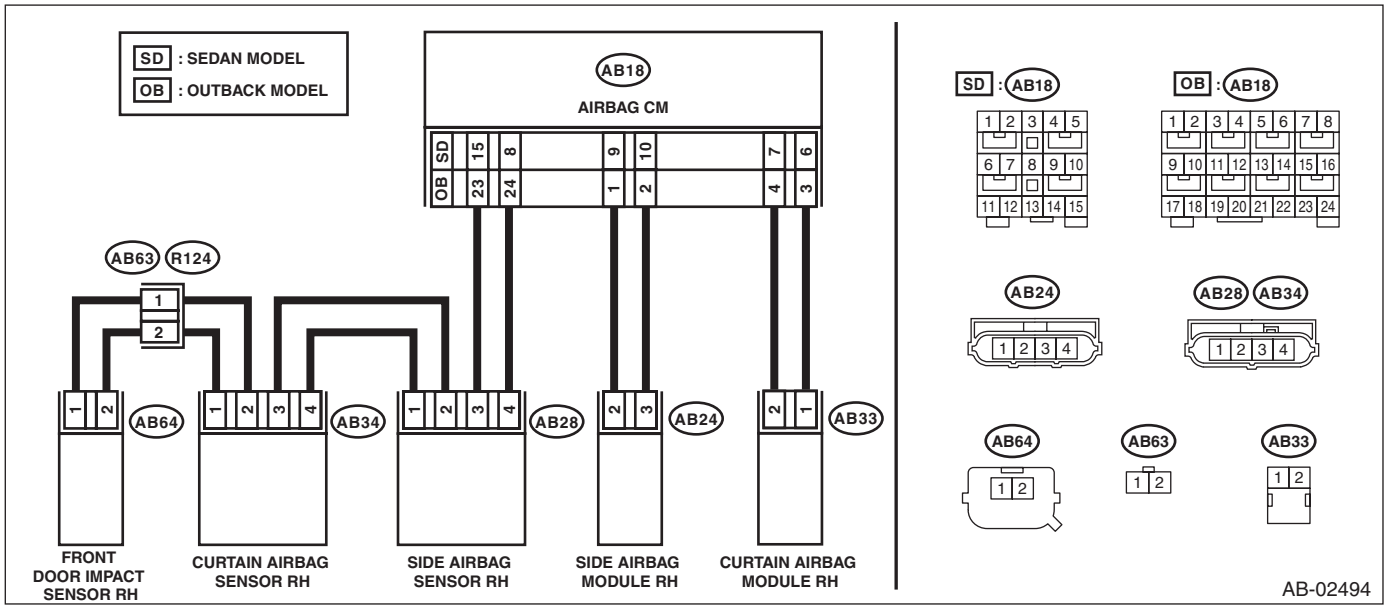

	Step	Check	Yes	No
1	**CHECK DTC.** Read the DTC.	Is DTC EB or EC displayed?	Perform the diagnosis of DTC EC. <Ref. to AB(diag)-189, DTC EC SIDE SENSOR BUS RH COMMUNICATION ERROR, Diagnostic Chart with Trouble Code.>	Go to step **2**.
2	**CHECK POOR CONTACT OF CONNECTORS.** Check for poor contact of the connectors between the airbag control module and the front door impact sensor (RH).	Is there poor contact?	Replace the airbag rear harness and the door harness.	Go to step **3**.
3	**CHECK AIRBAG REAR HARNESS (BETWEEN SIDE AIRBAG SENSOR (RH) AND CURTAIN AIRBAG SENSOR (RH)).** 1) Turn the ignition switch to OFF, disconnect the battery ground cable, and wait for 60 seconds or more. 2) Disconnect the connector (AB26) from seat belt pretensioner (RH). 3) Disconnect the connector (AB33) from curtain airbag module (RH). 4) Disconnect connector (AB24) of the side airbag module (RH). 5) Disconnect connector (AB28) from side airbag sensor (RH). 6) Connect the connector (AB28) of side airbag sensor (RH) and the connector (1AI) in the test harness AI. 7) Connect the connector (2AI) in the test harness AI and the connector (1V) in the test harness V. 8) Disconnect the connector (AB34) from curtain airbag sensor (RH), and connect the connector (2V) in test harness V to connector (AB34). 9) Measure the resistance between connector (3V) terminals in the test harness V. ***Connector & terminal*** ***(3V) No. 2 — (3V) No. 6:*** ***(3V) No. 1 — (3V) No. 7:***	Is the resistance less than 10 Ω?	Go to step **4**.	Replace the airbag rear harness along with body harness.
4	**CHECK AIRBAG REAR HARNESS (BETWEEN SIDE AIRBAG SENSOR (RH) AND CURTAIN AIRBAG SENSOR (RH)).** Measure the resistance between connector (3V) in test harness V and chassis ground, and the resistance between connector (3V) terminals in test harness V. ***Connector & terminal*** ***(3V) No. 2 — Chassis ground:*** ***(3V) No. 1 — Chassis ground:*** ***(3V) No. 1 — (3V) No. 2:***	Is the resistance 1 MΩ or more?	Go to step **5**.	Replace the airbag rear harness along with body harness.
5	**CHECK AIRBAG CONTROL MODULE.** 1) Connect all connectors. 2) Clear the memory. 3) Perform the Inspection Mode. 4) Read the DTC.	Is the same DTC displayed?	Go to step **6**.	Go to step **8**.

	Step	Check	Yes	No
6	**REPLACE CURTAIN AIRBAG SENSOR (RH) AND CHECK AIRBAG CONTROL MODULE AFTER REPLACEMENT.** 1) Turn the ignition switch to OFF, disconnect the battery ground cable, and wait for 60 seconds or more. 2) Replace the curtain airbag sensor (RH). <Ref. to AB-87, REMOVAL, Curtain Airbag Sensor.> 3) Connect all connectors. 4) Clear the memory. 5) Perform the Inspection Mode. 6) Read the DTC.	Is the same DTC displayed?	Go to step **7**.	Go to step **8**.
7	**REPLACE SIDE AIRBAG SENSOR (RH) AND CHECK AIRBAG CONTROL MODULE AFTER REPLACEMENT.** 1) Turn the ignition switch to OFF, disconnect the battery ground cable, and wait for 60 seconds or more. 2) Replace the side airbag sensor (RH). <Ref. to AB-81, REMOVAL, Side Airbag Sensor.> 3) Connect all connectors. 4) Clear the memory. 5) Perform the Inspection Mode. 6) Read the DTC.	Is the same DTC displayed?	Replace the airbag control module. <Ref. to AB-68, REMOVAL, Airbag Control Module.>	Go to step **8**.
8	**CHECK FOR ANY OTHER DTC.** Read the DTC.	Is any other DTC displayed?	Check DTC using “List of Diagnostic Trouble Code (DTC)”. <Ref. to AB(diag)-41, List of Diagnostic Trouble Code (DTC).>	Finish the diagnosis.

CH:DTC F1 SIDE SENSOR BUS LH COMMUNICATION ERROR

NOTE:
Be sure to properly identify the Airbag system type prior to performing any diagnostics.

DTC DETECTING CONDITION:

- Open or short circuit in harness of side sensor bus (LH).
- Side airbag sensor (LH) is faulty.
- Curtain airbag sensor (LH) is faulty.
- Front door impact sensor (LH) is faulty.
- Airbag control module is faulty.

CAUTION:
Before performing diagnosis, refer to "CAUTION" in "General Description". <Ref. to AB(diag)-5, CAUTION, General Description.>

WIRING DIAGRAM:

- Type A

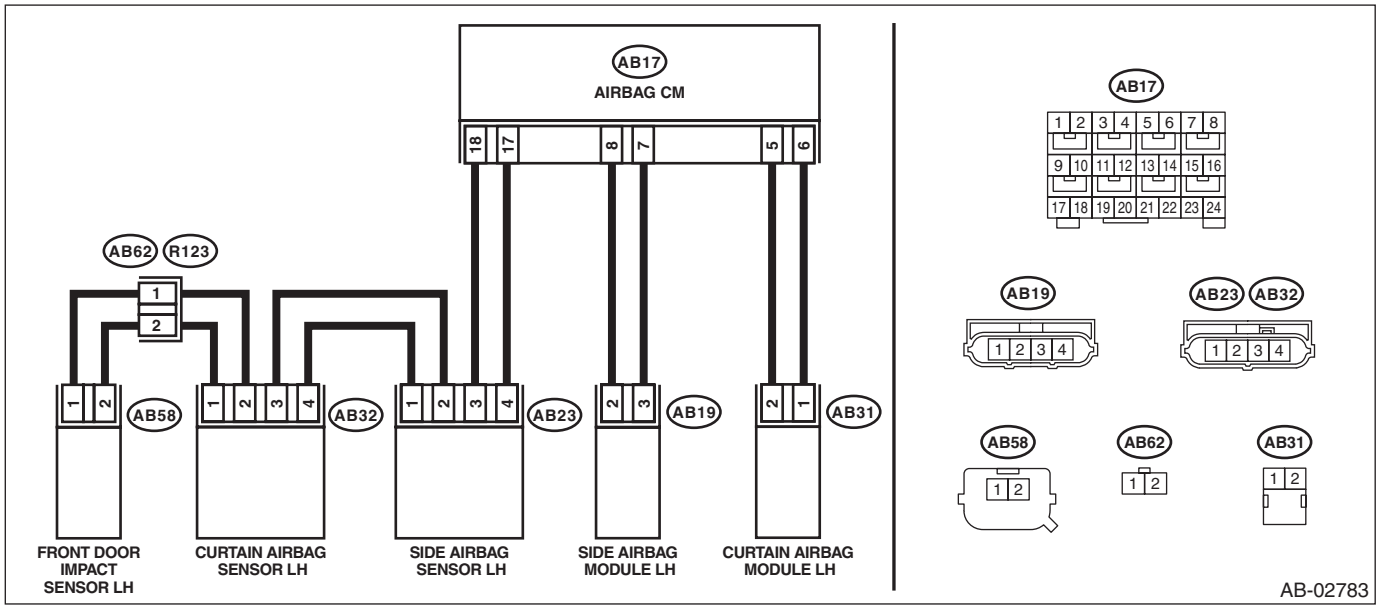

- Type B

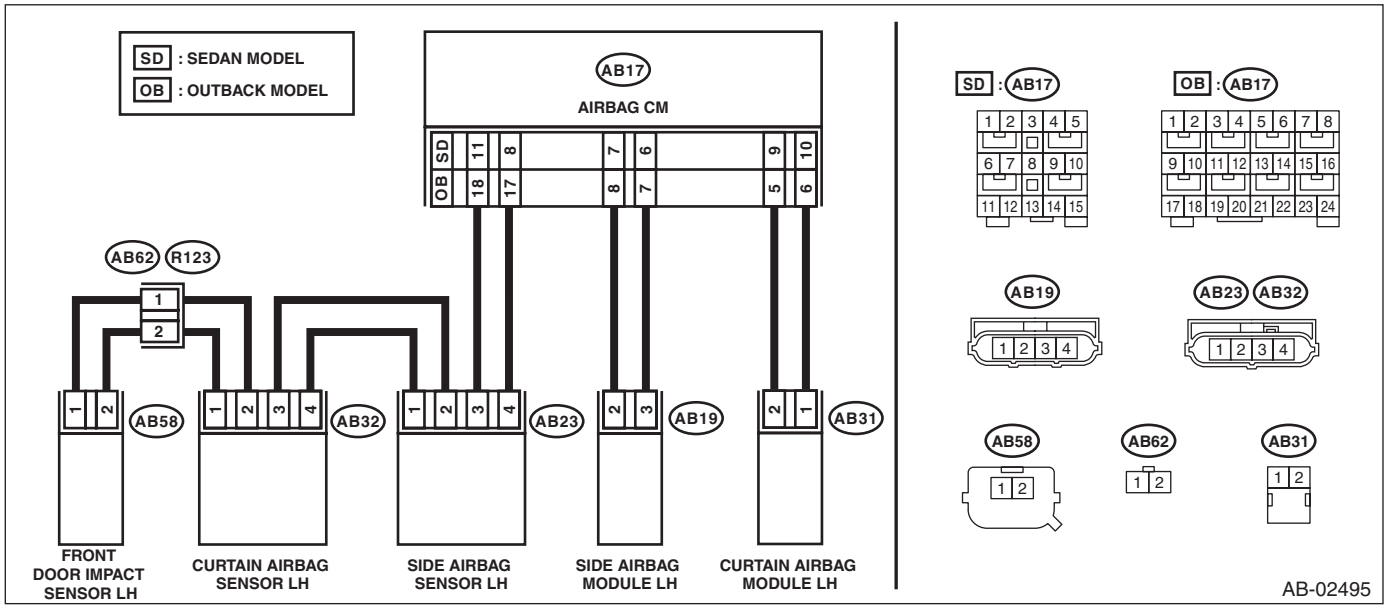

Diagnostic Chart with Trouble Code

	Step	Check	Yes	No
1	**CHECK DTC.** Read the DTC.	Is DTC F3 or F4 displayed?	Perform the diagnosis of DTC F4. <Ref. to AB(diag)-201, DTC F4 SIDE SENSOR BUS LH COMMUNICATION ERROR, Diagnostic Chart with Trouble Code.>	Go to step **2**.
2	**CHECK DTC.** Read the DTC.	Is DTC F5 or F6 displayed?	Perform the diagnosis of DTC F6. <Ref. to AB(diag)-204, DTC F6 SIDE SENSOR BUS LH COMMUNICATION ERROR, Diagnostic Chart with Trouble Code.>	Go to step **3**.
3	**CHECK DTC.** Read the DTC.	Is DTC A4 or A5 displayed?	Perform the diagnosis of DTC A5. <Ref. to AB(diag)-170, DTC A5 DOOR SENSOR BUS LH COMMUNICATION ERROR, Diagnostic Chart with Trouble Code.>	Go to step **4**.
4	**CHECK POOR CONTACT OF CONNECTORS.** Check for poor contact of the connectors between the airbag control module and the front door impact sensor (LH).	Is there poor contact?	Replace the airbag rear harness and the door harness.	Go to step **5**.

	Step	Check	Yes	No
5	**CHECK AIRBAG REAR HARNESS (BETWEEN AIRBAG CONTROL MODULE AND SIDE AIRBAG SENSOR LH).** 1) Turn the ignition switch to OFF, disconnect the battery ground cable, and wait for 60 seconds or more. 2) Disconnect the connector (AB21) from seat belt pretensioner (LH). 3) Disconnect the connector (AB31) from curtain airbag module (LH). 4) Disconnect connector (AB19) of the side airbag module (LH). 5) Disconnect the connectors (AB6, AB17, AB18) from airbag control module. 6) Connect the connector (1AG) in the test harness AG to the connectors (AB6, AB17, AB18). NOTE: For type B (sedan models), connect test harness AH between the connectors (AB6, AB17, AB18) and (1AG). 7) Disconnect the connector (AB23) from the side airbag sensor (LH). 8) Connect the connector (2V) in the test harness V to the connector (AB23). 9) Measure the resistance between connector (5AG) in the test harness AG and connector (3V) in the test harness V. ***Connector & terminal*** ***Type A & Type B (OUTBACK model)*** ***(5AG) No. 14 — (3V) No. 1:*** ***(5AG) No. 16 — (3V) No. 2:*** ***Type B (Sedan model)*** ***(5AG) No. 14 — (3V) No. 1:*** ***(5AG) No. 15 — (3V) No. 2:***	Is the resistance less than 10 Ω?	Go to step **6**.	Replace the airbag rear harness along with body harness.
6	**CHECK AIRBAG REAR HARNESS (BETWEEN AIRBAG CONTROL MODULE AND SIDE AIRBAG SENSOR LH).** Measure the resistance between connector (3V) in test harness V and chassis ground, and the resistance between connector (3V) terminals. ***Connector & terminal*** ***(3V) No. 1 — Chassis ground:*** ***(3V) No. 2 — Chassis ground:*** ***(3V) No. 1 — (3V) No. 2:***	Is the resistance 1 MΩ or more?	Go to step **7**.	Replace the airbag rear harness along with body harness.

	Step	Check	Yes	No
7	**CHECK AIRBAG REAR HARNESS (BETWEEN SIDE AIRBAG SENSOR AND CURTAIN AIRBAG SENSOR LH).** 1) Disconnect the connector (2V) in the test harness V from the connector (AB23) of side airbag sensor (LH). 2) Connect the connector (AB23) of side airbag sensor (LH) and the connector (1AI) in the test harness AI. 3) Connect the connector (2AI) in the test harness AI and the connector (1V) in the test harness V. 4) Disconnect the connector (AB32) from curtain airbag sensor (LH), and connect the connector (2V) in test harness V to connector (AB32). 5) Measure the resistance between connector (3V) terminals in the test harness V. ***Connector & terminal*** ***(3V) No. 2 — (3V) No. 6:*** ***(3V) No. 1 — (3V) No. 7:***	Is the resistance less than 10 Ω?	Go to step **8**.	Replace the airbag rear harness along with body harness.
8	**CHECK AIRBAG REAR HARNESS (BETWEEN SIDE AIRBAG SENSOR AND CURTAIN AIRBAG SENSOR LH).** Measure the resistance between connector (3V) in test harness V and chassis ground, and the resistance between connector (3V) terminals in test harness V. ***Connector & terminal*** ***(3V) No. 2 — Chassis ground:*** ***(3V) No. 1 — Chassis ground:*** ***(3V) No. 1 — (3V) No. 2:***	Is the resistance 1 MΩ or more?	Go to step **9**.	Replace the airbag rear harness along with body harness.
9	**CHECK AIRBAG REAR HARNESS AND DOOR HARNESS (BETWEEN CURTAIN AIRBAG SENSOR LH AND DOOR SENSOR LH).** 1) Disconnect the connector (AB58) from the front door impact sensor (LH), and connect the connector (1H) in the test harness H to connector (AB58). 2) Measure the resistance between connector (3V) in the test harness V and connector (3H) in the test harness H. ***Connector & terminal*** ***(3V) No. 4 — (3H) No. 5:*** ***(3V) No. 5 — (3H) No. 6:***	Is the resistance less than 10 Ω?	Go to step **10**.	Check the door harness, and if any fault is found, replace the harness. If there is no fault, replace the airbag rear harness together with body harness.
10	**CHECK AIRBAG REAR HARNESS AND DOOR HARNESS (BETWEEN CURTAIN AIRBAG SENSOR LH AND DOOR SENSOR LH).** Measure the resistance between connector (3V) in test harness V and chassis ground, and the resistance between connector (3V) terminals in test harness V. ***Connector & terminal*** ***(3V) No. 4 — Chassis ground:*** ***(3V) No. 5 — Chassis ground:*** ***(3V) No. 4 — (3V) No. 5:***	Is the resistance 1 MΩ or more?	Go to step **11**.	Check the door harness, and if any fault is found, replace the harness. If there is no fault, replace the airbag rear harness together with body harness.

	Step	Check	Yes	No
11	**CHECK AIRBAG CONTROL MODULE.** 1) Connect all connectors. 2) Clear the memory. 3) Perform the Inspection Mode. 4) Read the DTC.	Is the same DTC displayed?	Go to step **12**.	Go to step **15**.
12	**REPLACE SIDE AIRBAG SENSOR (LH) AND CHECK AIRBAG CONTROL MODULE AFTER REPLACEMENT.** 1) Turn the ignition switch to OFF, disconnect the battery ground cable, and wait for 60 seconds or more. 2) Replace the side airbag sensor (LH). <Ref. to AB-81, REMOVAL, Side Airbag Sensor.> 3) Connect all connectors. 4) Clear the memory. 5) Perform the Inspection Mode. 6) Read the DTC.	Is the same DTC displayed?	Go to step **13**.	Go to step **15**.
13	**REPLACE CURTAIN AIRBAG SENSOR (LH) AND CHECK AIRBAG CONTROL MODULE AFTER REPLACEMENT.** 1) Turn the ignition switch to OFF, disconnect the battery ground cable, and wait for 60 seconds or more. 2) Replace the curtain airbag sensor (LH). <Ref. to AB-87, REMOVAL, Curtain Airbag Sensor.> 3) Connect all connectors. 4) Clear the memory. 5) Perform the Inspection Mode. 6) Read the DTC.	Is the same DTC displayed?	Go to step **14**.	Go to step **15**.
14	**REPLACE FRONT DOOR IMPACT SENSOR (LH) AND CHECK AIRBAG CONTROL MODULE AFTER REPLACEMENT.** 1) Turn the ignition switch to OFF, disconnect the battery ground cable, and wait for 60 seconds or more. 2) Replace the front door impact sensor (LH). <Ref. to AB-78, REMOVAL, Front Door Impact Sensor.> 3) Connect all connectors. 4) Clear the memory. 5) Perform the Inspection Mode. 6) Read the DTC.	Is the same DTC displayed?	Replace the airbag control module. <Ref. to AB-68, REMOVAL, Airbag Control Module.>	Go to step **15**.
15	**CHECK FOR ANY OTHER DTC ON DISPLAY.**	Is any other DTC displayed?	Check DTC using “List of Diagnostic Trouble Code”. <Ref. to AB(diag)-41, LIST, List of Diagnostic Trouble Code (DTC).>	Finish the diagnosis.

CI: DTC F2 SIDE SENSOR BUS LH COMMUNICATION ERROR

NOTE:
Refer to DTC F1 for details on DTC F2. <Ref. to AB(diag)-195, DTC F1 SIDE SENSOR BUS LH COMMUNICATION ERROR, Diagnostic Chart with Trouble Code.>

CJ:DTC F3 SIDE SENSOR BUS LH COMMUNICATION ERROR

NOTE:
Refer to DTC F4 for details on DTC F3. <Ref. to AB(diag)-201, DTC F4 SIDE SENSOR BUS LH COMMUNICATION ERROR, Diagnostic Chart with Trouble Code.>

CK:DTC F4 SIDE SENSOR BUS LH COMMUNICATION ERROR

NOTE:
Be sure to properly identify the Airbag system type prior to performing any diagnostics.

DTC DETECTING CONDITION:

- Open or short circuit in harness of side sensor bus (LH).
- Side airbag sensor (LH) and curtain airbag sensor (LH) are faulty.
- Airbag control module is faulty.

CAUTION:

Before performing diagnosis, refer to "CAUTION" in "General Description". <Ref. to AB(diag)-5, CAUTION, General Description.>

WIRING DIAGRAM:

- Type A

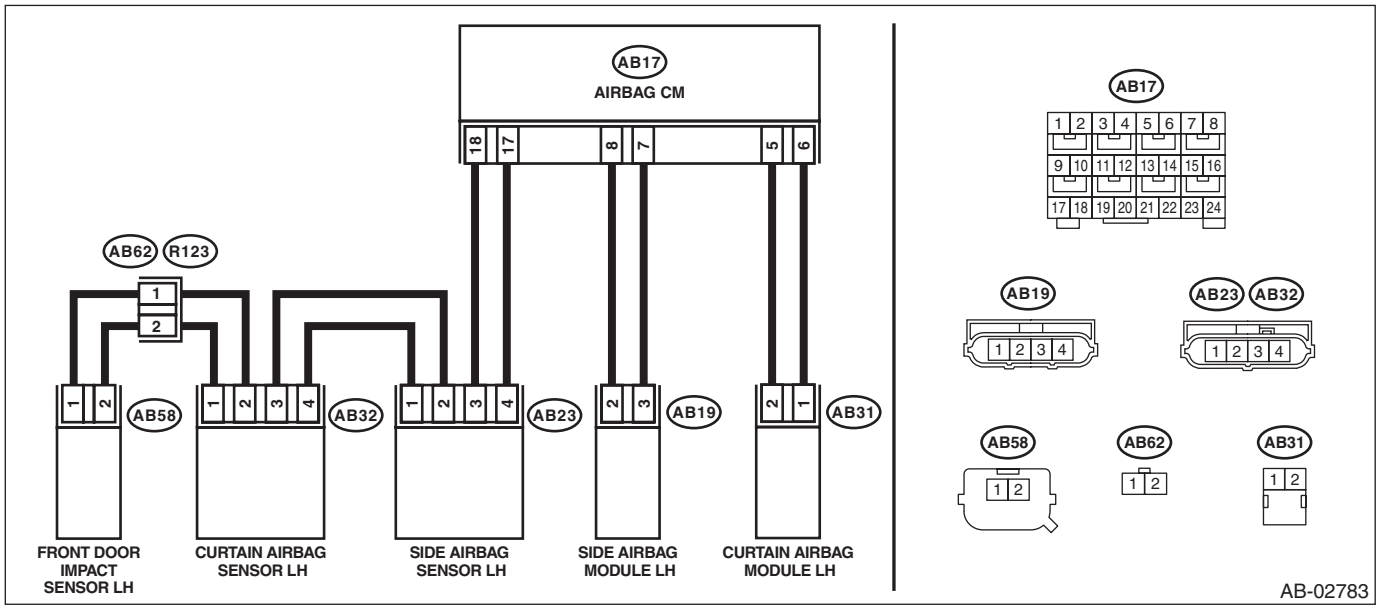

- Type B

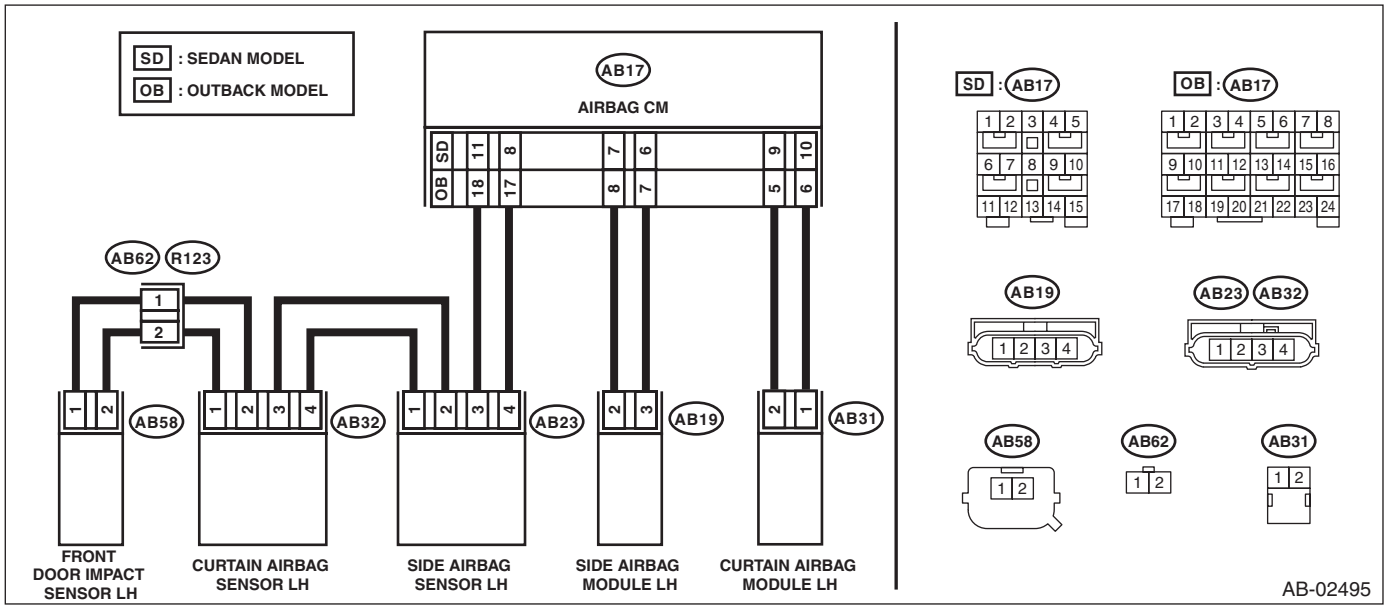

	Step	Check	Yes	No
1	**CHECK POOR CONTACT OF CONNECTORS.** Check for poor contact of the connectors between the airbag control module and the curtain airbag sensor (LH).	Is there poor contact?	Replace the airbag rear harness and the door harness.	Go to step **2**.
2	**CHECK AIRBAG REAR HARNESS (BETWEEN AIRBAG CONTROL MODULE AND SIDE AIRBAG SENSOR LH).** 1) Turn the ignition switch to OFF, disconnect the battery ground cable, and wait for 60 seconds or more. 2) Disconnect the connector (AB21) from seat belt pretensioner (LH). 3) Disconnect the connector (AB31) from curtain airbag module (LH). 4) Disconnect connector (AB19) of the side airbag module (LH). 5) Disconnect the connectors (AB6, AB17, AB18) from airbag control module. 6) Connect the connector (1AG) in the test harness AG to the connectors (AB6, AB17, AB18). NOTE: For type B (sedan models), connect test harness AH between the connectors (AB6, AB17, AB18) and (1AG). 7) Disconnect the connector (AB23) from side airbag sensor (LH), and connect the connector (2V) in test harness V to connector (AB23). 8) Measure the resistance between connector (5AG) in the test harness AG and connector (3V) in the test harness V. ***Connector & terminal*** ***Type A & Type B (OUTBACK model)*** ***(5AG) No. 14 — (3V) No. 1:*** ***(5AG) No. 16 — (3V) No. 2:*** ***Type B (Sedan model)*** ***(5AG) No. 14 — (3V) No. 1:*** ***(5AG) No. 15 — (3V) No. 2:***	Is the resistance less than 10 Ω?	Go to step **3**.	Replace the airbag rear harness along with body harness.
3	**CHECK AIRBAG REAR HARNESS (BETWEEN AIRBAG CONTROL MODULE AND SIDE AIRBAG SENSOR LH).** Measure the resistance between connector (3V) in test harness V and chassis ground, and the resistance between connector (3V) terminals. ***Connector & terminal*** ***(3V) No. 1 — Chassis ground:*** ***(3V) No. 2 — Chassis ground:*** ***(3V) No. 1 — (3V) No. 2:***	Is the resistance 1 MΩ or more?	Go to step **4**.	Replace the airbag rear harness along with body harness.
4	**CHECK AIRBAG CONTROL MODULE.** 1) Connect all connectors. 2) Clear the memory. 3) Perform the Inspection Mode. 4) Read the DTC.	Is the same DTC displayed?	Go to step **5**.	Go to step **6**.

	Step	Check	Yes	No
5	**REPLACE SIDE AIRBAG SENSOR (LH) AND CHECK AIRBAG CONTROL MODULE AFTER REPLACEMENT.** 1) Turn the ignition switch to OFF, disconnect the battery ground cable, and wait for 60 seconds or more. 2) Replace the side airbag sensor (LH). <Ref. to AB-81, REMOVAL, Side Airbag Sensor.> 3) Connect all connectors. 4) Clear the memory. 5) Perform the Inspection Mode. 6) Read the DTC.	Is the same DTC displayed?	Replace the airbag control module. <Ref. to AB-68, REMOVAL, Airbag Control Module.>	Go to step **6**.
6	**CHECK FOR ANY OTHER DTC ON DISPLAY.** Read the DTC.	Is any other DTC displayed?	Check DTC using "List of Diagnostic Trouble Code (DTC)". <Ref. to AB(diag)-41, List of Diagnostic Trouble Code (DTC).>	Finish the diagnosis.

CL:DTC F5 SIDE SENSOR BUS LH COMMUNICATION ERROR

NOTE:
Refer to DTC F6 for details on DTC F5. <Ref. to AB(diag)-204, DTC F6 SIDE SENSOR BUS LH COMMUNICATION ERROR, Diagnostic Chart with Trouble Code.>

CM:DTC F6 SIDE SENSOR BUS LH COMMUNICATION ERROR

DTC DETECTING CONDITION:

- Open or short circuit in harness of side sensor bus (LH).
- Side airbag sensor (LH) or curtain airbag sensor (LH) are faulty.
- Airbag control module is faulty.

CAUTION:

Before performing diagnosis, refer to "CAUTION" in "General Description". <Ref. to AB(diag)-5, CAUTION, General Description.>

WIRING DIAGRAM:

- Type A

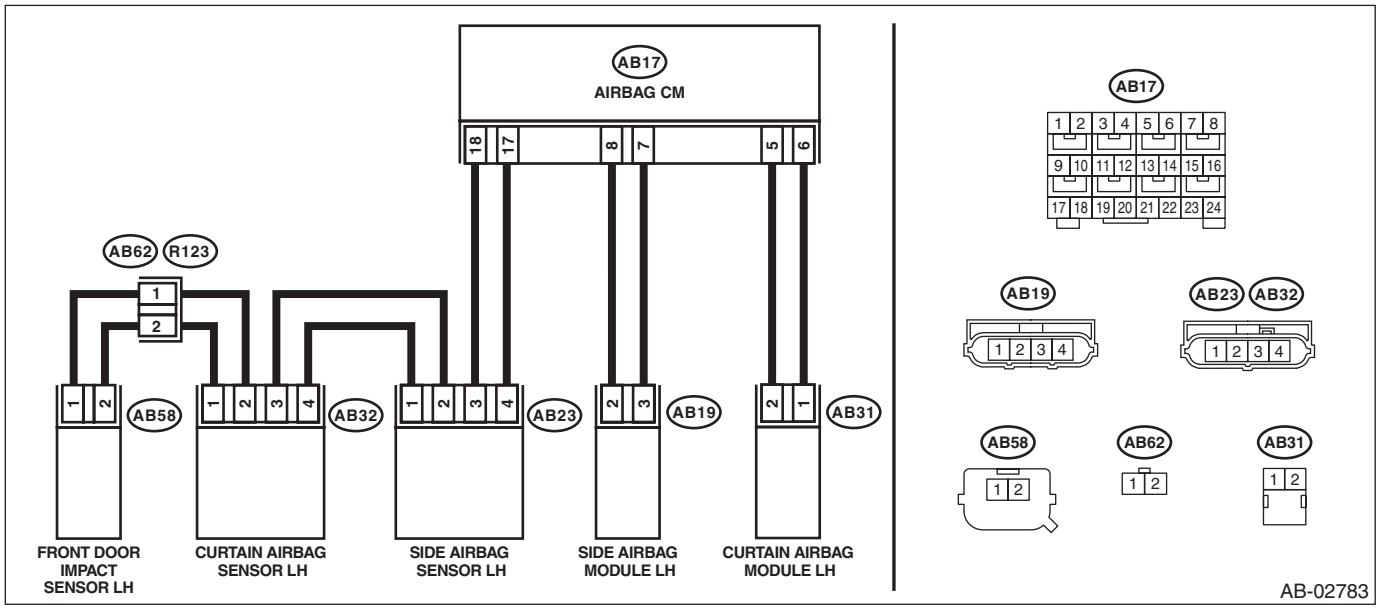

- Type B

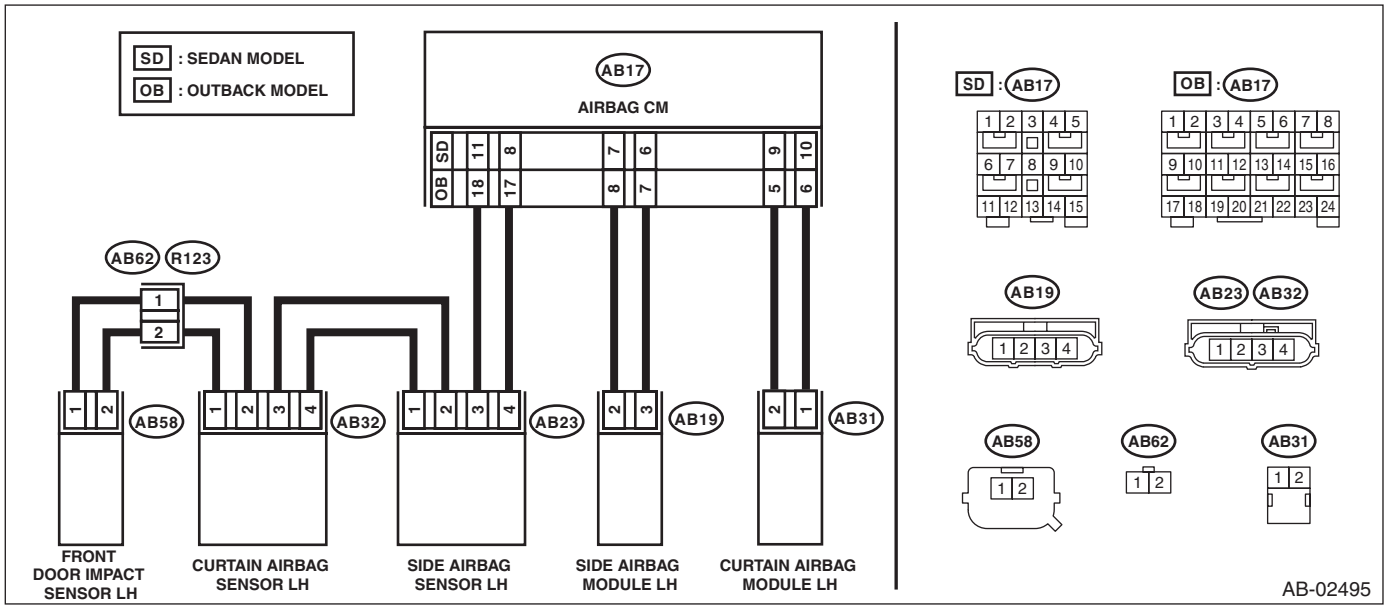

	Step	Check	Yes	No
1	**CHECK DTC.** Read the DTC.	Is DTC F3 or F4 displayed?	Perform the diagnosis of DTC F4. <Ref. to AB(diag)-201, DTC F4 SIDE SENSOR BUS LH COMMUNICATION ERROR, Diagnostic Chart with Trouble Code.>	Go to step **2**.
2	**CHECK POOR CONTACT OF CONNECTORS.** Check for poor contact of the connectors between the airbag control module and the curtain airbag sensor (LH).	Is there poor contact?	Replace the airbag rear harness and the door harness.	Go to step **3**.
3	**CHECK AIRBAG REAR HARNESS (BETWEEN SIDE AIRBAG SENSOR LH AND CURTAIN AIRBAG SENSOR LH).** 1) Turn the ignition switch to OFF, disconnect the battery ground cable, and wait for 60 seconds or more. 2) Disconnect the connector (AB21) from seat belt pretensioner (LH). 3) Disconnect the connector (AB31) from curtain airbag module (LH). 4) Disconnect connector (AB19) of the side airbag module (LH). 5) Disconnect the connector (AB23) in the side airbag sensor (LH). 6) Connect the connector (AB23) of side airbag sensor (LH) and the connector (1AI) in the test harness AI. 7) Connect the connector (2AI) in the test harness AI and the connector (1V) in the test harness V. 8) Disconnect the connector (AB32) from curtain airbag sensor (LH), and connect the connector (2V) in test harness V to connector (AB32). 9) Measure the resistance between connector (3V) terminals in the test harness V. ***Connector & terminal*** ***(3V) No. 2 — (3V) No. 6:*** ***(3V) No. 1 — (3V) No. 7:***	Is the resistance less than 10 Ω?	Go to step **4**.	Replace the airbag rear harness along with body harness.
4	**CHECK AIRBAG REAR HARNESS (BETWEEN SIDE AIRBAG SENSOR AND CURTAIN AIRBAG SENSOR LH).** Measure the resistance between connector (3V) in test harness V and chassis ground, and the resistance between connector (3V) terminals in test harness V. ***Connector & terminal*** ***(3V) No. 1 — Chassis ground:*** ***(3V) No. 2 — Chassis ground:*** ***(3V) No. 1 — (3V) No. 2:***	Is the resistance 1 MΩ or more?	Go to step **5**.	Replace the airbag rear harness along with body harness.
5	**CHECK AIRBAG CONTROL MODULE.** 1) Connect all connectors. 2) Clear the memory. 3) Perform the Inspection Mode. 4) Read the DTC.	Is the same DTC displayed?	Go to step **6**.	Go to step **8**.

	Step	Check	Yes	No
6	**REPLACE CURTAIN AIRBAG SENSOR (LH) AND CHECK AIRBAG CONTROL MODULE AFTER REPLACEMENT.** 1) Turn the ignition switch to OFF, disconnect the battery ground cable, and wait for 60 seconds or more. 2) Replace the curtain airbag sensor (LH). <Ref. to AB-87, REMOVAL, Curtain Airbag Sensor.> 3) Connect all connectors. 4) Clear the memory. 5) Perform the Inspection Mode. 6) Read the DTC.	Is the same DTC displayed?	Go to step **7**.	Go to step **8**.
7	**REPLACE SIDE AIRBAG SENSOR (LH) AND CHECK AIRBAG CONTROL MODULE AFTER REPLACEMENT.** 1) Turn the ignition switch to OFF, disconnect the battery ground cable, and wait for 60 seconds or more. 2) Replace the side airbag sensor (LH). <Ref. to AB-81, REMOVAL, Side Airbag Sensor.> 3) Connect all connectors. 4) Clear the memory. 5) Perform the Inspection Mode. 6) Read the DTC.	Is the same DTC displayed?	Replace the airbag control module. <Ref. to AB-68, REMOVAL, Airbag Control Module.>	Go to step **8**.
8	**CHECK FOR ANY OTHER DTC ON DISPLAY.**	Is any other DTC displayed?	Check DTC using “List of Diagnostic Trouble Code (DTC)”. <Ref. to AB(diag)-41, List of Diagnostic Trouble Code (DTC).>	Finish the diagnosis.

OCCUPANT DETECTION SYSTEM (DIAGNOSTICS)

OD(diag)

		Page
1.	Basic Diagnostic Procedure	2
2.	Check List for Interview	3
3.	General Description	4
4.	Electrical Component Location	7
5.	Airbag Connector	8
6.	Control Module I/O Signal	9
7.	Subaru Select Monitor	10
8.	Read Diagnostic Trouble Code (DTC)	11
9.	Inspection Mode	12
10.	Clear Memory Mode	13
11.	Display of Status Information	14
12.	System Calibration (Rezeroing)	15
13.	Airbag Warning Light Illumination Pattern	17
14.	Passenger's Airbag ON/OFF Indicator Light Illumination Pattern	18
15.	List of Diagnostic Trouble Code (DTC)	19
16.	Diagnostic Procedure with Diagnostic Trouble Code (DTC)	20

1. Basic Diagnostic Procedure

A: PROCEDURE

Step		Check	Yes	No
1	**CHECK WARNING LIGHT.** Check whether the airbag warning light in the combination meter is lit.	Does the airbag warning light illuminate?	Go to step **2**.	Perform the diagnosis according to phenomenon of the problem.
2	**READ DTC.** 1) Turn the ignition switch to OFF. 2) Connect the Subaru Select Monitor to data link connector. 3) Turn the ignition switch to ON and run the Subaru Select Monitor. 4) Read the DTC. <Ref. to OD(diag)-11, OPERATION, Read Diagnostic Trouble Code (DTC).> NOTE: If the communication function of the Subaru Select Monitor cannot be executed normally, check the communication circuit. <Ref. to AB(diag)-29, COMMUNICATION FOR INITIALIZING IMPOSSIBLE, INSPECTION, Subaru Select Monitor.> 5) Record all DTCs and freeze frame data.	Is DTC displayed?	Go to step **3**.	Go to "Airbag Warning Light Failure" <Ref. to AB(diag)-37, Airbag Warning Light Failure.>.
3	**PERFORM DIAGNOSIS.** 1) Determine the possible cause "List of Diagnostic Trouble Code (DTC)" <Ref. to OD(diag)-19, List of Diagnostic Trouble Code (DTC).>. 2) Inspect the DTC using "List of Diagnostic Trouble Code (DTC)". 3) Repair the trouble cause. 4) Perform the Clear Memory Mode. <Ref. to OD(diag)-13, Clear Memory Mode.> 5) Perform the Inspection Mode. <Ref. to OD(diag)-12, Inspection Mode.> 6) Read any other DTCs displayed.	Is DTC displayed?	Perform the procedure 1) to 5) in step 3.	Finish the diagnosis.

2. Check List for Interview

A: CHECK

Customer's name		Inspector's name	
Date vehicle brought in	/ /	Registration No.	
Odometer reading	km miles	V.I.N.	
Date problem occurred	/ /	Registration year	/ /
Weather	❑ Fine ❑ Cloudy ❑ Rainy ❑ Snowy ❑ Others :		
Temperature	°C (°F)		
Road condition	❑ Flat road ❑ Uphill ❑ Downhill ❑ Gravel road ❑ Others :		
Vehicle operation	❑ Starting ❑ Idling ❑ Driving ❑ Constant speed ❑ Accelerating ❑ Decelerating ❑ Turning ❑ Others :		
Details of problem			
Airbag warning light operation	❑ Normal (After turning the ignition switch to ON, illuminates for 6 seconds then goes off.) ❑ Remains ON ❑ Remains OFF		
Passenger's airbag ON/OFF indicator does not operate.	❑ Normal (After turning the ignition switch to ON, illuminates for 6 seconds then goes off for 2 seconds; Lights ON (adult) or OFF (children/unoccupied).) ❑ Both remain ON ❑ Both remain OFF		
DTC output	❑ OK code ❑ DTC: (Code:)		

3. General Description

A: CAUTION

1) If the seat cushion cover is removed or replaced, make sure to perform the occupant detection system adjustment after installing the seat to the vehicle. <Ref. to OD(diag)-15, System Calibration (Rezeroing).> Failure to do so may cause improper operation of the occupant detection system.
2) The occupant detection system (passenger seat only) control module and the occupant detection sensor are fixed to the seat cushion frame. Never remove the occupant detection control module or the occupant detection sensor from the seat cushion frame.
3) Do not replace the seat cushion pad by itself. Always replace the seat cushion pad & frame assembly as a set. The seat cushion pad and cushion frame are adjusted as a set at the time of manufacture. If cushion pads and cushion frames are combined from those of other vehicles or other sets, the occupant detection system may not operate properly.
4) If the seat cushion cover is removed, make sure to replace the hang wire on the seat cushion cover side with a new wire.
5) Never connect the battery in reverse polarity. Occupant detection system may be destroyed instantly.
6) Do not disconnect the battery terminals while the engine is running. A large counter electromotive force will be generated in the generator, and this voltage may damage electronic parts such as occupant detection control module.
7) Before disconnecting the connectors of each sensor and control module, be sure to turn the ignition switch to OFF and wait for 60 seconds or more. Occupant detection control module may be damaged.
8) Every occupant detection system-related part is a precision part. Do not drop them.

CAUTION:
• Do not use electrical test devices on airbag system wiring harnesses or connector circuits.
• Be careful not to damage the airbag system wiring harness, when servicing the occupant detection system.
• Refer to CAUTION in Airbag System when repairing occupant detection system. <Ref. to AB-9, CAUTION, General Description.>

B: INSPECTION

Measure the battery voltage and check electrolyte.

Standard voltage:
12 V

Specific gravity:
1.260 or more

Fluid level:
Between the upper level and lower level

C: PREPARATION TOOL

CAUTION:
To measure the voltage and resistance of airbag system and occupant detection system components, be sure to use the specified test harness.

1. SPECIAL TOOL

ILLUSTRATION	TOOL NUMBER	DESCRIPTION	REMARKS
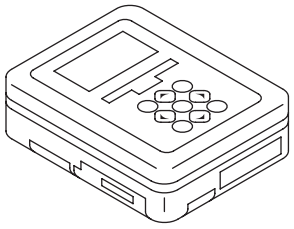 ST1B022XU0	1B022XU0	SUBARU SELECT MONITOR III KIT	Used for troubleshooting the electrical system.

- TEST HARNESS Y

ILLUSTRATION	TOOL NUMBER	DESCRIPTION	REMARKS
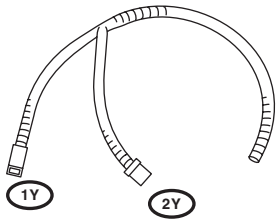 ST98299AG040	98299AG040	TEST HARNESS Y	Used for troubleshooting seat belt buckle switch.

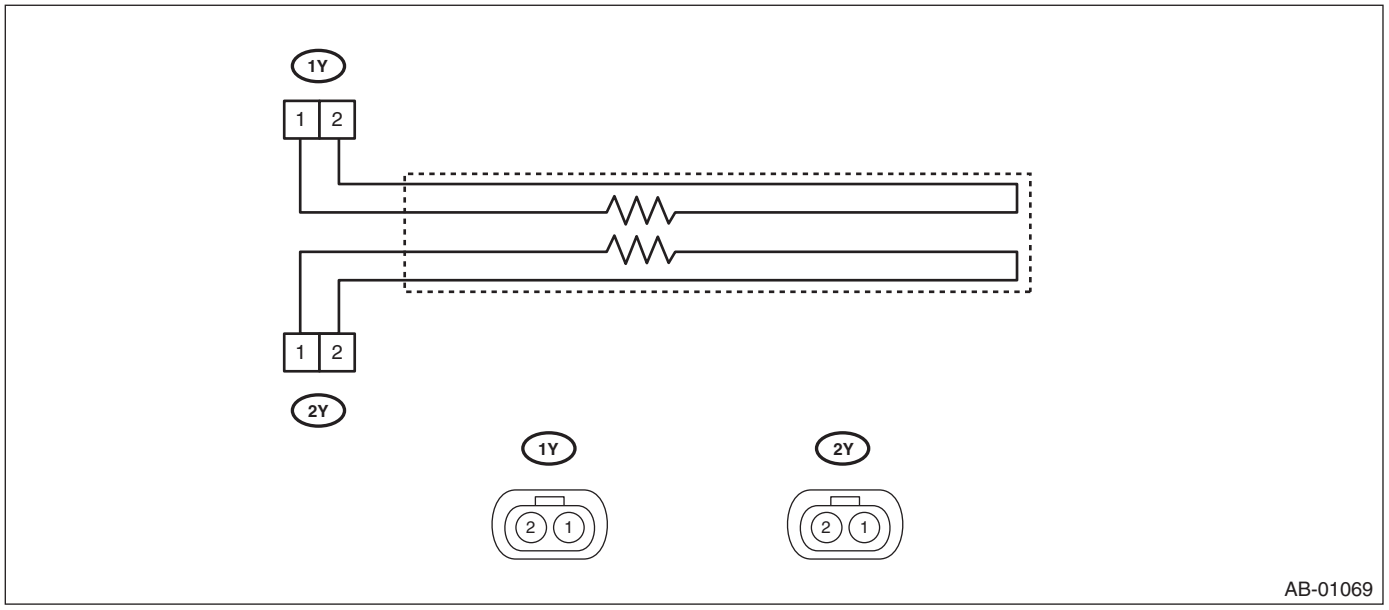

AB-01069

- TEST HARNESS AE

ILLUSTRATION	TOOL NUMBER	DESCRIPTION	REMARKS
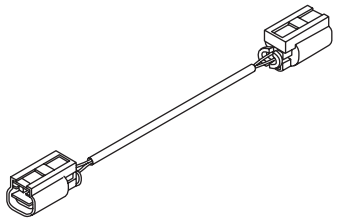 ST98299XA030	98299XA030	TEST HARNESS AE	TEST HARNESS Y ADAPTER HARNESS Used for troubleshooting seat belt buckle switch.

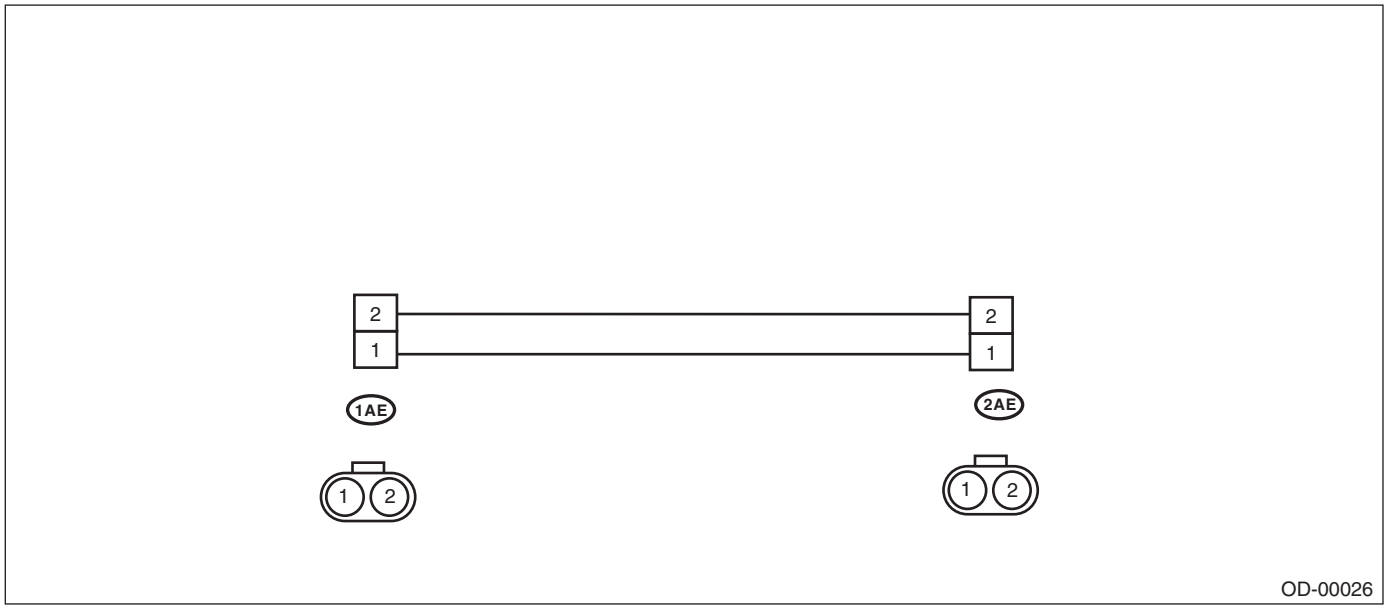

2. GENERAL TOOL

TOOL NAME	REMARKS
Circuit tester	Used for measuring resistance, voltage and current.

4. Electrical Component Location

A: LOCATION

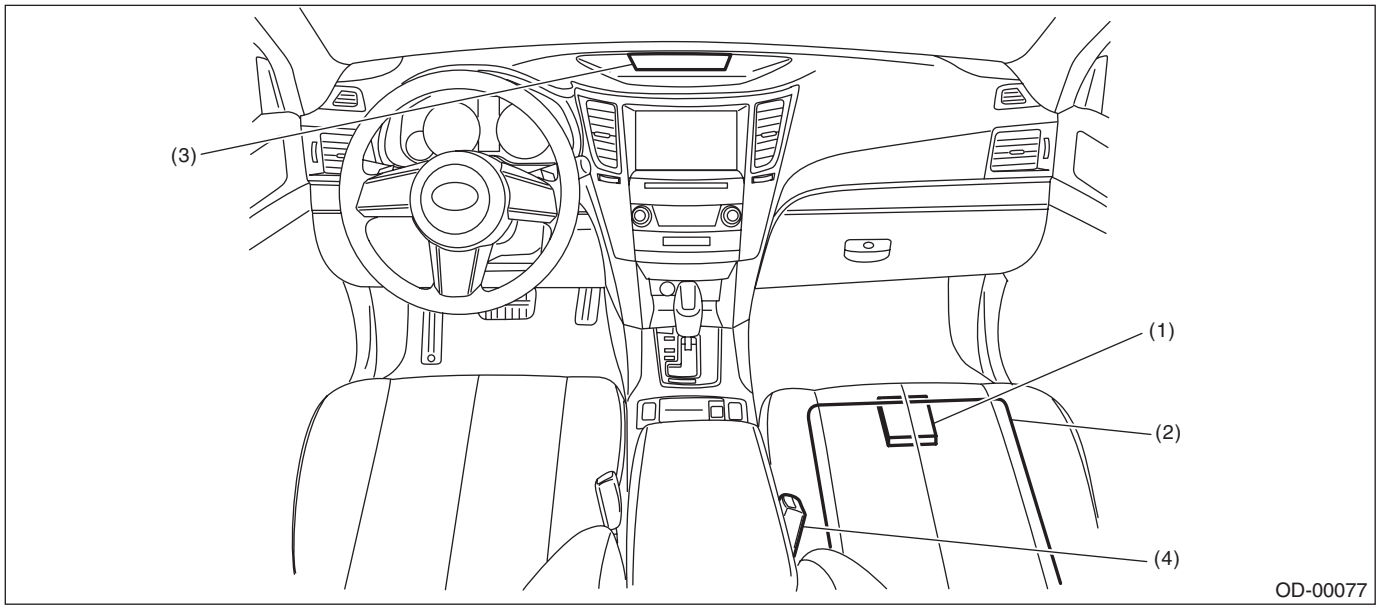

(1) Occupant detection control module
(2) Occupant detection sensor
(3) Airbag ON/OFF indicator light
(4) Buckle switch (passenger's seat)

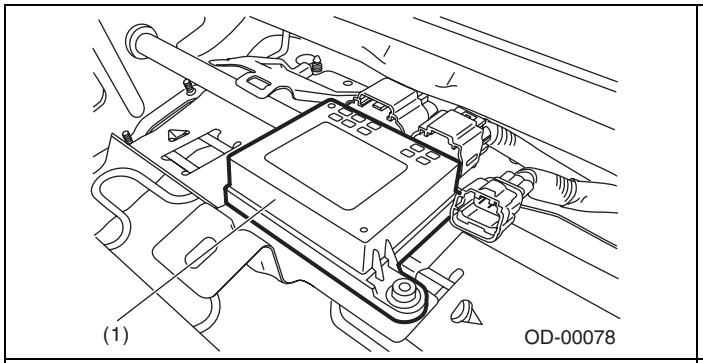

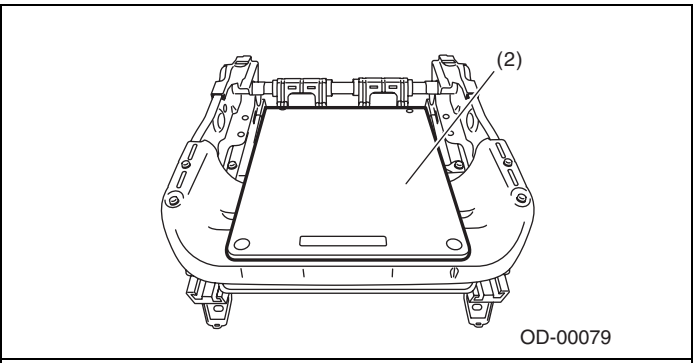

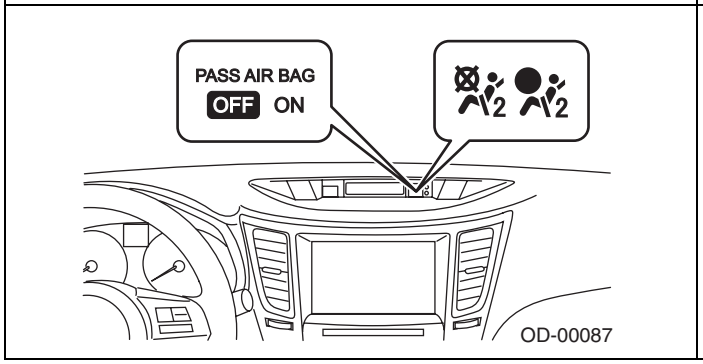

5. Airbag Connector

A: PROCEDURE

1. OCCUPANT DETECTION SYSTEM (BETWEEN AIRBAG REAR HARNESS AND SEAT HARNESS)

1) How to disconnect:
Push the lock arm (A), and disconnect the connector.

CAUTION:
When pulling the slide lock or disconnecting connector, be sure to hold the connector, not the harness.

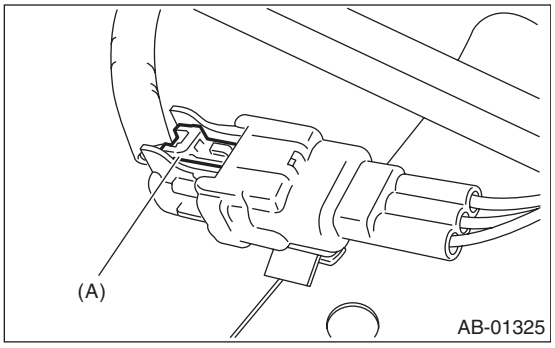

2) How to connect:
Holding the connector, push it in securely until a clicking sound is heard.

CAUTION:
Be sure to insert the connector in until it is locked. Then pull it gently to make sure that it is locked.

2. AIRBAG CONTROL MODULE

Refer to Airbag System section. <Ref. to AB-19, AIRBAG CONTROL MODULE, PROCEDURE, Airbag Connector.>

3. BUCKLE SWITCH RH

Refer to Airbag System section. <Ref. to AB-27, BUCKLE SWITCH RH, PROCEDURE, Airbag Connector.>

6. Control Module I/O Signal

A: ELECTRICAL SPECIFICATION

CAUTION:
Never remove the occupant detection control module, occupant detection sensor or seat frame, because they are integrated into one unit.

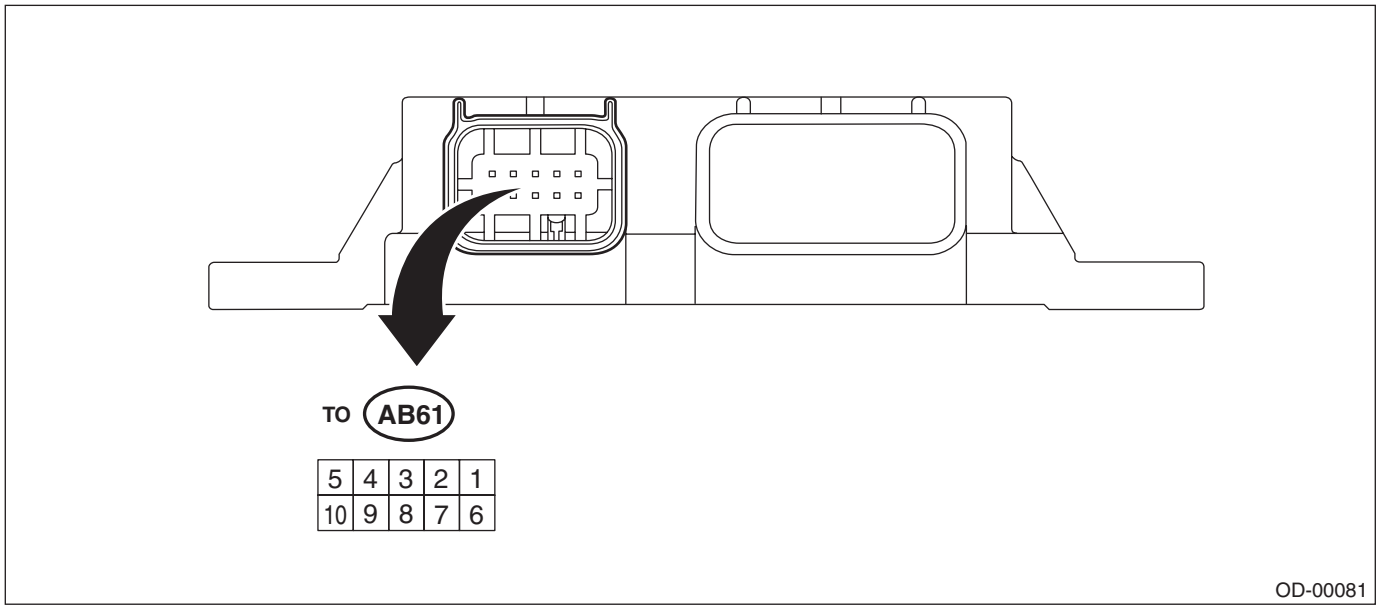

Terminal name	Terminal No.	Input/output value	Remarks
IG – power supply	5	9 — 16 V	When ignition switch is ON
Airbag control module communication (COM)	3	Open collector terminal	Communication line
Airbag control module communication (GND)	4	0 V	Ground
Buckle switch	9	0 — IG voltage	Ignition voltage when switch is ON
Buckle switch (GND)	8	0 V	Switch ground

B: WIRING DIAGRAM

Refer to the electrical wiring diagram. <Ref. to WI-191, WIRING DIAGRAM, Occupant Detection System.>

7. Subaru Select Monitor

A: OPERATION

For detailed operation procedures, refer to the “PC application help for Subaru Select Monitor”.

B: INSPECTION

1. COMMUNICATION FOR INITIALIZING IMPOSSIBLE

DETECTING CONDITION:
Defective harness connector
TROUBLE SYMPTOM:
Communication is impossible between the airbag control module and the Subaru Select Monitor.
Refer to “Communication for Initializing Impossible” in AIRBAG SYSTEM (DIAGNOSTICS). <Ref. to AB(diag)-29, COMMUNICATION FOR INITIALIZING IMPOSSIBLE, INSPECTION, Subaru Select Monitor.>

8. Read Diagnostic Trouble Code (DTC)

A: OPERATION

Read out the DTC stored in airbag control module. For operation procedures, refer to AIRBAG SYSTEM (DIAGNOSTICS). <Ref. to AB(diag)-32, OPERATION, Read Diagnostic Trouble Code (DTC).>

NOTE:
For details concerning DTCs, refer to the List of Diagnostic Trouble Code (DTC) (airbag system, occupant detection system). <Ref. to AB(diag)-41, List of Diagnostic Trouble Code (DTC).> <Ref. to OD(diag)-19, List of Diagnostic Trouble Code (DTC).>

9. Inspection Mode

A: PROCEDURE

Recreate the circumstance by referring to the conditions described in the checklist.

10.Clear Memory Mode

A: OPERATION

For operation procedures, refer to AIRBAG SYSTEM (DIAGNOSTICS). <Ref. to AB(diag)-34, OPERATION, Clear Memory Mode.>

11.Display of Status Information

A: OPERATION

Check the operating condition of each sensor in the event of malfunction in seat belt buckle switch and seat position sensor, or when the seat belt buckle switch and seat position sensor has been replaced.
1) On «Main Menu» display, select {Each System Check}.
2) On «System Selection Menu» display, select {Airbag System}.
3) On «Airbag System» display, select {Status Data}.
The following table is for support data.

Items	Display
Seat position sensor LH	—*2
Seat position sensor RH	—*2
Seat belt buckle switch LH	—*6
Seat belt buckle switch RH	Fastened*3/Not fastened*4/Other*5/Initial setting*1/—*6
Passenger's airbag control status	ON*7/OFF*8/Initial setting*1

*1: Displayed when it is initial
*2: Seat position sensor not supported
*3: Seat belt fastened
*4: Seat belt not fastened
*5: Displayed when data other than belt fastened or not fastened, such as breakdown, is input
*6: Seat belt buckle switch not supported
*7: Passenger's airbag operating state
*8: Passenger's airbag non-operating state

NOTE:
For detailed operation procedures, refer to "PC application help for Subaru Select Monitor".

12.System Calibration (Rezeroing)

A: OPERATION

NOTE:
When replacing the occupant detection system, or removing and disassembling the passenger's seat, always perform the system calibration after installing a seat in the vehicle.
1) Park empty vehicle on a level surface.
2) Check the following items to adjust the condition of the vehicle.
• Adjust the seat backrest to be fully upright. (For models with power seats, press the power seat button until the backrest comes to a stop.)
• Adjust the seat slide position all the way back. (For models with power seats, press the power seat button until the seat slide does not move any further.)
• Do not place anything on the top of the seat cushion.
• Sit on the seat cushion to smooth the seat surface.
• Check that the passenger's seat belt is not inserted into the buckle, not tense or not stuck.
• Check that ambient temperature is in a range from 0 to 40°C (32 to 104°F).
3) Turn the ignition switch OFF once, then turn it ON again.

NOTE:
• This operation is performed to reset the occupant detection.
• Do not touch the seat until the system calibration (Rezeroing) is completed. If you have touched the seat even if only once, re-perform the steps from the step 3) again.
4) On «Main Menu» display, select {Each System Check}.
5) On «System Selection Menu» display, select {Occupant Detection System}.
6) On the {Occupant Detection System} display, select {Rezeroing}.
7) When «See service manual. And check vehicle condition for successfully completing the rezeroing.» is displayed, check the condition of the vehicle.
8) When the «Re-zeroing Adjust the passenger seat to the condition shown in service manual» is displayed, slide the passenger seat all the way to the back, check that the backrest is adjusted to all the way up, and select the [OK].

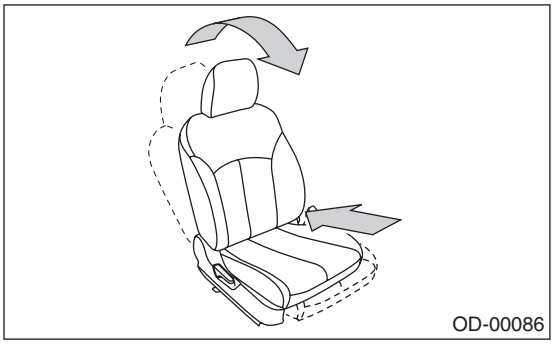

9) When the «Re-zeroing Unbelt the Passenger seatbelt Continue: OK, Quit: NO» is displayed, make sure the passengers seatbelt is disconnected from the buckle and select the [OK].
10) When the «Re-zeroing Empty the passenger seat Continue: OK, Quit: NO» is displayed, make sure that the passenger's seat is empty, airbag OFF indicator illuminates and airbag ON indicator does not illuminate, and select the [OK].

NOTE:
• After selecting the [OK], «In process... Please wait for a while without touching vehicle» is displayed. Do not touch or rock the vehicle while the message is displayed.
• During the system calibration process, if the «Re-zeroing is unsuccessful See service manual Press "OK" to END» is displayed, go to step 12).
11) When the re-zeroing is ended normally, the «Re-zeroing is successfully completed Press "OK" to END» is displayed. And then turn the ignition switch to OFF to finish the diagnosis.
12) During the system calibration process, if «Re-zeroing is unsuccessful See service manual Press "OK" to END» is displayed, turn the ignition switch to OFF once and turn it ON again, then read the DTC of the airbag system. <Ref. to OD(diag)-11, Read Diagnostic Trouble Code (DTC).>
When DTC is input, fix the fault and then perform the system calibration. When DTC is not input, check the seat and vehicle status and then perform the system calibration again. <Ref. to OD(diag)-15, System Calibration (Rezeroing).>

NOTE:
When the re-zeroing is unsuccessful, there could be occupant detection system failure or improper seat and vehicle status. When the airbag warning light illuminates, read the DTC of the airbag system, and perform the diagnosis while referring to List of Diagnostic Trouble Code (DTC). <Ref. to OD(diag)-11, Read Diagnostic Trouble Code (DTC).> <Ref. to AB(diag)-41, LIST, List of Diagnostic Trouble Code (DTC).>

13. Airbag Warning Light Illumination Pattern

A: INSPECTION

Turn the ignition switch to ON, and confirm that the airbag warning light remains on for approx. 6 seconds and then goes off afterwards.

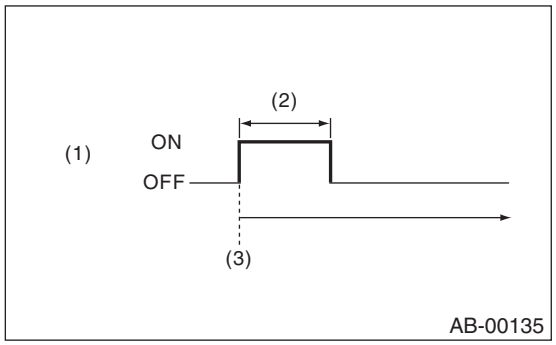

(1) Airbag warning light
(2) Approx. 6 sec.
(3) Ignition switch ON

14.Passenger's Airbag ON/OFF Indicator Light Illumination Pattern

A: INSPECTION

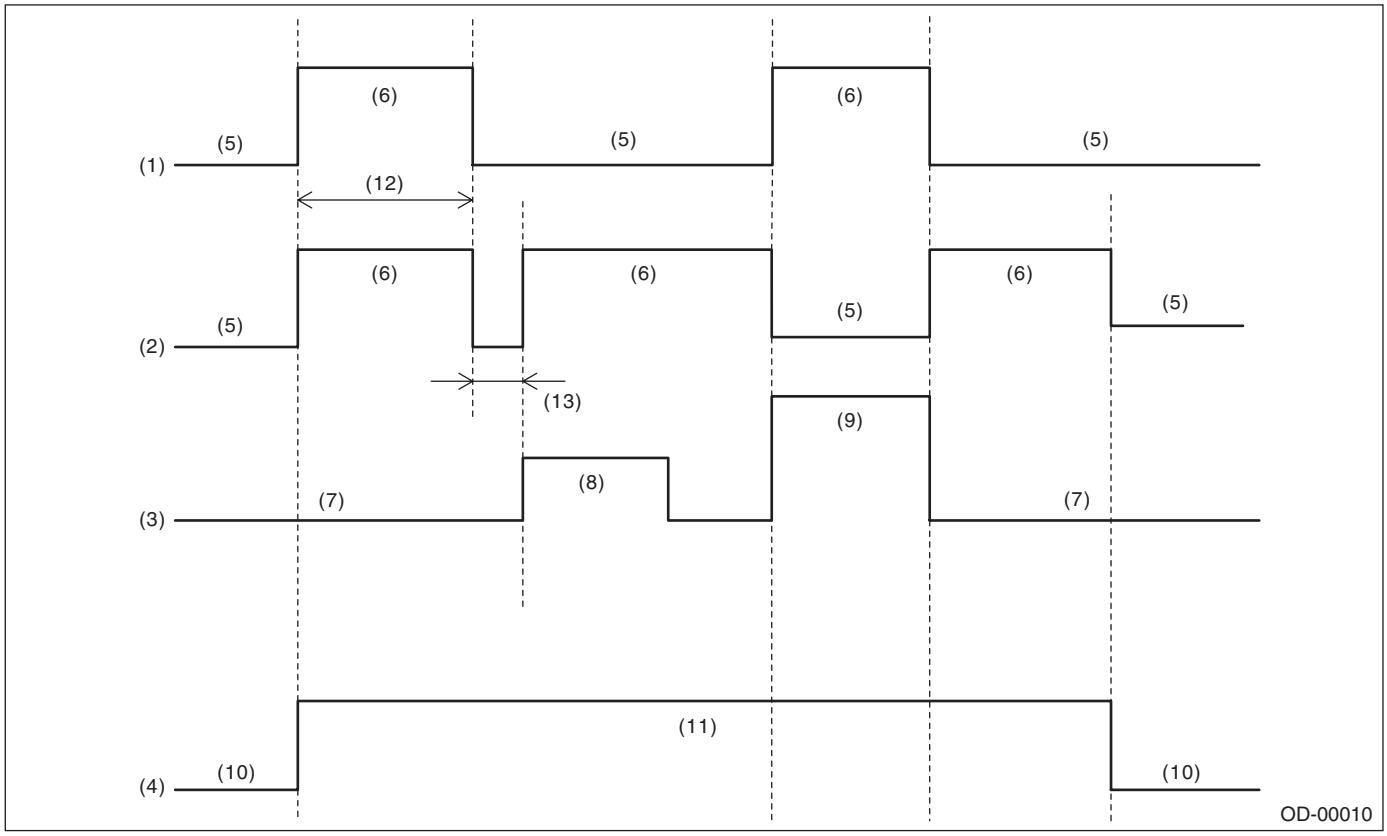

(1)	Passenger's airbag ON indicator light	(6)	Light ON	(10)	OFF
(2)	Passenger's airbag OFF indicator light	(7)	Empty	(11)	ON
(3)	Occupant seating	(8)	Child	(12)	Approx. 6 sec.
(4)	Ignition switch	(9)	Adult	(13)	Approx. 2 sec.
(5)	Light OFF				

15.List of Diagnostic Trouble Code (DTC)

A: LIST

DTC	Item	Content of diagnosis	Reference
27	ODS Communication error	• Occupant detection control module and airbag control module communication is faulty. • Airbag rear harness circuit is open, shorted, shorted to ground or shorted to power supply. • Occupant detection harness is faulty. • Occupant detection system is faulty. • Airbag control module is faulty.	<Ref. to OD(diag)-20, DTC 27 ODS COMMUNICATION ERROR, Diagnostic Procedure with Diagnostic Trouble Code (DTC).>
29	ODS failure	• Occupant detection sensor is faulty. • Occupant detection control module is faulty. • Occupant detection harness is faulty. • Fuse No. 25 (in joint box) is blown.	<Ref. to OD(diag)-21, DTC 29 ODS FAILURE, Diagnostic Procedure with Diagnostic Trouble Code (DTC).>
2A	ODS Calibration error	• Occupant detection control module is faulty. • Calibration of occupant detection control module is initial setting or faulty.	<Ref. to OD(diag)-22, DTC 2A ODS CALIBRATION ERROR, Diagnostic Procedure with Diagnostic Trouble Code (DTC).>
2B	ODS System wrong parts	• Specification of occupant detection control module is improper. • Occupant detection control module is faulty.	<Ref. to OD(diag)-22, DTC 2B ODS SYSTEM WRONG PARTS, Diagnostic Procedure with Diagnostic Trouble Code (DTC).>
37	Buckle Switch RH failure	• Passenger's buckle switch circuit is open, shorted or shorted to ground. • Occupant detection system is faulty. • Occupant detection harness is faulty.	<Ref. to OD(diag)-23, DTC 37 BUCKLE SWITCH RH FAILURE, Diagnostic Procedure with Diagnostic Trouble Code (DTC).>

16.Diagnostic Procedure with Diagnostic Trouble Code (DTC)

A: DTC 27 ODS COMMUNICATION ERROR

Perform the diagnosis following diagnostic procedures for the airbag system. <Ref. to AB(diag)-73, DTC 27 ODS COMMUNICATION ERROR, Diagnostic Chart with Trouble Code.>

B: DTC 29 ODS FAILURE

DTC DETECTING CONDITION:

- Occupant detection sensor is faulty.
- Occupant detection control module is faulty.
- Occupant detection harness is faulty.
- Rear airbag harness (RH) is faulty.
- Fuse No. 25 (in fuse box) is blown out.
- System calibration (rezeroing) is unsuccessful.

	Step	Check	Yes	No
1	**CHECK POOR CONTACT OF CONNECTORS.** Check for poor contact of the connectors between the occupant detection control module and airbag control module.	Is there poor contact?	Reconnect the connector. If the fault is not fixed, replace the airbag harness.	Go to step **2**.
2	**CHECK DTC.** Read DTC of the airbag system.	Is another DTC displayed?	Perform the diagnosis according to DTC.	Go to step **3**.
3	**PERFORM SYSTEM CALIBRATION (REZEROING).** Perform system calibration (rezeroing).	Did the system calibration (rezeroing) complete properly?	Turn the ignition switch OFF once, then turn it ON again and check that the airbag warning light turns off.	Check the seat harness, and if any fault is found, replace the seat harness. If the fault is not fixed, replace the occupant detection system. <Ref. to SE-12, DISASSEMBLY, Front Seat.>

C: DTC 2A ODS CALIBRATION ERROR

DTC DETECTING CONDITION:

- Calibration of occupant detection control module is initial setting or faulty.
- Occupant detection control module is faulty.

Step		Check	Yes	No
1	**CHECK DTC.** Read the DTC of the airbag system using the Subaru Select Monitor.	Is DTC other than 2A displayed?	Perform the diagnosis according to the displayed DTC.	Go to step **2**.
2	**PERFORM RE-ZEROING.** Perform system calibration using the Subaru Select Monitor. <Ref. to OD(diag)-15, System Calibration (Rezeroing).>	Did the system calibration complete properly?	Go to step **3**.	Replace the occupant detection system. <Ref. to SE-27, PASSENGER'S SEAT, DISASSEMBLY, Front Seat.>
3	**CHECK DTC.** 1) Turn the ignition switch to OFF and wait for 60 seconds or more. 2) Turn the ignition switch to ON, and then read the DTC of the airbag system.	Is DTC other than DTC 2A displayed?	Perform the diagnosis according to the displayed DTC.	When DTC is 2A, replace the occupant detection system. <Ref. to SE-27, PASSENGER'S SEAT, DISASSEMBLY, Front Seat.> When DTC is not displayed, end the diagnosis.

CAUTION:
When DTC other than DTC 2A is present, system calibration (re-zeroing) cannot be completed normally.
When occupant detection system DTC other than DTC 2A is present (27, 29, 2B, 37), perform the diagnosis of the DTCs other than 2A first.

D: DTC 2B ODS SYSTEM WRONG PARTS

DTC DETECTING CONDITION:

- Wrong occupant detection control module is installed.
- Occupant detection control module is faulty.

When DTC 2B is displayed, the occupant detection control module is faulty.
Replace the occupant detection control module with a genuine occupant detection control module.

E: DTC 37 BUCKLE SWITCH RH FAILURE

DTC DETECTING CONDITION:

- Passenger's buckle switch circuit is open, shorted or shorted to ground.
- Seat harness circuit is open, shorted or shorted to ground.
- Occupant detection control module is faulty.

WIRING DIAGRAM:

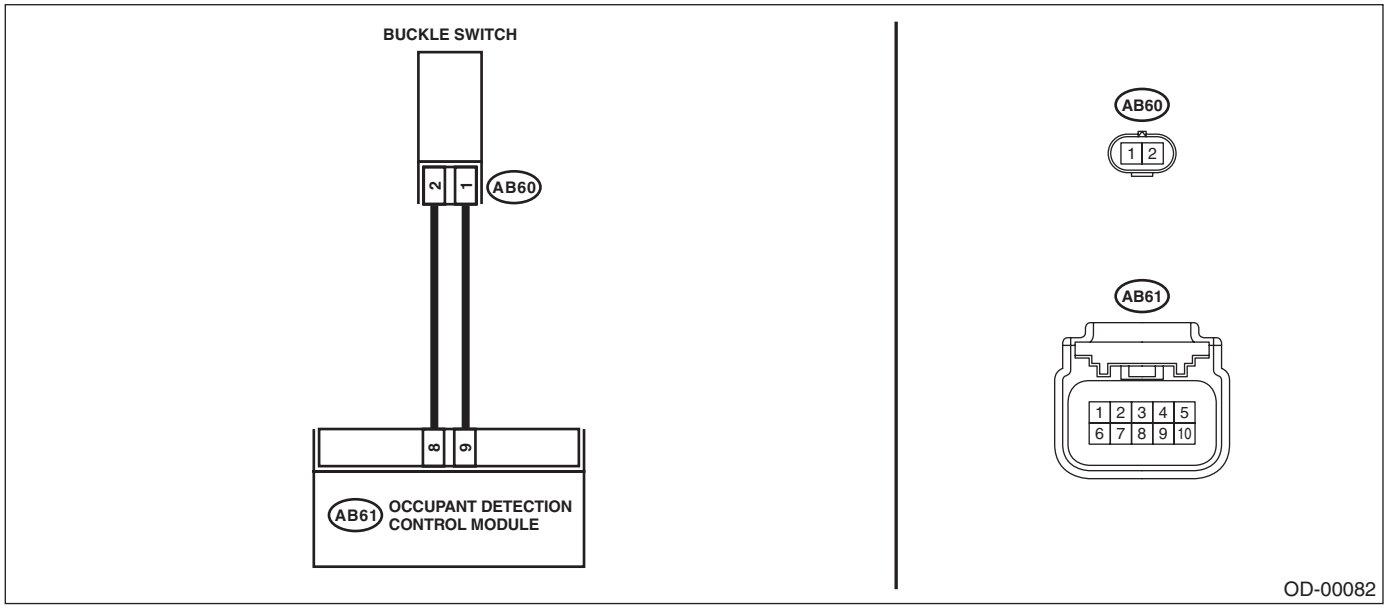

Step		Check	Yes	No
1	**CHECK POOR CONTACT OF CONNECTORS.** Check for poor contact of the connectors between the occupant detection control module and buckle switch.	Is there poor contact?	Reconnect the connectors. If the fault is not fixed, replace the airbag harness.	Go to step **2**.
2	**CHECK BUCKLE SWITCH.** 1) Turn the ignition switch to OFF, disconnect the battery ground cable, and wait for 60 seconds. 2) Disconnect the buckle switch connector (AB60). 3) Connect the test harness AE and test harness connector Y to buckle switch connector (AB60). 4) Connect the battery ground terminal and turn the ignition switch to ON.	Does the airbag warning light illuminate for 6 seconds and go off?	Replace the buckle switch. <Ref. to SB-17, OUTER BELT ASSY, REMOVAL, Front Seat Belt.>	Check the seat harness, and if any fault is found, replace the seat harness. If the fault is not fixed, replace the occupant detection system.

SEAT BELT SYSTEM

SB

Page

1. General Description 2
2. Pretensioner Connector 11
3. Inspection Locations after a Collision 12
4. Seat Belt Warning System 13
5. Front Seat Belt 17
6. Rear Seat Belt 30

1. General Description

A: COMPONENT

1. FRONT SEAT BELT

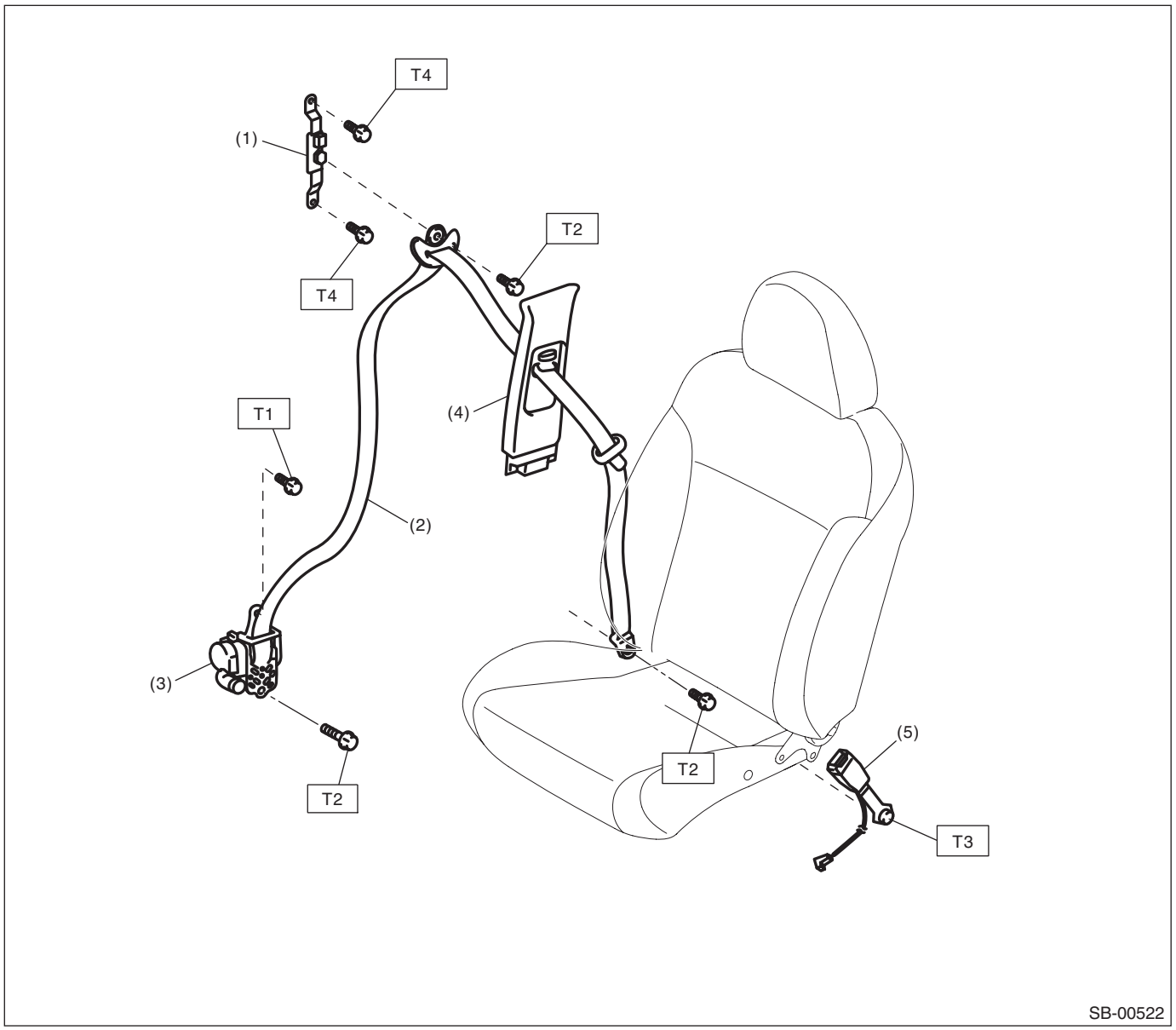

(1) Adjustable anchor ASSY
(2) Outer belt ASSY
(3) Seat belt retractor ASSY (Outer belt ASSY)
(4) Center pillar trim UPR
(5) Inner belt ASSY

Tightening torque:N·m (kgf-m, ft-lb)
T1: 7.5 (0.76, 5.5)
T2: 30 (3.06, 22.1)
T3: 38 (3.87, 28.0)
T4: 53 (5.4, 39.1)

2. REAR SEAT BELT (SEDAN MODEL)

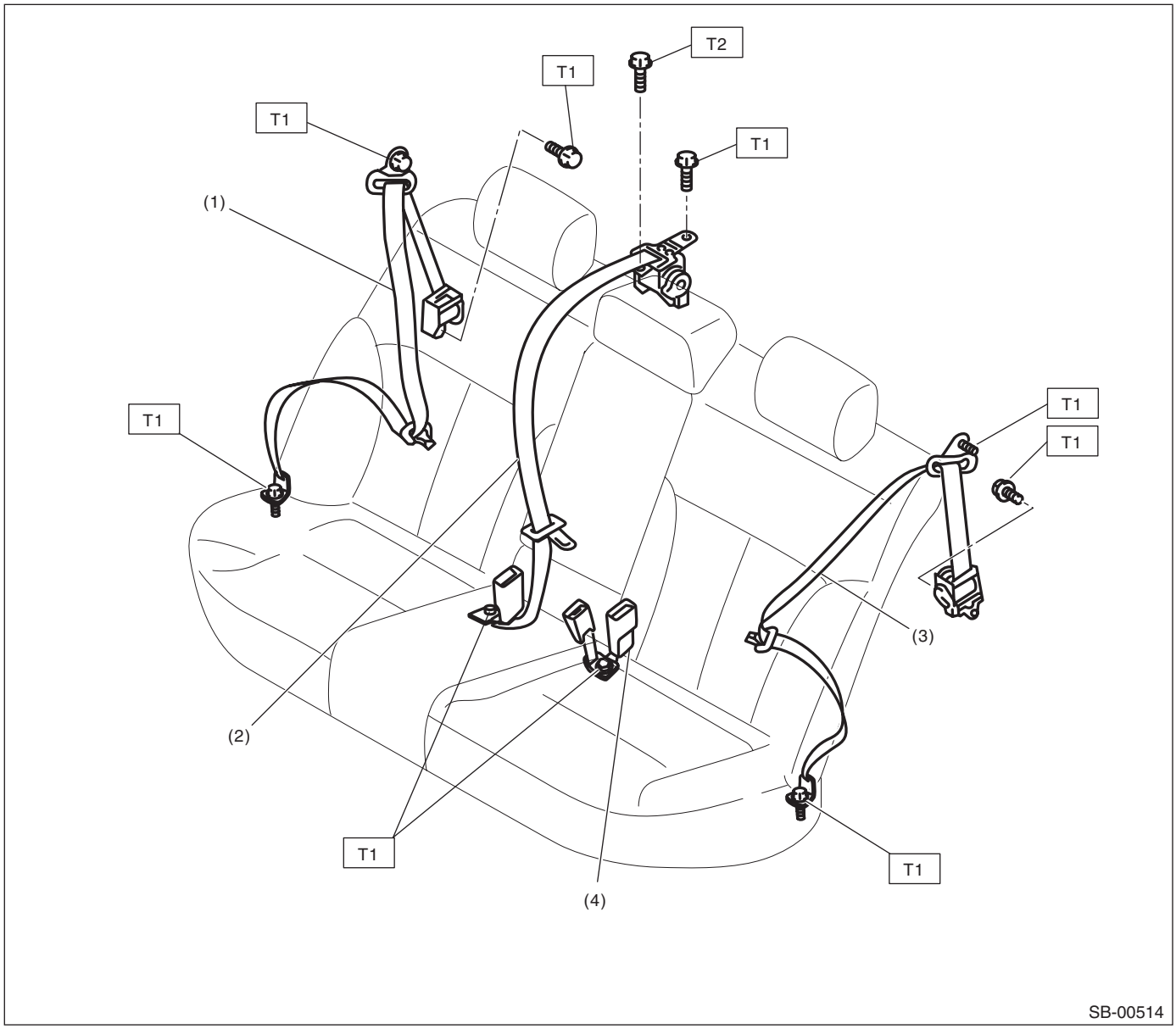

(1) Outer belt ASSY RH
(2) Shoulder belt ASSY CTR
(3) Outer belt ASSY LH
(4) Center belt ASSY LH

Tightening torque:N·m (kgf-m, ft-lb)
T1: 30 (3.06, 22.1)
T2: 53 (5.4, 39.1)

3. REAR SEAT BELT (OUTBACK MODEL)

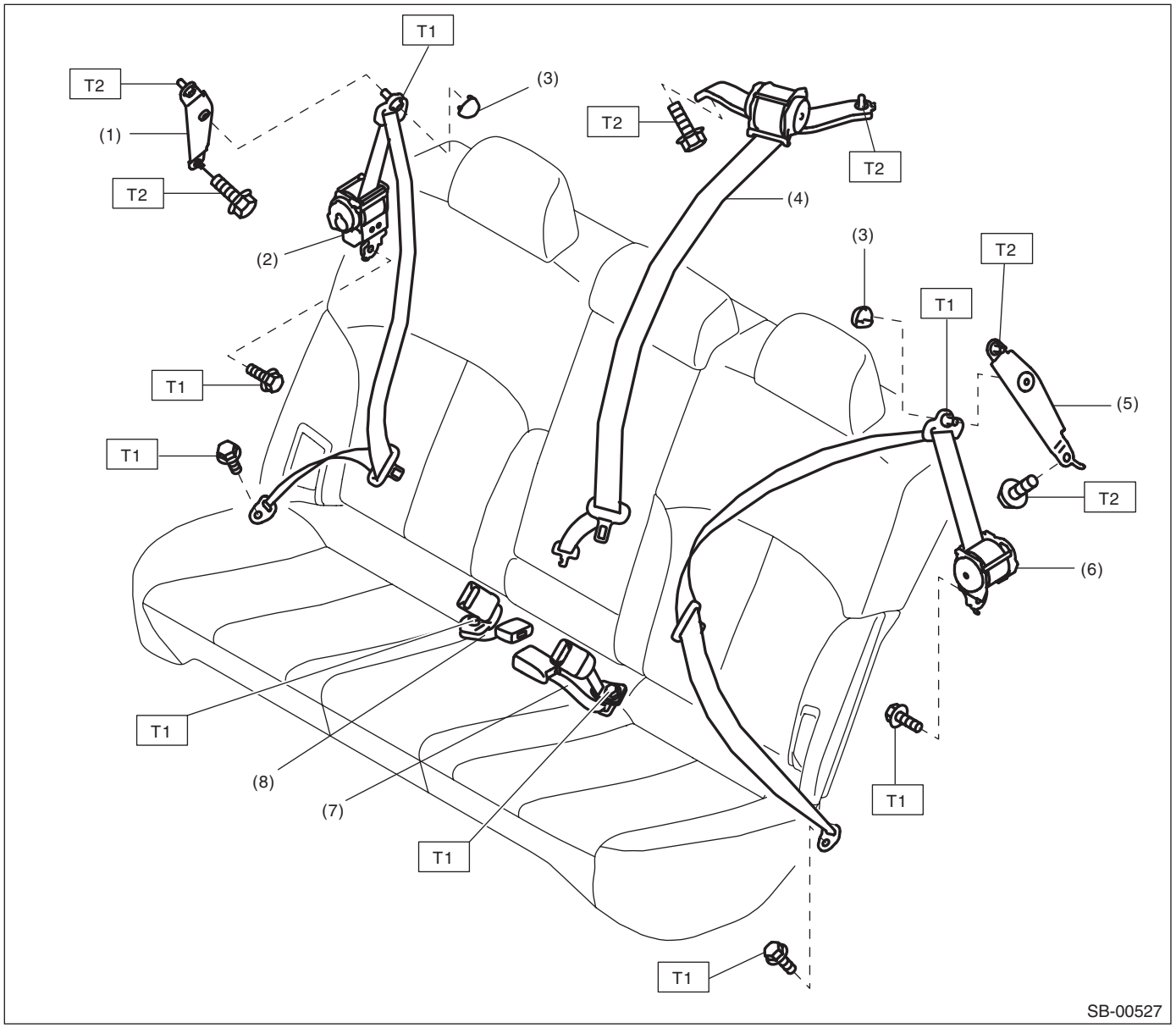

(1) Shoulder anchor bracket RH
(2) Outer belt ASSY RH
(3) Shoulder anchor cover
(4) Shoulder belt ASSY CTR
(5) Shoulder anchor bracket LH
(6) Outer belt ASSY LH
(7) Center belt ASSY LH
(8) Center belt ASSY RH

Tightening torque:N·m (kgf-m, ft-lb)
T1: 30 (3.06, 22.1)
T2: 53 (5.4, 39.1)

B: CAUTION

• Before starting the work, turn the ignition switch to OFF, disconnect the battery ground cable and wait for 60 seconds or more.
• The pretensioner system is fitted with a backup power supply. After disconnecting the battery ground cable, the pretensioner may operate if you do not wait for 60 seconds or more before starting pretensioner system servicing.
• Do not drop or apply any impact to the pretensioner.
• If oil, grease or water gets on the pretensioner, wipe it off immediately with a dry cloth.
• Do not expose the pretensioner to high temperature or flame.
• Do not allow current to flow through or voltage to reach the pretensioner. Do not use a circuit tester to check resistance of the pretensioner.
• Do not disassemble or attempt to repair the pretensioner. If it is dented, cracked or deformed, replace it with a new genuine part.
• Do not use the airbag or pretensioner parts from other vehicles. Always use a new genuine part for replacement.
• When handling a seat belt with deployed pretensioner, wear gloves and goggles. Wash your hands afterwards.
• Do not reuse a seat belt with deployed pretensioner.
• Before disposal, make sure to perform an operation process to the pretensioners.
• If material from the pretensioner enters the eyes or contacts skin during operation process, wash it away with clean water, and then consult a doctor.

C: PREPARATION TOOL

1. SPECIAL TOOL

• Subaru Select Monitor

ILLUSTRATION	TOOL NUMBER	DESCRIPTION	REMARKS
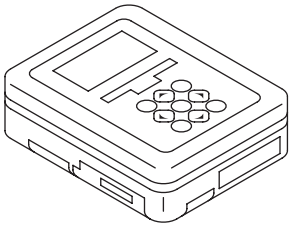 ST1B022XU0	1B022XU0	SUBARU SELECT MONITOR III KIT	Used for setting of each function and troubleshooting for electrical system.

- TEST HARNESS AD

ILLUSTRATION	TOOL NUMBER	DESCRIPTION	REMARKS
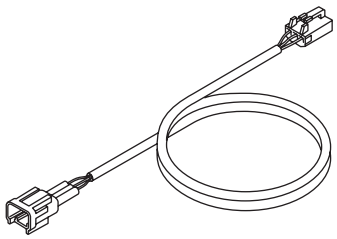 ST98299XA020	98299XA020	TEST HARNESS AD	Used when measuring voltage and resistance of the occupant detection system.

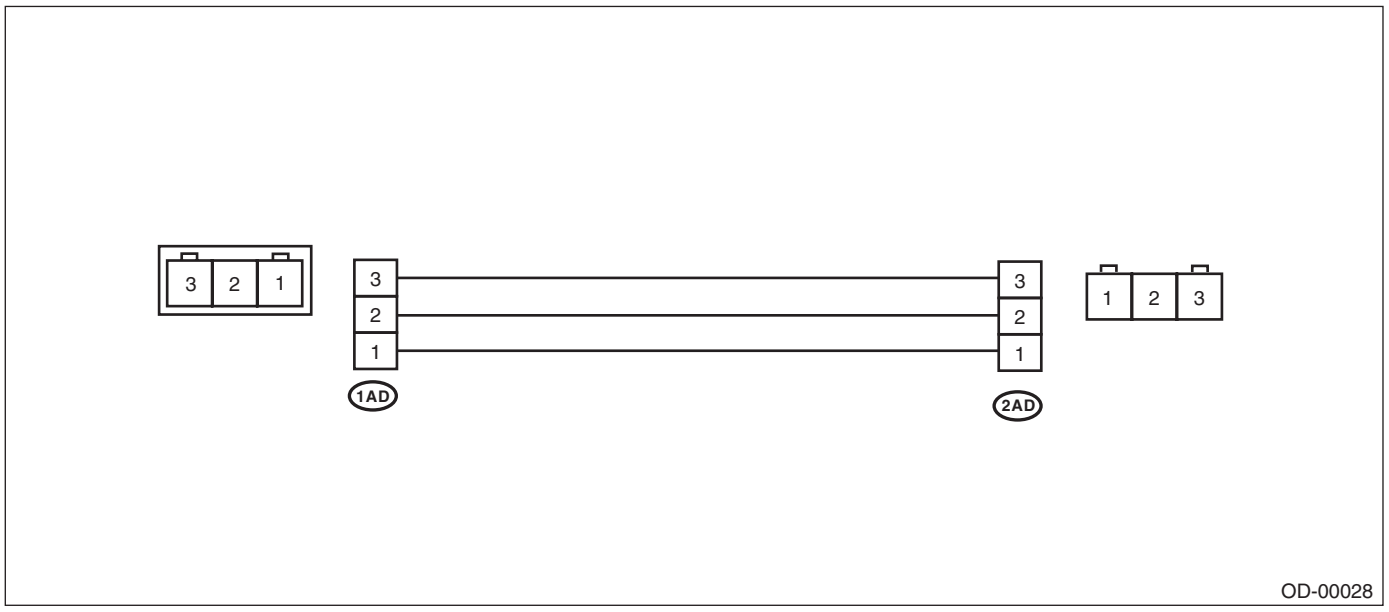

- TEST HARNESS AG

ILLUSTRATION	TOOL NUMBER	DESCRIPTION	REMARKS
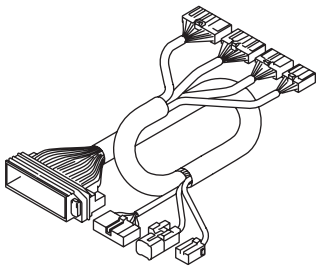 ST98299AG070	98299AG070	TEST HARNESS AG	Used when measuring voltage and resistance of airbag control module.

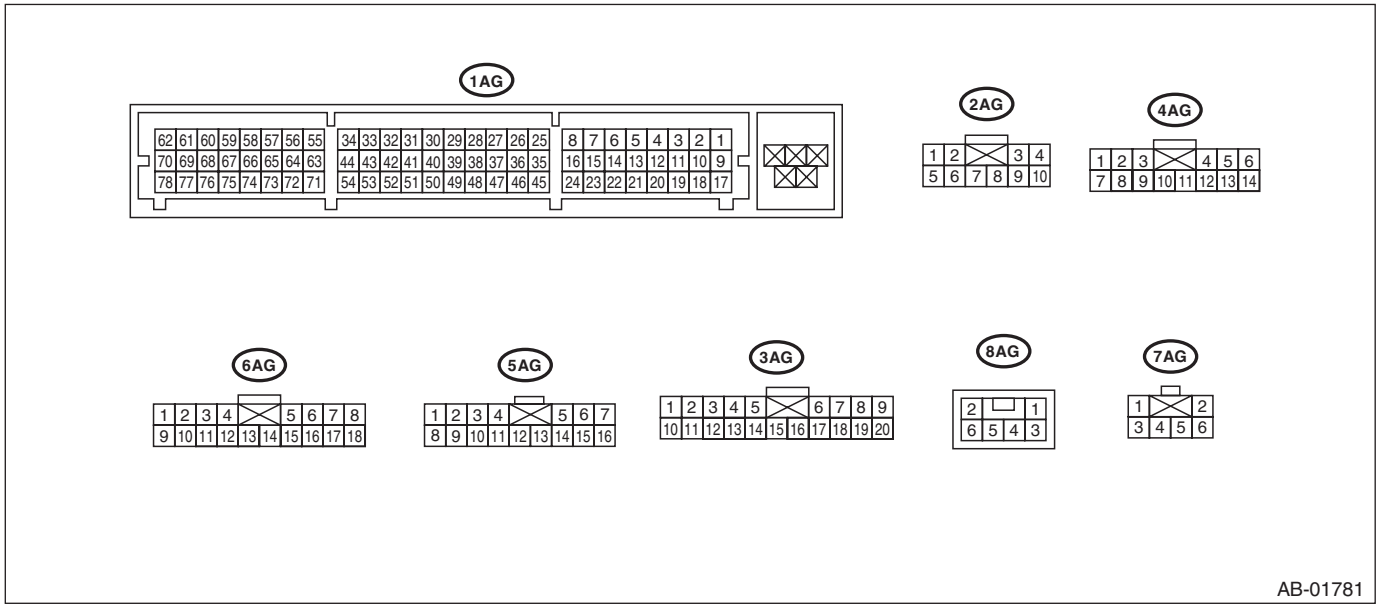

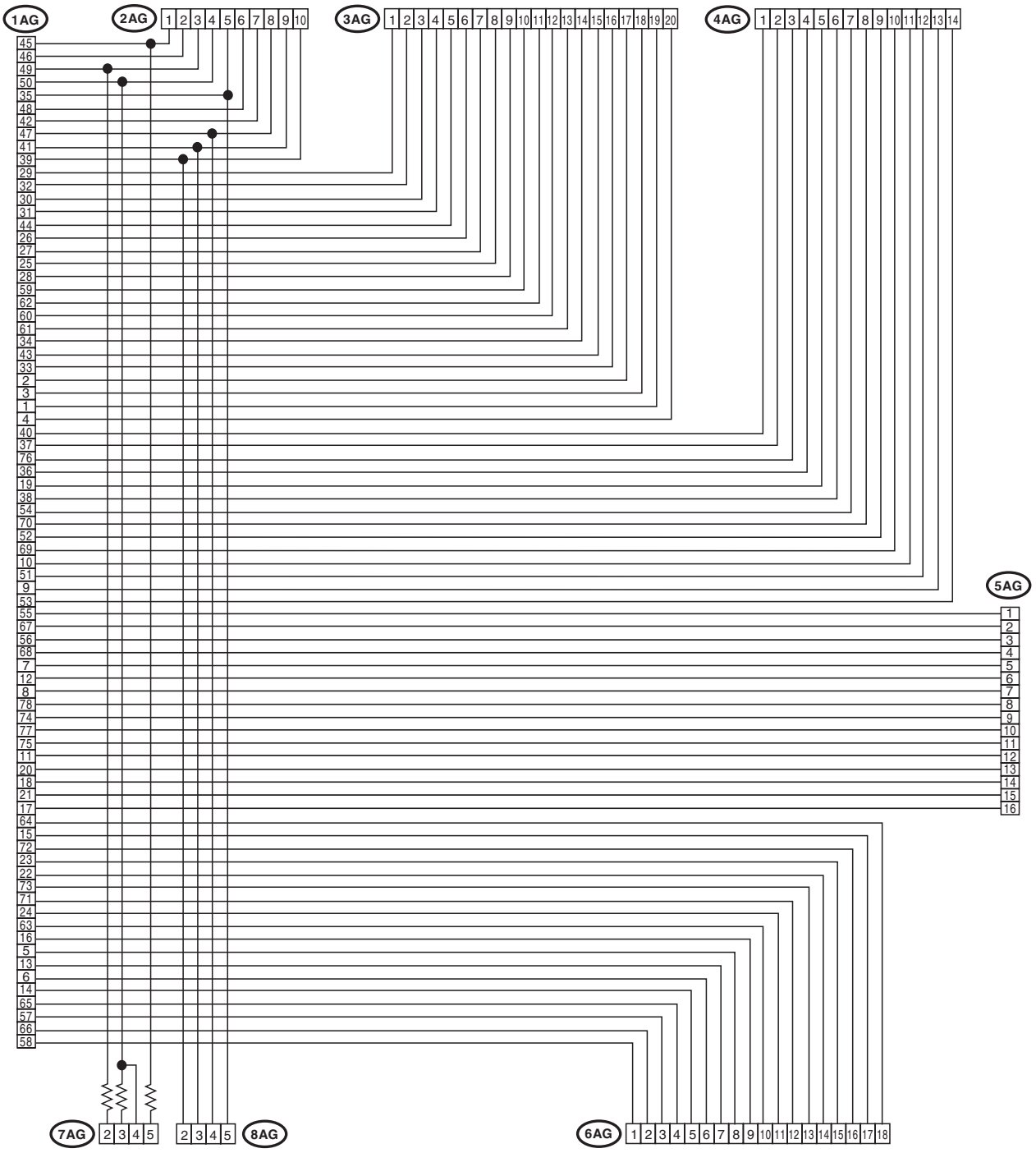

AB-01902

- TEST HARNESS Y

ILLUSTRATION	TOOL NUMBER	DESCRIPTION	REMARKS
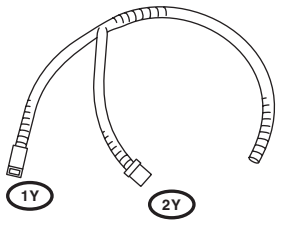 ST98299AG040	98299AG040	TEST HARNESS Y	Used for troubleshooting seat belt buckle switch.

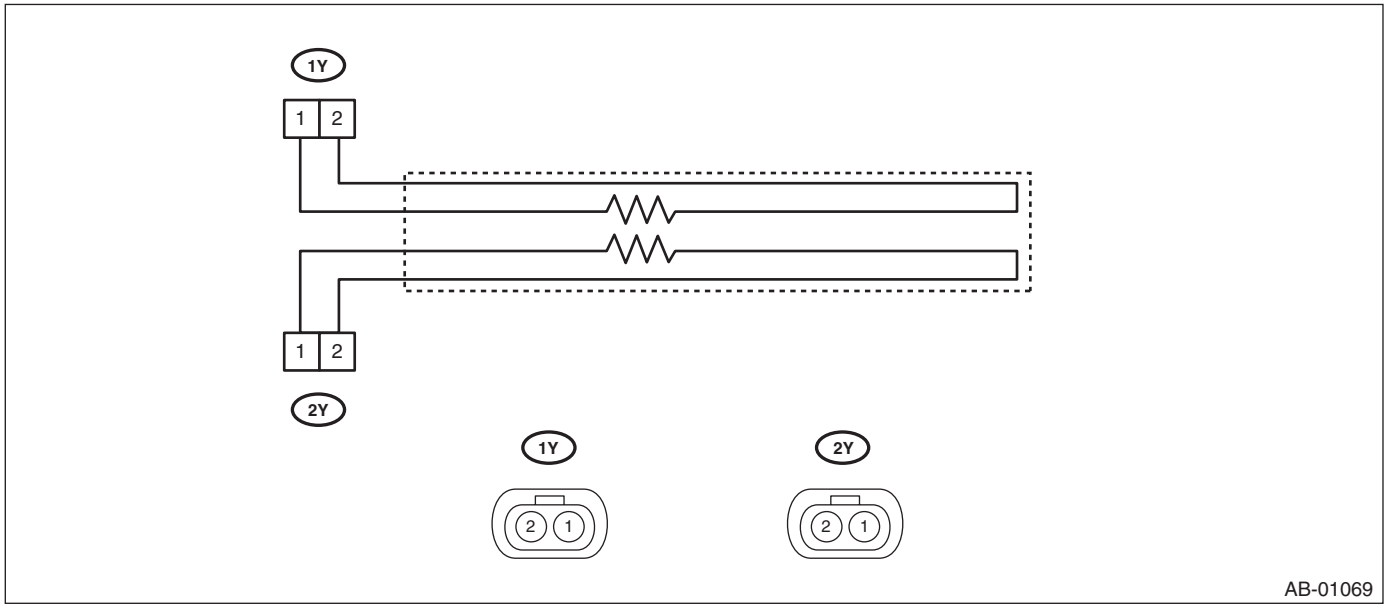

AB-01069

- AIRBAG RESISTOR

ILLUSTRATION	TOOL NUMBER	DESCRIPTION	REMARKS
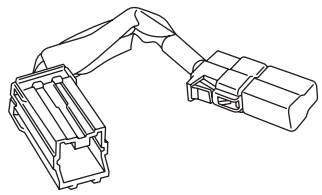 ST98299PA040	98299PA040	AIRBAG RESISTOR	Used in replacement of airbag module for which resistance value is same as airbag module. Two STs are required for diagnosis of two-stage inflator type airbag module.

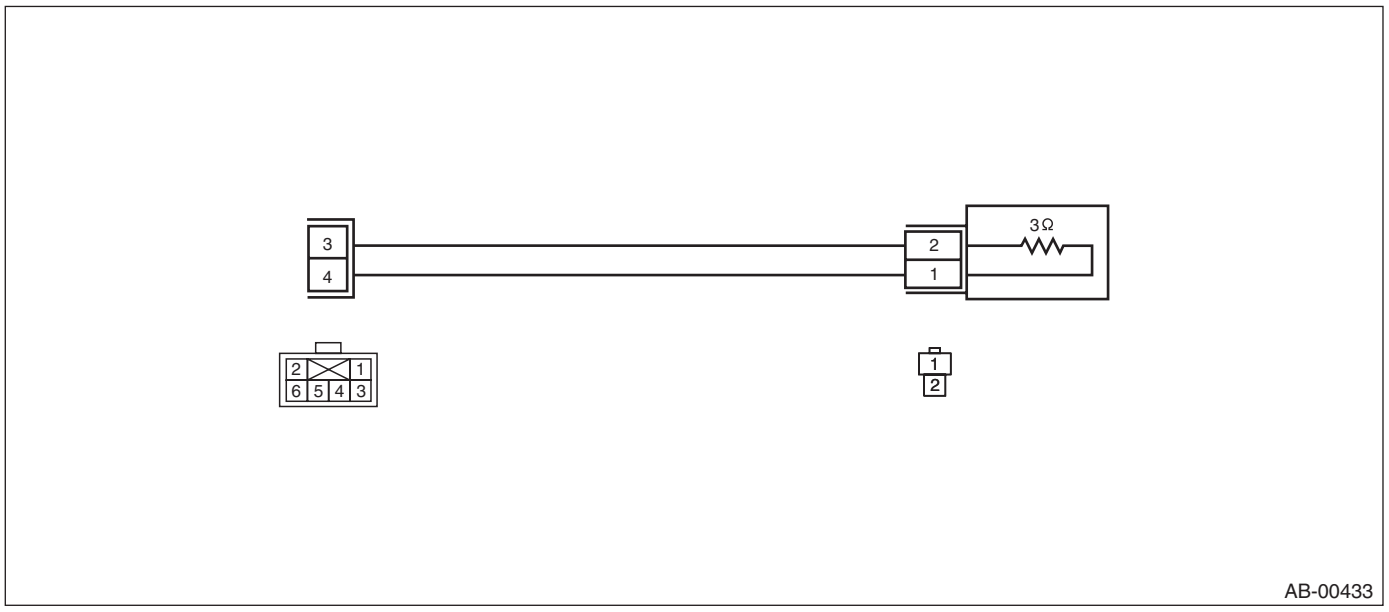

2. GENERAL TOOL

TOOL NAME	REMARKS
Circuit tester	Used for measuring resistance and voltage.

2. Pretensioner Connector

A: PROCEDURE

For connectors of seat belt pretensioner and buckle switch RH, refer to “Airbag System” or “Occupant Detection System”.

- Airbag system: <Ref. to AB-18, PROCEDURE, Airbag Connector.>
- Occupant detection system: <Ref. to OD(diag)-8, PROCEDURE, Airbag Connector.>

3. Inspection Locations after a Collision

A: INSPECTION

Refer to “Inspection Locations After a Collision” in the AIRBAG SYSTEM section. <Ref. to AB-29, Inspection Locations after a Collision.>

4. Seat Belt Warning System

A: WIRING DIAGRAM

Refer to “Seat Belt Warning System” in the wiring diagram. <Ref. to WI-226, WIRING DIAGRAM, Seat Belt Warning System.>

B: INSPECTION

CAUTION:
• Before diagnosing the airbag system, always turn the ignition switch to OFF, disconnect the battery ground cable, and then wait for 60 seconds or more.
• When replacing the airbag module, seat belt pretensioner, roll connector, control module, or sensors, reconnect the replacement part and check that the warning light operates normally.
• When inspecting the airbag main harness, disconnect the airbag module connectors of the driver’s and passenger’s seats for safety.
• When inspecting the airbag rear harness, disconnect the side airbag module connector, curtain airbag module connector and seat belt pretensioner connector for safety reasons.

	Step	Check	Yes	No
1	**CHECK CURRENT SETTINGS.** 1) Prepare the Subaru Select Monitor. 2) Turn the ignition switch to ON (engine OFF) and run the “PC application for Subaru Select Monitor”. 3) Select the “current data display” and read the data of the “Belt Warning Switch”.	Is the belt warning display ON?	Go to step **2**.	Turn the belt warning ON with unit customization.
2	**CHECK CURRENT DATA.** 1) Select the “current data display” and read the data of the “IG power supply voltage”. 2) Turn the ignition switch ON ←→ OFF.	Does the voltage change between 10 V or higher ←→ less than 1.5 V, according to the ignition switch ON ←→ OFF operation?	Go to step **3**.	Check the ignition switch circuit.
3	**CHECK FUNCTION.** 1) Sit on the driver’s seat and passenger’s seat and disconnect the seat belts of the both. 2) Turn the ignition switch to ON (engine OFF). 3) Check the illumination of the driver’s seat belt warning light in the combination meter, and the passenger’s seat belt warning light in the clock, and the sounding of the buzzer.	Do the driver’s warning light and passenger’s warning light blink and the buzzer sound while blinking?	Go to step **4**.	• Malfunction of the driver’s seat belt warning light →Go to step **10**. • Malfunction of the passenger’s seat belt warning light →Go to step **16**. • The buzzer does not sound →Go to step **6**.
4	**CHECK FUNCTION.** 1) Wait until the buzzer sound stops in step 3. (for approximately six seconds after starting sounding) 2) Connect and disconnect the seat belts of the driver’s and passenger’s. 3) Check the illumination of the driver’s seat belt warning light in the combination meter and the passenger’s seat belt warning light in the clock.	Do the seat belts warning light illuminate ←→ go off according to the operation?	Go to step **5**.	• Malfunction of the driver’s seat belt warning light →Go to step **6**. • Malfunction of the passenger’s seat belt warning light →Go to step **12**.

	Step	Check	Yes	No
5	**CHECK FUNCTION.** 1) Wait until the buzzer sound stops in step 3. (for approximately six seconds after starting sounding) 2) Start the engine, and set the vehicle speed at 20 km/h (12 MPH) or more. 3) Check the seat belt warning lights of the driver's and the passenger's, and if the warning buzzer sounds.	Do the driver's warning light and passenger's warning light blink and the buzzer sound while blinking?	Seat belt warning system is normal.	Go to step **20**.
6	**CHECK CURRENT DATA.** 1) Select the "current data display" and read the data of the seat belt switch of the driver's. 2) Connect and disconnect the seat belt buckle.	Does the seat belt SW display turn ON ←→ OFF according to the operation?	Go to step **10**.	Go to step **7**.
7	**CHECK HARNESS.** 1) Disconnect the negative terminal from the battery, and wait for 60 seconds or more. 2) Disconnect the connector of body integrated unit and the seat belt buckle switch. 3) Check for short circuit to battery, open circuit and short circuit to ground between the body integrated unit and the seat belt buckle switch LH. ***Connector & terminal*** ***Manual seat*** ***(i84) No. 30 — (R108) No. 1:*** ***Power seat*** ***(i84) No. 30 — (R381) No. 1:***	Is the harness normal?	Go to step **8**.	Repair or replace the harness.
8	**CHECK HARNESS.** Measure the resistance between the seat belt buckle switch LH and chassis ground. ***Connector & terminal*** ***Manual seat*** ***(R108) No. 2 — Chassis ground:*** ***Power seat*** ***(R381) No. 2 — Chassis ground:***	Is the resistance less than 10 Ω?	Go to step **9**.	Repair or replace the harness.
9	**CHECK SEAT BELT BUCKLE SWITCH LH.** Measure the resistance between the connector terminals of the driver's seat belt switch when the driver's seat belt is fastened and detached. ***Connector & terminal*** ***Manual seat*** ***(R108) No. 1 — (R108) No. 2:*** ***Power seat*** ***(R381) No. 1 — (R381) No. 2:***	Is the resistance when the belt is fastened 1 MΩ or more, and less than 10 Ω when the belt is detached?	Replace the body integrated unit. <Ref. to SL-71, REMOVAL, Body Integrated Unit.>	Replace the inner belt assembly LH. <Ref. to SB-17, OUTER BELT ASSY, REMOVAL, Front Seat Belt.>
10	**CHECK DTC.** Read the DTC using Subaru Select Monitor.	Is any CAN-related body system DTC detected?	Check the CAN system according to the DTC.	Go to step **11**.
11	**CHECK COMBINATION METER.** Perform the self-diagnosis of combination meter. <Ref. to IDI-6, SELF-DIAGNOSIS DISPLAY MODE, OPERATION, Combination Meter System.>	At the start of combination meter self diagnosis, did the buzzer sound and the seat belt warning light illuminate?	Replace the body integrated unit or the combination meter. Or replace both. It may be due to the transmission failure of the body integrated unit or the reception failure of the combination meter.	Replace the combination meter. <Ref. to IDI-21, REMOVAL, Combination Meter.>

	Step	Check	Yes	No
12	**CHECK CURRENT DATA.** 1) Sit in the passenger's seat. 2) Select "Current Data Display" and display the data of "P seat belt SW input ". 3) Fasten and detach the passenger's side seat belt buckle, and read the data of the seat belt switch. <Ref. to BC(diag)-12, OPERATION, Read Current Data.>	Does the seat belt switch display turn ON ←→ OFF according to the operation of the seat belt buckle?	Go to step **16**.	Go to step **13**.
13	**CHECK AIRBAG SYSTEM AND OCCUPANT DETECTION SYSTEM.** Perform the check in accordance with the diagnostic procedure DTC 27 of the airbag system. <Ref. to AB(diag)-73, DTC 27 ODS COMMUNICATION ERROR, Diagnostic Chart with Trouble Code.>	Is there any problem on the inspection result?	Go to step **14**.	Repair or replace with new parts according to DTC 27.
14	**CHECK BUCKLE SWITCH RH.** Perform the check in accordance with the diagnostic procedure DTC 37 of the occupant detection system. <Ref. to OD(diag)-23, DTC 37 BUCKLE SWITCH RH FAILURE, Diagnostic Procedure with Diagnostic Trouble Code (DTC).>	Is there any problem on the inspection result?	Go to step **15**.	Repair or replace with new parts according to DTC 37.
15	**CHECK AIRBAG CONTROL MODULE AND BODY INTEGRATED UNIT.** Check the airbag control module, occupant detection sensor and seat belt buckle switch RH. Perform the check in accordance with the diagnostic procedure DTC 39 of the airbag system. <Ref. to AB(diag)-79, DTC 39 SEAT BELT WARNING FAILURE, Diagnostic Chart with Trouble Code.>	Is there any problem on the inspection result?	Replace the body integrated unit. <Ref. to SL-71, REMOVAL, Body Integrated Unit.>	Repair or replace with new parts according to DTC 39.
16	**CHECK CLOCK POWER SUPPLY VOLTAGE.** 1) Disconnect the clock connector. 2) Turn the ignition switch to ON. 3) Measure the voltage between the ignition power supply and the clock. ***Connector & terminal*** ***(i59) No. 10 (+) — Chassis ground (–):*** ***(i59) No. 8 (+) — Chassis ground (–):***	Is the voltage 10 V or more?	Go to step **17**.	Check the harness for a open or short between the fuse and clock.
17	**CHECK CLOCK GROUND CIRCUIT.** 1) Turn the ignition switch to OFF. 2) Measure the resistance between clock and chassis ground. ***Connector & terminal*** ***(i59) No. 6 — Chassis ground:***	Is the resistance less than 10 Ω?	Go to step **18**.	Repair or replace the harness.
18	**CHECK BODY INTEGRATED UNIT DATA.** Read the DTC of body integrated unit using Subaru Select Monitor.	Is DTC detected?	Perform the diagnosis according to DTC.	Go to step **19**.
19	**CHECK HARNESS BETWEEN BODY INTEGRATED UNIT AND COMBINATION METER.** 1) Turn the ignition switch to OFF. 2) Disconnect the harness of the body integrated unit and the combination meter. 3) Measure the resistance between body integrated unit and combination meter. ***Connector & terminal*** ***(i84) No. 27 — (i10) No. 33:*** ***(i84) No. 35 — (i10) No. 32:***	Is the resistance less than 10 Ω?	Go to step **20**.	Repair or replace the harness.

	Step	Check	Yes	No
20	**CHECK HARNESS BETWEEN CLOCK AND COMBINATION METER.** 1) Disconnect the harness of the clock and the combination meter. 2) Measure the resistance between clock and combination meter. ***Connector & terminal*** ***(i59) No. 5 — (i10) No. 3:***	Is the resistance less than 10 Ω?	Go to step **21**.	Repair or replace the harness.
21	**CHECK COMMUNICATION STATUS BETWEEN CLOCK AND COMBINATION METER.** 1) Remove the clock, and install a properly operating clock (new clock). 2) Connect the connector and then turn the ignition switch to ON. ***Connector & terminal*** ***(i59) No. 5 — (i10) No. 3:***	Is the clock properly displayed?	Replace the clock.	Replace the meter case assembly.

5. Front Seat Belt

A: REMOVAL

1. OUTER BELT ASSY

CAUTION:
• The airbag system is fitted with a backup power supply. After disconnecting the battery ground cable, the airbag may operate if you do not wait for 60 seconds before starting the service of airbag system.
• Do not drop or subject the pretensioner to any impact.
• Since the pretensioner and bracket are integrated as a unit, do not disassemble them.
1) Before working, turn the ignition switch to OFF, disconnect the battery ground cable, and wait for 60 seconds or more.

NOTE:
Remove the front and rear bolts from the slide rail of the power seat before removing the battery ground.
2) Tilt the backrest forward and move the seat to the front most position.

CAUTION:
For the power seat, after moving the seat, check that the battery ground has been removed. If not, disconnect the battery ground cable and wait for 60 seconds or more.
3) Release the claws, and then remove the side sill cover - front INN. (On the side where seat belt assembly is removed)

CAUTION:
Do not pull with excessive force. Doing so may damage the claws of the side sill cover INN.

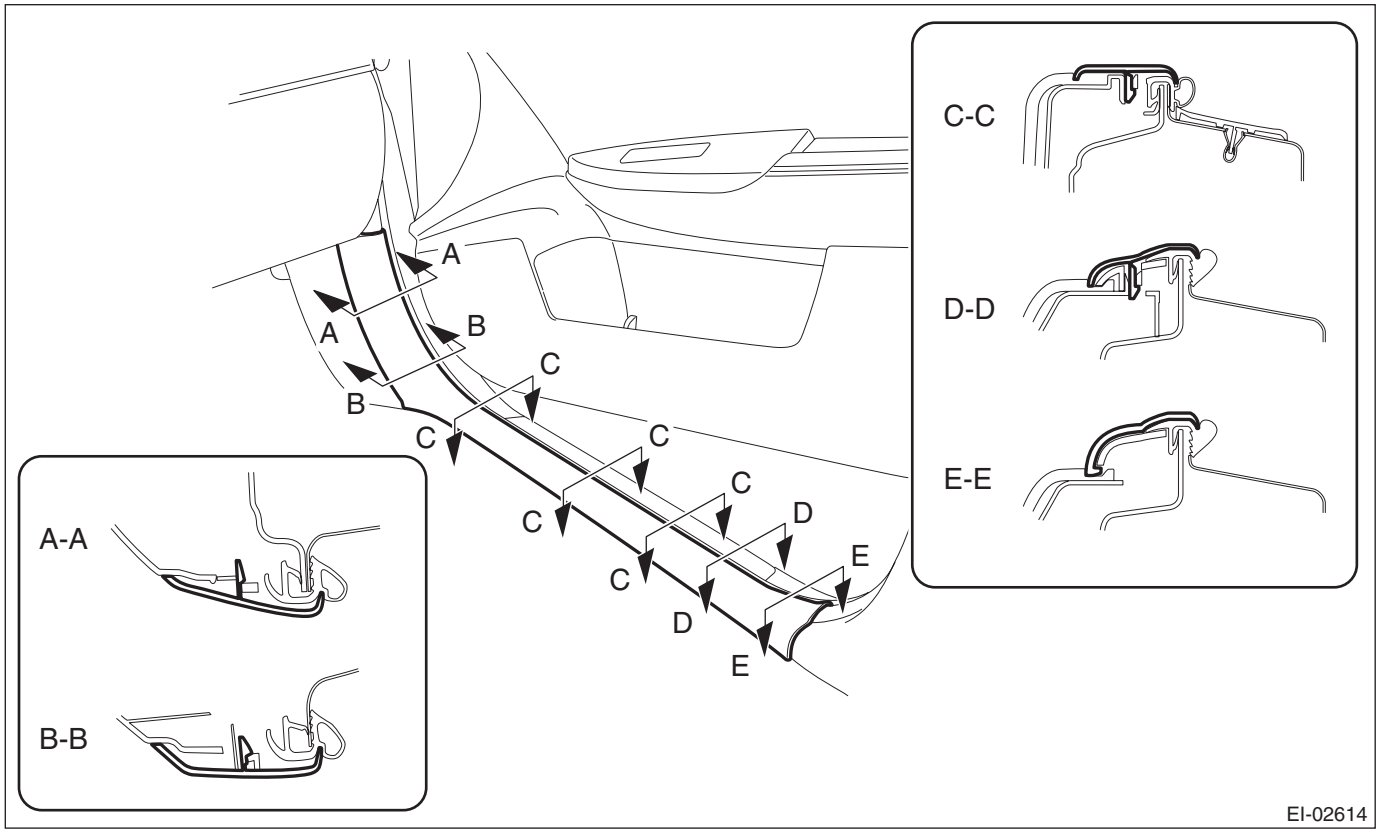

NOTE:
To release the claws of the side sill cover INN, the following steps are recommended.
1. Take out the weather strip from under the side sill cover INN.
2. Turn over the floor mat and release the claw (C-C) by accessing from behind the side sill cover INN.

4) Release the clips and claws, and then remove the side sill cover - rear INN. (On the side where seat belt assembly is removed)

CAUTION:
Do not pull with excessive force. Doing so may damage the claws of the side sill cover INN.

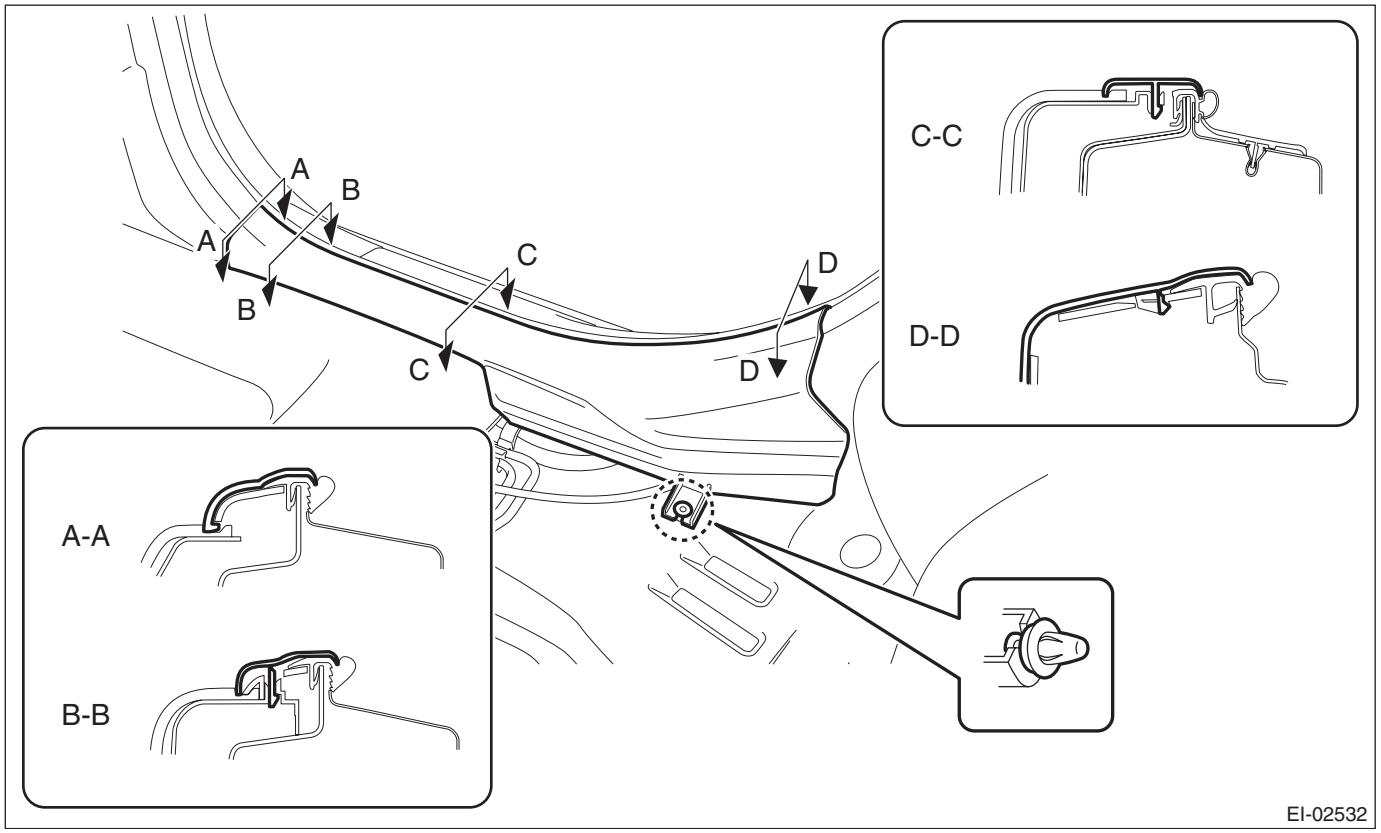

NOTE:
To release the claws of the side sill cover INN, the following steps are recommended.
1. Take out the weather strip from under the side sill cover INN.
2. Turn over the floor mat and release the claw (C-C and D-D) by accessing from behind the side sill cover INN.

5) Remove the center pillar trim LWR. (On the side where seat belt assembly is removed)
(1) Release the clip by pulling the center pillar trim LWR toward you.
(2) Expand the claws of center pillar trim LWR outward and remove it from the center pillar trim UPR.

CAUTION:
Do not expand the center pillar trim LWR excessively. Doing so may damage the trim.

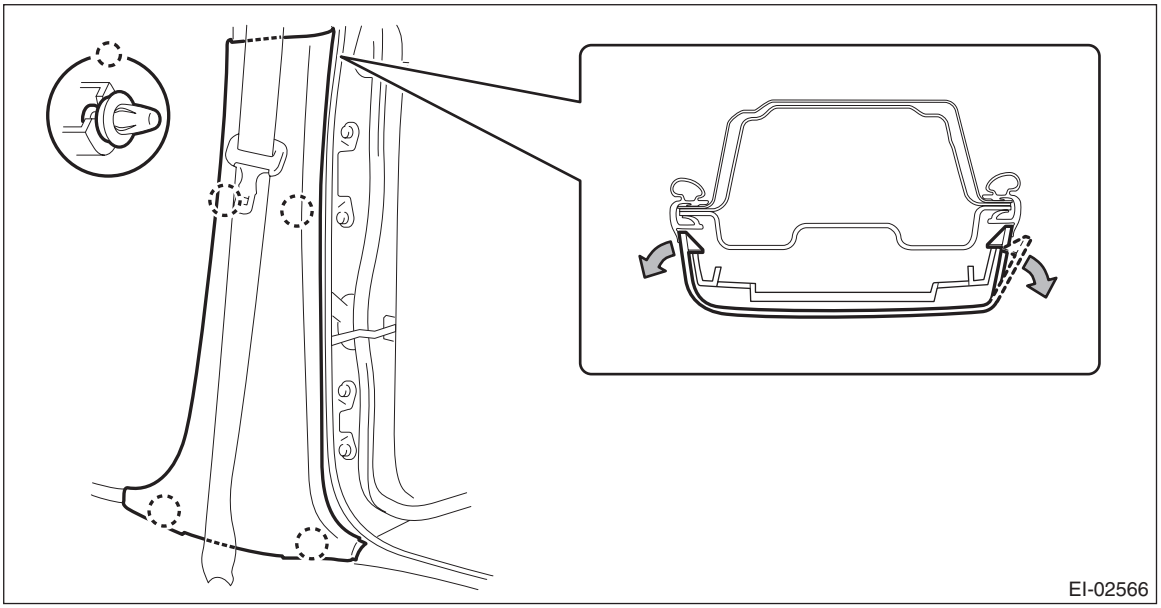
EI-02566

NOTE:
First release the claw located to the rear of the vehicle.
6) Remove the center pillar trim UPR. (On the side where seat belt assembly is removed)
(1) Release the clip by pulling the center pillar trim UPR toward you.
(2) Remove the center pillar trim UPR by lowering the entire trim.

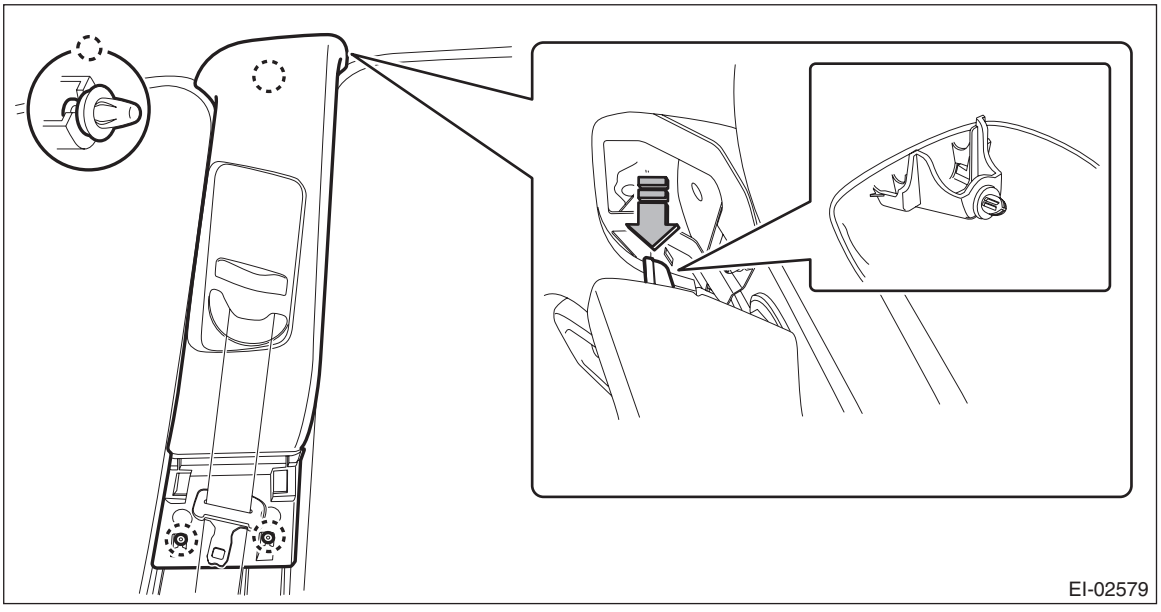
EI-02579

(3) Remove the shoulder anchor bolt.

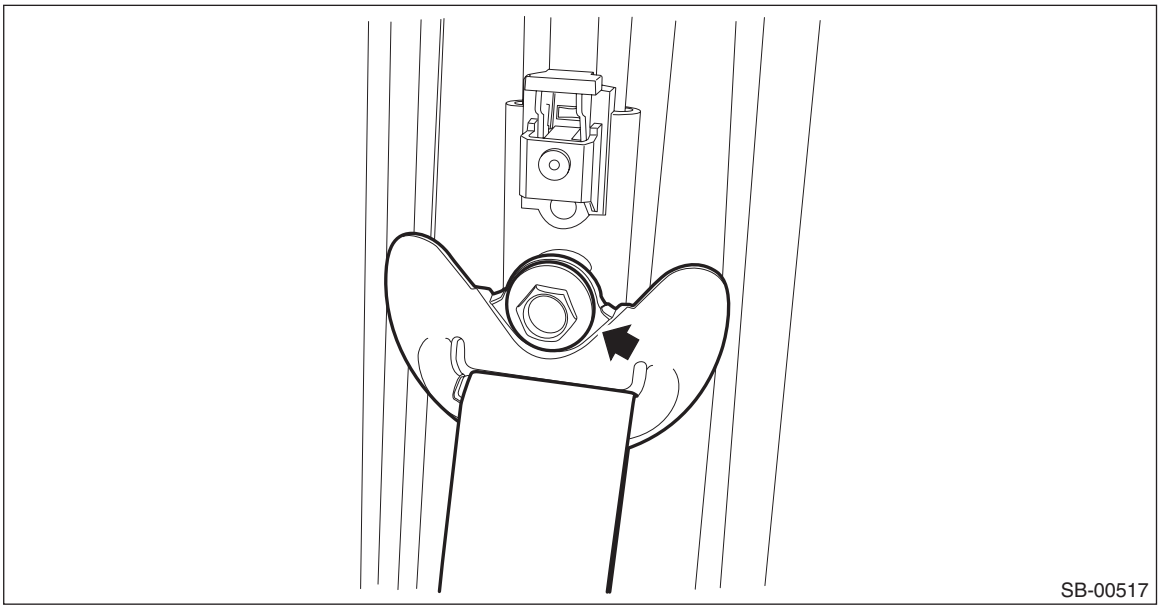

7) Remove the seat belt assembly.
(1) Turn over the floor mat to disconnect the belt tension sensor connector.
(2) Remove the bolt to remove the seat belt retractor and lower anchor bolt.

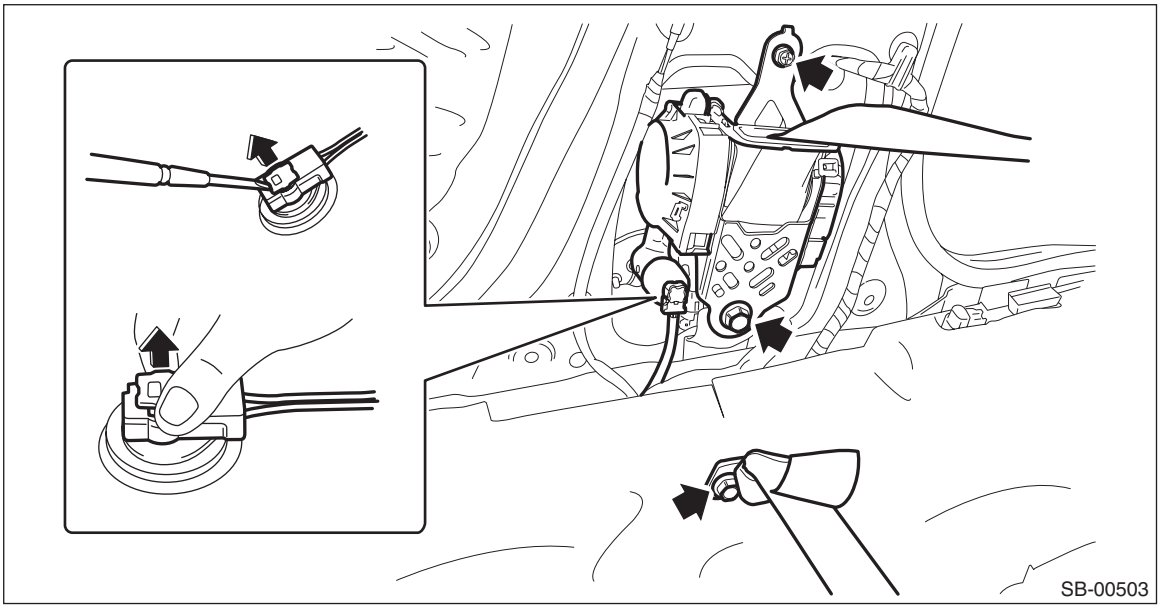

(3) Pull out the seat belt from the center pillar trim UPR.

2. INNER BELT ASSY

CAUTION:
The airbag system is fitted with a backup power supply. After disconnecting the battery ground cable, the airbag may operate if you do not wait for 60 seconds before starting the service of airbag system.

1) Turn the ignition switch to OFF.
2) Disconnect the ground cable from battery and wait for at least 60 seconds before starting work.

NOTE:
For the power seat, remove the slide rail installing bolt before removing the battery ground.

3) Remove the front seats.
(1) Remove the slide rail installing bolt.
a) Tilt the backrest forward and move the seat to the front most position.
b) Remove the rear bolt cover (A) and remove the two bolts.
c) Move the seat to the rearmost position.
d) Remove the front bolt cover (B) and remove the two bolts.

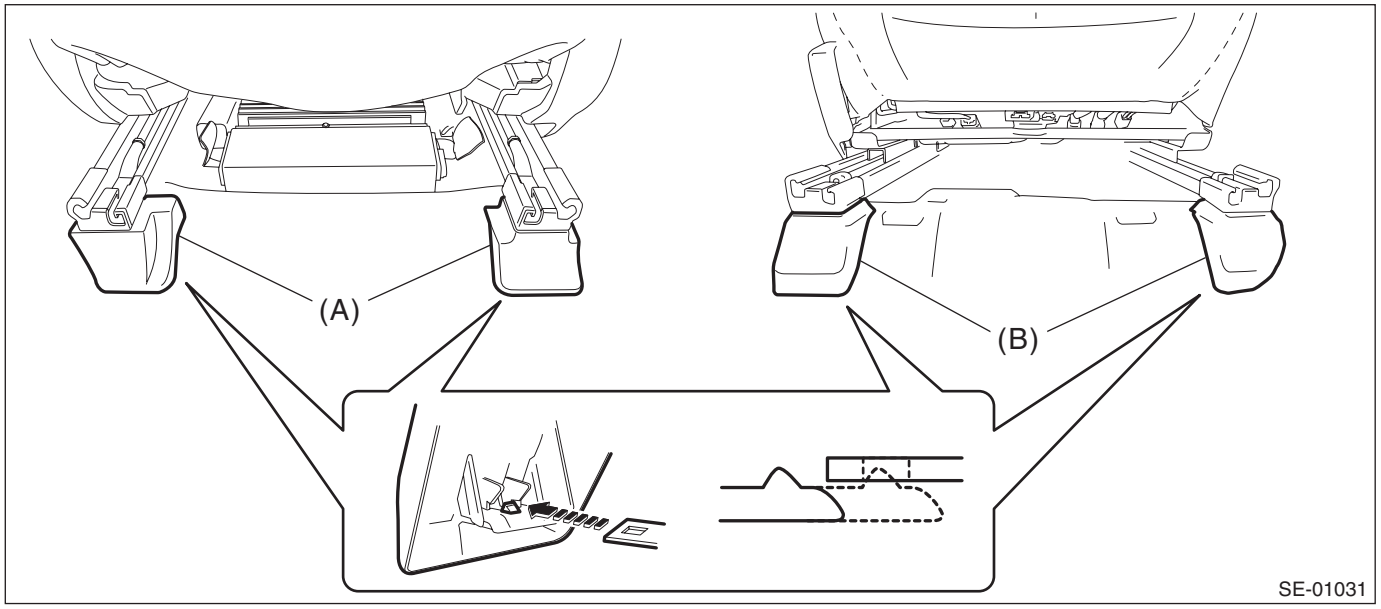

(2) Disconnect the connector under the seat.

CAUTION:
Disconnect the ground cable from battery, and wait 60 seconds before disconnecting the connector.
- Seat belt warning light connector (driver's seat)
- Occupant detection system harness connector (passenger's seat)
- Side airbag connector
- Seat heater connector (model with seat heater)
- Power seat connector (model with power seats)
- Headrest monitor connector (model with headrest monitor)

4) Remove the inner seat belt assembly.
(1) Remove the nut and remove the inner seat belt assembly.
(2) Remove the clip for the inner seat belt harness located under the seat cushion.

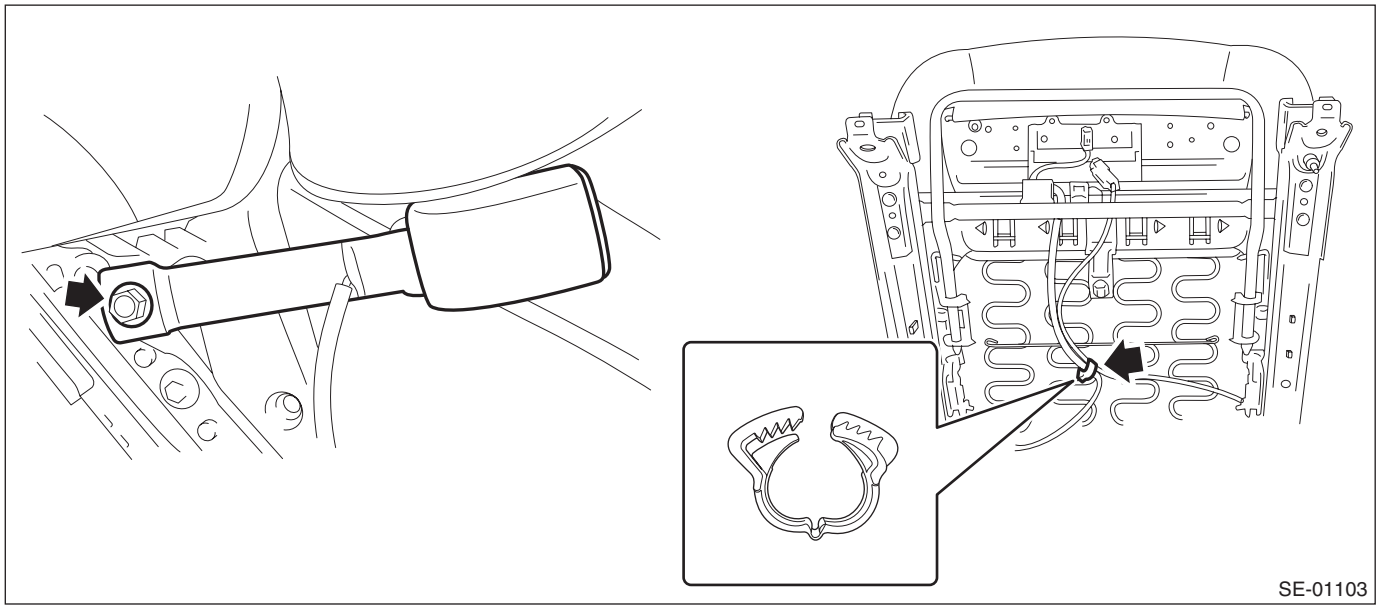

3. ADJUSTABLE ANCHOR ASSY

CAUTION:
• The airbag system is fitted with a backup power supply. After disconnecting the battery ground cable, the airbag may operate if you do not wait for 60 seconds before starting the service of airbag system.
• Do not drop or subject the pretensioner to any impact.
• Since the pretensioner and bracket are integrated as a unit, do not disassemble them.
1) Before working, turn the ignition switch to OFF, disconnect the battery ground cable, and wait for 60 seconds or more.

NOTE:
For the power seat model, move the seat all the way forward before removing the battery ground terminal.
2) Tilt the backrest forward and move the seat to the front most position.

CAUTION:
For the power seat, after moving the seat, check that the battery ground has been removed. If not, disconnect the battery ground cable and wait for 60 seconds or more.
3) Release the claws, and then remove the side sill cover - front INN. (On the side where seat belt assembly is removed)

CAUTION:
Do not pull with excessive force. Doing so may damage the claws of the side sill cover INN.

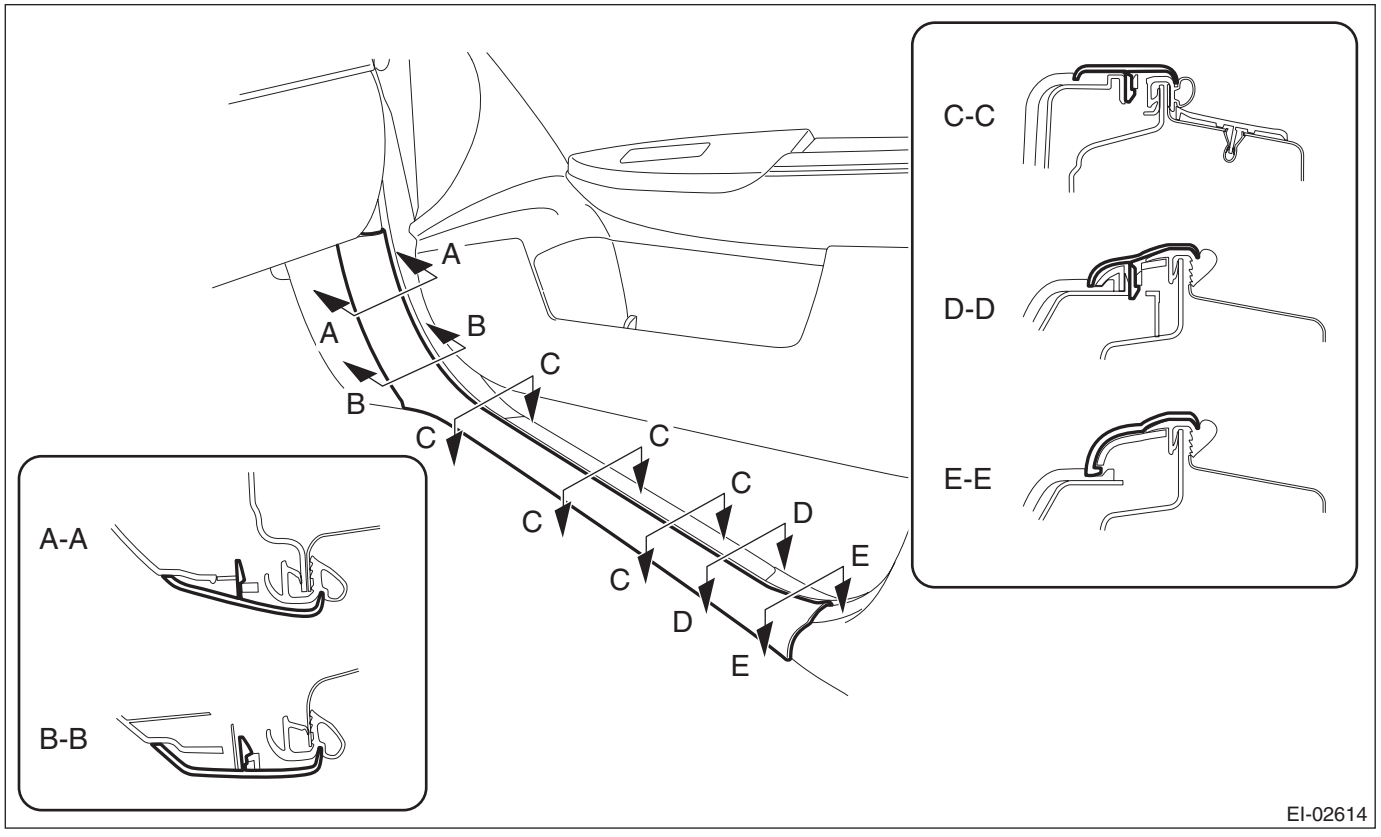

NOTE:
To release the claws of the side sill cover INN, the following steps are recommended.
1. Take out the weather strip from under the side sill cover INN.
2. Turn over the floor mat and release the claw (C-C) by accessing from behind the side sill cover INN.

4) Release the clips and claws, and then remove the side sill cover - rear INN. (On the side where seat belt assembly is removed)

CAUTION:
Do not pull with excessive force. Doing so may damage the claws of the side sill cover INN.

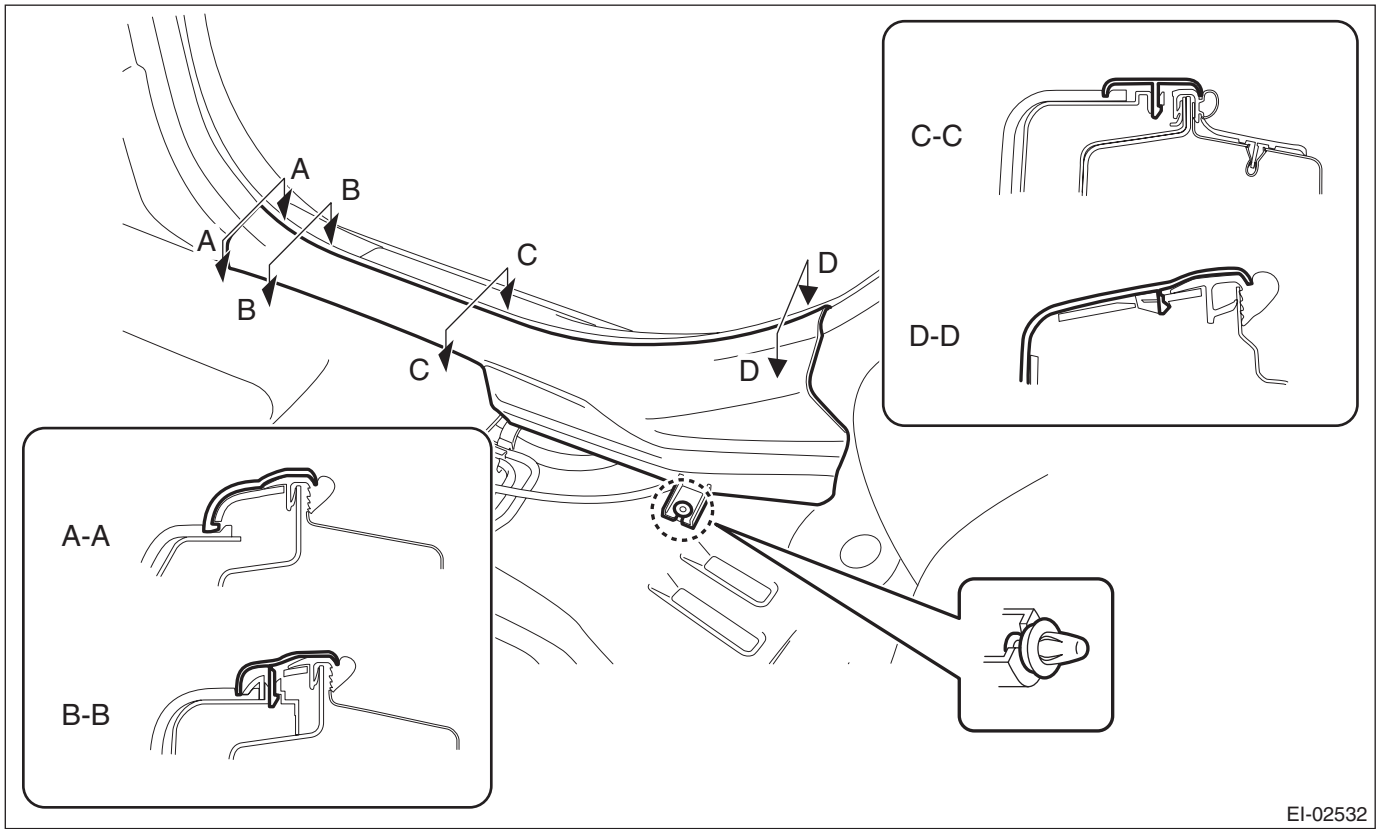

NOTE:
To release the claws of the side sill cover INN, the following steps are recommended.
1. Take out the weather strip from under the side sill cover INN.
2. Turn over the floor mat and release the claw (C-C and D-D) by accessing from behind the side sill cover INN.

5) Remove the center pillar trim LWR. (On the side where seat belt assembly is removed)
   (1) Release the clip by pulling the center pillar trim LWR toward you.
   (2) Expand the claws of center pillar trim LWR outward and remove it from the center pillar trim UPR.

CAUTION:
Do not expand the center pillar trim LWR excessively. Doing so may damage the trim.

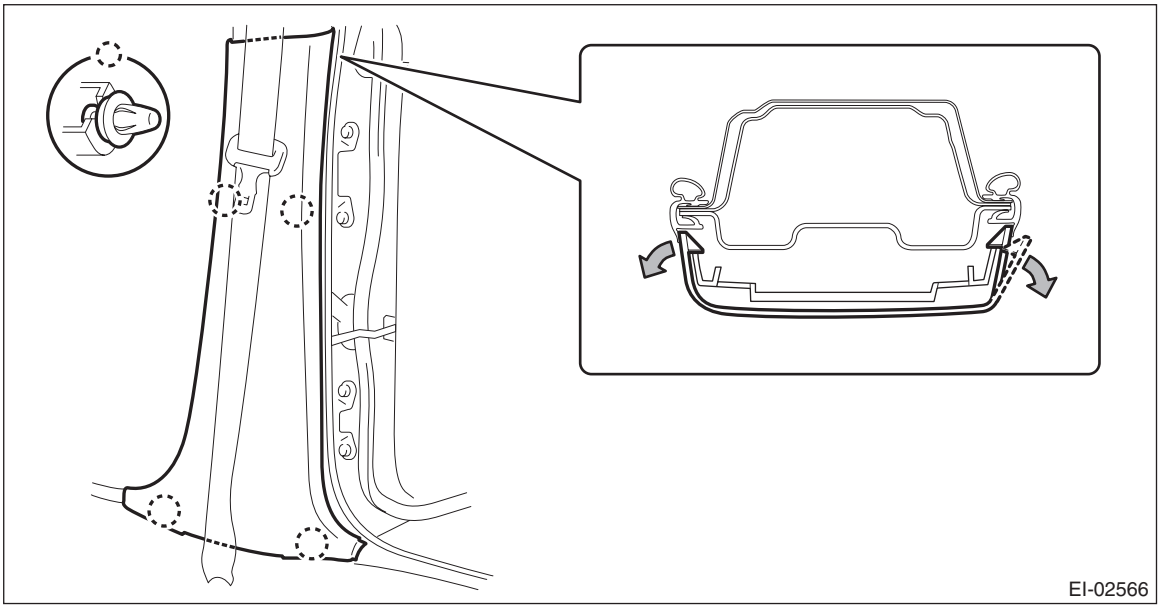
EI-02566

NOTE:
First release the claw located to the rear of the vehicle.

6) Remove the center pillar trim UPR. (On the side where seat belt assembly is removed)
   (1) Release the clip by pulling the center pillar trim UPR toward you.
   (2) Remove the center pillar trim UPR by lowering the entire trim.

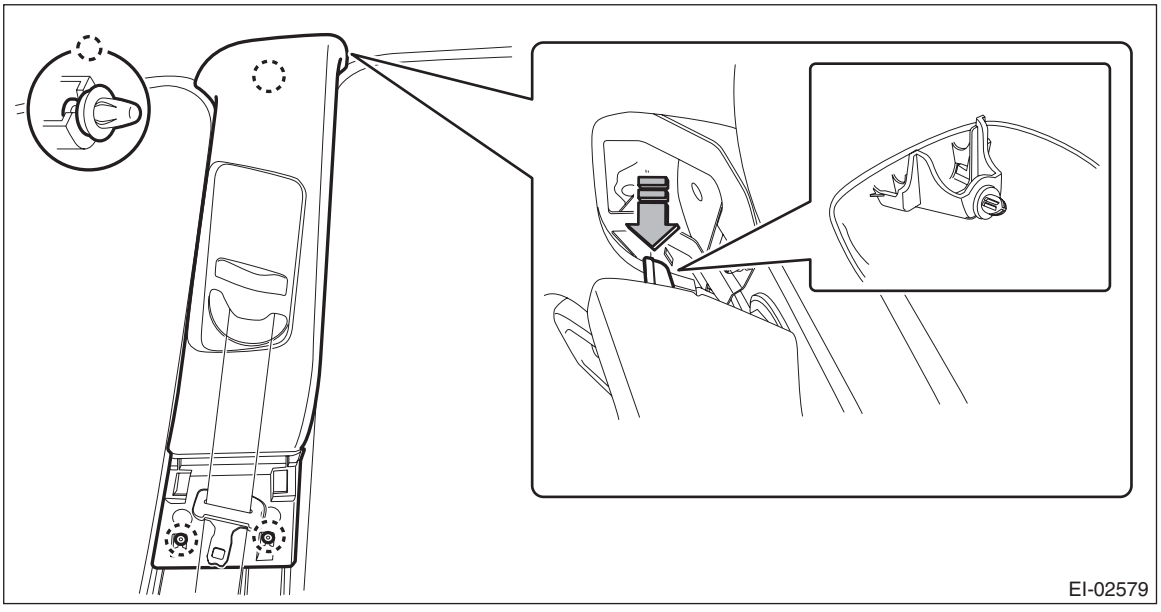
EI-02579

(3) Remove the shoulder anchor bolt.

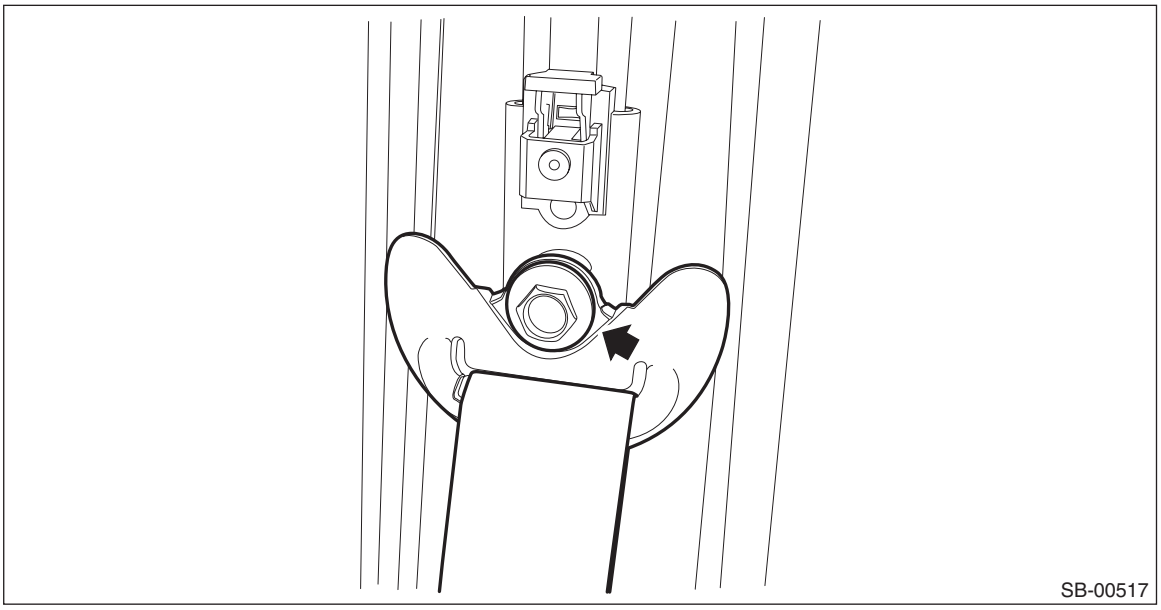

7) Remove the two bolts to remove the adjustable anchor assembly.

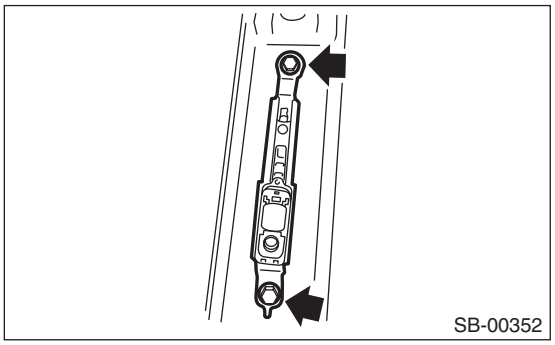

B: INSTALLATION

1. OUTER BELT ASSY

CAUTION:
• The parts of the driver and passenger sides are not the same. Before installation, make sure that the correct part is used.
• During installation, make sure that the seat belts are not twisted.
• After installation, make sure that the seat belt can be pulled out and retracted smoothly.
• Make sure that the seat belt harness is not caught anywhere. Wrong harness rooting may cause the harness short from pinch.
• Do not reuse the clips in the upper section of the center pillar trim. Always replace with a new part. Once the pillar trim is removed, the clip retention power deteriorates and the center pillar trim may come off.

1) Before installation, perform a unit inspection of retractor. <Ref. to SB-28, INSPECTION, Front Seat Belt.>
2) Install the outer belt assembly.

Tightening torque:
Front seat belt: <Ref. to SB-2, FRONT SEAT BELT, COMPONENT, General Description.>

3) Assemble the center pillar trim LWR to the center pillar trim UPR securely.

CAUTION:
Do not forget to install the seat belt.

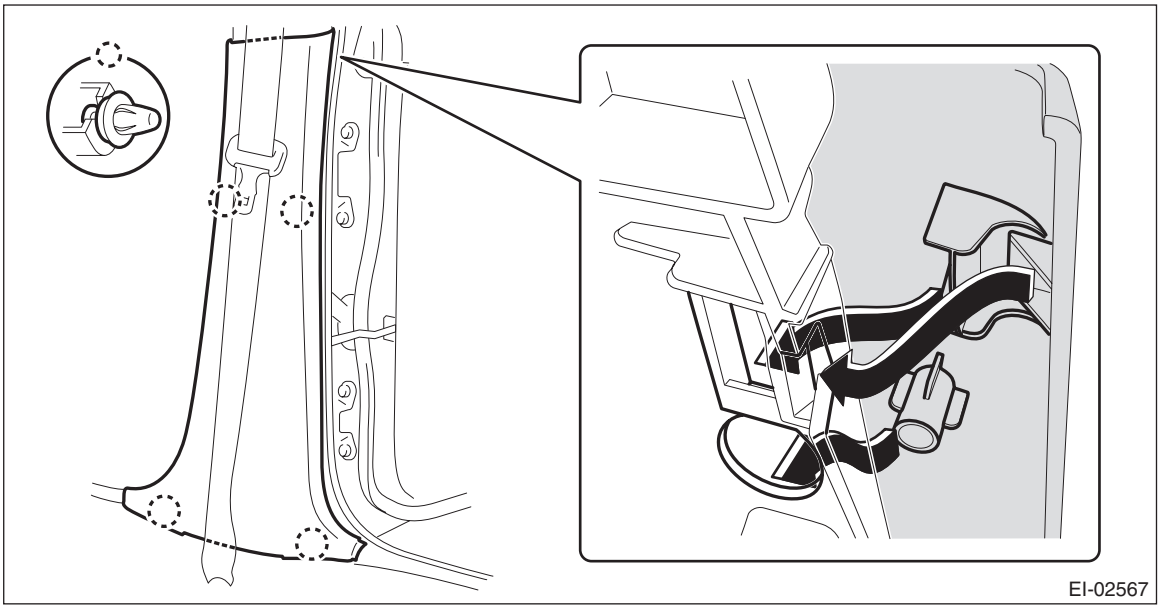

4) Assemble the center pillar trim LWR and center pillar trim UPR to the body.

CAUTION:
Do not reuse the clips in the upper section of the pillar trim. Always replace with a new part.

(1) Guide the seat belt through the center pillar trim UPR.
(2) Insert the upper claws of the pillar trim.
(3) Attach the pillar trim by fitting the lower clips to the body.

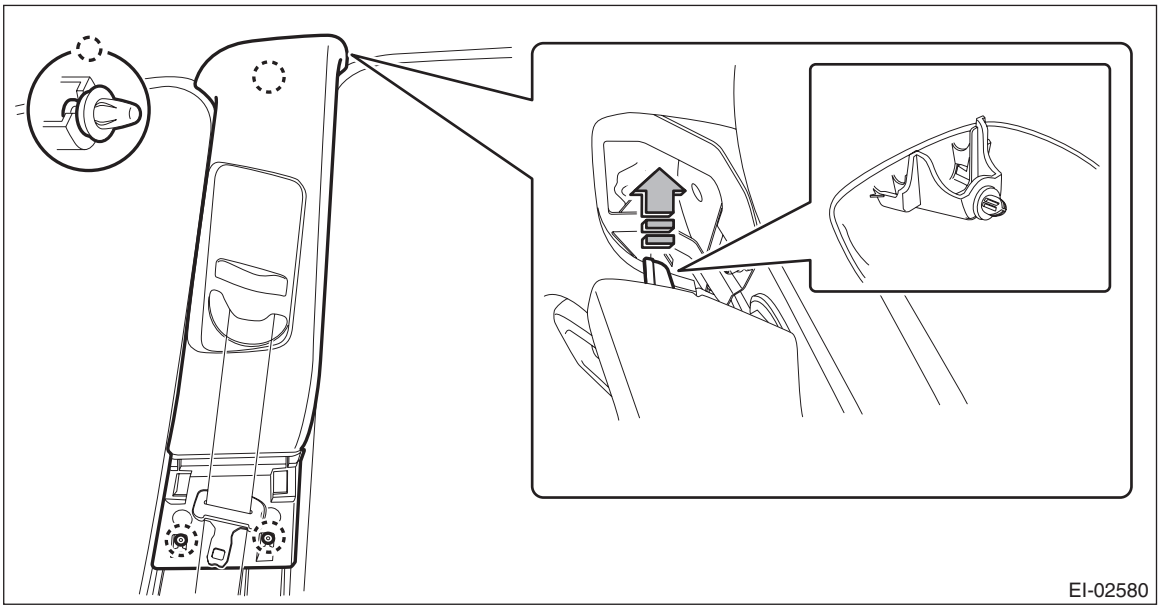

5) Install the remaining parts in the reverse order of removal.
6) After installation, check the following points.

- The seat belt is not twisted.
- The seat belt can be pulled out and retracted smoothly.
- The adjustable anchor can be moved smoothly.
- Check that the airbag warning light lights up for approximately 6 seconds and then turns off when connecting the battery ground cable and turning the ignition switch to ON.

2. INNER BELT ASSY

CAUTION:
- **Before installation, make sure that the correct part is used.**
- **During installation, make sure that the seat belts are not twisted.**
- **Make sure that the seat belt harness is not caught. Wrong routing of harnesses may cause short circuits because of getting caught.**

1) Install the inner belt assembly.

Tightening torque:
Front seat belt: <Ref. to SB-2, FRONT SEAT BELT, COMPONENT, General Description.>

2) Locate the seat belt harness and retain it with a harness clip.

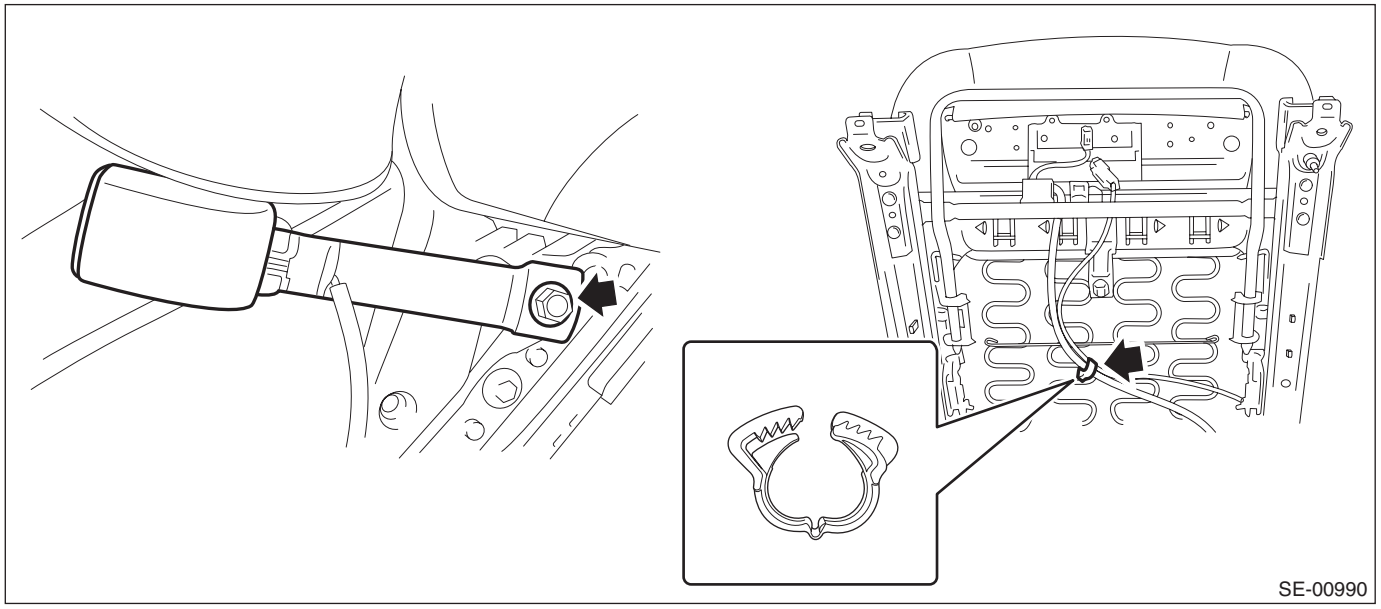

3) Install the seat assembly to the body.

CAUTION:
- **The seat mounting bolts differ between the front mounting points and the rear mounting points. Make sure that you are using correct bolts at correct positions.**
- **Tighten the slide rail installing bolt gradually in several steps to the specified torque in the order as shown in the figure.**

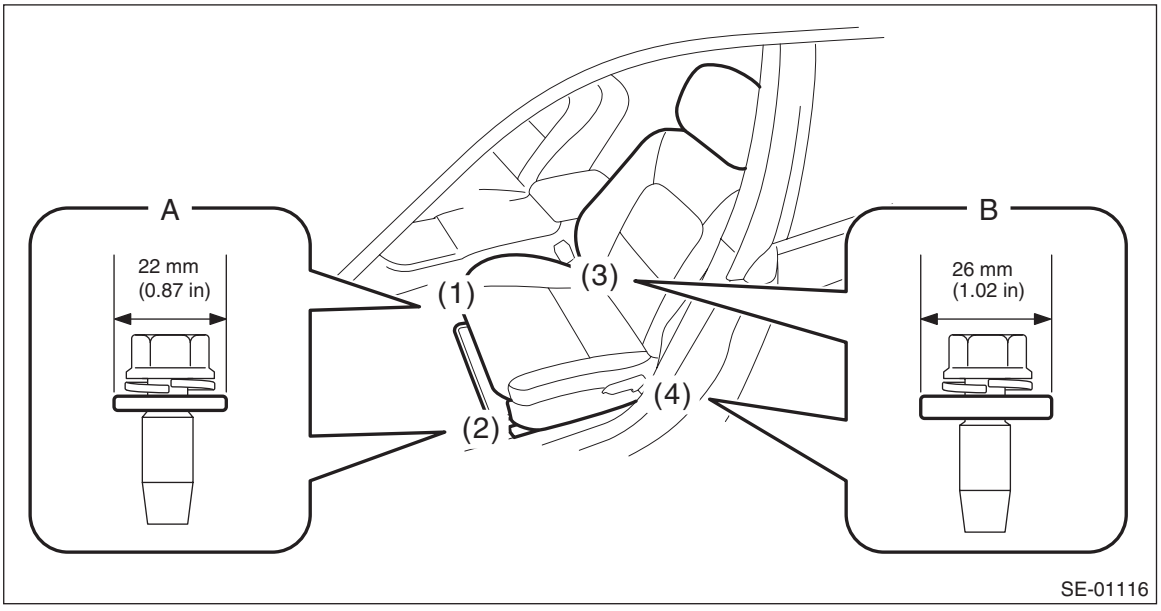

- **Front (bolt A): Washer diameter 22 mm (0.87 in)**
- **Rear (bolt B): Washer diameter 26 mm (1.02 in)**

Tightening torque:
Front seat assembly: 53 N·m (5.4 kgf-m, 39.1 ft-lb)
4) Check that no harness is caught by sliding the seat back and forth.

3. ADJUSTABLE ANCHOR ASSY

Referring to the installation procedure for outer belt ASSY, install the parts in the reverse order of removal.

Tightening torque:
Front seat belt: <Ref. to SB-2, FRONT SEAT BELT, COMPONENT, General Description.>

C: INSPECTION

1. VISUAL INSPECTION

Check for the following, and replace with new parts if necessary.
- Pretensioner is cracked or deformed.
- Adjustable anchor assembly is cracked or deformed.
- Seat belt is slackened, bent or worn.
- Seat belt is abnormally wound or extended.
- Inner belt ASSY is deformed or damaged.
- Seat belt buckle cannot be engaged properly.

2. ELR LOCK MECHANISM INSPECTION

1) Hold the retractor upright (as installed in the vehicle) and check the ELR lock mechanism.
2) Tilt the retractor from the upright posture and check the following points.
- It does not lock if the inclination angle is 12° or less.

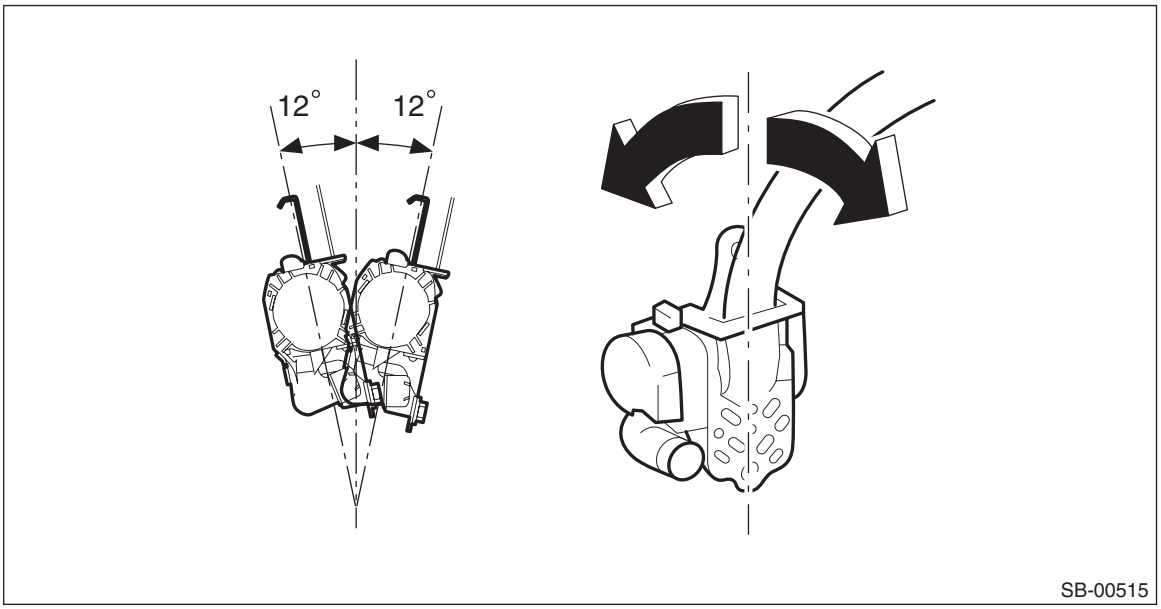

• It remains locked if the inclination angle is 27° or more.

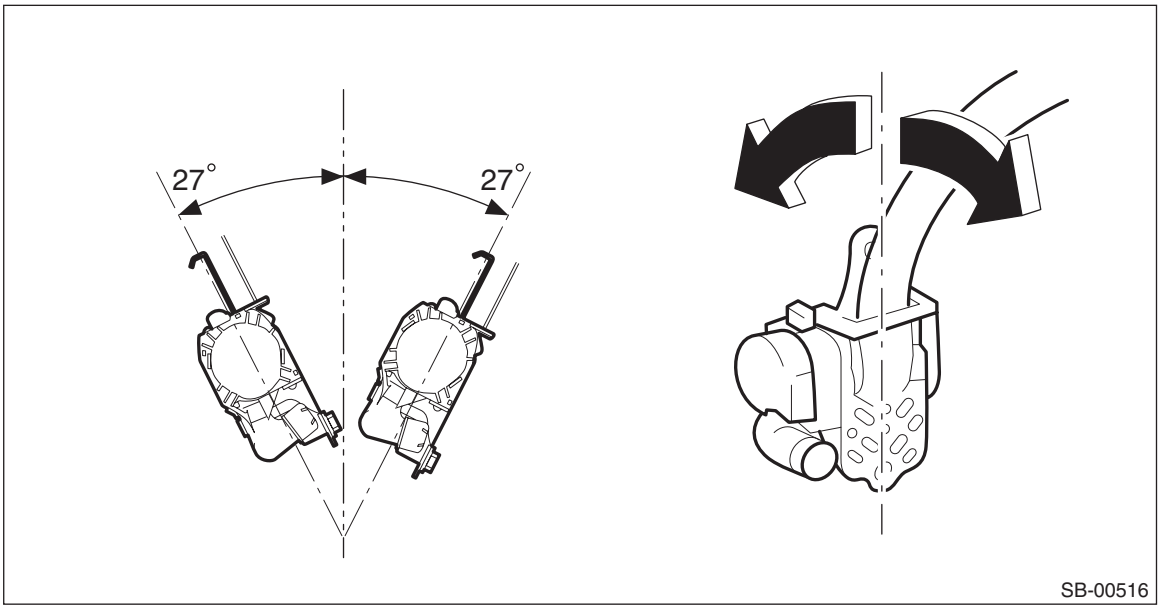

3) If the ELR lock mechanism does not operate correctly, replace the outer belt assembly with a new part.

3. SEAT BELT SWITCH INSPECTION

Preparation tool: Circuit tester

• Driver's seat

Check the resistance between the terminals when the inner belt assembly is in each of the following operation conditions.

Terminal No.	Inspection conditions	Standard	Circuit
1 — 2	Tongue plate inserted	10 kΩ or more	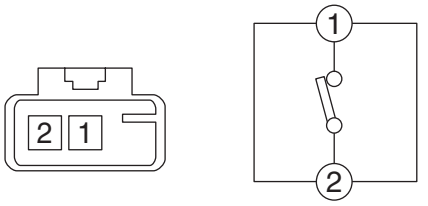
1 — 2	Tongue plate detached	Less than 1 Ω	

Replace the inner belt assembly if the inspection result is not within the standard value.

• Passenger's seat

Check the current value between the terminals when the inner belt assembly is in each of the following operation conditions.

Terminal No.	Inspection conditions	Standard	Circuit
1 — 2	Tongue plate inserted	12 — 18 mA	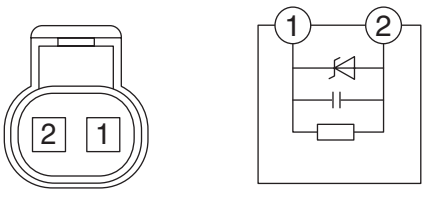
1 — 2	Tongue plate detached	4 — 7 mA	

Replace the inner belt assembly if the inspection result is not within the standard value.

6. Rear Seat Belt

A: REMOVAL

1. OUTER BELT ASSEMBLY RH & LH (SEDAN MODEL)

1) Disconnect the ground cable from battery and wait for at least 60 seconds before starting work.

CAUTION:
The airbag system is fitted with a backup power supply. After disconnecting the battery ground cable, the airbag may operate if you do not wait for 60 seconds before starting the service of airbag system.

2) Remove the rear seat cushion.
   (1) Pull up the seat cushion and release the hook.

CAUTION:
If the hook is disconnected from the vehicle body, replace the hook with the new part to prevent the decline of the fixed force of the seat.

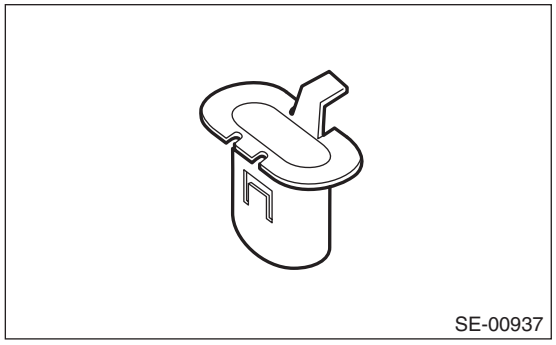
SE-00937

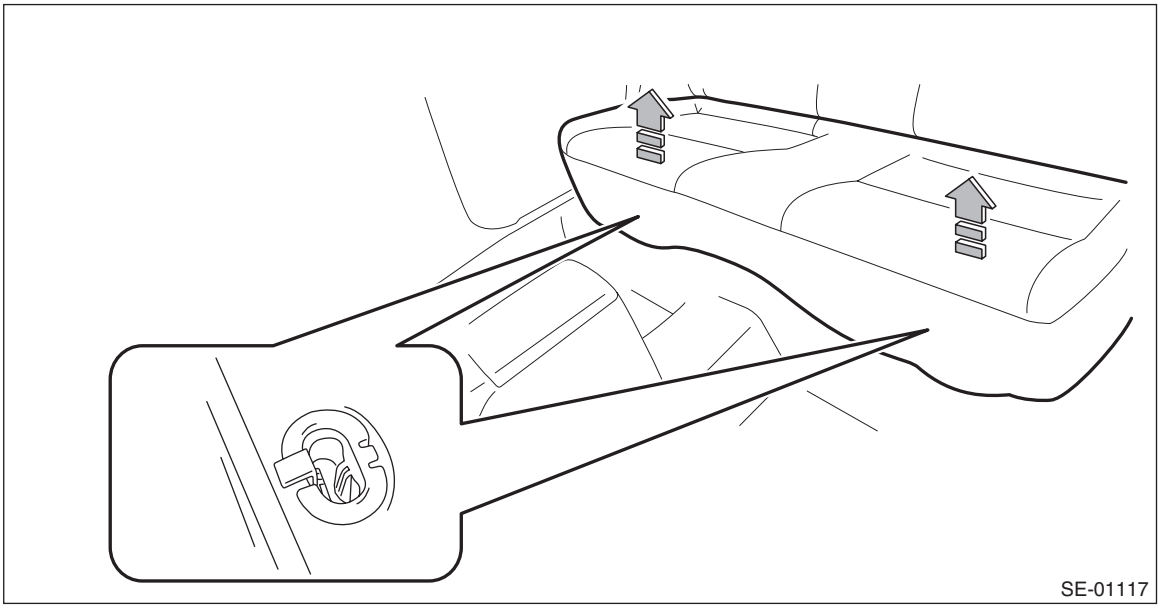
SE-01117

(2) Remove the hook (A) by pushing it back while lifting the front side of the seat cushion, and remove the seat cushion.

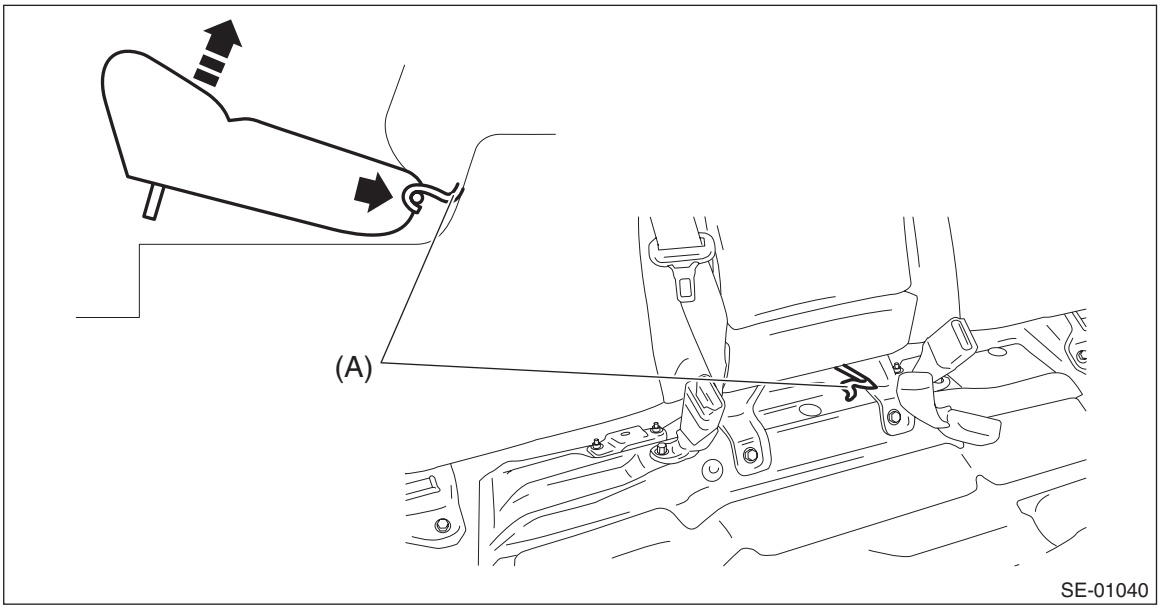

3) Release the clips and claws, and then remove the side sill cover - rear INN. (On the side where seat belt assembly is removed)

CAUTION:
Do not pull with excessive force. Doing so may damage the claws of the side sill cover INN.

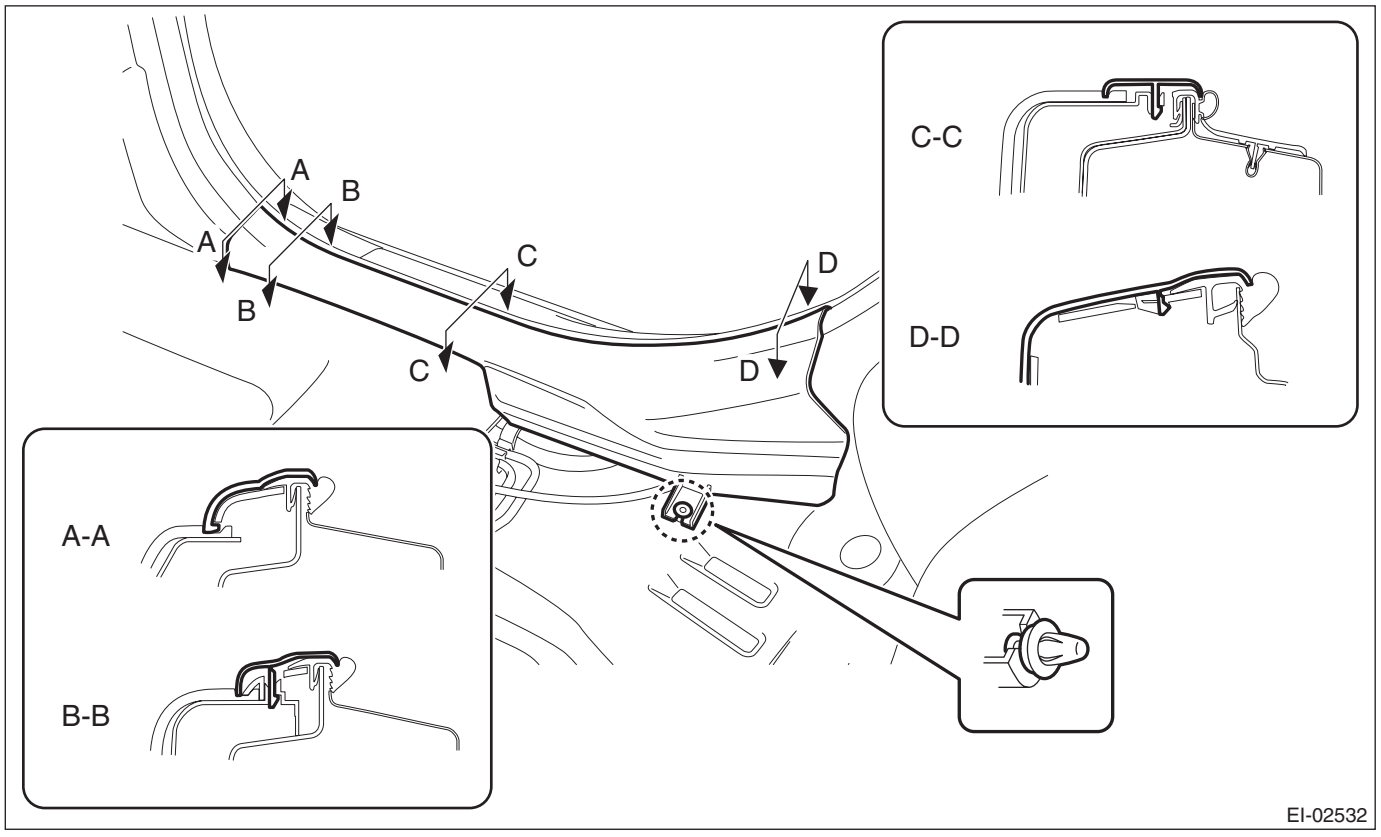

NOTE:
To release the claws of the side sill cover INN, the following steps are recommended.
1. Take out the weather strip from under the side sill cover INN.
2. Turn over the floor mat and release the claw (C-C and D-D) by accessing from behind the side sill cover INN.

4) Remove the rear quarter trim LWR. (On the side where seat belt assembly is removed)
(1) Remove the backrest side pad assembly.
a) Remove the screws.

Preparation tool: Stubby screwdriver

b) Turn over the bottom end of the backrest side pad in the forward direction so that the claws are released.
c) Remove the backrest side pad by pulling it up.

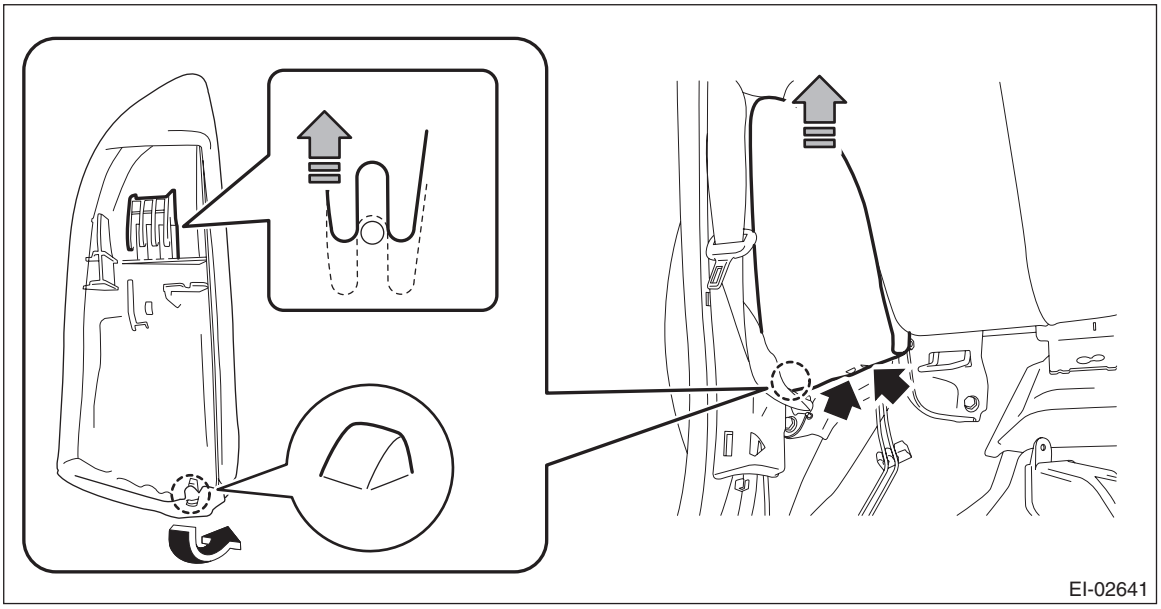

(2) Pull the release lever in the trunk room, and then tilt the backrest forward.

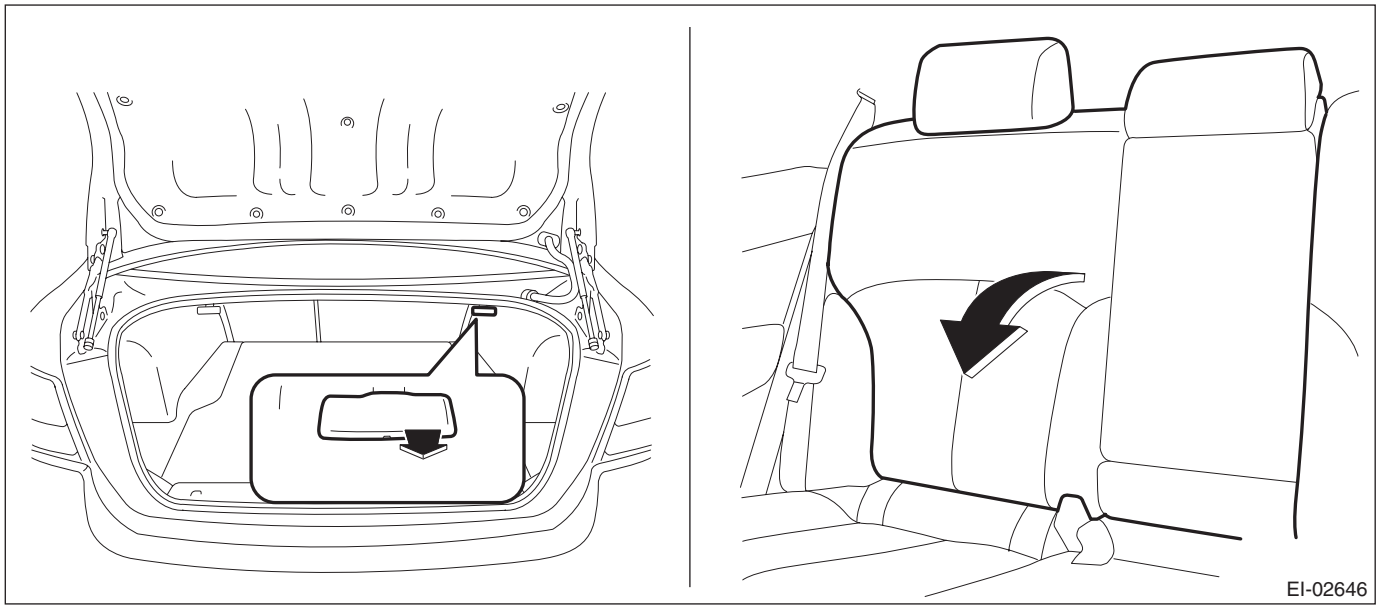

(3) Release the clips of the trunk trim panel assembly - side.

(4) Remove the clips, and remove the rear quarter trim LWR.

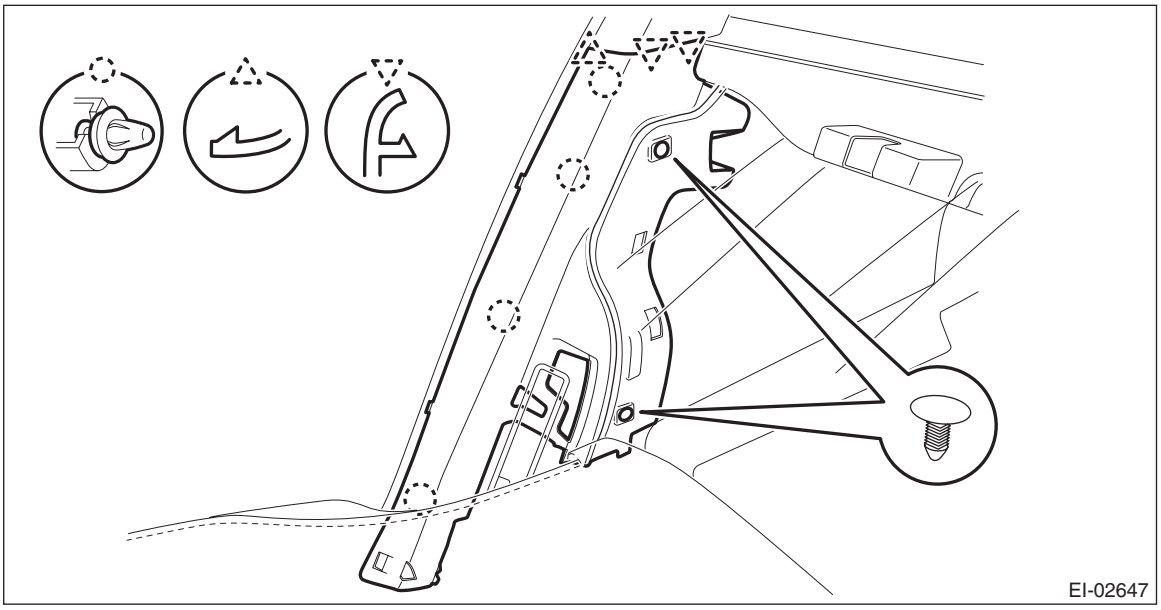

5) Remove the rear quarter trim UPR. (On the side where seat belt assembly is removed)
(1) Remove the lower anchor bolt of the outer belt assembly.

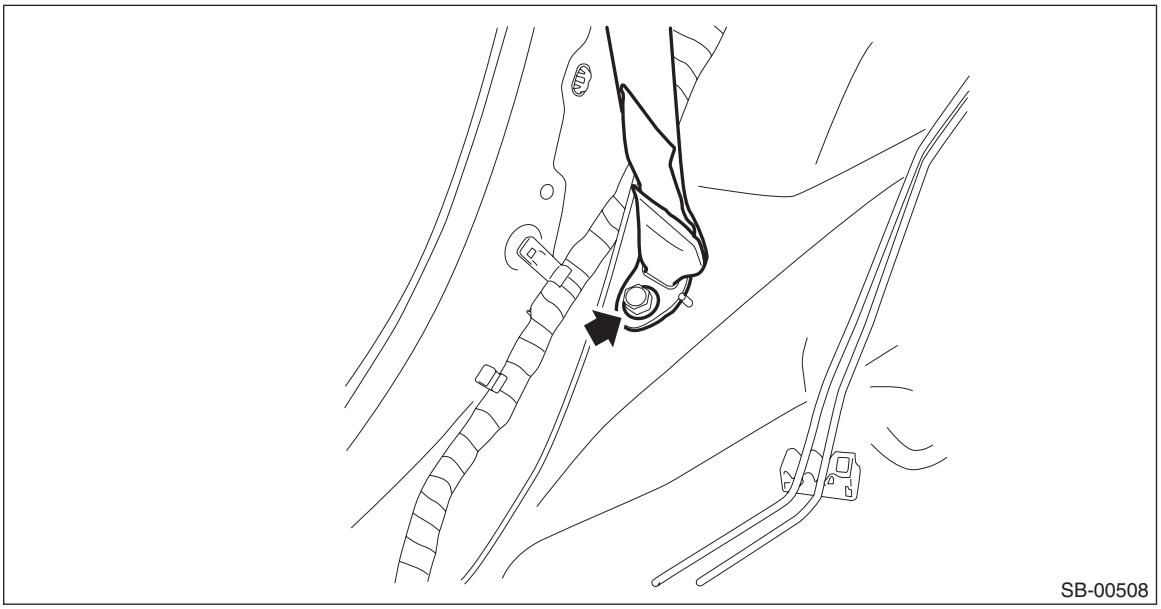

(2) Release the clips, and remove the rear quarter trim UPR.

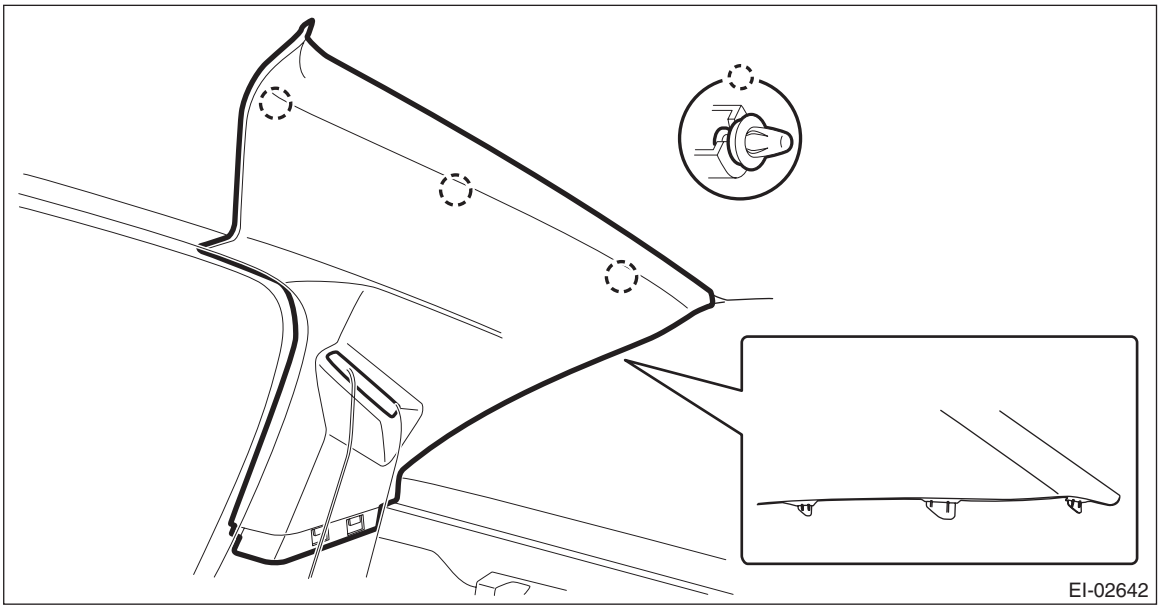

(3) Pull out the seat belt and remove the rear quarter trim UPR.

6) Remove the outer seat belt assembly.

(1) Remove the bolts and remove the seat belt anchor.

(2) Remove the bolts, and remove the seat belt retractor assembly.

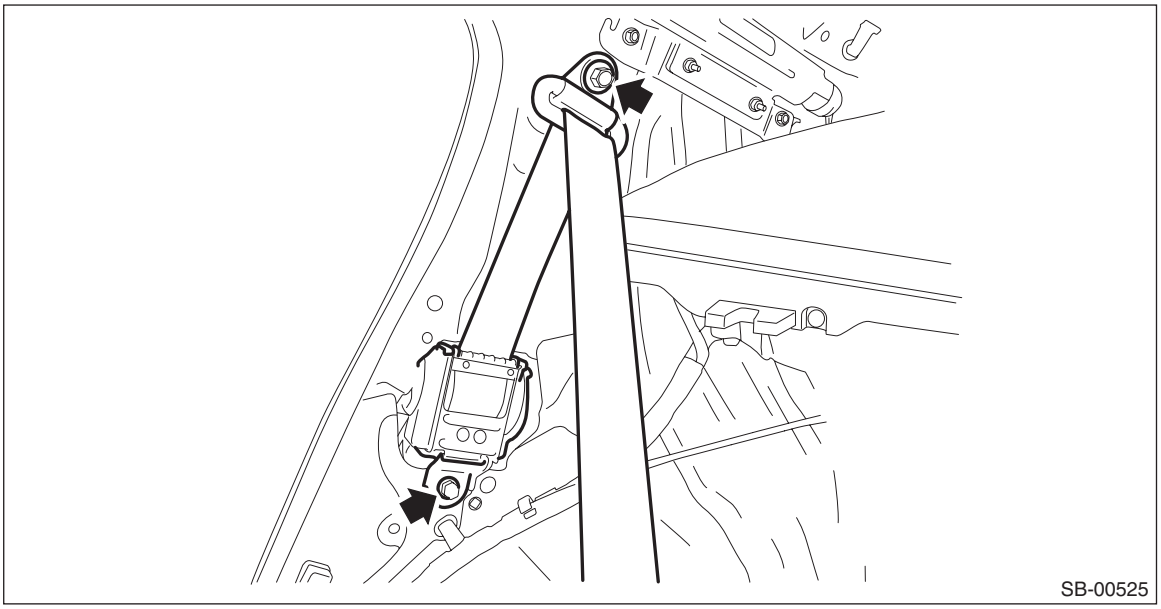

2. OUTER BELT ASSEMBLY RH & LH (OUTBACK MODEL)

1) Disconnect the ground cable from battery and wait for at least 60 seconds before starting work.

CAUTION:
The airbag system is fitted with a backup power supply. After disconnecting the battery ground cable, the airbag may operate if you do not wait for 60 seconds before starting the service of airbag system.

2) Remove the rear seat cushion.
   (1) Pull up the seat cushion and release the hook.

CAUTION:
If the hook is disconnected from the vehicle body, replace the hook with the new part to prevent the decline of the fixed force of the seat.

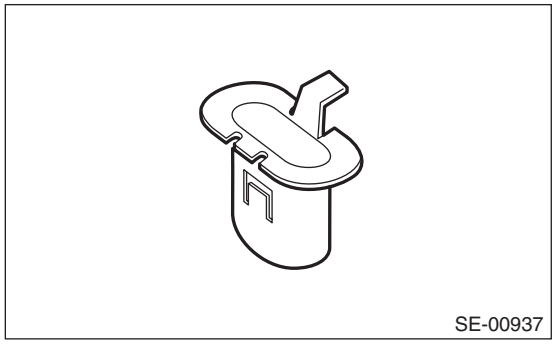
SE-00937

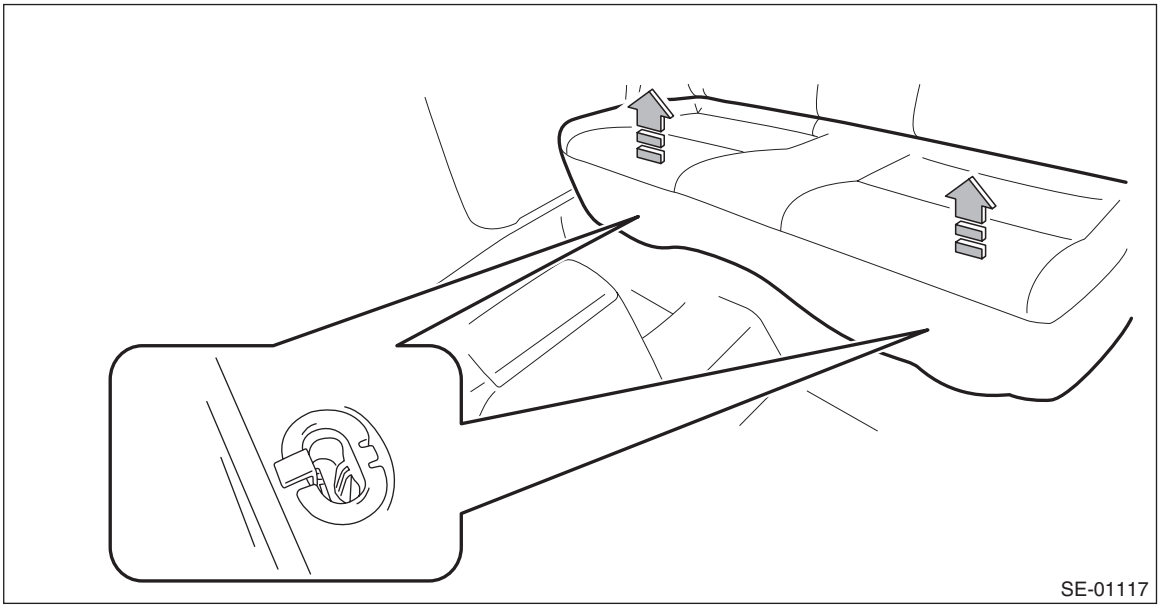
SE-01117

(2) Remove the hook (A) by pushing it back while lifting the front side of the seat cushion, and remove the seat cushion.

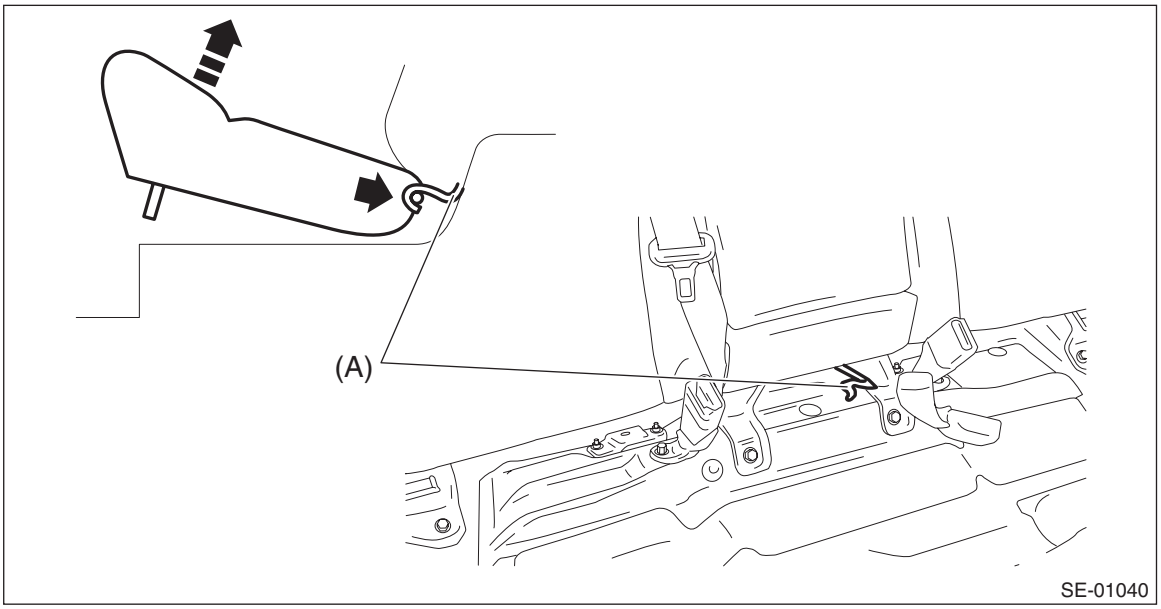

3) Release the clips and claws, and then remove the side sill cover - rear INN. (On the side where seat belt assembly is removed)

CAUTION:
Do not pull with excessive force. Doing so may damage the claws of the side sill cover INN.

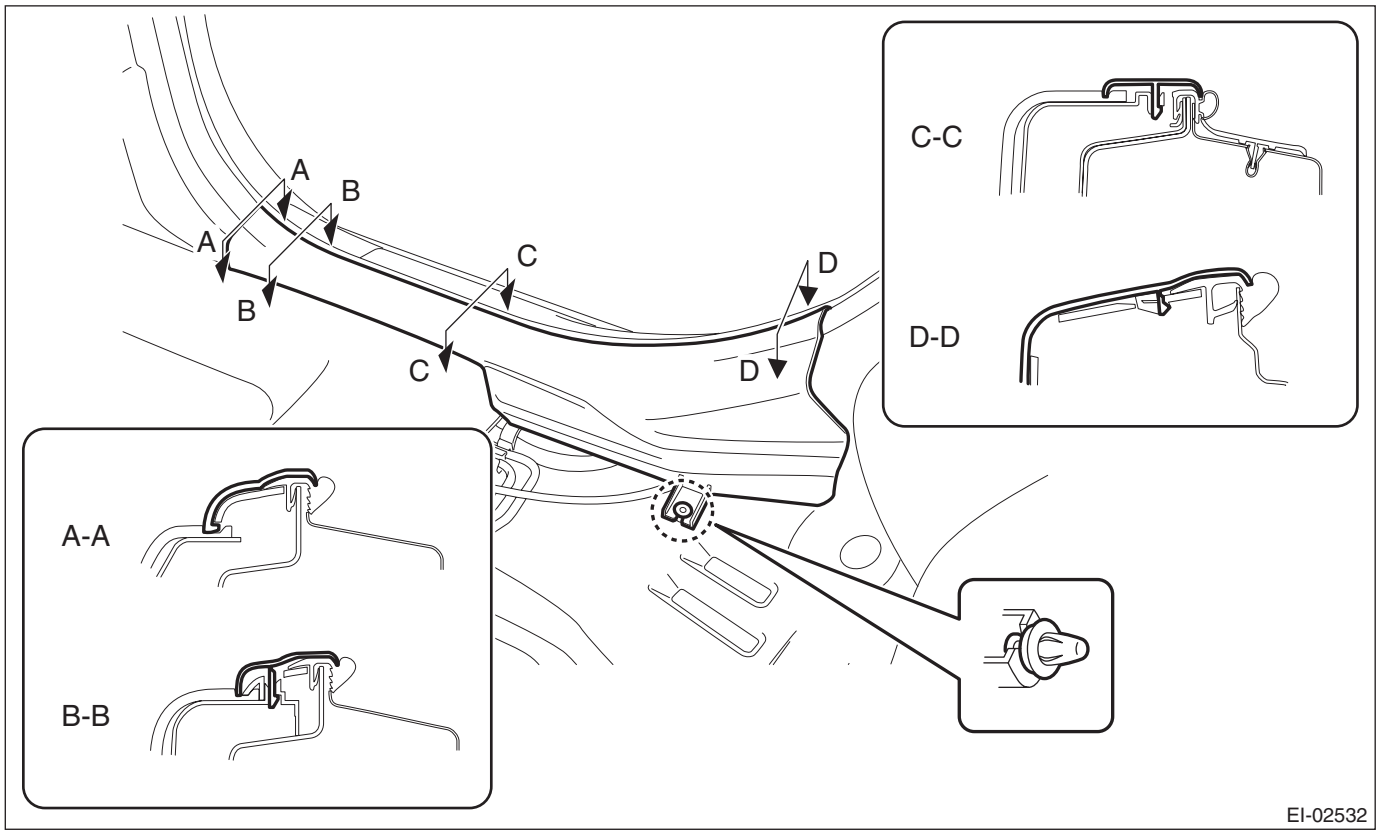

NOTE:
To release the claws of the side sill cover INN, the following steps are recommended.
1. Take out the weather strip from under the side sill cover INN.
2. Turn over the floor mat and release the claw (C-C and D-D) by accessing from behind the side sill cover INN.

4) Tilt the backrest forward, and then turn over the backrest backside mat.

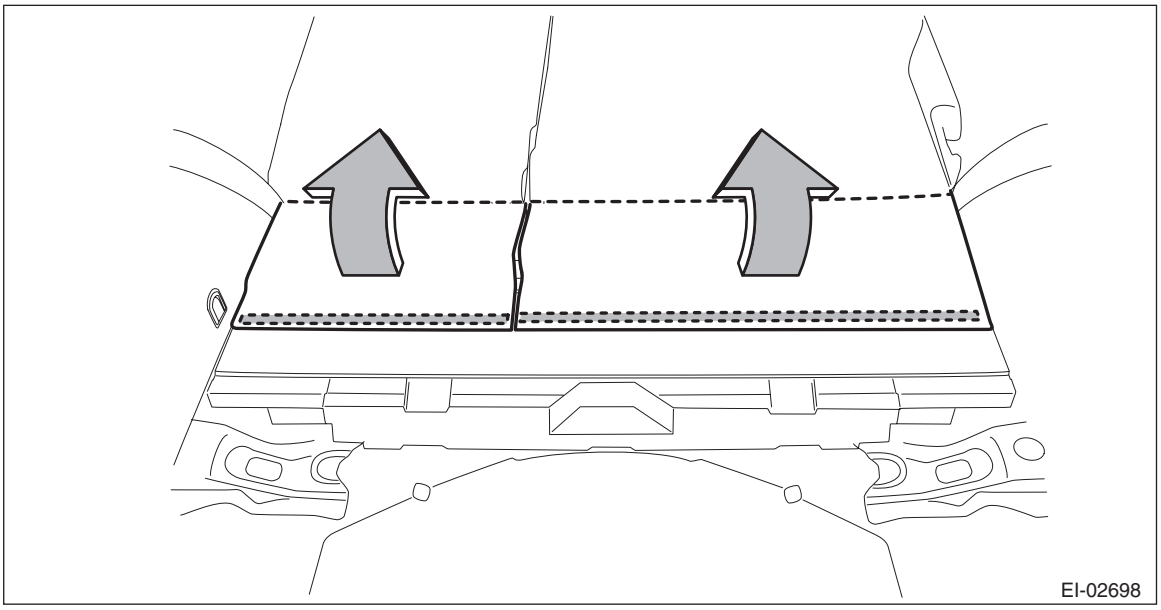

5) Remove the backrest side pad assembly. (On the side where seat belt assembly is removed)
   (1) Disconnect the backrest cable and reclining lever cable.
   (2) Remove the screws and remove the reclining lever assembly by pulling it downward.

Preparation tool: Stubby screwdriver

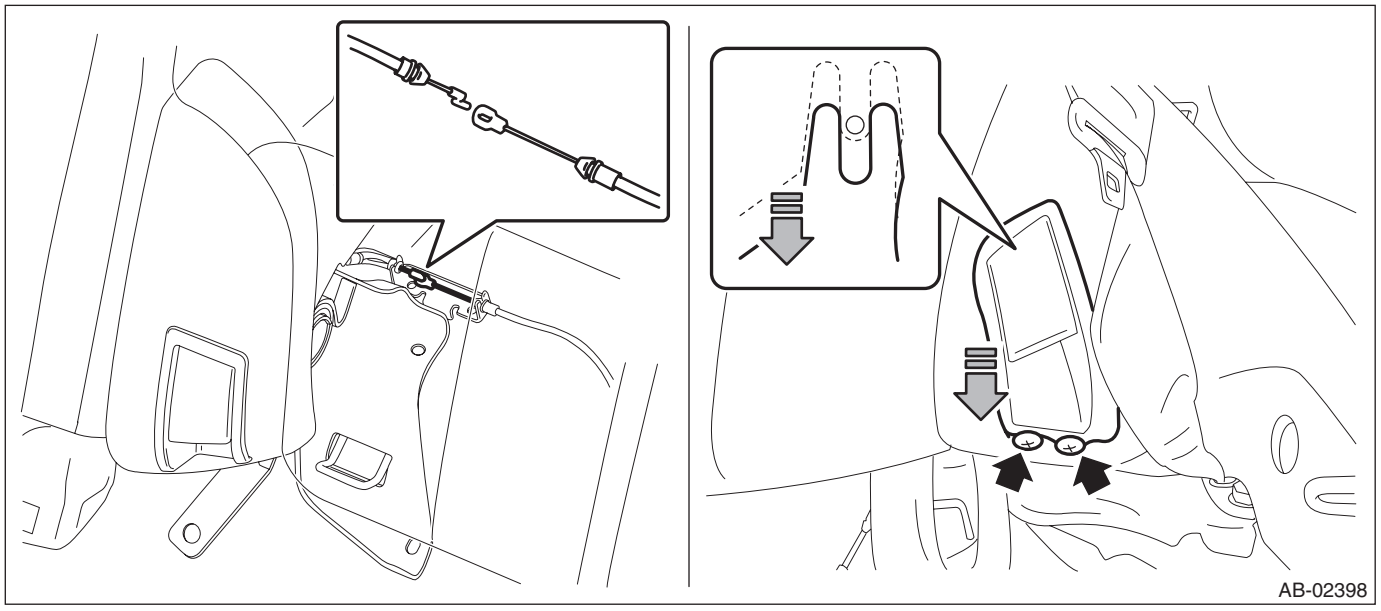

   (3) Turn over the bottom end of the backrest side pad in the forward direction so that the claws are released.

(4) Remove the backrest side pad by pulling it up.

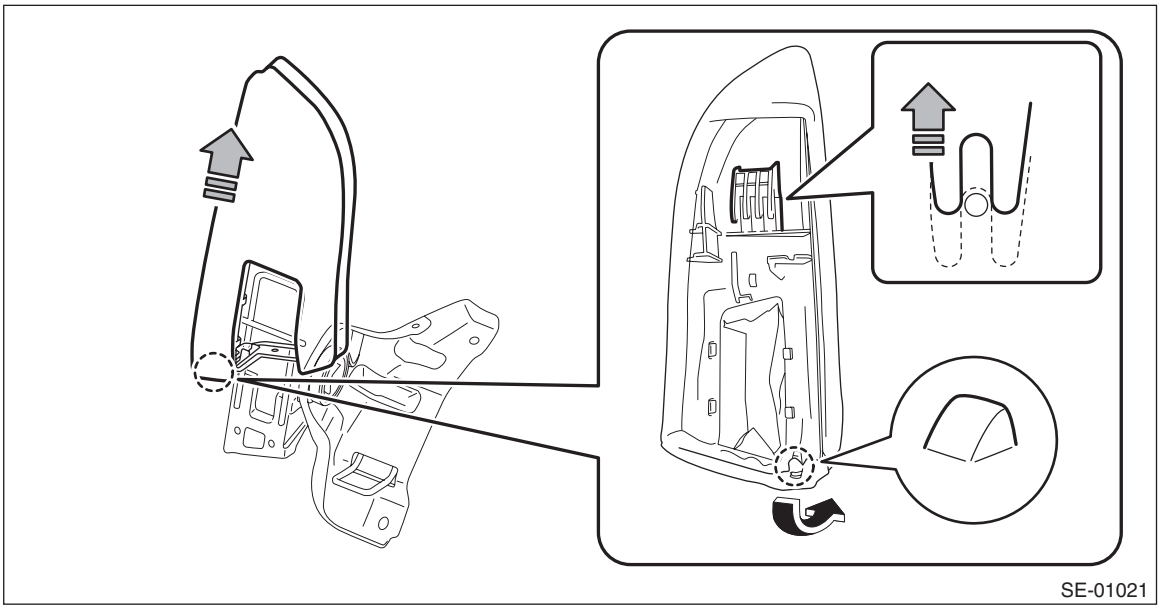

6) Remove the clips, and remove the luggage floor box and rear floor edge cover.

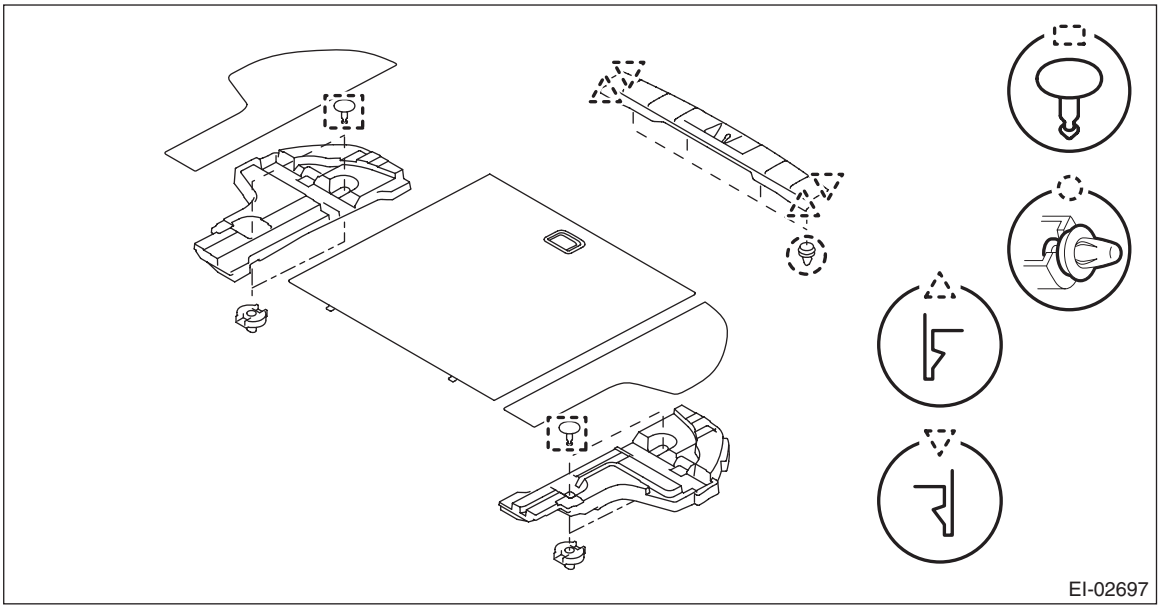

7) Remove the rear quarter trim LWR. (On the side where seat belt assembly is removed)
   (1) Remove the caps, screws, and bolts. (A), (C)
   (2) Take out the hook and remove the screw inside. (B)
   (3) Remove the clips, and remove the rear quarter trim LWR.

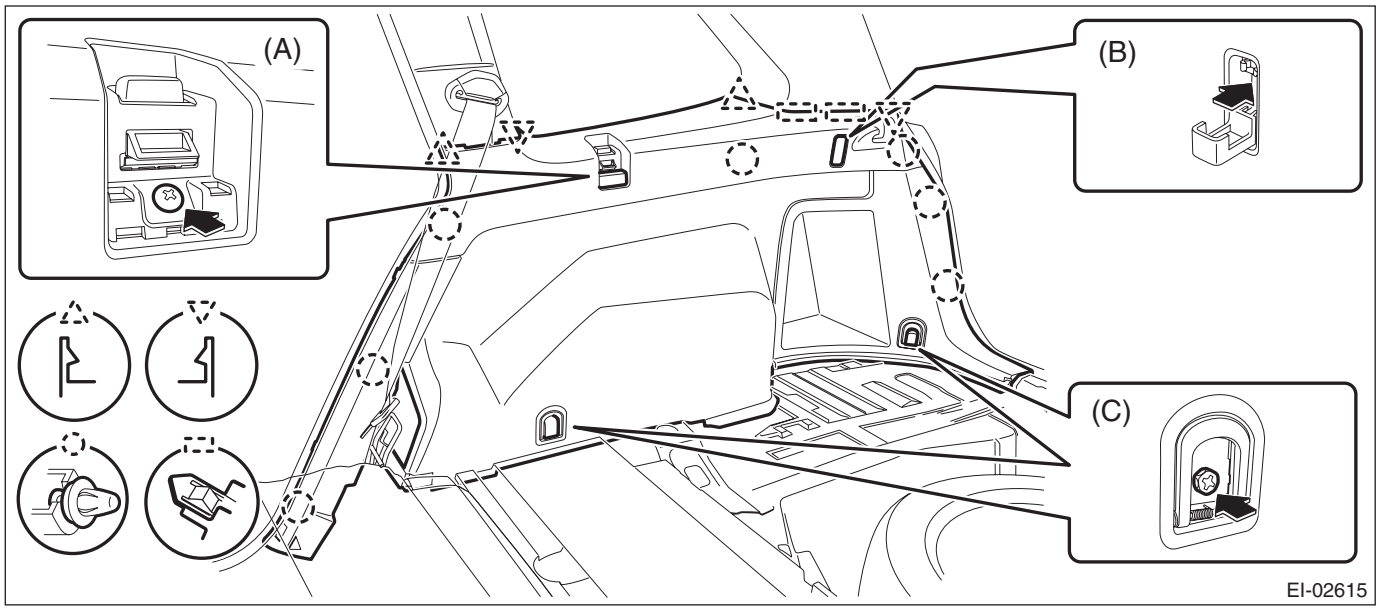

8) Remove the outer seat belt assembly.
   (1) Remove the seat belt lower anchor bolt.
   (2) Open the cap and remove the bolt to remove the seat belt anchor.
   (3) Remove the bolts, and remove the seat belt retractor assembly.

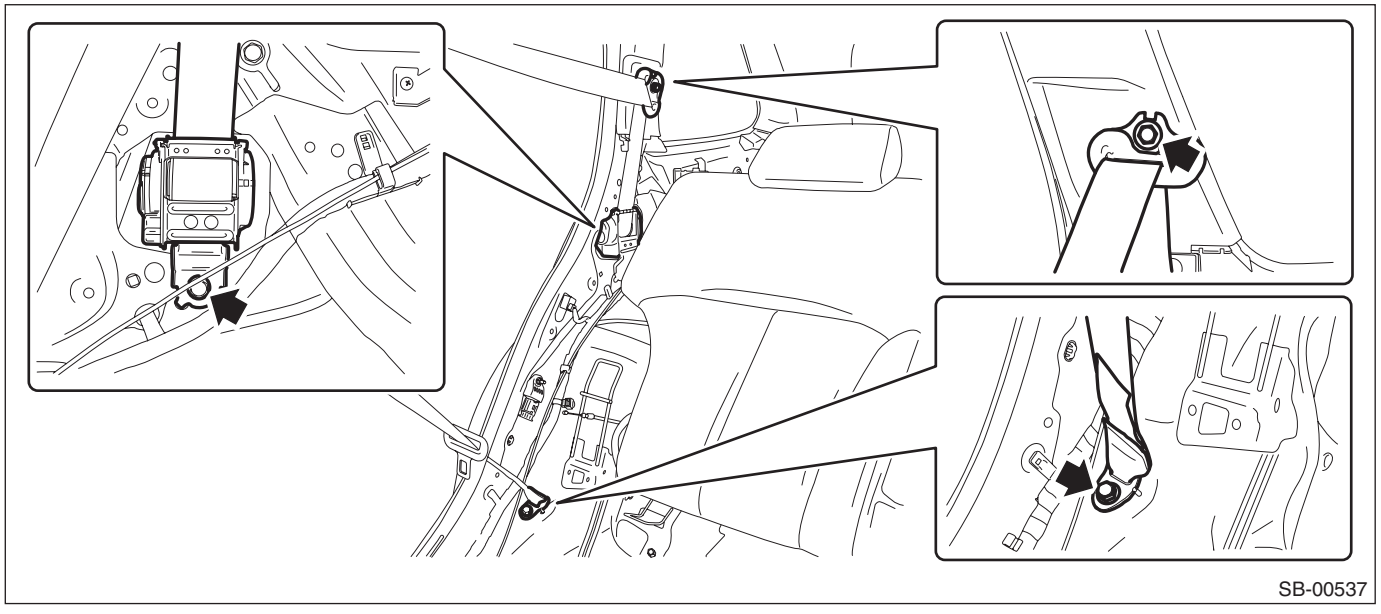

3. SHOULDER BELT ASSEMBLY CTR (SEDAN MODEL)

1) Disconnect the ground cable from battery and wait for at least 60 seconds before starting work.

CAUTION:
The airbag system is fitted with a backup power supply. After disconnecting the battery ground cable, the airbag may operate if you do not wait for 60 seconds before starting the service of airbag system.

2) Remove the rear seat cushion.
   (1) Pull up the seat cushion and release the hook.

CAUTION:
If the hook is disconnected from the vehicle body, replace the hook with the new part to prevent the decline of the fixed force of the seat.

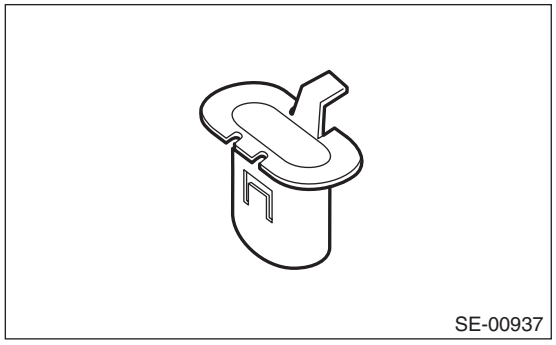
SE-00937

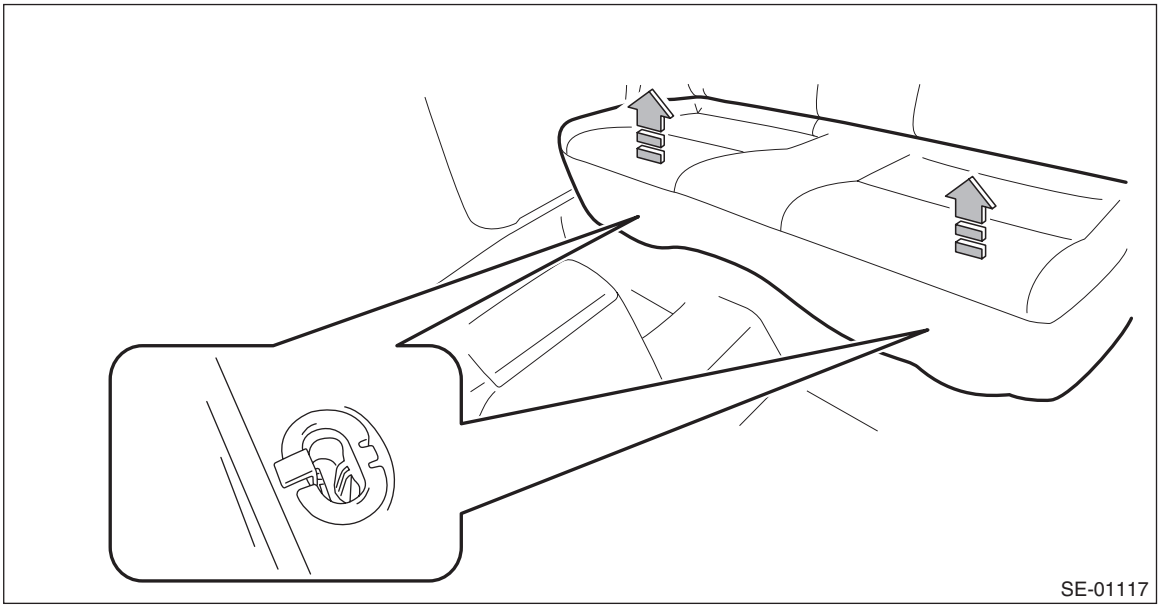
SE-01117

(2) Remove the hook (A) by pushing it back while lifting the front side of the seat cushion, and remove the seat cushion.

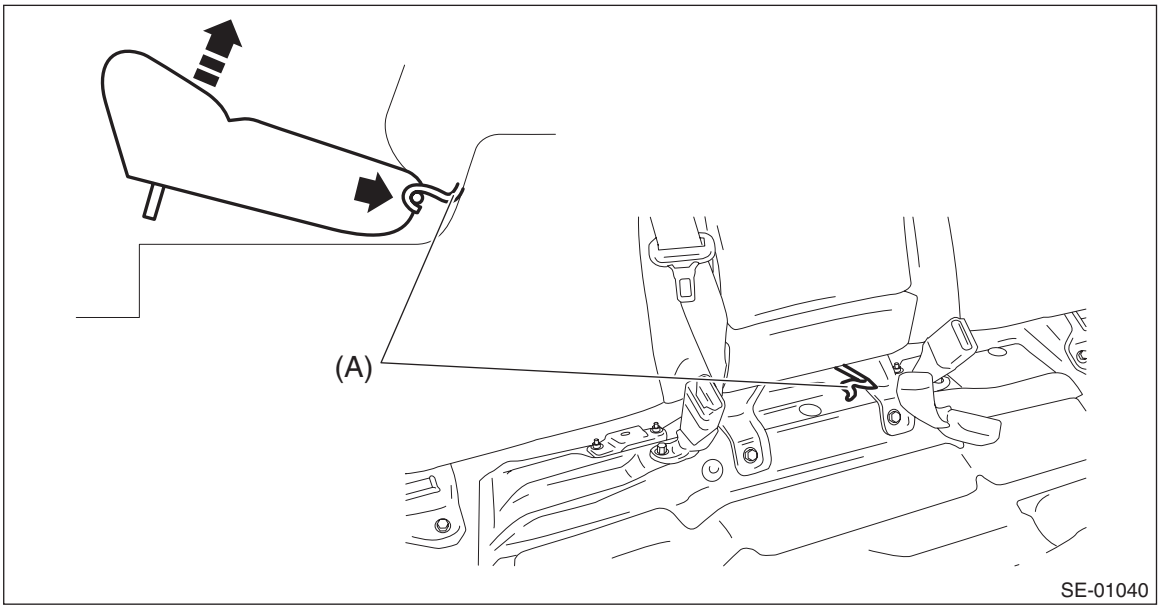

3) Release the clips and claws, and remove the side sill covers - rear INN on the left and right sides.

CAUTION:
Do not pull with excessive force. Doing so may damage the claws of the side sill cover INN.

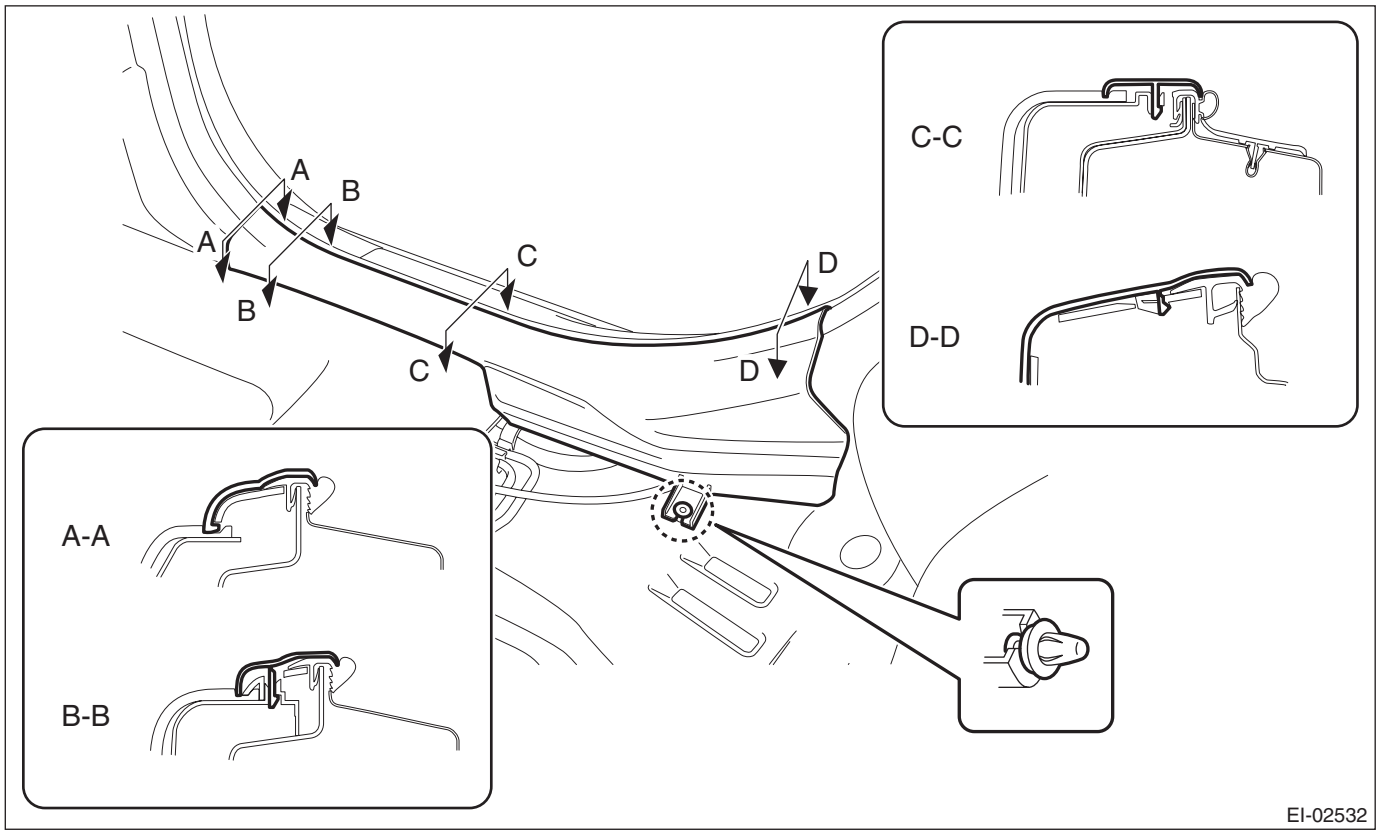

NOTE:
To release the claws of the side sill cover INN, the following steps are recommended.
1. Take out the weather strip from under the side sill cover INN.
2. Turn over the floor mat and release the claw (C-C and D-D) by accessing from behind the side sill cover INN.

4) Remove the left and right rear quarter trim LWR.
(1) Remove the left and right backrest side pad.
a) Remove the screws.

Preparation tool: Stubby screwdriver

b) Turn over the bottom end of the backrest side pad in the forward direction so that the claws are released.
c) Remove the backrest side pad by pulling it up.

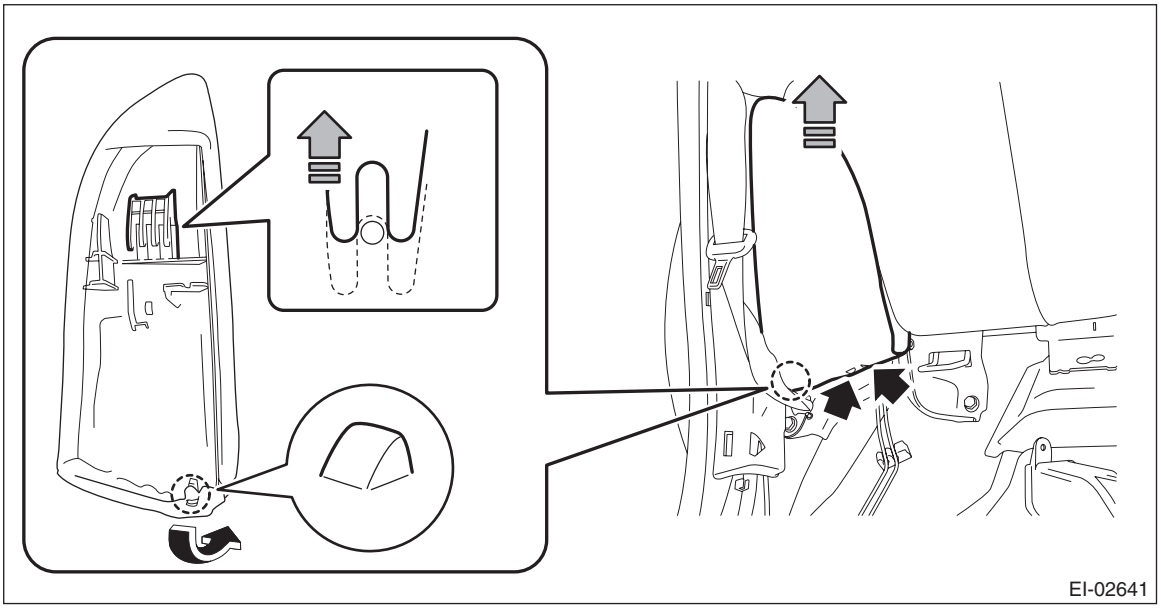

(2) Pull the release lever in the trunk room, and then tilt the left and right backrest forward.

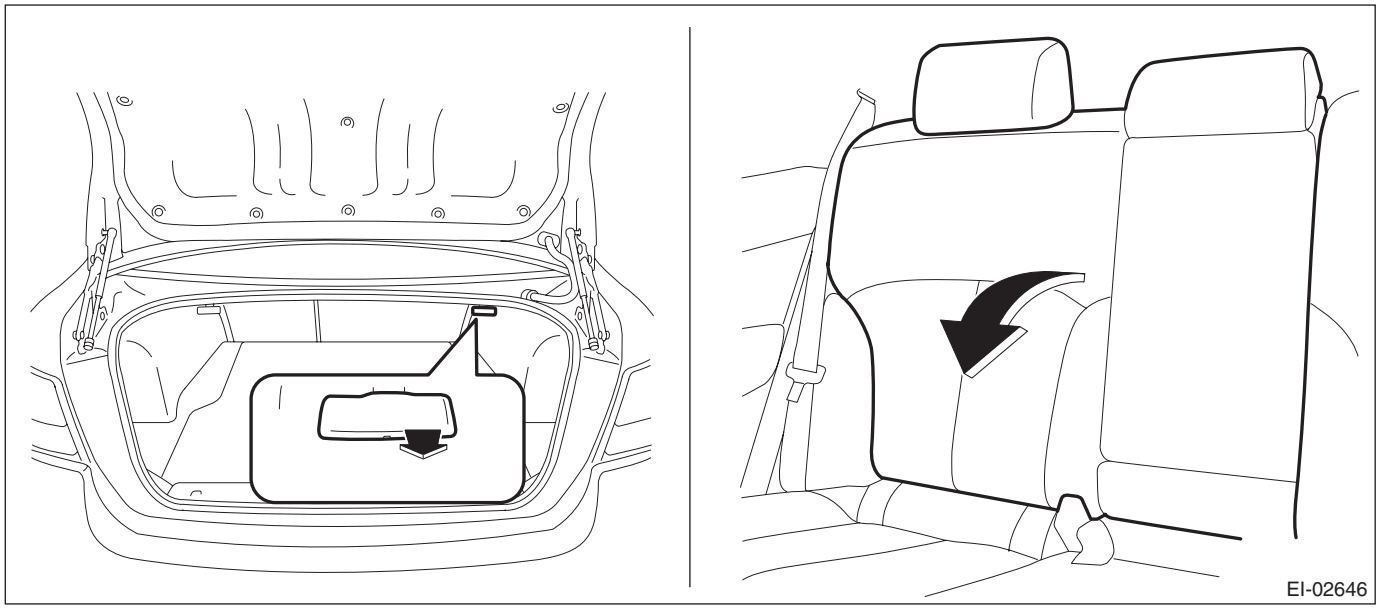

(3) Release the clips of the trunk trim panel assembly - side.

(4) Remove the clips, and remove the left and right rear quarter trim LWR.

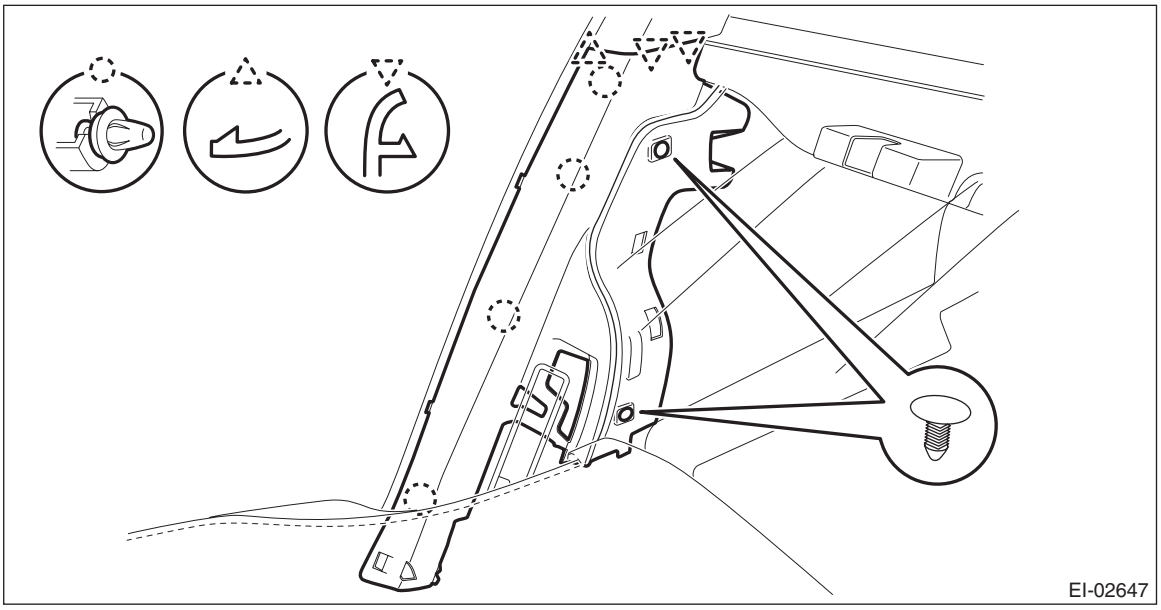

5) Remove the left and right rear quarter trim UPR.

(1) Remove the lower anchor bolt of the outer belt assembly.

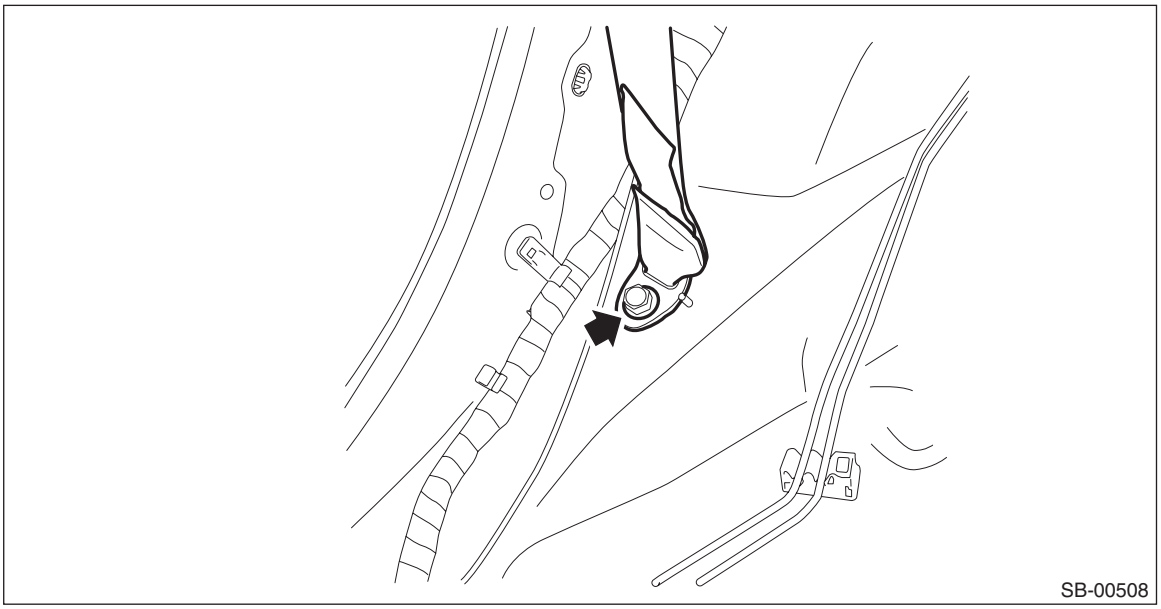

(2) Release the clips, and remove the rear quarter trim UPR.

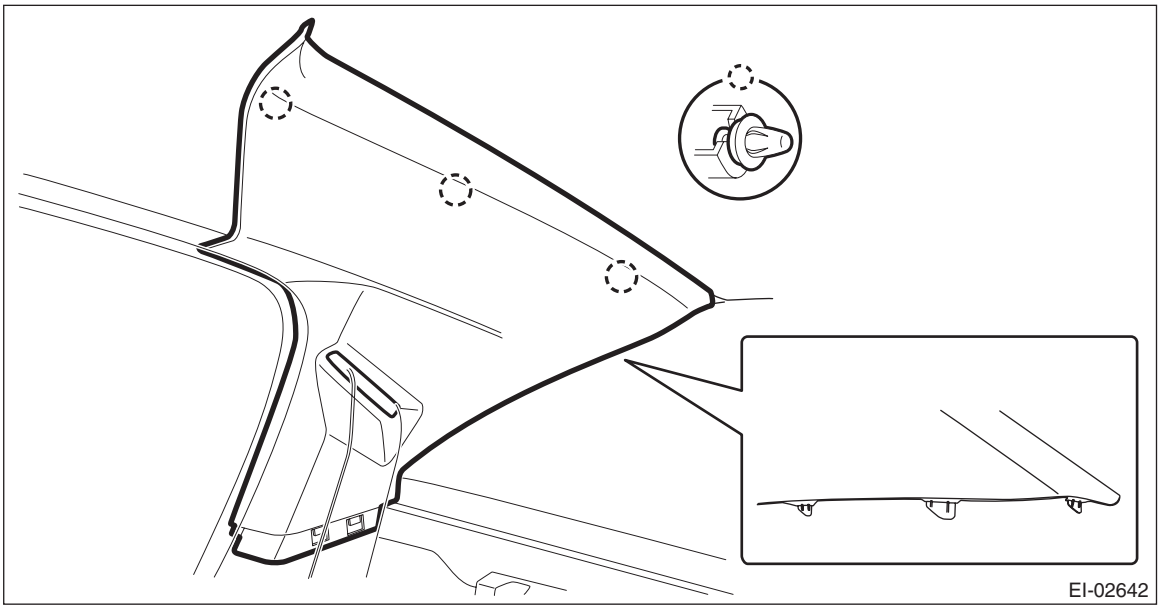

(3) Pull out the seat belt and remove the rear quarter trim UPR.

6) Release the clips and remove the trunk trim panel assembly - front on the left and right sides.

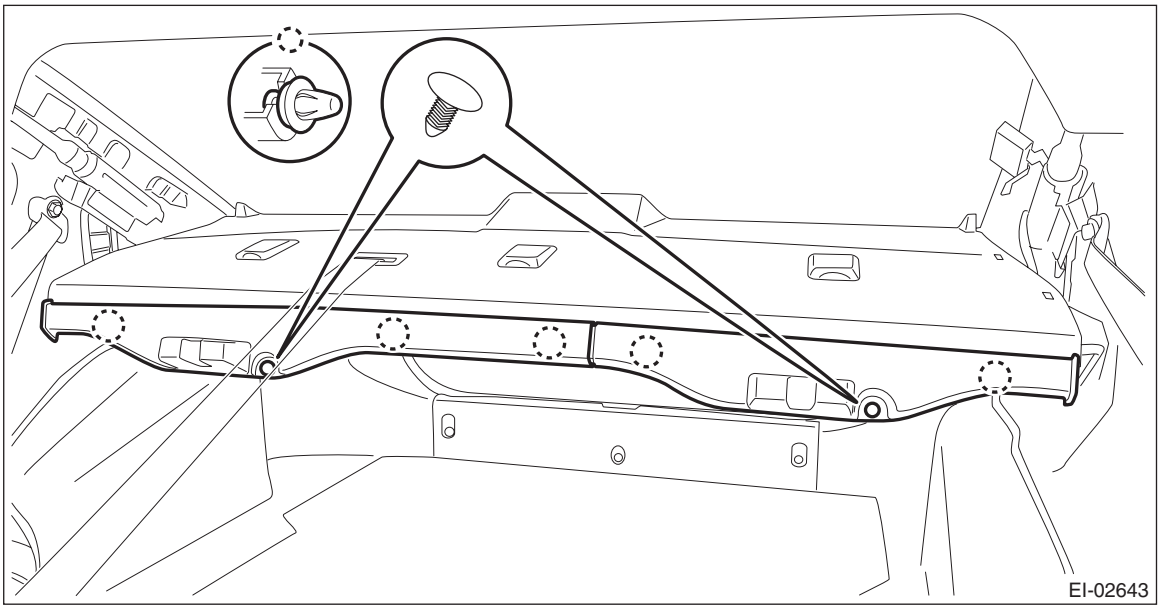

7) Remove the lower anchor of the shoulder belt assembly CTR.
   (1) Remove the nuts and remove the ISO-FIX anchor.
   (2) Remove the bolts, and remove the lower anchor of shoulder belt assembly CTR.

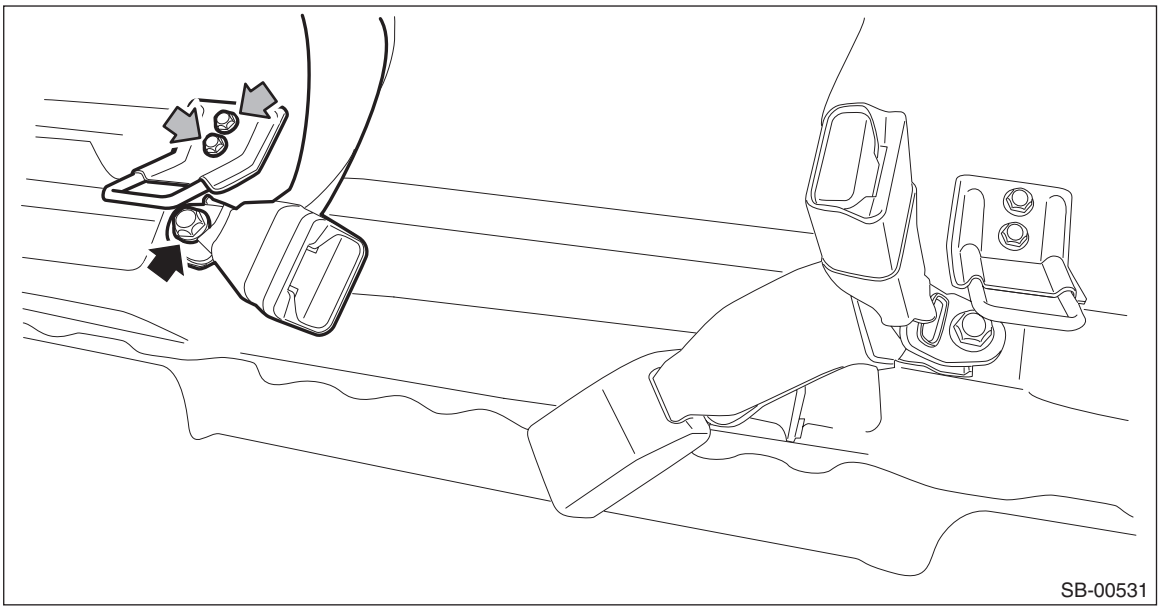

8) Remove the rear shelf panel assembly.
   (1) Release the clips to float the rear shelf panel assembly.
   (2) Release the belt guide and guide the anchor of rear center seat belt to behind the shelf panel.
   (3) Disconnect the connector of high-mounted stop light.
   (4) Remove the rear shelf panel assembly.

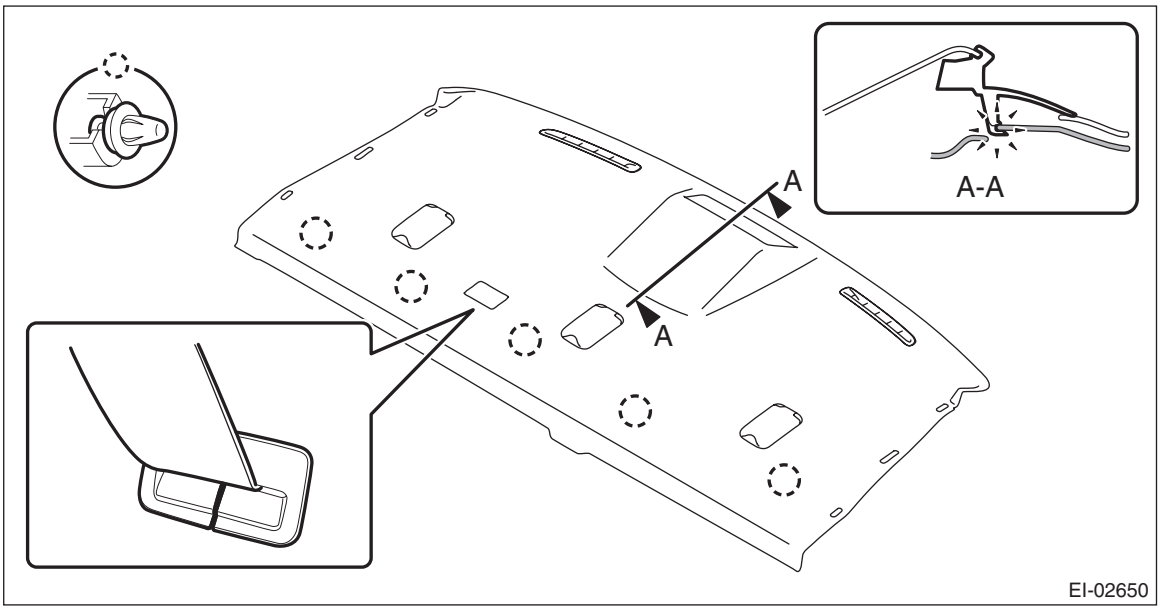

9) Remove the bolts, and remove the shoulder belt assembly CTR.

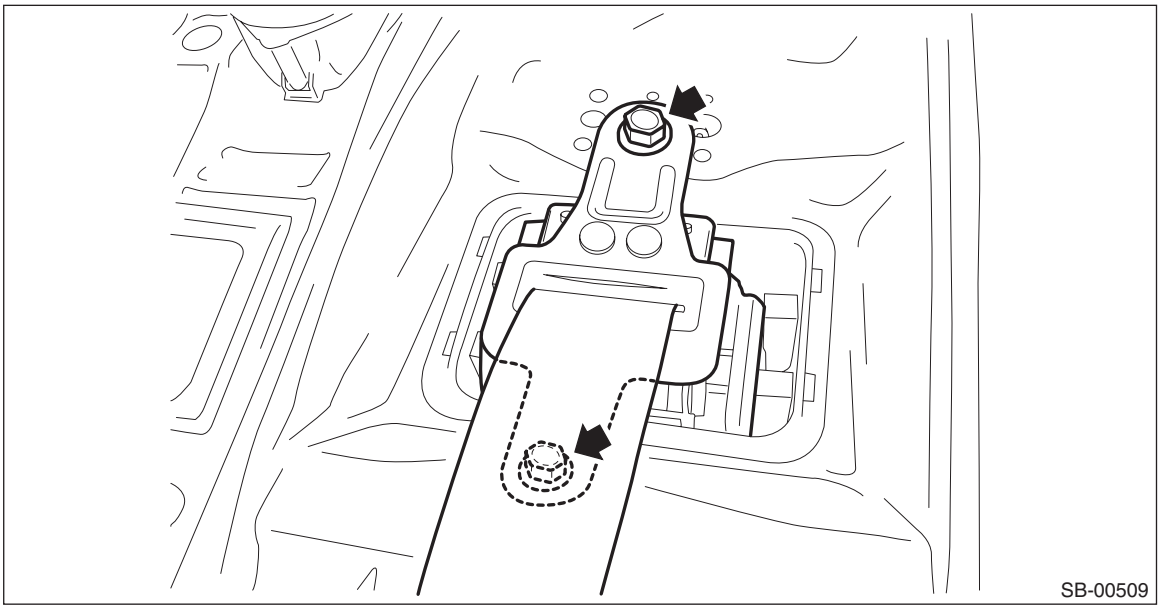

4. SHOULDER BELT ASSEMBLY CTR (OUTBACK MODEL)

1) Disconnect the ground cable from battery and wait for at least 60 seconds before starting work.

CAUTION:
The airbag system is fitted with a backup power supply. After disconnecting the battery ground cable, the airbag may operate if you do not wait for 60 seconds before starting the service of airbag system.

2) Remove the rear seat cushion.
   (1) Pull up the seat cushion and release the hook.

CAUTION:
If the hook is disconnected from the vehicle body, replace the hook with the new part to prevent the decline of the fixed force of the seat.

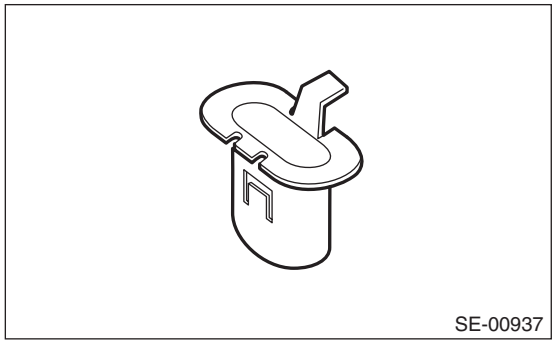
SE-00937

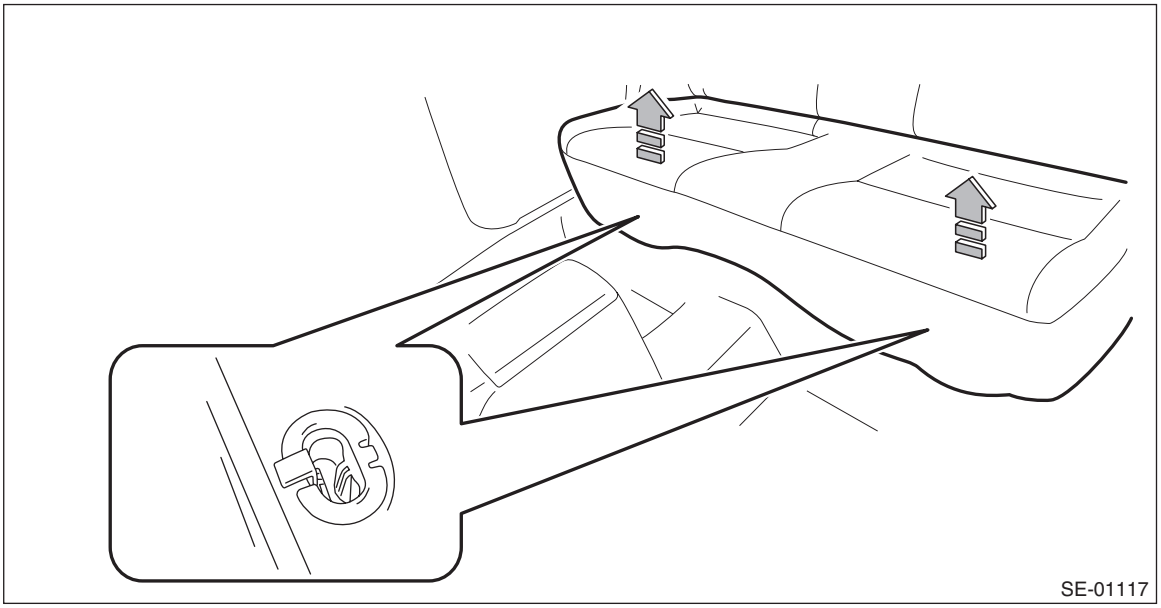
SE-01117

(2) Remove the hook (A) by pushing it back while lifting the front side of the seat cushion, and remove the seat cushion.

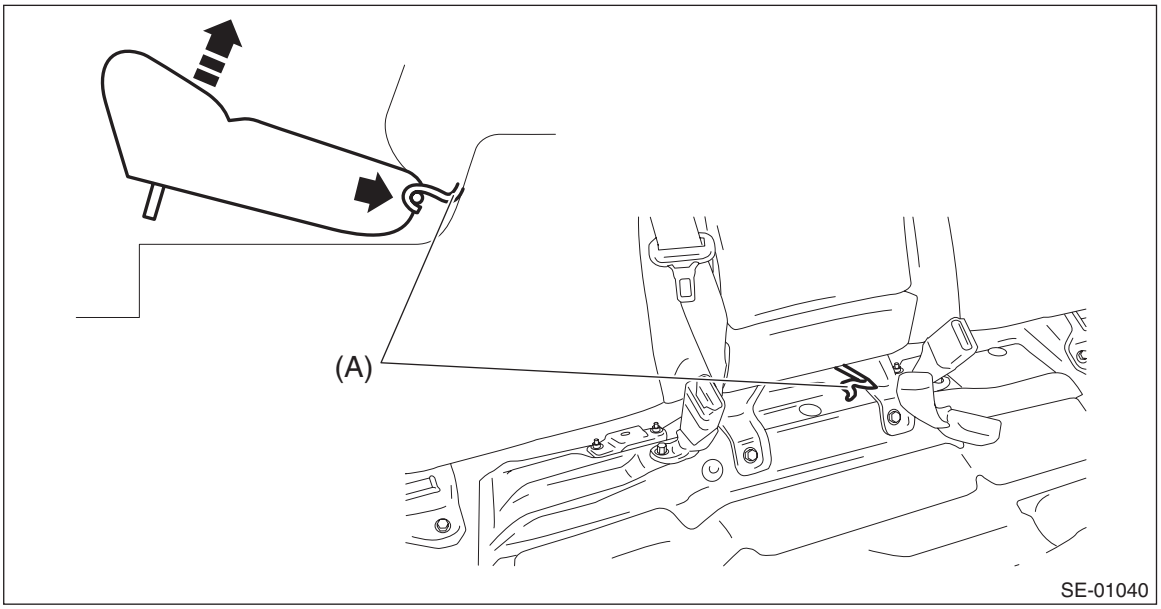

3) Release the clips and claws, and remove the side sill covers - rear INN on the left and right sides.

CAUTION:
Do not pull with excessive force. Doing so may damage the claws of the side sill cover INN.

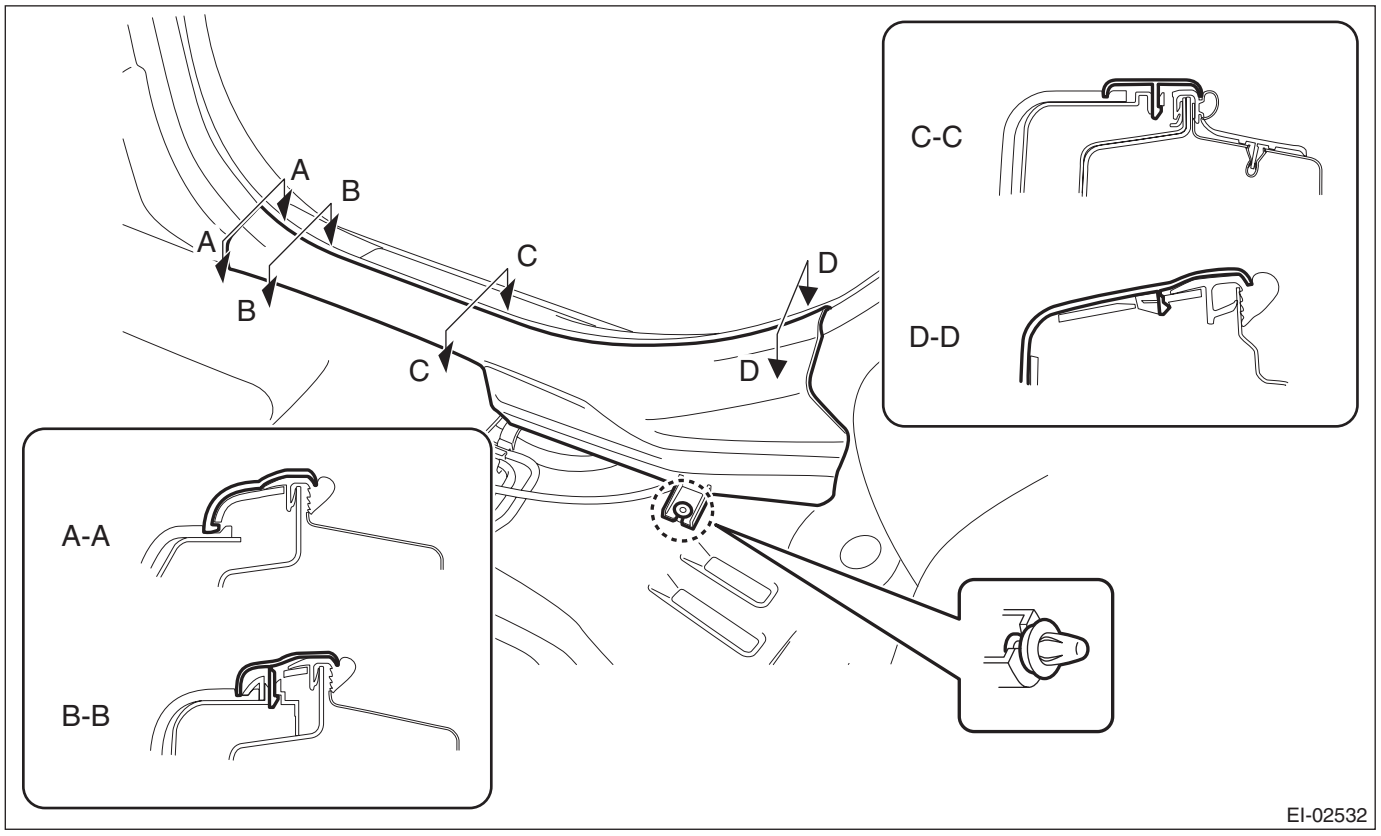

NOTE:
To release the claws of the side sill cover INN, the following steps are recommended.
1. Take out the weather strip from under the side sill cover INN.
2. Turn over the floor mat and release the claw (C-C and D-D) by accessing from behind the side sill cover INN.

4) Tilt the backrest forward, and then turn over the backrest backside mat.

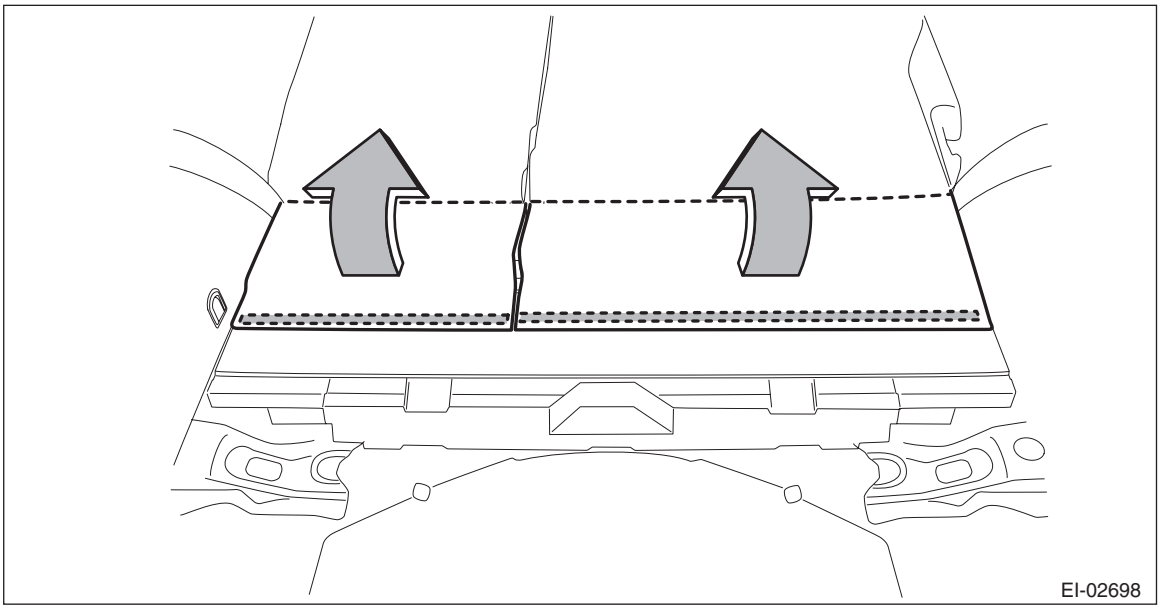

5) Remove the left and right backrest side pad assembly.
   (1) Disconnect the backrest cable and reclining lever cable.
   (2) Remove the screws and remove the reclining lever assembly by pulling it downward.

Preparation tool: Stubby screwdriver

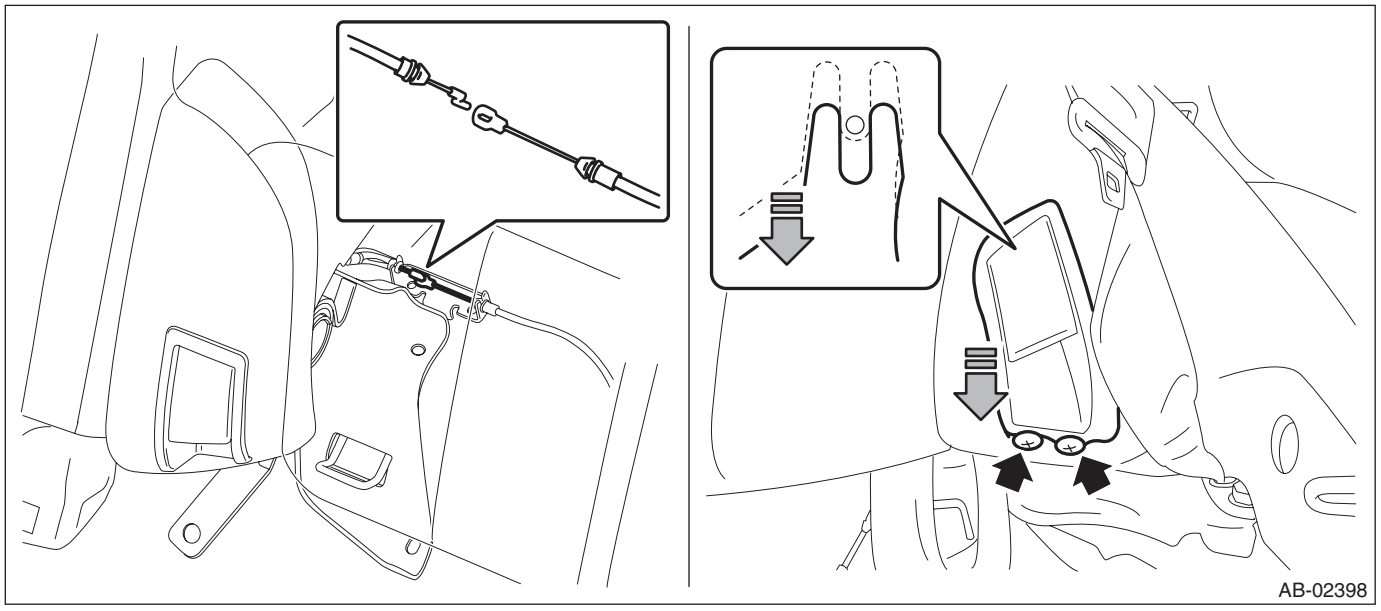

   (3) Turn over the bottom end of the backrest side pad in the forward direction so that the claws are released.

(4) Remove the backrest side pad by pulling it up.

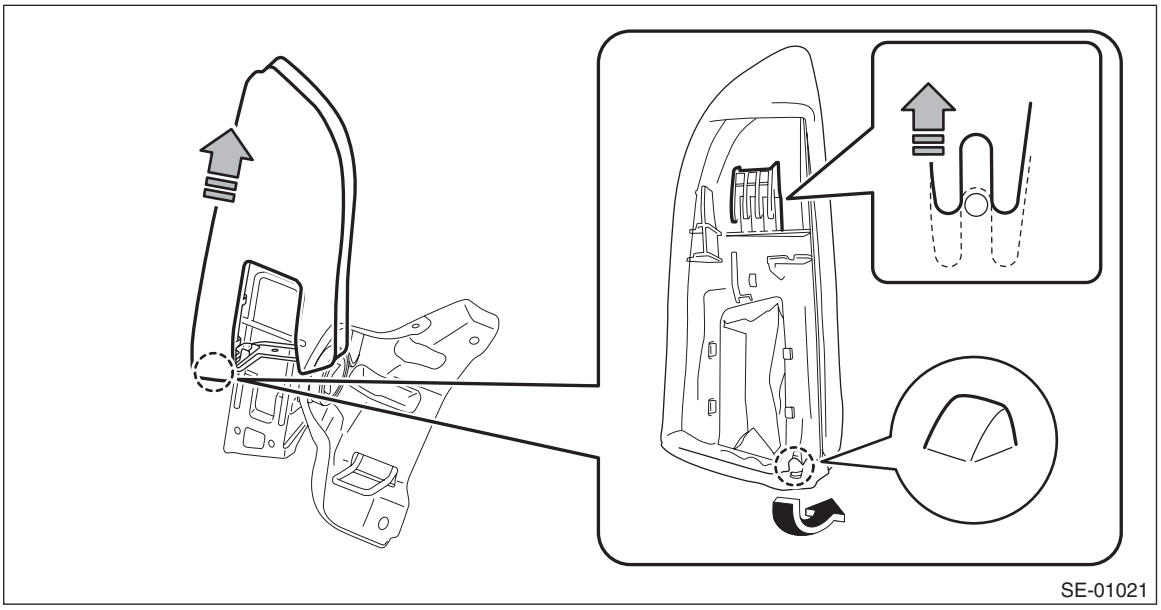

6) Remove the clips, and remove the luggage floor box and rear floor edge cover.

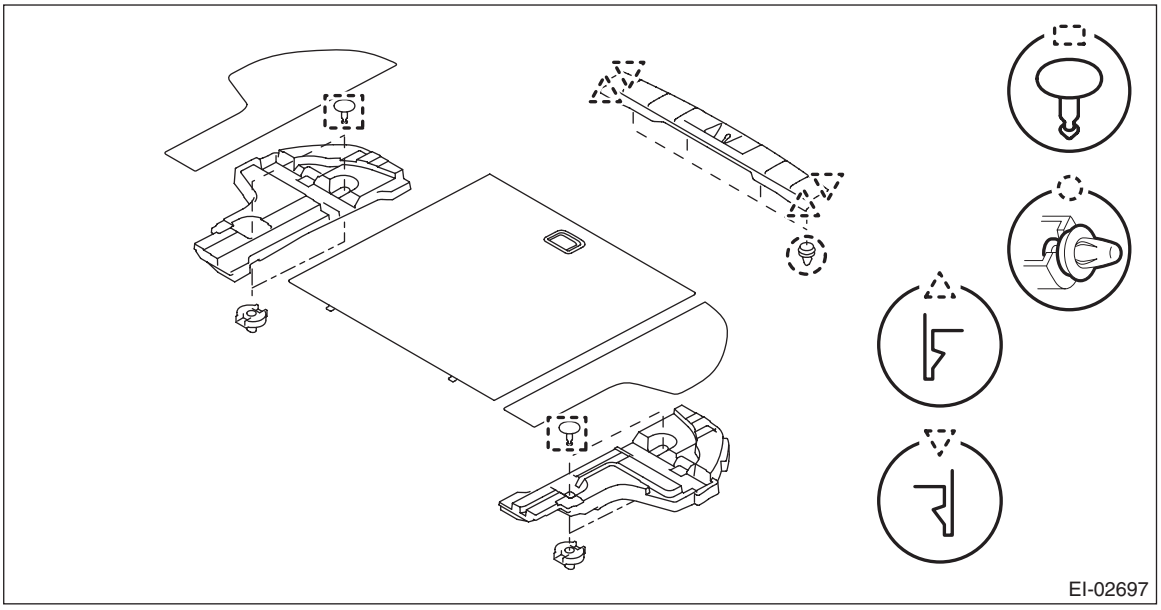

7) Remove the left and right rear quarter trim LWR.
(1) Remove the caps, screws, and bolts. (A), (C)
(2) Take out the hook and remove the screw inside. (B)
(3) Remove the clips, and remove the rear quarter trim LWR.

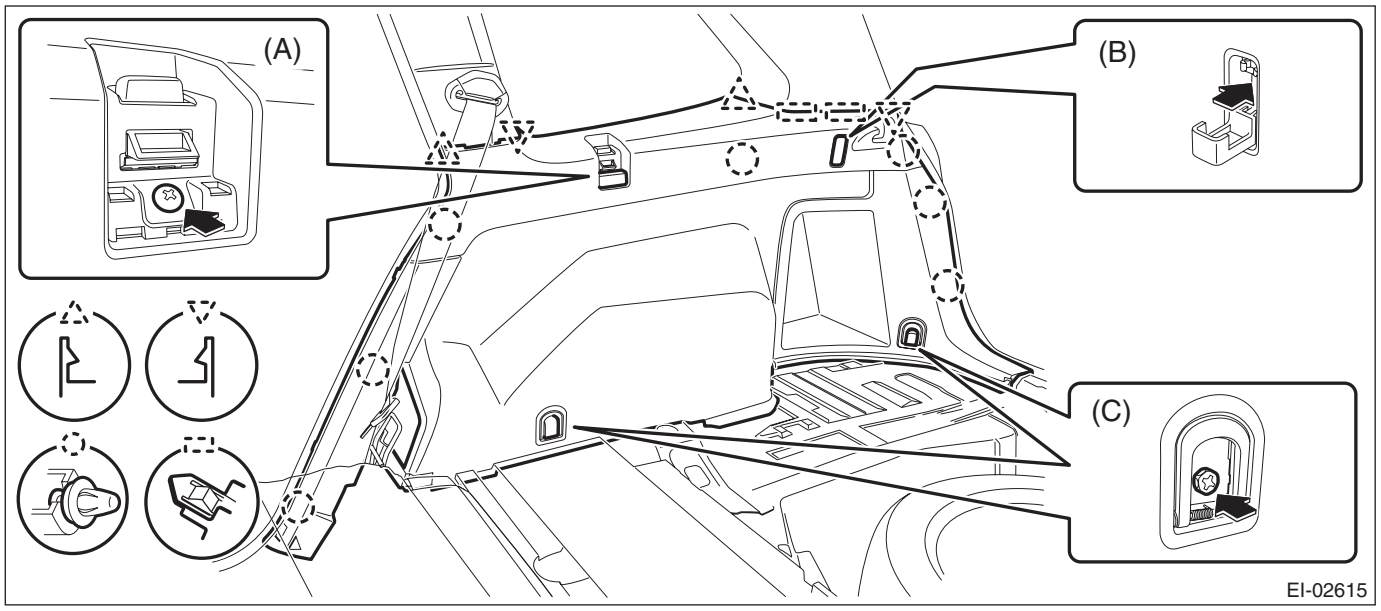

8) Remove the left and right rear quarter trim UPR.
(1) Open the cap and remove the bolt to remove the seat belt anchor.
(2) Remove the clips, and remove the rear quarter trim UPR - front.
(3) Remove the clips, and remove the rear quarter trim UPR - rear.

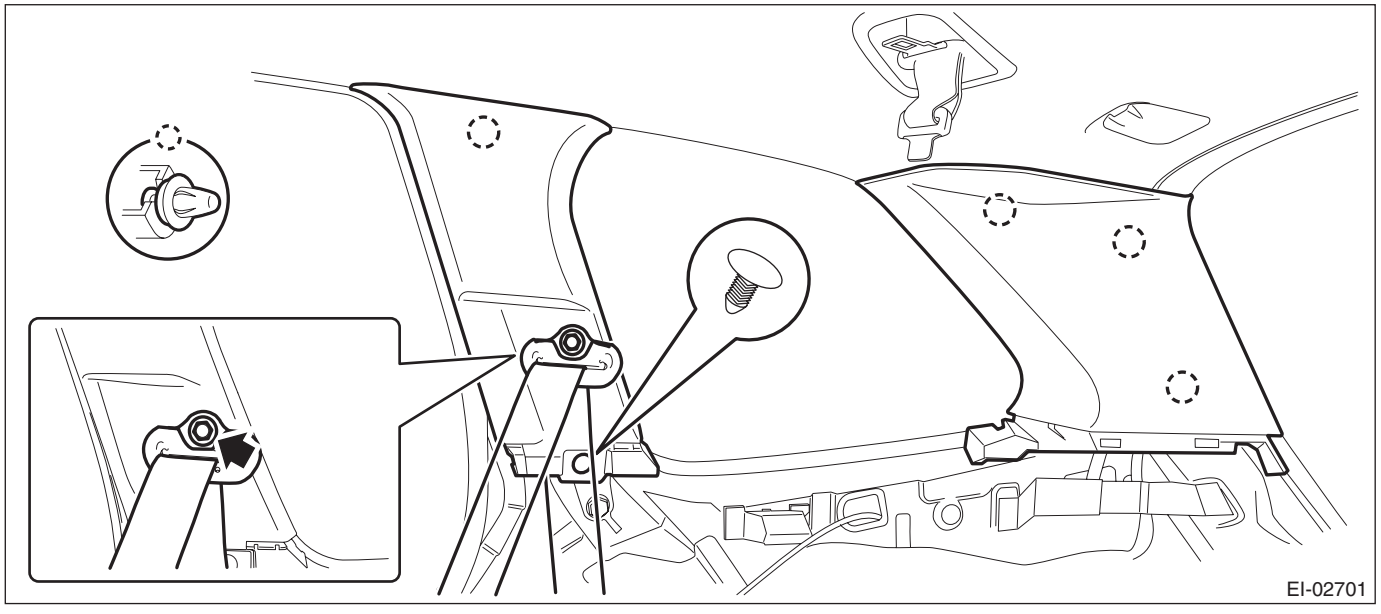

9) Remove the left and right front pillar trims.
(1) Pull the upper part of the front pillar trim towards the center of the vehicle.
(2) Insert long-nose pliers into the top part of the trim, grip the clip with the pliers and twist 90° in that position.

CAUTION:
Be careful not to damage the pillar trim surface and curtain airbag module when inserting the pliers.
(3) Holding the clip twisted as in the previous step, remove the front pillar trim from the clip.

(4) Remove the clip and the front pillar trim.

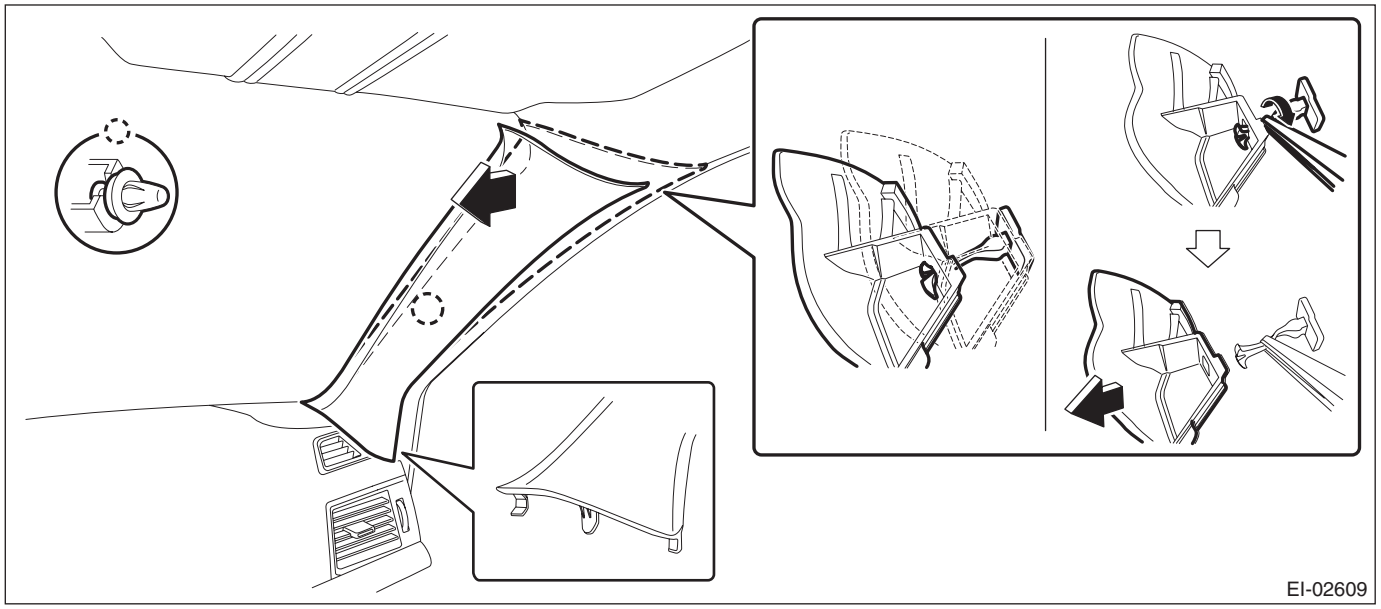

10) Release the claws, and then remove the side sill cover - front INN on the left and right sides.

CAUTION:
Do not pull with excessive force. Doing so may damage the claws of the side sill cover INN.

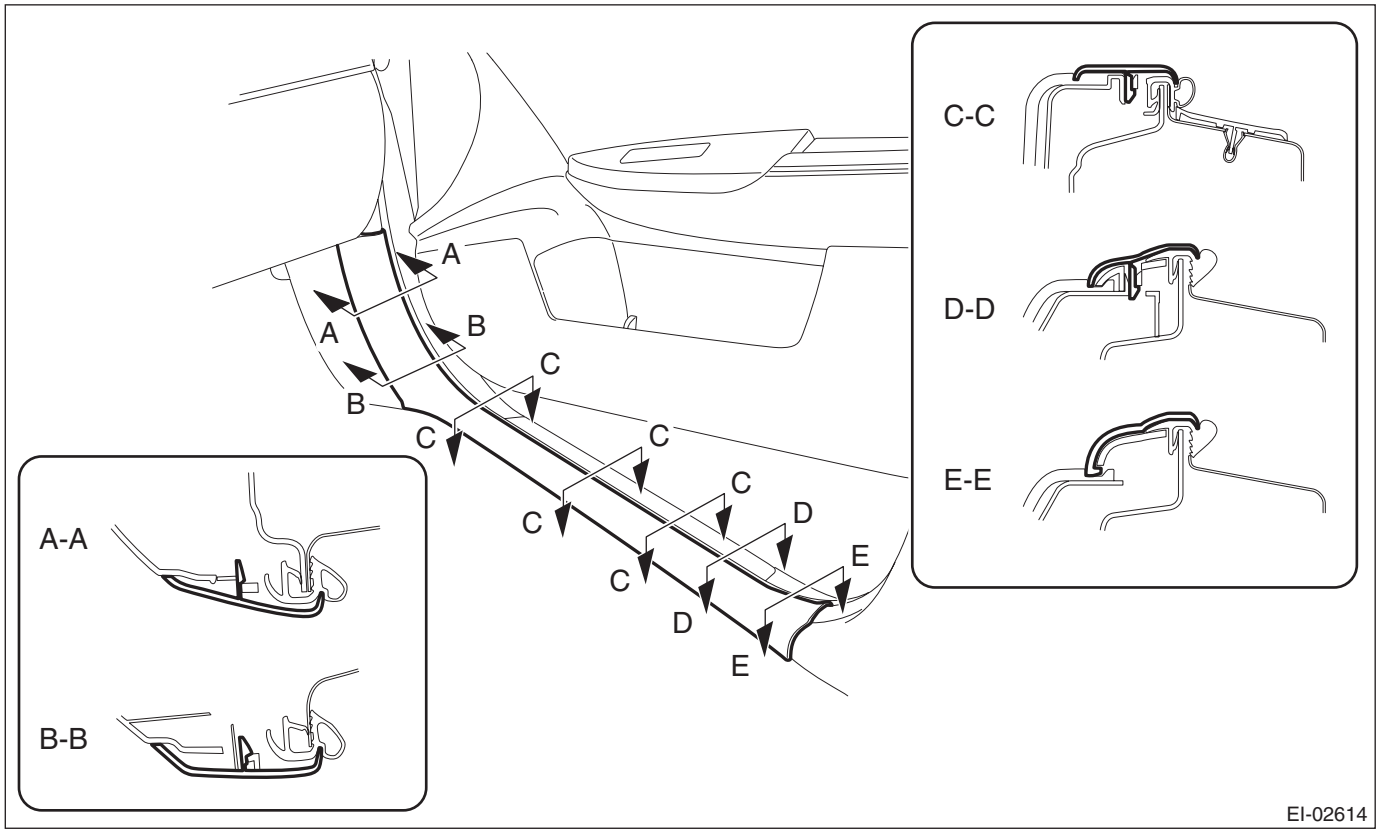

NOTE:
To release the claws of the side sill cover INN, the following steps are recommended.
1. Take out the weather strip from under the side sill cover INN.
2. Turn over the floor mat and release the claw (C-C) by accessing from behind the side sill cover INN.

11) Remove the left and right center pillar trim LWR.
(1) Release the clip by pulling the center pillar trim LWR toward you.
(2) Expand the claws of center pillar trim LWR outward and remove it from the center pillar trim UPR.

CAUTION:
Do not expand the center pillar trim LWR excessively. Doing so may damage the trim.

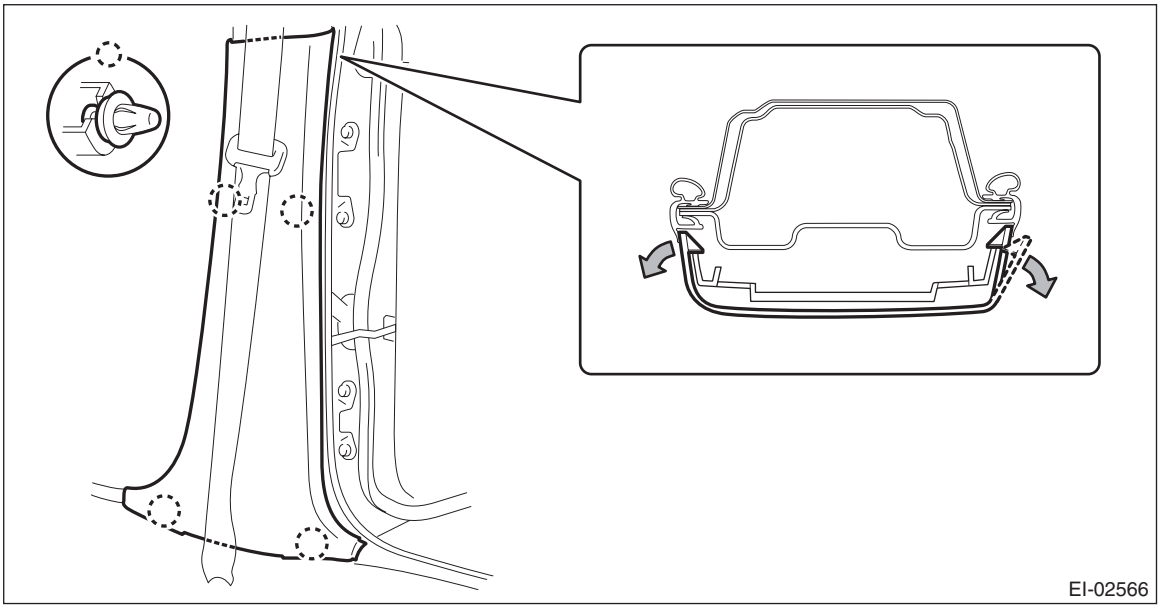
EI-02566

NOTE:
First release the claw located to the rear of the vehicle.
12) Remove the left and right center pillar trim UPR.
(1) Remove the seat belt lower anchor bolt.

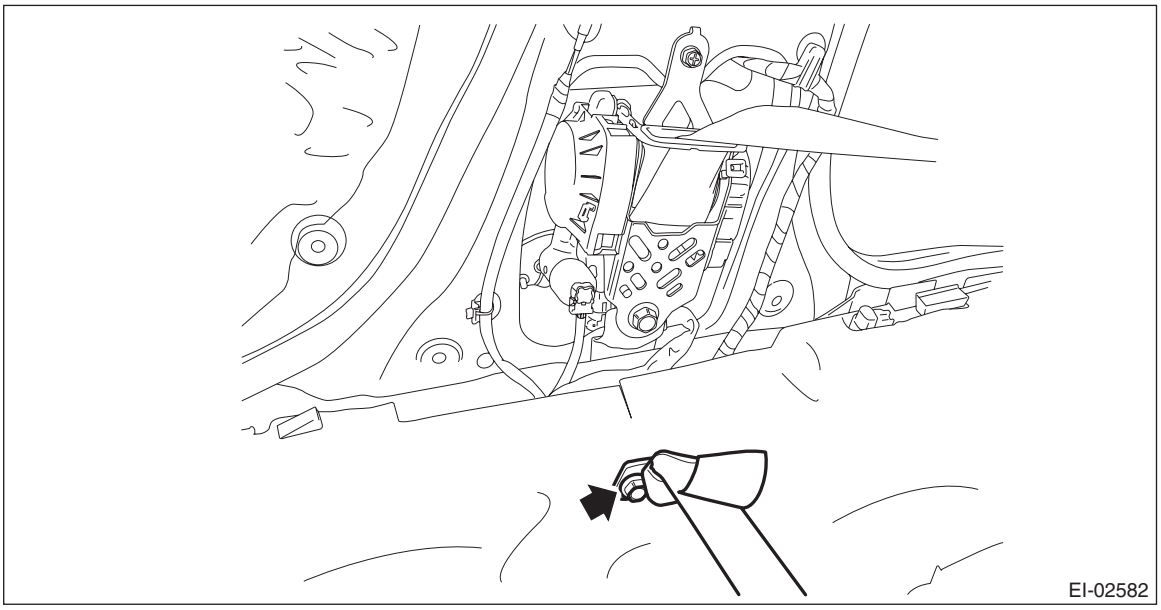
EI-02582

(2) Release the clip by pulling the center pillar trim UPR toward you.

(3) Remove the center pillar trim UPR by lowering the entire trim.

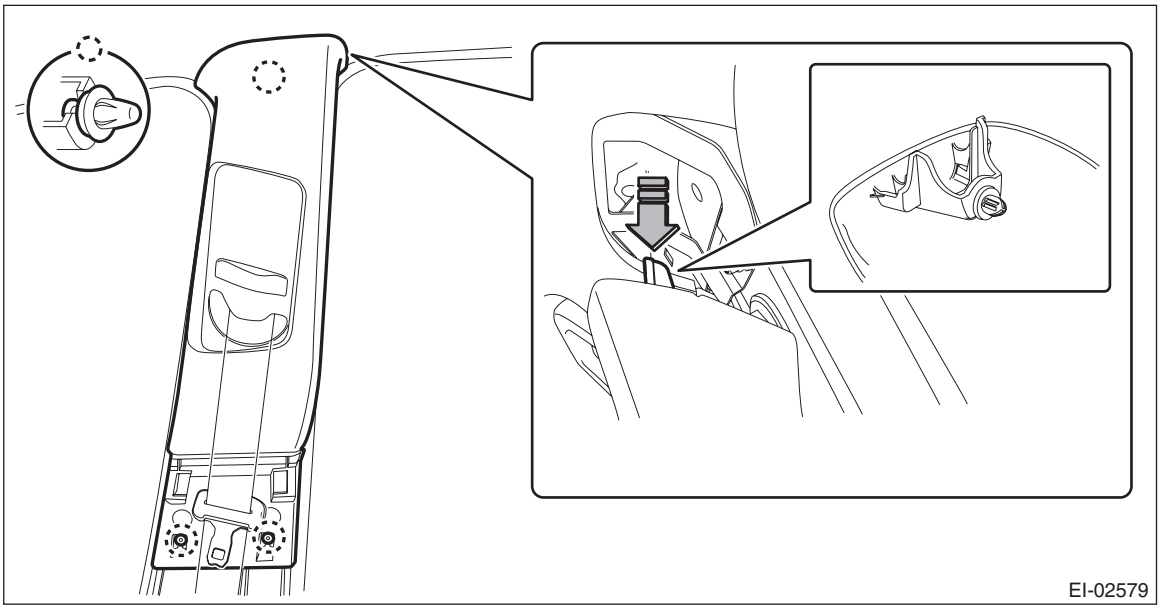

(4) Pull out the seat belt from the center pillar trim UPR.

13) Remove the overhead console assembly.

(1) Push and open the rear end of the overhead console lid, and remove the screws.

(2) Disconnect the connector and remove the overhead console assembly.

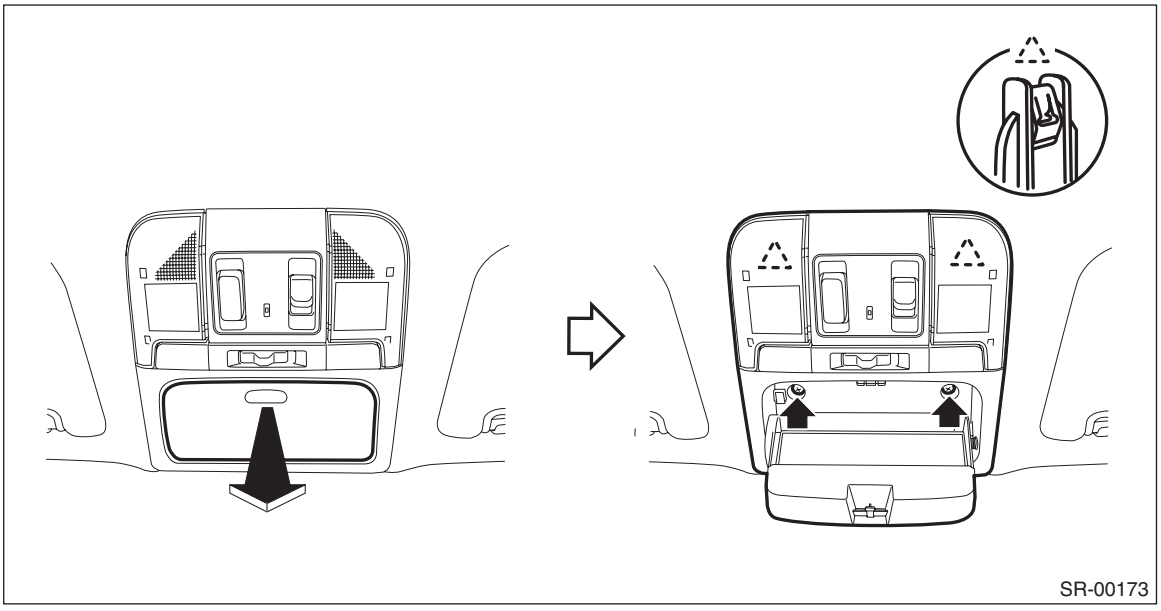

14) Remove the left and right sun visor assembly.
(1) Remove the cover, loosen the screws, and remove the sun visor assembly.
(2) Press the both sides of the sun visor hook using a flat tip screwdriver.
(3) Remove the sun visor hook by pulling toward you.

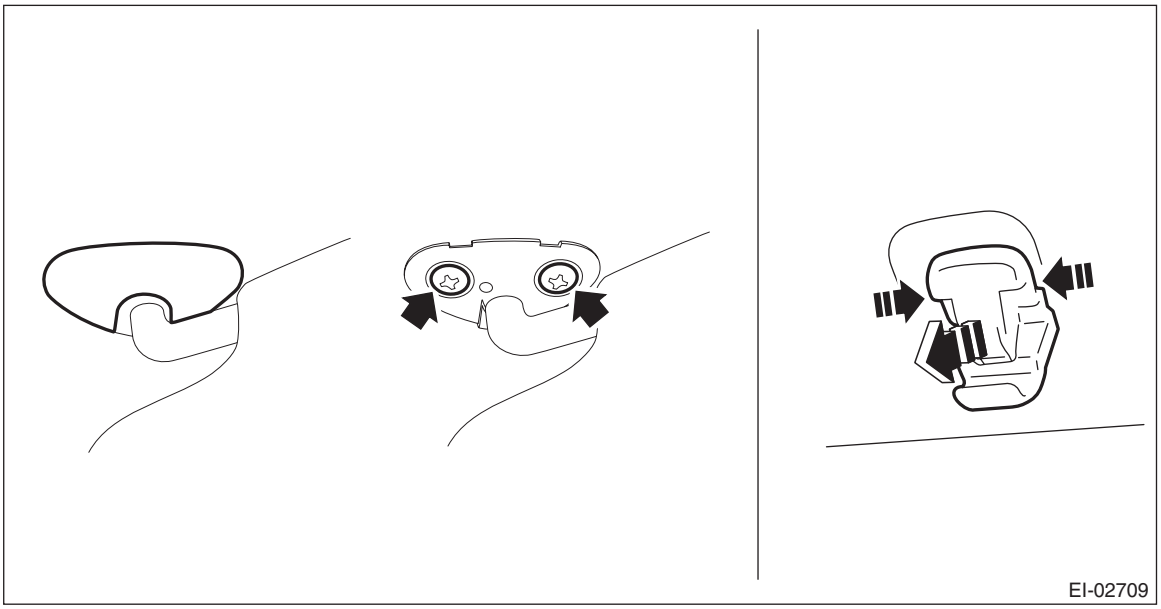

15) Remove the room light assembly.
(1) Release the claws and remove the cover.
(2) Remove the two screws.

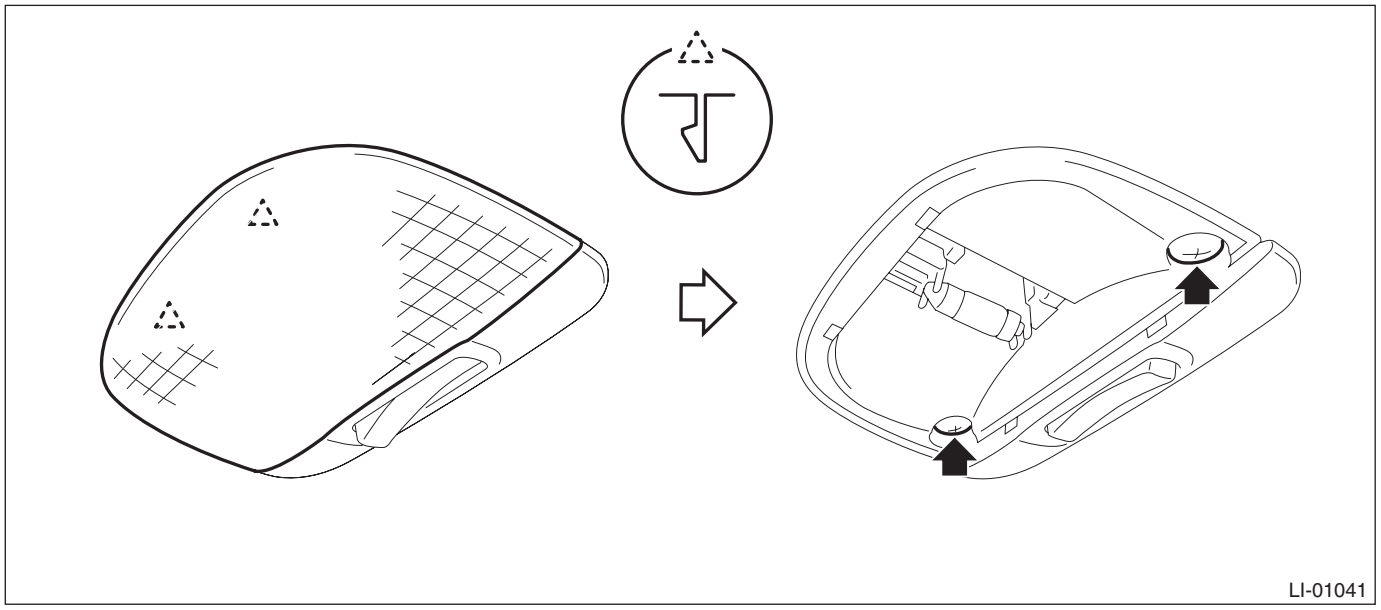

(3) Disconnect the connector and remove the room light assembly.

16) Remove the luggage room light.
(1) Release the claws and remove the luggage room light main body.
(2) Disconnect the connector and remove the luggage room light.

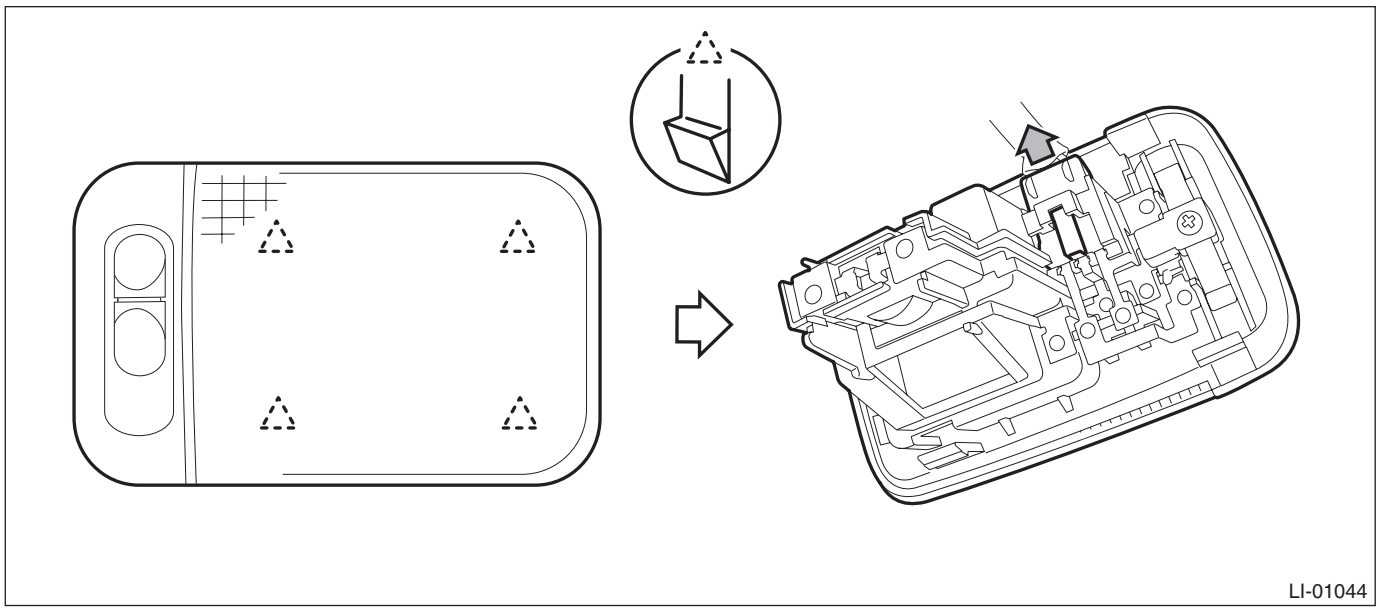

17) Remove all assist grip assembly.
(1) Remove the cap (a).
(2) Pull the assist grip toward you (to the vehicle center) and remove the metal clip from the bracket.

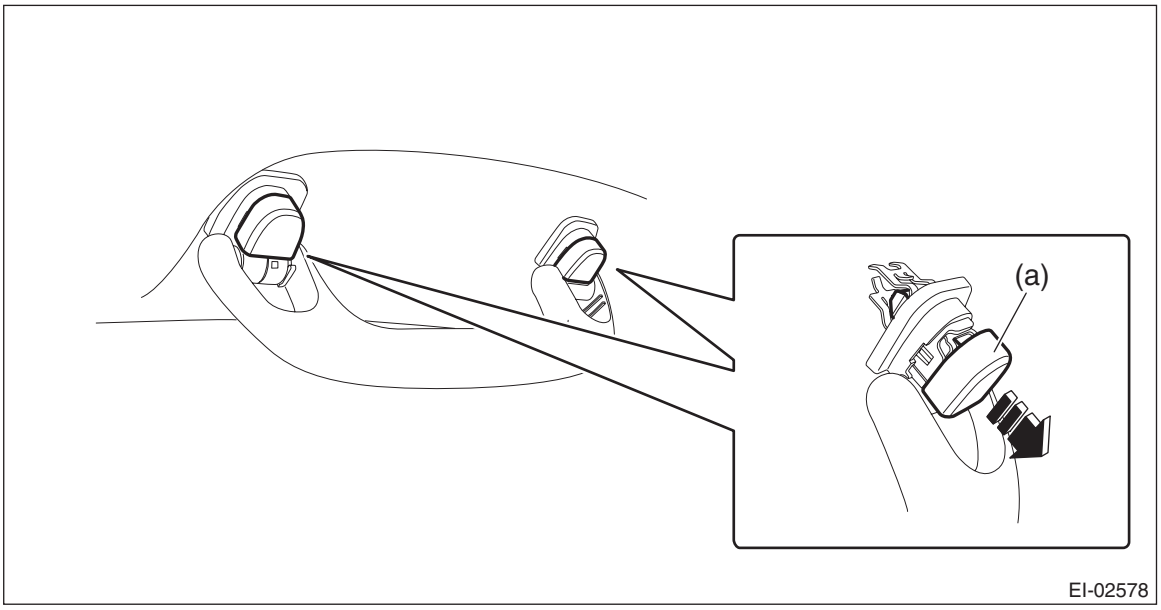

18) Remove the sun roof garnish. (model with sunroof)

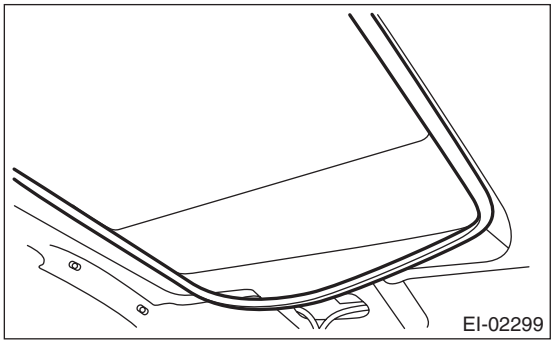

19) Disconnect the roof harness connector at the front pillar RH.
20) Remove the roof trim assembly.
    (1) Release the clips and remove the feeder cable from the roof trim.
    (2) Take out the roof trim assembly from the rear gate opening to outside.

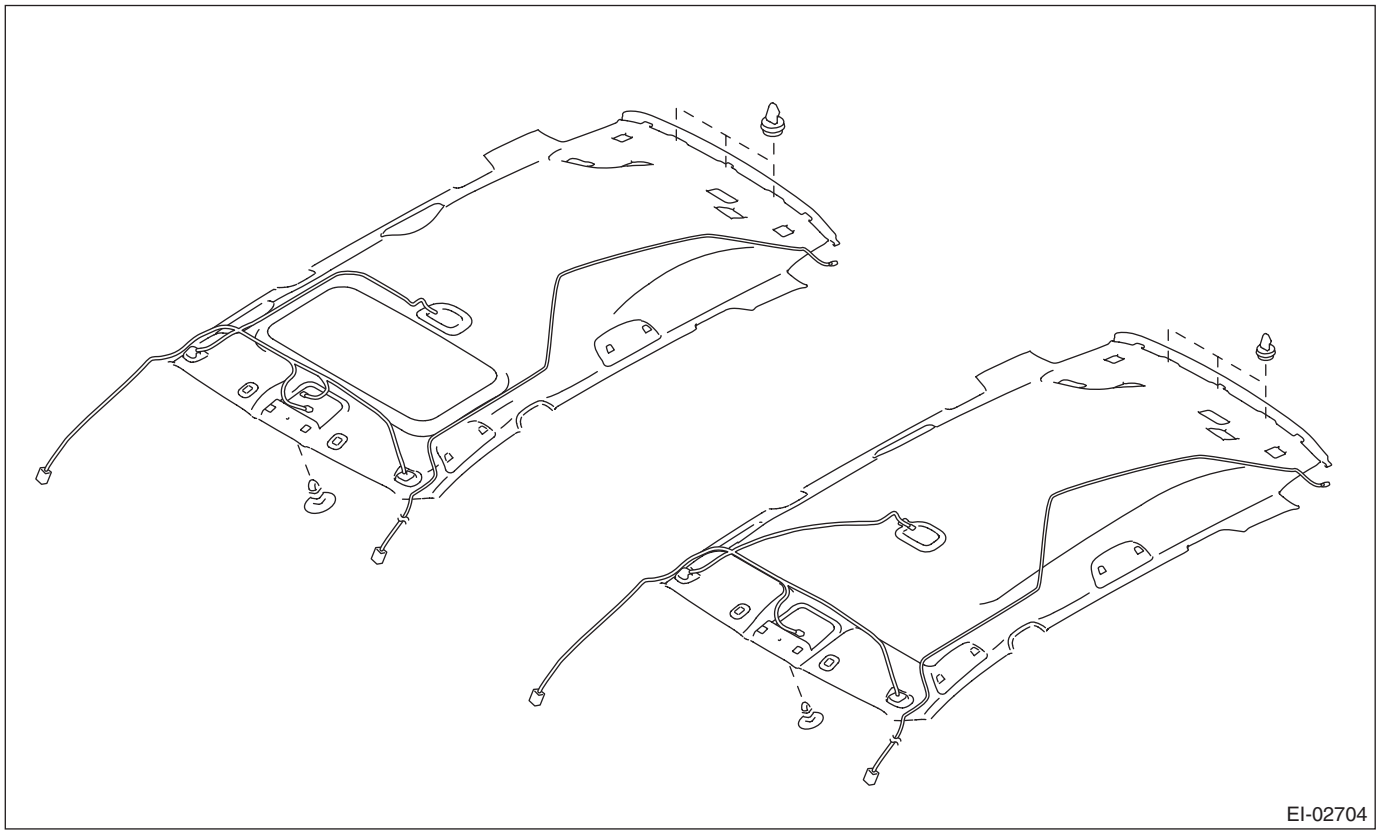

21) Remove the bolts, and remove the shoulder belt assembly CTR.

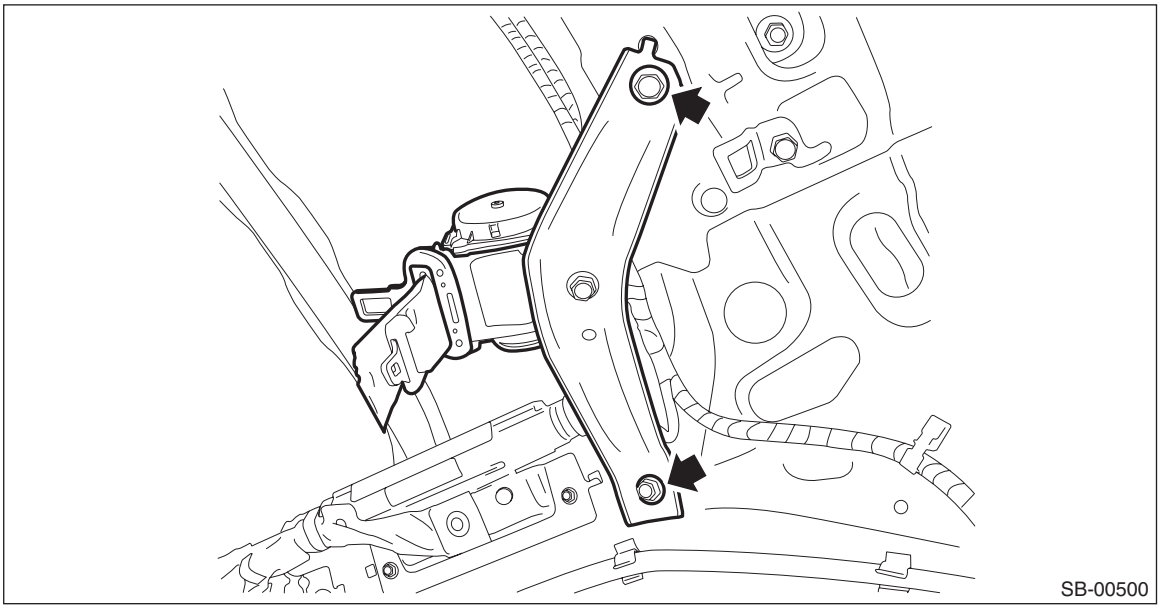

5. CENTER BELT RH ASSEMBLY & LH ASSEMBLY

1) Disconnect the ground cable from battery and wait for at least 60 seconds before starting work.

CAUTION:
The airbag system is fitted with a backup power supply. After disconnecting the battery ground cable, the airbag may operate if you do not wait for 60 seconds before starting the service of airbag system.

2) Remove the rear seat cushion.
   (1) Pull up the seat cushion and release the hook.

CAUTION:
If the hook is disconnected from the vehicle body, replace the hook with the new part to prevent the decline of the fixed force of the seat.

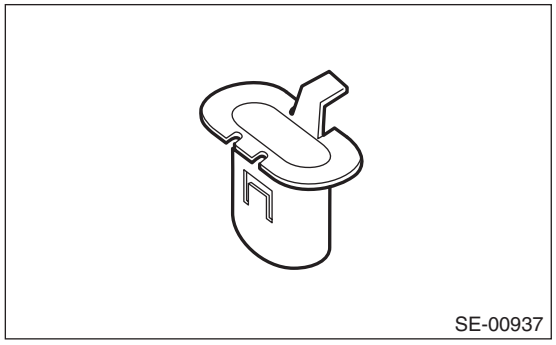
SE-00937

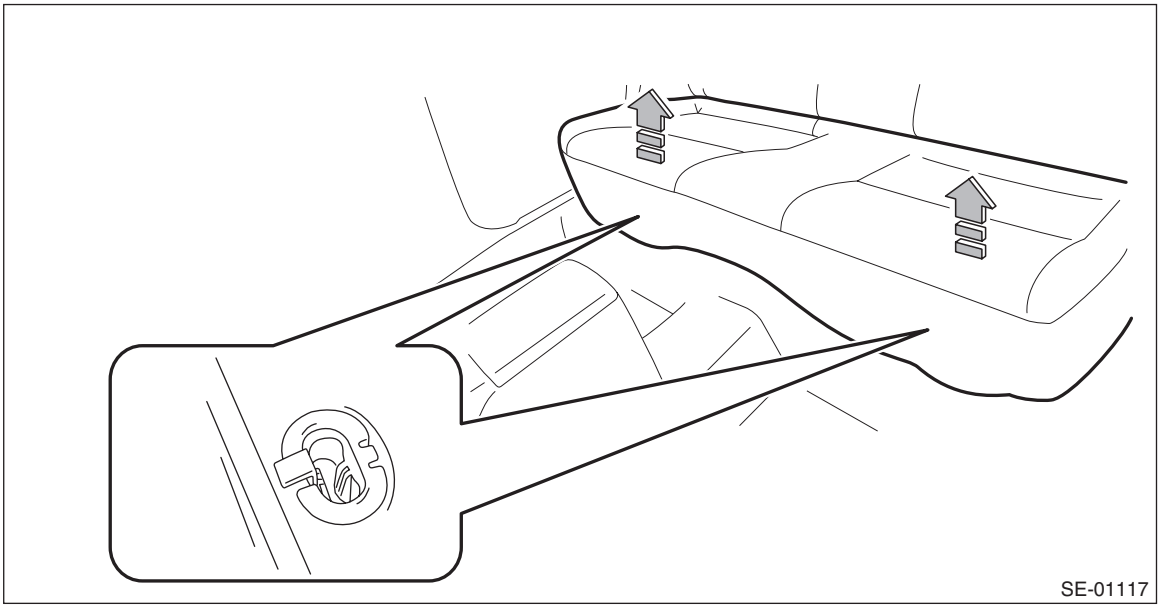
SE-01117

(2) Remove the hook (A) by pushing it back while lifting the front side of the seat cushion, and remove the seat cushion.

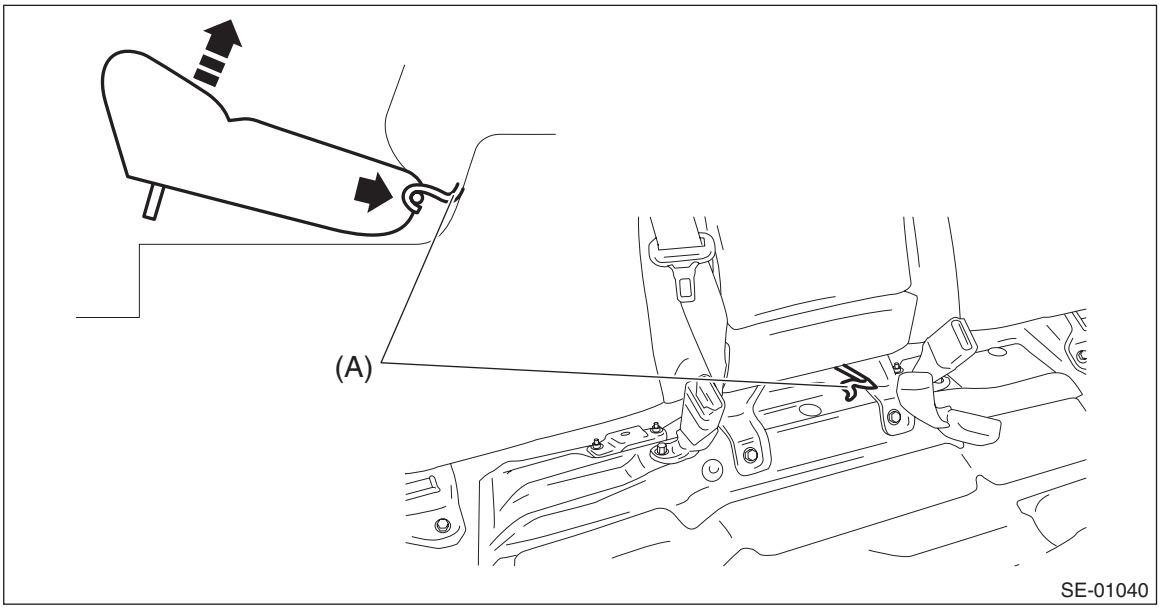

3) Remove the center belt RH assembly & LH assembly.
(1) Remove the bolts and remove the ISO-FIX anchor.
(2) Remove the bolts, then remove the center belt RH assembly & LH assembly.
• Sedan model

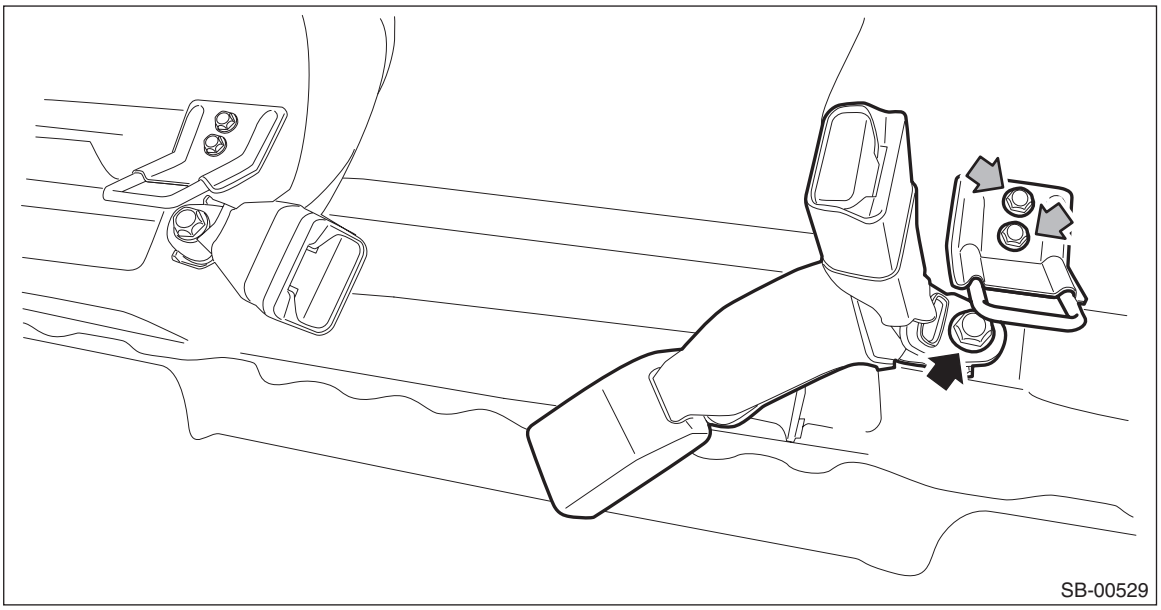

- OUTBACK model

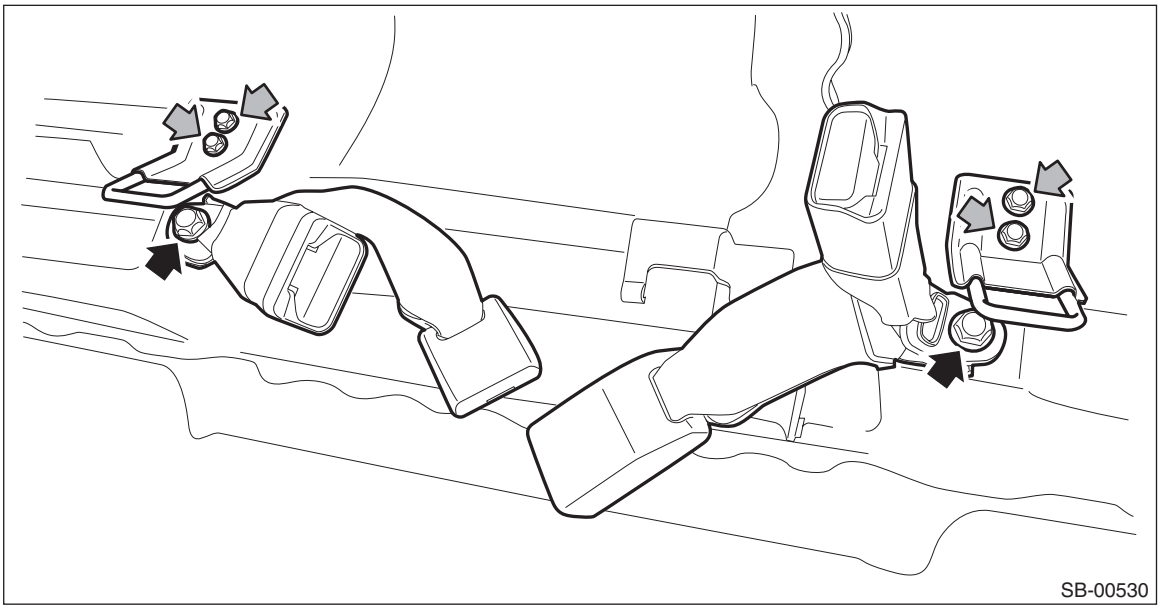

B: INSTALLATION

1. OUTER BELT RH ASSEMBLY & LH ASSEMBLY (SEDAN MODEL)

CAUTION:
If the hook is disconnected from the vehicle body, replace the hook with the new part to prevent the decline of the fixed force of the seat.

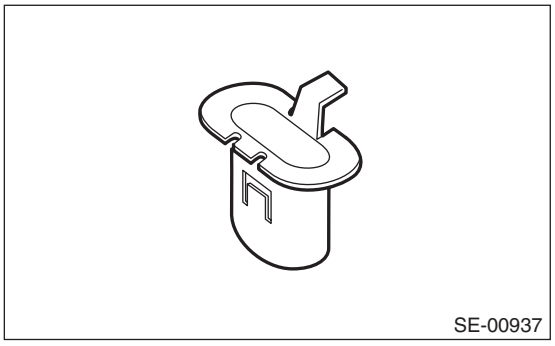

1) Before installation, perform a unit inspection of retractor. <Ref. to SB-63, INSPECTION, Rear Seat Belt.>
2) Install the outer belt assembly.

CAUTION:
- **During installation, make sure that the seat belts are not twisted.**
- **After installation, make sure that the seat belts are smoothly extended and wound.**

Tightening torque:
REAR SEAT BELT (SEDAN MODEL): <Ref. to SB-3, REAR SEAT BELT (SEDAN MODEL), COMPONENT, General Description.>

3) Install the remaining parts in the reverse order of removal.
4) After installation, check the following points.
- The seat belt is not twisted.
- The seat belt can be pulled out and retracted smoothly.

2. OUTER BELT RH ASSEMBLY & LH ASSEMBLY (OUTBACK MODEL)

CAUTION:
If the hook is disconnected from the vehicle body, replace the hook with the new part to prevent the decline of the fixed force of the seat.

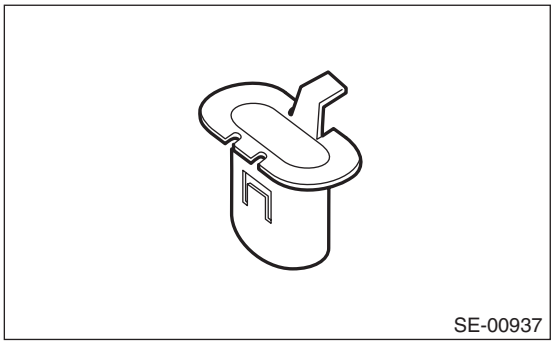
SE-00937

1) Before installation, perform a unit inspection of retractor. <Ref. to SB-63, INSPECTION, Rear Seat Belt.>
2) Install the outer seat belt retractor.

Tightening torque:
Rear seat belt (OUTBACK model): <Ref. to SB-4, REAR SEAT BELT (OUTBACK MODEL), COMPONENT, General Description.>
3) Install the rear quarter trim UPR.
4) Install the outer belt shoulder anchor.
5) Install the outer belt lower anchor.

CAUTION:
- **During installation, make sure that the seat belts are not twisted.**
- **After installation, make sure that the seat belts are smoothly extended and wound.**

Tightening torque:
Rear seat belt (OUTBACK model): <Ref. to SB-4, REAR SEAT BELT (OUTBACK MODEL), COMPONENT, General Description.>
6) Install the remaining parts in the reverse order of removal.
7) After installation, check the following points.
- The seat belt is not twisted.
- The seat belt can be pulled out and retracted smoothly.

3. SHOULDER BELT CTR ASSEMBLY (SEDAN MODEL)

CAUTION:
If the hook is removed from vehicle body, replace the hook with the new part to avoid the deterioration of seat securing.

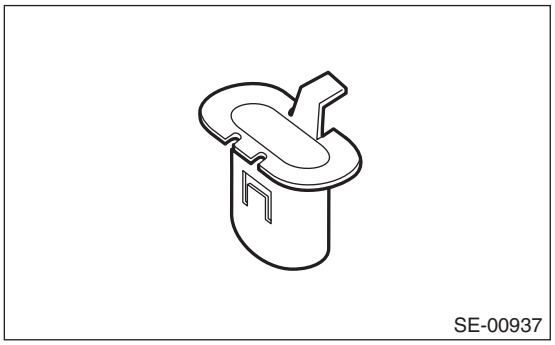
SE-00937

1) Install the shoulder belt retractor.

Tightening torque:
REAR SEAT BELT (SEDAN MODEL): <Ref. to SB-3, REAR SEAT BELT (SEDAN MODEL), COMPONENT, General Description.>
2) Install the rear shelf trim.

3) Install the shoulder belt lower anchor.

CAUTION:
- **During installation, make sure that the seat belts are not twisted.**
- **After installation, make sure that the seat belts are smoothly extended and wound.**

Tightening torque:
REAR SEAT BELT (SEDAN MODEL): <Ref. to SB-3, REAR SEAT BELT (SEDAN MODEL), COMPONENT, General Description.>

4) Rear quarter upper trim
5) Install the remaining parts in the reverse order of removal.
6) After installation, check the following points.
- The seat belt is not twisted.
- The seat belt can be pulled out and retracted smoothly.

4. SHOULDER BELT CTR ASSEMBLY (OUTBACK MODEL)

CAUTION:
If the hook is removed from vehicle body, replace the hook with the new part to avoid the deterioration of seat securing.

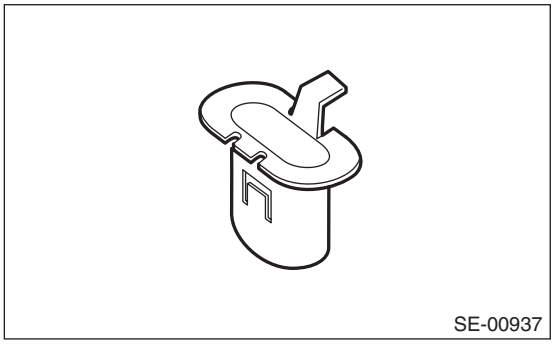
SE-00937

1) Install the shoulder belt retractor.

Tightening torque:
Rear seat belt (OUTBACK model): <Ref. to SB-4, REAR SEAT BELT (OUTBACK MODEL), COMPONENT, General Description.>

2) Install the roof trim.
3) Install the remaining parts in the reverse order of removal.
4) After installation, check the following points.
- The seat belt is not twisted.
- The seat belt can be pulled out and retracted smoothly.

5. CENTER BELT ASSEMBLY RH & LH

1) Install the center belt assembly.

Tightening torque:
REAR SEAT BELT (SEDAN MODEL): <Ref. to SB-3, REAR SEAT BELT (SEDAN MODEL), COMPONENT, General Description.>
Rear seat belt (OUTBACK model): <Ref. to SB-4, REAR SEAT BELT (OUTBACK MODEL), COMPONENT, General Description.>

2) Install the ISO-FIX anchor.

Tightening torque:
25 N·m (2.55 kgf-m, 18.4 ft-lb)

3) Install the rear seat cushion.

CAUTION:
If the hook is disconnected from the vehicle body, replace the hook with the new part to prevent the decline of the fixed force of the seat.

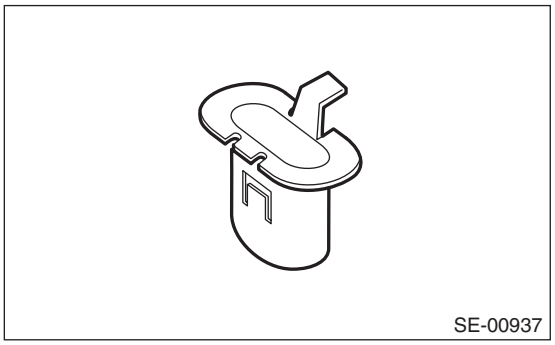
SE-00937

4) Install the remaining parts in the reverse order of removal.
5) After installation, check the following points.
- The seat belt is not twisted.
- Check that the airbag warning light lights up for approximately 6 seconds and then turns off when connecting the battery ground cable and turning the ignition switch to ON.

C: INSPECTION

1. VISUAL INSPECTION

Check for the following, and replace with new parts if necessary.
- Seat belt is slackened, bent or worn.
- Seat belt is abnormally wound or extended.
- Inner belt ASSY is deformed or damaged.
- Seat belt buckle cannot be engaged properly.

2. ELR LOCK MECHANISM INSPECTION

1) Hold the retractor upright (as installed in the vehicle) and check the ELR lock mechanism.
2) Tilt the retractor from the upright posture and check the following points.
- It does not lock if the inclination angle is 12° or less.

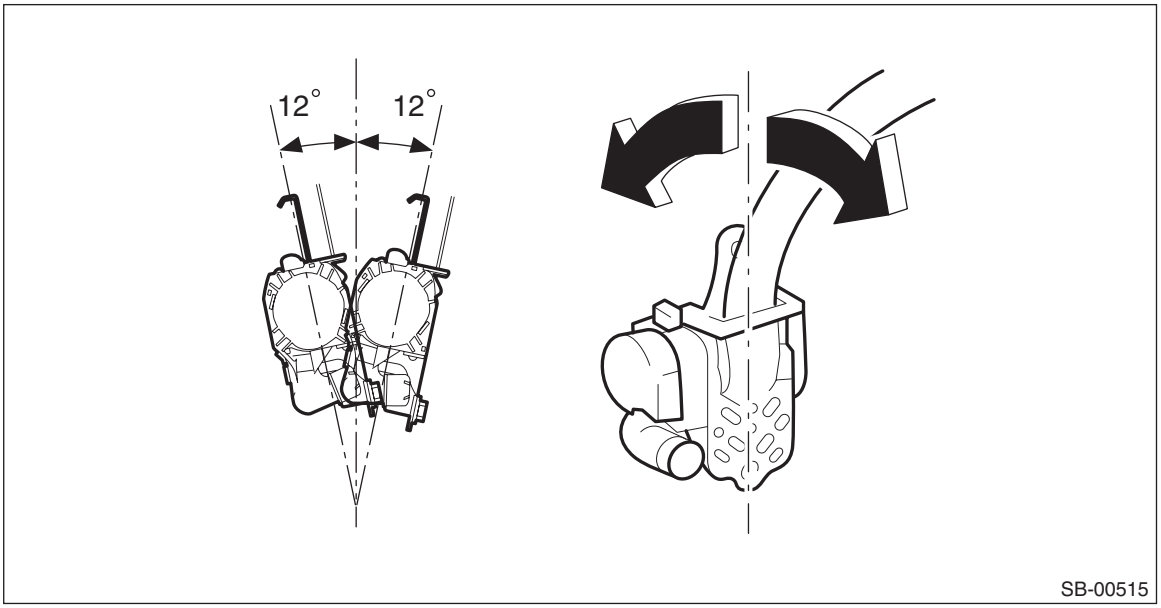

SB-00515

- It remains locked if the inclination angle is 27° or more.

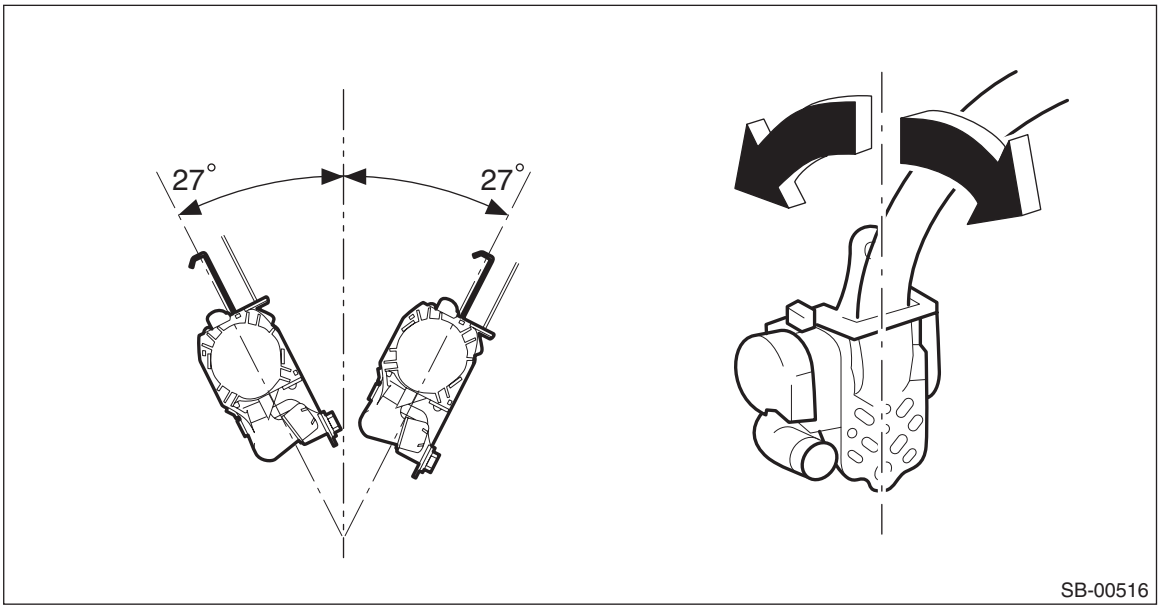

3) If the ELR lock mechanism does not operate correctly, replace the outer belt assembly with a new part.

LIGHTING SYSTEM

LI

		Page
1.	General Description	2
2.	Relay and Fuse	4
3.	Headlight System	6
4.	Day Time Running Light System	8
5.	Clearance Light and Illumination Light System	9
6.	Front Fog Light System	10
7.	Turn Signal Light and Hazard Light System	11
8.	Back-up Light System	13
9.	Stop Light System	15
10.	Interior Light System	16
11.	Combination Switch (Light)	19
12.	Light Control Sensor	24
13.	Headlight Assembly	25
14.	Headlight Bulb	31
15.	Front Turn Signal Light Bulb	35
16.	Clearance/Parking Light Bulb	37
17.	Front Side Marker Light Bulb	38
18.	Front Fog Light Assembly	40
19.	Front Fog Light Bulb	43
20.	Side Turn Signal Light Assembly	44
21.	Rear Combination Light Assembly	45
22.	Tail/Stop Light Bulb	47
23.	Rear Turn Signal Light Bulb	51
24.	Rear Finisher Light Assembly	54
25.	Back-up Light Bulb	56
26.	License Plate Light	58
27.	High-mounted Stop Light	60
28.	Spot Map Light	62
29.	Room Light	64
30.	Luggage Room Light	66
31.	Trunk Room Light	68
32.	Glove Box Light	69
33.	Door Step Light	70
34.	Ignition Switch Illumination	71
35.	Day Time Running Resistor	74
36.	Reflex Reflector	75
37.	Door Switch	76

1. General Description

A: SPECIFICATION

Headlight		High beam	12 V — 60 W
		Low beam	12 V — 55 W
Front turn signal light			12 V — 21 W
Parking light			12 V — 5 W
Side marker light			12 V — 5 W
Front fog light			12 V — 55 W
Side turn signal light (C6 model)			12 V — 1.4 W (LED)
Rear combination light	Sedan model	Tail/stop light	12 V — 5 / 21 W
		Turn signal light	12 V — 21 W
		Back-up light	12 V — 16 W
	OUTBACK model	Tail light	12 V — 5 W
		Stop light	12 V — 21 W
		Turn signal light	12 V — 21 W
Rear finisher light	Sedan model	Tail light	12 V — 5 W
	OUTBACK model	Tail light	12 V — 5 W
		Back-up light	12 V — 16 W
License plate light			12 V — 5 W
High-mounted stop light	Sedan model		12 V — 1 W (LED)
	OUTBACK model		12 V — 2.1 W (LED)
Room light			12 V — 8 W
Spot map light			12 V — 8 W
Luggage room light			12 V — 5 W
Trunk room light			12 V — 5 W
Glove box light			12 V — 1.4 W
Door step light			12 V — 5 W

B: CAUTION

• Before disassembling or reassembling parts, always disconnect the battery ground cable from battery. When replacing the audio, control module and other parts provided with memory functions, record the memory contents before disconnecting the battery ground cable. Otherwise, the memory is cleared.
• Reassemble the parts in the reverse order of disassembly procedure unless otherwise indicated.
• Connect the connectors securely during reassembly.
• After reassembly, make sure that the functional parts operate normally.
• Yellow connectors and harnesses with yellow tapes around them are the connectors and harnesses for the airbag system. Using a tester above such circuits may cause malfunction of airbag system. Follow the cautions for the airbag system in this case. <Ref. to AB-9, CAUTION, General Description.>
• Be careful not to damage the airbag system wiring harness when servicing electrical parts and switches.

C: PREPARATION TOOL

1. SPECIAL TOOL

ILLUSTRATION	TOOL NUMBER	DESCRIPTION	REMARKS
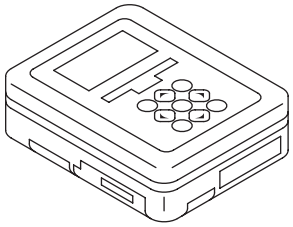 ST1B022XU0	1B022XU0	SUBARU SELECT MONITOR III KIT	Used for setting of each function and trouble-shooting for electrical system.

2. GENERAL TOOL

TOOL NAME	REMARKS
Circuit tester	Used for measuring resistance and voltage.

2. Relay and Fuse

A: LOCATION

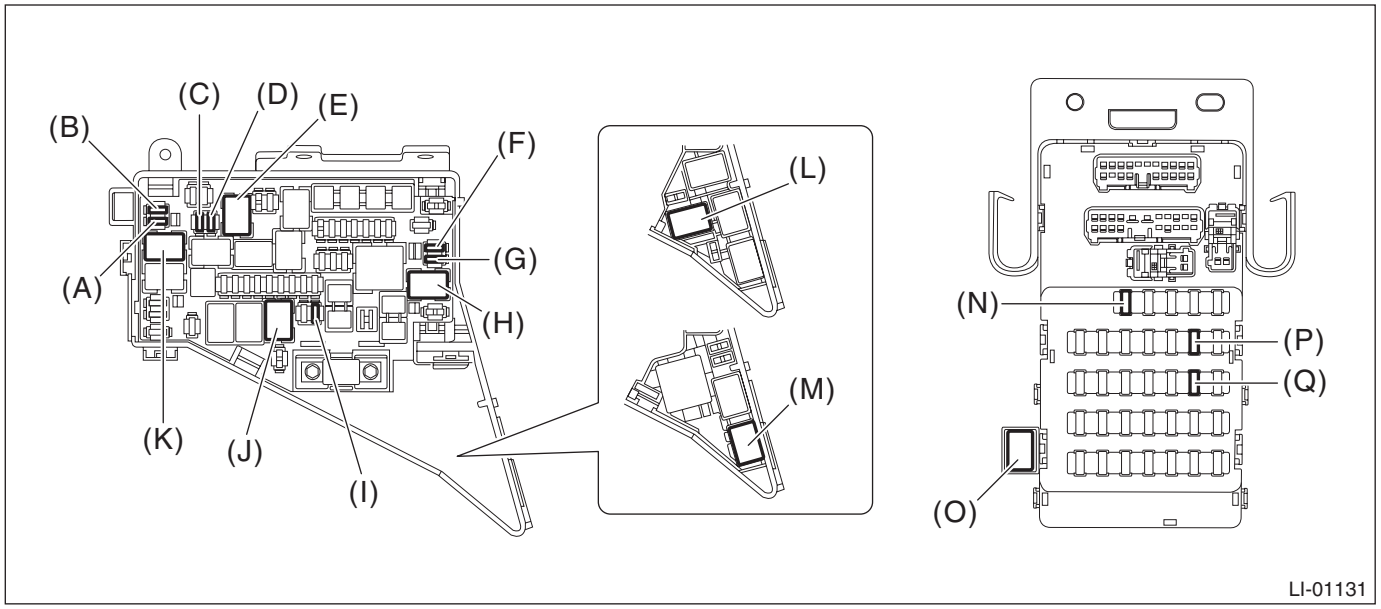

Main fuse box	Fuse 15A (front combination light RH)	(A)
	Fuse 15A (front combination light LH)	(B)
	Fuse 10A (front combination light LH)	(C)
	Fuse 10A (front combination light RH)	(D)
	Headlight relay (Hi)	(E)
	Fuse 10A (front fog light LH)	(F)
	Fuse 10A (front fog light RH)	(G)
	Front fog light relay	(H)
	Fuse 10A (rear combination light)	(I)
	Tail & Illumination relay	(J)
	Headlight relay (Lo)	(K)
A/C relay holder (in main fuse box)	Daytime running light relay (H4 model)	(L)
	Daytime running light relay (H6 model)	(M)
Relay & fuse box	Fuse 15A (trailer connector)	(N)
	Back-up light relay	(O)
	Fuse 7.5A (turn signal & hazard unit)	(P)
	Fuse 7.5A (inhibitor switch, back-up light relay)	(Q)

NOTE:
For other related fuses, refer to the wiring diagram. <Ref. to WI-15, Power Supply Circuit.>

B: INSPECTION

1. CHECK FUSE.

1) Remove the fuse and inspect visually.
2) If the fuse is blown out, replace the fuse.

NOTE:
If the fuse is blown again, check the system wiring harness.

2. CHECK RELAY

1) Check the resistance between relay terminals.

Terminal No.	Inspection conditions	Specification	Circuit
1 — 2	Always	1 MΩ or more	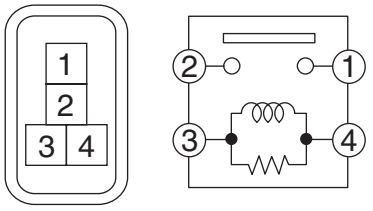 SR-00180
1 — 2	Apply battery voltage between 4 — 3 terminals.	Less than 1 Ω	

Terminal No.	Inspection conditions	Specification	Circuit
1 — 2	Always	1 MΩ or more	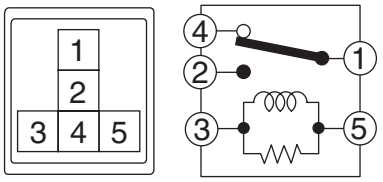 SL-01085
1 — 4	Always	Less than 1 Ω	
1 — 2	Apply battery voltage between 3 — 5 terminals.	Less than 1 Ω	

2) Replace the relay if the inspection result is not within the standard value.

3. Headlight System

A: WIRING DIAGRAM

Refer to “Headlight System” in the wiring diagram. <Ref. to WI-172, WIRING DIAGRAM, Headlight System.>

B: INSPECTION

1. AUTO HEADLIGHT SYSTEM CHECK

Preparation tool:
Subaru Select Monitor III KIT
Circuit tester

	Step	Check	Yes	No
1	**CHECK HEADLIGHT ILLUMINATION.** Set the lighting switch to the switch 1 (TAIL) and switch 2 (HEAD).	Do the tail and headlight illuminate?	Go to step **2**.	Check the combination switch (light) and headlight bulb.
2	**CHECK INPUT SIGNAL.** 1) Prepare the Subaru Select Monitor kit. 2) Turn the ignition switch to ON (engine OFF) and run the “PC application for Subaru Select Monitor”. 3) On «System Selection Menu» display, select {Integ. unit mode}. 4) Select the {Lighting AUTO input} from {Current Data Display & Save}.	Does the display switch between OFF ←→ ON when the lighting switch is moved to AUTO position?	Go to step **3**.	Go to step **8**.
3	**CHECK INPUT SIGNAL.** 1) From {Current Data Display & Save}, select {Illumination Sensor Output}. 2) Light up the darkness around light control sensor.	Is the value depending on the brightness output? (darkness: 47 — 53 Hz)	Check and replace the body integrated unit. • Inspection: <Ref. to BC(diag)-2, Basic Diagnostic Procedure.> • Replacement: <Ref. to SL-71, Body Integrated Unit.>	Go to step **4**.
4	**CHECK HARNESS.** 1) Disconnect the body integrated unit connector and light control sensor connector. 2) Check the harness between body integrated unit connector and light control sensor connector. ***Connector & terminal*** ***(B280) No. 19 — (i194) No. 4:*** ***(B280) No. 29 — (i194) No. 6:***	Is harness normal?	Go to step **5**.	Repair or replace the harness.
5	**CHECK HARNESS.** 1) Turn the ignition switch to ON. 2) Measure the voltage between light control sensor connector and chassis ground. ***Connector & terminal*** ***(i194) No. 3 (+) — Chassis ground (–):***	Is the voltage 10 V or more?	Go to step **6**.	Repair or replace the harness.
6	**CHECK BODY INTEGRATED UNIT.** 1) Connect the body integrated unit connector. 2) Measure the resistance between body integrated unit connector and chassis ground. ***Connector & terminal*** ***(B280) No. 29 — Chassis ground:***	Is the resistance less than 10 Ω?	Go to step **7**.	Replace the body integrated unit. <Ref. to SL-71, Body Integrated Unit.>

Step		Check	Yes	No
7	**CHECK LIGHT CONTROL SENSOR.** 1) Connect the light control sensor connector. 2) Turn the ignition switch to ON. 3) Set the lighting switch to AUTO position. 4) Connect the Subaru Select Monitor, and read the waveform data between light control sensor connector. ***Connector & terminal*** ***(i194) No. 4 — No. 6:*** 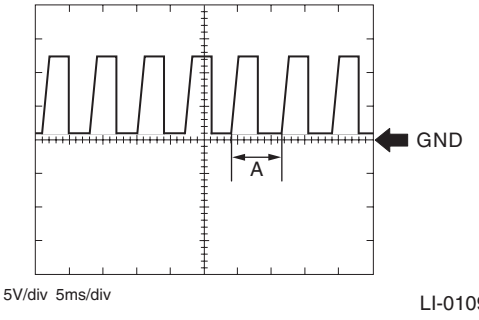 	Is waveform normal? (Interval of A becomes shorter as the surrounding becomes brighter.)	Go to step **8**.	Replace the light control sensor.
8	**CHECK COMBINATION SWITCH (LIGHT).** Check the combination switch (light). <Ref. to LI-23, INSPECTION, Combination Switch (Light).>	Is the combination switch (light) normal?	Go to step **9**.	Replace the combination switch (light).
9	**CHECK HARNESS.** 1) Disconnect the body integrated unit connector. 2) Check the harness between body integrated unit connector and combination switch (light) connector. ***Connector & terminal*** ***(B71) No. 14 — (B281) No. 16:***	Is harness normal?	Check and replace the body integrated unit. • Inspection: <Ref. to BC(diag)-2, Basic Diagnostic Procedure.> • Replacement: <Ref. to SL-71, Body Integrated Unit.>	Repair or replace the harness.

2. CHECK LIGHTING SWITCH

Measure the resistance between lighting switch terminals. <Ref. to LI-23, INSPECTION, Combination Switch (Light).>

3. CHECK DIMMER & PASSING SWITCH

Measure the resistance between dimmer & passing switch terminals. <Ref. to LI-23, INSPECTION, Combination Switch (Light).>

C: NOTE

For operation procedures of each component of the headlight system, refer to the respective section.
- Headlight Assembly: <Ref. to LI-25, Headlight Assembly.>
- Headlight bulb: <Ref. to LI-31, Headlight Bulb.>
- Combination switch (light): <Ref. to LI-19, Combination Switch (Light).>
- Light control sensor: <Ref. to LI-24, Light Control Sensor.>

4. Day Time Running Light System

A: WIRING DIAGRAM

Refer to “Headlight System” in the wiring diagram. <Ref. to WI-172, WIRING DIAGRAM, Headlight System.>

B: INSPECTION

1. DAYTIME RUNNING LIGHT SYSTEM CHECK

Step		Check	Yes	No
1	**CHECK DTC.** 1) Prepare the Subaru Select Monitor kit. 2) Turn the ignition switch to ON (engine OFF) and run the “PC application for Subaru Select Monitor”. 3) On «System Selection Menu» display, select {Integ. unit mode}. 4) Select {Diagnostic Code(s) Display}.	Is DTC displayed?	Perform the diagnosis according to DTC.	Go to step **2**.
2	**CHECK INPUT SIGNAL.** 1) From the state in step 1), select {Integ. unit mode}. 2) Select the following input signals. (1) Parking Brake Switch Input (2) Shift position (3) Lighting II Switch Input	Is the input signal normal?	Go to step **3**.	Check the defective part.
3	**CHECK RELAY.** Check the daytime running light relay. <Ref. to LI-5, CHECK RELAY, INSPECTION, Relay and Fuse.>	Is the relay OK?	Go to step **4**.	Replace the relay.
4	**CHECK HARNESS.**	Is harness normal?	Replace the body integrated unit. <Ref. to SL-71, REMOVAL, Body Integrated Unit.>	Repair or replace the harness.

C: NOTE

For operation procedures of each component of the daytime running light system, refer to the respective section.

- Headlight Assembly: <Ref. to LI-74, Day Time Running Resistor.>
- Headlight bulb: <Ref. to LI-31, Headlight Bulb.>
- Combination switch (light): <Ref. to LI-19, Combination Switch (Light).>
- Daytime running resistor: <Ref. to LI-74, Day Time Running Resistor.>

5. Clearance Light and Illumination Light System

A: WIRING DIAGRAM

Refer to “Clearance Light and Illumination Light System” in the wiring diagram. <Ref. to WI-89, WIRING DIAGRAM, Clearance Light and Illumination Light System.>

B: INSPECTION

1. CHECK LIGHTING SWITCH

Measure the resistance between lighting switch terminals. <Ref. to LI-23, INSPECTION, Combination Switch (Light).>

C: NOTE

For operation procedures of each component of the clearance light & illumination light system, refer to the respective sections.

- Combination switch (light): <Ref. to LI-19, Combination Switch (Light).>
- Clearance light/parking light bulb: <Ref. to LI-37, Clearance/Parking Light Bulb.>
- License plate light: <Ref. to LI-58, License Plate Light.>
- Ignition switch illumination: <Ref. to LI-71, Ignition Switch Illumination.>

6. Front Fog Light System

A: WIRING DIAGRAM

Refer to “Front Fog Light System” in the wiring diagram. <Ref. to WI-167, WIRING DIAGRAM, Front Fog Light System.>

B: INSPECTION

1. CHECK FRONT FOG LIGHT SWITCH

Measure the resistance between front fog light switch terminals. <Ref. to LI-23, INSPECTION, Combination Switch (Light).>

C: NOTE

For operation procedures of each component of the front fog light system, refer to the respective section.

- Combination switch (light): <Ref. to LI-19, Combination Switch (Light).>
- Front fog light assembly: <Ref. to LI-40, Front Fog Light Assembly.>
- Front fog light bulb: <Ref. to LI-43, Front Fog Light Bulb.>

7. Turn Signal Light and Hazard Light System

A: WIRING DIAGRAM

Refer to “Turn Signal Light and Hazard Light System” in the wiring diagram. <Ref. to WI-249, WIRING DIAGRAM, Turn Signal Light and Hazard Light System.>

B: INSPECTION

1. CHECK TURN SIGNAL SWITCH

Measure the resistance between turn signal switch terminals. <Ref. to LI-23, INSPECTION, Combination Switch (Light).>

2. CHECK HAZARD SWITCH

1) Remove the A/C control panel.
- Manual A/C model: <Ref. to AC-49, MANUAL A/C MODEL, REMOVAL, Control Panel.>
- Auto A/C model: <Ref. to AC-46, AUTO A/C MODEL, REMOVAL, Control Panel.>

2) Measure the resistance between hazard switch terminals.

Preparation tool: Circuit tester
- AUTO A/C MODEL

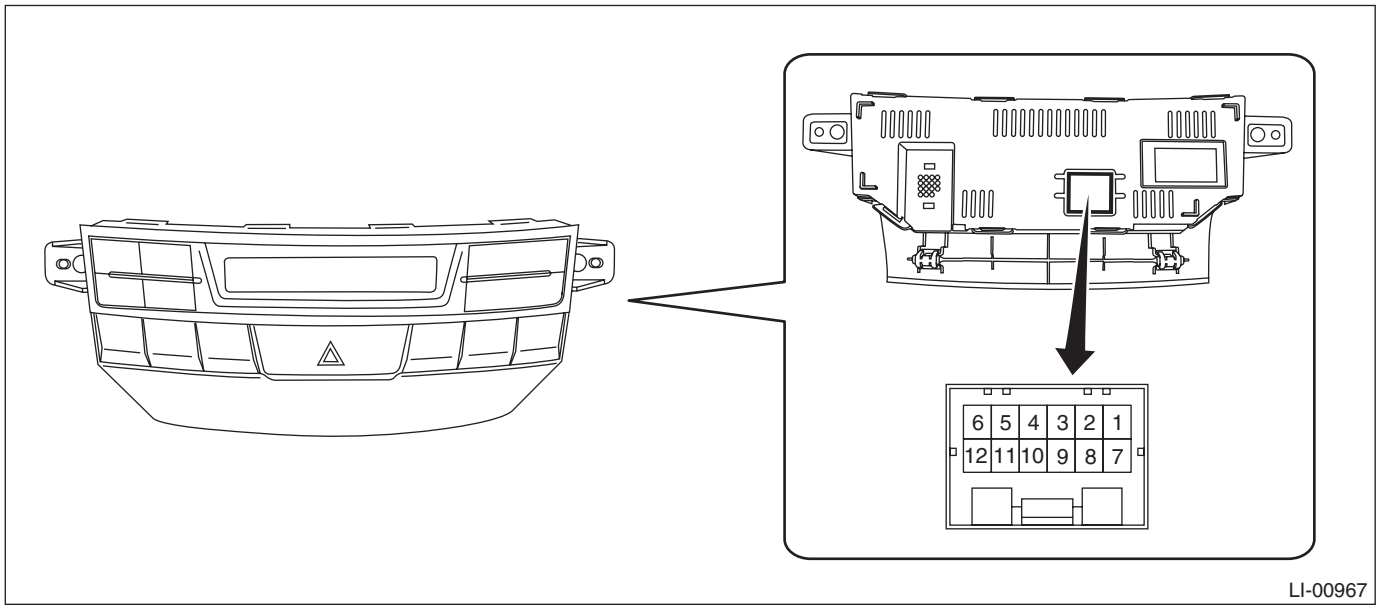

Terminal No.	Inspection conditions	Specification
1 — 2	Switch OFF	1 MΩ or more
	Switch ON	Less than 1 Ω

- MANUAL A/C MODEL

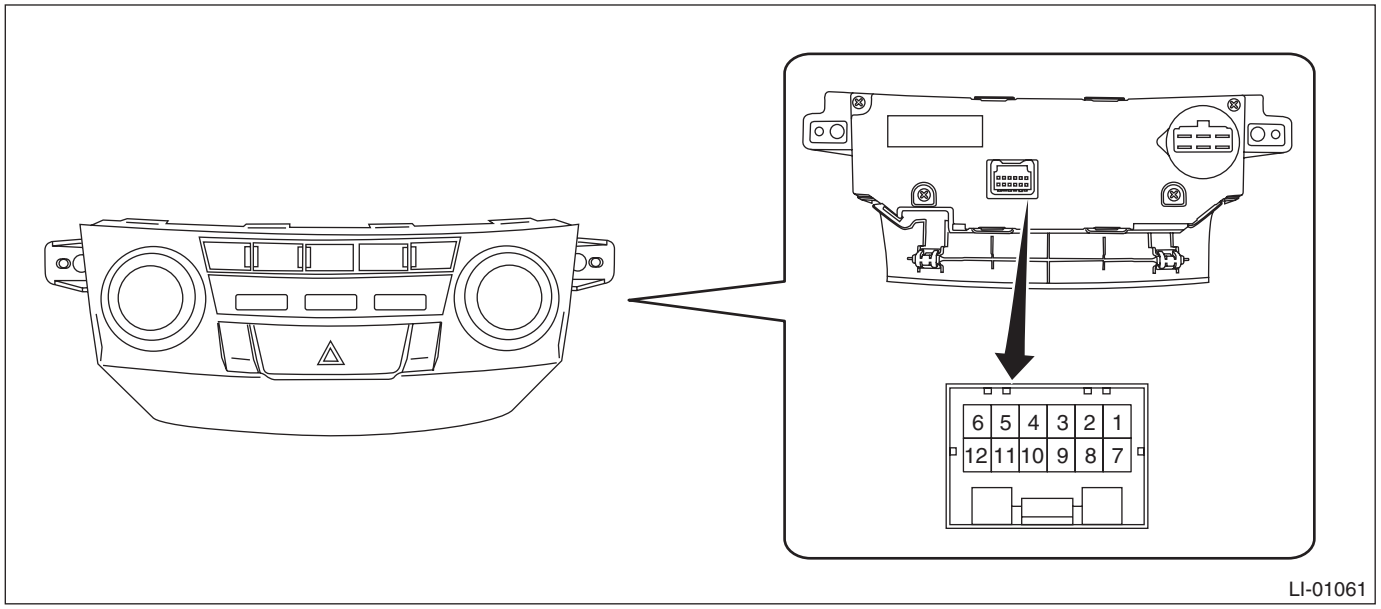

Terminal No.	Inspection conditions	Specification
4 — 5	Switch OFF	1 MΩ or more
	Switch ON	Less than 1 Ω

3) Replace the A/C control panel if the inspection result is not within the standard value.

3. CHECK TURN SIGNAL AND HAZARD MODULE

1) Measure the voltage between turn signal & hazard module connector and chassis ground.

Preparation tool: Circuit tester
Connector

Terminal No.	Input/Output	Inspection conditions	Standard
6 ←→ Chassis ground	Input	Turn signal switch (Right) OFF → ON	9 V or more → less than 1 V
5 ←→ Chassis ground	Input	Turn signal switch (Left) OFF → ON	9 V or more → less than 1 V
8 ←→ Chassis ground	Input	Hazard switch OFF → ON	9 V or more → less than 1 V
2 ←→ Chassis ground	Output	Turn signal switch (Right) OFF → ON	Repeat less than 1 V → less than 1 V ←→ more than 9 V at 60 to 120 times per minute.
3 ←→ Chassis ground	Output	Turn signal switch (Left) OFF → ON	Repeat less than 1 V → less than 1 V ←→ more than 9 V at 60 to 120 times per minute.
2 ←→ Chassis ground	Output	Hazard switch OFF → ON	Repeat less than 1 V → less than 1 V ←→ more than 9 V at 60 to 120 times per minute.
3 ←→ Chassis ground	Output	Hazard switch OFF → ON	Repeat less than 1 V → less than 1 V ←→ more than 9 V at 60 to 120 times per minute.

2) Replace the turn signal and hazard module if the inspection result is not within the standard value.

C: NOTE

For operation procedures of each component of the turn signal and hazard light system, refer to the respective sections.

- Combination switch (light): <Ref. to LI-19, Combination Switch (Light).>
- Front turn signal light bulb: <Ref. to LI-35, Front Turn Signal Light Bulb.>
- Side turn signal light assembly: <Ref. to LI-44, Side Turn Signal Light Assembly.>
- Rear combination light assembly: <Ref. to LI-45, Rear Combination Light Assembly.>
- Rear turn signal light bulb: <Ref. to LI-51, Rear Turn Signal Light Bulb.>

8. Back-up Light System

A: WIRING DIAGRAM

Refer to “Back-up Light System” in the wiring diagram. <Ref. to WI-82, WIRING DIAGRAM, Back-up Light System.>

B: INSPECTION

1. CHECK BACK-UP LIGHT SWITCH (MT MODEL)

1) Disconnect the back-up light switch connector.
2) Measure the resistance between back-up light switch terminals.

Preparation tool: Circuit tester

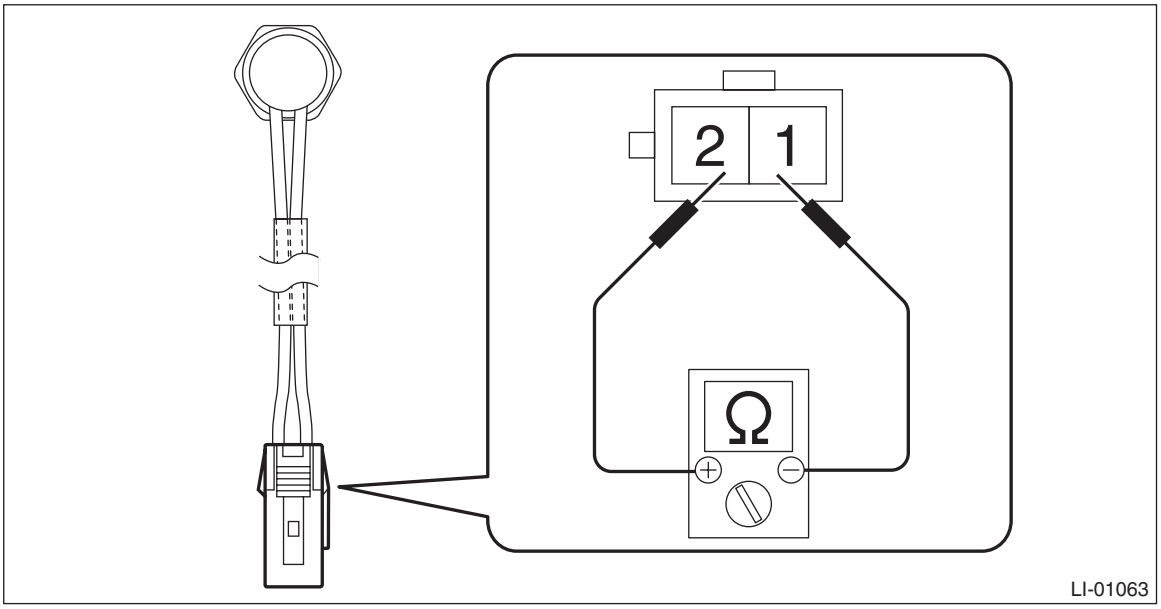

Terminal No.	Inspection conditions	Specification
1 — 2	When shift lever is set in reverse position	Less than 1 Ω
	Other positions	1 MΩ or more

3) Replace the back-up light switch if the inspection result is not within the standard value.

2. CHECK INHIBITOR SWITCH (AT/CVT MODEL)

1) Disconnect the inhibitor switch connector.
2) Measure the resistance between inhibitor switch terminals.

Preparation tool: Circuit tester

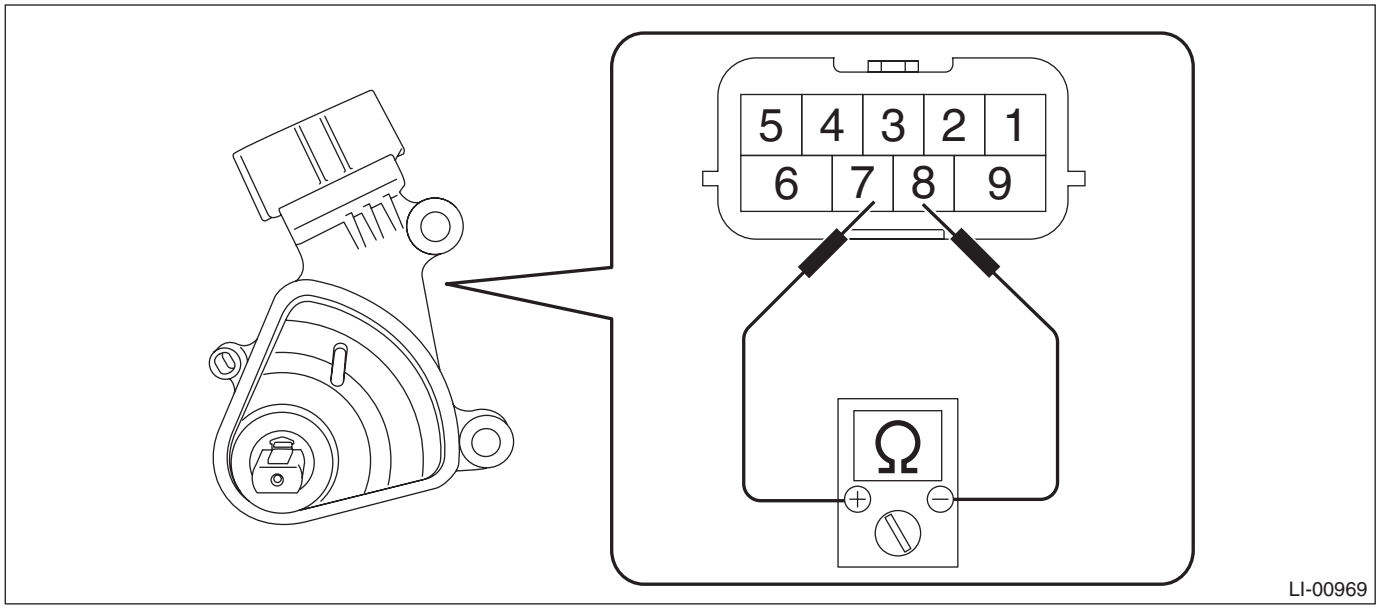

Terminal No.	Inspection conditions	Specification
7 — 8	When the selector lever is in the “R” range	Less than 1 Ω
	Other positions	1 MΩ or more

3) Replace the inhibitor switch if the inspection result is not within the standard value.

C: NOTE

For operation procedures of each component of the back-up light system, refer to the respective section.
- Rear combination light assembly: <Ref. to LI-45, Rear Combination Light Assembly.>
- Rear finisher light assembly: <Ref. to LI-54, Rear Finisher Light Assembly.>
- Back-up light bulb: <Ref. to LI-56, Back-up Light Bulb.>

9. Stop Light System

A: WIRING DIAGRAM

Refer to “Stop Light System” in the wiring diagram. <Ref. to WI-244, WIRING DIAGRAM, Stop Light System.>

B: INSPECTION

1. CHECK STOP LIGHT SWITCH

1) Disconnect the stop light switch connector.
2) Measure the resistance between stop light switch terminals.

Preparation tool: Circuit tester

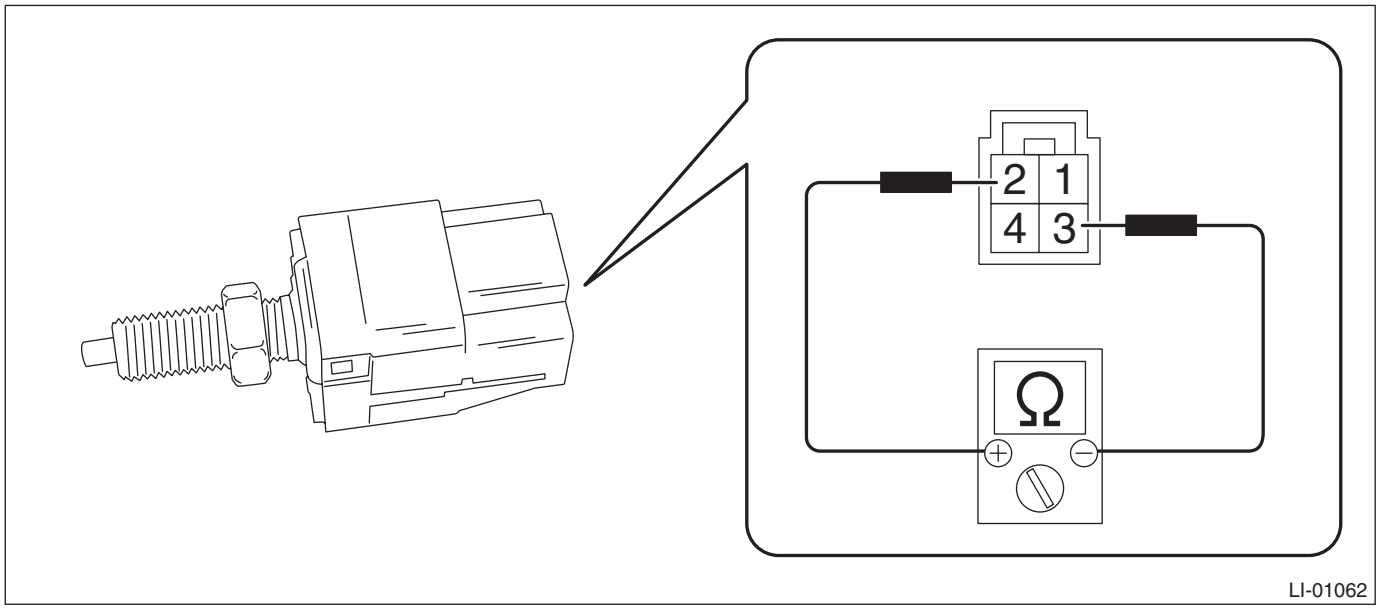

Terminal No.	Inspection conditions	Specification
2 — 3	When brake pedal is depressed	Less than 1 Ω
	When brake pedal is released	1 MΩ or more

3) Replace the stop light switch if the inspection result is not within the standard value.

C: NOTE

For operation procedures of each component of the stop light system, refer to the respective section.

- Rear combination light assembly: <Ref. to LI-45, Rear Combination Light Assembly.>
- Rear finisher light assembly: <Ref. to LI-54, Rear Finisher Light Assembly.>
- Tail light/stop light bulb: <Ref. to LI-47, Tail/Stop Light Bulb.>
- High-mounted stop light: <Ref. to LI-60, High-mounted Stop Light.>

10.Interior Light System

A: WIRING DIAGRAM

Refer to “Interior Light System” in the wiring diagram. <Ref. to WI-177, WIRING DIAGRAM, Interior Light System.>

B: INSPECTION

1. CHECK DOOR SWITCH.

1) Remove the door switch.
2) Measure the resistance between door switch terminals.

Preparation tool: Circuit tester

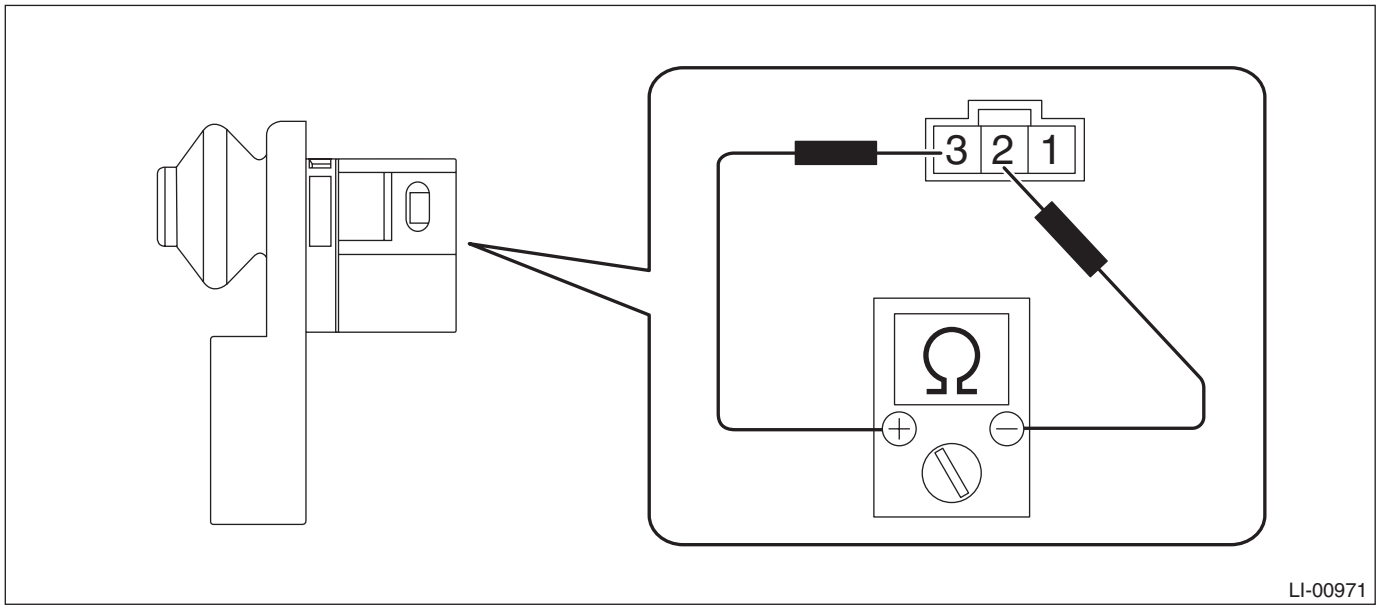

Terminal No.	Inspection conditions	Specification
2 — 3	When door is opened	Less than 1 Ω
	When door is closed	1 MΩ or more

3) Replace the door switch if the inspection result is not within the standard value.

2. CHECK REAR GATE LATCH SWITCH

1) Disconnect the rear gate latch switch connector.
2) Measure the resistance between rear gate latch switch terminals.

Preparation tool: Circuit tester

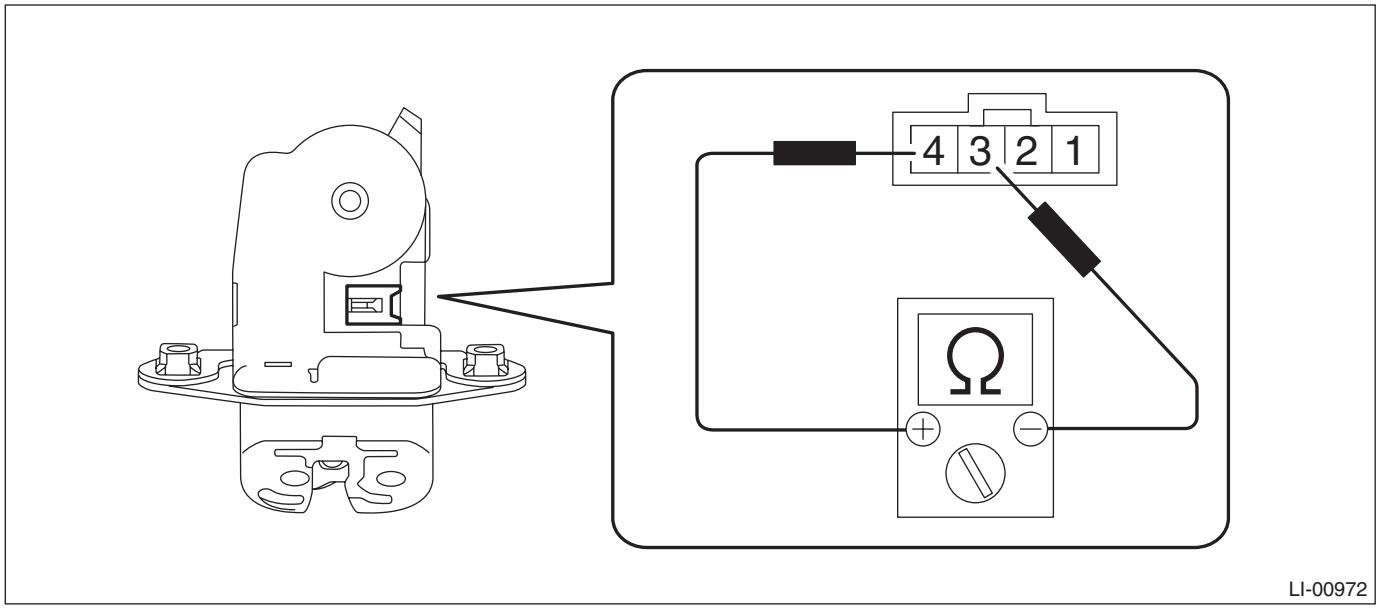

Terminal No.	Inspection conditions	Specification
3 — 4	When rear gate is opened	Less than 1 Ω
	When rear gate is closed	1 MΩ or more

3) If the inspection result is not within the standard value, replace the rear gate latch and actuator assembly.

3. CHECK TRUNK LID LATCH SWITCH

1) Disconnect the trunk lid latch switch connector.
2) Measure the resistance between trunk lid latch switch terminals.

Preparation tool: Circuit tester

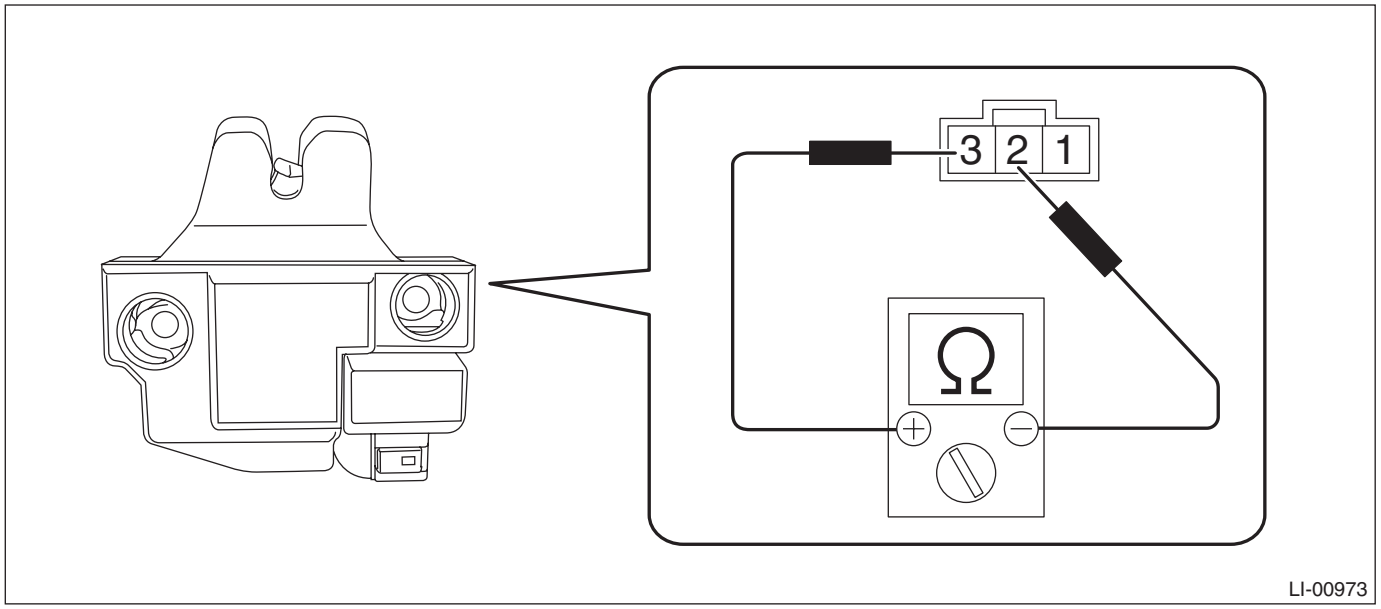

Terminal No.	Inspection conditions	Specification
2 — 3	When trunk lid is opened	Less than 1 Ω
	When trunk lid is closed	1 MΩ or more

3) If the inspection result is not within the standard value, replace the trunk lid latch and actuator assembly.

C: NOTE

For operation procedures of each component of the interior light system, refer to the respective section.
- Spot map light: <Ref. to LI-62, Spot Map Light.>
- Room light: <Ref. to LI-64, Room Light.>
- Luggage room light: <Ref. to LI-66, Luggage Room Light.>
- Trunk room light: <Ref. to LI-68, Trunk Room Light.>
- Glove box light: <Ref. to LI-69, Glove Box Light.>
- Door step light: <Ref. to LI-70, Door Step Light.>
- Door switch: <Ref. to LI-76, Door Switch.>

11.Combination Switch (Light)

A: REMOVAL

1) Position the front wheels straight ahead. (After moving a vehicle 5 m (16 ft) or more with front wheels positioned straight ahead, make sure that the vehicle moves straight ahead.)
2) Turn the ignition switch to OFF.
3) Disconnect the ground cable from battery and wait for at least 60 seconds before starting work.
4) Remove the driver's airbag module assembly.

CAUTION:
Before handling the airbag module, refer to "CAUTION" of "General Description" in "AIRBAG SYSTEM". <Ref. to AB-9, CAUTION, General Description.>

(1) Using a hexagon wrench etc. wrapped by protective tape, insert the snap pins and release the locks (3 locations).

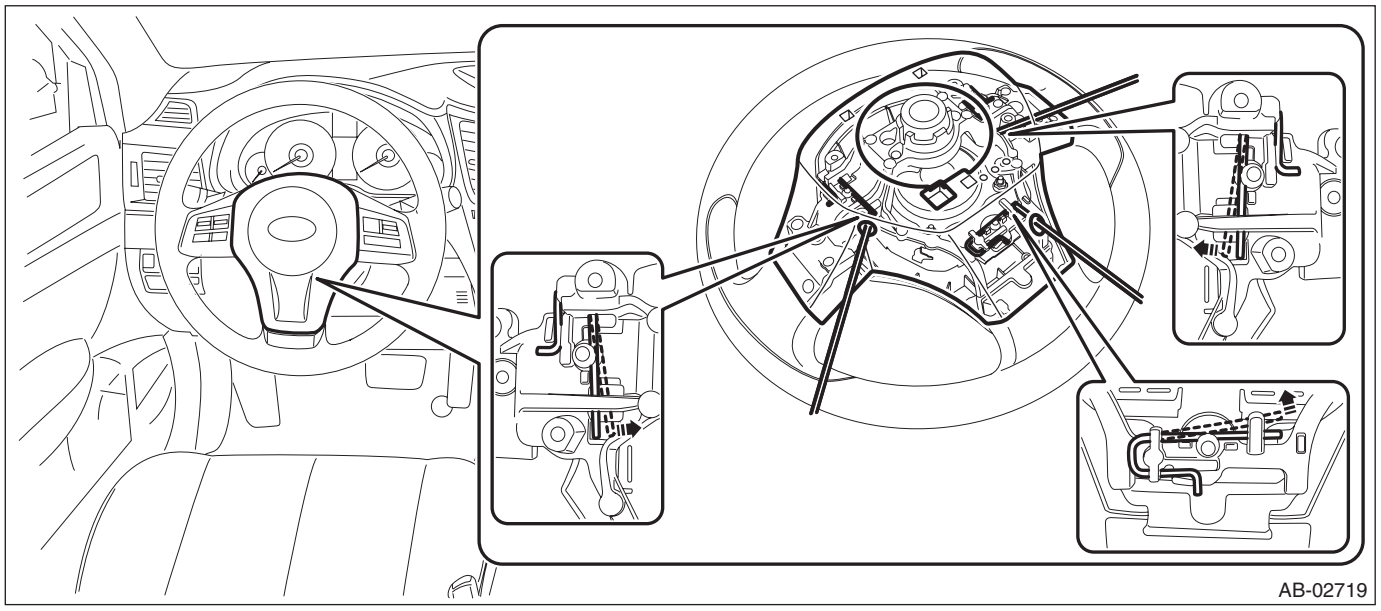

(2) Disconnect the horn harness and airbag connector and remove the airbag module assembly. <Ref. to AB-18, PROCEDURE, Airbag Connector.>

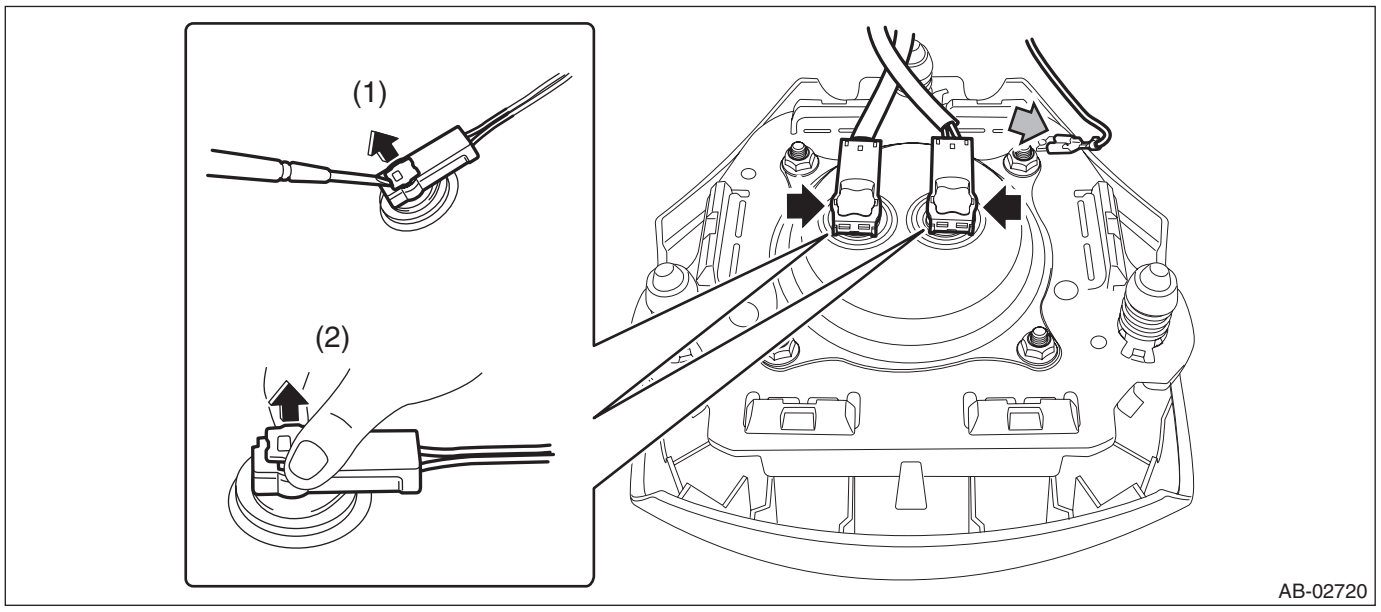

5) Remove the steering wheel.

CAUTION:
- **Always use the steering wheel puller for removal to avoid deforming the steering wheel.**
- **If the steering wheel has been removed, make sure that the roll connector is not turned from the original position.**

Preparation tool: Steering wheel puller

(1) Disconnect the connector and remove the nut.
(2) Put alignment marks and remove the steering wheel using a steering puller.

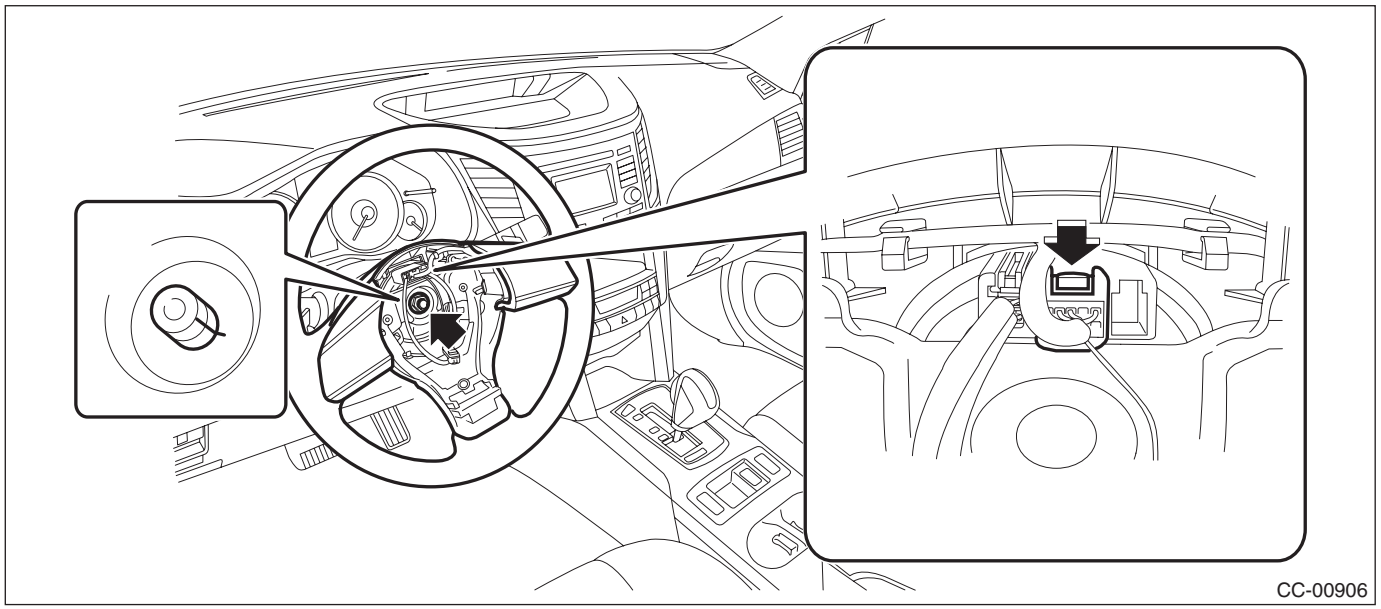

6) Remove the steering column cover.

(1) Lower the lever of the steering column.
(2) Release the claws and remove the screws, then detach the steering column lower cover.

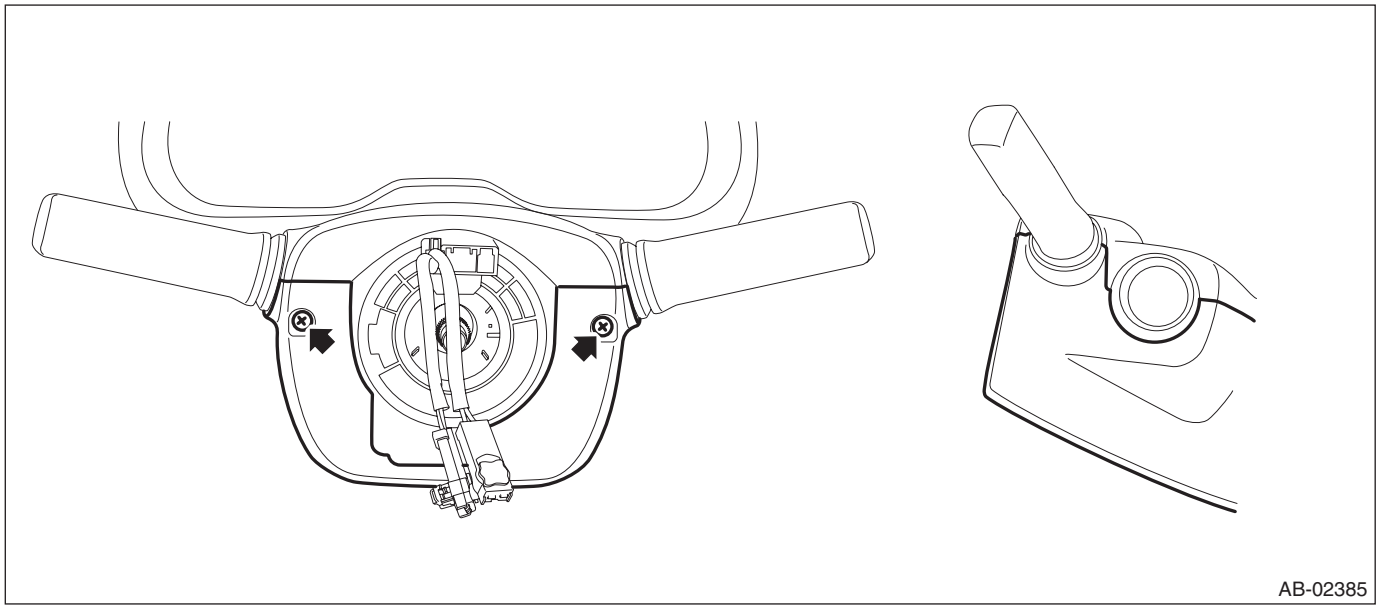

(3) Separate the steering column upper cover and steering upper cover, and remove the steering column upper cover.

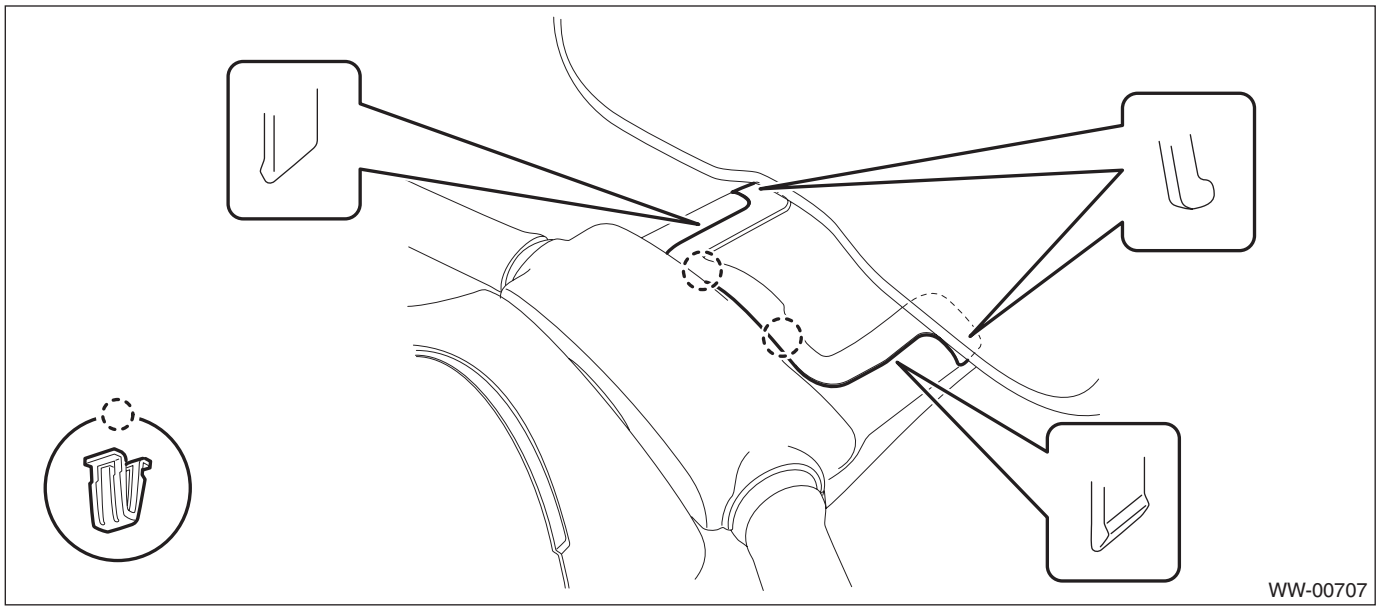

7) Remove the roll connector.

CAUTION:
Make sure that the roll connector is not turned from the original position.

(1) Disconnect the connector under the roll connector.
(2) Release the claws and remove the roll connector.

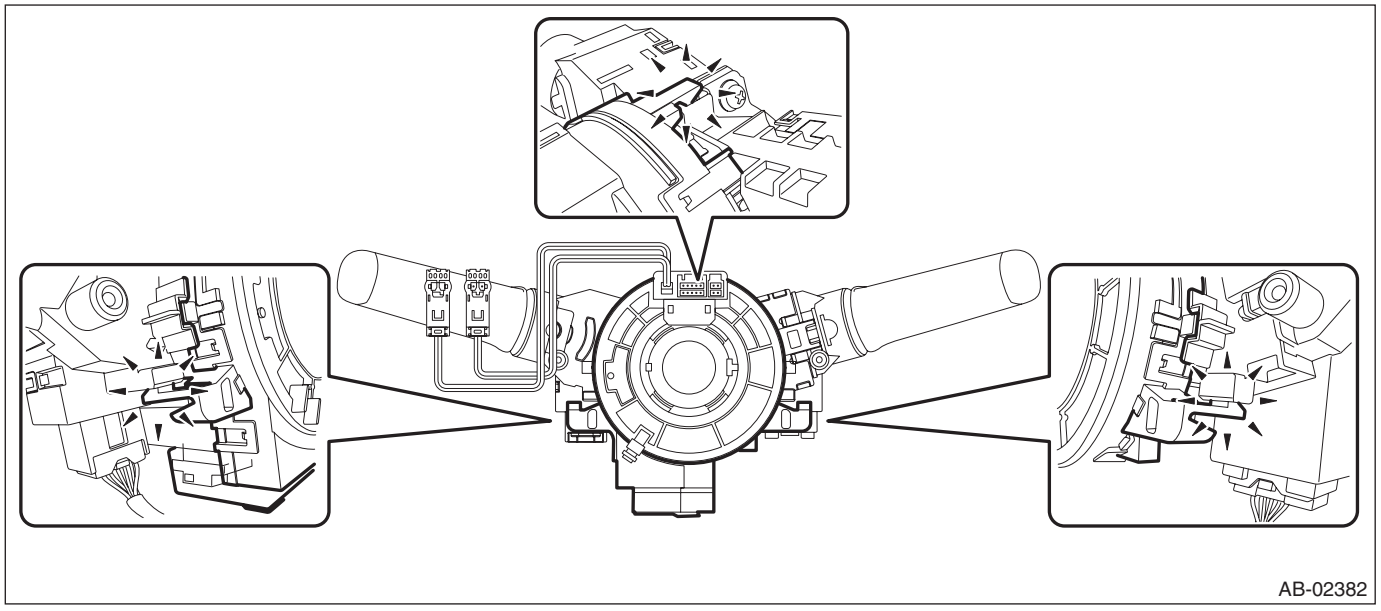

8) Remove the wiper switch assembly.
(1) Disconnect the connector from wiper switch.
(2) Release the claws, and pull out the wiper switch assembly.

CAUTION:
Do not press the claws with excessive force. They may be damaged.

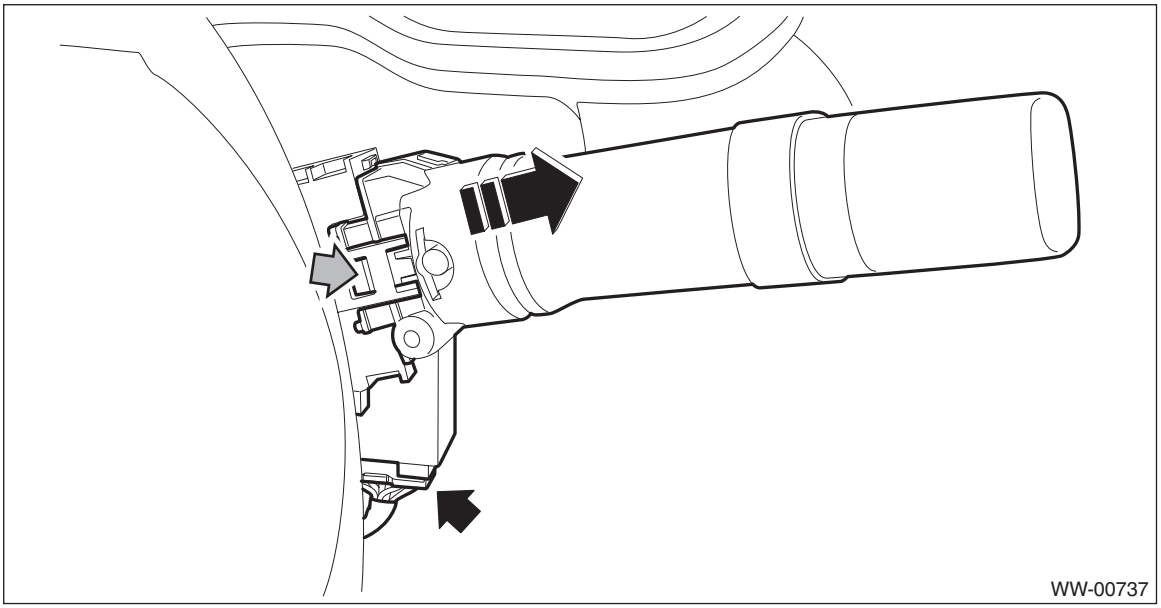

9) Remove the combination switch (light).
(1) Disconnect the connector of combination switch.
(2) Remove the screws and detach the combination switch (light).

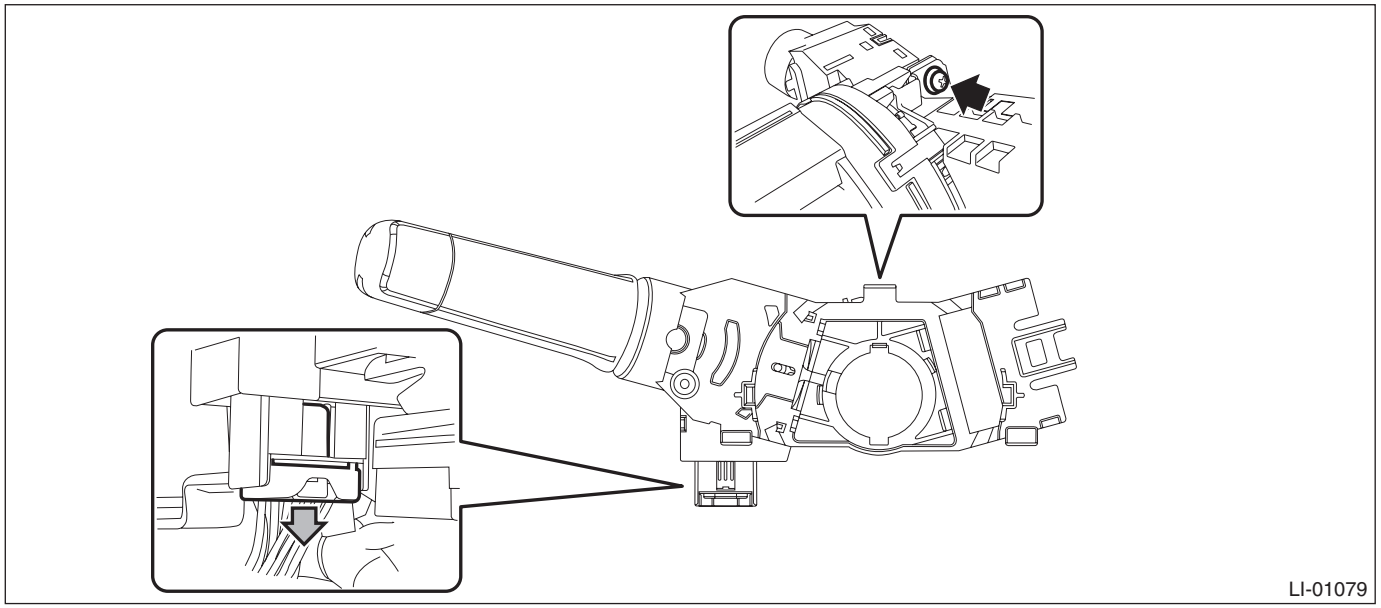

B: INSTALLATION

1) Install each part in the reverse order of removal.

CAUTION:
- **Before handling the airbag module, refer to "CAUTION" of "General Description" in "AIRBAG SYSTEM". <Ref. to AB-9, CAUTION, General Description.>**
- **Do not allow harness and connectors to interfere or get tangled up with other parts.**

2) Before installing steering wheel, be sure to adjust the direction of roll connector with steering. <Ref. to AB-101, ADJUSTMENT, Roll Connector.>

Tightening torque:
Combination switch (light): 3.5 N·m (0.36 kgf-m, 2.6 ft-lb)
Steering wheel: 39 N·m (3.98 kgf-m, 28.8 ft-lb)

Clearance:
Between column cover and steering wheel: 2 — 4 mm (0.08 — 0.16 in)

C: INSPECTION

1) Disconnect the combination switch (light) connector.
2) Measure the resistance between combination switch (light) connector terminals.

Preparation tool: Circuit tester

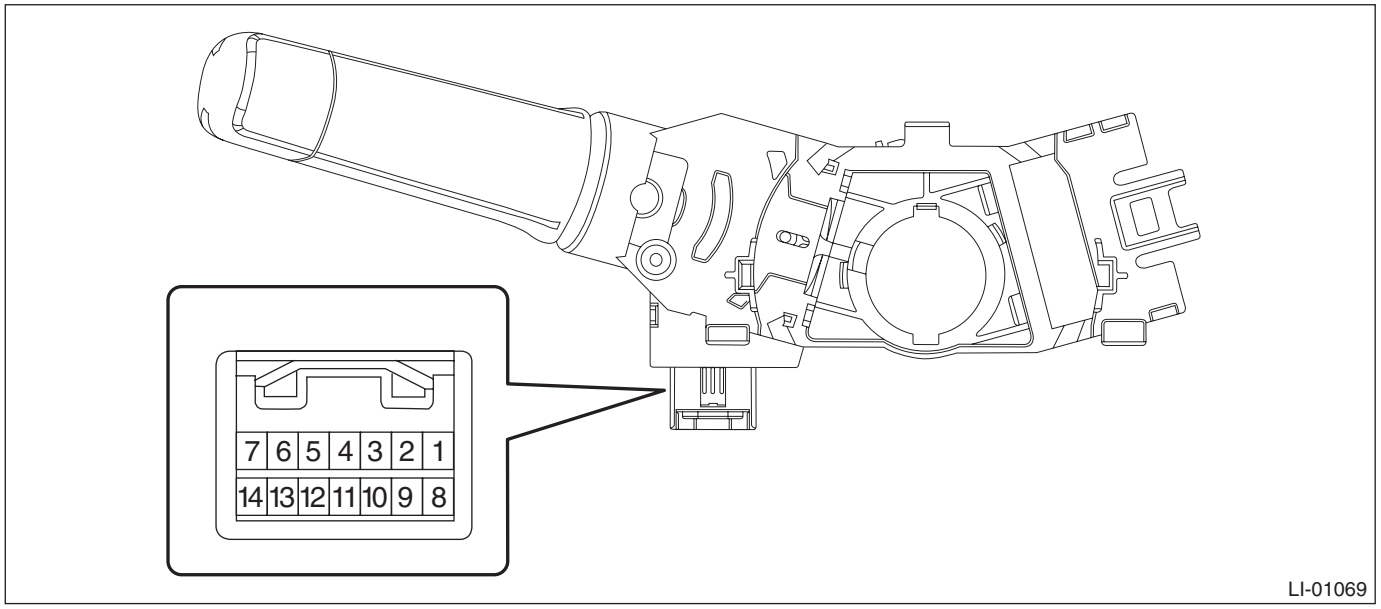

3) Replace the combination switch (light) if the inspection result is not within the standard value.

1. LIGHTING SWITCH

Terminal No.	Inspection Conditions	Standard
—	Switch OFF	1 MΩ or more
5 — 7	Switch 1 (TAIL)	Less than 1 Ω
6, 5 — 7	Switch 2 (HEAD)	Less than 1 Ω
14 — 7	Switch AUTO	Less than 1 Ω

2. DIMMER & PASSING SWITCH

Terminal No.	Inspection Conditions	Standard
4, 3 — 7	Switch PASS	Less than 1 Ω
4 — 7	Switch UP	Less than 1 Ω

3. TURN SIGNAL SWITCH

Terminal No.	Inspection Conditions	Specification
1 — 7	Switch TURN (RH)	Less than 1 Ω
2 — 7	Switch TURN (LH)	Less than 1 Ω

4. FRONT FOG LIGHT SWITCH

Terminal No.	Inspection Conditions	Specification
12 — 11	Switch OFF	1 MΩ or more
	Switch ON	Less than 1 Ω

12.Light Control Sensor

A: REMOVAL

NOTE:
The light control sensor is integrated with the sunload sensor.
1) Disconnect the ground cable from battery.
2) Remove the light control sensor.

CAUTION:
Be careful not to damage the sensors and interior trims when removing.

(1) Release the claws and clips, then detach the side speaker cover (RH).

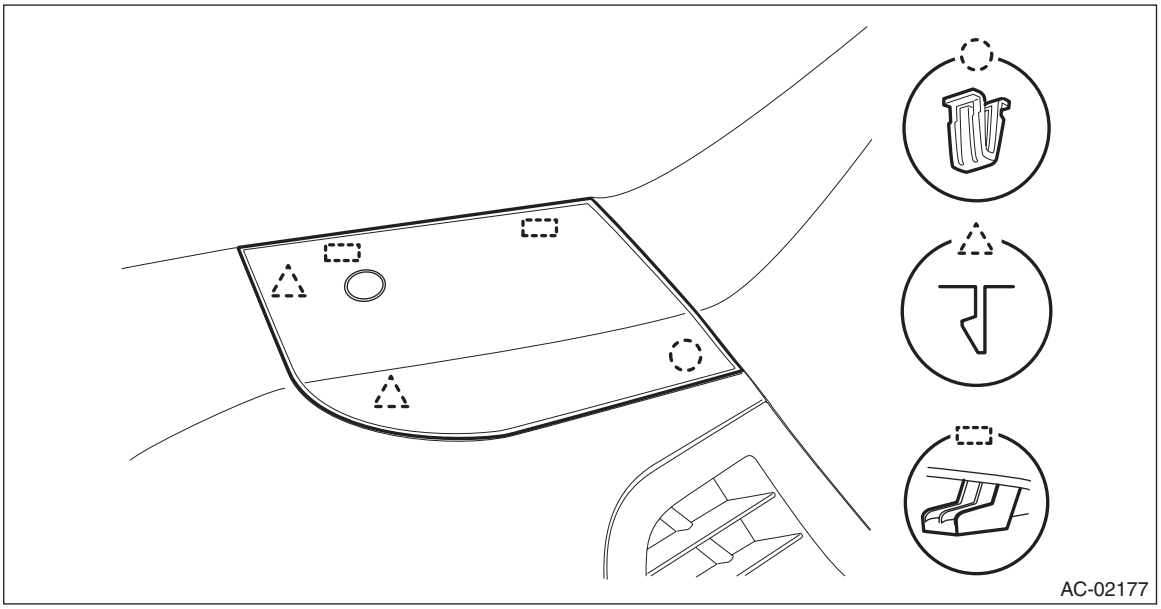

(2) Push out the light control sensor by pressing the left and right claws.
(3) Disconnect the connector, and remove the light control sensor.

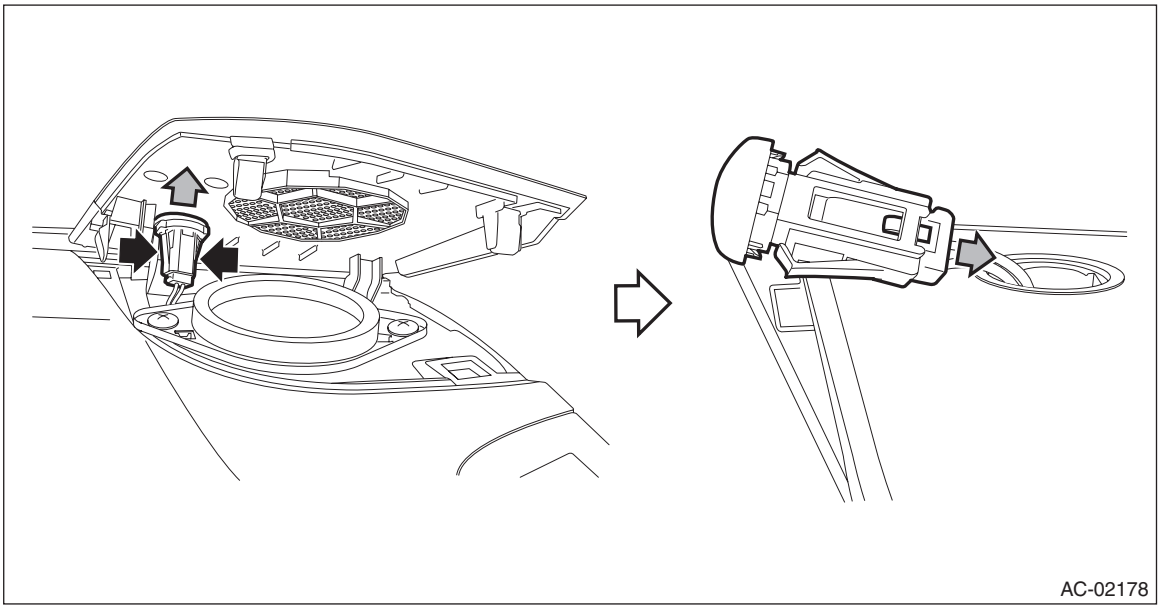

B: INSTALLATION

Install each part in the reverse order of removal.

C: INSPECTION

For the inspection of the light control sensor, refer to “AUTO HEADLIGHT SYSTEM CHECK” of “Headlight System”. <Ref. to LI-6, AUTO HEADLIGHT SYSTEM CHECK, INSPECTION, Headlight System.>

13.Headlight Assembly

A: REMOVAL

CAUTION:
Do not perform work with wet hands.

1) Disconnect the ground cable from battery.
2) Remove the clips and remove the air intake duct. (When removing the headlight RH)

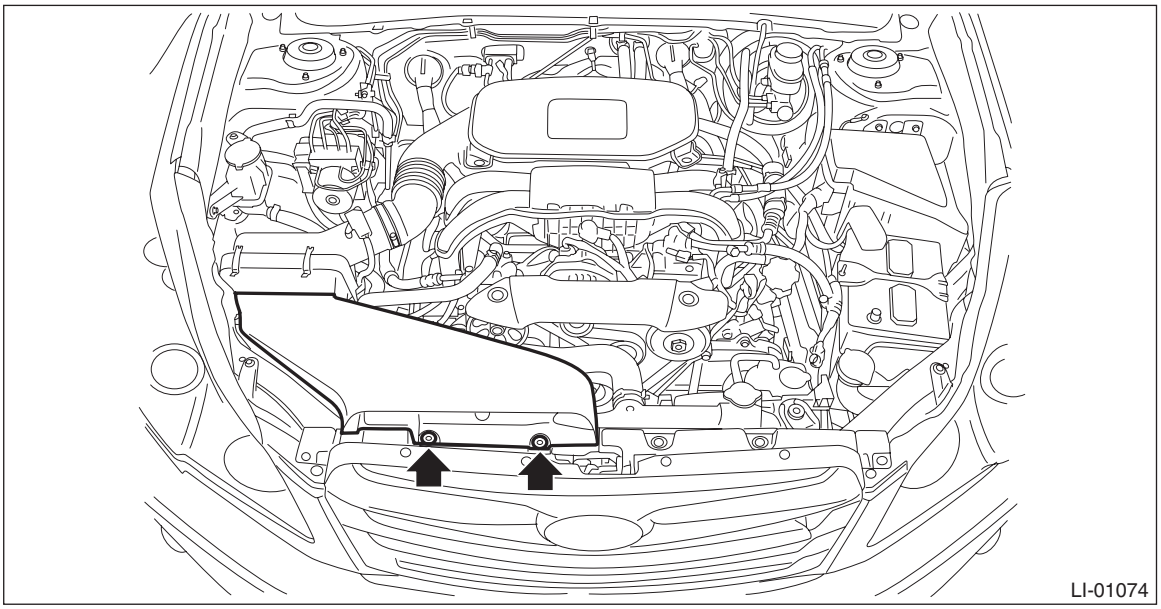

3) Remove the front bumper face assembly. <Ref. to EI-39, REMOVAL, Front Bumper.>
4) Remove the fender cover assembly UPR.
   (1) Remove the clip.
   (2) Release the claws of the fender cover assembly UPR by pulling it forward and remove the fender cover.

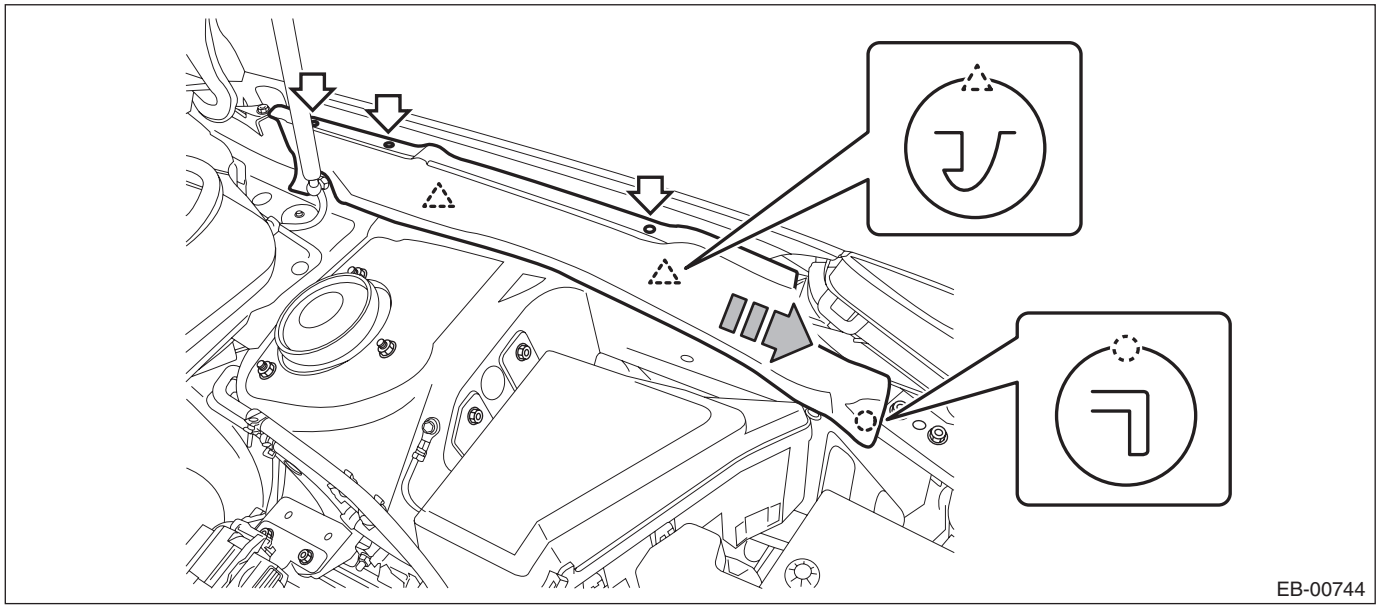

5) Remove the headlight assembly.
(1) Remove the bolts and clips, and pull out the headlight assembly to the front of the vehicle.

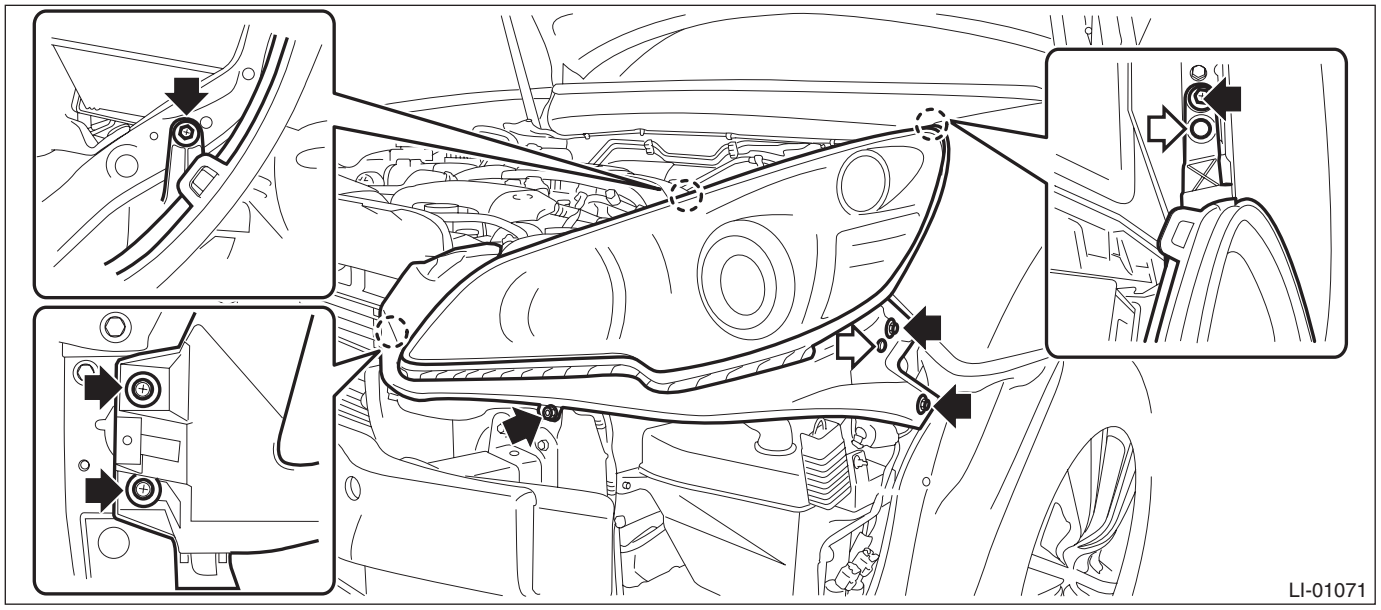

(2) Disconnect the connector and remove the headlight assembly.
- Headlight connector RH

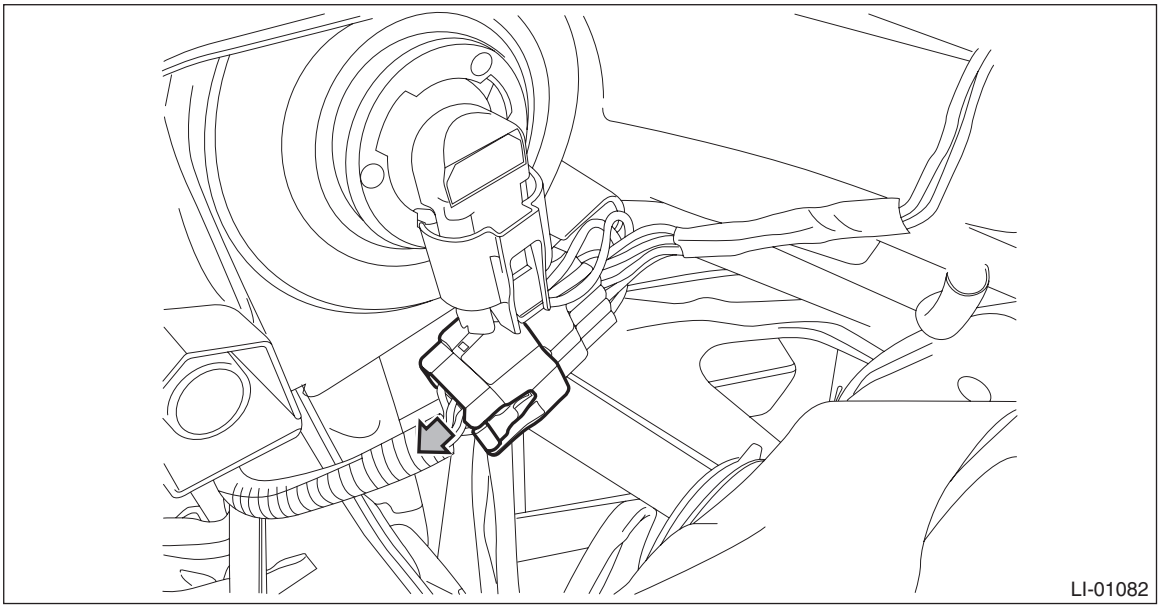

- Headlight connector LH

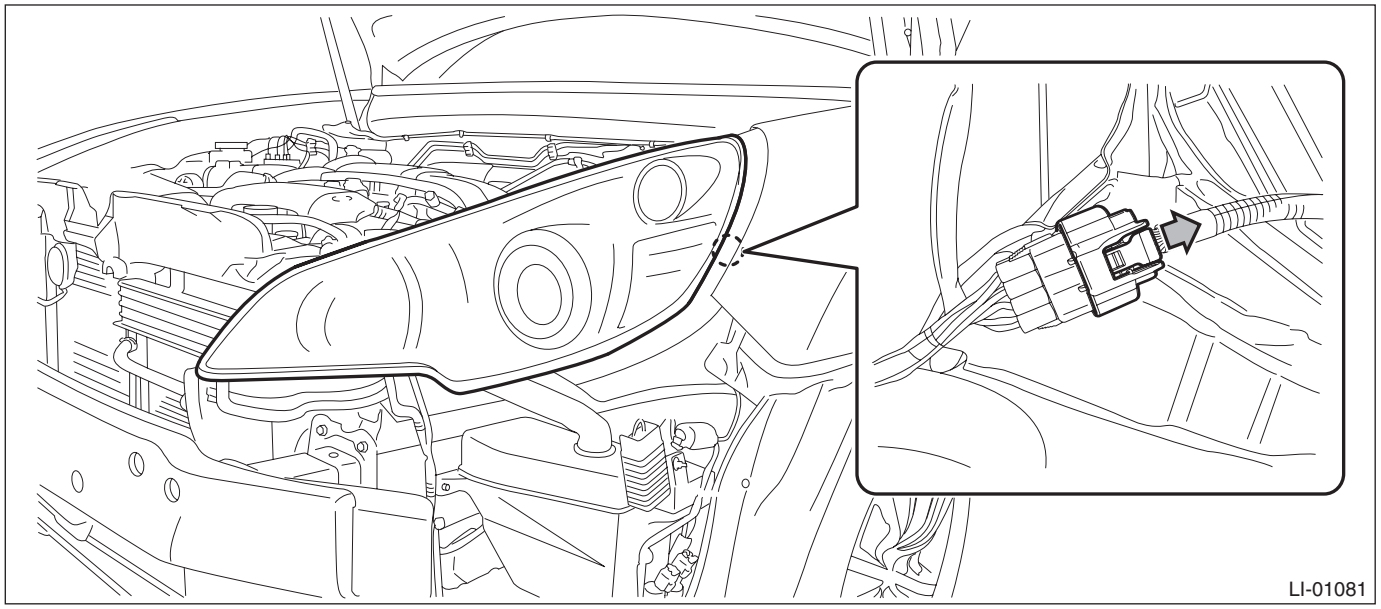

B: INSTALLATION

1) Install each part in the reverse order of removal.

Tightening torque:
Headlight assembly: 7.5 N·m (0.76 kgf-m, 5.5 ft-lb)

2) Adjust the headlight beam and fog light beam.
- Adjust the headlight beam. <Ref. to LI-27, HEADLIGHT BEAM ADJUSTMENT, ADJUSTMENT, Headlight Assembly.>
- Adjust the fog light beam. (Model with fog light) <Ref. to LI-41, FOG LIGHT AIMING, ADJUSTMENT, Front Fog Light Assembly.>

C: ADJUSTMENT

1. HEADLIGHT BEAM ADJUSTMENT

CAUTION:
- **Turn off the light before adjusting the headlight beam level. If it is necessary to inspect the beam level, do not keep the light on for two minutes or more.**
- **When blocking the light emitted from the headlight, use a light shield or equivalent.**

Do not apply the tape on the lens or place the cloth over it. It may raise the temperature in the light and cause deformation/bubble formations of the plastic lens.

1) Before checking the headlight beam level, be sure of the following:
- The area around the headlight has not sustained any scratches, damage or other type of deformation.
- Vehicle is parked on a level surface.
- The inflation pressure of tires is correct.
- Vehicle's fuel tank is fully filled.

2) Bounce the vehicle several times to normalize the suspension.
3) Make certain that someone is seated in the driver's seat.

4) Measure the distance between the low beam bulb centers and the height of the bulb center.

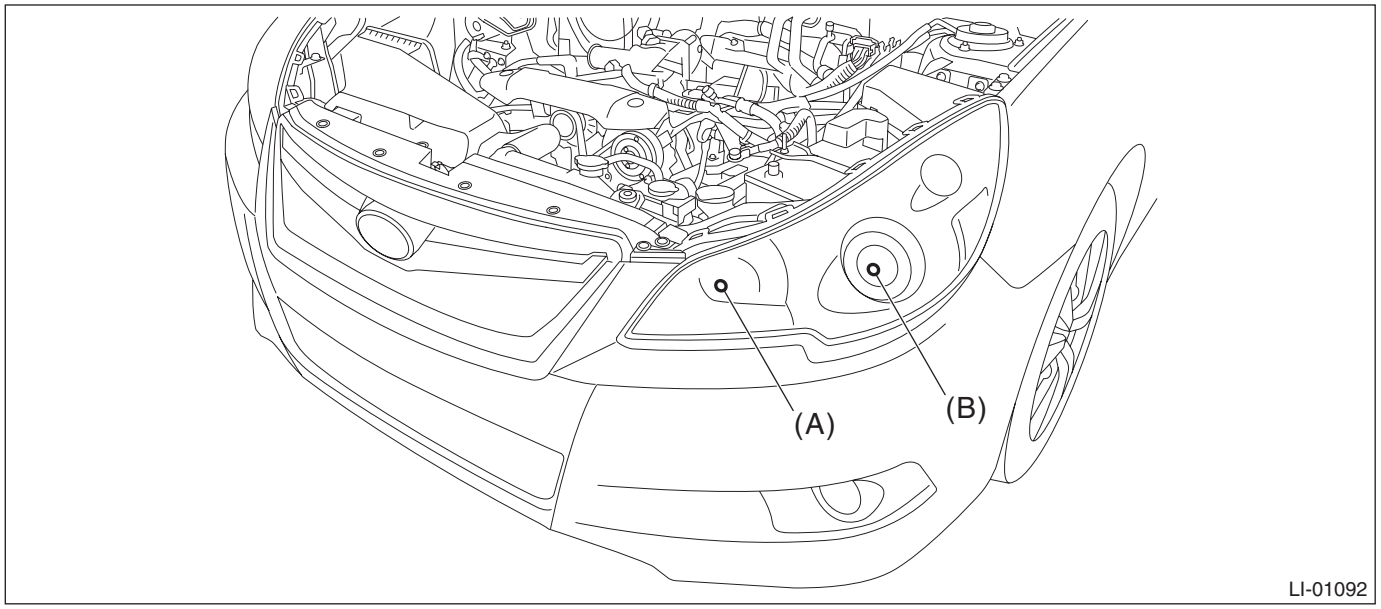

(A) High beam (B) Low beam

5) Place the vehicle with the front end facing to the measurement panel.

NOTE:
Adjustment type is recognized by marking of the right and left headlight. Confirm that which is displayed VOL or VOR, and then perform the operation according to the actual adjustment type.

- RH side headlight: Marking is placed at (A) or (B).
- LH side headlight: Marking is placed at (C).

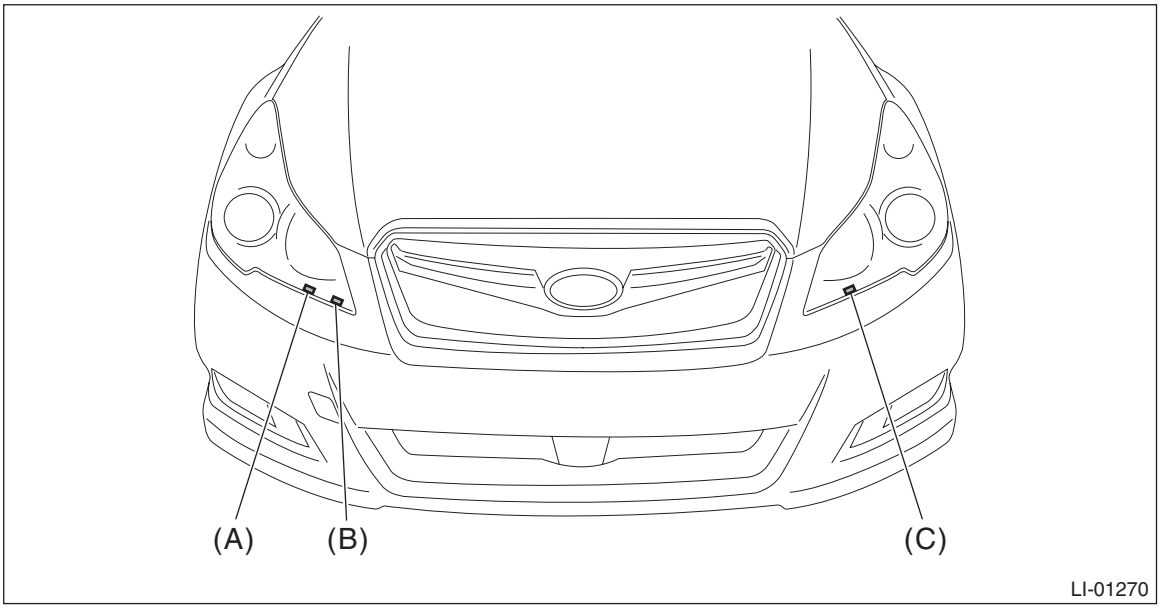

- VOL type

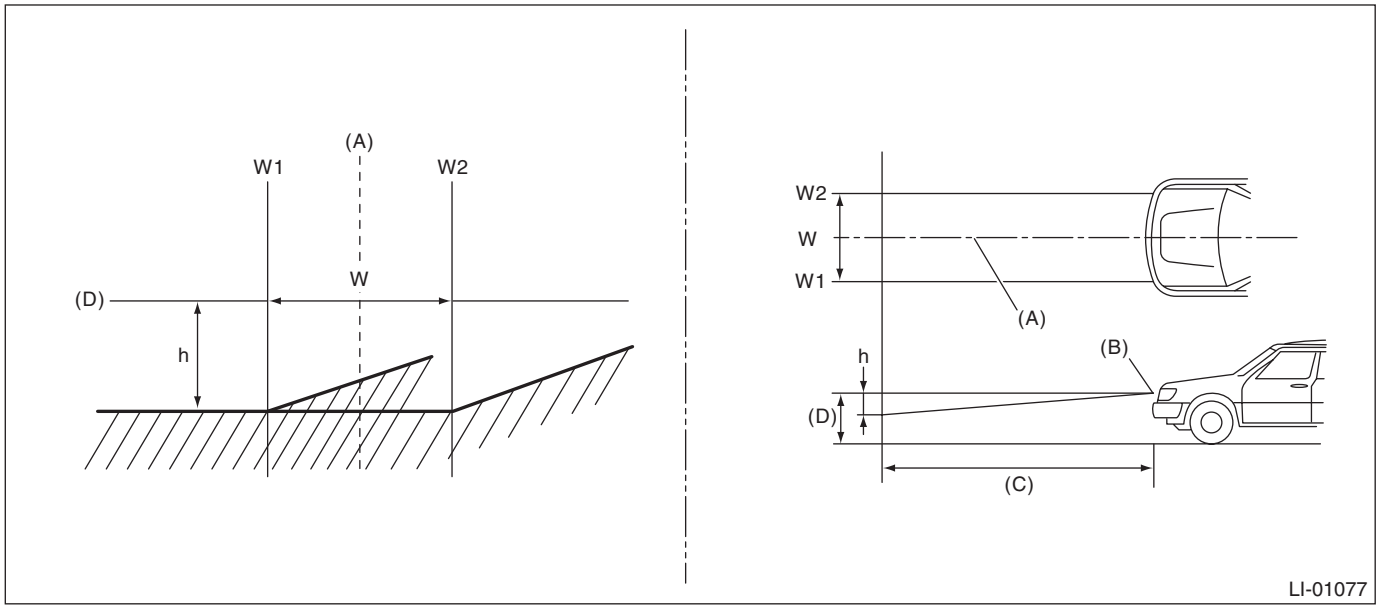

(A) Vehicle center
(B) Bulb center marking
(C) 3 m (10 ft)
(D) Height of headlight center

W mm (in)	h mm (in) at 3 m (10 ft)
1,404 (55.28)	21 (0.83)

- VOR type

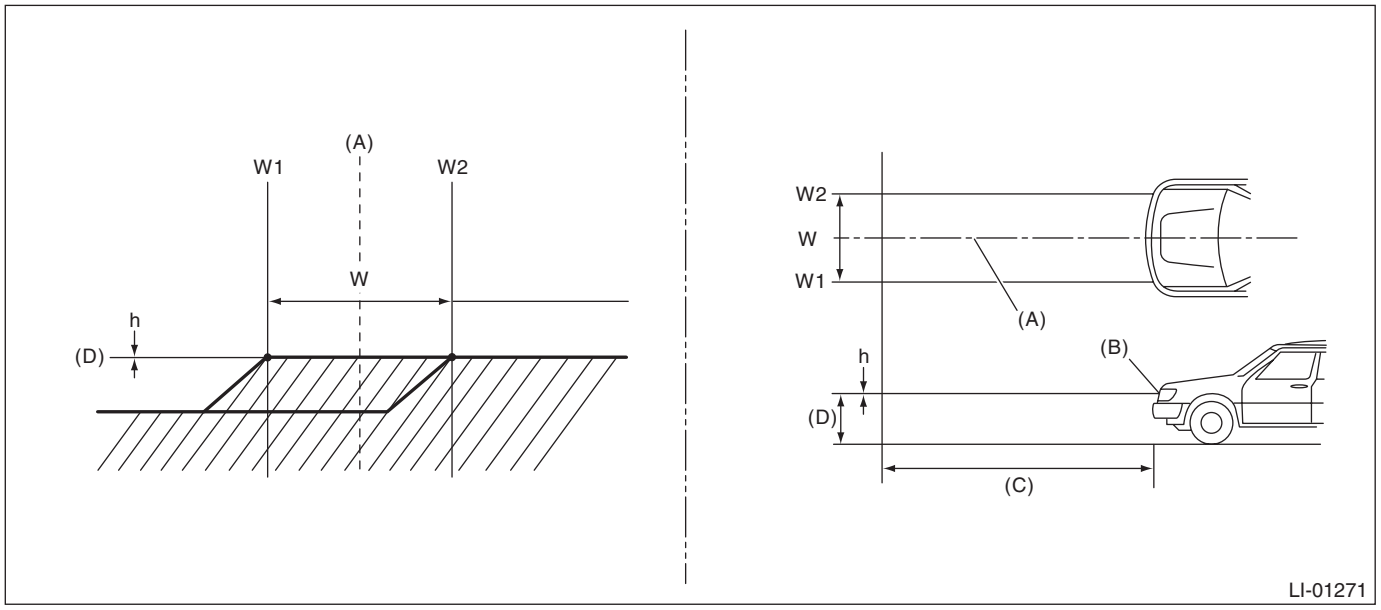

(A) Vehicle center
(B) Bulb center marking
(C) 3 m (10 ft)
(D) Height of headlight center

W mm (in)	h mm (in) at 3 m (10 ft)
1,404 (55.28)	Height of headlight center

6) Adjust the headlight low beam by turning the aiming screw.

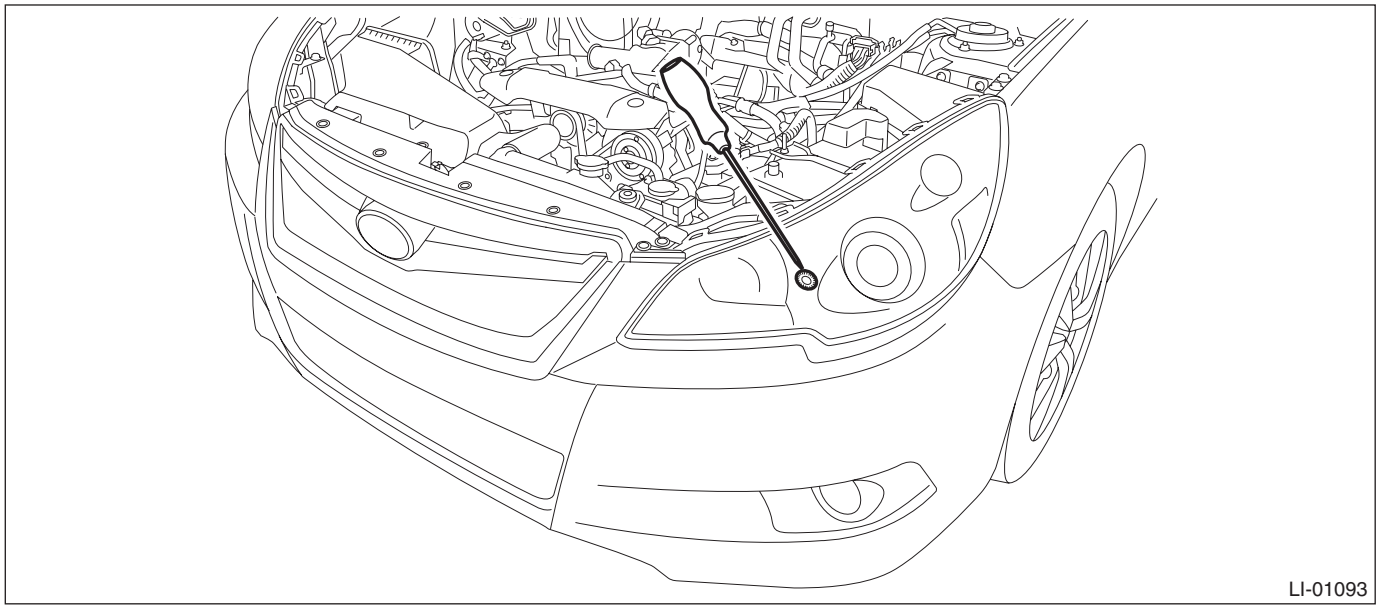

NOTE:
When using a tester, follow the instructions of the tester manual.

14.Headlight Bulb

A: REMOVAL

1. HIGH BEAM

CAUTION:
• Because the halogen bulb operates at a high temperature, dirt and oil on the bulb surface reduces the bulb's service life. Hold the flange portion when replacing the bulb. Never touch the glass portion.
• Do not leave the headlight without a bulb for a long time. Dust, moisture, etc. entering the headlight may affect its performance.

1) Disconnect the ground cable from battery.
2) Remove the clips and remove the air intake duct. (When removing the headlight high beam bulb RH)

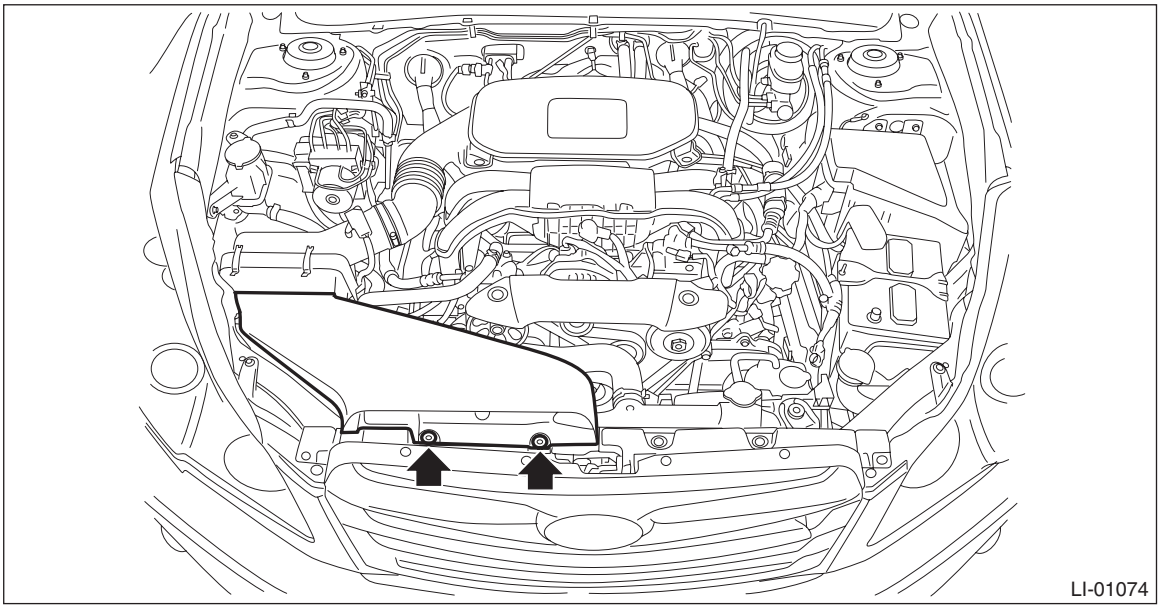

3) Disconnect the connector and remove the headlight high beam bulb.

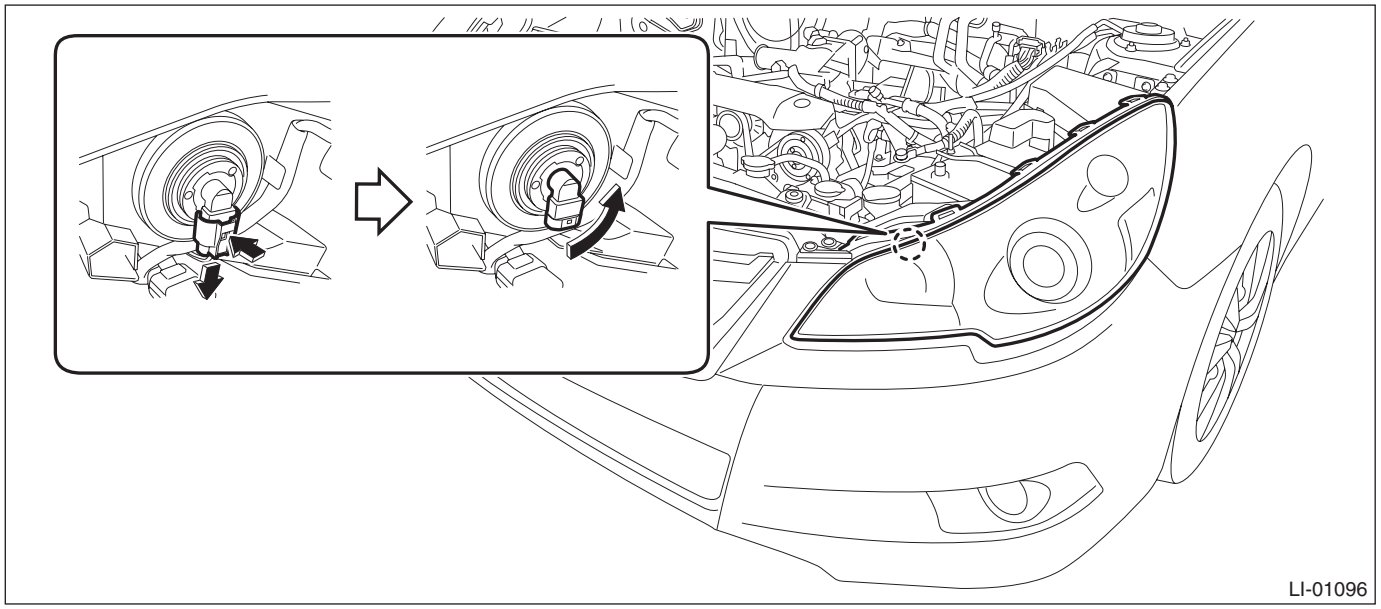

2. LOW BEAM

CAUTION:
• Because the halogen bulb operates at a high temperature, dirt and oil on the bulb surface reduces the bulb's service life. Hold the flange portion when replacing the bulb. Never touch the glass portion.
• Do not leave the headlight without a bulb and back cover for a long time. Dust, moisture, etc. entering the headlight may affect its performance.
1) Disconnect the ground cable from battery.
2) Remove the clips and remove the air intake duct. (When removing the headlight low beam bulb RH)

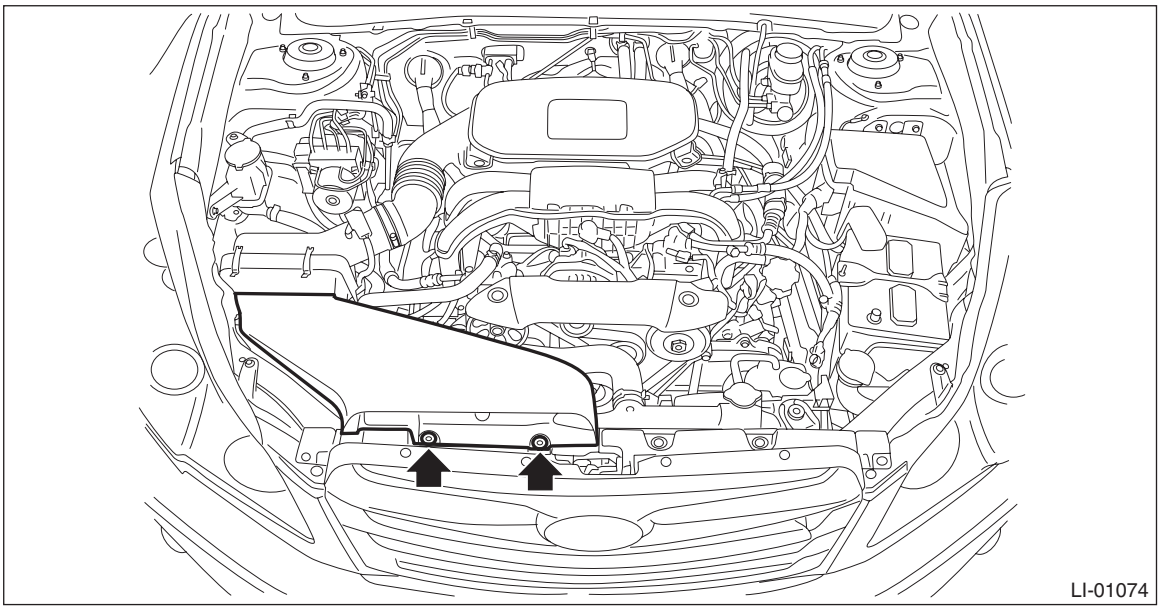

3) Turn the steering wheel in the opposite direction from the parts to be removed. Then remove the clips and turn over the mud guard.

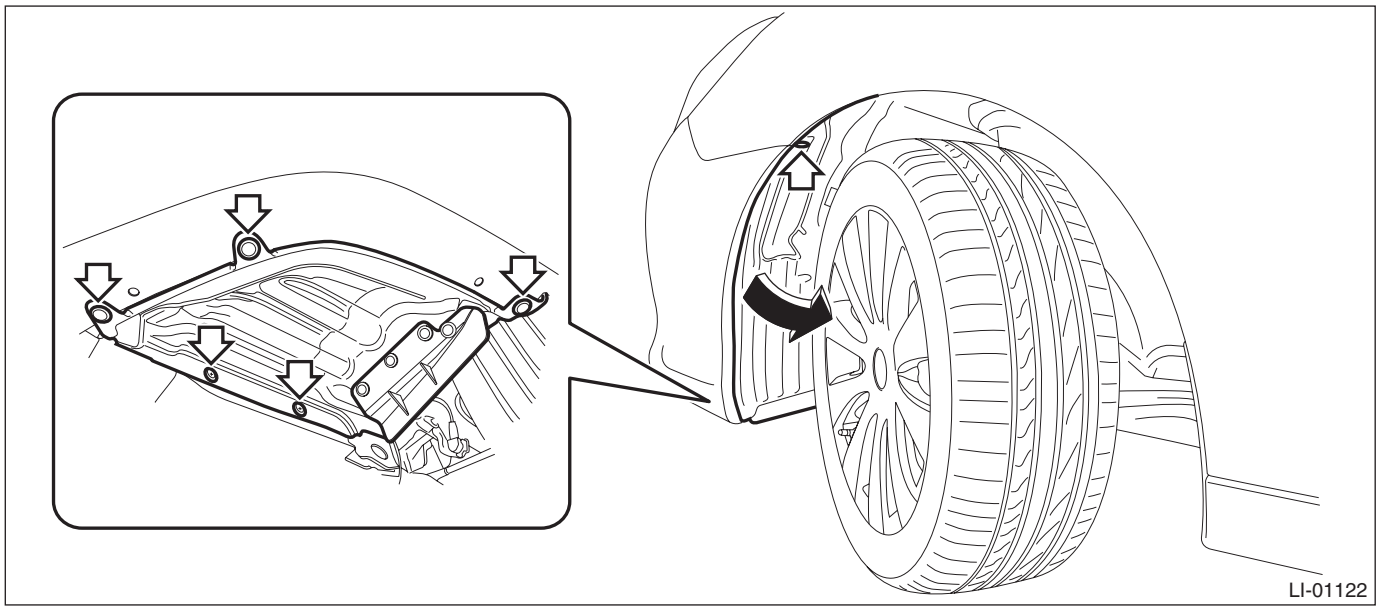

4) Remove the headlight low beam bulb.
(1) Remove the back cover.

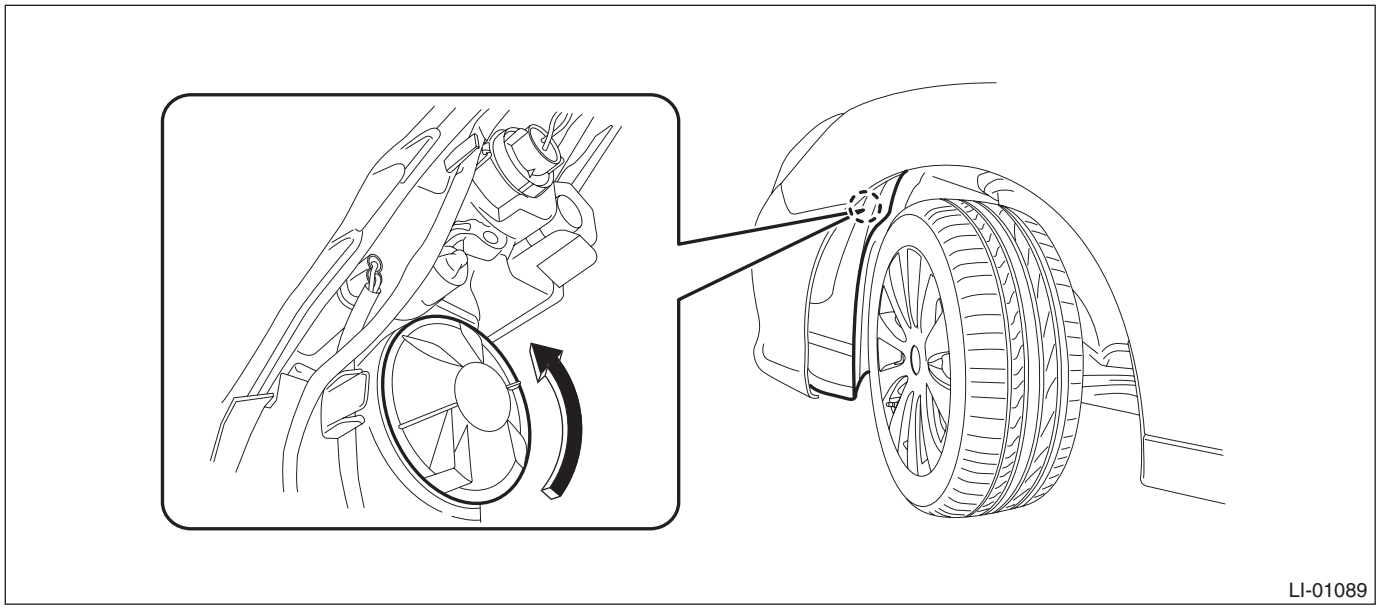
LI-01089

(2) Unlock the bulb socket and bulb spring, and remove the headlight low beam bulb.

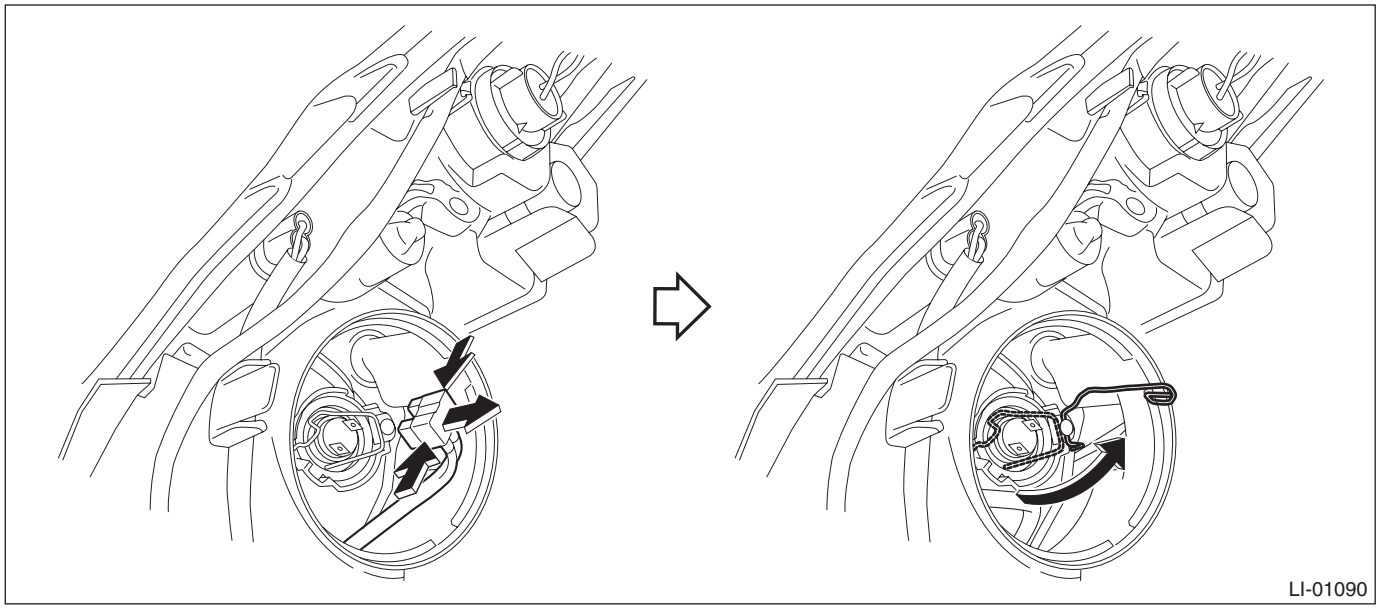
LI-01090

B: INSTALLATION

NOTE:
When installing the back cover, turn it to the position shown in the figure to lock while pressing the entire periphery of the cover.

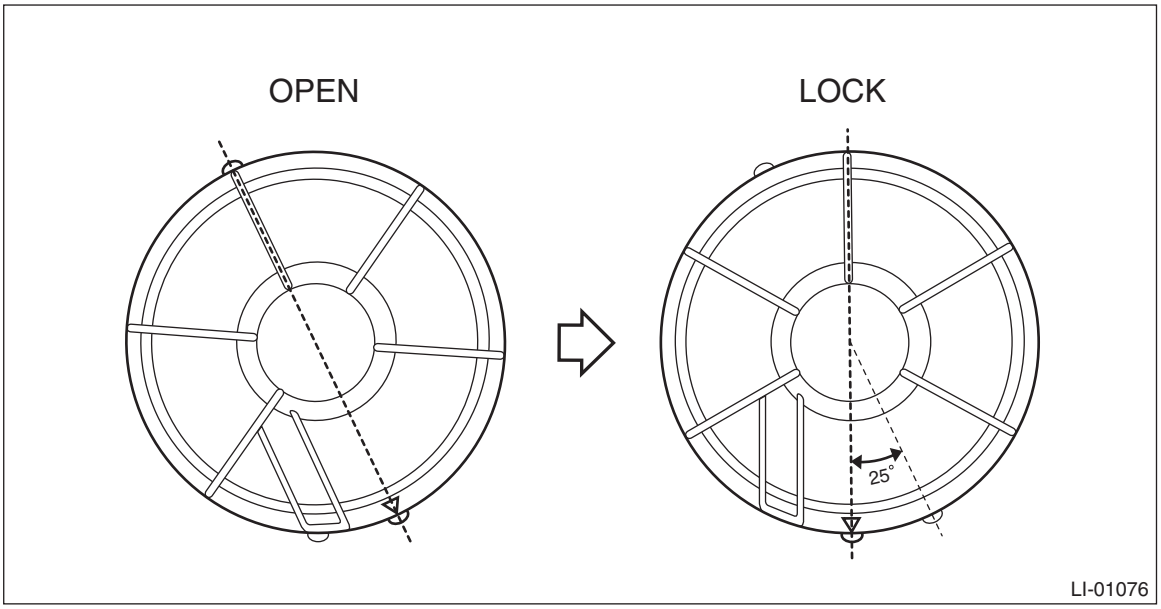

Install each part in the reverse order of removal.

C: INSPECTION

CAUTION:
- **Do not perform work with wet hands.**
- **Because the halogen bulb operates at a high temperature, dirt and oil on the bulb surface reduces the bulb's service life. Hold the flange portion when replacing the bulb. Never touch the glass portion.**
- **Do not leave the headlight without a bulb and back cover for a long time. Dust, moisture, etc. entering the headlight may affect its performance.**

1) Visually check the bulb for blow out.
2) Check the bulb specification. <Ref. to LI-2, SPECIFICATION, General Description.>
3) Replace the bulb if it is found defective.

15.Front Turn Signal Light Bulb

A: REMOVAL

1) Disconnect the ground cable from battery.
2) Remove the clips and remove the air intake duct. (When removing the front turn signal light bulb RH)

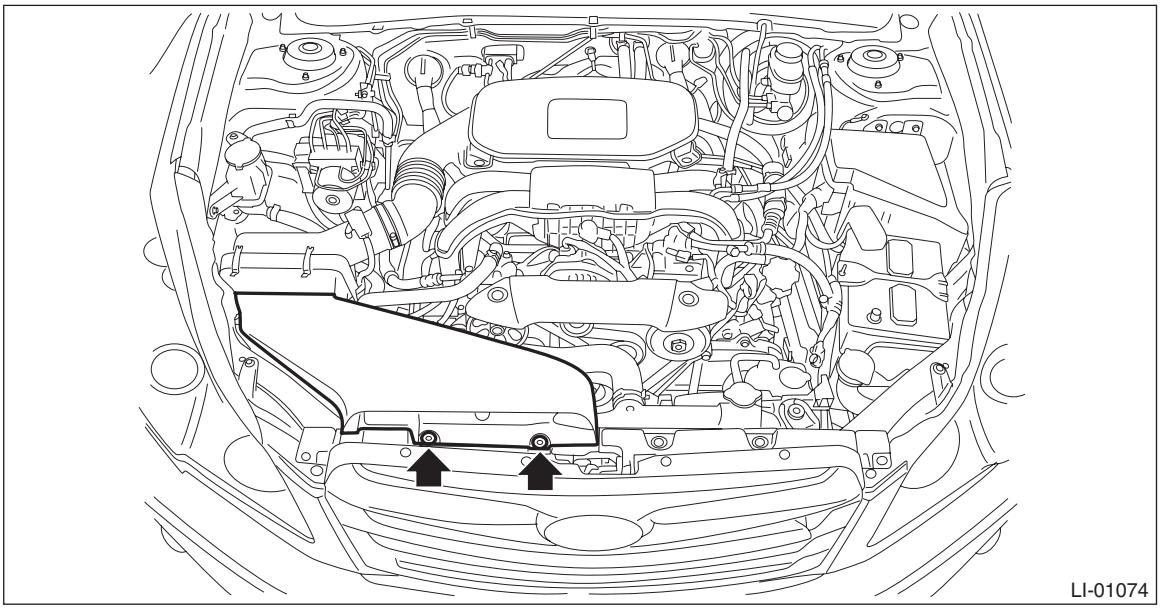

3) Remove the fender cover assembly UPR.
   (1) Remove the clip.
   (2) Release the claws of the fender cover assembly UPR by pulling it forward and remove the fender cover.

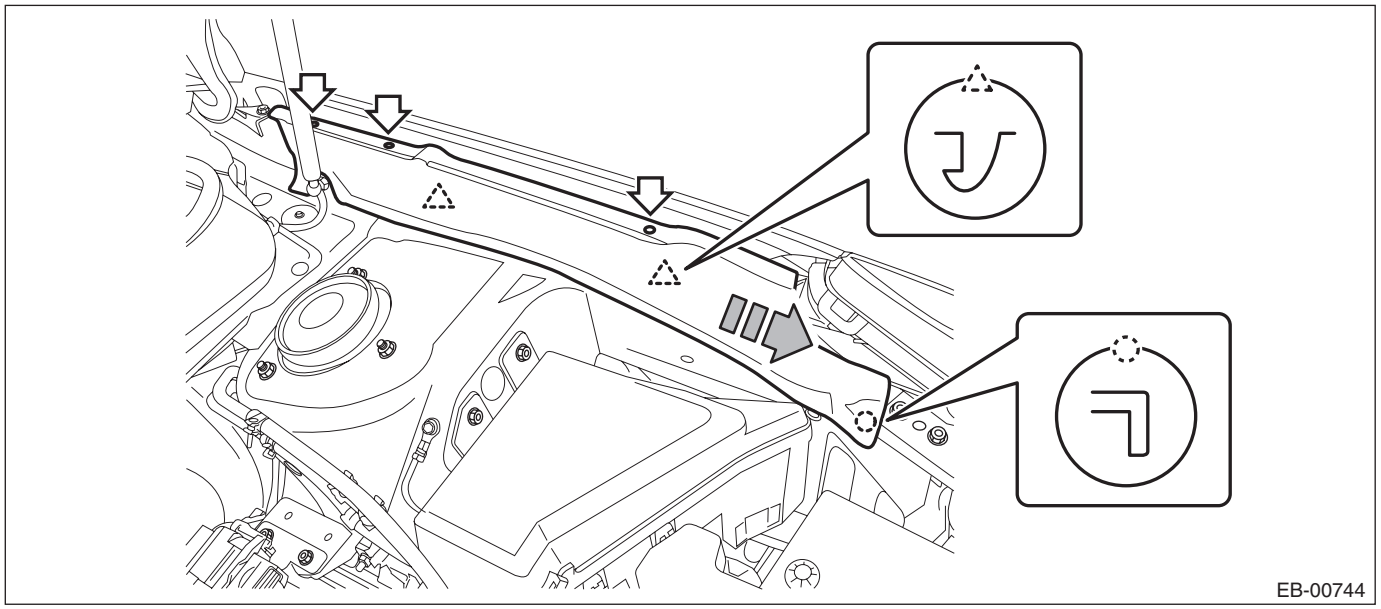

4) Remove the bulb socket and turn signal light bulb.

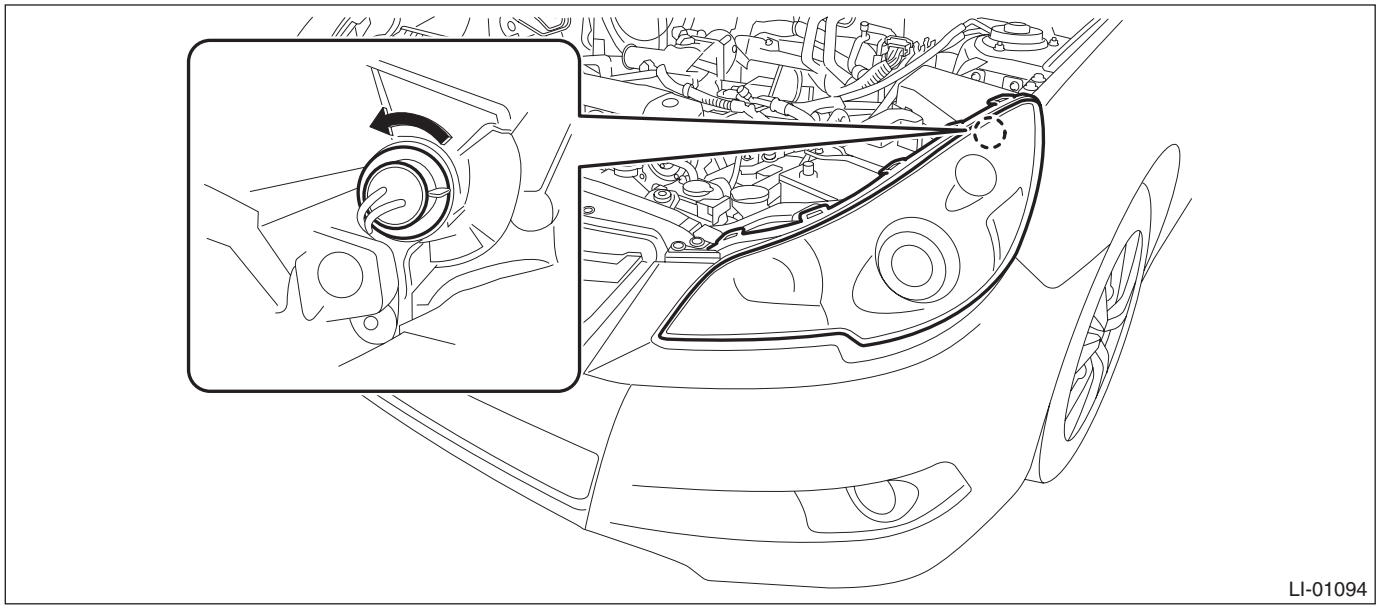

B: INSTALLATION

Install each part in the reverse order of removal.

C: INSPECTION

1) Visually check the bulb for blow out.
2) Check the bulb specification. <Ref. to LI-2, SPECIFICATION, General Description.>
3) Replace the bulb if it is found defective.

16.Clearance/Parking Light Bulb

A: REMOVAL

1) Disconnect the ground cable from battery.
2) Remove the clips and remove the air intake duct. (When removing the parking light bulb RH)

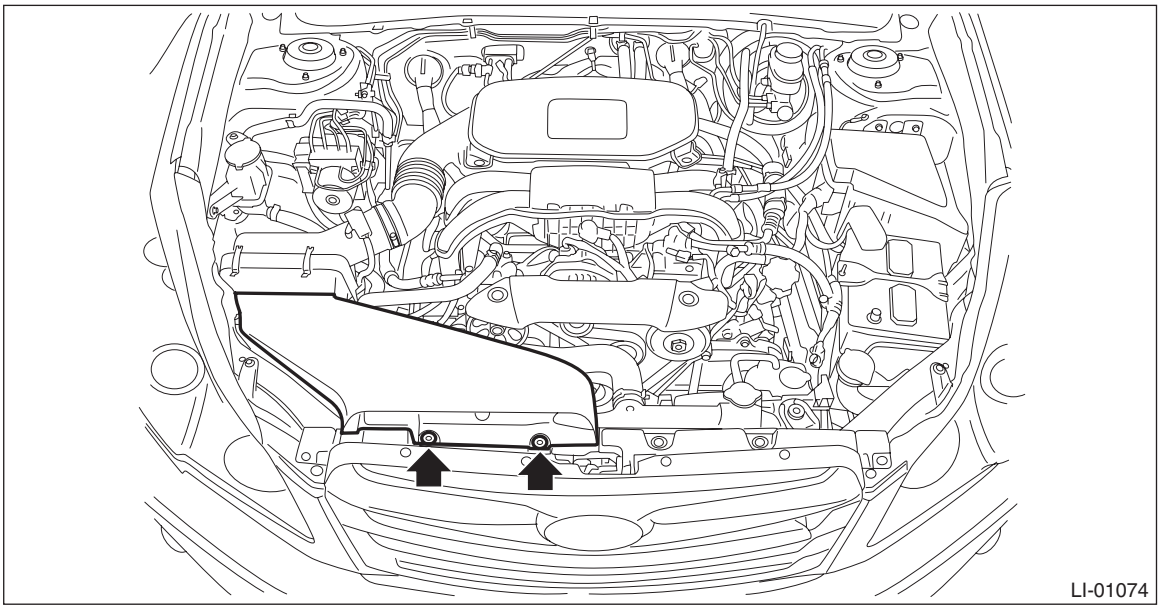

3) Remove the bulb socket and parking light bulb.

NOTE:
Move the battery rearward as required. (When removing the parking light bulb LH)

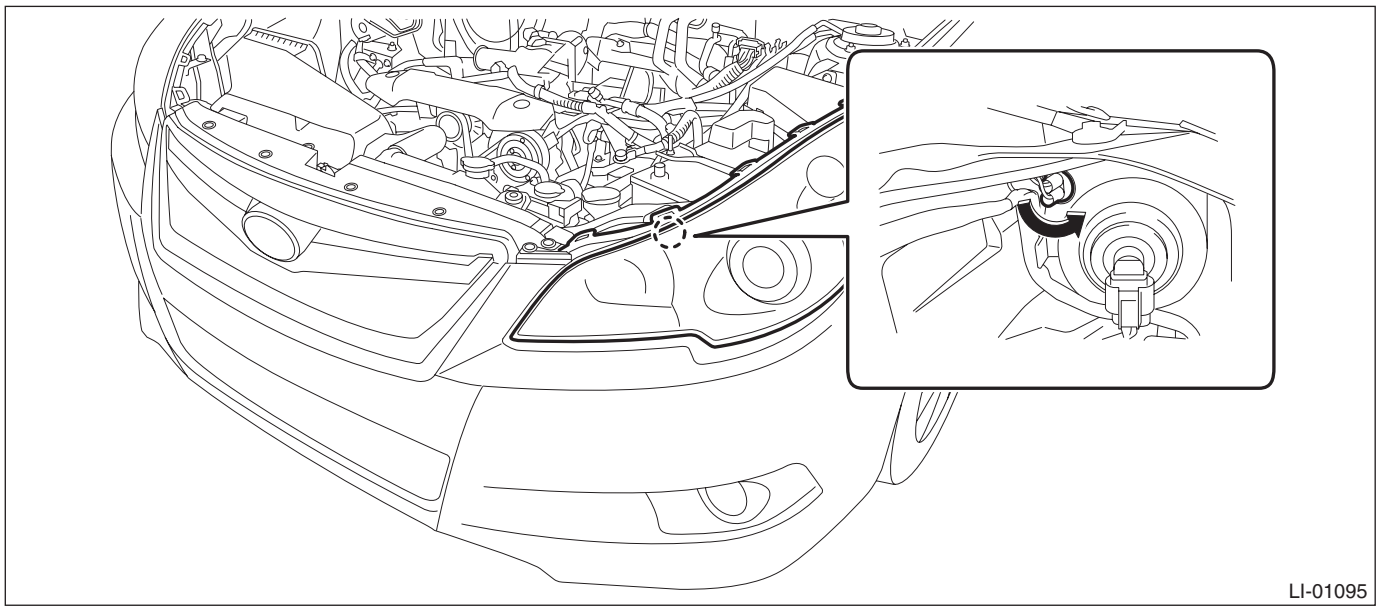

B: INSTALLATION

Install each part in the reverse order of removal.

C: INSPECTION

1) Visually check the bulb for blow out.
2) Check the bulb specification. <Ref. to LI-2, SPECIFICATION, General Description.>
3) Replace the bulb if it is found defective.

17.Front Side Marker Light Bulb

A: REMOVAL

1) Disconnect the ground cable from battery.
2) Remove the clips and remove the air intake duct. (When removing the front turn signal light bulb RH)

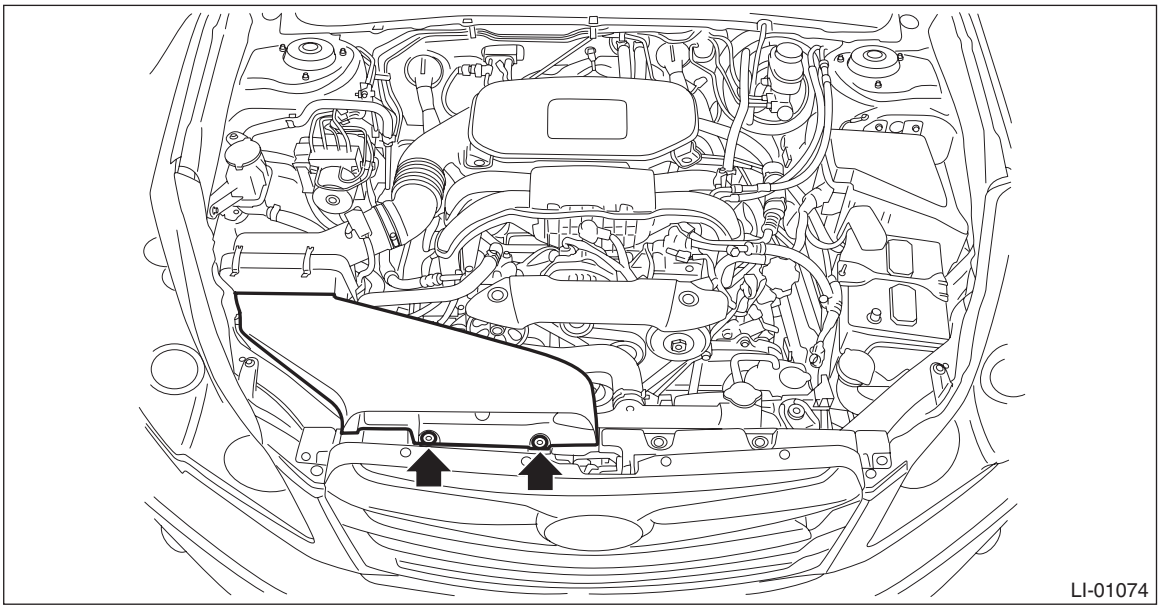

3) Turn the steering wheel in the opposite direction to the headlight to be removed. Then remove the clips and turn over the mud guard.

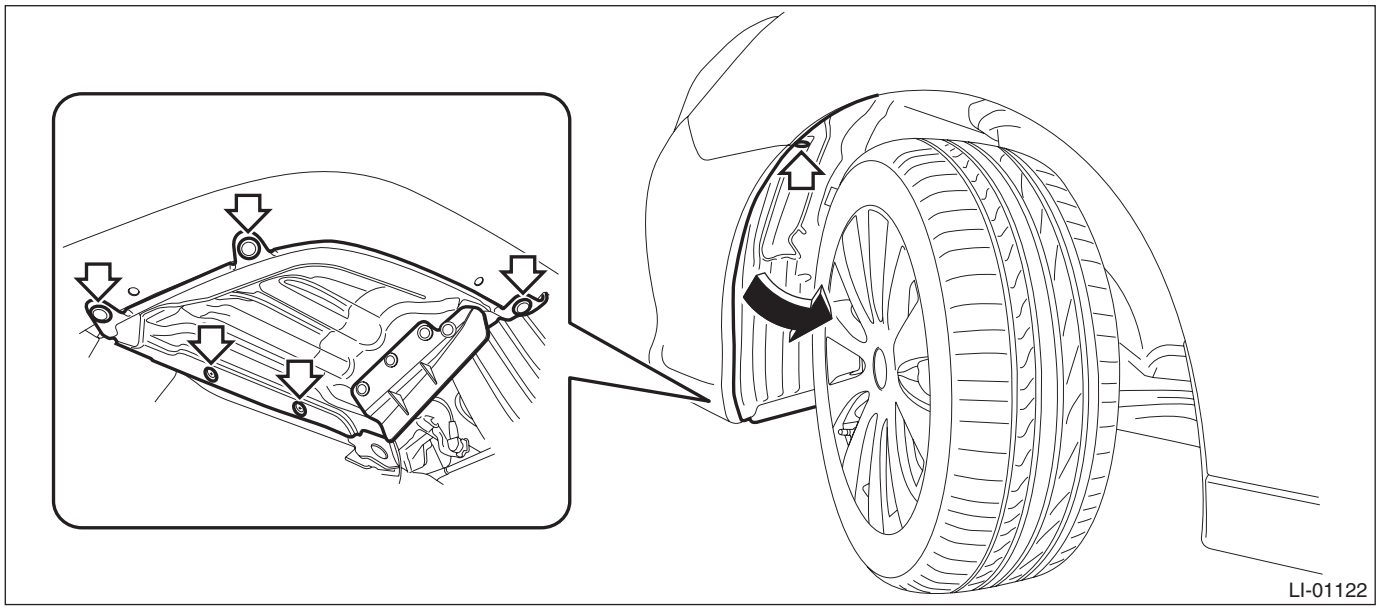

4) Remove the bulb socket and turn signal light bulb.

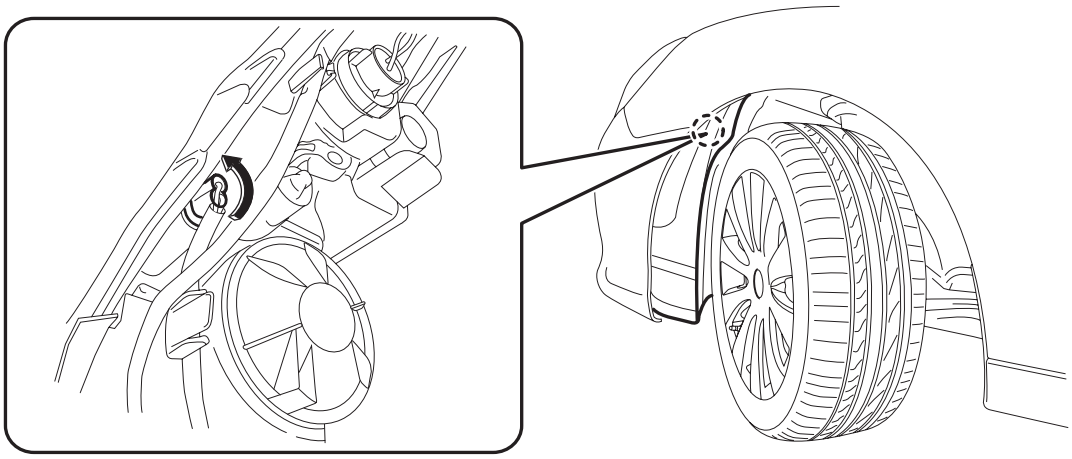

LI-01091

B: INSTALLATION

Install each part in the reverse order of removal.

C: INSPECTION

1) Visually check the bulb for blow out.
2) Check the bulb specification. <Ref. to LI-2, SPECIFICATION, General Description.>
3) Replace the bulb if it is found defective.

18.Front Fog Light Assembly

A: REMOVAL

1) Disconnect the ground cable from battery.
2) Remove the clips and turn over the front end of front mud guard.

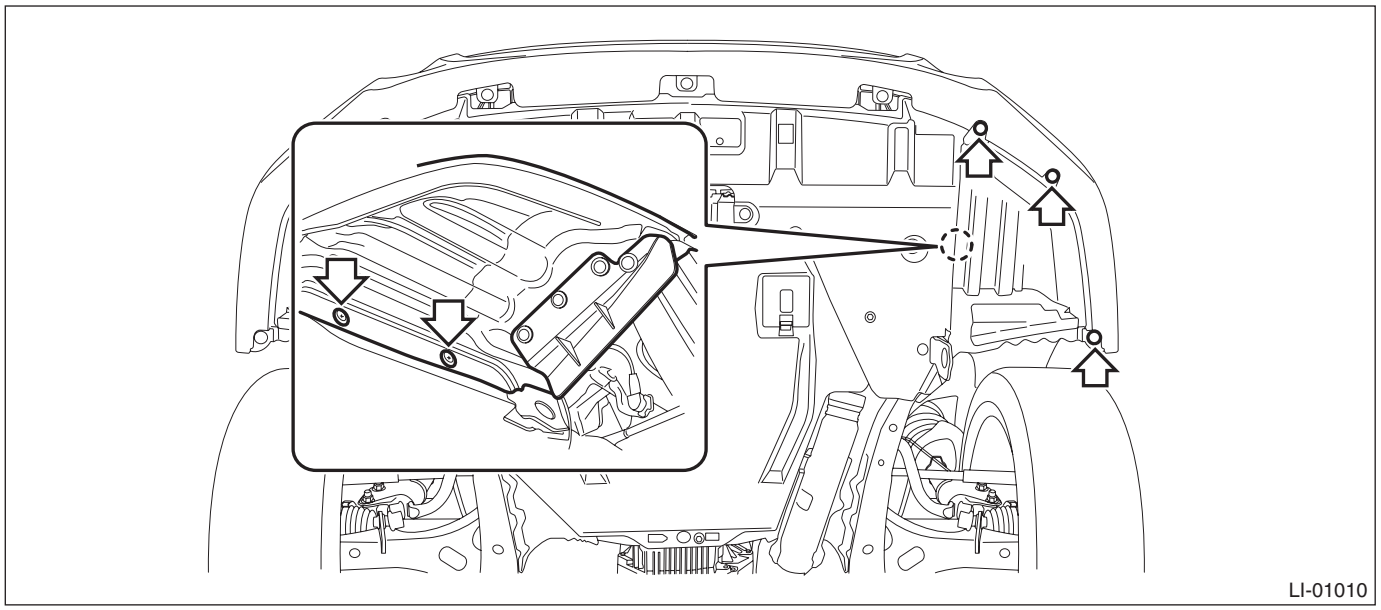

3) From the bottom of bumper face, remove the front fog light assembly.
   (1) Disconnect the connector.
   (2) Remove the bolts, and remove the front fog light assembly.

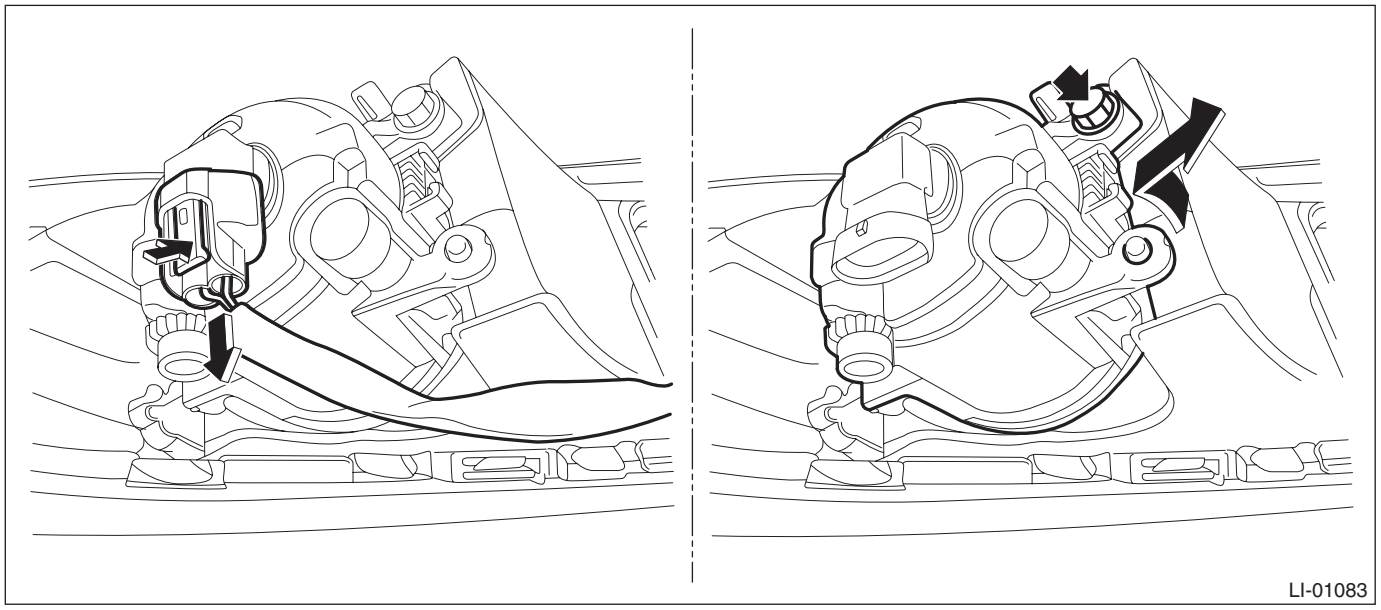

B: INSTALLATION

1) Install each part in the reverse order of removal.

Tightening torque:
Front fog light assembly: 7.5 N·m (0.76 kgf-m, 5.5 ft-lb)
2) Adjust the fog light beam. <Ref. to LI-41, FOG LIGHT AIMING, ADJUSTMENT, Front Fog Light Assembly.>

C: ADJUSTMENT

1. FOG LIGHT AIMING

1) Before checking the fog light beam level, be sure of the following:
- The area around the fog light has not sustained any accident, damage or other type of deformation.
- Vehicle is parked on a level surface.
- The inflation pressure of tires is correct.
- Vehicle's fuel tank is fully filled.

2) Bounce the vehicle several times to normalize the suspension.
3) Make certain that someone is seated in the driver's seat.
4) Place the vehicle with the front end facing to the measurement panel.

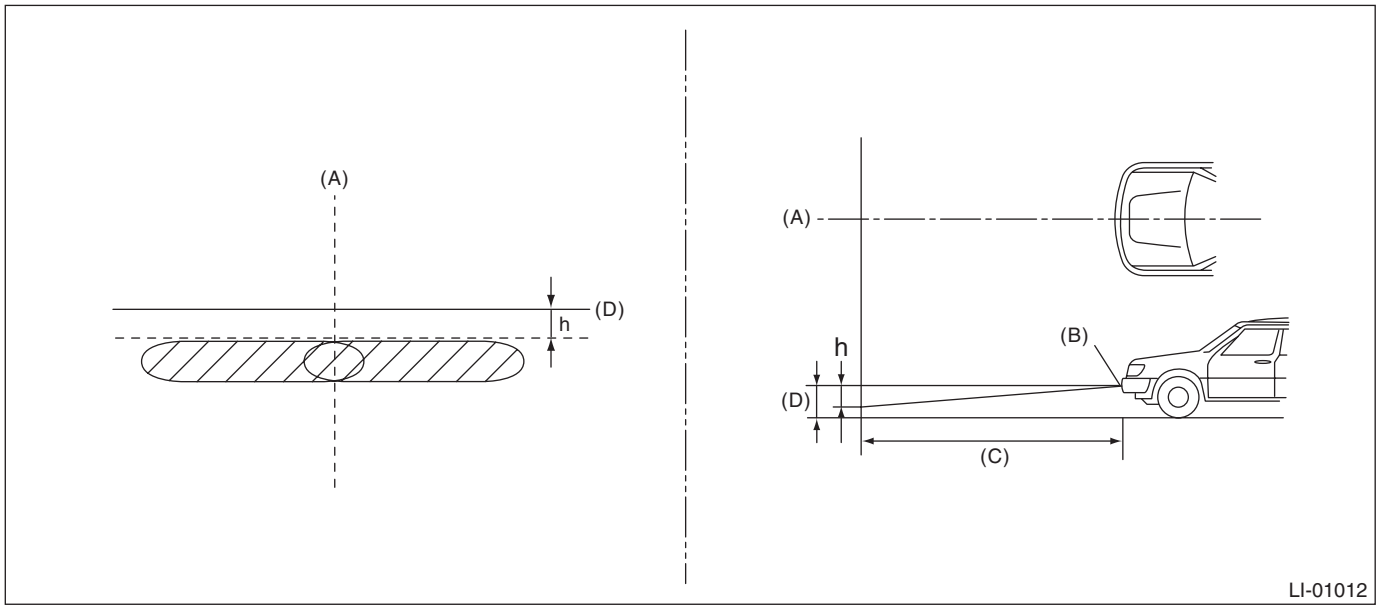

(A) Vehicle center
(B) Bulb center marking
(C) 3 m (10 ft)
(D) Height of fog light center

h mm (in) at 3 m (10 ft)
40 (1.58)

5) Adjust the fog light beam.
(1) Remove the clips and turn over the front end of front mud guard.

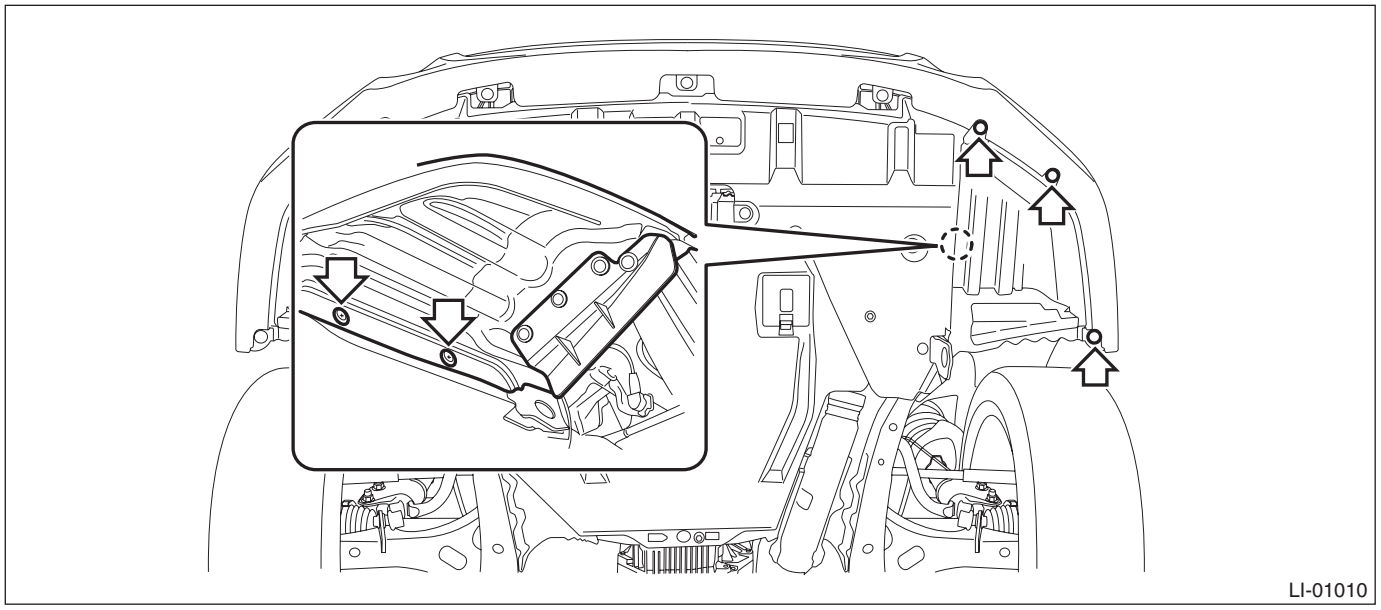
LI-01010

(2) Adjust the beam direction by turning the aiming screw from the bottom of front bumper face.

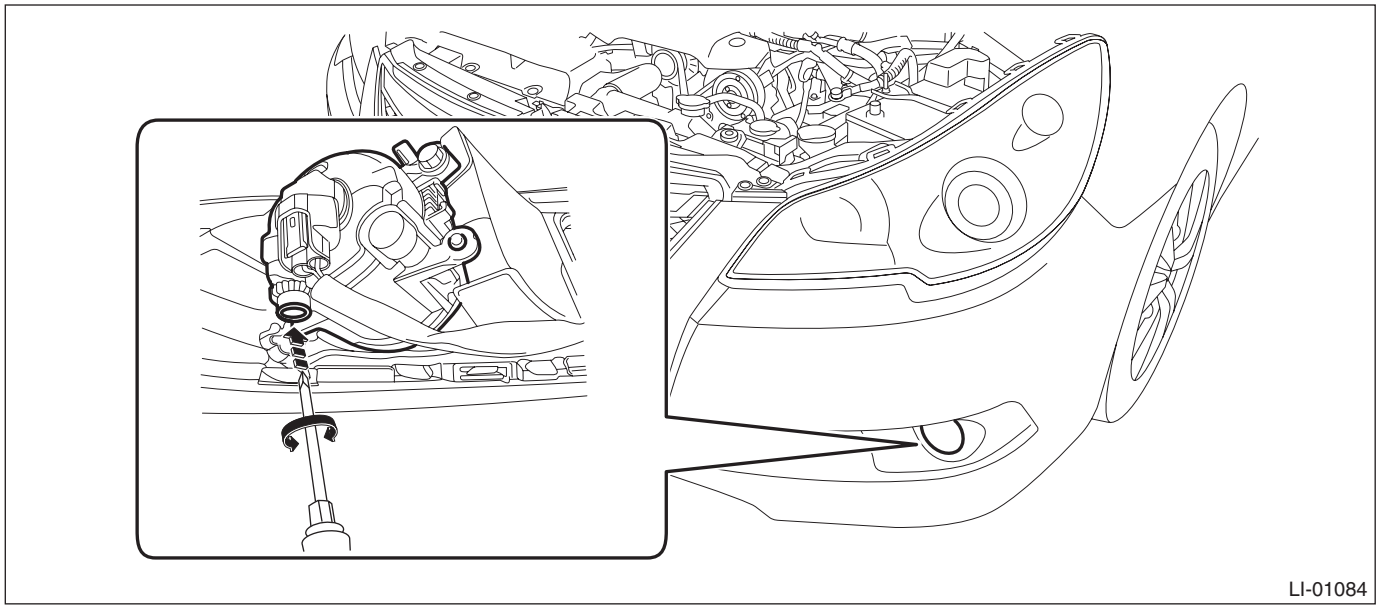
LI-01084

19.Front Fog Light Bulb

A: REMOVAL

1) Disconnect the ground cable from battery.
2) Remove the clips and turn over the front end of front mud guard.

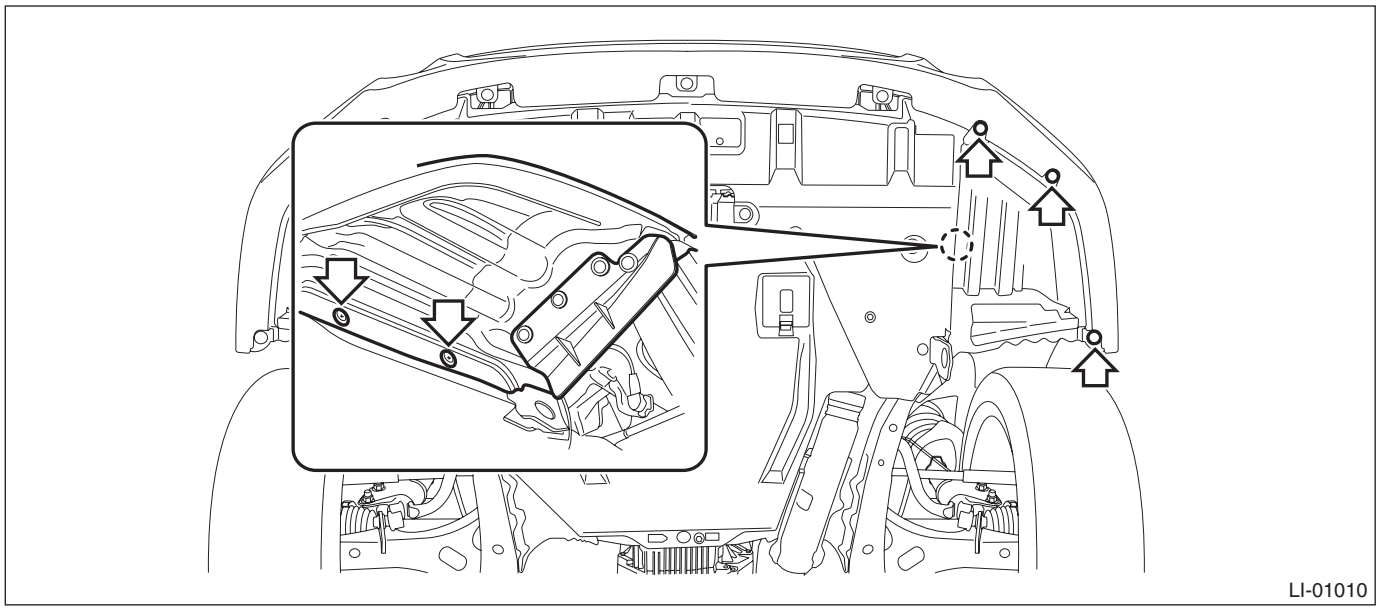

3) From the bottom of bumper face, remove the front fog light bulb.
   (1) Disconnect the connector.
   (2) Remove the bulb.

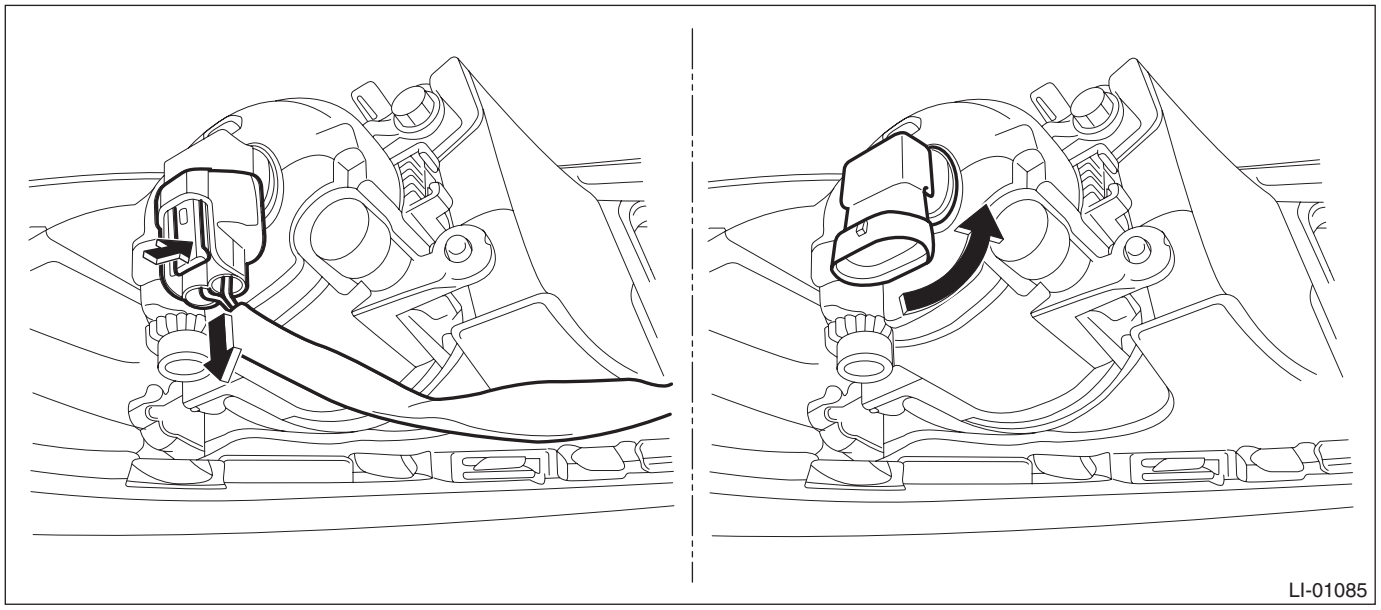

B: INSTALLATION

CAUTION:
After connecting the connector, make sure that the bulb is locked securely.
Install each part in the reverse order of removal.

C: INSPECTION

1) Visually check the bulb for blow out.
2) Check the bulb specification. <Ref. to LI-2, SPECIFICATION, General Description.>
3) Replace the bulb if it is found defective.

20.Side Turn Signal Light Assembly

A: REMOVAL

1) Disconnect the ground cable from battery.
2) Remove the mirror. <Ref. to GW-30, REPLACEMENT, Outer Mirror.>
3) Remove the scalp cap. <Ref. to GW-23, REPLACEMENT, Scalp Cap.>
4) Remove the side turn signal light assembly.
   (1) Remove the screws and pull out the side turn signal light assembly.
   (2) Disconnect the connector and remove the side turn signal light assembly.

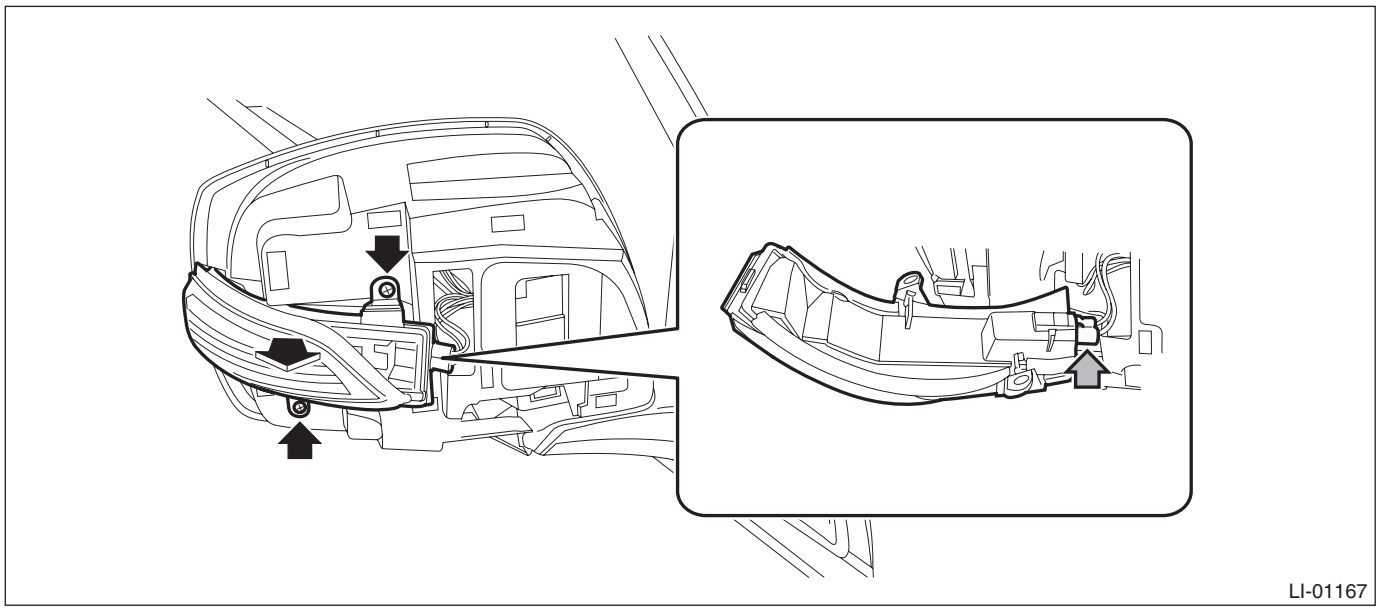

B: INSTALLATION

Install each part in the reverse order of removal.

C: INSPECTION

1) Install the side turn signal light assembly and check that it blinks normally.
2) If it is found not to blink normally, replace the side turn signal light assembly with a new part.

NOTE:
Since LED (Light Emitting Diode) is used for the side turn signal light, replace the side turn signal light assembly if the LED burns out.

21.Rear Combination Light Assembly

A: REMOVAL

1. SEDAN MODEL

1) Disconnect the ground cable from battery.
2) Remove the trunk room trim. <Ref. to EI-127, REMOVAL, Trunk Room Trim.>
3) Remove the rear combination light assembly.
   (1) Disconnect the connector.
   (2) Release the nuts and clips, then remove the rear combination light assembly.

CAUTION:
Be careful not to damage the clips.

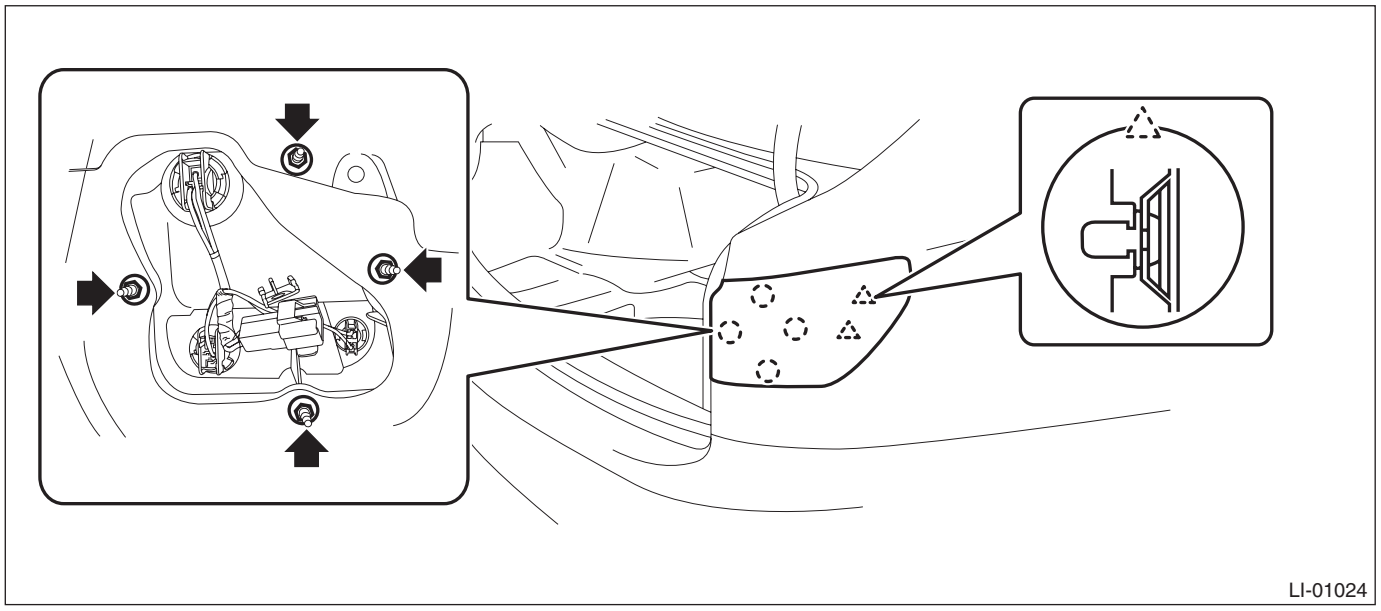

2. OUTBACK MODEL

1) Disconnect the ground cable from battery.
2) Remove the clips and detach the rear combination light covers.

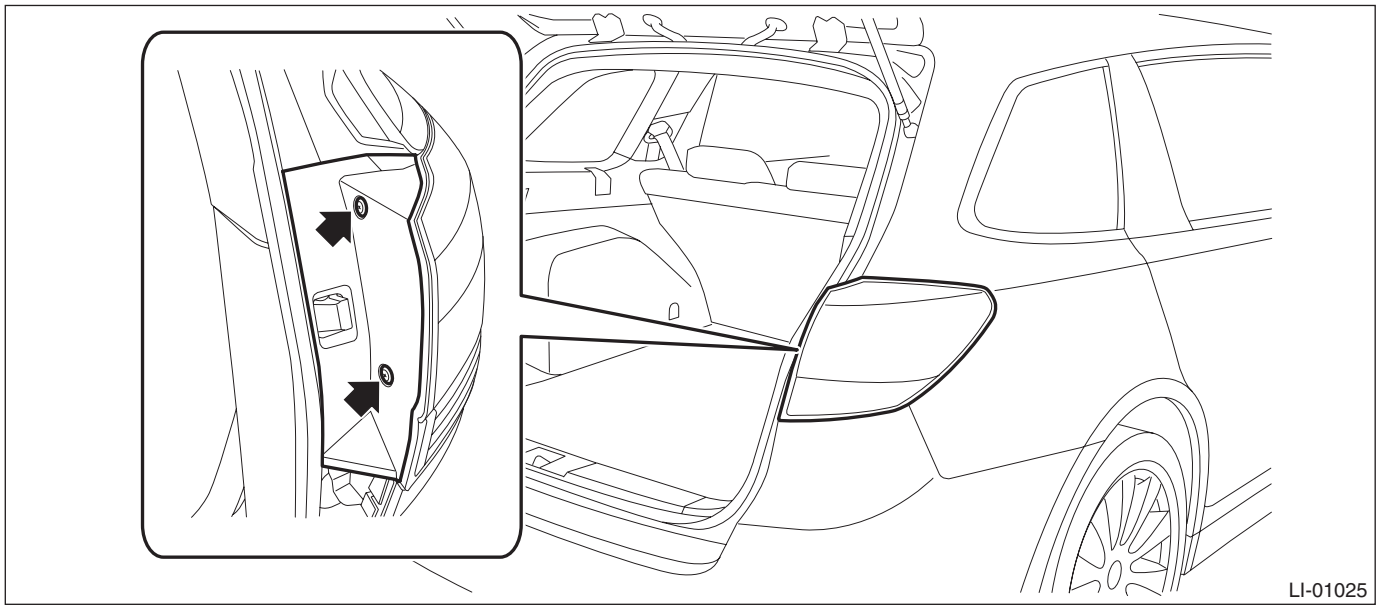

3) Remove the rear combination light assembly.

CAUTION:
Be careful not to damage the clips.

(1) Release the bolts and clips, then pull out the rear combination light assembly to the vehicle rear.
(2) Disconnect the connector and remove the rear combination light assembly.

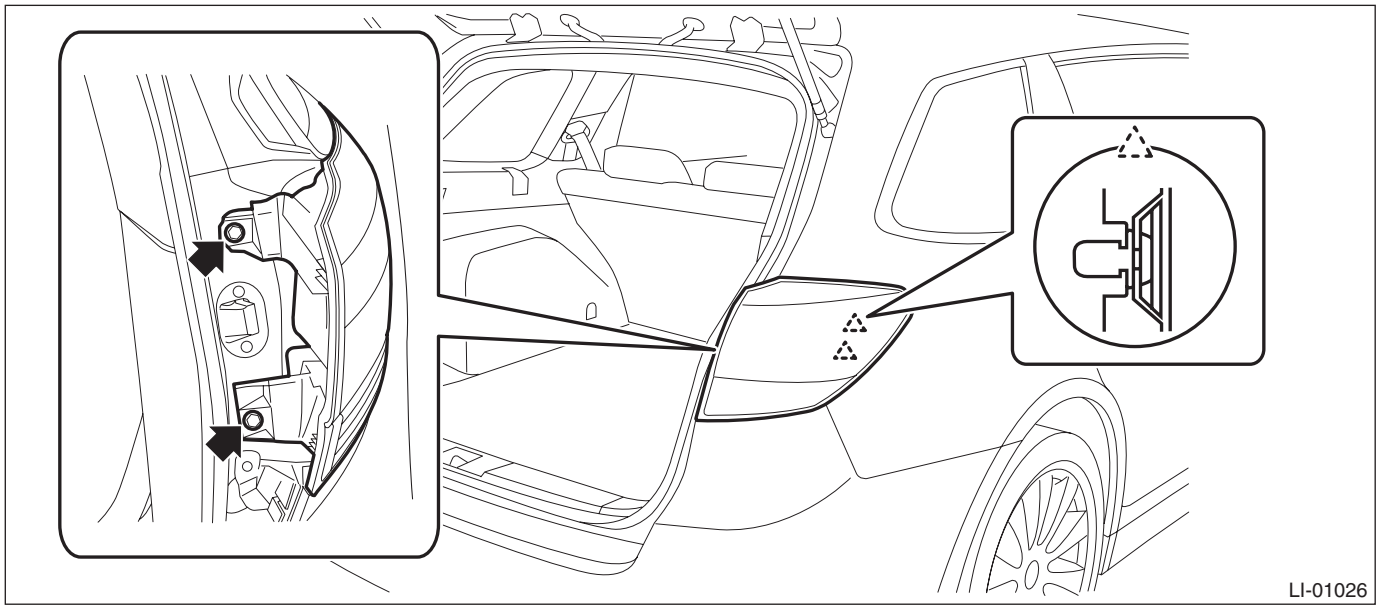

B: INSTALLATION

CAUTION:
For sedan models, replace the seal gasket of the rear combination light assembly with a new part. If the seal gasket is reused, water may come inside of the vehicle.
Install each part in the reverse order of removal.

Tightening torque:
Sedan model: 4.5 N·m (0.46 kgf-m, 3.3 ft-lb)
OUTBACK model: 7.5 N·m (0.76 kgf-m, 5.5 ft-lb)

C: INSPECTION

1) Visually check the bulb for blow out.
2) Check the bulb specification. <Ref. to LI-2, SPECIFICATION, General Description.>
3) Replace the bulb if it is found defective.

22.Tail/Stop Light Bulb

A: REMOVAL

1. SEDAN MODEL

• Rear combination light side

1) Disconnect the ground cable from battery.
2) Release the lock and remove the bulb inspection cover of trunk room trim.

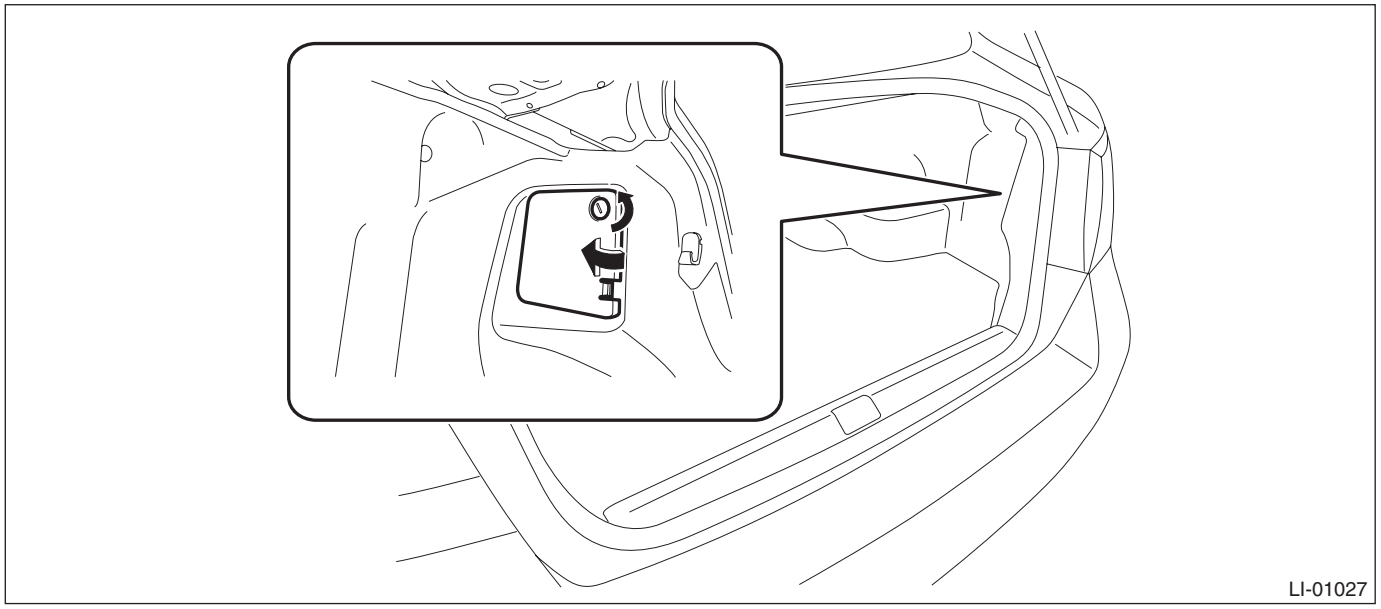

3) Remove the bulb socket and tail light/stop light bulb.

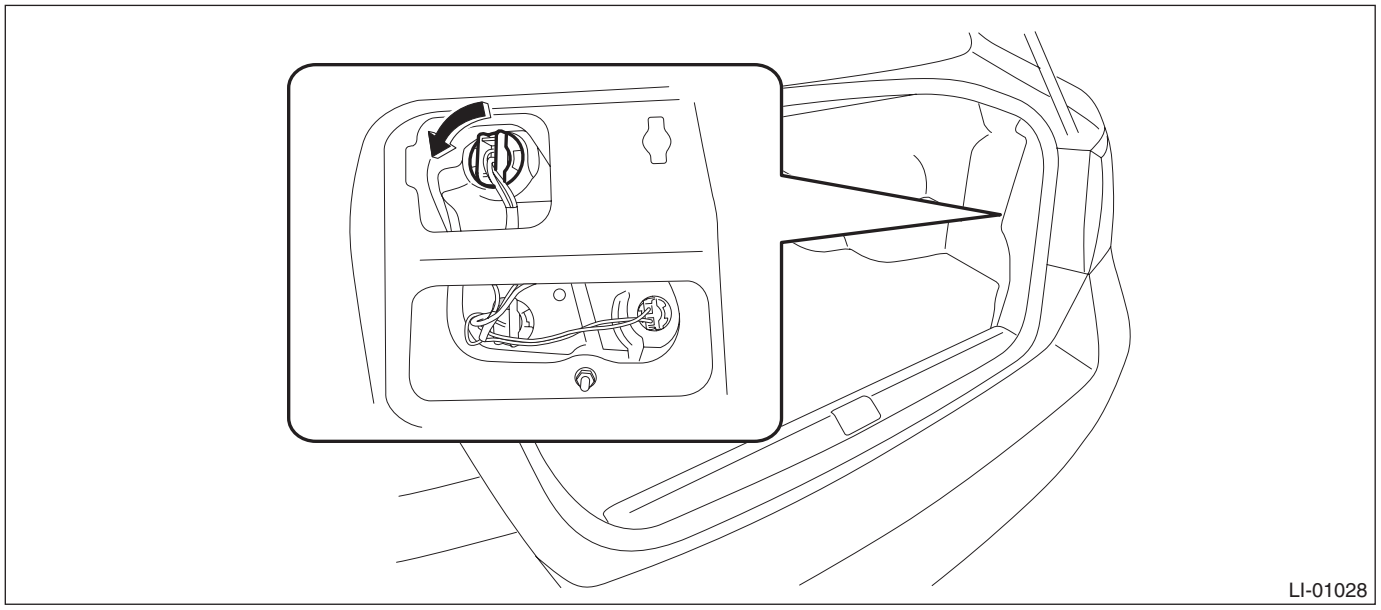

- **Rear finisher light side**

1) Disconnect the ground cable from battery.
2) Remove the trunk lid trim. <Ref. to EI-127, TRUNK LID TRIM, REMOVAL, Trunk Room Trim.>
3) Remove the bulb socket and tail light bulb.

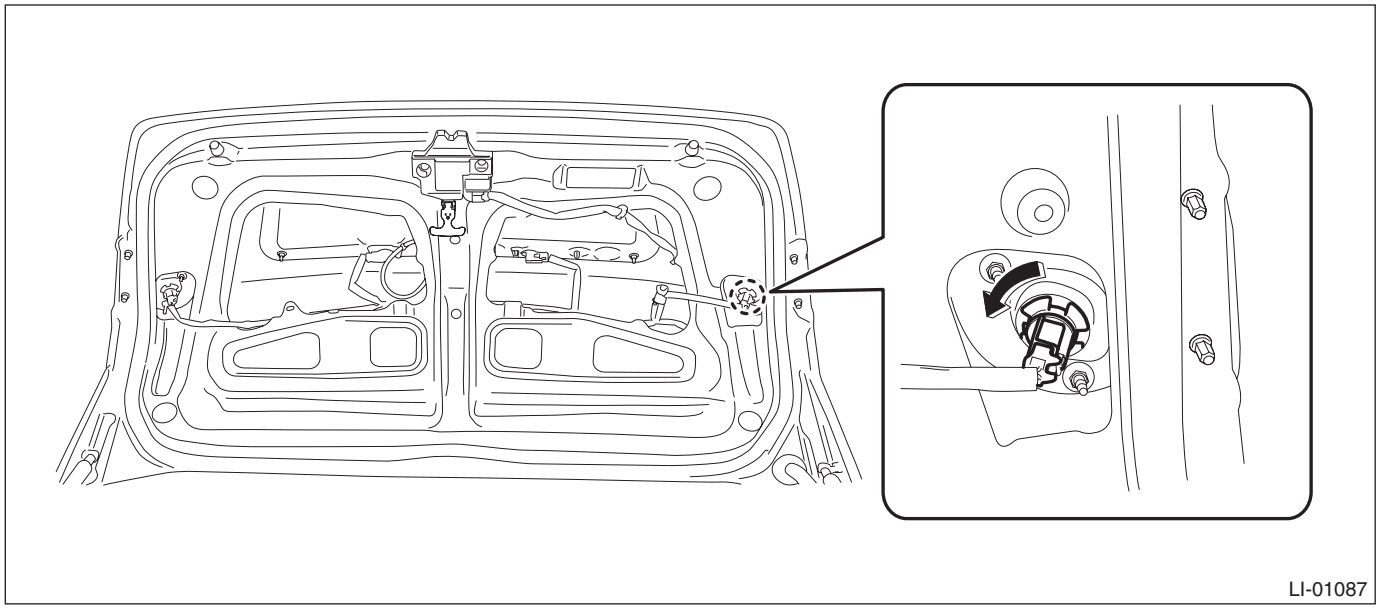

2. OUTBACK MODEL

- **Rear combination light side**

1) Disconnect the ground cable from battery.
2) Remove the clips and detach the rear combination light covers.

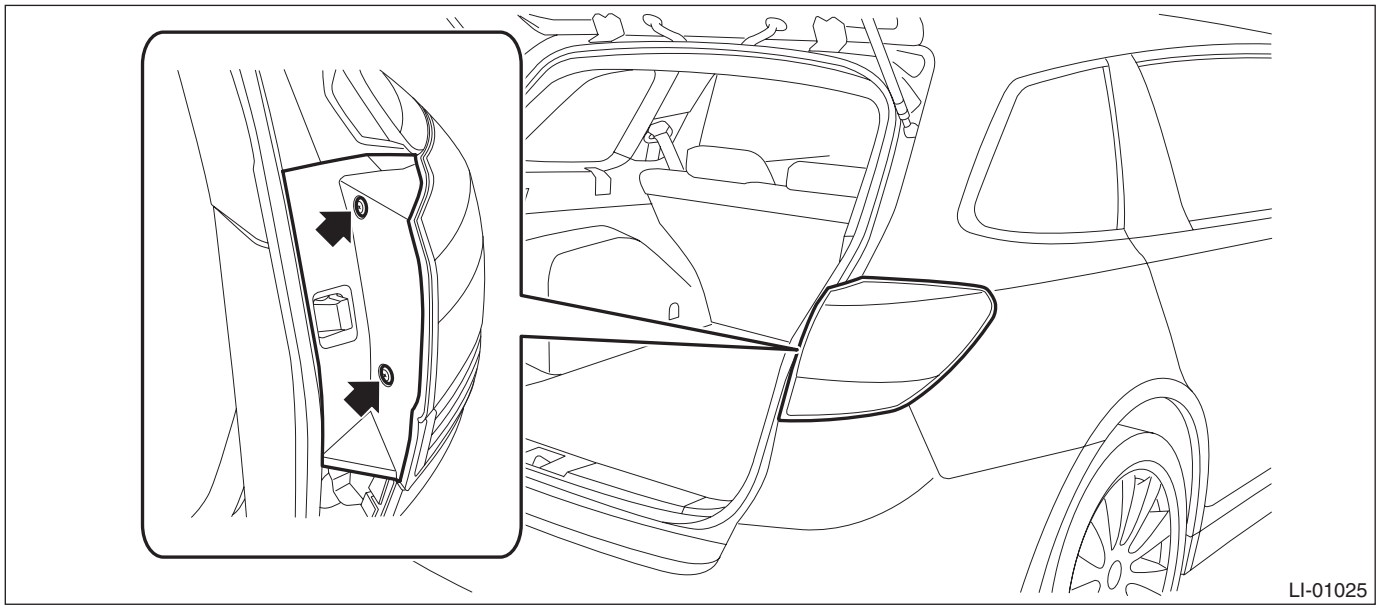

3) Remove the rear combination light assembly.

CAUTION:
Be careful not to damage the clips.

(1) Release the bolts and clips, then pull out the rear combination light assembly to the vehicle rear.
(2) Disconnect the connector and remove the rear combination light assembly.

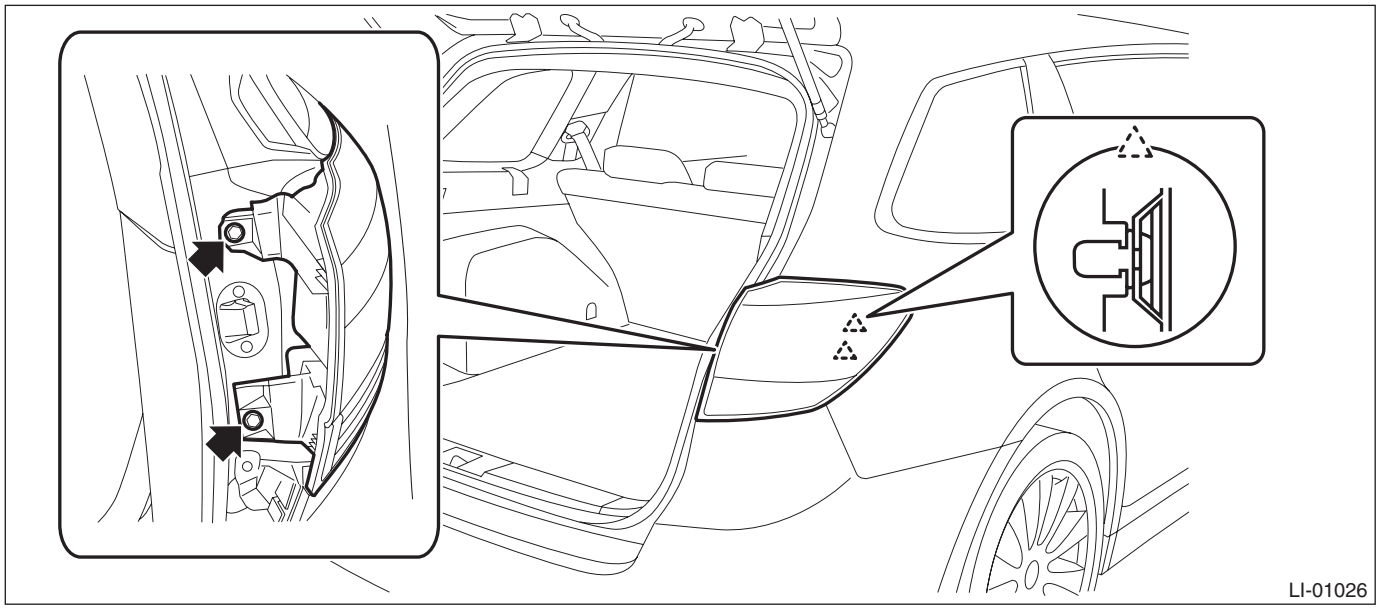

4) Remove the bulb sockets and bulbs.

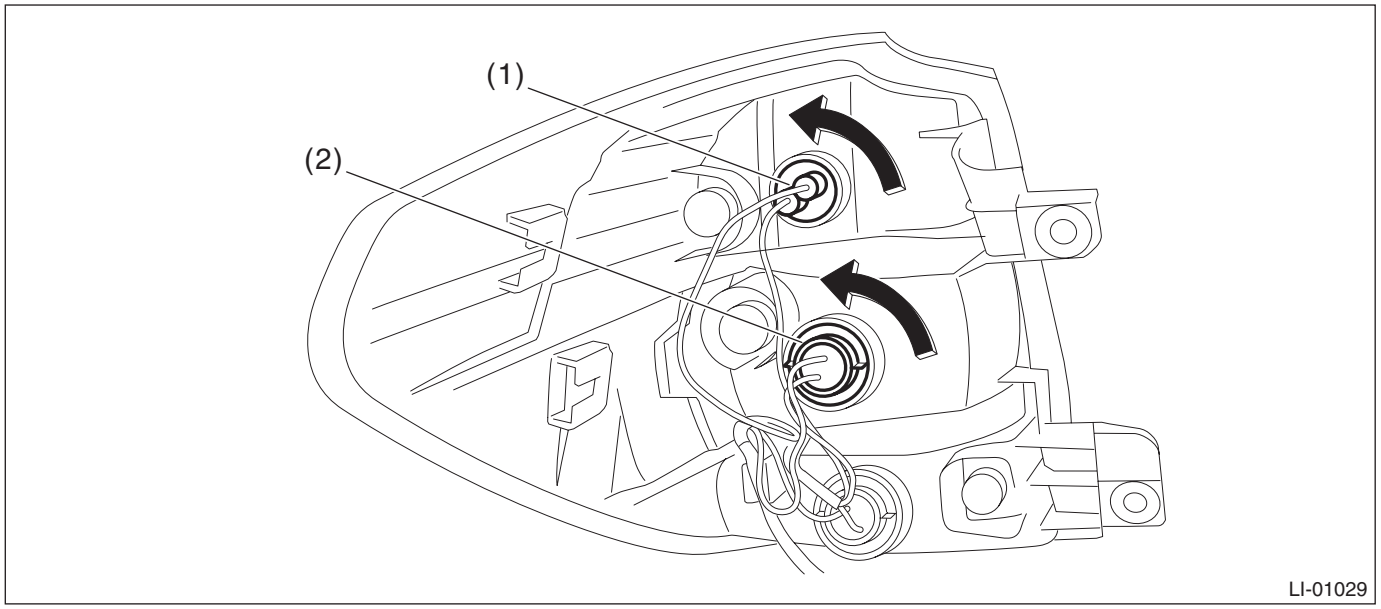

(1) Tail light bulb
(2) Stop light bulb

- **Rear finisher light side**

1) Release the claws and remove the bulb inspection cover of rear gate trim

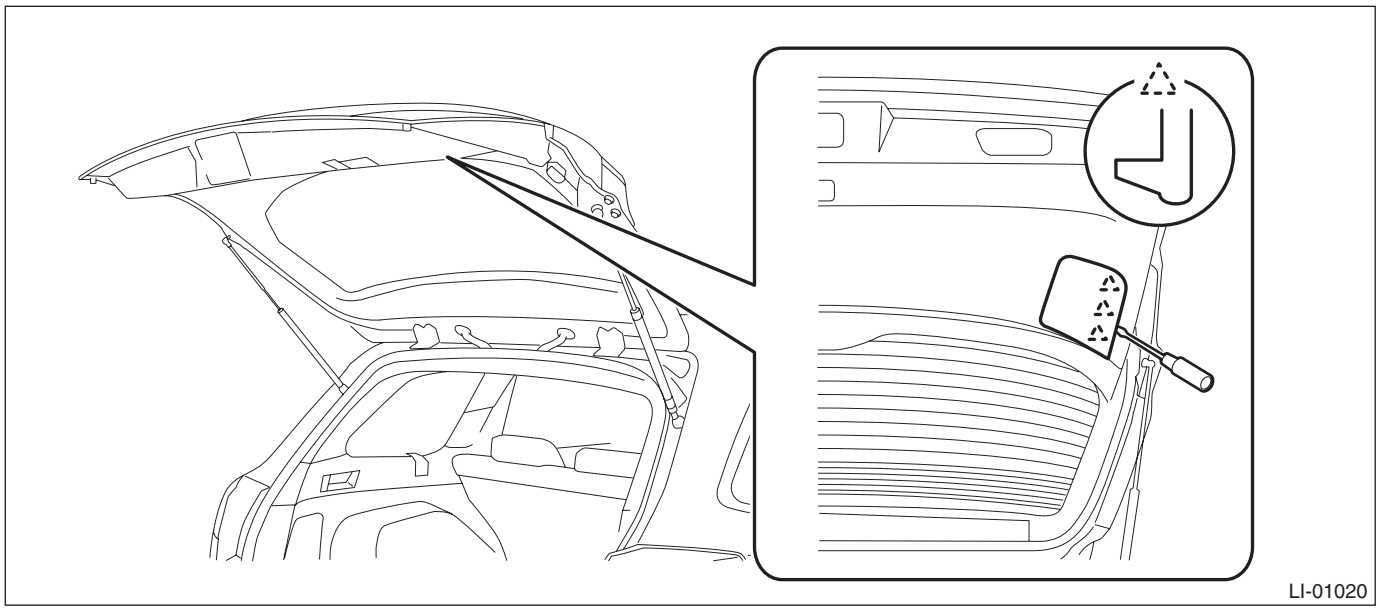

2) Remove the bulb socket and tail light bulb.

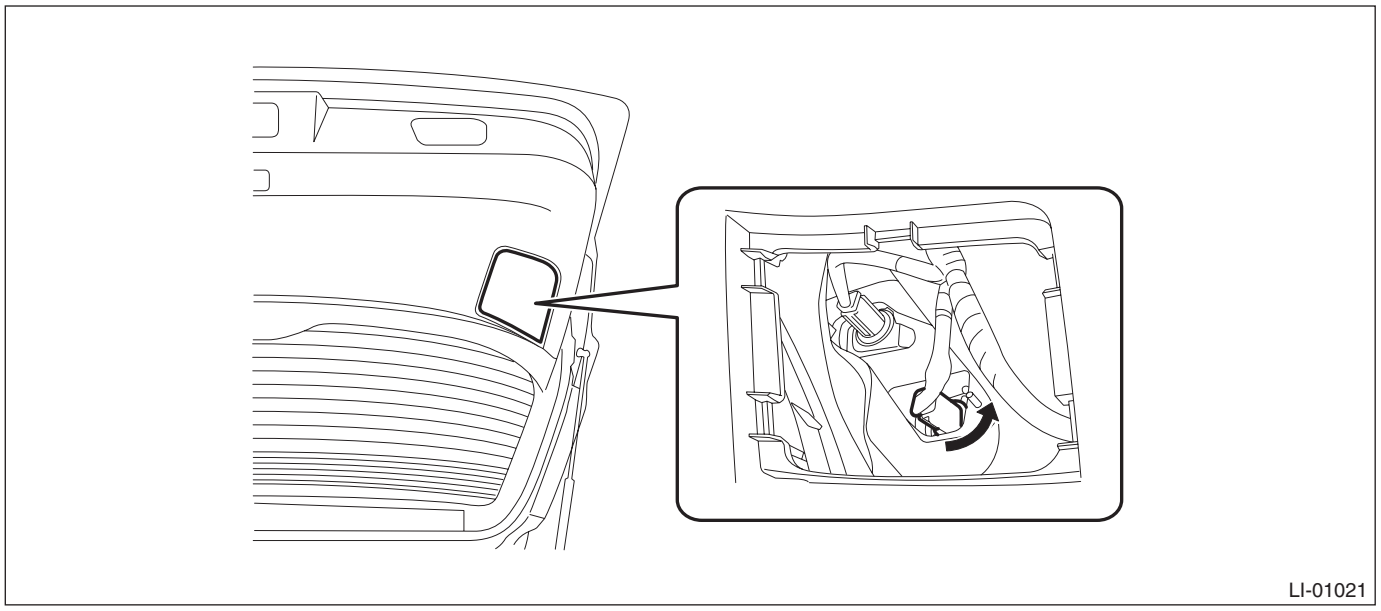

B: INSTALLATION

Install each part in the reverse order of removal.

Tightening torque:
Rear combination light ASSY: 7.5 N·m (0.76 kgf-m, 5.5 ft-lb)

C: INSPECTION

1) Visually check the bulb for blow out.
2) Check the bulb specification. <Ref. to LI-2, SPECIFICATION, General Description.>
3) Replace the bulb if it is found defective.

23.Rear Turn Signal Light Bulb

A: REMOVAL

1. SEDAN MODEL

1) Disconnect the ground cable from battery.
2) Release the lock and remove the bulb inspection cover of trunk room trim.

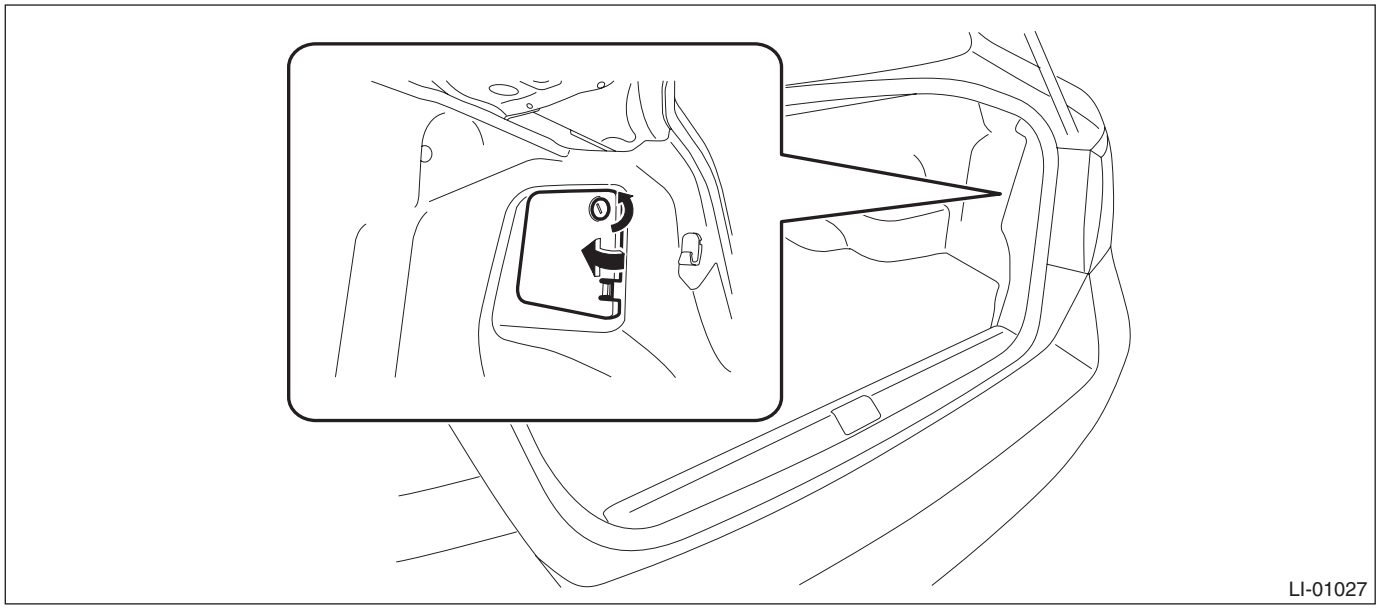

3) Remove the bulb socket and rear turn signal light bulb.

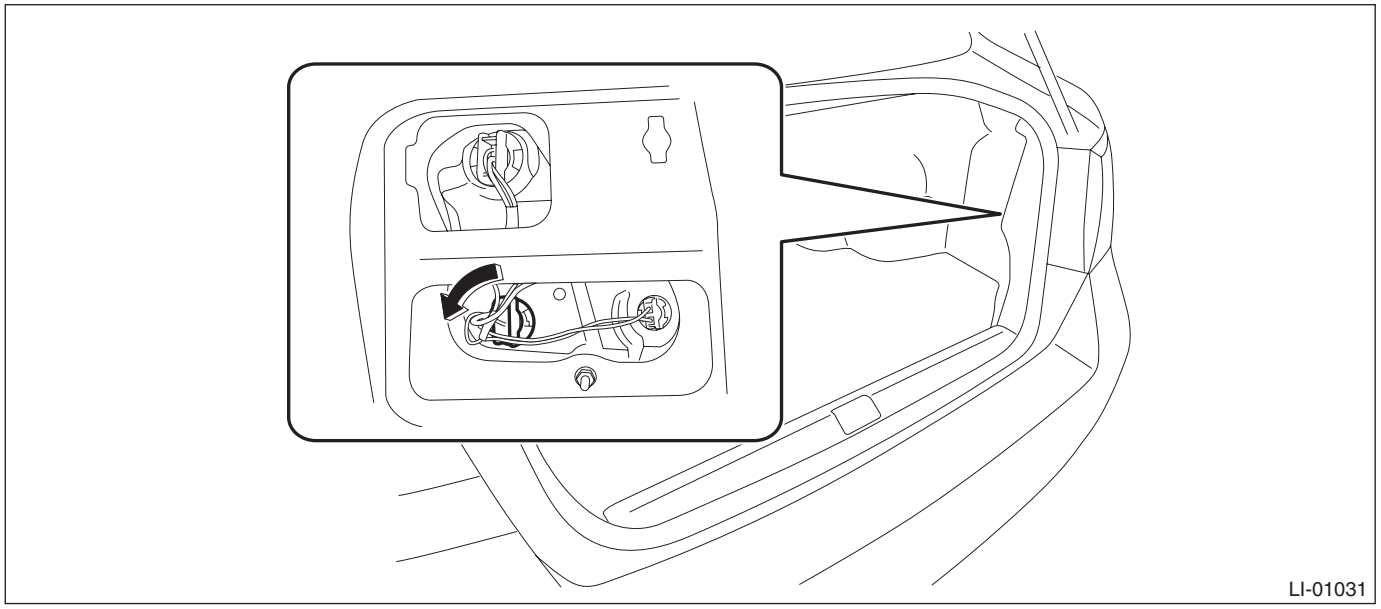

2. OUTBACK MODEL

1) Disconnect the ground cable from battery.
2) Remove the clips and detach the rear combination light covers.

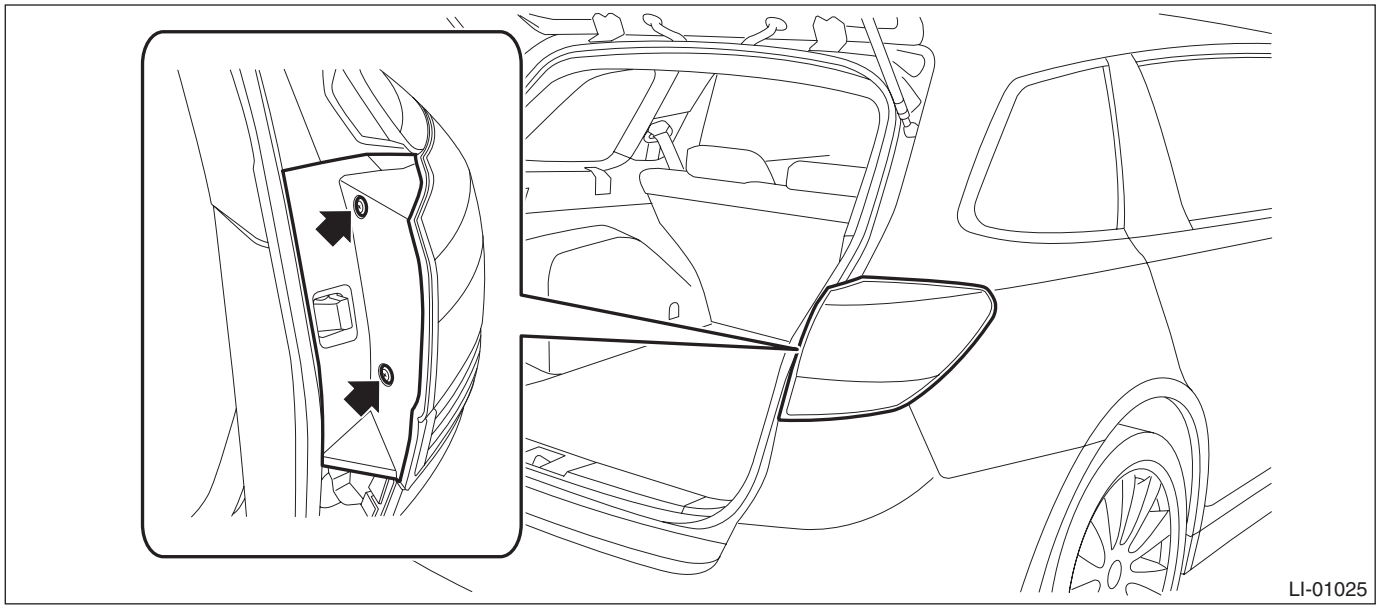

3) Remove the rear combination light assembly.

CAUTION:
Be careful not to damage the clips.

(1) Release the bolts and clips, then pull out the rear combination light assembly to the vehicle rear.
(2) Disconnect the connector and remove the rear combination light assembly.

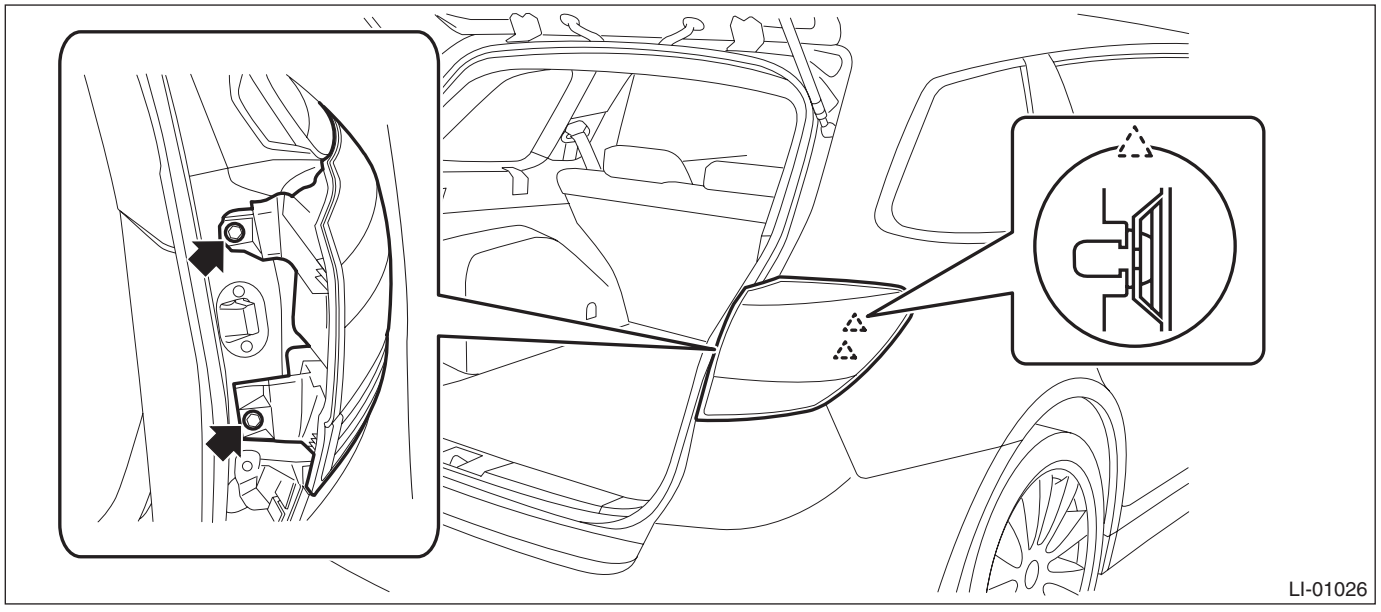

4) Remove the bulb socket and rear turn signal light bulb.

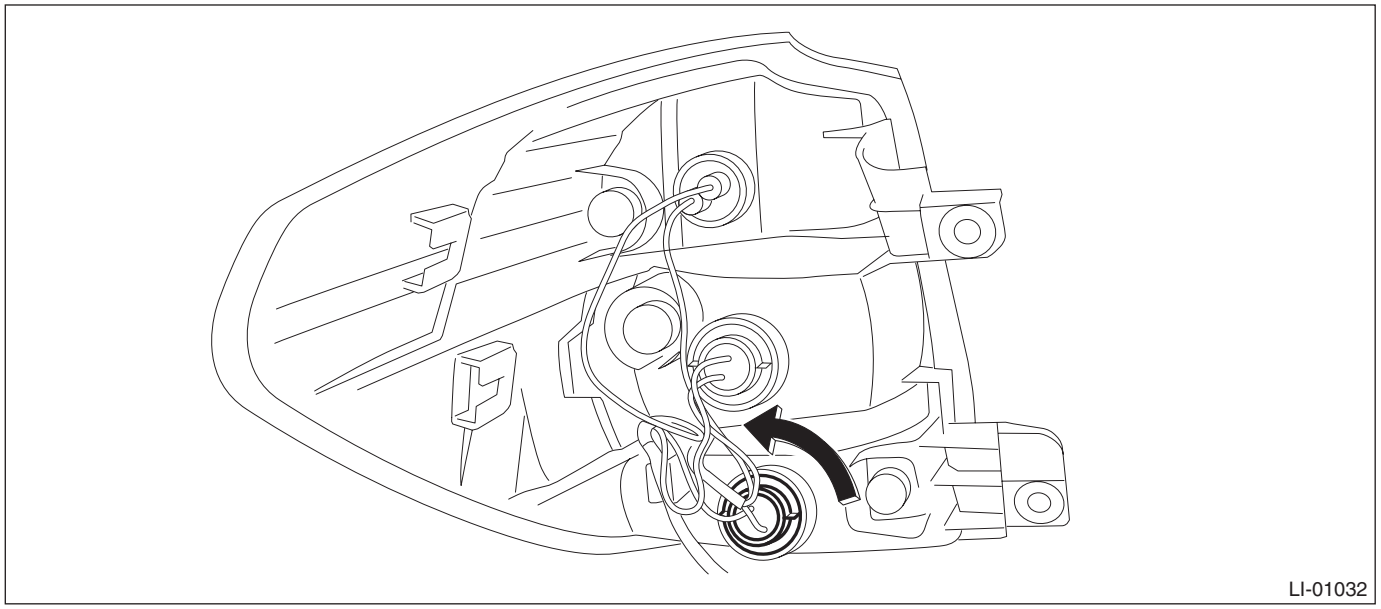

B: INSTALLATION

Install each part in the reverse order of removal.

Tightening torque:
Rear combination light ASSY: 7.5 N·m (0.76 kgf-m, 5.5 ft-lb)

C: INSPECTION

1) Visually check the bulb for blow out.
2) Check the bulb specification. <Ref. to LI-2, SPECIFICATION, General Description.>
3) Replace the bulb if it is found defective.

24.Rear Finisher Light Assembly

A: REMOVAL

1. SEDAN MODEL

1) Disconnect the ground cable from battery.
2) Remove the trunk lid trim. <Ref. to EI-127, REMOVAL, Trunk Room Trim.>
3) Remove the rear finisher light assembly.
   (1) Disconnect the connector.
   (2) Remove the nuts and bolts and remove the rear finisher light assembly.

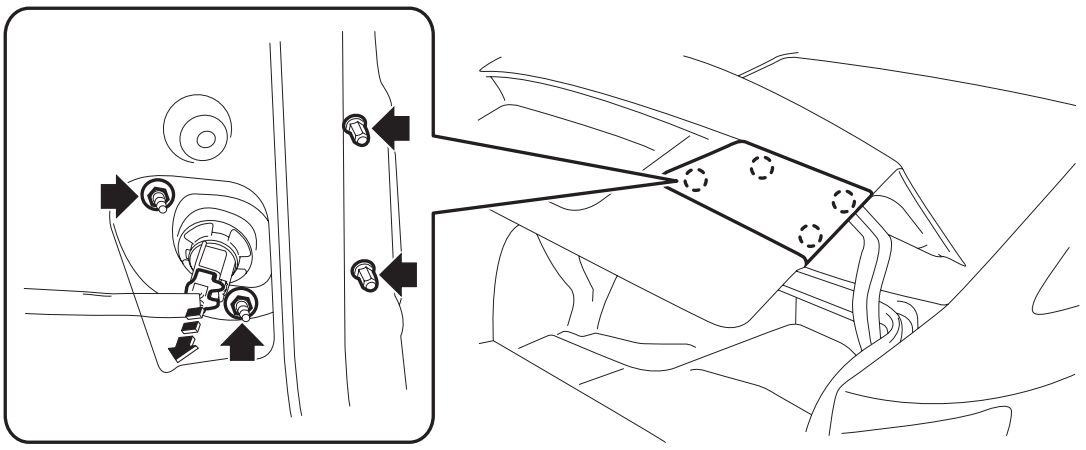

LI-01015

2. OUTBACK MODEL

1) Disconnect the ground cable from battery.
2) Remove the rear gate trim. <Ref. to EI-160, REMOVAL, Rear Gate Trim.>
3) Remove the rear gate garnish. <Ref. to EI-164, REMOVAL, Rear Gate Garnish.>
4) Release the clips and claws, then detach the rear finisher light side cover.

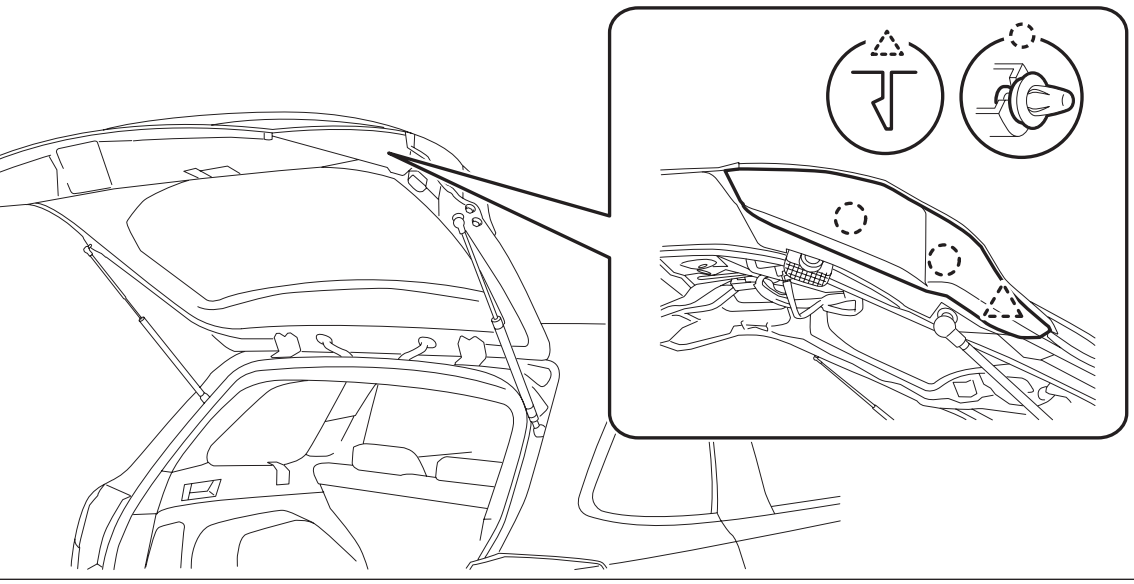

LI-01016

5) Remove the rear finisher light assembly.
   (1) Disconnect the connector.
   (2) Remove the nuts and release the pin, then remove the rear finisher light assembly.

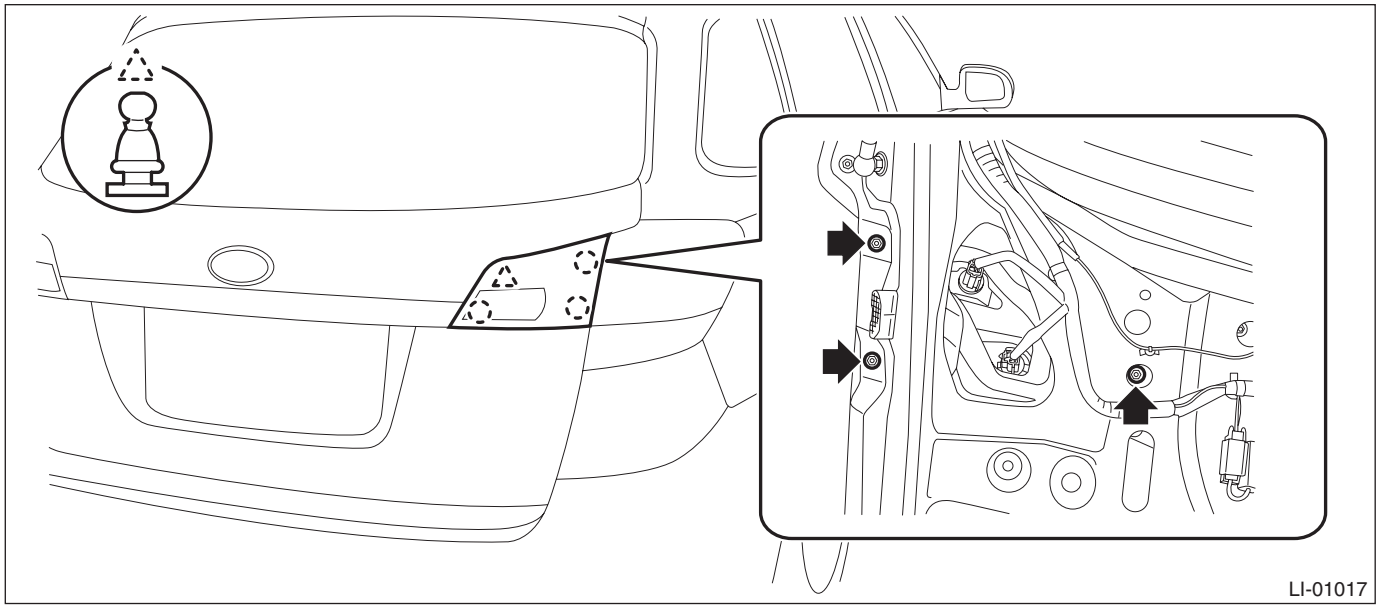

B: INSTALLATION

CAUTION:
Replace the body seal gasket with a new part.
Install each part in the reverse order of removal.

Tightening torque:
Rear finisher light assembly: 4.5 N·m (0.45 kgf-m, 3.3 ft-lb)

25.Back-up Light Bulb

A: REMOVAL

1. SEDAN MODEL

1) Disconnect the ground cable from battery.
2) Release the lock and remove the bulb inspection cover of trunk room trim.

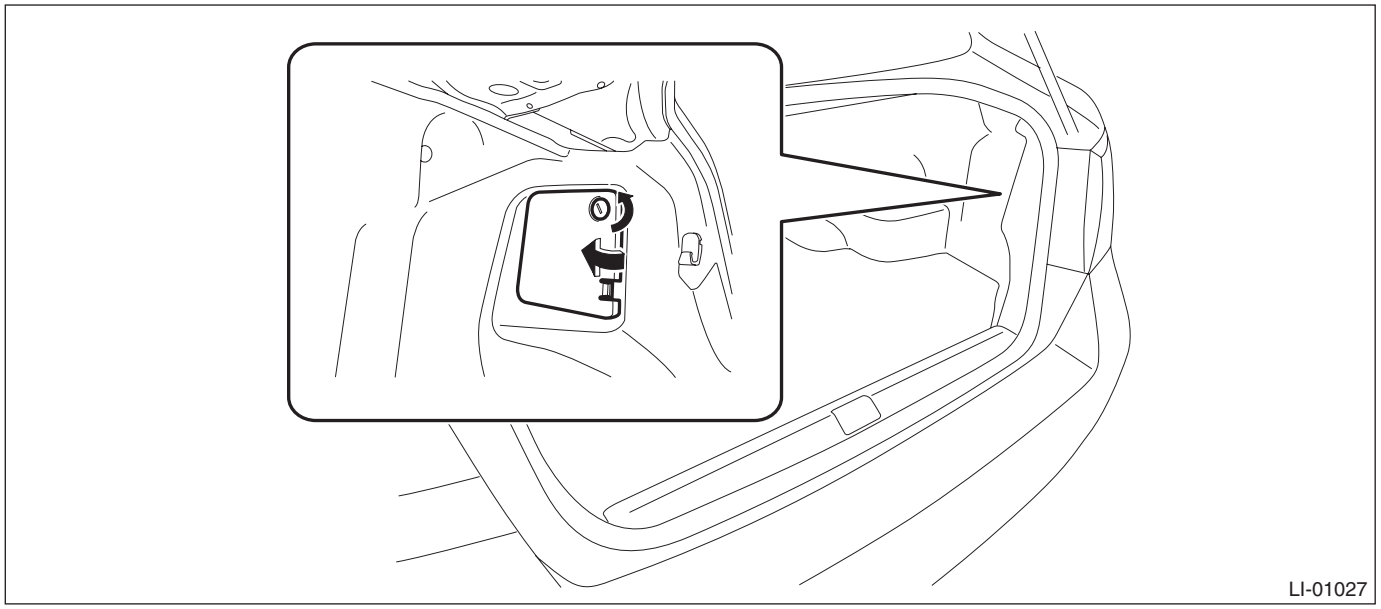

3) Remove the bulb socket and back-up light bulb.

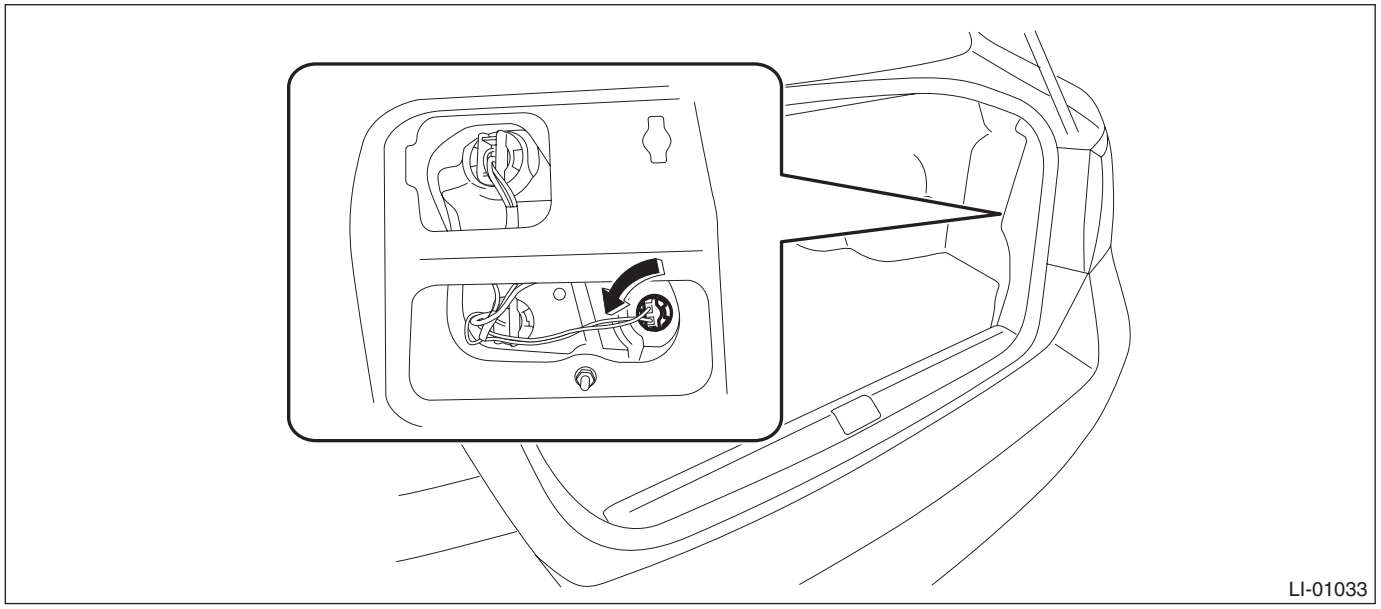

2. OUTBACK MODEL

1) Disconnect the ground cable from battery.
2) Release the claws and remove the bulb inspection cover of rear gate trim

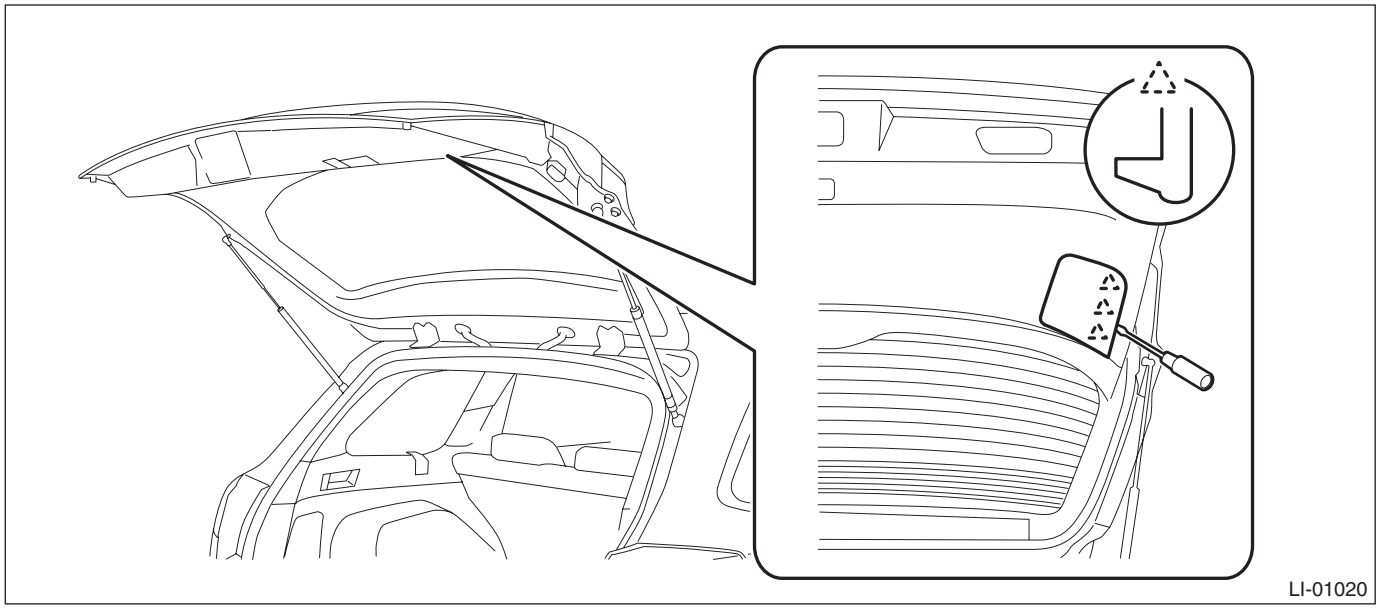

3) Remove the bulb socket and back-up light bulb.

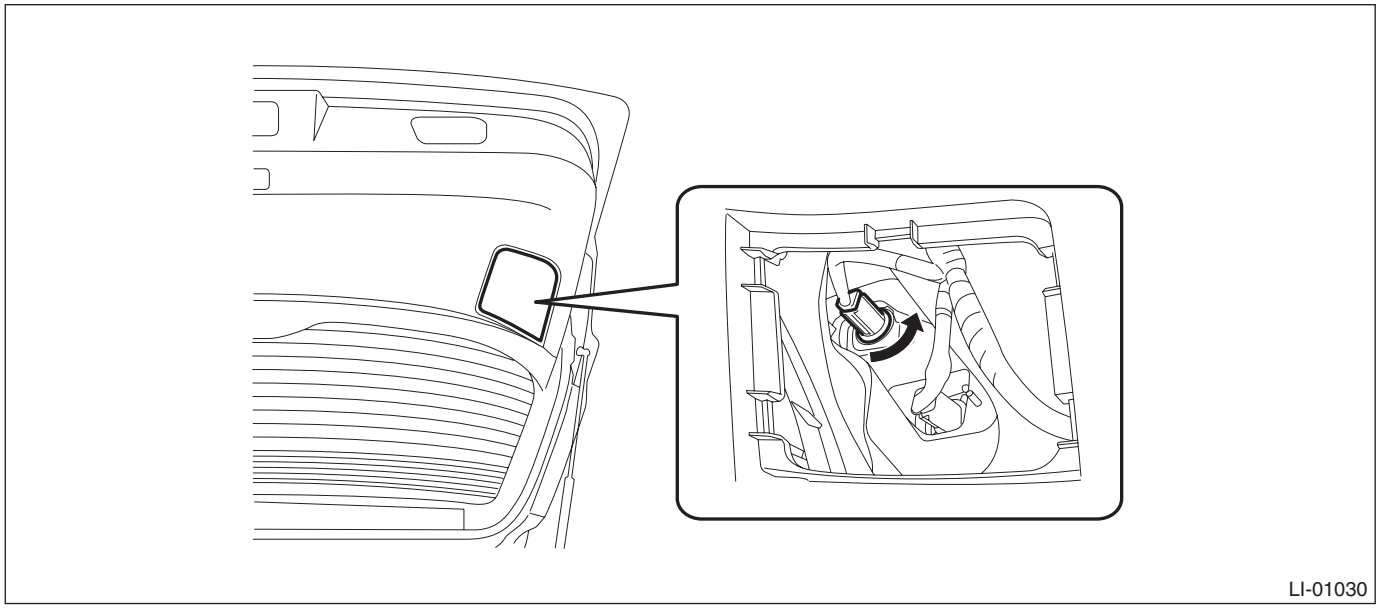

B: INSTALLATION

Install each part in the reverse order of removal.

C: INSPECTION

1) Visually check the bulb for blow out.
2) Check the bulb specification. <Ref. to LI-2, SPECIFICATION, General Description.>
3) Replace the bulb if it is found defective.

26.License Plate Light

A: REMOVAL

1. SEDAN MODEL

1) Disconnect the ground cable from battery.
2) Remove the trunk lid trim. <Ref. to EI-127, TRUNK LID TRIM, REMOVAL, Trunk Room Trim.>
3) Remove the trunk lid garnish. <Ref. to EI-163, REMOVAL, Trunk Lid Garnish.>
4) Disconnect the connector and remove the bulb socket.

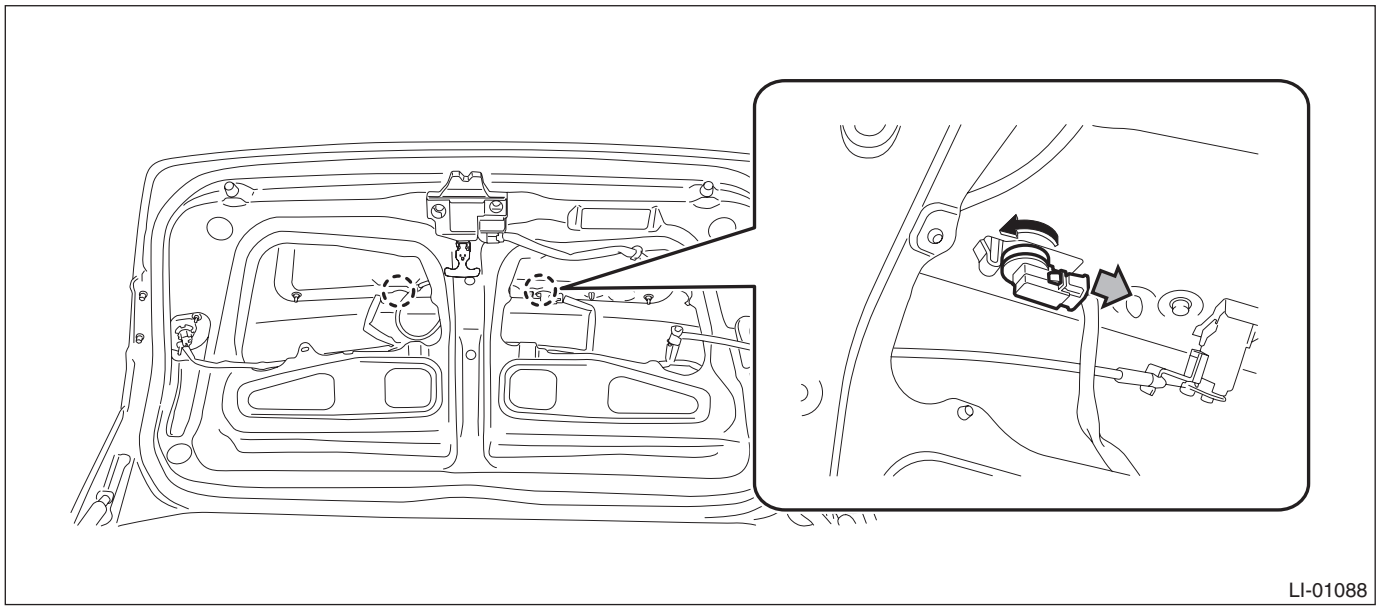

5) Remove the license plate light.

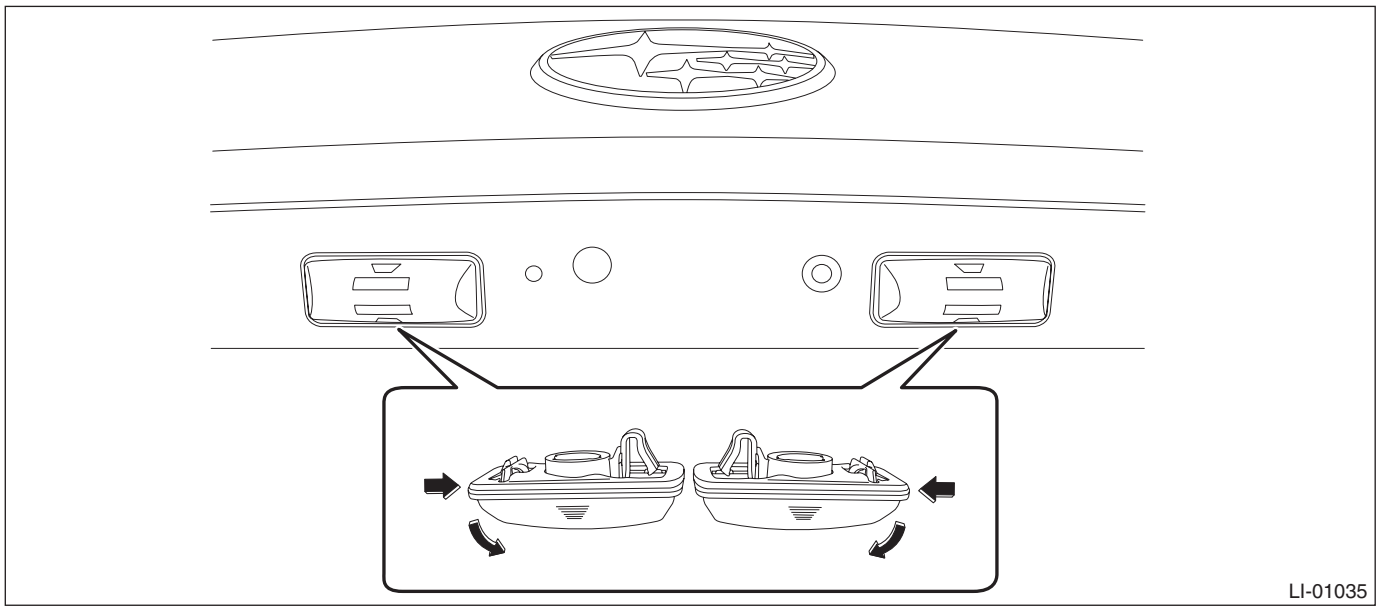

2. OUTBACK MODEL

1) Disconnect the ground cable from battery.
2) Remove the screws and remove the license plate light.

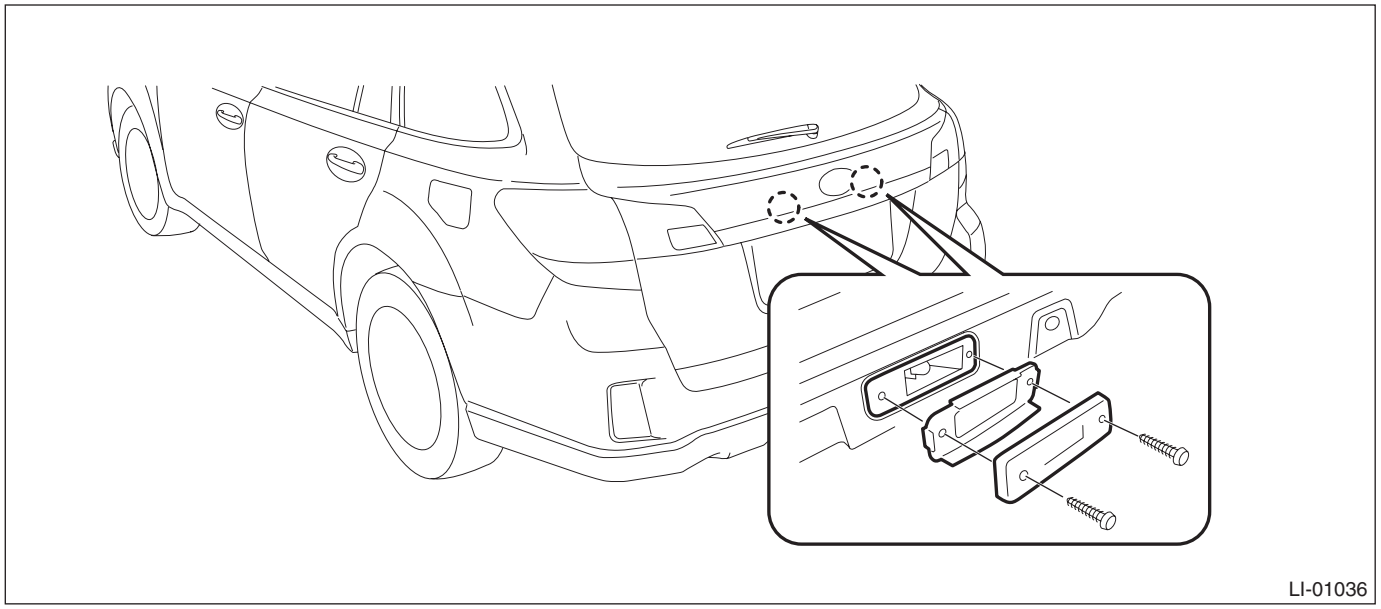

NOTE:
When removing the license plate light assembly harness, remove the following parts.
- Rear gate garnish: <Ref. to EI-164, REMOVAL, Rear Gate Garnish.>
- Rear gate opener button: <Ref. to SL-43, REMOVAL, Rear Gate Opener Button.>

B: INSTALLATION

Install each part in the reverse order of removal.

C: INSPECTION

1) Visually check the bulb for blow out.
2) Check the bulb specification. <Ref. to LI-2, SPECIFICATION, General Description.>
3) Replace the bulb if it is found defective.

27.High-mounted Stop Light

A: REMOVAL

1. SEDAN MODEL

1) Disconnect the ground cable from battery.
2) Remove the rear shelf trim. <Ref. to EI-120, REMOVAL, Rear Shelf Trim.>
3) Remove the high-mounted stop light.
   (1) Disconnect the connector.
   (2) Remove the lock washers and remove the high-mounted stop light.

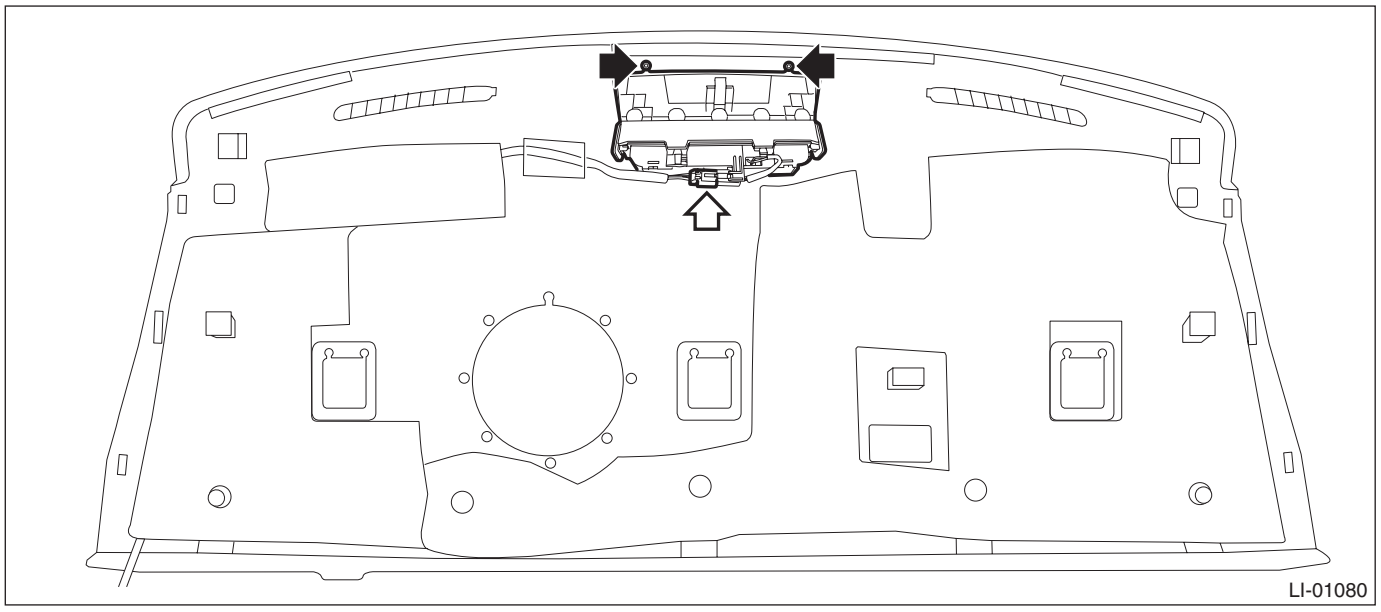

2. OUTBACK MODEL

1) Disconnect the ground cable from battery.
2) Remove the rear gate upper trim.
   (1) Release the claws in the trim end.
   (2) Disconnect the claws in the center of trim, and remove the rear gate upper trim.

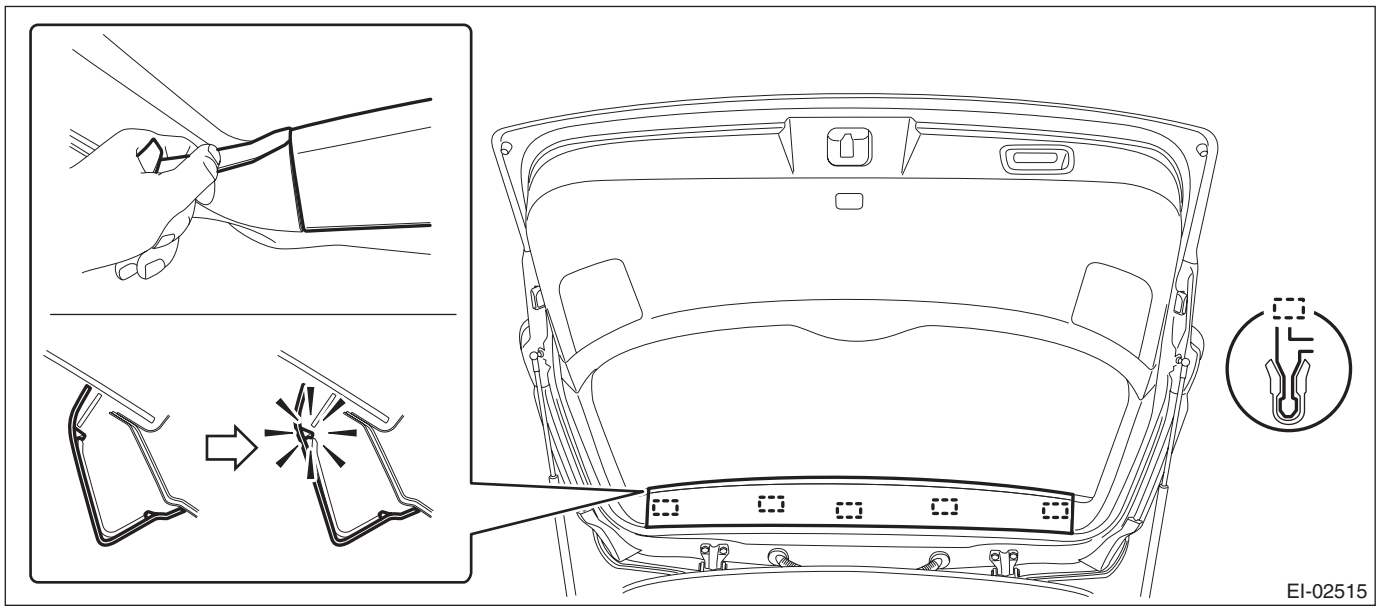

3) Remove the high-mounted stop light.
(1) Remove the nuts and take out the high-mounted stop light toward vehicle rear.

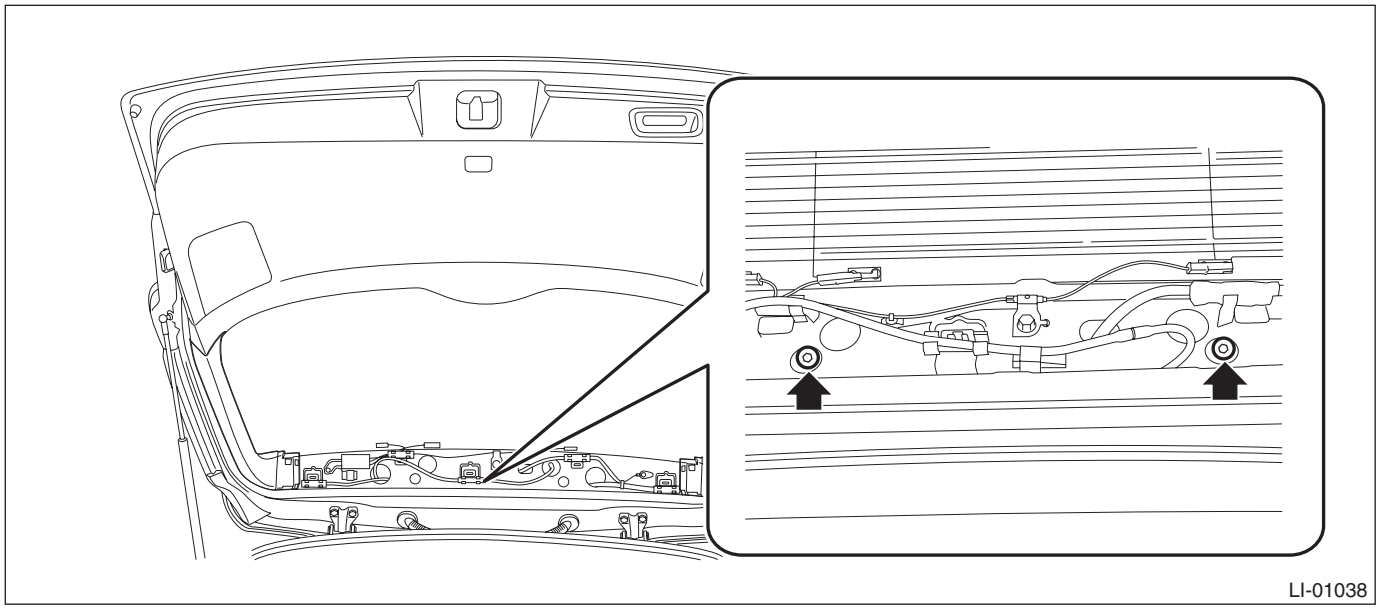
LI-01038

(2) Disconnect the connector and remove the high-mounted stop light.

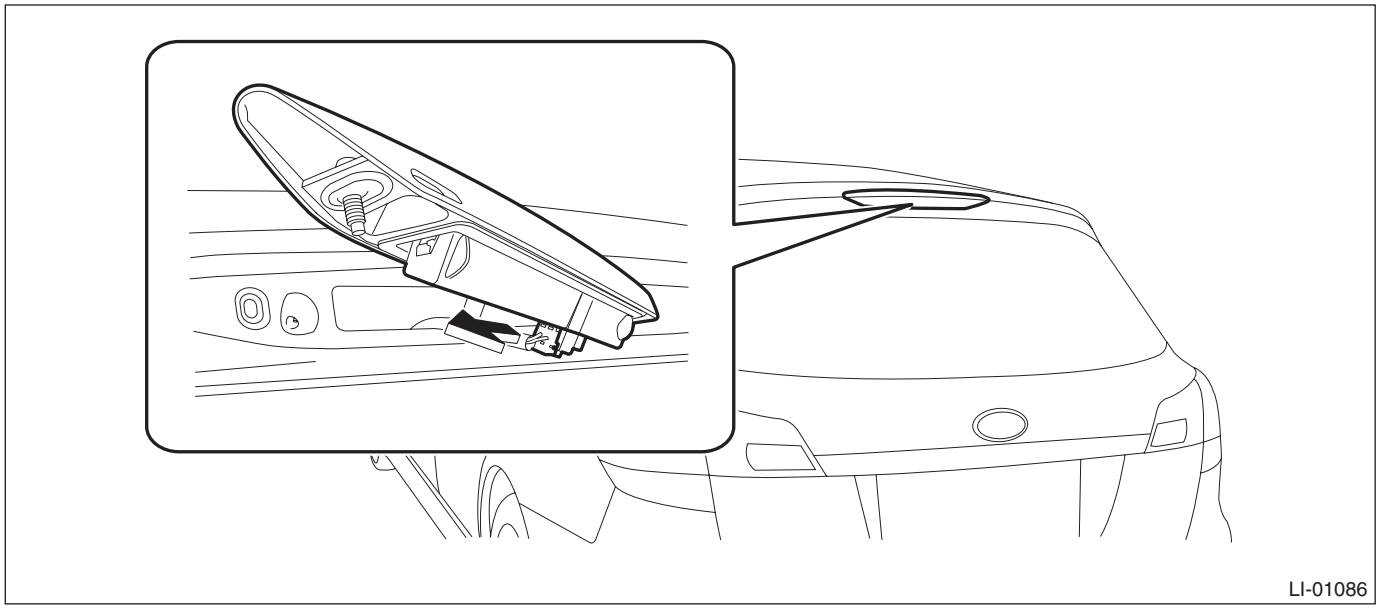
LI-01086

B: INSTALLATION

Install each part in the reverse order of removal.

Tightening torque:
High-mounted stop light: 4.5 N·m (0.46 kgf-m, 3.3 ft-lb)

C: INSPECTION

1) Install the high-mounted stop light to test if it illuminates normally.
2) If it fails to illuminate normally, replace the high-mounted stop light with a new part.

NOTE:
Since LED (Light Emitting Diode) is used for the high-mounted stop light, replace the high-mounted stop light assembly if the LED burns out.

28.Spot Map Light

A: REMOVAL

NOTE:
The spot map light is a single unit with the overhead console.
1) Disconnect the ground cable from battery.
2) Remove the overhead console assembly.
   (1) Push and open the rear end of the overhead console lid, and remove the screws.
   (2) Remove the clips and pull out the overhead console to disconnect the connectors.

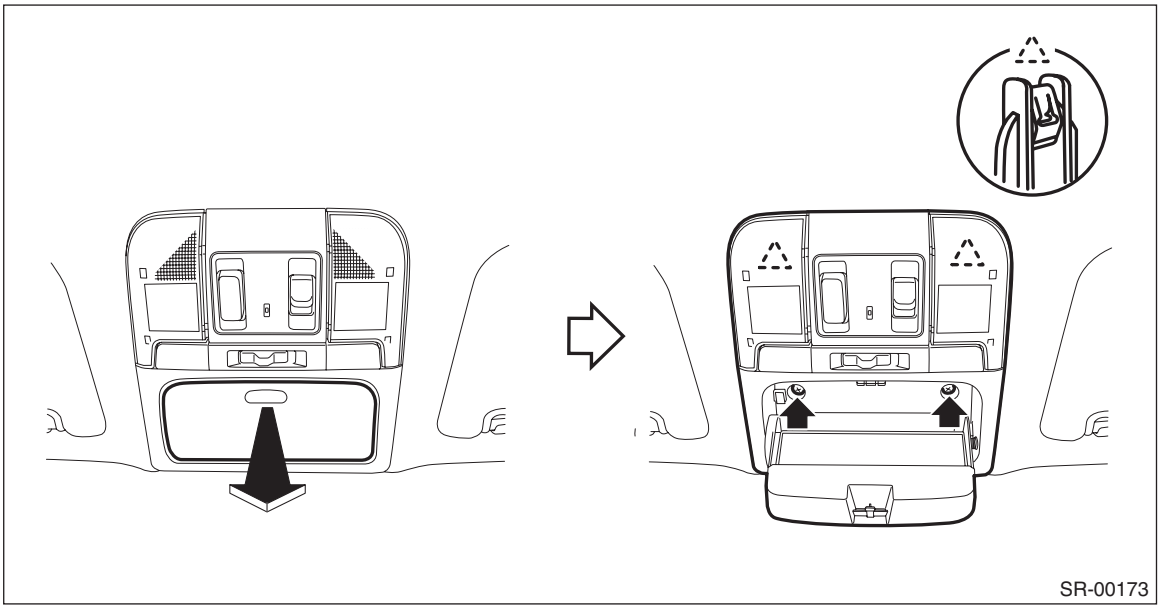

3) Release the claws, then detach the spot map light cover and bulb.

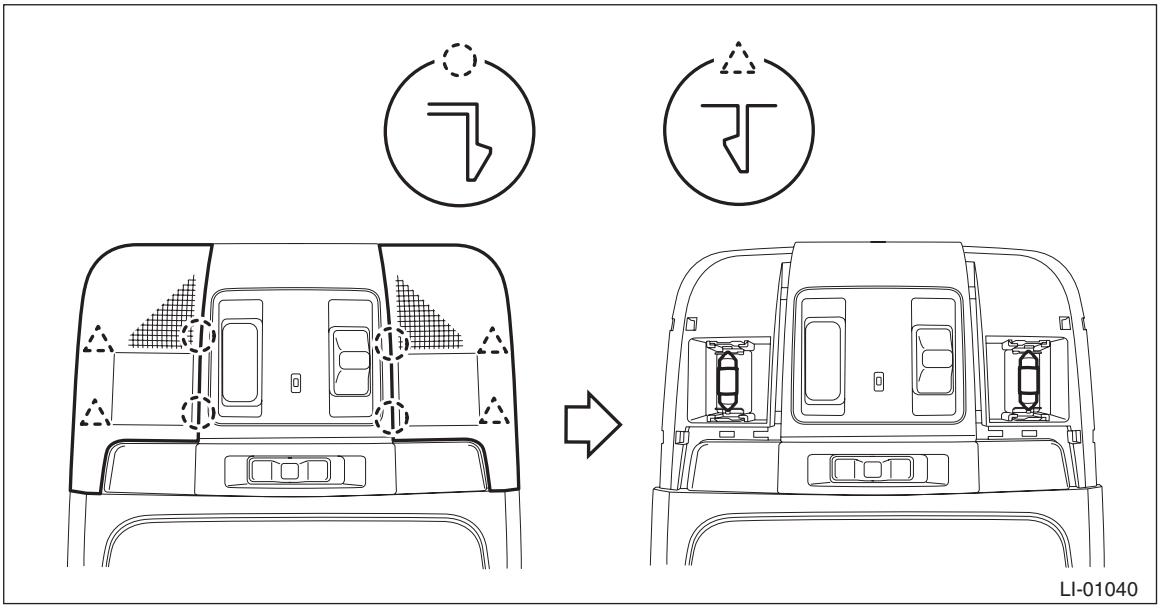

B: INSTALLATION

Install each part in the reverse order of removal.

C: INSPECTION

1. SPOT MAP LIGHT BULB

1) Visually check the bulb for blow out.
2) Check the bulb specification. <Ref. to LI-2, SPECIFICATION, General Description.>
3) Replace the bulb if it is found defective.

2. SPOT MAP LIGHT SWITCH

1) Remove the overhead console assembly.
2) Measure the resistance between spot map light switch terminals.

Preparation tool: Circuit tester

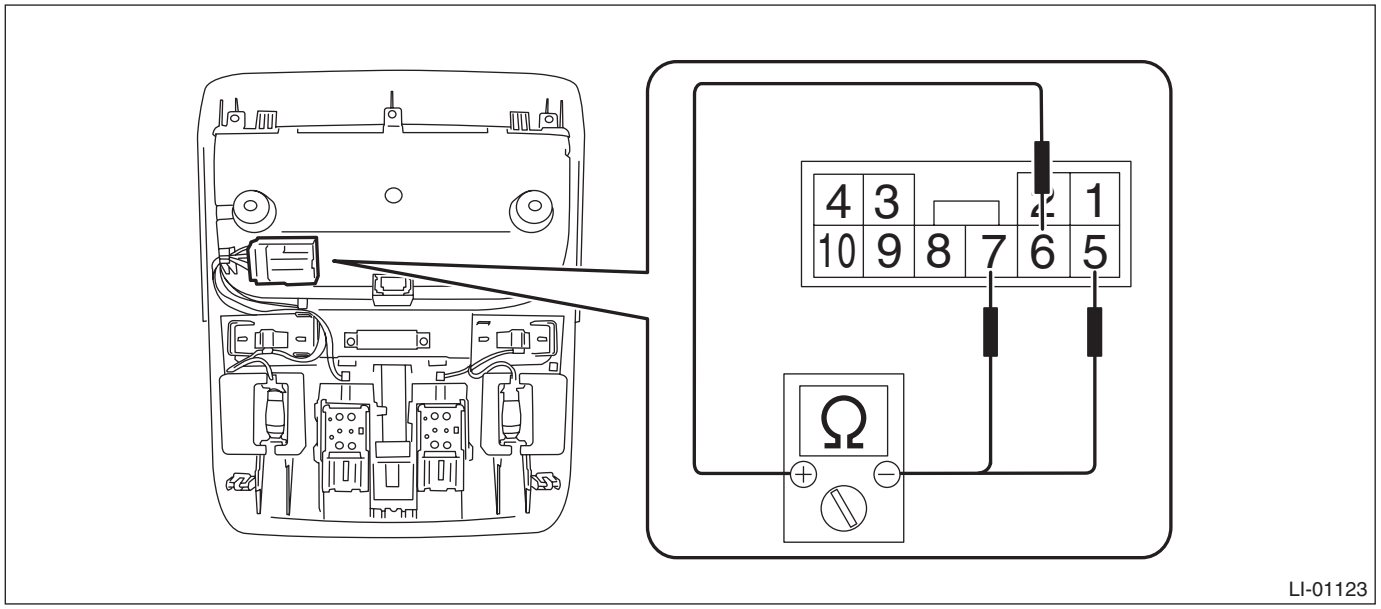

Terminal No.	Inspection Conditions	Specification
—	Switch OFF	1 MΩ or more
6 — 5	Switch ON	Less than 1 Ω
6 — 7	Switch door	Less than 1 Ω

3) Replace the overhead console assembly if the inspection result is not within the standard value.

3. OVERHEAD CONSOLE ILLUMINATION LIGHT BULB

NOTE:
Since LEDs (Light Emitting Diode) are used for the overhead console illumination light bulb, replace the overhead console assembly if an LED burns out.

29.Room Light

A: REMOVAL

1) Disconnect the ground cable from battery.
2) Remove the room light.
   (1) Release the claws and remove the cover.
   (2) Remove the screws.

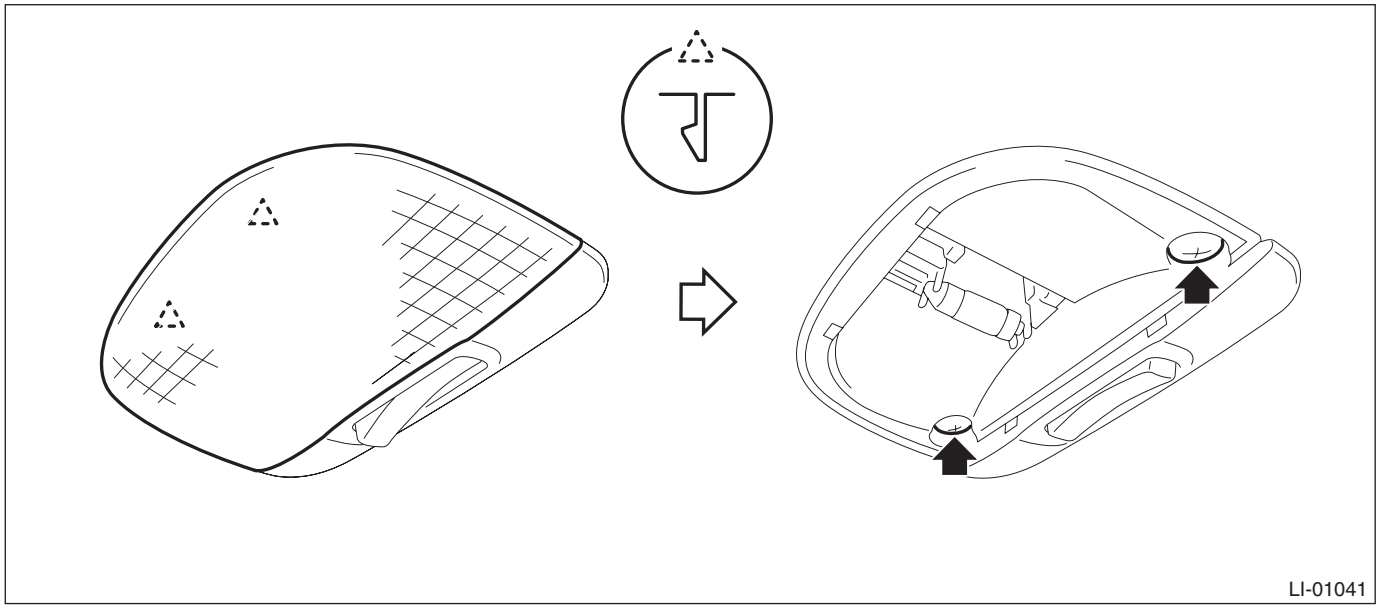

   (3) Disconnect the connector and remove the room light and bulb.

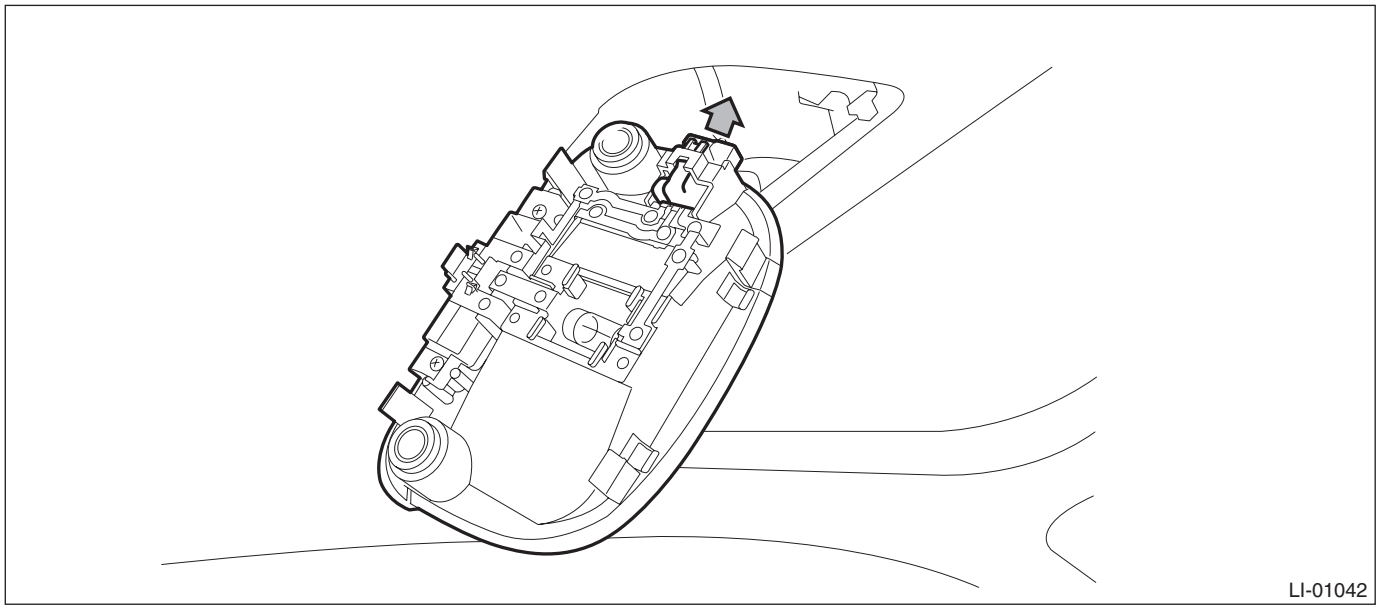

B: INSTALLATION

Install each part in the reverse order of removal.

C: INSPECTION

1. ROOM LIGHT BULB

1) Visually check the bulb for blow out.
2) Check the bulb specification. <Ref. to LI-2, SPECIFICATION, General Description.>
3) Replace the bulb if it is found defective.

2. ROOM LIGHT SWITCH

1) Remove the room light.
2) Measure the resistance between room light switch terminals.

Preparation tool: Circuit tester

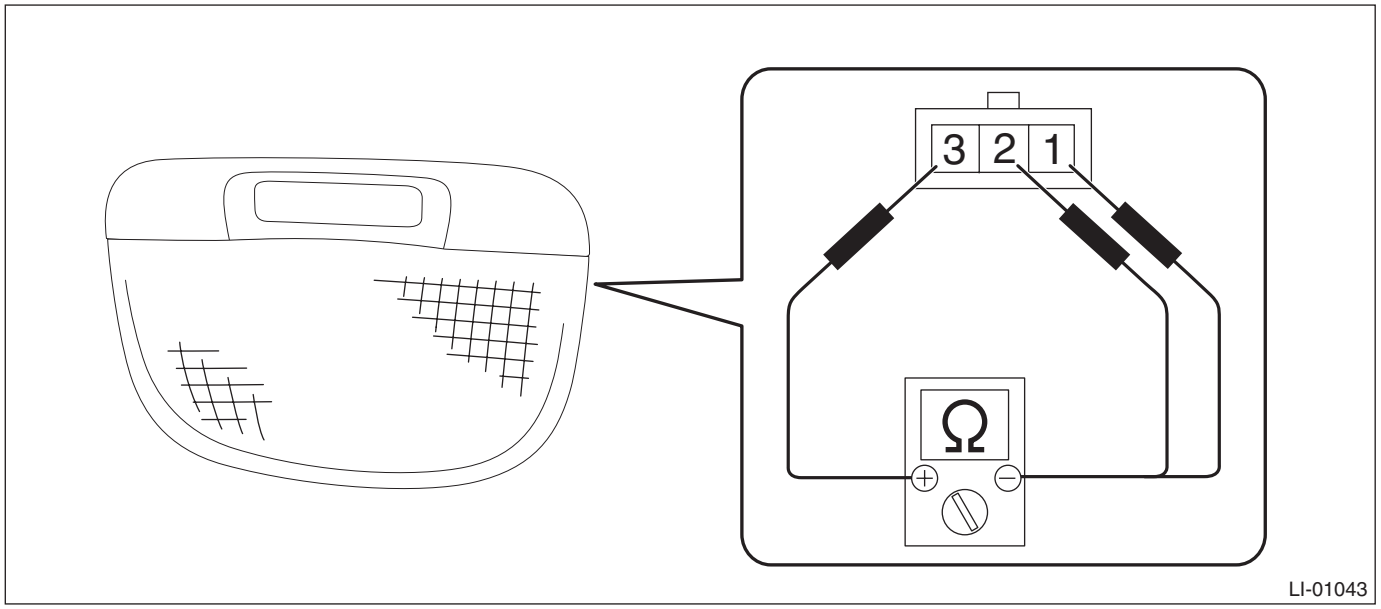

Terminal No.	Inspection Conditions	Specification
—	Switch OFF	1 MΩ or more
1 — 3	Switch ON	Less than 1 Ω
2 — 3	Switch door	Less than 1 Ω

3) Apply battery voltage to check the lighting condition of room light.

Terminal No.	Inspection Conditions	Specification
3 (+) — 1,2 (–)	Switch OFF	Light OFF
	Switch ON	Light ON
	Switch door	Light ON

4) Replace the spot map light switch if the inspection result is not within the standard value.

30.Luggage Room Light

A: REMOVAL

1) Disconnect the ground cable from battery.
2) Remove the luggage room light.
   (1) Release the claws and remove the luggage room light main body.
   (2) Disconnect the connector and remove the luggage room light.

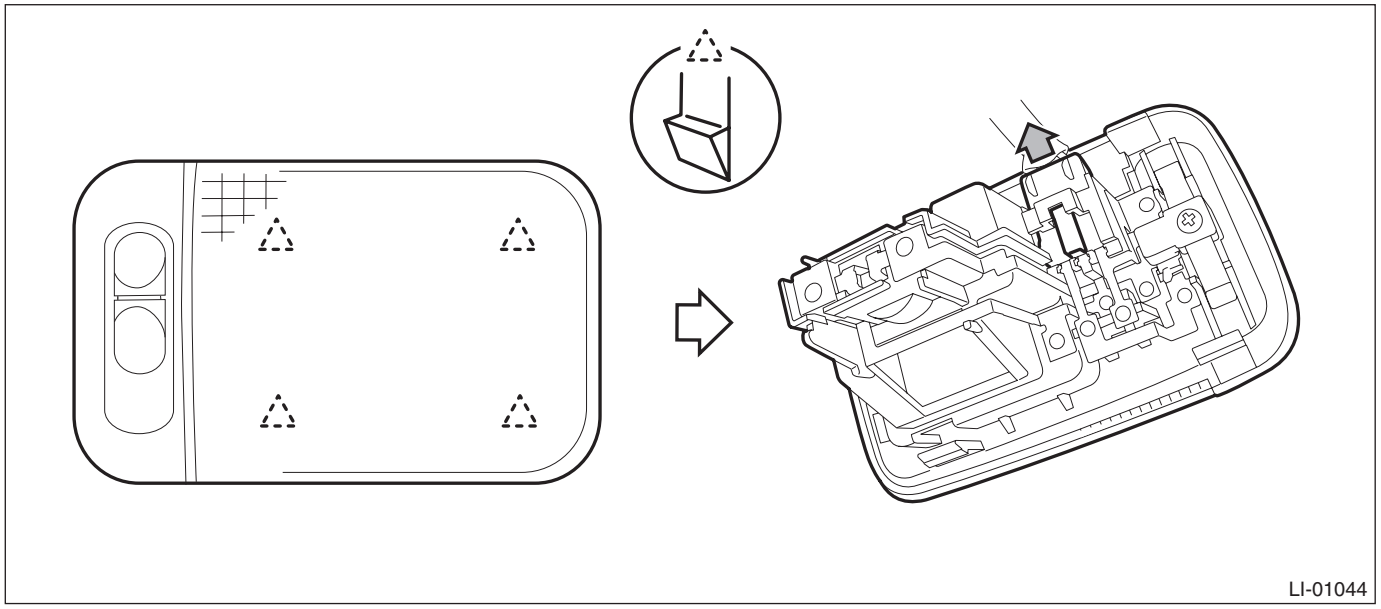

3) Release the claws, and detach the luggage room light cover and bulb.

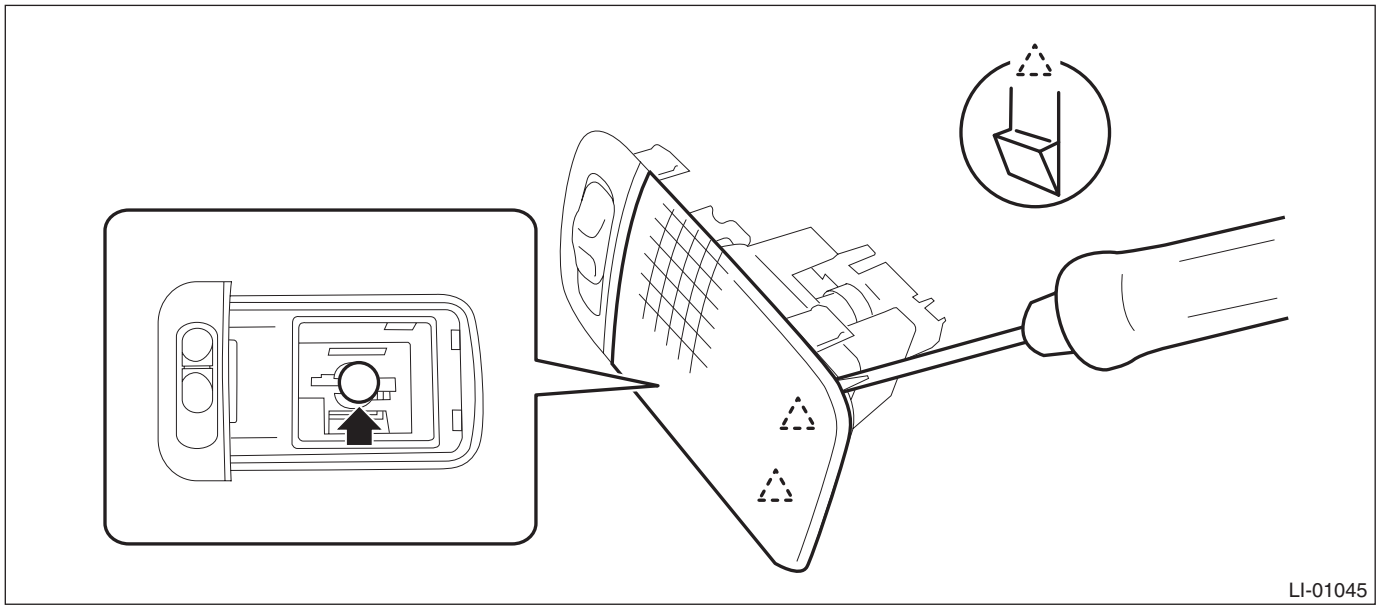

B: INSTALLATION

Install each part in the reverse order of removal.

C: INSPECTION

1. LUGGAGE ROOM LIGHT BULB

1) Visually check the bulb for blow out.
2) Check the bulb specification. <Ref. to LI-2, SPECIFICATION, General Description.>
3) Replace the bulb if it is found defective.

2. LUGGAGE ROOM LIGHT SWITCH

1) Remove the luggage room light.
2) Measure the resistance between luggage room light switch terminals.

Preparation tool: Circuit tester

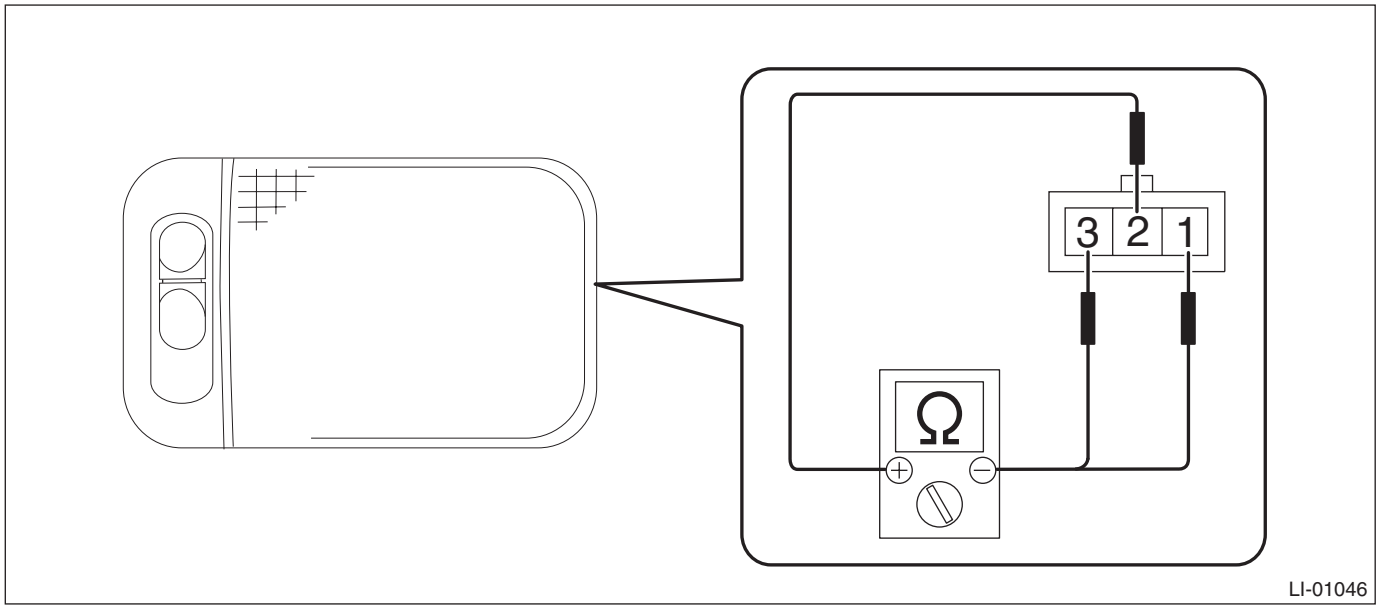

Terminal No.	Inspection Conditions	Specification
—	Switch OFF	1 MΩ or more
1 — 2	Switch ON	Less than 1 Ω
2 — 3	Switch door	Less than 1 Ω

3) Replace the luggage room light if the inspection result is not within the standard value.

31.Trunk Room Light

A: REMOVAL

1) Disconnect the ground cable from battery.
2) Remove the trunk room light
   (1) Disconnect the connector.
   (2) Turn the trunk room light counterclockwise to 60° and remove the light.

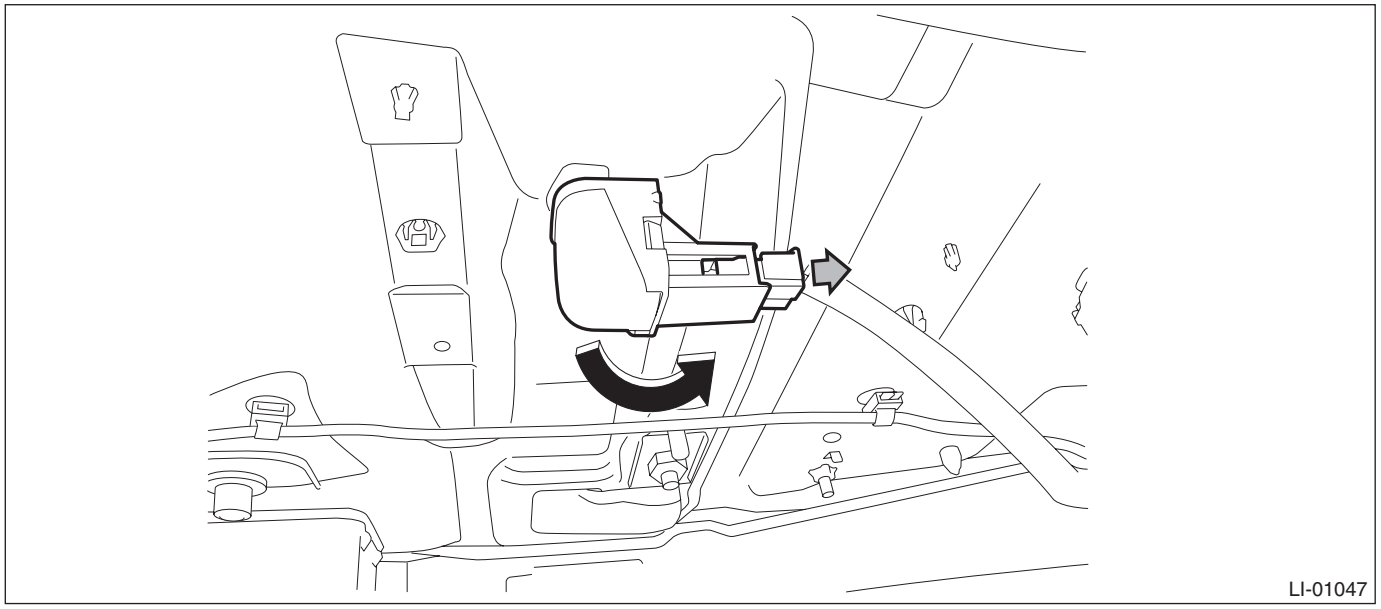

3) Release the claws, and detach the trunk room light cover and bulb.

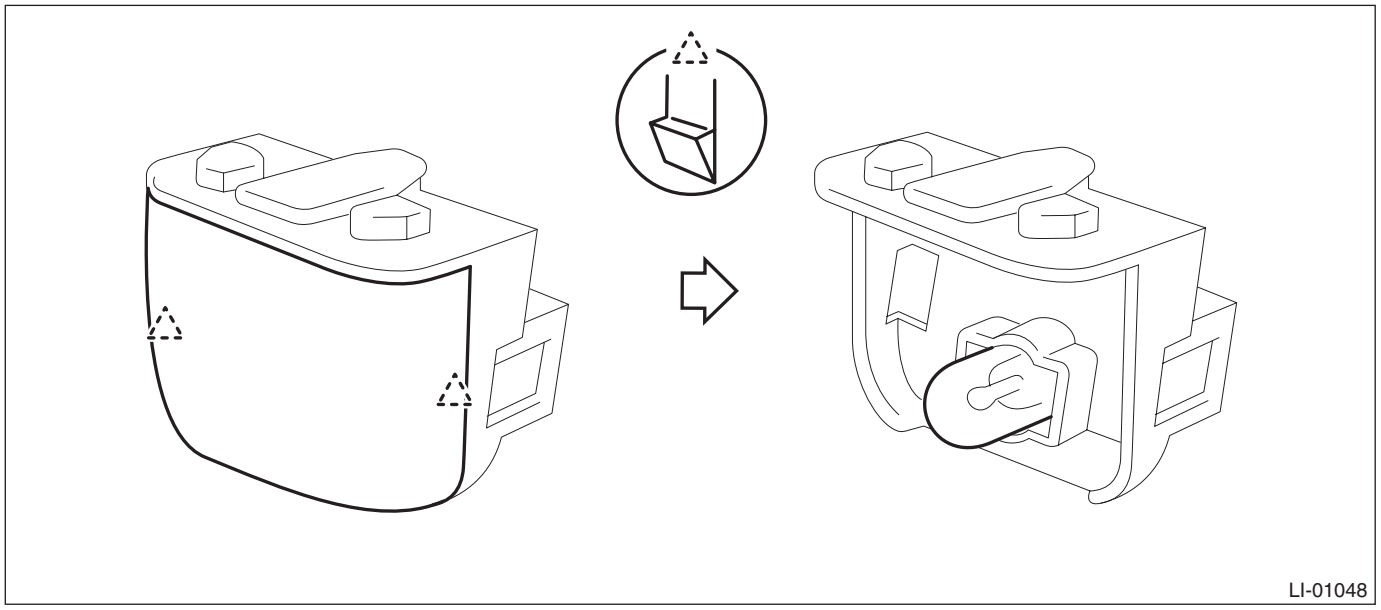

B: INSTALLATION

Install each part in the reverse order of removal.

C: INSPECTION

1) Visually check the bulb for blow out.
2) Check the bulb specification. <Ref. to LI-2, SPECIFICATION, General Description.>
3) Replace the bulb if it is found defective.

32.Glove Box Light

A: REMOVAL

1) Disconnect the ground cable from battery.
2) Remove the glove box. <Ref. to EI-66, REMOVAL, Glove Box.>
3) Remove the glove box light from the glove box back panel.

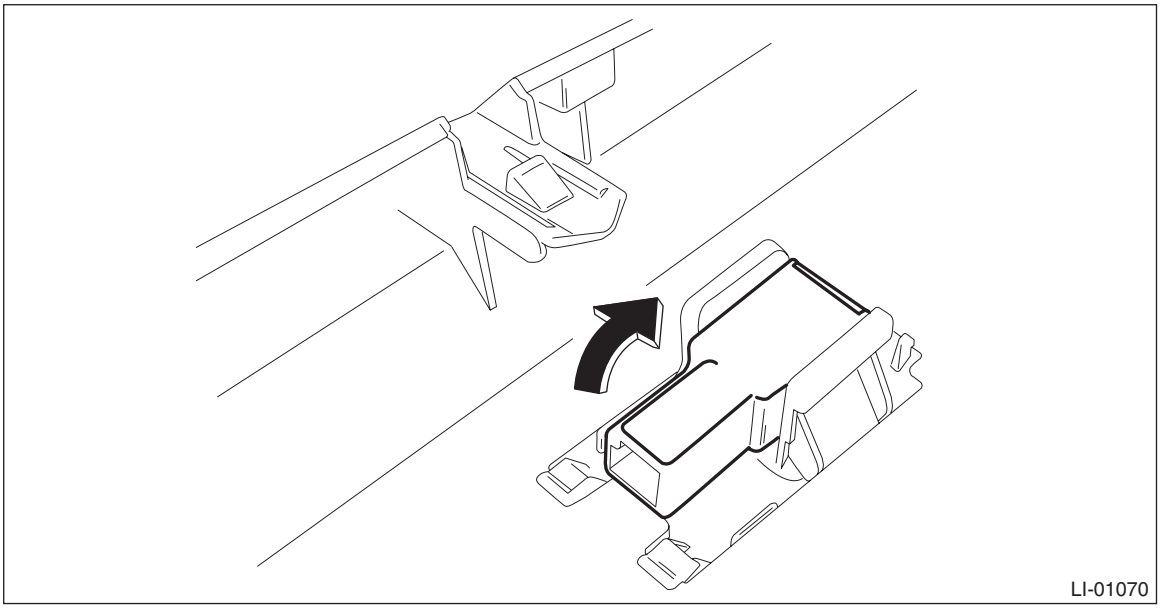

B: INSTALLATION

Install each part in the reverse order of removal.

C: INSPECTION

1) Install the glove box light and test if it illuminates normally.
2) If it is found not to illuminate normally, replace the glove box light with a new part.

NOTE:
Since LED (Light Emitting Diode) is used for the glove box light, replace the glove box light assembly if the LED burns out.

33.Door Step Light

A: REMOVAL

1) Disconnect the ground cable from battery.
2) Remove the door step light.

CAUTION:
Be careful not to damage light and door trim.

(1) Insert a flat tip screwdriver into the slit of the door step light to release the claw.
(2) Disconnect the connector and remove the door step light.

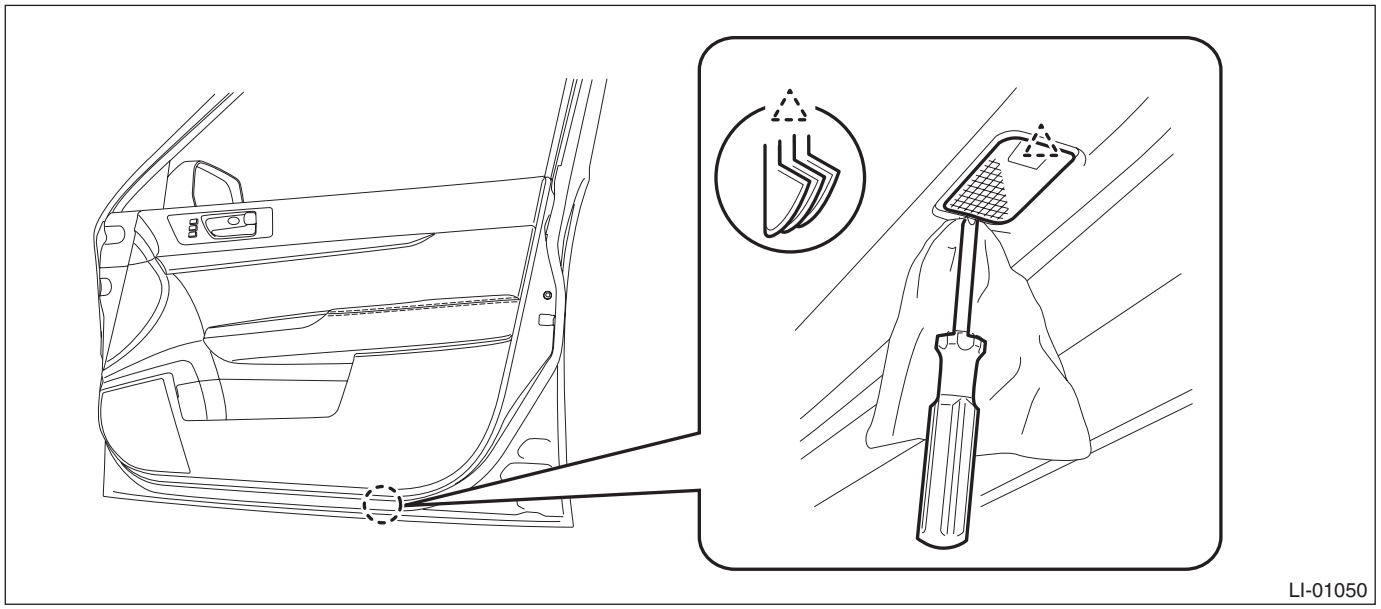

B: INSTALLATION

Install each part in the reverse order of removal.

C: INSPECTION

1) Visually check the bulb for blow out.
2) Check the bulb specification. <Ref. to LI-2, SPECIFICATION, General Description.>
3) Replace the bulb if it is found defective.

34.Ignition Switch Illumination

A: REMOVAL

1) Disconnect the ground cable from battery.
2) Remove the steering column cover.
   (1) Remove the screws by turning the steering wheel to right and left.

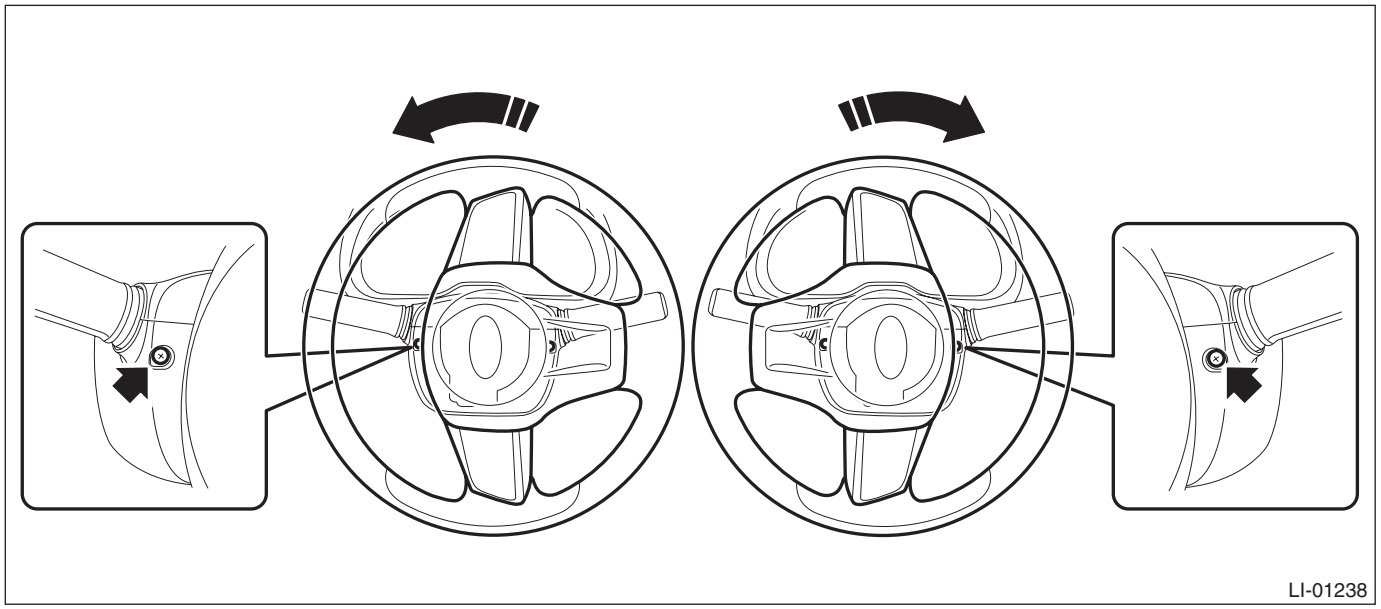

   (2) Release the claws and remove the steering column lower cover.

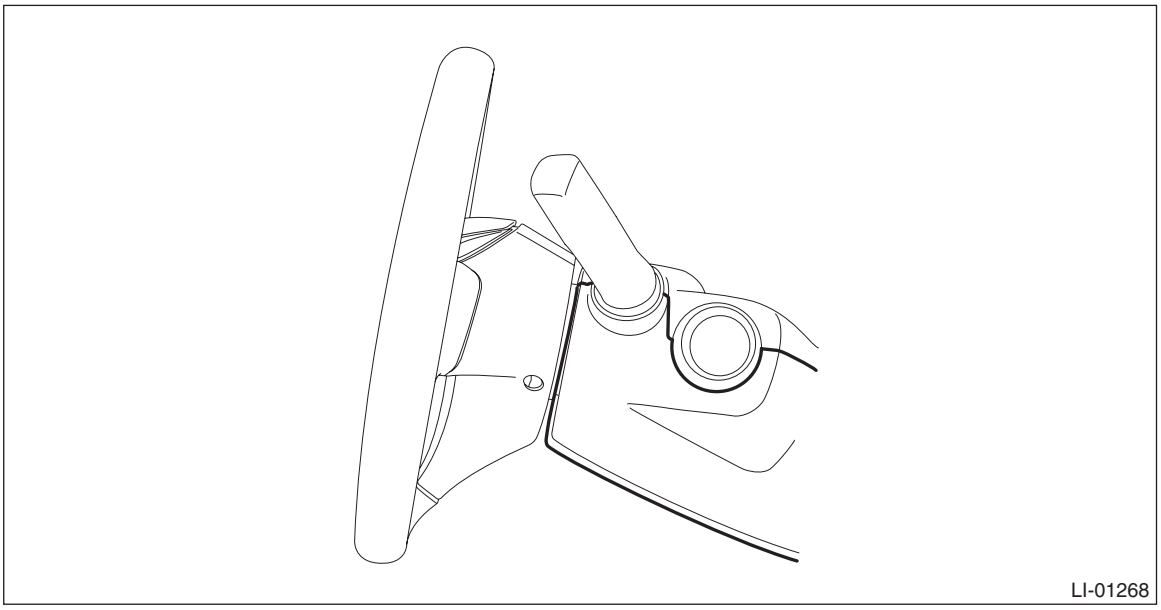

(3) Separate the steering column upper cover and steering upper cover, and remove the steering column upper cover.

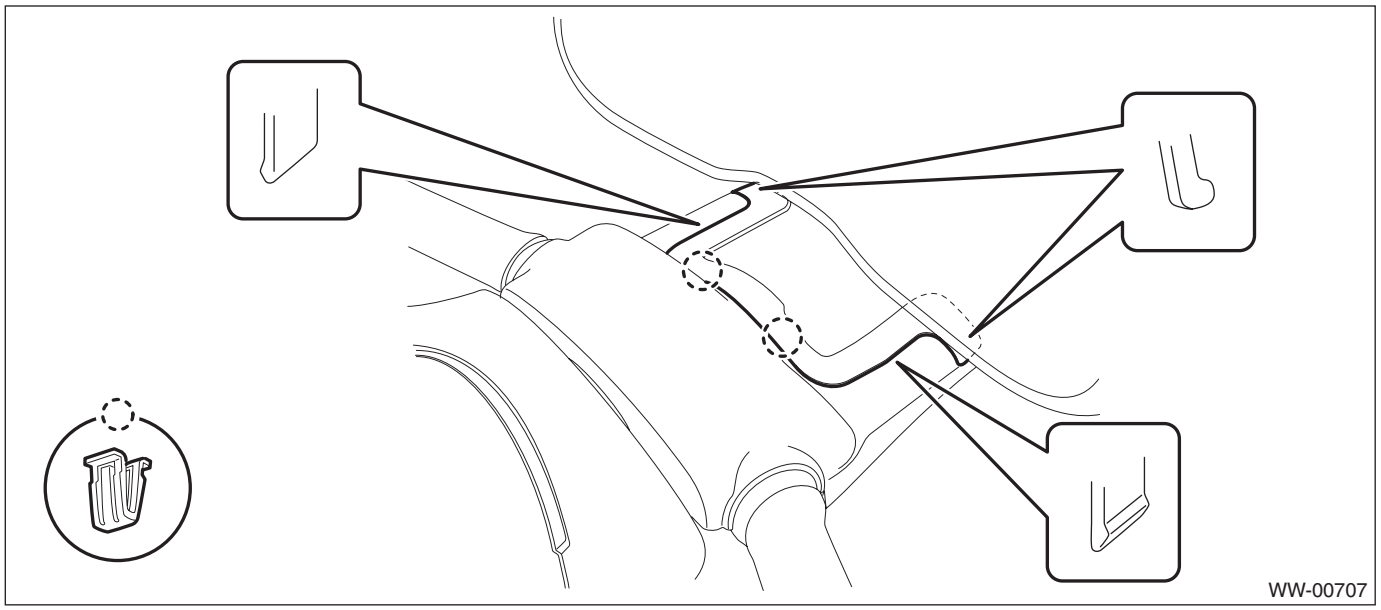

3) Remove the bulb socket and ignition switch illumination bulb.

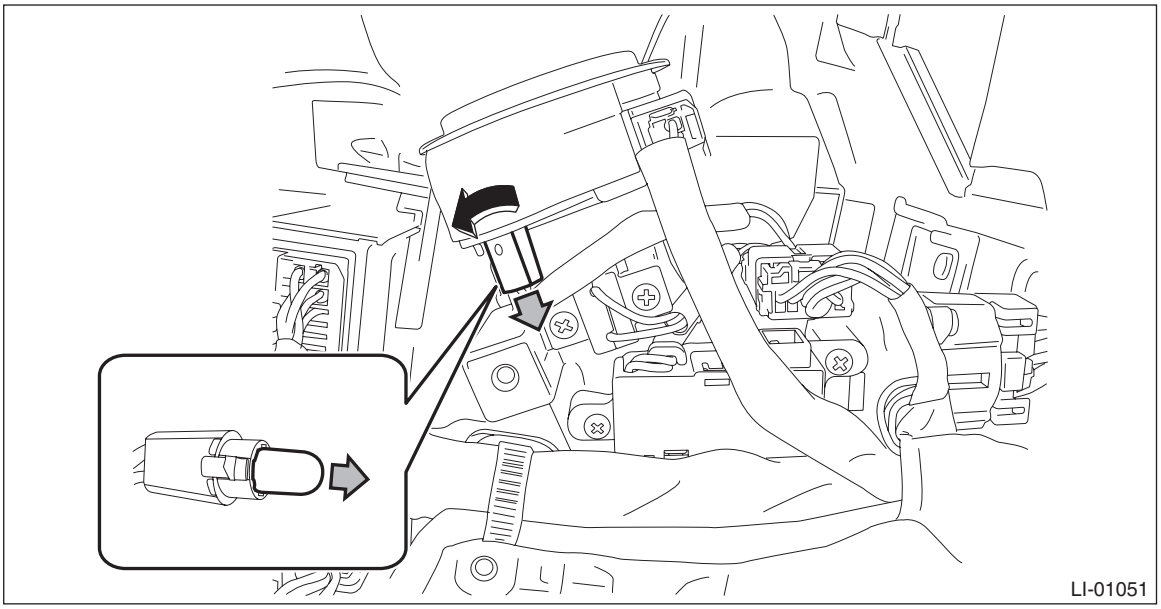

NOTE:
If the bulb socket is faulty, replace the ignition key lock. <Ref. to SL-58, Ignition Key Lock.>

B: INSTALLATION

Install each part in the reverse order of removal.

C: INSPECTION

Step		Check	Yes	No
1	**CHECK THE IGNITION SWITCH ILLUMINATION.** Make sure the ignition switch illumination illuminates when driver's side door is open.	Does the ignition switch illumination illuminate?	Ignition switch illumination is normal.	Go to step **2**.
2	**CHECK THE IGNITION SWITCH ILLUMINATION.** Make sure the ignition switch illumination blinks when the ignition switch is turned to ON.	Does the ignition switch illumination blink?	Check the function setting of body integrated unit. <Ref. to BC(diag)-2, Basic Diagnostic Procedure.>	Check the ignition switch illumination circuit. <Ref. to SL-25, CHECK IGNITION SWITCH ILLUMINATION, INSPECTION, Keyless Entry System.>

35.Day Time Running Resistor

A: REMOVAL

1) Remove the front bumper face assembly. <Ref. to EI-39, REMOVAL, Front Bumper.>
2) Remove the daytime running resistor.
   (1) Disconnect the connector.
   (2) Remove the bolt, and remove the daytime running resistor.

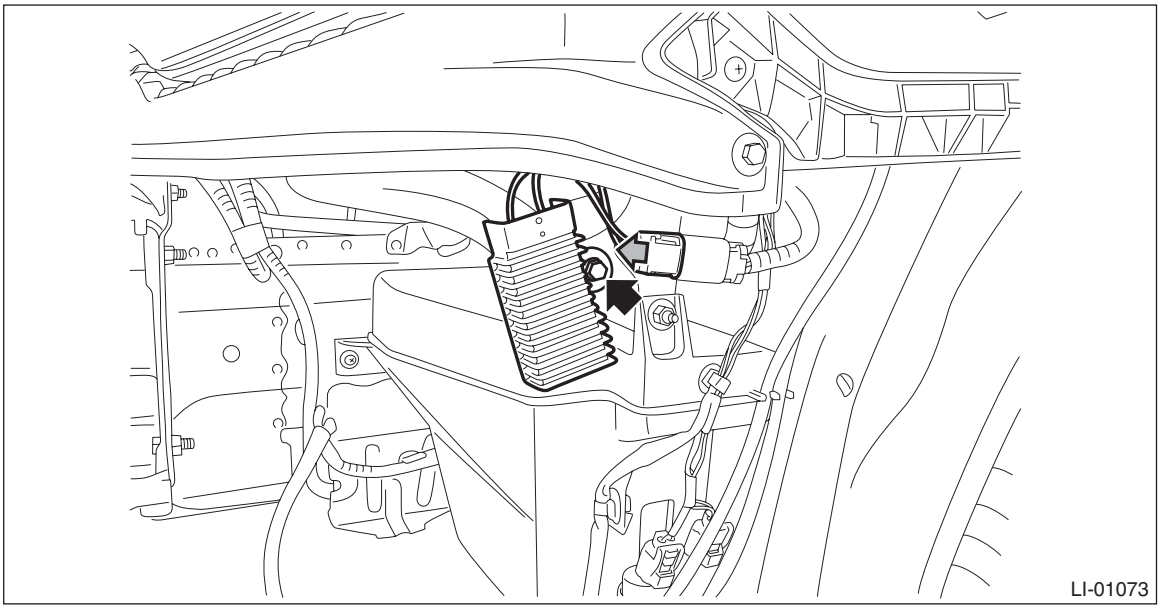

B: INSTALLATION

1) Install each part in the reverse order of removal.

Tightening torque:
Daytime running resistor: 7.5 N·m (0.76 kgf-m, 5.5 ft-lb)
2) Adjust the fog light beam. (Model with fog light) <Ref. to LI-41, FOG LIGHT AIMING, ADJUSTMENT, Front Fog Light Assembly.>

36.Reflex Reflector

A: REMOVAL

From behind the bumper, release the claws and remove the reflex reflector.

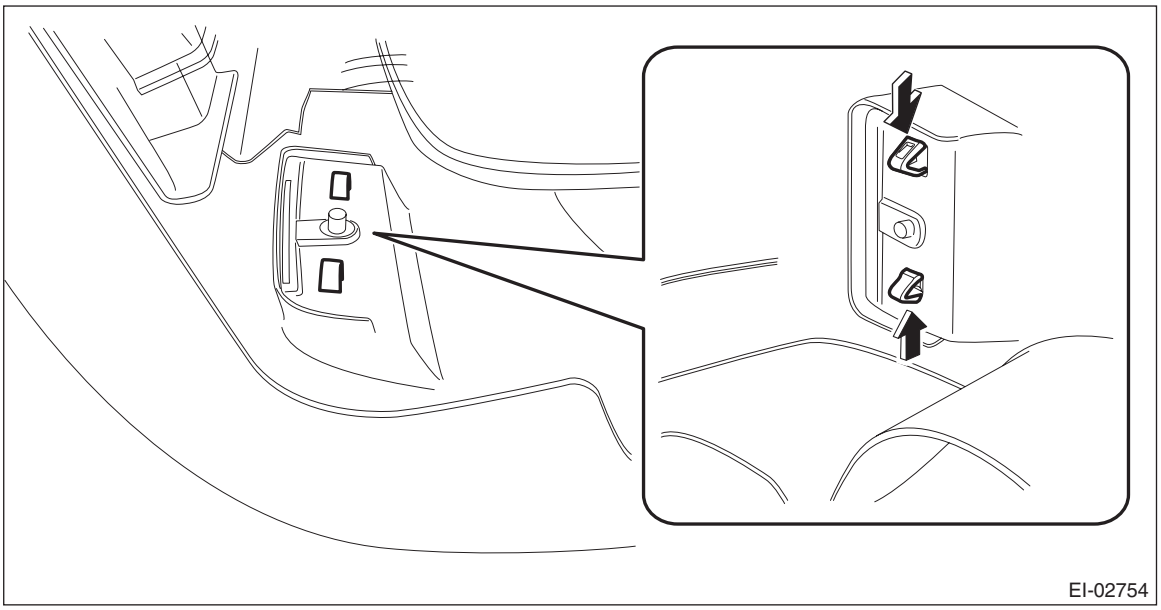

B: INSTALLATION

Install each part in the reverse order of removal.

37.Door Switch

A: REMOVAL

1) Disconnect the ground cable from battery.
2) Remove the door switch.
   (1) Remove the screws, and pull out the door switch.
   (2) Disconnect the connector and remove the door switch.

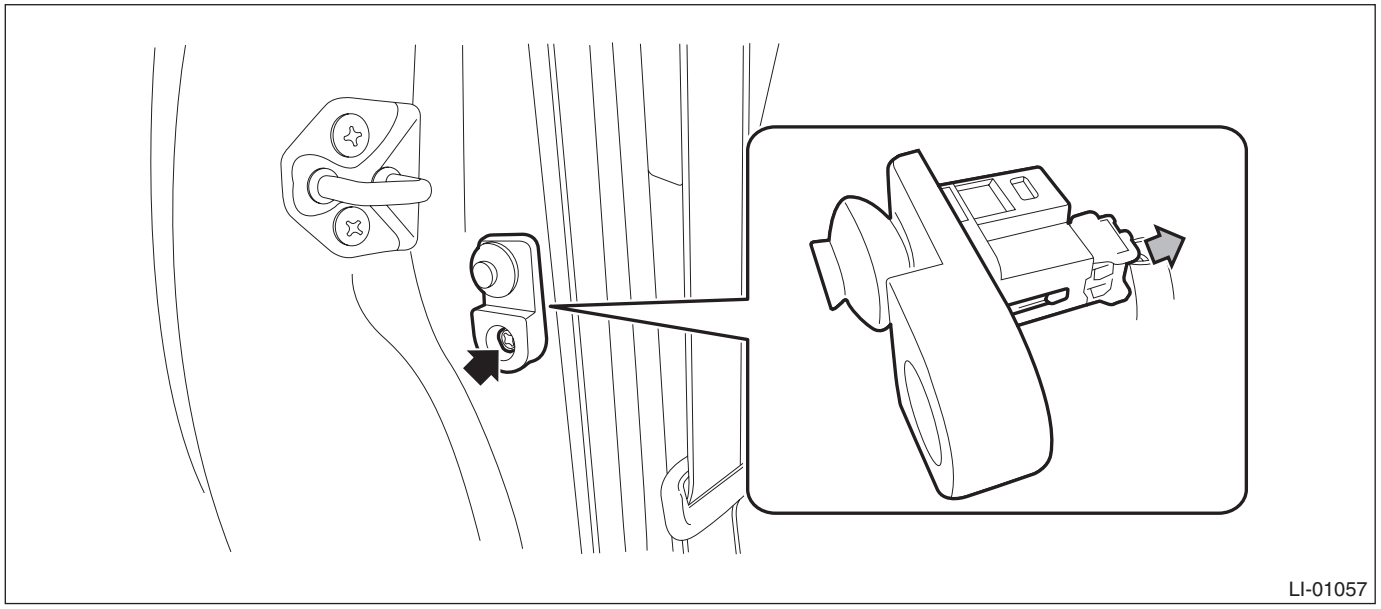

B: INSTALLATION

Install each part in the reverse order of removal.

C: INSPECTION

Refer to “CHECK DOOR SWITCH” of “Interior Light System”. <Ref. to LI-16, CHECK DOOR SWITCH., INSPECTION, Interior Light System.>

WIPER AND WASHER SYSTEMS

WW

		Page
1.	General Description	2
2.	Wiper and Washer System	8
3.	Combination Switch (Wiper)	9
4.	Wiper Blade	16
5.	Washer Tank and Motor	19
6.	Front Wiper Arm	24
7.	Front Wiper Motor and Link	25
8.	Front Washer Nozzle	31
9.	Rear Wiper Arm	36
10.	Rear Wiper Motor	38
11.	Rear Washer	43

1. General Description

A: SPECIFICATION

Front wiper motor	Input	12 V — 72 W or less
Rear wiper motor	Input	12 V — 42 W or less
Front washer motor	Pump type	Centrifugal
	Input	12 V — 36 W or less
Rear washer motor	Pump type	Centrifugal
	Input	12 V — 36 W or less

B: COMPONENT

1. FRONT WIPER

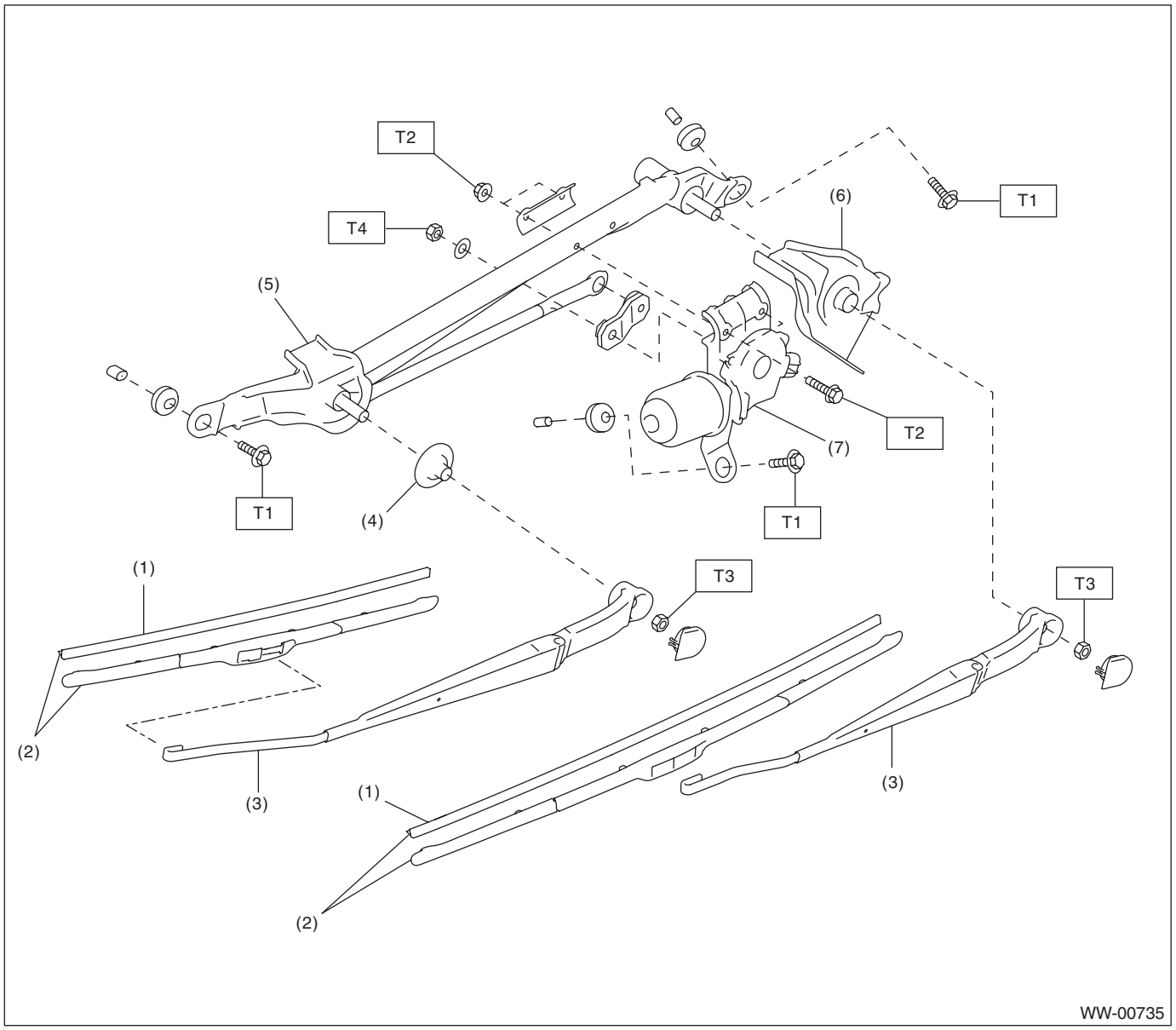

(1) Wiper rubber
(2) Wiper blade ASSY
(3) Wiper arm ASSY
(4) Pivot cover B
(5) Wiper link ASSY
(6) Pivot cover C
(7) Wiper motor assembly

Tightening torque:N·m (kgf-m, ft-lb)
T1: 6 (0.61, 4.4)
T2: 7.5 (0.76, 5.5)
T3: 22 (2.24, 16.2)
T4: 32.1 (3.27, 23.7)

2. REAR WIPER

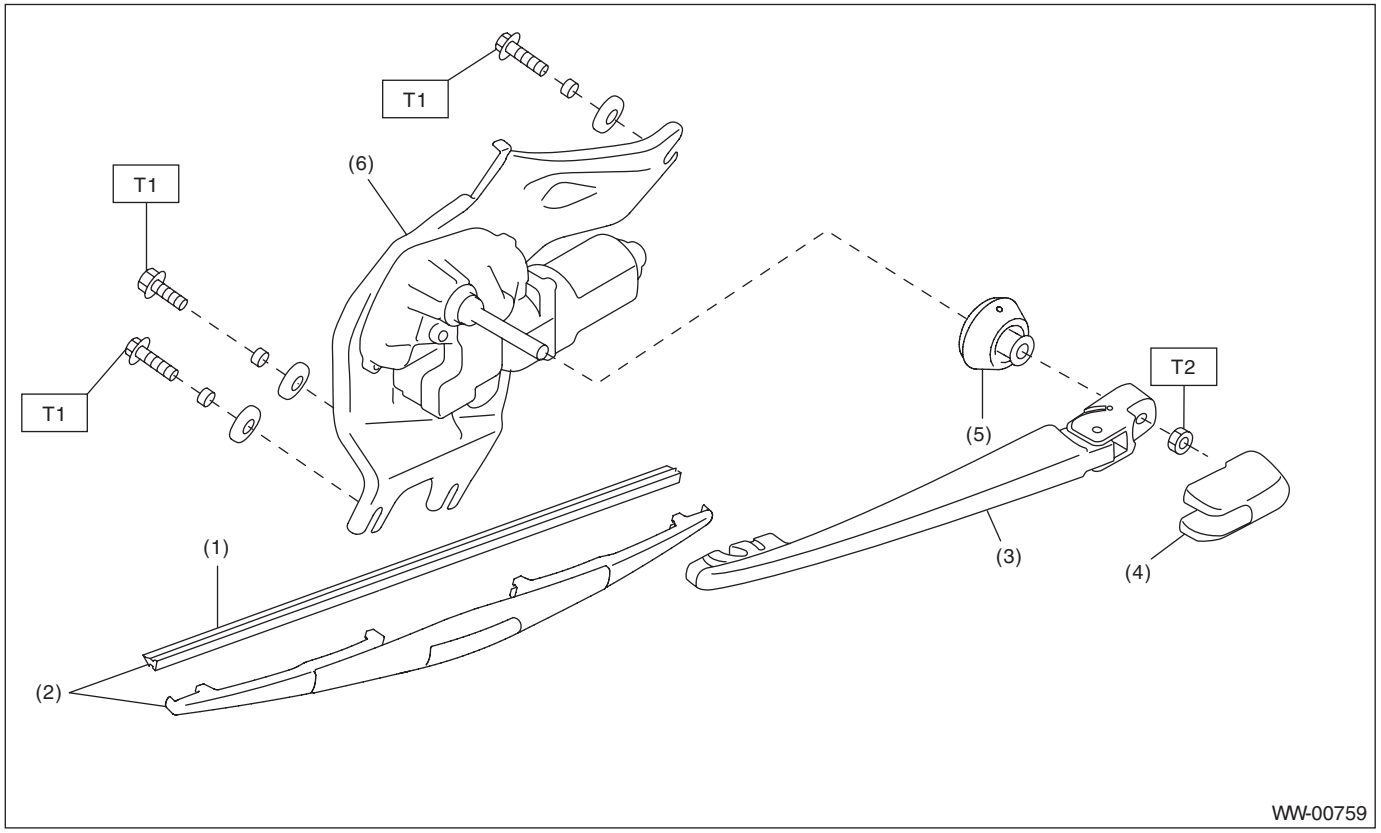

(1)	Wiper rubber	(4)	Wiper arm cover	***Tightening torque:N·m (kgf-m, ft-lb)***
(2)	Wiper blade ASSY	(5)	Pivot cap	***T1: 7 (0.71, 5.2)***
(3)	Wiper arm	(6)	Wiper motor ASSY	***T2: 8 (0.82, 5.9)***

3. WASHER TANK

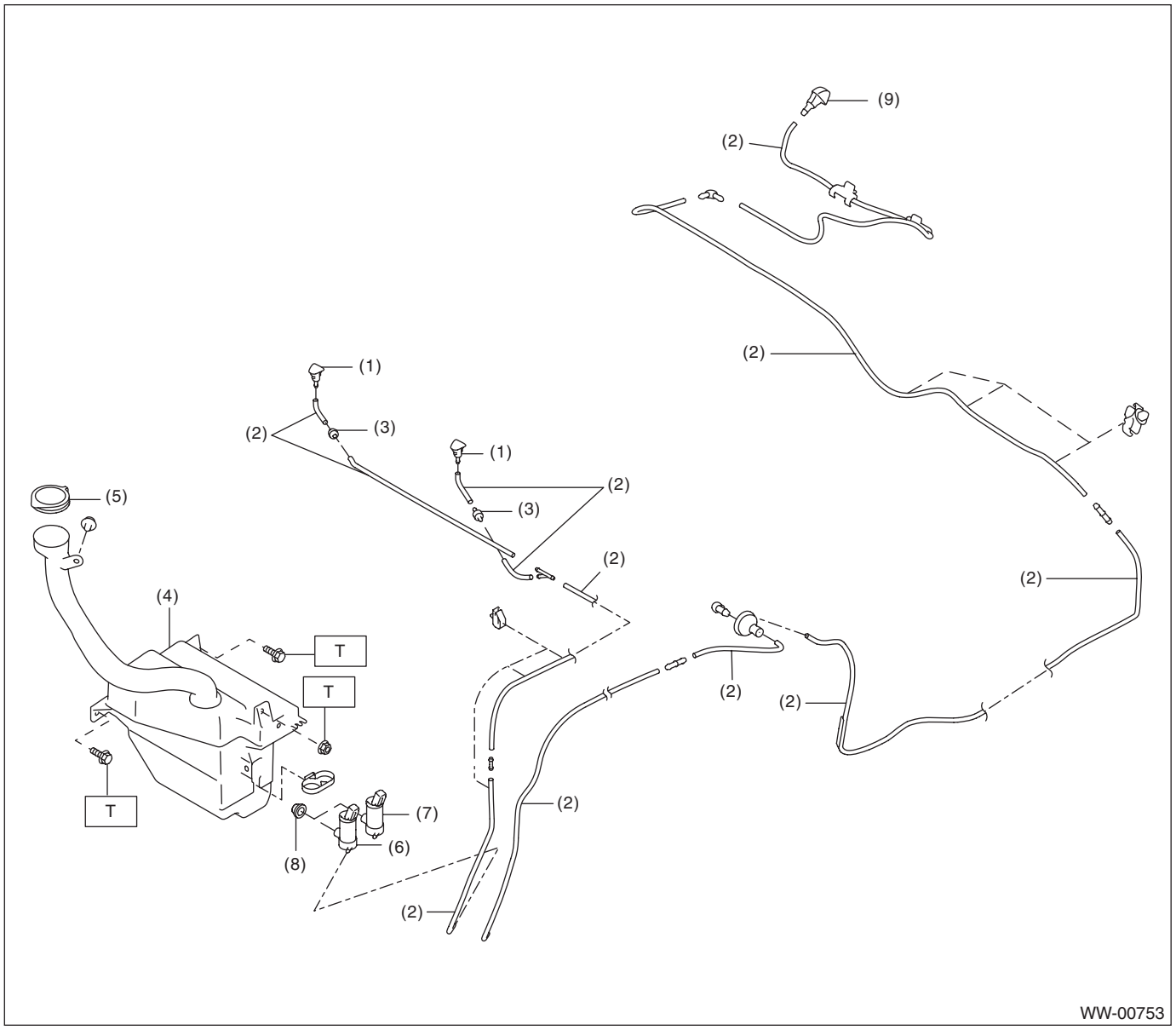

(1) Front washer nozzle
(2) Washer hose
(3) Check valve
(4) Washer tank
(5) Washer tank cap
(6) Front washer motor
(7) Rear washer motor (OUTBACK model only)
(8) Grommet
(9) Rear washer nozzle (OUTBACK model only)

Tightening torque:N·m (kgf-m, ft-lb)
T: 6 (0.61, 4.4)

C: CAUTION

- Connect the connectors and hoses securely during reassembly.
- After reassembly, make sure functional parts operates smoothly.
- Be careful with the airbag system wiring harness which passes near electrical parts and switches.
- Yellow connectors and harnesses with yellow tapes around them are the connectors and harnesses for the airbag system. Using a tester above such circuits may cause malfunction of airbag system. Follow the cautions for the airbag system in this case. <Ref. to AB-9, CAUTION, General Description.>
- When connecting the pipe hoses, be careful not to cause bend or blockage.
- If even a small amount of silicon oil or grease enters tank and washer fluid passages, an oil film will be formed on the glass and will cause the wiper to chatter and judder. Make sure that no oil comes into contact with the system.

D: PREPARATION TOOL

1. SPECIAL TOOL

ILLUSTRATION	TOOL NUMBER	DESCRIPTION	REMARKS
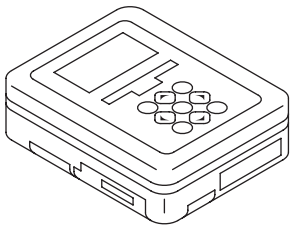 ST1B022XU0	1B022XU0	SUBARU SELECT MONITOR III KIT	Used for setting of each function and trouble-shooting for electrical system.

2. GENERAL TOOL

TOOL NAME	REMARKS
Circuit tester	Used for checking voltage and continuity.

NOTE:
Refer to the data described below, prepare the materials to make a front washer nozzle adjustment tool.

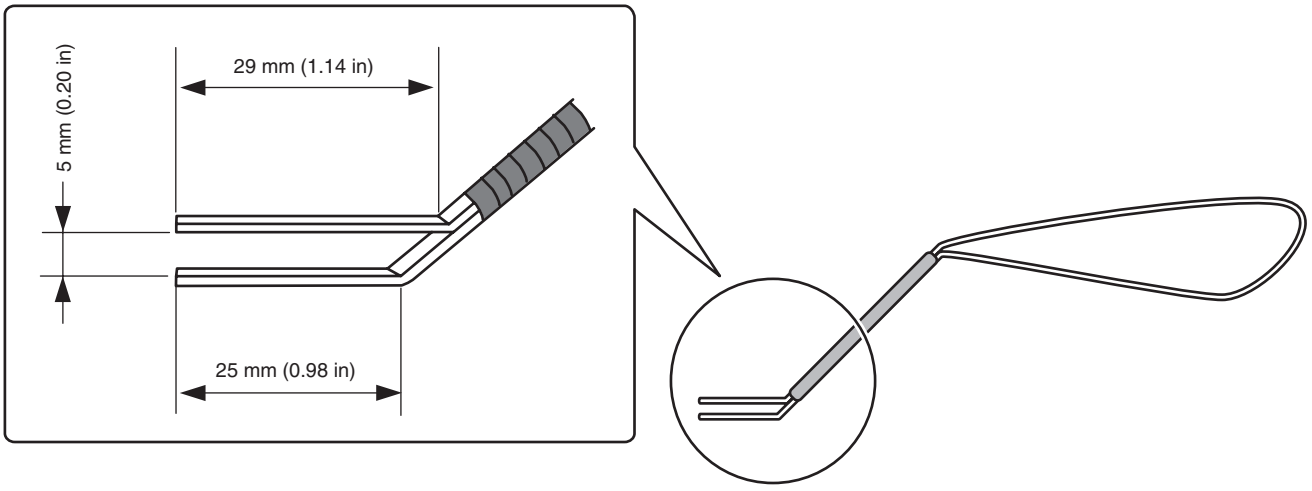

Materials
- Vertebra of wiper blade which is to be discarded
- Vinyl tape

Steps of making a front washer nozzle adjustment tool

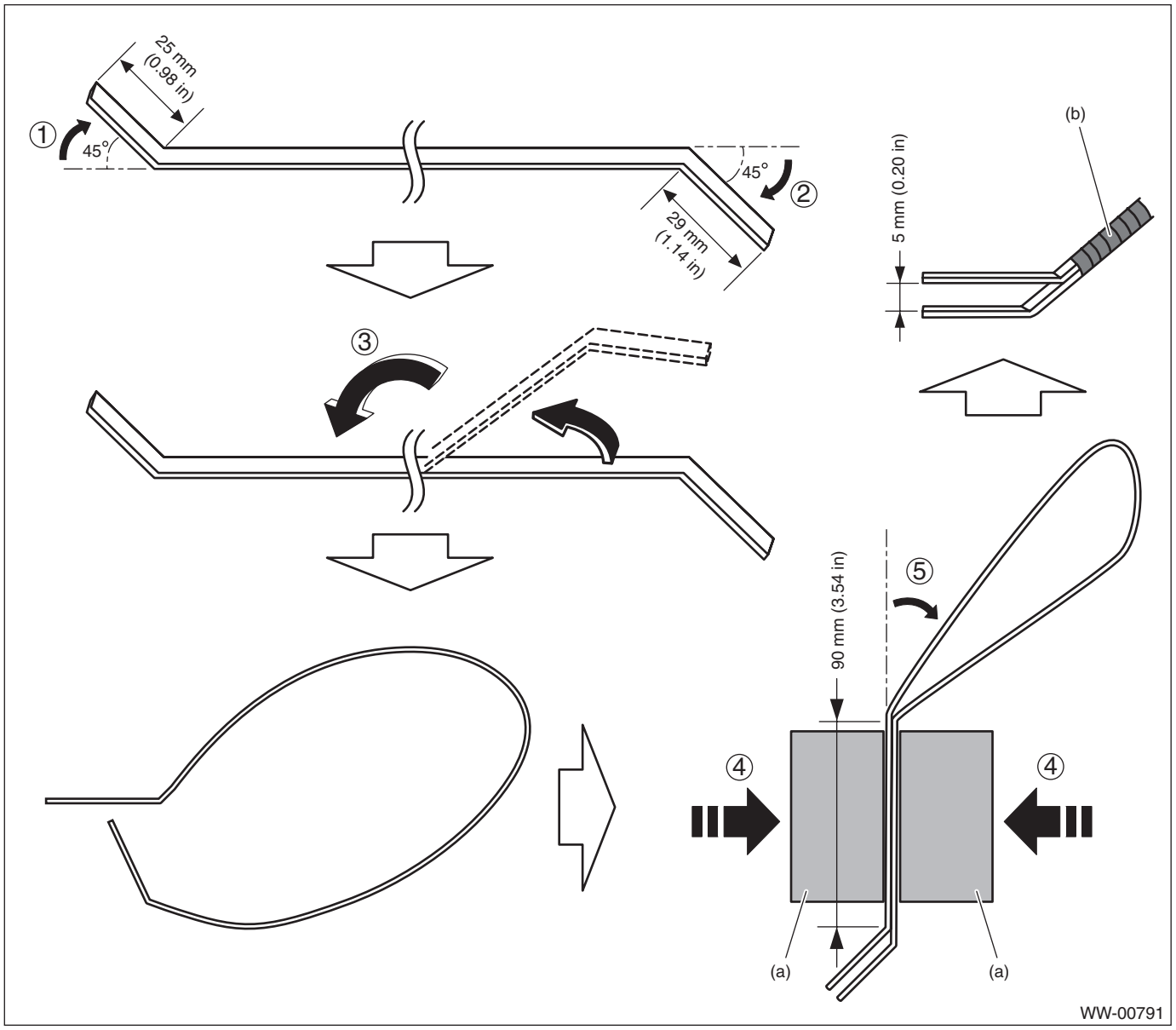

1. Bend the vertebra at the position 25 mm (0.98 in) away from its end by 45°.
2. Bend the vertebra at the position 29 mm (1.14 in) away from the other end by 45°.
3. Double up the vertebra so that the longer end (29 mm (1.14 in)) comes upward.
4. Secure the vertebra with a vise (a) so that the tip clearance becomes 5 mm (0.20 in).
5. Bend the vertebra at the position approximately 90 mm (3.54 in) away from the bending point for the longer end.
6. Check that the tip clearance is 5 mm (0.20 in), and secure the vertebra with vinyl tape (b).

2. Wiper and Washer System

A: WIRING DIAGRAM

1. WIPER AND WASHER (FRONT)

Refer to “Front Wiper and Washer System” in the wiring diagram. <Ref. to WI-169, WIRING DIAGRAM, Front Wiper and Washer System.>

2. WIPER AND WASHER (REAR)

Refer to “Rear Wiper and Washer System” in the wiring diagram. <Ref. to WI-219, WIRING DIAGRAM, Rear Wiper and Washer System.>

B: INSPECTION

Symptoms	Repair order
Wiper and washers do not operate.	1. Wiper fuse (F/B No. 14, 15) 2. Combination switch 3. Wiper motor assembly 4. Wiring harness
Wipers do not operate in LO or HI.	1. Combination switch 2. Wiper motor assembly 3. Wiring harness
Wipers do not operate in INT.	1. Combination switch 2. Wiper motor assembly 3. Wiring harness
Washer motor does not operate.	1. Washer switch 2. Washer motor 3. Wiring harness
Wipers do not operate when washer switch is ON.	1. Wiper motor assembly 2. Wiring harness
Washer fluid spray does not operate properly.	1. Washer motor 2. Washer hose and nozzle

C: NOTE

For procedure of each component of the wiper and washer system, refer to the respective sections.

- Combination switch (wiper): <Ref. to WW-9, Combination Switch (Wiper).>
- Wiper blade: <Ref. to WW-16, Wiper Blade.>
- Washer tank and motor: <Ref. to WW-19, Washer Tank and Motor.>
- Front wiper arm: <Ref. to WW-24, Front Wiper Arm.>
- Front wiper motor and link: <Ref. to WW-25, Front Wiper Motor and Link.>
- Front washer nozzle: <Ref. to WW-31, Front Washer Nozzle.>
- Rear wiper arm: <Ref. to WW-36, Rear Wiper Arm.>
- Rear wiper motor: <Ref. to WW-38, Rear Wiper Motor.>
- Rear washer nozzle: <Ref. to WW-43, Rear Washer.>

3. Combination Switch (Wiper)

A: REMOVAL

1) Disconnect the ground cable from battery.
2) Remove the steering column cover.
   (1) Remove the screws by turning the steering wheel to right and left.

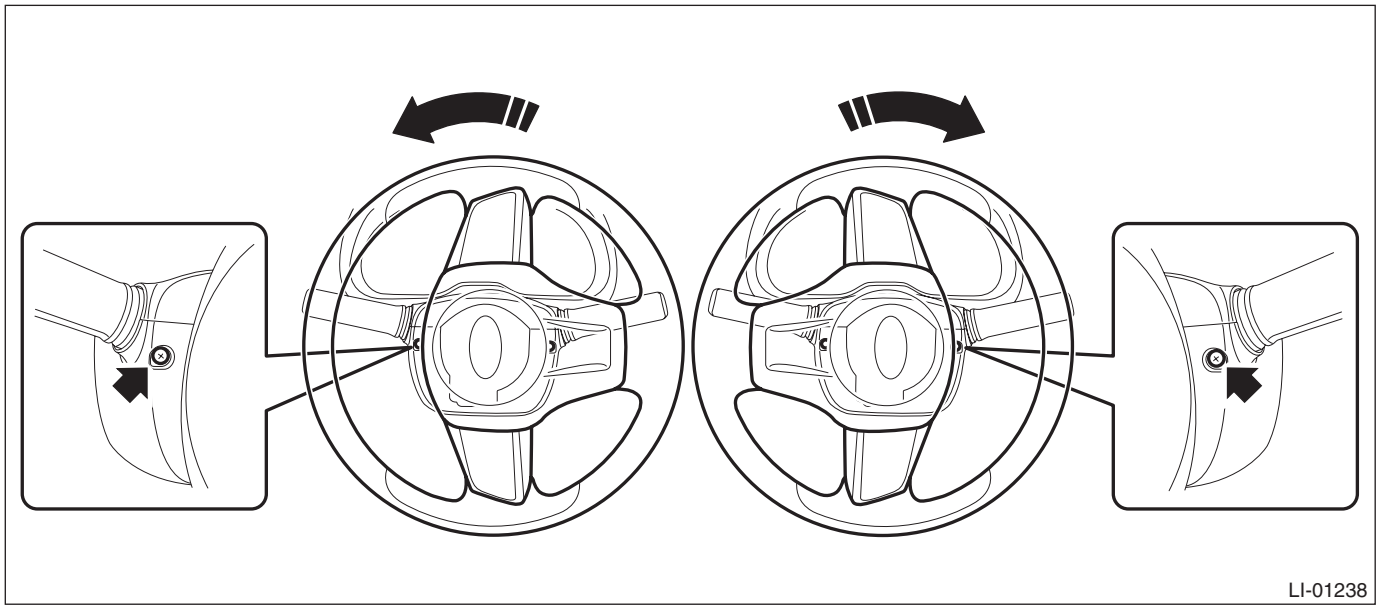

   (2) Release the claws and remove the steering column lower cover.
   (3) Separate the steering column upper cover and steering upper cover, and remove the steering column upper cover.

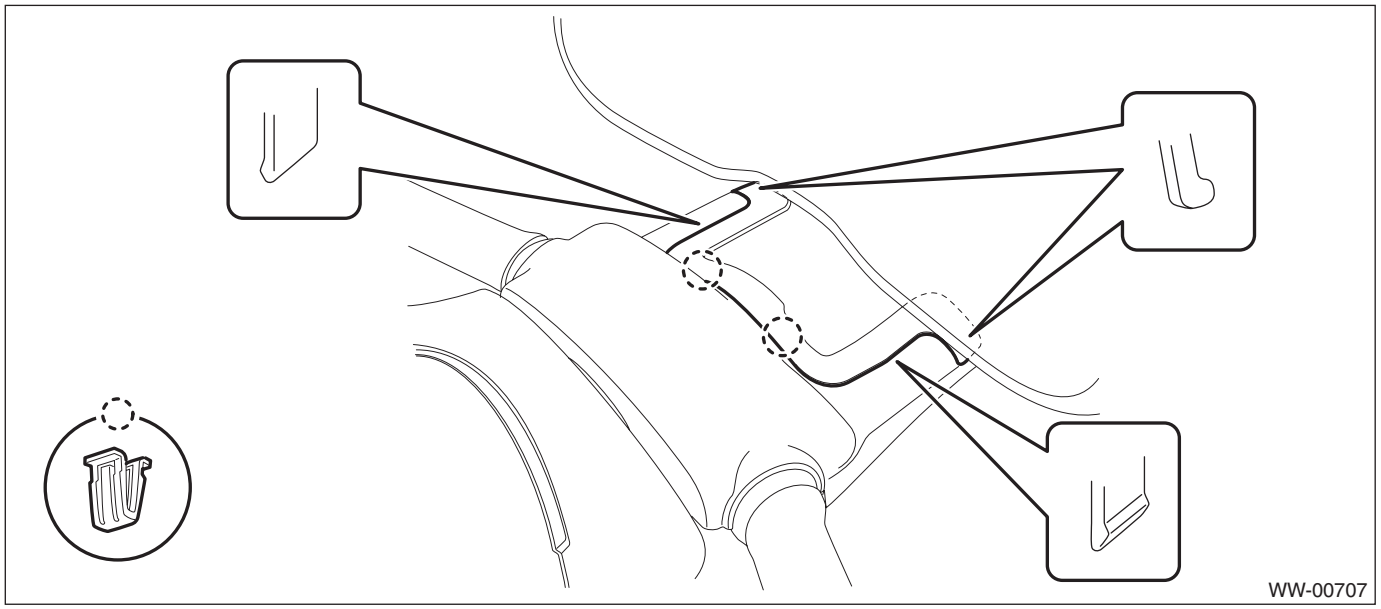

3) Remove the wiper switch assembly.
   (1) Disconnect the connector from wiper switch.
   (2) Release the claws, and pull out the wiper switch assembly.

CAUTION:
Do not press the claws with excessive force. They may be damaged.

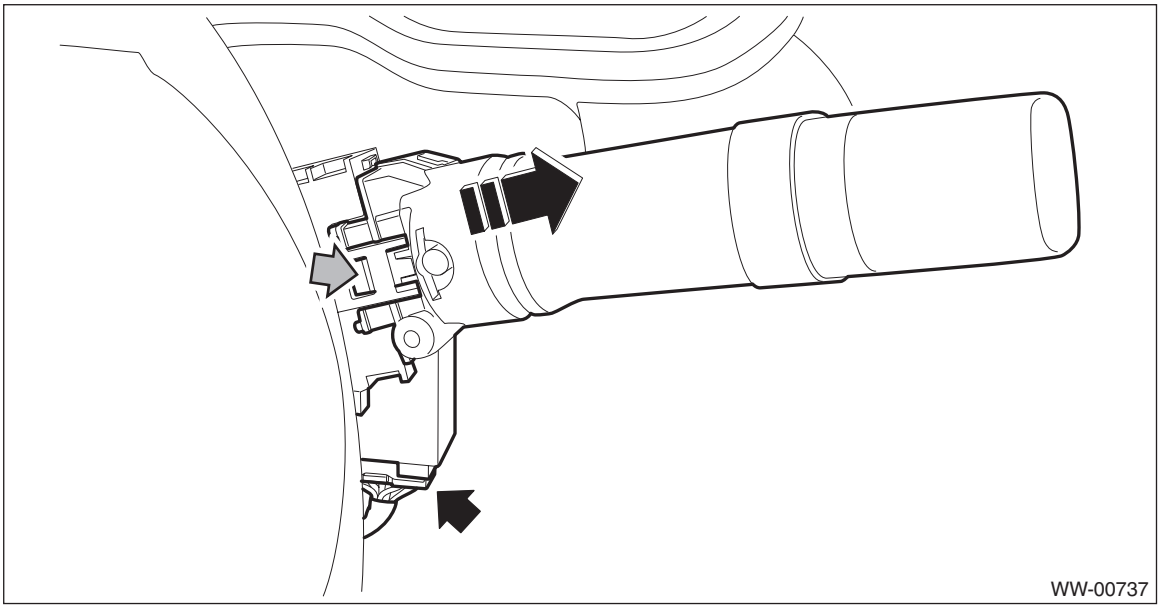

B: INSTALLATION

Install each part in the reverse order of removal.

C: INSPECTION

1. INSPECTION OF SWITCH UNIT

1) Operate the switches to check the continuity between terminals.

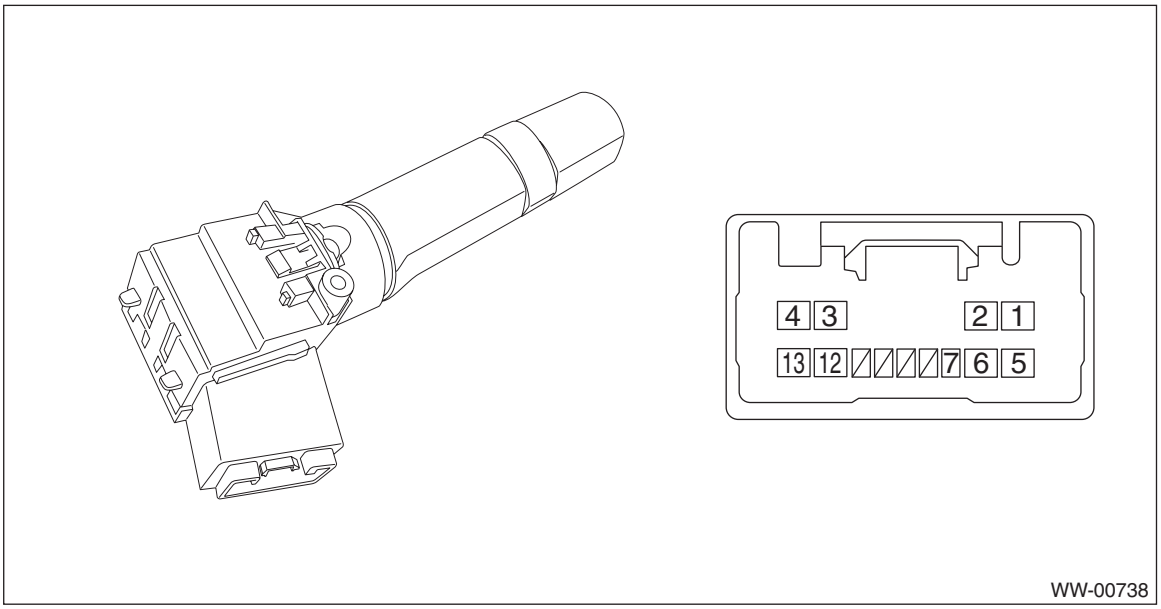

	Switch position	Terminal No.	Specification
Front	OFF	3 and 12	Less than 1 Ω
	INT	3 and 12	Less than 1 Ω
	LO	3 and 4	Less than 1 Ω
	HI	4 and 13	Less than 1 Ω
	Washer ON	1 and 2	Less than 1 Ω
Rear	OFF	5 and 2 5 and 6 2 and 6	1 MΩ or more
	ON	2 and 6	Less than 1 Ω
	INT	2 and 7	Less than 1 Ω
	Washer ON	5 and 2 5 and 6 2 and 6	Less than 1 Ω

2) Replace the switch if the inspection result is not within the standard value.

2. FRONT WIPER

1) Check with Subaru Select Monitor
   (1) Check the input signal when the front wiper switch is turned to LO or HI, using the current data display of body integrated unit.
   (2) Does the input signal change corresponding to the switch operation?
   - **Yes** → Finish the diagnosis.
   - **No** →
     1. Check the harness.
     2. Check the input voltage of body integrated unit.

Connector & terminal
(B280) No. 2 (+) — Chassis ground (–):
     3. Replace the body integrated unit. <Ref. to SL-71, Body Integrated Unit.>

2) Check the intermittent operation (inspection of the wiper switch alone)

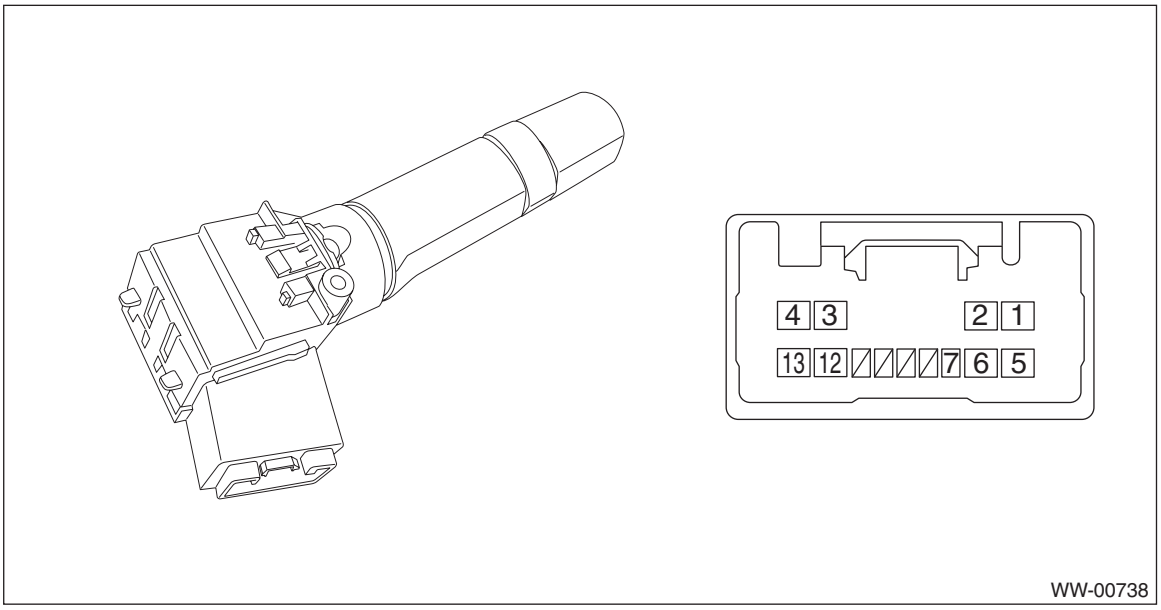

(1) Set the voltage meter between terminal No. 4 (+) and No. 3 (–).
(2) Connect the battery to connector. (Terminal No. 4 (+), terminal No. 2 & 3 (–))
(3) Turn the front wiper switch to INT.
(4) Connect the battery (+) to the terminal No. 4 for 5 seconds.
(5) Connect the battery (–) to the terminal No. 2 and check the voltage between terminal No. 4 — terminal No. 3 during intermittent operation.
(6) Perform step (1) to (5) above when intermittent control switch is in MIN or MAX, and replace the switch if the operation is not as specified.

Intermittent stationary time
MIN: Approx. 2 seconds
MAX: Approx. 16 seconds

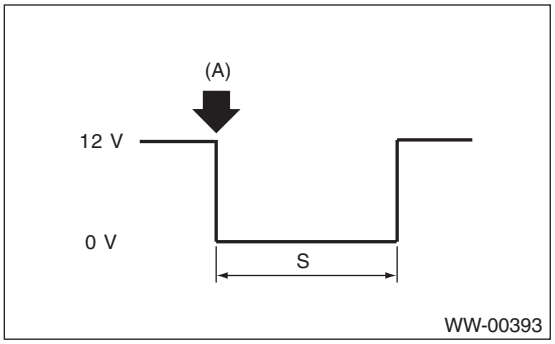

(A): Connect the battery (–) to the terminal No. 12.
S: Intermittent downtime (sec.)

3. REAR WIPER

1) Check input of body integrated unit.
Check the input signal when the rear wiper switch is operated using Subaru Select Monitor.
(1) Turn the ignition switch to ON.
(2) Operate the rear wiper switch to each position of ON, INT and Washer ON.
(3) Does the input signal change corresponding to the switch operation?
- **Yes** → Go to step 4.
- **No** → Go to step 2.

2) Check harness.
(1) Turn the ignition switch to OFF, disconnect the ground cable from battery.
(2) Disconnect the connector of body integrated unit and wiper switch.
(3) Measure the resistance between body integrated unit and wiper switch.

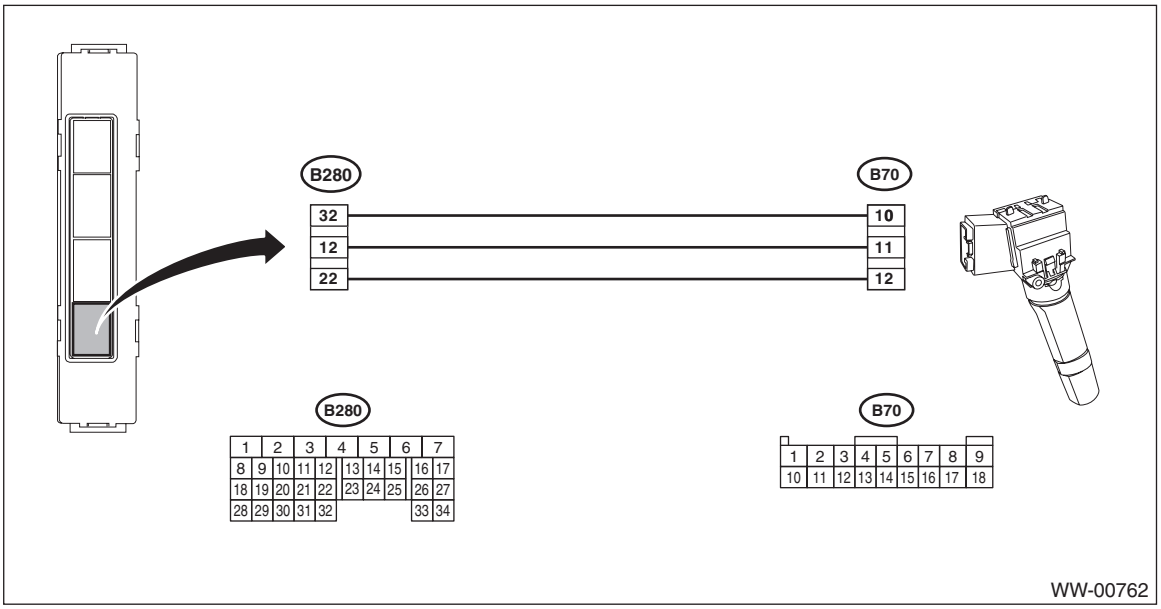

Connector & terminal
(B280) No. 32 — (B70) No. 10:
(B280) No. 12 — (B70) No. 11:
(B280) No. 22 — (B70) No. 12:
(4) Is the resistance less than 10 Ω?
- **Yes** → Go to step 3.
- **No** → Repair the harness between the body integrated unit and wiper switch.

3) Check input voltage of body integrated unit.
(1) Connect the ground cable to battery.
(2) Turn the ignition switch to ON and check the input voltage of body integrated unit.

Connector & terminal
(B280) No. 5 (+) — Chassis ground (–):
(i171) No. 17 (+) — Chassis ground (–):
(3) Is the voltage 10 V or more?
- **Yes** → Go to step 4.
- **No** → Check the harness and fuse.

4) Check output of body integrated unit.
Check the output signal when the rear wiper switch is operated using Subaru Select Monitor.
(1) Turn the ignition switch to ON.
(2) Operate the rear wiper switch to ON and Washer ON.
(3) When the operation in step (2) is performed, check the output signal of body integrated unit to rear wiper motor.
(4) When the rear wiper switch is set to ON, is ON output continuous? Also, when the washer is set to ON, is ON output?
- **Yes** → Go to step 5.
- **No** → Replace the body integrated unit. <Ref. to SL-71, Body Integrated Unit.>

5) Check output of body integrated unit.
Check the output signal when the rear wiper switch is operated using Subaru Select Monitor.
(1) Turn the ignition switch to ON.
(2) Set the rear wiper switch to INT.
(3) When the operation in step (2) is performed, check the output signal of body integrated unit.

(4) When the rear wiper switch is set to INT, is ON/OFF output repeated? (INT OFF time (when vehicle parked): 12 seconds)
- **Yes** → Go to step 8.
- **No** → Go to step 6.

6) Check harness between body integrated unit and rear wiper motor.
(1) Turn the ignition switch to OFF, disconnect the ground cable from battery.
(2) Disconnect the connector of body integrated unit and wiper switch.
(3) Measure the resistance between the harness connector terminals of the body integrated unit and rear wiper motor.

Connector & terminal
(B280) No. 6 — (D43) No. 2:
(4) Is the resistance less than 10 Ω?
- **Yes** → Go to step 7.
- **No** → Repair the open circuit of the harness between body integrated unit and rear wiper motor.

7) Check stop position circuit of the rear wiper motor.
(1) Disconnect the harness connector of the rear wiper motor.
(2) Check the continuity of the circuit of rear wiper motor stop position.

Connector & terminal
(D43) No. 1 (+) — (D43) No. 4 (–):
(3) Is there continuity between terminals?
- **Yes** → Go to step 8.
- **No** → Replace the rear wiper motor assembly.

8) Check power supply circuit of the rear wiper motor.
(1) Disconnect the harness connector of the rear wiper motor.
(2) Turn the ignition switch to ON.
(3) Measure the voltage between the rear wiper motor harness connector terminal and chassis ground.

Connector & terminal
(D43) No. 3 (+) — Chassis ground (–):
(4) Is the voltage 10 V or more?
- **Yes** → Go to step 9.
- **No** → Check the fuse (No. 27 in main fuse box).

9) Check ground circuit of rear wiper motor.
(1) Turn the ignition switch to OFF.
(2) Measure the resistance between the rear wiper motor harness connector terminal and chassis ground.

Connector & terminal
(D43) No. 4 — Chassis ground:
(3) Is the resistance less than 10 Ω?
- **Yes** → Go to step 10.
- **No** → Repair the open circuit of the rear wiper motor ground circuit.

10) Check harness between body integrated unit and rear wiper motor.
(1) Turn the ignition switch to OFF.
(2) Disconnect the harness connector of body integrated unit.
(3) Disconnect the harness connector of the rear wiper motor.
(4) Measure the resistance between the harness connector terminals of the body integrated unit and rear wiper motor.

Connector & terminal
(B280) No. 7 — (D43) No. 1:
(5) Is the resistance less than 10 Ω?
- **Yes** → Go to step 11.
- **No** → Repair the open circuit of the harness between body integrated unit and rear wiper motor.

11) Check output of body integrated unit.
(1) Connect the harness connector of body integrated unit.
(2) Disconnect the connector of the rear wiper motor.
(3) Turn the ignition switch to ON.
(4) Measure the voltage between rear wiper motor connector and chassis ground.

Connector & terminal
(D43) No. 2 (+) — Chassis ground (–):
(5) Is the voltage less than 1.5 V when the rear wiper switch is OFF, and is the voltage 10 V or more when the rear wiper switch is ON?
- **Yes** → Go to step 12.
- **No** → Replace the body integrated unit. <Ref. to SL-71, Body Integrated Unit.>

12) Check operation of rear wiper motor.
(1) Remove the rear wiper motor.
(2) Check the rear wiper motor. <Ref. to WW-42, INSPECTION, Rear Wiper Motor.>
(3) Does the rear wiper motor rotate normally?
- **Yes** → Finished.
- **No** → Replace the rear wiper motor assembly.

NOTE:
Rear wiper intermittent time

Select lever position	Vehicle speed (km/h (MPH))	Intermittent stopping time (sec.)
Rev.	—	Continuous operation
Except for reverse mode	80 — (50 —)	3
	50 — 80 (31 — 50)	6
	20 — 50 (12 — 31)	9
	0 — 20 (0 — 12)	12

4. Wiper Blade

A: REMOVAL

1. FRONT

Remove the blade assembly.
1) Lift up the locking clip (A).
2) Turn the blade assembly in the arrow direction.
3) Press the arm in.
4) Pull out the arm while lifting it, and remove the blade assembly from the arm.

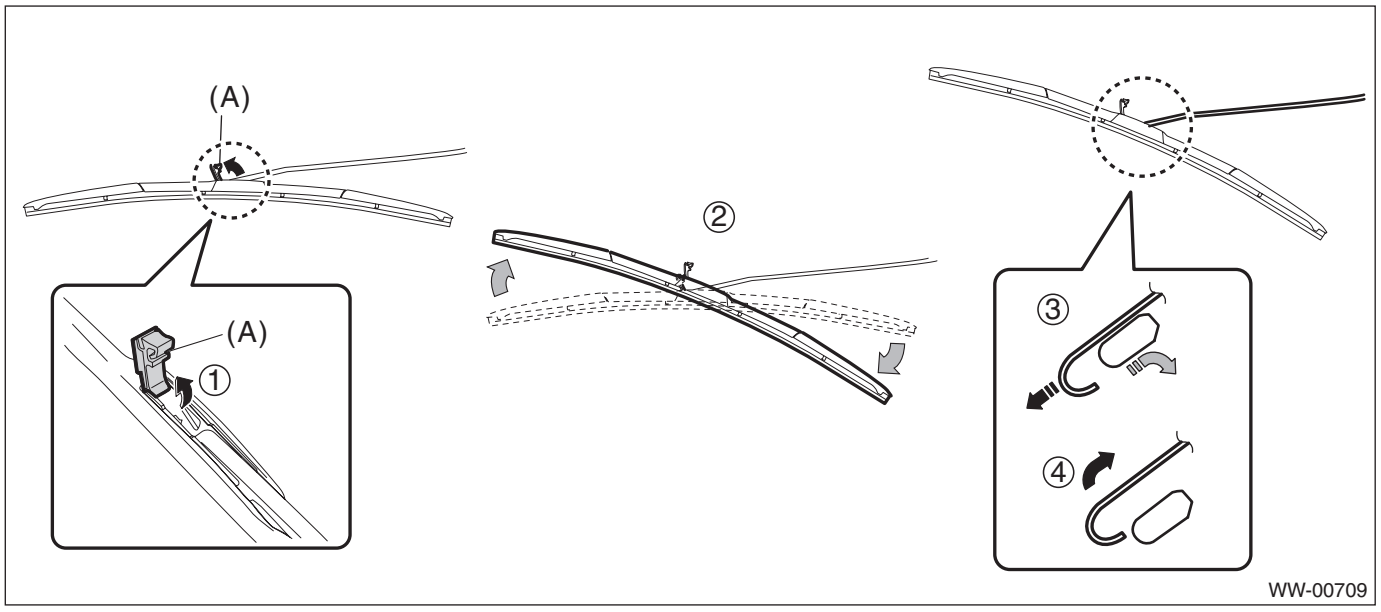

2. REAR

Turn the blade in the direction of arrow (A) and remove it from arm.

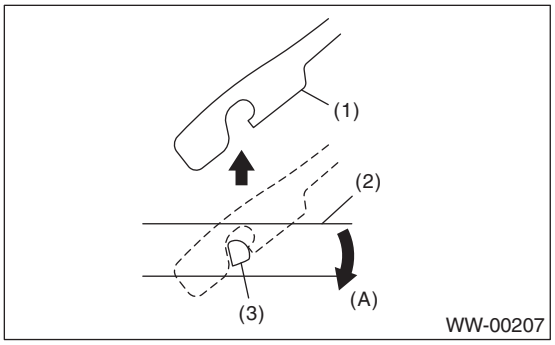

(A) Turn the wiper blade.

(1) Wiper arm
(2) Wiper blade
(3) Wiper blade attachment section

B: INSTALLATION

1) Install each part in the reverse order of removal.
2) Confirm that the clip is locked securely.

C: DISASSEMBLY

1. FRONT

Pull side (A) of the wiper rubber stopper and remove the rubber from the blade assembly.

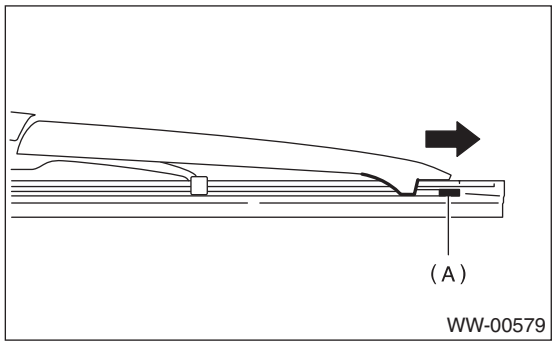

2. REAR

Pull the wiper rubber top slightly from stopper (A) and pull out completely.

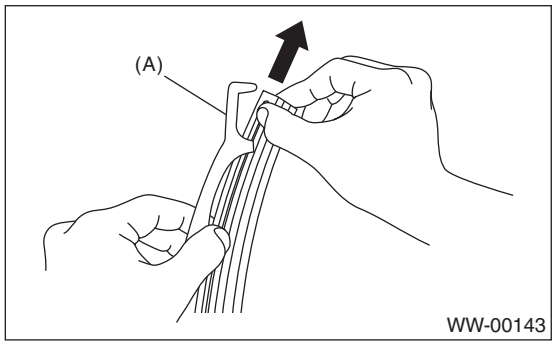

D: ASSEMBLY

1. FRONT

1) Insert the wiper rubber onto the blade so that the stopper is in the position shown in the figure.

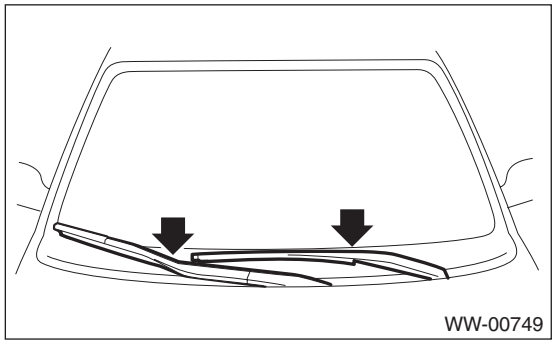

2) Make sure the wiper rubber is securely fastened to the pull stopper (A).

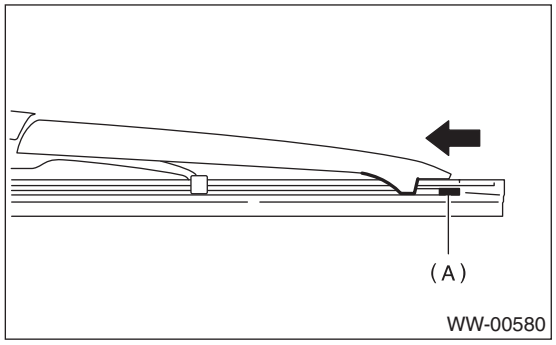

2. REAR

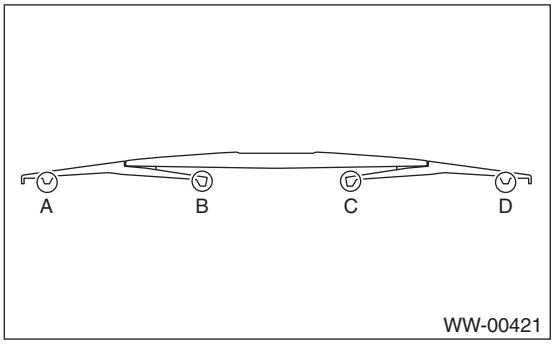

1) Insert the wiper rubber into claw (B).

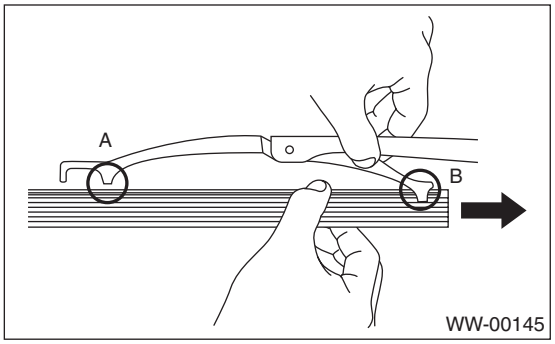

2) Insert the wiper rubber until its top end protrudes approx. 20 mm (0.79 in) from stopper (D).

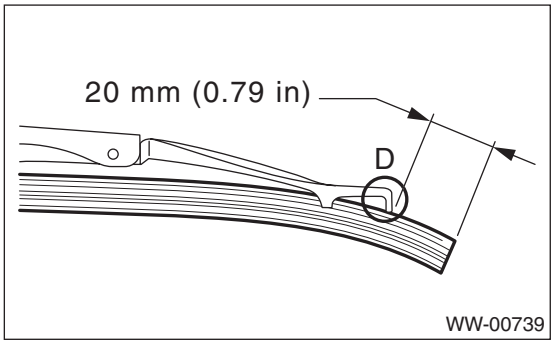

3) Insert the wiper rubber into claw (A).

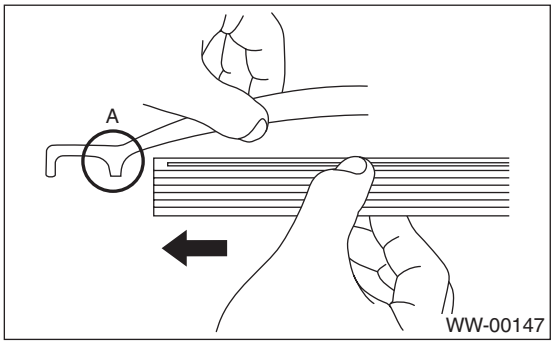

E: INSPECTION

1) When the wiper does not operate properly, inspect the following item.
- Make sure that the movable part of blade assembly moves smoothly.
- Make sure the wiper rubber is not deformed or damaged.

2) If damaged, replace with a new part.

5. Washer Tank and Motor

A: REMOVAL

1) Open the front hood.
2) Disconnect the ground cable from battery.
3) Remove the bumper face.
   (1) Remove the clips, turn over the front mud guard, and disconnect the fog light connector. (Model with fog light)

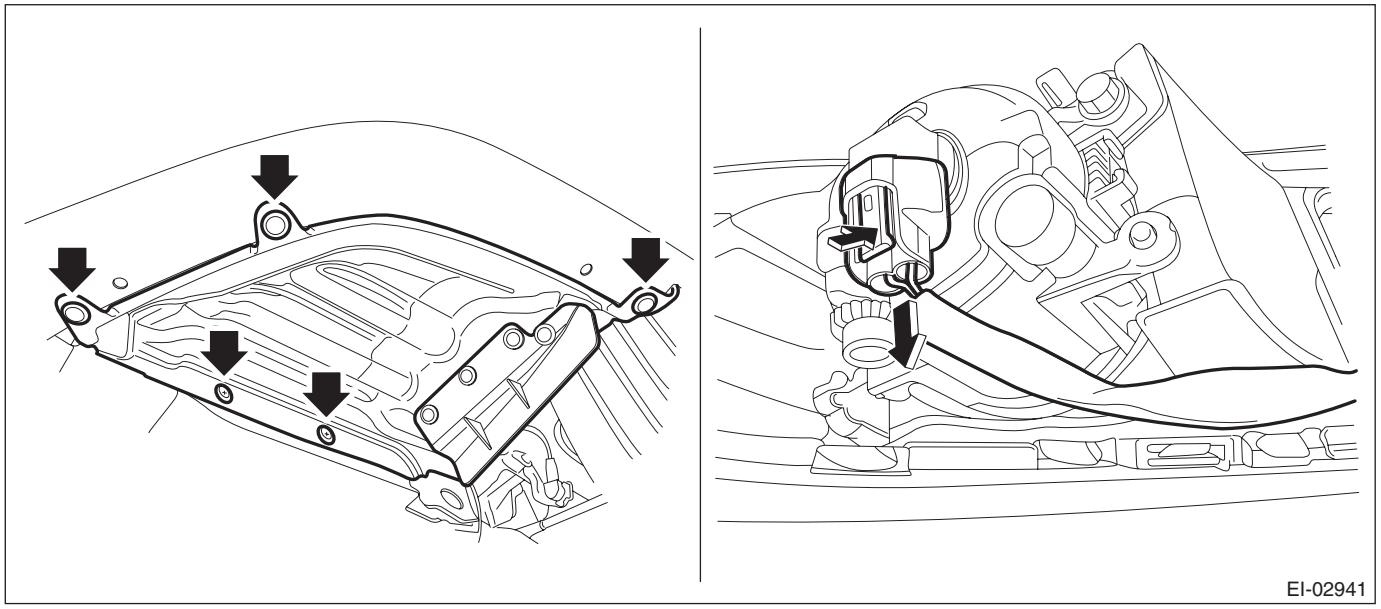

   (2) Remove the clips at the upper side of the bumper.
   (3) Remove the clips from the fender.

(4) Remove the clips at the lower side of bumper.

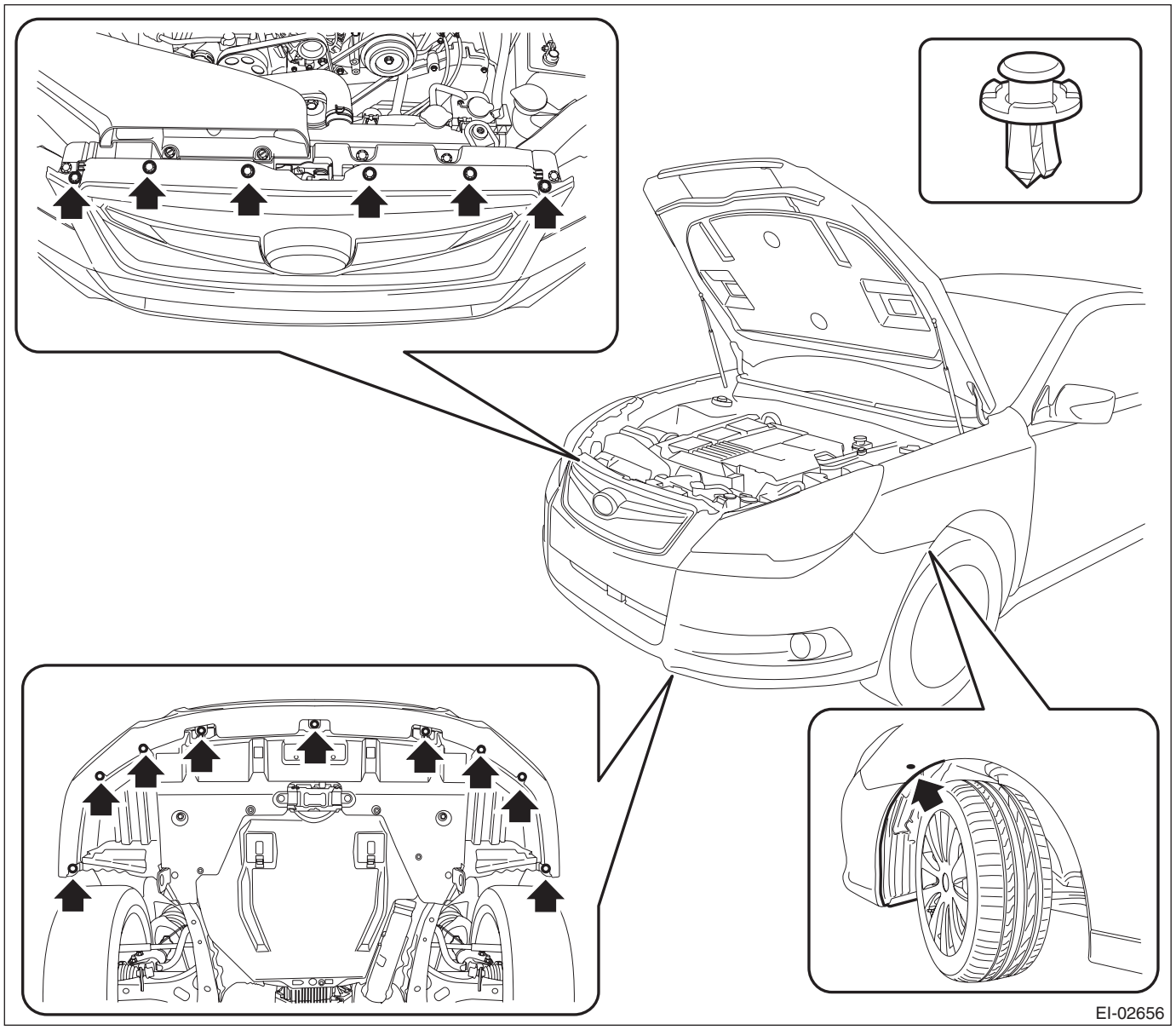

(5) Detach the flange section on the bumper face side from the bracket side front UPR.

CAUTION:
Do not pull forcibly. It may damage the flange sections of the bumper face.

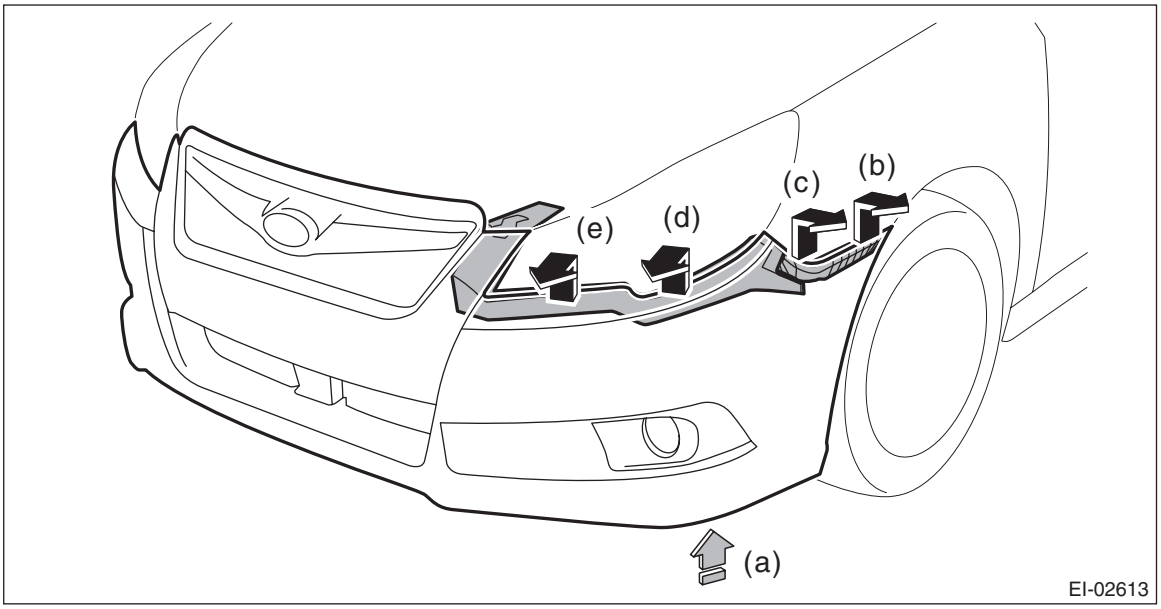

NOTE:
Pushing up the lower side (a) of the fog light, remove from (b) to (e).
Detach the opposite side in the same manner.

4) Remove the washer tank assembly.

(1) Remove the clip of the washer tank duct.

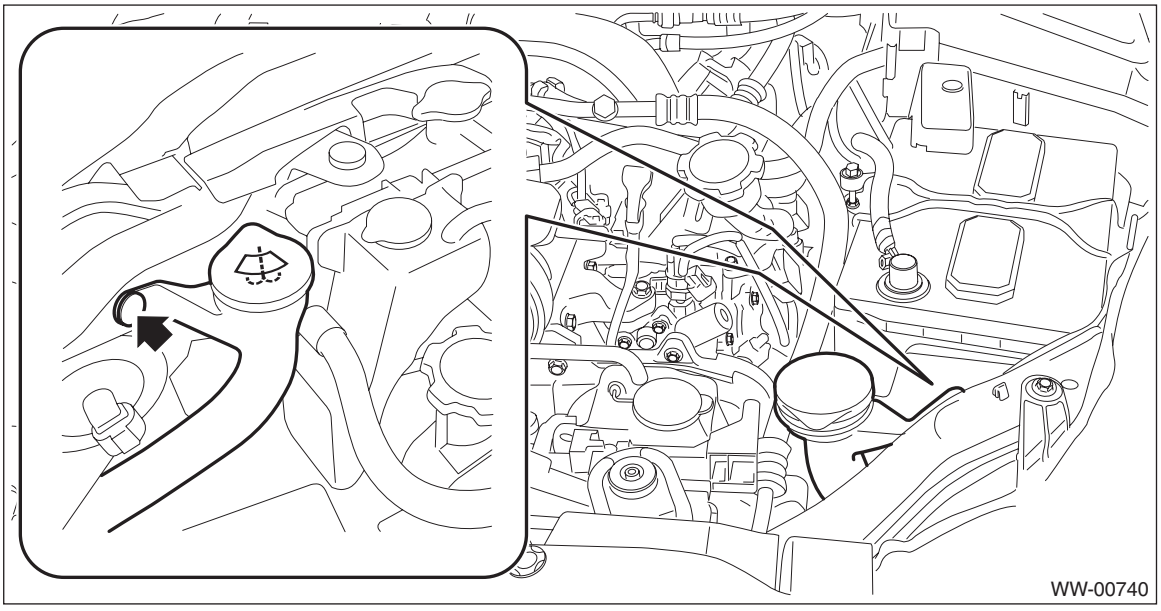

(2) Prepare a container before disconnecting the washer hose and drain all washer fluid in the tank.

(3) Disconnect the connector from the washer motor and washer tank level sensor, and then remove the harness clip.

(4) Remove the bolt and nuts and remove the washer tank assembly.

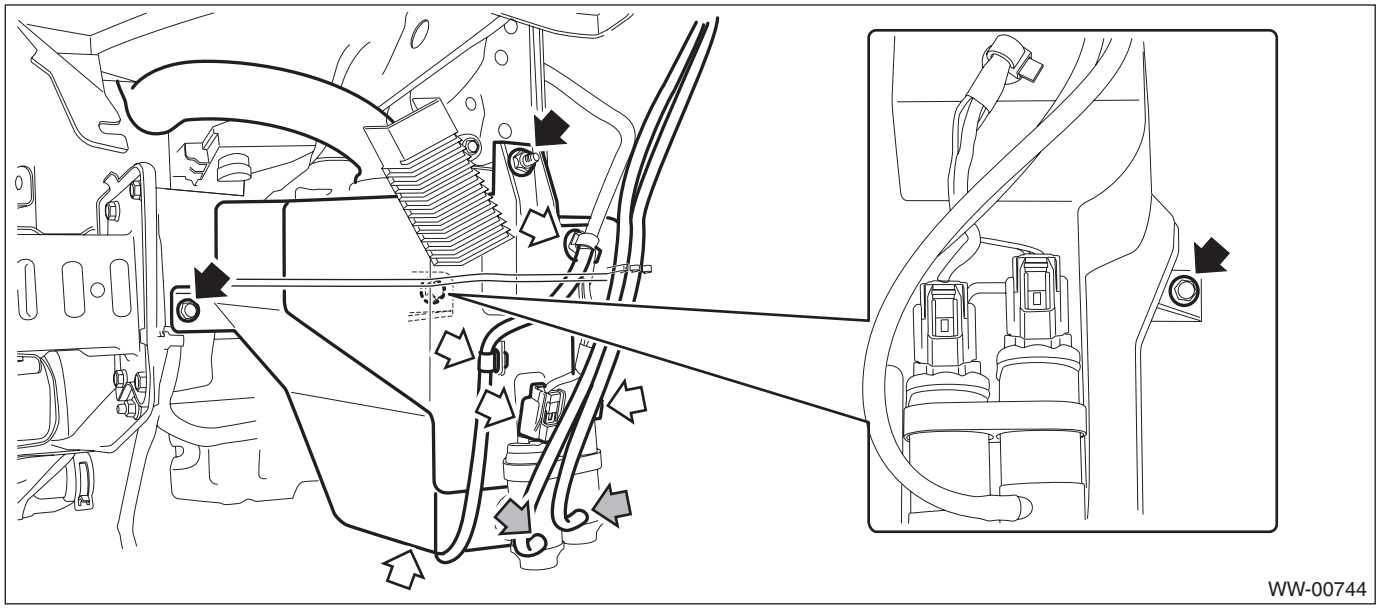

5) Remove the washer motor from the tank.

B: INSTALLATION

1) Install each part in the reverse order of removal.

CAUTION:
Install the bumper face so that the under cover front end (b) comes inside the front bumper face (a).

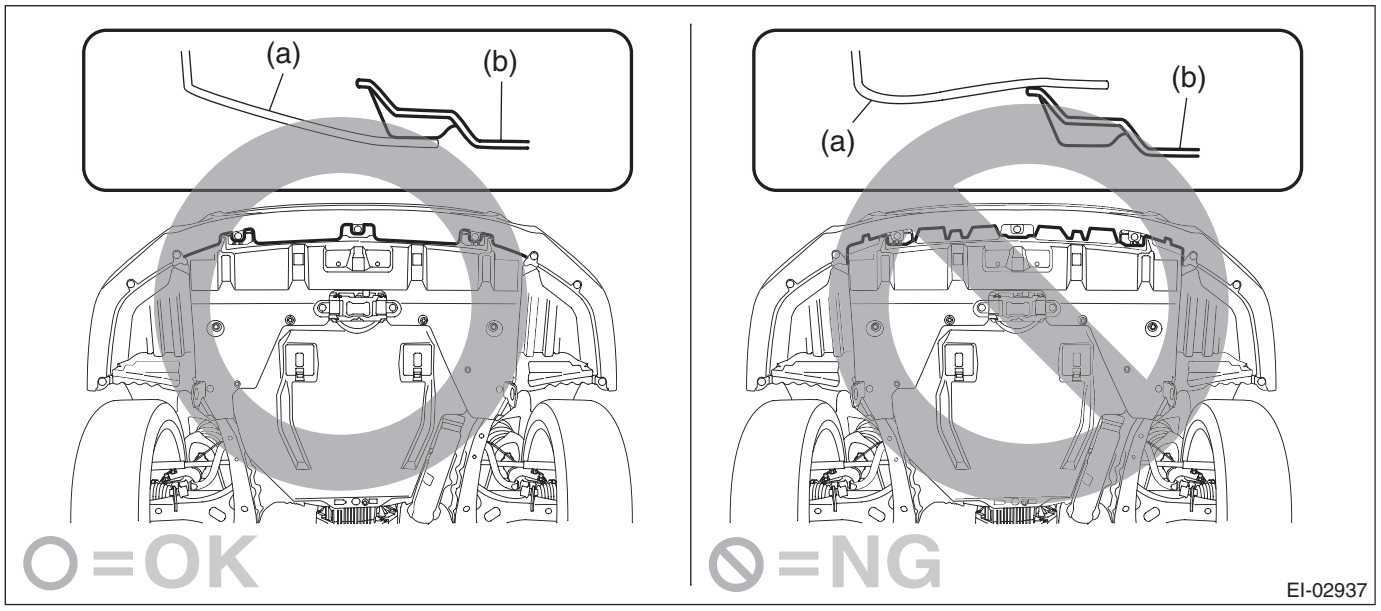

2) Add new washer fluid.

Tightening torque:
6 N·m (0.61 kgf-m, 4.4 ft-lb)

3) Adjust the fog light beam. (Model with fog light) <Ref. to LI-41, FOG LIGHT AIMING, ADJUSTMENT, Front Fog Light Assembly.>

C: INSPECTION

Apply battery voltage to the connector terminal of the washer motor and make sure that the motor operates.

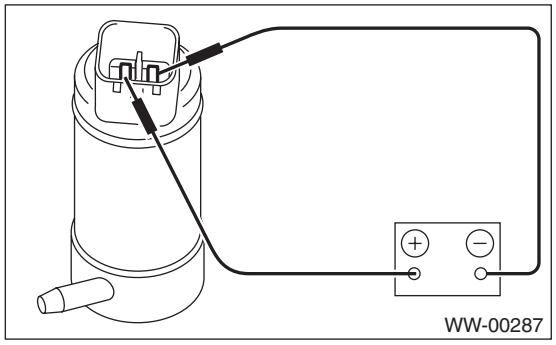

6. Front Wiper Arm

A: REMOVAL

CAUTION:
Follow the steps below when standing up the wiper arm. Not following the steps may cause contacting of wiper arms and damages of wiper arms.
1. Stand up the driver's side wiper arm.
2. Stand up the passenger's side wiper arm.
Fold the wiper arms in the reverse order.
1) Open the front hood.
2) Remove the front wiper arm assembly.
(1) Remove the cap.
(2) Remove the nuts, and remove the front wiper arm assembly.

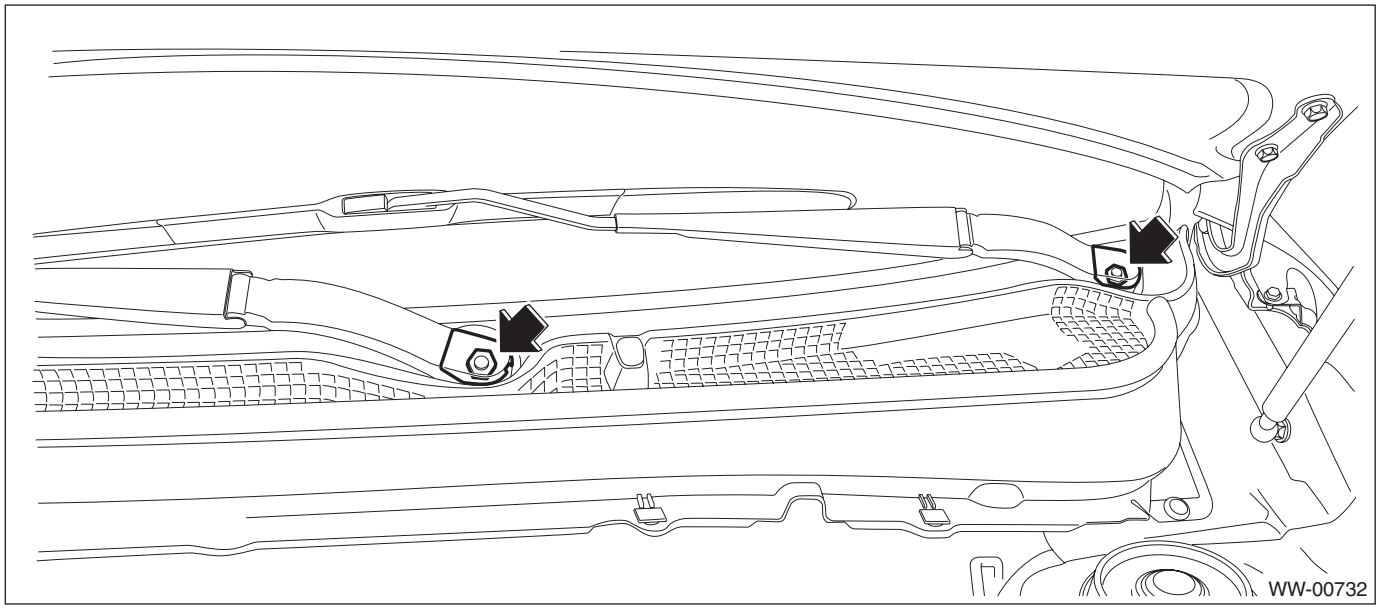

B: INSTALLATION

CAUTION:
Follow the steps below when tilting the wiper arm. Not following the steps may cause contacting of wiper arms and damages of wiper arms.
1. Tilt the passenger's side wiper arm.
2. Tilt the driver's side wiper arm.
1) Install the wiper arm assembly.

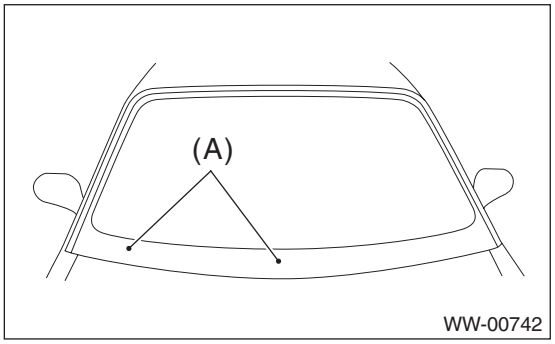

Tightening torque:
22 N·m (2.24 kgf-m, 16.2 ft-lb)
(1) Install the wiper arm assembly so that the wiper blade aligns with the ceramic print point mark (A) on windshield glass.
(2) Tighten the wiper arm assembly to specified torque and install the cap.
2) Operate the wiper to check whether the wiper blade aligns with the point mark. If not, perform installation over again.

7. Front Wiper Motor and Link

A: REMOVAL

1) Disconnect the ground cable from battery.
2) Remove the front wiper arm assembly.

CAUTION:
Follow the steps below when standing up the wiper arm. Not following the steps may cause contacting of wiper arms and damages of wiper arms.
1. Stand up the driver's side wiper arm.
2. Stand up the passenger's side wiper arm.
Fold the wiper arms in the reverse order.

(1) Remove the cap.
(2) Remove the nuts, and remove the front wiper arm assembly.

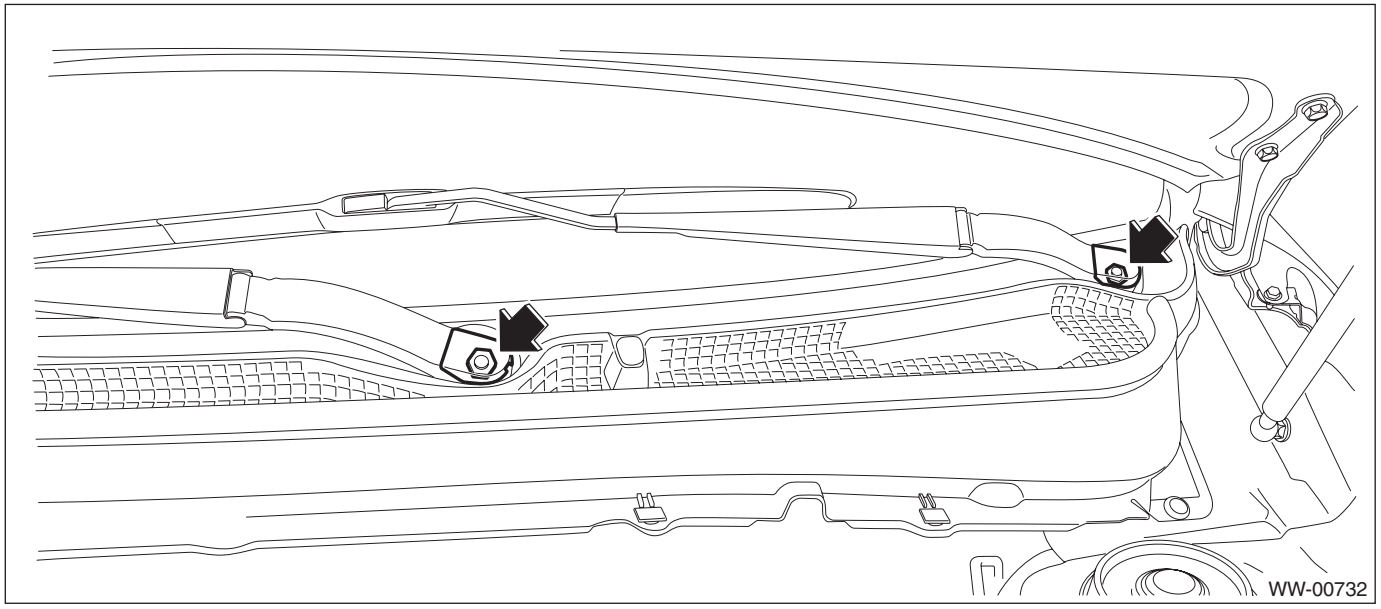

3) Remove the cowl panel side.
   (1) Detach the pins of the cowl panel side.
   (2) Remove the cowl panel side from inside the fender panel by pulling it.

CAUTION:
Applying excessive pulling force may damage the cowl panel side. If it is difficult to remove, use a plastic remover or equivalent tool.

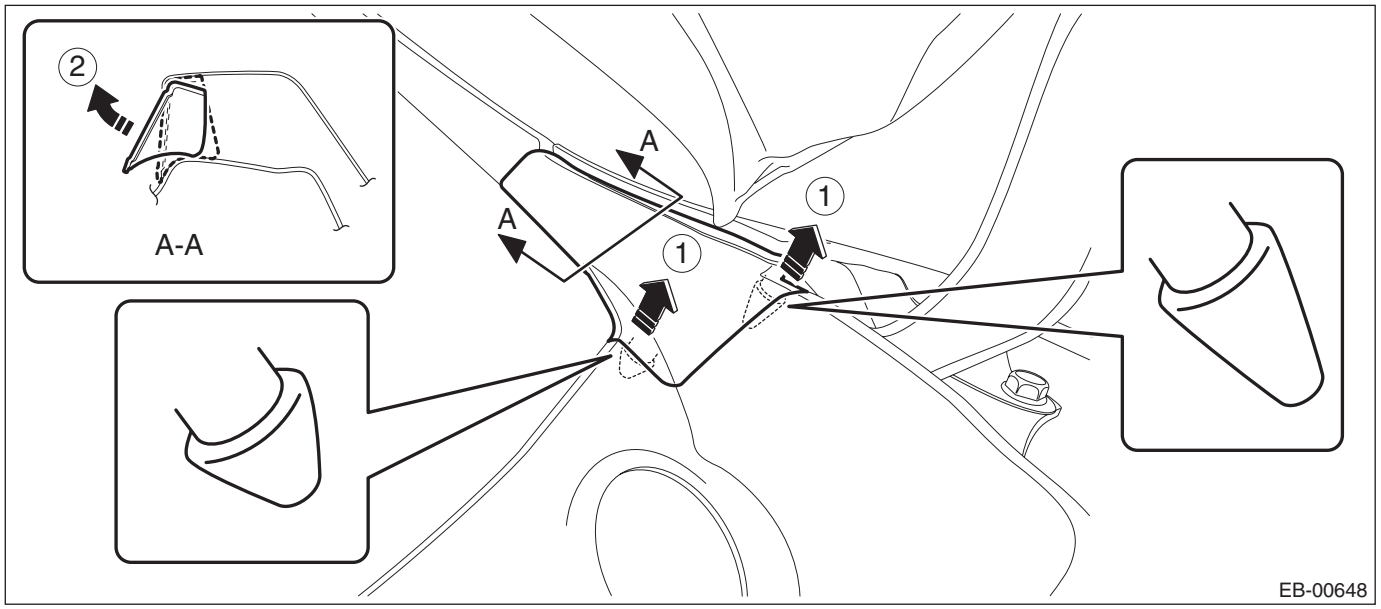

4) Remove the cowl panel.
   (1) Release the clip (A).
   (2) Push the claw of the clip (B) from both sides to remove it.

CAUTION:
When removing the clip (B), push the claw of the clip from both sides.
The clip may be damaged if forcibly pulled.

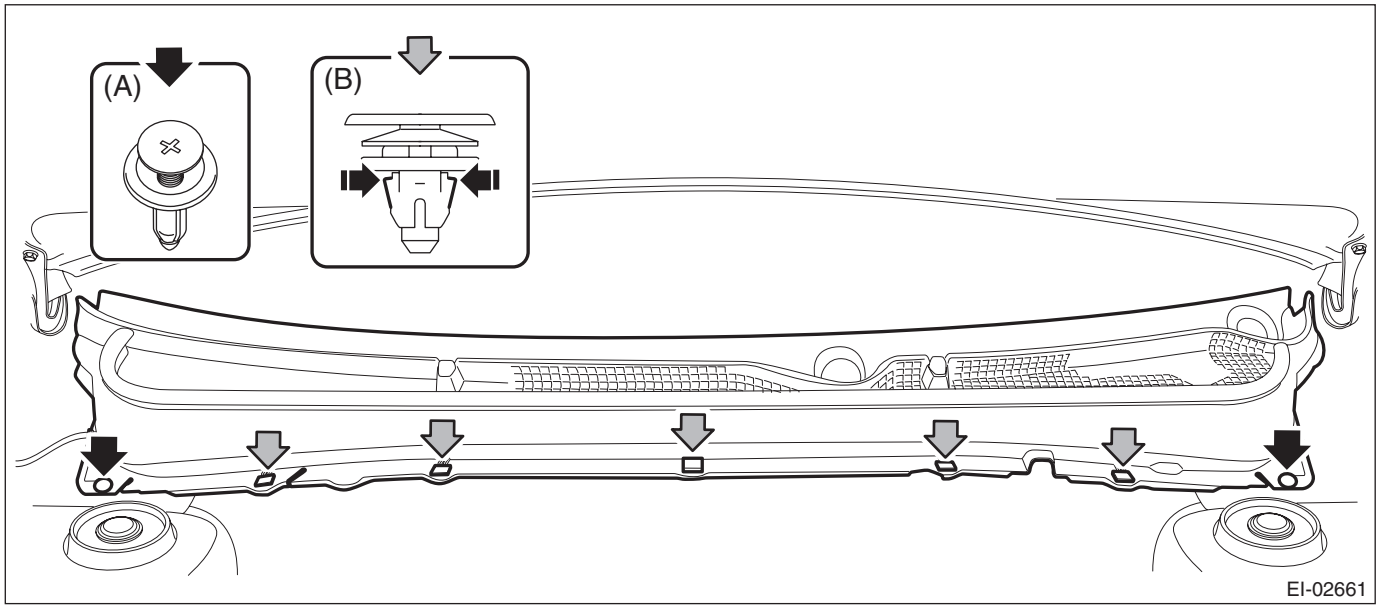

(3) Disconnect the washer hose.

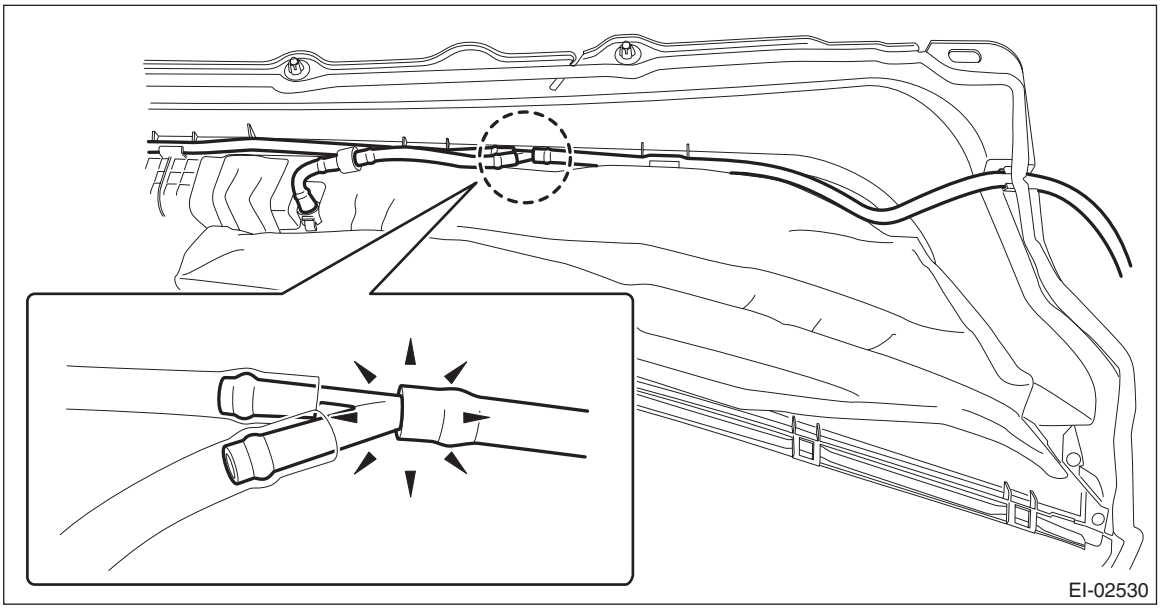

5) Remove the wiper link assembly.
(1) Disconnect the motor connector.
(2) Remove the bolts and harness clips and remove the wiper link assembly.

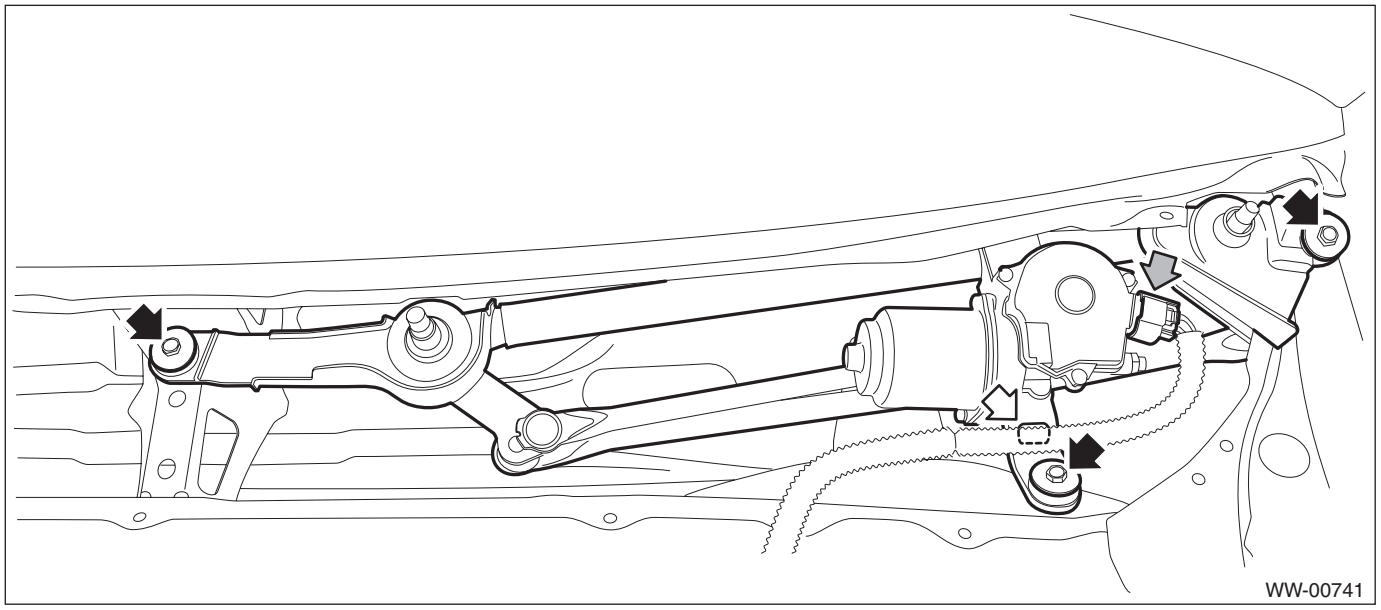

6) Remove the wiper motor assembly.
(1) Remove the nuts on the link plate and motor assembly to be disconnected from the link assembly.
(2) Remove the nuts and remove the wiper motor assembly.

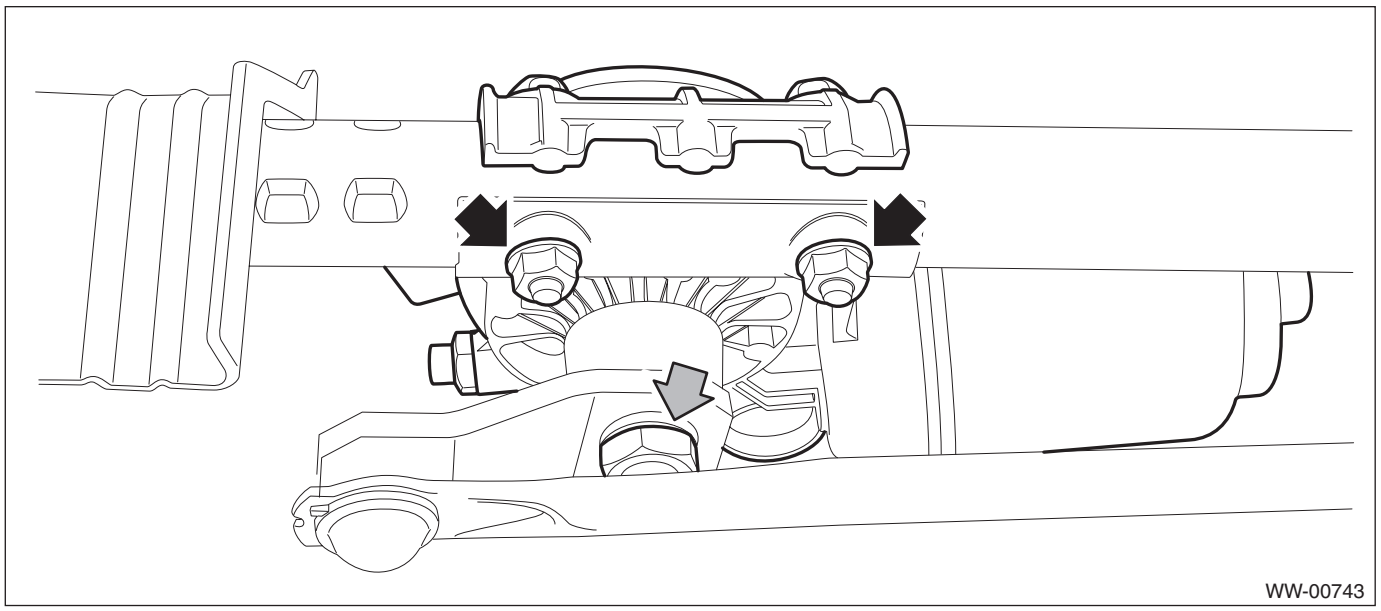

B: INSTALLATION

1) Connect the ground cable to battery.
2) To check whether the motor is at the automatic stop position, connect the harness to the motor and switch the wiper switch to ON/OFF.
3) Disconnect the ground cable from battery.
4) Install the wiper motor assembly.

CAUTION:
Tighten the nuts so that the rod (A) and link plate (B) align.

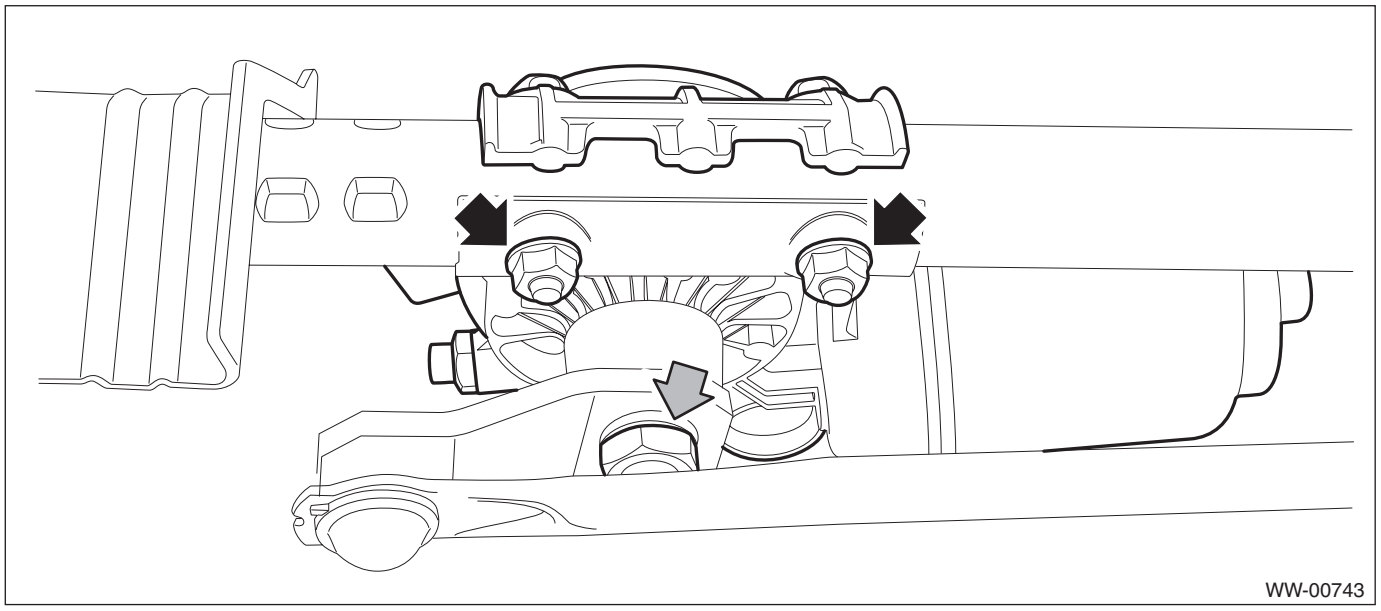
WW-00743

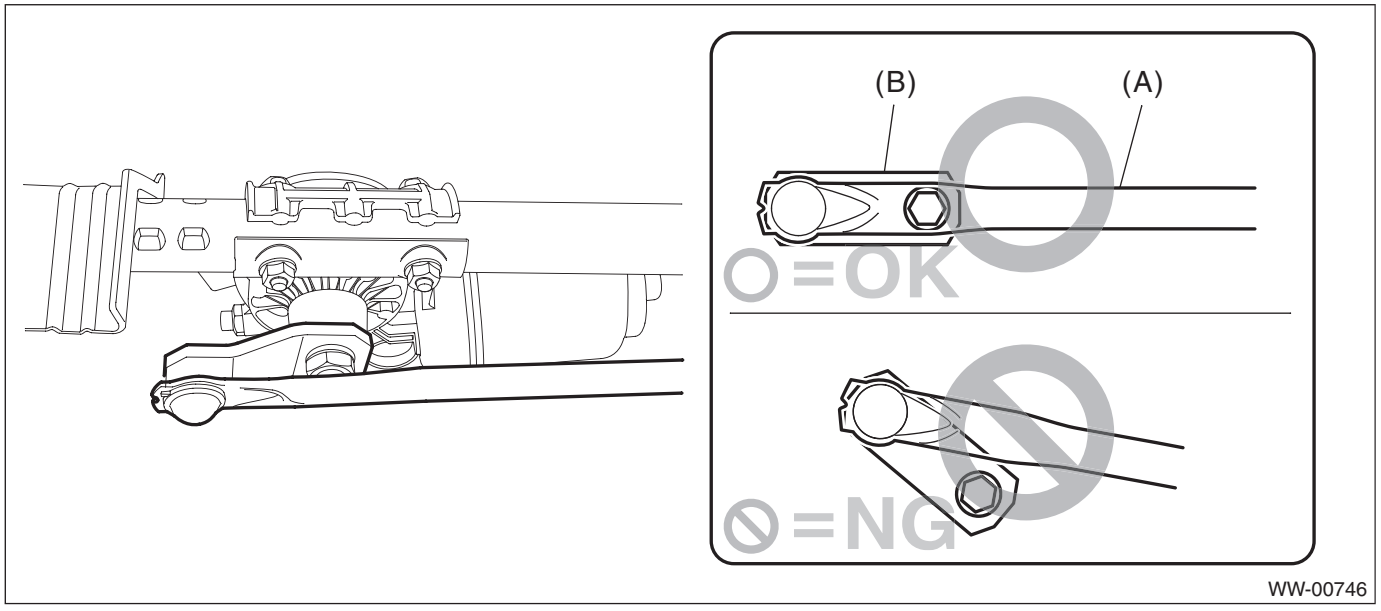

WW-00746

Tightening torque:
Refer to "COMPONENT" of "General Description". <Ref. to WW-3, FRONT WIPER, COMPONENT, General Description.>

5) Install the wiper link assembly and cowl panel in the reverse order of removal.

Tightening torque:
Refer to "COMPONENT" of "General Description". <Ref. to WW-3, FRONT WIPER, COMPONENT, General Description.>

C: INSPECTION

1) When the battery is connected to the terminal of connectors, confirm that the motor operates at low speed.
2) When the battery is connected to the terminal of connectors, confirm that the motor operates at high speed.
3) Connect the battery to the terminals of connector, then run the motor at low speed and disconnect the terminal in mid motion.
4) Connect the battery and confirm that the motor stops at the automatic stop position after the motor operates at low speed again.

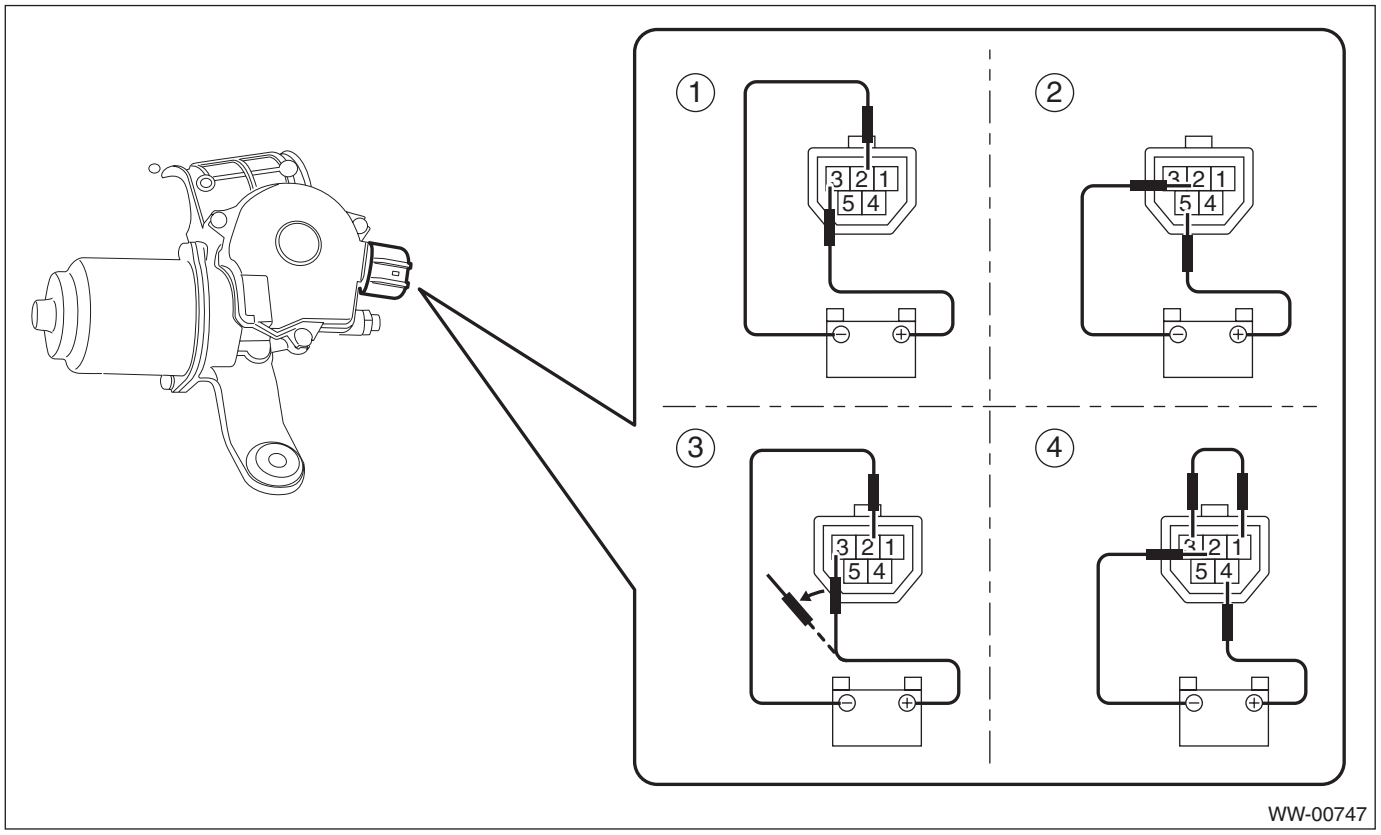

8. Front Washer Nozzle

A: REMOVAL

1) Disconnect the ground cable from battery.
2) Remove the front wiper arm assembly.

CAUTION:
Follow the steps below when standing up the wiper arm. Not following the steps may cause contacting of wiper arms and damages of wiper arms.
1. Stand up the driver's side wiper arm.
2. Stand up the passenger's side wiper arm.
Fold the wiper arms in the reverse order.

(1) Remove the cap.
(2) Remove the nuts, and remove the front wiper arm assembly.

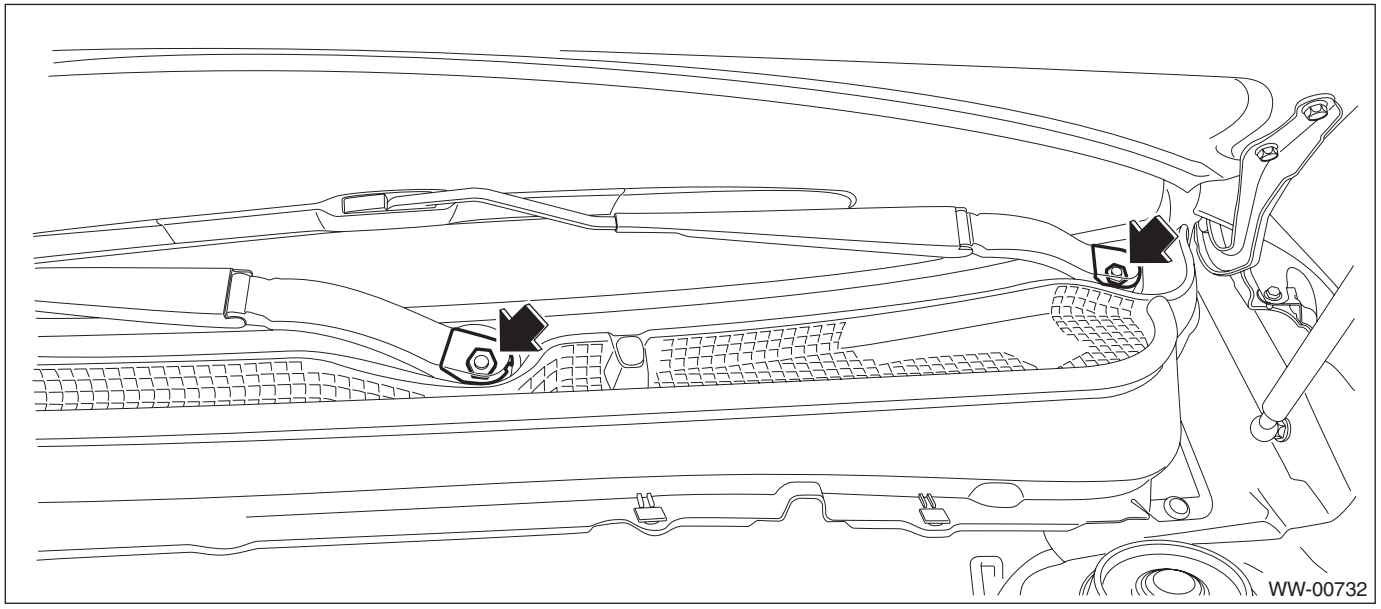

3) Remove the cowl panel side.
   (1) Detach the pins of the cowl panel side.
   (2) Remove the cowl panel side from inside the fender panel by pulling it.

CAUTION:
Applying excessive pulling force may damage the cowl panel side. If it is difficult to remove, use a plastic remover or equivalent tool.

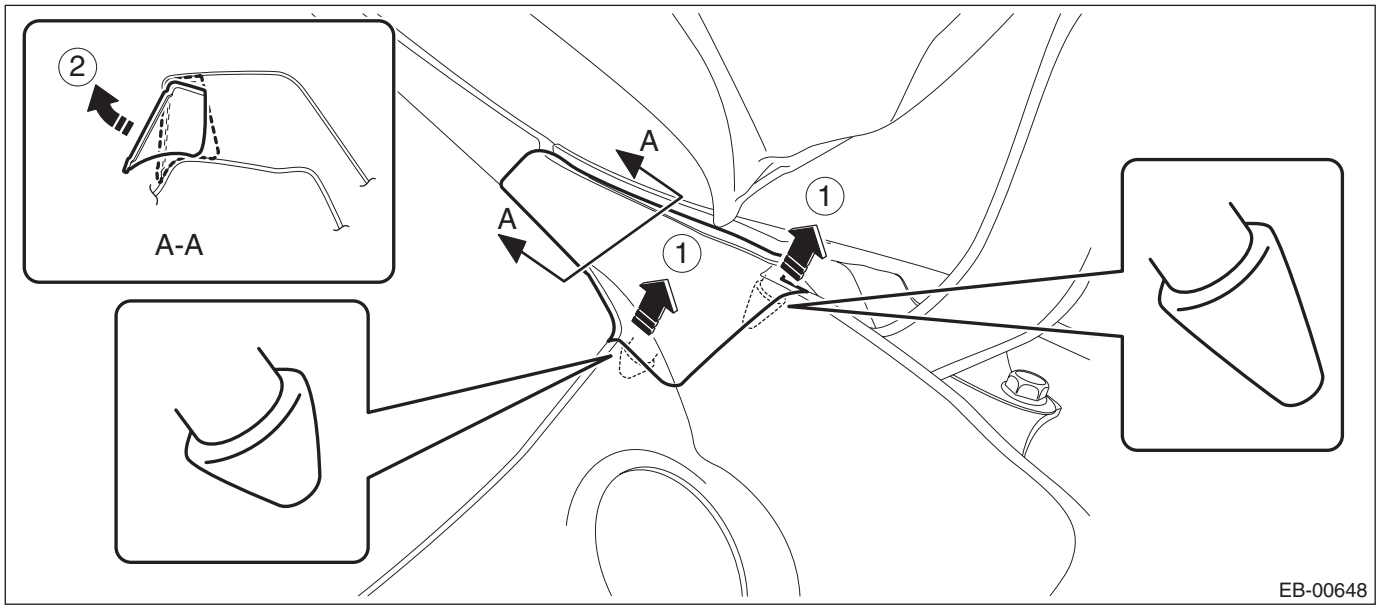

4) Remove the cowl panel.
   (1) Remove clips (A).
   (2) Push the claw of the clip (B) from both sides to remove it.

CAUTION:
When removing the clip (B), push the claw of the clip from both sides.
Be careful because the clip can be damaged if you pull unnecessarily hard on them.

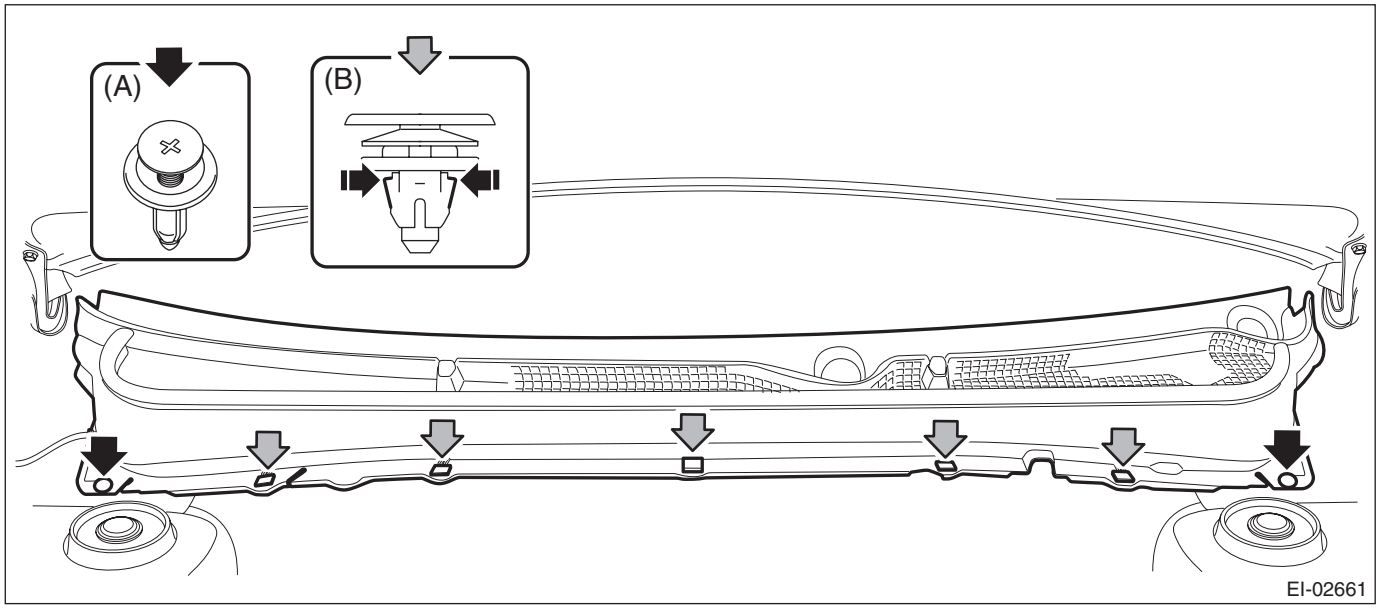

(3) Disconnect the washer hose.

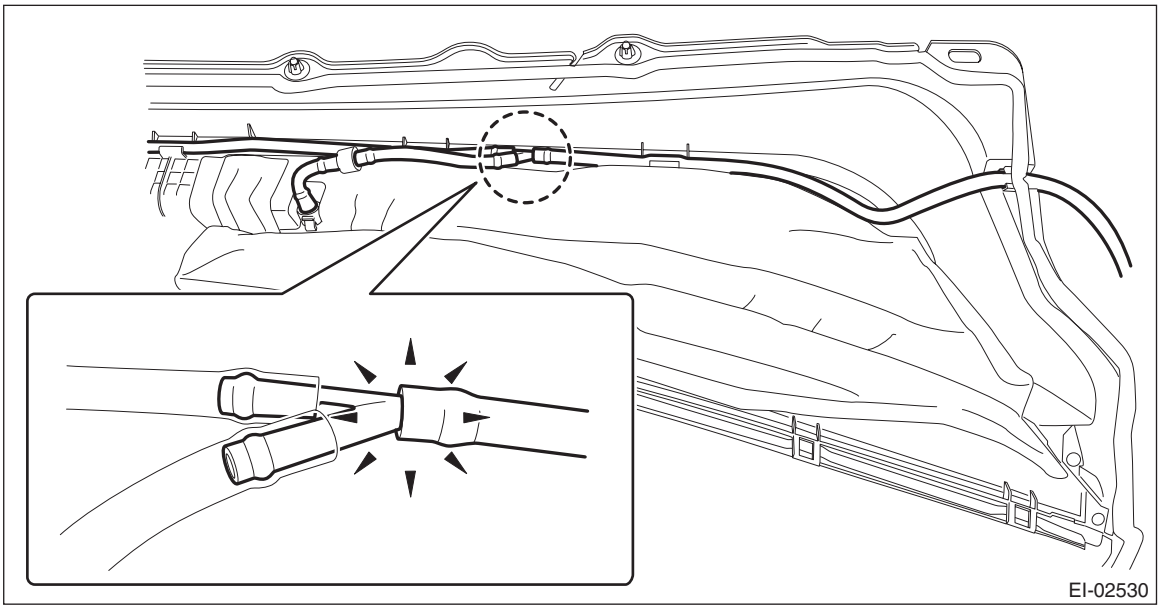

5) Remove the front washer nozzle.
(1) Push the claw using a flat tip screwdriver, etc.
(2) When the washer nozzle lifts up, pull out the nozzle using a clip remover, etc.
(3) Disconnect the washer hose and remove the washer nozzle.

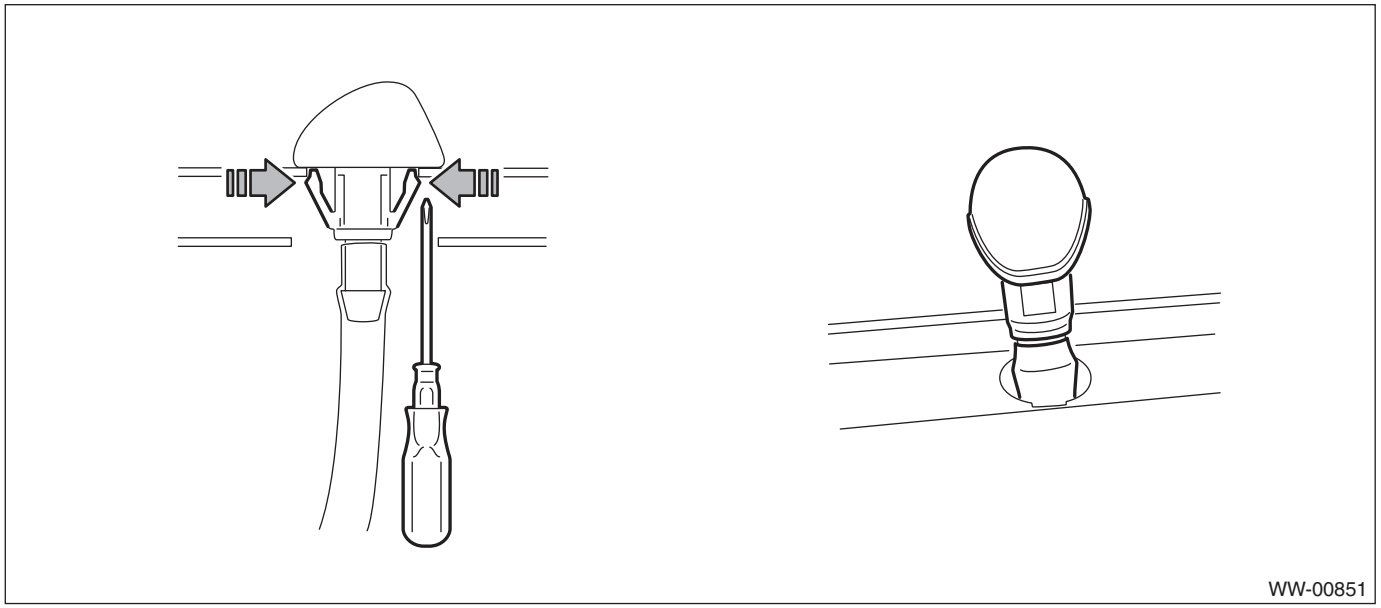

B: INSTALLATION

1) Install each part in the reverse order of removal.

Tightening torque:
Refer to "COMPONENT" of "General Description". <Ref. to WW-3, FRONT WIPER, COMPONENT, General Description.>

2) Adjust the washer nozzle position. <Ref. to WW-34, ADJUSTMENT, Front Washer Nozzle.>

C: INSPECTION

- Make sure the nozzle and hose are not clogged.
- Make sure the hose is not bent.

D: ADJUSTMENT

1) Turn the wiper switch to OFF position.
2) While the vehicle is at a standstill, insert the washer nozzle adjustment tool (a) into upper side (b) and lower side (c) of the washer nozzle to perform necessary adjustment.

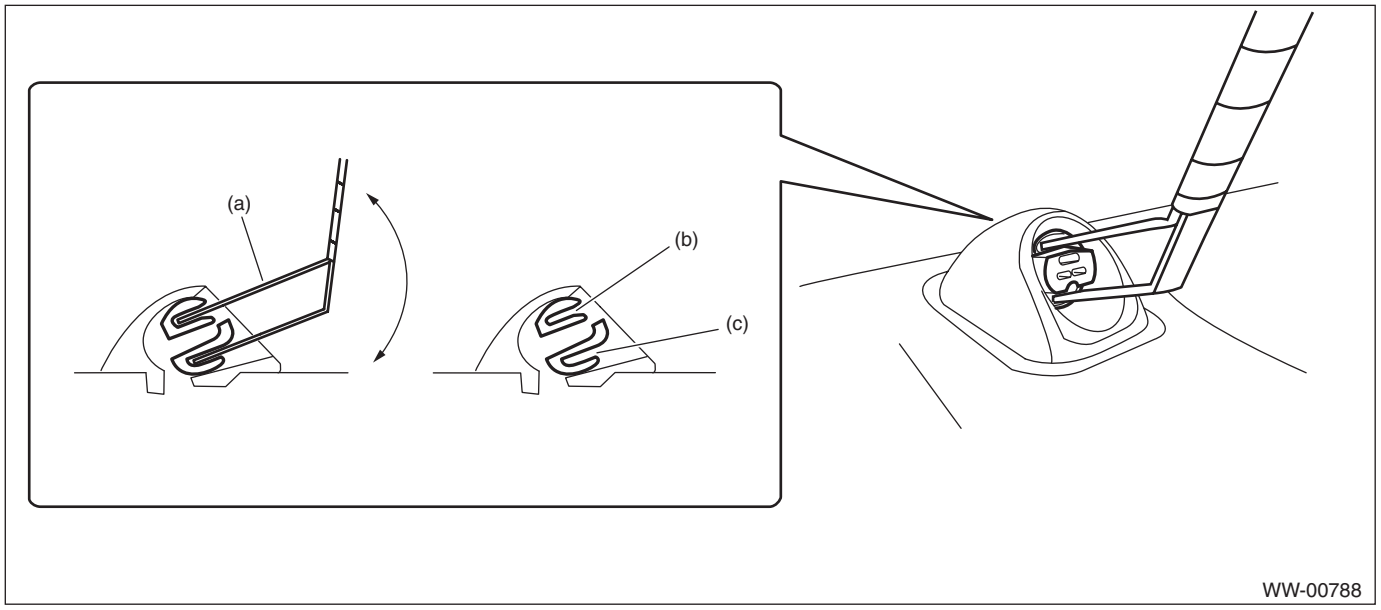

CAUTION:
Washer nozzle is made of resin. If precision screwdriver (A) or equivalent is inserted into discharge port for adjustment, the discharge port can be deformed, and washer fluid cannot be sprayed.

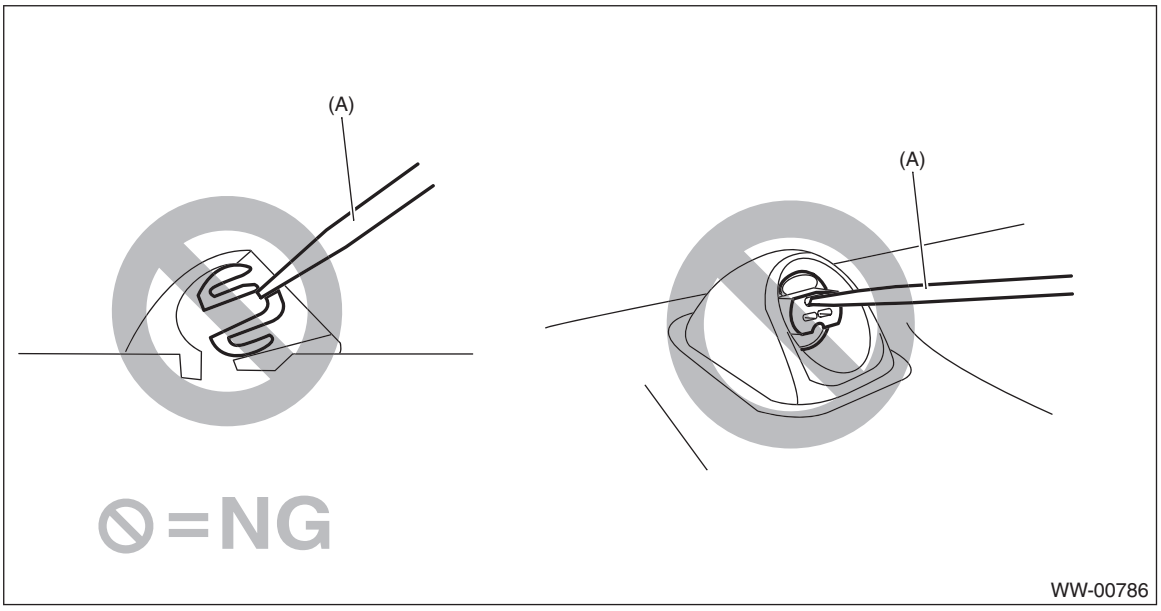

3) Adjust the injection position of the washer fluid as shown in the figure.

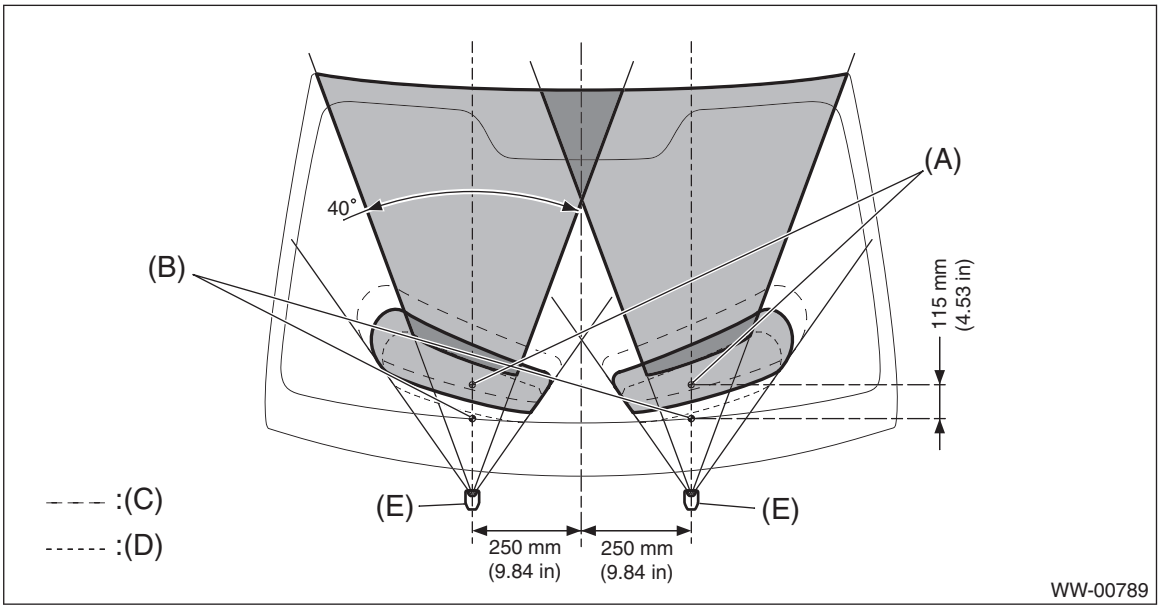

(A) Lower-side spray position center
(B) Ceramic line position on the nozzle center
(C) Washer fluid elevation angle, lower limit of spray area
(D) Washer fluid elevation angle, upper limit of spray area
(E) Washer nozzle

9. Rear Wiper Arm

A: REMOVAL

1) Pull up the wiper arm cover.
2) Remove the nut and remove the wiper arm.

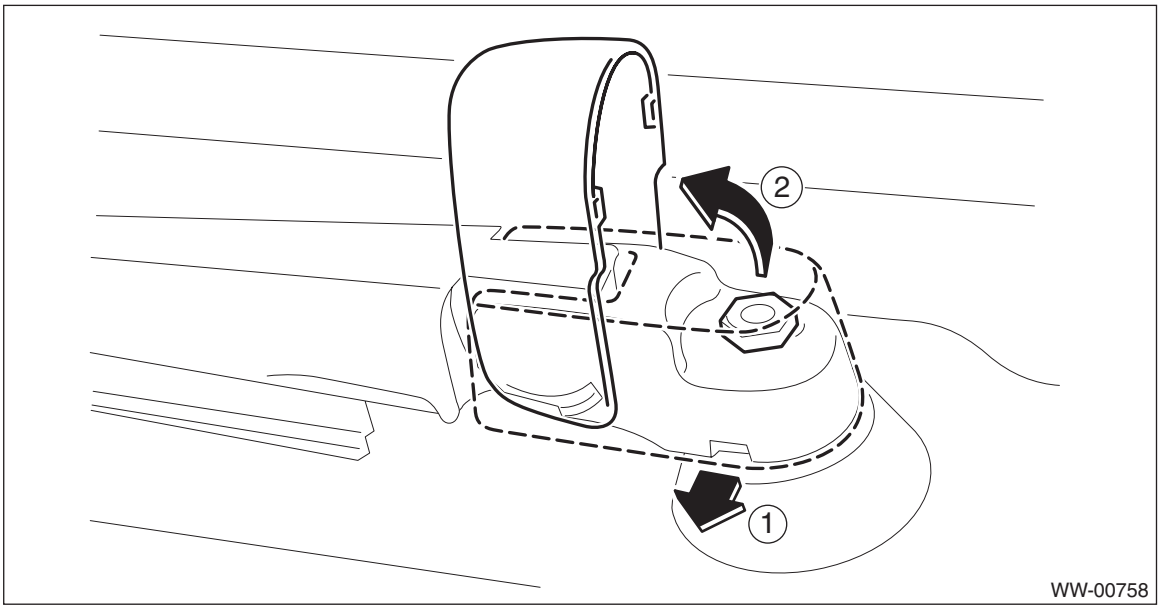

B: INSTALLATION

1) Install in the reverse order of removal.
2) Operate the rear wiper once.
3) Align the blade with the marking on the glass.

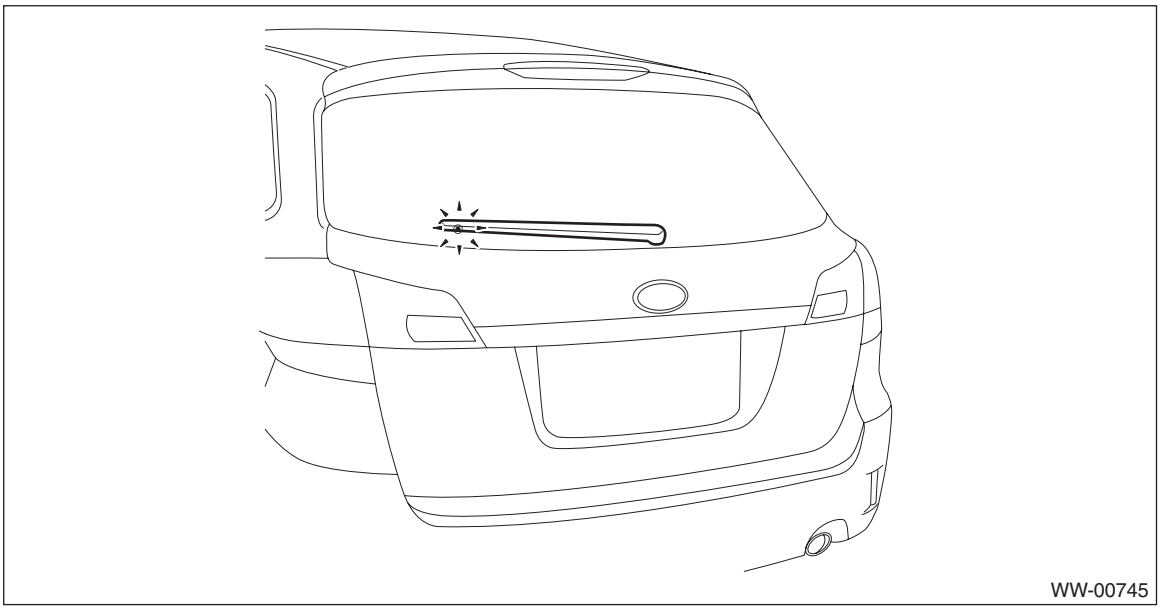

Tightening torque:
Refer to "COMPONENT" of "General Description". <Ref. to WW-4, REAR WIPER, COMPONENT, General Description.>

C: ADJUSTMENT

1) Operate the rear wiper once.
2) Align the blade with the marking on the glass.

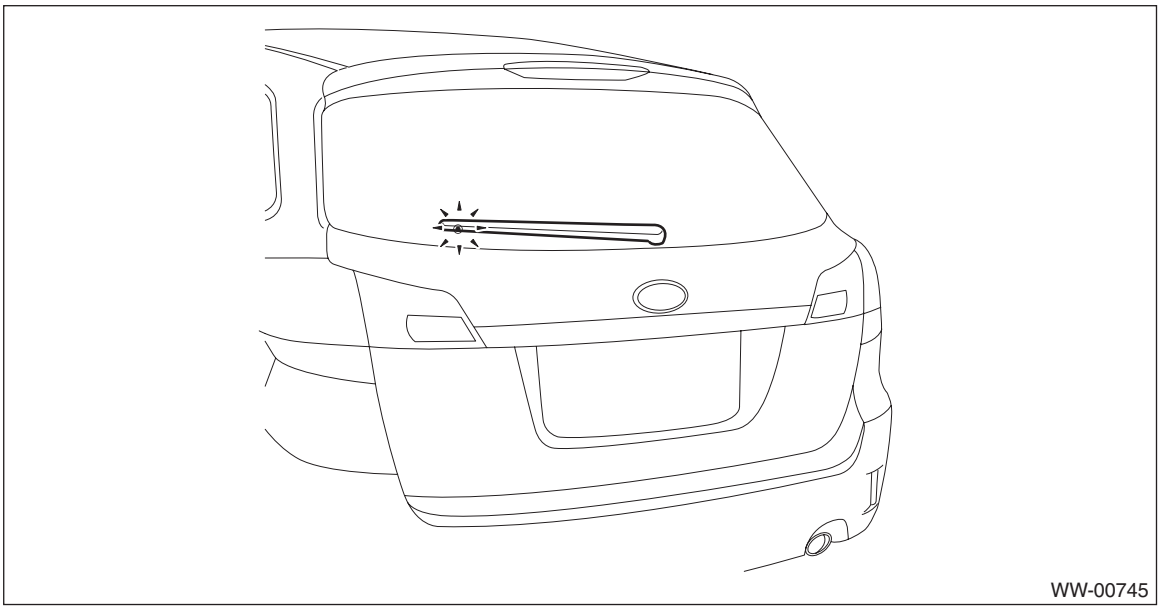

10.Rear Wiper Motor

A: REMOVAL

1) Disconnect the ground cable from battery.
2) Remove the rear wiper arm assembly.
   (1) Remove the wiper arm cover.
   (2) Remove the nut and remove the wiper arm.

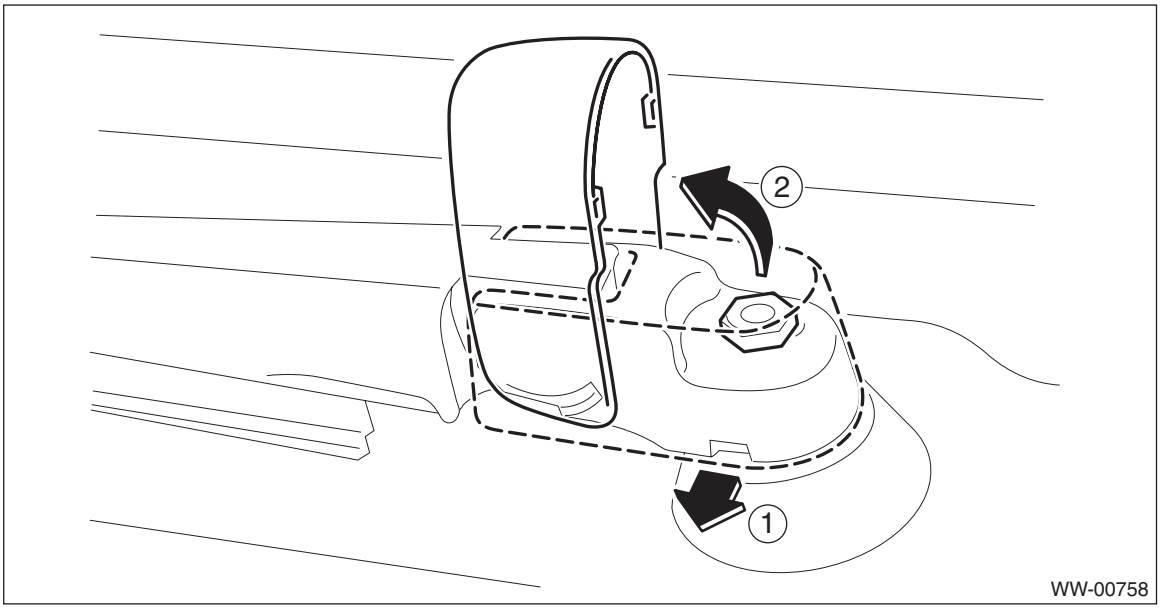

3) Remove the rear gate trim.
   (1) Remove the rear gate upper trim.
      a) Remove the claws on the trim edge.
      b) Disconnect the claws in the center of trim, and remove the rear gate upper trim.

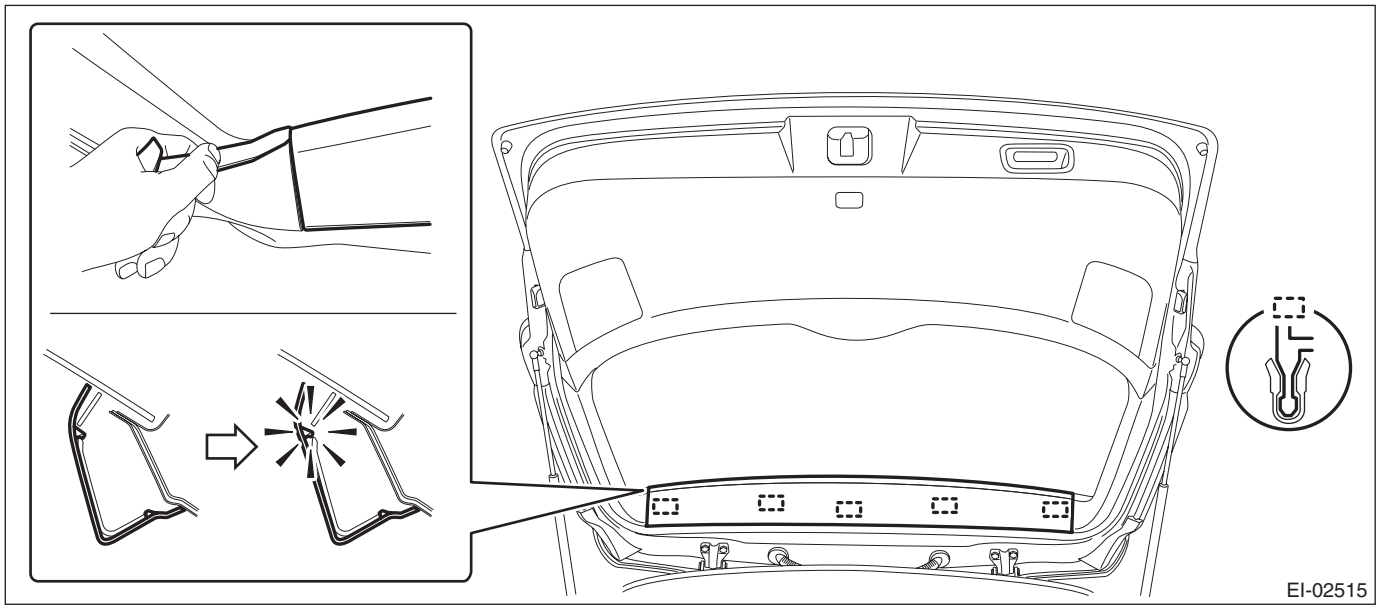

(2) Remove the rear gate pillar trim.
a) Release the claws.
b) Remove the claws on the bottom of trim, and remove the rear gate pillar trim.

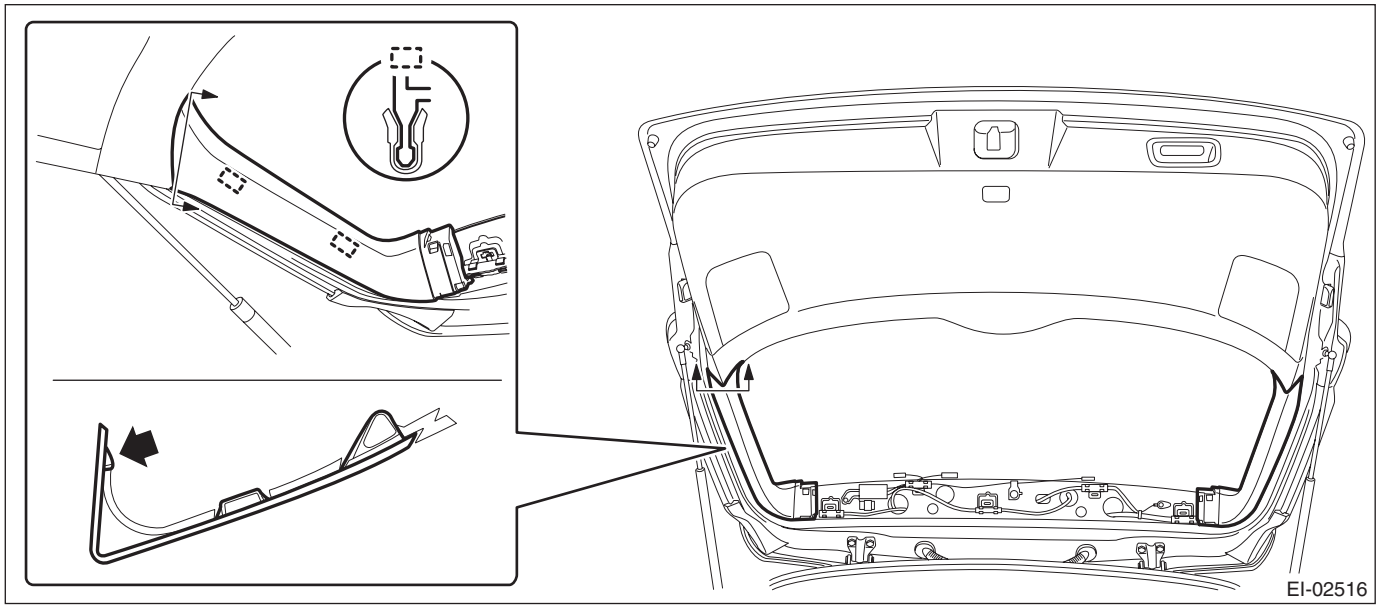
EI-02516

(3) Remove the hand grip of rear gate.

CAUTION:
- **Be careful not to scratch the trim.**
- **To protect the trim from damage, attach a protective tape to the tool in use.**

a) Insert a precision screwdriver (a).
b) With the screwdriver inserted, push it down to release the claw and pull it toward you.
c) Remove the screws and detach the hand grip.

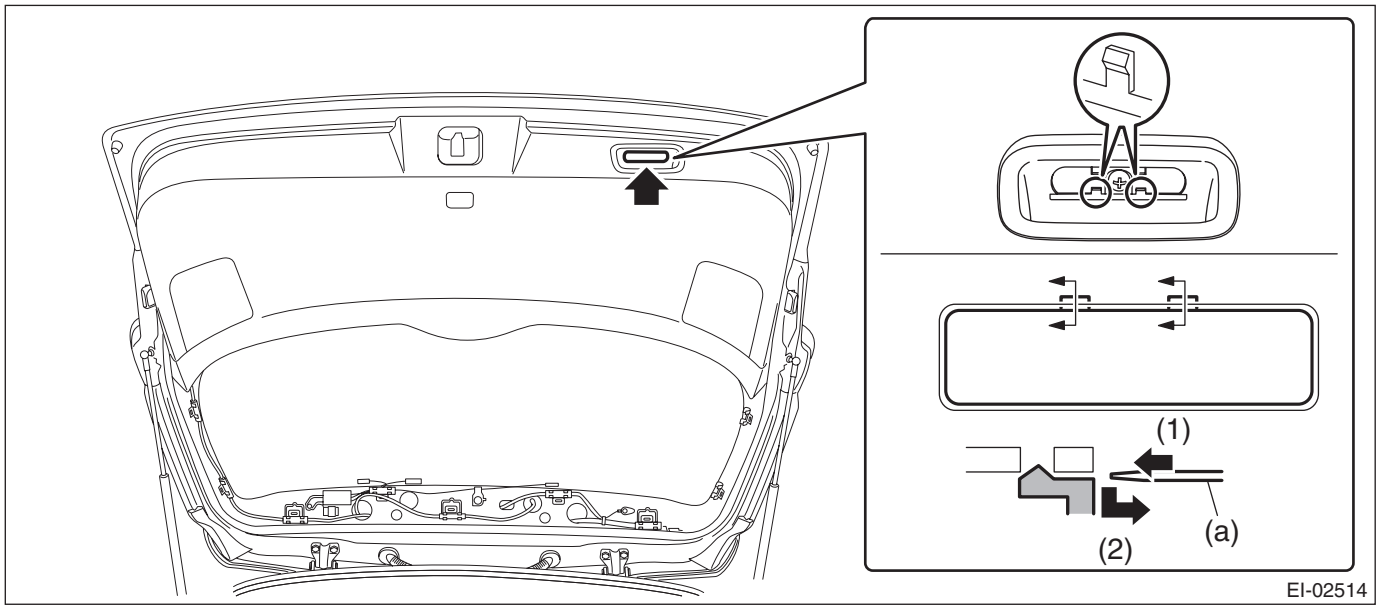

EI-02514

(4) Remove the rear gate lower trim.
a) Remove the clips on both ends.
b) Release the clips and remove the rear gate lower trim.

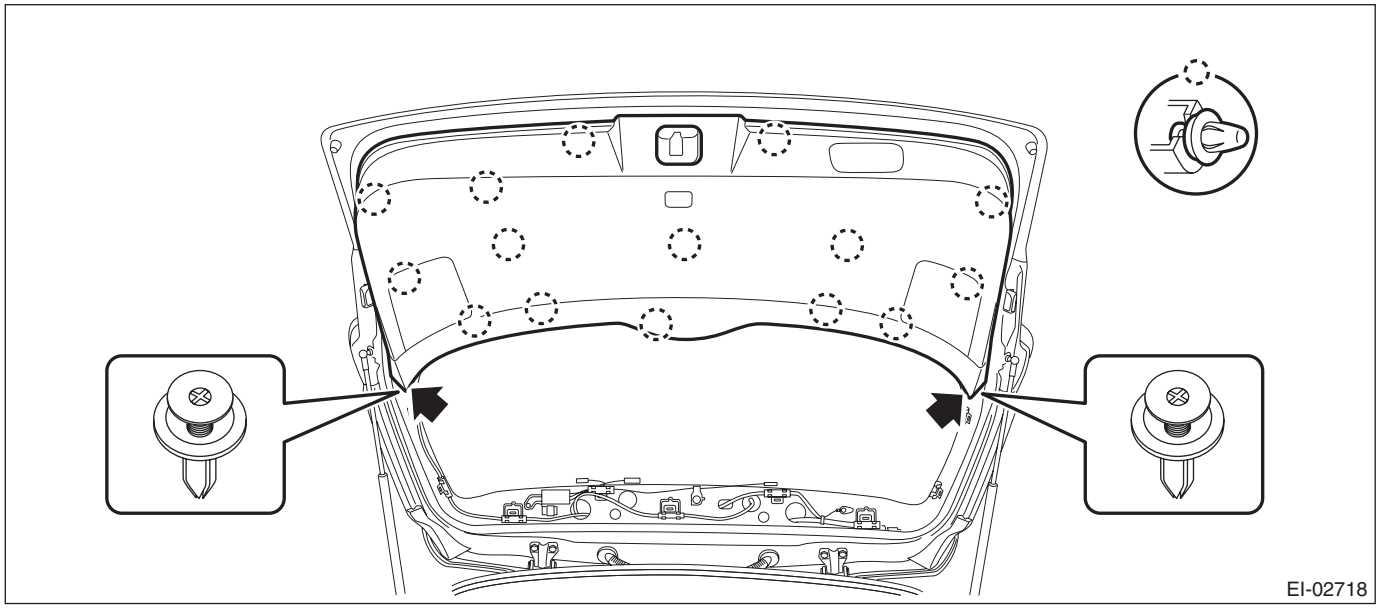

4) Remove the rear wiper motor assembly.
(1) Remove the harness clamp, and disconnect the harness connector of the wiper motor assembly.
(2) Remove the bolts, and then remove the wiper motor assembly.

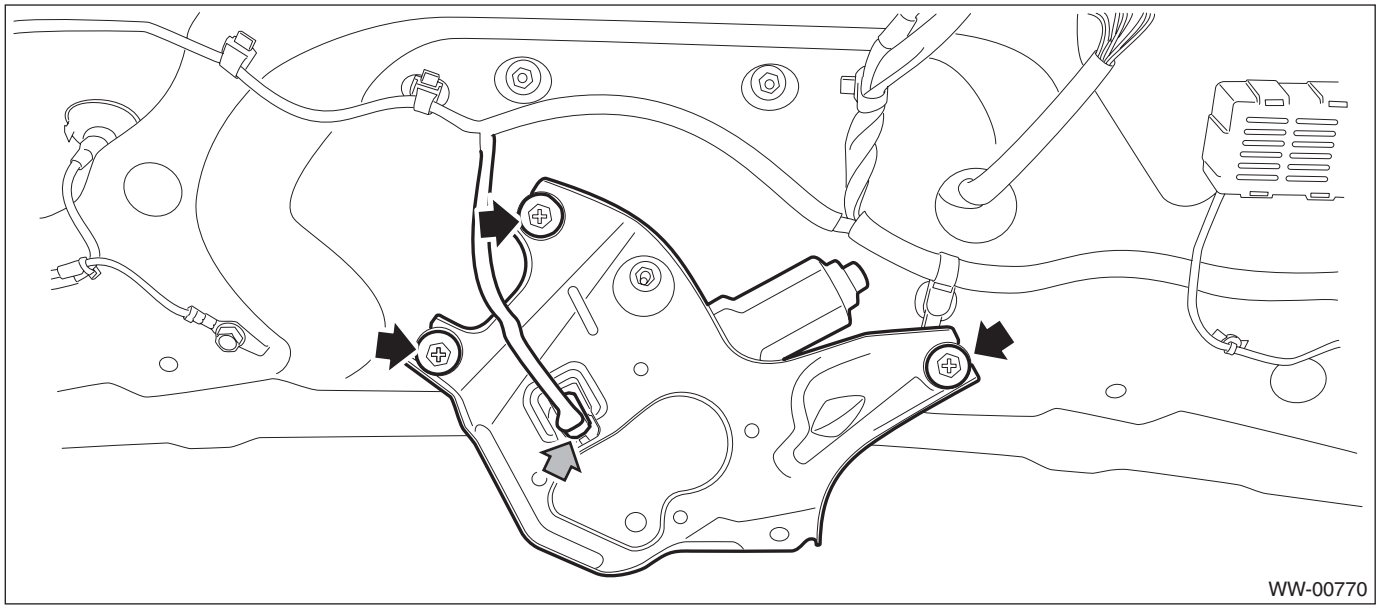

B: INSTALLATION

1) Install each part in the reverse order of removal.
2) Make sure that the ❍ mark on the pivot cap faces up, as shown in the figure.

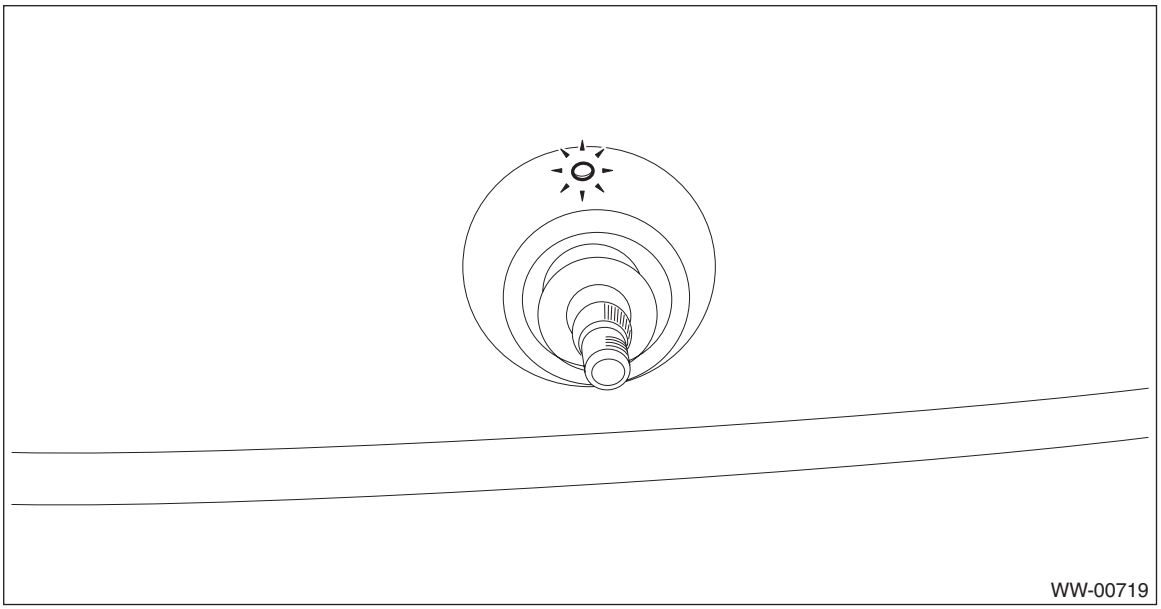

Tightening torque:
Refer to "COMPONENT" of "General Description". <Ref. to WW-4, REAR WIPER, COMPONENT, General Description.>

C: INSPECTION

1) Connect the battery to the wiper motor connector and confirm that wiper motor operates.
2) Connect the battery to the terminals of connector, then run the motor and disconnect the terminal in mid motion.
3) Connect the battery and confirm that the motor stops at the automatic stop position after the motor operates at low speed again.

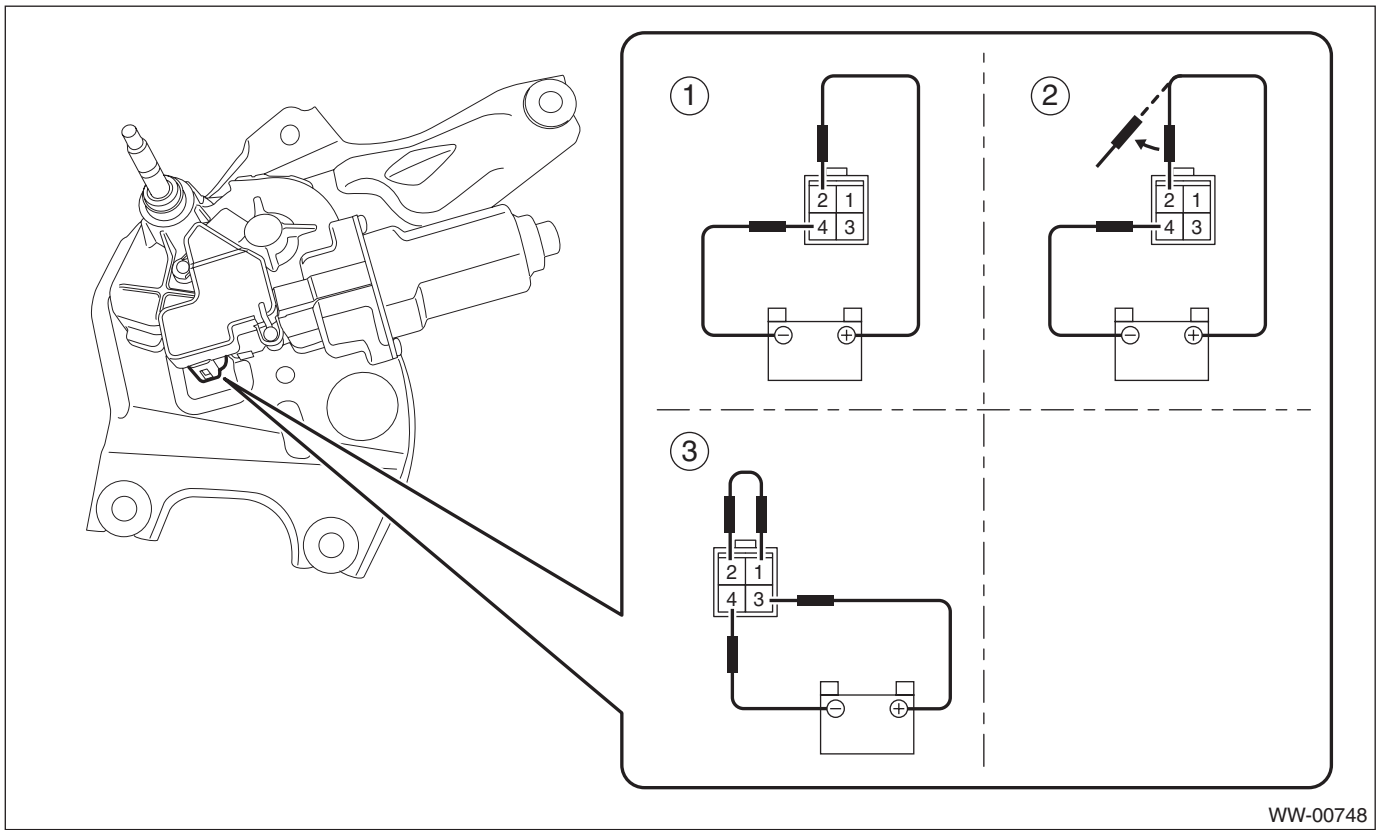

11.Rear Washer

A: REMOVAL

1) Disconnect the ground cable from battery.
2) Remove the rear gate upper trim.
   (1) Remove the claws on the trim edge.
   (2) Disconnect the claws in the center of trim, and remove the rear gate upper trim.

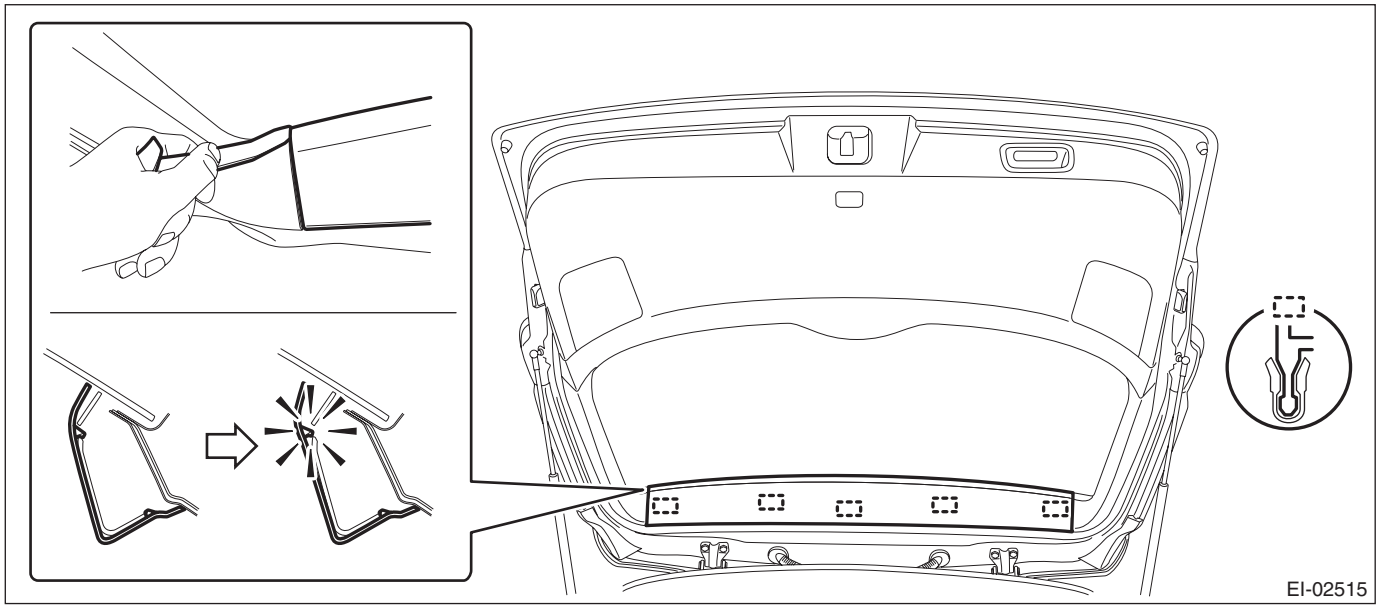

3) Remove the high-mounted stop light.
   (1) Remove the nut.

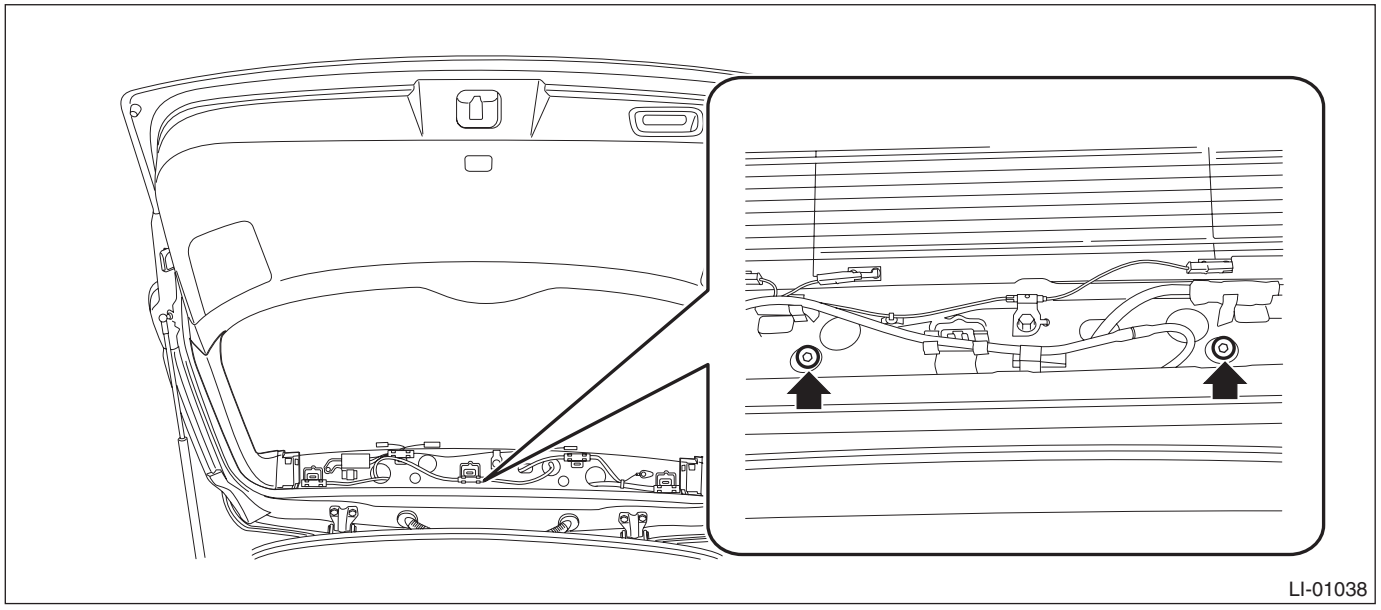

(2) Disconnect the connector and remove the high-mounted stop light.

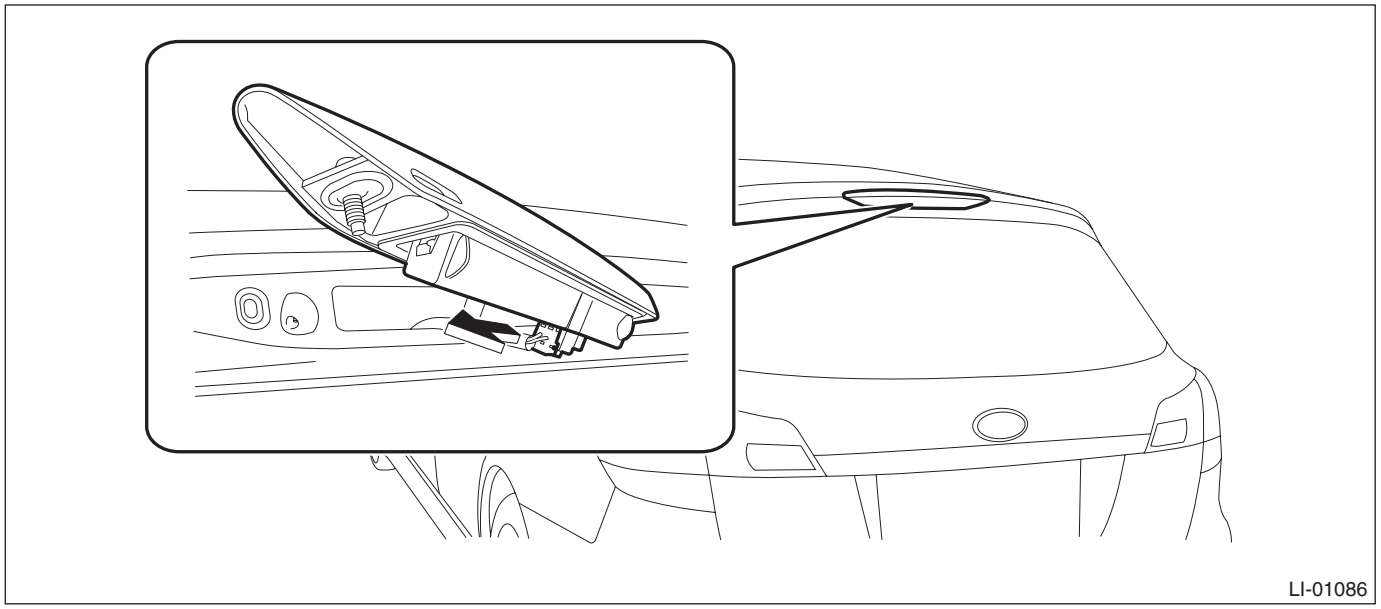

4) Remove the rear washer nozzle.

CAUTION:
Before removing, apply protective tape to the body panel and used tools not to damage the rear gate panel.

(1) Push the claw using a flat tip screwdriver, etc.
(2) When the washer nozzle lifts up, pull out the nozzle using a clip remover, etc.
(3) Disconnect the washer hose and remove the washer nozzle.

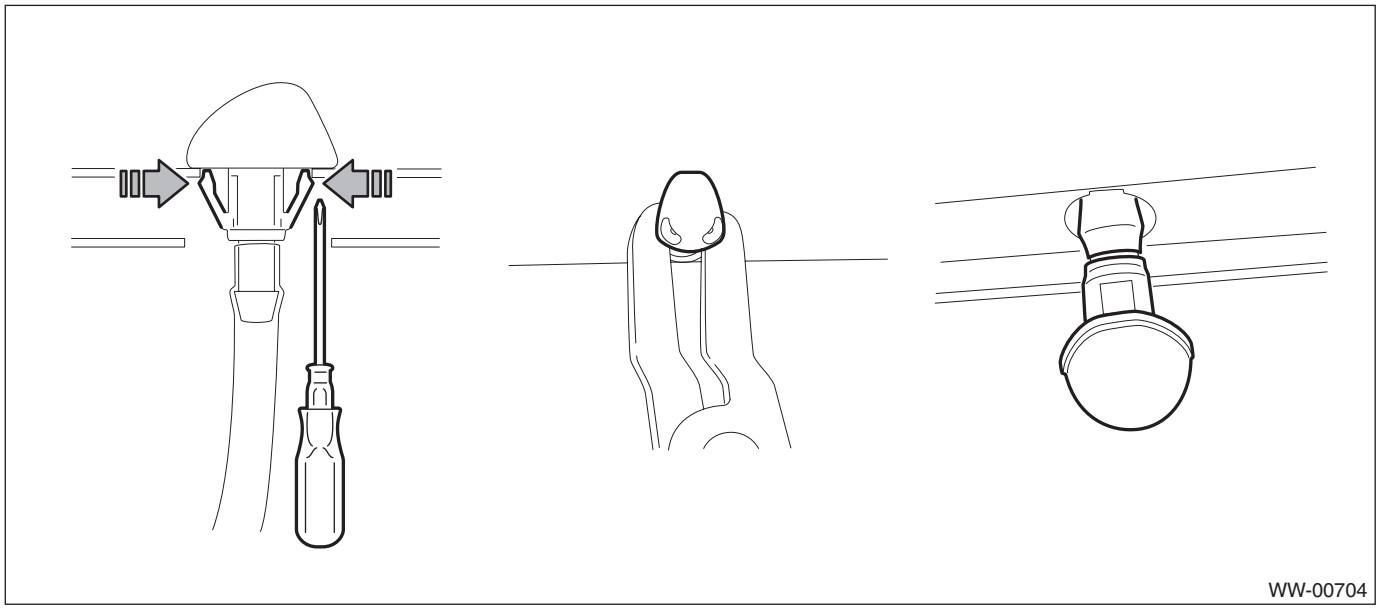

B: INSTALLATION

1) Install each part in the reverse order of removal.

Tightening torque:
High-mounted stop light assembly: 4.5 N·m (0.46 kgf-m, 3.3 ft-lb)

2) Check the washer nozzle position. <Ref. to WW-45, VISUAL INSPECTION, INSPECTION, Rear Washer.>

C: INSPECTION

1. VISUAL INSPECTION

Check for the following items, and if any malfunction is found, replace the corresponding part.
- Make sure the nozzle and hose are not clogged.
- Make sure the hose is not bent.

2. INSPECTING THE SPRAY POSITION

1) Turn the wiper switch to OFF position.
2) While the vehicle is stopped, check that the washer spray position is as shown in the figure.
3) After inspection, if the spray position is out of the specified range, adjust the position or replace with the new washer nozzle.

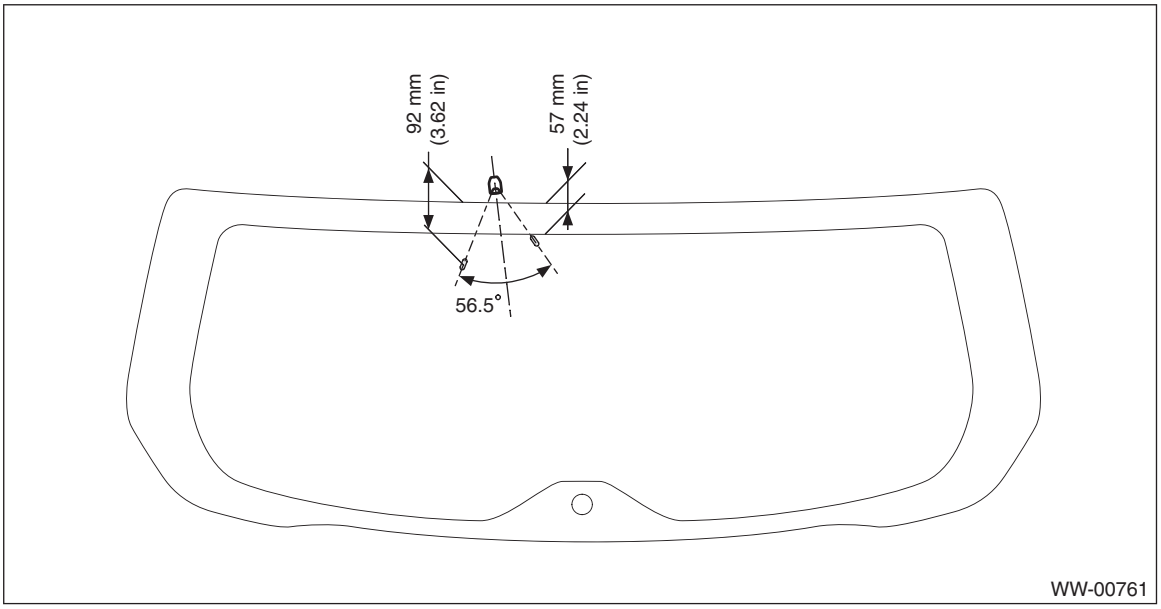

ENTERTAINMENT

ET

		Page
1.	General Description	2
2.	Audio System	3
3.	Navigation System	8
4.	Audio	12
5.	Front Speaker	14
6.	Rear Speaker	17
7.	Woofer	19
8.	Power Amplifier	21
9.	Antenna	22
10.	Noise Suppressor	30
11.	Steering Satellite Switch	32
12.	Navigation Body	38
13.	GPS Antenna	40
14.	Rearview Camera System	45
15.	Front Accessory Power Supply Socket	54
16.	Rear Accessory Power Supply Socket	58
17.	AUX Input Terminal	61

1. General Description

A: CAUTION

• Before disassembling or reassembling parts, always disconnect the battery ground cable from battery. When replacing the audio, control module and other parts provided with memory functions, record the memory contents before disconnecting the battery ground cable. Otherwise, the memory is cleared.
• Reassemble the parts in the reverse order of disassembly procedure unless otherwise indicated.
• Adjust parts to the given specifications.
• Connect the connectors securely during reassembly.
• After reassembly, make sure functional parts operate smoothly.

B: PREPARATION TOOL

1. GENERAL TOOL

TOOL NAME	REMARKS
Circuit tester	Used for measuring resistance and voltage.
Steering wheel puller	Used for removing the steering wheel.

2. Audio System

A: WIRING DIAGRAM

1. AUDIO

Refer to “Audio System” in the wiring diagram. <Ref. to WI-69, WIRING DIAGRAM, Audio System.>

B: INSPECTION

Symptoms	Repair order
No power coming in. (No display and no sound from speakers)	1. Check the fuse and power supply for audio. 2. Check the audio ground. 3. Remove the audio and repair them.
A specific speaker does not operate.	1. Check the speaker. 2. Check the output circuit between audio and speaker.
Audio generates noise with engine running.	1. Check the audio ground. 2. Check the generator. 3. Check the ignition coil. 4. Remove the audio and repair them.
Volume is low in AM and FM modes or interference noise occurs.	1. Check the antenna. 2. Check the antenna amplifier. 3. Check the rear window defogger. 4. Check the noise suppressor. 5. Check the audio ground. 6. Remove the audio and repair them.
Rear window defogger generates noise when it operate.	1. Check the rear window defogger.

1. CHECK EACH VEHICLE SIGNAL

1) With the ignition switch ON and audio OFF, turn the VOLUME dial by 40 clicks while pressing the preset 1 key.
2) When «System Diagnostic Menu» is displayed, select {Confirmation/Adjustment} by SCROLL/TUNE dial, then press ENTER/SETTING key (SCROLL/TUNE dial).

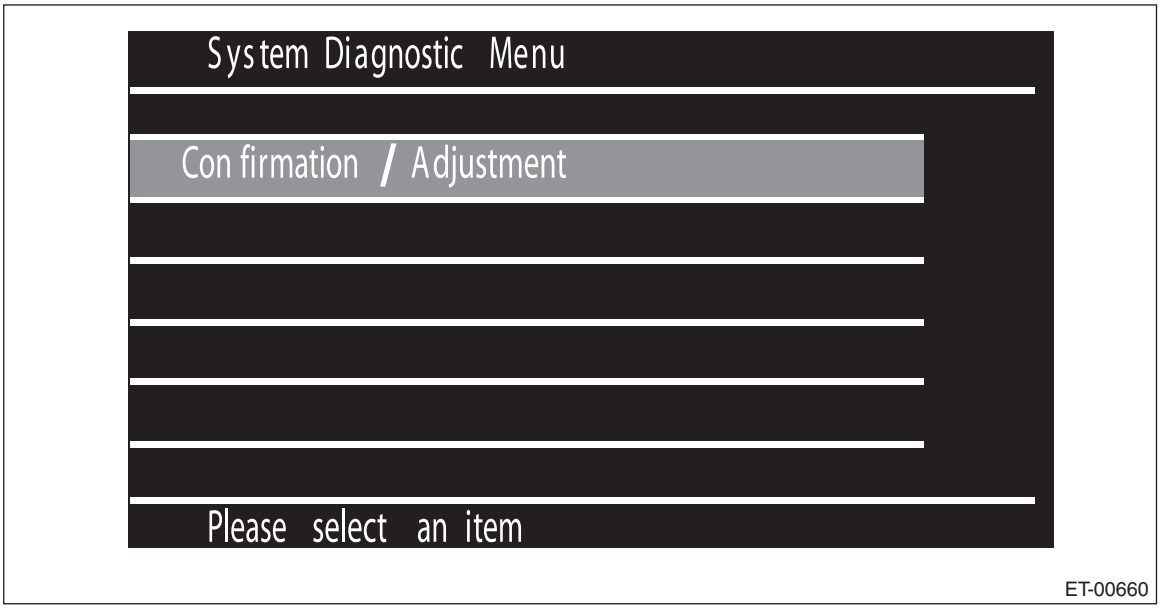

3) When «System.. > Confirmation/Adjustment» is displayed, select {Vehicle Signals} by SCROLL/TUNE dial, then press ENTER/SETTING key (SCROLL/TUNE dial).

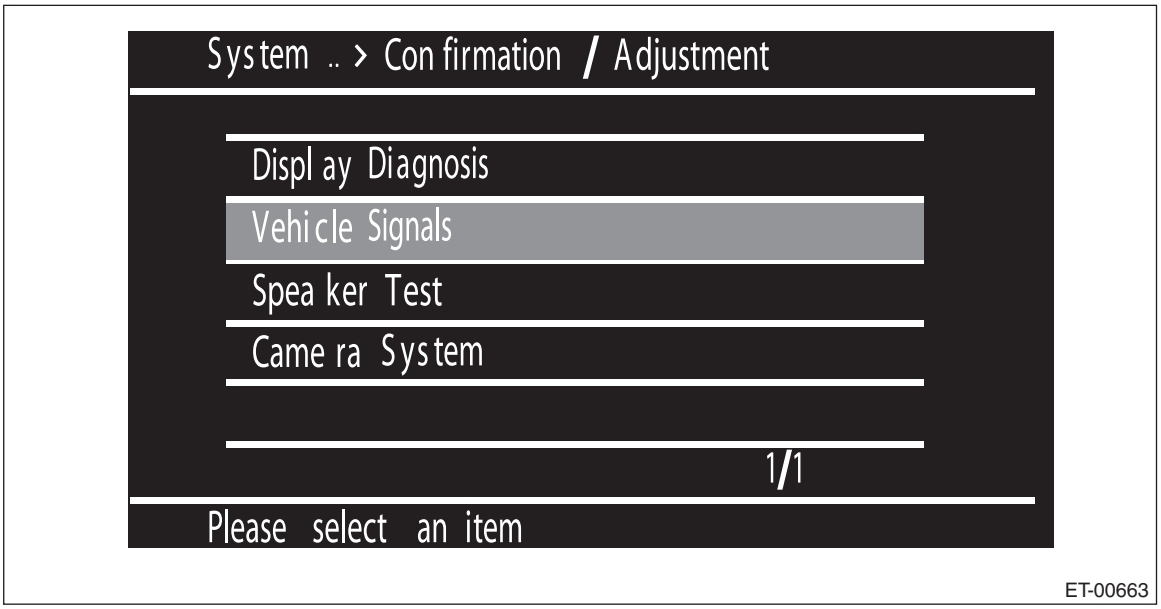

- **CHECK ILLUMINATION**

When the light switch is turned ON, make sure that “ON” lights in ILL+ and then the screen becomes dim.

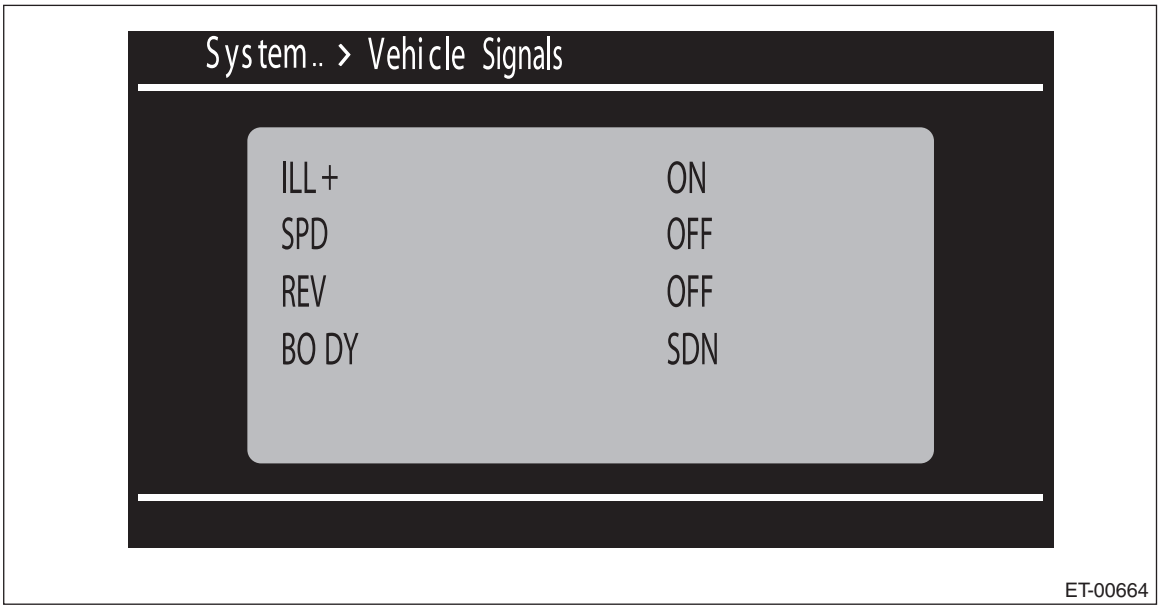

ON: Normal.
OFF: Abnormal. Check the signal line connector. If there are no problems, the unit could be faulty.

• CHECK SPEED SENSOR

NOTE:
- Before starting inspections, check the safety around the vehicle.
- Lift up the vehicle as necessary.
- When the diagnostic trouble code is input in the VDCCM, perform the Clear Memory operation.

1) Move the vehicle slowly 2 to 3 meters (6.6 to 9.8 ft).
2) Check that “ON” is displayed in SPD.

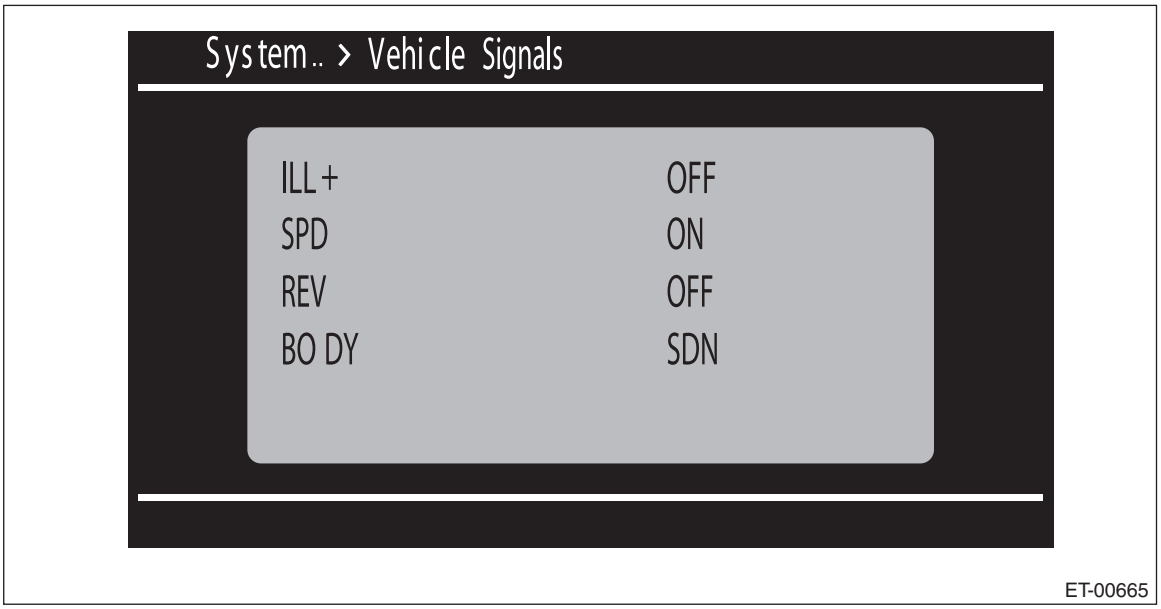

ON: Normal.
OFF: Abnormal. Check the signal line connector. If there are no problems, the unit could be faulty.

• CHECK BACK SENSOR

1) Turn the parking brake switch to ON and depress the brake pedal, then put the gear in reverse.
2) Make sure that “ON” is displayed in REV.

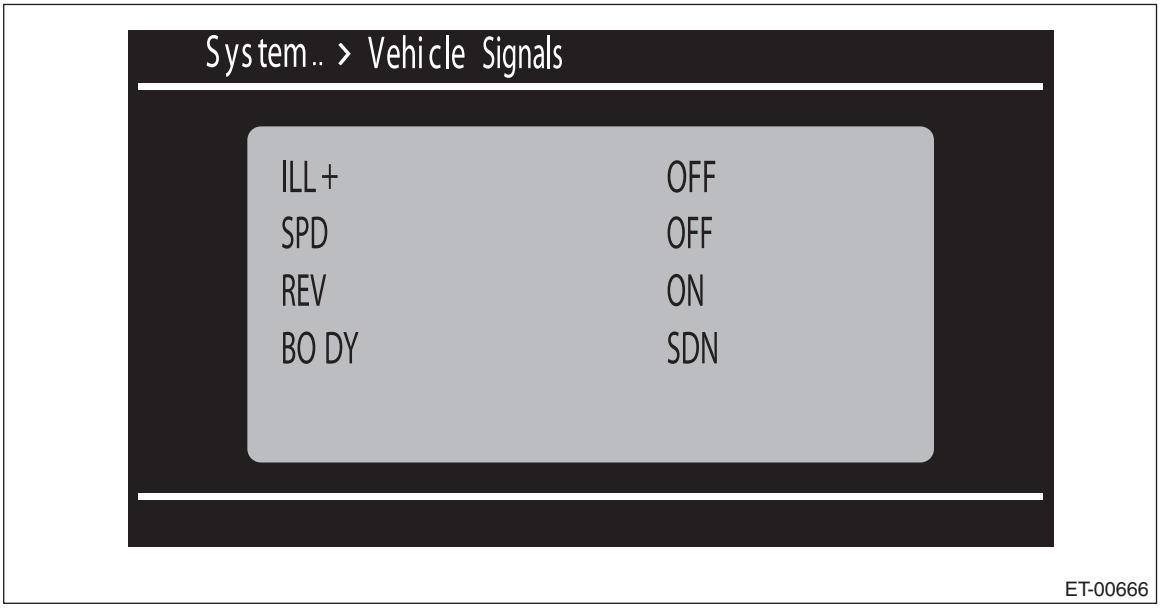

ON: Normal.
OFF: Abnormal. Check the signal line connector. If there are no problems, the unit could be faulty.

• **CHECK VEHICLE SETTING**

1) Check that “SDN” or “WGN” is displayed in BODY.

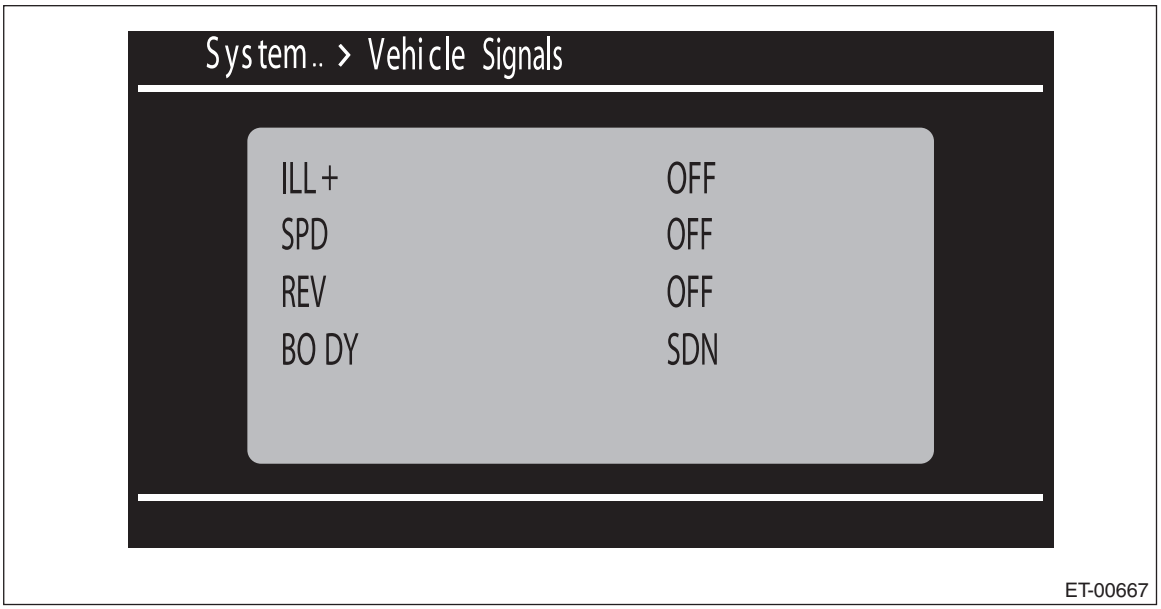

SDN: sedan model
WGN: OUTBACK model

2. CHECK MICROPHONE CONNECTION

Perform the inspection mode of the microphone connection.

1) When “HOOK OFF” button of the satellite switch is pressed with telephone unregistered, the screen switches to «BT» and “Welcome” is displayed.

2) While “Welcome” is displayed, press “+” → “HOOK OFF” → “+” → “HOOK OFF” → “+” continuously in 5 seconds.

3) After “Speak loudly” is displayed, the inspection mode of the microphone connection is started.

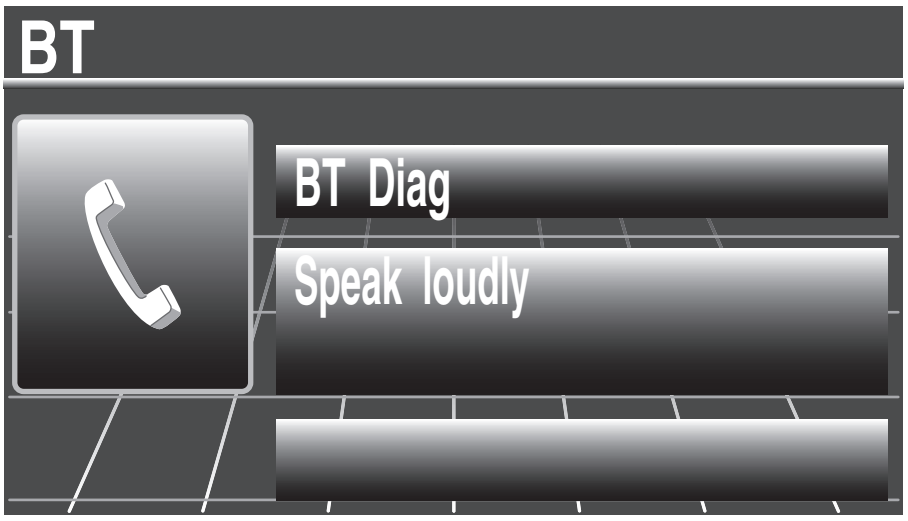

ET-00679

4) When the inspection mode of the microphone connection is completed, the inspection result is displayed.
MIC: good: normal
MIC: CHECK: There is something wrong with the connection status of the microphone. Check the following items.
- Connection status of the microphone
- Change the microphone or audio unit and check the microphone connection again then replace the faulty part.

C: NOTE

For procedure of each component in the audio system, refer to the respective sections.
- Audio unit: <Ref. to ET-12, Audio.>
- Power amplifier: <Ref. to ET-21, Power Amplifier.>
- Front side speaker: <Ref. to ET-14, FRONT SIDE SPEAKER, REMOVAL, Front Speaker.>
- Front door speaker: <Ref. to ET-15, FRONT DOOR SPEAKER, REMOVAL, Front Speaker.>
- Rear door speaker: <Ref. to ET-17, Rear Speaker.>
- Woofer: <Ref. to ET-19, Woofer.>
- Antenna: <Ref. to ET-22, Antenna.>
- Steering satellite switch: <Ref. to ET-32, Steering Satellite Switch.>
- Noise suppressor: <Ref. to ET-30, Noise Suppressor.>
- XM satellite radio antenna: <Ref. to ET-23, XM SATELLITE RADIO ANTENNA, REMOVAL, Antenna.>

3. Navigation System

A: WIRING DIAGRAM

Refer to “Navigation System” in the wiring diagram. <Ref. to WI-185, WIRING DIAGRAM, Navigation System.>

B: INSPECTION

NOTE:
If no problems are found in “CHECK NAVIGATION OPERATION”, “CHECK EACH CONNECTION” and “CHECK EACH VEHICLE SIGNAL” as described below, check the navigation system circuit. <Ref. to WI-185, WIRING DIAGRAM, Navigation System.>

1. CHECK NAVIGATION OPERATION

Start the engine and check that the opening screen is displayed.
Standard: Opening screen is displayed.
OK: Normal.
NG: If the screen is not displayed, check the following items.

- The map disk (DVD-ROM) is set in the navigation system unit
- Check the connection of the power supply connector at the backside of the navigation unit. If wire connection is correct or has got repaired, check again that the opening screen is displayed.

If it is not displayed at this time, it indicates the navigation unit trouble.

2. CHECK EACH CONNECTION

1) Press the «Audio» key to display the AUDIO OFF screen.
2) Touch the screen in the order of (1) to (6) shown in the figure.

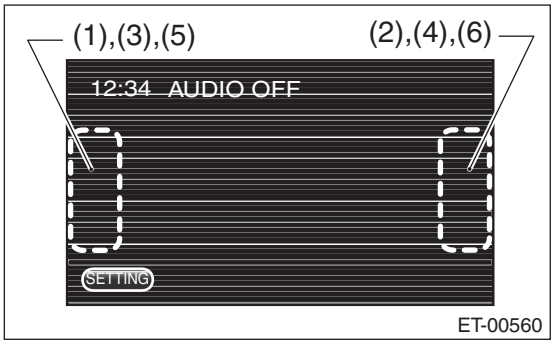

3) The display will switch to the Dealer Diag Menu screen.

• CHECK MICROPHONE, AUX AND REARVIEW CAMERA

NOTE:
Before starting inspections, check the safety around the rear end of the vehicle and then turn the ignition switch to ON.
1) Touch {Connection Info.} on the «Dealer Diag Menu» screen.
2) Check that “Connect” is displayed in all the MIC, AUX and Camera items.

NOTE:
{AUX} item is not displayed, if the suitable mini jack is not inserted in the AUX terminal in the console box.
Connect: Normal.
NC: Abnormal. Check the signal line connection. If there are no problems, the unit could be faulty.

• CHECK GPS ANTENNA

NOTE:
When checking the GPS antenna, perform the check operation outdoors to improve the receiver sensitivity.
1) Touch {Vehicle Signal Info.} on the «Dealer Diag Menu» screen.
2) Check that “Connect” is displayed in the GPS Antenna item.
Connect: Normal.
NC: Abnormal. Check the GPS antenna connection.

• CHECK UART COMMUNICATION

NOTE:
When checking the GPS antenna, perform the check operation outdoors to improve the receiver sensitivity.
1) Touch {Vehicle Signal Info.} on the «Dealer Diag Menu» screen.
2) Check that “ON” is displayed in the UART signal item.
OK: Normal.
NG: Abnormal. Check the signal line connection. If there are no problems, the unit could be faulty.

NOTE:
If the UART signal line connector is not connected, the marker line is not displayed when the rearview camera image is displayed.

3. CHECK EACH VEHICLE SIGNAL

1) Press «Audio» key to display the Audio OFF screen.
2) Touch the screen in the order of (1) to (6) shown in the figure.

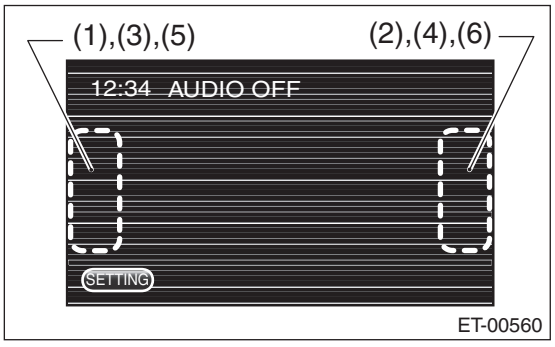

3) The display will switch to the Dealer Diag Menu screen.

• CHECK BACK SENSOR

1) Touch {Vehicle Signal Info.} on the «Dealer Diag Menu» screen.
2) Turn the parking brake switch to ON and depress the brake pedal, then put the gear in reverse.
3) Make sure that “ON” is displayed in the Reverse item.
ON: Normal.
OFF: Abnormal. Check the signal line connector. If there are no problems, the unit could be faulty.

• CHECK IGNITION SWITCH.

1) Touch {Vehicle Signal Info.} on the «Dealer Diag Menu» screen.
2) Make sure that “ON” lights in the IGN item and then the screen becomes dim.
ON: Normal.
OFF: Abnormal. Check the signal line connector. If there are no problems, the unit could be faulty.

• CHECK SPEED SENSOR

NOTE:
- Before starting inspections, check the safety around the vehicle.
- Lift up the vehicle as necessary.
- When the diagnostic trouble code is input in the VDCCM, perform the Clear Memory operation.

1) Touch {Vehicle Signal Info.} on the «Dealer Diag Menu» screen.
2) Move the vehicle slowly 2 to 3 meters (6.6 to 9.8 ft).
3) Check that “ON” is displayed in the Speed item.
ON: Normal.
OFF: Abnormal. Check the signal line connector. If there are no problems, the unit could be faulty.

• CHECK PARKING BRAKE

Touch {Vehicle Signal Info.} on the «Dealer Diag Menu» screen.

NOTE:
Because the navigation unit does not read the parking brake signal, OFF is displayed constantly.

4. CHECK DVD-ROM

Insert a DVD-ROM (region code 1) into the navigation unit and play it, and the screen switches to the image from DVD.

NOTE:
Region code 1 is the code for DVD-ROM designated for United States of America and Territories of the United States, Canada, Bermuda islands. DVD-ROMs of different region code cannot be played.
Standard: DVD images are displayed.
OK: Normal.
NG: If DVD images are not displayed, check the following points. If no problems are found, the navigation unit is faulty.
- Is a DVD-ROM set in the navigation unit?
- Is the DVD-ROM set in the unit properly?
- Is a correct type of DVD (DVD-VIDEO only) used?
- Is the playing side dirty or damaged?

NOTE:
- DVD images cannot be displayed while driving or the parking brake is not applied.
- The rear entertainment system cannot play MP3 files and DVD-Audio.

5. MESSAGE LIST

Message	Cause	Action
CHECK DISC	A nonconforming or unsupported disk or a disk with no data recorded is used, or the disk cannot be read due to damage, dirt, etc.	1. Is the playing side of the disk dirty or damaged? Check whether the disk conforming to the standard is used or the disk is set properly in the unit. 2. Check whether the disk is a playable data format.
REGION CODE ERROR	DVD region code mismatch.	Use a DVD with region code 1 displayed. (United States of America and Territories of the United States, Canada, Bermuda islands = Region code 1)
PARENTAL ERROR	Cannot play due to parental level setting.	Change the parental level set in the navigation unit.
PUSH EJECT	An error (including a high temperature error) occurred in the disk playback mechanism in the navigation unit while playing a CD (CDDA, MP3 or WMA).	1. Eject the CD and then insert again. 2. Turn the ignition switch to OFF and leave the device until the temperature lowers enough. If the message still appears after the step 1. above is performed, the unit could be faulty. 3. Turn the ignition switch to ACC/ON again and start DVD. 4. If the message still appears after the above-mentioned step is performed, the unit could be faulty.
PUSH EJECT	An error occurred in the disk playback mechanism in the navigation unit while playing a DVD.	1. Eject the DVD and then insert again. 2. Turn the ignition switch to OFF and leave the device until the temperature lowers enough. If the message still appears after the step 1. above is performed, the unit could be faulty. 3. Turn the ignition switch to ACC/ON again and start DVD. 4. If the message still appears after the above-mentioned step is performed, the unit could be faulty.

C: NOTE

For procedure of each component in the navigation system, refer to the respective section.
- Navigation unit: <Ref. to ET-38, Navigation Body.>
- GPS antenna: <Ref. to ET-40, GPS Antenna.>

4. Audio

A: REMOVAL

1) Disconnect the ground cable from battery.
2) Remove the center panel assembly.

CAUTION:
Do not put your finger on the fin of the air vent grille. Doing so may damage the fin.

(1) Attach the protective tape (a) to the meter visor.

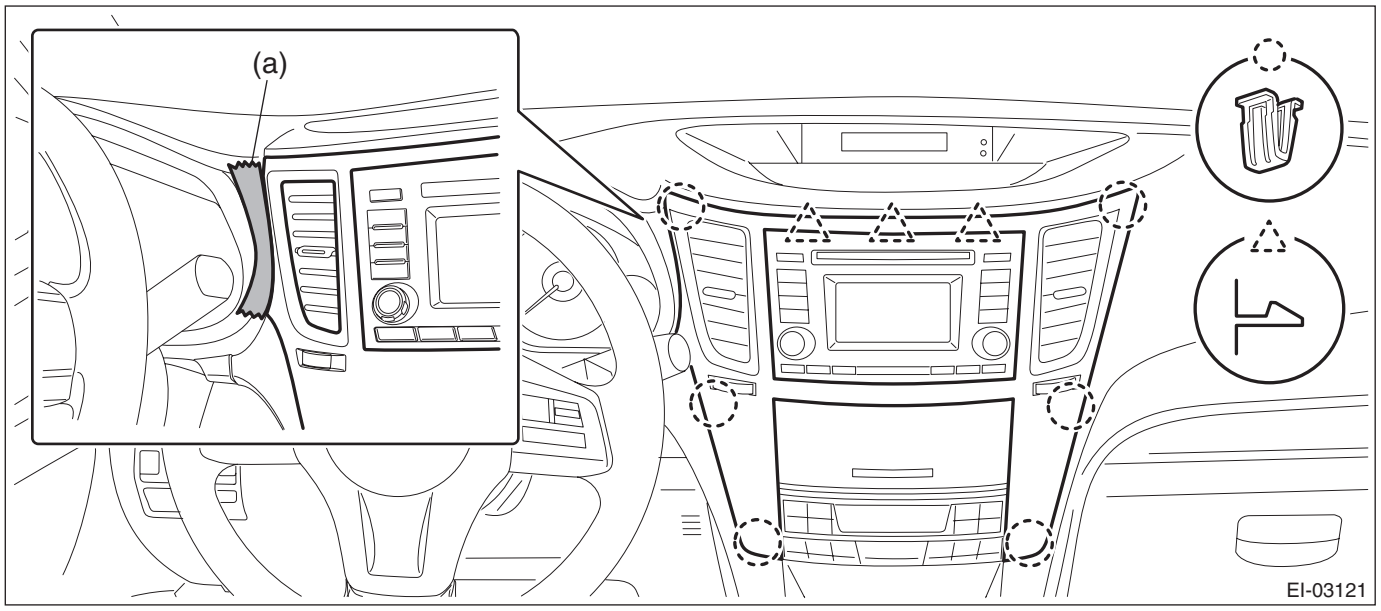

(2) Insert a finger into the air vent grille and release the left and right clips at the top of the center panel. (A), (B)
(3) Insert a finger into the air vent grille and release the left and right clips at the center of the center panel. (C), (D)

(4) Release the clips at the bottom of the center panel and remove the center panel assembly.

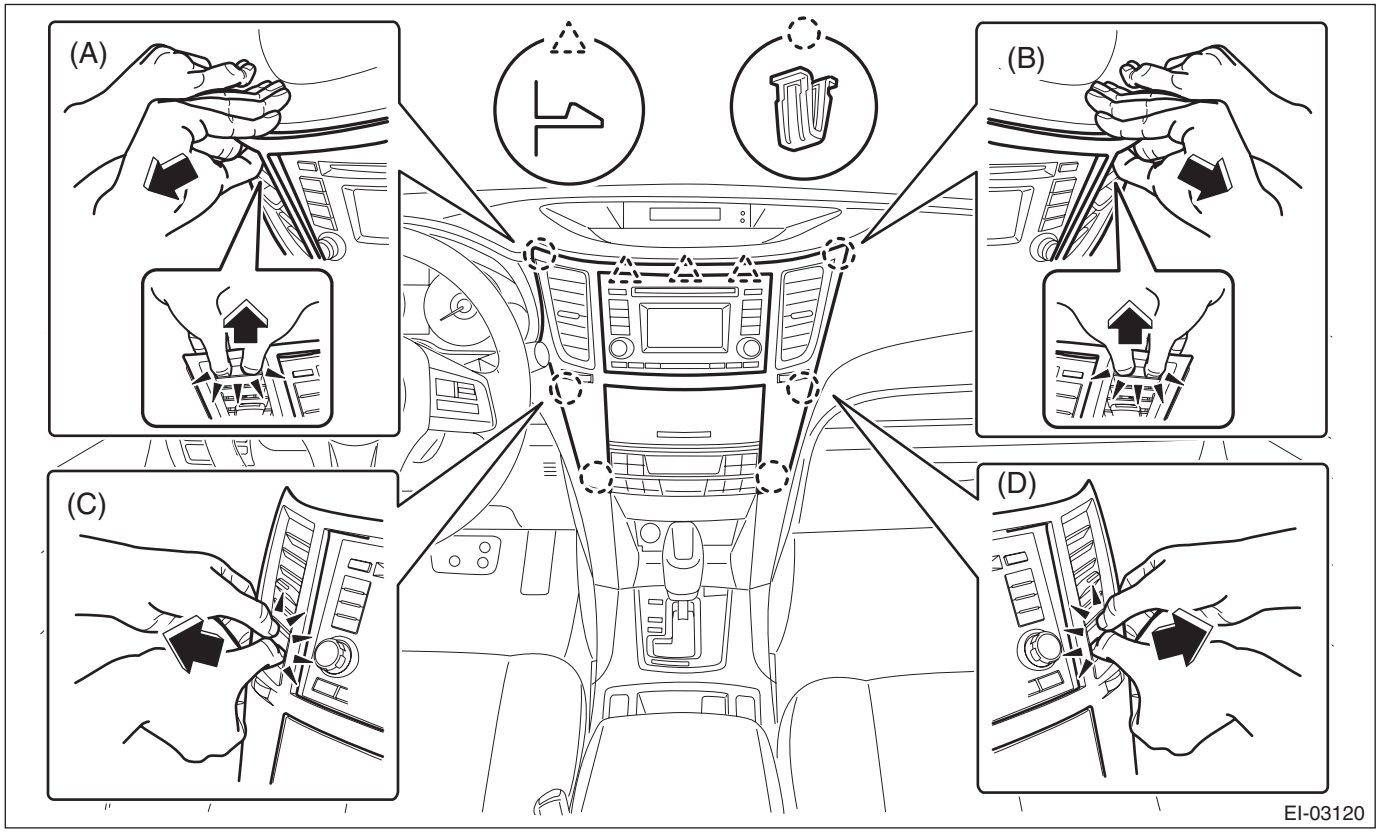

3) Remove the audio assembly.
(1) Remove the left and right screws, and partially pull the audio out from center console.
(2) Disconnect the connectors, and remove the audio assembly.

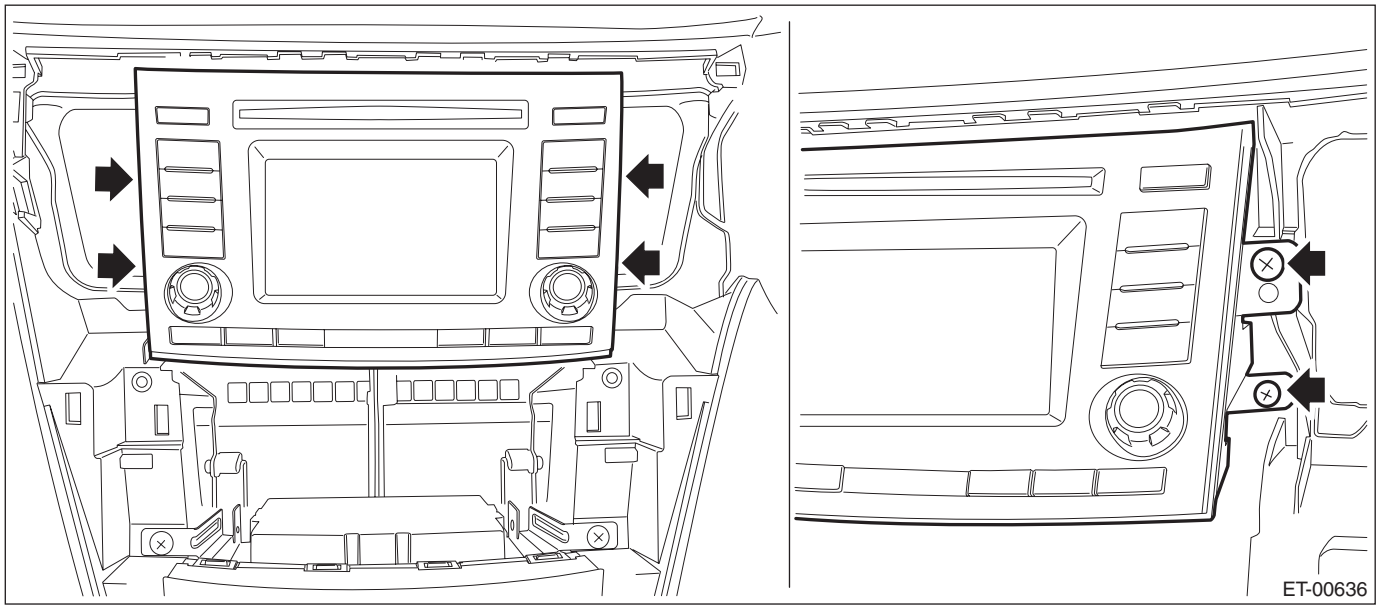

B: INSTALLATION

Install each part in the reverse order of removal.

5. Front Speaker

A: REMOVAL

1. FRONT SIDE SPEAKER

1) Disconnect the ground cable from battery.
2) Remove the front side speaker.
   (1) Release the clips and claws, then detach the speaker cover.

CAUTION:
Use a plastic clip remover for removal.

   (2) Remove the screws.

Preparation tool: Stubby screwdriver

   (3) Disconnect the connector and remove the front side speaker assembly.

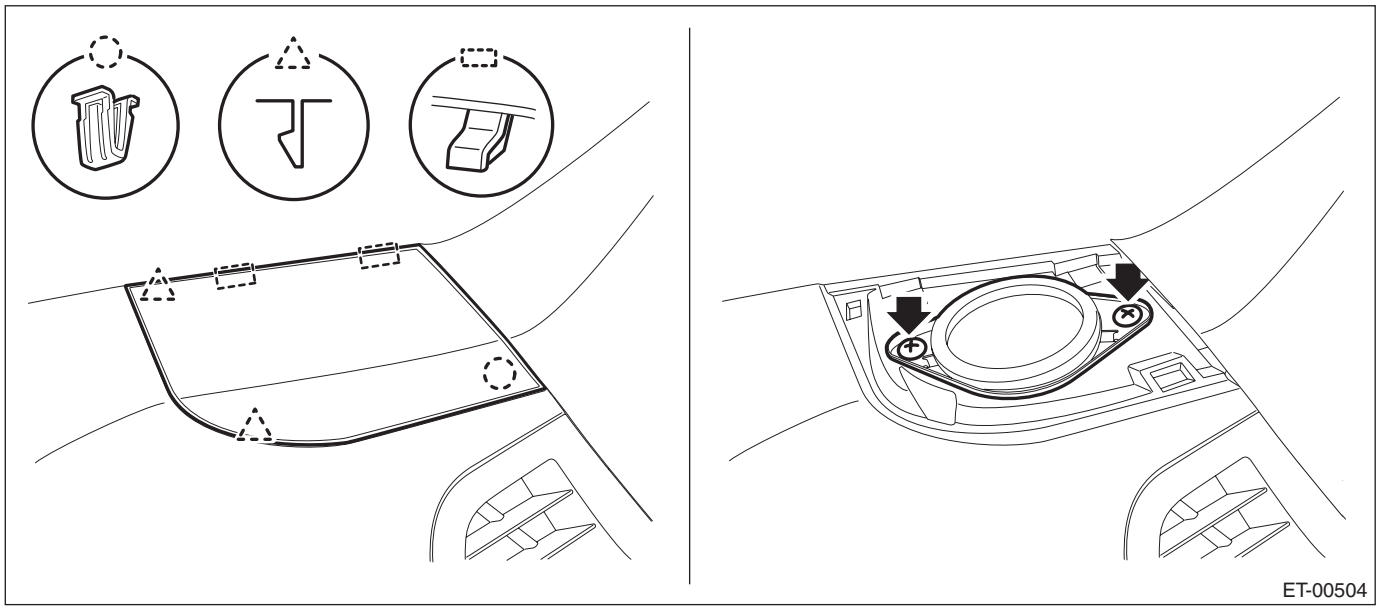

NOTE:
On the passenger's side, also disconnect the sunload sensor connector.

2. FRONT DOOR SPEAKER

1) Disconnect the ground cable from battery.
2) Remove the gusset cover.
   (1) Attach the protective tape (a) to the door trim.
   (2) Release the clips and claws, then detach the gusset cover.

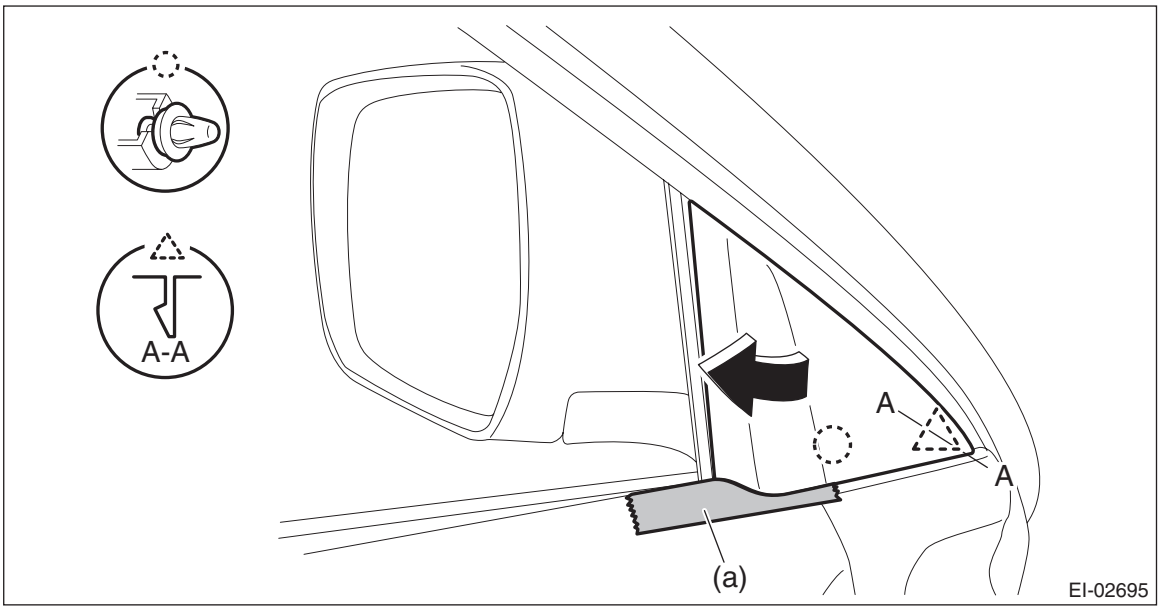

3) Remove the door trim assembly.
   (1) Open the cover and remove the screw.
   (2) Remove the clips in the order of (A) to (J) and remove the door trim assembly from the door panel.

CAUTION:
When removing the door trim, be sure to remove the clips in the correct order. Forcibly removing clips may damage the door panel assembly.

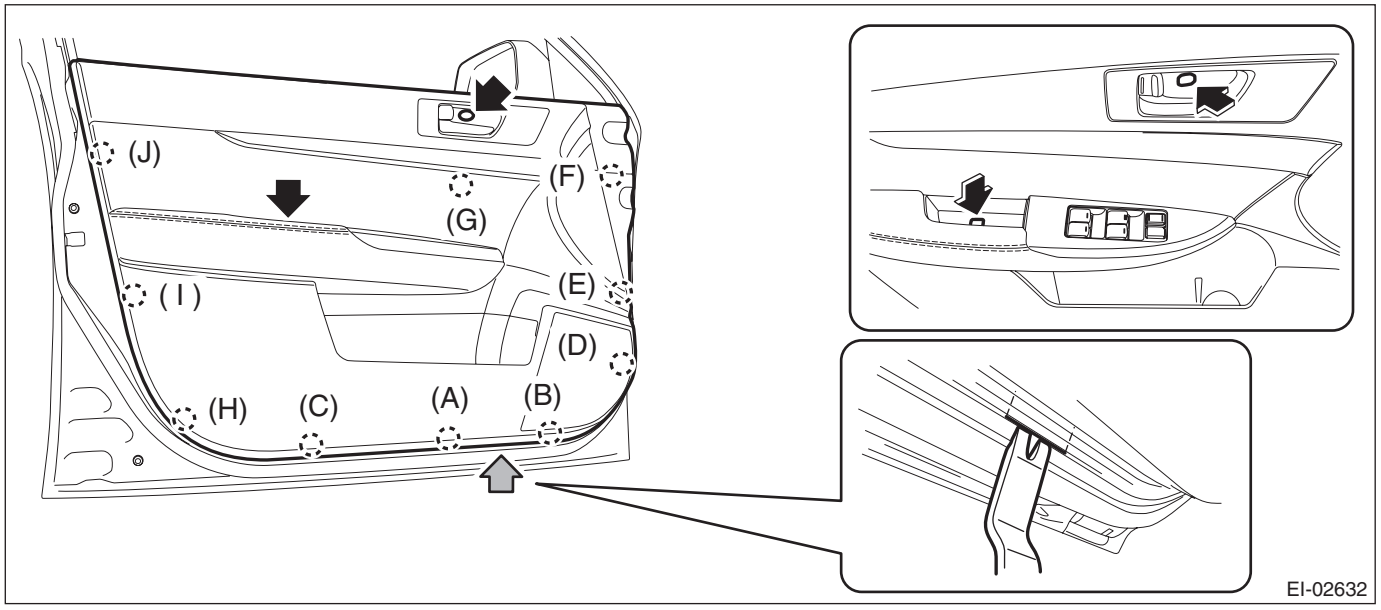

NOTE:
Insert a plastic clip remover into the slit at the bottom of the door trim, to lift the door trim.

(3) Remove the cables (a) and (b) from the cable holder of inner remote.

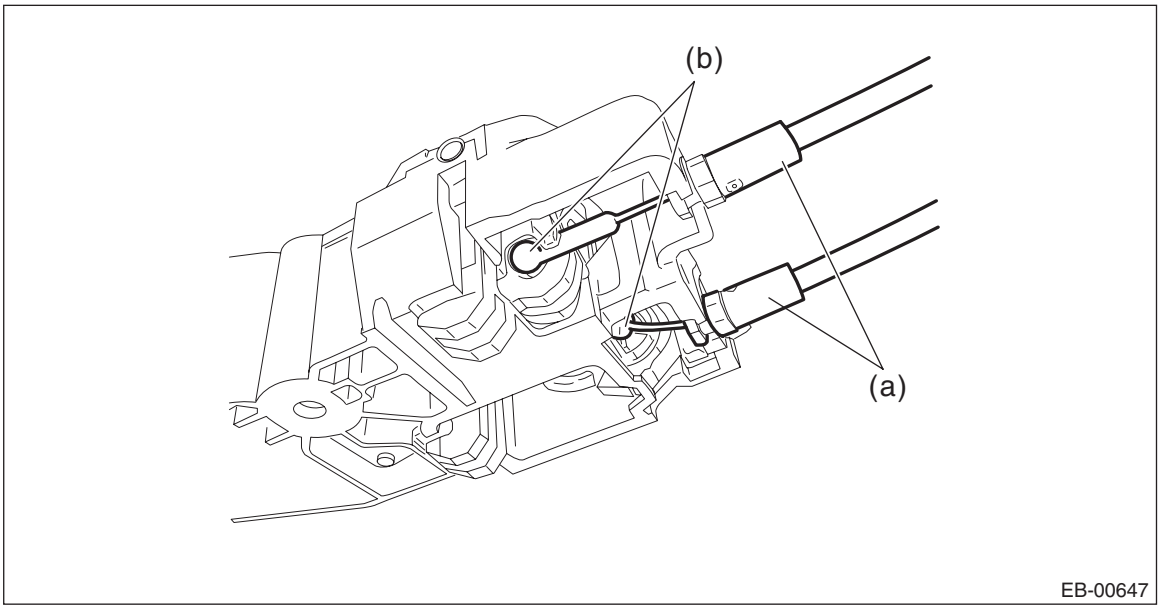

(4) Disconnect the harness connector and remove the door trim assembly.

4) Remove the front door speaker assembly.

(1) Remove the screws.

(2) Disconnect the harness connector and remove the front door speaker assembly.

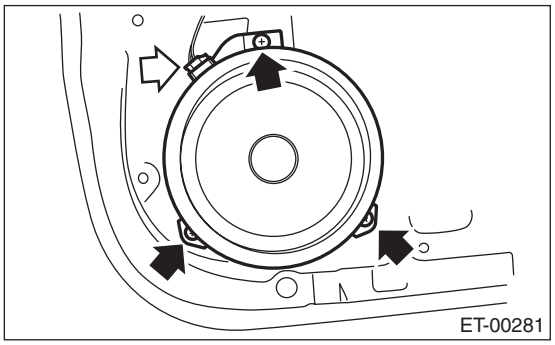

B: INSTALLATION

Install each part in the reverse order of removal.

6. Rear Speaker

A: REMOVAL

1) Disconnect the ground cable from battery.
2) Remove the door trim assembly.
   (1) Open the cover and remove the screw.
   (2) Remove the clips in the order of (A) to (H) and remove the door trim assembly from the door panel.

CAUTION:
When removing the door trim, be sure to remove the clips in the correct order. Forcibly removing clips may damage the door panel assembly.

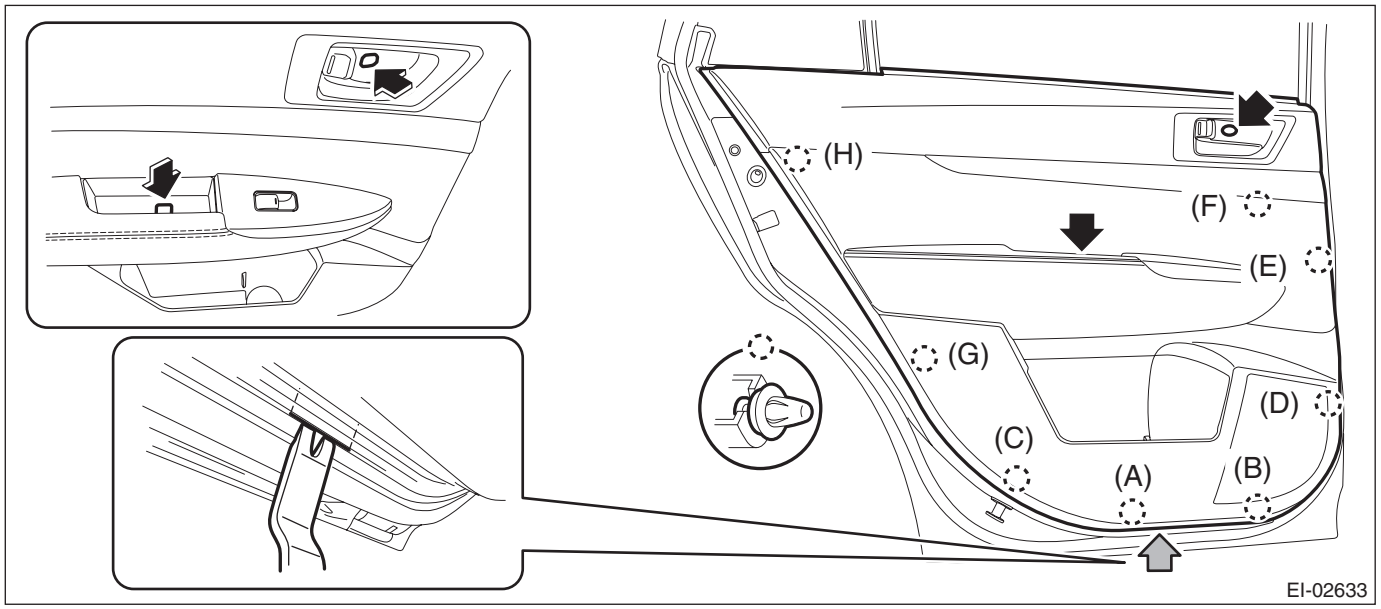

NOTE:
Insert a plastic clip remover into the slit at the bottom edge of the door trim and lift the door trim.
   (3) Remove the cables (a) and (b) from the cable holder of inner remote.

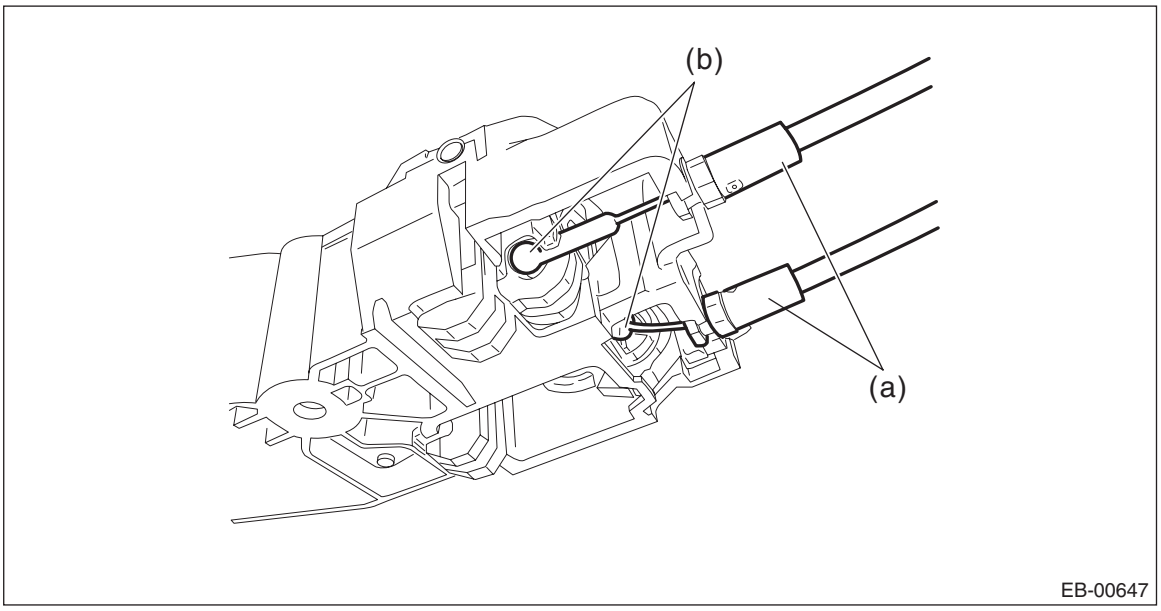

   (4) Disconnect the harness connector and remove the door trim.

3) Remove the rear speaker assembly.
   (1) Remove the screws.
   (2) Disconnect the harness connector and remove the rear speaker assembly.

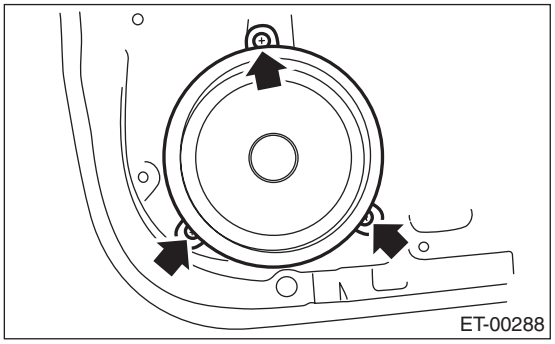

B: INSTALLATION

Install each part in the reverse order of removal.

7. Woofer

A: REMOVAL

1. SEDAN MODEL

NOTE:
harman/kardon® audio system only.
1) Disconnect the ground cable from battery.
2) Remove the rear shelf trim. <Ref. to EI-120, REMOVAL, Rear Shelf Trim.>
3) Remove the woofer.
   (1) Remove the screws.
   (2) Disconnect the harness connector and remove the woofer assembly.

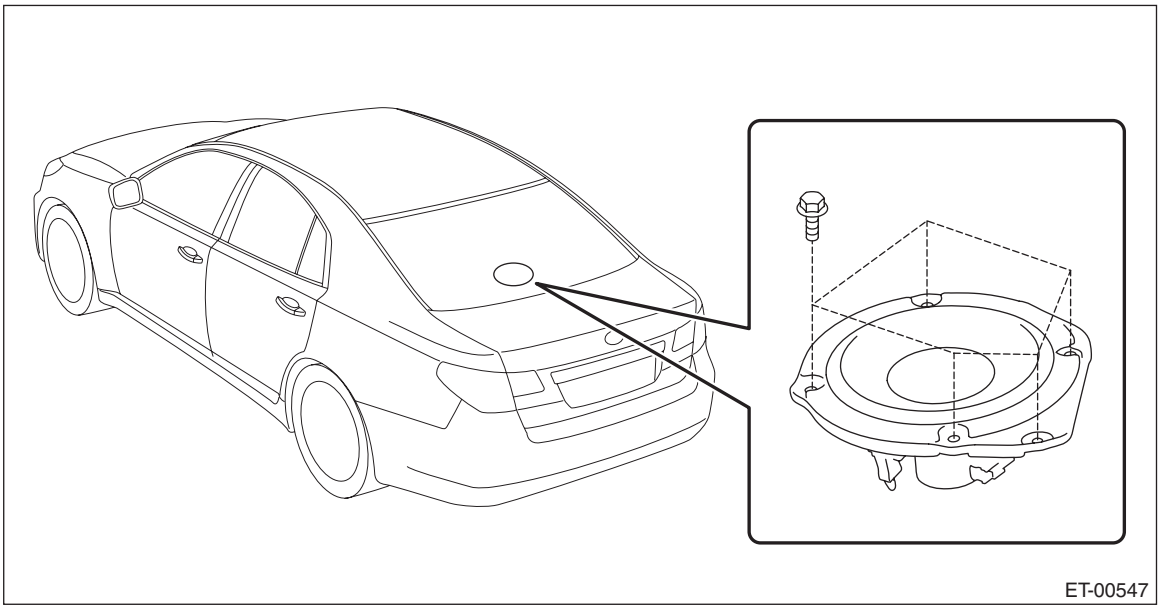

2. OUTBACK MODEL

NOTE:
harman/kardon® audio system only.
1) Disconnect the ground cable from battery.
2) Remove the rear quarter trim LWR. <Ref. to EI-114, OUTBACK MODEL, REMOVAL, Rear Quarter Trim.>
3) Remove the woofer.
   (1) Remove the woofer bracket mounting clips and screws, then remove the woofer bracket.
   (2) Disconnect the harness connector and remove the woofer assembly.

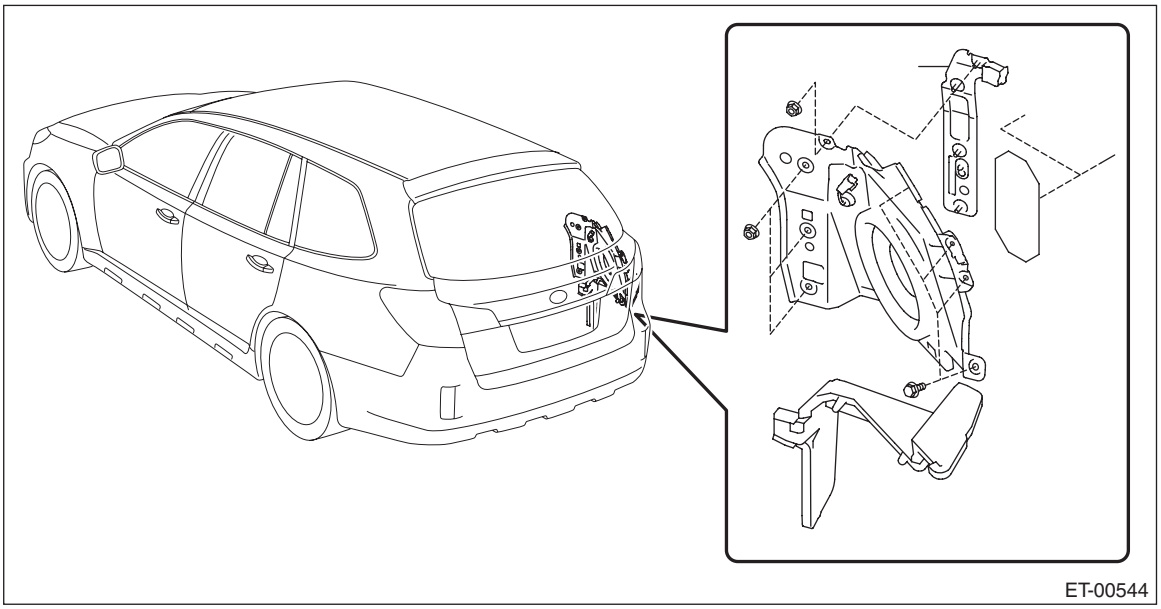

B: INSTALLATION

Install each part in the reverse order of removal.

Tightening torque:
7.5 N·m (0.76 kgf-m, 5.5 ft-lb)

8. Power Amplifier

A: REMOVAL

NOTE:
harman/kardon® audio system only.
1) Disconnect the ground cable from battery.

NOTE:
For the power seat, move the seat before removing the battery ground terminal.
2) Move the passenger's seat to the front-most position.
3) Remove the power amplifier.
   (1) Disconnect the harness connector.
   (2) Remove the nut and remove the power amplifier.

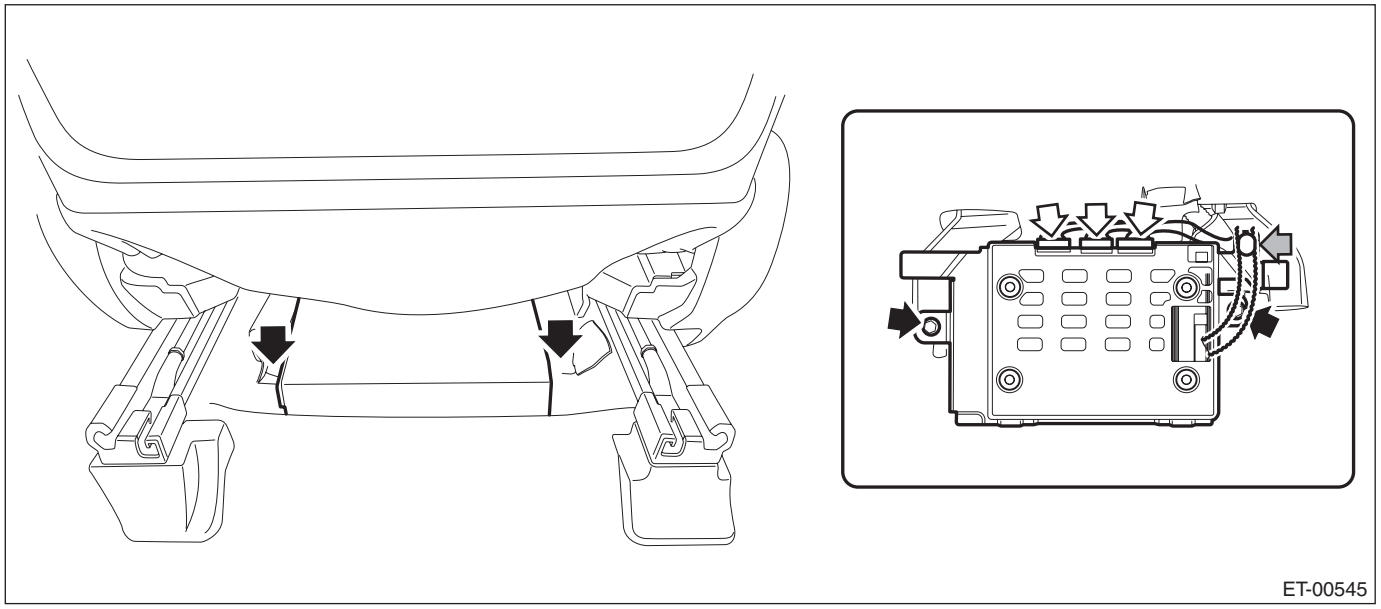

B: INSTALLATION

Install each part in the reverse order of removal.

Tightening torque:
4.5 N·m (0.46 kgf-m, 3.32 ft-lb)

9. Antenna

A: REMOVAL

1. RADIO ANTENNA AMPLIFIER

• Sedan model

1) Remove the rear quarter trim LH. <Ref. to EI-110, SEDAN MODEL, REMOVAL, Rear Quarter Trim.>
2) Remove the radio antenna amplifier assembly.
   (1) Disconnect the connector.
   (2) Remove the bolts, and then remove the radio antenna amplifier assembly.

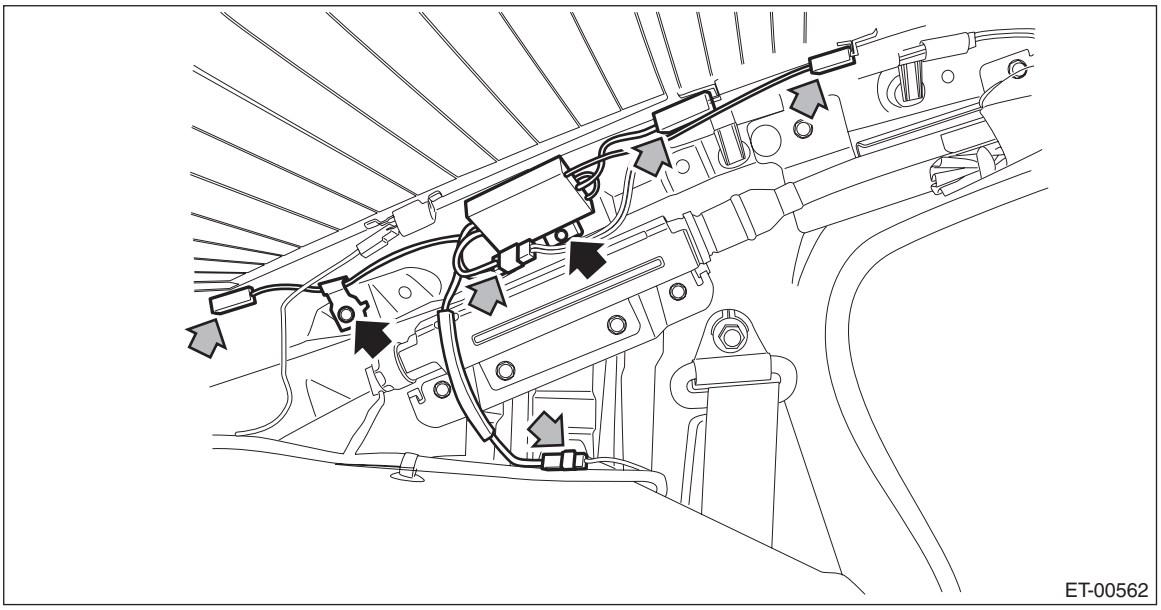

• OUTBACK model

1) Remove the rear gate upper trim.
   (1) Remove the claws on the trim edge.
   (2) Disconnect the claws in the center of trim, and remove the rear gate upper trim.

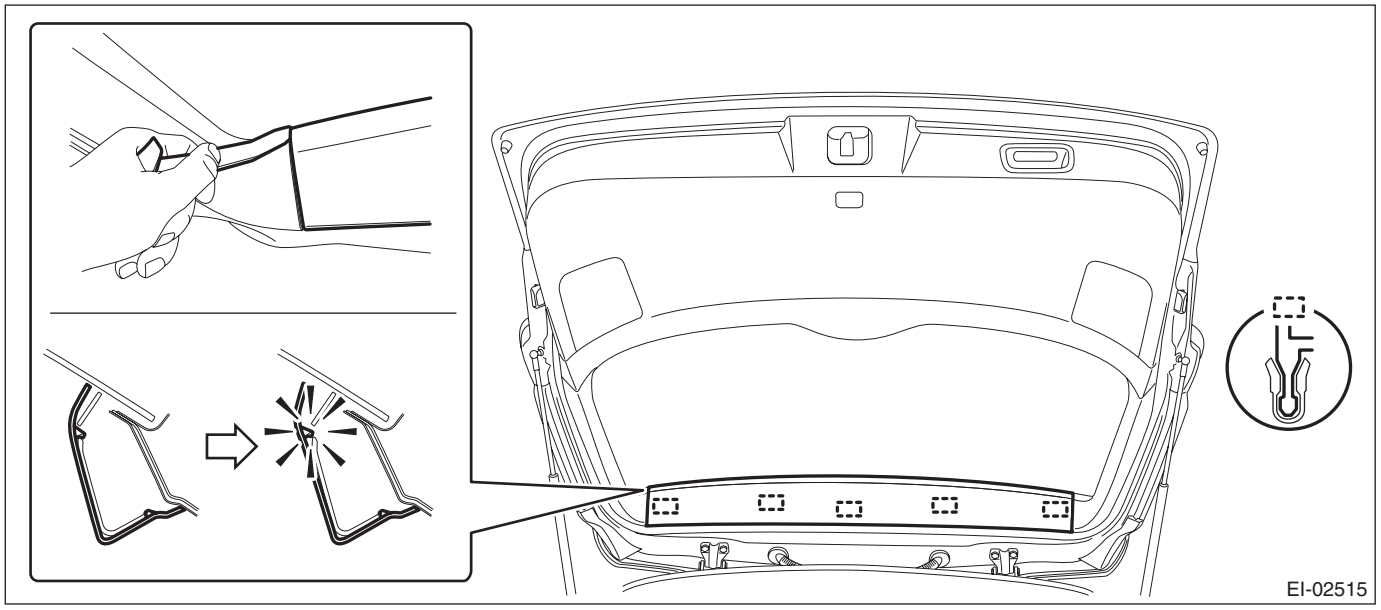

2) Remove the radio antenna amplifier assembly.
   (1) Disconnect the connector.
   (2) Remove the bolts, and then remove the radio antenna amplifier assembly.

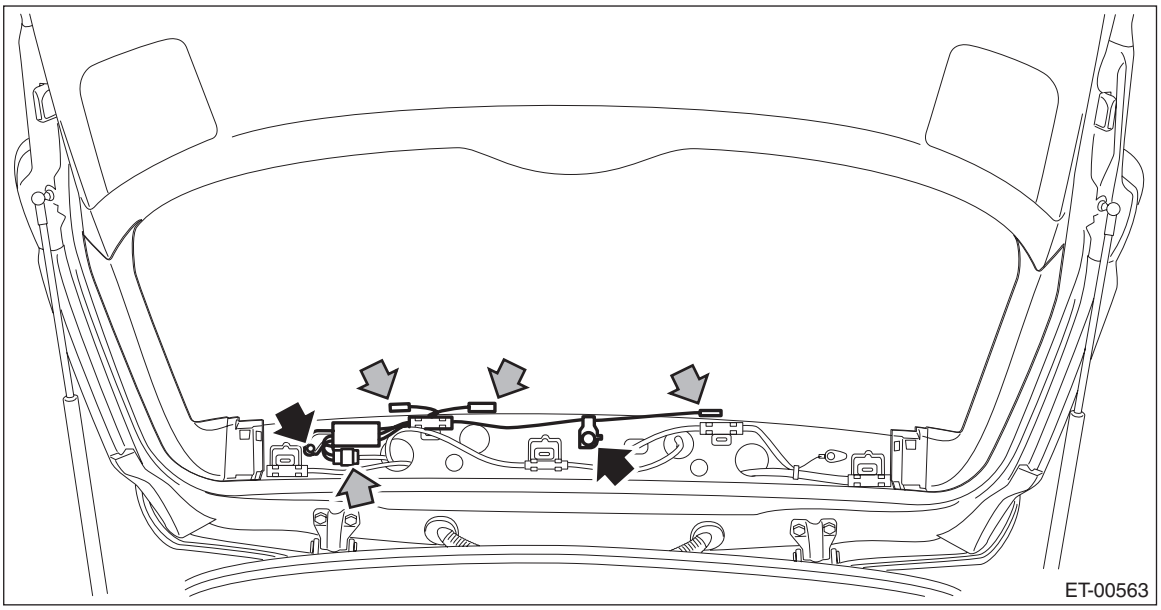

2. XM SATELLITE RADIO ANTENNA

1) Remove the roof trim. <Ref. to EI-131, REMOVAL, Roof Trim.>
2) Disconnect the harness connector and terminal, and remove the mounting nut (A).

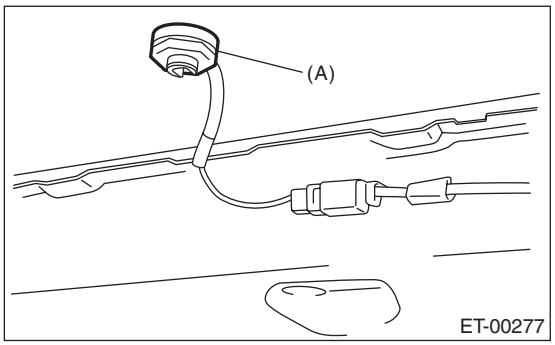

3) Pull out the antenna from the roof top.

B: INSTALLATION

Install each part in the reverse order of removal.

Tightening torque:
Radio antenna amplifier: 12 N·m (1.22 kgf-m, 8.9 ft-lb)
XM satellite radio antenna: 4.5 N·m (0.46 kgf-m, 3.3 ft-lb)

C: INSPECTION

CAUTION:
When wiping dirt off of the glass to avoid heat wire damage, be careful of the following.
- **Use a dry and soft cloth.**
- **Move the cloth along the heat wire.**

Inspection method of antenna, it is different from printing pattern of antenna.

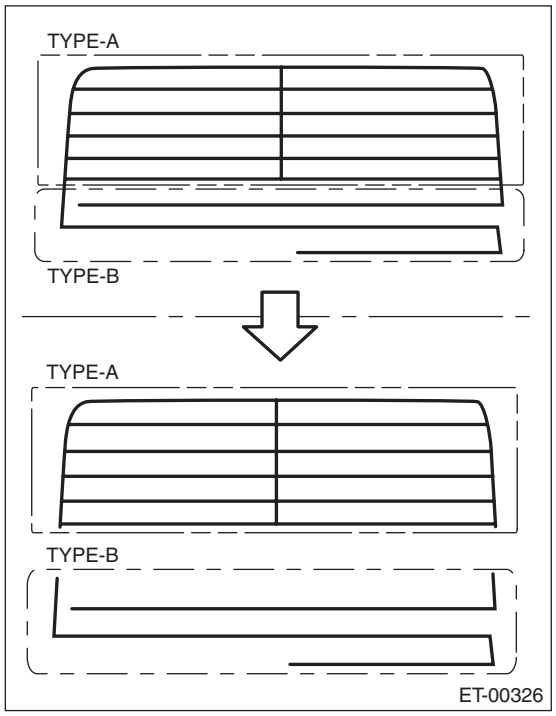

TYPE-A Printing pattern of grid
TYPE-B Printing pattern of straight

1. TYPE A

1) Disconnect the ground cable from battery.
2) Remove the trim.
Sedan model: Remove the rear quarter trim rear on both sides. <Ref. to EI-110, SEDAN MODEL, REMOVAL, Rear Quarter Trim.>
OUTBACK model: Remove the rear gate trim. <Ref. to EI-160, REMOVAL, Rear Gate Trim.>
3) Disconnect the antenna harness connector and antenna terminals.

4) Prepare the extension harness (A), (B).

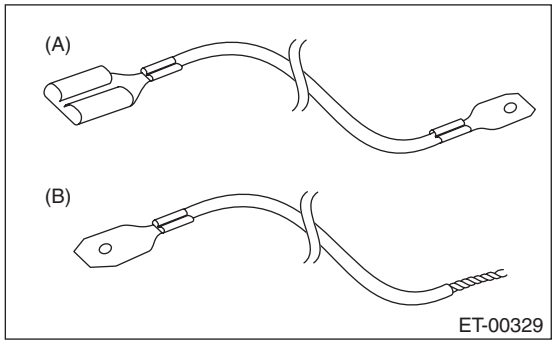

(A) Attach the flat terminals (male and female) to both ends of the harness of 2,000 mm (78.7 in) length (electrical wire unit dimensions approx. 2.0 mm^2 (0.0032 sq in)).

(B) Attach the flat terminal (female) to one side of the harness, another side to twist the harness of 2,000 mm (78.7 in) length (electrical wire unit dimensions approx. 2.0 mm^2 (0.0032 sq in)).

5) Connect the extension harness (A) to rear defogger harness (power supply side) terminal and antenna terminal.

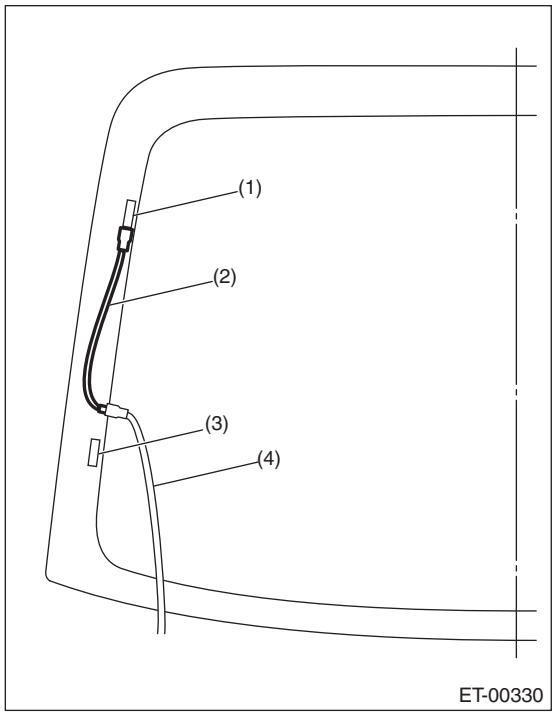

(1) Antenna terminal
(2) Extension harness (A)
(3) Rear defogger terminal
(4) Rear defogger harness (power supply side - red blue)

6) Connect the extension harness (B) to rear defogger harness (ground side) terminal.

7) Fasten the another side of extension harness (B) to end of antenna pattern of grid with tape.

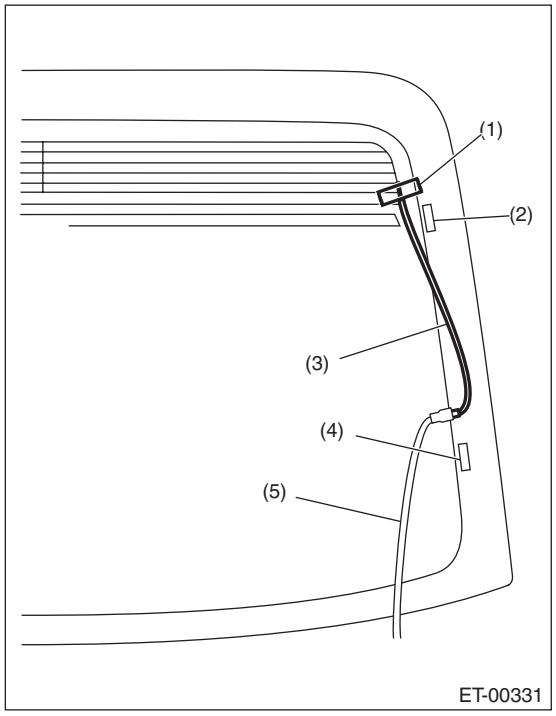

(1) Tape
(2) Antenna terminal
(3) Extension harness (B)
(4) Rear defogger terminal
(5) Rear defogger harness (ground side - black)

8) Connect the ground cable to battery.
9) Turn the ignition switch to ON.
10) Turn the rear defogger switch to ON.
11) Wrap a piece of aluminum foil around the tip of tester probe and press foil against antenna wire with your finger.

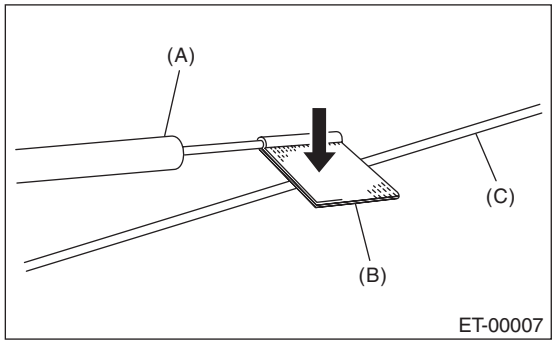

(A) Tester probe
(B) Aluminum foil
(C) Antenna wire

12) Measure the voltage around an antenna wire (a) and (b).

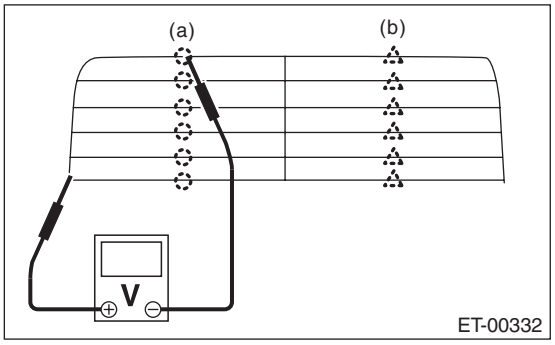

	Measured voltage value	Criteria
(a)	Approx. 3V (standard value)	Normal
	Approx. 6 V or 0 V	Open
(b)	Approx. 9V (standard value)	Normal
	Approx. 12 V or 6 V	Open

NOTE:
Measuring point (a)
• If the measured value is 6 V, heat wire is open between antenna wire center and positive (+) terminal of probe.
• If it is 0 V, the circuit is open between antenna wire center and ground.
Measuring point (b)
• If the measured value is 12 V, heat wire is open between antenna wire center and positive (+) terminal of probe.
• If it is 6 V, the circuit is open between antenna wire center and ground.

13) Fasten the voltmeter positive (+) side and negative (–) side to end of open harness positive side of step 12).

14) Search a point the voltage changes from 0 V, and move the negative (–) probe along antenna wire slowly.

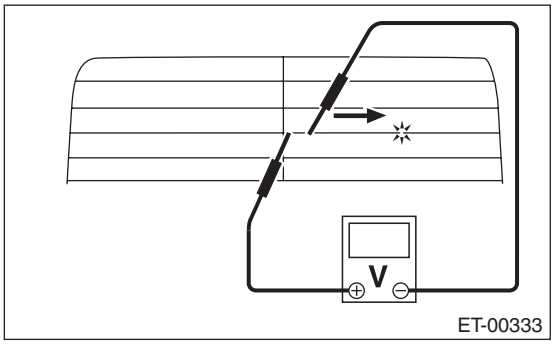

15) Repair the antenna wire if the place of the open circuit is identified. <Ref. to ET-29, REPAIR, Antenna.>

2. TYPE B

Measure the resistance between the antenna terminal and each antenna wire.

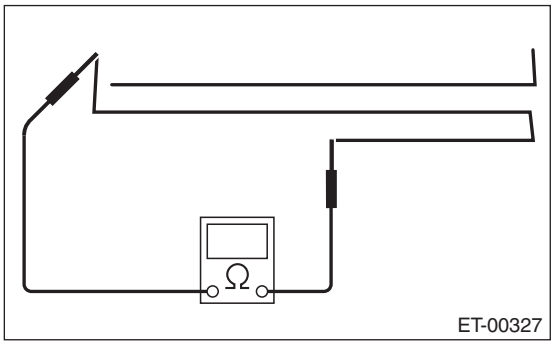

1) Disconnect the ground cable from battery.
2) Wrap a piece of aluminum foil around the tip of probe and press foil against antenna wire with your finger.

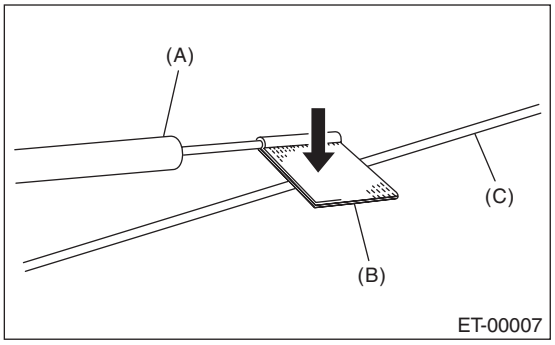

(A) Tester probe
(B) Aluminum foil
(C) Antenna wire

3) To locate the broken point, move the probe along antenna wire.

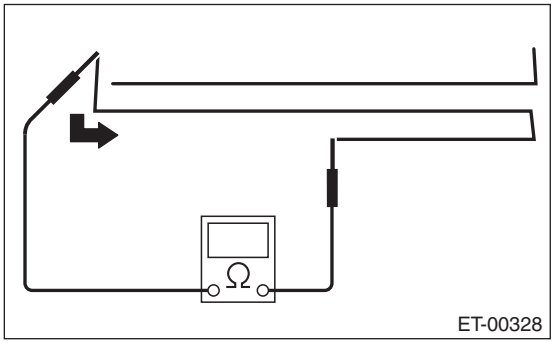

NOTE:
If an antenna wire is OK, resistance will be less than 20 Ω.
If an antenna wire is broken, resistance will be more than 1 MΩ.
4) Repair the antenna wire if the place of the open circuit is identified. <Ref. to ET-29, REPAIR, Antenna.>

D: REPAIR

1) Clean the external circumference of antenna wire and around with alcohol or white gasoline.
2) Paste a thin masking film on the glass along broken wire.
3) Apply the conductive silver composition (DUPONT No. 4817) on the broken portion with a drawing pen.

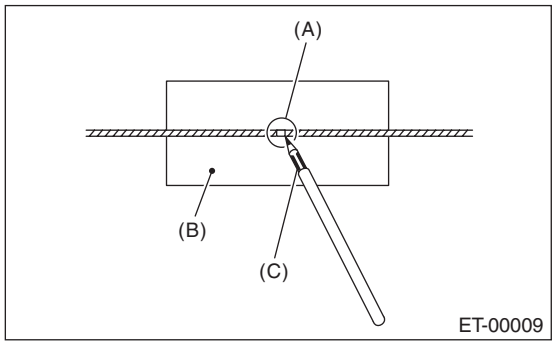

(A) Broken portion
(B) Masking film
(C) Conductive silver composition

4) Dry out the deposited portion.
5) After repair has been completed, measure the resistance in repaired wire.

10.Noise Suppressor

A: REMOVAL

1. SEDAN MODEL

1) Disconnect the ground cable from battery.
2) Remove the rear shelf trim. <Ref. to EI-120, REMOVAL, Rear Shelf Trim.>
3) Remove the noise suppressor.
   (1) Disconnect harness connector from noise suppressor.
   (2) Remove the harness clamps and bolts and detach the noise suppressor.

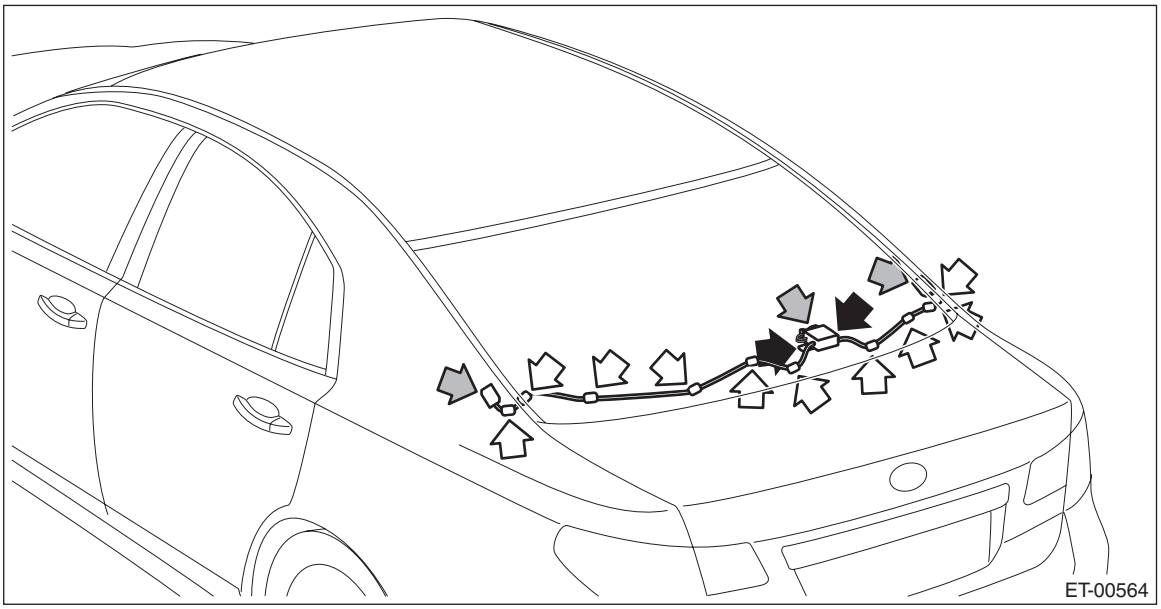

2. OUTBACK MODEL

1) Disconnect the ground cable from battery.
2) Remove the rear gate trim. <Ref. to EI-160, REMOVAL, Rear Gate Trim.>
3) Remove the noise suppressor.
   (1) Disconnect harness connector from noise suppressor.
   (2) Remove the harness clamps and bolts and detach the noise suppressor.

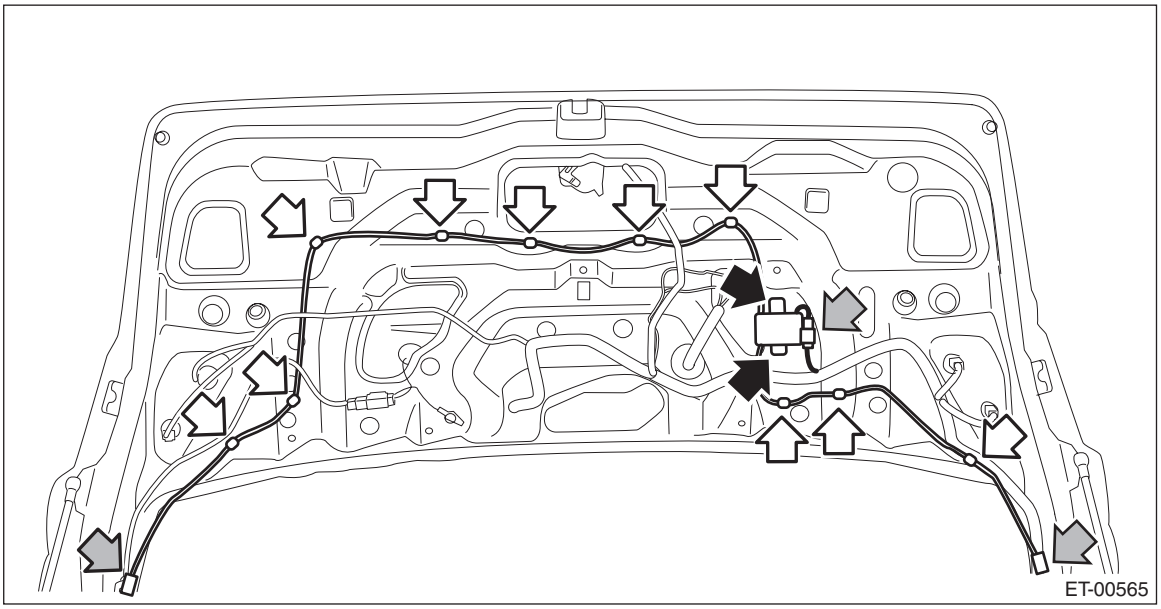

B: INSTALLATION

Install each part in the reverse order of removal.

Tightening torque:
Noise suppressor: 12 N·m (1.22 kgf-m, 8.9 ft-lb)

11.Steering Satellite Switch

A: REMOVAL

CAUTION:
Refer to "CAUTION" of "General Description" before handling the airbag module. <Ref. to AB-9, CAUTION, General Description.>

1) Position the front wheels straight ahead. (After moving a vehicle 5 m (16 ft) or more with front wheels positioned straight ahead, make sure that the vehicle moves straight ahead.)
2) Turn the ignition switch to OFF.
3) Disconnect the ground cable from battery and wait for at least 60 seconds before starting work.
4) Remove the driver's airbag module assembly.
   (1) Using a hexagon wrench etc. wrapped by protective tape, insert the snap pins and release the locks (3 locations).

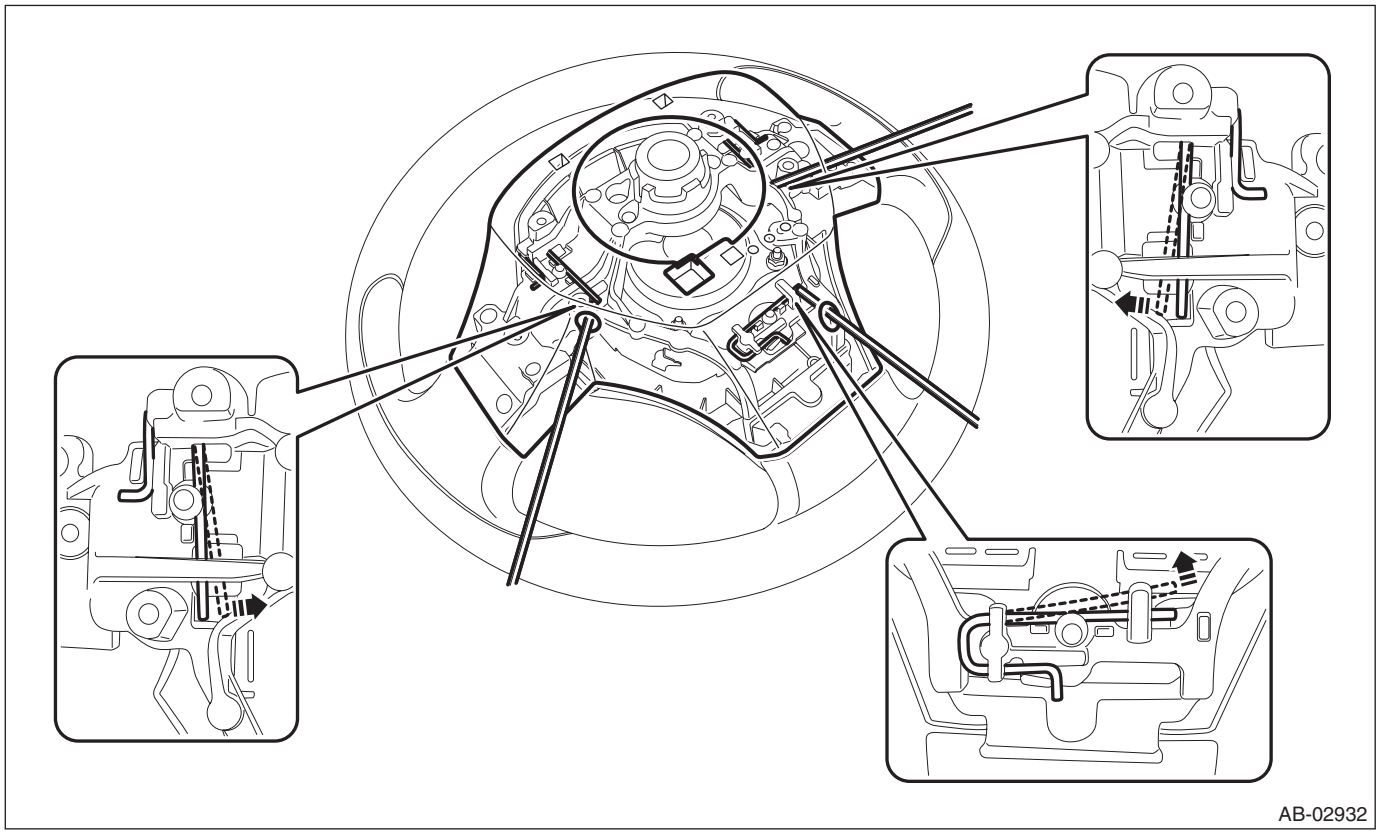

(2) Disconnect the horn harness and airbag connector and remove the airbag module assembly. <Ref. to AB-21, DRIVER'S AIRBAG MODULE, CURTAIN AIRBAG MODULE & PRETENSIONER, PROCEDURE, Airbag Connector.>

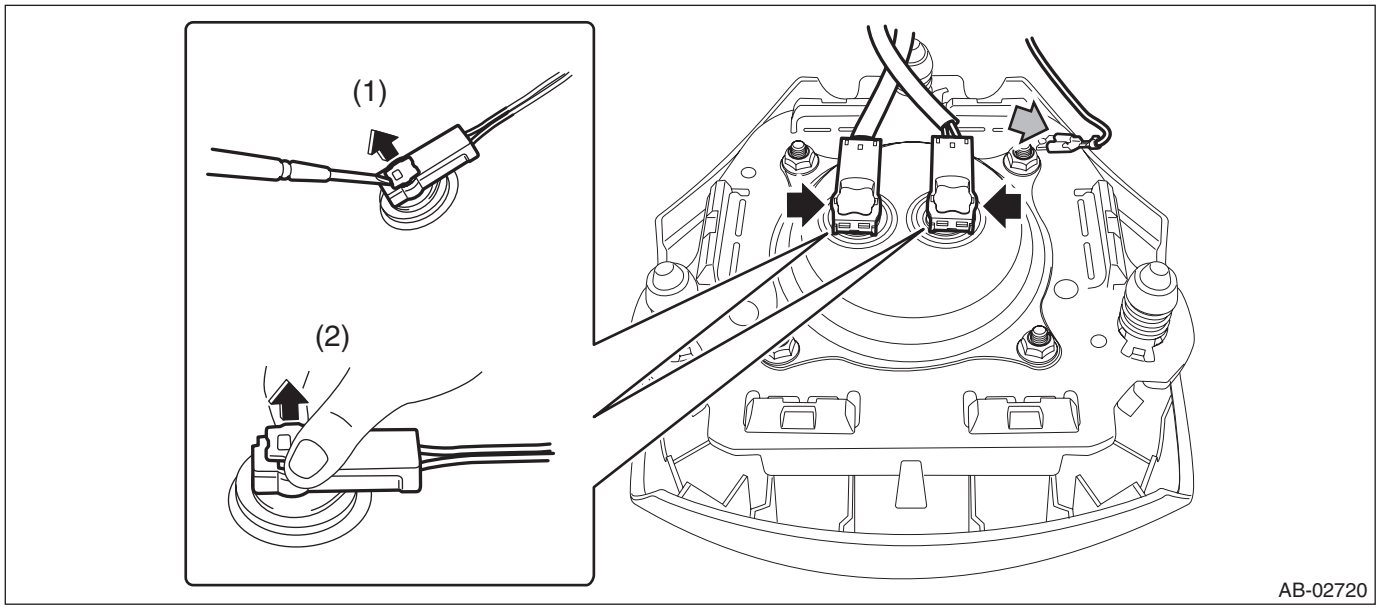

5) Remove the steering wheel.

CAUTION:
- **Always use the steering wheel puller for removal to avoid deforming the steering wheel.**
- **If the steering wheel has been removed, make sure that the roll connector is not turned from the original position.**

(1) Disconnect the connector and remove the nut.
(2) Put alignment marks and remove the steering wheel.

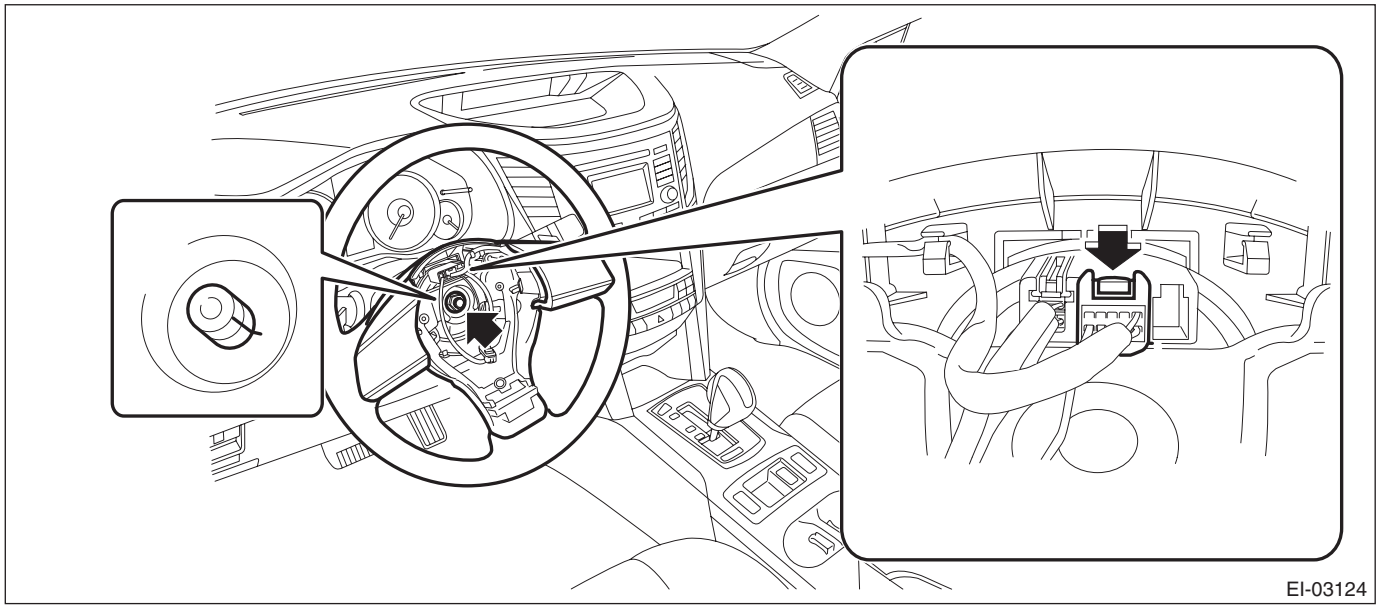

6) Remove the satellite switch.
(1) Remove the screw, disconnect the connector and remove the paddle shift switch. (Model with paddle shift)

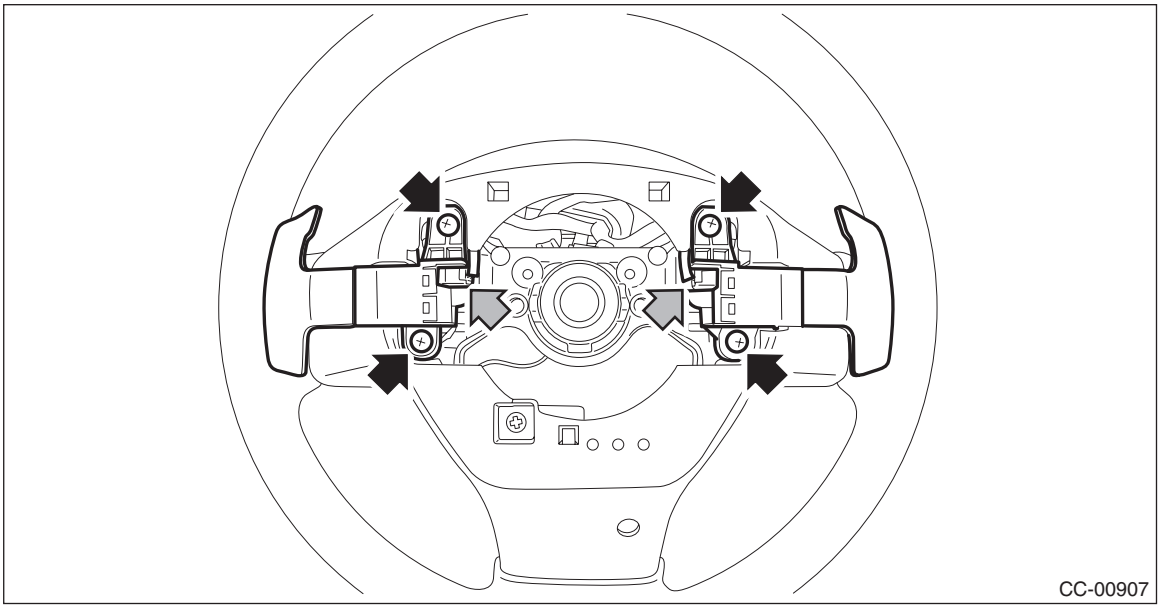

(2) Release the claws and clips, detach the cover - steering wheel LWR.

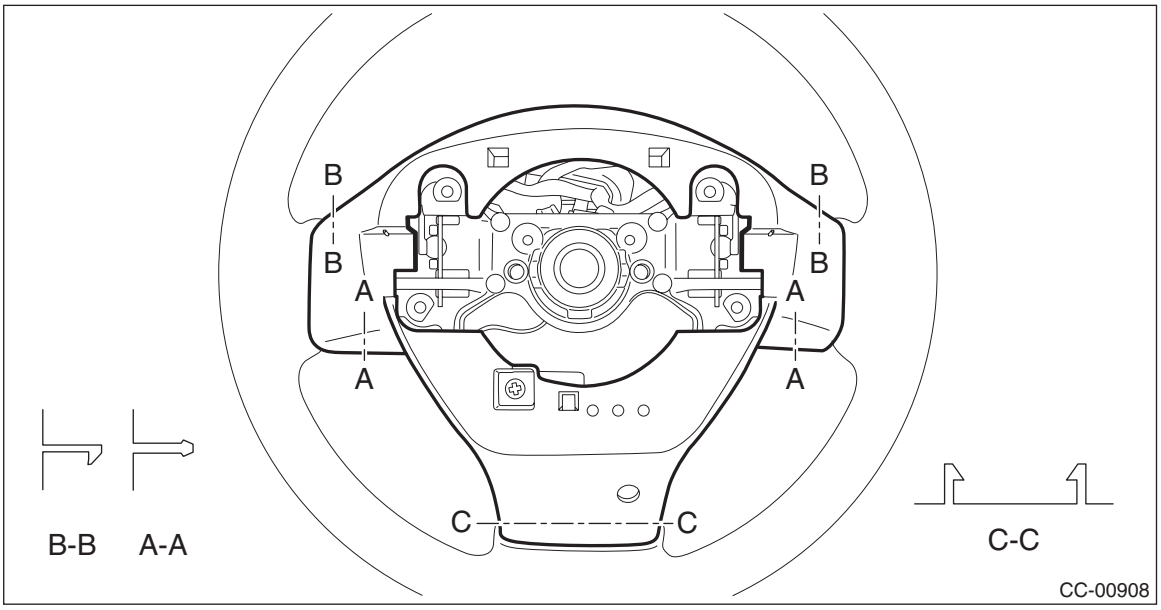

(3) Remove the screws and then remove the satellite switch assembly.

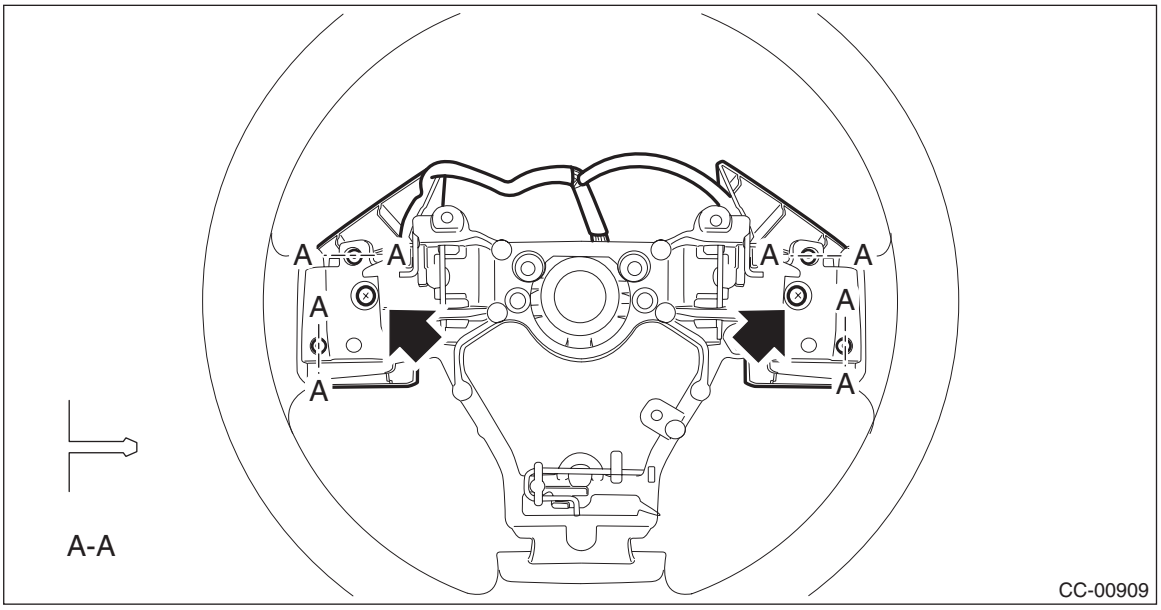

B: INSTALLATION

Install each part in the reverse order of removal.

Tightening torque:

Steering wheel: 39 N·m (4.0 kgf-m, 28.8 ft-lb)

Clearance:

Between column cover and steering wheel: 2 — 4 mm (0.08 — 0.16 in)

C: INSPECTION

1) Measure the resistance between satellite switch connector terminals.

- Audio operation

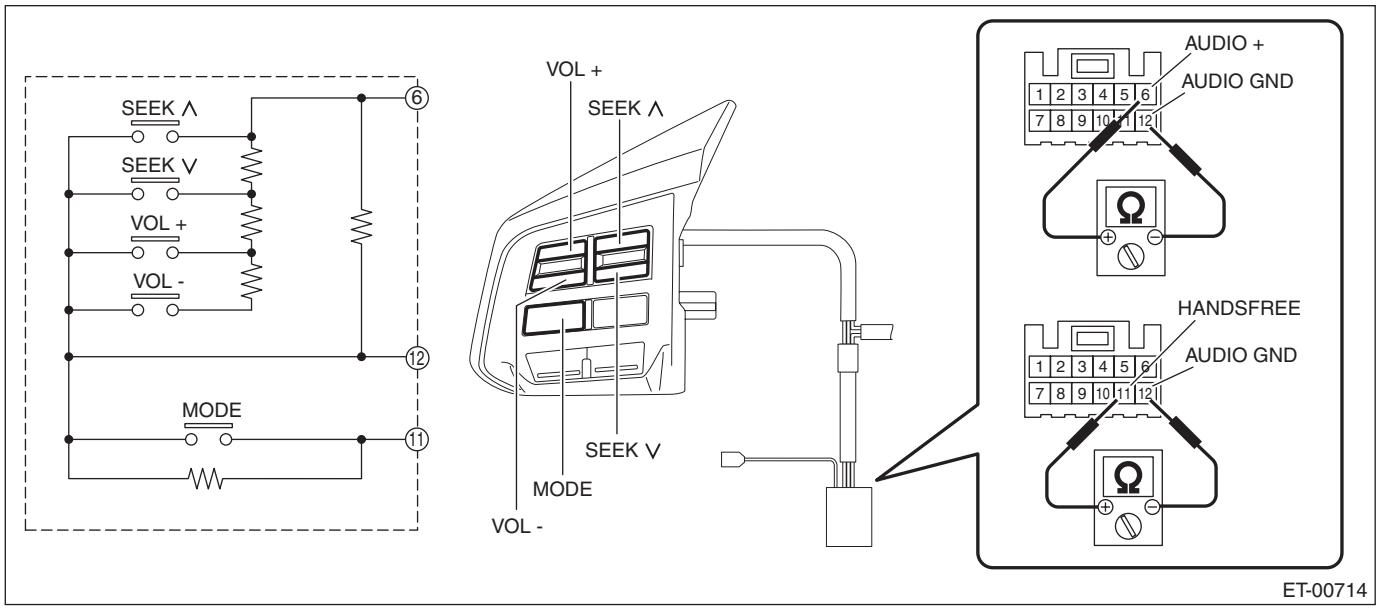

Switch	Switch operation	Terminal No.	Standard
VOL (+) VOL (–) SEEK (∧) SEEK (∨)	All OFF	6 and 12	Approx. 100 kΩ
MODE	OFF	11 and 12	Approx. 100 kΩ
VOL (+)	ON	6 and 12	Approx. 1000 Ω
VOL (–)	ON	6 and 12	Approx. 3110 Ω
Preset CH UP/SEEK (∧)	ON	6 and 12	Approx. less than 1 Ω
Preset CH DOWN/SEEK (∨)	ON	6 and 12	Approx. 330 Ω
MODE	ON	11 and 12	Approx. less than 1 Ω

- Handsfree operation

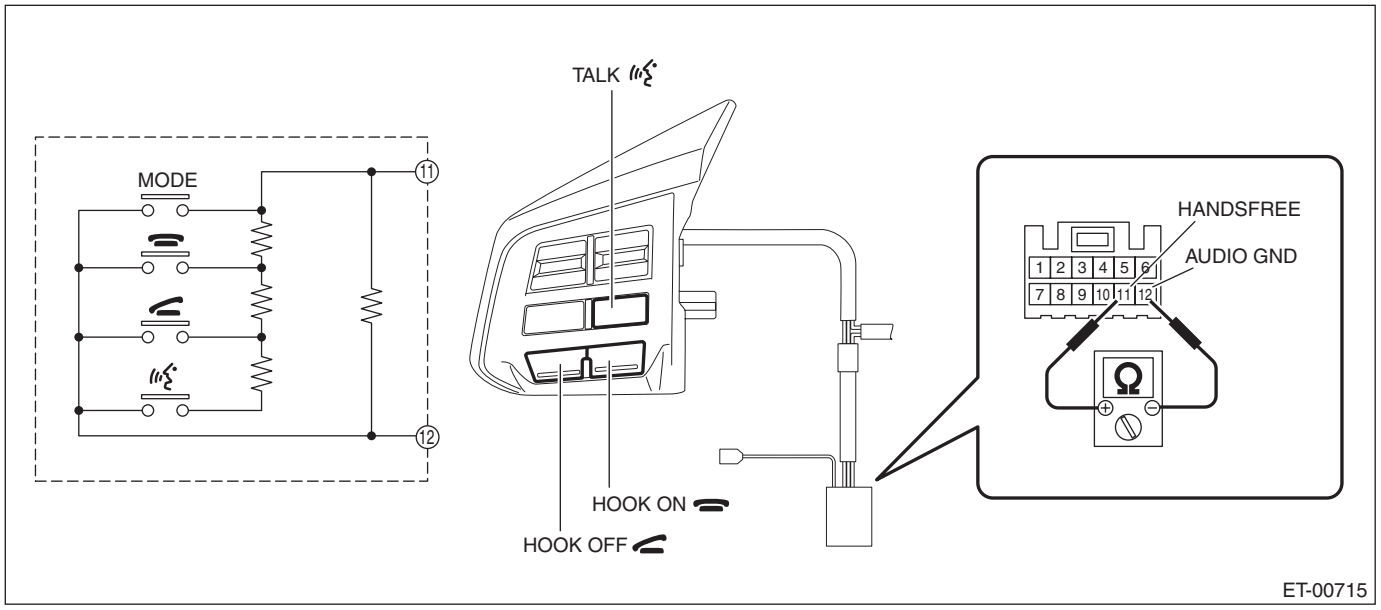

Switch	Switch operation	Terminal No.	Standard
HOOK ON HOOK OFF TALK	All OFF	11 and 12	Approx. 100 kΩ
HOOK ON	ON	11 and 12	Approx. 330 Ω
HOOK OFF	ON	11 and 12	Approx. 1000 Ω
TALK	ON	11 and 12	Approx. 3110 Ω

2) If the result of the measurement is not at the standard value, replace the satellite switch.

12.Navigation Body

A: REMOVAL

CAUTION:
• When replacing the navigation unit, be sure to replace with specified navigation unit. The marker adjustment can not be performed correctly if replacing with unspecified navigation unit.
• After replacing the navigation unit, be sure to check that the rearview camera images and the marker line are displayed.

1) Disconnect the ground cable from battery.
2) Remove the center panel assembly.

CAUTION:
Do not put your finger on the fin of the air vent grille. Doing so may damage the fin.

(1) Attach the protective tape (a) to the meter visor.

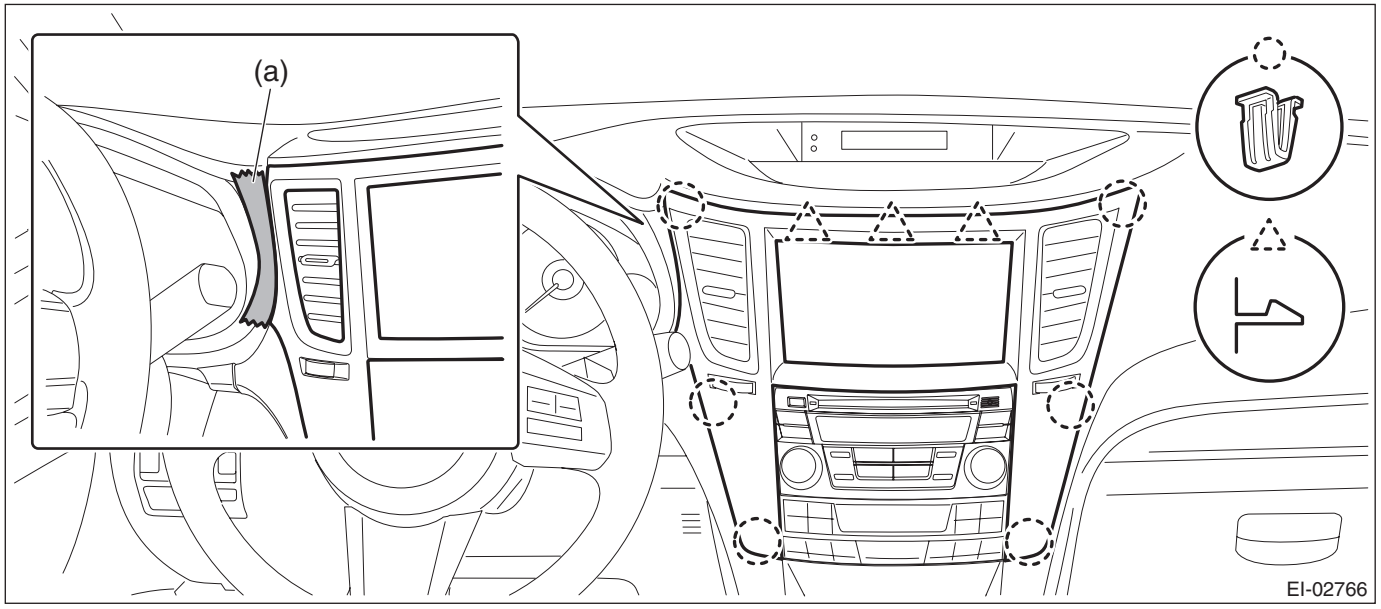

(2) Insert a finger into the air vent grille and release the left and right clips at the top of the center panel. (A), (B)
(3) Insert a finger into the air vent grille and release the left and right clips at the center of the center panel. (C), (D)

(4) Release the clips at the bottom of the center panel and remove the center panel assembly.

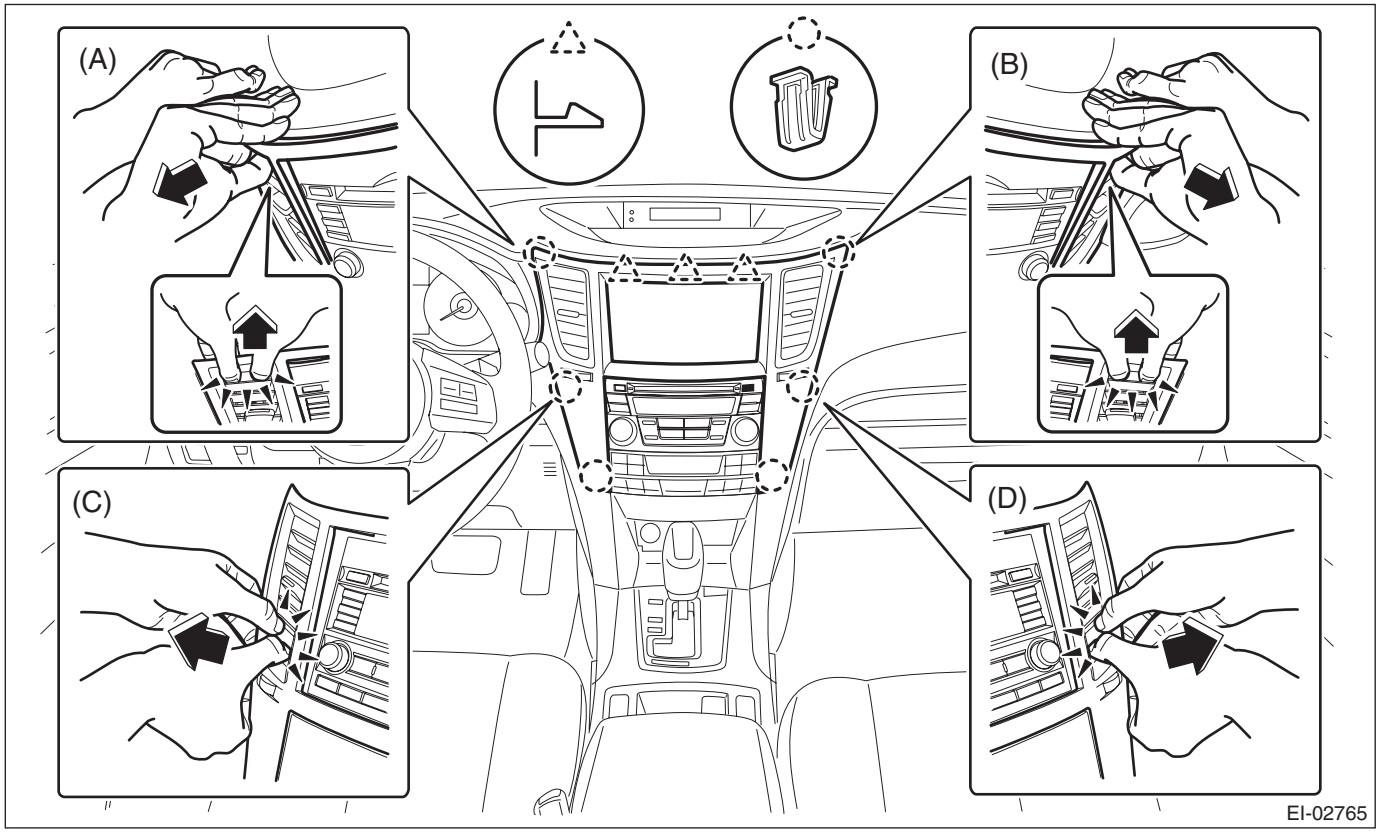

3) Remove the navigation assembly.
(1) Remove the left and right screws.
(2) Disconnect the connector and remove the navigation assembly.

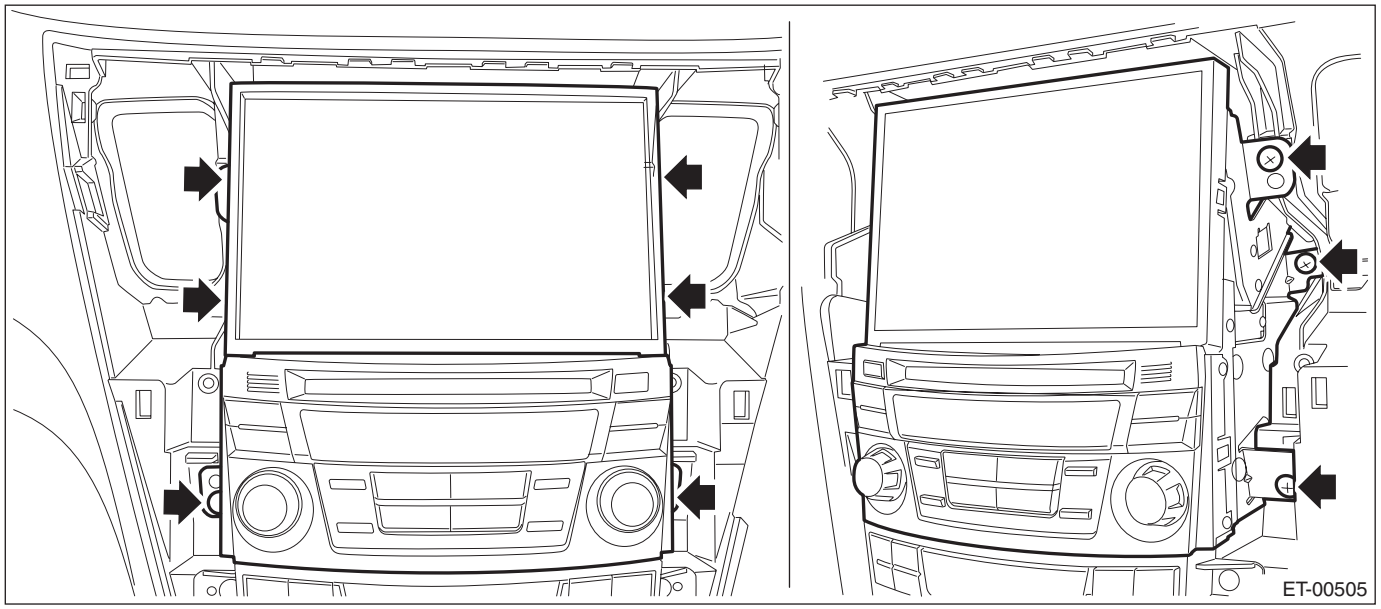

B: INSTALLATION

Install each part in the reverse order of removal.

13.GPS Antenna

A: REMOVAL

1) Disconnect the ground cable from battery.
2) Remove the center panel assembly.

CAUTION:
Do not put your finger on the fin of the air vent grille. Doing so may damage the fin.

(1) Attach the protective tape (a) to the meter visor.

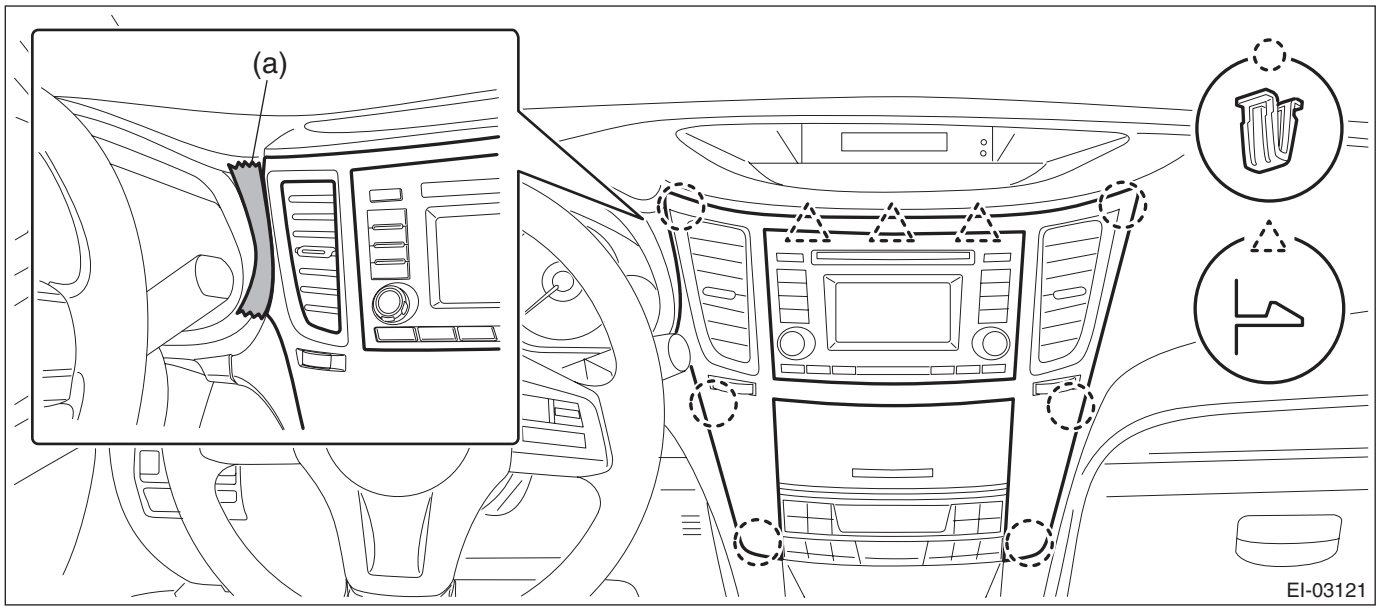

(2) Insert a finger into the air vent grille and release the left and right clips at the top of the center panel. (A), (B)
(3) Insert a finger into the air vent grille and release the left and right clips at the center of the center panel. (C), (D)

(4) Release the clips at the bottom of the center panel and remove the center panel assembly.

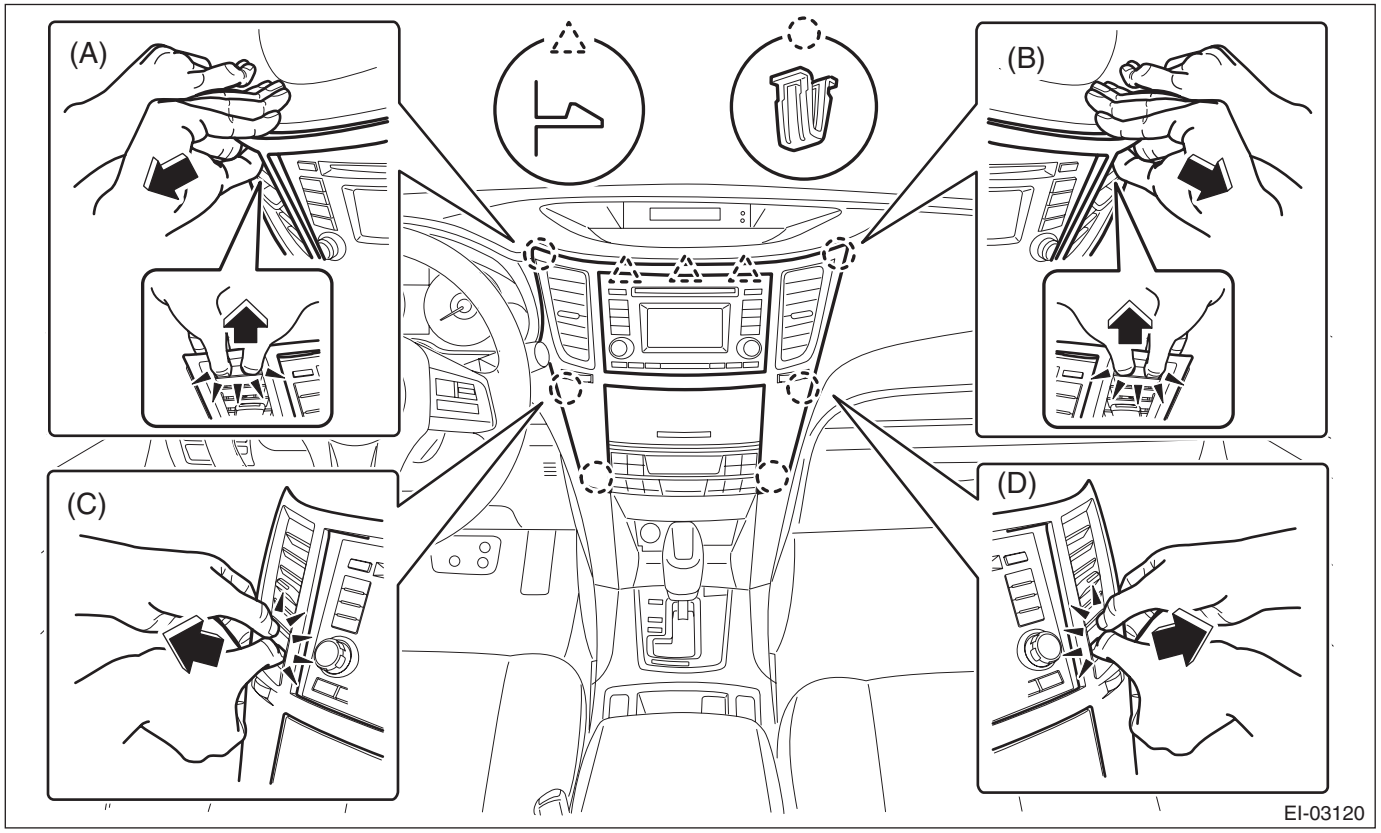

3) Remove the combination meter assembly.

CAUTION:

- **Be careful not to damage the meter or instrument panel.**
- **Pay particular attention to avoid damaging the meter glass.**

(1) Release the lock, tilt the steering column to the lowest end and fully extend the column by the telescopic system.

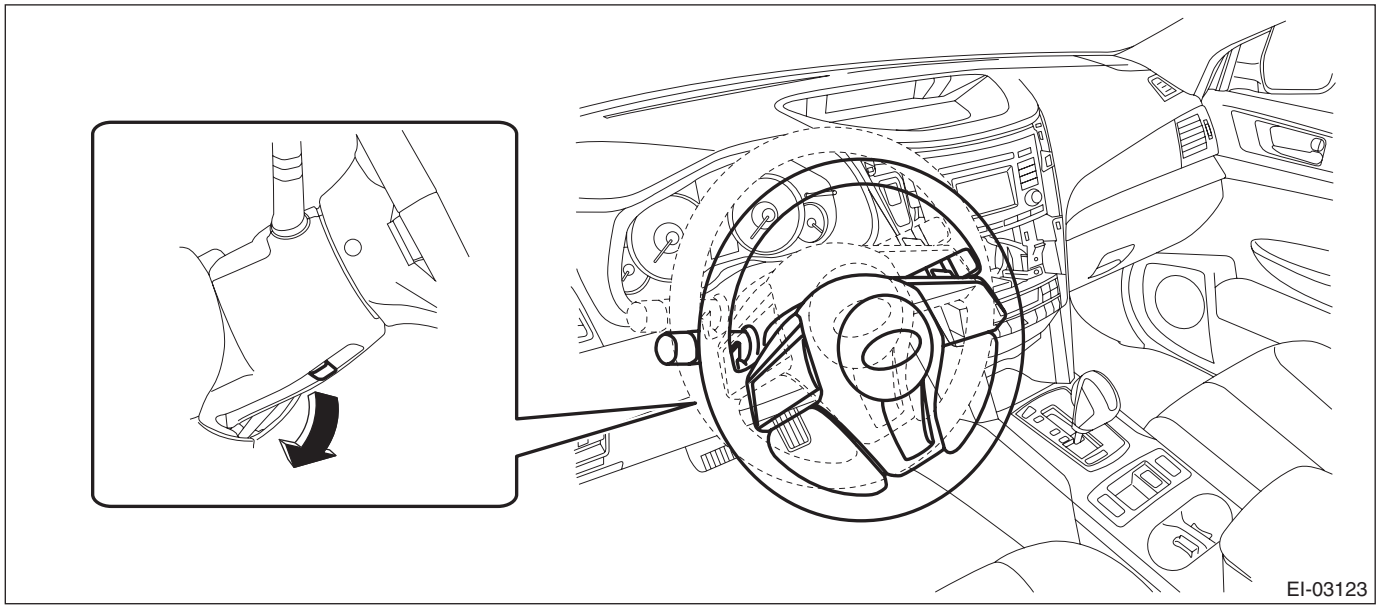

(2) Release the screws and clips, then detach the meter visor assembly.

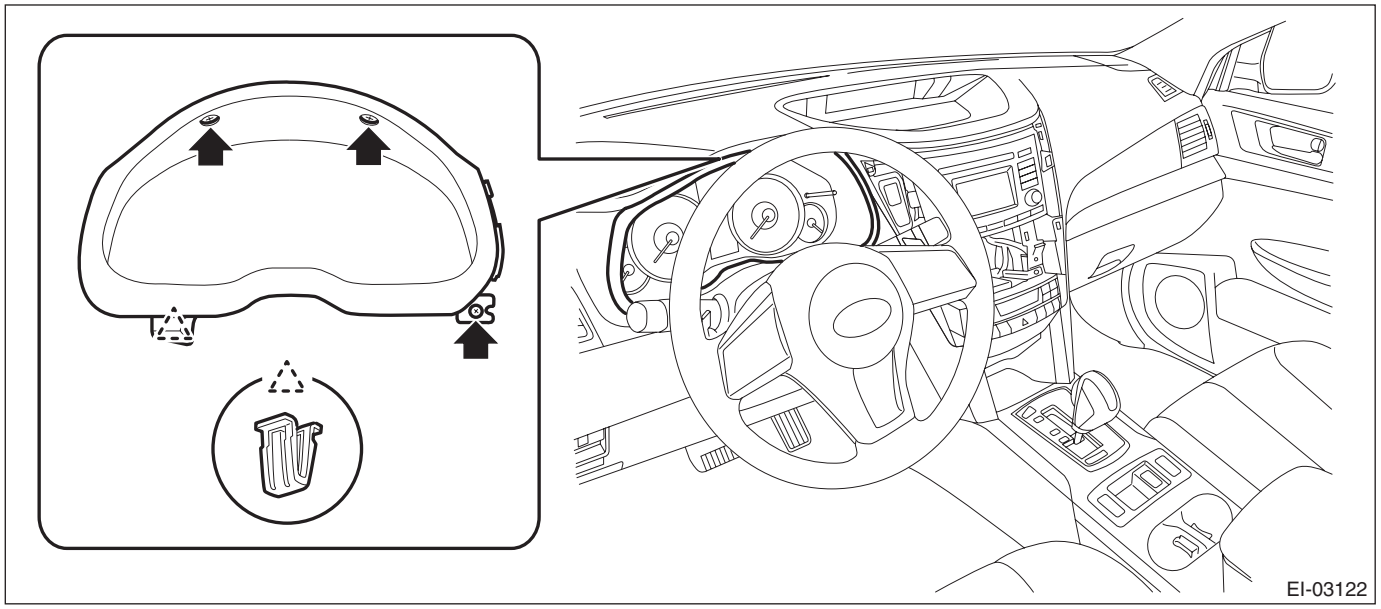

(3) Remove the screws and pull the steering COMPL upper cover toward you.

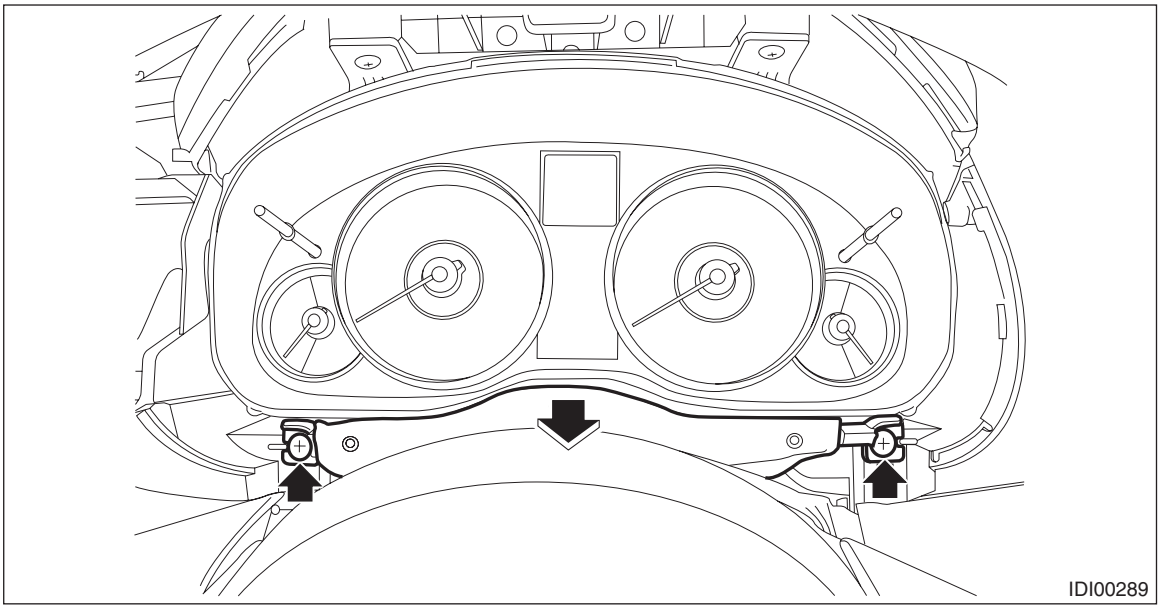

(4) Remove the screws and pull out the combination meter toward you to disconnect the connectors.

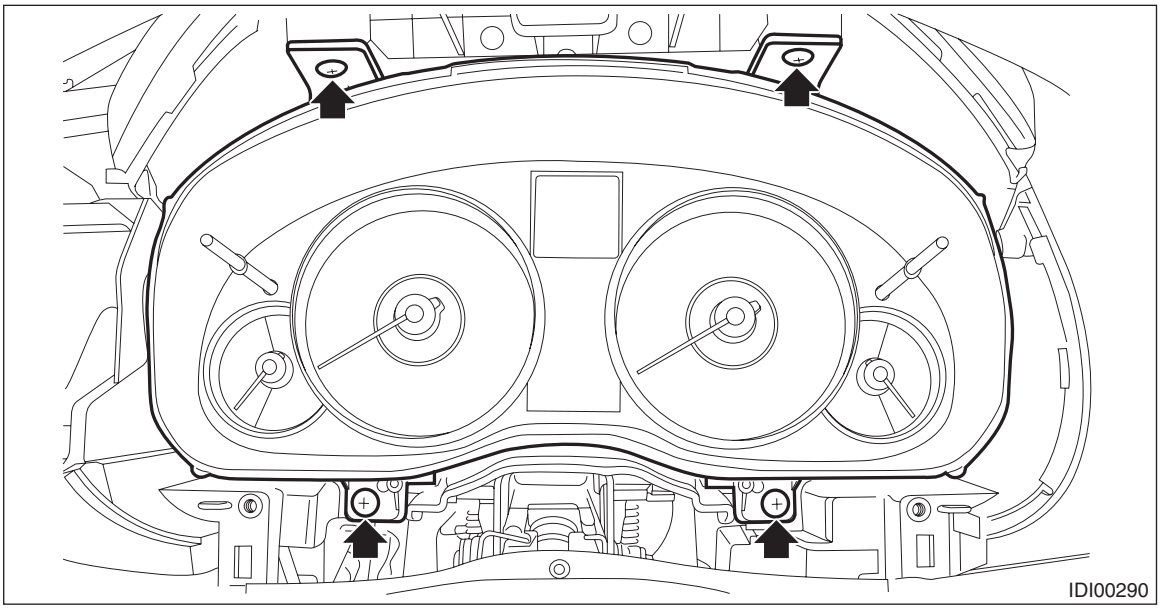

(5) Remove the combination meter assembly as shown in the figure.

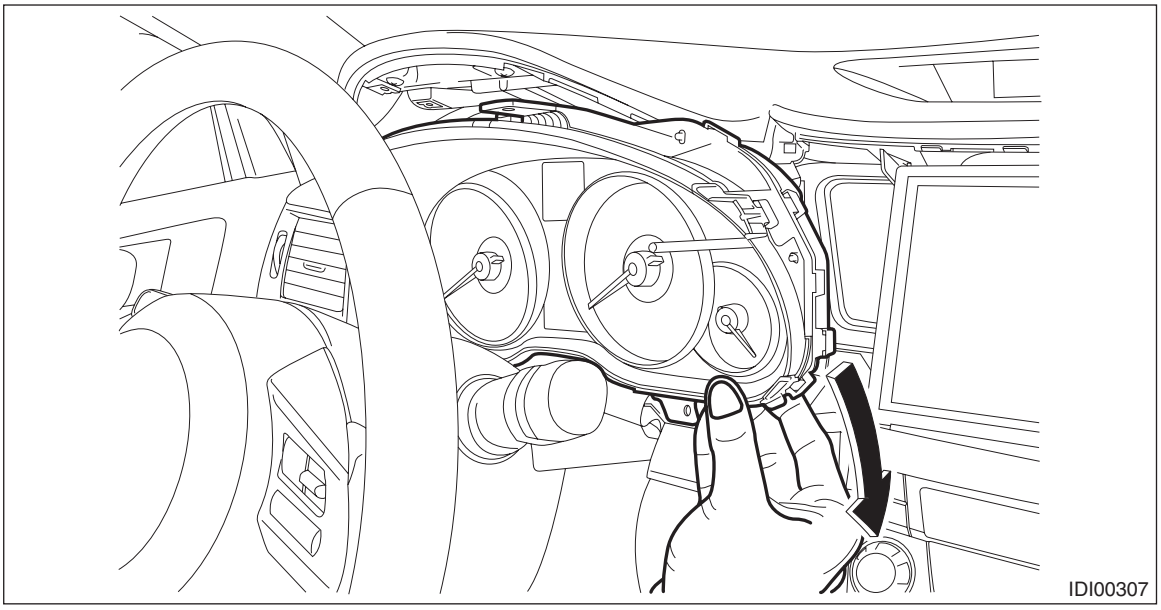

4) Remove the navigation assembly.
(1) Remove the left and right screws.
(2) Disconnect the connectors, and remove the navigation assembly.

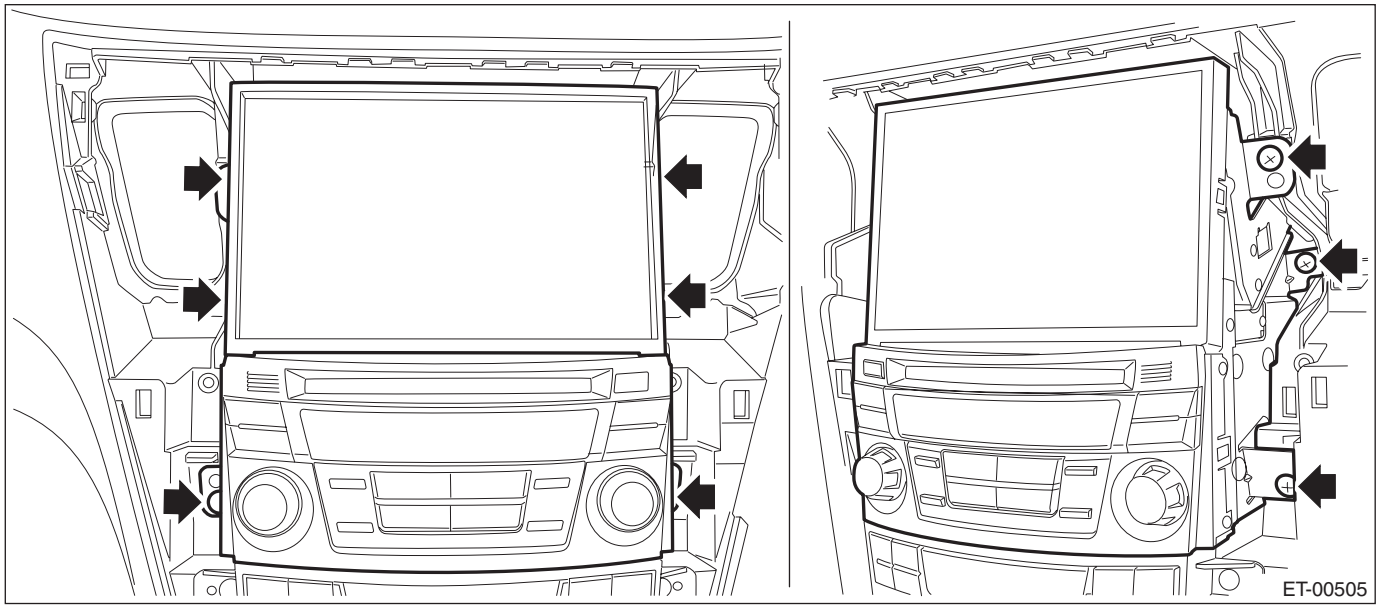

5) Remove the GPS antenna.

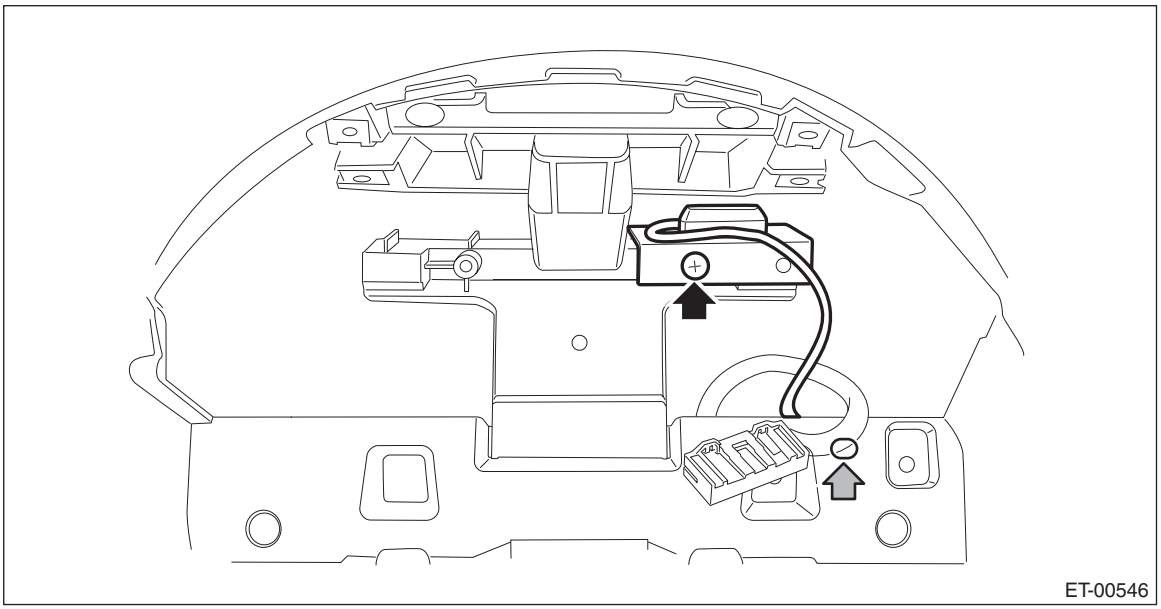

(1) Tie a string to the GPS antenna harness connector on the navigation assembly side.

NOTE:
A string makes operation easier during installation.

(2) Remove the screw and harness clamp to remove the GPS antenna.
(3) When the GPS antenna is pulled out, remove the string attached to the connector in step (1).

B: INSTALLATION

Install each part in the reverse order of removal.

14.Rearview Camera System

A: WIRING DIAGRAM

Refer to “Rearview Camera System” in the wiring diagram. <Ref. to WI-213, WIRING DIAGRAM, Rearview Camera System.>

B: REMOVAL

1. SEDAN MODEL

1) Disconnect the ground cable from battery.
2) Remove the trunk lid trim.
   (1) Remove the trunk handle.
   (2) Remove the clips and the trunk lid trim.

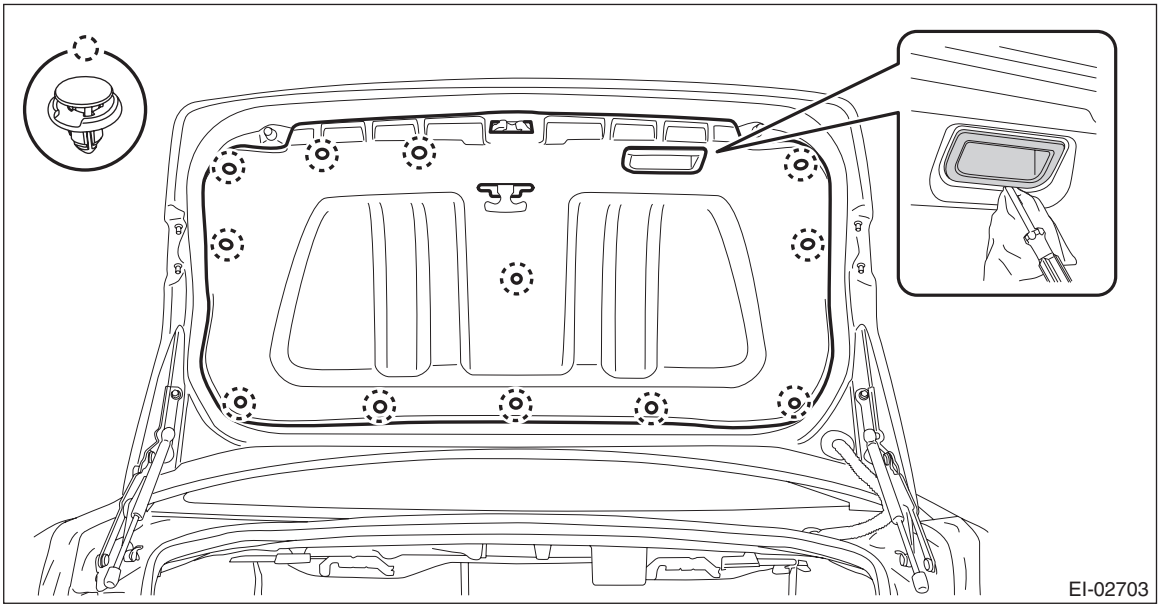

3) Remove the trunk lid garnish.
   (1) Remove the nut.
   (2) Remove the clips and the trunk lid garnish.

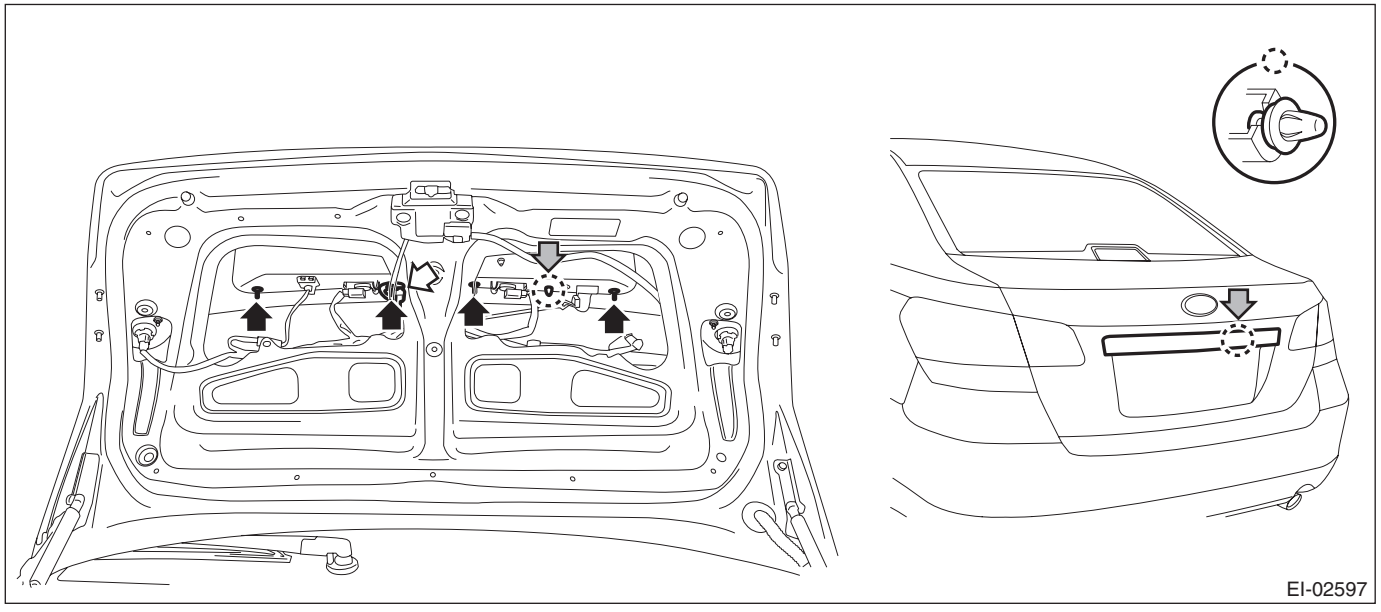

4) Remove the rearview camera.

CAUTION:
Do not drop or apply any impact to the rearview camera because it is a precision equipment.

(1) Disconnect the rearview camera connector.
(2) Remove the bolt from the face of trunk.
(3) Disconnect the claws and then remove the rearview camera assembly.

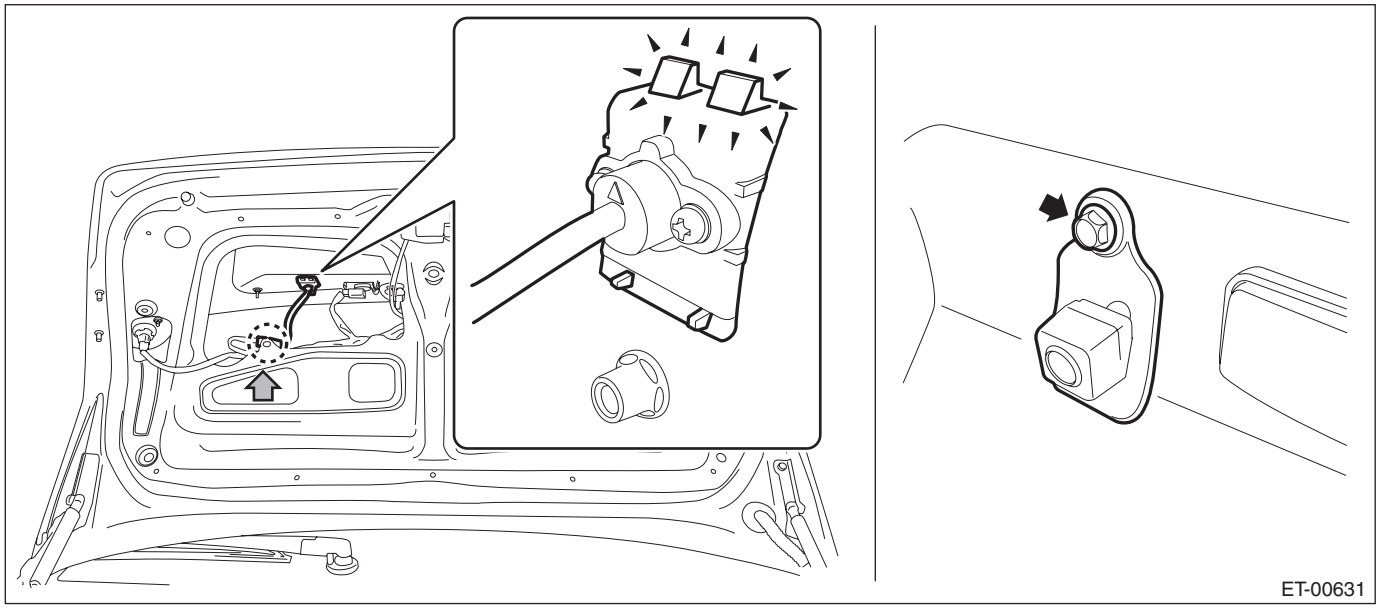

2. OUTBACK MODEL

1) Disconnect the ground cable from battery.
2) Remove the rear gate trim.
   (1) Remove the rear gate upper trim.
      a) Remove the claws on the trim edge.
      b) Disconnect the claws in the center of trim, and remove the rear gate upper trim.

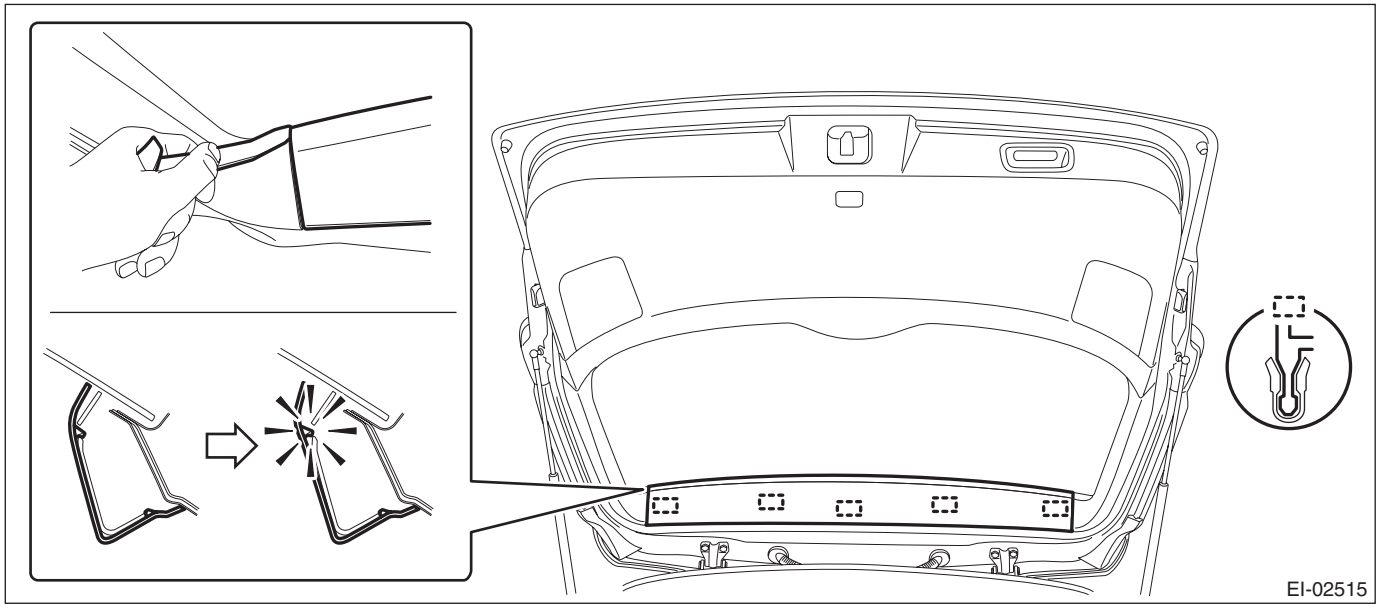

(2) Remove the rear gate pillar trim.
a) Release the claws.
b) Remove the claws on the bottom of trim, and remove the rear gate pillar trim.

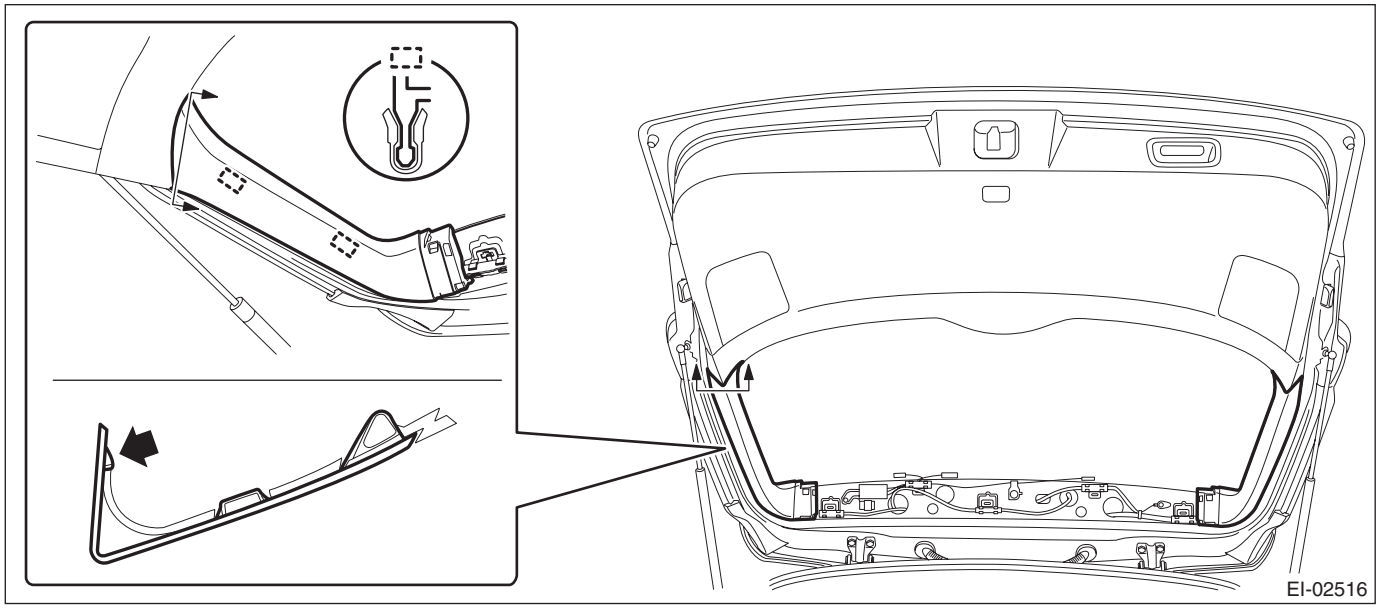

(3) Remove the hand grip of rear gate.

CAUTION:
- **Be careful not to scratch the trim.**
- **To protect the trim from damage, attach a protective tape to the tool in use.**

a) Insert a precision screwdriver (a).
b) With the screwdriver inserted, push it down to release the claw and pull it toward you.
c) Remove the screws and detach the hand grip.

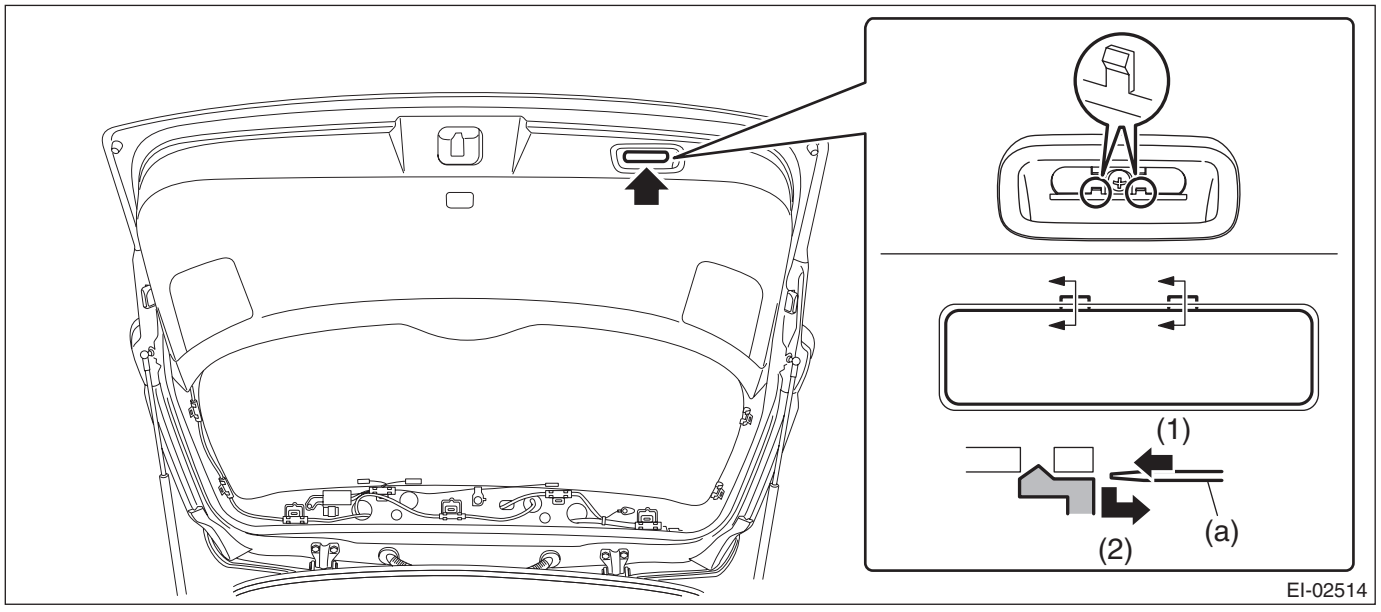

(4) Remove the rear gate lower trim.
a) Remove the clips on both ends.
b) Release the clips and remove the rear gate lower trim.

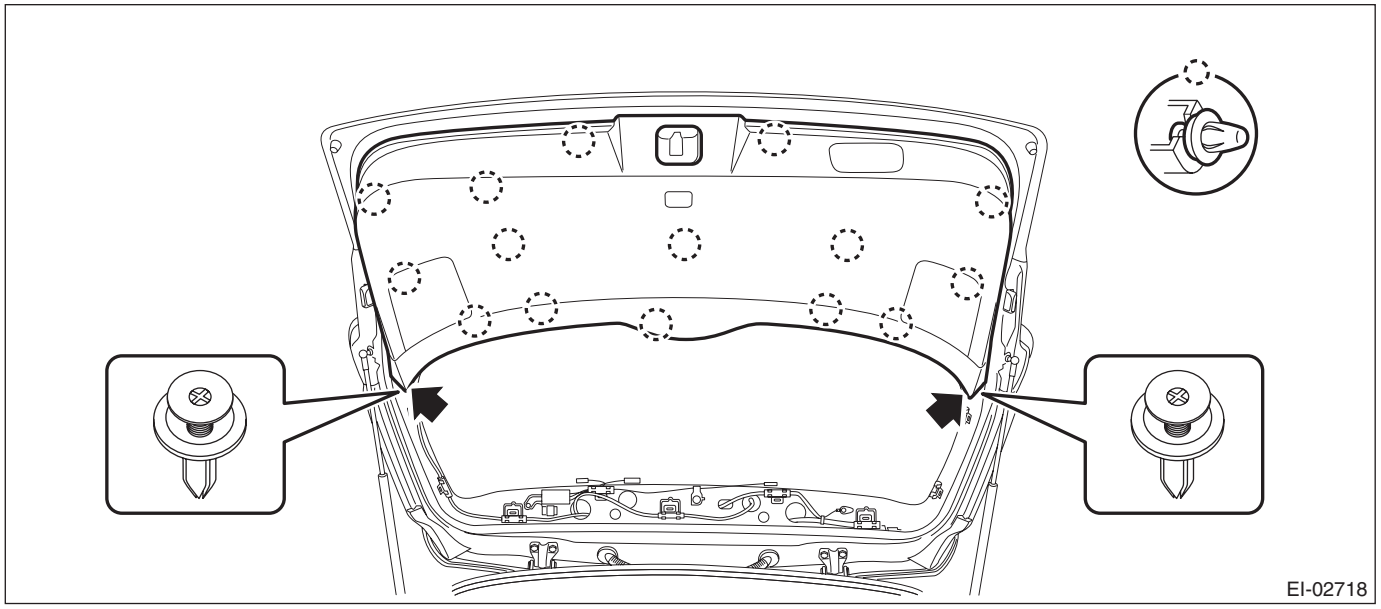

3) Remove the rear gate garnish.
(1) Release the clips and claws, then detach the rear finisher light side cover.

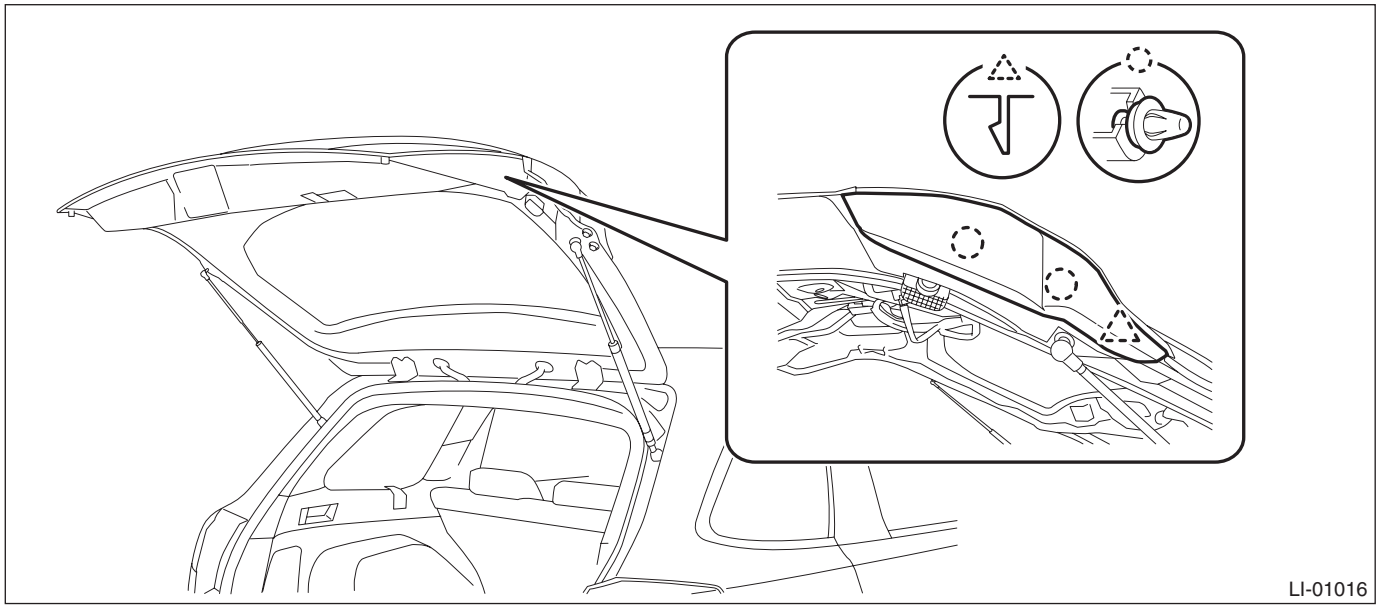

(2) Disconnect the harness connector of license plate light assembly.
(3) Remove the nuts.

(4) Remove the clips, and remove the rear gate garnish.

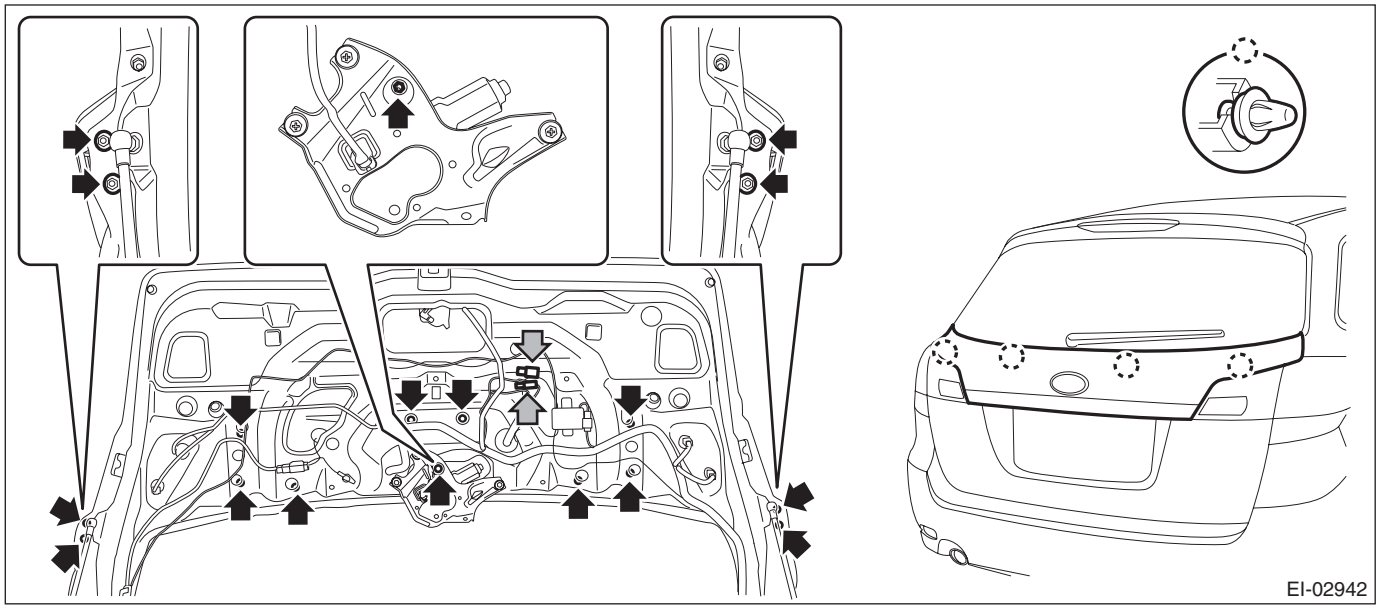

4) Remove the rearview camera assembly.

CAUTION:
Do not drop or apply any impact to the rearview camera because it is a precision equipment.

(1) Disconnect the rearview camera connector.
(2) Remove the nut and bolt on the back side of rear gate.
(3) Disconnect the claws (for temporary fastening) and remove the rearview camera assembly.

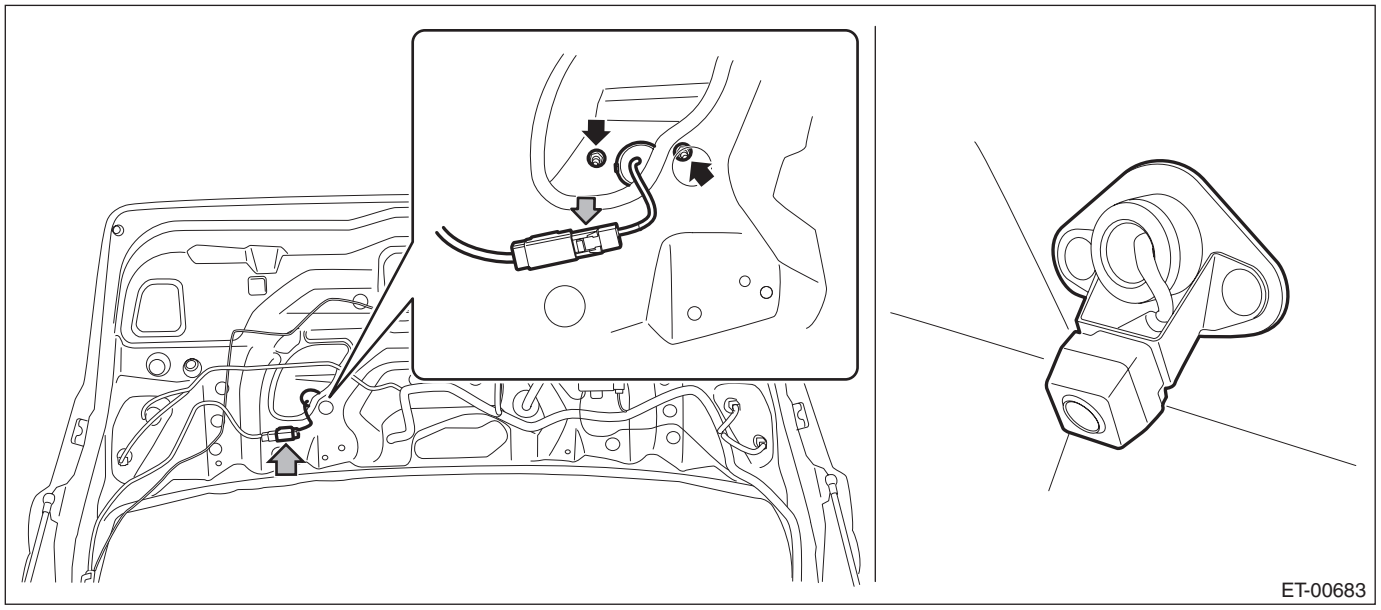

C: INSTALLATION

CAUTION:
Be sure to confirm the marker position, whenever the rearview camera is removed/installed/replaced.
Install each part in the reverse order of removal.

Tightening torque:
Sedan model
Rearview camera (bracket): 7.5 N·m (0.76 kgf-m, 5.5 ft-lb)
Trunk lid garnish: 4.5 N·m (0.46 kgf-m, 3.3 ft-lb)
OUTBACK model
Rearview camera (bracket (nut)): 4.5 N·m (0.46 kgf-m, 3.3 ft-lb)
Rear gate garnish: 4.5 N·m (0.46 kgf-m, 3.3 ft-lb)
Rear wiper motor & wiper arm: <Ref. to WW-4, REAR WIPER, COMPONENT, General Description.>

D: INSPECTION

1) Park the vehicle at the level place where there are enough area at the rear of the vehicle.
2) Attach the tape as the target point for standard at the floor rearward of the vehicle as shown in the figure below.

NOTE:
Standard tape width is about 30 — 50 mm (1.18 — 1.97 in) and brilliant color shall be used.

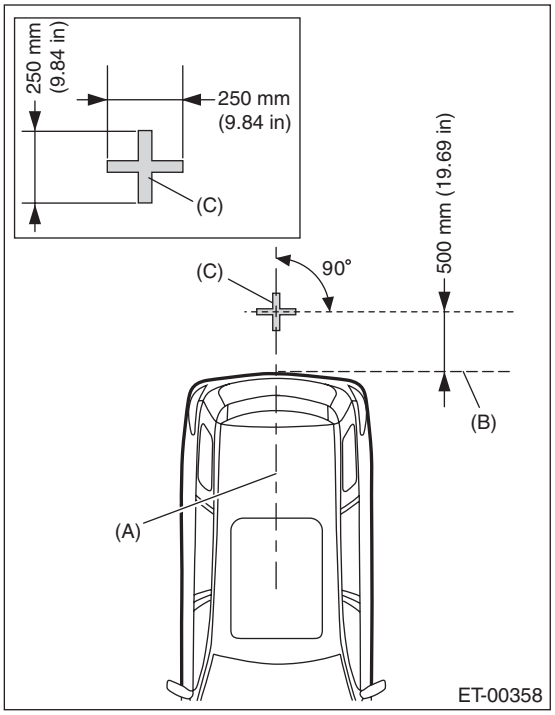

(A) Vehicle body center line
(B) Rear edge of bumper
(C) Target point

3) Confirm the following before checking the corresponding items.
- Navigation
  - If the display is blank.

  Rearview camera image is not displayed. (Navigation screen is displayed normally.)
    1. Check the condition of back sensor connection. <Ref. to ET-9, CHECK EACH VEHICLE SIGNAL, INSPECTION, Navigation System.>
    2. Check the condition of rearview camera connection. <Ref. to ET-8, CHECK EACH CONNECTION, INSPECTION, Navigation System.>
  - If the marker is not displayed.
    1. Check the UART communication. <Ref. to ET-8, CHECK EACH CONNECTION, INSPECTION, Navigation System.>
  - If the marker position is not aligned.
    1. Adjust the marker position according to the MARKER ADJUSTMENT MODE. <Ref. to ET-51, MARKER ADJUSTMENT MODE, ADJUSTMENT, Rearview Camera System.>
- Rearview mirror (RCD model)
  - If the rearview camera display is blank.
    1. Check the condition of back sensor connection. <Ref. to ET-9, CHECK EACH VEHICLE SIGNAL, INSPECTION, Navigation System.>
    2. Check the condition of rearview camera connection. <Ref. to ET-8, CHECK EACH CONNECTION, INSPECTION, Navigation System.>
    3. Check the room mirror. <Ref. to GW-62, ADJUSTMENT, Rearview Mirror (RCD Model).>

E: ADJUSTMENT

1. MARKER ADJUSTMENT MODE

Navigation

1) Prepare the target point. <Ref. to ET-50, INSPECTION, Rearview Camera System.>
2) Display the audio OFF screen by turning the ignition switch to ON, then touch the screen in the order of (1) — (6).

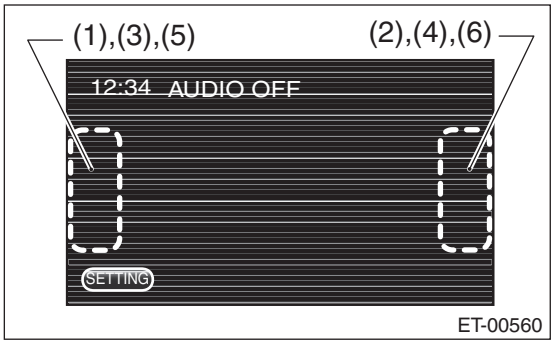

3) When the Dealer Diag menu screen is displayed, touch the “Rear Camera Setup” from the items.

CAUTION:
Do not select the item other than “Rear Camera Setup”. The navigation system can not operate normally.
4) Shift the select lever to the “R” position to display the image of the rearview camera.

5) Touch the adjustment keys on the display screen to adjust the marker line.
- Sedan model

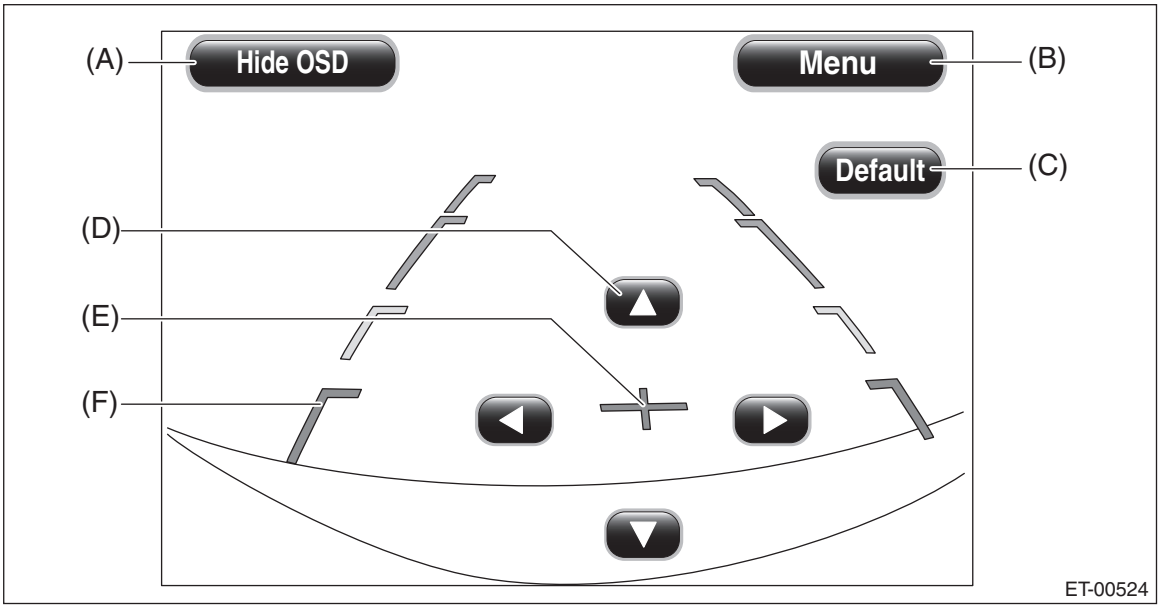

- OUTBACK model

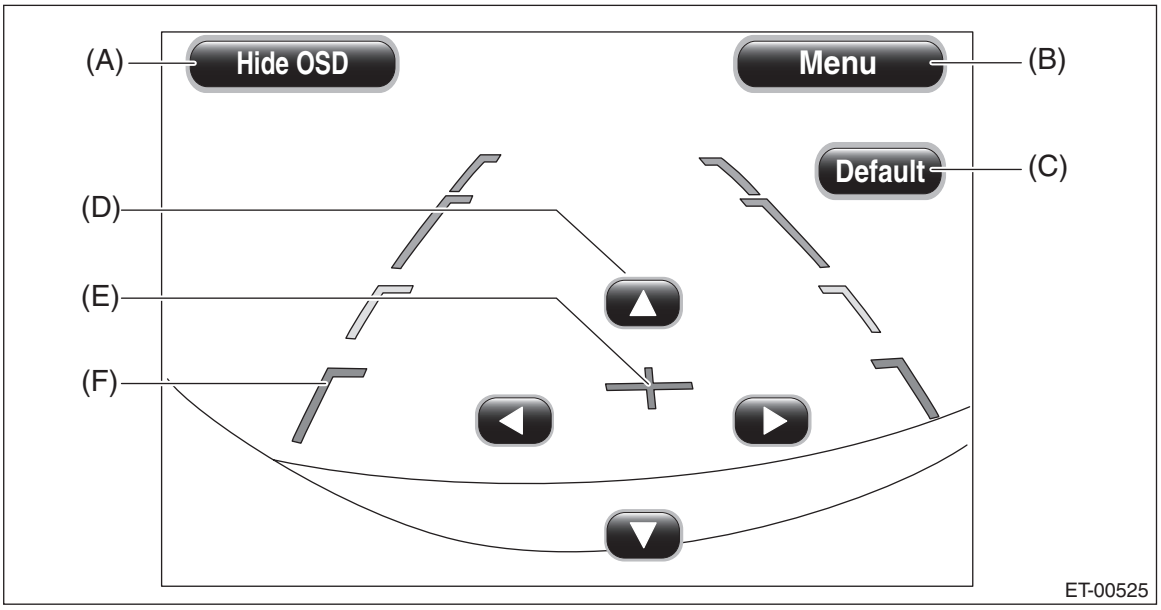

(A) Hide OSD key
(B) Menu key
(C) Default key
(D) Adjustment keys
(E) Cross line
(F) Vehicle width and distance reference line

(1) Confirm that the target point position in the display screen is identified.
(2) Adjust by touching the adjustment keys so that the cross line (E) and target point join together.

NOTE:
- Hide OSD key: Touching the Hide OSD key hides the operation keys. When the operation keys are not displayed, touching the display screen displays the operation keys again.
- Menu key: Touching this key shifts to the Dealer Diag Menu screen.
- Default key: Touching this key resets the adjustment values to the default condition.

6) Turn the ignition switch to OFF and wait for 60 seconds or more before turning the ignition switch to ON again.

CAUTION:
If the ignition switch is turned to OFF, be sure to wait for 60 seconds or more before turning the ignition switch to ON again.
If turning the ignition switch to ON again or disconnecting the ground cable from battery within 60 seconds after turning the ignition switch to OFF, the navigation unit data updating can not be performed correctly.

7) Shift the select lever to the “R” position to display the image of the rearview camera.
8) Confirm that the marker line position is correctly adjusted before turning the ignition switch to OFF, then finish the procedures.

15.Front Accessory Power Supply Socket

A: WIRING DIAGRAM

Refer to “Front Accessory Power Supply Socket System” in the wiring diagram. <Ref. to WI-166, WIRING DIAGRAM, Front Accessory Power Supply Socket System.>

B: REMOVAL

1) Disconnect the ground cable from battery.
2) Remove the center panel assembly.

CAUTION:
Do not put your finger on the fin of the air vent grille. Doing so may damage the fin.

(1) Attach the protective tape (a) to the meter visor.

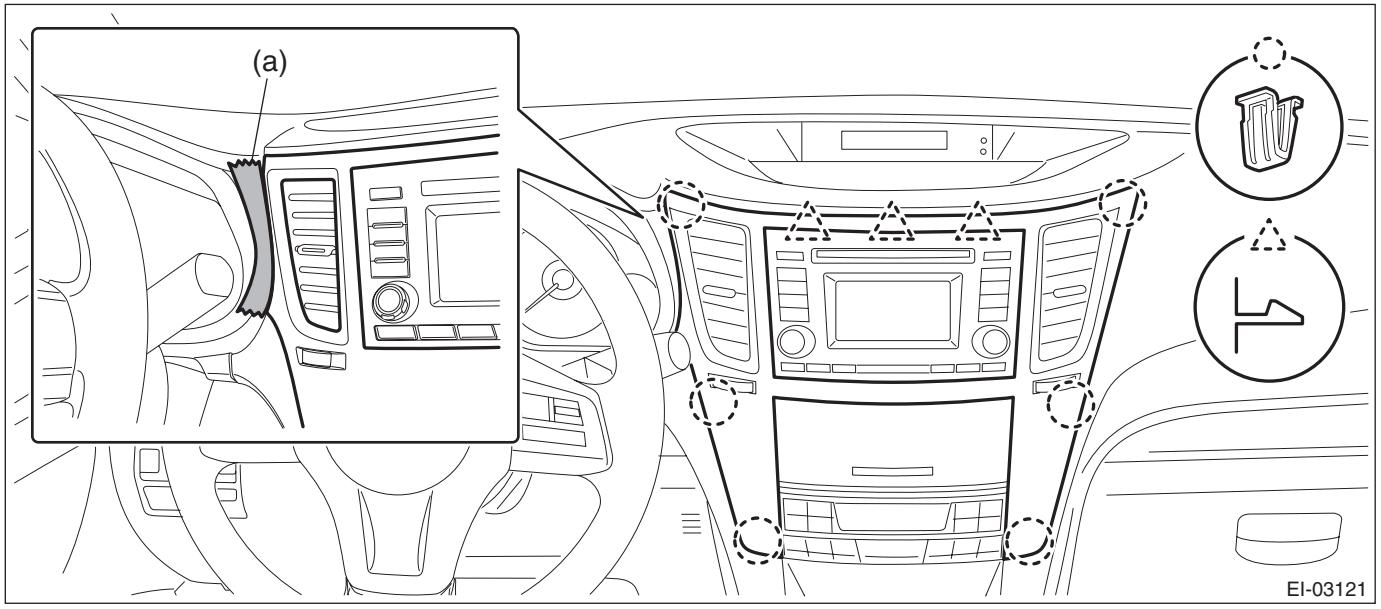

(2) Insert a finger into the air vent grille and release the left and right clips at the top of the center panel. (A), (B)
(3) Insert a finger into the air vent grille and release the left and right clips at the center of the center panel. (C), (D)

(4) Release the clips at the bottom of the center panel and remove the center panel assembly.

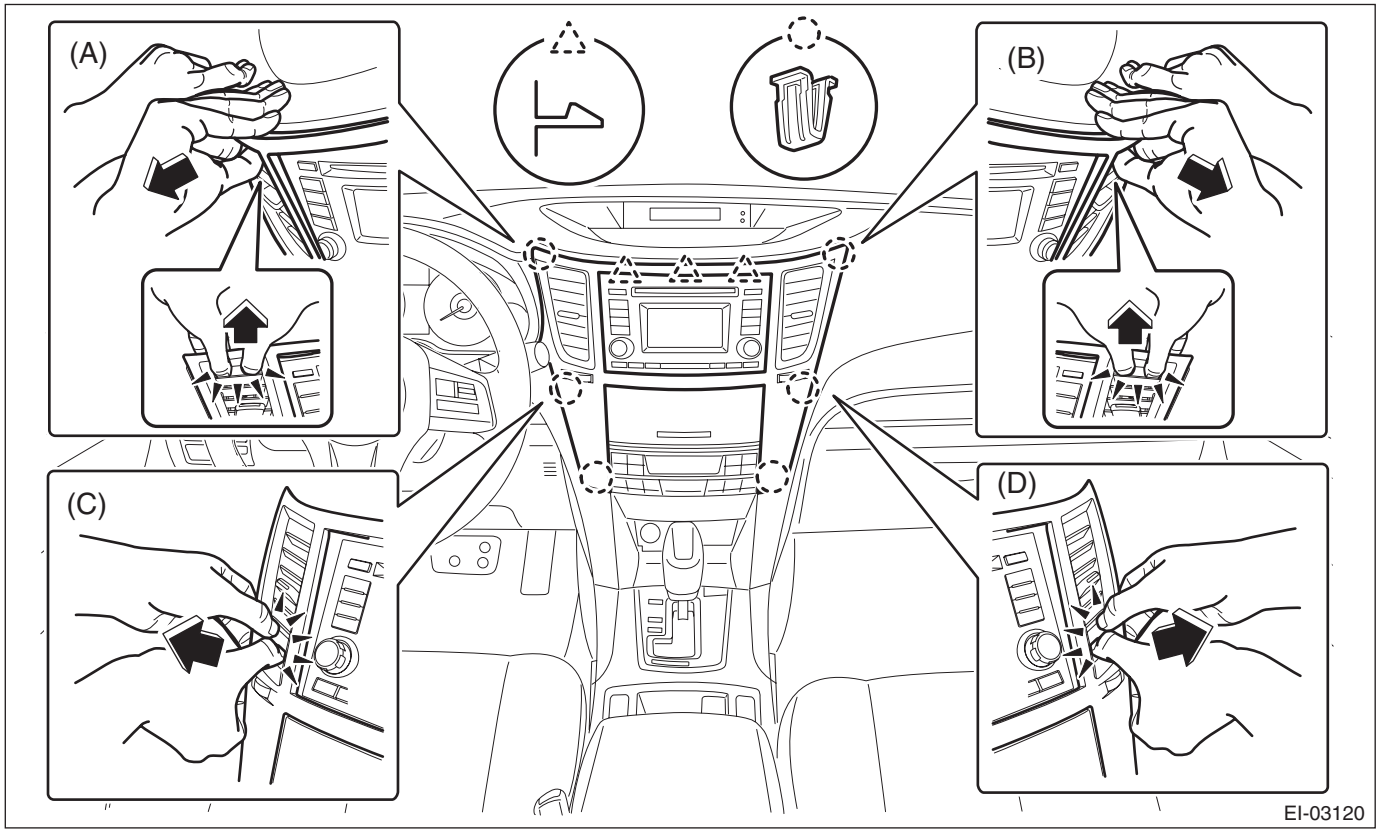

3) Remove the audio assembly.
(1) Remove the left and right screws, and partially pull the audio out from center console.
(2) Disconnect the connectors, and remove the audio assembly.

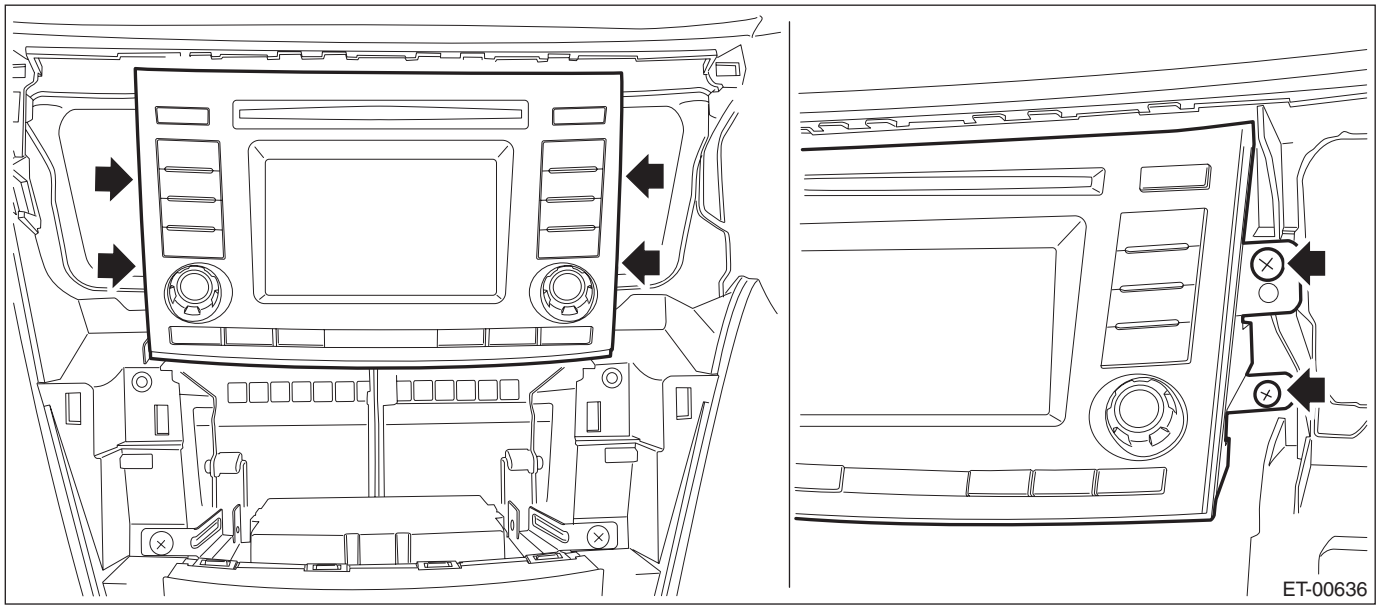

4) Remove the navigation assembly. (model with navigation)
   (1) Remove the left and right screws.
   (2) Disconnect the connectors, and remove the navigation assembly.

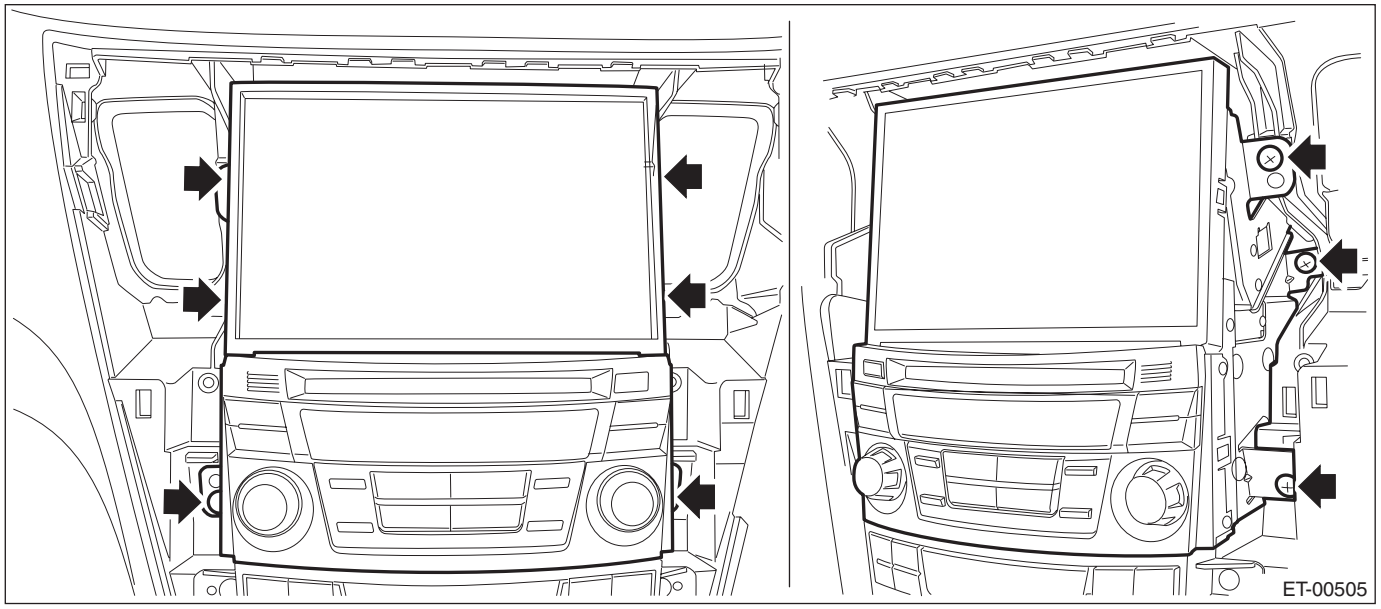

5) Remove the control panel assembly.
   (1) Remove the screws, and pull out the control panel assembly toward you.
   (2) Disconnect the connector, and remove the control panel assembly.

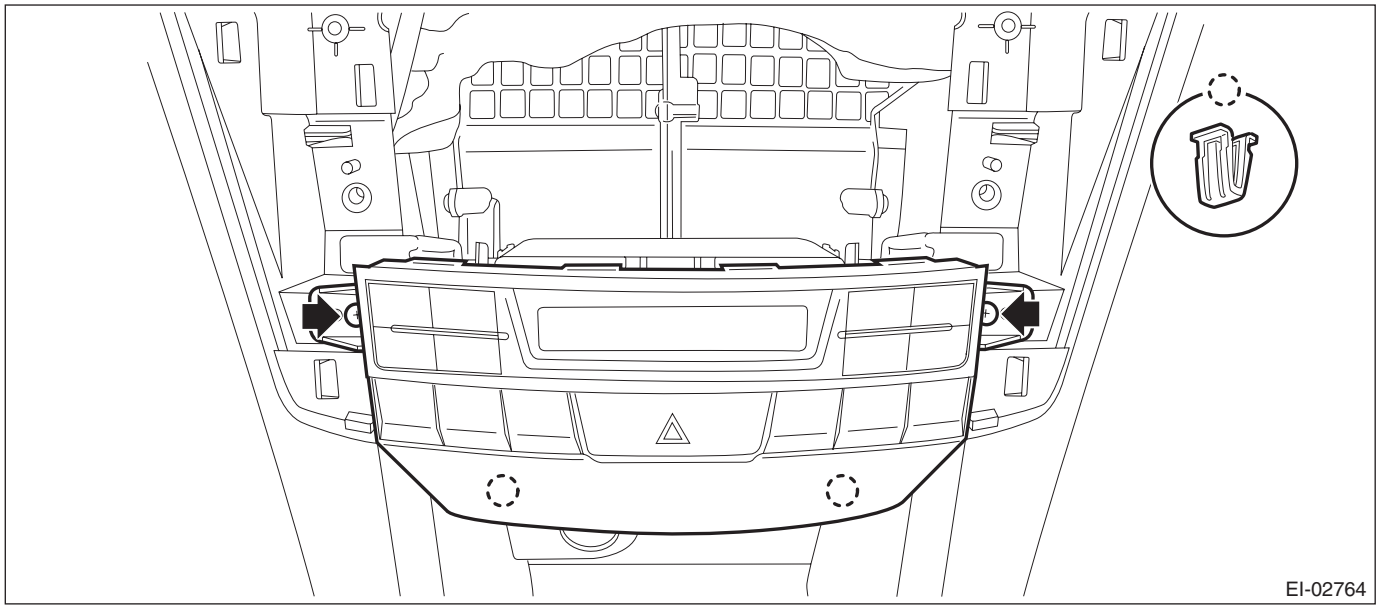

6) Remove the front accessory power supply socket.
   (1) Disconnect the connector and turn the securing cover to remove it.
   (2) Pull the accessory power supply socket out to remove.

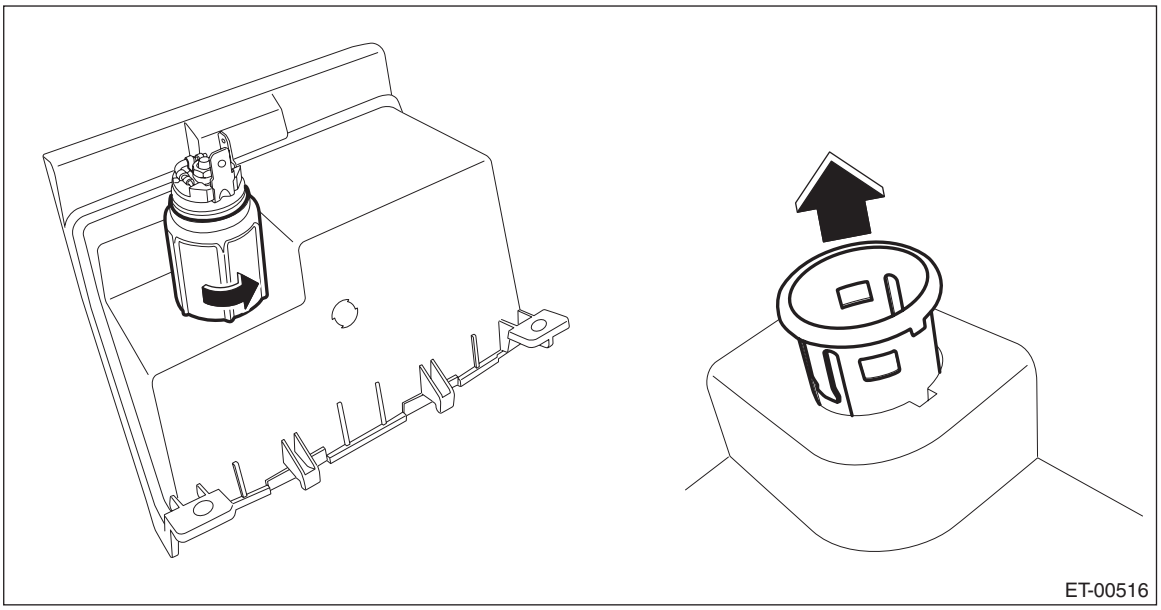

C: INSTALLATION

Install each part in the reverse order of removal.

16.Rear Accessory Power Supply Socket

A: WIRING DIAGRAM

Refer to “Rear Accessory Power Supply Socket System” in the wiring diagram. <Ref. to WI-211, WIRING DIAGRAM, Rear Accessory Power Supply Socket System.>

B: REMOVAL

1) Remove the console front cover assembly.

- MT model
  1. Remove the shift knob.
  2. Release the clips and claws, then pull up the console front cover assembly.

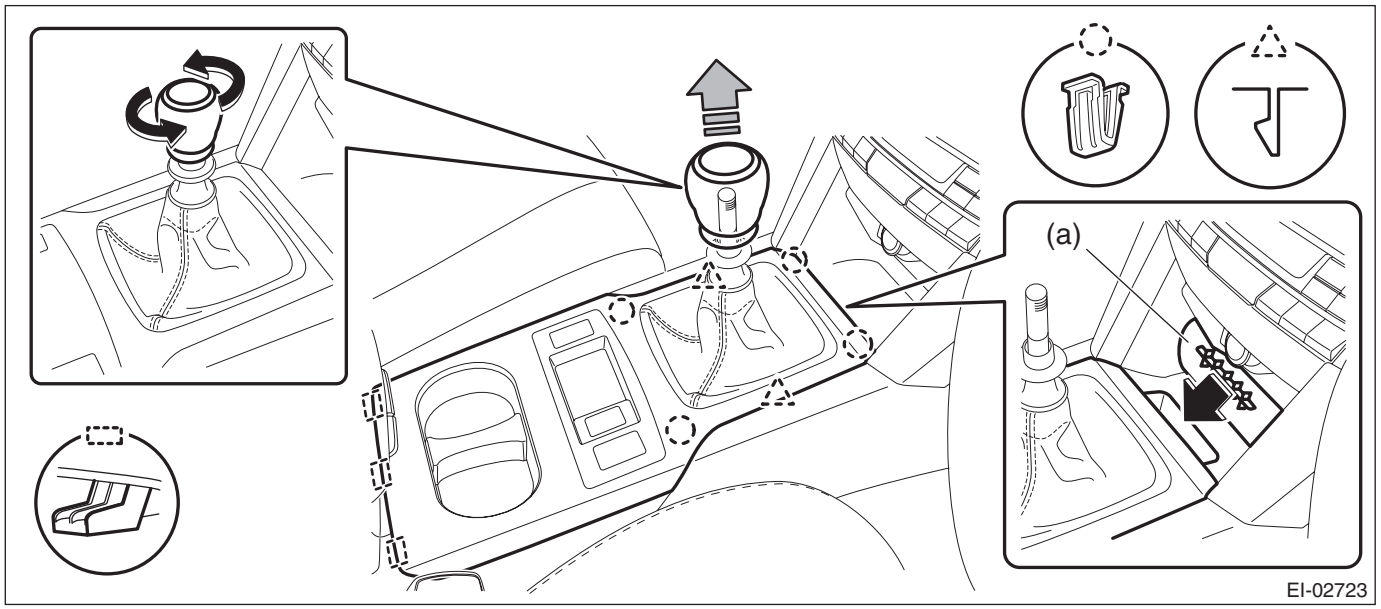

NOTE:
Turn over the front center pocket mat (a) and pull up the console front cover from the slit.

  3. Disconnect the harness connector and remove the console front cover assembly.

- AT/CVT model
  1. Remove the select lever knob.
     a. Lower the cover grip AT.
     b. Remove the clamp grip pin, then remove the select lever knob.
  2. Release the clips and claws, then pull up the console front cover assembly.

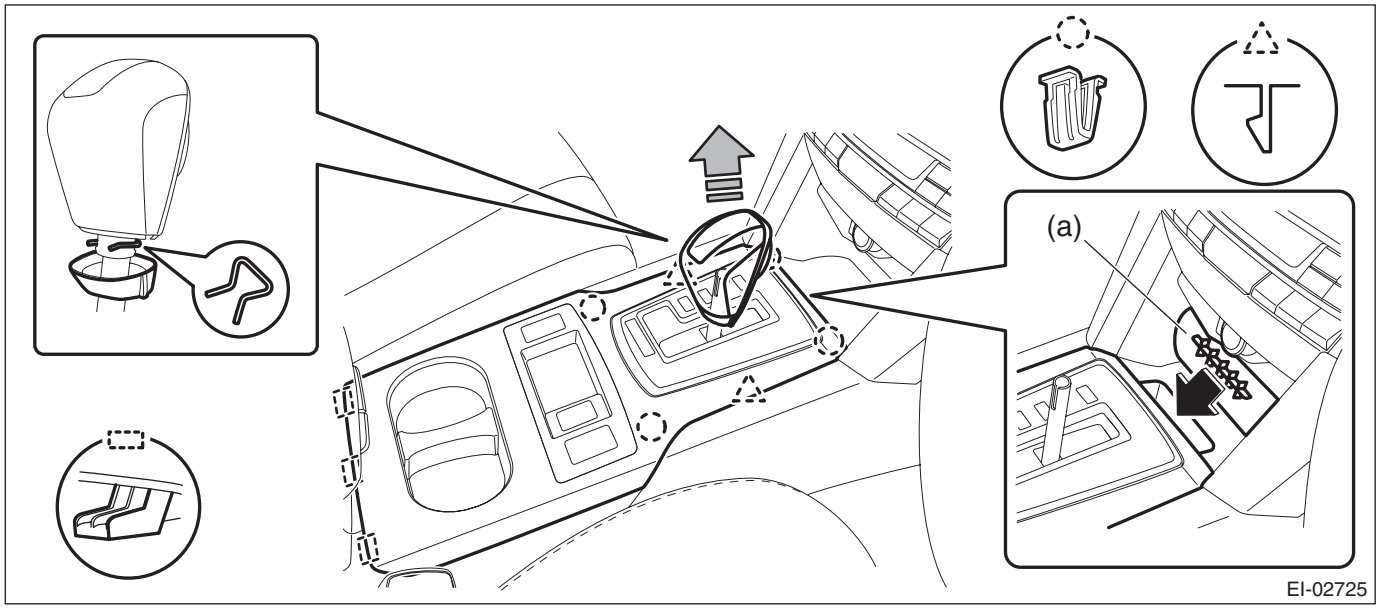

NOTE:
Turn over the front center pocket mat (a) and pull up the console front cover from the slit.

  3. Disconnect the harness connector and remove the console front cover assembly.

2) Remove the console front side cover assembly.
   (1) Remove the screws and release the clips (A) to (D) in order.
   (2) Remove the console front side cover assembly by pulling it up.

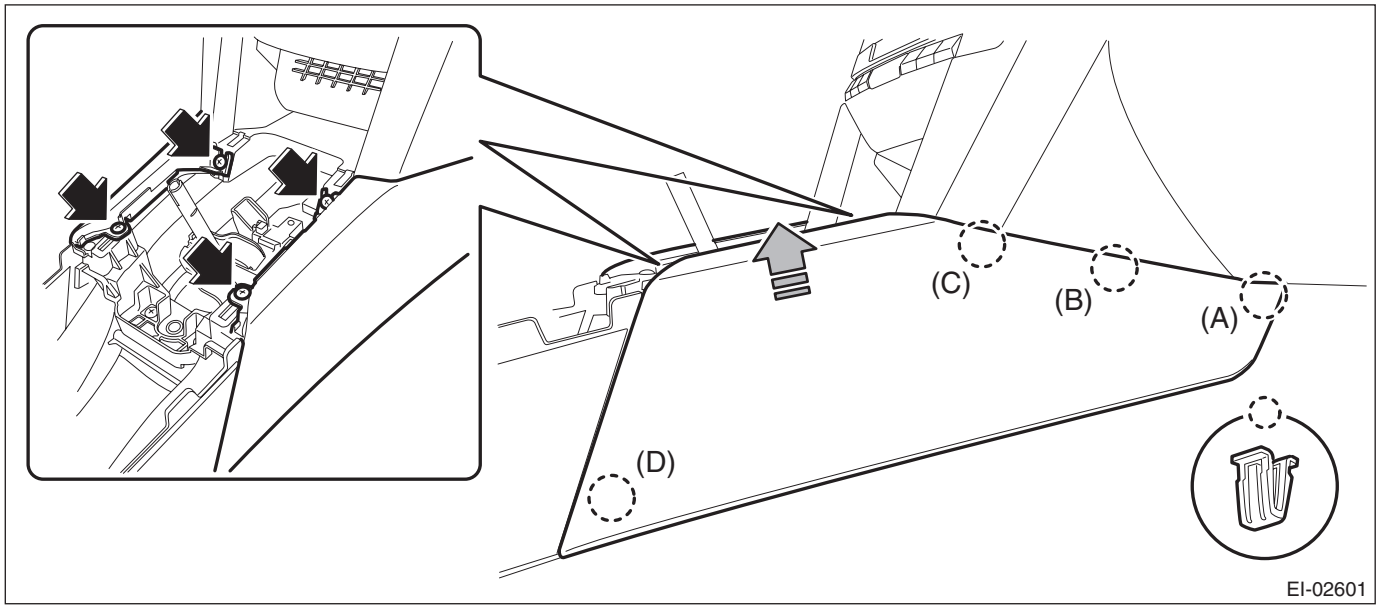

3) Remove the console box assembly.
   (1) Move the seat forward, and remove the bolts after detaching the left and right caps.

NOTE:
For a model with power seat, connect the battery ground cable and move the seat. Then, disconnect the battery ground cable again and wait for 60 seconds at least before restarting the work.

(2) Remove the screws, disconnect the harness connector and remove the console box assembly.

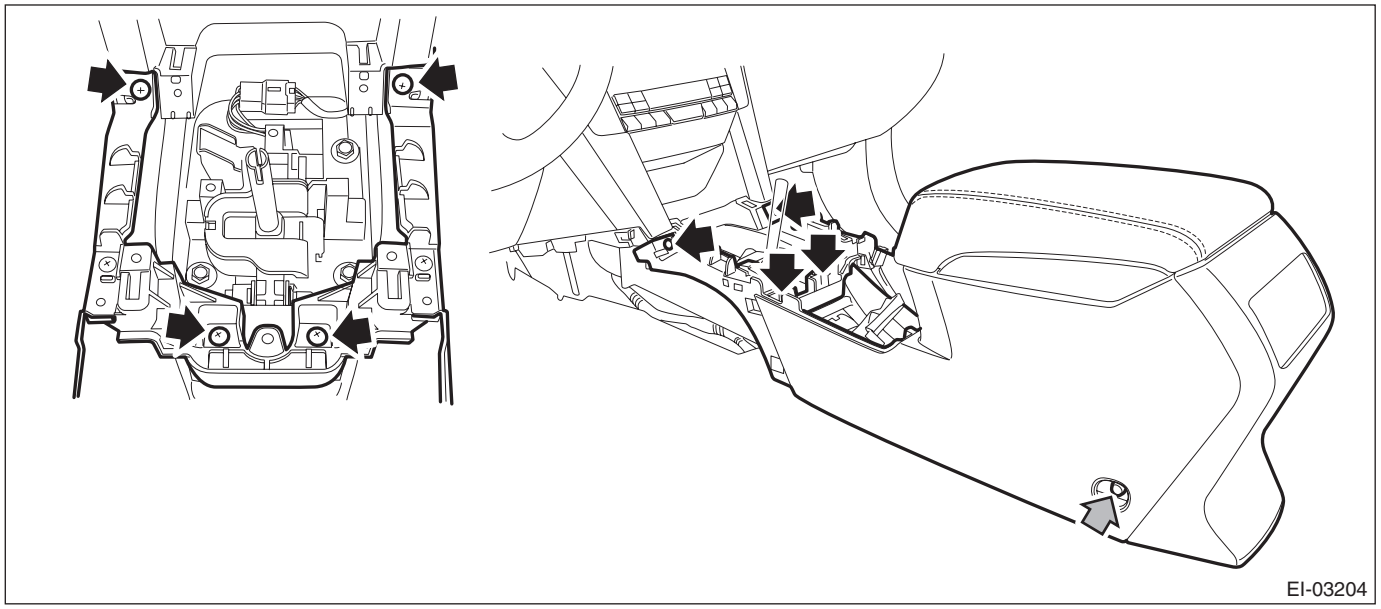

4) Remove the front accessory power supply socket.
(1) Remove the claws (two) in accessory power supply socket.
(2) Pull the accessory power supply socket out to remove.

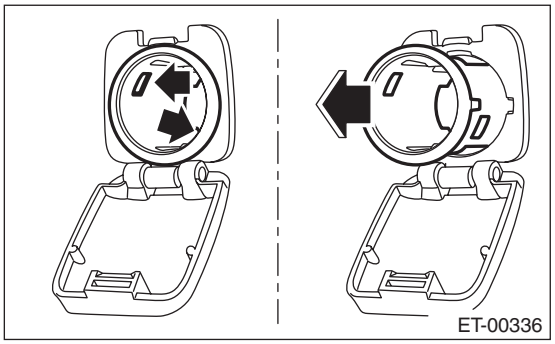

C: INSTALLATION

Install each part in the reverse order of removal.

Tightening torque:
Center console: 6.5 N·m (0.66 kgf-m, 4.8 ft-lb)

17.AUX Input Terminal

A: REMOVAL

1. AUX INPUT TERMINAL

1) Disconnect the ground cable from battery.
2) Remove the console front cover assembly.

- MT model
  1. Remove the shift knob.
  2. Release the clips and claws, then pull up the console front cover assembly.

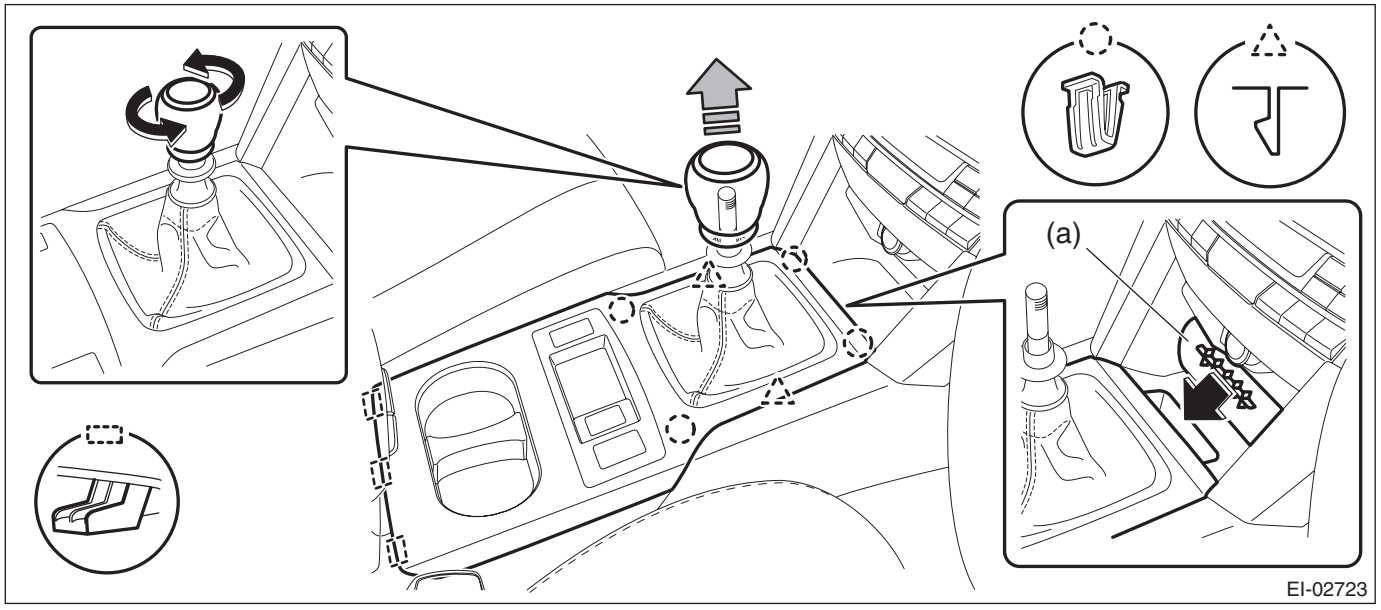

NOTE:
Turn over the front center pocket mat (a) and pull up the console front cover from the slit.

  3. Disconnect the harness connector and remove the console front cover assembly.

- AT/CVT model
  1. Remove the select lever knob.
     a. Lower the cover grip AT.
     b. Remove the clamp grip pin, then remove the select lever knob.
  2. Release the clips and claws, then pull up the console front cover assembly.

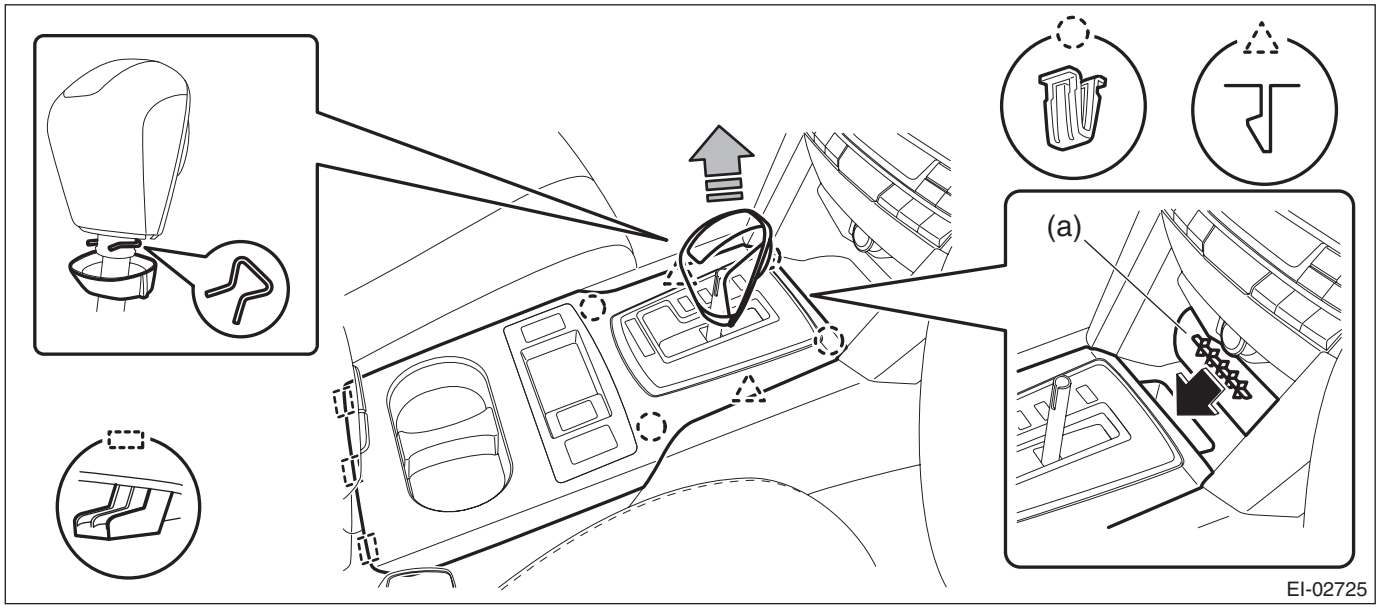

NOTE:
Turn over the front center pocket mat (a) and pull up the console front cover from the slit.

3. Disconnect the harness connector and remove the console front cover assembly.

3) Remove the console front side cover assembly.
(1) Remove the screws and release the clips (A) to (D) in order.
(2) Remove the console front side cover assembly by pulling it up.

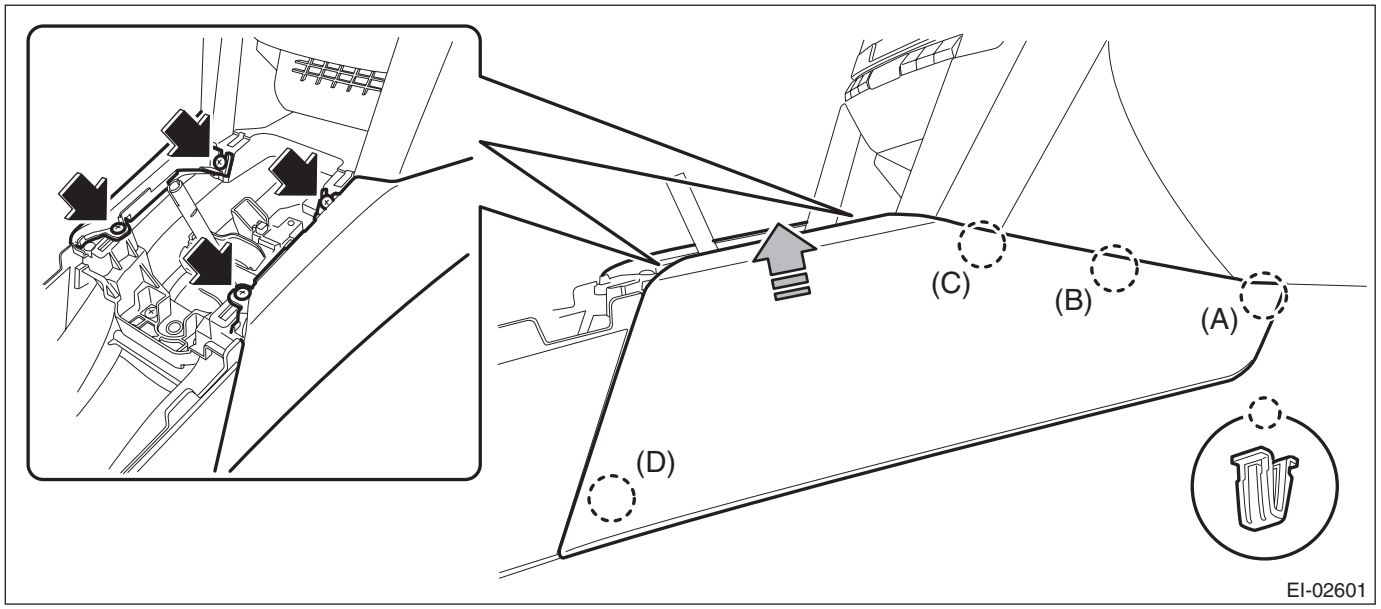

4) Remove the console box assembly.
(1) Move the seat forward, and remove the bolts after detaching the left and right caps.

NOTE:
For a model with power seat, connect the battery ground cable and move the seat. Then, disconnect the battery ground cable again and wait for 60 seconds at least before restarting the work.

(2) Remove the screws, disconnect the harness connector and remove the console box assembly.

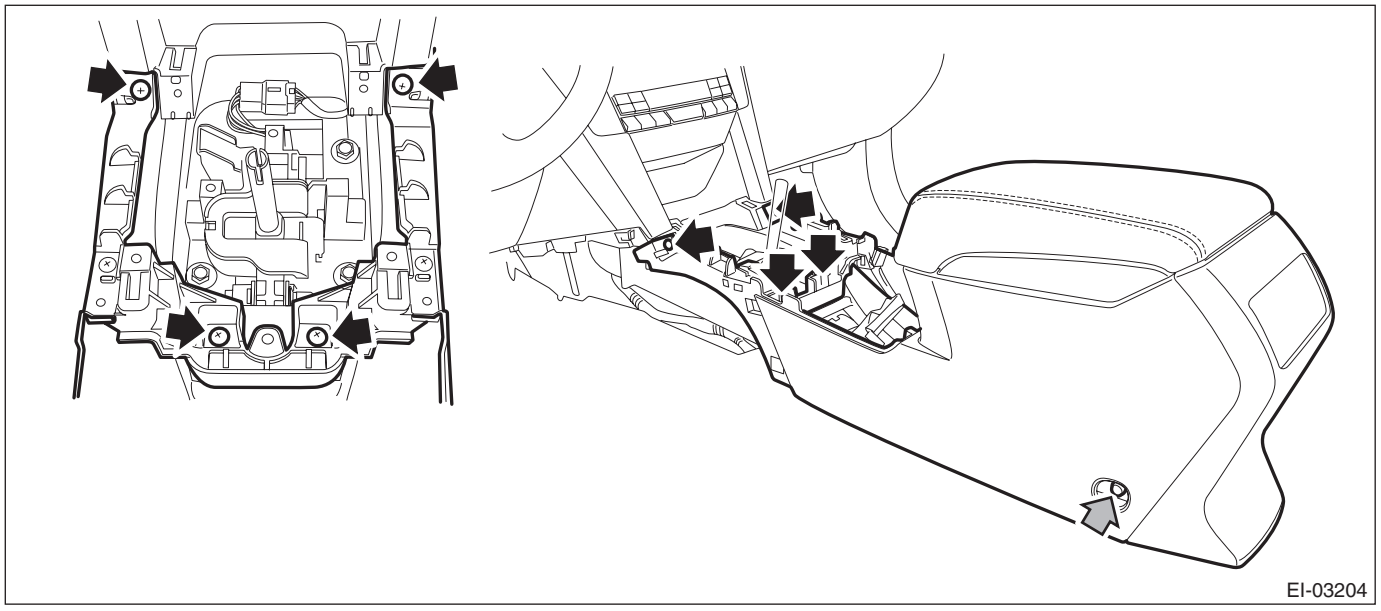

5) Remove the AUX input terminal.
   (1) Remove the claws at four locations.
   (2) Remove the AUX input terminal assembly by pushing it into the console box.

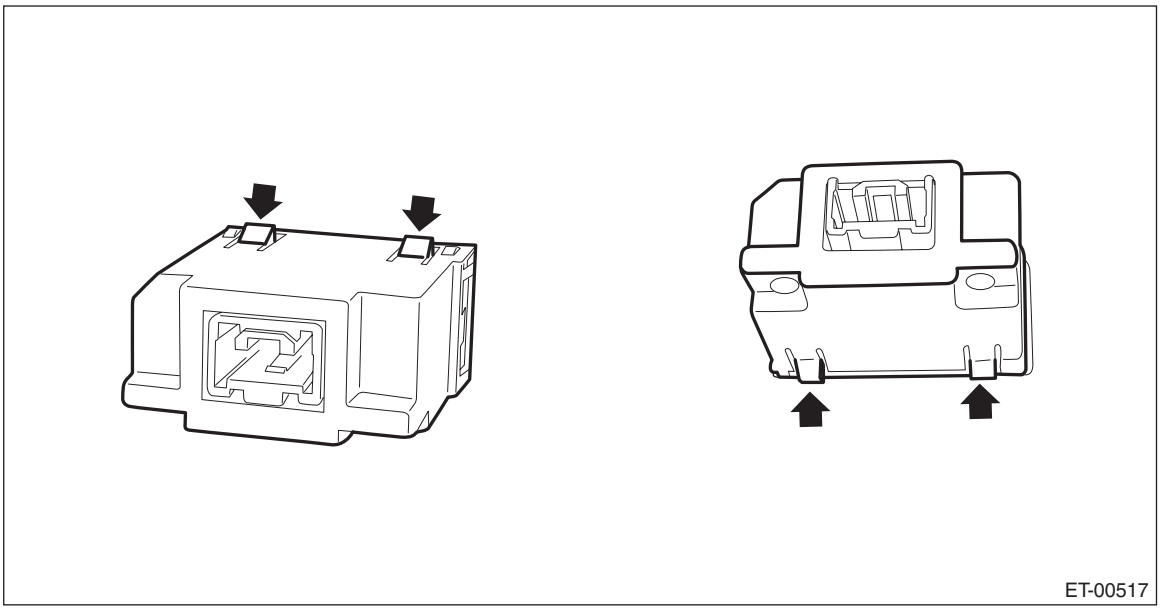

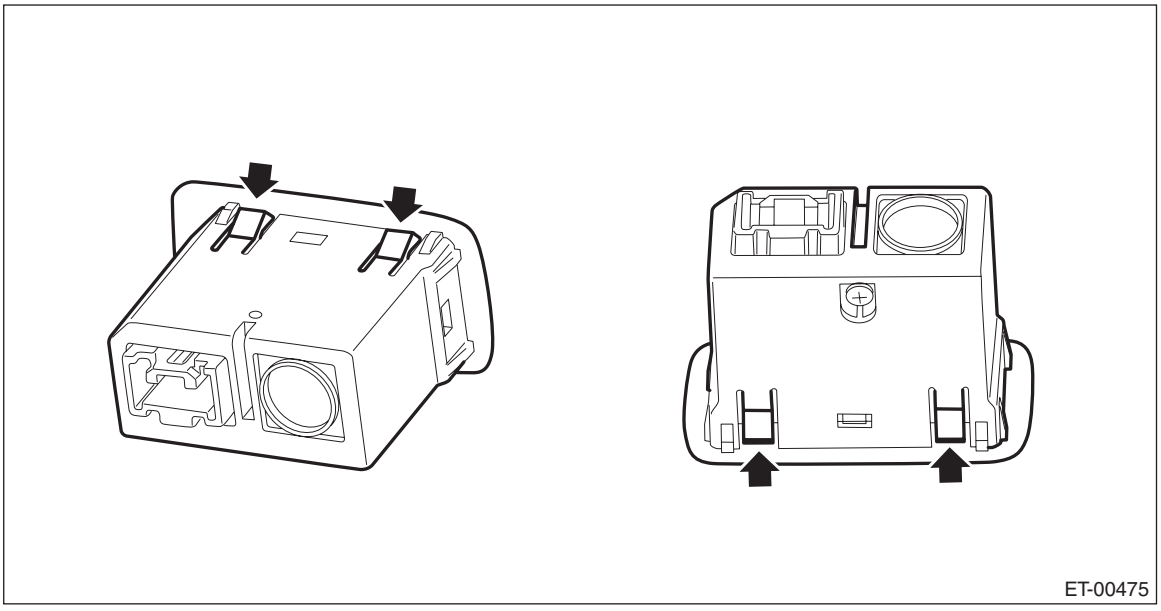

2. AUX TERMINAL HARNESS

1) Disconnect the ground cable from battery.
2) Remove the console front cover assembly.

- MT model
  1. Remove the shift knob.
  2. Release the clips and claws, then pull up the console front cover assembly.

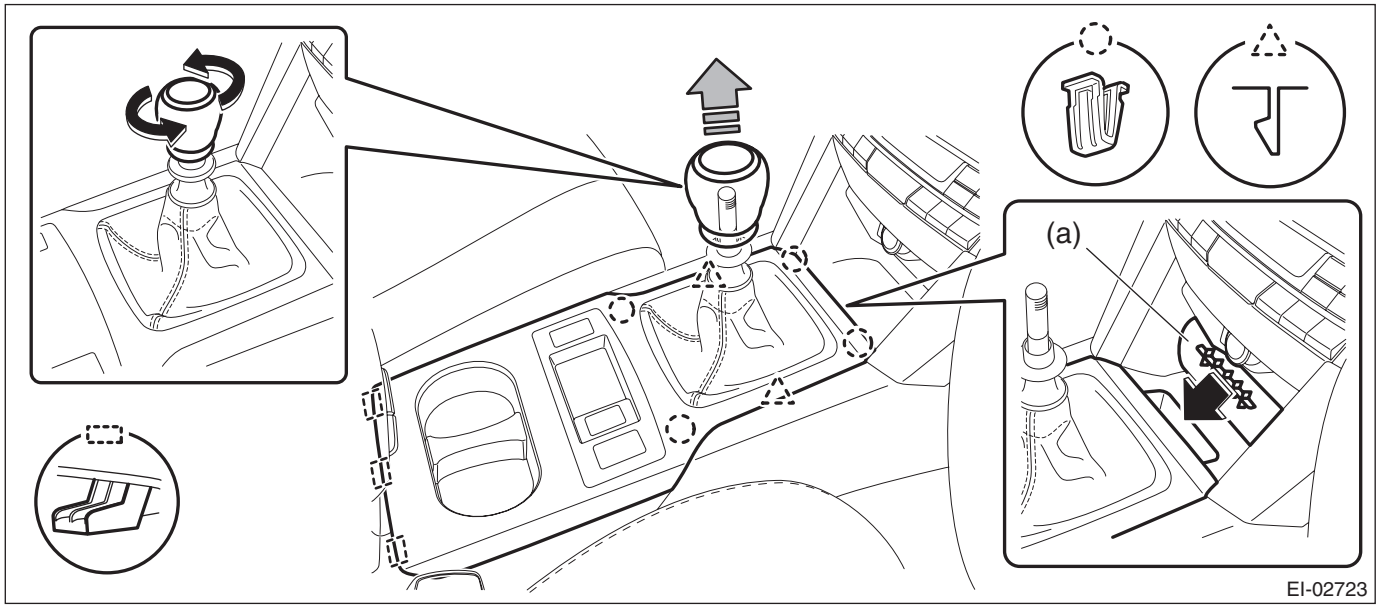

NOTE:
Turn over the front center pocket mat (a) and pull up the console front cover from the slit.

  3. Disconnect the harness connector and remove the console front cover assembly.

- AT/CVT model
  1. Remove the select lever knob.
     a. Lower the cover grip AT.
     b. Remove the clamp grip pin, then remove the select lever knob.
  2. Release the clips and claws, then pull up the console front cover assembly.

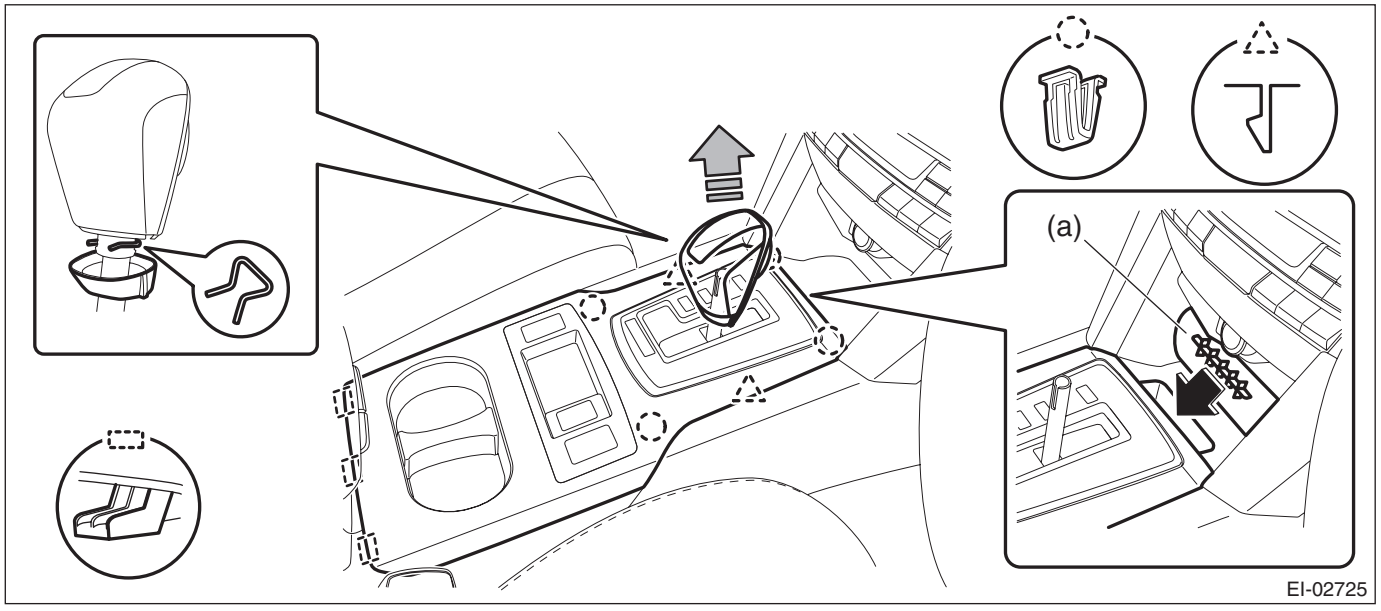

NOTE:
Turn over the front center pocket mat (a) and pull up the console front cover from the slit.

  3. Disconnect the harness connector and remove the console front cover assembly.

3) Remove the console front side cover assembly LH.
(1) Remove the screws and release the clips (A) to (D) in order.
(2) Remove the console front side cover assembly by pulling it up.

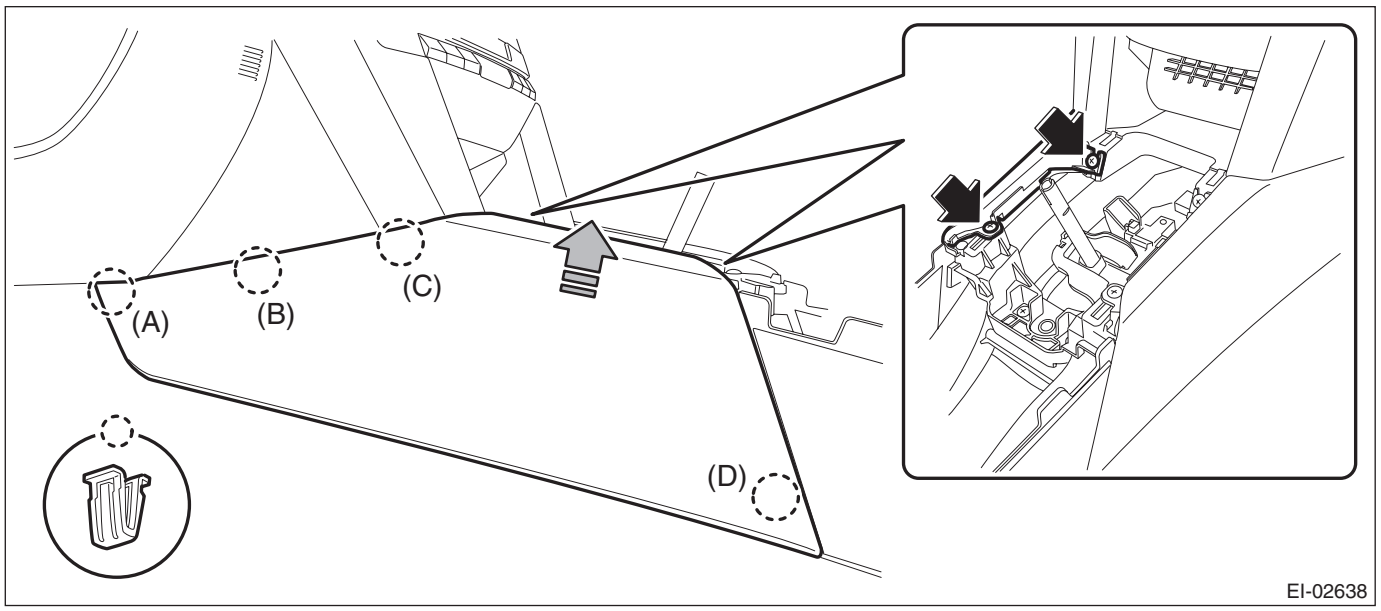

4) Remove the center panel assembly.

CAUTION:
Do not put your finger on the fin of the air vent grille. Doing so may damage the fin.
(1) Attach the protective tape (a) to the meter visor.

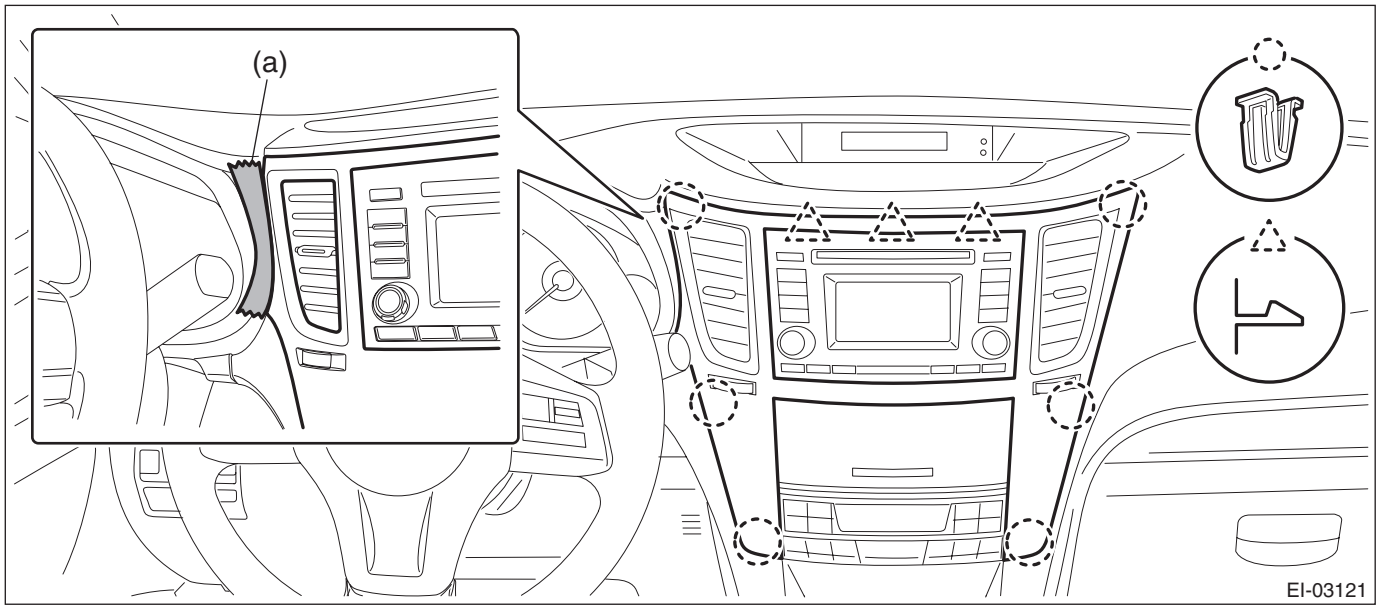

(2) Insert a finger into the air vent grille and release the left and right clips at the top of the center panel. (A), (B)
(3) Insert a finger into the air vent grille and release the left and right clips at the center of the center panel. (C), (D)

(4) Release the clips at the bottom of the center panel and remove the center panel assembly.

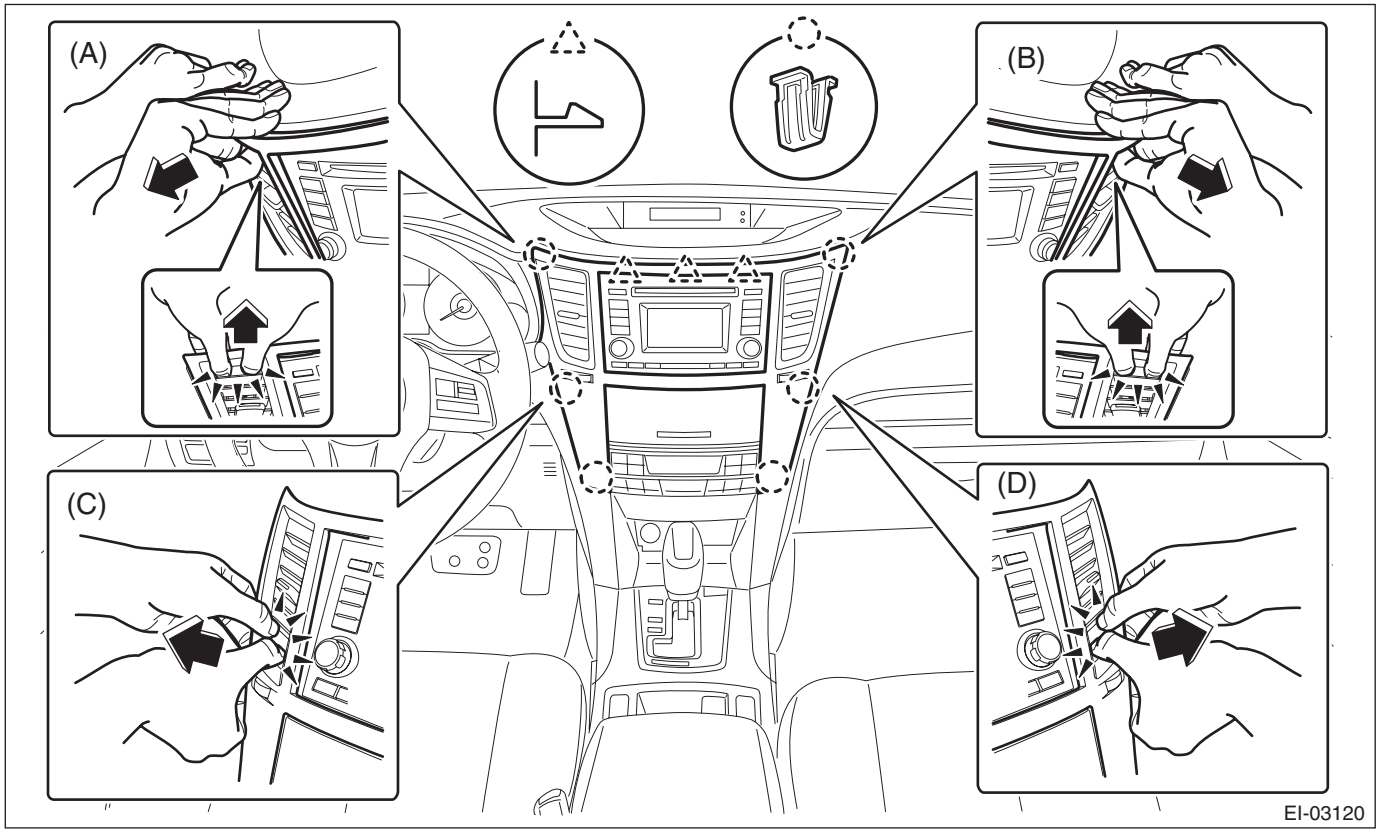

5) Remove the audio assembly.
(1) Remove the left and right screws, and partially pull the audio out from center console.
(2) Disconnect the connectors, and remove the audio assembly.

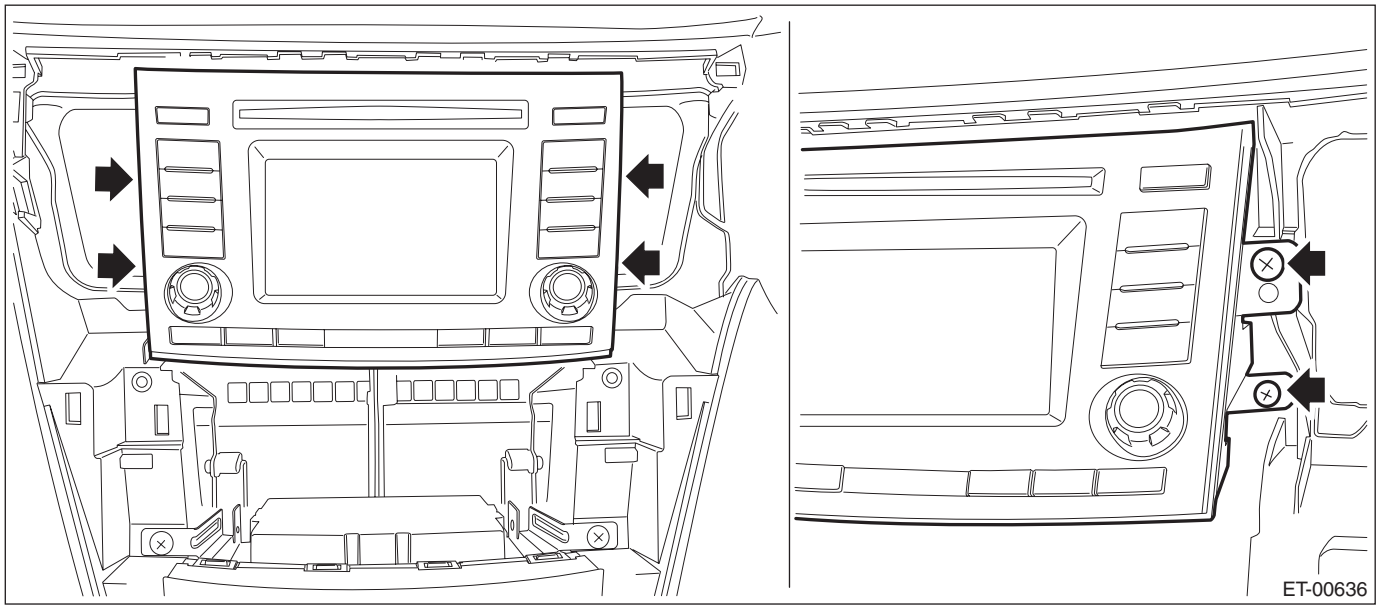

6) Remove the navigation assembly. (model with navigation)
   (1) Remove the left and right screws.
   (2) Disconnect the connectors, and remove the navigation assembly.

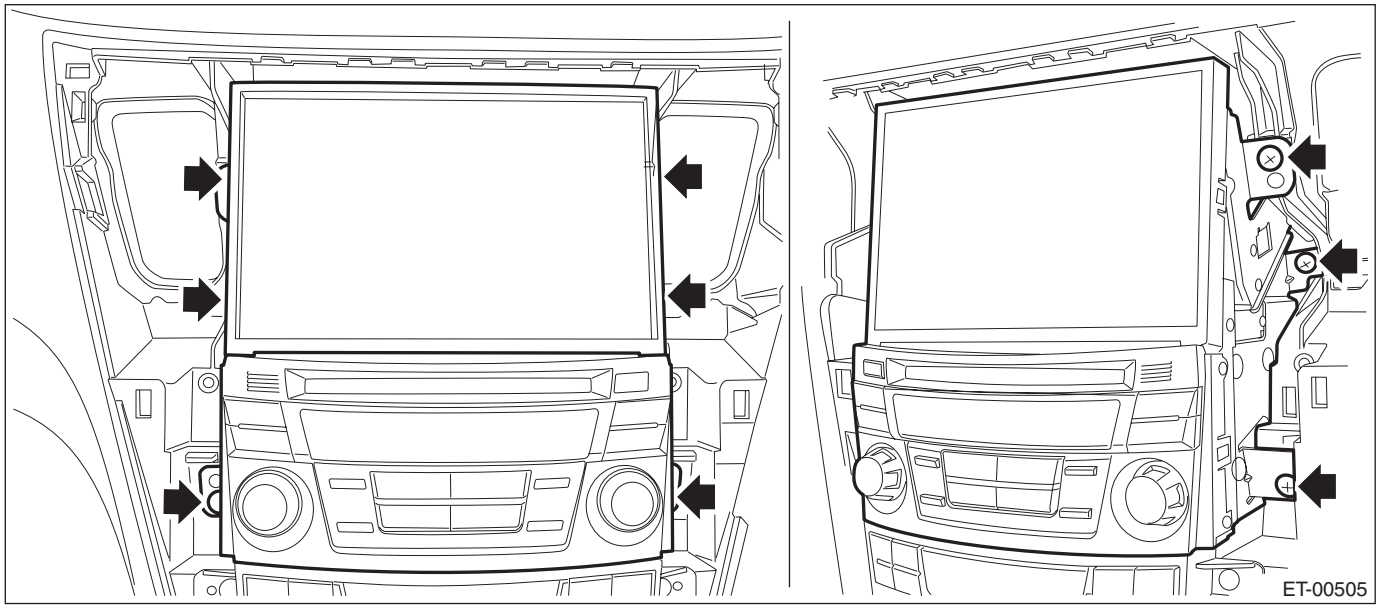

7) Remove the AUX terminal harness.
   (1) Remove the harness clamp.
   (2) Disconnect the connector from the AUX input terminal assembly, and remove the AUX terminal harness.

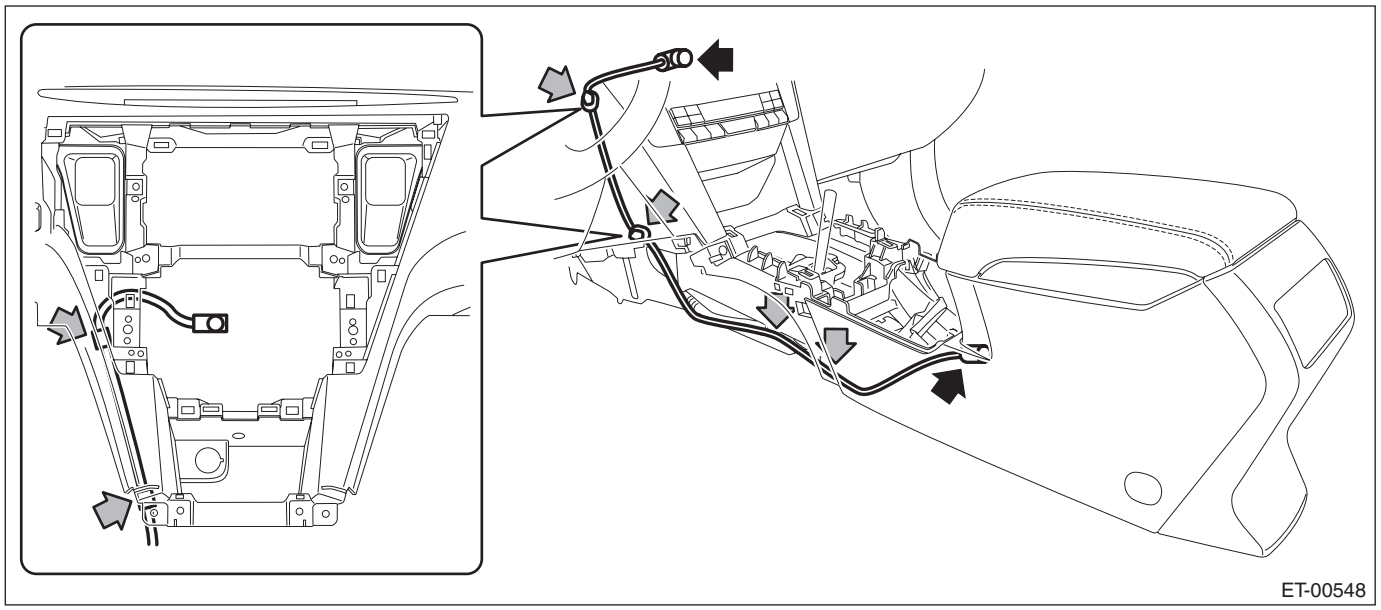

B: INSTALLATION

Install each part in the reverse order of removal.

Tightening torque:
Center console: 6.5 N·m (0.66 kgf-m, 4.8 ft-lb)

COMMUNICATION SYSTEM

COM

Page

1. General Description 2
2. Relay and Fuse 3
3. Horn System 4
4. Horn 5
5. Horn Switch 11

1. General Description

A: COMPONENT

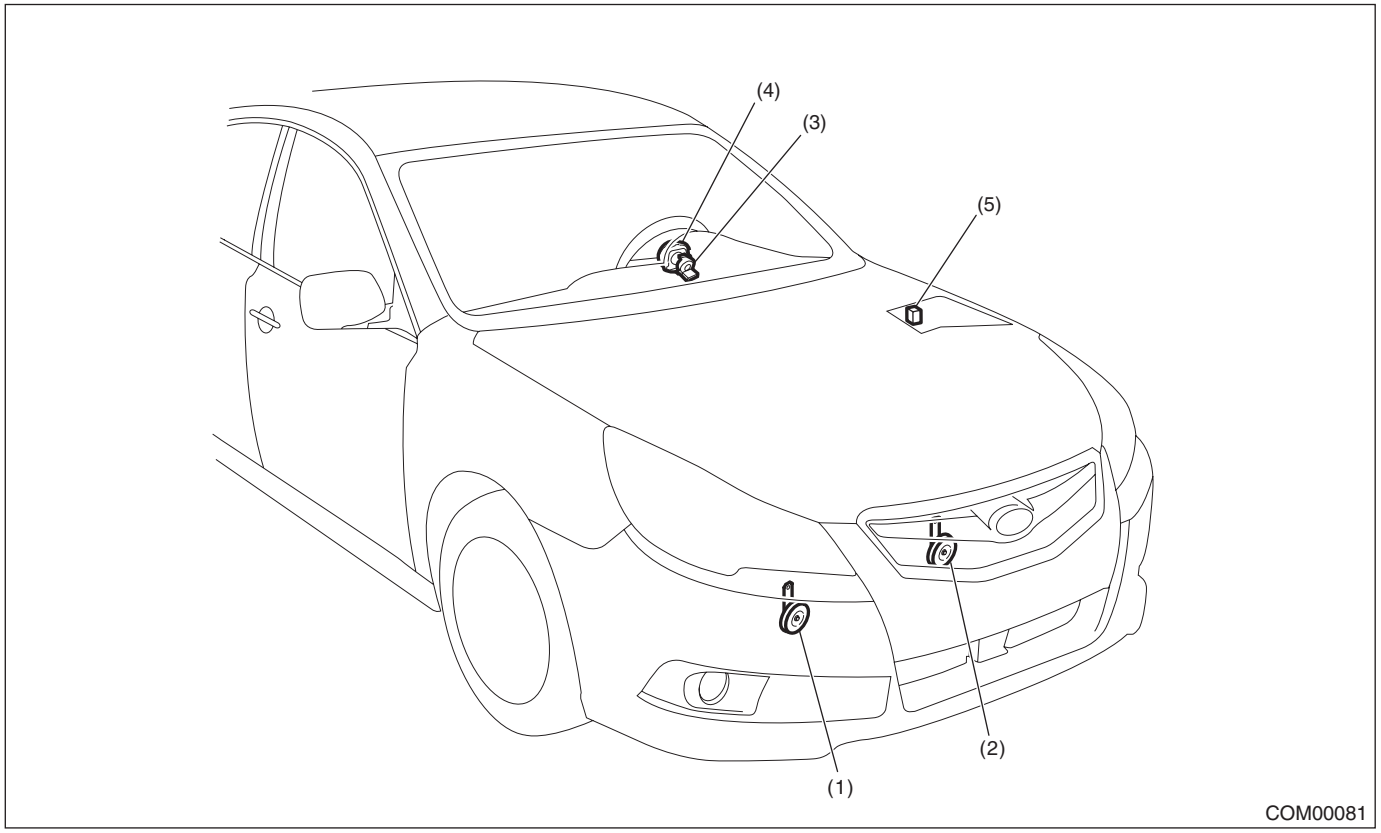

(1) Hi pitch side horn
(2) Lo pitch side horn
(3) Roll connector
(4) Horn switch (driver's airbag module ASSY)
(5) Horn relay

B: CAUTION

• Before disassembling or reassembling parts, always disconnect the battery ground cable from battery. When replacing the audio, control module and other parts provided with memory functions, record the memory contents before disconnecting the battery ground cable. Otherwise, the memory is cleared.
• Reassemble the parts in the reverse order of disassembly procedure unless otherwise indicated.
• Connect the connectors securely during reassembly.
• After reassembly, make sure that the functional parts operate normally.
• Yellow connectors and harnesses with yellow tapes around them are the connectors and harnesses for the airbag system. Using a tester above such circuits may cause malfunction of airbag system. Follow the cautions for the airbag system in this case. <Ref. to AB-9, CAUTION, General Description.>
• Be careful not to damage the airbag system wiring harness when servicing electrical parts and switches.

C: PREPARATION TOOL

1. GENERAL TOOL

TOOL NAME	REMARKS
Circuit tester	Used for measuring resistance and voltage.

2. Relay and Fuse

A: LOCATION

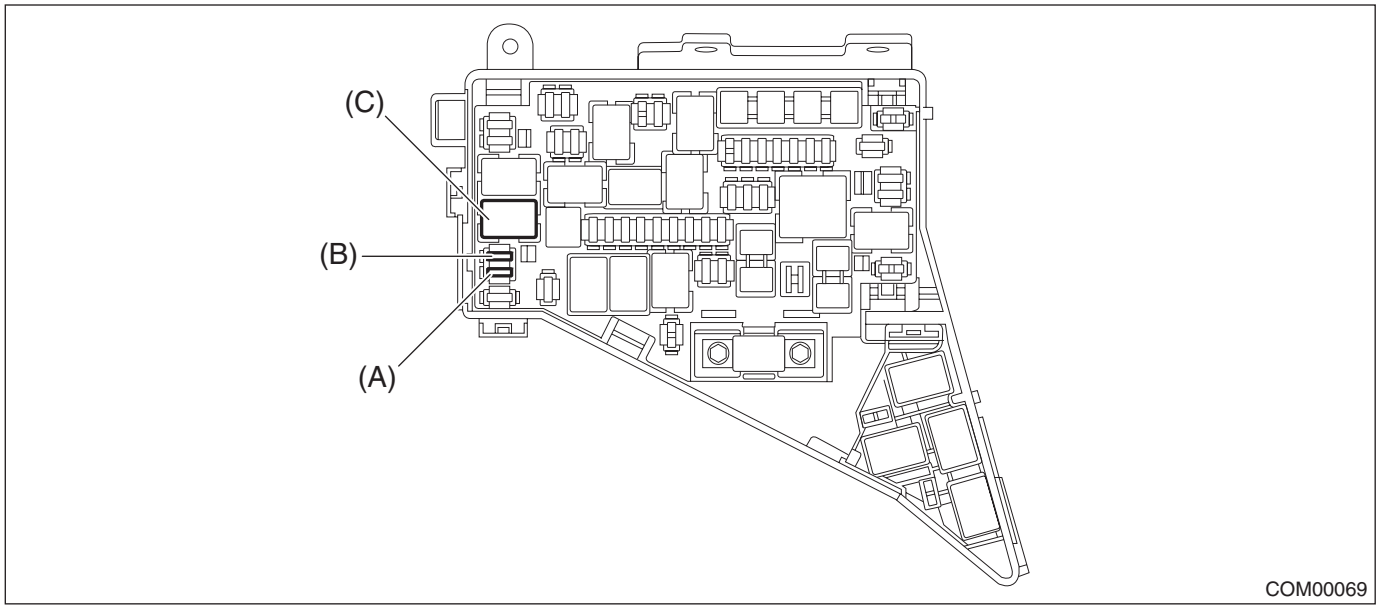

Main fuse box	Fuse 7.5A (Hi pitch (RH) side horn)	(A)
	Fuse 7.5A (Lo pitch (LH) side horn)	(B)
	Horn relay	(C)

NOTE:
For other related fuses, refer to the wiring diagram. <Ref. to WI-15, Power Supply Circuit.>

B: INSPECTION

1. CHECK FUSE.

1) Remove the fuse and check visually.
2) If the fuse is blown out, replace the fuse.

2. CHECK RELAY

1) Check the resistance between relay terminals.

Terminal No.	Inspection conditions	Specification	Circuit
1 — 2	Always	1 MΩ or more	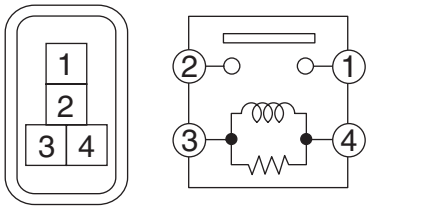
1 — 2	Apply battery voltage between 4 — 3 terminals.	Less than 1 Ω	

2) Replace the relay if the inspection result is not within the standard value.

3. Horn System

A: WIRING DIAGRAM

Refer to “Horn System” in the wiring diagram. <Ref. to WI-175, WIRING DIAGRAM, Horn System.>

B: INSPECTION

Symptoms	Inspection steps
Horn does not sound	1. Check the fuse.
	2. Check the horn relay.
	3. Check the role connector.
	4. Check the horn switch.
	5. Check the horn assembly.
	6. Check the harness.

C: NOTE

For operation procedures of each component of the horn system, refer to the respective section.

- Horn ASSY: <Ref. to COM-5, Horn.>
- Horn switch: <Ref. to COM-11, Horn Switch.>

4. Horn

A: REMOVAL

1) Disconnect the ground cable from battery.
2) Remove the bumper face assembly.
   (1) Remove the clips, turn over the front mud guard, and disconnect the fog light connector. (Model with fog light)

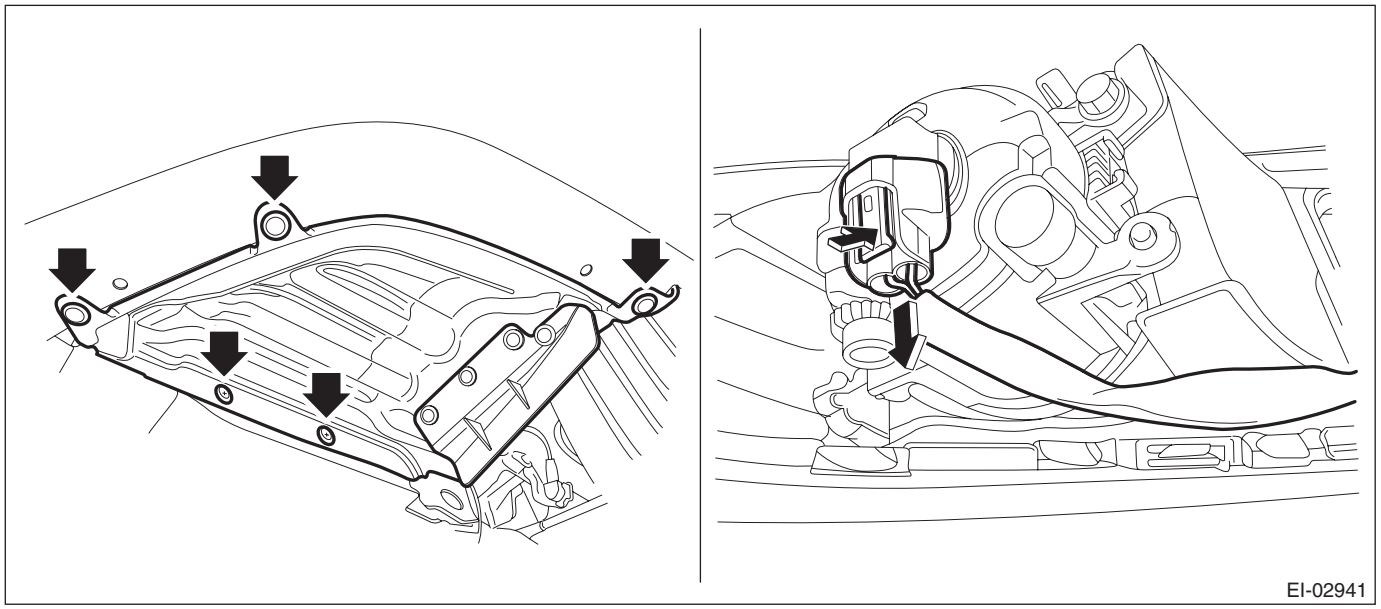

   (2) Remove the clips at the upper side of the bumper.
   (3) Remove the clips from the fender.

(4) Remove the clips at the lower side of bumper.

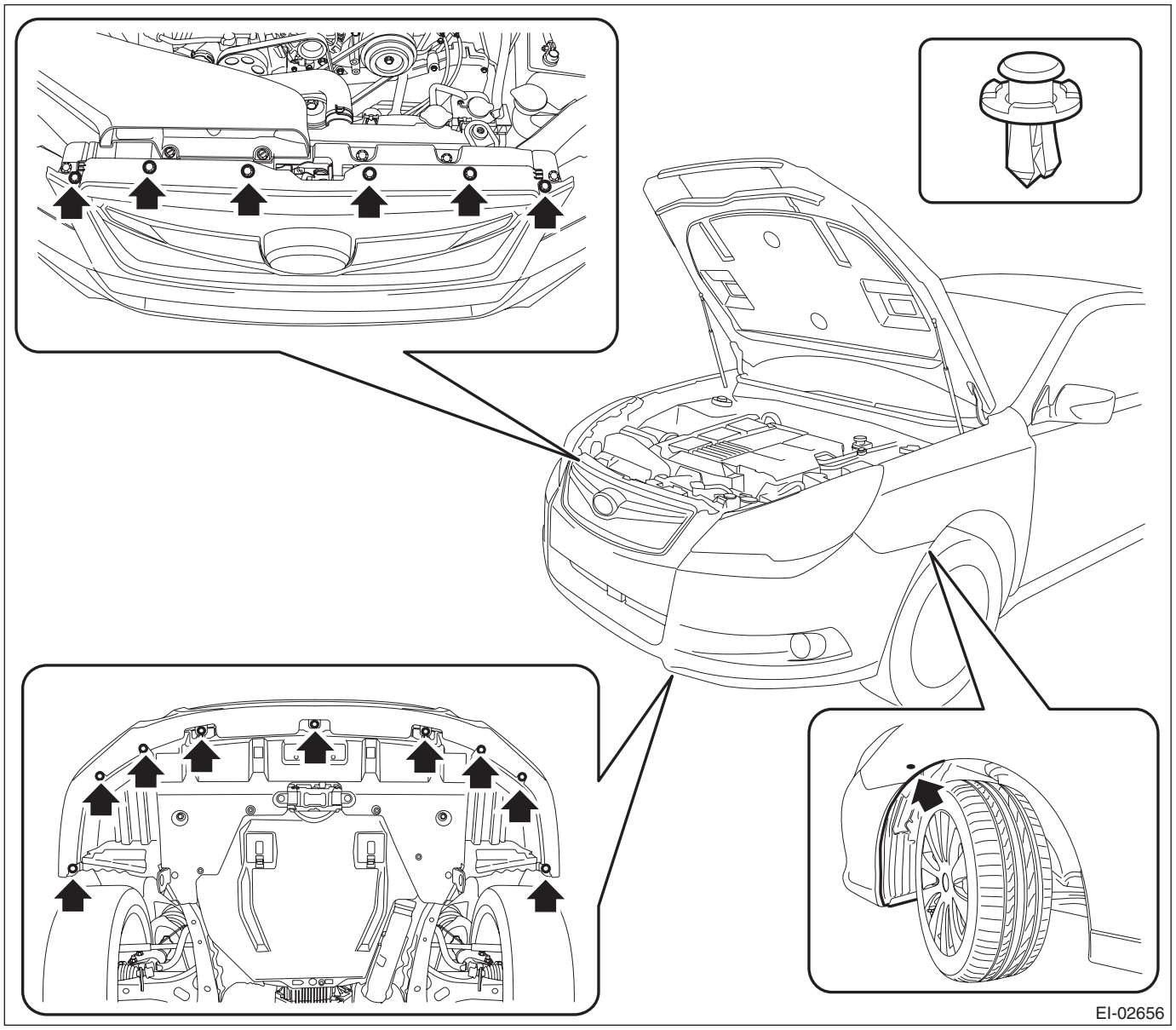

(5) Detach the flange section on the bumper face side from the bracket side front UPR.

CAUTION:
Do not pull forcibly. It may damage the flange sections of the bumper face.

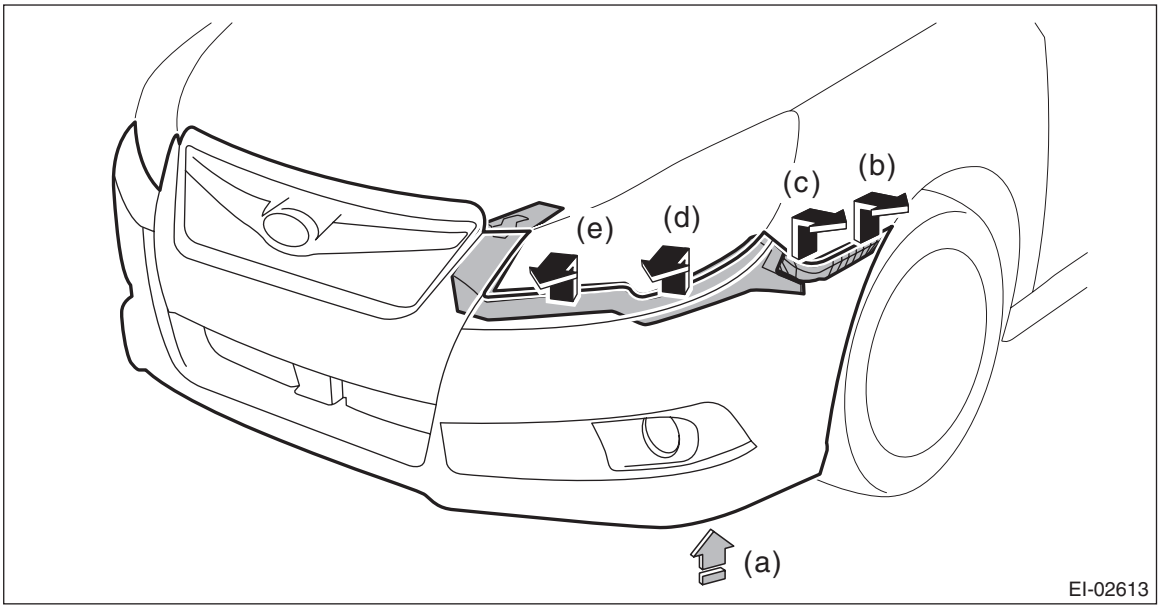

NOTE:
Pushing up the lower side (a) of the fog light, remove from (b) to (e).
Detach the opposite side in the same manner.

3) Remove the clips and remove the air intake duct.

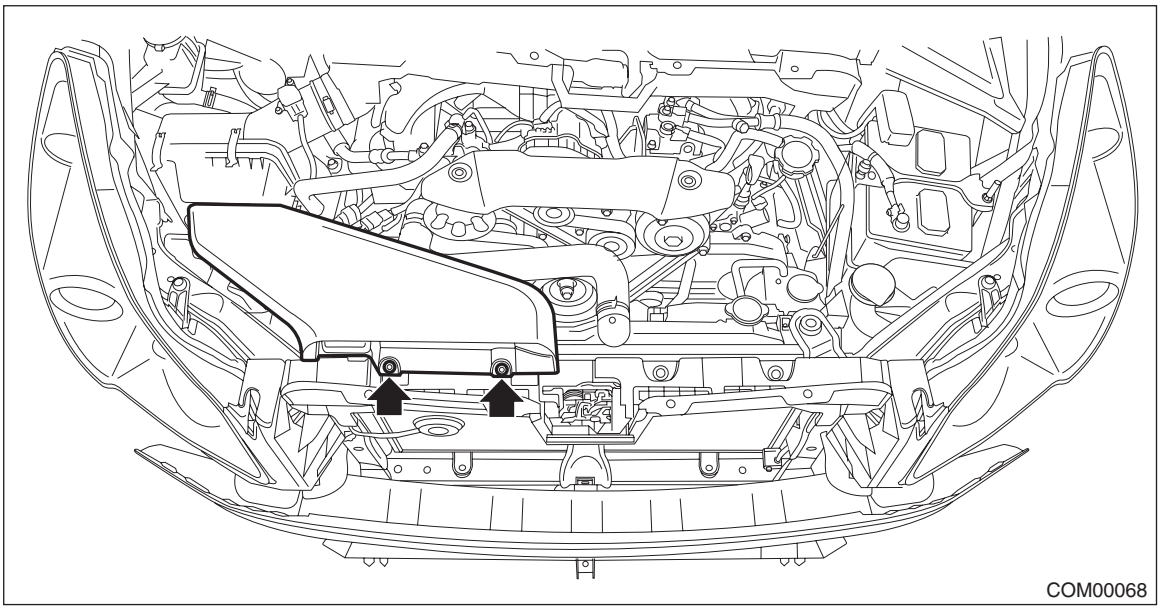

4) Remove the clips and remove the grille bracket.

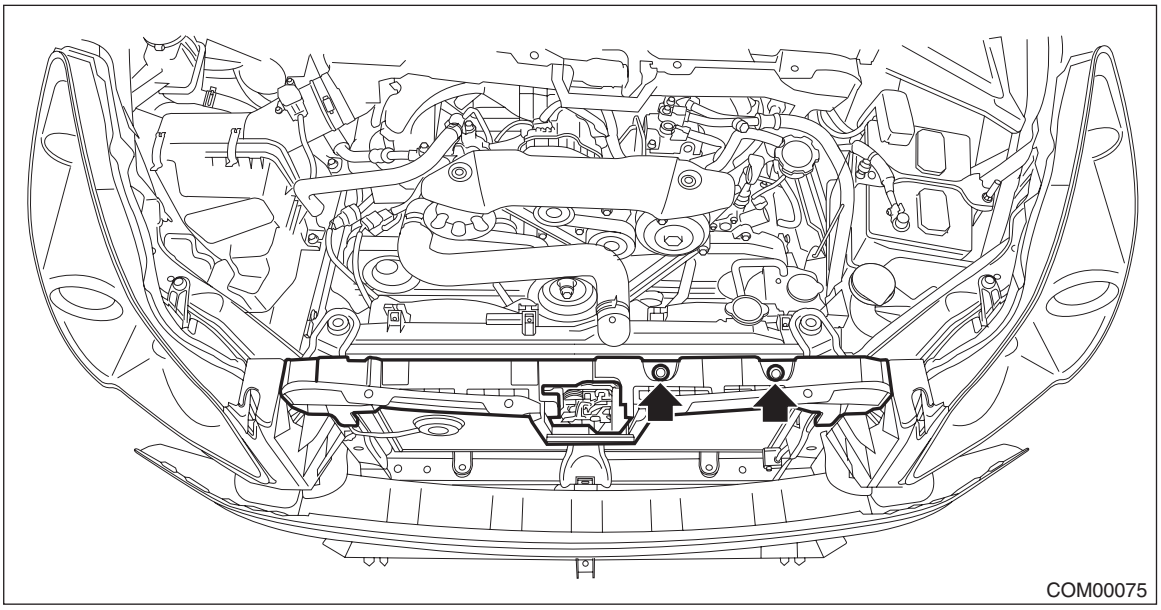

5) Remove the Lo pitch side horn.
   (1) Disconnect the connector.
   (2) Remove the horn bracket mounting bolt, and remove the Lo pitch side horn.

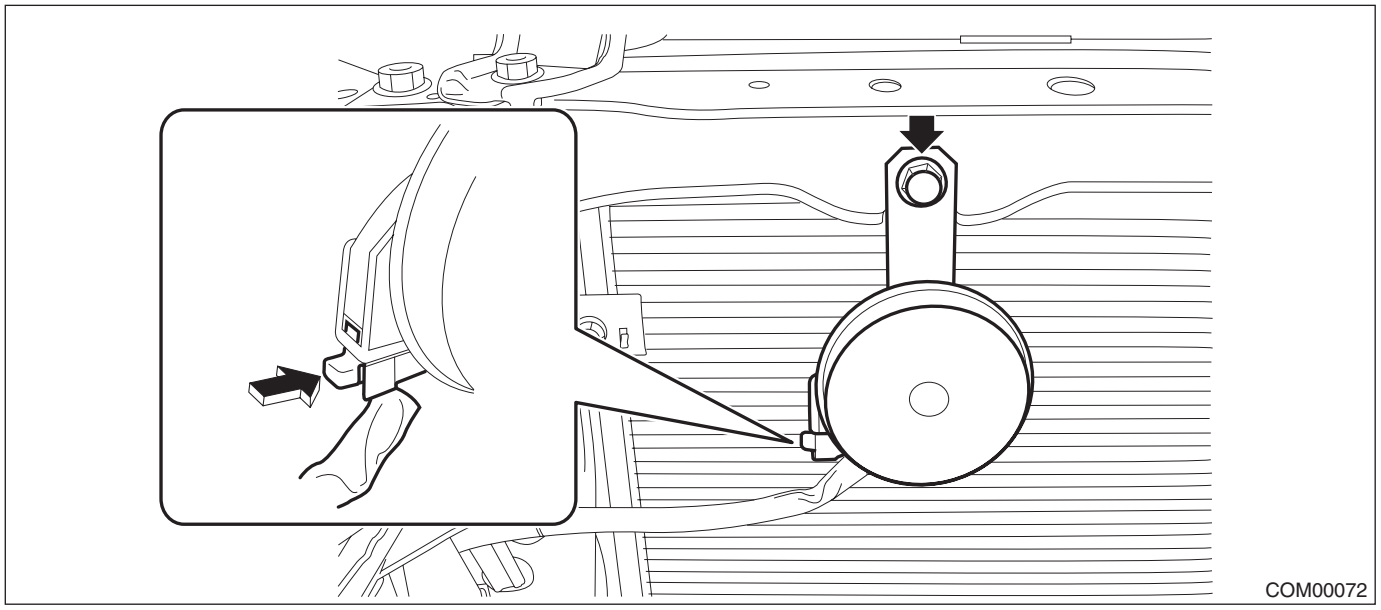

6) Remove the Hi pitch side horn.
   (1) Disconnect the connector.
   (2) Remove the horn bracket mounting bolt, and remove the Hi pitch side horn.

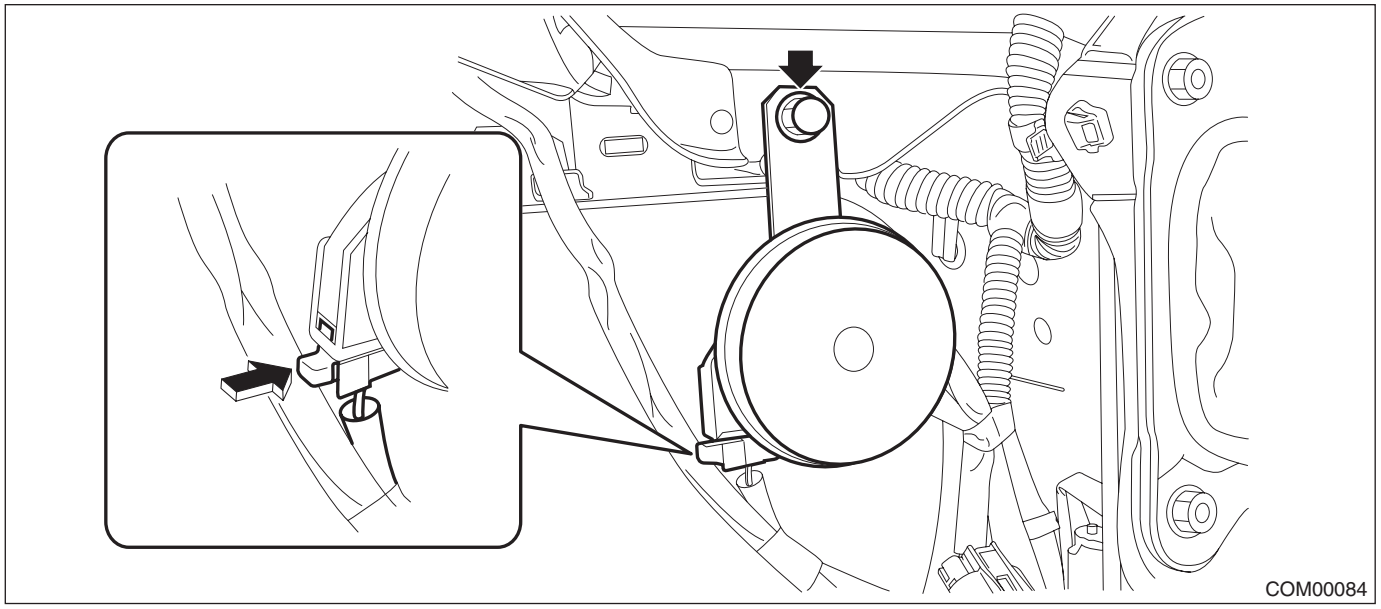

B: INSTALLATION

1) Install each part in the reverse order of removal.

CAUTION:
Install the bumper face so that the under cover front end (b) comes inside the front bumper face (a).

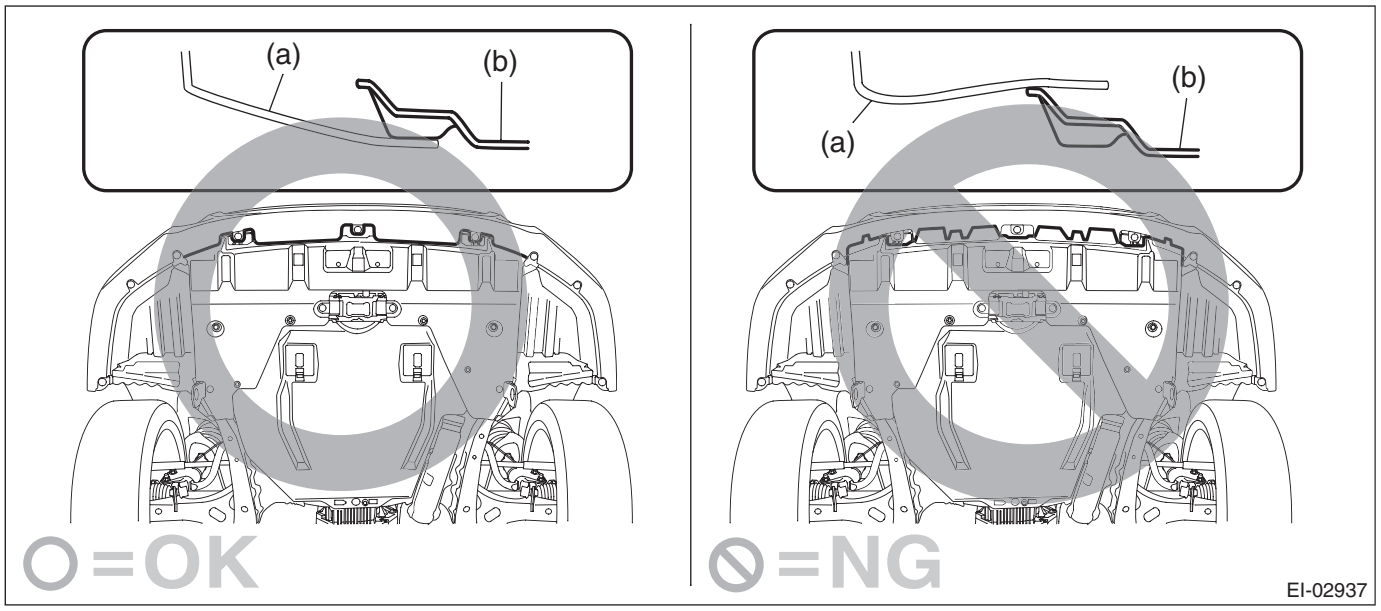

Tightening torque:
Horn assembly: 18 N·m (1.84 kgf-m, 13.3 ft-lb)

2) Adjust the fog light beam. (Model with fog light) <Ref. to LI-41, FOG LIGHT AIMING, ADJUSTMENT, Front Fog Light Assembly.>

C: INSPECTION

1. CHECK HORN ASSEMBLY.

1) Remove the horn assembly (Hi pitch side and Lo pitch side). <Ref. to COM-5, REMOVAL, Horn.>
2) Check the horn sounds when applying the battery voltage to the horn assembly.

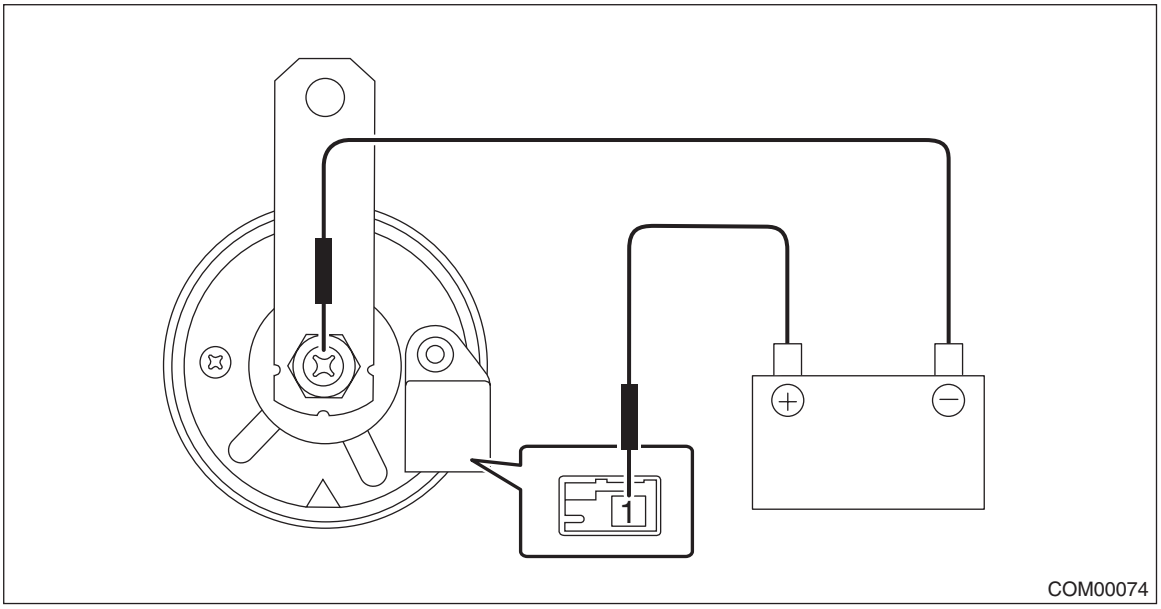

Terminal No.	Inspection conditions	Specification
1 (+) — Horn case (–)	Connect battery to the terminals	Sounds

3) If it does not operate normally, replace the horn assembly.

5. Horn Switch

A: REMOVAL

NOTE:
Horn switch is a unit with the driver's airbag module.
1) Position the front wheels straight ahead. (After moving a vehicle 5 m (16 ft) or more with front wheels positioned straight ahead, make sure that the vehicle moves straight ahead.)
2) Turn the ignition switch to OFF.
3) Disconnect the ground cable from battery and wait for at least 60 seconds before starting work.
4) Remove the driver's airbag module assembly.

CAUTION:
Before handling the airbag module, refer to "CAUTION" of "General Description" in "AIRBAG SYSTEM". <Ref. to AB-9, CAUTION, General Description.>

(1) Using a hexagon wrench etc. wrapped by protective tape, insert the snap pins and release the locks (3 locations).

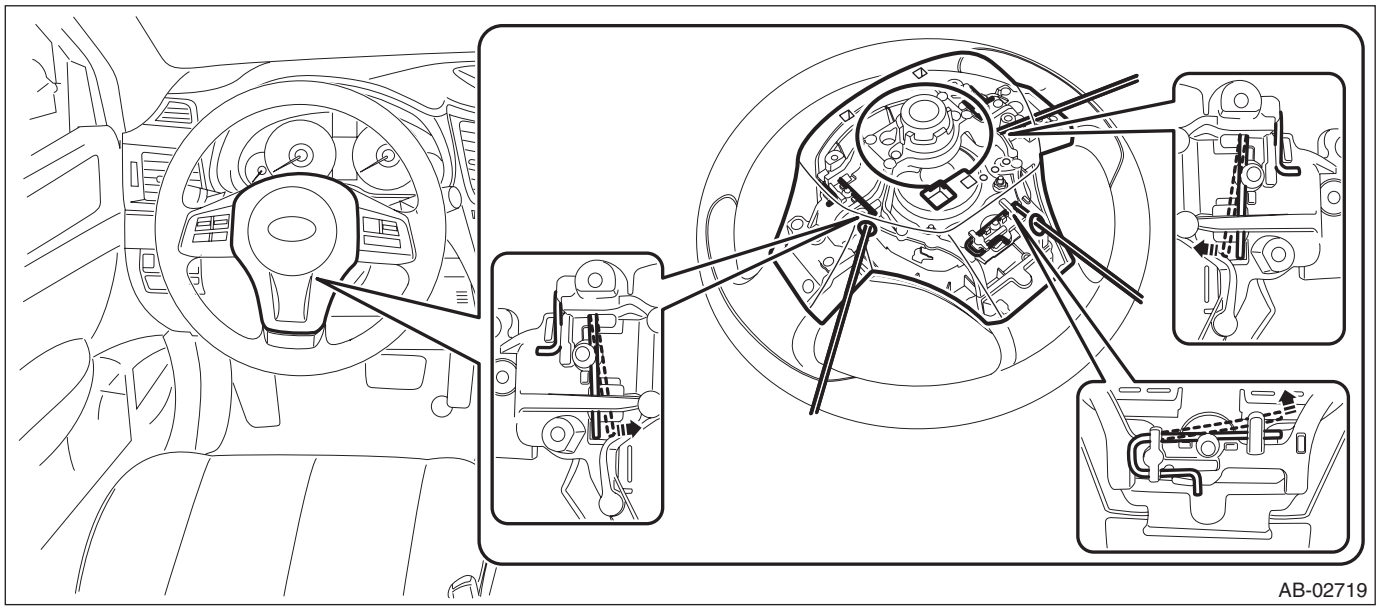

(2) Disconnect the horn harness and airbag connector and remove the airbag module assembly. <Ref. to AB-18, PROCEDURE, Airbag Connector.>

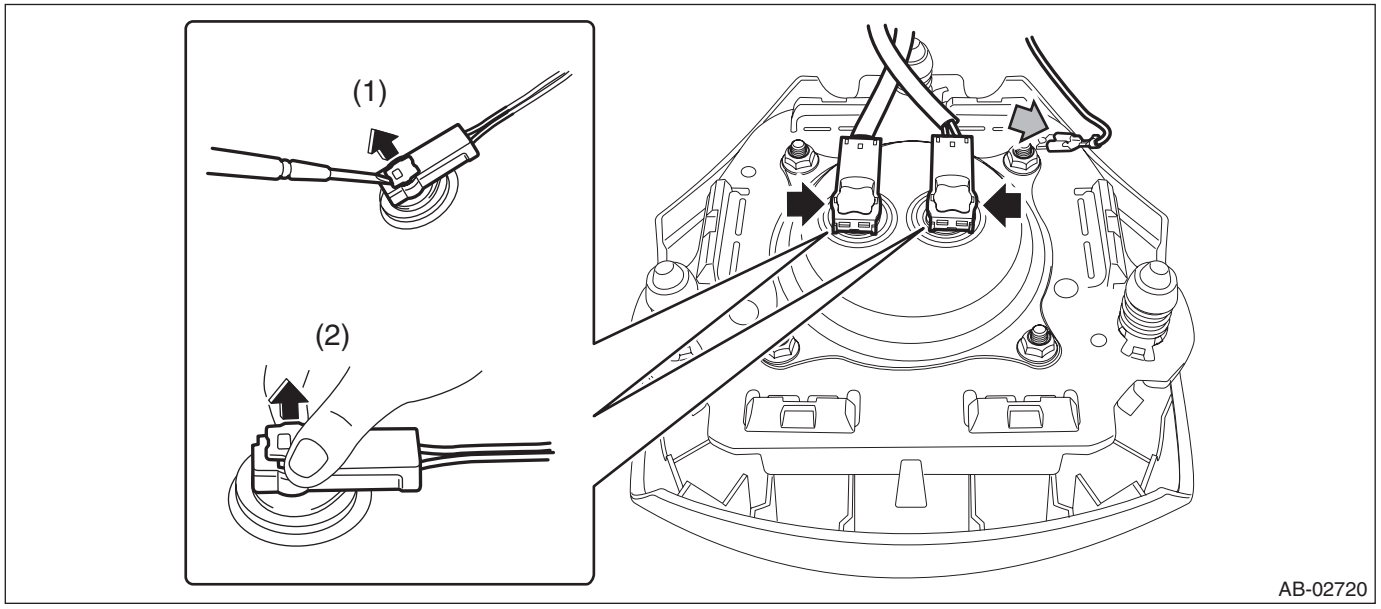

B: INSTALLATION

CAUTION:
• Before handling the airbag module, refer to "CAUTION" of "General Description" in "AIRBAG SYSTEM". <Ref. to AB-9, CAUTION, General Description.>
• Do not allow harness and connectors to interfere or get tangled up with other parts.
1) Install the driver's airbag module. <Ref. to AB-36, INSTALLATION, Driver's Airbag Module.>
2) Install each part in the reverse order of removal.

C: INSPECTION

1. CHECK HORN SWITCH.

1) Remove the horn switch. <Ref. to COM-11, REMOVAL, Horn Switch.>
2) Check that the connection of the horn switch harness connector is correct.
3) Disconnect the horn switch harness connector and check the resistance between the harness connectors.

Preparation tool: Circuit tester

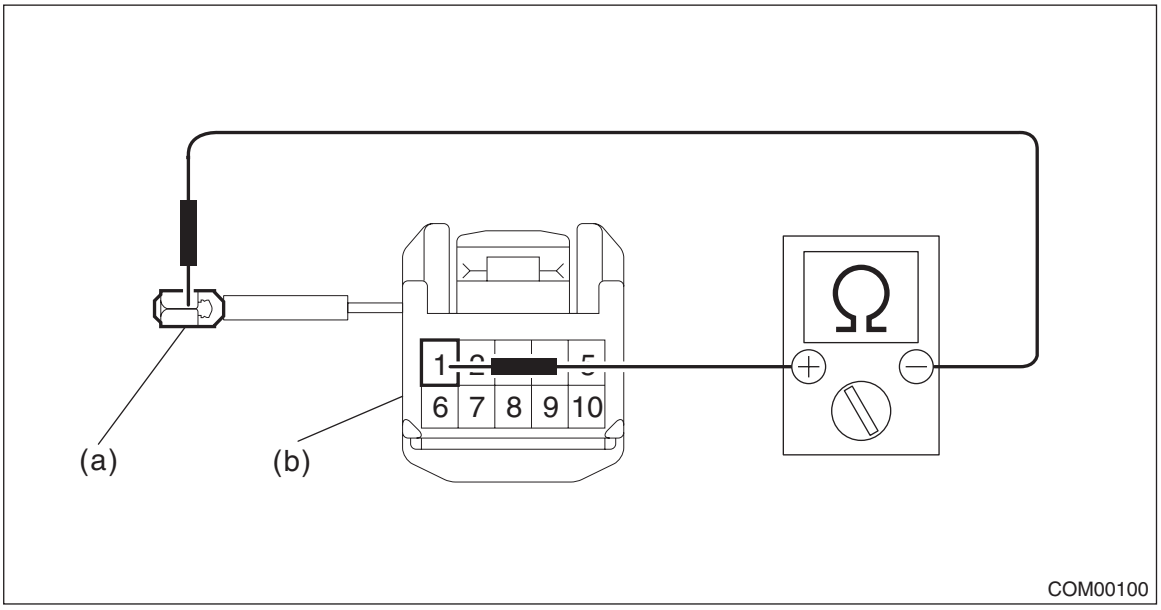

(a) Ground terminal (b) Horn switch terminal

Terminal No.	Standard
Horn switch terminal — ground terminal	Less than 1 Ω

4) Replace the driver's airbag module if the inspection result is not within the standard value.

2. CHECK ROLL CONNECTOR.

1) Remove the roll connector. <Ref. to AB-96, REMOVAL, Roll Connector.>
2) Check the resistance between roll connector terminals.

Preparation tool: Circuit tester

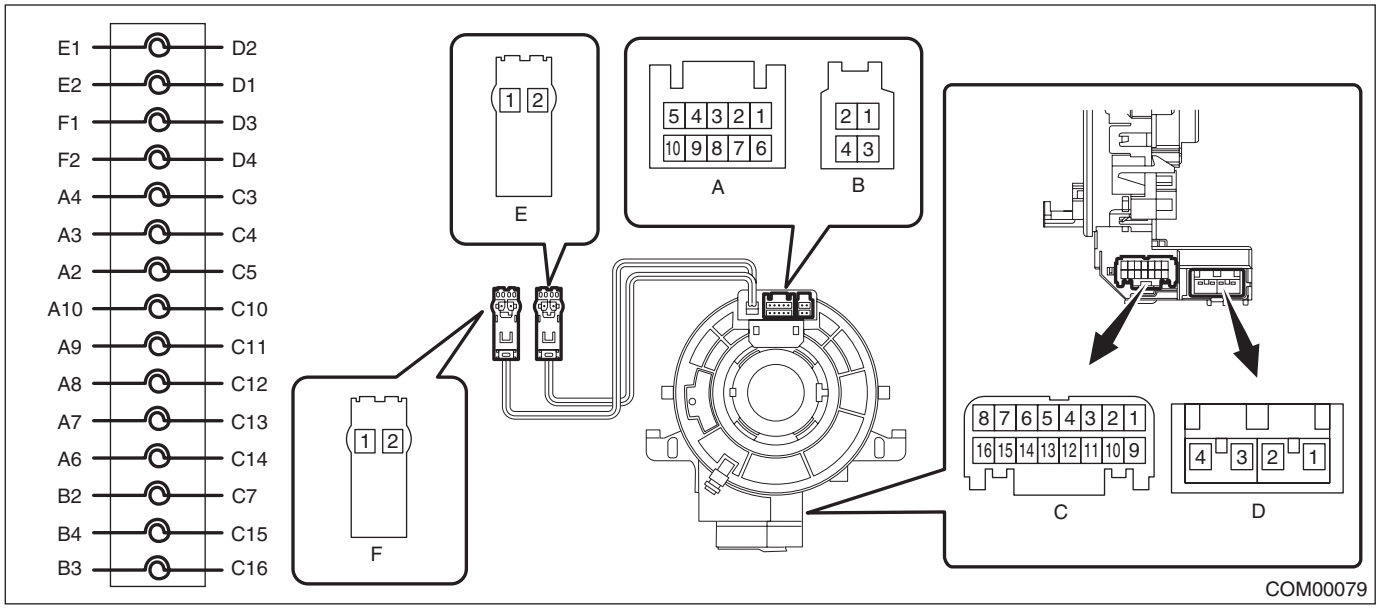

Terminal No.	Inspection conditions	Standard
A10 — C10	Always	Less than 1 Ω

3) Replace the roll connector if the inspection result is not within the standard value.

GLASS/WINDOWS/MIRRORS

GW

		Page
1.	General Description	2
2.	Relay and Fuse	8
3.	Power Window System	10
4.	Power Window Control Switch	12
5.	Front Door Glass	17
6.	Front Regulator and Motor Assembly	19
7.	Remote Control Mirror System	22
8.	Scalp Cap	23
9.	Outer Mirror Assembly	28
10.	Outer Mirror	30
11.	Remote Control Mirror Switch	32
12.	Rear Door Glass	34
13.	Rear Regulator and Motor Assembly	36
14.	Windshield Glass	40
15.	Rear Gate Glass	48
16.	Rear Window Glass	52
17.	Rear Window Defogger System	55
18.	Rear Quarter Glass	58
19.	Rearview Mirror	60
20.	Rearview Mirror (RCD Model)	61
21.	Wiper Deicer System	65

1. General Description

A: COMPONENT

1. FIXED GLASS (SEDAN MODEL)

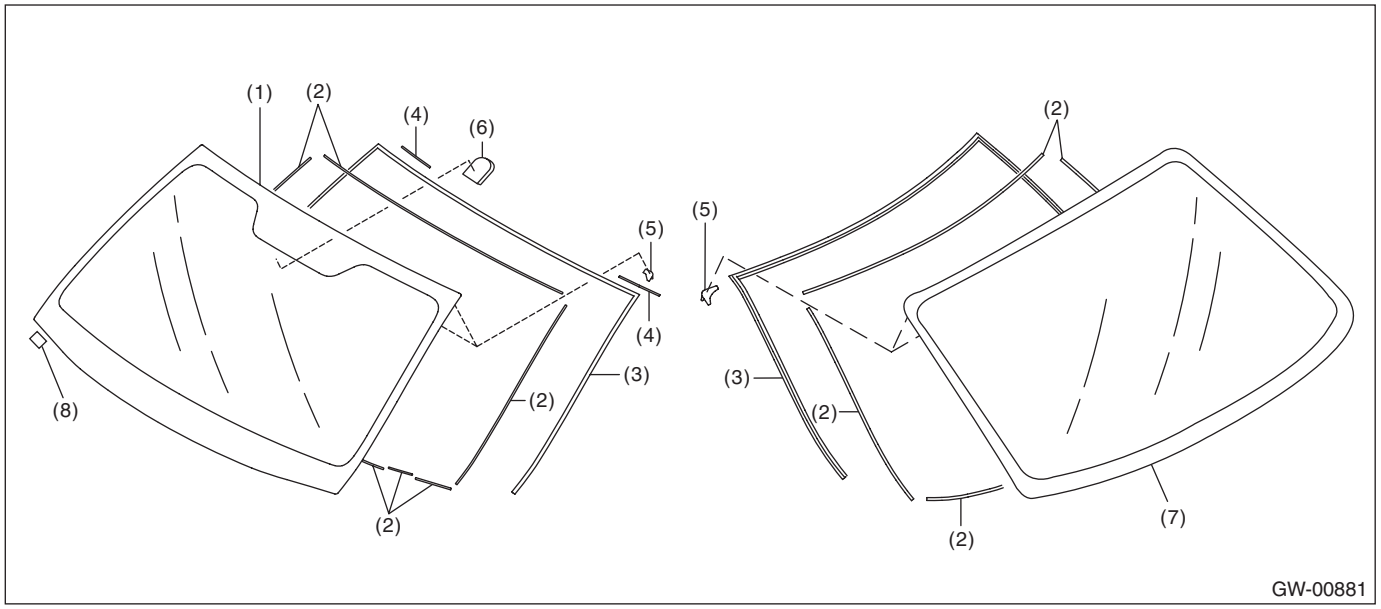

(1) Windshield glass
(2) Dam rubber
(3) Molding
(4) Seal upper side
(5) Locating pin
(6) Rearview mirror mount
(7) Rear window glass
(8) Seal A

2. FIXED GLASS (OUTBACK MODEL)

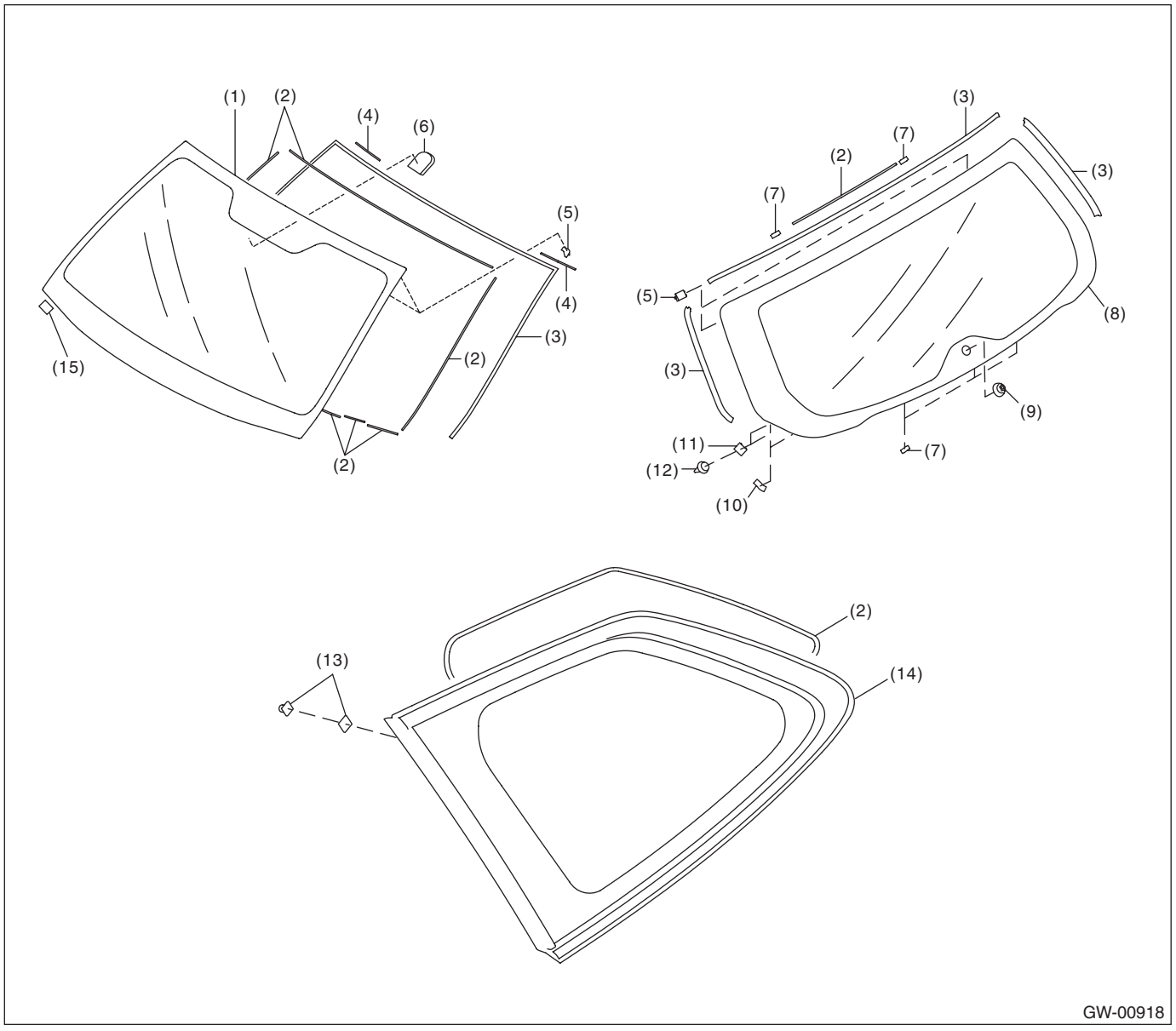

(1) Windshield glass
(2) Dam rubber
(3) Molding
(4) Seal upper side
(5) Locating pin
(6) Rearview mirror mount
(7) Spacer
(8) Rear gate glass
(9) Pivot
(10) EPT sealer
(11) Holder
(12) Clip
(13) Fastener
(14) Rear quarter glass
(15) Seal A

3. FRONT DOOR GLASS

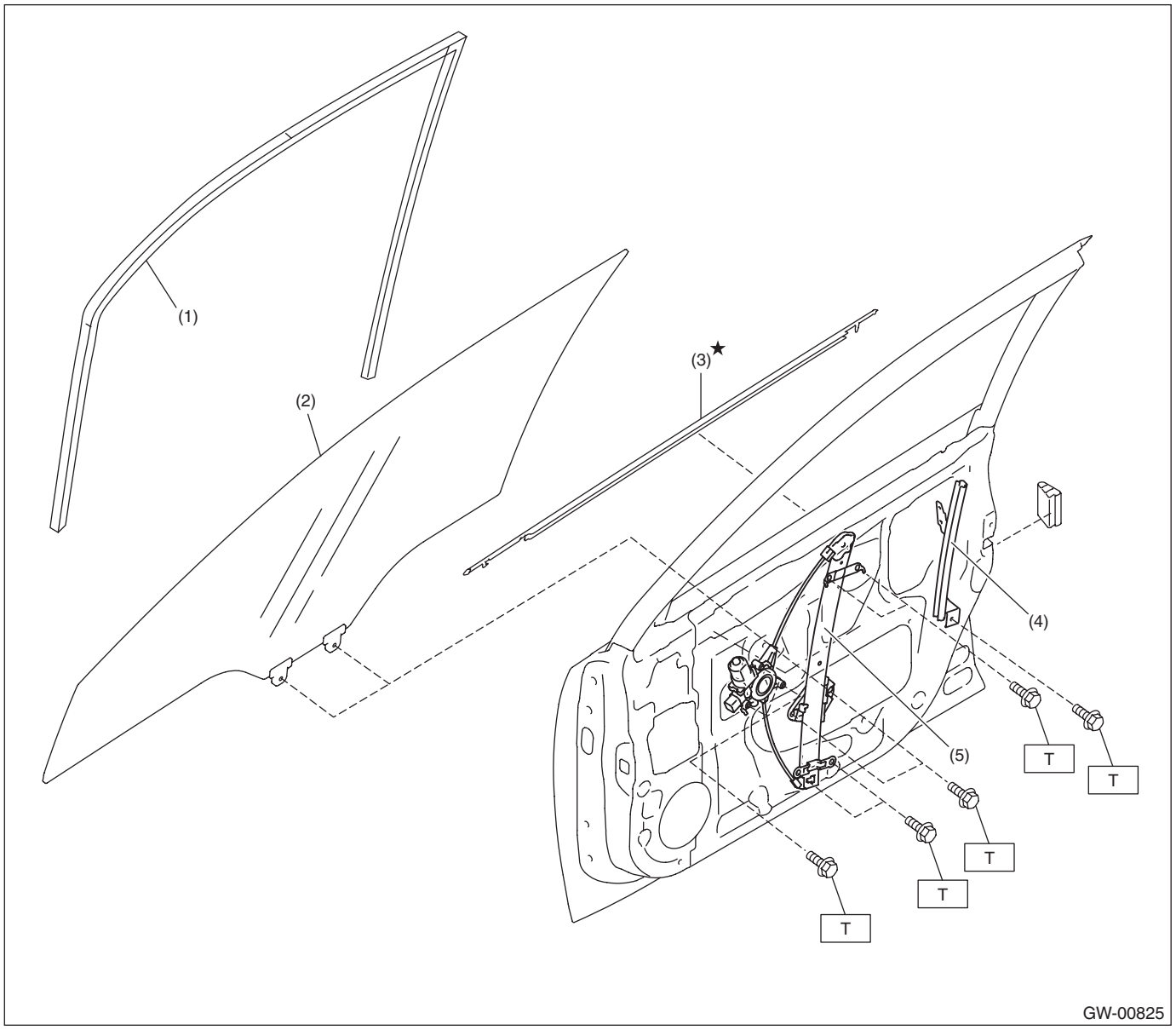

(1) Glass run rubber
(2) Front door glass
(3) Weather strip outer
(4) Door sash
(5) Regulator and motor ASSY

Tightening torque:N·m (kgf-m, ft-lb)
T: 7.5 (0.76, 5.5)

4. REAR DOOR GLASS

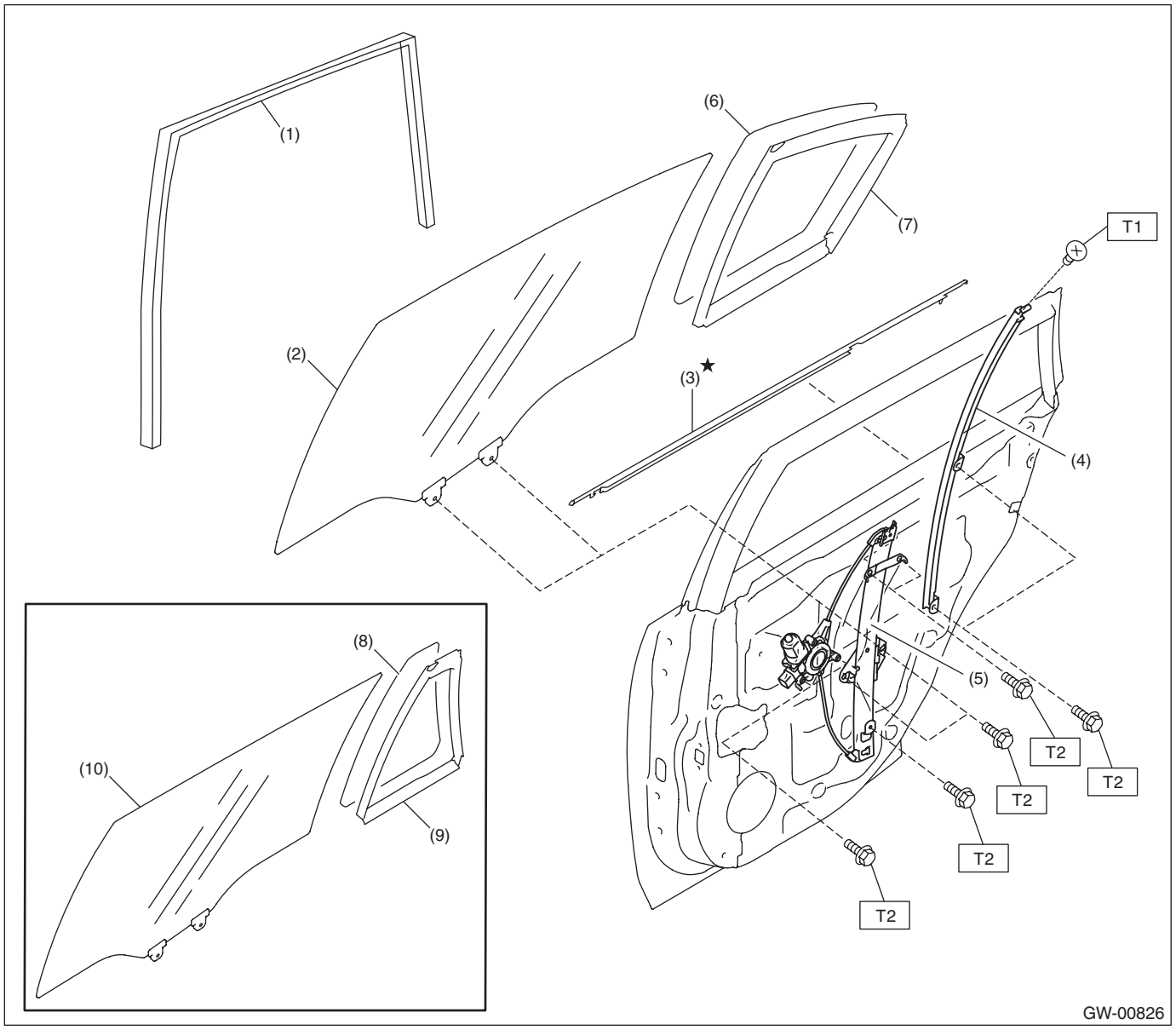

(1)	Glass run rubber	(6)	Partition glass (Sedan model)
(2)	Rear door glass (Sedan model)	(7)	Partition molding (Sedan model)
(3)	Weather strip outer	(8)	Partition glass (OUTBACK model)
(4)	Door sash	(9)	Partition molding (OUTBACK model)
(5)	Regulator and motor ASSY	(10)	Rear door glass (OUTBACK model)

Tightening torque:N·m (kgf-m, ft-lb)
T1: 2.2 (0.22, 1.6)
T2: 7.5 (0.76, 5.5)

5. MIRROR

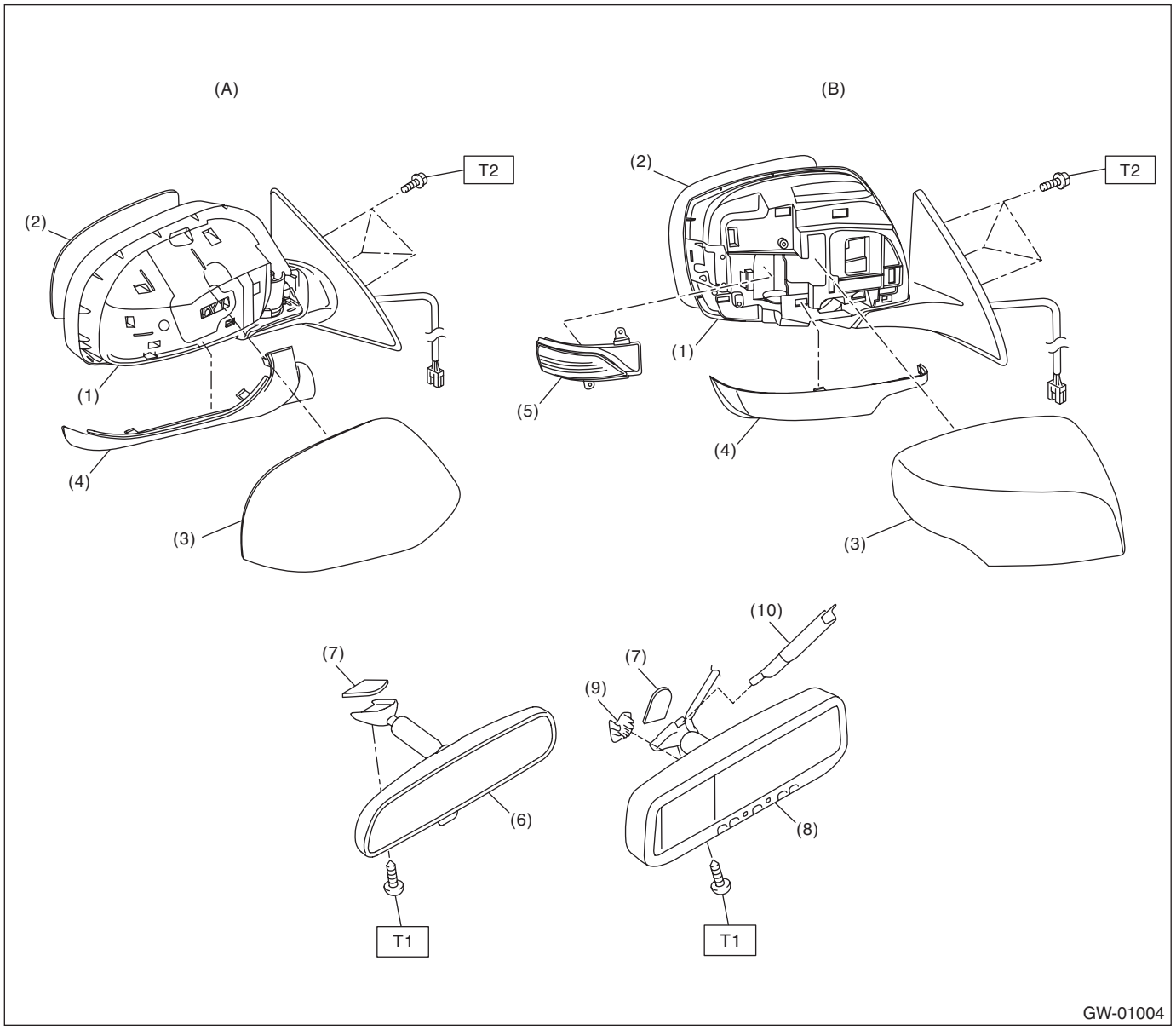

(A)	Model without electric retractable mirror (except for C6 model)	(B)	Model with electric retractable mirror (C6 model)

(1)	Outer mirror	(6)	Rear view mirror
(2)	Mirror	(7)	Mount
(3)	Scalp cap	(8)	Rearview mirror (RCD model)
(4)	Outer mirror lower cover	(9)	Connector cover
(5)	Side turn signal light	(10)	Harness cover

Tightening torque:N·m (kgf-m, ft-lb)	
T1:	*1.9 (0.19, 1.4)*
T2:	*4.5 (0.46, 3.3)*

B: CAUTION

- Before disassembling or reassembling parts, always disconnect the battery ground cable from battery. When replacing the audio, control module and other parts provided with memory functions, record the memory contents before disconnecting the battery ground cable. Otherwise, the memory is cleared.
- Avoid impact and damage to the glass.
- Reassemble the parts in the reverse order of disassembly procedure unless otherwise indicated.
- Connect the connectors securely during reassembly.
- After reassembly, make sure that the functional parts operate normally.

C: PREPARATION TOOL

1. SPECIAL TOOL

ILLUSTRATION	TOOL NUMBER	DESCRIPTION	REMARKS
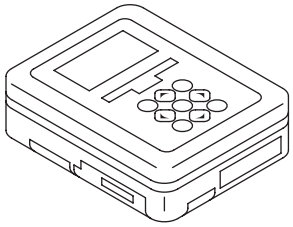 ST1B022XU0	1B022XU0	SUBARU SELECT MONITOR III KIT	Used for setting of each function and trouble-shooting for electrical system.

2. GENERAL TOOL

TOOL NAME	REMARKS
Circuit tester	Used for measuring resistance and voltage.
Piano wire	Used for removing the window glass.
Cutter knife	Used for removing the window glass.
Windshield glass knife	Used for removing the window glass.
TORX® T20	Used to remove and install the rearview mirror.

2. Relay and Fuse

A: LOCATION

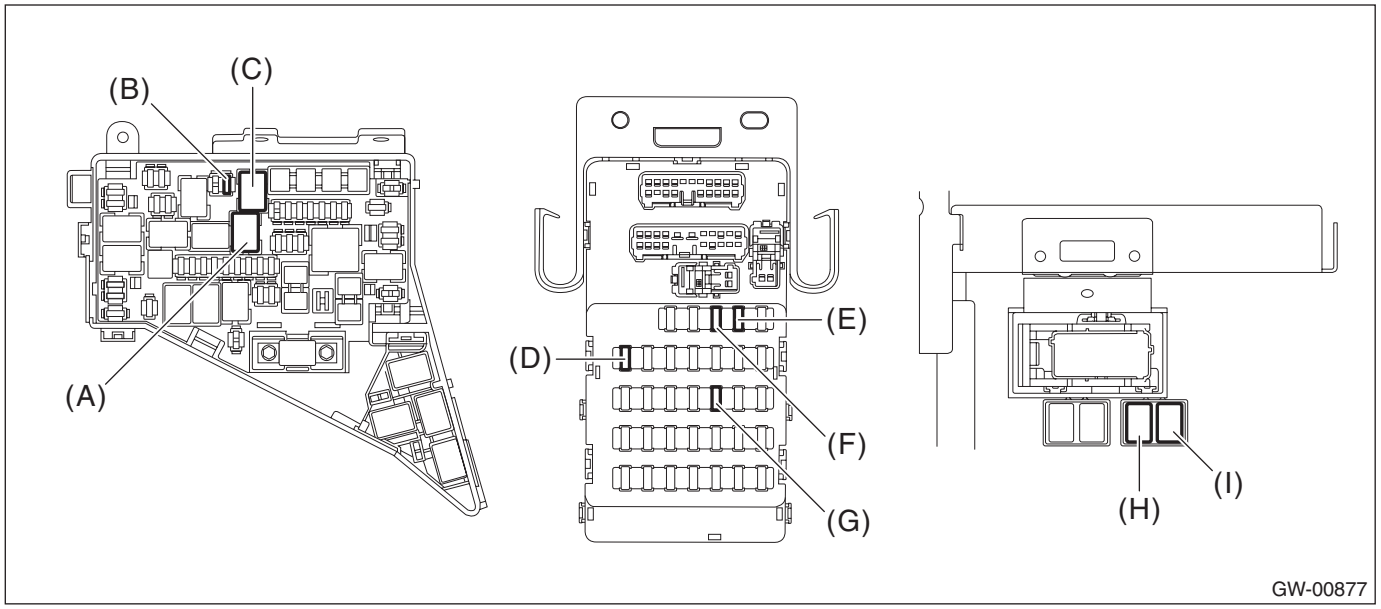

Main fuse box	Power window relay	(A)
	Fuse 25A (rear defogger)	(B)
	Rear defogger relay	(C)
Relay & fuse box	Fuse 7.5A (remote control mirror)	(D)
	Fuse 7.5A (wiper deicer)	(E)
	Fuse 20A (power window)	(F)
	Fuse 15A (wiper deicer, remote control mirror)	(G)
Relay holder	Wiper deicer relay	(H)
	Mirror heater relay	(I)

NOTE:
For other related fuses, refer to the wiring diagram. <Ref. to WI-15, Power Supply Circuit.>

B: INSPECTION

1. CHECK FUSE.

1) Remove the fuse and check visually.
2) If the fuse is blown out, replace the fuse.

2. CHECK RELAY

1) Check the resistance between relay terminals.

Terminal No.	Inspection conditions	Specification	Circuit
1 — 2	Always	1 MΩ or more	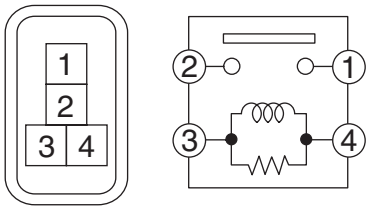 SR-00180
1 — 2	Apply battery voltage between 4 — 3 terminals.	Less than 1 Ω	

Terminal No.	Inspection conditions	Specification	Circuit
1 — 2	Always	1 MΩ or more	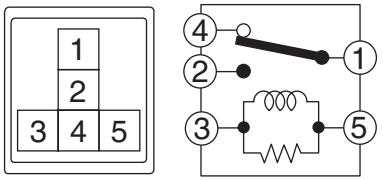 SL-01085
1 — 4	Always	Less than 1 Ω	
1 — 2	Apply battery voltage between 3 — 5 terminals.	Less than 1 Ω	

2) Replace the relay if the inspection result is not within the standard value.

3. Power Window System

A: WIRING DIAGRAM

Refer to “Power Window System” in the wiring diagram. <Ref. to WI-200, WIRING DIAGRAM, Power Window System.>

B: INSPECTION

Symptoms	Inspection order
All power windows do not operate.	1. Check the fuse. 2. Check the power window relay. 3. Check the wiring harness.
Particular window does not operate.	1. Check the fuse. 2. Check the power window main switch. 3. Check the power window sub-switch. 4. Check the power window motor. 5. Check the wiring harness.
“Window Lock” does not operate.	Check the power window main switch.
Driver’s side window moves slightly (approx. 20 mm (0.79 in)). (model with driver’s side AUTO UP function)	1. Check the power window motor. 2. Check the power window main switch. 3. Check the wiring harness.
Driver’s side window moves slightly (approx. 50 mm (1.97 in)). (model with driver’s side AUTO UP function) (This is not malfunction.)	Perform reset operation A. <Ref. to GW-10, RESET OPERATION A, OPERATION, Power Window System.>
Driver’s side window does not close completely. (model with driver’s side AUTO UP function) (After fully closed with AUTO UP, the window reverses and slightly opens.)	Perform reset operation B. <Ref. to GW-10, RESET OPERATION B, OPERATION, Power Window System.>

C: OPERATION

1. RESET OPERATION A

1) Sit in the driver’s seat and close the door.
2) Turn the ignition switch to ON.
3) Operate the power window main switch to open the window glass halfway.
4) Operate the power window main switch to “UP” direction to fully close the driver’s side window glass.
5) While the window glass is fully closed, hold down the power window switch to “UP” direction for one second.
6) Operate the power window main switch to “AUTO DOWN” direction to check whether the window fully opens properly.

NOTE:
If the window does not fully open properly, repeat steps 1) to 6).

2. RESET OPERATION B

1) Sit in the driver’s seat and close the door.
2) Turn the ignition switch to ON.
3) Perform “AUTO UP” operation for the driver’s side window glass, by fully pulling up the power window main switch to cause the reverse operation (in reverse operation, the window is repeatedly fully closed and then reversed to open it slightly.) 10 times in row.
4) Check that the “AUTO UP” does not operate.
5) Perform reset operation A.
6) Check that the window operates properly by operating the “AUTO UP” and “AUTO DOWN” switch.

NOTE:
If the window does not fully open/close properly, repeat steps 1) to 6).

D: NOTE

For operation procedures of each component of the power window system, refer to the respective sections.
- Power window control switch: <Ref. to GW-12, Power Window Control Switch.>
- Front door glass: <Ref. to GW-17, Front Door Glass.>
- Front regulator and motor assembly: <Ref. to GW-19, Front Regulator and Motor Assembly.>
- Rear door glass: <Ref. to GW-34, Rear Door Glass.>
- Rear regulator and motor assembly: <Ref. to GW-36, Rear Regulator and Motor Assembly.>

4. Power Window Control Switch

A: REMOVAL

1. MAIN SWITCH

1) Remove the front door trim. <Ref. to EI-60, FRONT DOOR, REMOVAL, Door Trim.>
2) Remove the power window switch panel.

CAUTION:
Do not damage the door trim with the switch panel.

(1) Insert a sheet of protective paper (a) between switch panel and door trim.
(2) Remove the screws and disconnect the connector.
(3) Disconnect the claws and then remove the power window switch panel.

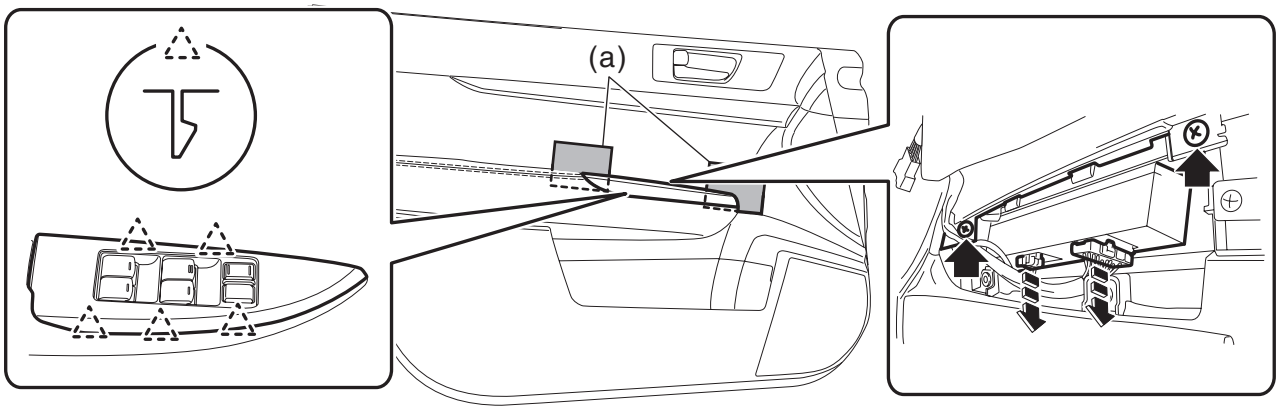

GW-00956

(4) Remove the screws and remove the power window main switch.

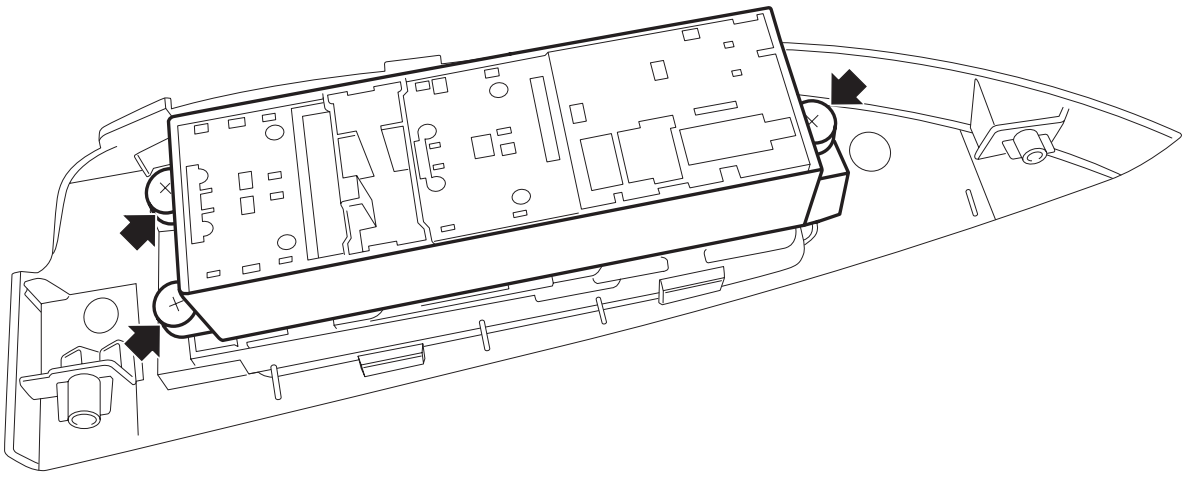
GW-00883

2. SUB-SWITCH

1) Remove the rear door trim. <Ref. to EI-61, REAR DOOR, REMOVAL, Door Trim.>
2) Remove the power window switch panel.

CAUTION:
Do not damage the door trim with the switch panel.

(1) Insert a sheet of protective paper (a) between switch panel and door trim.
(2) Remove the screws and disconnect the connector.
(3) Disconnect the claws and then remove the power window switch panel.

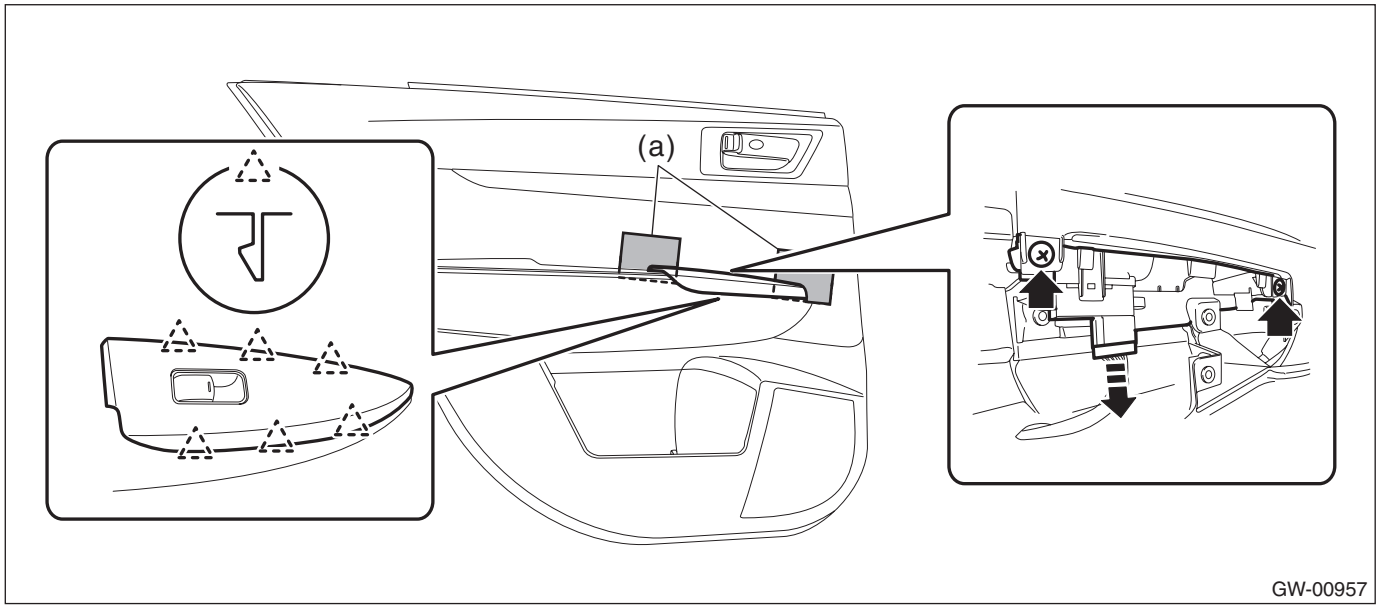

3) Disconnect the claws and then remove the power window sub-switch.

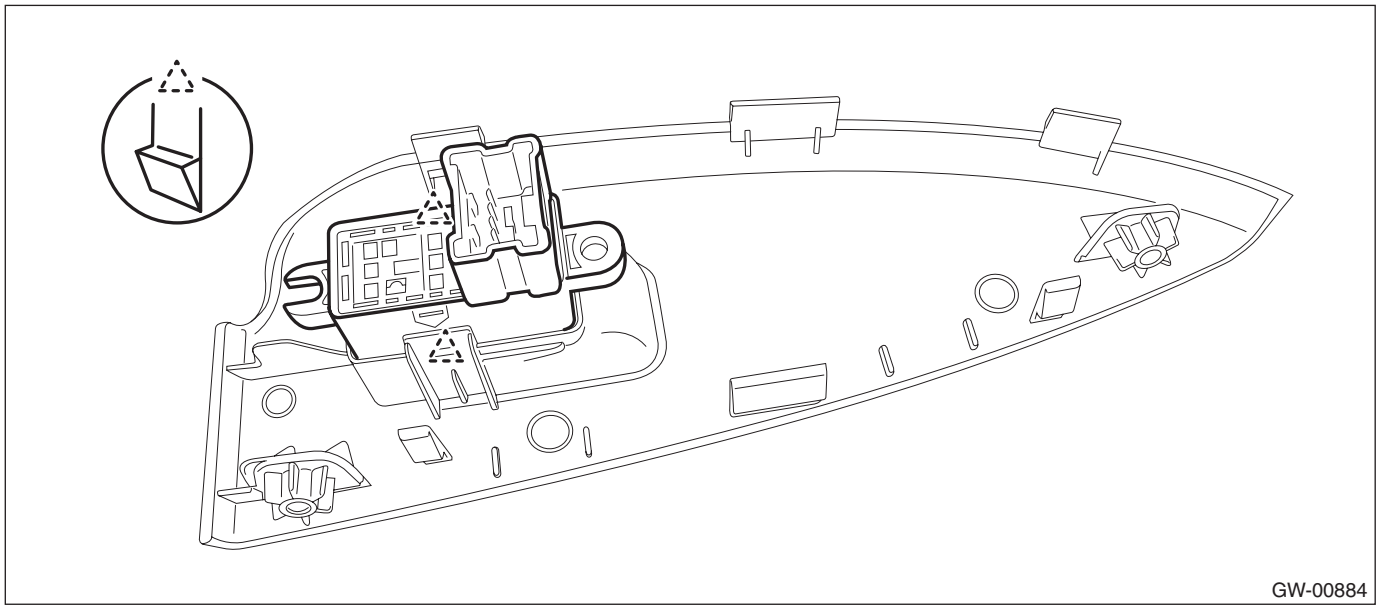

B: INSTALLATION

CAUTION:
• After installation of main switch, always perform the initial setting. (model with driver's side AUTO UP function)
Failure to do so may cause the improper activation of auto-reverse operation for pinching hazard prevention.
• Use protective paper to avoid damage to the door trim.
1) Install each part in the reverse order of removal.
2) Perform initial setting operation (reset operation A). <Ref. to GW-10, RESET OPERATION A, OPERATION, Power Window System.>

C: INSPECTION

1. MAIN SWITCH

• Driver's seat

CAUTION:
Since the driver's side power window switch is controlled by CPU, do not check continuity for switch alone with the circuit tester. Performing continuity check with circuit tester may damage the driver's side power window switch circuit.
Check output from the power window main switch to driver's side motor using the oscilloscope function in the Subaru Select Monitor.
1) Remove the power window main switch.
2) Connect the battery and the Subaru Select Monitor to the power window main switch terminal.

CAUTION:
Never mix up the terminals when connecting the power window main switch connector and battery. If connected to a wrong terminal, the power window main switch may be damaged.

NOTE:
• When the battery is connected to the power window main switch terminal, the letters "AUTO" on the driver's side knob illuminates.
• For detailed procedures, refer to "Subaru Select Monitor Operation Manual".

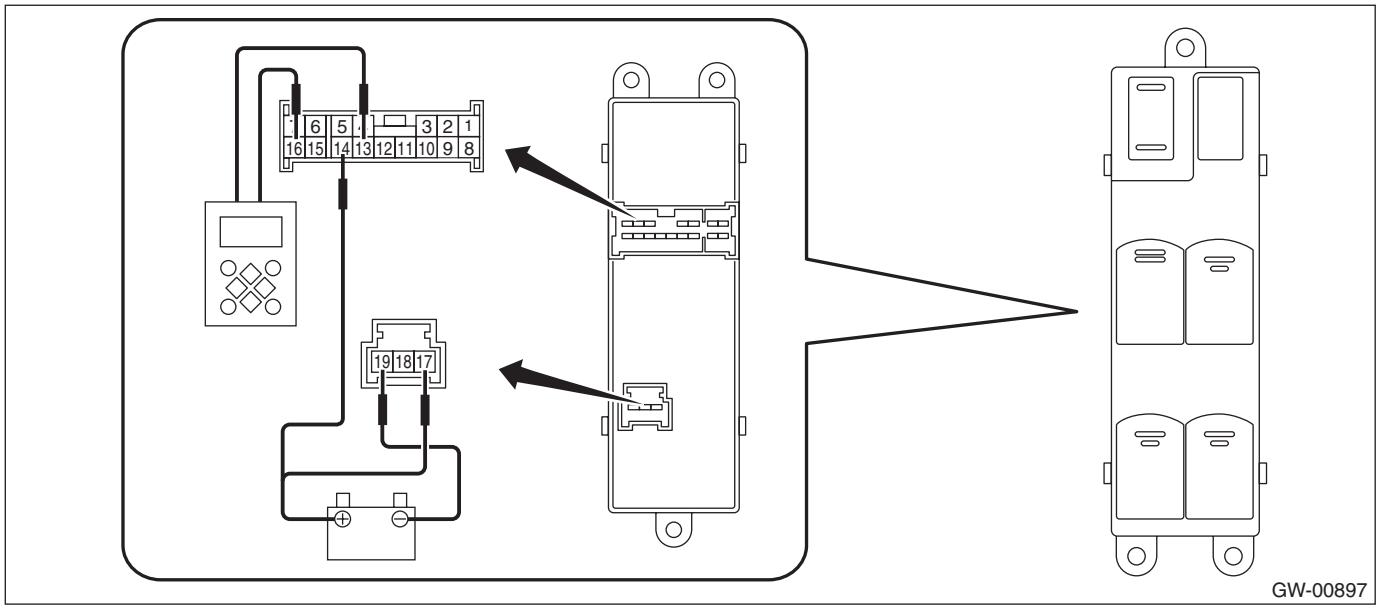

3) Operate the main switch and check the output.

NOTE:
Since output time during window UP operation is extremely short, it cannot be checked without using a measuring instrument such as oscilloscope. Output is constantly produced while the switch is operated for window DOWN operation.

Inspection conditions	Output time (model without driver's side AUTO UP function)	Output time (model with driver's side AUTO UP function)	Standard
AUTO UP	600 ms	Approx. 130 ms	Battery voltage
UP	During switch operation		
OFF	—	—	0 V
DOWN	During switch operation	During switch operation	Battery voltage
AUTO DOWN	600 ms	Approx. 300 ms	

4) Replace the power window main switch if the inspection result is not within the standard value.

- **Except for driver's seat**

1) Check the resistance between main switch terminals.

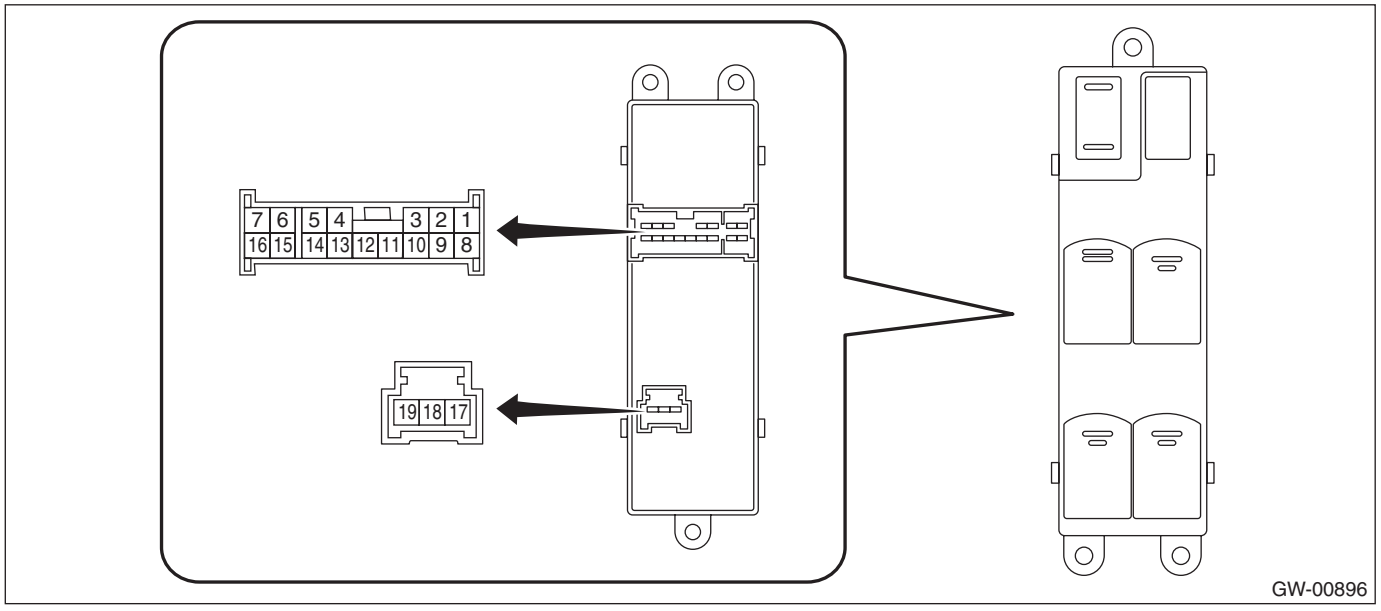

	Terminal No.	Inspection conditions	Standard
Passenger's seat	14 — 8 19 — 12	UP	Less than 1 Ω
	14 — 12 14 — 8	OFF	1 MΩ or more
	19 — 8 19 — 12 8 — 12		Less than 1 Ω
	14 — 12 19 — 8	DOWN	Less than 1 Ω

	Terminal No.	Inspection conditions	Standard
Rear LH	14 — 7 19 — 5	UP	Less than 1 Ω
	14 — 7 14 — 5	OFF	1 MΩ or more
	19 — 7 19 — 5 7 — 5		Less than 1 Ω
	14 — 5 19 — 7	DOWN	Less than 1 Ω
Rear RH	14 — 1 19 — 3	UP	Less than 1 Ω
	14 — 1 14 — 3	OFF	1 MΩ or more
	19 — 3 19 — 1 3 — 1		Less than 1 Ω
	14 — 3 19 — 1	DOWN	Less than 1 Ω

2) Replace the main switch if the inspection result is not within the standard value.

2. SUB-SWITCH

1) Remove the sub switch.
2) Check the resistance between sub switch terminals.

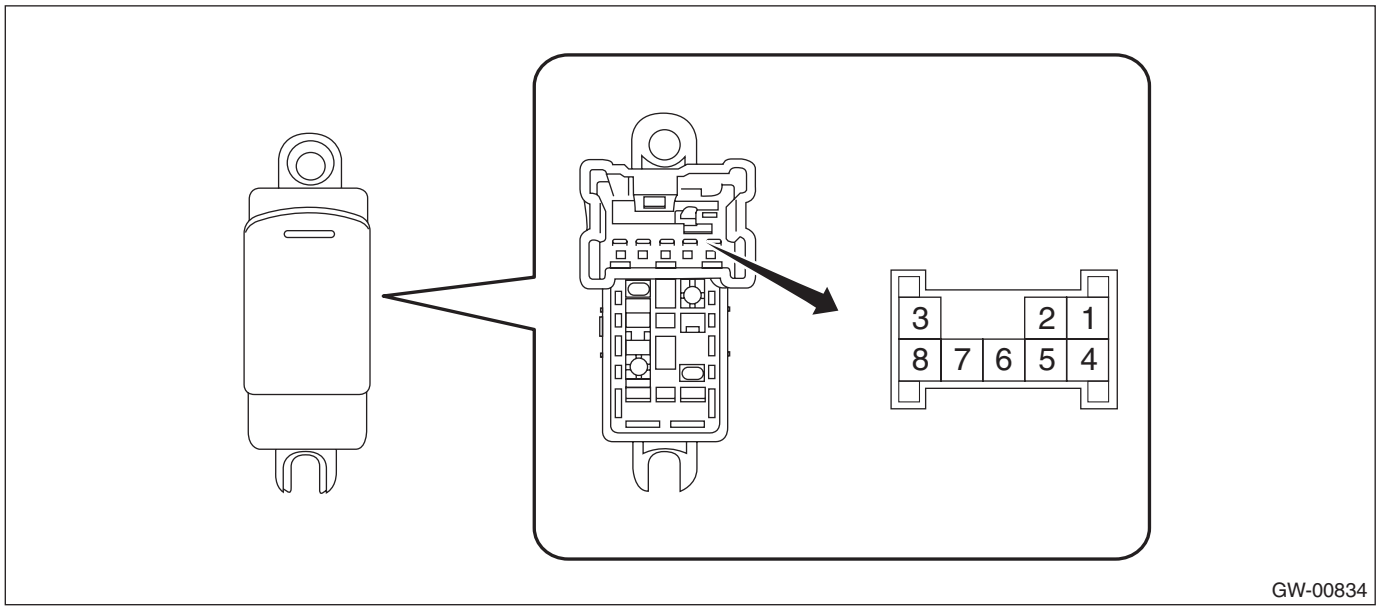

	Terminal No.	Inspection conditions	Specification
Passenger's seat, rear	4 — 5 6 — 7	UP	Less than 1 Ω
	7 — 4 8 — 4	OFF	1 MΩ or more
	5 — 8 6 — 7		Less than 1 Ω
	4 — 6 5 — 8	DOWN	Less than 1 Ω

3) Replace the sub switch if the inspection result is not within the standard value.

5. Front Door Glass

A: REMOVAL

1) Remove the front door trim. <Ref. to EI-60, FRONT DOOR, REMOVAL, Door Trim.>
2) Remove the sealing cover.

CAUTION:
- **Carefully remove the butyl tape. Excessive force will easily break the cover.**
- **If cover gets broken, replace it with a new part.**

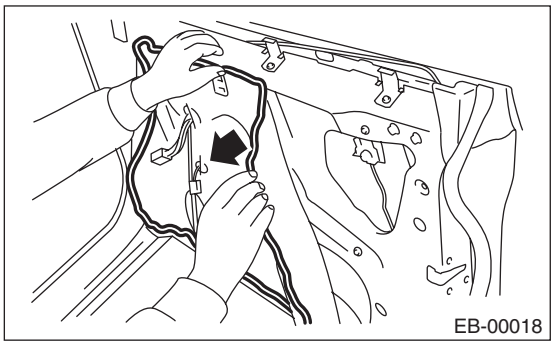

3) Remove the inner pad.
4) Attach the battery ground cable and power window switch and turn the ignition to ON.
5) Remove the front door glass.
   (1) Operate the power window switch to move the front door glass to the position where the mounting bolts can be seen.
   (2) Remove the bolt.

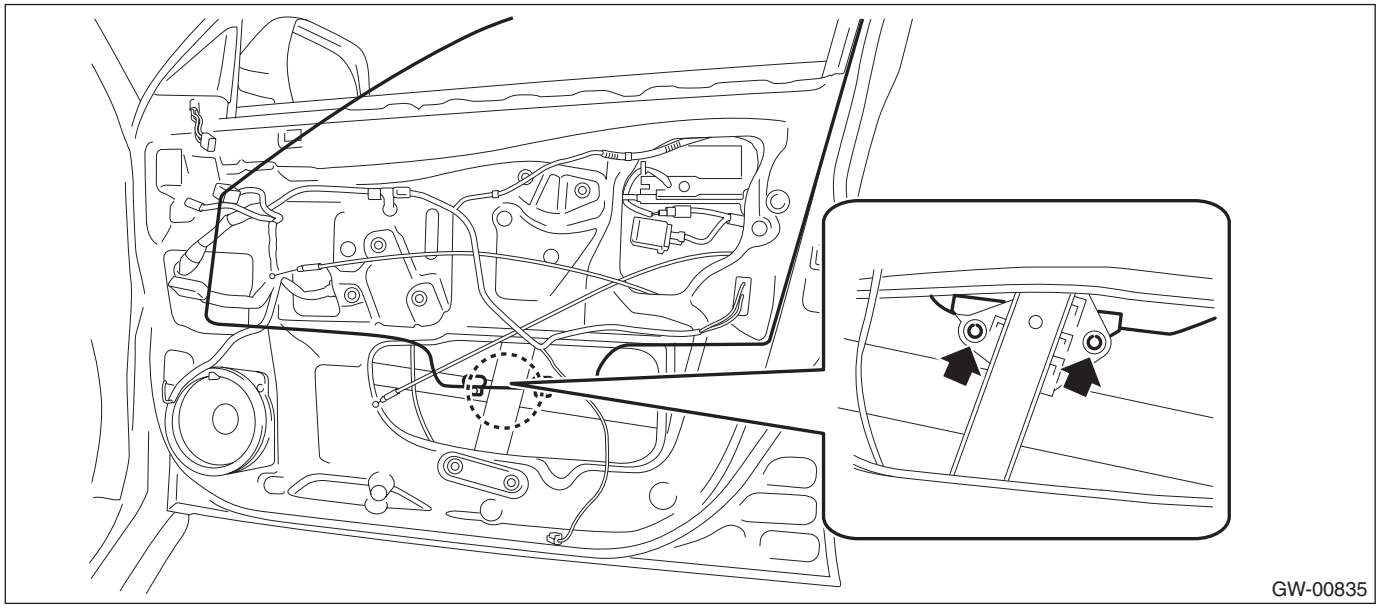

(3) While tilting the glass, remove the windshield glass.

CAUTION:
Avoid impact and damage to the glass.

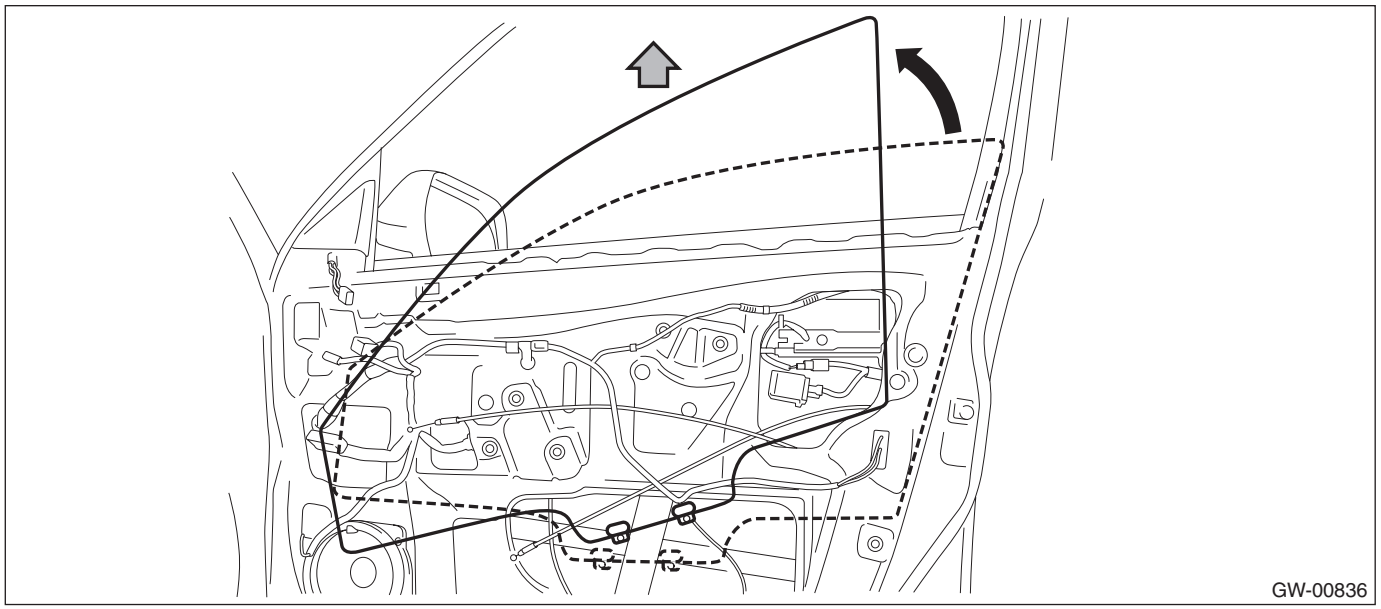

B: INSTALLATION

CAUTION:
Make sure that the glass run rubber is placed securely in the door frame and sash.
Install each part in the reverse order of removal.

Tightening torque:
Refer to "COMPONENT" of "General Description". <Ref. to GW-4, FRONT DOOR GLASS, COMPONENT, General Description.>

6. Front Regulator and Motor Assembly

A: REMOVAL

1) Remove the front door trim. <Ref. to EI-60, FRONT DOOR, REMOVAL, Door Trim.>
2) Remove the sealing cover.

CAUTION:
- **Carefully remove the butyl tape. Excessive force will easily break the cover.**
- **If cover gets broken, replace it with a new part.**

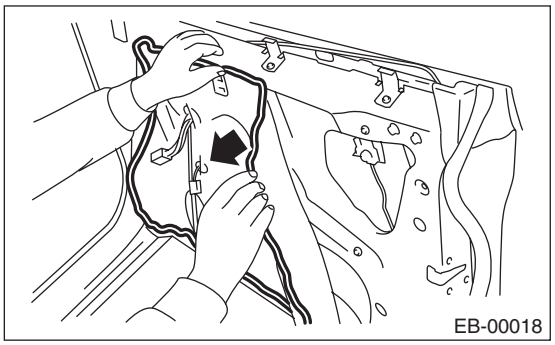

3) Remove the inner pad.
4) Attach the battery ground cable and power window switch and turn the ignition to ON.
5) Remove the front door glass.
   (1) Operate the power window switch to move the front door glass to the position where the mounting bolts can be seen.
   (2) Remove the bolt.

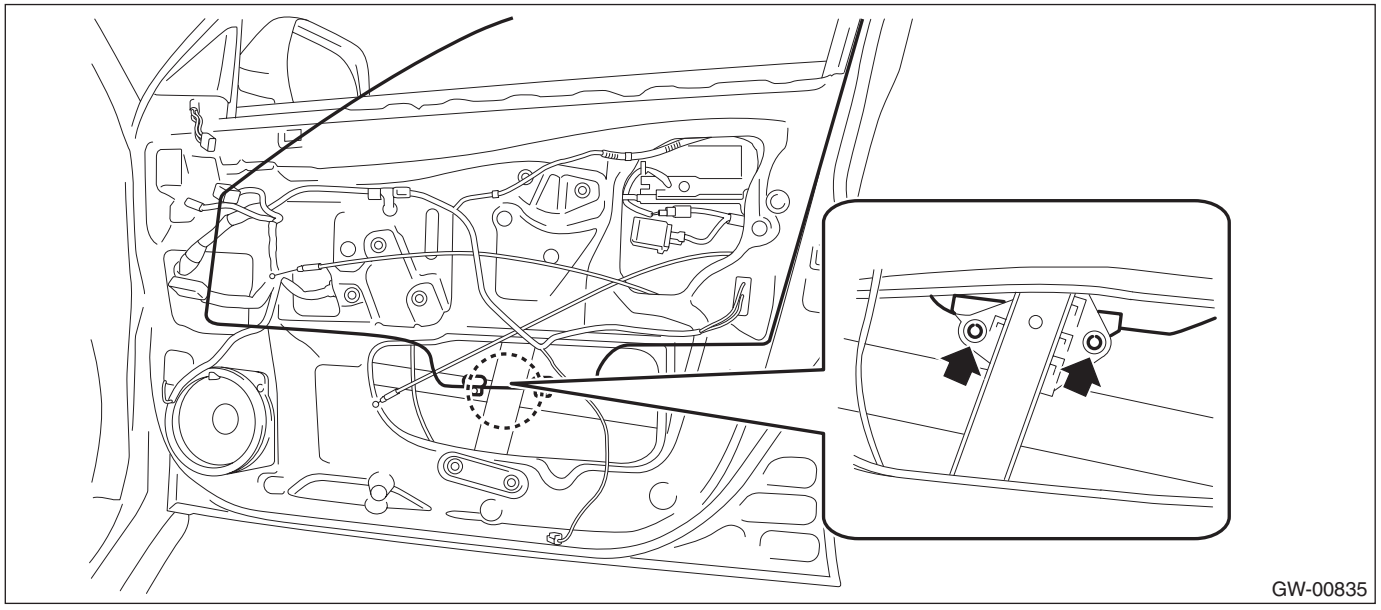

(3) While tilting the glass, remove the windshield glass.

CAUTION:
Avoid impact and damage to the glass.

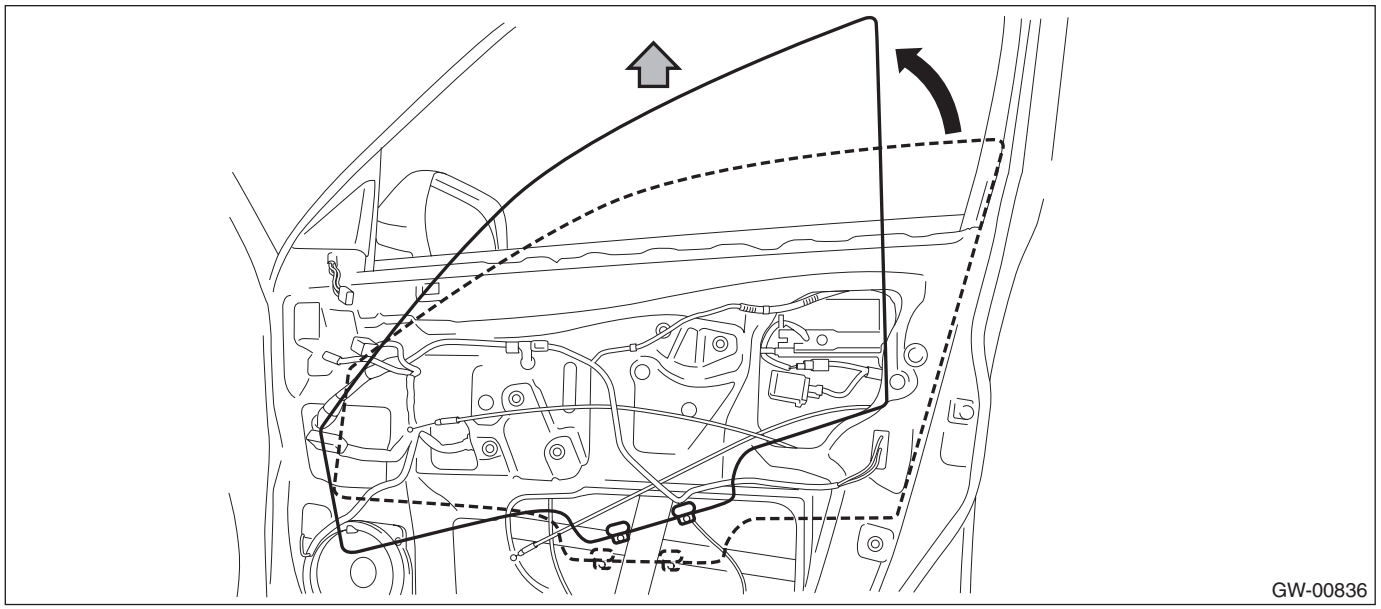

6) Remove the front regulator and motor assembly.
(1) Disconnect the connector.
(2) Remove the bolts, and then remove the front regulator and motor assembly.

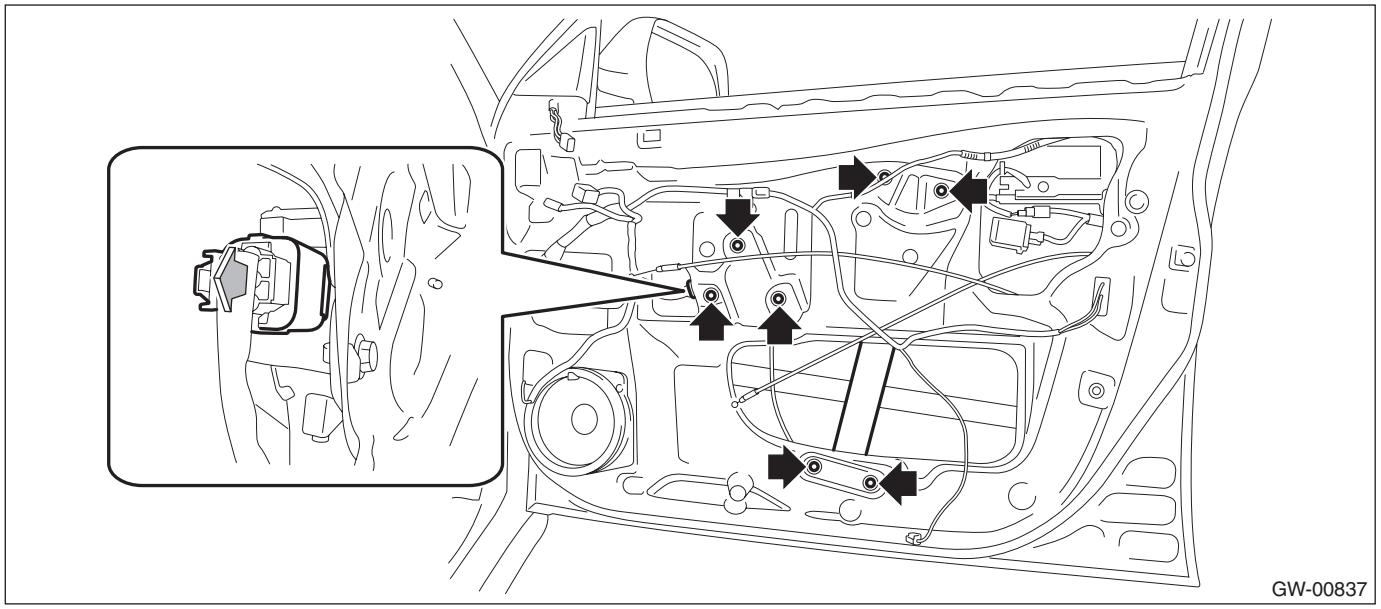

B: INSTALLATION

Install each part in the reverse order of removal.

Tightening torque:
Refer to "COMPONENT" of "General Description". <Ref. to GW-4, FRONT DOOR GLASS, COMPONENT, General Description.>

C: INSPECTION

1) Disconnect the motor connector.
2) Apply battery voltage between the motor connector terminals and check the motor operation.

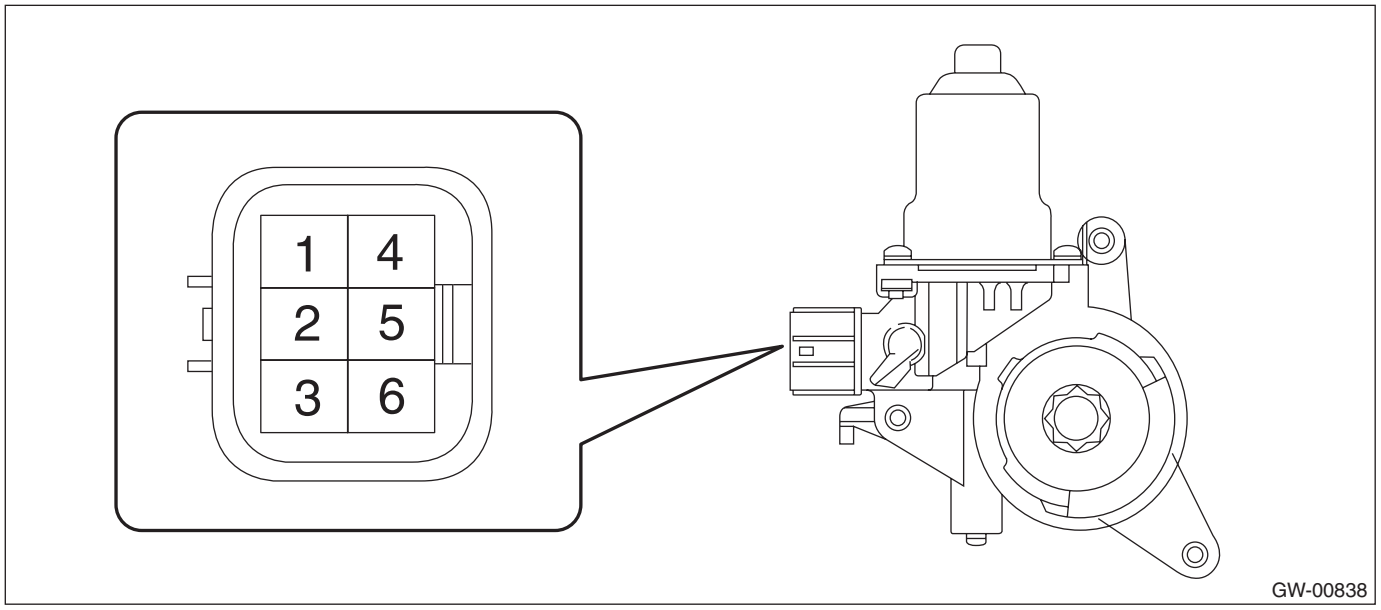

Terminal No.	Inspection conditions	Specification
1 (+) — 4 (–)	Apply battery voltage between terminals.	Increase
4 (+) — 1 (–)	Apply battery voltage between terminals.	Decrease

3) If the inspection results in improper operation, replace the front regulator and motor assembly.

7. Remote Control Mirror System

A: WIRING DIAGRAM

Refer to “Remote Control Mirror System” in the wiring diagram. <Ref. to WI-221, WIRING DIAGRAM, Remote Control Mirror System.>

B: INSPECTION

1. SYMPTOM CHART

Symptoms	Inspection order
All function does not operate.	1. Check the fuse. 2. Check the remote control mirror switch. 3. Check the wiring harness.
One side of the mirror motor does not operate.	1. Check the remote control mirror switch. 2. Check the mirror motor. 3. Check the wiring harness.
Mirror heater does not operate.	1. Check the defogger switch. 2. Check the mirror heater relay. 3. Check the mirror heater. 4. Check the wiring harness.

NOTE:
The mirror heater operates with the rear window defogger at the same time. Refer to the inspection procedure of rear window defogger system for details. <Ref. to GW-55, INSPECTION, Rear Window Defogger System.>

C: NOTE

For operation procedures of each component of the remote control mirror system, refer to the respective sections.

- Scalp cap: <Ref. to GW-23, Scalp Cap.>
- Outer mirror assembly: <Ref. to GW-28, Outer Mirror Assembly.>
- Outer mirror: <Ref. to GW-30, Outer Mirror.>
- Remote control mirror switch: <Ref. to GW-32, Remote Control Mirror Switch.>

8. Scalp Cap

A: REPLACEMENT

1. MODEL WITHOUT ELECTRIC RETRACTABLE MIRROR

CAUTION:
• When removing the mirror, be careful not to damage the back surface of mirror with a flat tip screwdriver.
• When installing the mirror, insert the connector and clip securely.

1) Operate the remote control mirror switch to face the mirror surface upward.
2) Disconnect the ground cable from battery.
3) Remove the outer mirror.
   (1) Disconnect the clips using a flat tip screwdriver.

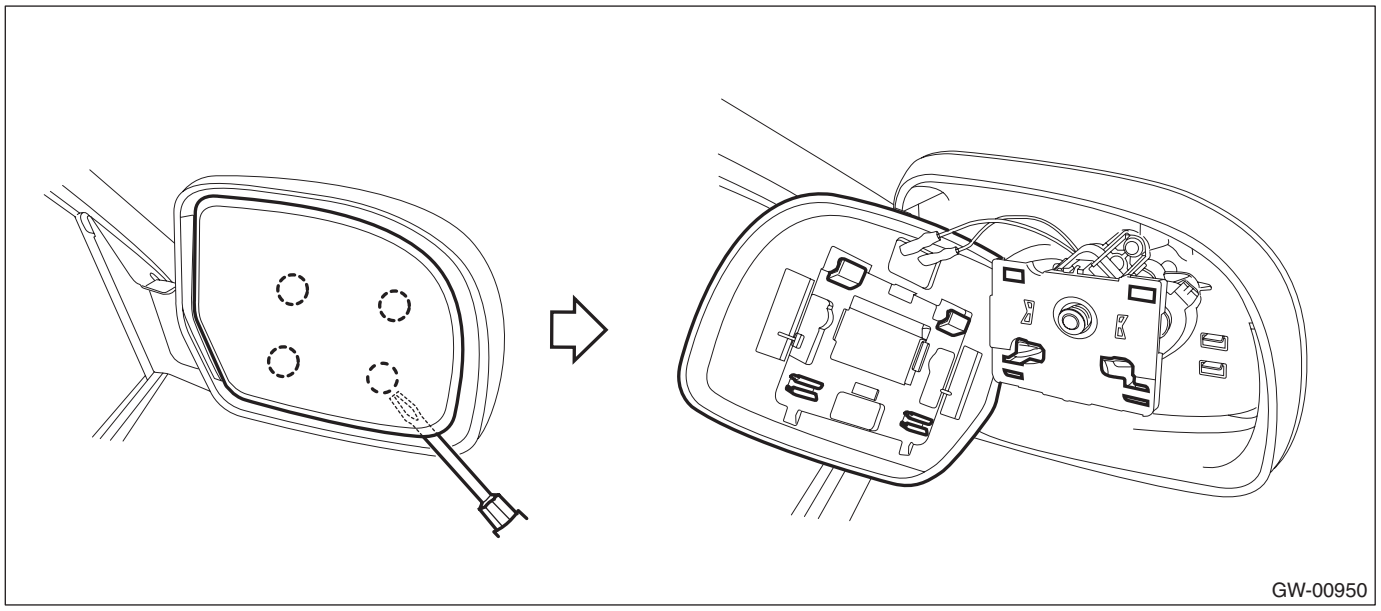

   (2) Disconnect the mirror heater connector. (Model with mirror heater)

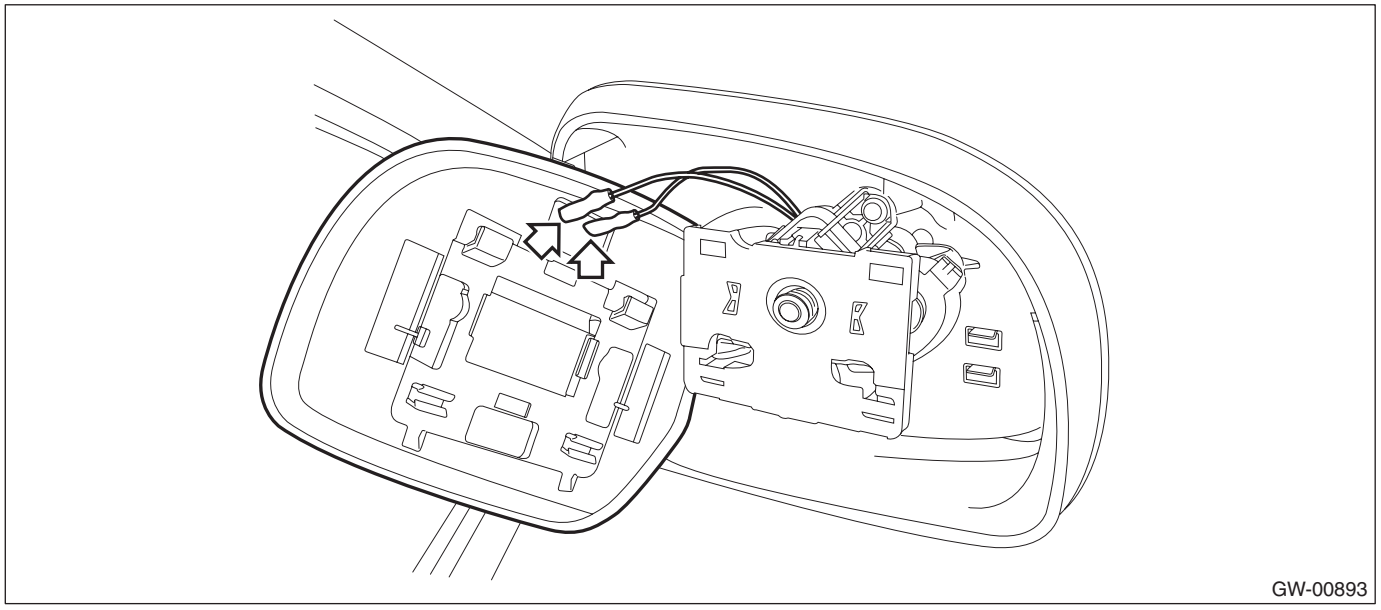

4) Disconnect the claws and then remove the scalp cap.

CAUTION:
Be careful not to apply excessive force when removing the scalp cap, as the lower hooks may become damaged.

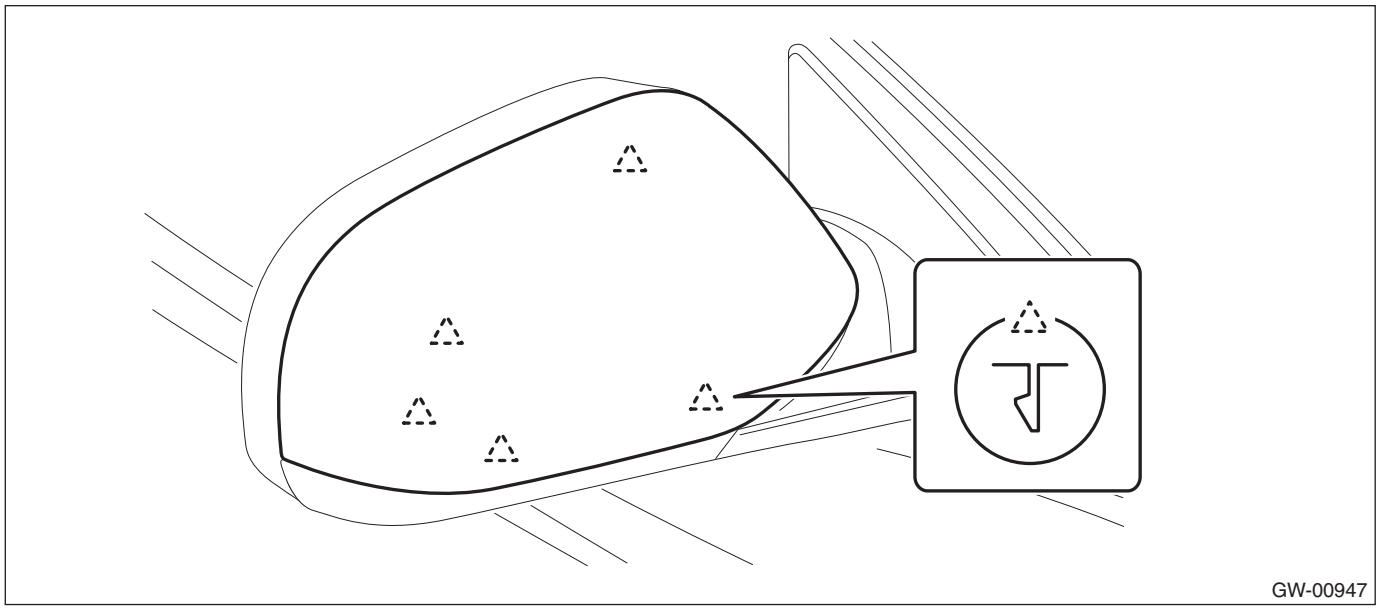

5) Engage the claws into the hole and install the scalp cap.

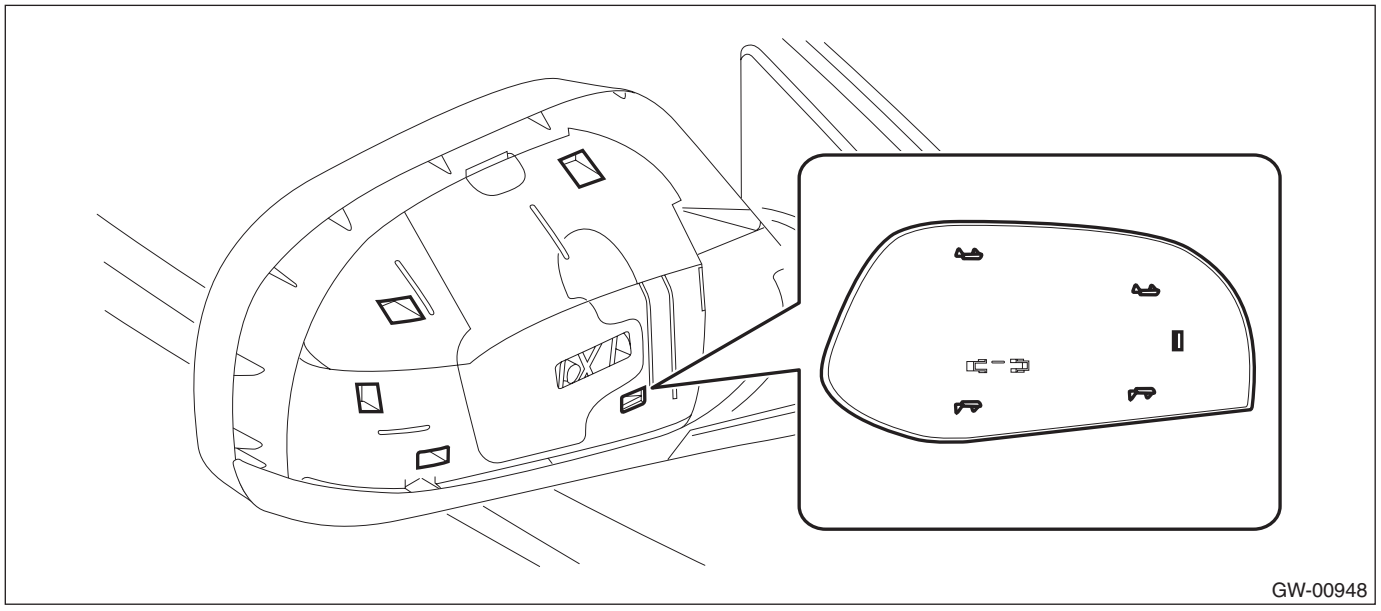

6) Check that all the claws are securely engaged.

2. MODEL WITH ELECTRIC RETRACTABLE MIRROR

CAUTION:
• When removing the mirror, be careful not to damage the back surface of mirror with a flat tip screwdriver.
• When installing the mirror, insert the connector and clip securely.

1) Operate the remote control mirror switch to face the mirror surface upward.
2) Disconnect the ground cable from battery.
3) Remove the outer mirror.
   (1) Using a flat tip screwdriver, release the clips then remove the outer mirror by sliding downward.

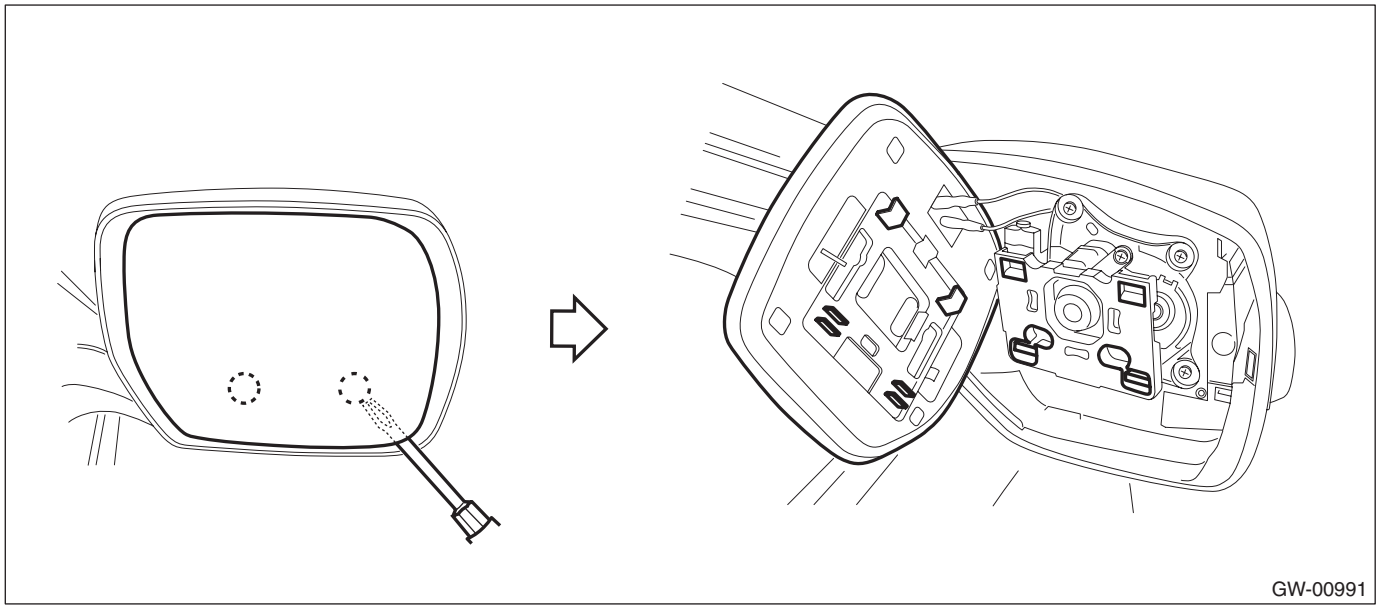

   (2) Disconnect the mirror heater connector. (Model with mirror heater)

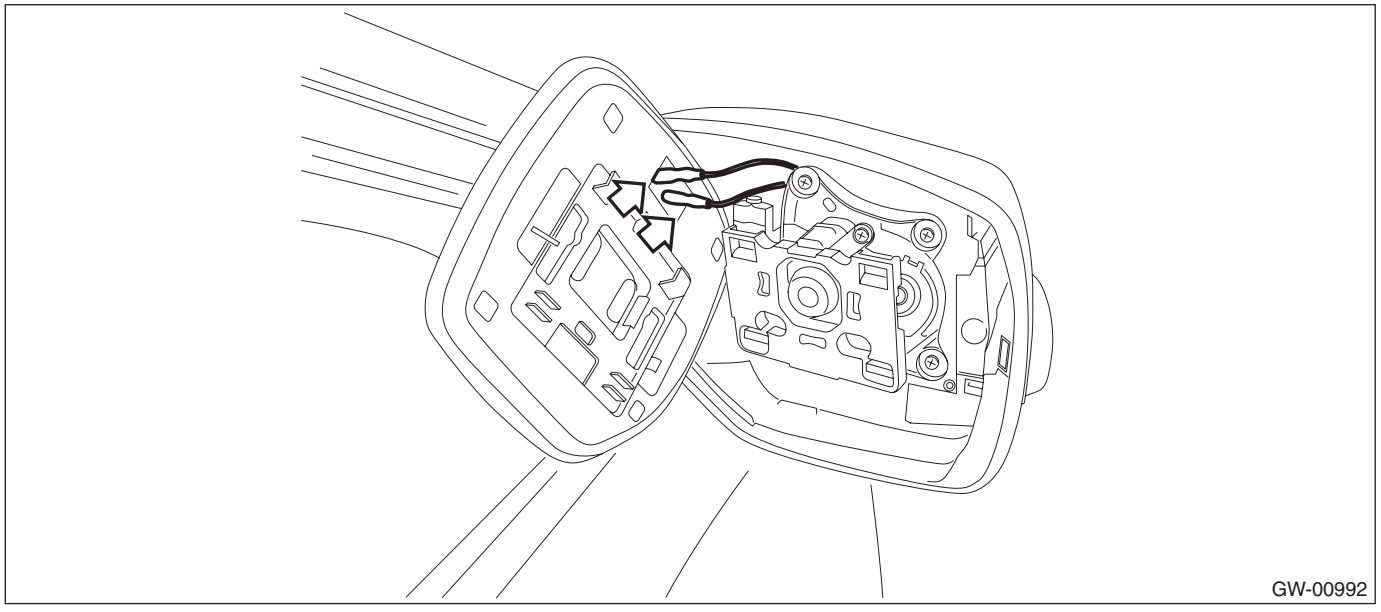

4) Disconnect the claws and then remove the outer mirror lower cover.

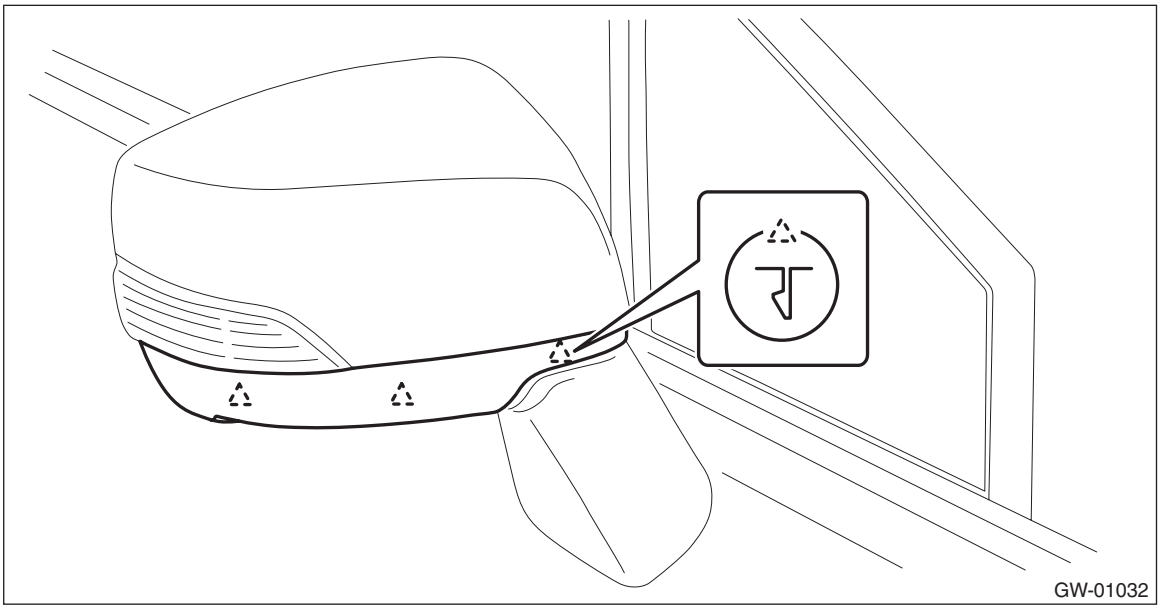

5) Disconnect the claws and then remove the scalp cap.

CAUTION:
Be careful not to apply excessive force when removing the scalp cap, as the lower hooks may become damaged.

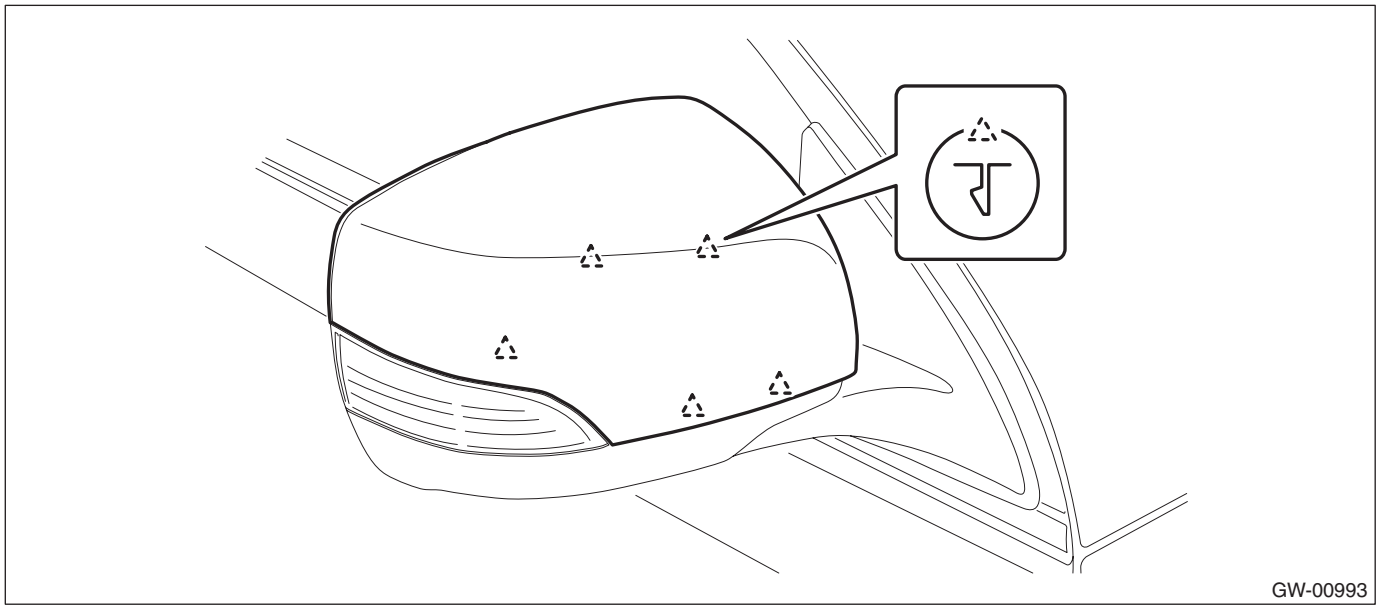

6) Engage the claws into the hole and install the scalp cap.

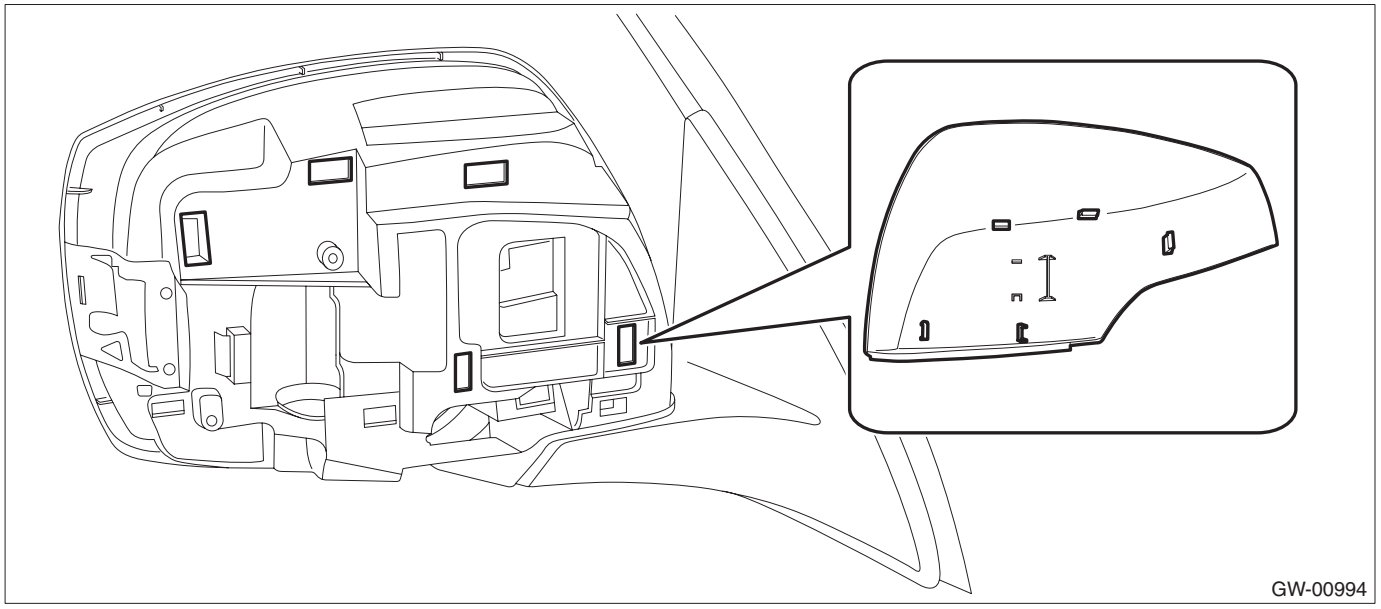

7) Engage the claws into the hole and install the outer mirror lower cover.

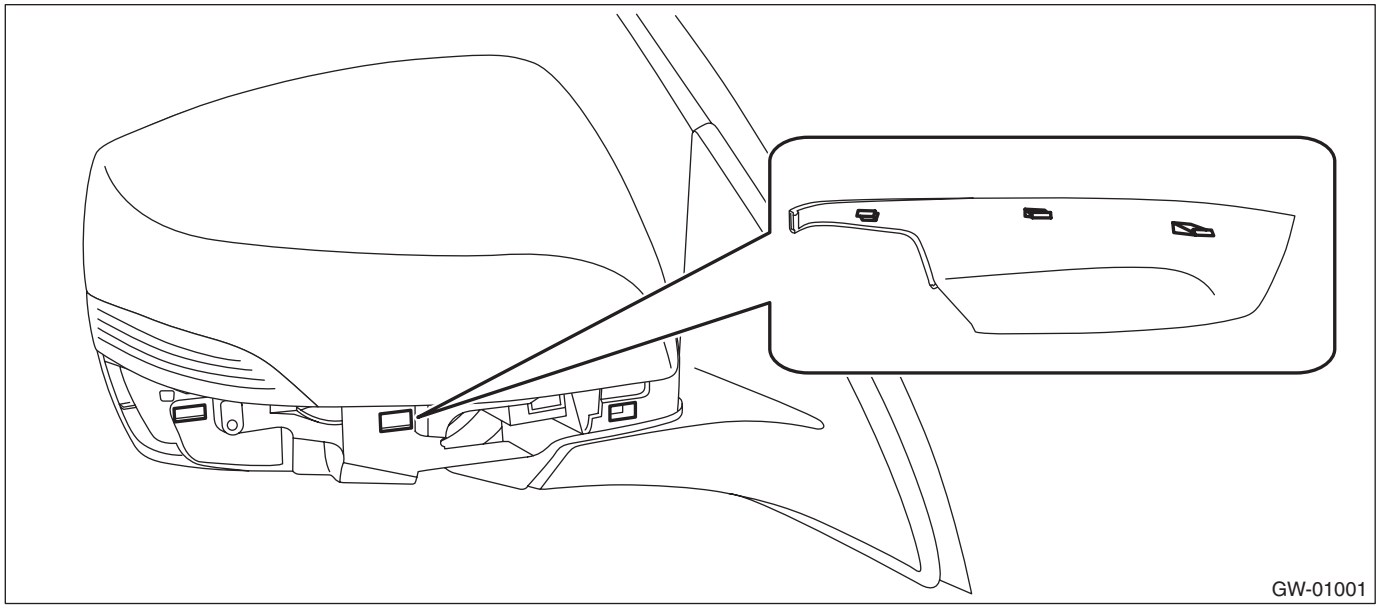

8) Check that all the claws are securely engaged.
9) Install the outer mirror in the reverse order of removal.

9. Outer Mirror Assembly

A: REMOVAL

1) Remove the front door trim. <Ref. to EI-60, FRONT DOOR, REMOVAL, Door Trim.>
2) Remove the outer mirror assembly.
   (1) Disconnect the connector.
   (2) Remove the bolts to remove outer mirror assembly.

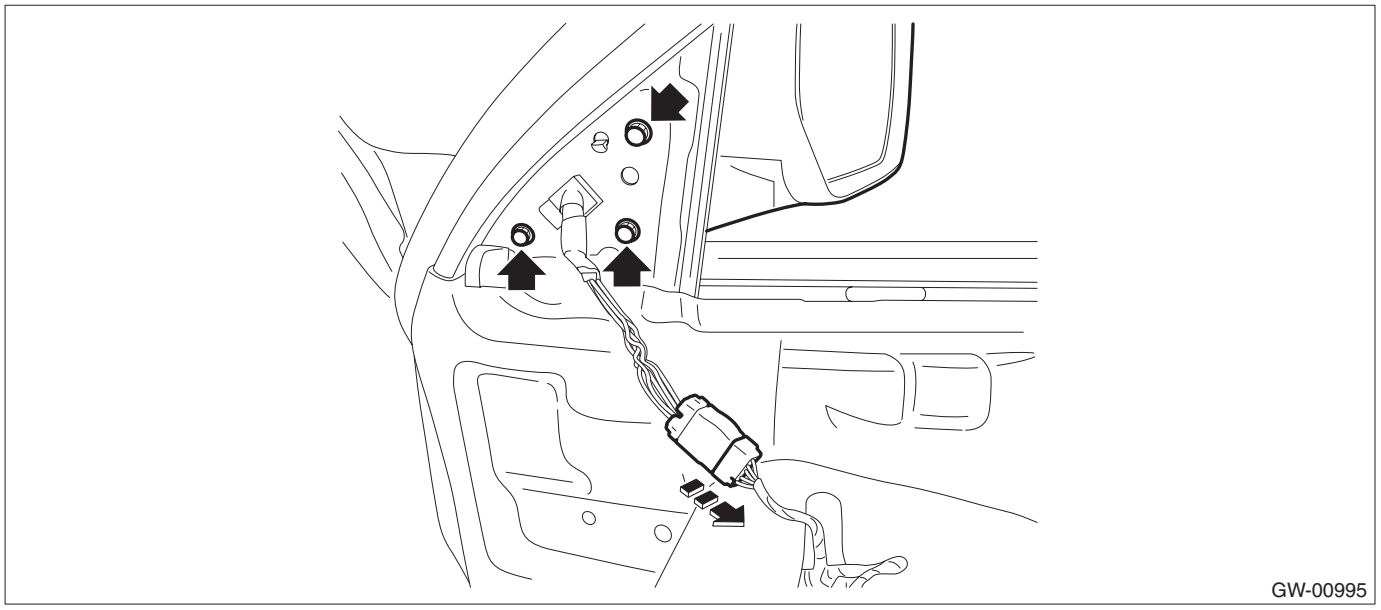
GW-00995

B: INSTALLATION

Install each part in the reverse order of removal.

Tightening torque:
Outer mirror assembly: 4.5 N·m (0.46 kgf-m, 3.3 ft-lb)

C: INSPECTION

1) Disconnect the outer mirror connector.
2) Apply battery voltage between the outer mirror connector terminals and check the mirror operation.

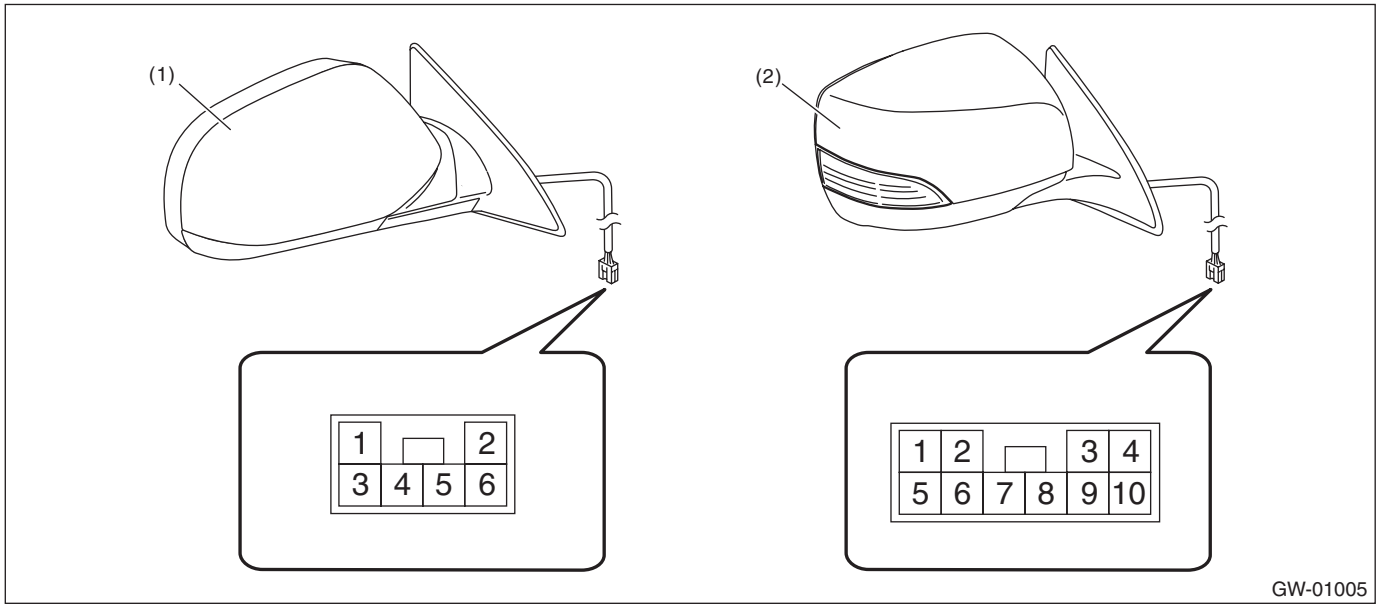

GW-01005

(1) Model without electric retractable mirror
(2) Model with electric retractable mirror

- Model without electric retractable mirror

Terminal No.	Inspection conditions	Switch position
—	—	OFF
2 (+) — 5 (–)	Apply battery voltage between terminals.	UP
5 (+) — 2 (–)	Apply battery voltage between terminals.	DOWN
4 (+) — 2 (–)	Apply battery voltage between terminals.	LEFT
2 (+) — 4 (–)	Apply battery voltage between terminals.	RIGHT

- Model with electric retractable mirror

Terminal No.	Inspection conditions	Switch position
—	—	OFF
3 (+) — 8 (–)	Apply battery voltage between terminals.	UP
8 (+) — 3 (–)	Apply battery voltage between terminals.	DOWN
7 (+) — 3 (–)	Apply battery voltage between terminals.	LEFT
3 (+) — 7 (–)	Apply battery voltage between terminals.	RIGHT
2 (+) — 6 (–)	Apply battery voltage between terminals.	Folding
6 (+) — 2 (–)	Apply battery voltage between terminals.	Unfolding

3) If it does not operate normally, replace the outer mirror assembly.

10.Outer Mirror

A: REPLACEMENT

1. MODEL WITHOUT ELECTRIC RETRACTABLE MIRROR

CAUTION:
• When removing the mirror, be careful not to damage the back surface of mirror with a flat tip screwdriver.
• When installing the mirror, insert the connector and clip securely.

1) Operate the remote control mirror switch to face the mirror surface upward.
2) Disconnect the ground cable from battery.
3) Remove the outer mirror.
   (1) Disconnect the clips using a flat tip screwdriver.

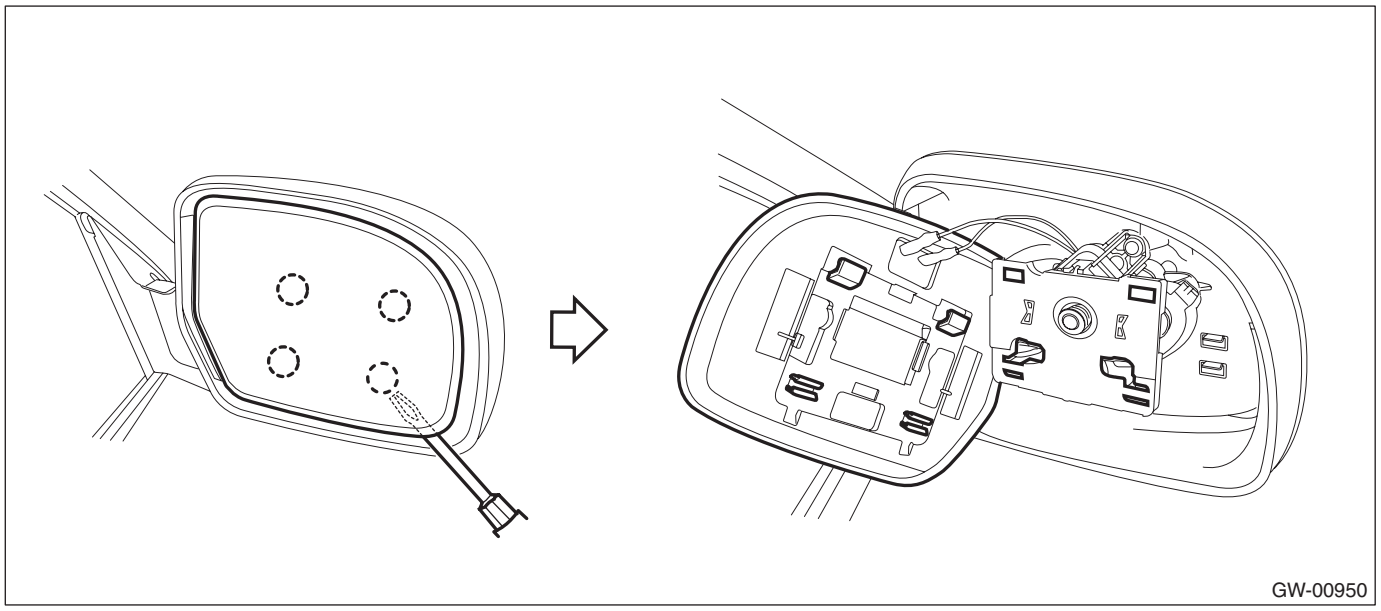

   (2) Disconnect the mirror heater connector. (Model with mirror heater)

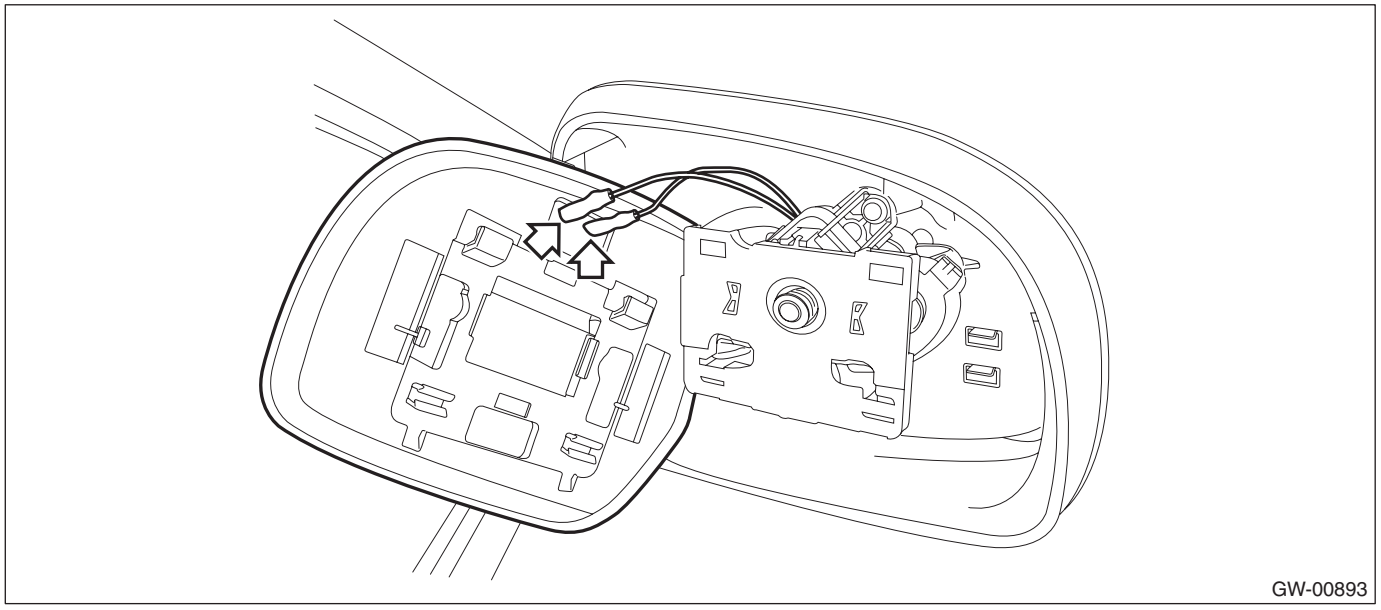

4) Install the outer mirror in the reverse order of removal.

2. MODEL WITH ELECTRIC RETRACTABLE MIRROR

CAUTION:
• When removing the mirror, be careful not to damage the back surface of mirror with a flat tip screwdriver.
• When installing the mirror, insert the connector and clip securely.

1) Operate the remote control mirror switch to face the mirror surface upward.
2) Disconnect the ground cable from battery.
3) Remove the outer mirror.
   (1) Using a flat tip screwdriver, release the clips then remove the outer mirror by sliding downward.

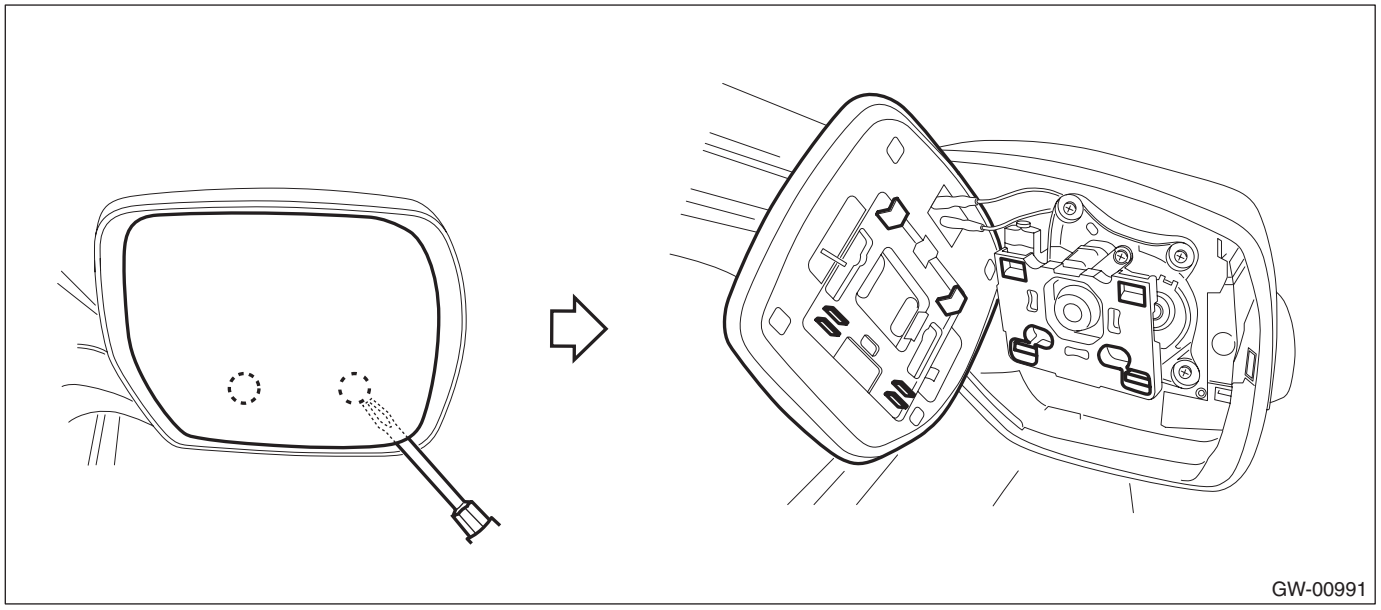

   (2) Disconnect the mirror heater connector. (Model with mirror heater)

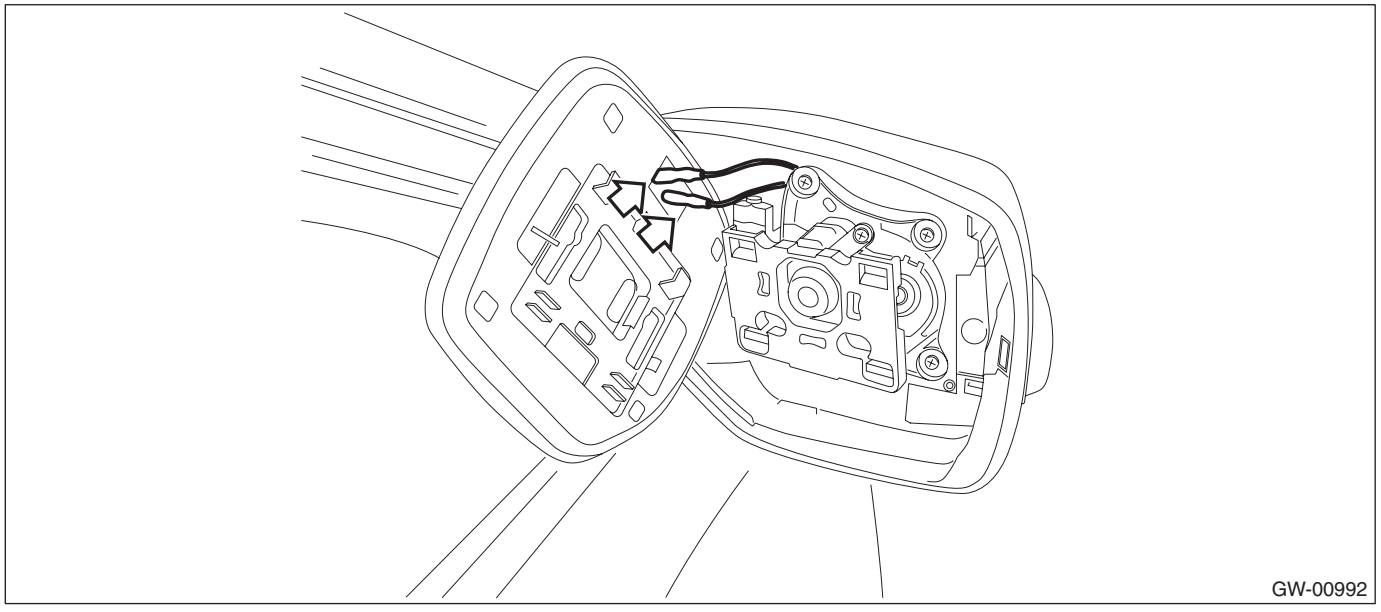

4) Install the outer mirror in the reverse order of removal.

11.Remote Control Mirror Switch

A: REMOVAL

1) Remove the instrument panel lower cover. <Ref. to EI-64, REMOVAL, Instrument Panel Lower Cover.>
2) Disconnect the claws and then remove the remote control mirror switch.

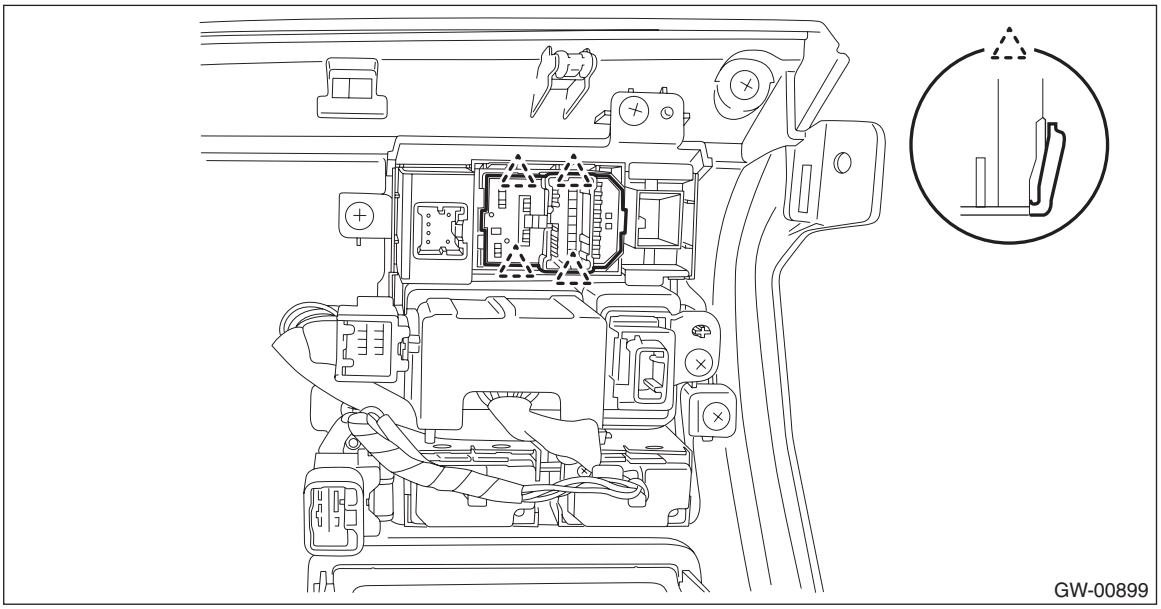

B: INSTALLATION

Install each part in the reverse order of removal.

C: INSPECTION

1) Disconnect the remote control mirror switch connector.
2) Check the resistance between remote control mirror switch terminals.

Preparation tool: Circuit tester

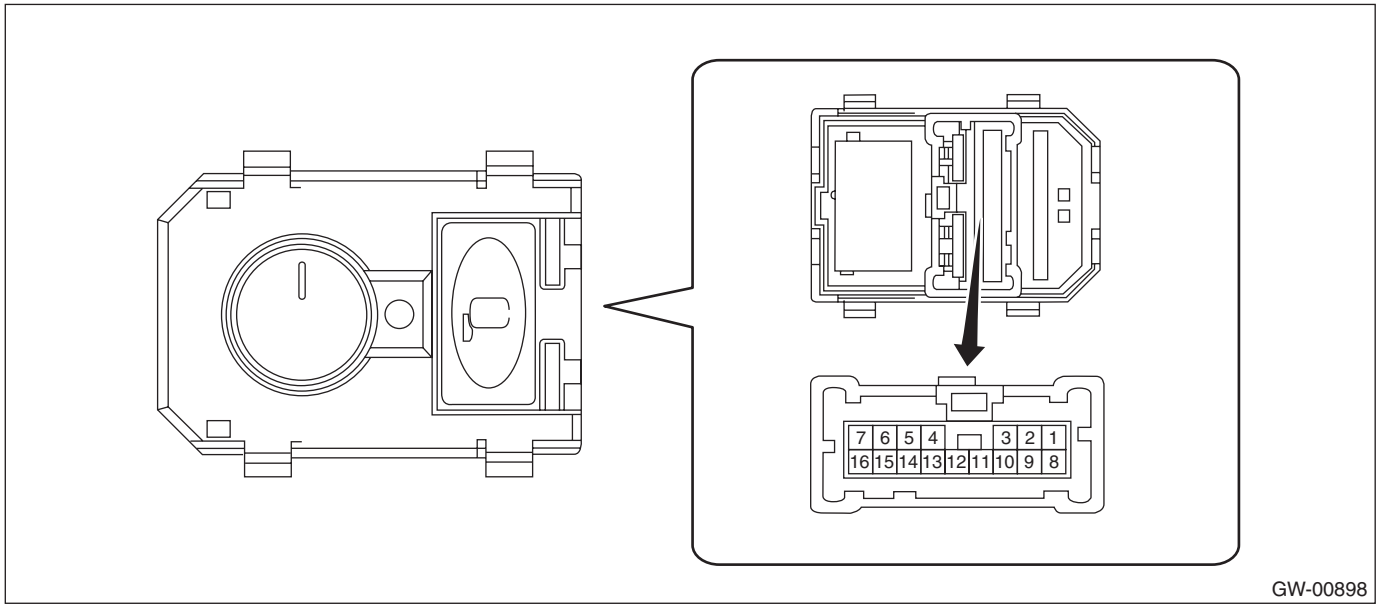

- Changeover switch RH

Terminal No.	Inspection conditions	Specification
—	OFF	1 MΩ or more
1 — 12 11 — 7	UP	Less than 1 Ω
1 — 11 12 — 7	DOWN	Less than 1 Ω
1 — 9 12 — 7	LEFT	Less than 1 Ω
1 — 12 9 — 7	RIGHT	Less than 1 Ω

- Changeover switch LH

Terminal No.	Inspection conditions	Specification
—	OFF	1 MΩ or more
1 — 14 10 — 7	UP	Less than 1 Ω
1 — 10 14 — 7	DOWN	Less than 1 Ω
1 — 8 14 — 7	LEFT	Less than 1 Ω
1 — 14 8 — 7	RIGHT	Less than 1 Ω

- Folding switch (model with electric retractable mirror)

Terminal No.	Inspection conditions	Specification
—	OFF	1 MΩ or more
1 — 5 2 — 7	Folding (LH)	Less than 1 Ω
1 — 6 3 — 7	Folding (RH)	Less than 1 Ω
1 — 2 5 — 7	Unfolding (LH)	Less than 1 Ω
1 — 3 6 — 7	Unfolding (RH)	Less than 1 Ω

3) Replace the remote control mirror switch if the inspection result is not within the standard value.

12.Rear Door Glass

A: REMOVAL

1) Remove the rear door trim. <Ref. to EI-61, REAR DOOR, REMOVAL, Door Trim.>
2) Remove the sealing cover.

CAUTION:
- **Carefully remove the butyl tape. Excessive force will easily break the cover.**
- **If cover gets broken, replace it with a new part.**

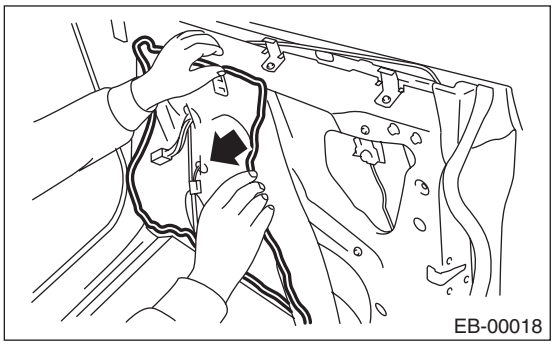

3) Attach the battery ground cable and power window switch and turn the ignition to ON.
4) Remove the rear door glass.
   (1) Operate the power window switch to move the rear door glass to the lowest position where the mounting bolts can be seen.
   (2) Remove the screw and bolt and remove the door sash.

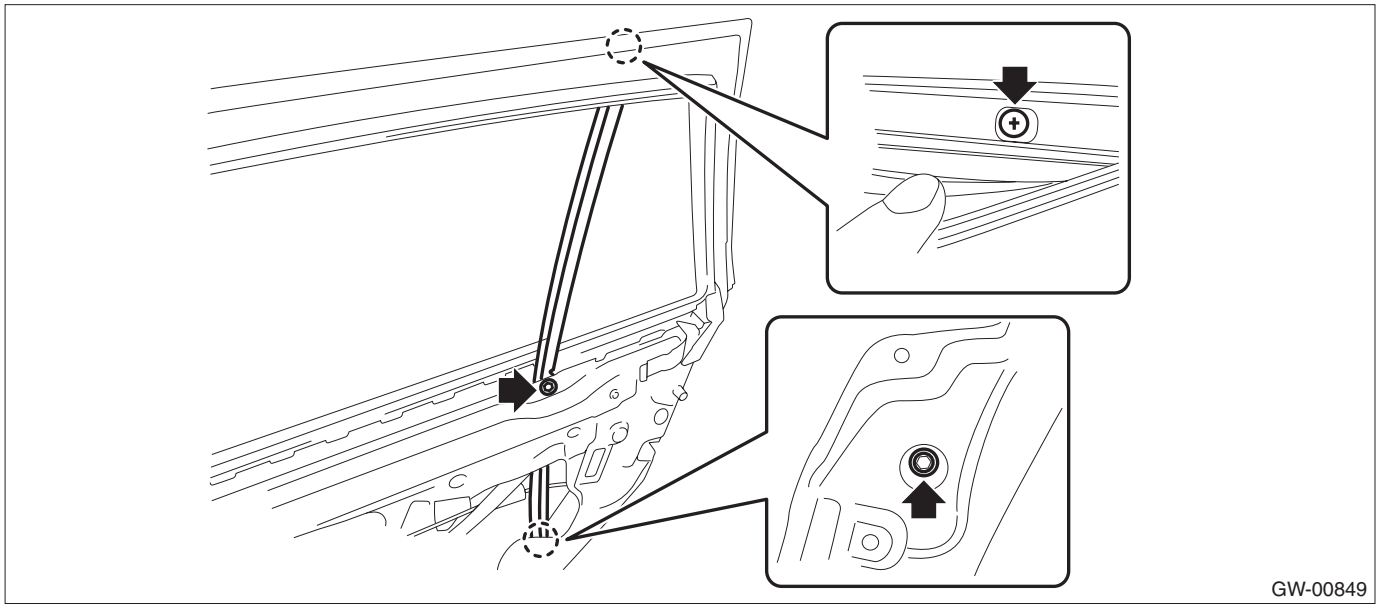

(3) Remove the bolt.

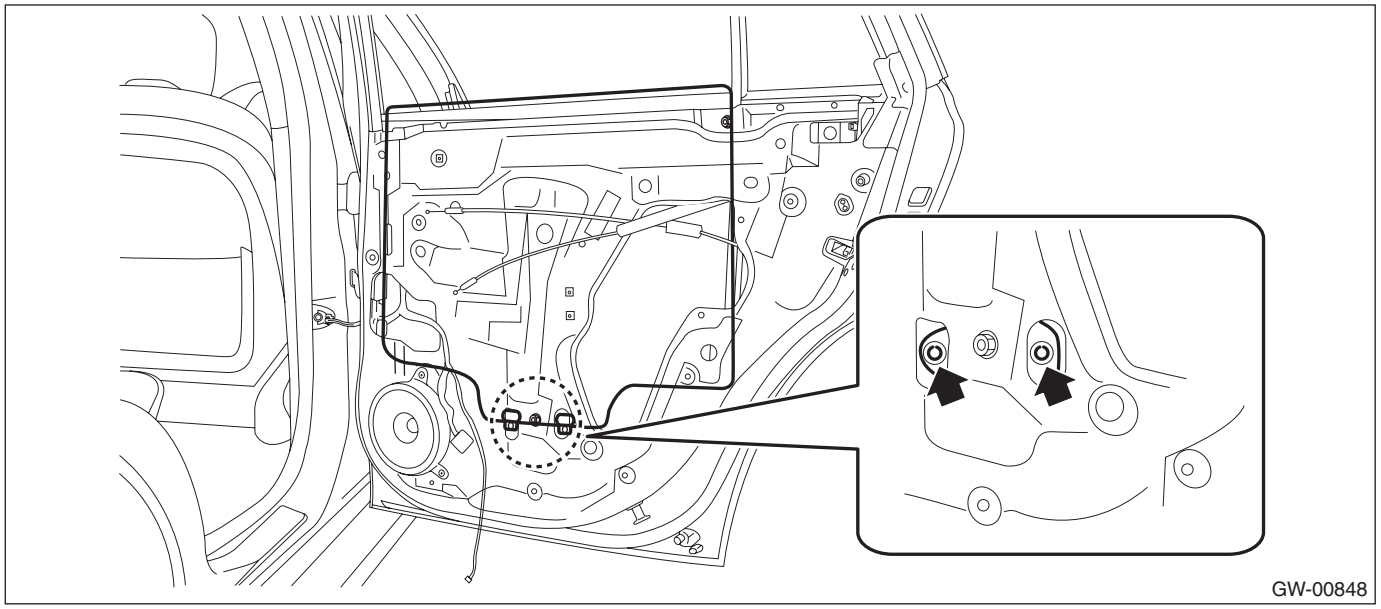

(4) Remove the rear door glass.

CAUTION:
Avoid impact and damage to the glass.

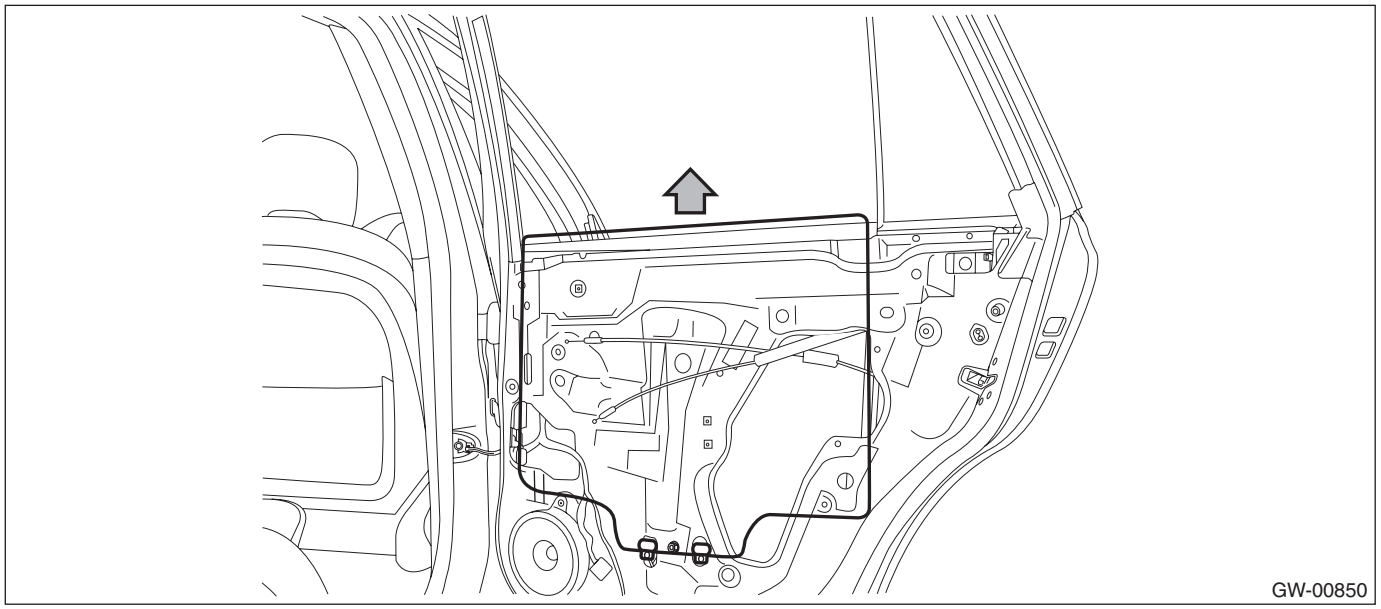

B: INSTALLATION

CAUTION:
Make sure that the glass run rubber is placed securely in the door frame and sash.
Install each part in the reverse order of removal.

Tightening torque:
Refer to "COMPONENT" of "General Description". <Ref. to GW-5, REAR DOOR GLASS, COMPONENT, General Description.>

13.Rear Regulator and Motor Assembly

A: REMOVAL

1) Remove the rear door trim. <Ref. to EI-61, REAR DOOR, REMOVAL, Door Trim.>
2) Remove the sealing cover.

CAUTION:
- **Carefully remove the butyl tape. Excessive force will easily break the cover.**
- **If cover gets broken, replace it with a new part.**

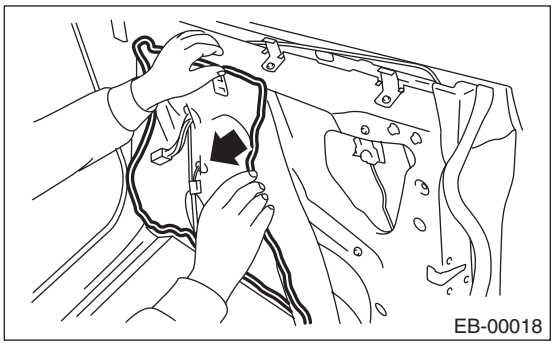

3) Attach the battery ground cable and power window switch and turn the ignition to ON.
4) Remove the rear door glass. <Ref. to GW-34, REMOVAL, Rear Door Glass.>
   (1) Operate the power window switch to move the rear door glass to the lowest position where the mounting bolts can be seen.
   (2) Remove the screw and bolt and remove the door sash.

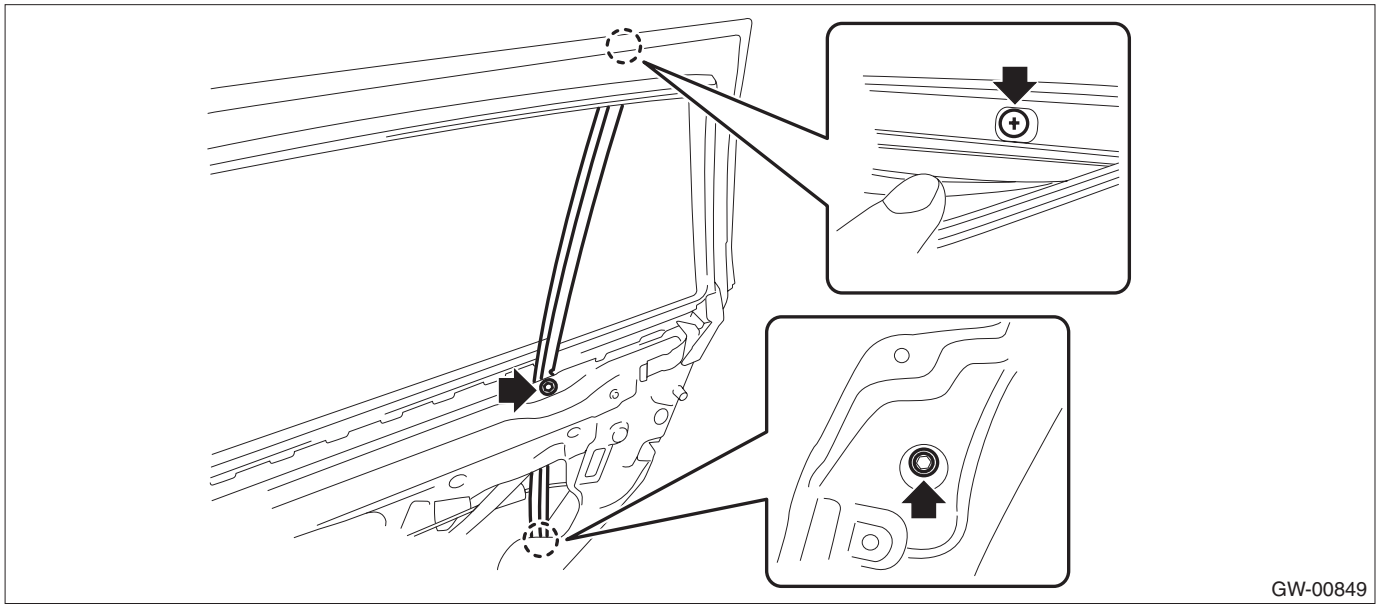

(3) Remove the bolt.

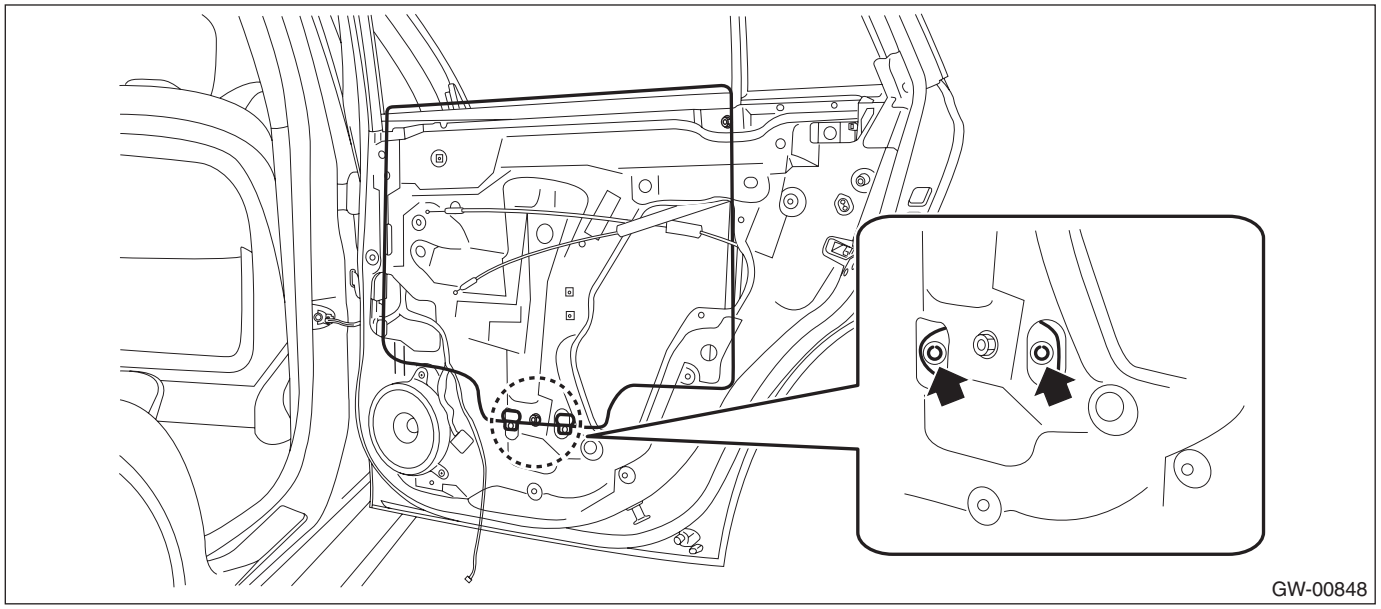

(4) Remove the rear door glass.

CAUTION:
Avoid impact and damage to the glass.

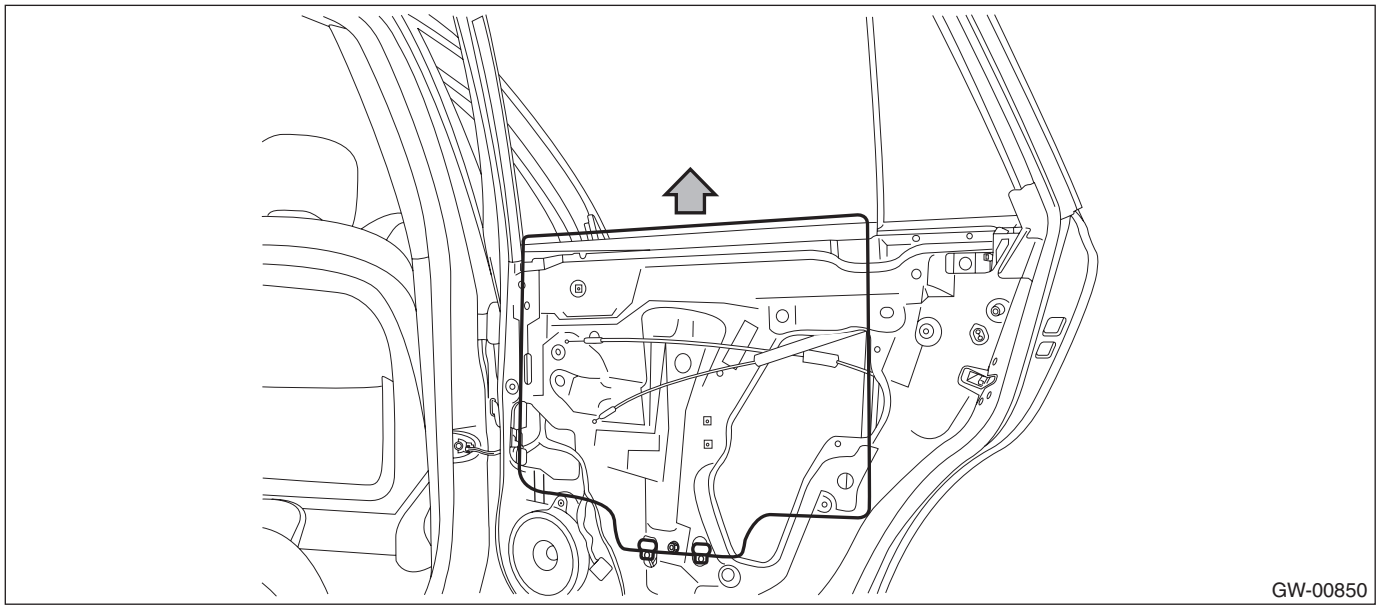

5) Remove the rear regulator and motor assembly.
   (1) Disconnect the connector.
   (2) Remove the bolts, and then remove the rear regulator and motor assembly.

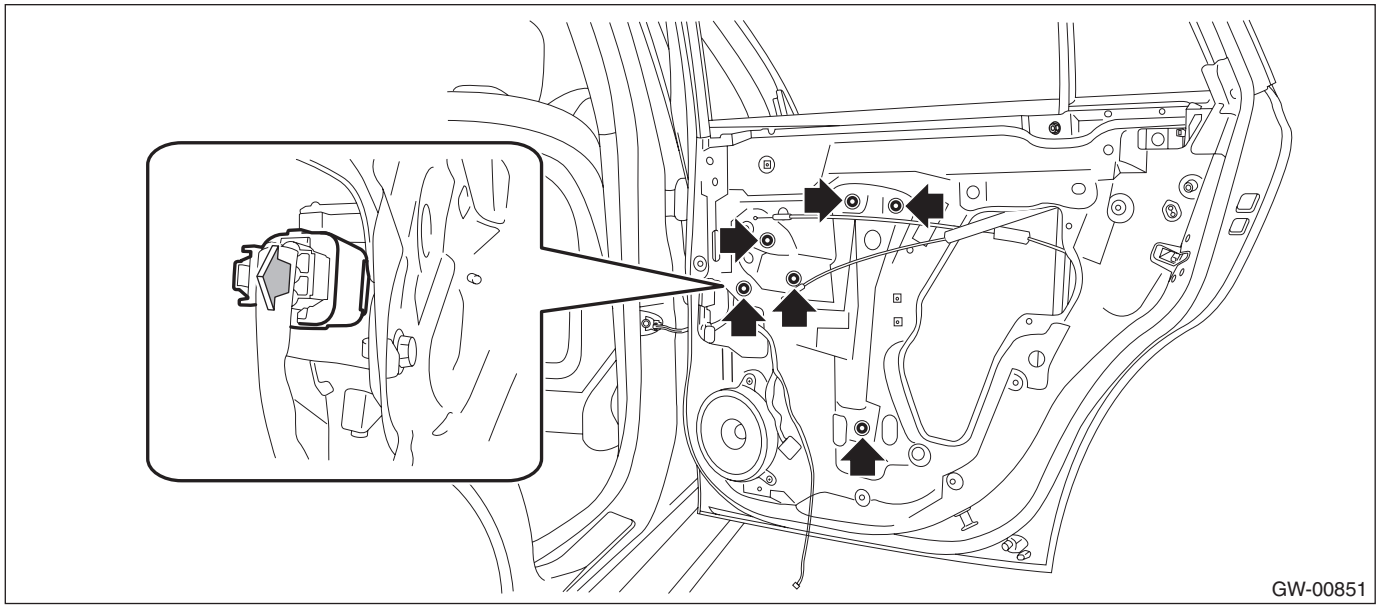

B: INSTALLATION

Install each part in the reverse order of removal.

Tightening torque:
Refer to "COMPONENT" of "General Description". <Ref. to GW-5, REAR DOOR GLASS, COMPONENT, General Description.>

C: INSPECTION

1) Disconnect the motor connector.
2) Apply battery voltage between the motor connector terminals and check the motor operation. Check to ensure that the motor rotates in reverse direction when the terminal to which battery voltage is applied is changed.

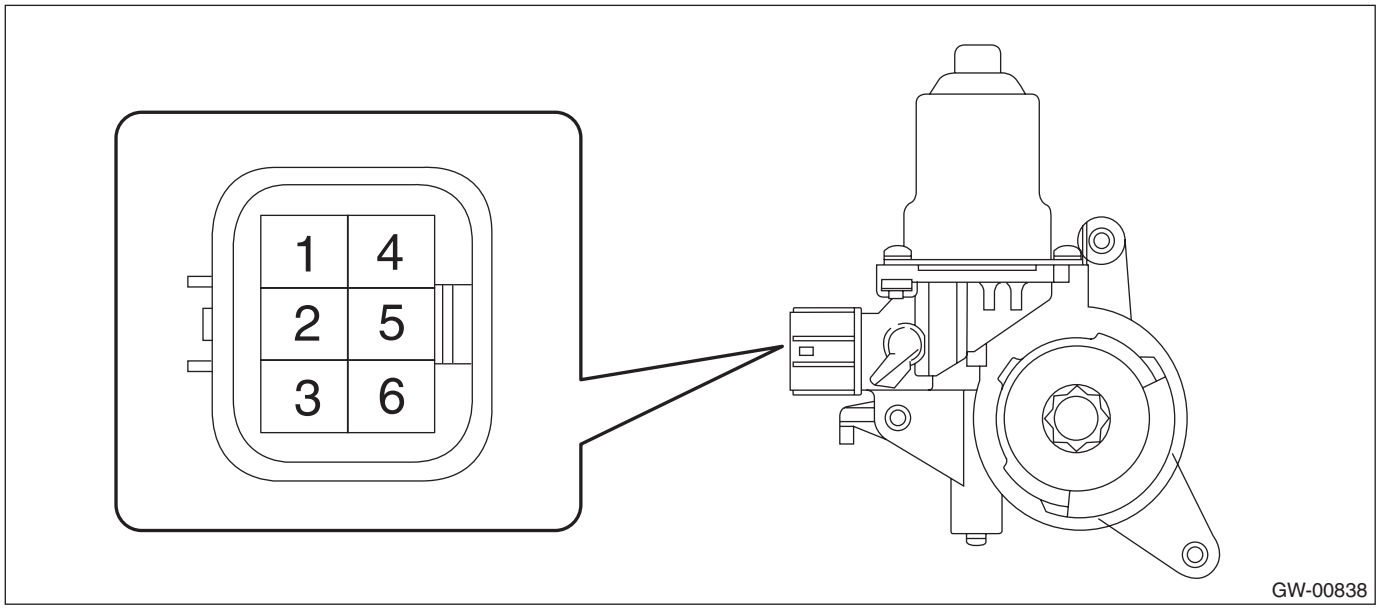

Terminal No.	Inspection conditions	Standard
1 (+) — 4 (–)	Apply battery voltage between terminals.	Increase
4 (+) — 1 (–)	Apply battery voltage between terminals.	Decrease

3) If the inspection results in improper operation, replace the rear regulator and motor assembly.

14.Windshield Glass

A: REMOVAL

1. USING WINDSHIELD GLASS KNIFE

1) Disconnect the ground cable from battery. (Models with wiper deicer)
2) Remove the front pillar trim. <Ref. to EI-102, REMOVAL, Upper Inner Trim.>
3) Disconnect the wiper deicer connector. (Models with wiper deicer)
4) Remove the cowl panel. <Ref. to EI-32, REMOVAL, Cowl Panel.>
5) Remove the molding from the glass and tape the body side of the circumference of windshield glass for protection.

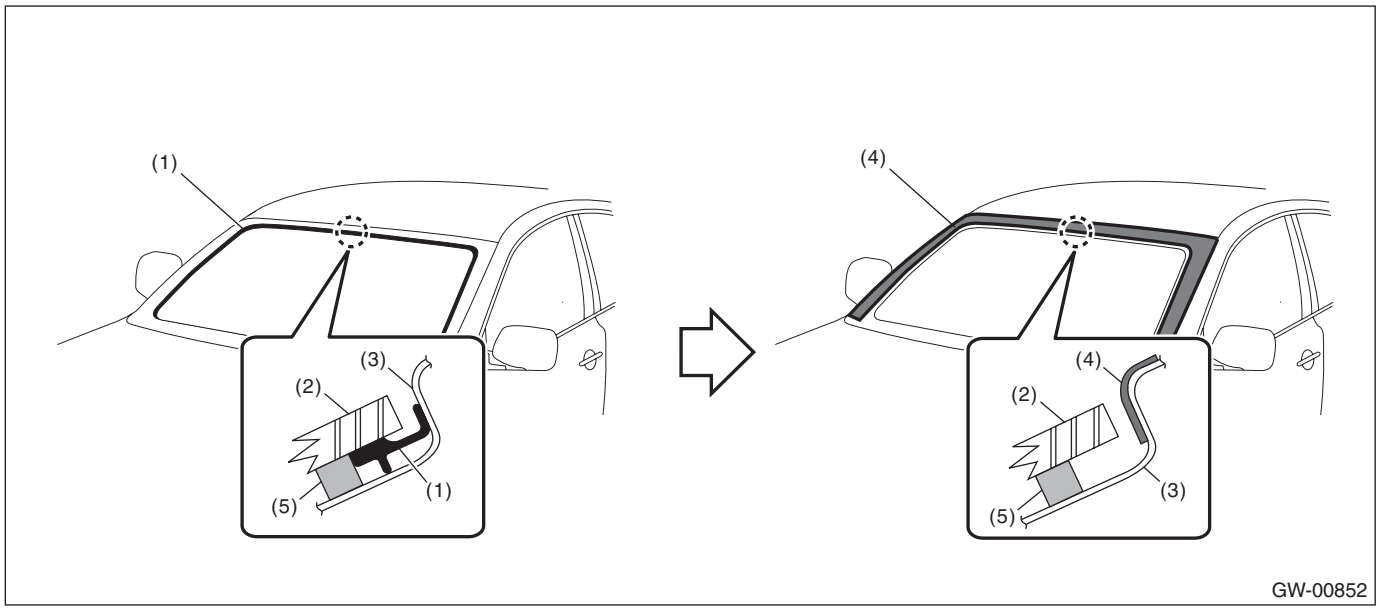

(1) Molding
(2) Windshield glass
(3) Body panel
(4) Protective tape
(5) Adhesive

6) Remove the windshield glass.
(1) Apply sufficient amount of soapy water to the adhesive part and insert the windshield glass knife.
(2) While holding the knife edge and windshield glass edge at a right angle, move the windshield glass knife parallel to the windshield glass edge along the surface and edge of windshield glass to cut the adhesive.

CAUTION:
- **Cutting of adhesive part should be started with wider gap between windshield glass and body.**
- **Never twist the windshield glass knife.**

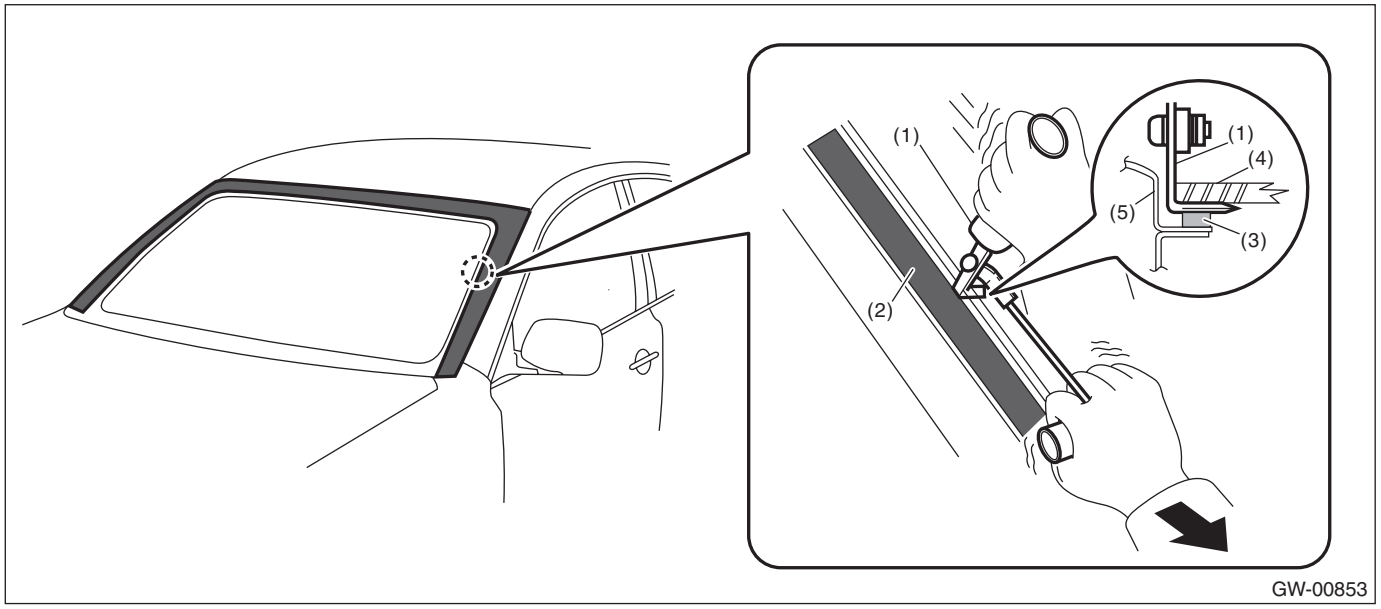

(1) Windshield glass knife
(2) Protective tape
(3) Adhesive
(4) Windshield glass
(5) Body panel

(3) Disconnect the locating pin and remove the windshield glass.

NOTE:
The locating pins are bonded to the corners of glass. Use piano wire to disconnect the pins.

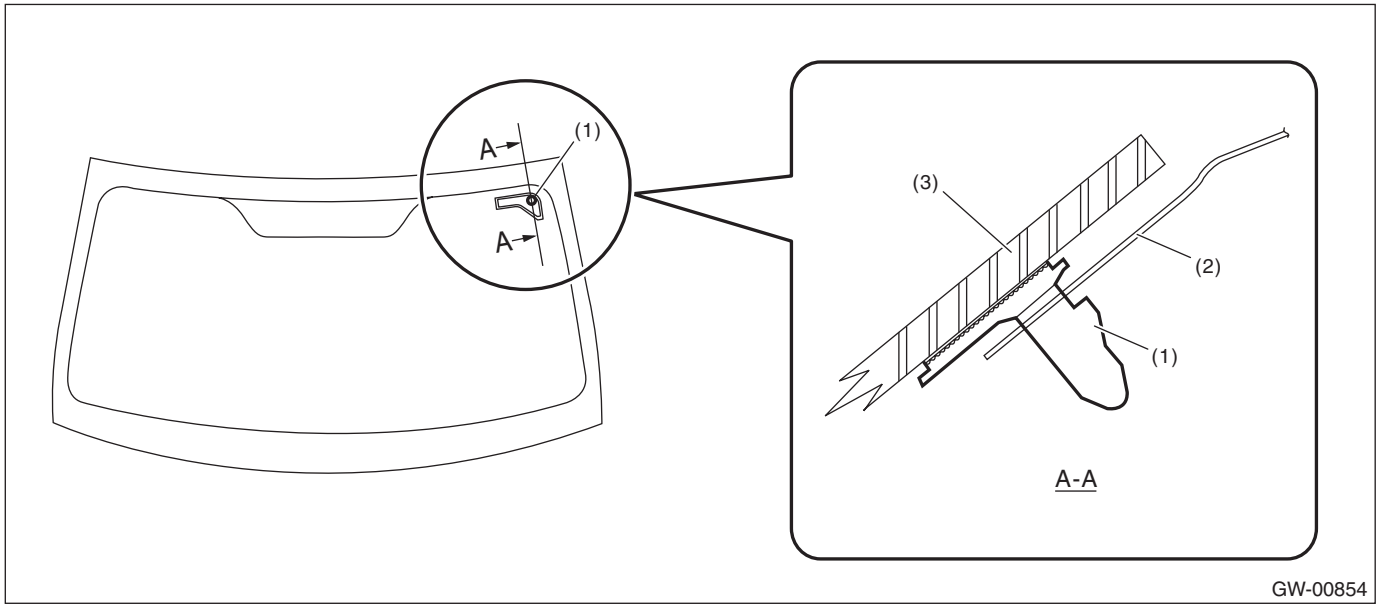

(1) Locating pin
(2) Body panel
(3) Windshield glass

2. USING PIANO WIRE

CAUTION:
- **Do not tightly pull the piano wire against the windshield glass edge.**
- **Apply protective tape, etc, and be careful that the inner and outer components of the vehicle are not damaged.**
- **Do not cross piano wires. Otherwise they may be cut.**

1) Disconnect the ground cable from battery. (Models with wiper deicer)
2) Remove the front pillar trim. <Ref. to EI-102, REMOVAL, Upper Inner Trim.>
3) Disconnect the wiper deicer connector. (Models with wiper deicer)
4) Remove the cowl panel. <Ref. to EI-32, REMOVAL, Cowl Panel.>
5) Remove the molding from the glass and tape the body side of the circumference of windshield glass for protection.

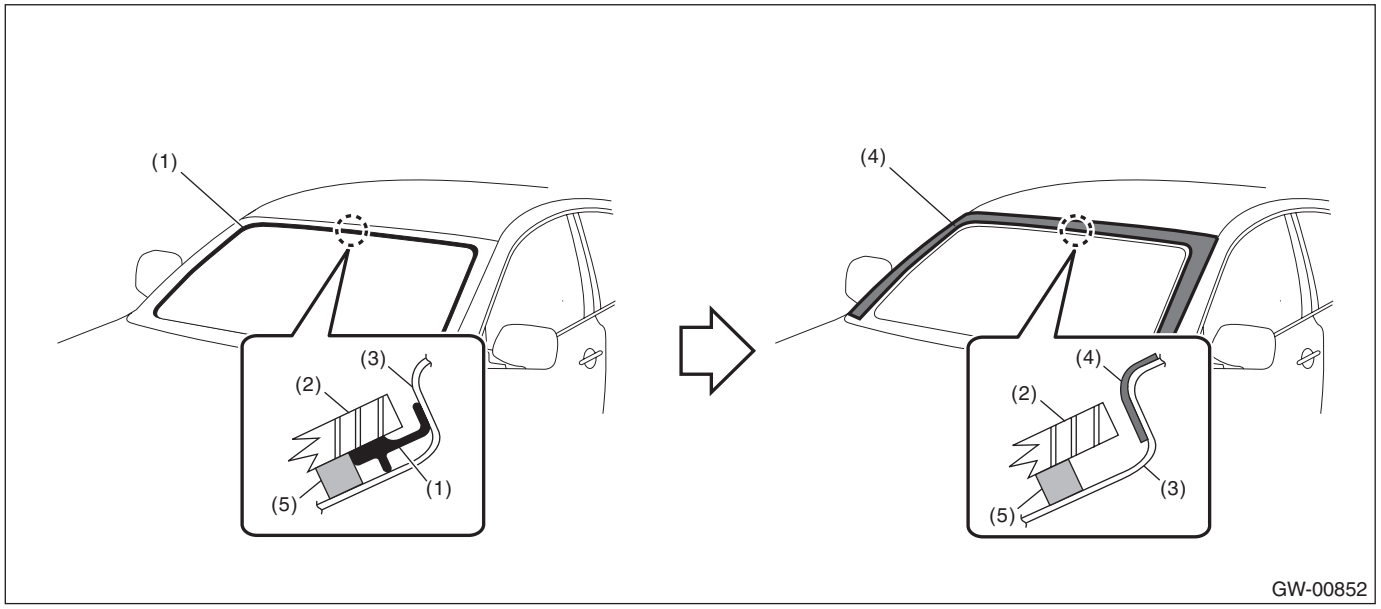

(1) Molding
(2) Windshield glass
(3) Body panel
(4) Protective tape
(5) Adhesive

6) Remove the windshield glass.
(1) Using a drill, make a hole in the adhesive part.
(2) Pass the piano wire through the hole, and pull the wire ends alternately to cut off the adhesive part and locating pin.

CAUTION:
Attach a piece of wood to both piano wire ends.

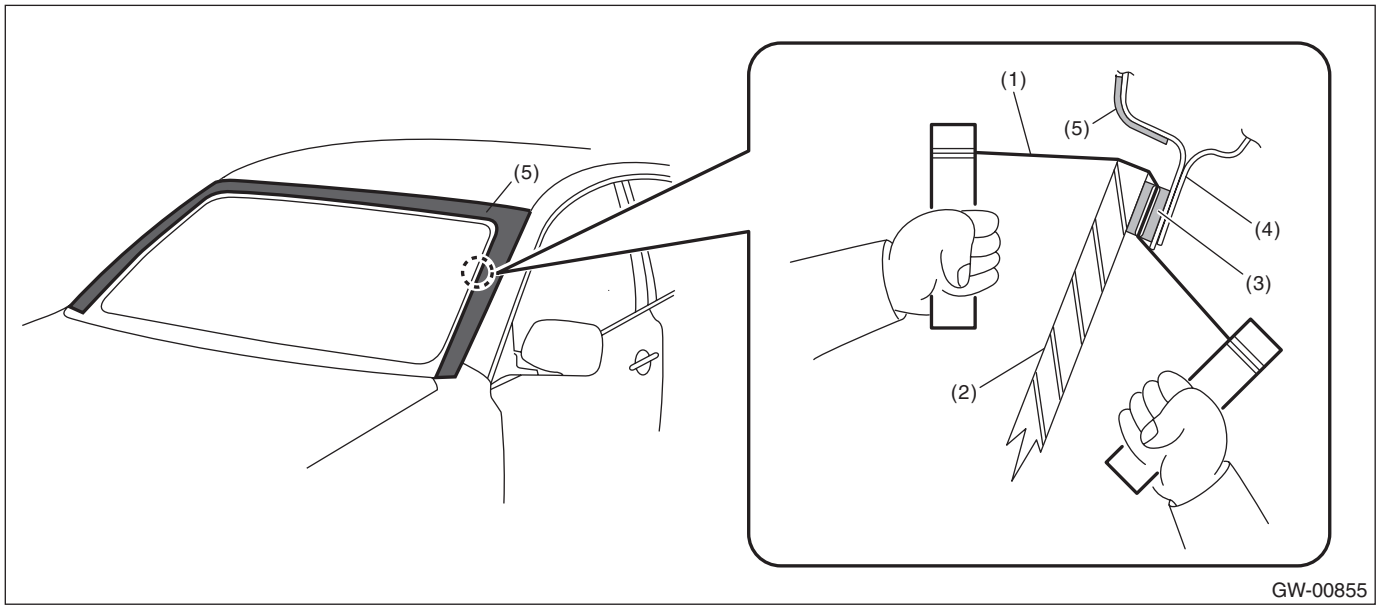

(1) Piano wire
(2) Windshield glass
(3) Adhesive
(4) Body panel
(5) Protective tape

B: INSTALLATION

1) Fabricate the cartridge nozzle tip as shown and set the sealant gun with the adhesive.

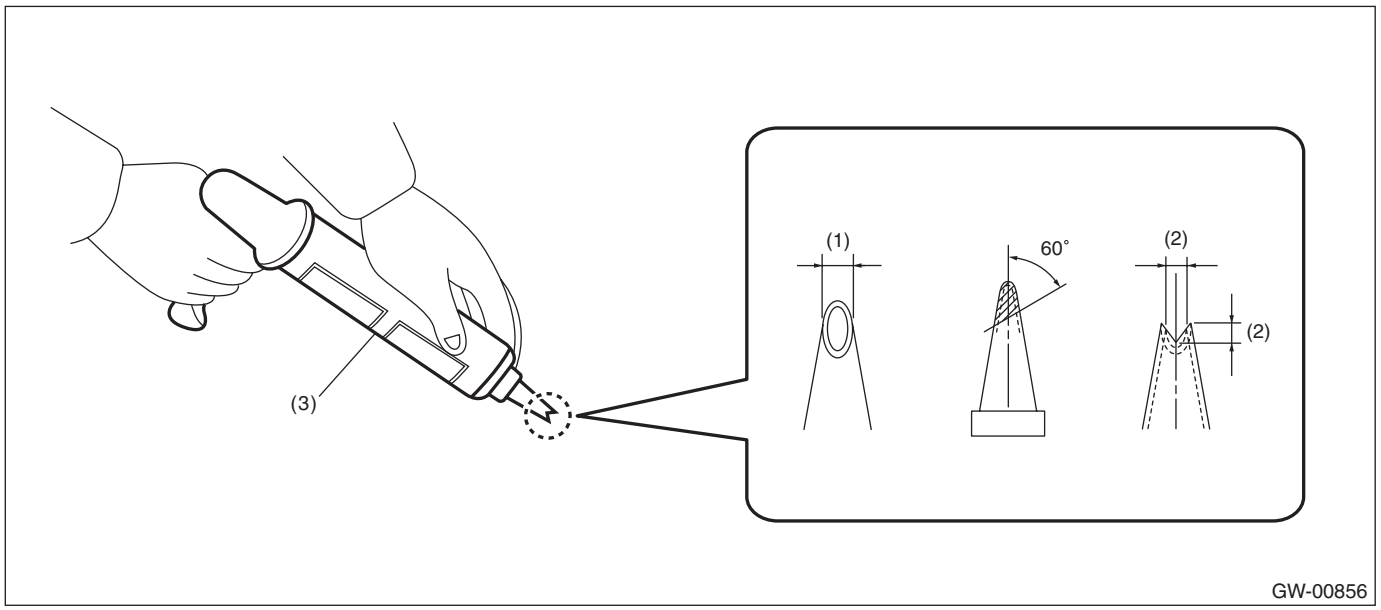

(1) 10 mm (0.39 in)
(2) 8 mm (0.31 in)
(3) Sealant gun

2) Remove the adhesive layer on the body using cutter knife to obtain smooth face of 2 mm (0.08 in) thick.

CAUTION:
- **Be careful not to damage the body and paint surface.**
- **Be sure to keep some of old adhesive.**

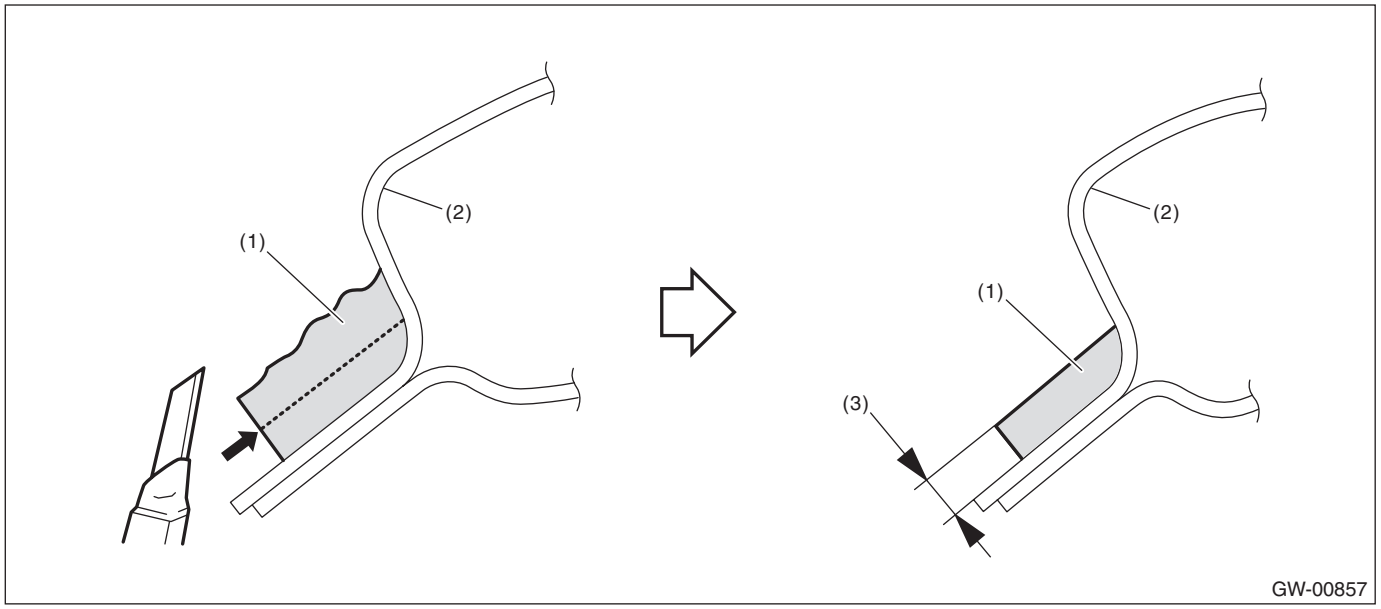

(1) Adhesive (2) Body panel (3) 2 mm (0.08 in)

3) Clean the glass and body with alcohol or white gasoline to eliminate cutting powder, dust and dirt completely.
4) Attach the dam rubber to the glass.

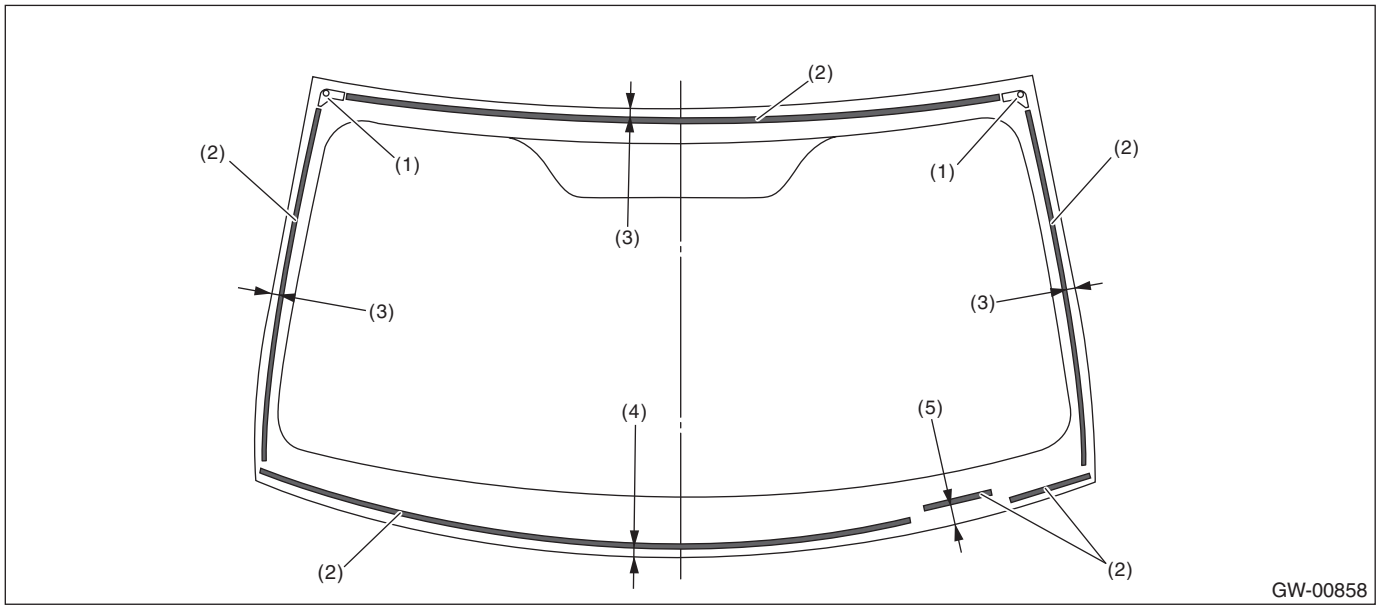

(1) Locating pin (3) 15 mm (0.59 in) (5) 23.5 mm (0.92 in)
(2) Dam rubber (4) 13.5 mm (0.53 in)

5) Install the molding to the glass.

CAUTION:
Be careful to attach the molding so that the molding has no loose or undulating part.

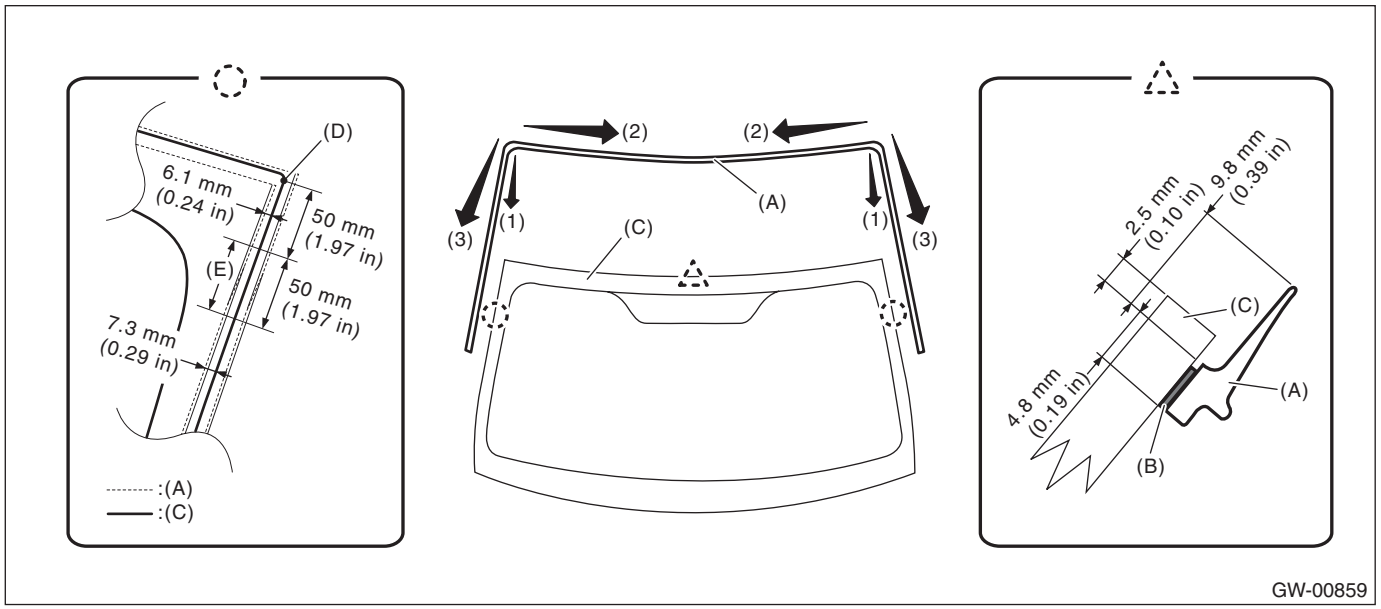

(1) Align the molding (A) with both ends of the upper edge of the windshield glass (C).
(2) Install the molding from both corners of the upper edge toward the center.
(3) Install the molding from both corners of the upper edge toward the lower side.

NOTE:
Change the molding installation width within the gradual change range (E) based on the curve end point on the upper end of side area (D).

(4) Firmly apply the double sided tape (B) of the molding evenly to the glass surface.

6) Install the windshield glass.

(1) Apply the primer to the adhesive surface of glass side and body side using sponge.

Glass primer:
Dow Automotive's
ESSEX U-401, U-402 or equivalent

Painted surface primer:
Dow Automotive's
ESSEX U-413 or equivalent

NOTE:
- Primer once attached to the painted surface of the body and internal trim is hard to wipe off. Mask the circumference of such area.
- Let primer dry for about ten minutes before installing the glass.
- Do not touch the surface coated with primer.

(2) Apply adhesive to the glass end back surface.

Adhesive:
Dow Automotive's
ESSEX U-400HV or equivalent

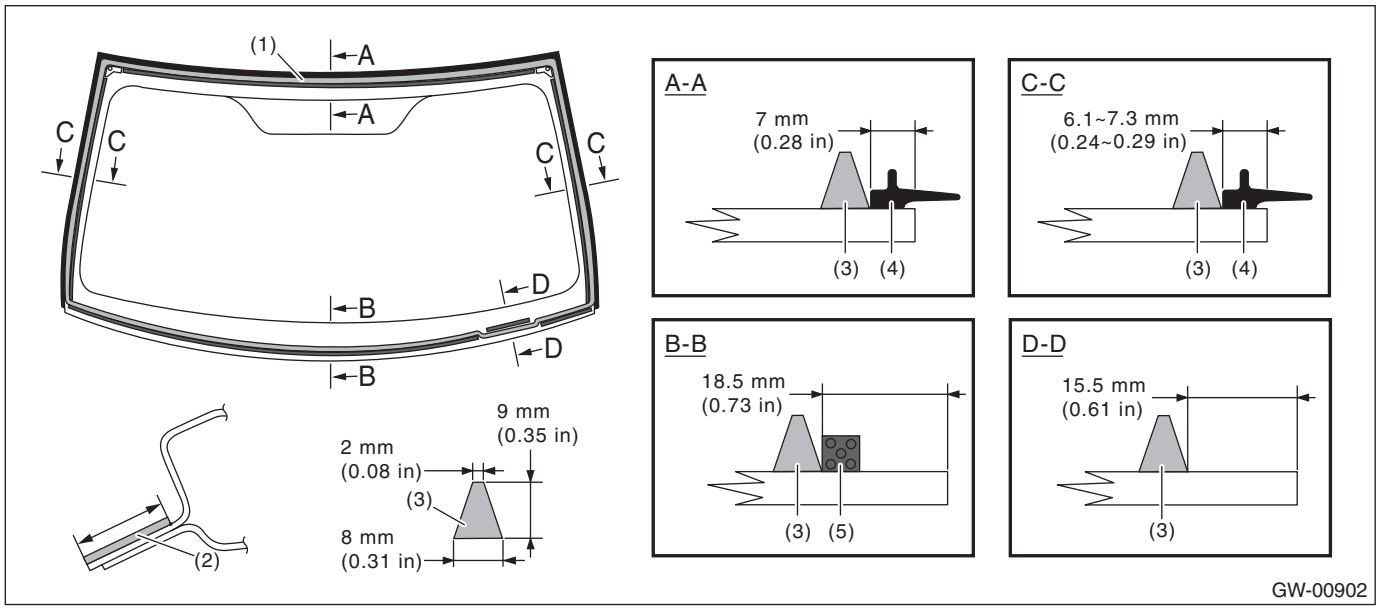

(1) Application of primer (glass side)
(2) Application of primer (body side)
(3) Adhesive
(4) Molding
(5) Dam rubber

(3) Fit the locating pins to vehicle body using suction rubber cup to install the windshield glass.

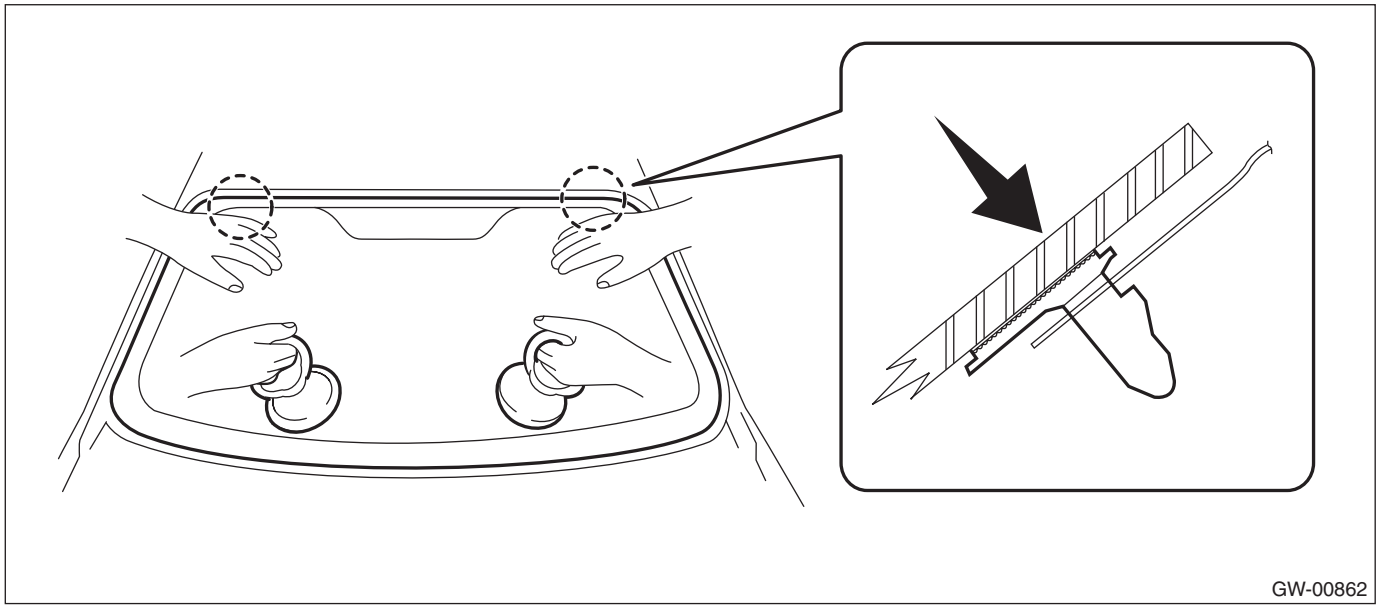

(4) Lightly press the entire perimeter of windshield glass for tight fit.
(5) Make flush the adhesive surface jutted out using spatula.

7) After completion of all work, allow the vehicle to stand for about 24 hours.

NOTE:
• When door is opened/closed after glass is bonded, always lower the door glass first, and then open/close it carefully.
• Move the vehicle slowly.
• For minimum drying time and vehicle standing time before driving after bonding, follow instructions or instruction manual from the adhesive manufacturer.

8) After curing of adhesive, pour the water on external surface of vehicle to check that there are no water leaks.

NOTE:
When a vehicle is returned to the user, tell him or her that the vehicle should not be subjected to heavy impact for at least three days.

9) Install the cowl panel. <Ref. to EI-34, INSTALLATION, Cowl Panel.>
10) Connect the wiper deicer connector. (Models with wiper deicer)
11) Install the front pillar trim. <Ref. to EI-107, INSTALLATION, Upper Inner Trim.>
12) Connect the battery ground terminal. (Models with wiper deicer)

15.Rear Gate Glass

A: REMOVAL

1) Disconnect the ground cable from battery.
2) Remove the rear gate trim. <Ref. to EI-160, REMOVAL, Rear Gate Trim.>
3) Remove the rear gate garnish. <Ref. to EI-164, REMOVAL, Rear Gate Garnish.>
4) Remove the rear wiper arm and rear wiper motor. <Ref. to WW-38, REMOVAL, Rear Wiper Motor.>
5) Disconnect the rear defogger connector and radio antenna connector.
6) Remove the rear gate glass in the same procedure as for windshield glass. <Ref. to GW-40, REMOVAL, Windshield Glass.>

B: INSTALLATION

NOTE:
When applying adhesive and installing the dam rubber and molding, refer to Ag printing as a mark.

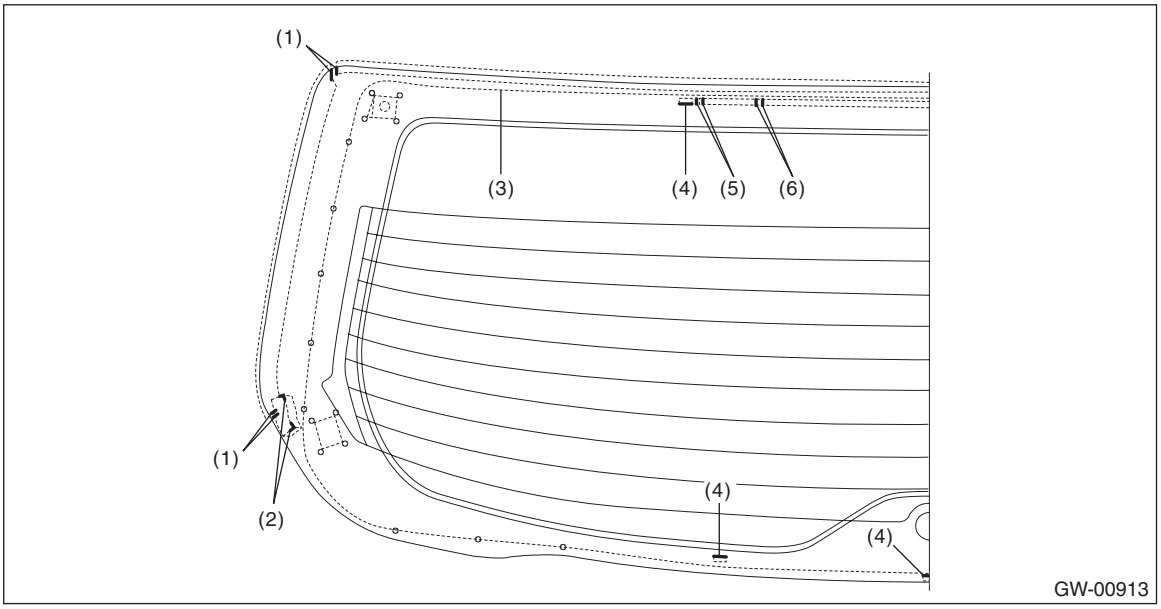

(1) Molding edge
(2) EPT sealer edge
(3) Adhesive line
(4) Spacer edge
(5) Dam rubber edge (LH)
(6) Dam rubber edge (RH)

1) Fabricate the cartridge nozzle tip as shown and set the sealant gun with the adhesive.

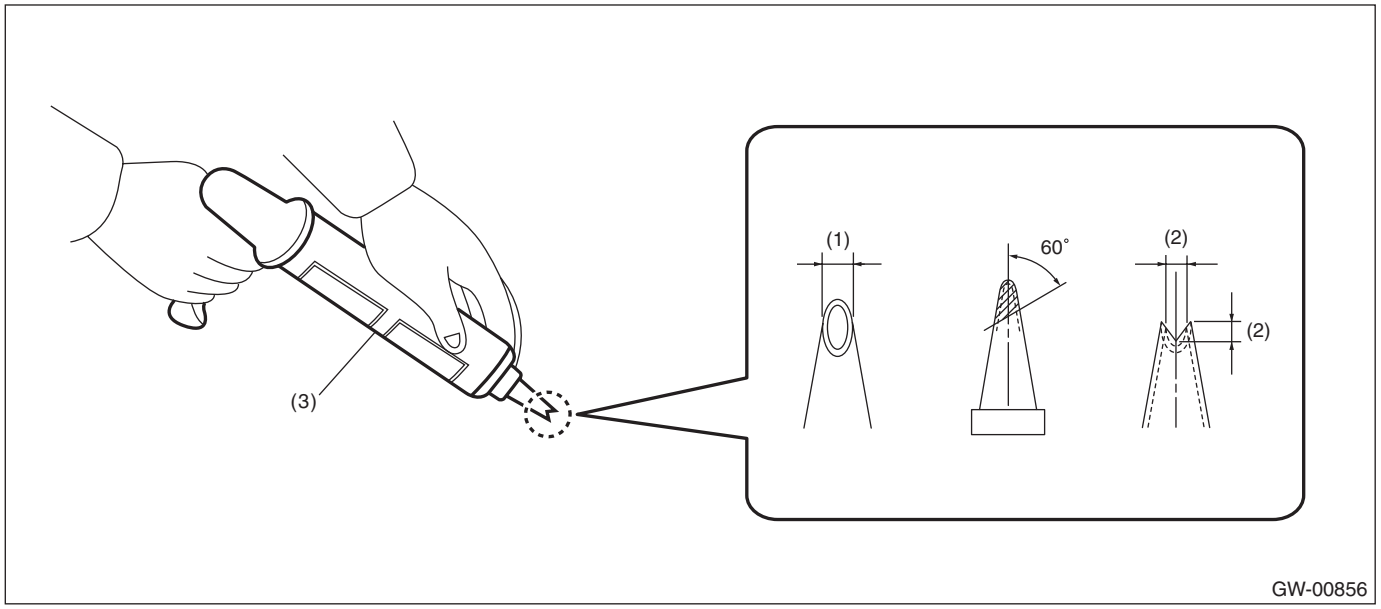

(1) 10 mm (0.39 in) (2) 8 mm (0.31 in) (3) Sealant gun

2) Prepare and clean the adhesion surfaces of the glass and body using the same procedures as for the windshield glass. <Ref. to GW-43, INSTALLATION, Windshield Glass.>
3) Attach the dam rubber to the glass.

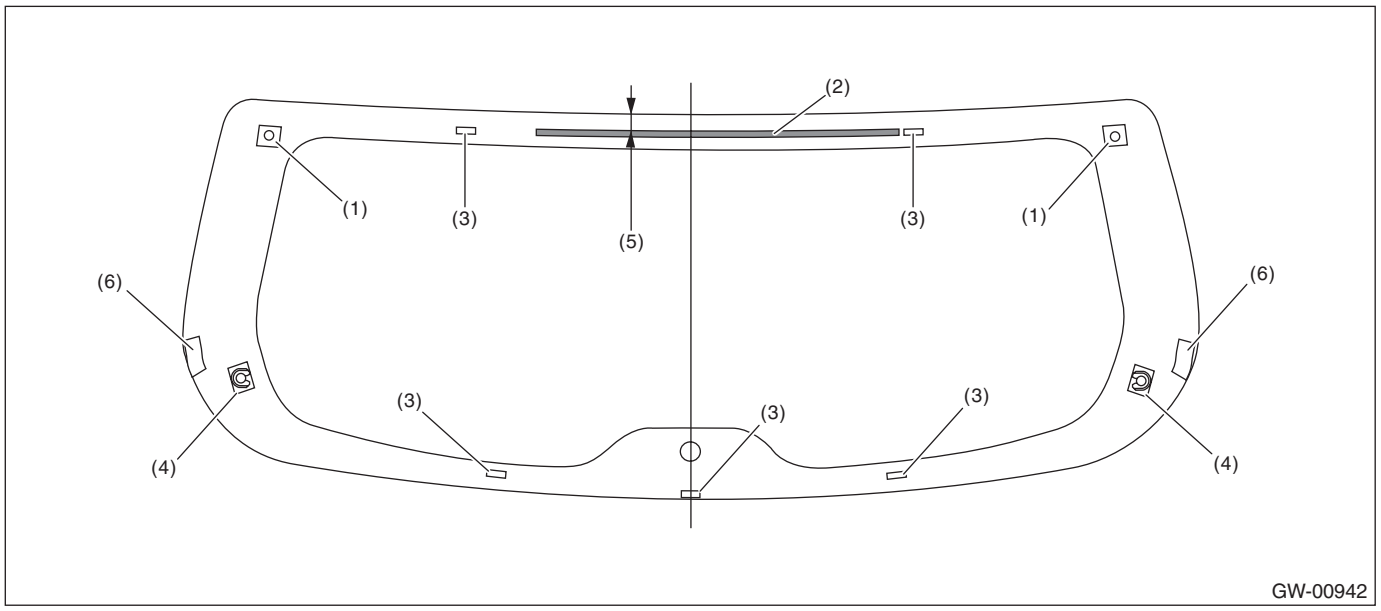

(1) Locating pin (3) Spacer (5) 15 mm (0.59 in)
(2) Dam rubber (4) Holder (6) EPT sealer

4) Install the molding to the glass.

CAUTION:
Be careful to attach the molding so that the molding has no loose or undulating part.

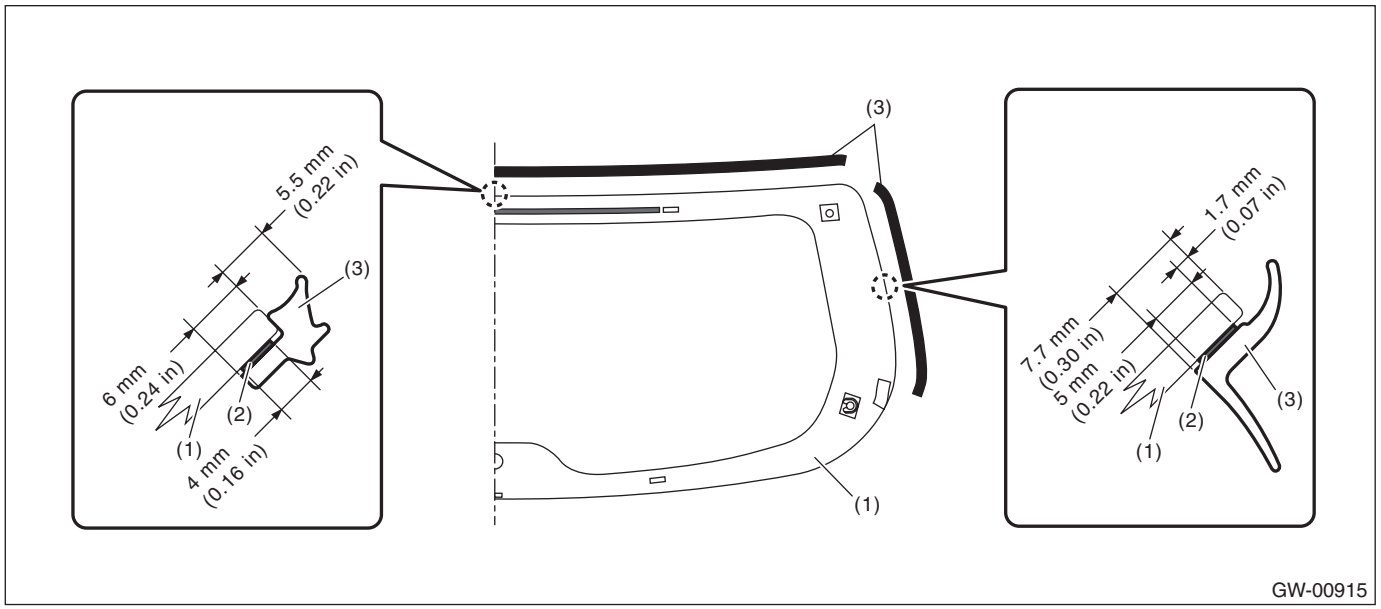

(1) Rear gate glass (2) Double-sided tape (3) Molding

5) Install the rear gate glass in the same procedure as for windshield glass. <Ref. to GW-43, INSTALLATION, Windshield Glass.>

(1) Apply the primer to the adhesive surface of glass side and body side using sponge.
(2) Apply adhesive to the glass end back surface.

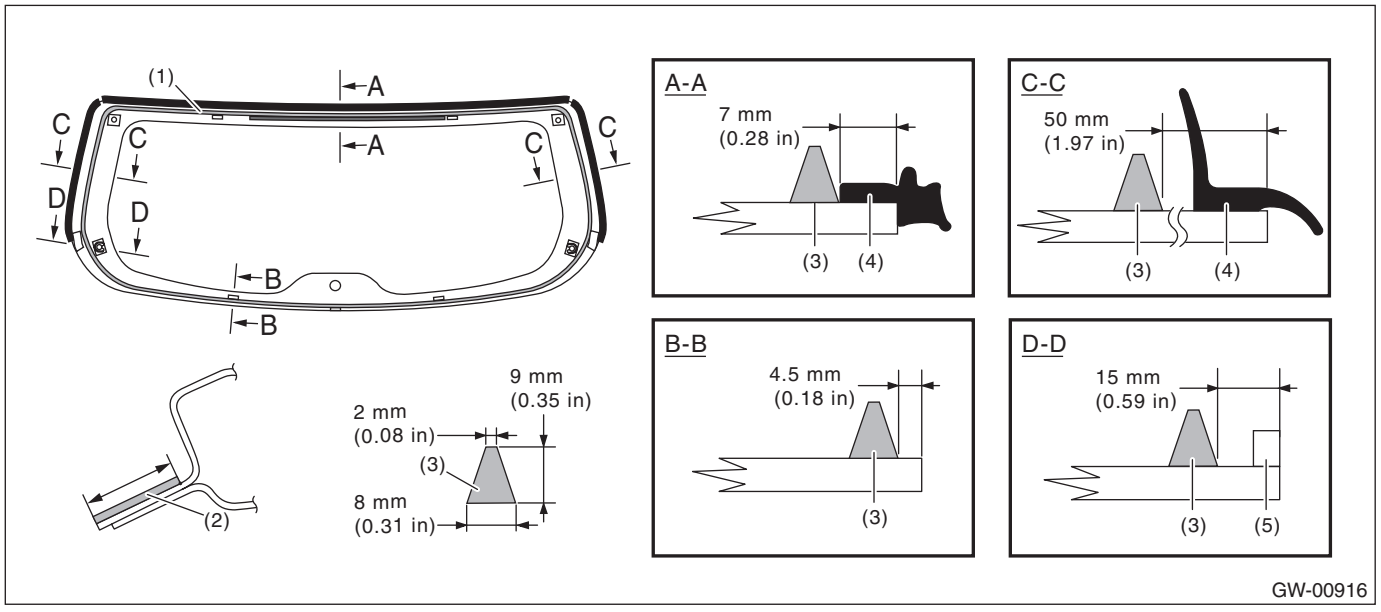

(1) Application of primer (glass side) (3) Adhesive (5) EPT sealer
(2) Application of primer (body side) (4) Molding

(3) Attach the clip to the rear gate glass holder.
(4) Insert the glass locating pins in the rear gate panel holes and install the rear gate glass.
(5) Lightly press the entire perimeter of rear gate glass for tight fit.
(6) Make flush the adhesive surface jutted out using spatula.

6) After completion of all work, allow the vehicle to stand for about 24 hours.

NOTE:
• When door is opened/closed after glass is bonded, always lower the door glass first, and then open/close it carefully.
• Move the vehicle slowly.
• For minimum drying time and vehicle standing time before driving after bonding, follow instructions or instruction manual from the adhesive manufacturer.

7) Connect the rear defogger connector and radio antenna connector.
8) Install the rear wiper arm and rear wiper motor. <Ref. to WW-41, INSTALLATION, Rear Wiper Motor.>
9) Install the rear gate garnish. <Ref. to EI-166, INSTALLATION, Rear Gate Garnish.>
10) Install the rear gate trim. <Ref. to EI-161, INSTALLATION, Rear Gate Trim.>
11) Connect the battery ground terminal.
12) After curing of adhesive, pour the water on external surface of vehicle to check that there are no water leaks.

NOTE:
When a vehicle is returned to the user, tell him or her that the vehicle should not be subjected to heavy impact for at least three days.

16.Rear Window Glass

A: REMOVAL

1) Disconnect the ground cable from battery.
2) Disconnect the rear defogger connector and radio antenna connector.
3) Remove the rear window glass in the same procedure as for windshield glass. <Ref. to GW-40, REMOVAL, Windshield Glass.>

B: INSTALLATION

1) Fabricate the cartridge nozzle tip as shown and set the sealant gun with the adhesive.

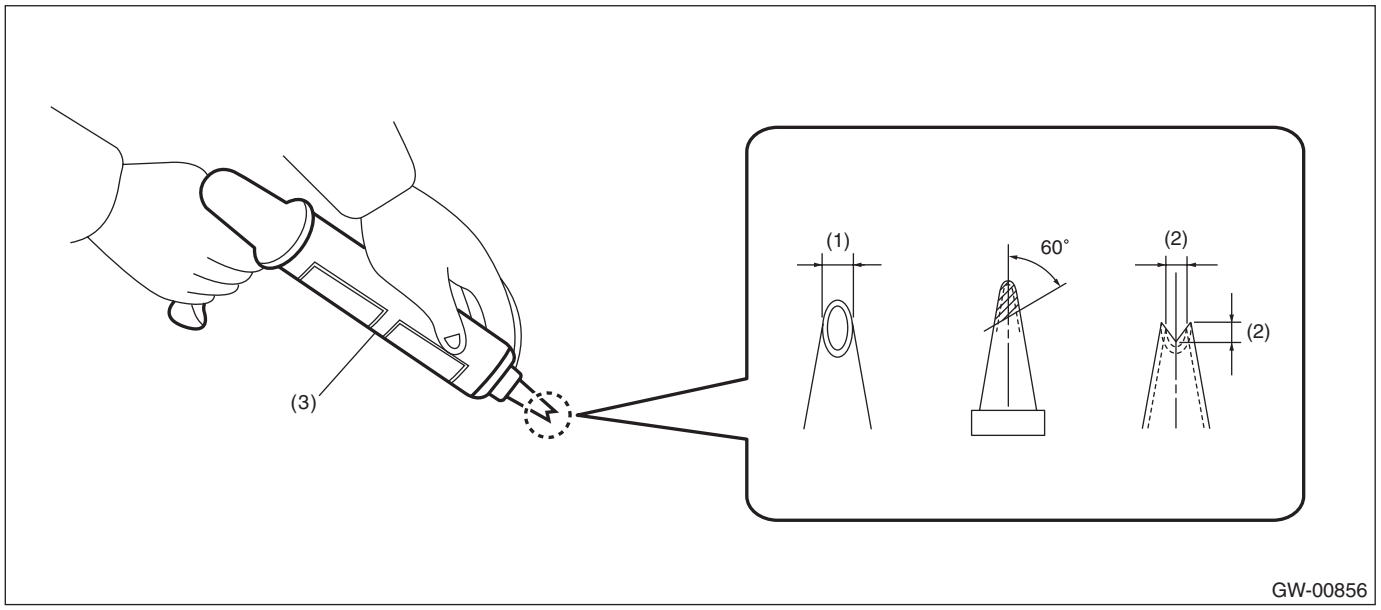

(1) 10 mm (0.39 in) (2) 8 mm (0.31 in) (3) Sealant gun

2) Prepare and clean the adhesion surfaces of the glass and body using the same procedures as for the windshield glass. <Ref. to GW-43, INSTALLATION, Windshield Glass.>
3) Attach the dam rubber to the glass.

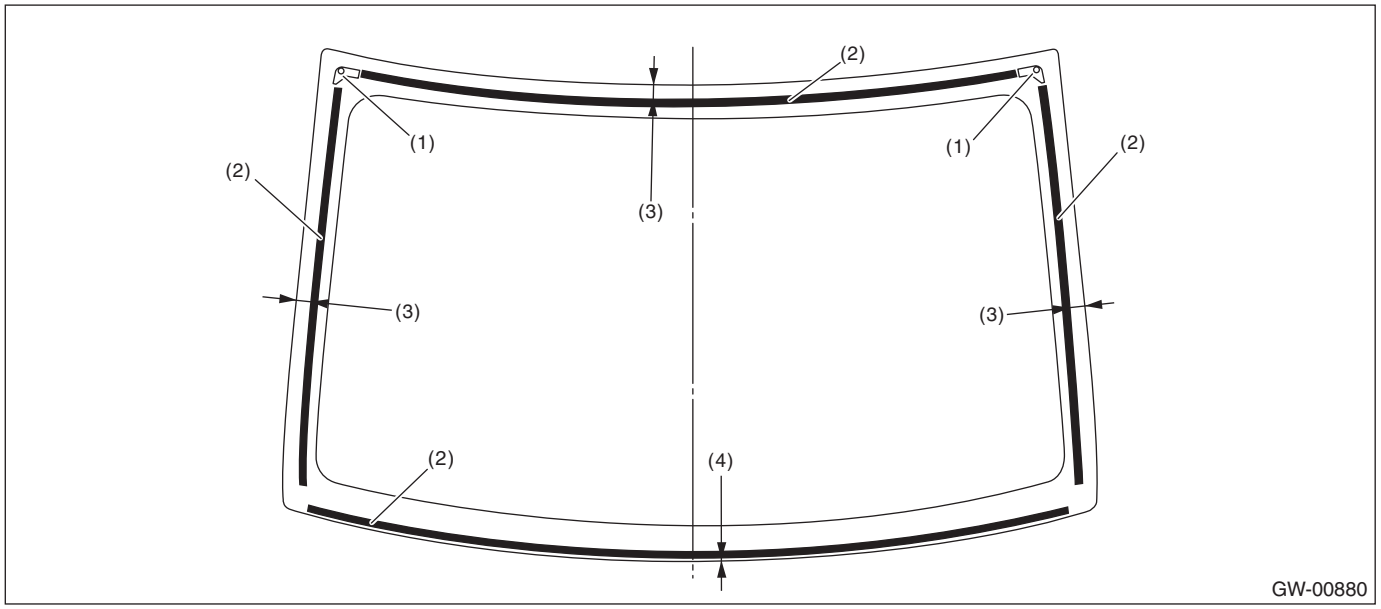

(1) Locating pin (3) 16 mm (0.63 in) (4) 1 mm (0.04 in)
(2) Dam rubber

4) Install the molding to the glass.

CAUTION:
Be careful to attach the molding so that the molding has no loose or undulating part.

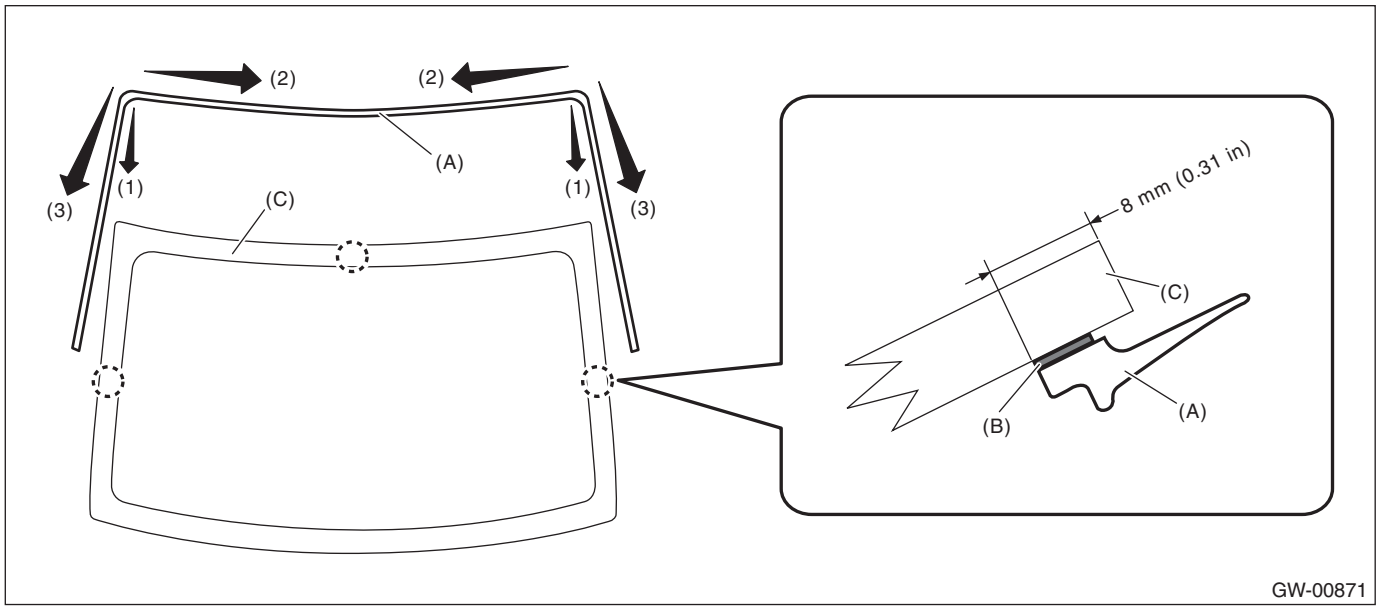

(1) Align the molding (A) to the upper ends of the glass (C).
(2) Install the molding from both corners of the upper edge toward the center.
(3) Install the molding from both corners of the upper edge toward the lower side.
(4) Firmly apply the double sided tape (B) of the molding evenly to the glass surface.

5) Install the rear glass in the same procedure as for windshield glass. <Ref. to GW-43, INSTALLATION, Windshield Glass.>

(1) Apply the primer to the adhesive surface of glass side and body side using sponge.
(2) Apply adhesive to the glass end back surface.

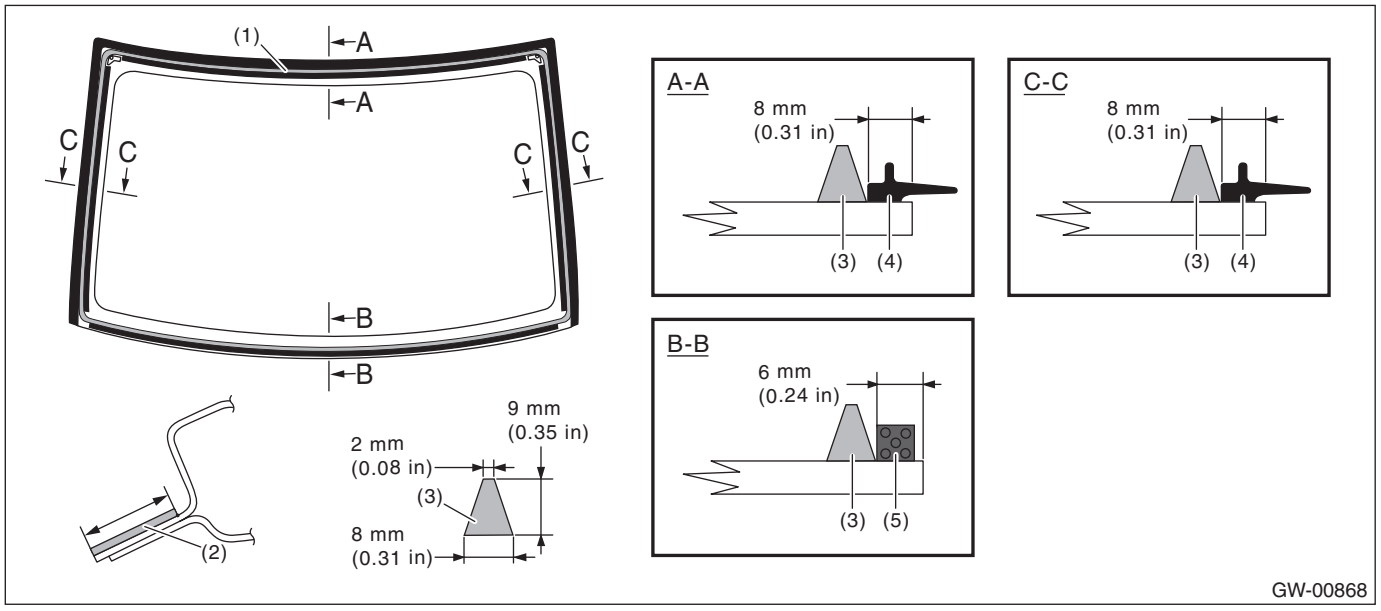

(1) Application of primer (glass side)
(2) Application of primer (body side)
(3) Adhesive
(4) Molding
(5) Dam rubber

(3) Insert the glass locating pins in the rear panel holes and install the rear glass.
(4) Lightly press the entire perimeter of rear glass for tight fit.
(5) Make flush the adhesive surface jutted out using spatula.

6) After completion of all work, allow the vehicle to stand for about 24 hours.

NOTE:
• When door is opened/closed after glass is bonded, always lower the door glass first, and then open/close it carefully.
• Move the vehicle slowly.
• For minimum drying time and vehicle standing time before driving after bonding, follow instructions or instruction manual from the adhesive manufacturer.

7) Connect the rear defogger connector and radio antenna connector.
8) Connect the battery ground terminal.
9) After curing of adhesive, pour the water on external surface of vehicle to check that there are no water leaks.

NOTE:
When a vehicle is returned to the user, tell him or her that the vehicle should not be subjected to heavy impact for at least three days.

17.Rear Window Defogger System

A: WIRING DIAGRAM

Refer to “Rear Defogger System” in the wiring diagram. <Ref. to WI-212, WIRING DIAGRAM, Rear Defogger System.>

B: INSPECTION

1. CHECK SYSTEM

Symptoms	Inspection order
Rear window defogger does not operate.	1. Check the fuse. 2. Check the rear defogger relay. 3. Check the rear window defogger switch. 4. Check the heat wire. 5. Check the wiring harness. 6. Check body integrated unit.

NOTE:
Rear window defogger system can be customized using the Subaru Select Monitor, when the customize setting {A/C ECM setting} of the body integrated unit is set to With.

System name	Initial setting	Customize setting
Rr Defogger op. mode	OFF after 15 min.	Repeat 15 min. operation and 2 min. stop.

2. CHECK WITH SUBARU SELECT MONITOR

CAUTION:
Check whether the rear defogger operation mode setting is in initial setting or customize setting before performing inspection.

1) Check the input signal when the rear window defogger switch is operated using Subaru Select Monitor.
   (1) Prepare the Subaru Select Monitor. <Ref. to GW-7, PREPARATION TOOL, General Description.>
   (2) Turn the ignition switch to ON (engine OFF) and run the “PC application for Subaru Select Monitor”.
   (3) On «System Selection Menu» display, select {Integ. unit mode}.
   (4) Select the {Rr defogger output} on {Current Data Display & Save}.
   (5) Check the displayed data (ON/OFF) by operating the rear window defogger switch.
2) Check the operation with rear window defogger switch ON.
• When customize setting is set as “Continuous”, it is normal if the 15-minute operation and 2-minute stop repeats.
• When customize setting is “Normal”, it is normal if the operation lasts for 15 minutes and then turns OFF.
3) When the operation in 2) above fails, replace the body integrated unit.

3. HEAT WIRE INSPECTION

CAUTION:
Use a dry soft cloth to wipe off dirt on the glass along the heat wires with care not to damage the heat wires.

1) Prepare the following checking items.
• Liquid crystal thermograph sheet (Approximate Size: 300 × 300 mm (11.8 × 11.8 in) and thermal temperature: 35 — 40°C (95 — 104°F))
• Aluminum foil
2) Turn the ignition switch to ON.
3) Turn the defogger switch to ON.

4) Push the liquid crystal thermograph sheet from the outside of the rear glass.

NOTE:
Use the liquid crystal thermograph sheet every range it is separated with the separate line.

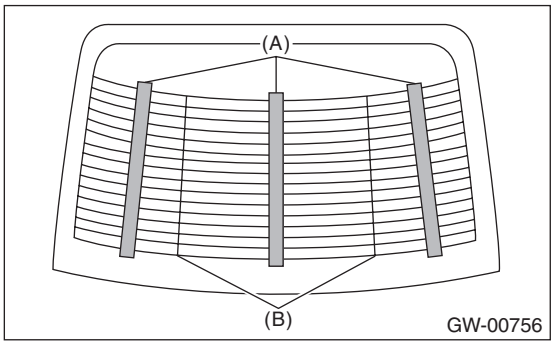

(A) Liquid crystal thermograph sheet
(B) Separate line

5) Determine the faulty heat wire by checking the color of the liquid crystal thermograph sheet.

Liquid crystal thermograph sheet	Criteria
Change occurred (red → blue)	Normal
No change (black)	Open

NOTE:
- Check from the inside of the glass if the liquid crystal thermograph sheet does not change.
- The time for the color change may differ depends on the surface temperature of the glass.

6) Wrap a piece of aluminum foil around the tip of tester probe and press it against the heat wire with your finger.

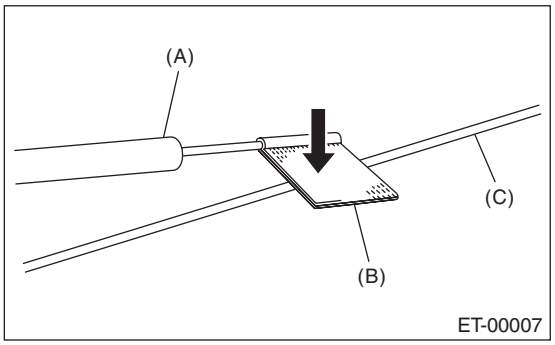

(A) Tester probe
(B) Aluminum foil
(C) Heat wire

7) To both ends of the section that has been found to include an open in the step 5), apply the tester positive (+) probe and the negative (–) probe.

8) Move the tester probe on the negative (–) side slowly along the heat wire. If voltage changes from zero while moving the tester probe, heat wire is open at the voltage change point.

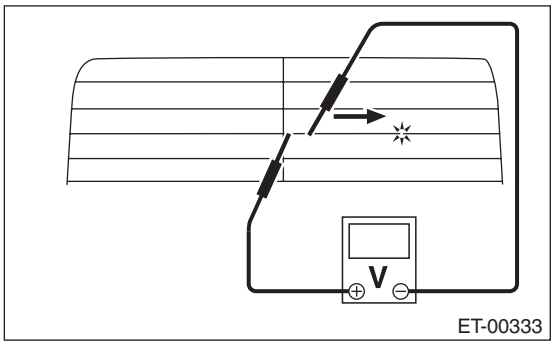

9) Repair the heat wire that determines the place of the open circuit. <Ref. to GW-57, REPAIR, Rear Window Defogger System.>

C: REPAIR

1) Clean the broken portion with alcohol or white gasoline.
2) Mask both side of wire with masking tape.
3) Apply the conductive silver composition to the broken portion.

Conductive silver composition:
by Permatex
QUICK GRID

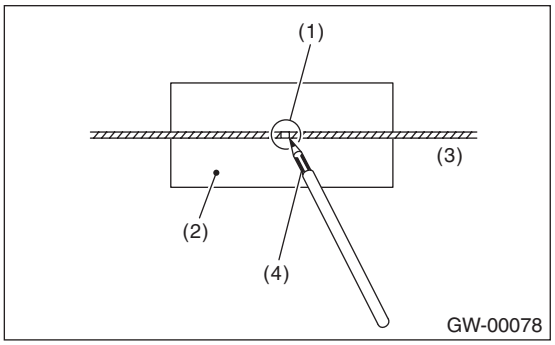

(1) Broken portion
(2) Masking tape
(3) Broken wire
(4) Conductive silver composition

4) Dry using a dryer after applying the composition.
5) After repair, check the wire.

18.Rear Quarter Glass

A: REMOVAL

1) Disconnect the ground cable from battery.
2) Remove the rear quarter trim. <Ref. to EI-114, OUTBACK MODEL, REMOVAL, Rear Quarter Trim.>
3) Remove the rear quarter glass in the same procedure as for windshield glass. <Ref. to GW-40, REMOVAL, Windshield Glass.>

B: INSTALLATION

1) Fabricate the cartridge nozzle tip as shown and set the sealant gun with the adhesive.

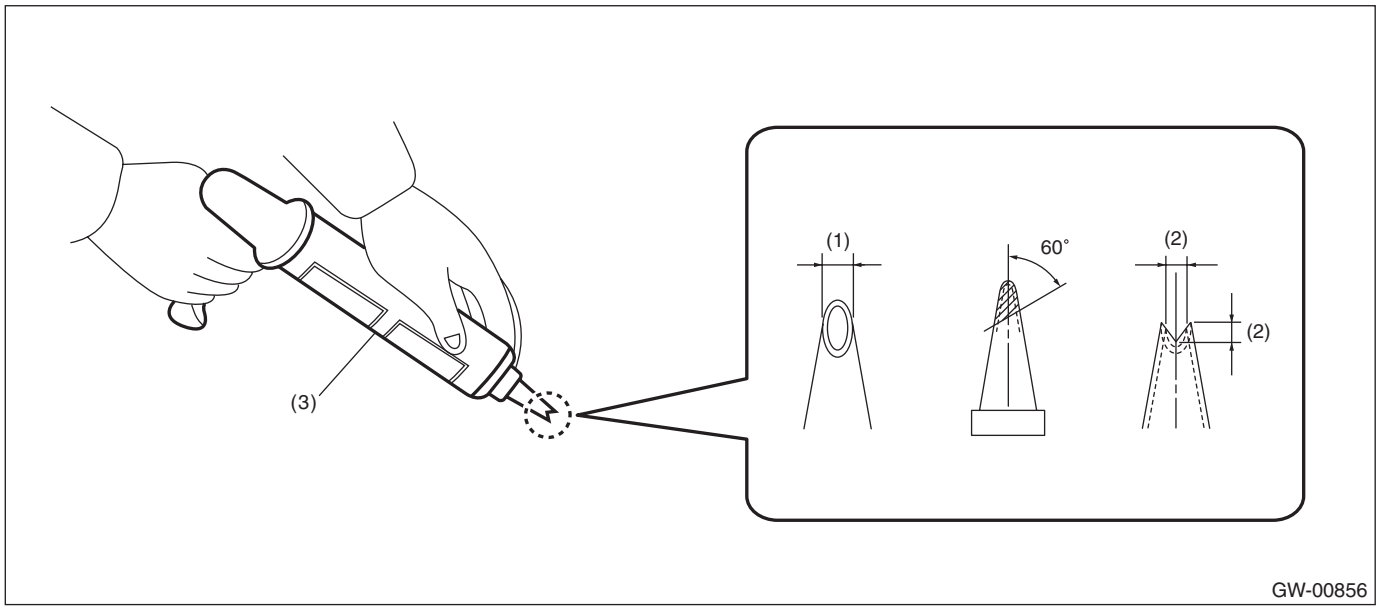

(1) 10 mm (0.39 in) (2) 8 mm (0.31 in) (3) Sealant gun

2) Prepare and clean the adhesion surfaces of the glass and body using the same procedures as for the windshield glass. <Ref. to GW-43, INSTALLATION, Windshield Glass.>
3) Attach the dam rubber to the glass.

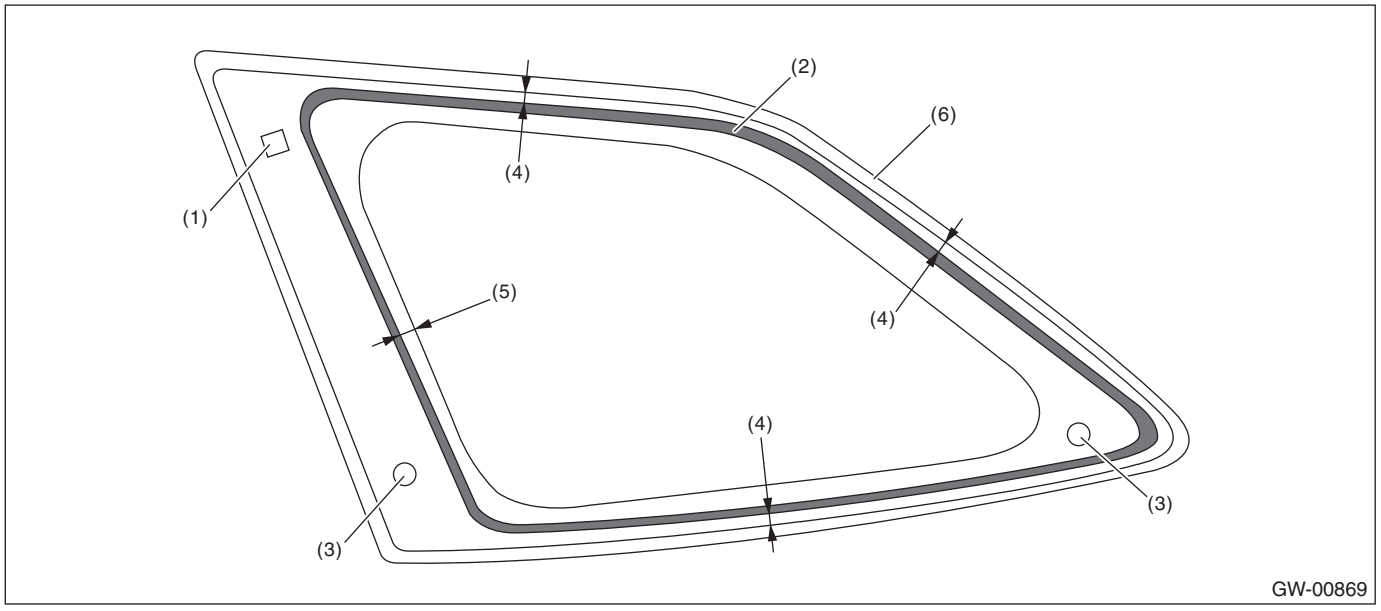

(1) Fastener (3) Clip (5) 12 mm (0.47 in)
(2) Dam rubber (4) 8 mm (0.31 in) (6) Molding

4) Install the rear quarter glass in the same procedure as for windshield glass. <Ref. to GW-43, INSTALLATION, Windshield Glass.>
(1) Apply the primer to the adhesive surface of glass side and body side using sponge.
(2) Apply adhesive to the glass end back surface.

NOTE:
Use the molding terminal as a reference.

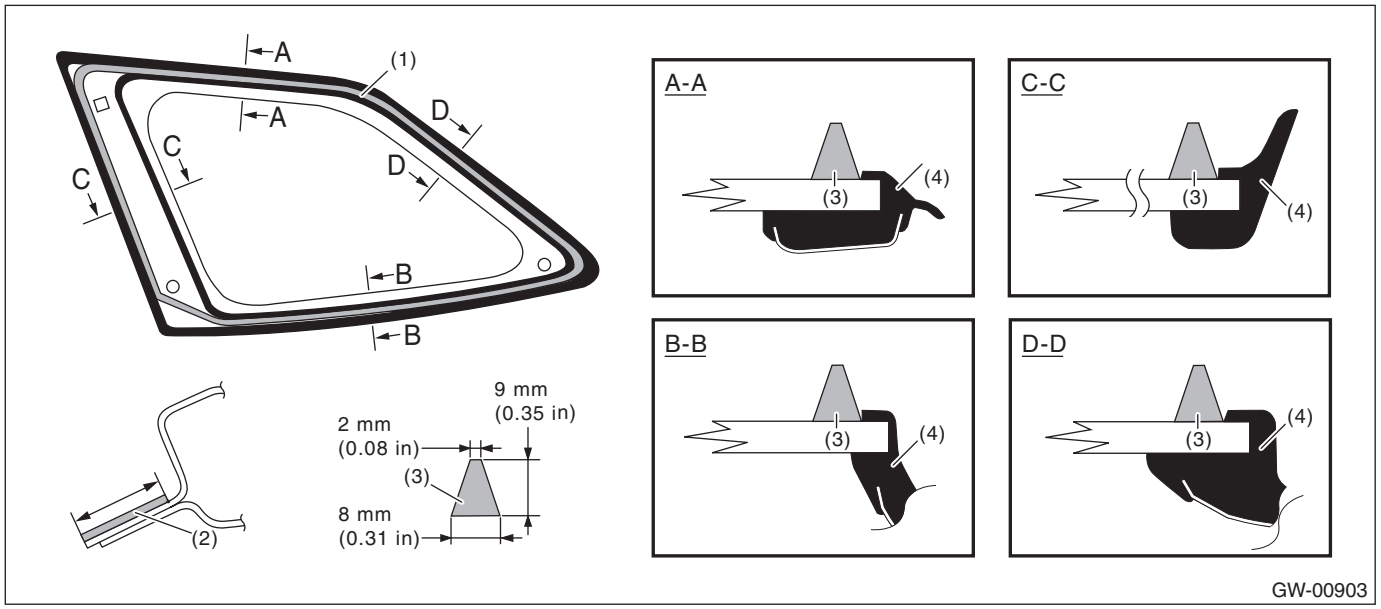

(1) Application of primer (glass side) (3) Adhesive (4) Molding
(2) Application of primer (body side)

(3) Mount the fastener on the vehicle body.
(4) Insert the clips in the side panel holes and install the rear quarter glass.
(5) Lightly press the entire perimeter of rear quarter glass for tight fit.
(6) Make flush the adhesive surface jutted out using spatula.

5) After completion of all work, allow the vehicle to stand for about 24 hours.

NOTE:
• When door is opened/closed after glass is bonded, always lower the door glass first, and then open/close it carefully.
• Move the vehicle slowly.
• For minimum drying time and vehicle standing time before driving after bonding, follow instructions or instruction manual from the adhesive manufacturer.

6) After curing of adhesive, pour the water on external surface of vehicle to check that there are no water leaks.

NOTE:
When a vehicle is returned to the user, tell him or her that the vehicle should not be subjected to heavy impact for at least three days.

7) Install the rear quarter trim. <Ref. to EI-119, INSTALLATION, Rear Quarter Trim.>
8) Connect the battery ground terminal.

19.Rearview Mirror

A: REMOVAL

CAUTION:
Be careful not to damage the mirror surface and windshield glass.
1) Remove the TORX® bolt, and then slide the rear view mirror to remove.

Preparation tool: TORX® T20

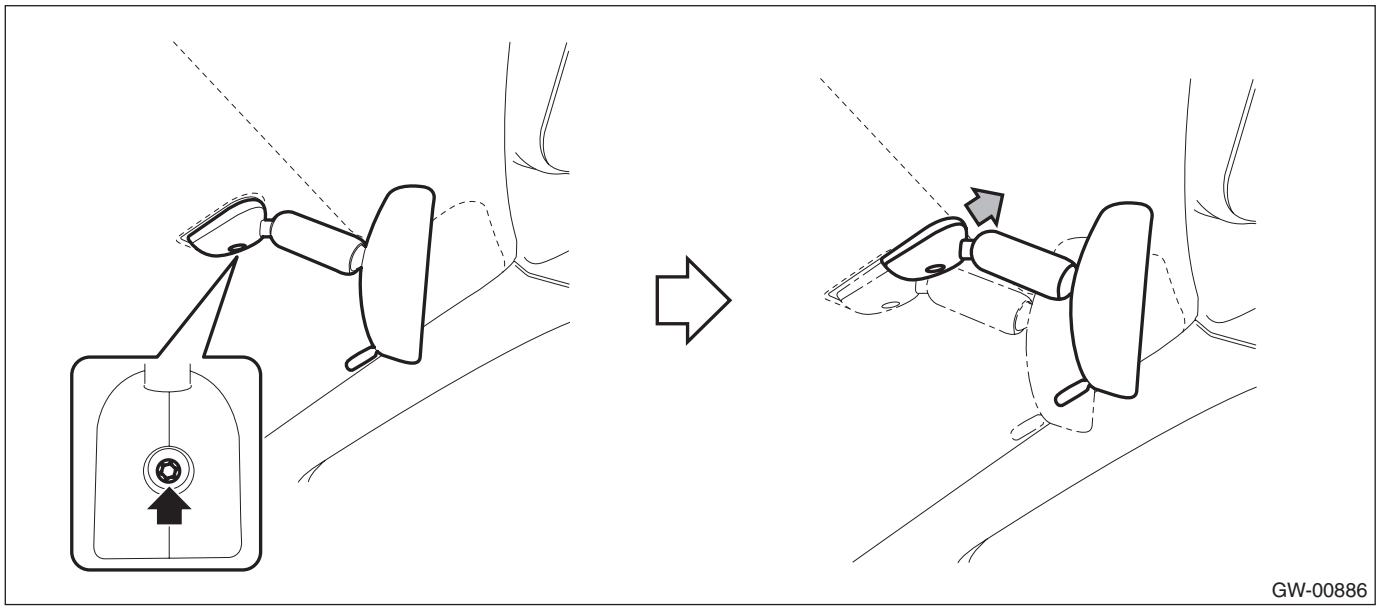

2) When the mirror mount is damaged, use something like piano wire or a spatula to remove.

B: INSTALLATION

CAUTION:
When tightening the mounting TORX® screw, be sure to observe the tightening torque. Otherwise, the mount may be damaged in over-torque conditions.
Install each part in the reverse order of removal.

Tightening torque:
Refer to "COMPONENT" of "General Description". <Ref. to GW-6, MIRROR, COMPONENT, General Description.>

NOTE:
If the mirror mount is removed, it is attached according to the following procedures.
1. Remove the old adhesive completely.
2. Attach the mirror mount by matching with the mark on the windshield glass.
3. Make sure that the mirror mount is firmly adhered.

Adhesive:
REPAIR KIT IN MR (Part No. 65029FC000) or equivalent

C: INSPECTION

Check the mirror and mirror mount for damage.

20.Rearview Mirror (RCD Model)

A: REMOVAL

CAUTION:
Be careful not to damage the mirror surface and windshield glass.

1) Disconnect the ground cable from battery.
2) Remove the rearview mirror.
   (1) Slide the upper section of the cover, and release the claws in the lower section, then remove the harness cover (a).
   (2) Disconnect the rearview mirror connector (b).

CAUTION:
- **Be careful not to pull the harness.**
- **In order to prevent damaging the mirror and harness, remove the connector with the cap as a unit. When removing the cap, disconnect the connector first.**

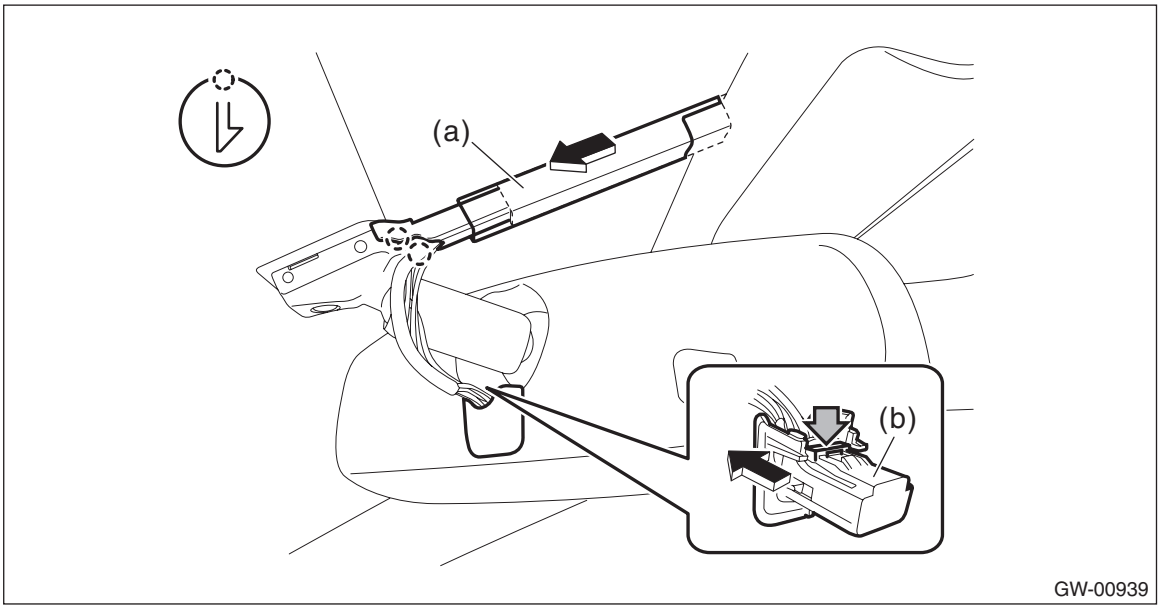

(3) Remove the TORX® bolt, and then slide the rear view mirror to remove.

Preparation tool: TORX® T20

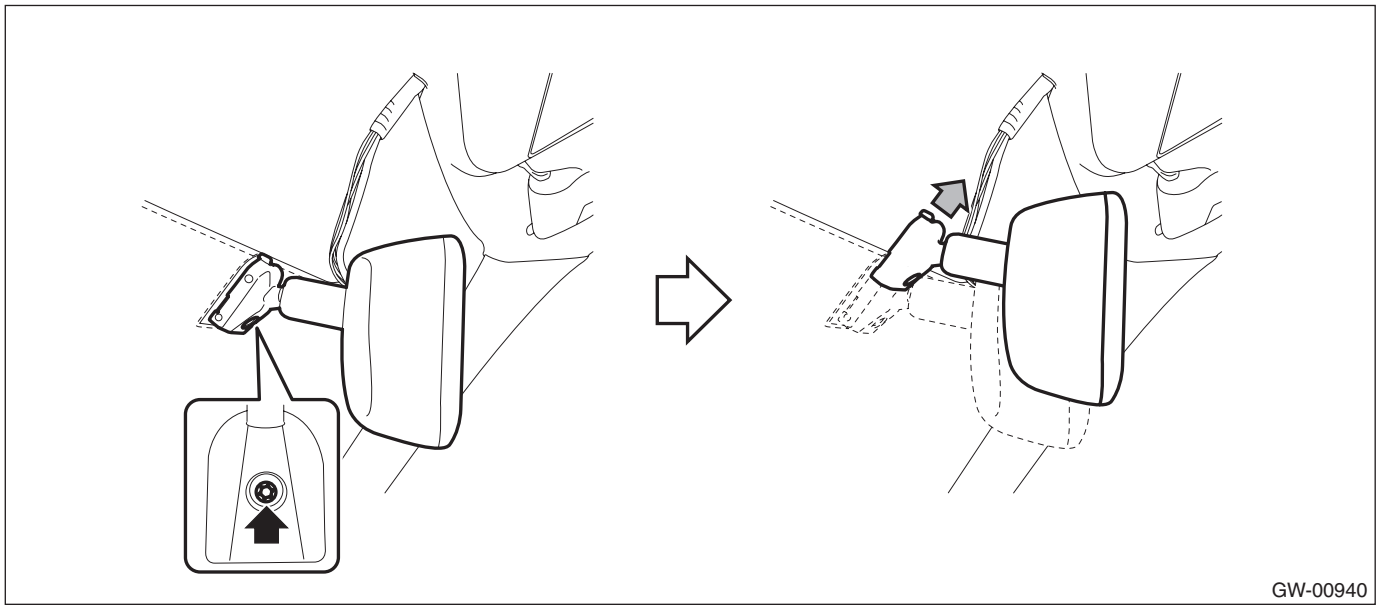

3) When the mirror mount is damaged, use something like piano wire or a spatula to remove.

B: INSTALLATION

CAUTION:
When tightening the mounting TORX® bolt, be sure to observe the specified torque. Otherwise, the mount may be damaged in over-torque conditions.

1) Install each part in the reverse order of removal.
2) Perform calibration and zone setting of the rearview mirror (RCD). <Ref. to GW-62, ADJUSTMENT, Rearview Mirror (RCD Model).>

Tightening torque:
Refer to "COMPONENT" of "General Description". <Ref. to GW-6, MIRROR, COMPONENT, General Description.>

C: ADJUSTMENT

CAUTION:
• When the rearview mirror (RCD) is removed or replaced, perform calibration and zone setting by following the procedures below.
• The zone setting of the vehicle is set to zone "8" at factory setting.

1. CALIBRATION

1) Before performing calibration, check the following items.
- There is a sufficient distance from a big metal object or a building.
- Vehicle is parked on a level surface.
- The switch of unnecessary accessories (A/C system, audio system and lighting system) is turned to "OFF".
- All doors are closed.

2) Start the engine.
3) Hold down the multi-function button (a) for six to nine seconds. Once calibration mode starts, "C" is displayed on the screen (b).

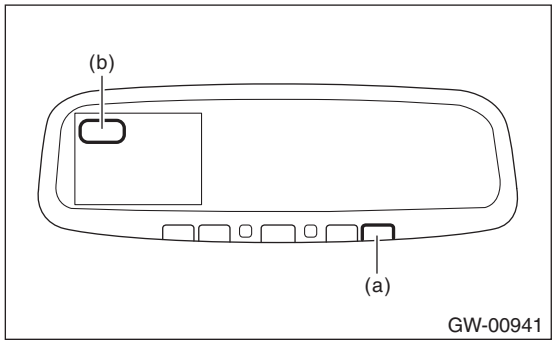

4) Drive the vehicle in a circle until the display of "C" on the screen goes off. (Approx. two or three times)
5) Display the compass to check the operation.

CAUTION:
The mirror may not be able to perform the reading correctly. Therefore, when the compass operates only to the specific direction, repeat steps 3) to 5).

2. ZONE SETTING

1) Refer to the compass zone map to check the zone number of area you use the vehicle.

Compass zone map

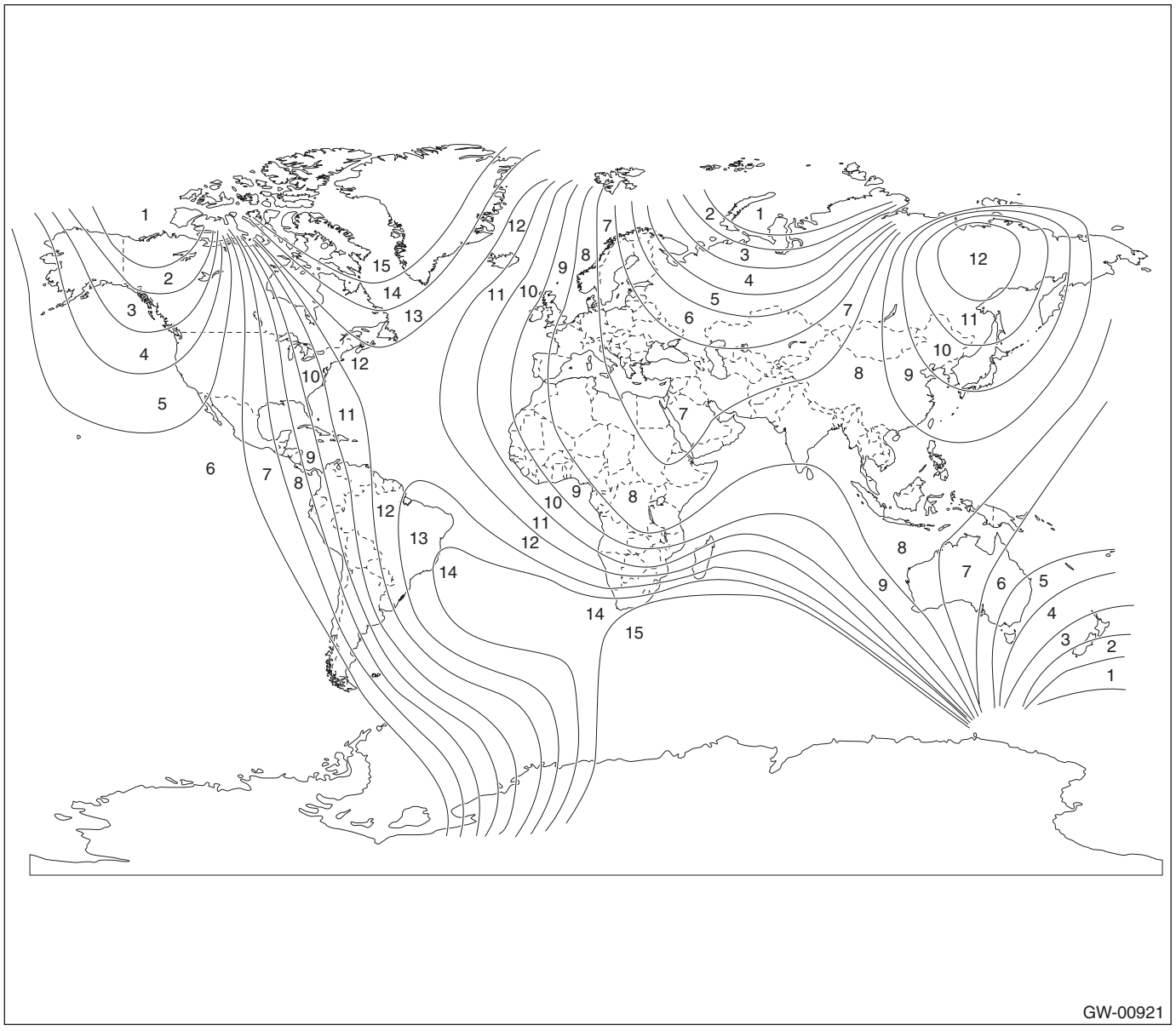

2) Turn the ignition switch to ON.

3) Hold down the multi-function button (a) for three to six seconds. Once zone setting mode starts, the zone number that is already set is displayed on the screen (b).

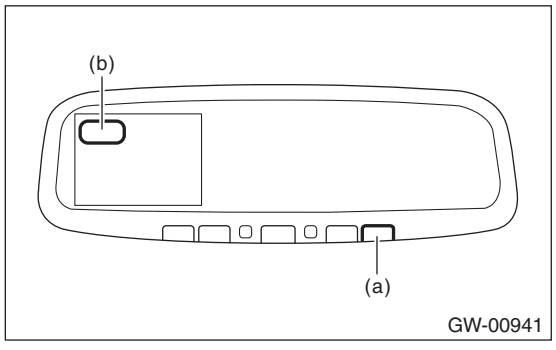

4) Push the multi-function button repeatedly until the zone number you want to set is displayed.

NOTE:
If you leave the multi-function button for three seconds, the zone setting mode is completed.

21.Wiper Deicer System

A: WIRING DIAGRAM

Refer to “Wiper Deicer System” in the wiring diagram. <Ref. to WI-255, Wiper Deicer System.>

B: INSPECTION

1. CHECK SYSTEM

NOTE:
- The wiper deicer does not operate when the ambient temperature becomes 5°C (41°F) or more.
- The wiper deicer operates with the rear window defogger at the same time.
- It is possible to perform a forced operation if you keep holding the rear window defogger switch for 3 seconds or more.

Symptoms	Inspection order
Wiper deicer does not operate.	1. Check the fuse. 2. Check the wiper deicer relay. 3. Check the rear window defogger switch. 4. Check the heat wire. 5. Check the wiring harness. 6. Check body integrated unit.

NOTE:
- Wiper deicer system can be customized using the Subaru Select Monitor, when the customize setting {A/C ECM setting} of the body integrated unit is set to With.
- Set the system using the Rr Defogger op. mode, and setting will be the same as rear defogger system setting.

System name	Initial setting	Customize setting
Rr Defogger op. mode	OFF after 15 min.	Continuous operation*

*: When one of the following conditions occurs, continuous operation is suspended and turned off after 15 minutes.
- Ambient temperature at 5°C (41°F) or more continues for 10 seconds.
- Malfunction occurs on ambient sensor.
- Vehicle speed of 15 km/h (9 MPH) or less continues 15 minutes (OFF when conditions are met)
- Battery voltage remains at 10 V or less for 30 seconds.
- Malfunction occurs in CAN communication.

2. CHECK WITH SUBARU SELECT MONITOR

CAUTION:
Before performing the inspection, check the following settings.
- **Wiper deicer setting → “support”. If “no support”, set to “support” using customize setting.**
- **Rr defogger op. mode setting → Initial setting or customize setting.**

1) Check the input signal when the rear window defogger switch is operated using Subaru Select Monitor.
   (1) Prepare the Subaru Select Monitor. <Ref. to GW-7, PREPARATION TOOL, General Description.>
   (2) Turn the ignition switch to ON (engine OFF) and run the “PC application for Subaru Select Monitor”.
   (3) On «System Selection Menu» display, select {Integ. unit mode}.
   (4) Select the {wiper deicer output} on {Current Data Display & Save}.
   (5) Check the displayed data (ON/OFF) by operating the rear window defogger switch.
2) Check the operation with rear window defogger switch ON.
- When customize setting is set as “Continuous”, it is normal if the 15-minute operation and 2-minute stop repeats.
- When customize setting is “Normal”, it is normal if the operation lasts for 15 minutes and then turns OFF.

3) When the operation in 2) above fails, replace the body integrated unit.

3. HEAT WIRE INSPECTION

Refer to “HEAT WIRE INSPECTION” of “Rear Window Defogger System”. <Ref. to GW-55, HEAT WIRE INSPECTION, INSPECTION, Rear Window Defogger System.>

NOTE:
Heat wire inspection needs removing/installing procedure of instrument panel assembly.

C: REPAIR

Refer to “REPAIR” of “Rear Window Defogger System”. <Ref. to GW-57, REPAIR, Rear Window Defogger System.>

NOTE:
Heat wire repair needs removing/installing procedure of instrument panel assembly.

BODY STRUCTURE

BS

Page
1. General Description 2

1. General Description

A: SPECIFICATION

Refer to “Body Repair Manual” for general description of body structure, reference points and reference dimensions.

INSTRUMENTATION/DRIVER INFO

IDI

		Page
1.	General Description	2
2.	Relay and Fuse	4
3.	Combination Meter System	5
4.	Clock System	17
5.	Combination Meter	21
6.	Speedometer	27
7.	Tachometer	28
8.	Fuel Gauge	29
9.	ECO Gauge	30
10.	Multi Display	31

1. General Description

A: SPECIFICATION

- Combination meter

Meter, display	Operation method, display method	Drive control	When checking the indicator needle operation/ needle reading operation
Speedometer	Stepping motor type	Combination meter	—
Tachometer			
ECO gauge			
Fuel gauge			
CVT/ATF temperature warning light	LED	Combination meter	On/Off
ABS warning light			
Seat belt warning light			
AWD warning light (Except for MT model)			
EPB warning light (C6 model)			
Low washer warning light			
Low engine oil warning light			
Tire air pressure warning light (except for C5 and C6 models)			
Hill hold ON indicator light (MT model)			
VDC warning light/VDC operation indicator light			
VDC OFF indicator light			
HI-beam indicator light			
Lighting indicator light			
Front fog light indicator light			
Malfunction indicator light (except for C6 model)			
Meter illumination back light			Light ON
LCD back light			Light ON
Engine coolant temperature warning light (red)			On (red)/Off
Engine coolant temperature indicator light (blue)			Off/On (blue)
Fuel level warning light			On/Off (Turns on near E.)
Malfunction indicator light (C6 model)		ECM	Turns on or off according to module control
Oil pressure warning light		Oil pressure switch	
Airbag warning light		Airbag CM	
Charge warning light		Generator	
Turn signal indicator light		Turn signal and hazard unit	
Security/immobilizer indicator light		Body integrated unit	
Parking brake/brake fluid level warning light (C6 model)		Combination meter/brake fluid level switch	On/Turns on or off according to module control
Parking brake/brake fluid level /EPB warning light (except for C6 model)			
Odo/Trip indicator	LCD	Combination meter	—
Shift indicator			
Select lever position indicator (except for MT model)			
Door open/vehicle frame indicator			
CRUISE mode indicator			

- Clock

Display	Display method
Cruising distance, average fuel economy, instantaneous fuel economy, ambient temperature, current time	VFD
Passenger's airbag ON indicator	LED
Passenger's airbag OFF indicator	
Passenger' seat belt warning light	

B: CAUTION

- Before disassembling or reassembling parts, always disconnect the battery ground cable from battery. When replacing the audio, control module and other parts provided with memory functions, record the memory contents before disconnecting the battery ground cable. Otherwise, the memory is cleared.
- Reassemble the parts in the reverse order of disassembly procedure unless otherwise indicated.
- Use gloves to avoid damage and getting fingerprints on the glass surface and meter surfaces.
- Do not apply an excessive force on the printed circuit.
- Do not drop or otherwise apply impact.
- Connect the connectors securely during reassembly.
- After reassembly, make sure that the functional parts operate normally.
- When the combination meter of model with immobilizer or with keyless access has been replaced, be sure to perform the registration of immobilizer.

C: PREPARATION TOOL

1. SPECIAL TOOL

ILLUSTRATION	TOOL NUMBER	DESCRIPTION	REMARKS
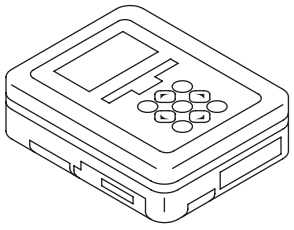 ST1B022XU0	1B022XU0	SUBARU SELECT MONITOR III KIT	Used for troubleshooting the electrical system.

2. GENERAL TOOL

TOOL NAME	REMARKS
Circuit tester	Used for measuring resistance and voltage.

2. Relay and Fuse

A: LOCATION

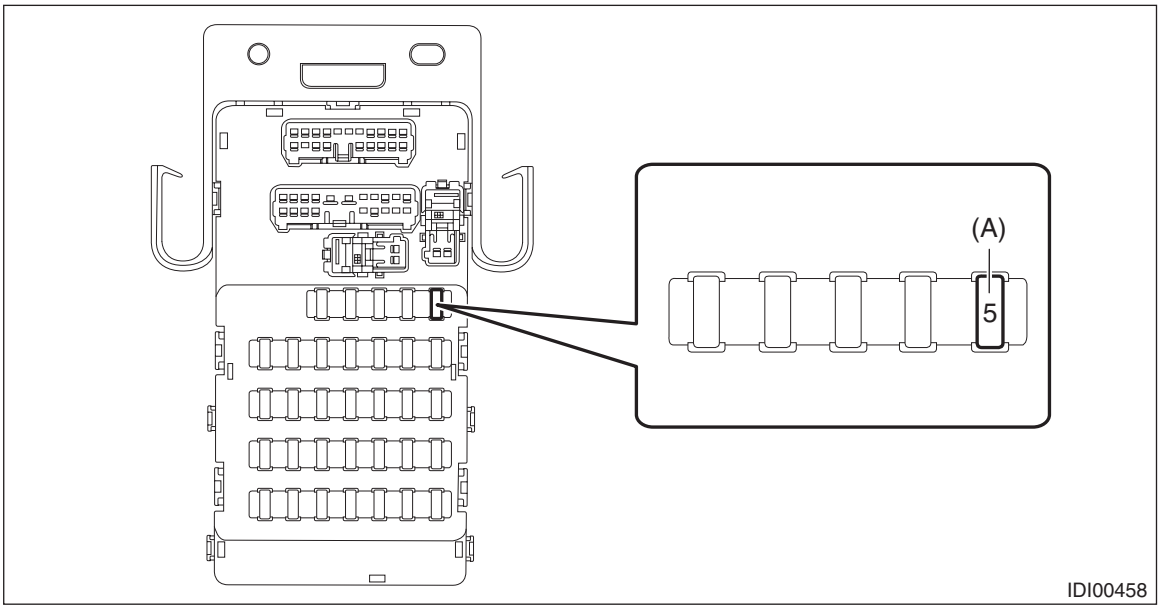

Relay & fuse box	Fuse 7.5A (combination meter, clock)	(A)

NOTE:
For other related fuses, refer to the wiring diagram. <Ref. to WI-15, Power Supply Circuit.>

B: INSPECTION

1. CHECK FUSE.

1) Remove the fuse and inspect visually.
2) If the fuse is blown out, replace the fuse.

NOTE:
If the fuse is blown again, check the system wiring harness.

3. Combination Meter System

A: WIRING DIAGRAM

Refer to “Combination Meter System” in the wiring diagram. <Ref. to WI-98, WIRING DIAGRAM, Combination Meter System.>

B: ELECTRICAL SPECIFICATION

1. COMBINATION METER TERMINAL ARRANGEMENT

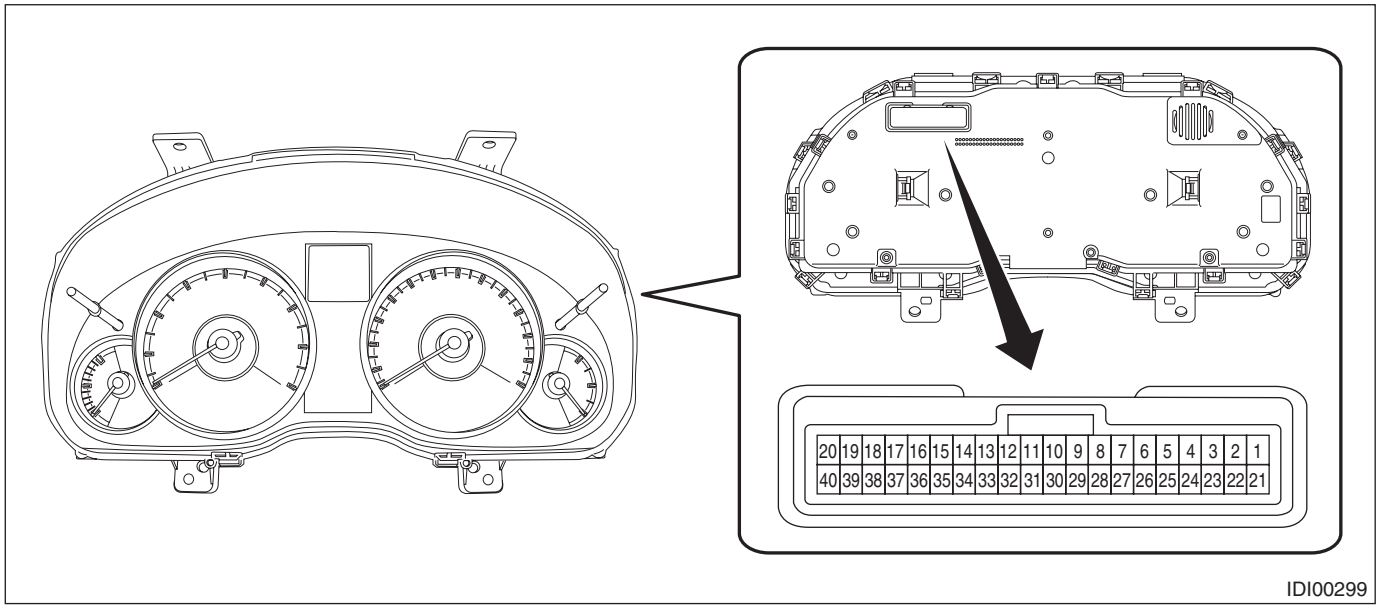

Connector

Terminal No.	Item	Measuring condition	Standard
3 (U-ART com.)	—	Cannot be measured	—
6 ← → Chassis ground	Voltage	Malfunction indicator light off → on	0 V → 10 — 14 V
7 ← → Chassis ground	Voltage	Charge warning light off → on	0 V → 10 — 14 V
8 ← → Chassis ground	Voltage	Oil pressure warning light off → on	0 V → 10 — 14 V
10 ← → Chassis ground	Voltage	LH turn indicator off → on	0 V → 10 — 14 V
11 ← → Chassis ground	Voltage	RH turn indicator off → on	0 V → 10 — 14 V
12 ← → Chassis ground	Voltage	Airbag warning light on → off	10 — 14 V → 0 V
14 ← → Chassis ground	Voltage	Auto headlight beam leveler warning light off → on	0 V → 10 — 14 V
15 ← → Chassis ground	Voltage	Security/immobilizer indicator light off → on	0 V → 10 — 14 V
19 (IG) ←→ Chassis ground	Voltage	IG OFF → ON	0 V → 10 — 14 V
20 (+B) ←→ Chassis ground	Voltage	Always	10 — 14 V
24 ← → Chassis ground	Voltage	Brake fluid/parking brake warning light off → on	0 V → 10 — 14 V
29 ← → Chassis ground	Waveform	Speedometer	Pulse generation
30 ← → Chassis ground	Waveform	Tachometer	Pulse generation
32 (CAN–) ←→ Chassis ground	—	Cannot be measured	—
33 (CAN+) ←→ Chassis ground	—	Cannot be measured	—
35 ← → Chassis ground	—	Cannot be measured	—
36 ← → Chassis ground	Voltage	Ambient sensor	0 V → 0.1 — 5 V
37 ← → Chassis ground	Resistance	Always	Less than 1 Ω
38 ← → Chassis ground	Resistance	Always	Less than 1 Ω
39 (GND) ←→ Chassis ground	Resistance	Always	Less than 1 Ω

C: OPERATION

1. SELF-DIAGNOSIS DISPLAY MODE

The self-diagnosis (checking of each meter, warning light, indicator light, illumination, LCD) of combination meter can be performed in the following procedure.

CAUTION:
Perform the steps described in 1) through 4) within 10 seconds.
1) Within 3 seconds after turning the ignition switch to ON, set the lighting switch to tail light or headlight position.
2) Press the trip meter knob three times.
3) Turn the lighting switch to OFF, and press the trip meter knob three times.
4) Set the lighting switch to tail light or headlight position again, and press the trip meter knob three times.

NOTE:
• When pressing the trip meter knob four times, the display changes to DTC display mode. <Ref. to IDI-9, DTC DISPLAY MODE, OPERATION, Combination Meter System.>
• When pressing the trip meter knob five times, the display changes to dealer customize mode. <Ref. to IDI-10, DEALER CUSTOMIZE MODE, OPERATION, Combination Meter System.>
• When the self-diagnosis function operates, the warning light, indicator light, and LCD display checks are performed. After this, the buzzer will sound for 0.5 seconds every time the trip meter knob is pressed, and operation checks are performed in the order of meter indicator needle operation, meter indicator needle indication, and LCD. Turn the ignition switch to OFF to cancel the self-diagnosis function.
• When the engine starts during diagnosis, the self-diagnosis function is not cancelled, however, once the vehicle starts driving, the self-diagnosis function is deactivated automatically.
5) Go to “Check meter indicator operation”.
Check meter operation, warning light, indicator light, illumination and LCD.

NOTE:
• After “_S_1” is displayed on the LCD, the meter indicator operation check mode is initiated.
• Each of the meter indicator operation display and LCD display switches every 6 seconds.

Meter indicator	LCD display, illumination	Warning light, indicator light
MIN indication ↓ MAX indication	ILL1 (Min. brightness) ↓*4 ILL6 (Max. brightness)	*1, *2, *3
MAX indication ↓ MIN indication	ILL6 (Max. brightness) ↓*4 ILL1 (Min. brightness)	

*1: Warning lights and indicator lights controlled by the meter drive circuit are illuminated. <Ref. to IDI-2, SPECIFICATION, General Description.>
*2: Warning lights and indicator lights controlled by other module are turned on/off according to the module control. <Ref. to IDI-2, SPECIFICATION, General Description.>
*3: Engine coolant temperature warning light illuminates in red.
*4: Display for one second for each level
6) Press the trip meter knob once.

7) Go to “Meter Indicator Needle Indication Check”.
Check meter operation, warning light, indicator light, and LCD.

NOTE:
- Meter indicator switches every 1.5 seconds for each indication.
- ILL indication illuminates at the same brightness as when entering “Meter Indicator Needle Indication Check”.
- During operation, “_S_2” is displayed on the LCD.

Speedometer (km/h)	Tachometer (rpm)	Fuel gauge	ECO gauge	Fuel level warning light	Warning light, indicator light
0	0	Lowest point	Lowest point	Light ON	*1, *2, *3
0	0	E	–Max	Light ON	
40	1000	1/2	0	Light OFF	
100	4000	F	+Max	Light OFF	
40	1000	1/2	0	Light OFF	
0	0	E	–Max	Light ON	

*1: Warning lights and indicator lights controlled by the meter drive circuit turn off. <Ref. to IDI-2, SPECIFICATION, General Description.>
*2: Warning lights and indicator lights controlled by other module are turned on/off according to the module control. <Ref. to IDI-2, SPECIFICATION, General Description.>
*3: Engine coolant temperature indicator light illuminates in blue.
8) Press the trip meter knob once.
9) Go to “Check LCD display”.
Check the LCD display.

NOTE:
- After “_S_3” is displayed on the LCD, the LCD display check mode is initiated.
- LCD display switches every 1 second.
- Warning lights and indicator lights controlled by the meter drive circuit turn off. <Ref. to IDI-2, SPECIFICATION, General Description.>
- Warning lights and indicator lights controlled by other module are turned on/off according to the module control. <Ref. to IDI-2, SPECIFICATION, General Description.>
- The meter indication remains at the same level as “Meter Indicator Needle Indication Check”.
- ILL indication illuminates at ILL6 level (max. brightness).

- After No. 14 is displayed in the illumination order, display is repeated from No. 1 again.

ORDER	AT/SS	CRUISE/SET	TRIP/UNIT/ODO/ S/I/S#	DOOR/ REAR GATE/ TRUNK OPEN
1	▲ ▼	CRUISE SET	A 8 8 8 . 8 B 8 8 8 8 8 8 [S] [I] S#	
2		OFF	1 1 1 . 1 1 1 1 1 1 1	OFF
3	▲	CRUISE	A 2 2 2 . 2 2 2 2 2 2 2 [S]	
4		OFF	3 3 3 . 3 3 3 3 3 3 3	OFF
5	▼	SET	B 4 4 4 . 4 4 4 4 4 4 4 [I]	
6		OFF	5 5 5 . 5 5 5 5 5 5 5	OFF
7	▲	CRUISE	A 6 6 6 . 6 6 6 6 6 6 6 S#	
8		OFF	7 7 7 . 7 7 7 7 7 7 7	OFF
9	▼	SET	B 8 8 8 . 8 8 8 8 8 8 8 [S]	
10		OFF	9 9 9 . 9 9 9 9 9 9 9	OFF
11	▲	CRUISE	A 0 0 0 . 0 0 0 0 0 0 0 [I]	
12		OFF	8 8 8 . 8 8 8 8 8 8 8	OFF
13	▼	SET	B 8 8 8 . 8 8 8 8 8 8 8 S#	
14		OFF	8 8 8 . 8 8 8 8 8 8 8	OFF

IDI00366

2. DTC DISPLAY MODE

The combination meter DTC can be displayed according to the following procedure.

CAUTION:
Perform the steps described in 1) through 4) within 10 seconds.
1) Within 3 seconds after turning the ignition switch to ON, set the lighting switch to tail light or headlight position.
2) Press the trip meter knob four times.
3) Turn the lighting switch to OFF, and press the trip meter knob four times.
4) Set the lighting switch to tail light or headlight position again, and press the trip meter knob four times.
5) Go to “DTC display mode”.

NOTE:
• If a diagnostic trouble code (DTC) is detected, an input error to meters exists. Check the harness on the body side and related parts.
• Detected diagnostic trouble code (DTC) cannot be cleared.
• When the engine starts during diagnosis, the self-diagnosis function is not cancelled, however, once ignition switch is turned OFF or the vehicle is driven, the DTC display mode is cancelled automatically.

(1) When the DTC display mode operates, the LCD displays whether diagnostic trouble code (DTC) exists.

DTC display	Item	Condition
“--”	-	Normal
“Er”	-	System error (meter error)
B900	Power supply system	When IG OFF is detected while driving
B901	Speedometer	Abnormal speed pulse value and CAN data value with engine ON
B902	Speedometer	Inconsistency between speed pulse value and CAN data value with engine ON
U116	Tachometer	Abnormal input data with engine ON
U140	Fuel meter	Abnormal input data with engine ON
U155	CAN communication	CAN communication error
U167	Immobilizer collation	Collation with body integrated unit failed
U422	Fuel meter	Abnormal input data with IG ON
U431	Fuel meter	When input data out of range is detected with engine ON

(2) If the diagnostic trouble code (DTC) is stored, ODO value at occurrence of trouble is displayed.

NOTE:
• Diagnostic trouble code (DTC) is stored for up to four cases. If diagnostic trouble code (DTC) is input exceeding four cases, the code is deleted in order starting with the oldest one.
• When there are more than one diagnostic trouble code (DTC), the code is displayed according to the following conditions and switches every time when the trip meter knob is pressed.

1. Displayed in the descending order of ODO value.
2. If the ODO value is the same, displayed in the ascending order of diagnostic trouble code (DTC) value.

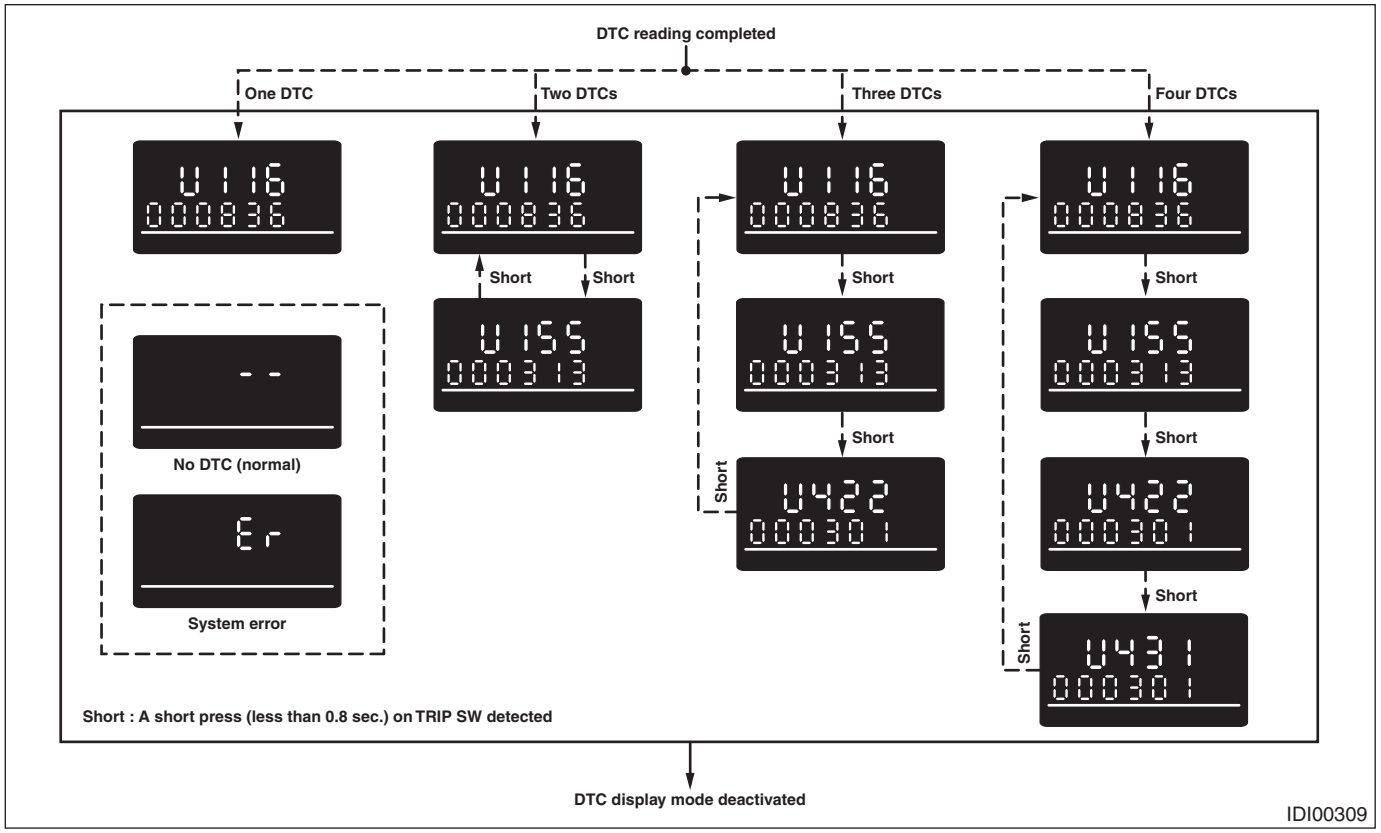

3. DEALER CUSTOMIZE MODE

The combination meter can be customized with dealer customize according to the following procedure.

CAUTION:
Perform the steps described in 1) through 4) within 10 seconds.

1) Within 3 seconds after turning the ignition switch to ON, set the lighting switch to tail light or headlight position.
2) Press the trip meter knob five times.
3) Turn the lighting switch to OFF, and press the trip meter knob five times.
4) Set the lighting switch to tail light or headlight position again, and press the trip meter knob five times.
5) Move on to the “DEALER CUSTOMIZE MODE”.

- When the dealer customize mode operates, the LCD displays each adjustment screen.
- The dealer customize mode consists of three setting screens. {Avg.F/E Correction Screen}, {Ambient Temp. Correction Screen} and {Clock Adjust. Screen} is displayed cyclically in this order every time the trip meter knob is tapped.
- Holding down the trip meter knob while each setting screen is displayed can change the setting value.

NOTE:
When ignition switch is turned OFF or the vehicle is driven, the customize mode is cancelled automatically.

No.	Customize mode	Initial value	Correction range
1	Avg.F/E Correction Screen	±0%	±10%
2	Ambient Temp. Correction Screen	±0°C (°F)	±3°C (°F)
3	Clock Adjust. Screen	on	on or off

D: INSPECTION

1. SYMPTOM CHART

CAUTION:
When measuring the voltage and resistance of each control module or sensor, use a tapered pin with a diameter of less than 0.64 mm (0.03 in) in order to avoid poor contact. Do not insert the pin more than 2 mm (0.08 in).

Symptoms	Repair order	Note
Combination meter assembly does not operate.	1. Power supply 2. Ground circuit 3. Combination meter	<Ref. to IDI-11, CHECK POWER SUPPLY AND GROUND CIRCUIT, INSPECTION, Combination Meter System.>
Speedometer does not operate.	1. VDC C/M 2. Harness 3. Combination meter	<Ref. to IDI-12, CHECK VDC CONTROL MODULE, INSPECTION, Combination Meter System.>
Tachometer does not operate.	1. ECM 2. Harness 3. Combination meter	<Ref. to IDI-12, CHECK ENGINE CONTROL MODULE (ECM), INSPECTION, Combination Meter System.>
Fuel gauge does not operate.	1. Communication circuit 2. Harness 3. Body integrated unit 4. Fuel level sensor 5. Combination meter	<Ref. to IDI-13, CHECK FUEL LEVEL SENSOR, INSPECTION, Combination Meter System.>
ECO gauge does not operate.	1. Communication circuit 2. Combination meter	<Ref. to IDI-15, CHECK ECO GAUGE, INSPECTION, Combination Meter System.> NOTE: The ECO gauge does not operate unless the vehicle is driven at least 1 km (0.6 mile) after the trip meter is reset.
Warning buzzer for key left in ignition does not sound.	1. Communication circuit 2. Combination meter	<Ref. to IDI-15, CHECK WARNING BUZZER FOR KEY LEFT IN IGNITION., INSPECTION, Combination Meter System.>

2. CHECK POWER SUPPLY AND GROUND CIRCUIT

	Step	Check	Yes	No
1	**CHECK POWER SUPPLY FOR COMBINATION METER.** 1) Remove the combination meter. 2) Measure the voltage between combination meter connector and chassis ground. ***Connector & terminal*** ***(i10) No. 20 (+) — Chassis ground (–):***	Is the voltage 10 V or more?	Go to step **2**.	Check the harness for open or short between the fuse and combination meter.
2	**CHECK POWER SUPPLY FOR COMBINATION METER.** 1) Turn the ignition switch to ON. 2) Measure the voltage between combination meter connector and chassis ground. ***Connector & terminal*** ***(i10) No. 19 (+) — Chassis ground (–):***	Is the voltage 10 V or more?	Go to step **3**.	Check the harness for open or short between the ignition switch and combination meter.
3	**CHECK GROUND CIRCUIT OF COMBINATION METER.** 1) Turn the ignition switch to OFF. 2) Measure the resistance between combination meter connector and chassis ground. ***Connector & terminal*** ***(i10) No. 39 — Chassis ground:***	Is the resistance less than 10 Ω?	Replace the meter case assembly.	Repair or replace the harness.

3. CHECK VDC CONTROL MODULE

	Step	Check	Yes	No
1	**CHECK VEHICLE SPEED SIGNAL.** 1) Remove the combination meter mounting screws. 2) Lift up the vehicle and support it with rigid racks. 3) Drive the vehicle faster than 10 km/h (6 MPH). **WARNING:** **Be careful not to get caught in the running wheels.** 4) Measure the voltage between combination meter connector and chassis ground. ***Connector & terminal*** ***(i10) No. 29 (+) — Chassis ground (–):***	Is the voltage less than 1 V ←→ 5 V or more?	Replace the meter case assembly.	Go to step **2**.
2	**CHECK HARNESS BETWEEN VDC CONTROL MODULE AND COMBINATION METER.** 1) Turn the ignition switch to OFF. 2) Disconnect the VDC control unit connector and the combination meter connector. 3) Measure the resistance between the VDC control module connector and the combination meter connector. ***Connector & terminal*** ***(B310) No. 11 — (i10) No. 29:***	Is the resistance less than 10 Ω?	Check VDC control module. <Ref. to VDC(diag)-2, Basic Diagnostic Procedure.>	Repair or replace the harness.

4. CHECK ENGINE CONTROL MODULE (ECM)

	Step	Check	Yes	No
1	**CHECK ECM SIGNAL.** 1) Start the engine. 2) Measure the voltage between ECM connector and chassis ground. ***Connector & terminal*** ***(B135) No. 15 (+) — Chassis ground (–):***	Is the voltage 0 ←→ 14 V or more?	Go to step **2**.	Inspect the ECM. • H4 non-turbo model: <Ref. to EN(H4SO)(diag)-2, Basic Diagnostic Procedure.> • H4 turbo model: <Ref. to EN(H4DOTC)(diag)-2, Basic Diagnostic Procedure.> • H6 model: <Ref. to EN(H6DO)(diag)-2, Basic Diagnostic Procedure.>
2	**CHECK HARNESS BETWEEN COMBINATION METER AND ECM.** 1) Turn the ignition switch to OFF. 2) Disconnect the ECM connector and combination meter connector. 3) Measure the resistance between the ECM connector and the combination meter connector. ***Connector & terminal*** ***(B135) No. 15 — (i10) No. 30:***	Is the resistance less than 10 Ω?	Replace the meter case assembly.	Repair or replace the harness.

5. CHECK FUEL LEVEL SENSOR

	Step	Check	Yes	No
1	**CHECK COMBINATION METER.** 1) Drain fuel. 2) Check the fuel indication status in the combination meter.	Does the fuel gauge needle indicate EMPTY and is the fuel level warning light blinking?	Go to step **4**.	Go to step **2**.
2	**CHECK COMBINATION METER.** Perform the self-diagnosis of combination meter. <Ref. to IDI-6, SELF-DIAGNOSIS DISPLAY MODE, OPERATION, Combination Meter System.>	Is it operating normally?	Go to step **3**.	Replace the meter case assembly. <Ref. to IDI-21, Combination Meter.>
3	**CHECK DIAGNOSTIC TROUBLE CODE (DTC).** 1) Prepare the Subaru Select Monitor kit. 2) Turn the ignition switch to ON (engine OFF) and run the “PC application for Subaru Select Monitor”. 3) On «System Selection Menu» display, select {Integ. unit mode}. 4) Select {Diagnostic Code(s) Display}.	Is DTC being displayed?	Perform the diagnosis according to DTC. <Ref. to LAN(diag)-32, LIST, List of Diagnostic Trouble Code (DTC).>	Go to step **4**.
4	**CHECK HARNESS.** 1) Disconnect the body integrated unit connector. 2) Measure the resistance between body integrated unit connector and chassis ground. ***Connector & terminal*** ***(i84) No. 17 — Chassis ground:***	Is the resistance 15.4 — 416 Ω?	Go to step **5**. Go to step **9**. (If the step 1 is “Yes”)	Repair or replace the harness.
5	**CHECK COMMUNICATION BETWEEN BODY INTEGRATED UNIT AND COMBINATION METERS.** 1) Remove the fuel sub level sensor. • H4 non-turbo model: <Ref. to FU(H4SO)-69, REMOVAL, Fuel Sub Level Sensor.> • H4 turbo model: <Ref. to FU(H4DOTC)-83, REMOVAL, Fuel Sub Level Sensor.> • H6 model: <Ref. to FU(H6DO)-75, REMOVAL, Fuel Sub Level Sensor.> 2) Short the fuel sub level sensor connector terminal to the chassis ground with 266.9 — 274.9 Ω resistance. 3) Turn the ignition switch to ON. ***Connector & terminal*** ***(R59) No. 1 — Chassis ground:***	Does the meter needle indicate EMPTY?	Go to step **7**.	Go to step **6**.
6	**CHECK BODY INTEGRATED UNIT.** 1) Retain the condition in step 5. 2) On {Integ. unit mode}, select {Fuel level resistance output value} using the Subaru Select Monitor.	Is 266.9 — 274.9 Ω displayed in the data?	Go to step **11**.	Replace the body integrated unit. <Ref. to SL-71, Body Integrated Unit.>

Step		Check	Yes	No
7	**CHECK COMMUNICATION BETWEEN BODY INTEGRATED UNIT AND COMBINATION METERS.** 1) Remove the fuel sub level sensor. • H4 non-turbo model: <Ref. to FU(H4SO)-69, REMOVAL, Fuel Sub Level Sensor.> • H4 turbo model: <Ref. to FU(H4DOTC)-83, REMOVAL, Fuel Sub Level Sensor.> • H6 model: <Ref. to FU(H6DO)-75, REMOVAL, Fuel Sub Level Sensor.> 2) Short the fuel sub level sensor connector terminal to the chassis ground with approx. 7.7 — 9.7 Ω resistance. 3) Turn the ignition switch to ON. ***Connector & terminal*** ***(R59) No. 1 — Chassis ground:***	Does the meter needle indicate FULL?	Go to step **9**.	Go to step **8**.
8	**CHECK BODY INTEGRATED UNIT.** 1) Retain the condition in step 7. 2) On {Integ. unit mode}, select {Fuel level resistance output value} using the Subaru Select Monitor.	Is the resistance 7.7 — 9.7 Ω?	Go to step **11**.	Replace the body integrated unit. <Ref. to SL-71, Body Integrated Unit.>
9	**CHECK FUEL SUB LEVEL SENSOR.** 1) Remove the fuel sub level sensor. • H4 non-turbo model: <Ref. to FU(H4SO)-69, REMOVAL, Fuel Sub Level Sensor.> • H4 turbo model: <Ref. to FU(H4DOTC)-83, REMOVAL, Fuel Sub Level Sensor.> • H6 model: <Ref. to FU(H6DO)-75, REMOVAL, Fuel Sub Level Sensor.> 2) Measure the resistance between the fuel sub level sensor connectors when the float is in FULL and EMPTY position. ***Connector & terminal*** ***(R59) No. 1 — No. 2:***	Is the resistance 7.7 — 9.7 Ω (FULL) and 266.9 — 274.9 Ω (EMPTY)?	Go to step **10**.	Replace the fuel sub level sensor.
10	**CHECK FUEL LEVEL SENSOR.** 1) Remove the fuel level sensor. • H4 non-turbo model: <Ref. to FU(H4SO)-67, REMOVAL, Fuel Level Sensor.> • H4 turbo model: <Ref. to FU(H4DOTC)-81, REMOVAL, Fuel Level Sensor.> • H6 model: <Ref. to FU(H6DO)-73, REMOVAL, Fuel Level Sensor.> 2) Measure the resistance between the fuel level sensor connectors when the float is in FULL and EMPTY position. ***Connector & terminal*** ***(R58) No. 1 — No. 4:***	Is the resistance 7.7 — 9.7 Ω (FULL) and 137.1 — 141.1 Ω (EMPTY)?	Check the connection status of the harness and connector that may have a temporary poor contact.	Replace the fuel level sensor.
11	**CHECK COMBINATION METER OPERATION.** 1) Remove the combination meter. 2) Attach the combination meter to another vehicle on which the fuel gauge operates normally to check its operation.	Is the fuel gauge normal?	Replace the body integrated unit. <Ref. to SL-71, Body Integrated Unit.>	Replace the meter case assembly.

6. CHECK ECO GAUGE

	Step	Check	Yes	No
1	**CHECK DIAGNOSTIC TROUBLE CODE (DTC).** 1) Prepare the Subaru Select Monitor kit. 2) Turn the ignition switch to ON (engine OFF) and run the “PC application for Subaru Select Monitor”. 3) On «System Selection Menu» display, select {Integ. unit mode}. 4) Select the {Diagnostic Code(s) Display}.	Is a DTC of high-speed CAN detected?	Perform the diagnosis according to DTC. <Ref. to LAN(diag)-32, LIST, List of Diagnostic Trouble Code (DTC).>	Go to step **2**.
2	**CHECK ECO GAUGE.** Perform the self-diagnosis of combination meter. <Ref. to IDI-6, SELF-DIAGNOSIS DISPLAY MODE, OPERATION, Combination Meter System.>	Does ECO gauge operate properly?	Check the connection status of the harness and connector that may have a temporary poor contact.	Replace the meter case assembly. <Ref. to IDI-21, Combination Meter.>

7. CHECK WARNING BUZZER FOR KEY LEFT IN IGNITION

	Step	Check	Yes	No
1	**CHECK KEY WARNING SWITCH ALARM.** 1) Insert the key into ignition key lock. 2) Open the driver’s side door.	Does the buzzer sound from the meter?	Normal	Go to step **2**.
2	**CHECK COMMUNICATION STATUS.** 1) Prepare the Subaru Select Monitor. 2) On «System Selection Menu» display, select {Integ. unit mode}. 3) On {Current Data Display & Save}, select {key-lock warning SW}. 4) Insert and remove the key.	Does the display change between ON ←→ OFF?	Go to step **3**.	Check the ignition circuit. <Ref. to SL-59, INSPECTION, Ignition Key Lock.>
3	**CHECK COMMUNICATION STATUS.** 1) On {Current Data Display & Save}, select {Driver’s door SW input}. 2) Open and close the door.	Does the display change between ON ←→ OFF?	Go to step **4**.	Check the door switch circuit. <Ref. to SL-10, CHECK DOOR LOCK SWITCH, INSPECTION, Door Lock Control System.>
4	**CHECK COMMUNICATION STATUS.** 1) Turn the ignition switch to ON (engine OFF) and run the “PC application for Subaru Select Monitor”. 2) On «System Selection Menu» display, select {Integ. unit mode}. 3) Select {Diagnostic Code(s) Display}.	Is DTC being displayed?	Perform the diagnosis according to DTC. <Ref. to LAN(diag)-32, LIST, List of Diagnostic Trouble Code (DTC).>	Go to step **5**.
5	**CHECK COMBINATION METER.** Perform the self-diagnosis of combination meter. <Ref. to IDI-6, SELF-DIAGNOSIS DISPLAY MODE, OPERATION, Combination Meter System.>	Did the buzzer sound?	Go to step **6**.	Replace the meter case assembly.
6	**CHECK COMBINATION METER.** 1) Remove the combination meter. 2) Attach the buzzer to another vehicle on which the buzzer operates normally to check its operation.	Did the buzzer sound?	Replace the body integrated unit. <Ref. to SL-71, Body Integrated Unit.>	Replace the meter case assembly.

E: NOTE

For operation procedures of each component of the combination meter system, refer to the respective section.

- Combination meter: <Ref. to IDI-21, Combination Meter.>
- Speedometer: <Ref. to IDI-27, Speedometer.>
- Tachometer: <Ref. to IDI-28, Tachometer.>
- Fuel gauge: <Ref. to IDI-29, Fuel Gauge.>
- ECO gauge: <Ref. to IDI-30, ECO Gauge.>

4. Clock System

A: WIRING DIAGRAM

Refer to “Clock System” in the wiring diagram. <Ref. to WI-96, WIRING DIAGRAM, Clock System.>

B: ELECTRICAL SPECIFICATION

1. MULTI DISPLAY TERMINAL ARRANGEMENT

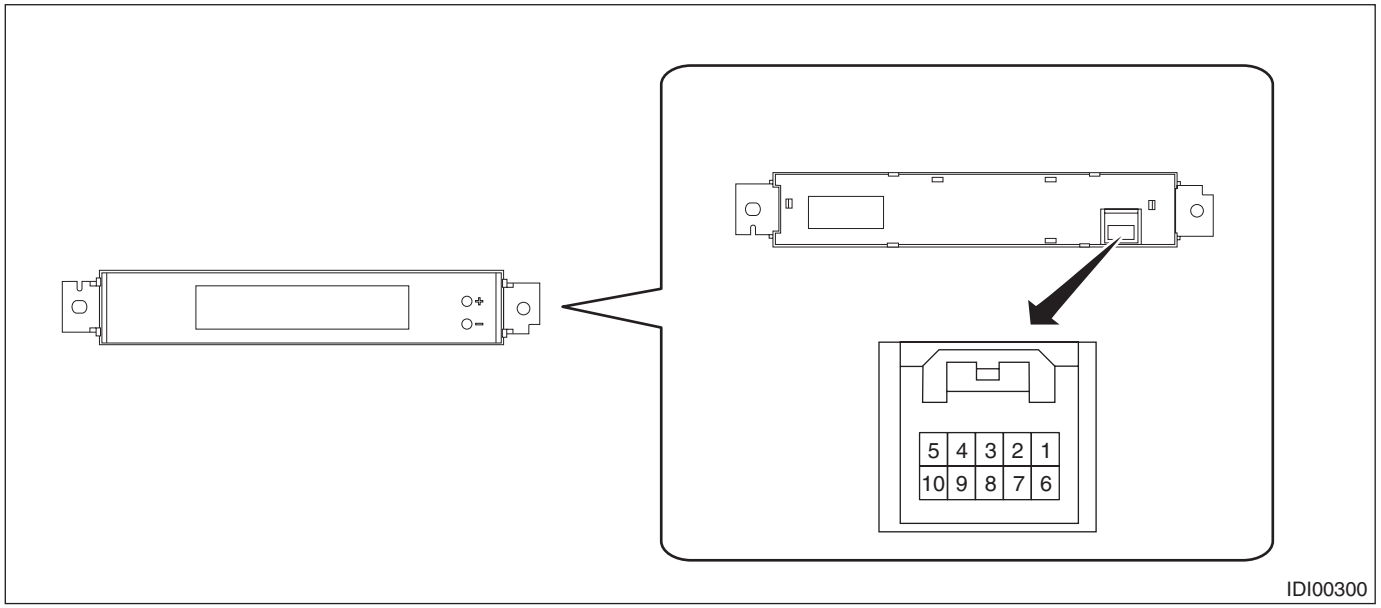

Connector

Terminal No.	Item	Measuring condition	Standard
5 (U-ART com.)	—	Cannot be measured	—
6 (GND) ←→ Chassis ground	Resistance	Always	Less than 1 Ω
8 (IG) ←→ Chassis ground	Voltage	IG OFF → ON	0 V → 10 — 14 V
10 (+B) ←→ Chassis ground	Voltage	Always	10 — 14 V

C: INSPECTION

1. SYMPTOM CHART

Symptoms	Repair order	Note
No display is shown.	1. Power supply 2. Ground circuit 3. Communication circuit harness 4. Multi display	<Ref. to IDI-18, CHECK POWER SUPPLY AND GROUND CIRCUIT., INSPECTION, Clock System.>
Ambient air temperature/fuel economy displays do not appear.	1. Power supply 2. Ground circuit 3. Communication circuit harness 4. Multi display	<Ref. to IDI-18, CHECK CLOCK SYSTEM COMMUNICATION CIRCUIT, INSPECTION, Clock System.>
Only ambient air temperature display is not displayed.	1. Power supply 2. Harness 3. Ambient sensor 4. Communication circuit 5. Multi display	<Ref. to IDI-19, CHECK AMBIENT TEMPERATURE SYSTEM COMMUNICATION CIRCUIT, INSPECTION, Clock System.>
Only fuel economy display is not displayed.	1. Setting 2. Communication circuit 3. Multi display	<Ref. to IDI-20, CHECK FUEL ECONOMY SYSTEM COMMUNICATION CIRCUIT., INSPECTION, Clock System.>

2. CHECK POWER SUPPLY AND GROUND CIRCUIT

	Step	Check	Yes	No
1	**CHECK POWER SUPPLY.** 1) Disconnect the multi display connector. 2) Measure the voltage between multi display connector and chassis ground. ***Connector & terminal*** ***(i59) No. 10 (+) — Chassis ground (–):***	Is the voltage 10 V or more?	Go to step **2**.	Check the harness for open or short between the fuse and multi display.
2	**CHECK GROUND CIRCUIT.** Measure the resistance between multi display connector and chassis ground. ***Connector & terminal*** ***(i59) No. 6 — Chassis ground:***	Is the resistance less than 10 Ω?	Go to step **3**.	Repair or replace the harness.
3	**CHECK HARNESS BETWEEN MULTI DISPLAY AND COMBINATION METER.** 1) Disconnect the combination meter connector. 2) Measure the resistance between multi display connector and combination meter connector. ***Connector & terminal*** ***(i59) No. 5 — (i10) No. 3:***	Is the resistance less than 10 Ω?	Go to step **4**.	Repair or replace the harness.
4	**CHECK MULTI DISPLAY.** 1) Remove the multi display. 2) Attach the clock to another vehicle on which the clock display operates normally, and check its operation.	Is the multi display normal?	Replace the meter case assembly.	Replace the multi display.

3. CHECK CLOCK SYSTEM COMMUNICATION CIRCUIT

	Step	Check	Yes	No
1	**CHECK POWER SUPPLY.** 1) Disconnect the multi display connector. 2) Measure the voltage between multi display connector and chassis ground. ***Connector & terminal*** ***(i59) No. 8 (+) — Chassis ground (–):***	Is the voltage 10 V or more?	Go to step **2**.	Repair or replace the harness.
2	**CHECK GROUND CIRCUIT.** Measure the resistance between multi display connector and chassis ground. ***Connector & terminal*** ***(i59) No. 6 — Chassis ground:***	Is the resistance less than 10 Ω?	Go to step **3**.	Repair or replace the harness.
3	**CHECK HARNESS BETWEEN MULTI DISPLAY AND COMBINATION METER.** 1) Disconnect the combination meter connector. 2) Measure the resistance between multi display connector and combination meter connector. ***Connector & terminal*** ***(i59) No. 5 — (i10) No. 3:***	Is the resistance less than 10 Ω?	Go to step **4**.	Repair or replace the harness.
4	**CHECK MULTI DISPLAY.** 1) Remove the multi display. 2) Attach the clock to another vehicle on which the clock display operates normally, and check its operation.	Is the multi display normal?	Replace the meter case assembly.	Replace the multi display.

4. CHECK AMBIENT TEMPERATURE SYSTEM COMMUNICATION CIRCUIT

	Step	Check	Yes	No
1	**CHECK AMBIENT SENSOR POWER SUPPLY.** 1) Disconnect the ambient sensor connector. 2) Turn the ignition switch to ON. 3) Measure the voltage between the ambient sensor connector and chassis ground. ***Connector & terminal*** ***(B480) No. 2 (+) — Chassis ground (–):***	Is the voltage 4 V or more?	Go to step **2**.	Check the harness for open or short between the fuse and multi display.
2	**CHECK HARNESS BETWEEN AMBIENT SENSOR AND COMBINATION METER.** 1) Disconnect the combination meter connector. 2) Measure the resistance between the ambient sensor connector and the combination meter connector. ***Connector & terminal*** ***(B480) No. 1 — (i10) No. 37:*** ***(B480) No. 2 — (i10) No. 36:***	Is the resistance less than 10 Ω?	Go to step **3**.	Repair or replace the harness.
3	**CHECK AMBIENT SENSOR.** 1) Remove the ambient sensor. <Ref. to AC-78, REMOVAL, Ambient Sensor (Auto A/C Model).> 2) Check the ambient sensor. <Ref. to AC(diag)-44, AMBIENT SENSOR, Diagnostic Procedure for Sensors.>	Is the ambient sensor operating properly?	Go to step **4**.	Replace the ambient sensor.
4	**CHECK AMBIENT TEMPERATURE DISPLAY.** 1) Connect the combination meter connector. 2) Install the 3 Ω resistance to ambient sensor connector terminal. 3) Turn the ignition switch to ON. ***Connector & terminal*** ***(B480) No. 1 — No. 2:***	Does the ambient temperature display 25°C (77°F)?	Repair the poor contact between the ambient sensor and harness connector.	Go to step **5**.
5	**CHECK AMBIENT TEMPERATURE OUTPUT DATA.** 1) Prepare the Subaru Select Monitor kit. 2) Turn the ignition switch to ON (engine OFF) and run the “PC application for Subaru Select Monitor”. 3) On «System Selection Menu» display, select {Integ. unit mode}. 4) Select {Ambient Temperature}.	Does the ambient temperature display 25°C (77°F)?	Go to step **6**.	Replace the meter case assembly. <Ref. to IDI-21, Combination Meter.>
6	**CHECK MULTI DISPLAY.** 1) Remove the multi display. 2) Attach the ambient temperature display to another vehicle on which the ambient temperature display operates normally to check its operation.	Does the ambient temperature display 25°C (77°F)?	Replace the multi display.	Replace the meter case assembly. <Ref. to IDI-21, Combination Meter.>

5. CHECK FUEL ECONOMY SYSTEM COMMUNICATION CIRCUIT

	Step	Check	Yes	No
1	**CHECK FUEL ECONOMY DISPLAY OFF MODE.** Check that the mode display changes when the MFD changeover knob is operated. (Display changes in the following order: Cruising Distance → Average Fuel Economy → Instantaneous Fuel Economy → blank display)	Is fuel economy displayed?	Multi display is normal.	Go to step **2**.
2	**CHECK DIAGNOSTIC TROUBLE CODE (DTC).** 1) Prepare the Subaru Select Monitor kit. 2) Turn the ignition switch to ON (engine OFF) and run the “PC application for Subaru Select Monitor”. 3) On «System Selection Menu» display, select {Integ. unit mode}. 4) Select the {Diagnostic Code(s) Display}.	Is DTC detected?	Go to step **3**.	Replace the meter case assembly. <Ref. to IDI-21, Combination Meter.>
3	**CHECK MULTI DISPLAY.** 1) Remove the multi display. 2) Attach the fuel economy display to another vehicle on which the fuel economy display operates normally to check its operation.	Is the fuel economy display correct?	Replace the multi display.	Replace the meter case assembly. <Ref. to IDI-21, Combination Meter.>

D: NOTE

For operation procedures of each component of the clock system, refer to the following section:

- Multi display: <Ref. to IDI-31, Multi Display.>

5. Combination Meter

A: REMOVAL

1) Disconnect the ground cable from battery.
2) Remove the center panel assembly.

CAUTION:
Do not put your finger on the fin of the air vent grille. Doing so may damage the fin.

(1) Attach the protective tape (a) to the meter visor.

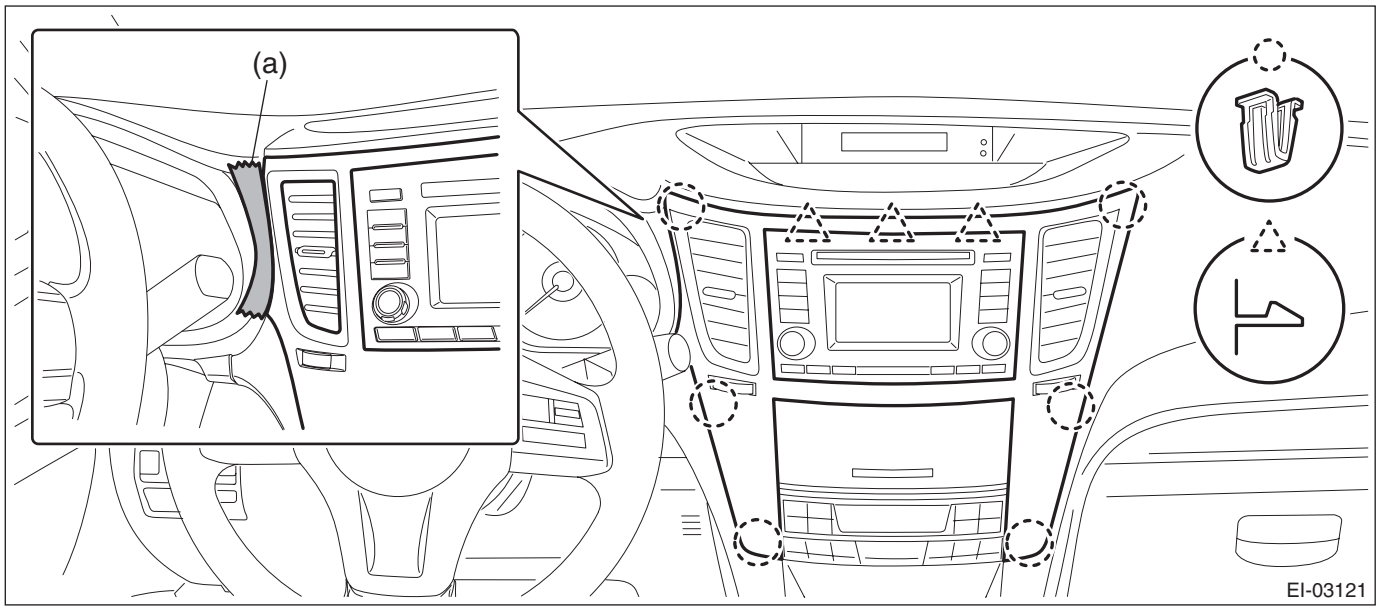

(2) Insert a finger into the air vent grille and release the left and right clips at the top of the center panel. (A), (B)
(3) Insert a finger into the air vent grille and release the left and right clips at the center of the center panel. (C), (D)

(4) Release the clips at the bottom of the center panel and remove the center panel assembly.

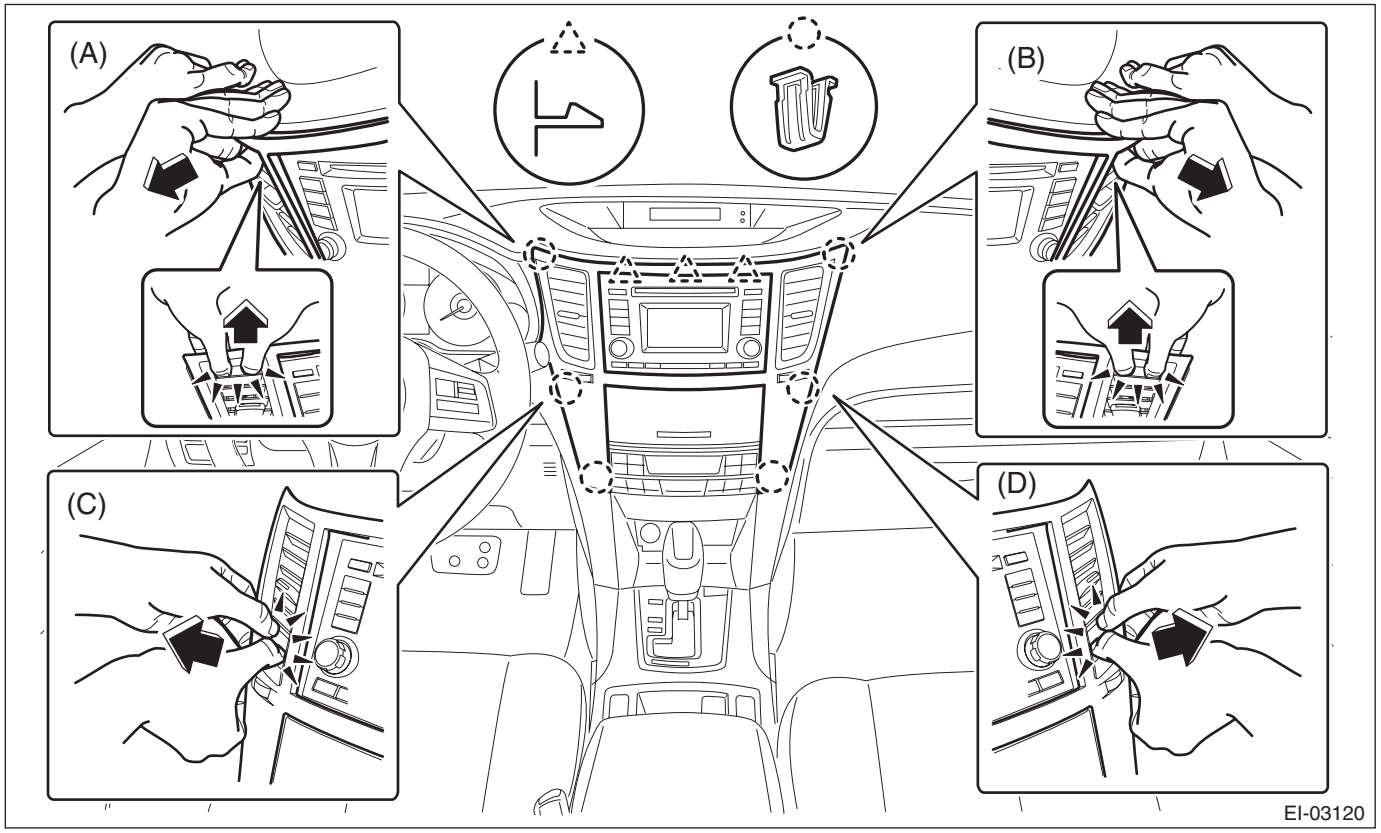

3) Remove the screws and release the claws, then detach the starter cover assembly.

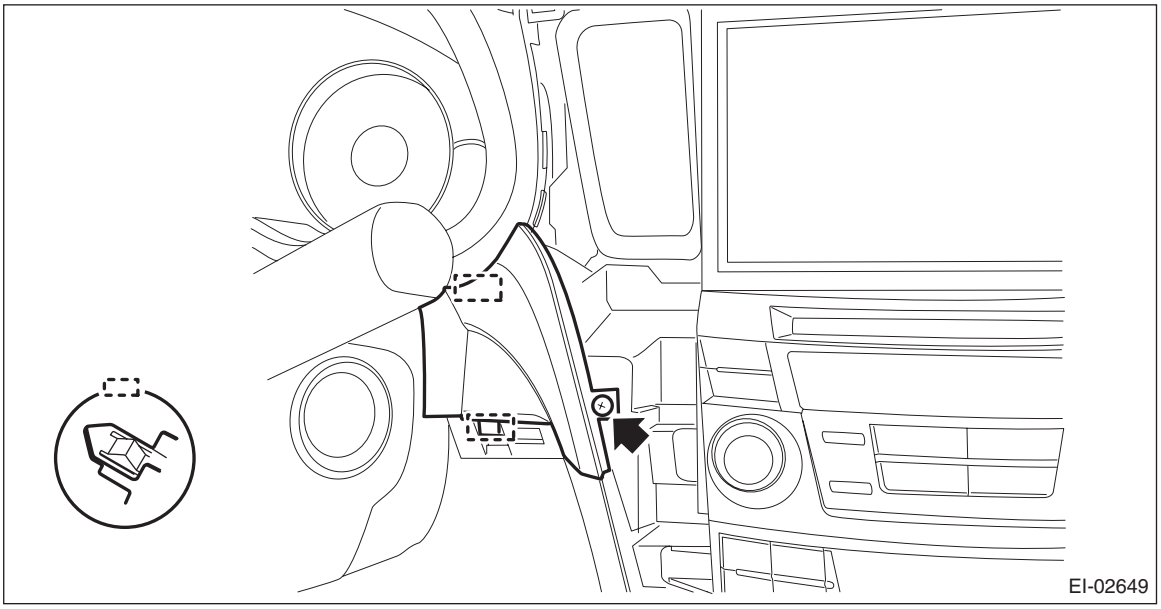

4) Release the lock, tilt the steering column to the lowest end and fully extend the column by the telescopic system.

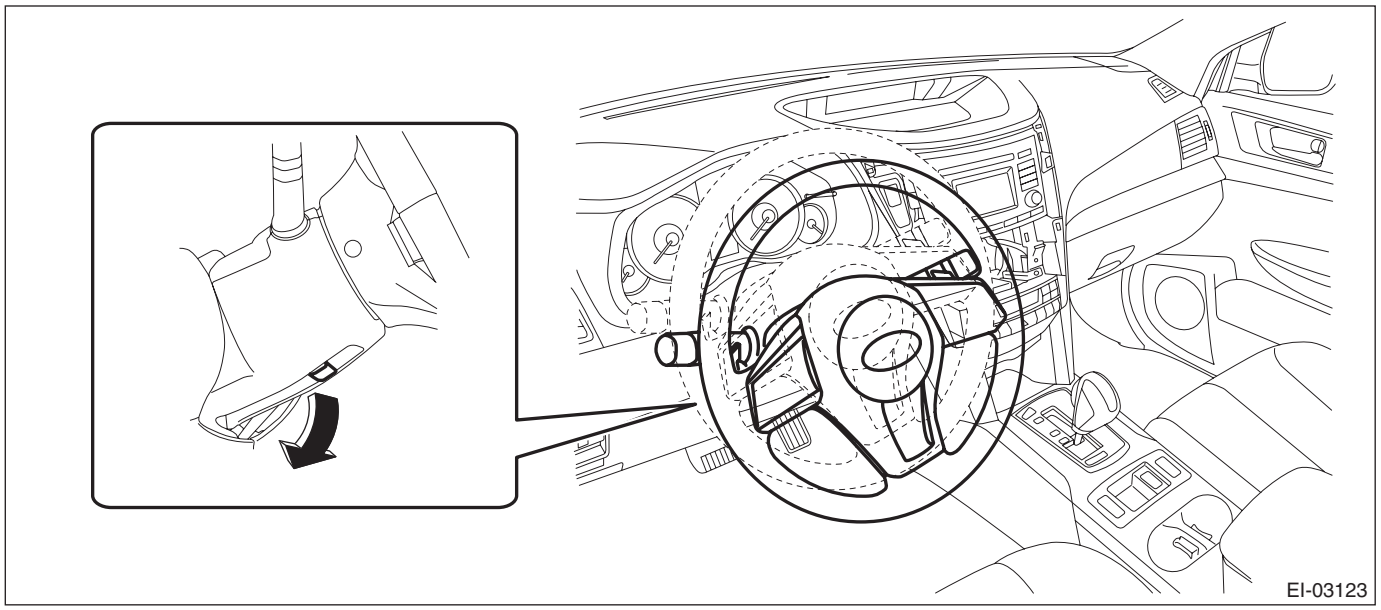

5) Release the screws and clips, then detach the meter visor assembly.

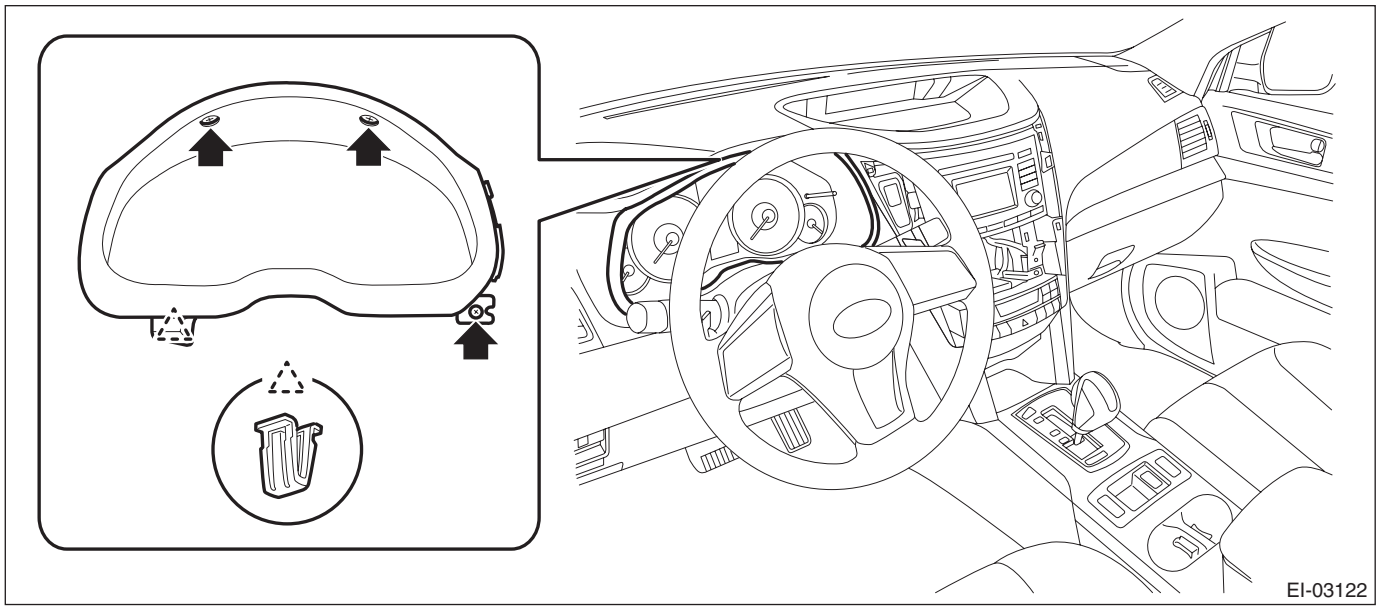

6) Remove the combination meter assembly.

CAUTION:
- **Be careful not to damage the meter or instrument panel.**
- **Pay particular attention to avoid damaging the meter glass.**

(1) Remove the screws and move the steering COMPL upper cover toward you.

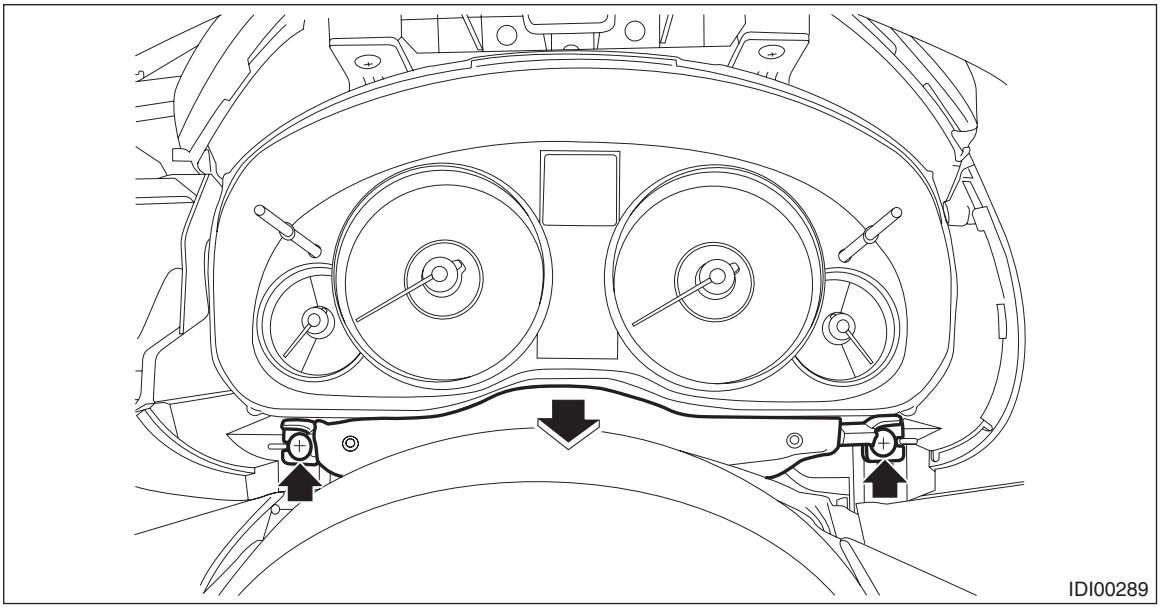

(2) Remove the screws.

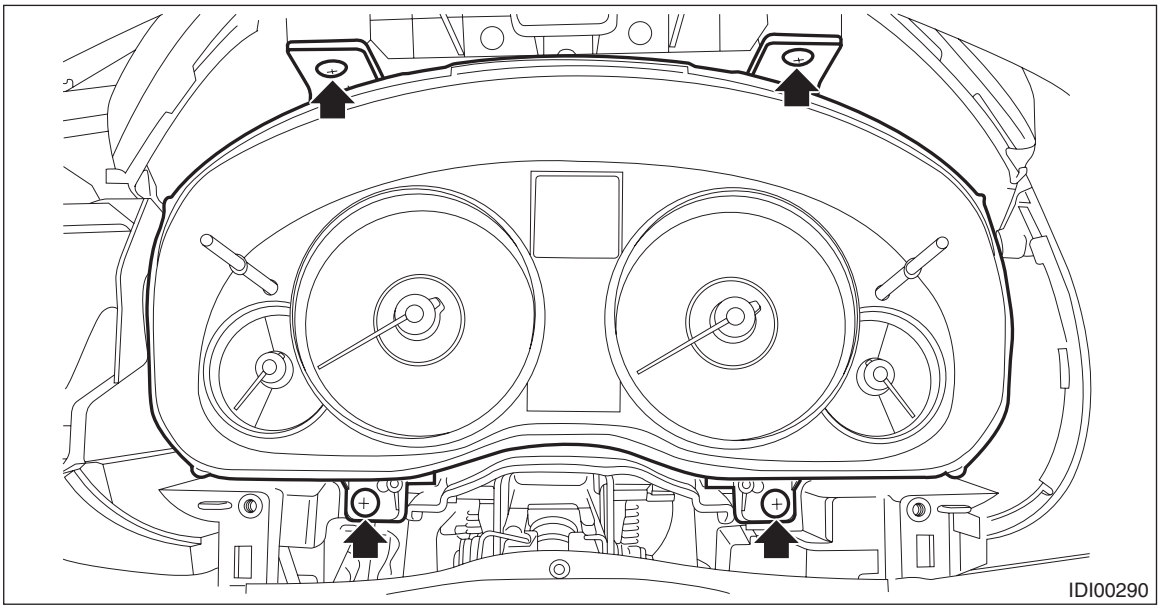

(3) Pull the combination meter toward you and disconnect the connector.

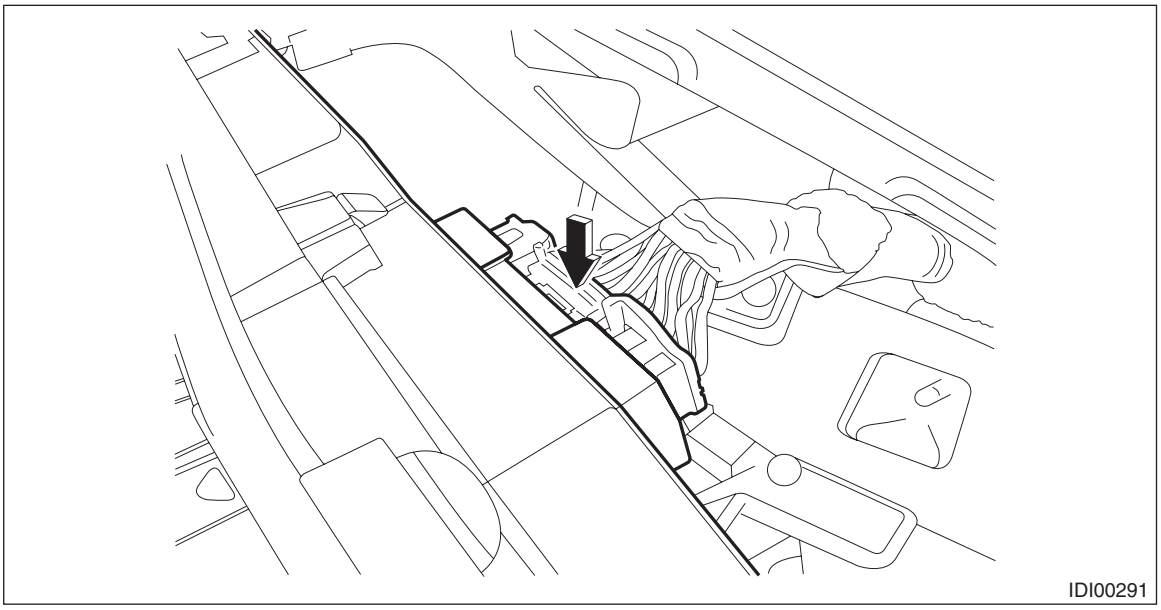

(4) Remove the combination meter assembly as shown in the figure.

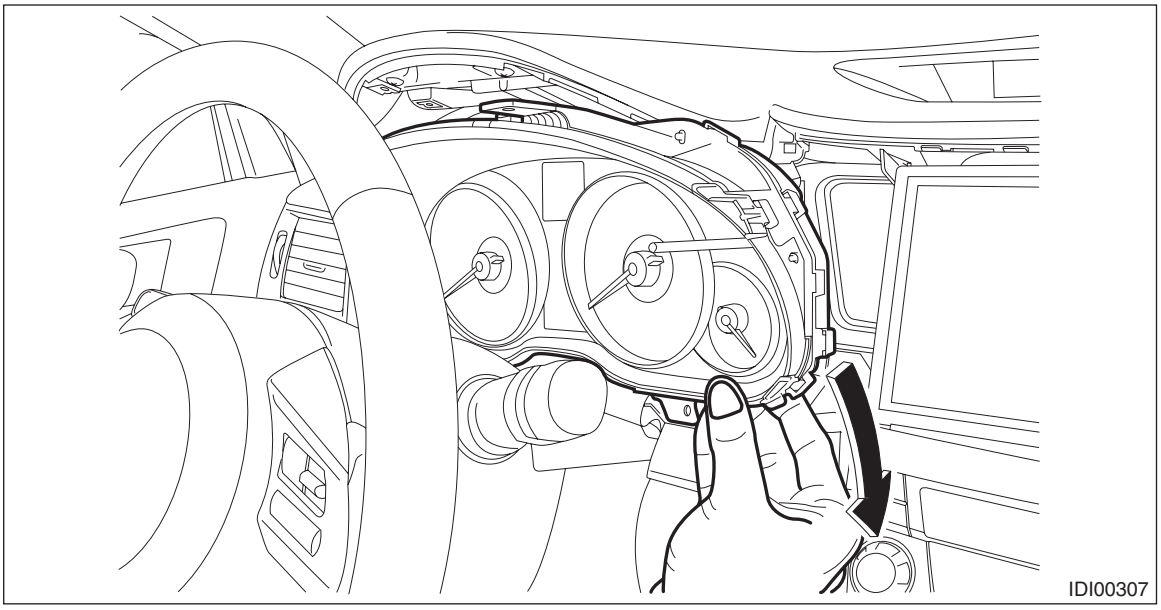

B: INSTALLATION

CAUTION:
- **Make sure the electrical connector is connected securely.**
- **Make sure that each meter operates normally.**
- **When the combination meter of model with immobilizer has been replaced, be sure to perform the registration of immobilizer.**

Install each part in the reverse order of removal.

C: DISASSEMBLY

1. DISASSEMBLY OF COMBINATION METER ASSEMBLY

CAUTION:
- **Use gloves to avoid damage and getting fingerprints on the glass surface and meter surfaces.**
- **Be careful not to apply excessive force to the trip knob.**
- **Be sure not to touch the meter indicator needle.**

Disengage the claw, and remove the meter glass (A) and meter visor (B) from the meter case assembly (C).

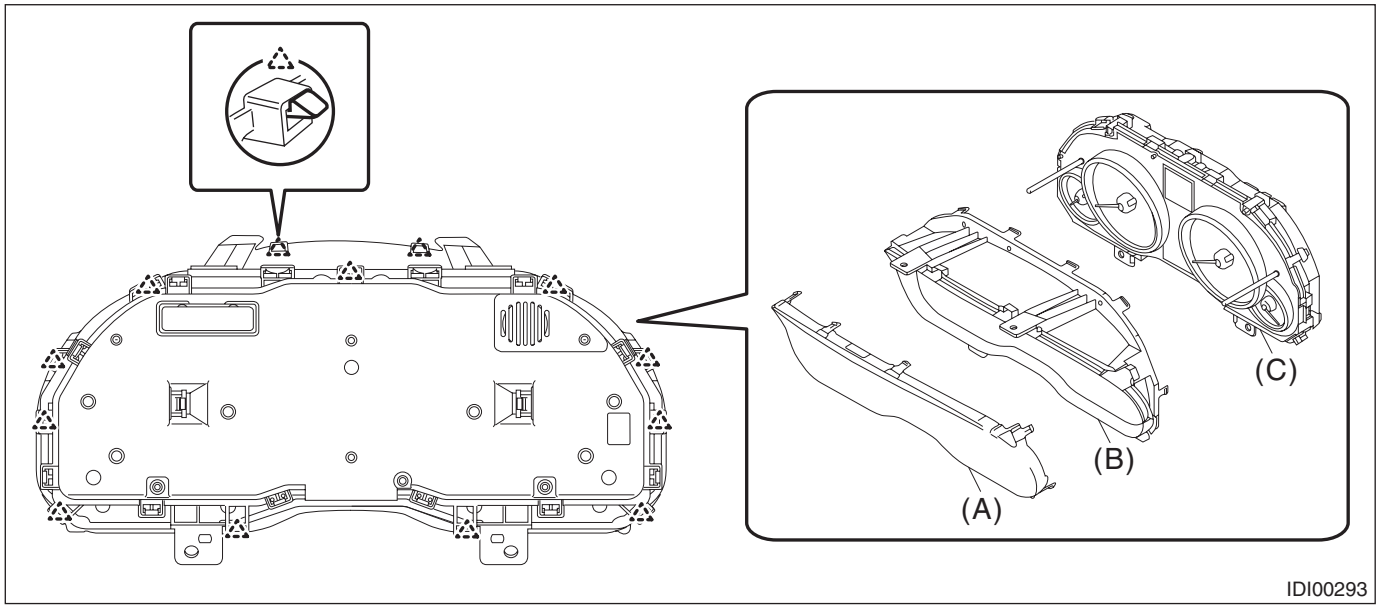

2. BULB REPLACEMENT

LEDs are used for all of warning lights and indicator lights of combination meters, replace the meter case assembly if faulty.

D: ASSEMBLY

Assemble each part in the reverse order of disassembly.

6. Speedometer

A: SPECIFICATION

Since the meter case assembly cannot be disassembled, do not remove or inspect the speedometer alone. (Do not remove the cover on the back surface.)

7. Tachometer

A: SPECIFICATION

Since the meter case assembly cannot be disassembled, do not remove or inspect the tachometer alone. (Do not remove the cover on the back surface.)

8. Fuel Gauge

A: SPECIFICATION

Since the meter case assembly cannot be disassembled, do not remove or inspect the fuel gauge alone. (Do not remove the cover on the back surface.)

9. ECO Gauge

A: SPECIFICATION

Since the meter case assembly cannot be disassembled, do not remove or inspect the ECO gauge alone. (Do not remove the cover on the back surface.)

10.Multi Display

A: REMOVAL

1) Disconnect the ground cable from battery.
2) Remove the center panel assembly.

CAUTION:
Do not put your finger on the fin of the air vent grille. Doing so may damage the fin.

(1) Attach the protective tape (a) to the meter visor.

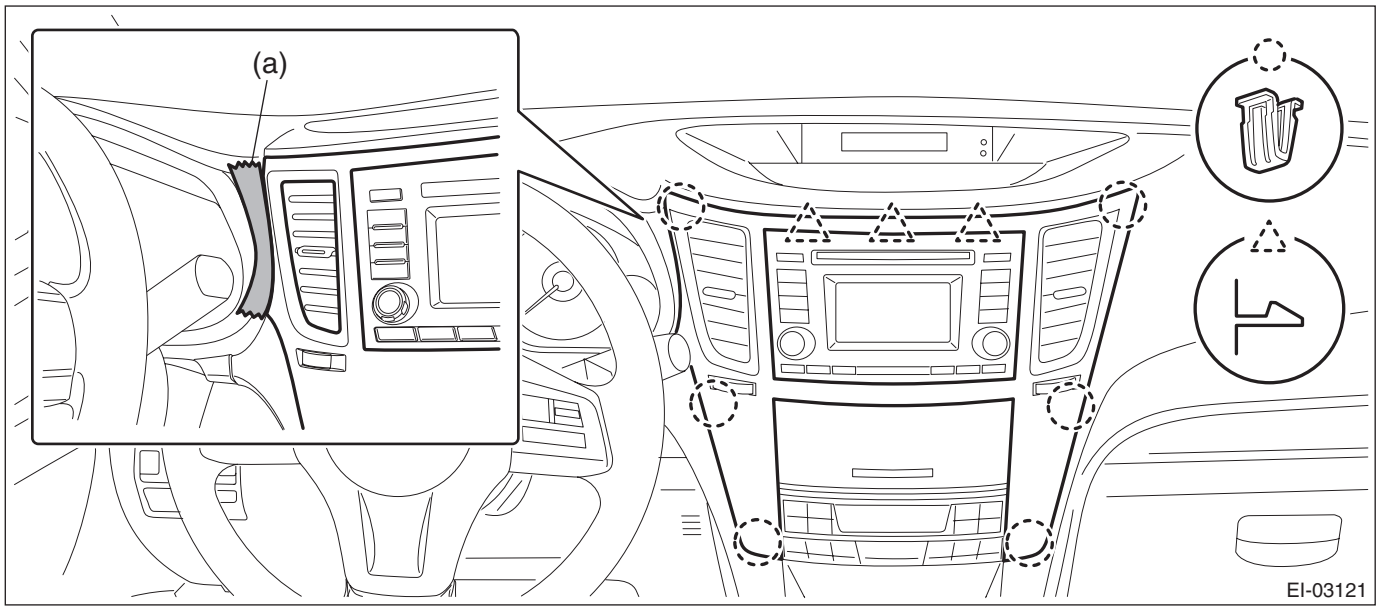

(2) Insert a finger into the air vent grille and release the left and right clips at the top of the center panel. (A), (B)
(3) Insert a finger into the air vent grille and release the left and right clips at the center of the center panel. (C), (D)

(4) Release the clips at the bottom of the center panel and remove the center panel assembly.

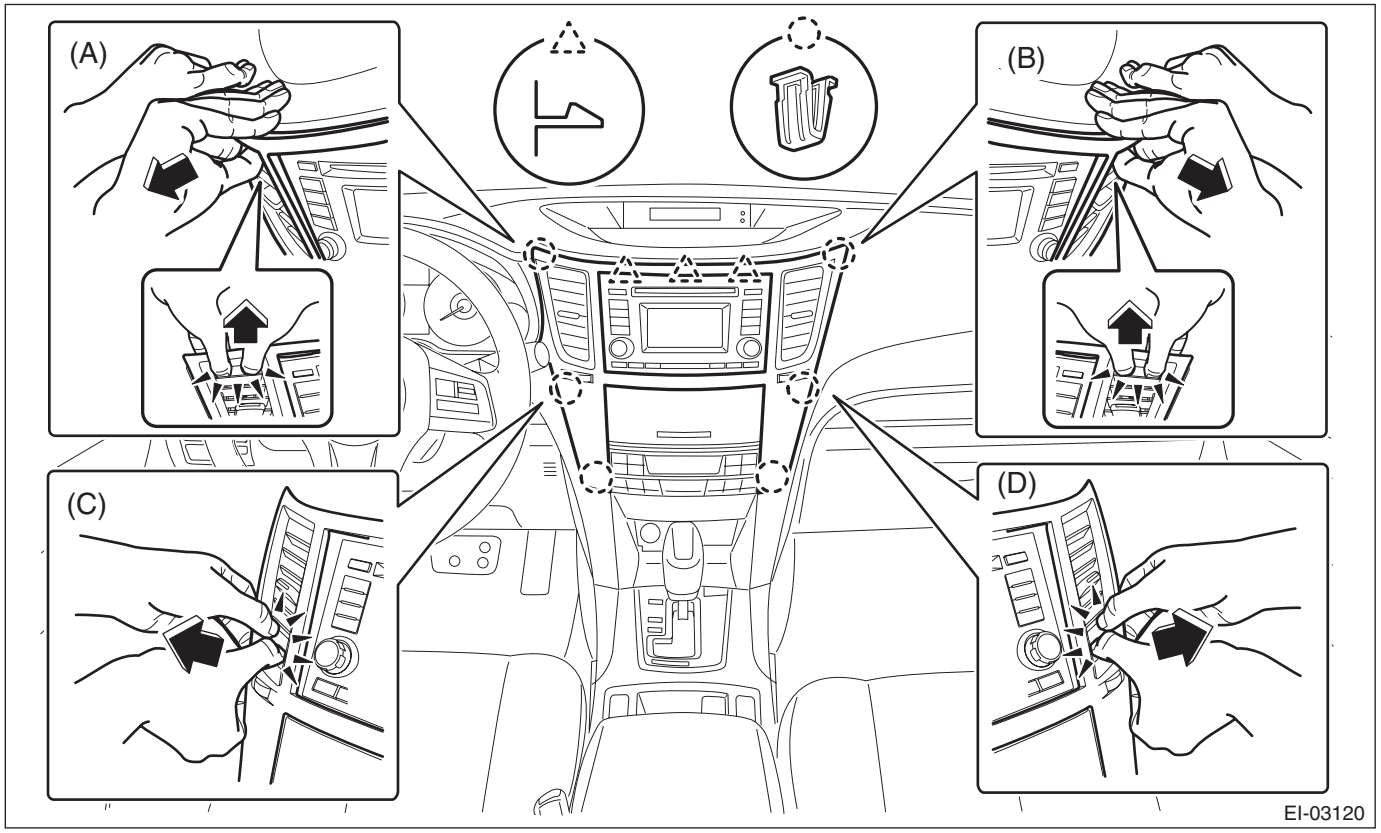

3) Remove the audio assembly.
(1) Remove the left and right screws, and partially pull the audio out from center console.
(2) Disconnect the connectors, and remove the audio assembly.

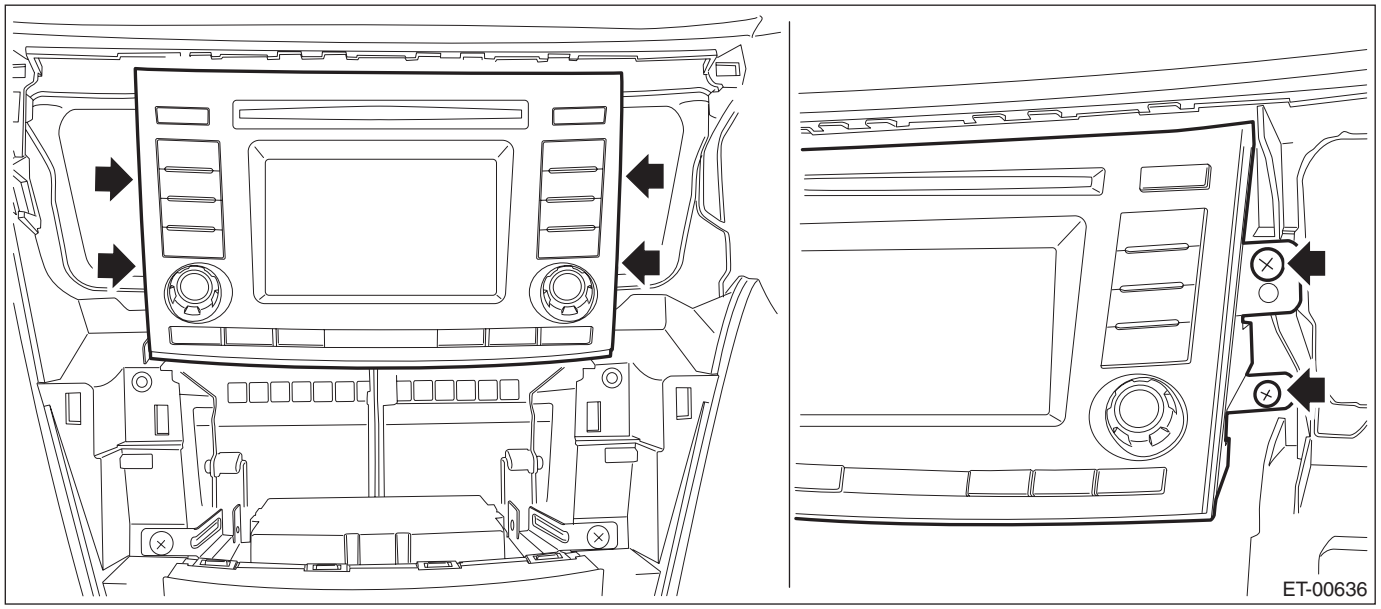

4) Remove the navigation assembly. (model with navigation)
   (1) Remove the left and right screws.
   (2) Disconnect the connectors, and remove the navigation assembly.

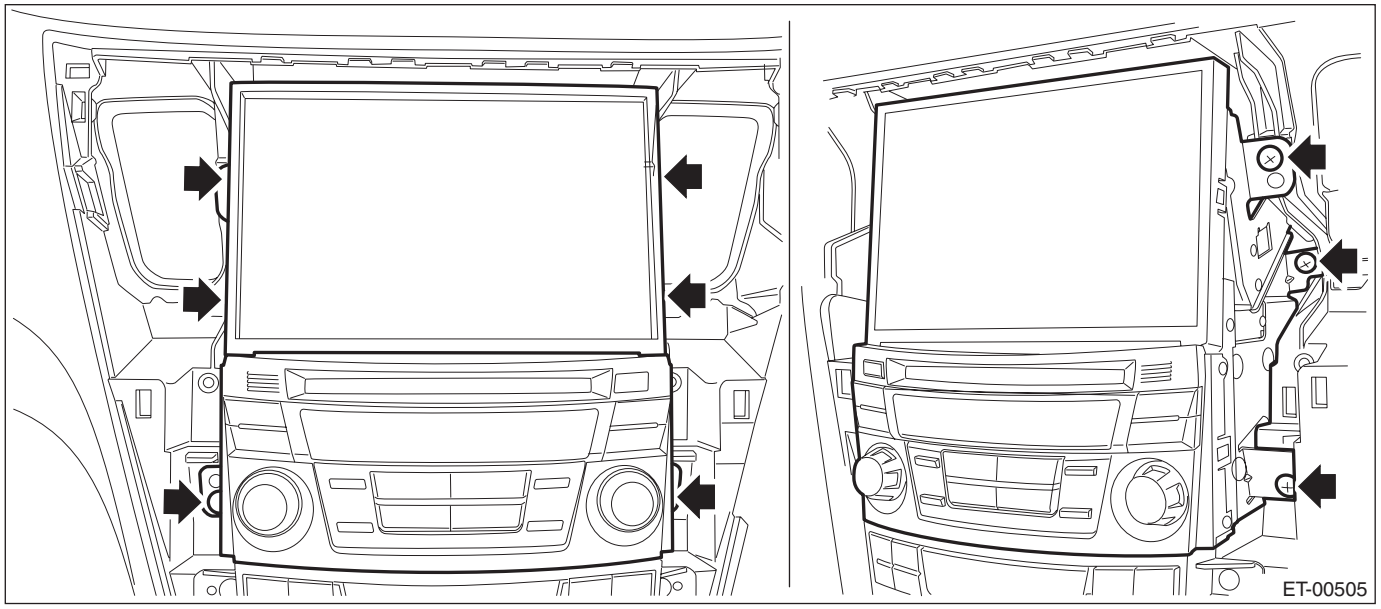

5) Remove the center speaker cover.
   (1) Push up the center speaker cover from the audio space.
   (2) Disconnect the claws and hooks and remove the center speaker cover.

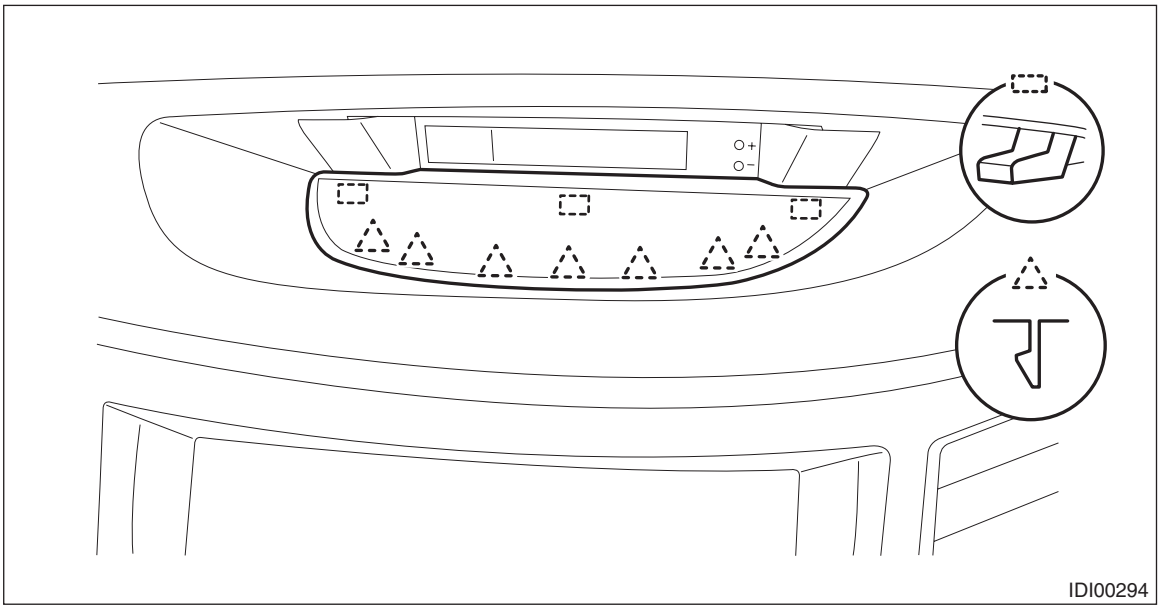

6) Remove the multi display.

CAUTION:
Be careful not to damage the multi display or instrument panel.

(1) Release the clips and claws, detach the multi display panel LWR.
(2) Remove the screws and pull out the multi display toward you to disconnect the connectors.

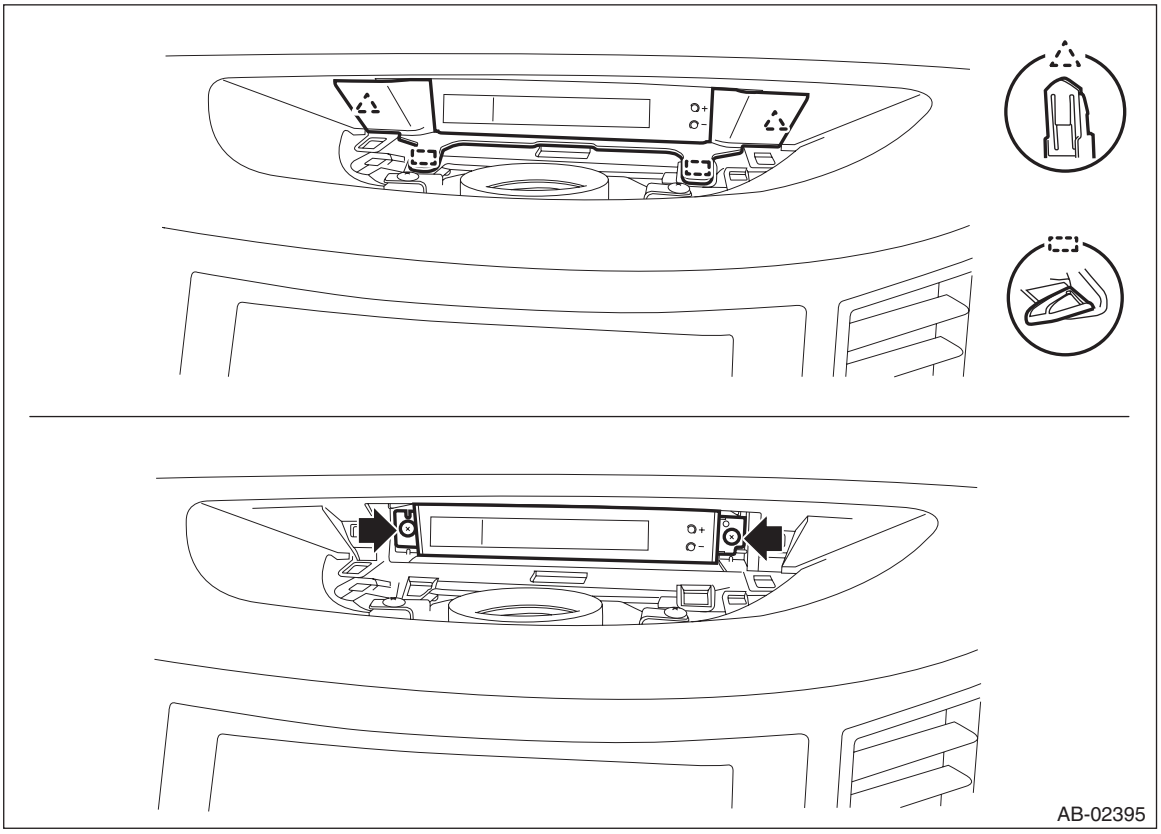

B: INSTALLATION

CAUTION:
- **Make sure the electrical connector is connected securely.**
- **Make sure that the multi display operates normally.**

Install each part in the reverse order of removal.

SEATS

SE

Page

1. General Description 2
2. Front Seat 10
3. Rear Seat 34
4. Power Seat System 57
5. Seat Heater System 66

1. General Description

A: COMPONENT

1. FRONT SEAT

- Manual seat LH

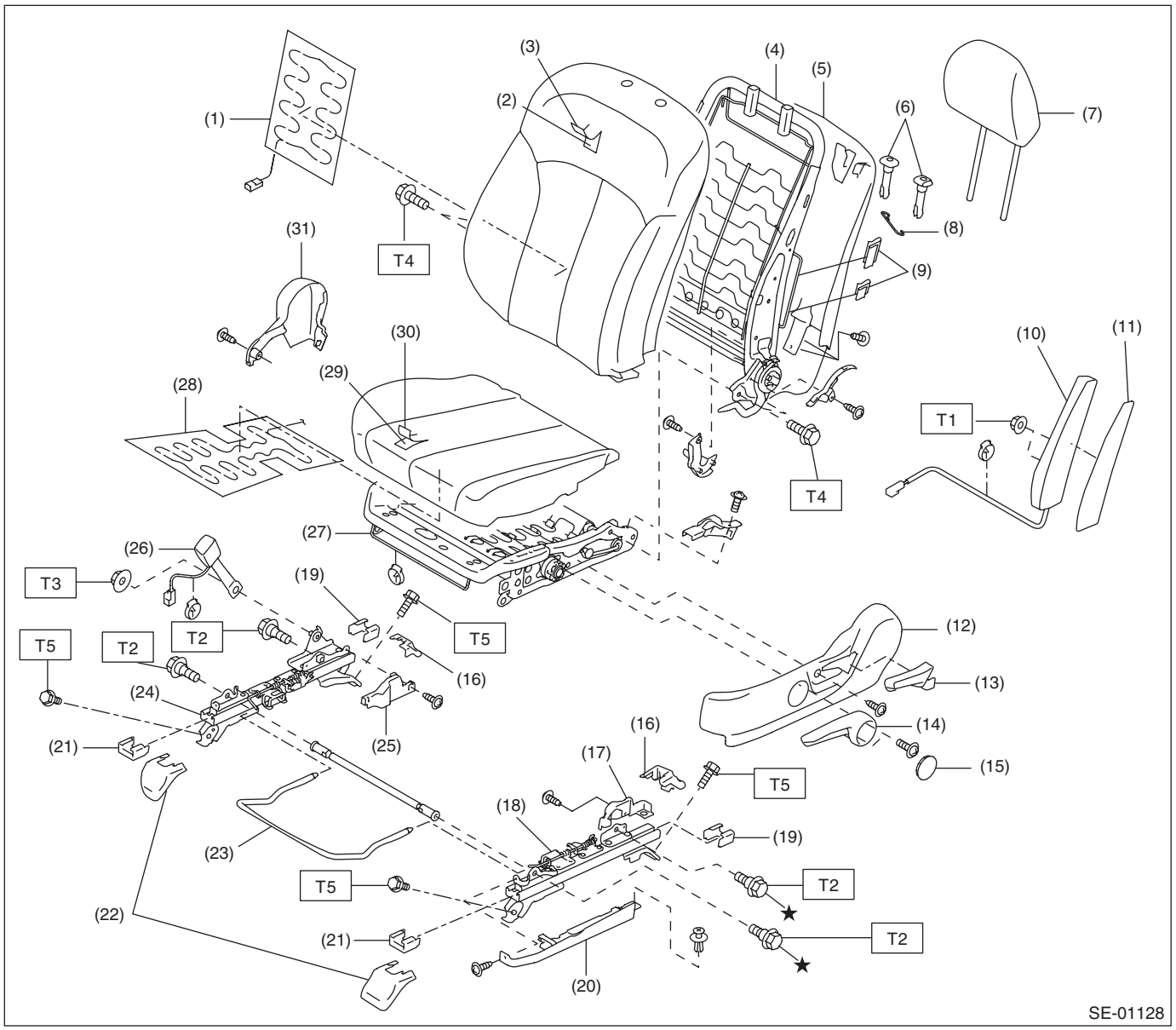

(1) Backrest heater ASSY
(2) Backrest pad
(3) Backrest cover
(4) Backrest frame ASSY
(5) Backrest back cover
(6) Headrest bushing
(7) Headrest ASSY
(8) Flat mat hook
(9) S hook
(10) Side airbag module ASSY
(11) Side airbag tape
(12) Seat side cover OUT
(13) Reclining lever
(14) Lifter lever
(15) Lifter lever cap
(16) Rear bolt cover
(17) Riser cover INN LH
(18) Slide rail ASSY LH
(19) Rail end cap rear
(20) Riser cover OUT
(21) Rail end cap front
(22) Front bolt cover
(23) Sliding adjust bar
(24) Slide rail ASSY RH
(25) Riser cover INN RH
(26) Inner seat belt ASSY
(27) Cushion frame ASSY
(28) Cushion heater ASSY
(29) Cushion pad
(30) Cushion cover
(31) Seat side cover IN

Tightening torque:N·m (kgf-m, ft-lb)

T1: 6 (0.61, 4.4)
T2: 18 (1.84, 13.3)
T3: 38 (3.87, 28.0)
T4: 52 (5.3, 38.4)
T5: 53 (5.4, 39.1)

- Power seat LH

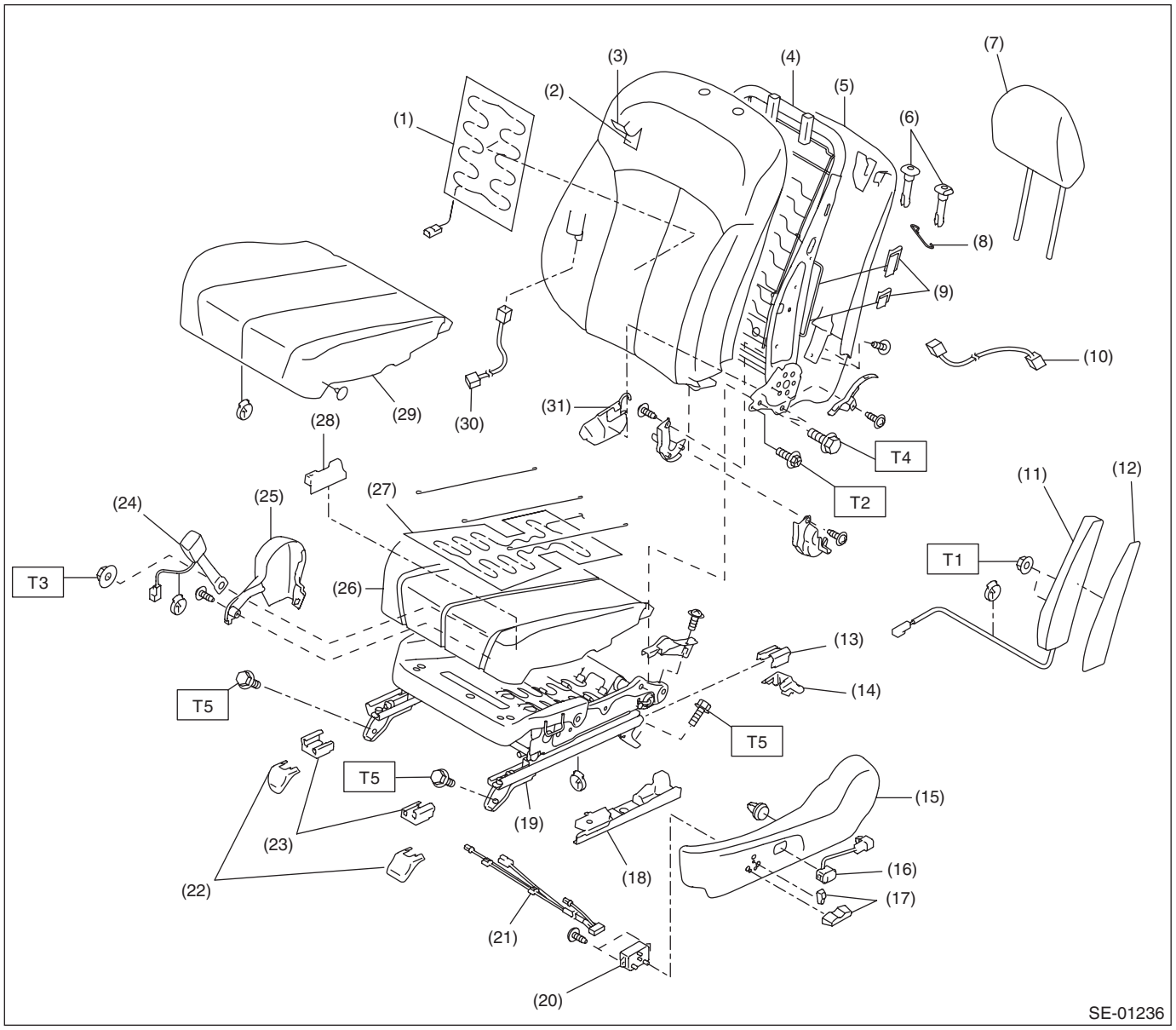

(1) Backrest heater ASSY
(2) Backrest pad
(3) Backrest cover
(4) Backrest frame ASSY
(5) Backrest back cover
(6) Headrest bushing
(7) Headrest ASSY
(8) Flat mat hook
(9) S hook
(10) Reclining motor harness
(11) Side airbag module ASSY
(12) Side airbag tape
(13) Rail end cap rear
(14) Rear bolt cover
(15) Seat side cover OUT
(16) Lumber switch ASSY
(17) Power seat switch knob
(18) Riser cover OUT LH
(19) Seat cushion frame ASSY
(20) Power seat switch ASSY
(21) Power seat switch harness
(22) Front bolt cover
(23) Rail end cap front
(24) Inner seat belt ASSY
(25) Seat side cover IN
(26) Cushion pad
(27) Cushion heater ASSY
(28) Riser cover INN RH
(29) Cushion cover
(30) Lumber motor harness
(31) Backrest inner cover

Tightening torque:N·m (kgf-m, ft-lb)
T1: 6 (0.61, 4.4)
T2: 18 (1.84, 13.3)
T3: 38 (3.87, 28.0)
T4: 52 (5.3, 38.4)
T5: 53 (5.4, 39.1)

- Manual seat RH

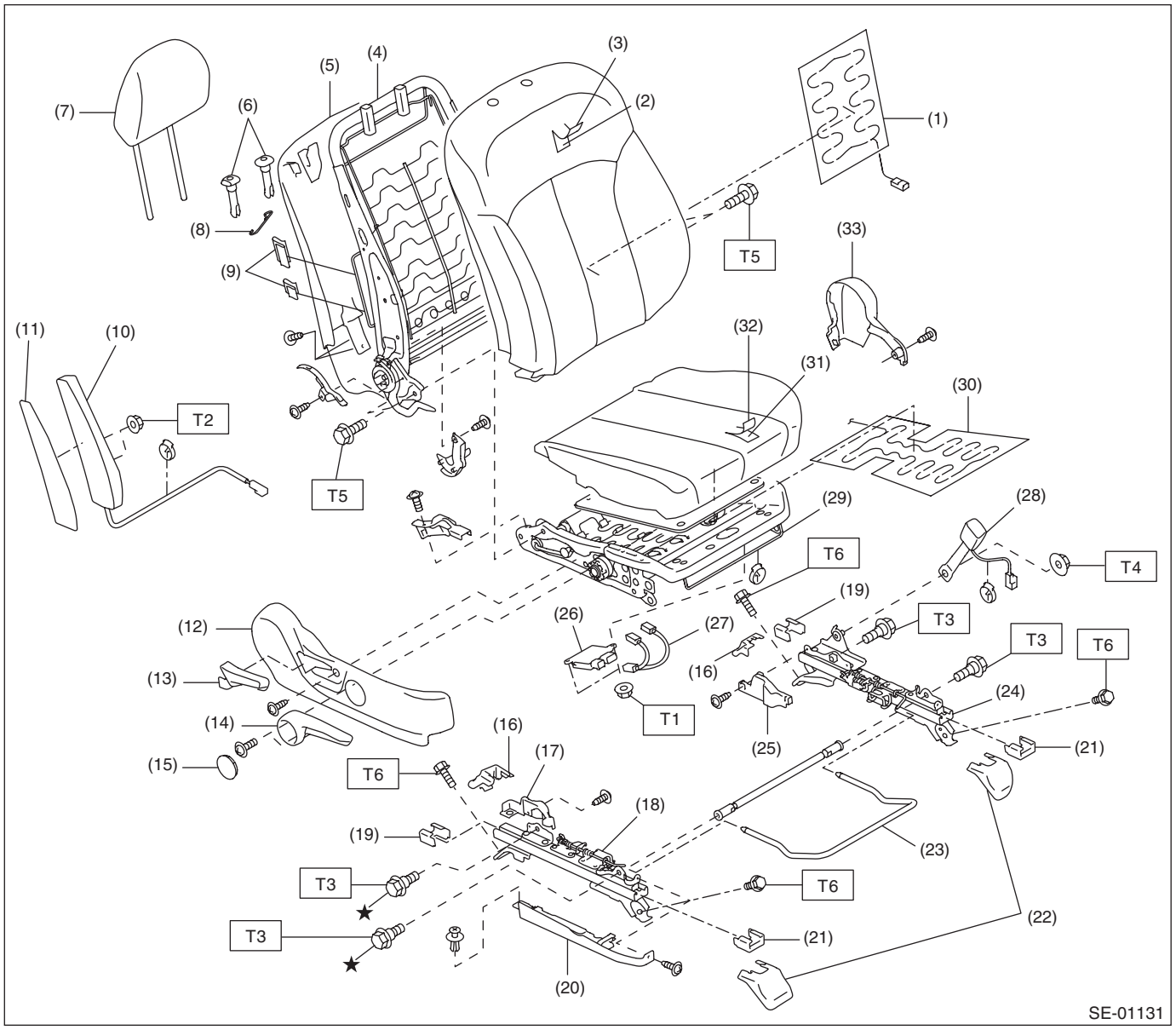

(1)	Backrest heater ASSY	(15)	Lifter lever cap	(29)	Cushion frame ASSY
(2)	Backrest pad	(16)	Rear bolt cover	(30)	Cushion heater ASSY
(3)	Backrest cover	(17)	Riser cover INN RH	(31)	Cushion pad
(4)	Backrest frame ASSY	(18)	Slide rail ASSY RH	(32)	Cushion cover
(5)	Backrest back cover	(19)	Rail end cap rear	(33)	Seat side cover IN
(6)	Headrest bushing	(20)	Riser cover OUT		
(7)	Headrest ASSY	(21)	Rail end cap front		
(8)	Flat mat hook	(22)	Front bolt cover		
(9)	S hook	(23)	Sliding adjust bar		
(10)	Side airbag module ASSY	(24)	Slide rail ASSY LH		
(11)	Side airbag tape	(25)	Riser cover INN LH		
(12)	Seat side cover OUT	(26)	Occupant detection control module		
(13)	Reclining lever	(27)	Occupant detection control module harness		
(14)	Lifter lever	(28)	Inner seat belt ASSY		

Tightening torque:N·m (kgf-m, ft-lb)

T1: 5.9 (0.6, 4.4)

T2: 6 (0.61, 4.4)

T3: 18 (1.84, 13.3)

T4: 38 (3.87, 28.0)

T5: 52 (5.3, 38.4)

T6: 53 (5.4, 39.1)

- Power seat RH

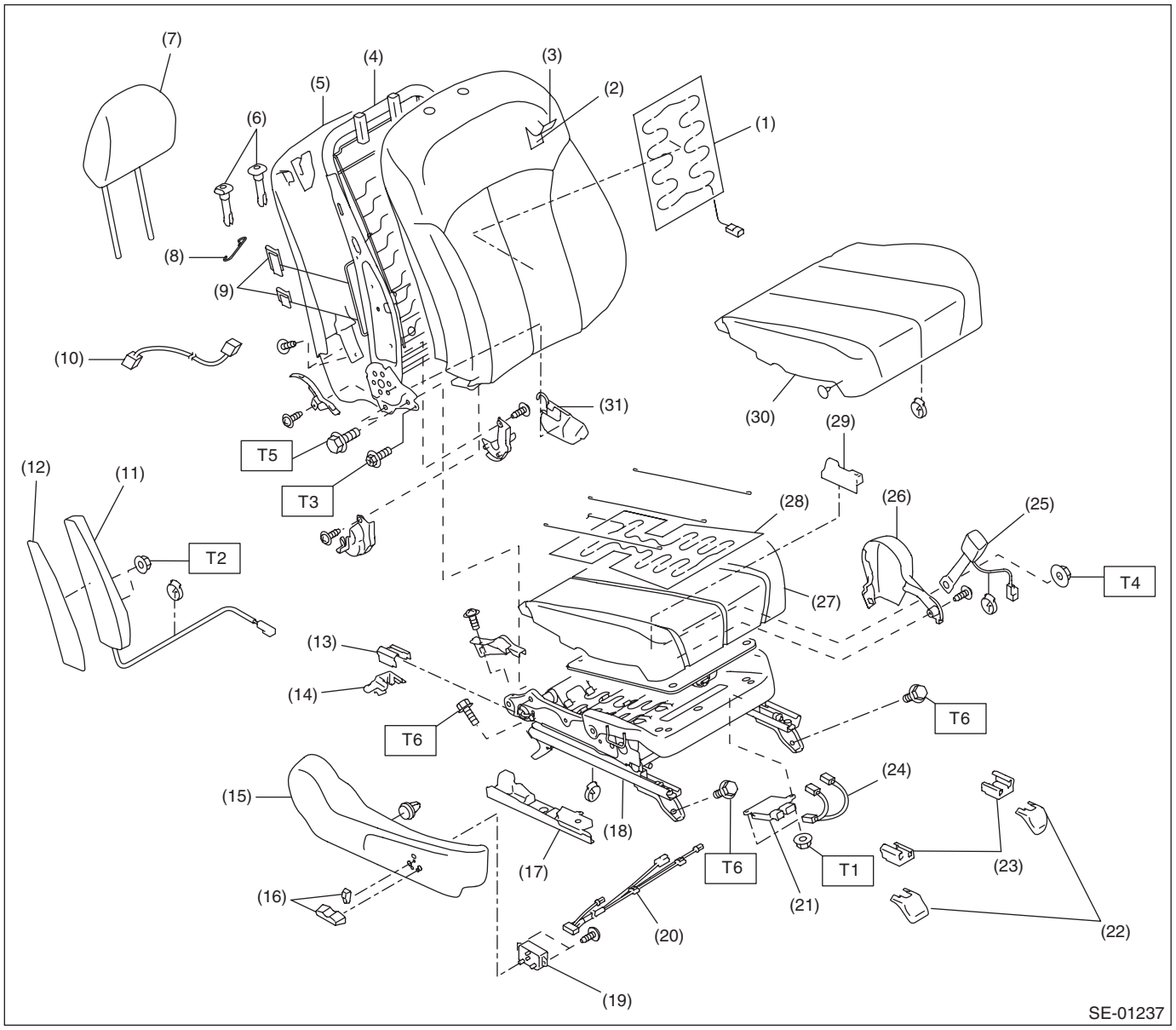

(1)	Backrest heater ASSY	(14)	Rear bolt cover	(27)	Cushion pad
(2)	Backrest pad	(15)	Seat side cover OUT	(28)	Cushion heater ASSY
(3)	Backrest cover	(16)	Power seat switch knob	(29)	Riser cover INN RH
(4)	Backrest frame ASSY	(17)	Riser cover OUT LH	(30)	Cushion cover
(5)	Backrest back cover	(18)	Seat cushion frame ASSY	(31)	Backrest inner cover
(6)	Headrest bushing	(19)	Power seat switch ASSY		
(7)	Headrest ASSY	(20)	Power seat harness	***Tightening torque:N·m (kgf-m, ft-lb)***	
(8)	Flat mat hook	(21)	Occupant detection control module	***T1:***	***5.9 (0.6, 4.4)***
(9)	S hook	(22)	Front bolt cover	***T2:***	***6 (0.61, 4.4)***
(10)	Reclining motor harness	(23)	Rail end cap front	***T3:***	***18 (1.84, 13.3)***
(11)	Side airbag module ASSY	(24)	Occupant detection control module harness	***T4:***	***38 (3.87, 28.0)***
(12)	Side airbag tape	(25)	Inner seat belt ASSY	***T5:***	***52 (5.3, 38.4)***
(13)	Rail end cap rear	(26)	Seat side cover IN	***T6:***	***53 (5.4, 39.1)***

2. REAR SEAT (SEDAN MODEL)

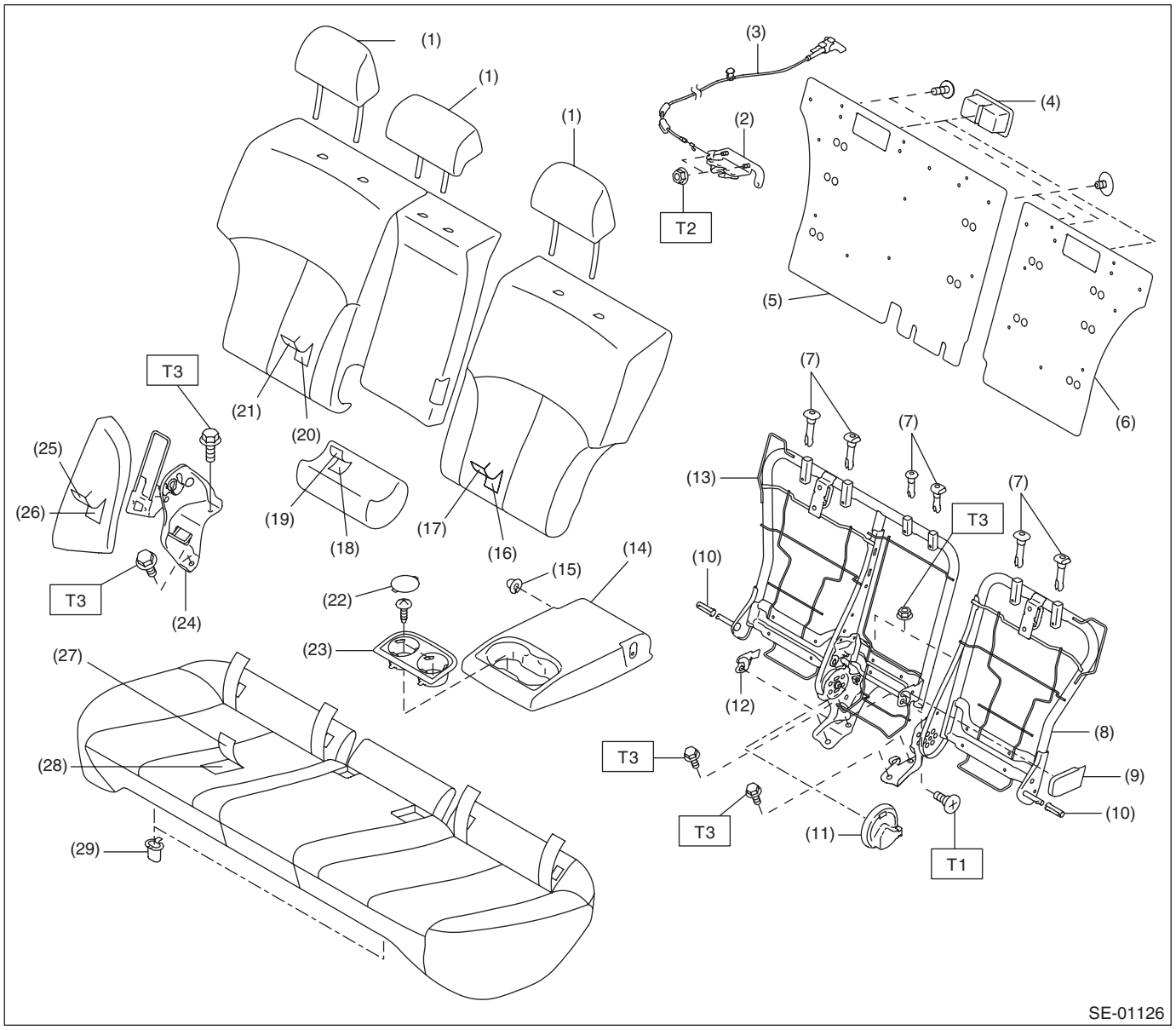

(1) Headrest ASSY
(2) Backrest lock ASSY
(3) Release lever ASSY
(4) Backrest back board RH
(5) Backrest striker cover
(6) Backrest back board LH
(7) Headrest lock bushing
(8) Backrest frame ASSY LH
(9) Armrest hinge cover
(10) Backrest hinge bushing
(11) Reclining hinge cover RH
(12) Armrest hinge bushing
(13) Backrest frame ASSY RH
(14) Armrest ASSY
(15) Armrest bushing
(16) Backrest pad LH
(17) Backrest cover LH
(18) Seat center pad
(19) Seat center cover
(20) Backrest pad RH
(21) Backrest cover RH
(22) Cup holder rubber
(23) Cup holder ASSY
(24) Hinge ASSY
(25) Backrest side cover
(26) Backrest side pad
(27) Seat cushion cover
(28) Seat cushion pad
(29) Hook

Tightening torque:N·m (kgf-m, ft-lb)
T1: 9.8 (1.0, 7.2)
T2: 24.5 (2.5, 18.1)
T3: 53 (5.4, 39.1)

3. REAR SEAT (OUTBACK MODEL)

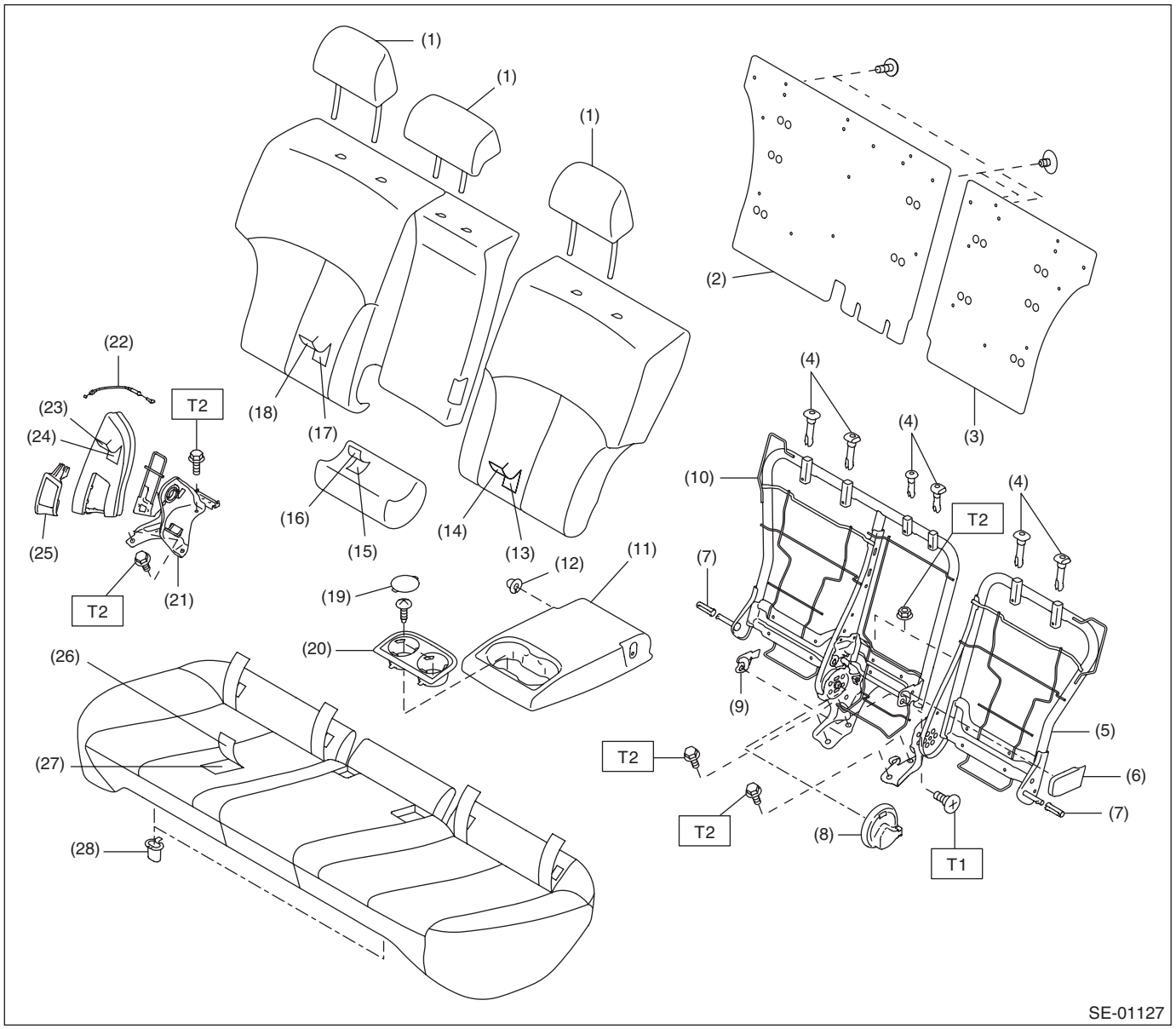

(1) Headrest ASSY
(2) Backrest back board RH
(3) Backrest back board LH
(4) Headrest lock bushing
(5) Backrest frame ASSY LH
(6) Armrest hinge cover
(7) Backrest hinge bushing
(8) Reclining hinge cover RH
(9) Armrest hinge bushing
(10) Backrest frame ASSY RH
(11) Armrest ASSY
(12) Armrest bushing
(13) Backrest pad LH
(14) Backrest cover LH
(15) Seat center pad
(16) Seat center cover
(17) Backrest pad RH
(18) Backrest cover RH
(19) Cup holder rubber
(20) Cup holder ASSY
(21) Hinge ASSY
(22) Reclining cable
(23) Backrest side cover
(24) Backrest side pad
(25) Reclining lever ASSY
(26) Seat cushion cover
(27) Seat cushion pad
(28) Hook

Tightening torque:N·m (kgf-m, ft-lb)
T1: 24.5 (2.5, 18.1)
T2: 53 (5.4, 39.1)

B: CAUTION

When removing the front seat from a vehicle, follow the safety instructions given in the airbag section.

C: PREPARATION TOOL

1. GENERAL TOOL

TOOL NAME	Remarks
Long nose plier	Used for removing the hog ring.
Hog ring pliers	Used for installing the hog ring.
Circuit tester	Used for checking voltage and continuity.

2. Front Seat

A: REMOVAL

CAUTION:
The airbag system is fitted with a backup power supply. After disconnecting the battery ground cable, the airbag may operate if you do not wait for 60 seconds before starting the service of airbag system.

1) Remove the headrest.

NOTE:
For models with headrest monitor, remove the headrest in the following procedures.
1. Fold the backrest all the way backward, and then remove the headrest.
2. Place the headrest on the seating face.
3. Return the backrest to the original position.

2) Disconnect the ground cable from battery and wait for at least 60 seconds before starting work.

NOTE:
For the power seat, remove the slide rail installing bolt before removing the battery ground.

3) Remove the slide rail installing bolt.
   (1) Tilt the backrest forward and move the seat to the front most position.
   (2) Remove the rear bolt cover (A) and remove the two bolts.
   (3) Move the seat to the rearmost position.
   (4) Remove the front bolt cover (B) and remove the two bolts.

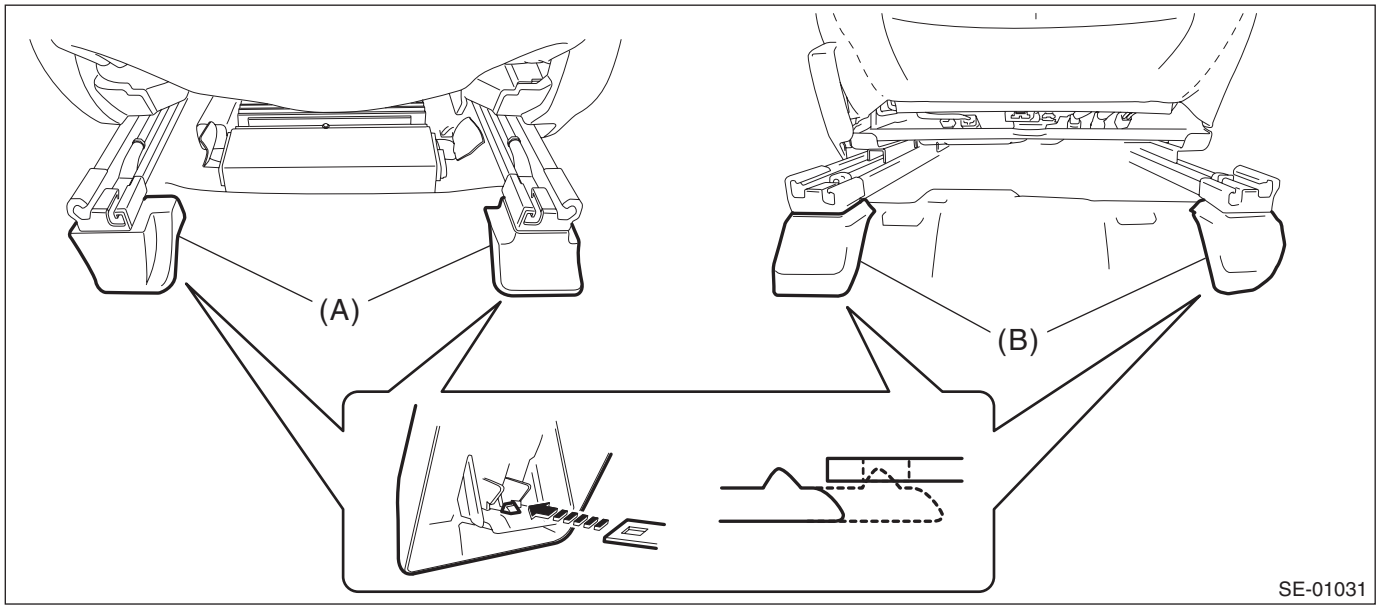

4) Disconnect the connector under the seat.

CAUTION:
Disconnect the ground cable from battery, and wait 60 seconds before disconnecting the connector.
- Seat belt warning light connector (driver's seat)
- Occupant detection system harness connector (passenger's seat)
- Side airbag connector
- Seat heater connector (model with seat heater)
- Power seat connector (model with power seats)
- Headrest monitor connector (model with headrest monitor)

5) Take out the front seat from the vehicle.

CAUTION:
Be careful not to damage the body.

B: INSTALLATION

Install each part in the reverse order of removal.

CAUTION:

• The seat mounting bolts differ between the front mounting points and the rear mounting points. Make sure that you are using correct bolts at correct positions.

• Tighten the slide rail installing bolt gradually in several steps to the specified torque in the order as shown in the figure.

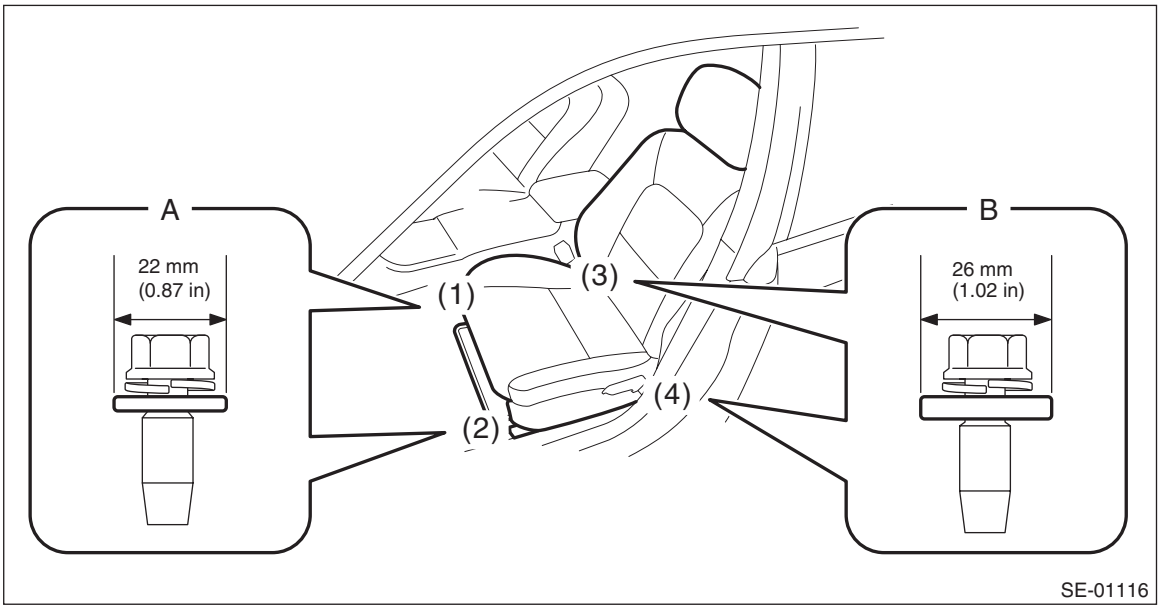

- **Front (bolt A): Washer diameter 22 mm (0.87 in)**
- **Rear (bolt B): Washer diameter 26 mm (1.02 in)**

Tightening torque:

Front seat assembly: 53 N·m (5.4 kgf-m, 39.1 ft-lb)

C: DISASSEMBLY

1. DRIVER SEAT (MANUAL SEAT)

CAUTION:
Before assembling, make sure how the harnesses of the side airbag and inner seat belt are routed in order to avoid misarranging. Assembling with harnesses improperly routed may cause the harness to get caught and short out.

1) Remove the seat from vehicle. <Ref. to SE-10, REMOVAL, Front Seat.>
2) Remove the seat lifter lever.
   (1) Using a flat tip screwdriver, remove the seat lifter lever cover (a).
   (2) Remove the screw and remove the seat lifter lever.

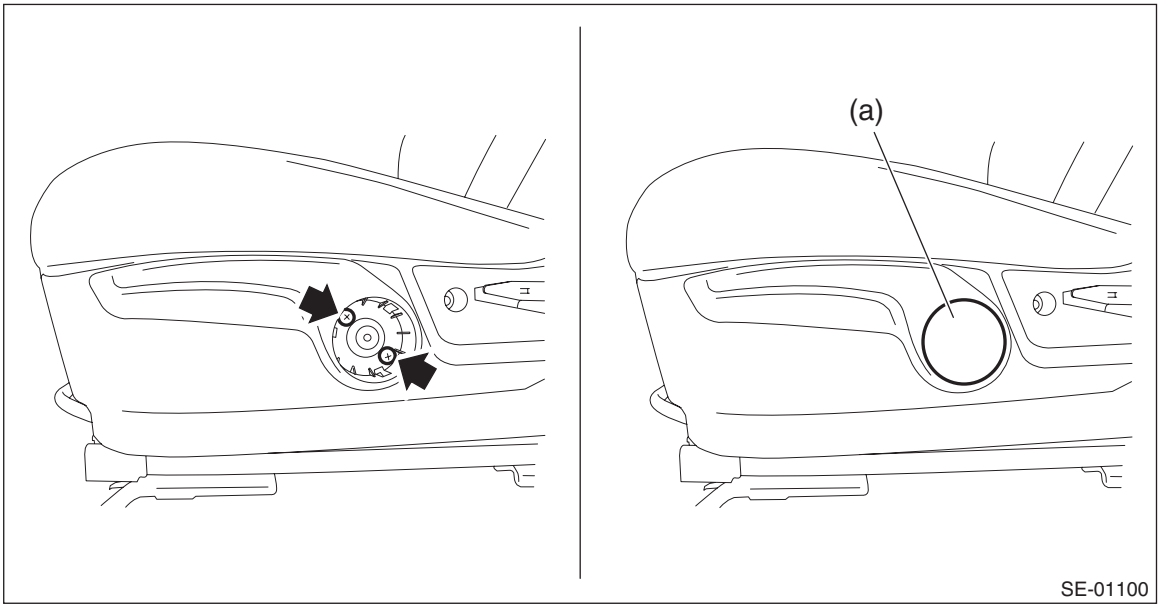

3) Remove the reclining lever cover.
   (1) Pull up the reclining lever and release the claws on the back.
   (2) Pull out the reclining lever cover.

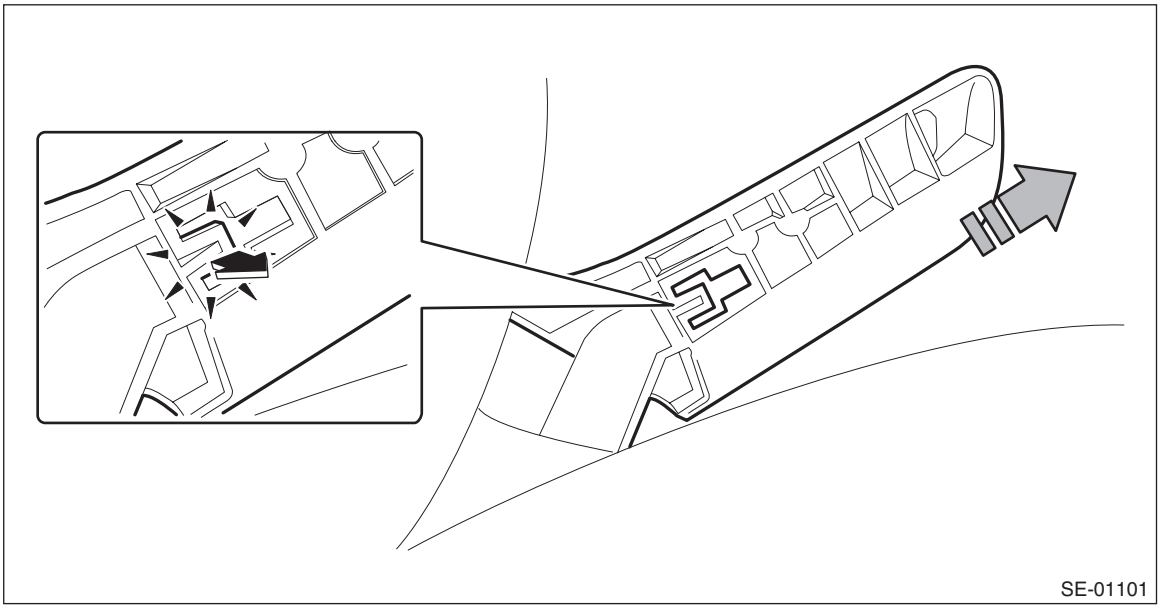

4) Remove the seat side cover OUT.
   (1) Remove the screws.
   (2) Release the claw in the upper section of the seat side cover.
   (3) Release the claw in the rear section of the seat side cover.

(4) Release the claw in the front section of the seat side cover, then remove the seat side cover OUT.

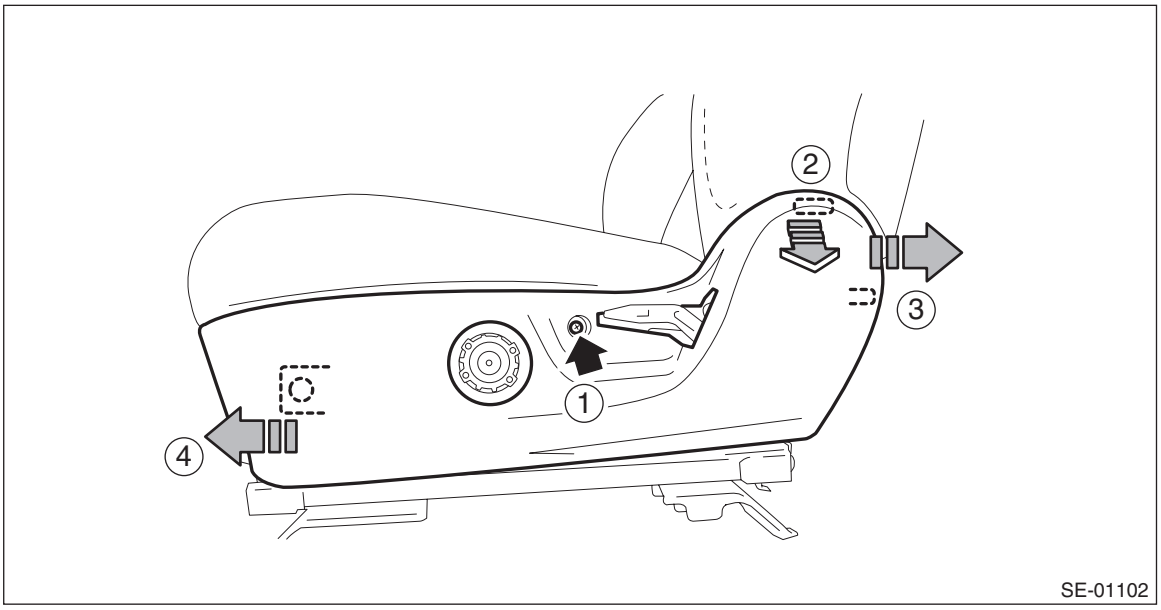

5) Remove the inner seat belt assembly.
(1) Remove the nut and remove the inner seat belt assembly.
(2) Remove the clip for the inner seat belt harness located under the seat cushion.

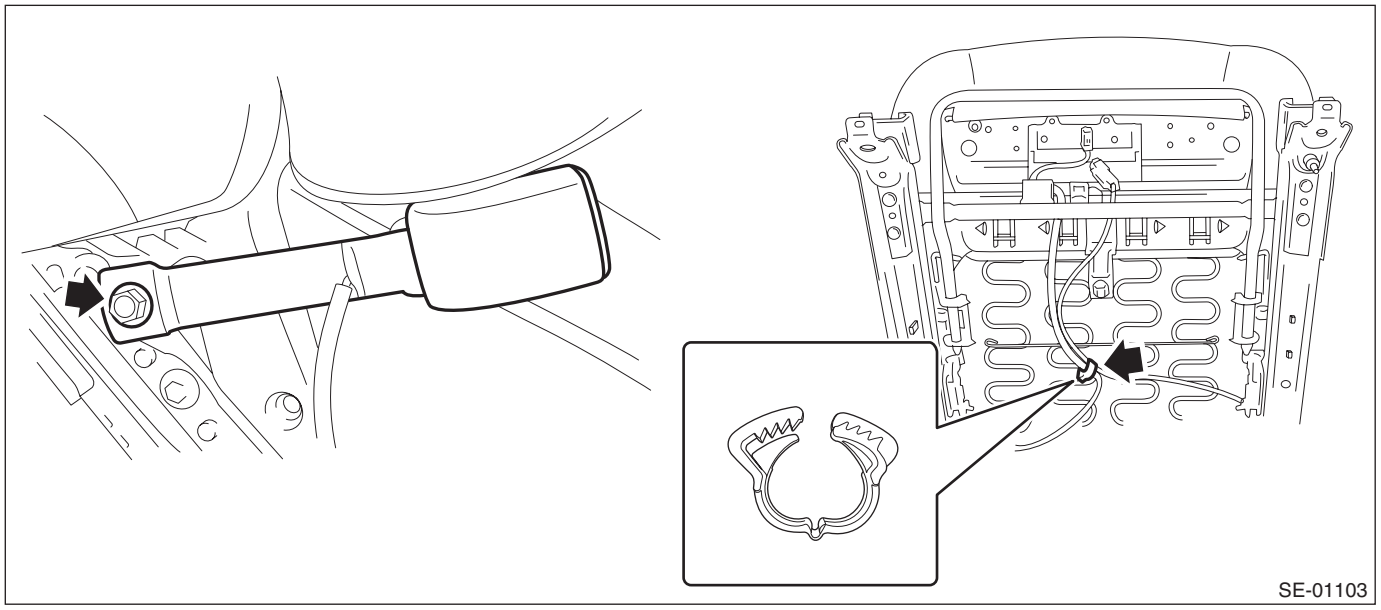

6) Remove the seat side cover IN.
(1) Remove the screws.
(2) Release the claw in the upper section of the seat side cover.
(3) Release the claw in the rear section of the seat side cover, then remove the seat side cover IN.

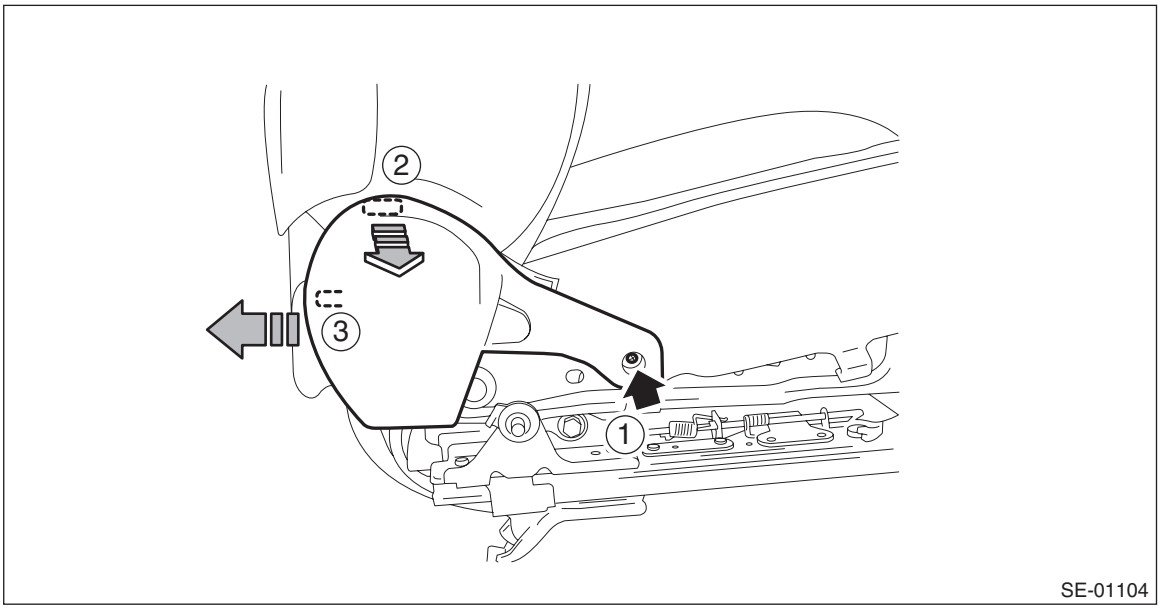

7) Separate the backrest assembly and the seat cushion assembly.
(1) Remove the clip for the side airbag harness located under the seat cushion. (seat with side airbag)
(2) Remove the bolts from reclining hinge of both sides.
(3) While taking care not to damage the airbag harness, separate the backrest assembly and the seat cushion assembly.

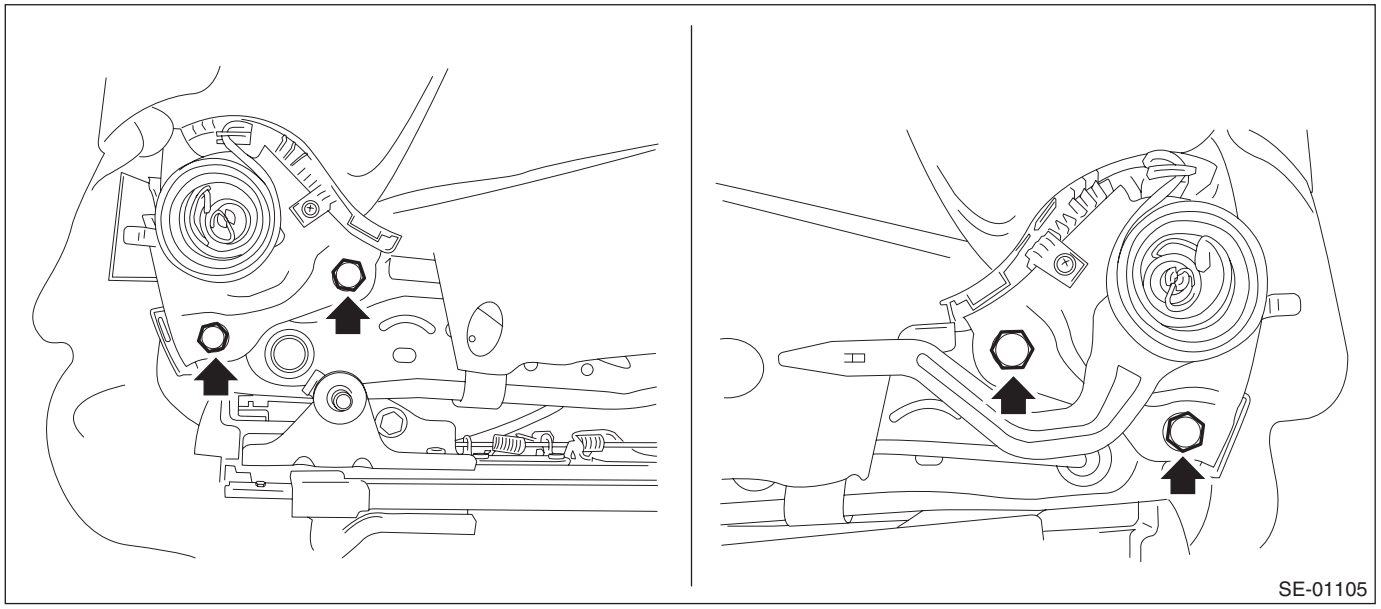

8) Remove the sliding adjuster bar.
(1) Remove the left and right spring locks.
(2) Pull out the sliding adjust bar.

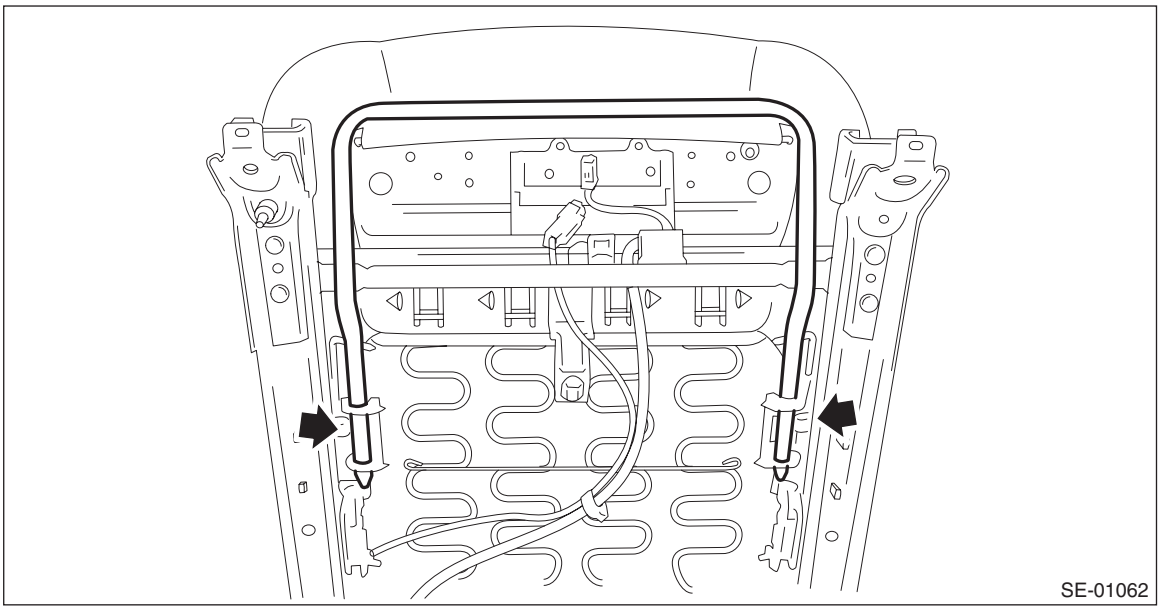

9) Remove the riser cover OUT.
(1) Remove the clip.
(2) Remove the hook, and detach the riser cover OUT.

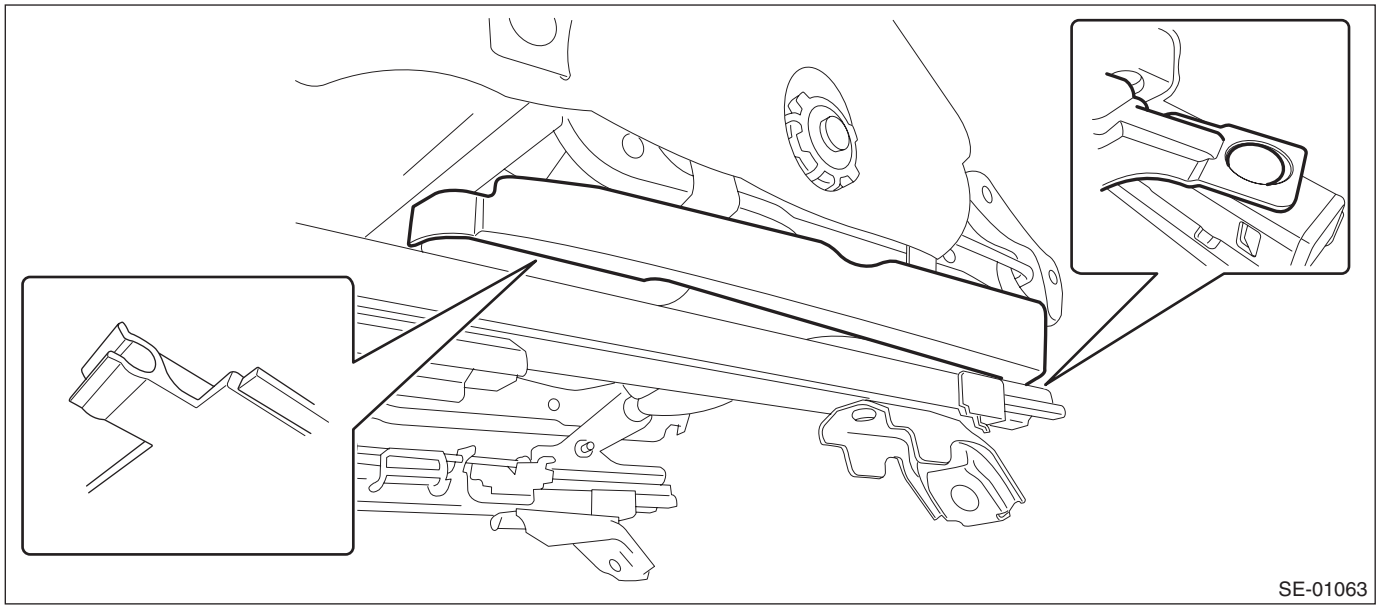

10) Remove the screws and remove the riser cover INN LH and RH.

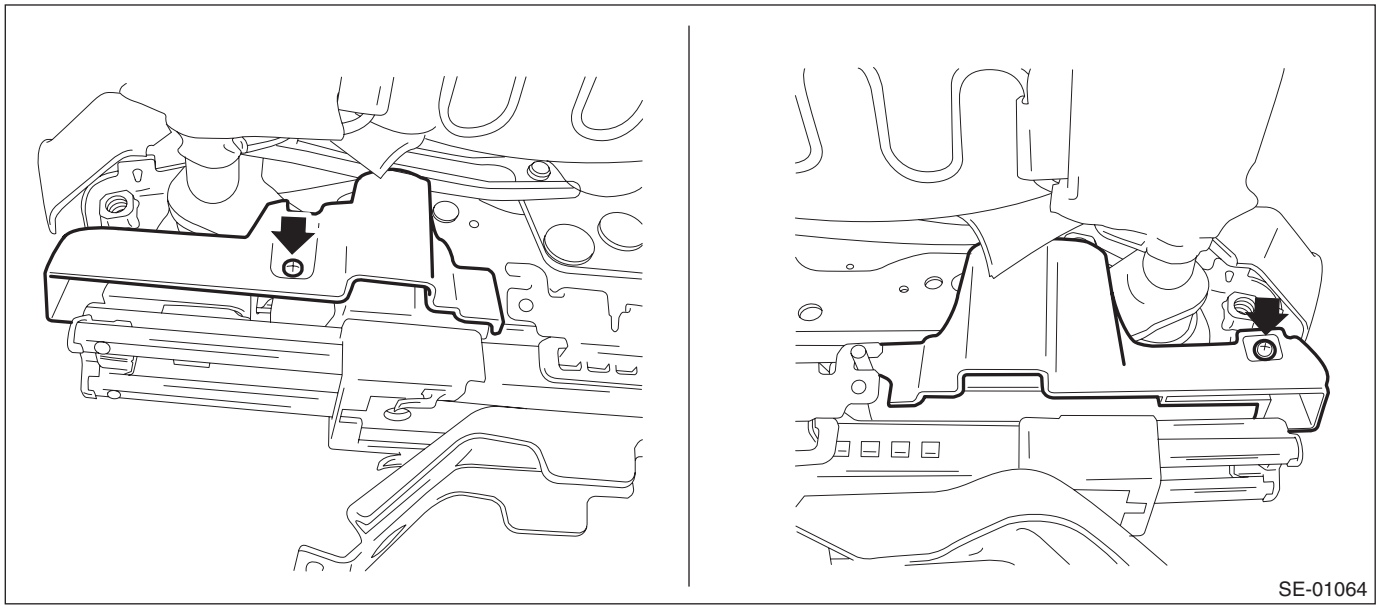

11) Remove the bolts and bushings on the seat cushion assembly (left and right) sides, and remove the slide rail assembly.

CAUTION:
Do not reuse the removed bolts because they are coated with the thread lock material. Always use new bolts during assembly.

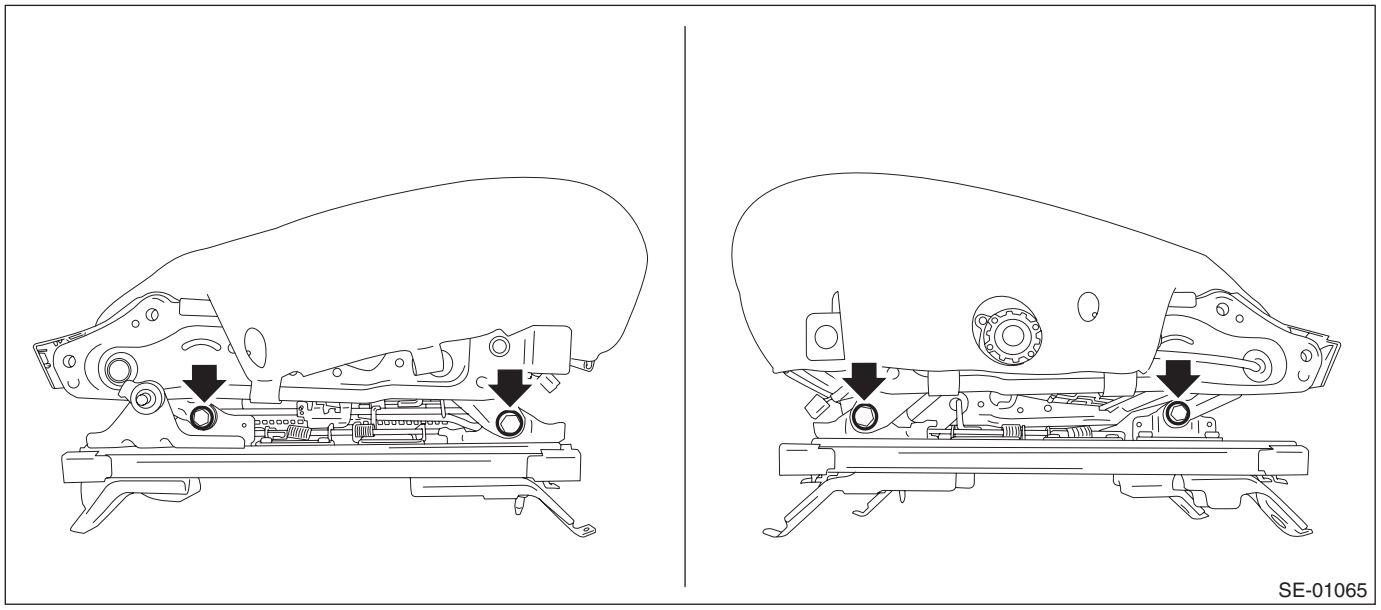

NOTE:
To remove the front bolt, use a spanner.

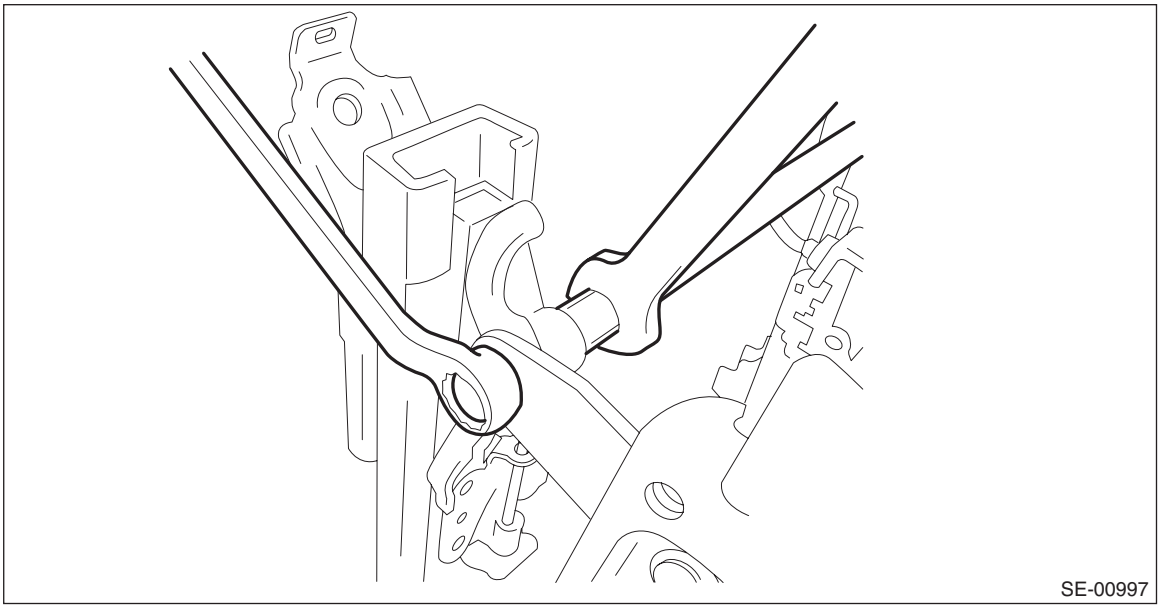

12) Remove the seat cushion pad & cover.
(1) Remove the hooks and hog rings.
(2) Remove the seat cushion pad & cover from seat cushion assembly.

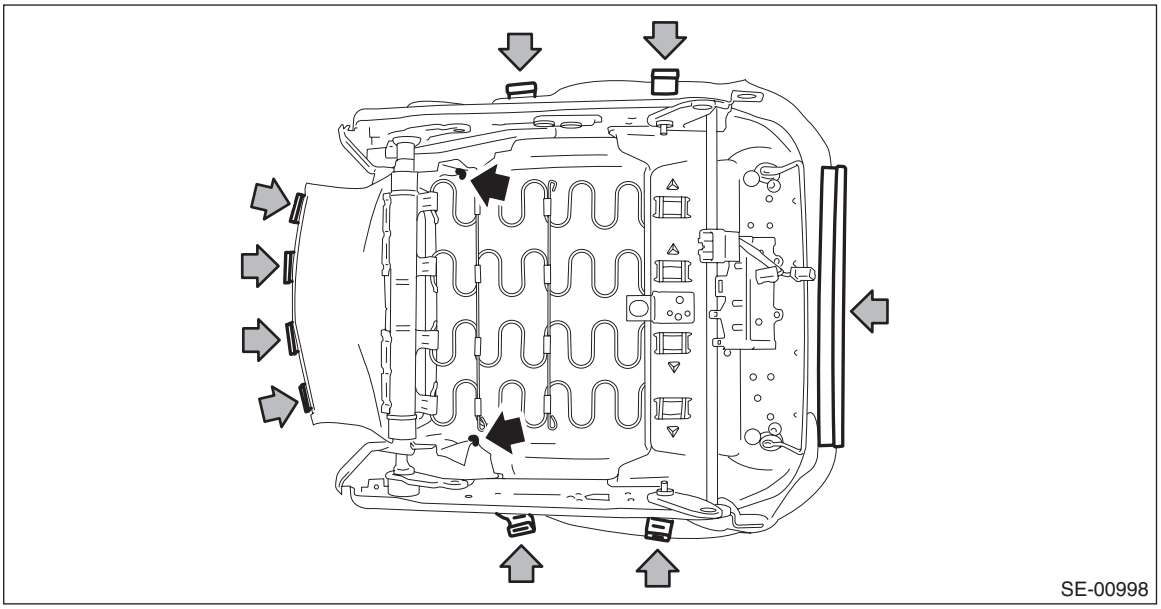

13) Remove the seat cushion cover.
(1) Remove the hog ring (A).
(2) Pull out the seat cushion pad from the seat cushion cover.

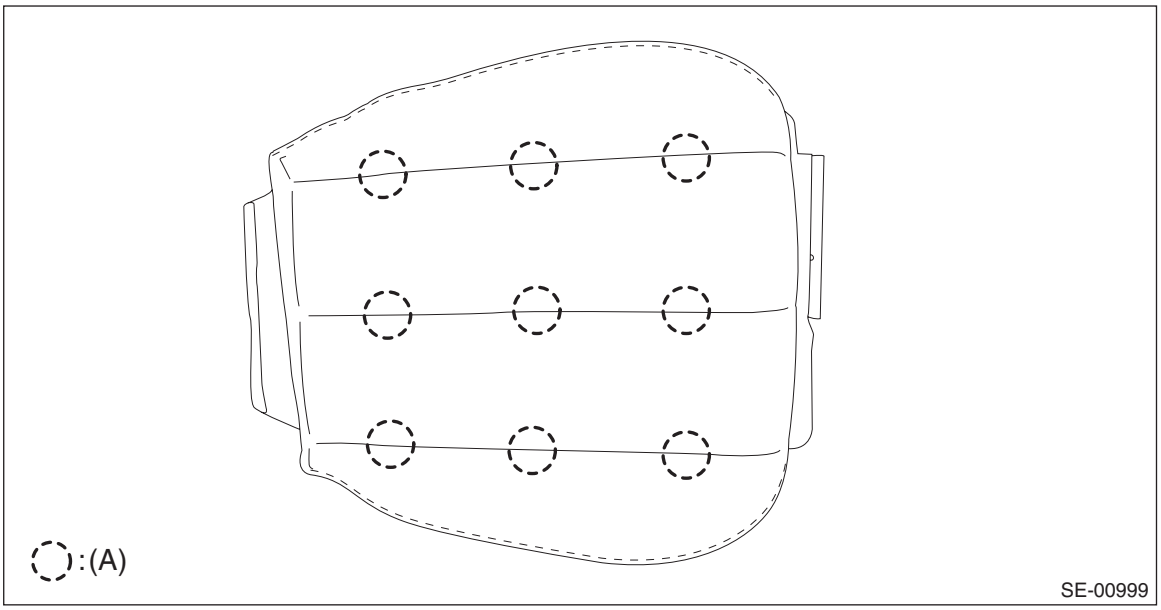

14) Remove the backrest back cover.
(1) Remove the screws.
(2) Release the hooks by pulling down the back cover and remove the backrest back cover.

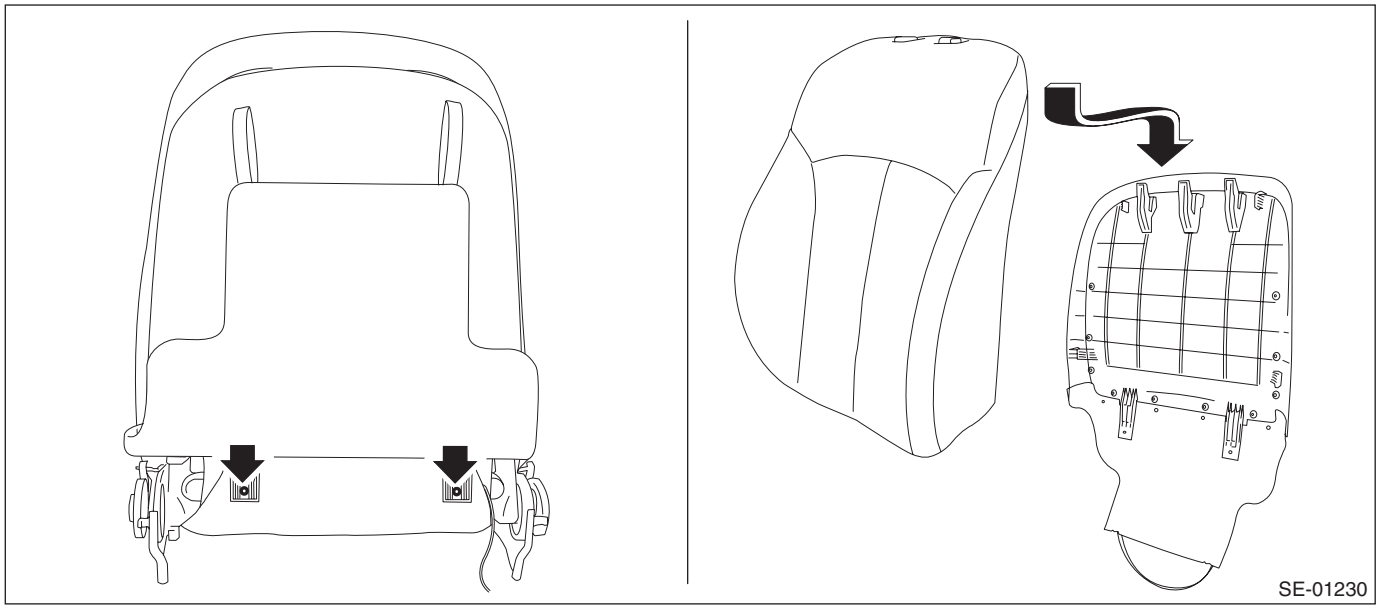

15) Remove the backrest pad & cover.

CAUTION:
Be careful not to tear the vinyl inside the seat when removing the hog rings.
If torn, replace with a new part.

(1) Remove the hooks and hog rings.
(2) Remove the backrest pad & cover from backrest assembly.

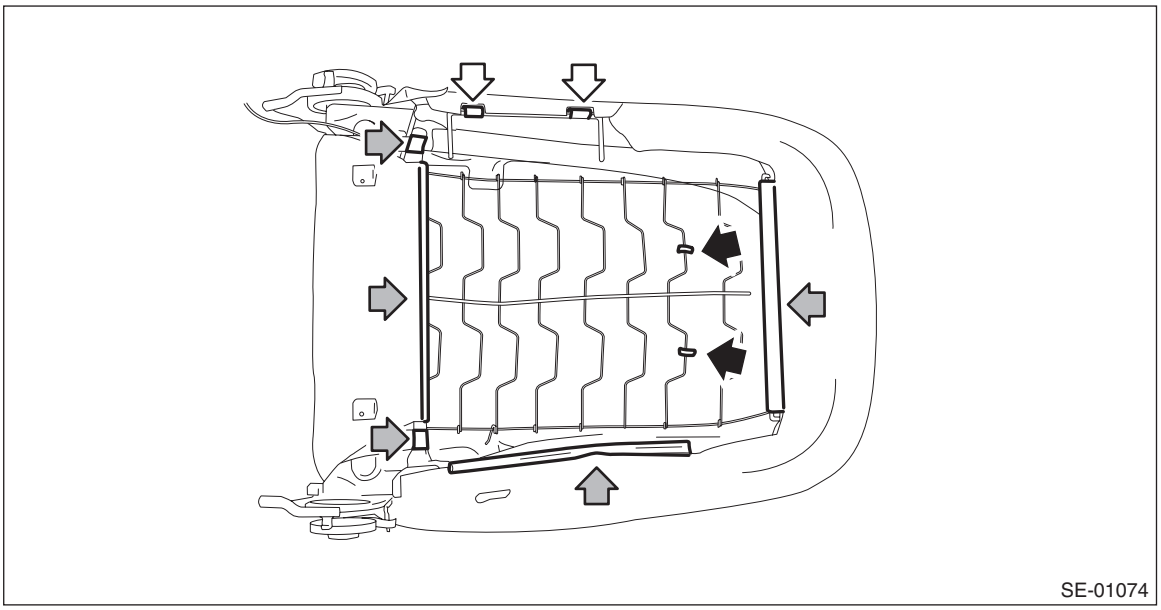

16) Remove the side airbag module assembly.

CAUTION:
Do not open the side airbag module case (plastic) of the airbag. If any damage is present in the side airbag module case (such as airbag module cloth coming out), replace the side airbag module assembly with a new one.

(1) Remove the hooks, hog rings, and S hooks.
(2) Remove the mounting nuts of the side airbag module.

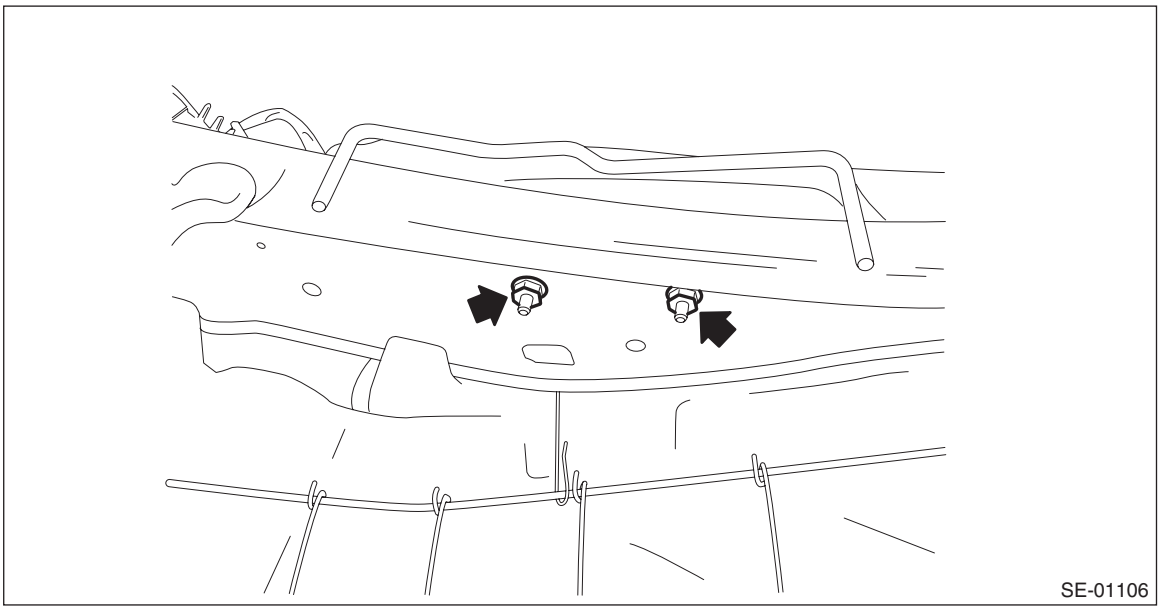

(3) Remove the side airbag harness from backrest frame assembly.
(4) While taking care not to damage the side airbag module case (plastic) of the airbag, remove the side airbag module assembly.

17) Remove the headrest bushing.

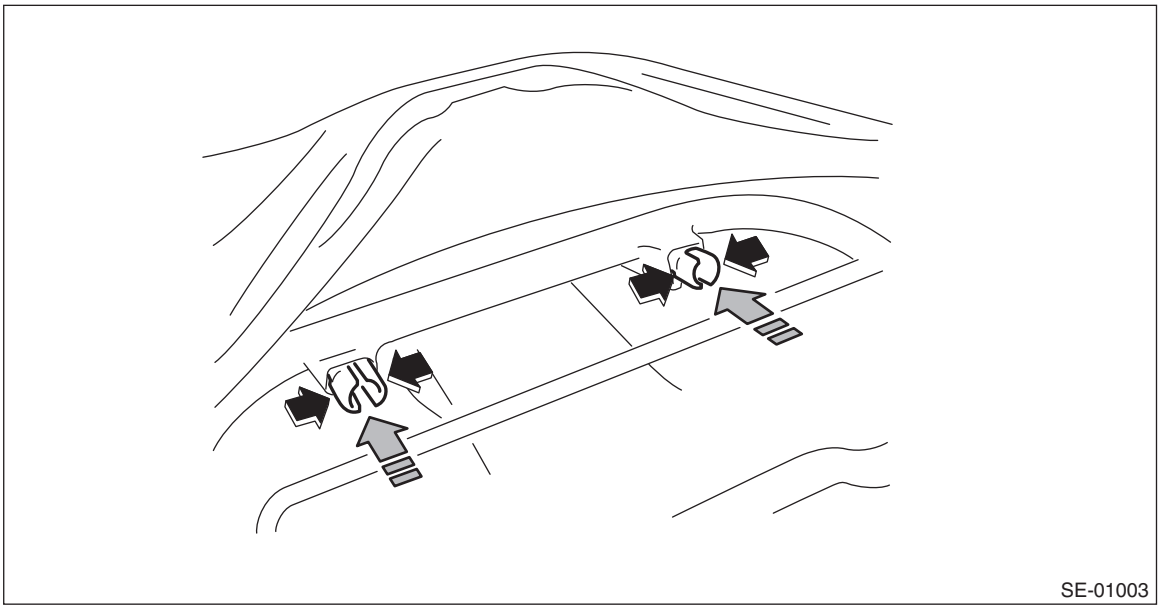

NOTE:
Catch the tip of headrest bushing with pliers and push it from inside seat to outside to remove it.

18) Pull out the backrest frame.

19) Remove the backrest cover.
    (1) Remove the hog ring (A).
    (2) Pull out the backrest pad from the backrest cover.

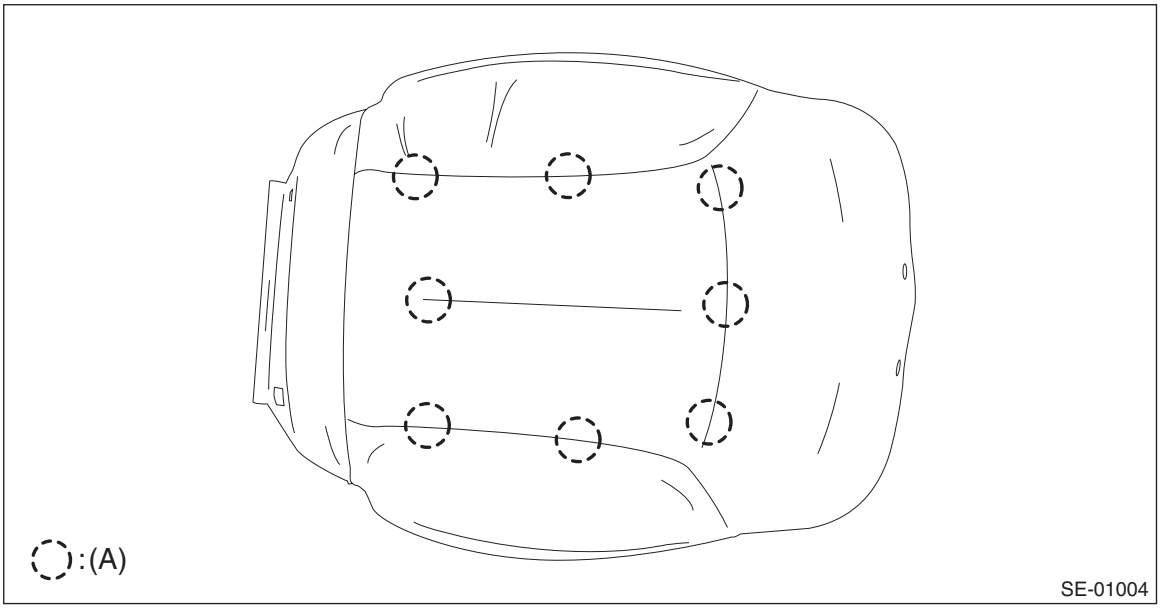

2. DRIVER SEAT (POWER SEAT)

CAUTION:
• Before assembling, make sure how the harnesses of the side airbag and inner seat belt are routed in order to avoid misarranging. Assembling with harnesses improperly routed may cause the harness to get caught and short out.
• Do not disassemble the backrest assembly and seat cushion frame and slide rail assembly.

1) Remove the seat from vehicle. <Ref. to SE-10, REMOVAL, Front Seat.>

NOTE:
Before removing the seat, lift the seating face.

2) Disconnect the connector for reclining motor from the backside of seat cushion.

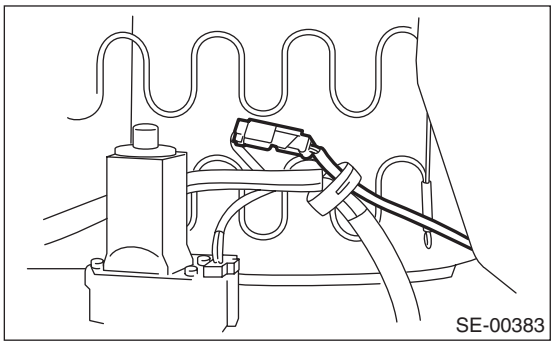

3) Remove the seat side cover OUT.
(1) Release the claw in the rear section of the seat side cover.
(2) Release the claw in the upper section of the seat side cover.
(3) Remove the clip and release the claw in the front section of the seat side cover
(4) Disconnect the power seat switch and lumber switch connector and remove the seat side cover OUT.

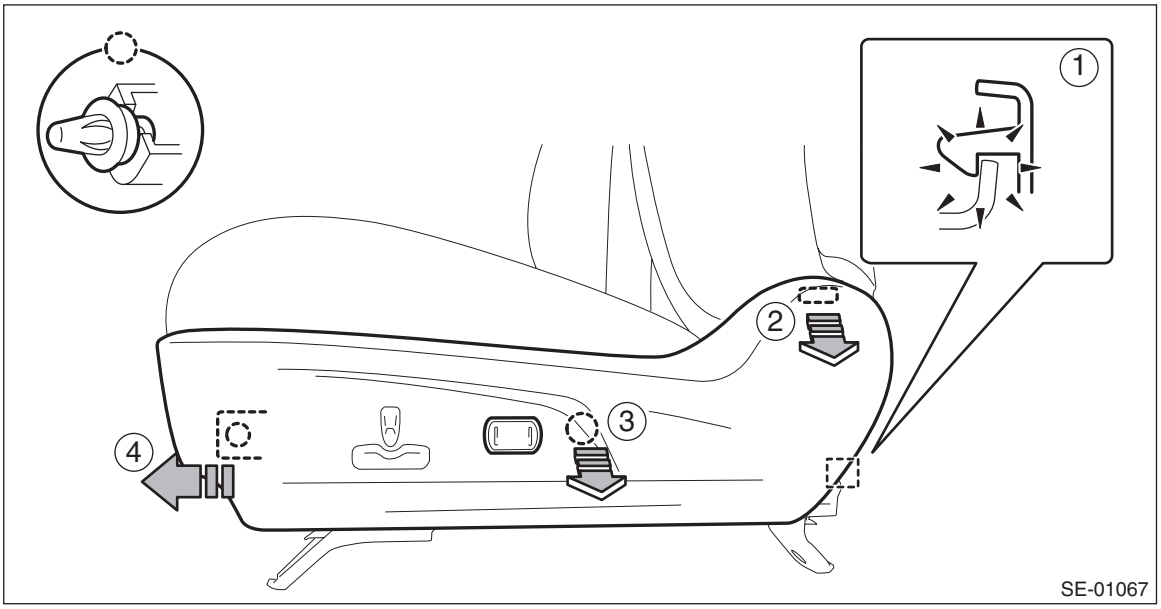

4) Remove the inner seat belt assembly.
   (1) Remove the nut and remove the inner seat belt assembly.
   (2) Disconnect the connector of the inner seat belt harness located under the seat cushion.

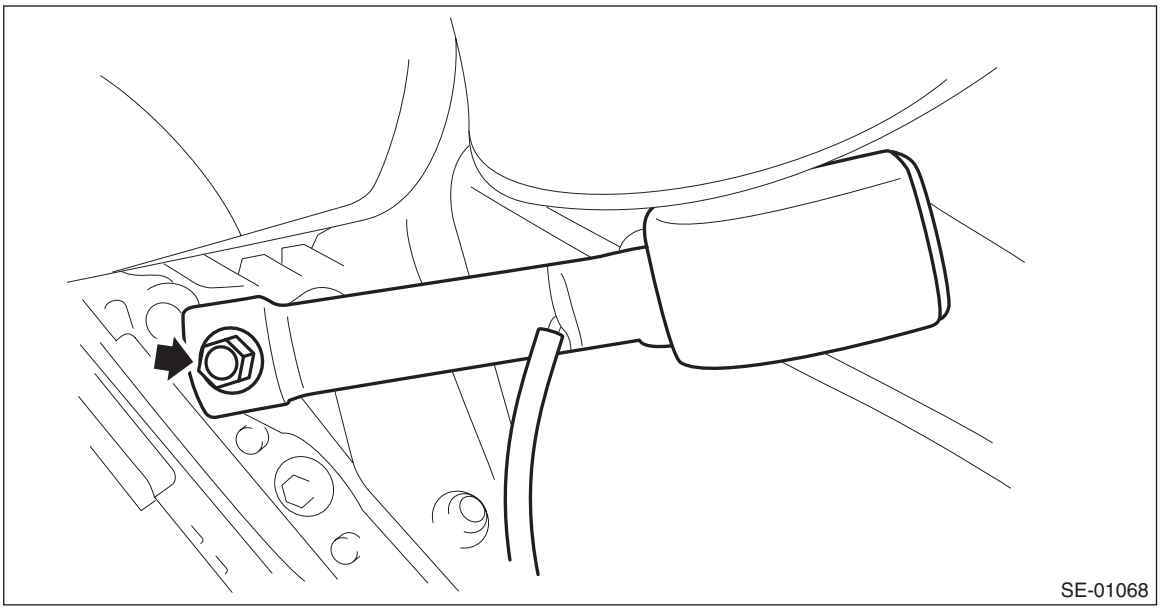
SE-01068

5) Remove the seat side cover IN.
   (1) Remove the screws.
   (2) Release the claw in the rear section of the seat side cover.
   (3) Release the claw in the upper section of the seat side cover, then remove the seat side cover IN.

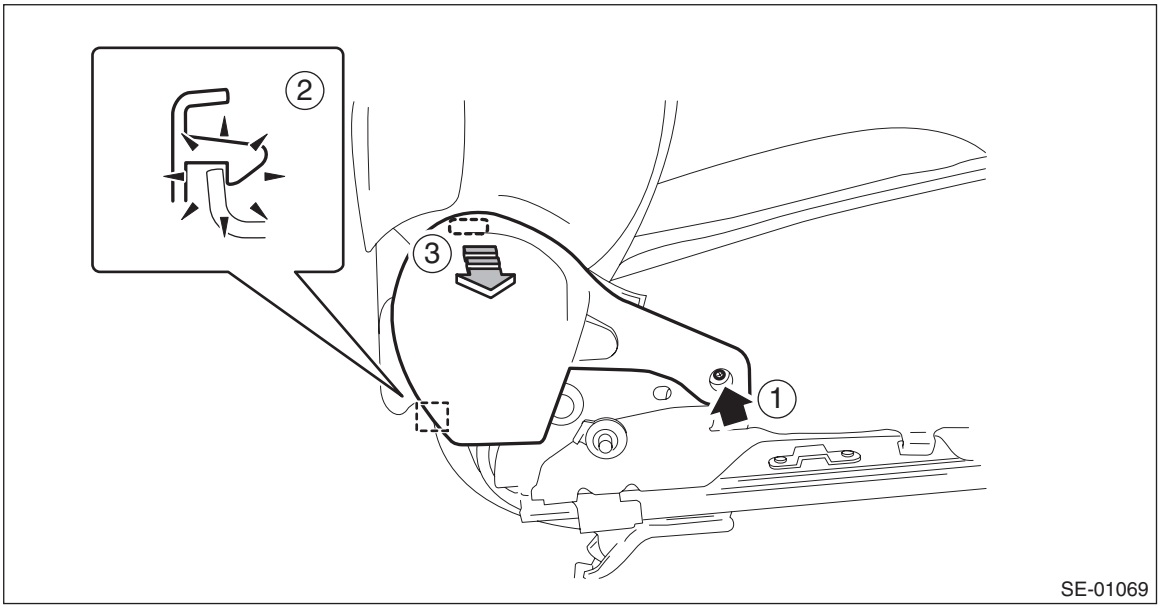

SE-01069

6) Separate the backrest assembly and the seat cushion assembly.
(1) Remove the clip for the side airbag harness located under the seat cushion.
(2) Remove the bolts from reclining hinge of both sides.
(3) While taking care not to damage the airbag harness, separate the backrest assembly and the seat cushion assembly.

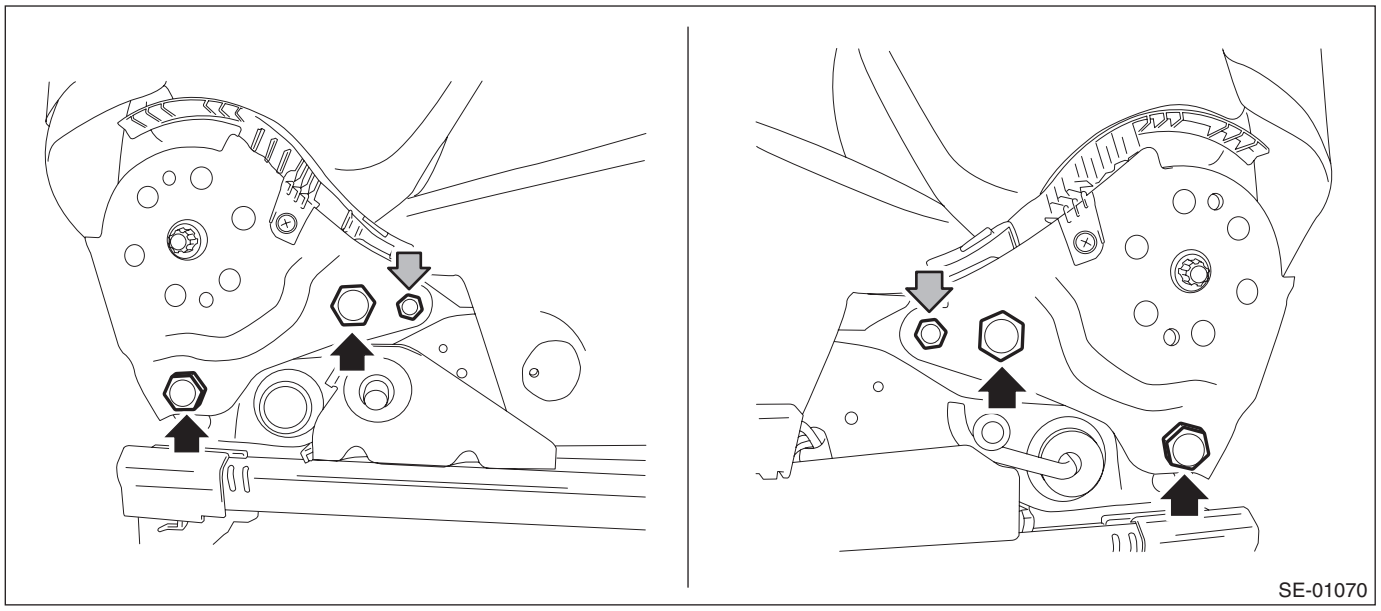

7) Remove the riser covers LH and RH as well as slide rail end cover.
(1) Remove the clips and remove the riser covers LH and RH.
(2) Remove the hook, and then remove the slide rail end cover.

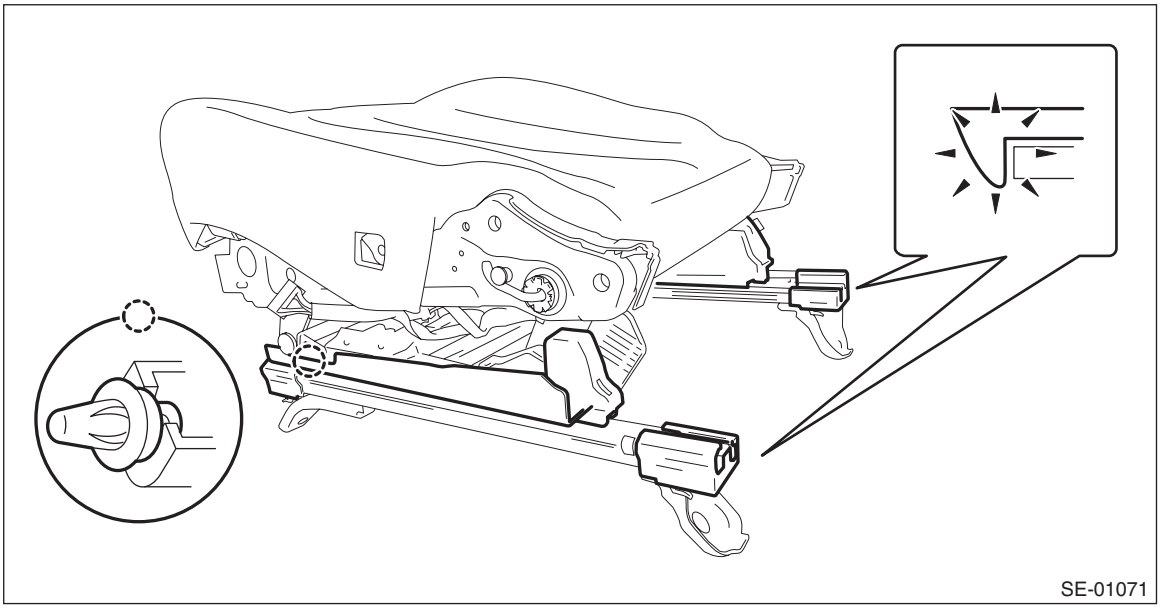

8) Remove the seat cushion pad & cover.
   (1) Remove the hooks and hog rings.
   (2) Remove the seat cushion pad & cover from seat cushion assembly.

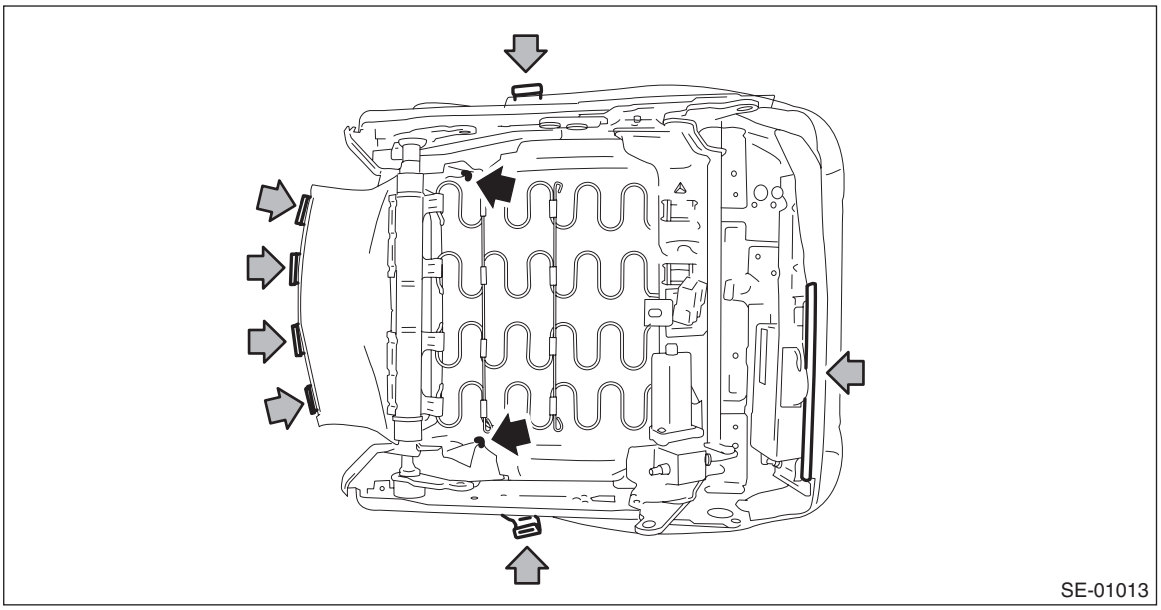

9) Remove the seat cushion cover.
   (1) Remove the hog ring (A).
   (2) Pull out the seat cushion pad from the seat cushion cover.

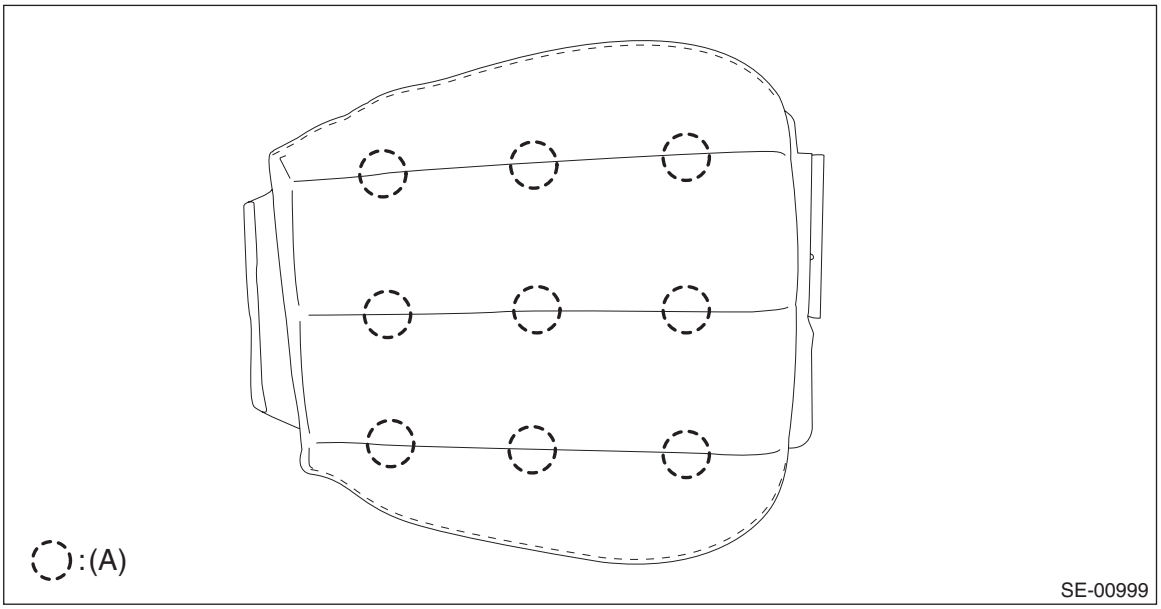

10) Remove the backrest back cover.
(1) Remove the screws.
(2) Release the hooks by pulling down the back cover and remove the backrest back cover.

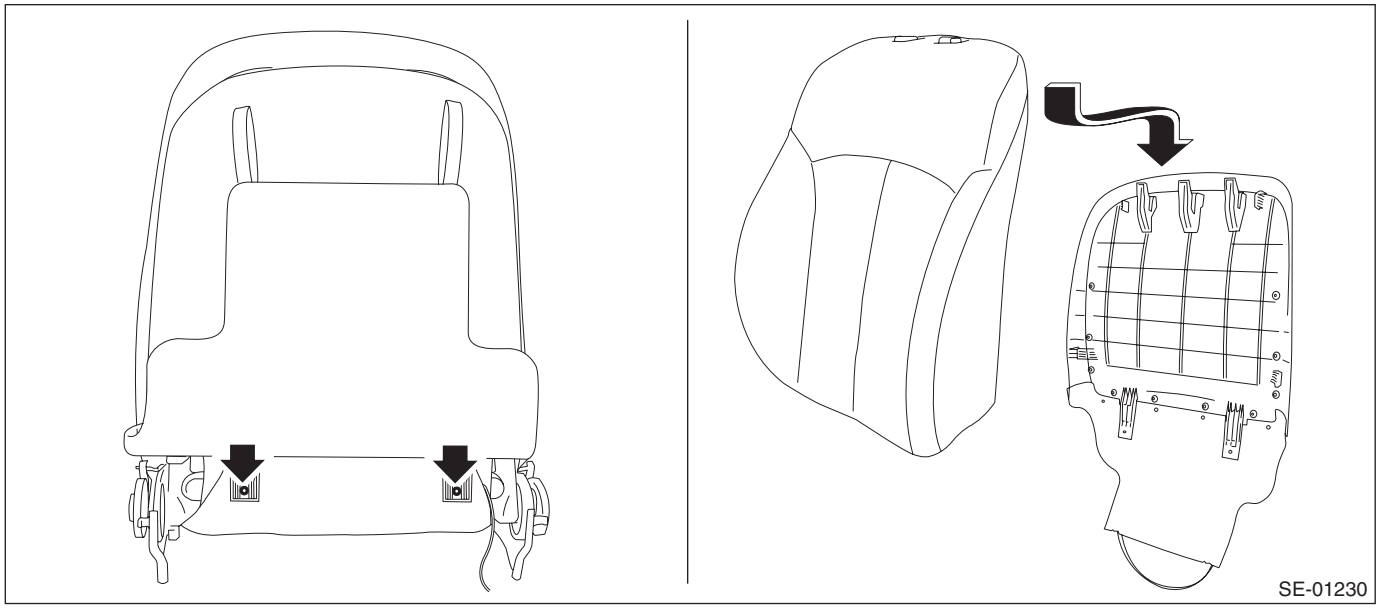

11) Remove the backrest pad & cover.
(1) Remove the hooks, hog rings, and metal clips.
(2) Remove the backrest pad & cover from backrest assembly.

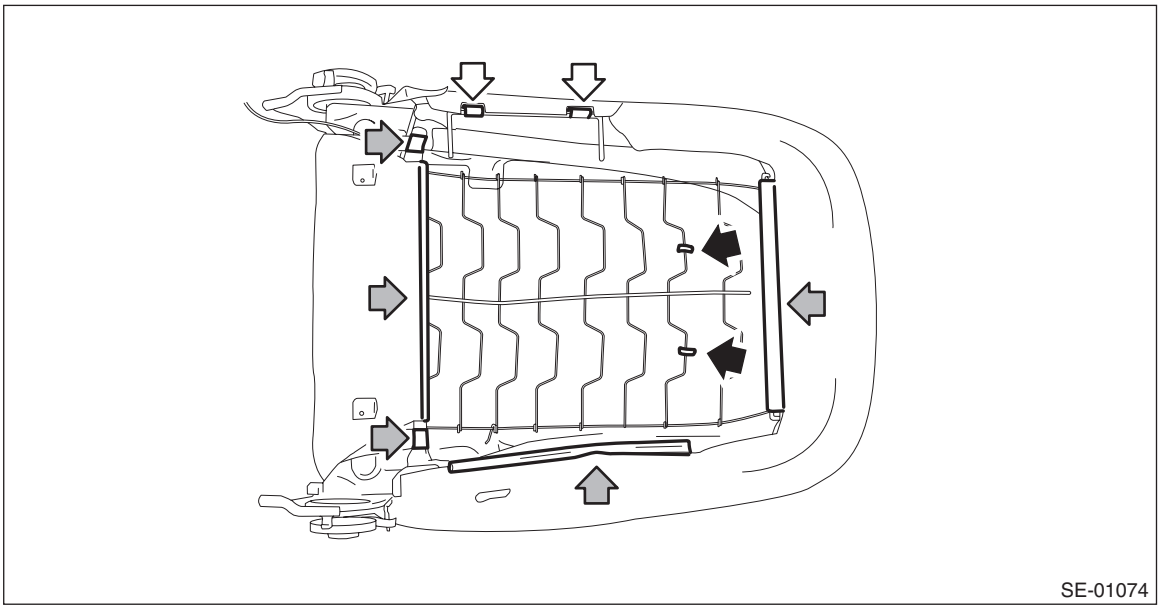

12) Remove the side airbag module assembly.

CAUTION:
Do not open the side airbag module case (plastic) of the airbag. If any damage is present in the side airbag module case (such as airbag module cloth coming out), replace the side airbag module assembly with a new one.

(1) Remove the S hook.
(2) Remove the mounting nuts of the side airbag module.

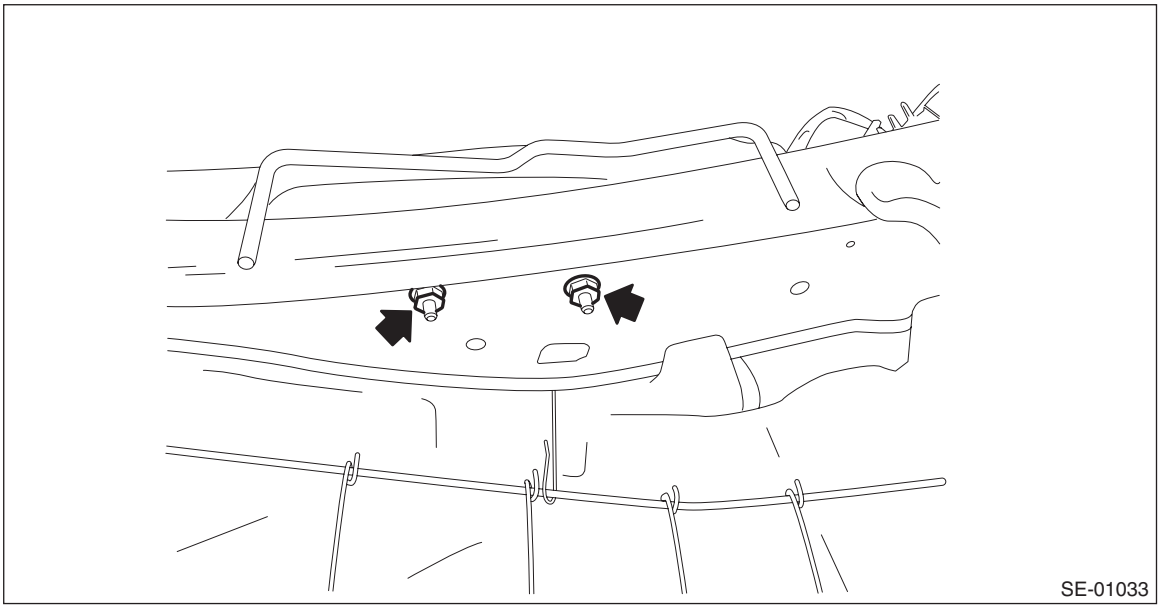
SE-01033

(3) Remove the side airbag harness from backrest frame assembly.
(4) While taking care not to damage the side airbag module case (plastic) of the airbag, remove the side airbag module assembly.

13) Remove the headrest bushing.

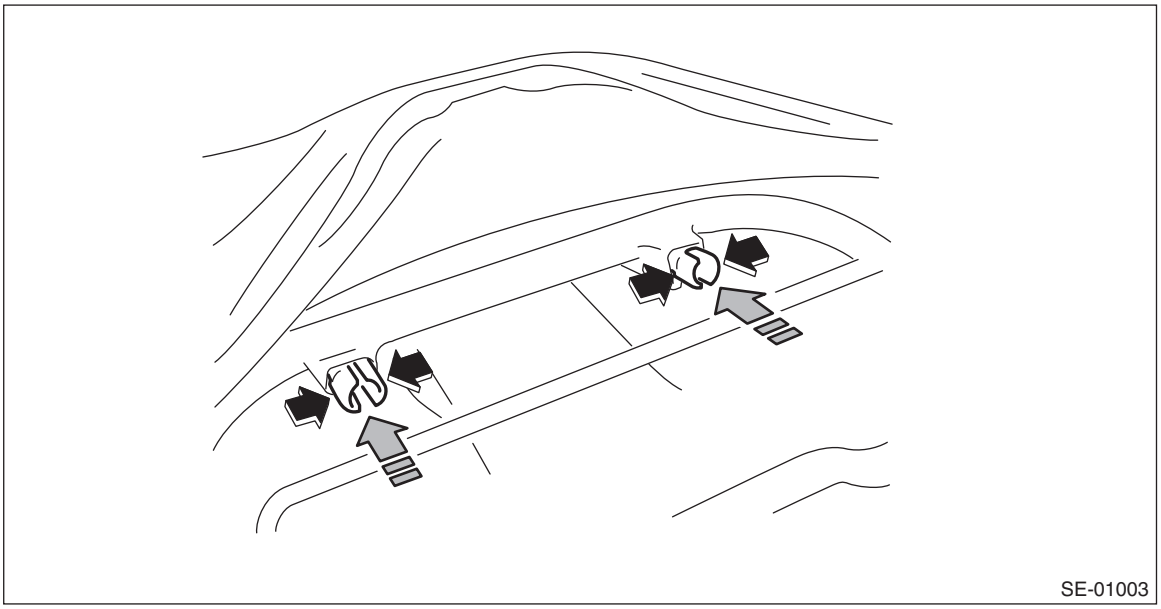
SE-01003

NOTE:
Catch the tip of headrest bushing with pliers and push it from inside seat to outside to remove it.

14) Pull out the backrest frame.

15) Remove the backrest cover.
(1) Remove the hog ring (A).
(2) Pull out the backrest pad from the backrest cover.

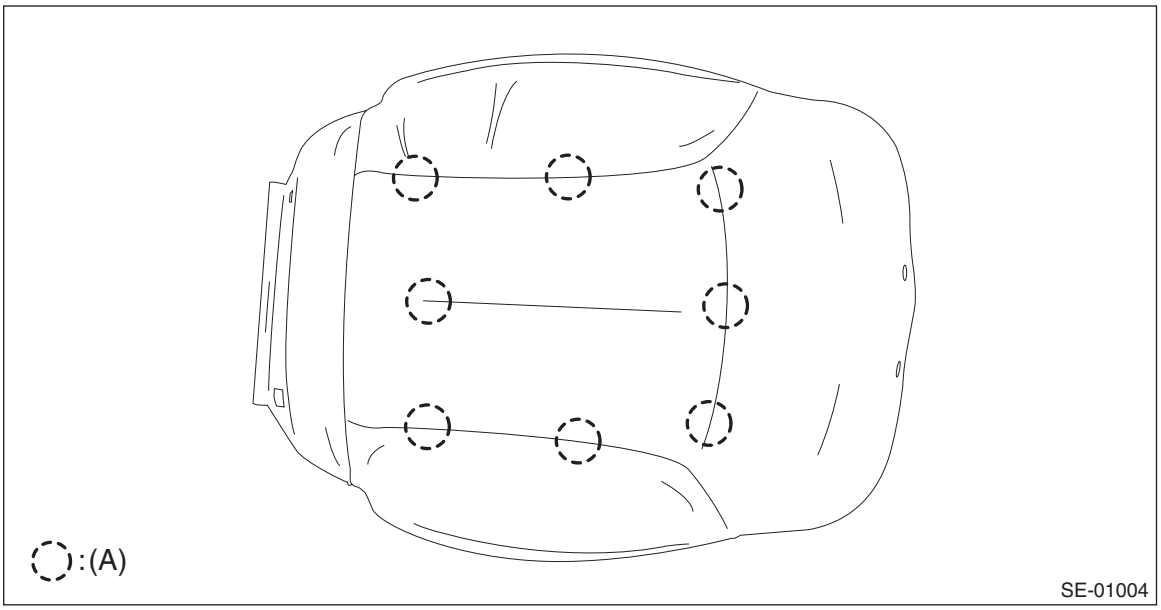

3. PASSENGER'S SEAT

CAUTION:
• If the seat cushion cover is removed or replaced, make sure to perform occupant detection system adjustment after installing the seat. <Ref. to OD(diag)-15, OPERATION, System Calibration (Rezeroing).>
Failure to do so may prevent the passenger's airbag from operating properly.
• The occupant detection system (passenger seat only) control module, occupant detection sensor, seat cushion pad and seat cushion frame are considered as a single seat cushion pad and frame assembly. Never remove the occupant detection control module or the occupant detection sensor from the seat cushion frame.
• If the seat cushion cover is removed, make sure to replace the hang wire on the seat cushion side with a new wire.

1) Remove the seat from vehicle. <Ref. to SE-10, REMOVAL, Front Seat.>

NOTE:
For power seat, lift the seating face before removing the seat.

2) Refer to the disassembly procedures for the driver's seat.
- Manual seat <Ref. to SE-12, DRIVER SEAT (MANUAL SEAT), DISASSEMBLY, Front Seat.>
- Power seat <Ref. to SE-21, DRIVER SEAT (POWER SEAT), DISASSEMBLY, Front Seat.>

D: ASSEMBLY

CAUTION:
• The slide rail mounting bolts for the manual seat are coated with the thread lock material. Therefore, do not reuse the removed bolts. Always use new bolts during assembly.

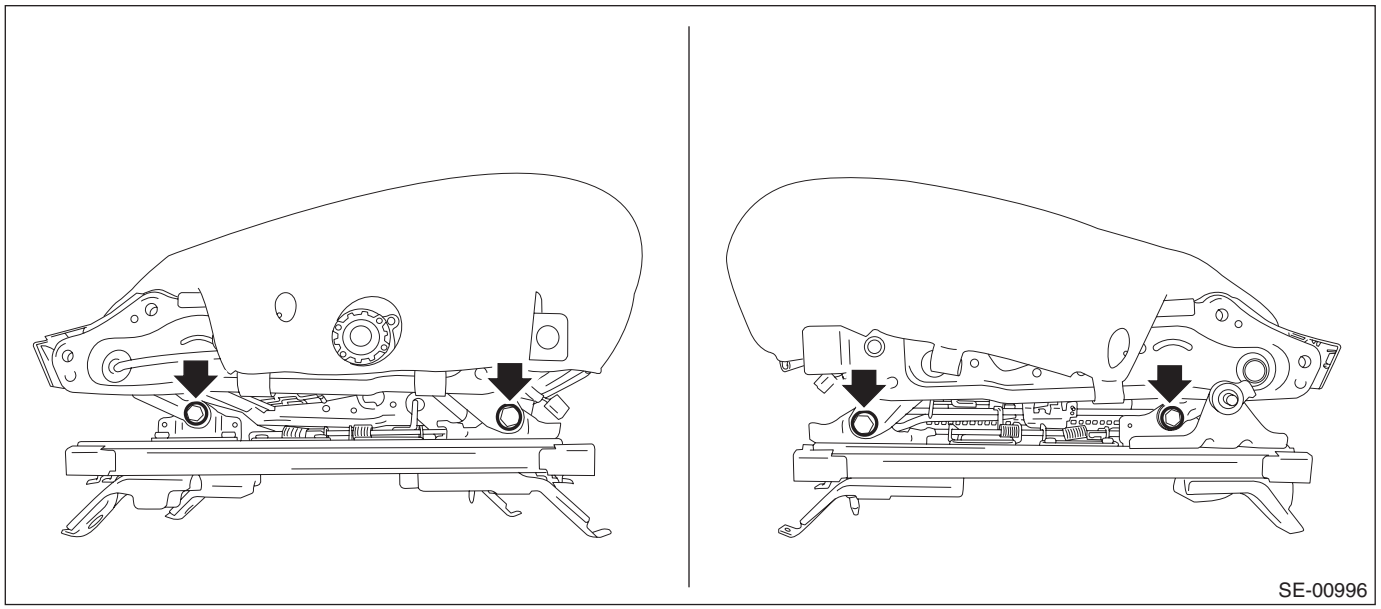

• Do not confuse the harness routing of the side airbag and inner seat belt etc. Assembling with harnesses improperly routed may cause the harness to get caught and short out.
• If the flat mat hook of the backrest frame assembly is deformed or comes off due to the deformation, replace the hook with a new part.

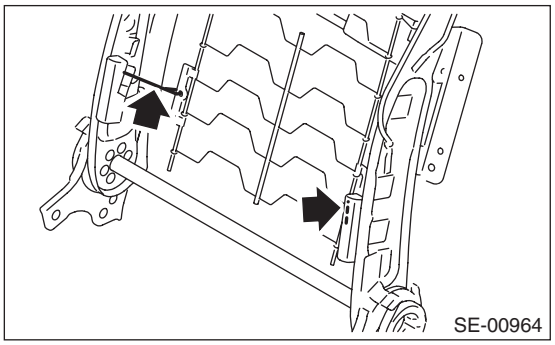

- **Make sure that the side airbag module assembly is installed as shown in the figure.**

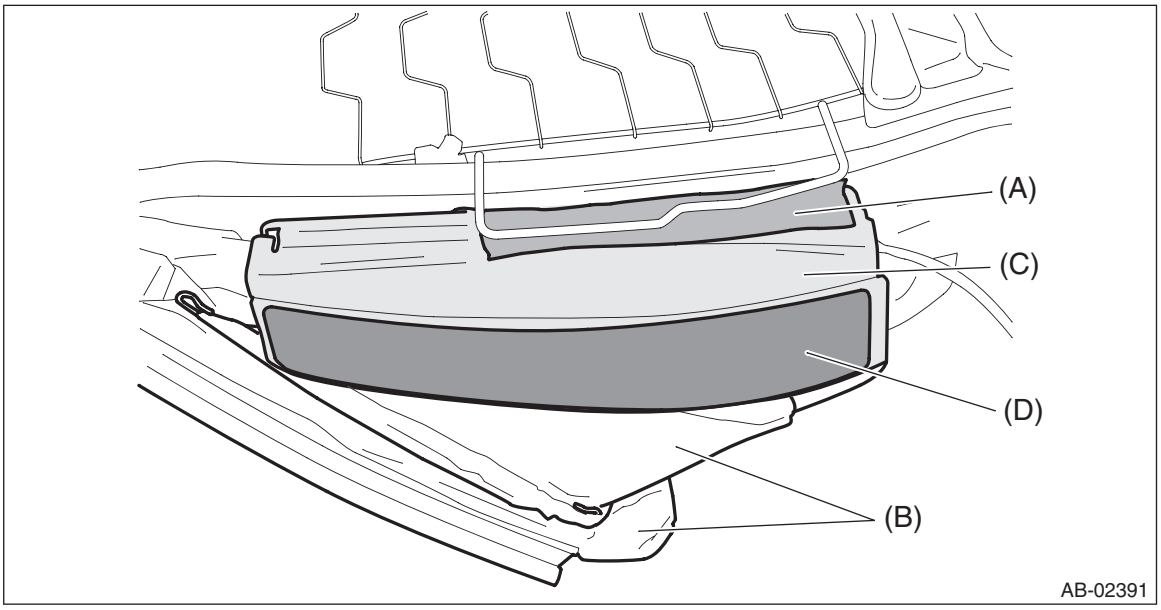

(A) Side airbag guide cloth
(B) Backrest cover
(C) Side airbag module ASSY
(D) Side airbag tape

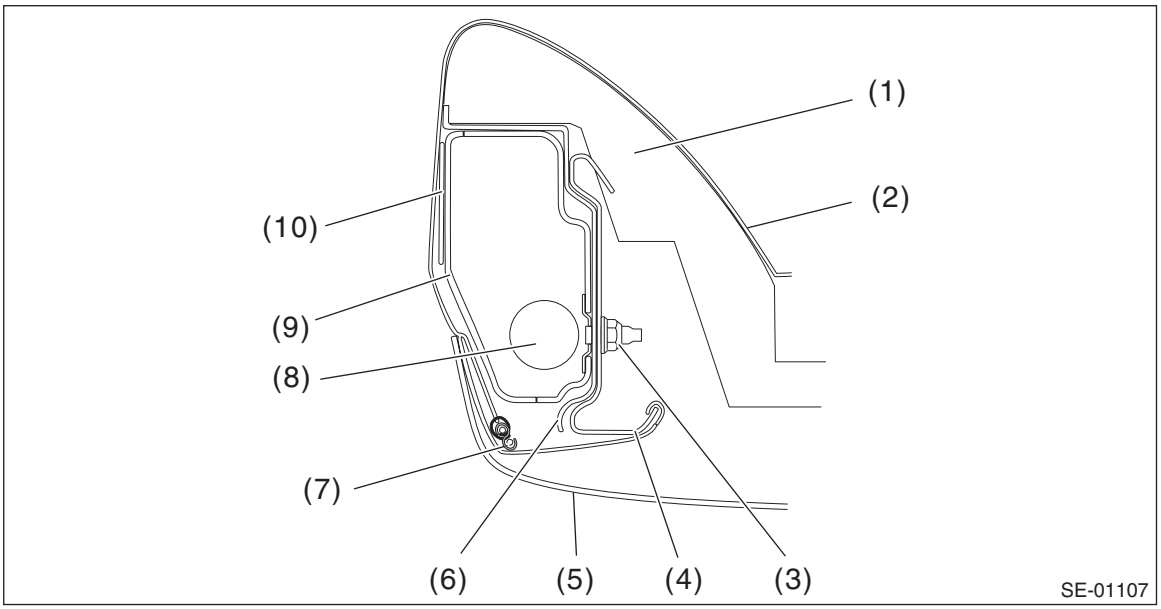

(1) Backrest pad
(2) Backrest cover
(3) Nut
(4) Backrest frame
(5) Backrest back cover
(6) Side airbag guide cloth
(7) S hook
(8) Side airbag module inflator
(9) Side airbag module case
(10) Side airbag tape

Besides, if the backrest cover is not installed securely, the side airbag module may not be activated properly, therefore keep strictly to the following procedures.
- **When replacing the side airbag assembly with new one, be sure to attach the side airbag tape.**
- **Be careful not to stain or damage the backrest cover during assembly.**
- **Do not reuse hog rings and S hooks.**
- **Secure the hog ring using hog ring pliers.**
- **Install the hog rings to the specified points securely and make sure that there is no wrinkle or twisting on backrest cover.**

1) Make sure that there is no foreign matter on side airbag module.
2) Assemble the seat cover.
   (1) Adjust so that the left and right clearances between wire and seat pad become equal, and mark the seat pad.

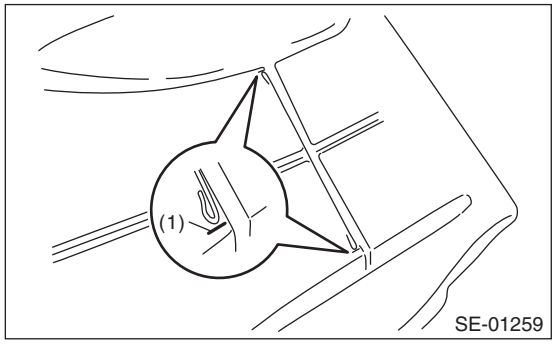

(1) Marking

   (2) Mark the center of the wire on the pad side to which the hog ring is attached.

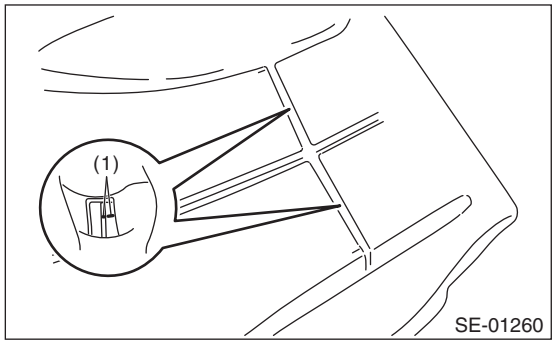

(1) Marking

   (3) Insert the wire into the seat cover, and align the wire with the position marked in Step 1).

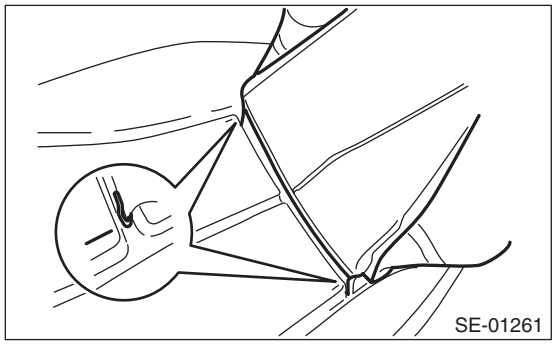

   (4) Mark the wire on the seat cover side according to the markings on the seat pad.

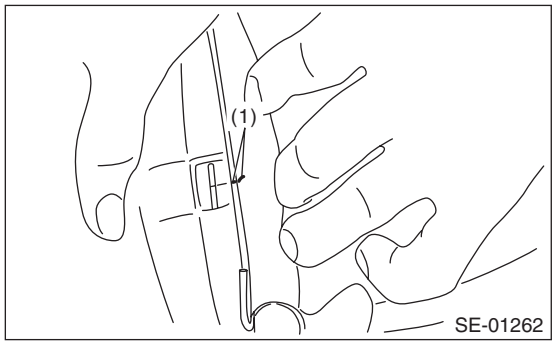

(1) Marking

(5) Perform Steps 1) — 4) to all sections to which the hog rings are attached.
(6) Make sure that all hog rings (A) are attached securely.

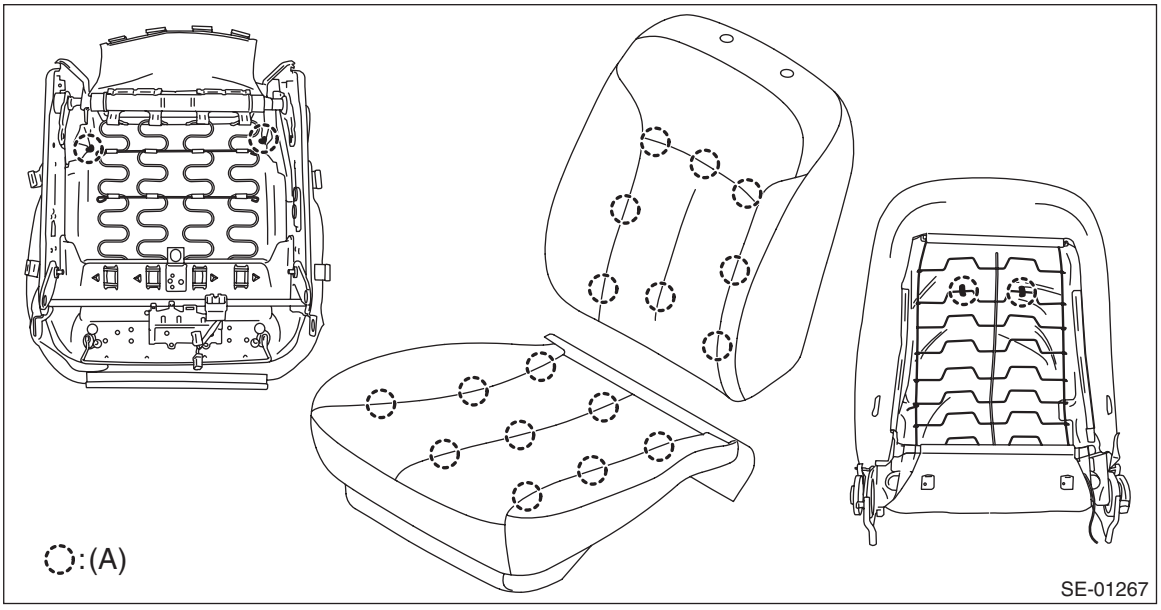

3) Assemble remaining parts in the reverse order of disassemble.

NOTE:
• When installing the inner seat belt assembly, follow the procedures described in the seat belt section. <Ref. to SB-25, INSTALLATION, Front Seat Belt.>
• Install the backrest assembly and seat cushion assembly in the following procedure.
1. Temporarily tighten the four reclining hinge bolts.
2. Place the backrest in the most upright position.
3. Tighten the reclining hinge bolts in order from (1) to (4) two or three times, until they reach the specified torque.

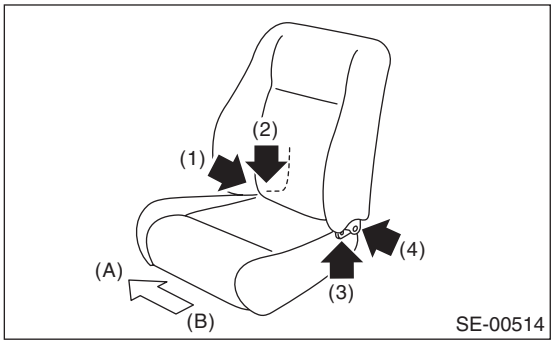

(A) Vehicle inside
(B) Vehicle outside

Tightening torque:
Refer to "COMPONENT" of "General Description". <Ref. to SE-2, FRONT SEAT, COMPONENT, General Description.>

Tightening torque: <Ref. to SE-2, FRONT SEAT, COMPONENT, General Description.>

4) If any wrinkles are found after the assembly of the seat cover, finish the seat cover with iron.
(1) Place the wet towel on wrinkles.

(2) Touch up with warm iron.

CAUTION:
Keep moving the iron, otherwise the seat cover surface can be damaged.

NOTE:
This method is available for genuine leather, synthetic leather, cloth, etc.

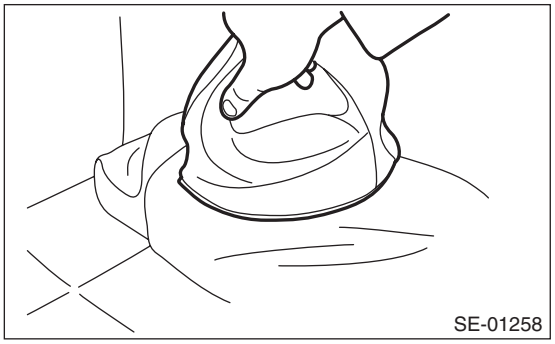

5) Install the seat assembly.

CAUTION:
• The seat mounting bolts differ between the front mounting points and the rear mounting points. Make sure that you are using correct bolts at correct positions.
• Tighten the slide rail installing bolts in the order as shown in the figure, in several steps by gradually increasing the torque until they reach the specified torque.

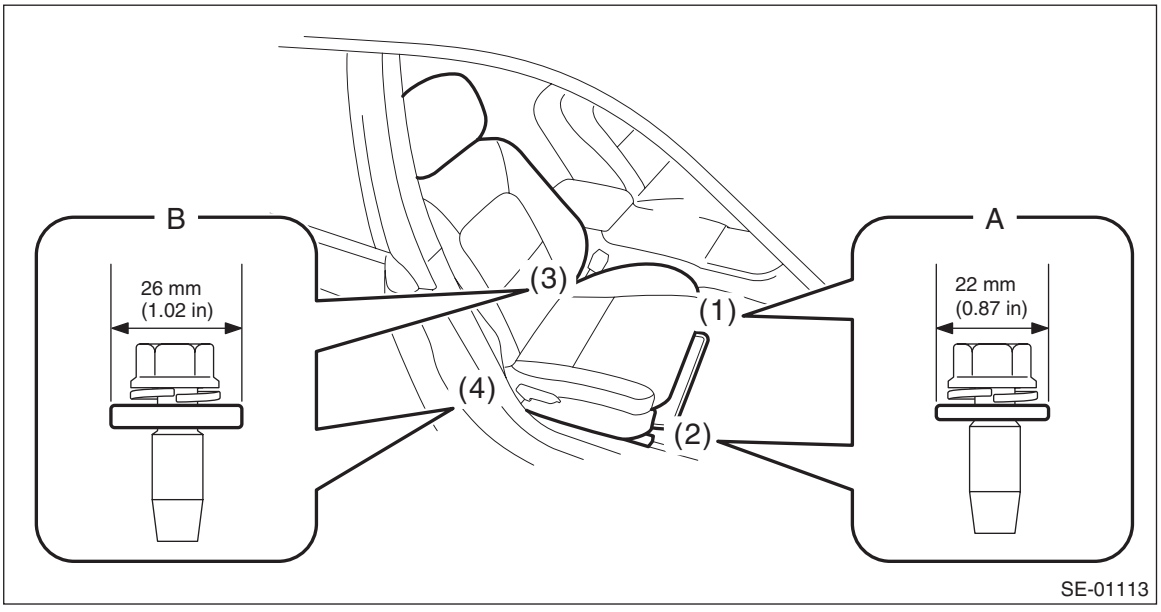

- **Front (bolt A): Washer diameter 22 mm (0.87 in)**
- **Rear (bolt B): Washer diameter 26 mm (1.02 in)**

Tightening torque: 53 N·m (5.4 kgf-m, 39.1 ft-lb)

E: INSPECTION

1. SEAT COVER

Check that no tear or fray on the backrest cover and seat cushion cover.

NOTE:
For model with side airbag, if the door side of the backrest cover is torn or frayed, the side airbag may not be deployed properly. In this case, replace the backrest cover.

2. FLAT MAT HOOK

Apply load to the backrest and check the flat mat hook.

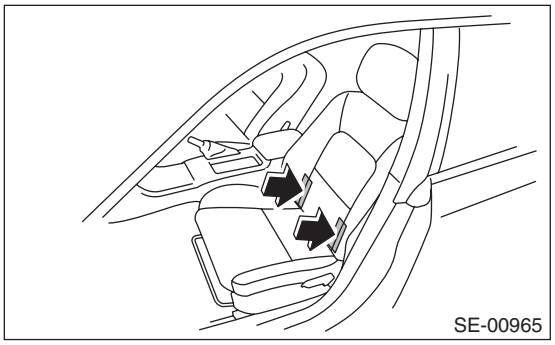

NOTE:
If the backrest does not keep sufficient tension when subject to load, some hooks may be detached.
If any hook is deformed and detached, replace it with a new hook.

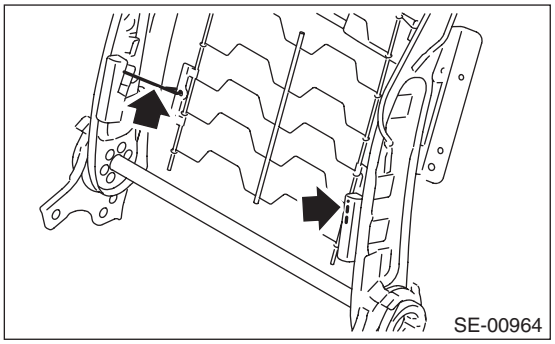

3. Rear Seat

A: REMOVAL

1. SEDAN MODEL

1) Remove the rear seat cushion.
   (1) Pull up the seat cushion and release the hook.

CAUTION:
If the hook is removed from vehicle body, replace the hook with the new part to avoid the deterioration of seat securing.

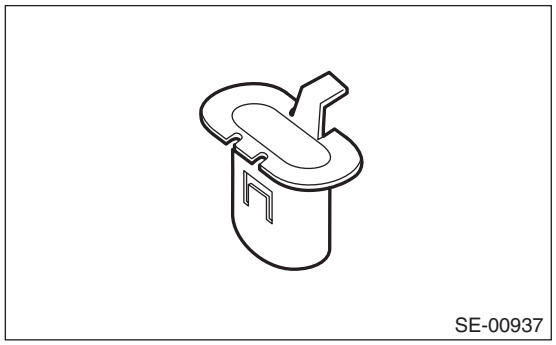
SE-00937

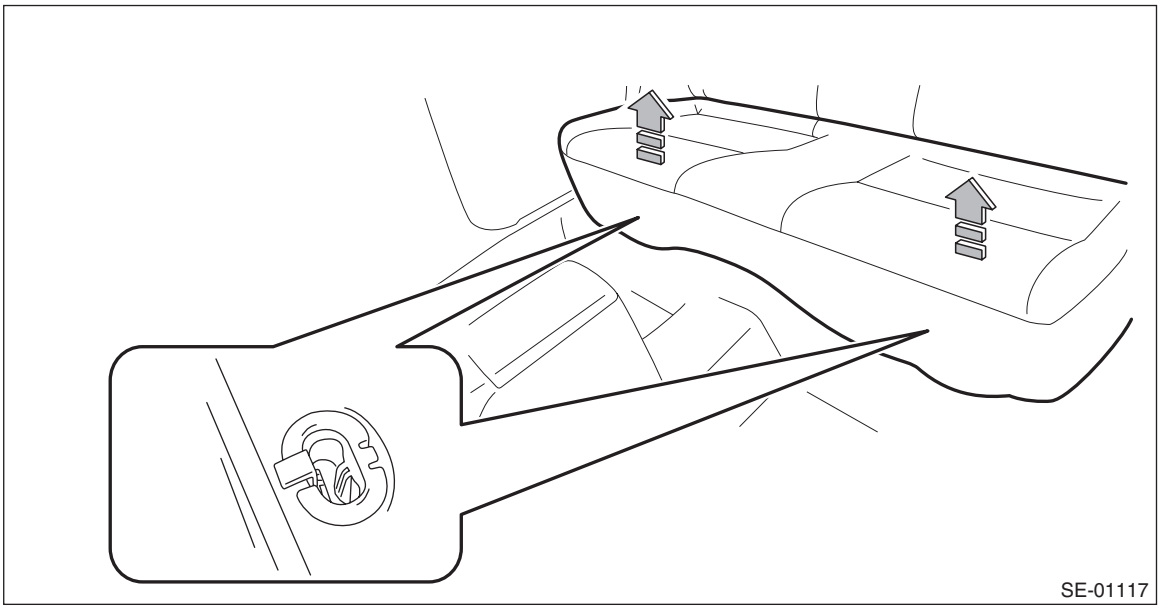
SE-01117

(2) Remove the hook (A) by pushing it back while lifting the front side of the seat cushion, and remove the seat cushion.

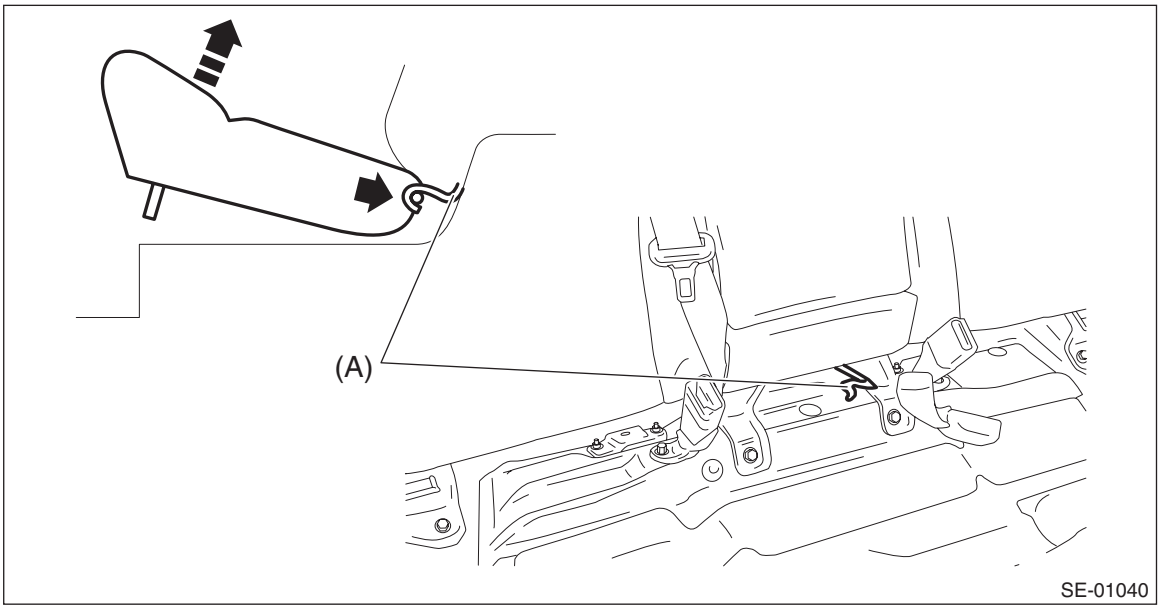

2) Remove the backrest assembly.
(1) Remove the bolts at the front of backrest hinge.

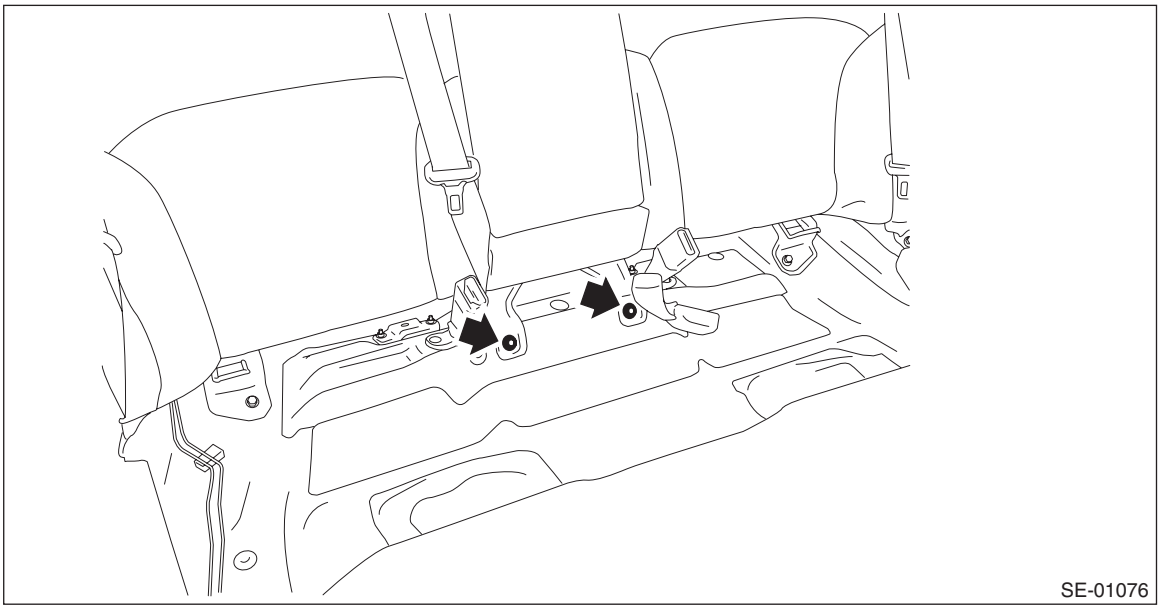

(2) Pull the release lever in the trunk room, and then tilt the backrest forward.

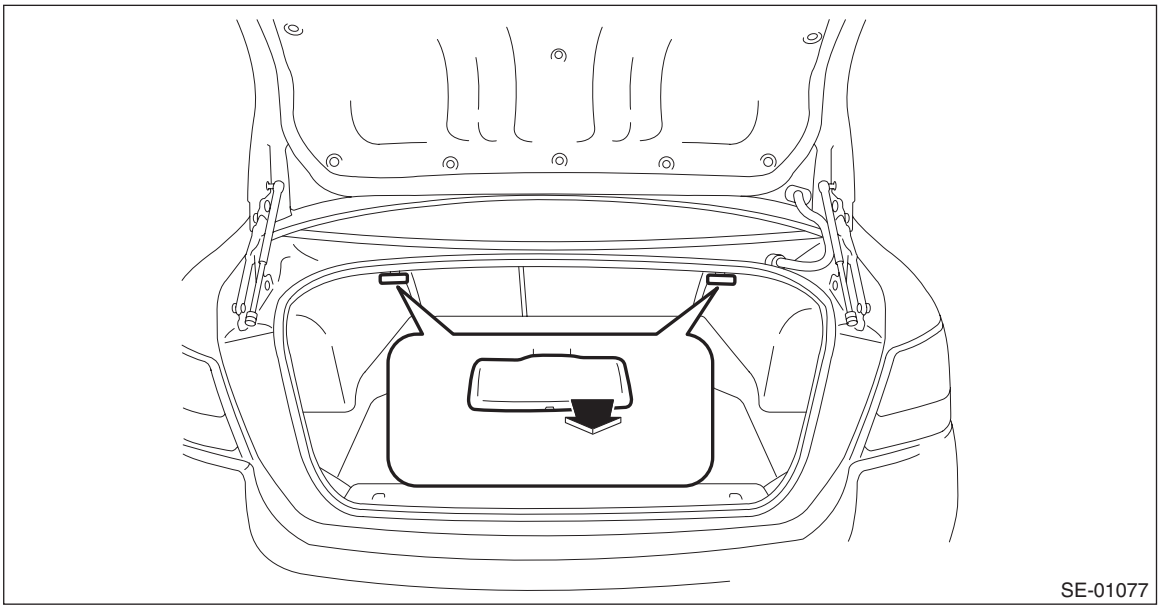

(3) Remove the nuts at the rear of backrest hinge.

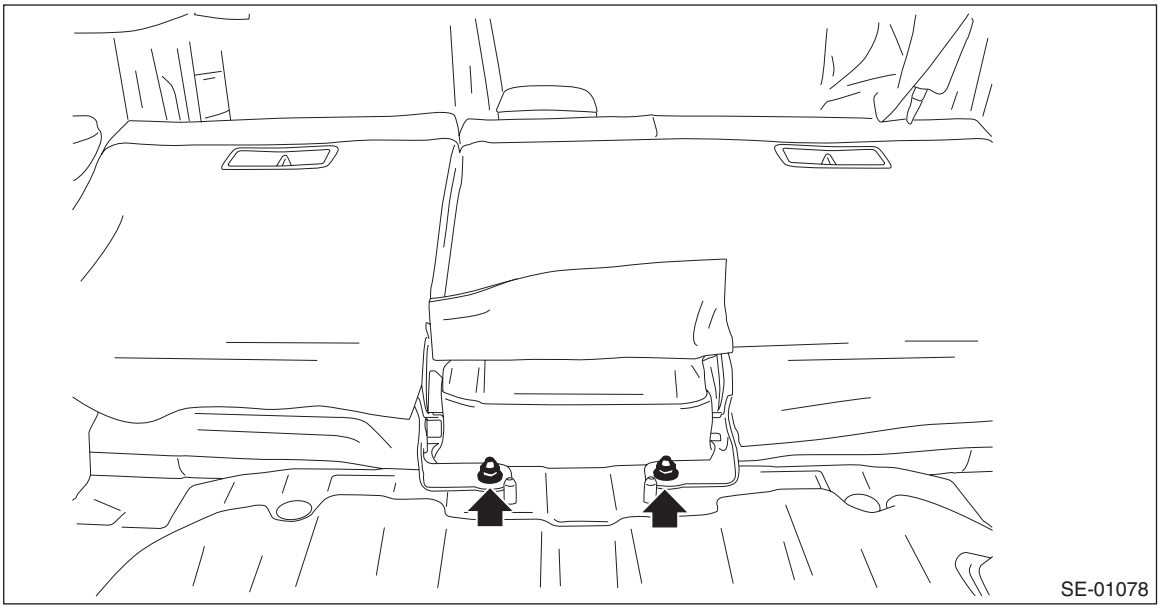

(4) Remove the backrest assembly RH from the hinge assembly RH.

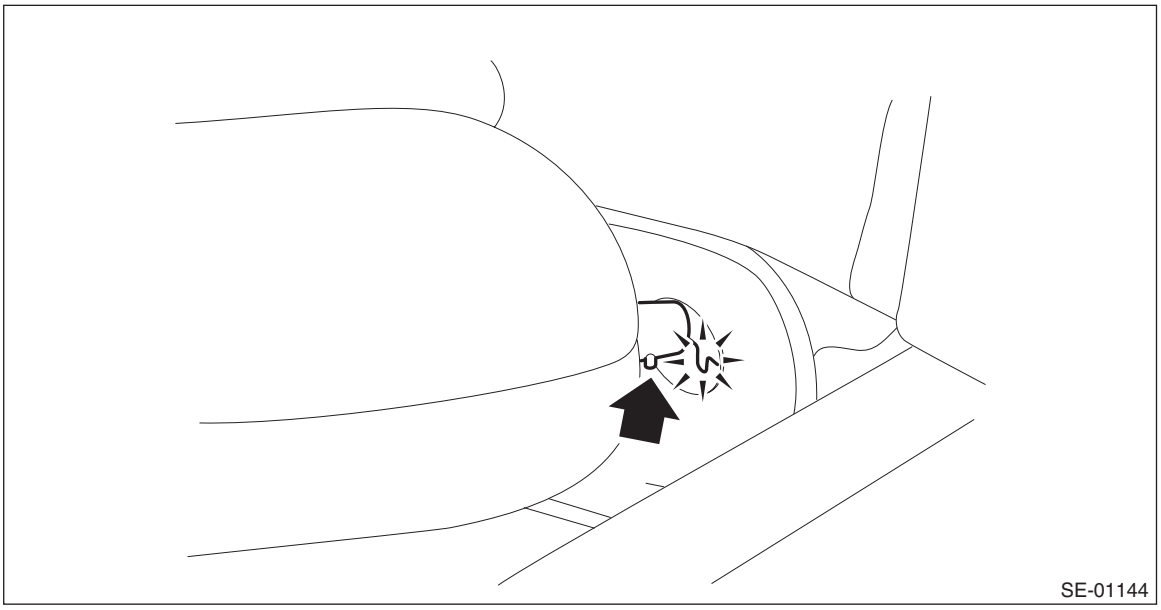

NOTE:
The backrest cannot be detached unless the backrest pin is aligned to the hinge assembly.

3) Referring to the above steps, remove the backrest assembly LH.

4) Remove the backrest side pad.

(1) Remove the bolts, and remove the backrest side pad assembly RH.

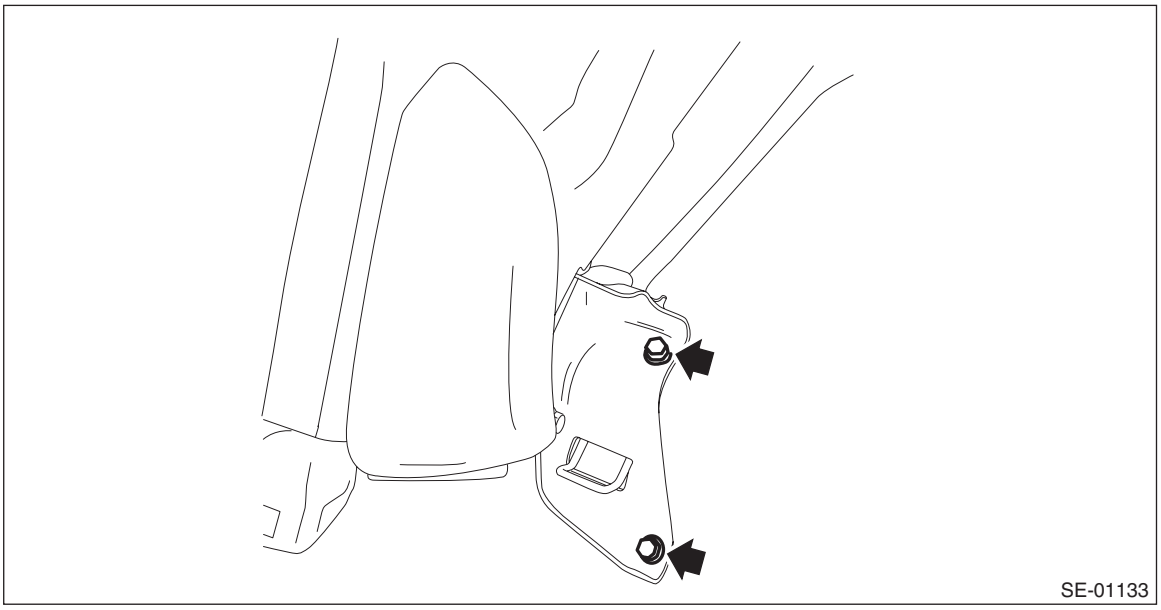

(2) Remove the screws.

(3) Turn over the bottom end of the backrest side pad in the forward direction so that the claws are released.

(4) Remove the backrest side pad by pulling it up.

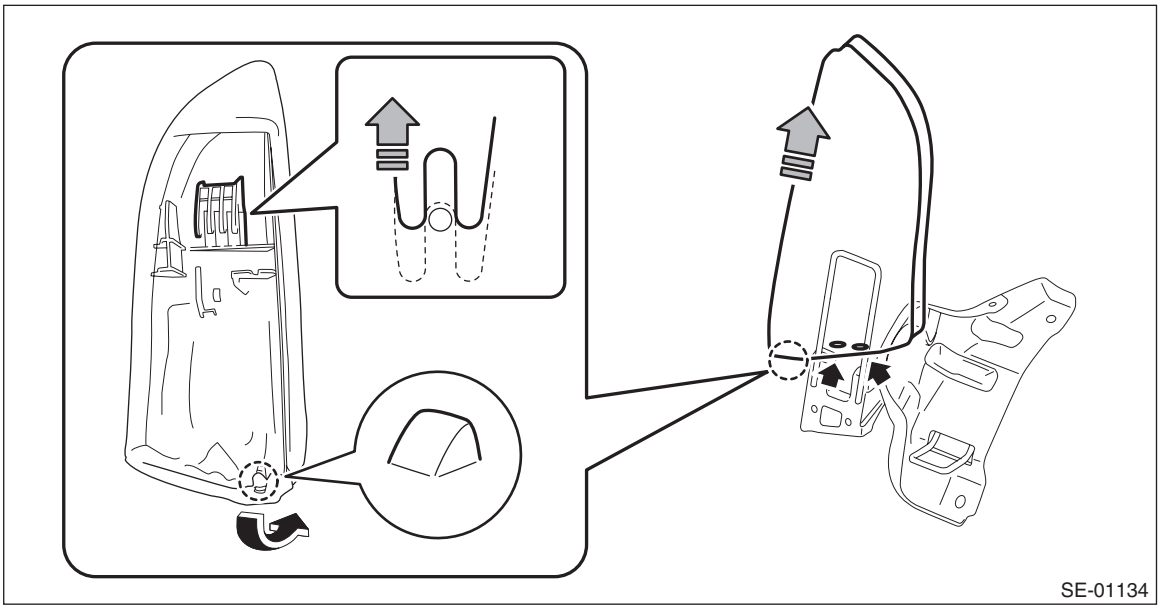

5) Referring to the above steps, remove the backrest side pad assembly LH.

2. OUTBACK MODEL

1) Disconnect the ground cable from battery.
2) Remove the rear seat cushion.
   (1) Pull up the seat cushion and release the hook.

CAUTION:
If the hook is removed from vehicle body, replace the hook with the new part to avoid the deterioration of seat securing.

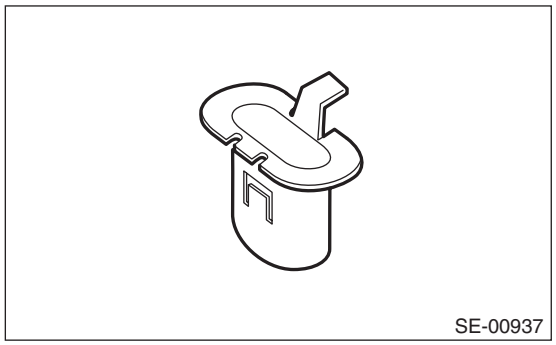
SE-00937

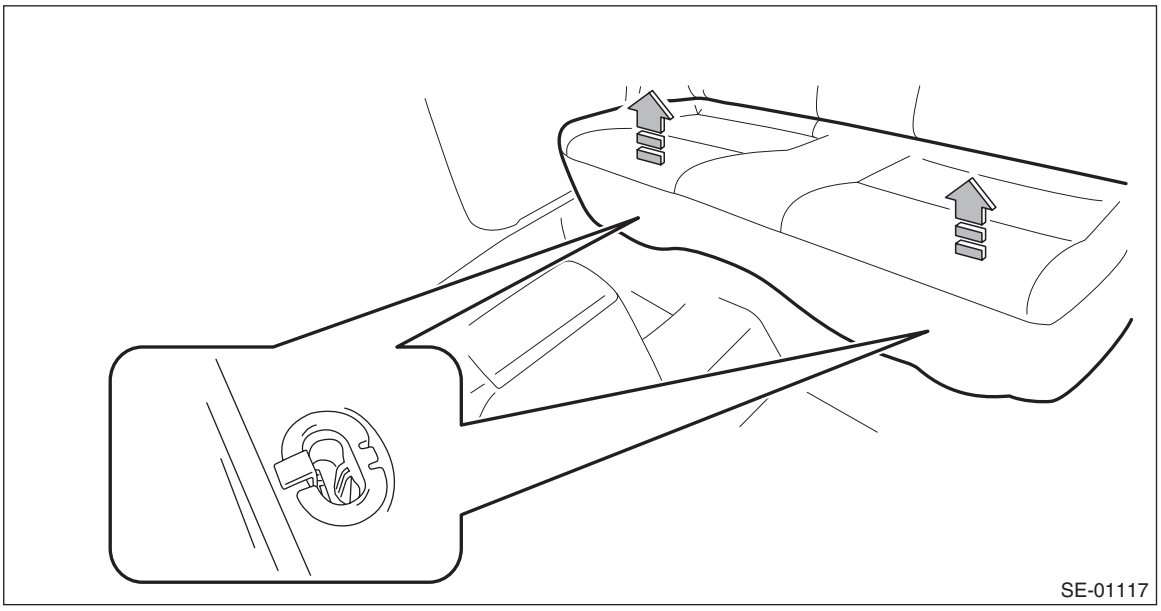
SE-01117

(2) Remove the hook (A) by pushing it back while lifting the front side of the seat cushion, and remove the seat cushion.

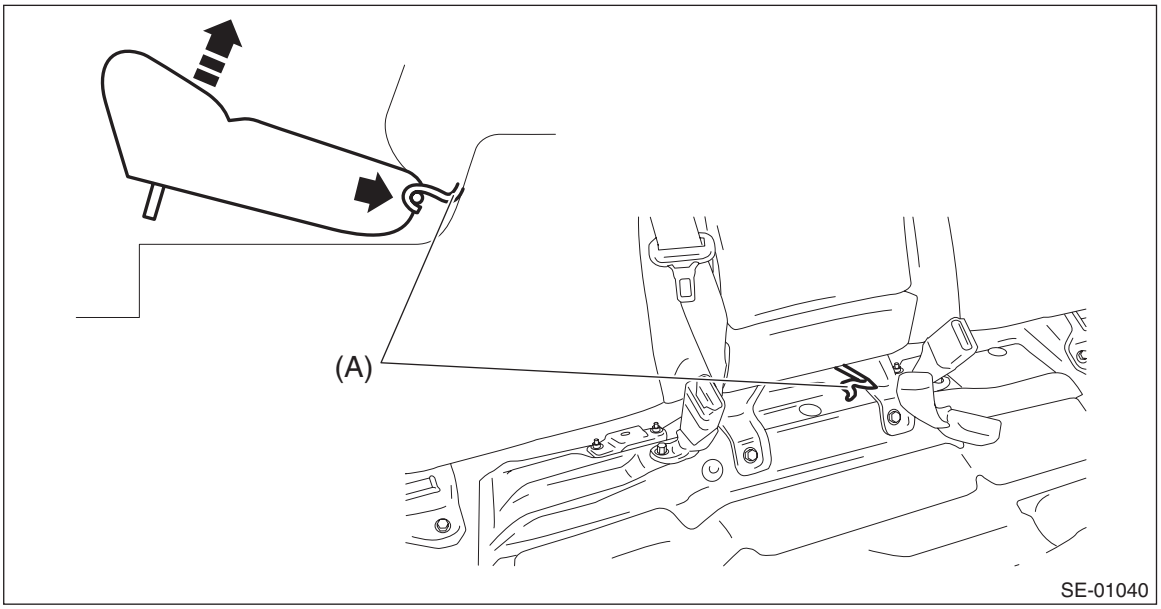

3) Remove the headrest.
4) Remove the backrest assembly RH.
(1) Remove the hinge bolts at the front of the backrest assembly RH.

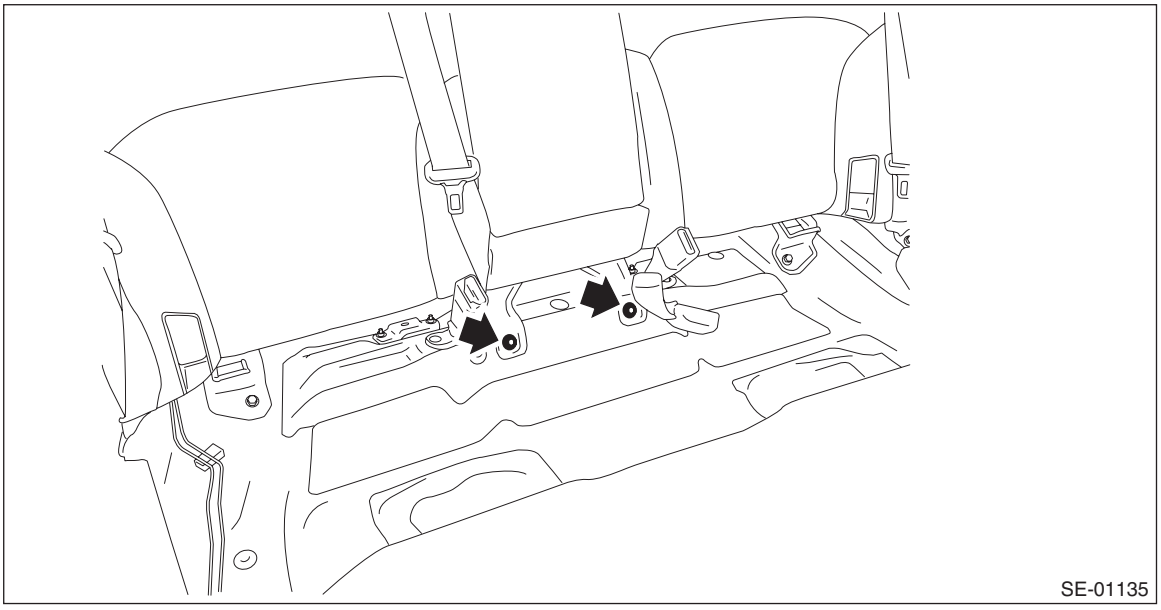

(2) Tilt the backrest forward, and then turn over the backrest backside mat.

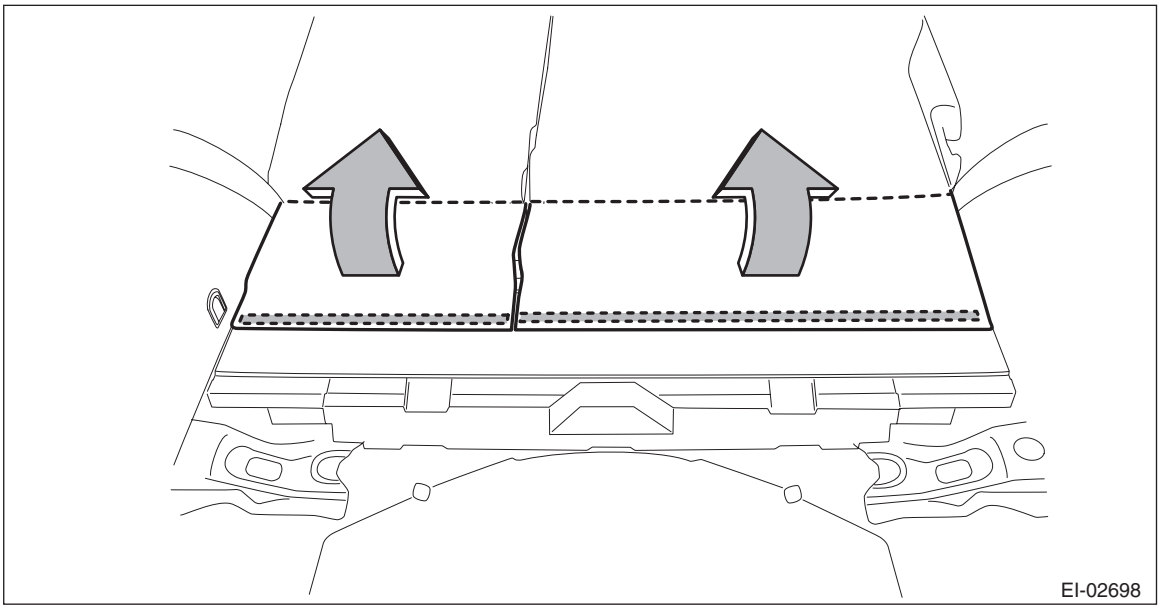

(3) Remove the clips, and remove the rear floor mat-front.

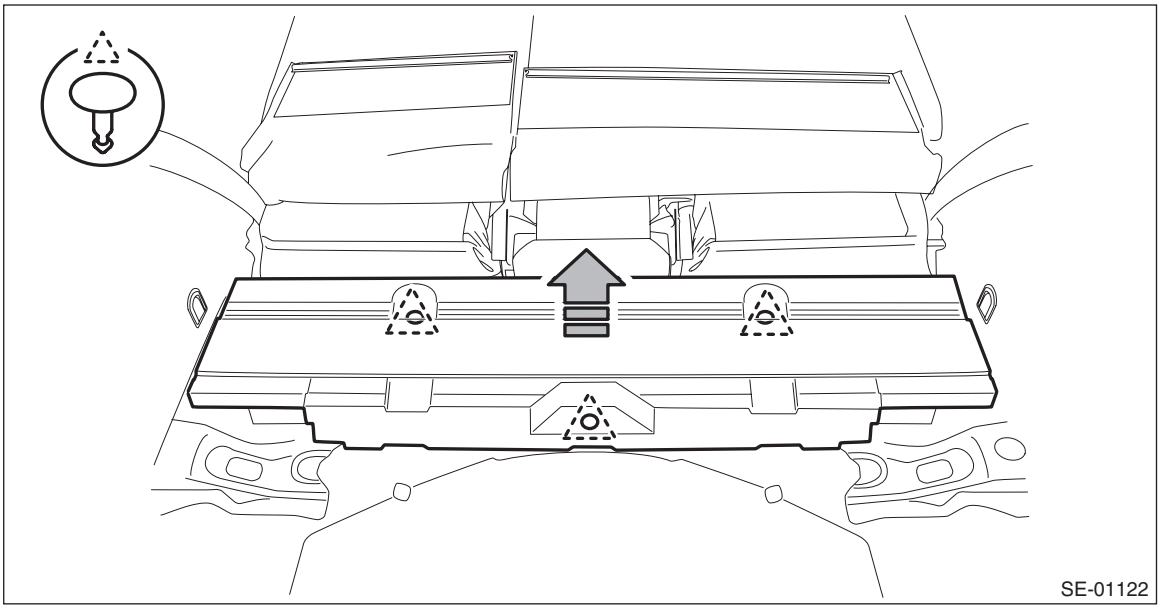

(4) Remove the nuts at the rear of backrest hinge.

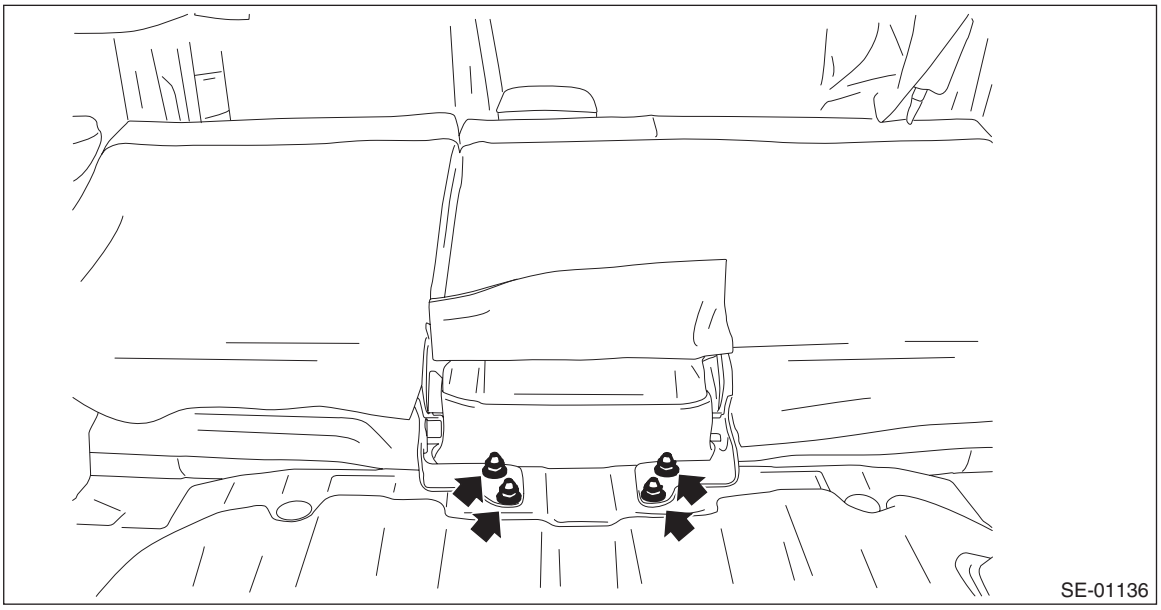

(5) Disconnect the backrest cable and reclining cable.

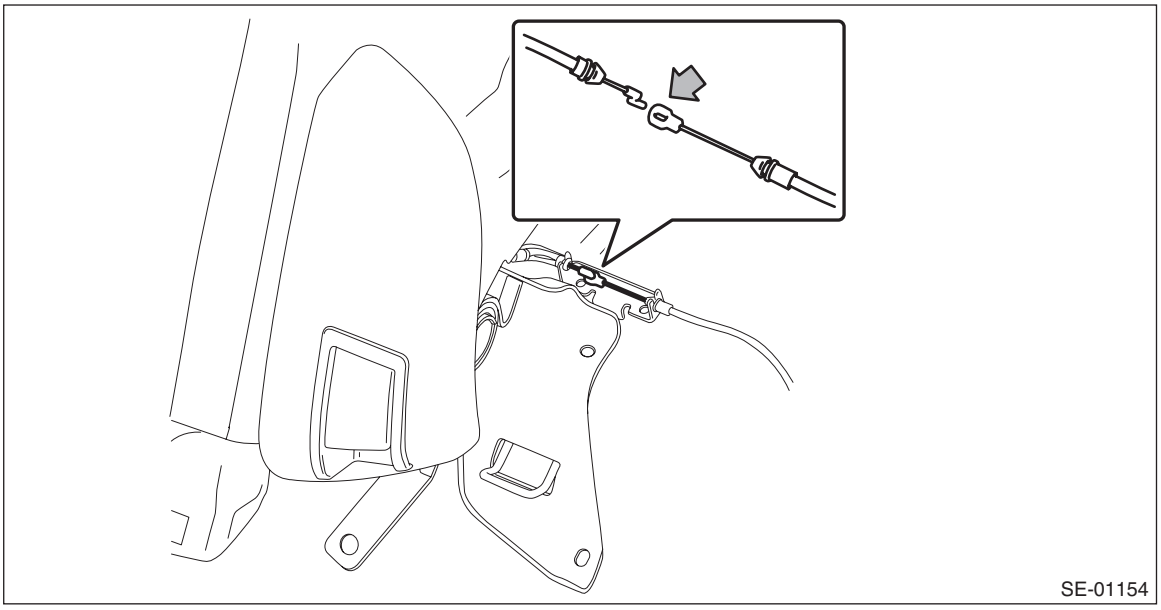

NOTE:
The backrest cannot be detached unless the backrest pin is aligned to the hinge assembly.

(6) Remove the backrest assembly RH from the hinge assembly RH.

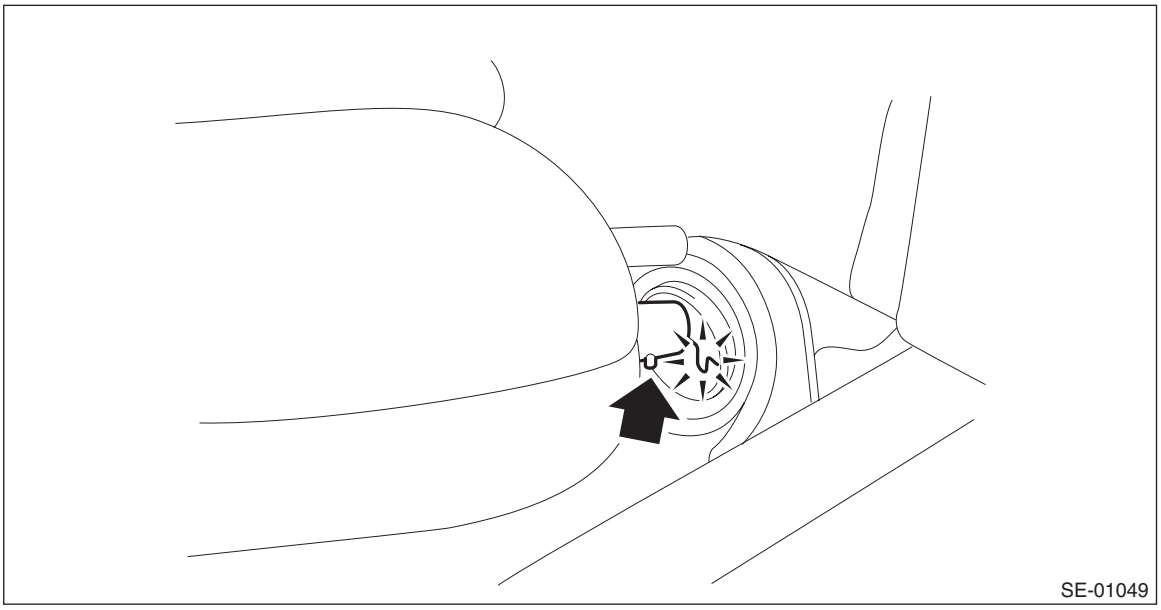

NOTE:
The backrest cannot be detached unless the backrest pin is aligned to the hinge assembly.

(7) Take out the part outside the vehicle so that the body is not damaged by the hinges.

5) Referring to the above steps, remove the backrest assembly LH.
6) Remove the bolts, and remove the backrest side pad assembly RH.

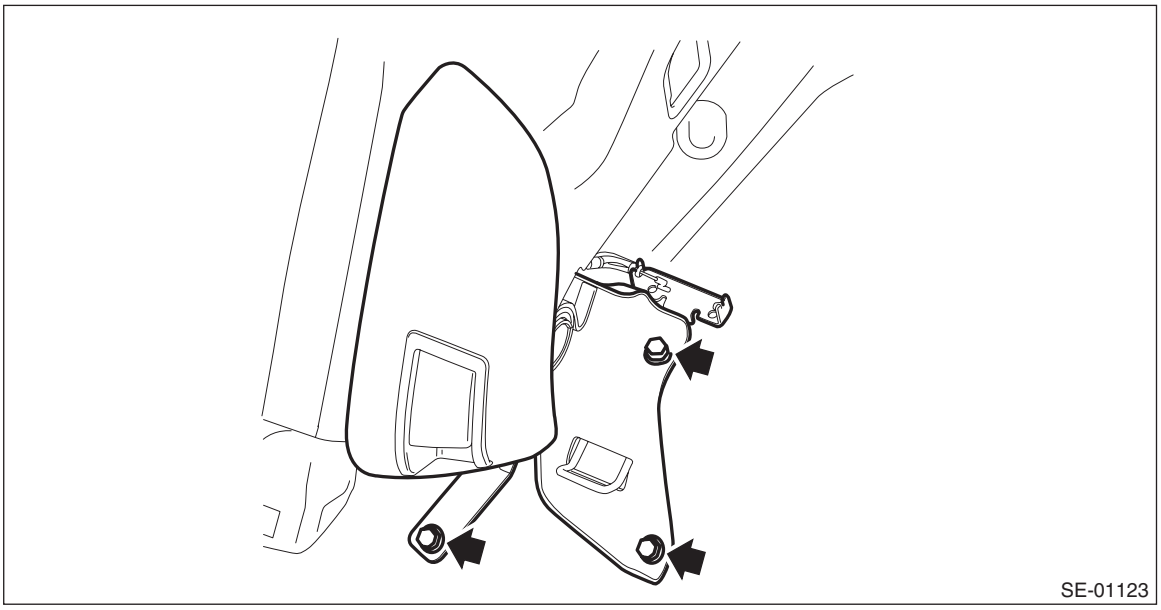

7) Remove the reclining lever assembly RH.
(1) Remove the screws and remove the reclining lever assembly by pulling it downward.

Preparation tool: Stubby screwdriver

(2) By pressing the wire cable claws, remove the relining cable from the reclining lever assembly.

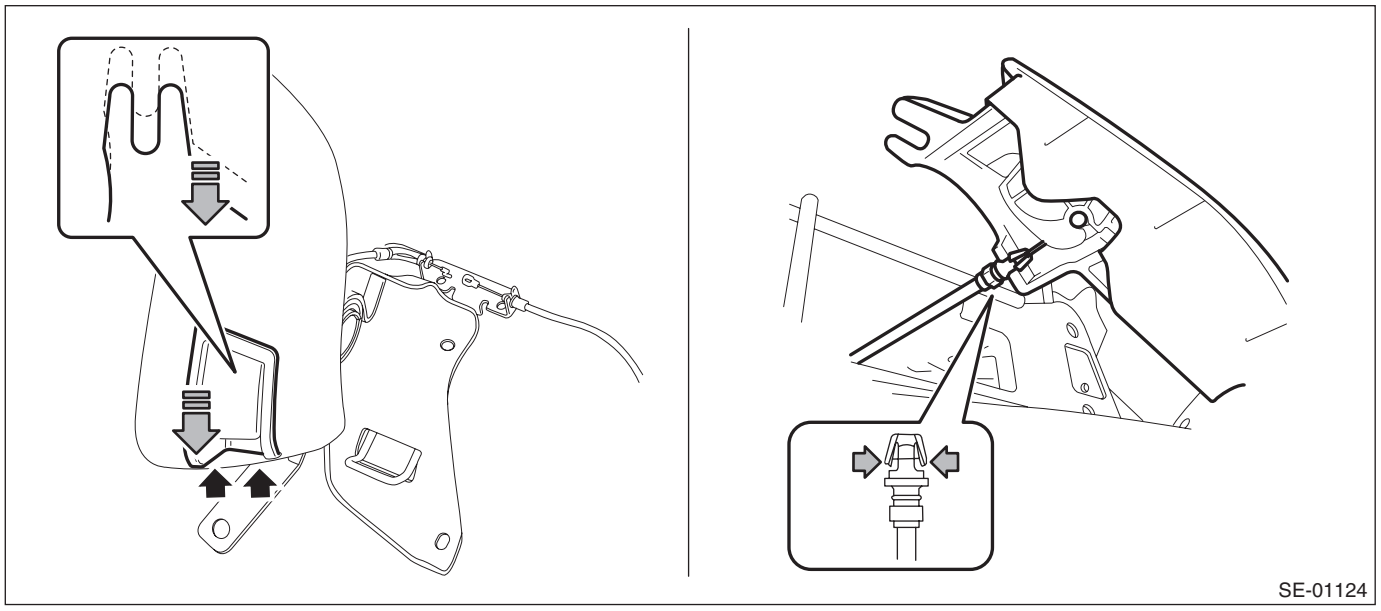

(3) Turn over the bottom end of the backrest side pad in the forward direction so that the claws are released.
(4) Remove the backrest side pad by pulling it up.

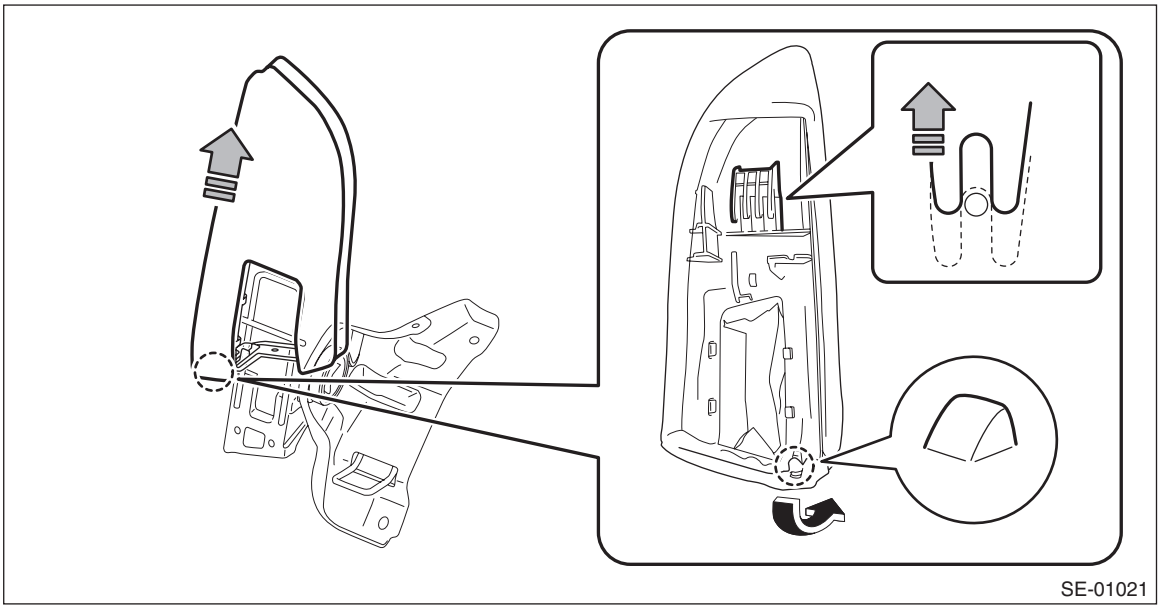

3. WIRE CABLE

Release lever cable (sedan model)

1) Pull the release lever in the trunk room, and then tilt the backrest forward.

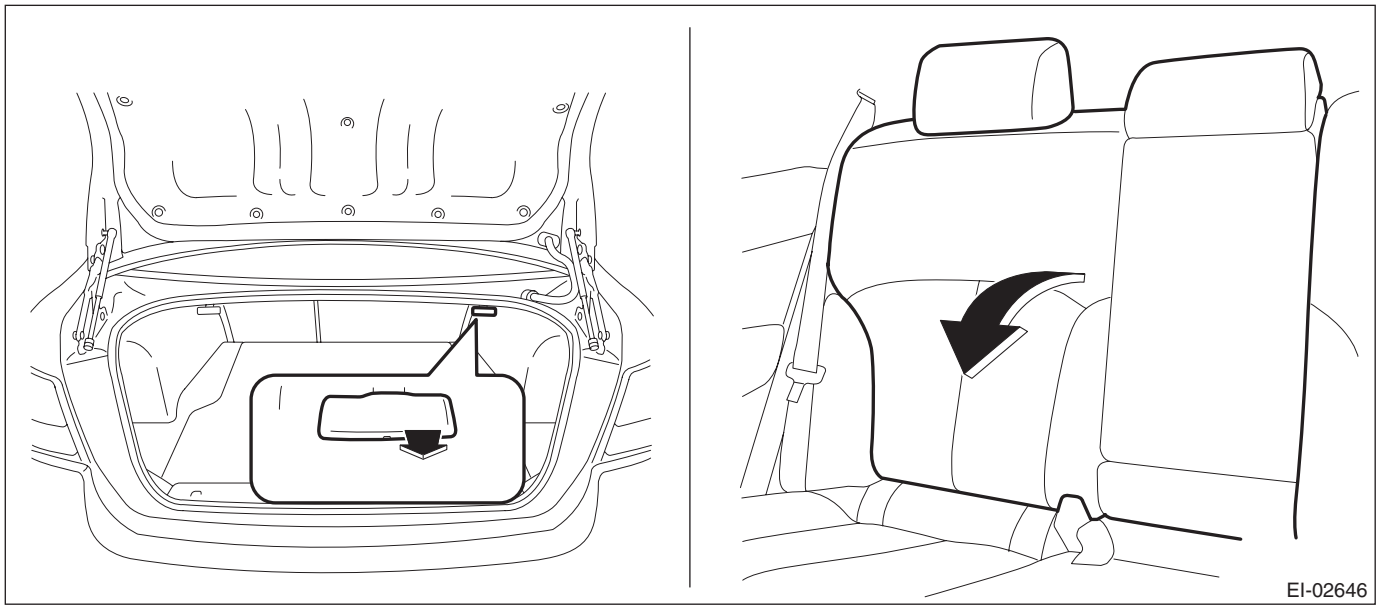

2) Remove the release lever assembly.
   (1) Remove the wire cable from lock assembly.
   (2) Remove the nuts, and then remove the lock assembly.
   (3) Remove the wire cable holder.
   (4) Press the stopper portion (a), and remove the release lever assembly while sliding it forward.

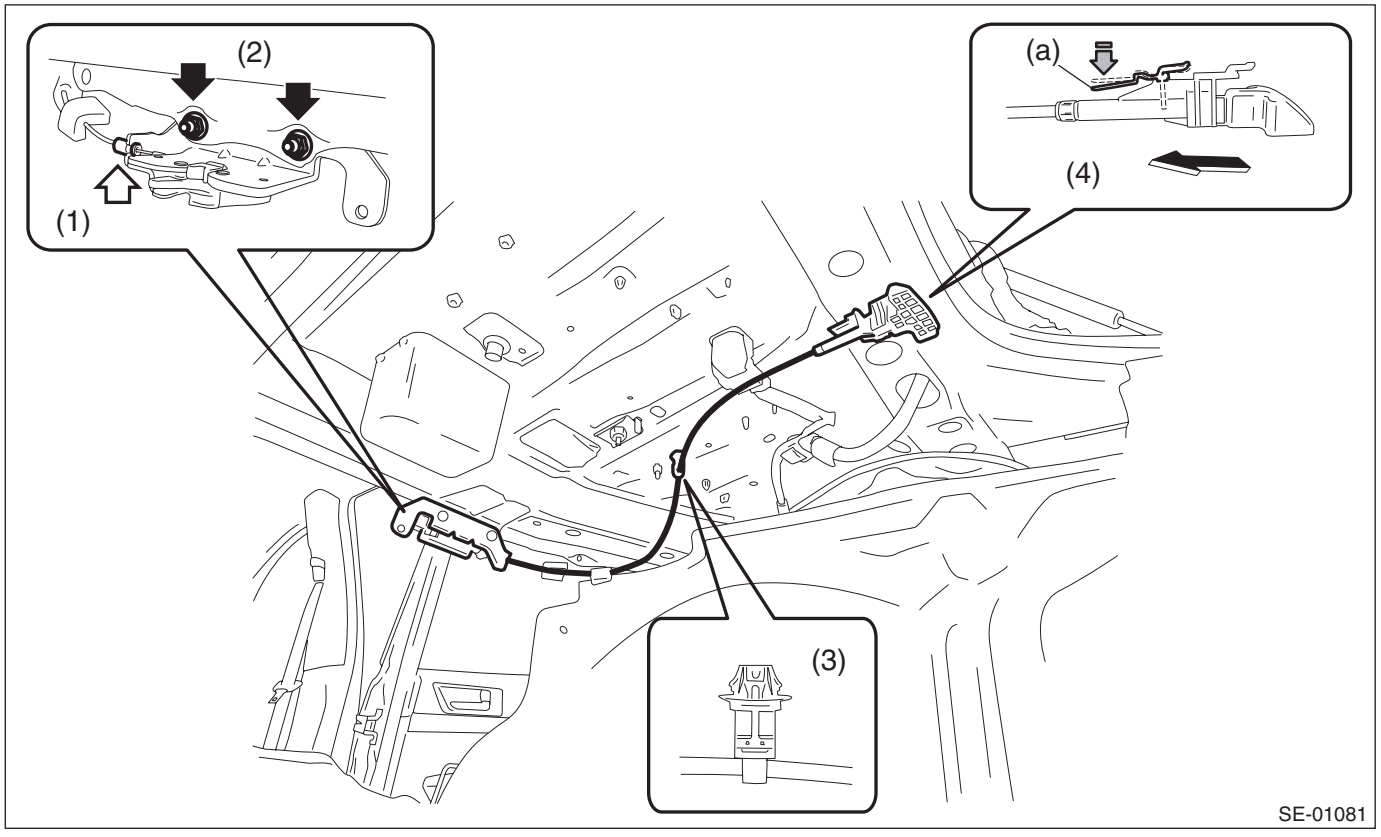

Reclining cable (OUTBACK model)

1) Remove the rear seat cushion.
   (1) Pull up the seat cushion and release the hook.

CAUTION:
If the hook is removed from vehicle body, replace the hook with the new part to avoid the deterioration of seat securing.

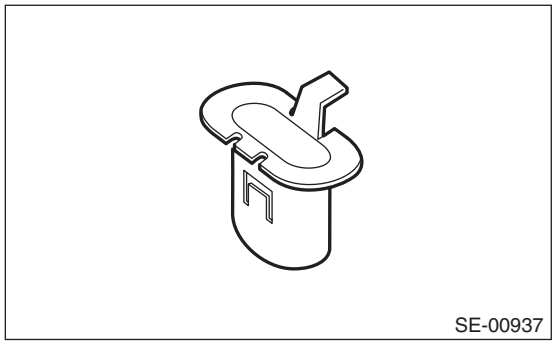
SE-00937

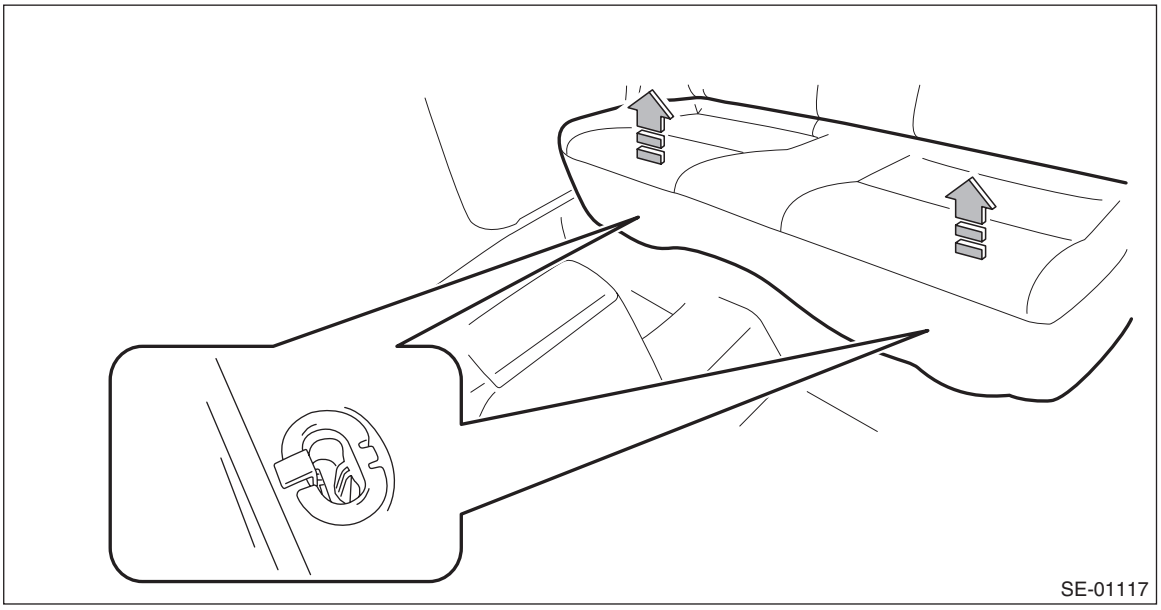
SE-01117

(2) Remove the hook (A) by pushing it back while lifting the front side of the seat cushion, and remove the seat cushion.

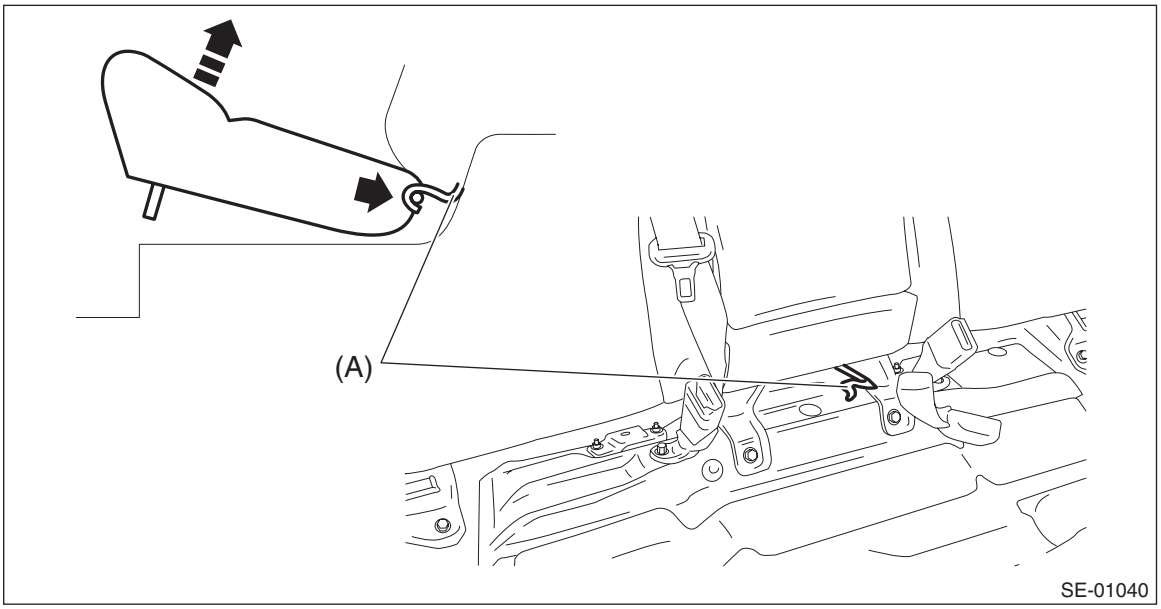

2) Tilt the backrest and turn over the seat backrest cover.

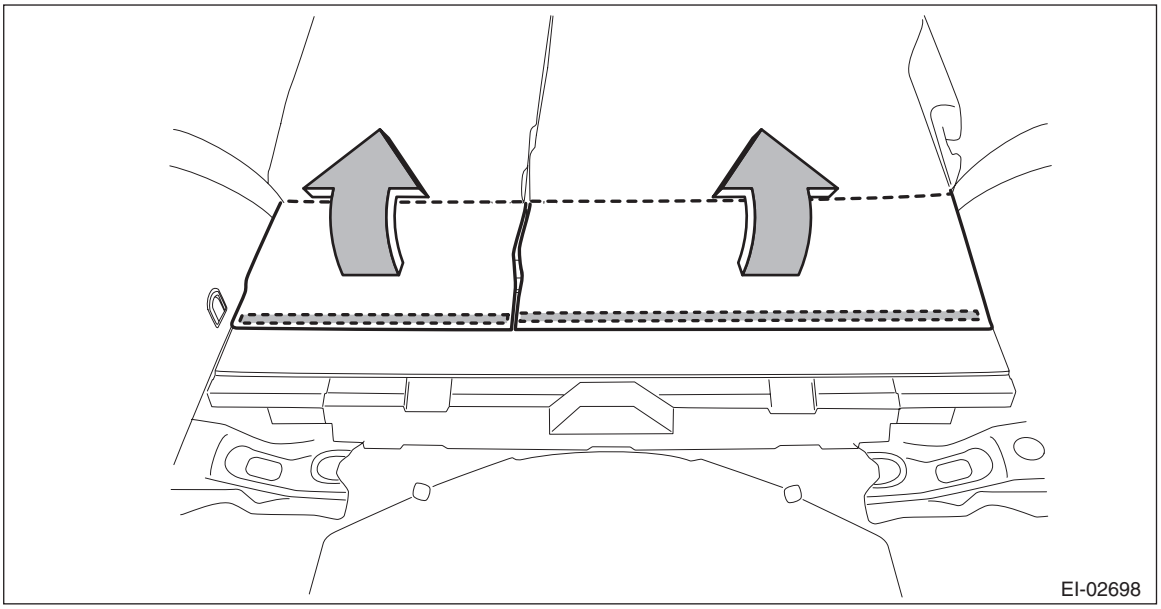

3) Remove the clips, and remove the rear floor mat-front.

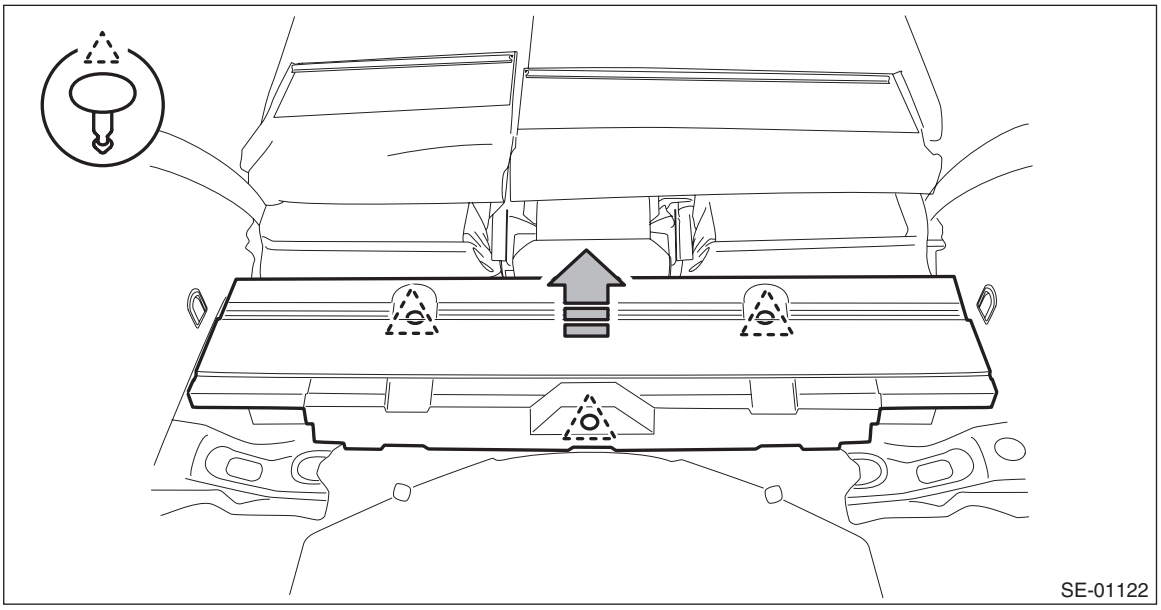

4) Remove the reclining lever assembly.
(1) Disconnect the backrest cable and reclining lever cable.

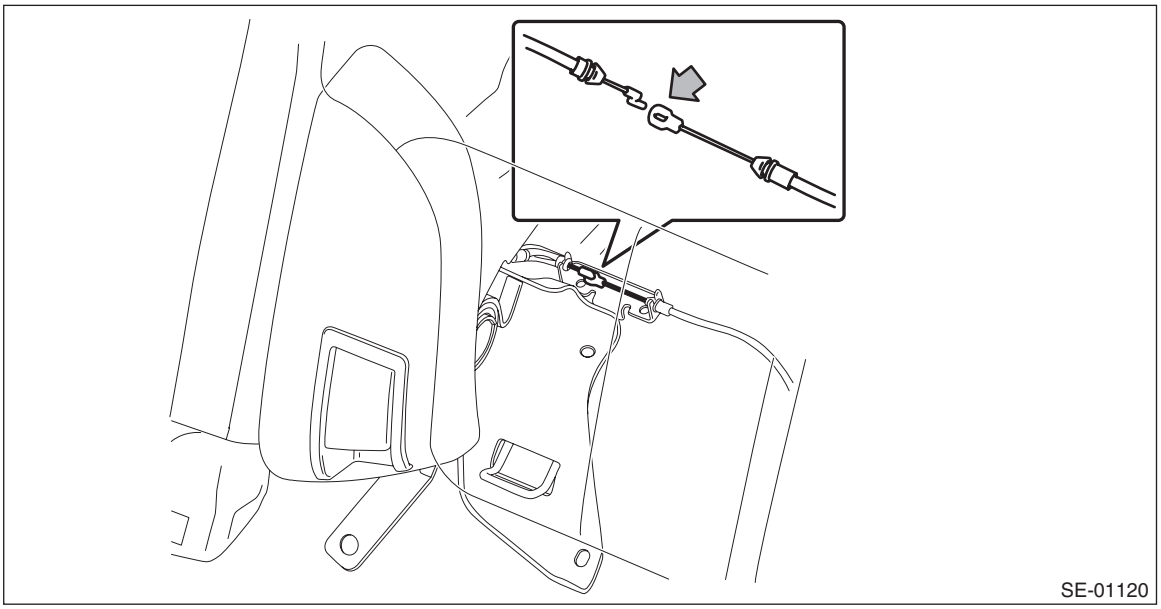

(2) Remove the screws and remove the reclining lever assembly by pulling it downward.

Preparation tool: Stubby screwdriver

(3) By pressing the wire cable claws, remove the relining cable from the reclining lever assembly.

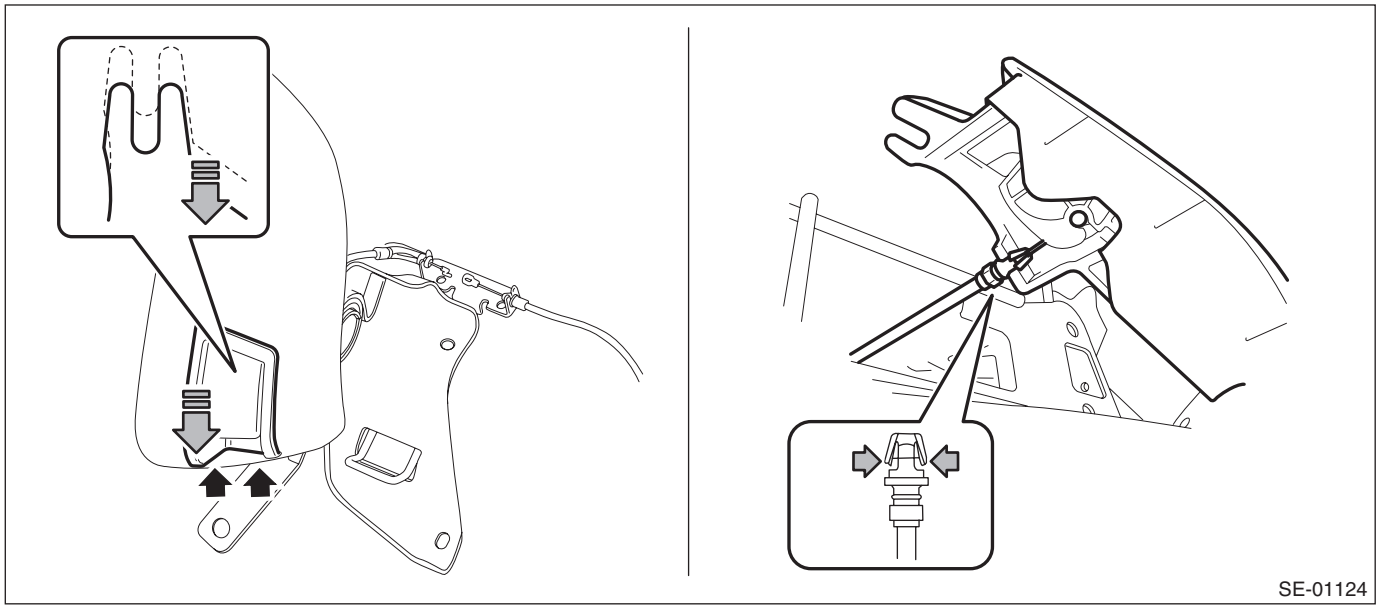

Backrest cable (OUTBACK model)

1) Remove the rear seat backrest assembly. <Ref. to SE-39, OUTBACK MODEL, REMOVAL, Rear Seat.>
2) Disassemble the backrest assembly and remove the backrest cable. <Ref. to SE-50, DISASSEMBLY, Rear Seat.>

B: INSTALLATION

Install each part in the reverse order of removal.

CAUTION:
If the hook is removed from vehicle body, replace the hook with the new part to avoid the deterioration of seat securing.

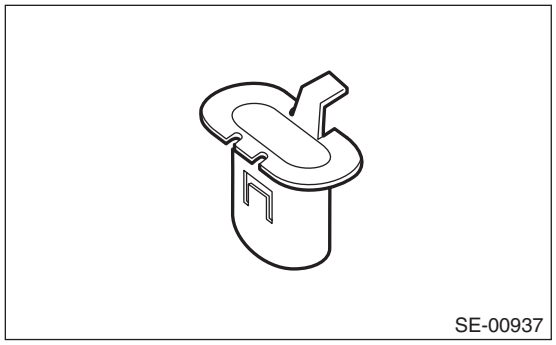

NOTE:
- After installing the backrest, make sure that each seat belt operates normally.
- Check that the remote lever and reclining lever operate normally.
- Make sure that they are properly secured on each hook on the vehicle side.

Tightening torque:
Refer to "COMPONENT" of "General Description".
Sedan model: <Ref. to SE-7, REAR SEAT (SEDAN MODEL), COMPONENT, General Description.>
OUTBACK model <Ref. to SE-8, REAR SEAT (OUTBACK MODEL), COMPONENT, General Description.>

C: DISASSEMBLY

1) Remove the rear seat.
- Sedan model: <Ref. to SE-34, SEDAN MODEL, REMOVAL, Rear Seat.>
- OUTBACK model <Ref. to SE-39, OUTBACK MODEL, REMOVAL, Rear Seat.>

2) Remove the headrest.
3) Remove the backrest back board.
   (1) Remove the plastic fastener at the lower part of backrest assembly, and open the fastener at both side to turn over the backrest cover.
   (2) Remove the backrest striker cover. (Sedan model)
   (3) Remove the screws (A) and clips (B).
   (4) Remove the hog rings (C) and remove the backrest backboard.

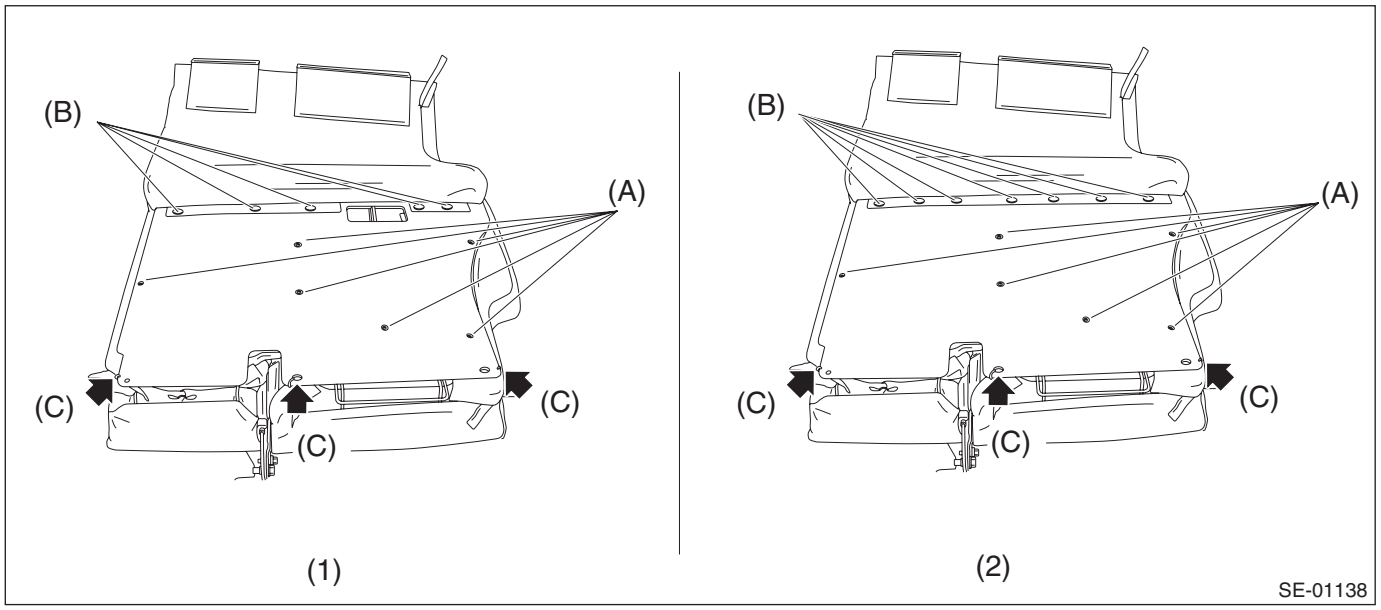

(1) Sedan model (2) OUTBACK model

4) Remove the headrest bushing.

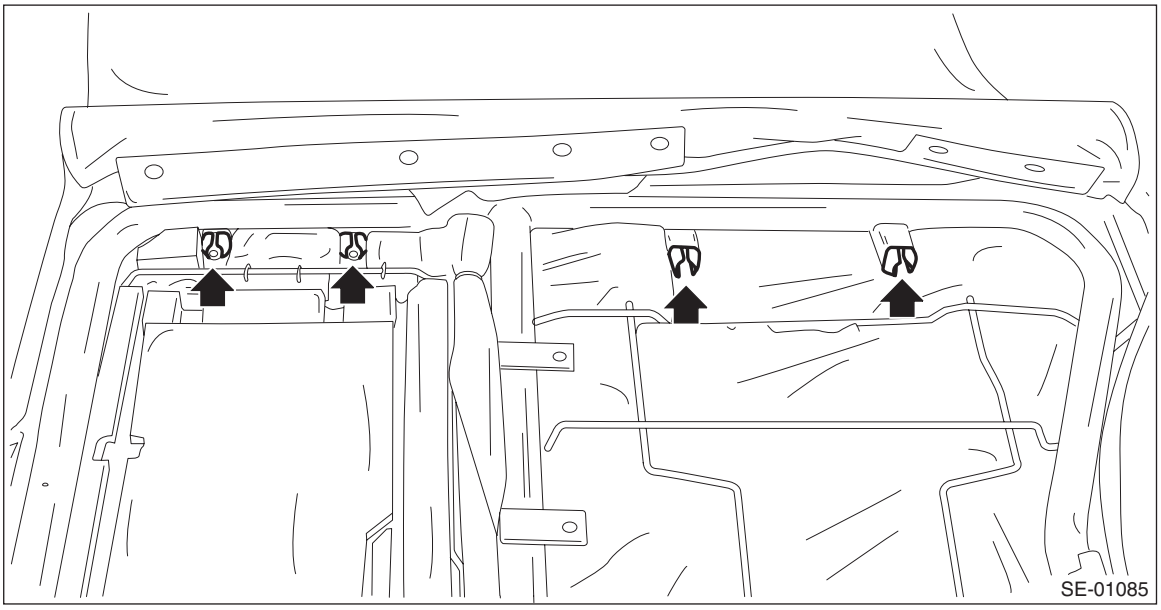

NOTE:
Catch the tip of headrest bushing with pliers and push it from inside seat to outside to remove it.

5) Remove the armrest assembly.
(1) Remove the armrest hinge cover by pulling it in the direction of arrow (black).
(2) Remove the screws, and remove the armrest.

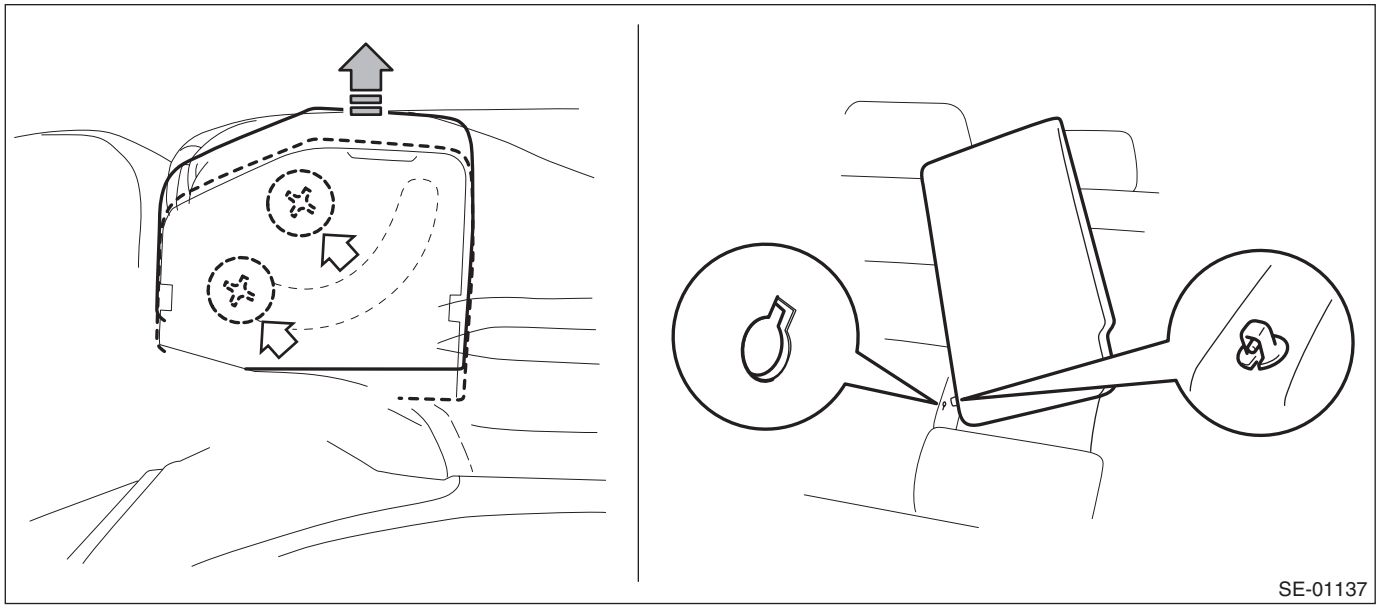

NOTE:
The armrests cannot be detached while the backrest assembly RH and armrest side pin positions are not aligned.

6) Remove the plastic hooks and hog rings, and remove the pad at lower side of armrest.

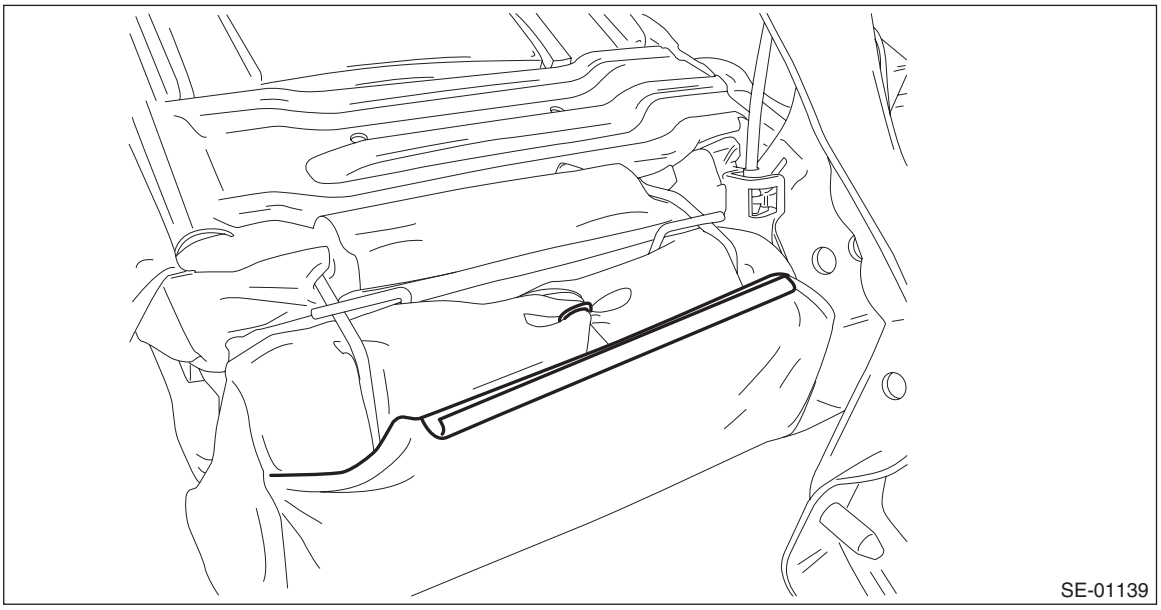

7) Remove the hog rings (A) and remove the backrest pad & frame assembly from the backrest assembly.

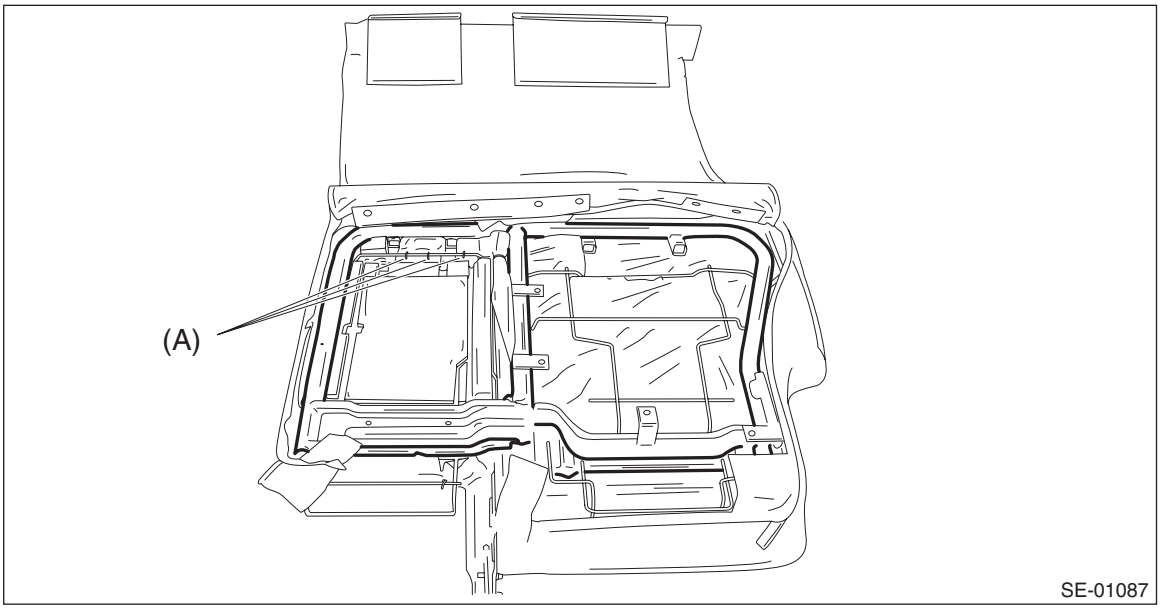

8) Remove the hog rings (A) on the front side of backrest, and then remove the backrest cover.

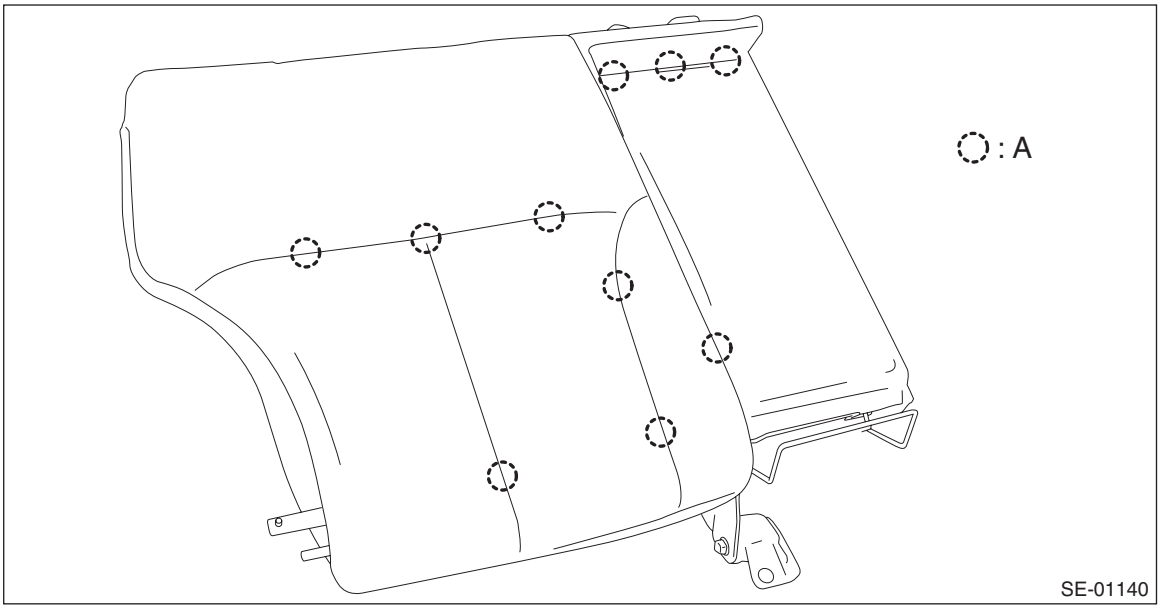

9) Referring to the step 2), disassemble the backrest assembly LH.

10) Remove the armrest cover.
(1) Take out the bottom sheets (a) from the cup holder and remove the screws (b).
(2) Remove the cup holder assembly (c).
(3) Detach the plastic fastener (d) and remove the armrest cover.

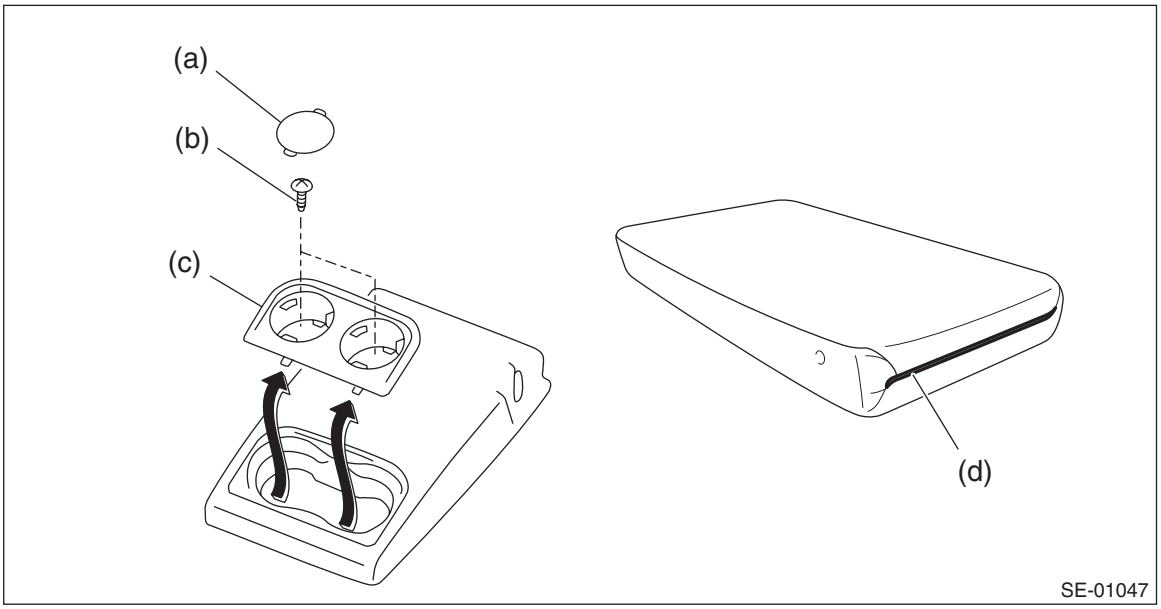

11) Detach the plastic fastener and hog ring, and then remove the headrest cover.

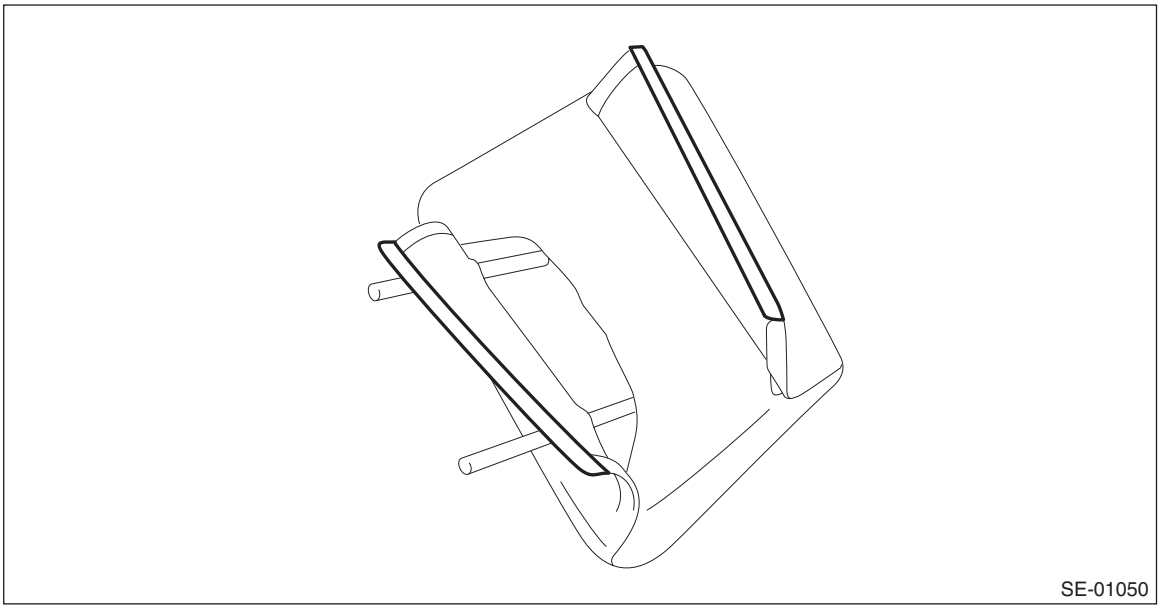

12) Remove the hog rings (A) on the rear side of the seat cushion.

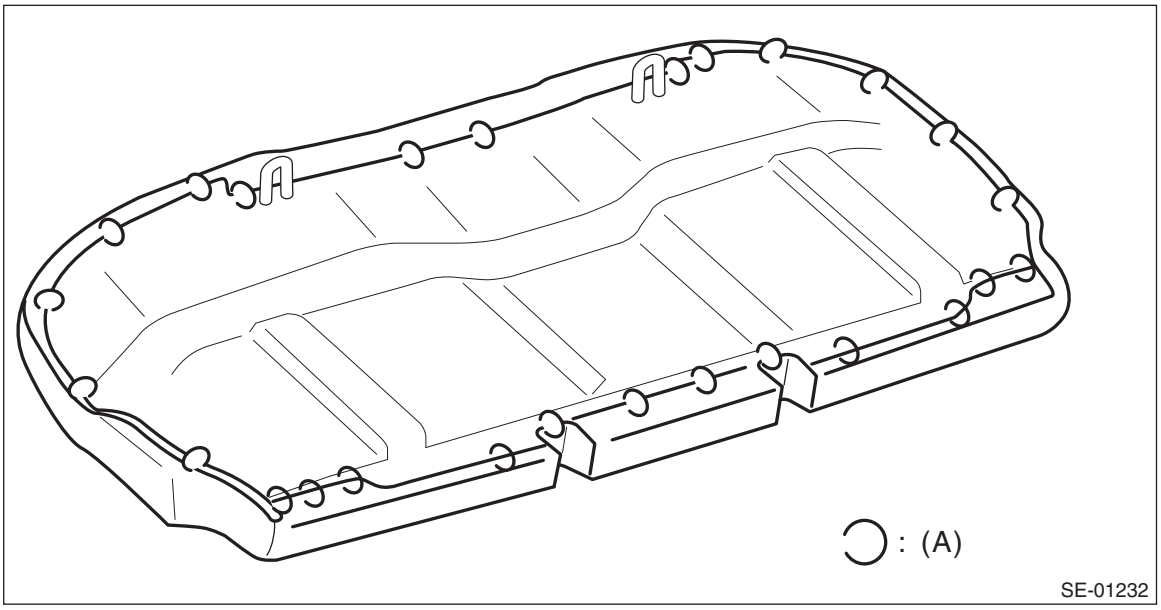

13) Remove the hog rings (A), then remove the seat cushion cover.

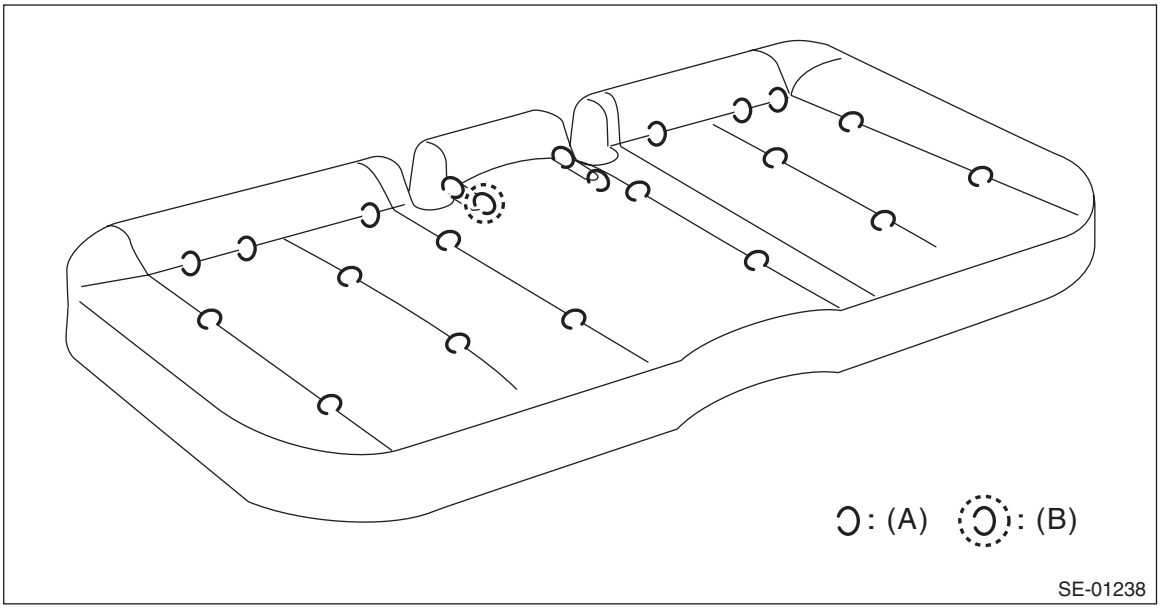

(A) Hog ring (B) OUTBACK model only

D: ASSEMBLY

CAUTION:
- **Do not reuse hog rings.**
- **Secure the hog ring using hog ring pliers.**
- **Install the hog rings to the specified points securely and make sure that there is no wrinkle or twisting on backrest cover.**

1) Assemble the seat cover in the same manner as the front seat. <Ref. to SE-28, ASSEMBLY, Front Seat.>
2) Make sure that all hog rings (A) are attached securely.
- Sedan model

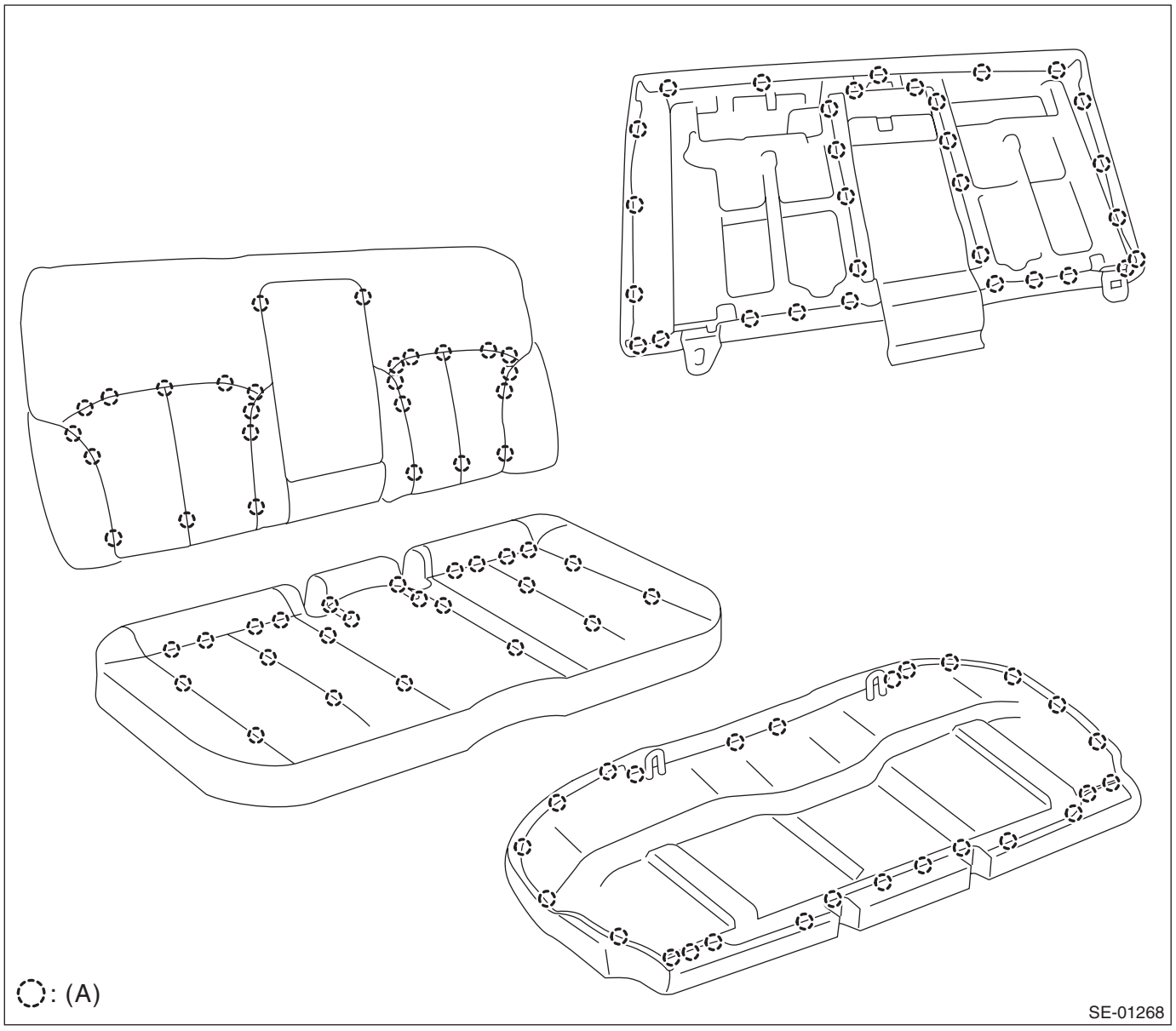

- OUTBACK model

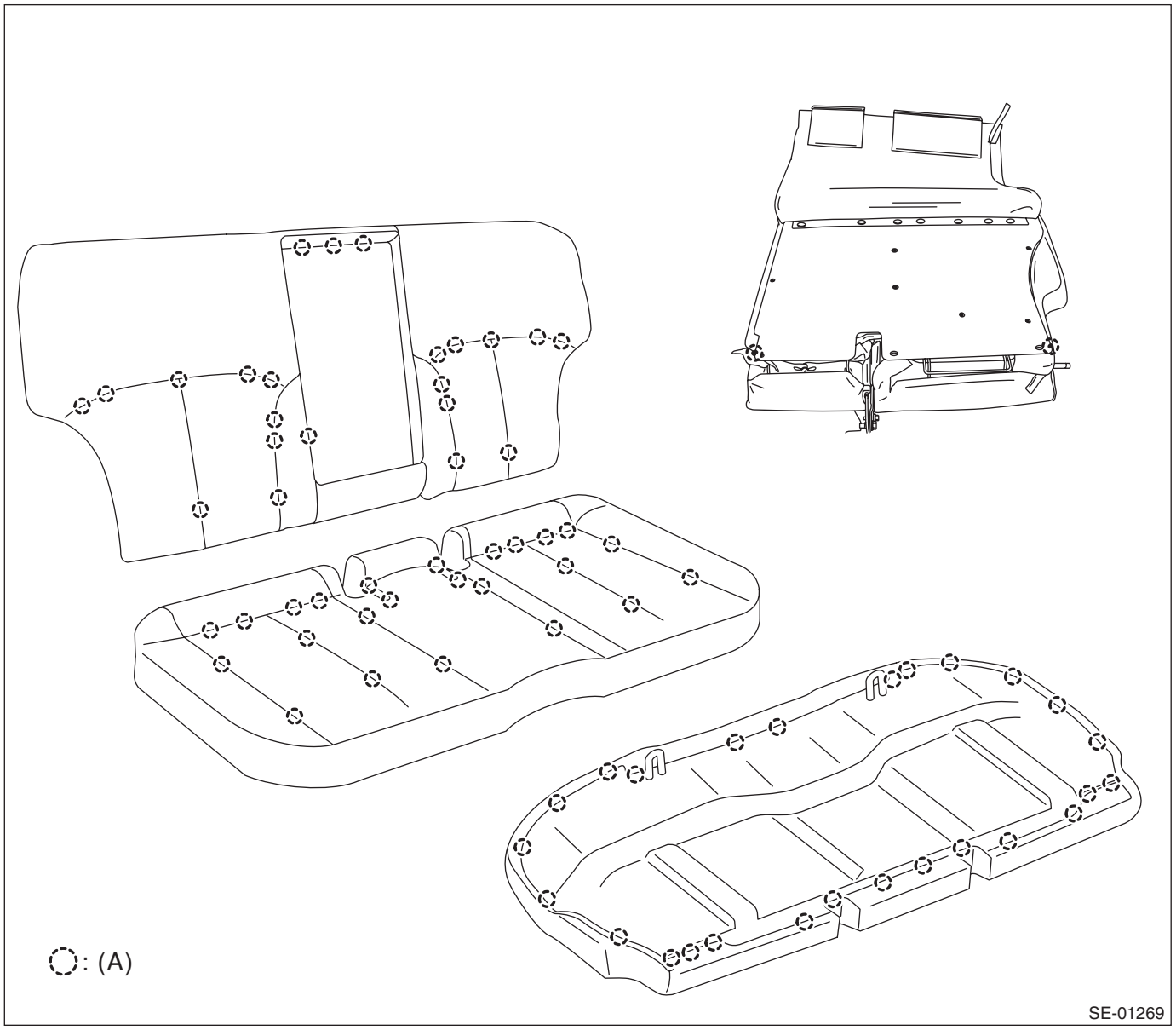

3) Assemble each part in the reverse order of disassembly.

NOTE:
- Do not contaminate or damage the cover.
- While installing the hog rings, prevent the seat from getting wrinkled.

Tightening torque:
Refer to "COMPONENT" of "General Description".
Sedan model: <Ref. to SE-7, REAR SEAT (SEDAN MODEL), COMPONENT, General Description.>
OUTBACK model: <Ref. to SE-8, REAR SEAT (OUTBACK MODEL), COMPONENT, General Description.>

4) Before installation, check the following items.
- No break and fray on seat cover.
- No fray or deformation on each wire cable.

5) Install each part in the reverse order of removal.

4. Power Seat System

A: REMOVAL

CAUTION:
When removing the front seat, Disconnect the ground cable from battery before disconnecting the side airbag module harness connector, and wait for 60 seconds before starting the operation.

1. POWER SEAT SWITCH

1) Remove the seat from vehicle. <Ref. to SE-10, REMOVAL, Front Seat.>
2) Remove the seat side cover OUT.
   (1) Release the claw in the rear section of the seat side cover.
   (2) Release the claw in the upper section of the seat side cover.
   (3) Remove the clip and release the claw in the front section of the seat side cover
   (4) Disconnect the power seat switch and lumber switch connectors and remove the seat side cover OUT.

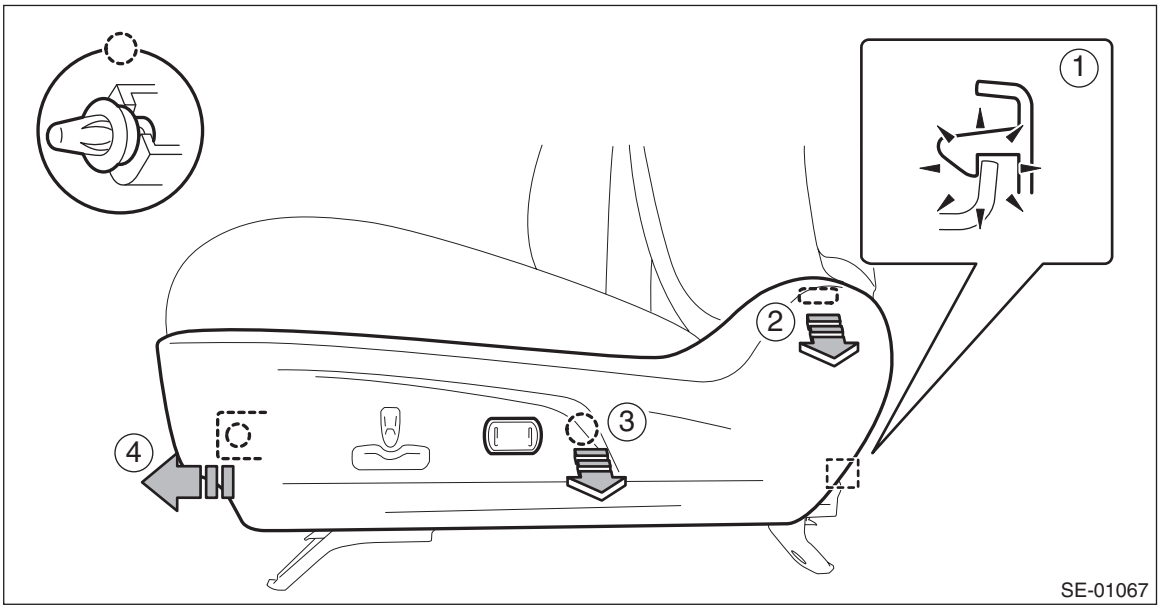

3) Remove the screws to remove the power seat switch assembly.

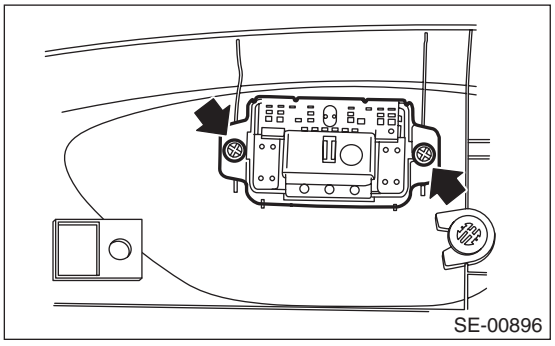

2. LUMBAR SWITCH

1) Remove the seat from vehicle. <Ref. to SE-10, REMOVAL, Front Seat.>
2) Remove the seat side cover OUT.
   (1) Release the claw in the rear section of the seat side cover.
   (2) Release the claw in the upper section of the seat side cover.
   (3) Remove the clip and release the claw in the front section of the seat side cover

(4) Disconnect the power seat switch and lumber switch connectors and remove the seat side cover OUT.

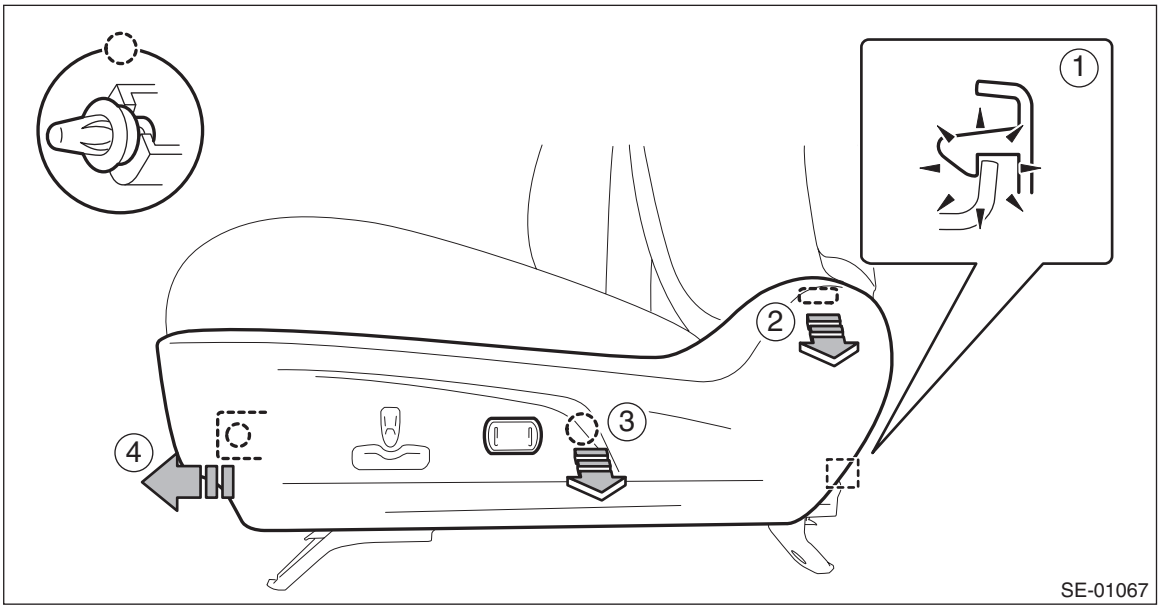

3) Disconnect the connector and remove the lumbar switch assembly.

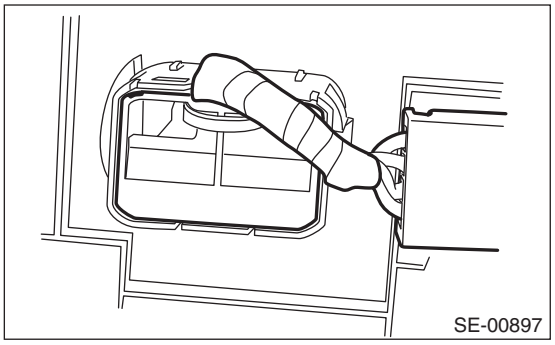

B: INSTALLATION

Install each part in the reverse order of removal.

C: INSPECTION

1. WIRING DIAGRAM

Refer to “Power Seat System” in the wiring diagram. <Ref. to WI-198, WIRING DIAGRAM, Power Seat System.>

2. TROUBLE SYMPTOM

Symptoms	Criteria
All functions do not operate. <Ref. to SE-61, ALL FUNCTIONS DO NOT OPERATE., INSPECTION, Power Seat System.>	• POWER SEAT SWITCH • LUMBAR SWITCH • Power seat harness • Body harness
A part of function does not operate. <Ref. to SE-62, SOME MOTORS DO NOT OPERATE., INSPECTION, Power Seat System.>	• POWER SEAT SWITCH • LUMBAR SWITCH • Power seat harness • Relevant motor

3. CHECK POWER SEAT SWITCH

Measure resistance between terminals while operating each switch.

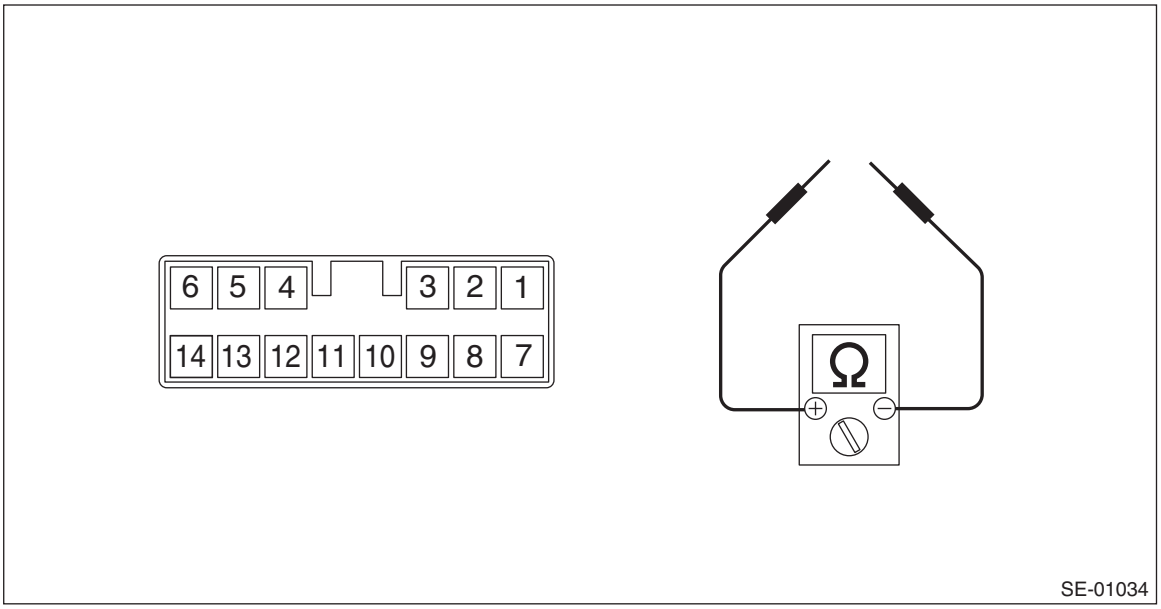

- Driver's seat

Switch position	Terminal No.	Standard
Slide forward	7 and 14 8 and 13	Less than 10 Ω
Slide rearward	7 and 13 8 and 14	Less than 10 Ω
Tilt up	7 and 2 8 and 1	Less than 10 Ω
Tilt down	7 and 1 8 and 2	Less than 10 Ω
Lifter up	7 and 5 8 and 6	Less than 10 Ω
Lifter down	7 and 6 8 and 5	Less than 10 Ω
Reclining forward	7 and 3 8 and 4	Less than 10 Ω
Reclining rearward	7 and 4 8 and 3	Less than 10 Ω

- Passenger's seat

Switch position	Terminal No.	Standard
Slide forward	7 and 13 8 and 14	Less than 10 Ω
Slide rearward	7 and 14 8 and 13	Less than 10 Ω
Reclining forward	7 and 4 8 and 3	Less than 10 Ω
Reclining rearward	7 and 3 8 and 4	Less than 10 Ω

Replace the switch if the inspection result is not within the standard value.

4. CHECK LUMBAR SWITCH

Measure resistance between terminals while operating each switch.

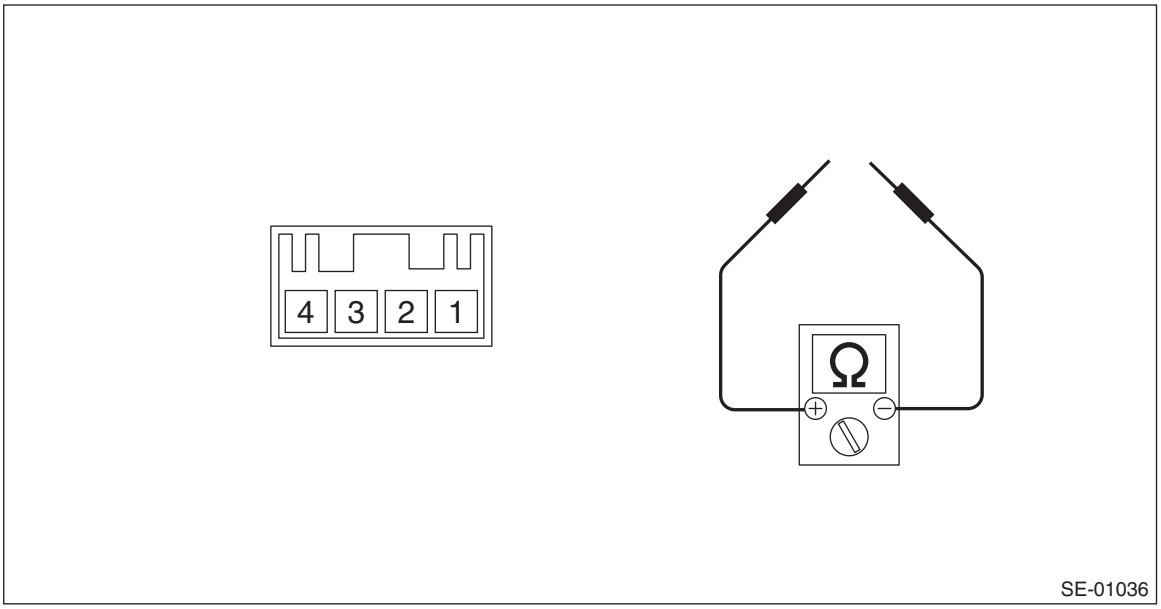

Switch position	Terminal No.	Standard
Lumbar forward	1 and 4 2 and 3	Less than 10 Ω
Lumbar backward	1 and 3 2 and 4	Less than 10 Ω

Replace the switch if the inspection result is not within the standard value.

5. ALL FUNCTIONS DO NOT OPERATE

	Step	Check	Yes	No
1	**CHECK SEAT FUNCTIONS.** Operate each power seat switch and check that each power seat function operates normally.	Does all function fails to operate?	Go to step **2**.	Check the motor which does not operate. <Ref. to SE-62, SOME MOTORS DO NOT OPERATE., INSPECTION, Power Seat System.>
2	**CHECK FUSE.** Check the power seat fuse inside the fuse box.	Is the fuse blown out?	Replace the appropriate fuse.	Go to step **3**.
3	**CHECK POWER SUPPLY CIRCUIT.** 1) Disconnect the connector of power seat switch assembly. 2) Measure the voltage between harness connector and chassis ground. ***Connector & terminal*** ***Driver's seat*** ***(R369) No. 7 (+) — Chassis ground (–):*** ***Passenger's seat*** ***(R190) No. 7 (+) — Chassis ground (–):***	Is the voltage 10 V or more?	Go to step **4**.	Check body harness.
4	**CHECK POWER SUPPLY CIRCUIT.** Measure the resistance between power seat switch harness connector and chassis ground. ***Connector & terminal*** ***Driver's seat*** ***(R369) No. 8 — Chassis ground:*** ***Passenger's seat*** ***(R190) No. 8 — Chassis ground:***	Is the resistance less than 10 Ω?	Replace the power seat switch assembly.	Check body harness.

6. SOME MOTORS DO NOT OPERATE

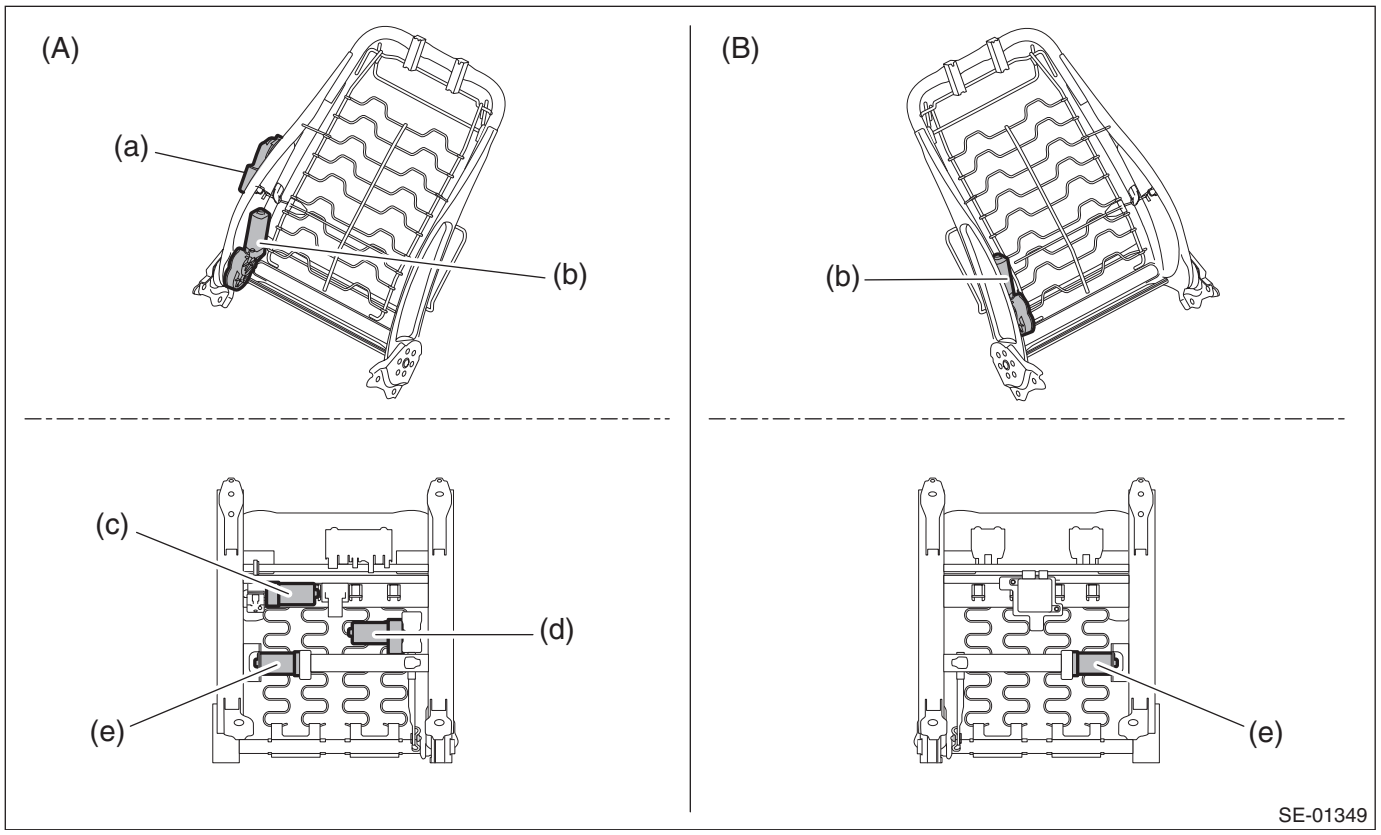

(A) Driver's seat
(B) Passenger's seat
(a) Lumber motor
(b) Reclining motor
(c) Tilt motor
(d) Lifter motor
(e) Slide motor

- Slide operation failure

Step		Check	Yes	No
1	**CHECK SWITCH.** 1) Disconnect the connector of power seat switch assembly. 2) Measure the resistance between connector terminals when moving the switch to slide forward and slide backward. <Ref. to SE-59, CHECK POWER SEAT SWITCH, INSPECTION, Power Seat System.>	Is there any problem on the inspection result?	Go to step **2**.	Replace the power seat switch assembly.
2	**CHECK HARNESS.** 1) Disconnect the power seat switch connector and slide motor connector. 2) Measure the resistance between power seat switch connector and slide motor connector. ***Connector & terminal*** ***Driver's seat*** ***(R370) No. 2 — (R369) No. 13:*** ***(R370) No. 1 — (R369) No. 14:*** ***Passenger's seat*** ***(R192) No. 2 — (R190) No. 13:*** ***(R192) No. 1 — (R190) No. 14:***	Is the resistance less than 10 Ω?	Go to step **3**.	Check power seat harness.

Step		Check	Yes	No
3	**CHECK SLIDE MOTOR.** 1) Connect the power seat switch connector and slide motor connector. 2) Apply 12 V to the slide motor and check the motor rotation. ***Connector & terminal*** ***Driver's seat*** ***(R369) No. 13 (+) — (R369) No. 14 (–):*** ***(R369) No. 14 (+) — (R369) No. 13 (–):*** ***Passenger's seat*** ***(R190) No. 13 (+) — (R190) No. 14 (–):*** ***(R190) No. 14 (+) — (R190) No. 13 (–):***	Does the motor rotate normally?	Check for temporary poor contact or mechanical trouble in slide rail.	Slide motor problem. Replace the seat cushion frame assembly.

- Malfunction of tilt operation

Step		Check	Yes	No
1	**CHECK SWITCH.** 1) Disconnect the connector of power seat switch assembly. 2) Measure the resistance between connector terminals when moving the switch to tilt up and tilt down. <Ref. to SE-59, CHECK POWER SEAT SWITCH, INSPECTION, Power Seat System.>	Is there any problem on the inspection result?	Go to step **2**.	Replace the power seat switch assembly.
2	**CHECK HARNESS.** 1) Disconnect the power seat switch connector and tilt motor connector. 2) Measure the resistance between power seat switch connector and tilt motor connector. ***Connector & terminal*** ***Driver's seat*** ***(R372) No. 2 — (R369) No. 1:*** ***(R372) No. 1 — (R369) No. 2:***	Is the resistance less than 10 Ω?	Go to step **3**.	Check power seat harness.
3	**CHECK TILT MOTOR.** 1) Connect the power seat switch connector and tilt motor connector. 2) Apply 12 V to the tilt motor and check the motor rotation. ***Connector & terminal*** ***Driver's seat*** ***(R369) No. 1 (+) — (R369) No. 2 (–):*** ***(R369) No. 2 (+) — (R369) No. 1 (–):***	Does the motor rotate normally?	Check for temporary poor contact or mechanical trouble in tilt mechanism.	Tilt motor problem. Replace the seat cushion frame assembly.

- Malfunction of lifter operation

Step		Check	Yes	No
1	**CHECK SWITCH.** 1) Disconnect the connector of power seat switch assembly. 2) Measure the resistance between connector terminals when moving the switch to lifter up and lifter down. <Ref. to SE-59, CHECK POWER SEAT SWITCH, INSPECTION, Power Seat System.>	Is there any problem on the inspection result?	Go to step **2**.	Replace the power seat switch assembly.

	Step	Check	Yes	No
2	**CHECK HARNESS.** 1) Disconnect the power seat switch connector and lifter motor connector. 2) Measure the resistance between power seat switch connector and lifter motor connector. ***Connector & terminal*** ***Driver's seat*** ***(R371) No. 2 — (R369) No. 6:*** ***(R371) No. 1 — (R369) No. 5:***	Is the resistance less than 10 Ω?	Go to step **3**.	Check power seat harness.
3	**CHECK LIFTER MOTOR.** 1) Connect the power seat switch connector and lifter motor connector. 2) Apply 12 V voltage to the lifter motor and check the motor rotation. ***Connector & terminal*** ***Driver's seat*** ***(R369) No. 6 (+) — (R369) No. 5 (–):*** ***(R369) No. 5 (+) — (R369) No. 6 (–):***	Does the motor rotate normally?	Check for temporary poor contact or mechanical trouble in lifter mechanism.	Lifter motor problem. Replace the seat cushion frame assembly.

- Malfunction of reclining operation

	Step	Check	Yes	No
1	**CHECK SWITCH.** 1) Disconnect the connector of power seat switch assembly. 2) Measure the resistance between connector terminals when moving the switch to reclining forward and reclining backward. <Ref. to SE-59, CHECK POWER SEAT SWITCH, INSPECTION, Power Seat System.>	Is there any problem on the inspection result?	Go to step **2**.	Replace the power seat switch assembly.
2	**CHECK HARNESS.** 1) Disconnect the power seat switch connector and reclining motor connector. 2) Measure the resistance between power seat switch connector and reclining motor connector. ***Connector & terminal*** ***Driver's seat*** ***(R375) No. 2 — (R369) No. 4:*** ***(R375) No. 1 — (R369) No. 3:*** ***Passenger's seat*** ***(R368) No. 2 — (R190) No. 3:*** ***(R368) No. 1 — (R190) No. 4:***	Is the resistance less than 10 Ω?	Go to step **3**.	Check power seat harness.
3	**CHECK RECLINING MOTOR.** 1) Connect the power seat switch connector and reclining motor connector. 2) Apply 12 V voltage to the reclining motor and check the motor rotation. ***Connector & terminal*** ***Driver's seat*** ***(R369) No. 4 (+) — (R369) No. 3 (–):*** ***(R369) No. 3 (+) — (R369) No. 4 (–):*** ***Passenger's seat*** ***(R190) No. 4 (+) — (R190) No. 3 (–):*** ***(R190) No. 3 (+) — (R190) No. 4 (–):***	Does the motor rotate normally?	Check for temporary poor contact or mechanical trouble in reclining hinge.	Reclining motor problem. Replace the backrest frame assembly.

- Malfunction of lumbar operation

	Step	Check	Yes	No
1	**CHECK SWITCH.** 1) Disconnect the connector of lumbar switch assembly. 2) Measure the resistance between connector terminals when moving the switch to lumbar forward and lumbar backward. <Ref. to SE-60, CHECK LUMBAR SWITCH, INSPECTION, Power Seat System.>	Is there any problem on the inspection result?	Go to step **2**.	Replace the lumbar switch assembly.
2	**CHECK HARNESS.** 1) Disconnect the lumbar switch connector and lumbar motor connector. 2) Measure the resistance between lumbar switch connector and lumbar motor connector. ***Connector & terminal*** ***Driver's seat*** ***(R379) No. 1 — (R376) No. 4:*** ***(R379) No. 2 — (R376) No. 3:***	Is the resistance less than 10 Ω?	Go to step **3**.	Check power seat harness.
3	**CHECK LUMBAR MOTOR.** 1) Connect the lumbar switch connector and lumbar motor connector. 2) Apply 12 V voltage to the lumbar motor and check the motor rotation. ***Connector & terminal*** ***Driver's seat*** ***(R376) No. 4 (+) — (R376) No. 3 (–):*** ***(R376) No. 3 (+) — (R376) No. 4 (–):***	Does the motor rotate normally?	Check for temporary poor contact or mechanical trouble in lumbar mechanism.	Lumbar motor problem. Replace the backrest frame assembly.

5. Seat Heater System

A: REMOVAL

1. SEAT HEATER UNIT

1) Remove the front seats. <Ref. to SE-10, REMOVAL, Front Seat.>
2) Remove the backrest cover of front seat and seat cushion cover. <Ref. to SE-12, DISASSEMBLY, Front Seat.>
3) Remove the seat heater unit.

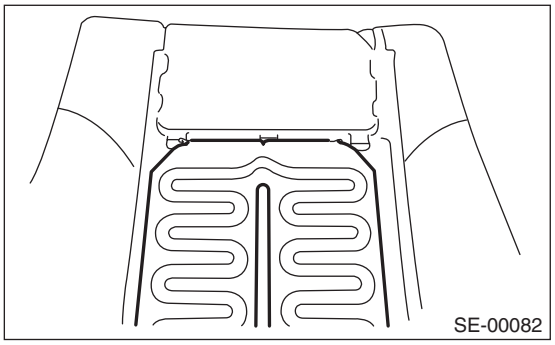

2. SEAT HEATER SWITCH

1) Disconnect the ground cable from battery.
2) Remove the console front cover assembly.

- MT model
  1. Remove the shift knob.
  2. Release the clips and claws, then pull up the console front cover assembly.

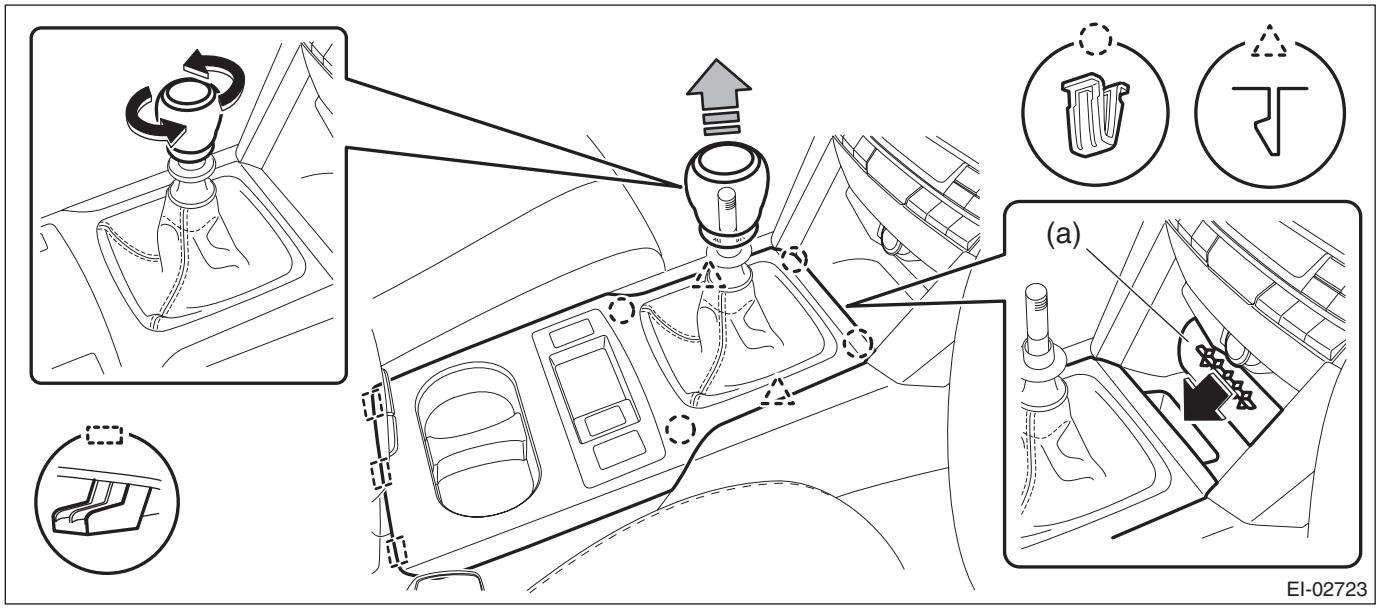

NOTE:
Turn over the front center pocket mat (a) and pull up the console front cover from the slit.

  3. Disconnect the harness connector and remove the console front cover assembly.

- AT model
  1. Remove the select lever knob.
     a. Lower the cover grip AT.
     b. Remove the clamp grip pin, then remove the select lever knob.
  2. Release the clips and claws, then pull up the console front cover assembly.

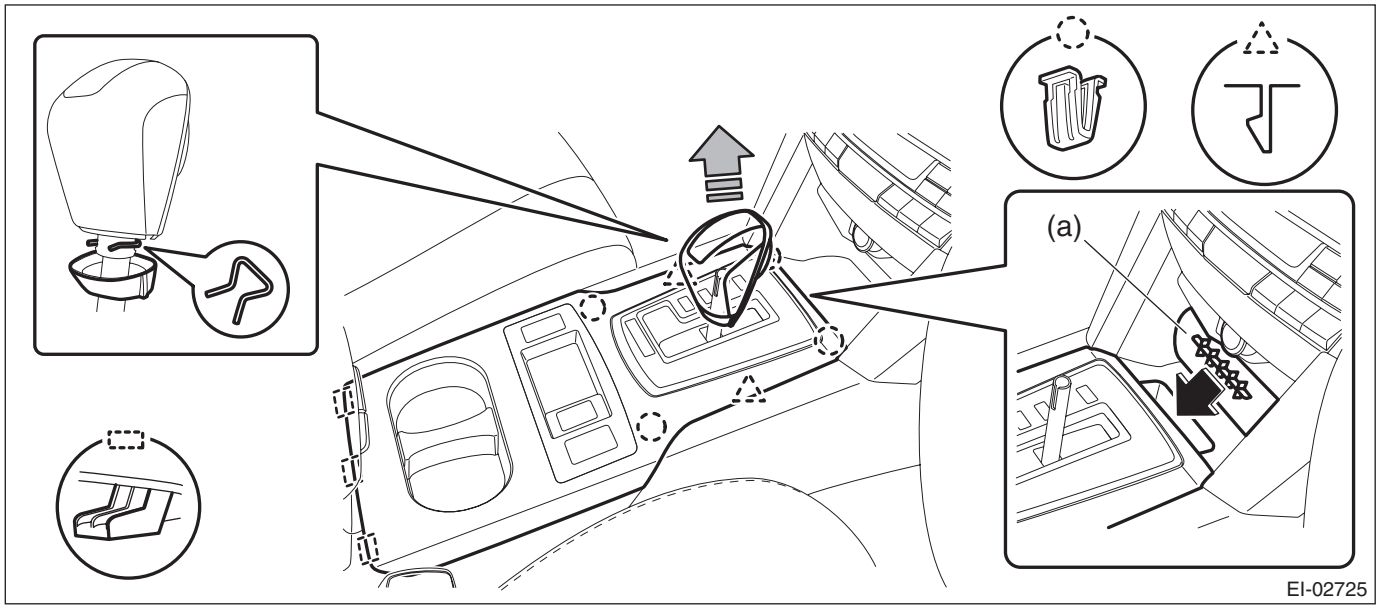

NOTE:
Turn over the front center pocket mat (a) and pull up the console front cover from the slit.

  3. Disconnect the harness connector and remove the console front cover assembly.

3) Release the claws and remove the seat heater switch from the back of console front cover.

3. SEAT HEATER RELAY AND FUSE

1) Disconnect the ground cable from battery.
2) Remove the instrument panel lower cover.
   (1) Remove the clips, and remove the instrument panel side cover LH.

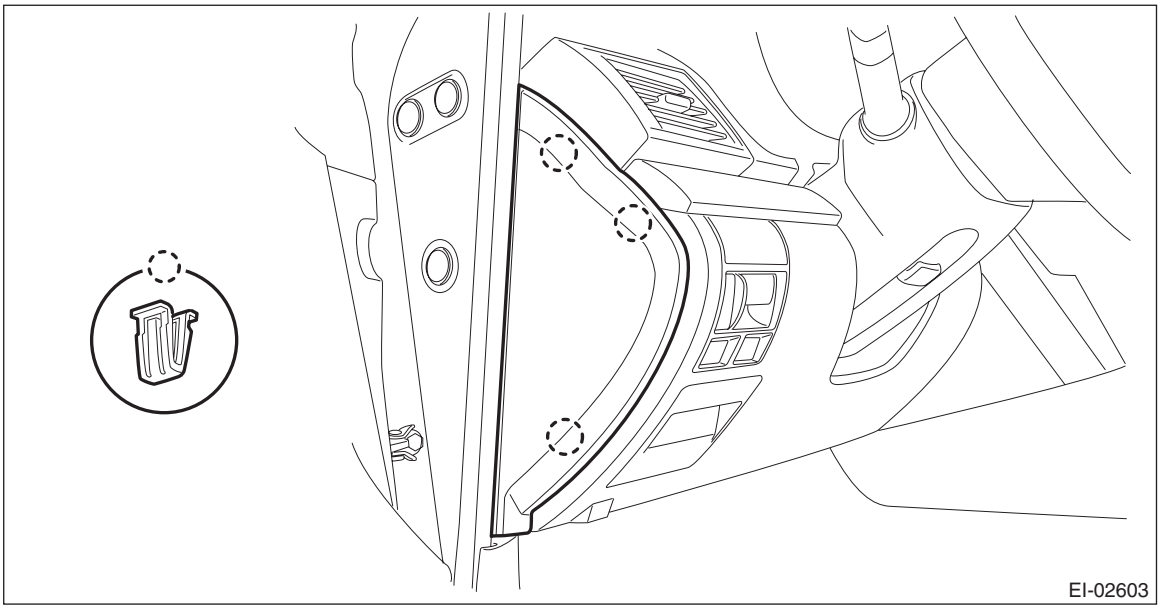

(2) Remove the clips and data link connector, and remove the instrument panel lower cover under.

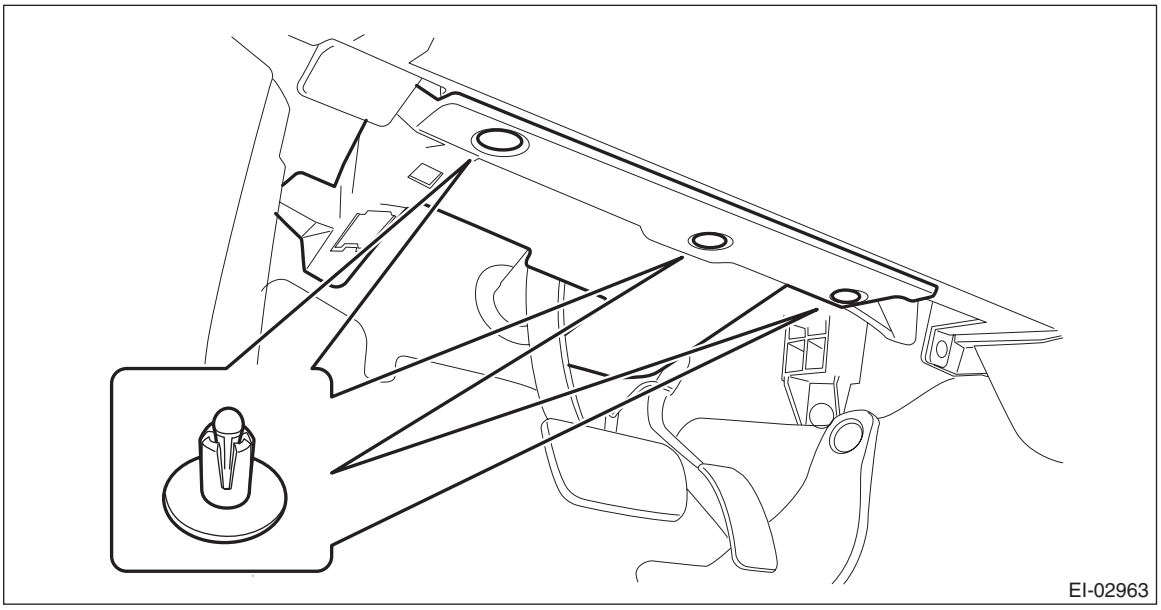

(3) Remove the screws and clips and release the claws, and remove the instrument panel lower cover while disconnecting the harness connectors.

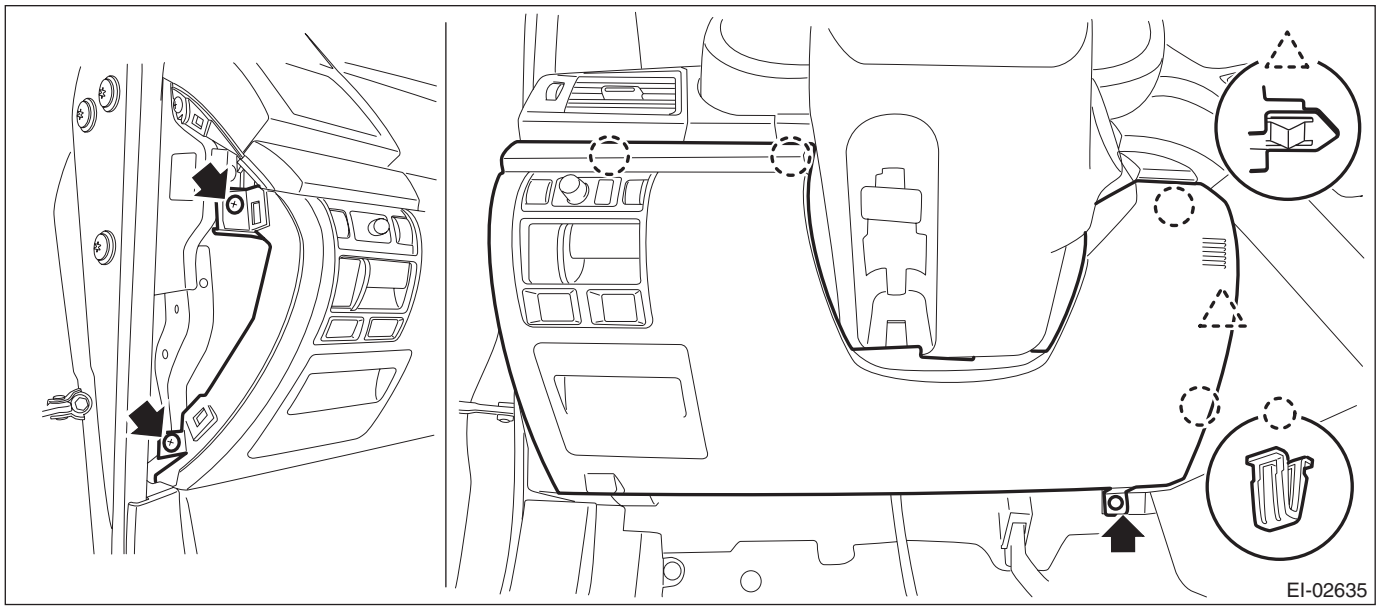

3) Remove the seat heater relay and fuse.
   (1) Remove the joint box bolts.
   (2) Remove the seat heater relay

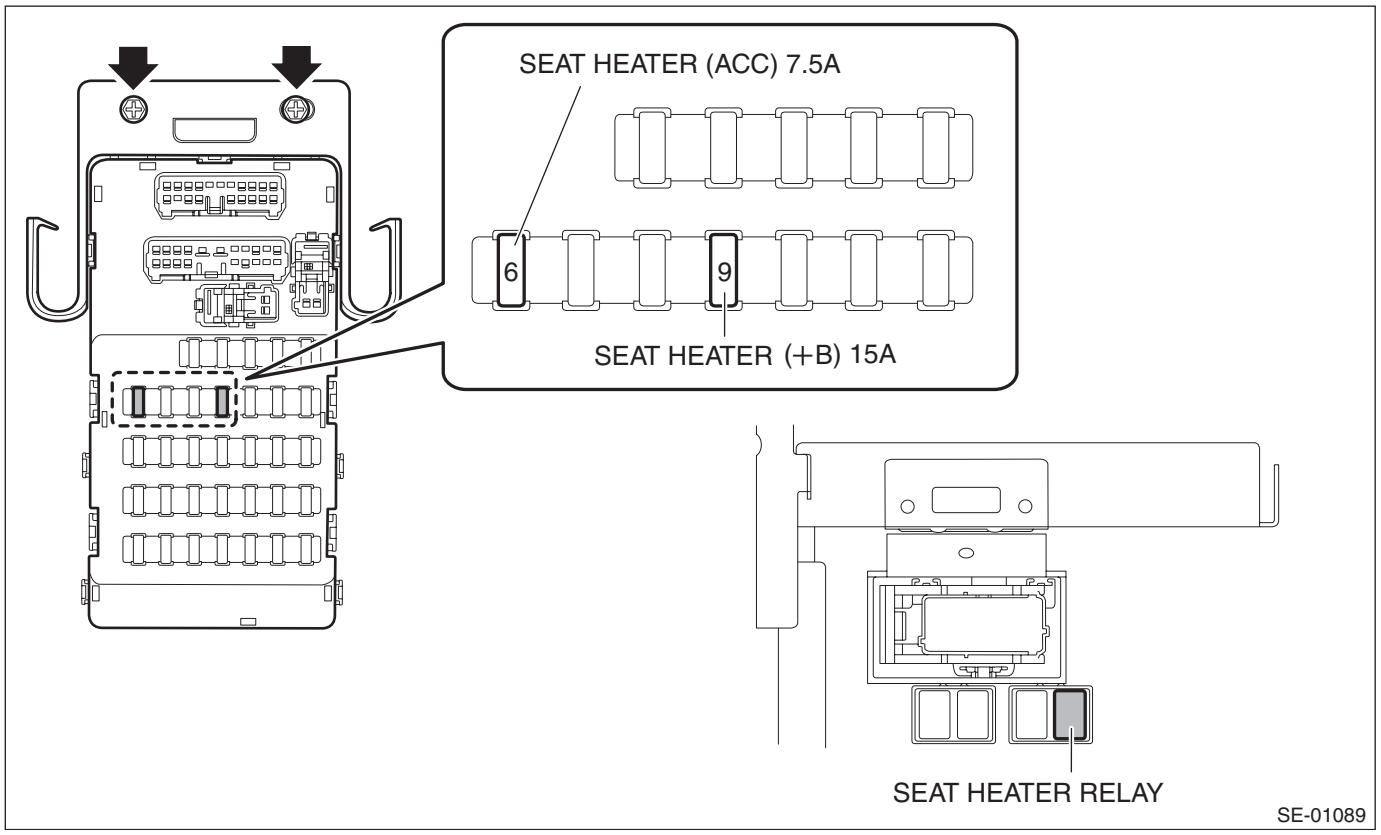

B: INSTALLATION

Install each part in the reverse order of removal.

C: INSPECTION

1. WIRING DIAGRAM

Refer to “Seat Heater System” in the wiring diagram. <Ref. to WI-234, WIRING DIAGRAM, Seat Heater System.>

2. DIAGNOSTIC CHART

Symptoms	Repair order
Seat heater does not operate.	1. Check the fuse. <Ref. to SE-69, CHECK SEAT HEATER FUSE, INSPECTION, Seat Heater System.>
	2. Check the seat heater relay. <Ref. to SE-70, CHECK SEAT HEATER RELAY, INSPECTION, Seat Heater System.>
	3. Check the seat heater switch. <Ref. to SE-70, CHECK SEAT HEATER SWITCH, INSPECTION, Seat Heater System.>
	4. Check the power supply and ground circuit for the seat heater system. <Ref. to SE-70, CHECK POWER SUPPLY AND GROUND CIRCUIT, INSPECTION, Seat Heater System.>

3. CHECK SEAT HEATER FUSE

Remove the seat heater fuse and inspect visually.
Is the fuse blown out?

- **Yes** → Replace the fuse.
- **No** → Check the power supply and ground circuits.

4. CHECK SEAT HEATER RELAY

1) Remove the seat heater relay from the relay holder.
2) Measure the resistance between seat heater relay terminals.

Preparation tool: Circuit tester

Terminal No.	Inspection conditions	Specification	Circuit
11 — 10	Always	1 MΩ or more	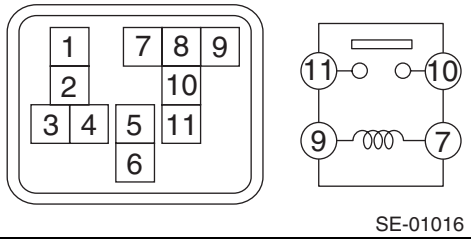
11 — 10	Apply battery voltage between terminals 9 — 7.	Less than 1 Ω	

SE-01016

3) Replace the seat heater relay if the inspection result is not within the standard value.

5. CHECK SEAT HEATER SWITCH

1) CHECK SEAT HEATER SWITCH
   (1) Turn the ignition switch to ON.
   (2) Measure the voltage between the seat heater switch and chassis ground when turning the switch to a position other than OFF.

Connector & terminal
LHD side seat
(R42) No. 4 (+) — Chassis ground (–):
RHD side seat
(R45) No. 4 (+) — Chassis ground (–):
Does the voltage fluctuate between 12 V ←→ 0 V?
- **Yes** → Harness faulty, open circuit of heater or thermostat faulty.
- **No** → Replace the seat heater switch.

6. CHECK POWER SUPPLY AND GROUND CIRCUIT

1) CHECK POWER SUPPLY CIRCUIT.
   (1) Disconnect the seat heater switch.
   (2) Turn the ignition switch to ON.
   (3) Measure the voltage between harness connector terminal and chassis ground.

Connector & terminal
Driver's seat
(R42) No. 4 (+) — Chassis ground (–):
Passenger's seat
(R45) No. 4 (+) — Chassis ground (–):
Is the voltage 12 V or more?
- **Yes** → Go to step 2.
- **No** → Check the harness between the seat heater switch and fuse.

2) CHECK GROUND CIRCUIT.
Measure the resistance between harness connector terminal and chassis ground.

Connector & terminal
Driver seat (manual seat)
(R42) No. 6 — Chassis ground:
(R41) No. 1 — Chassis ground:
Passenger seat (manual seat)
(R45) No. 6 — Chassis ground:
(R44) No. 1 — Chassis ground:
Driver seat (power seat)
(R42) No. 6 — Chassis ground:
(R380) No. 1 — Chassis ground:
Passenger seat (power seat)
(R45) No. 6 — Chassis ground:
(R363) No. 1 — Chassis ground:
Is the resistance less than 10 Ω?
- **Yes** → The power supply and ground circuits are normal.
- **No** → Repair the harness.

SECURITY AND LOCKS

SL

		Page
1.	General Description	2
2.	Relay and Fuse	8
3.	Door Lock Control System	9
4.	Keyless Entry System	14
5.	Security System	26
6.	Front Inner Remote	30
7.	Front Outer Handle	31
8.	Front Door Latch and Door Lock Actuator Assembly	34
9.	Rear Inner Remote	37
10.	Rear Outer Handle	38
11.	Rear Door Latch and Door Lock Actuator Assembly	41
12.	Rear Gate Opener Button	43
13.	Trunk Opener Switch	45
14.	Rear Gate Latch and Actuator Assembly	47
15.	Trunk Lid Latch and Actuator Assembly	49
16.	Front Hood Lock Assembly	51
17.	Remote Openers	54
18.	Ignition Key Lock	58
19.	Key Lock Cylinders	60
20.	Security Control Module	65
21.	Impact Sensor	66
22.	Keyless Entry Control Module	68
23.	Keyless Buzzer	70
24.	Body Integrated Unit	71
25.	Keyless Transmitter	72
26.	Transmitter	75
27.	Immobilizer Control Module	78
28.	Immobilizer Antenna	79

1. General Description

A: COMPONENT

1. DOOR LOCK ASSEMBLY

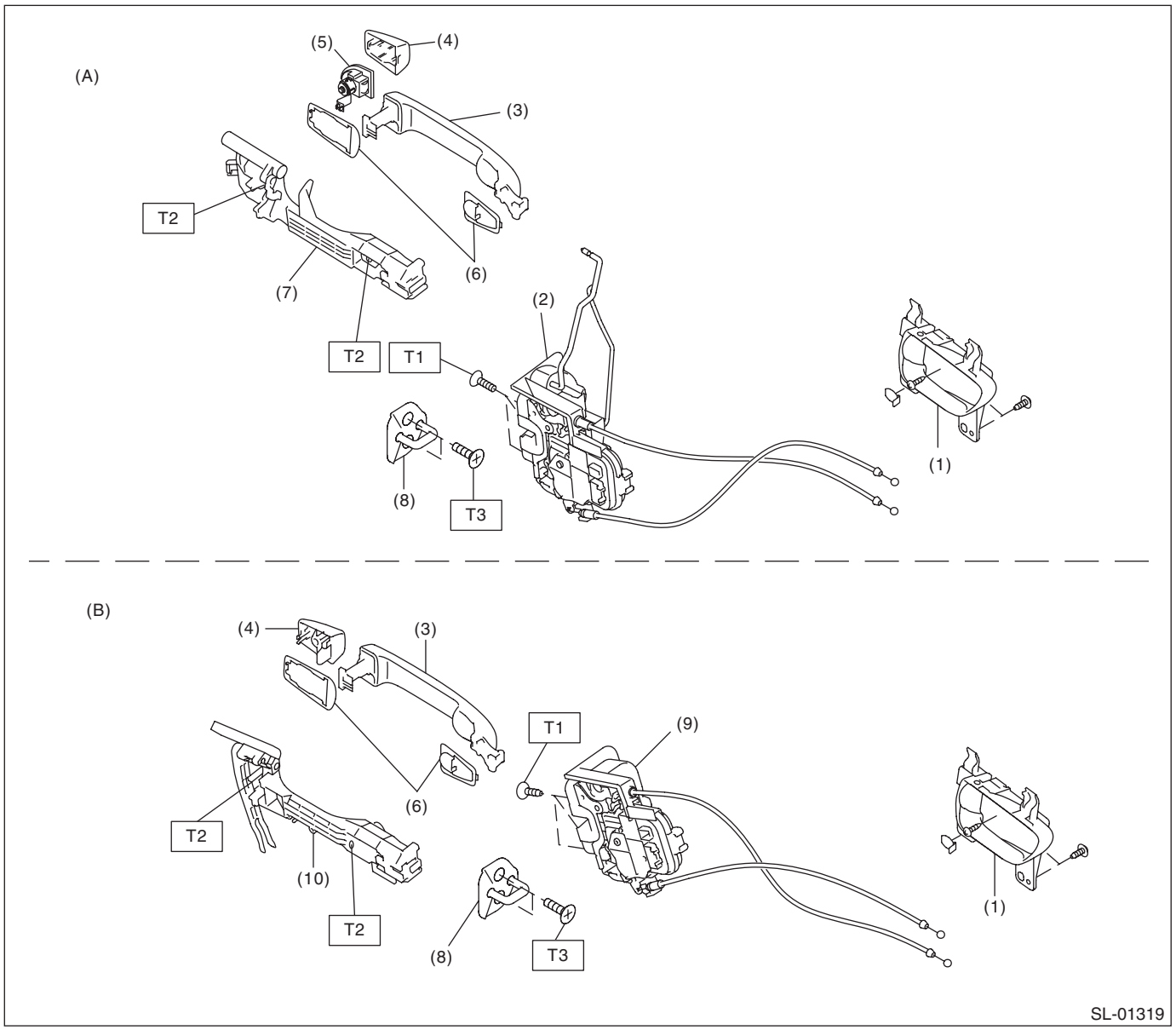

(A)	Front	(B)	Rear
(1)	Inner remote ASSY	(6)	Door outer handle spacer
(2)	Front door latch and door lock actuator ASSY	(7)	Front door outer handle frame ASSY
(3)	Door outer handle	(8)	Striker
(4)	Door outer handle cover	(9)	Rear door latch and door lock actuator ASSY
(5)	Key cylinder (driver's side only)	(10)	Rear door outer handle frame ASSY

Tightening torque:N·m (kgf-m, ft-lb)
T1: 6.5 (0.66, 4.8)
T2: 7.5 (0.76, 5.5)
T3: 18 (1.84, 13.3)

2. REAR GATE LOCK AND TRUNK LID LOCK

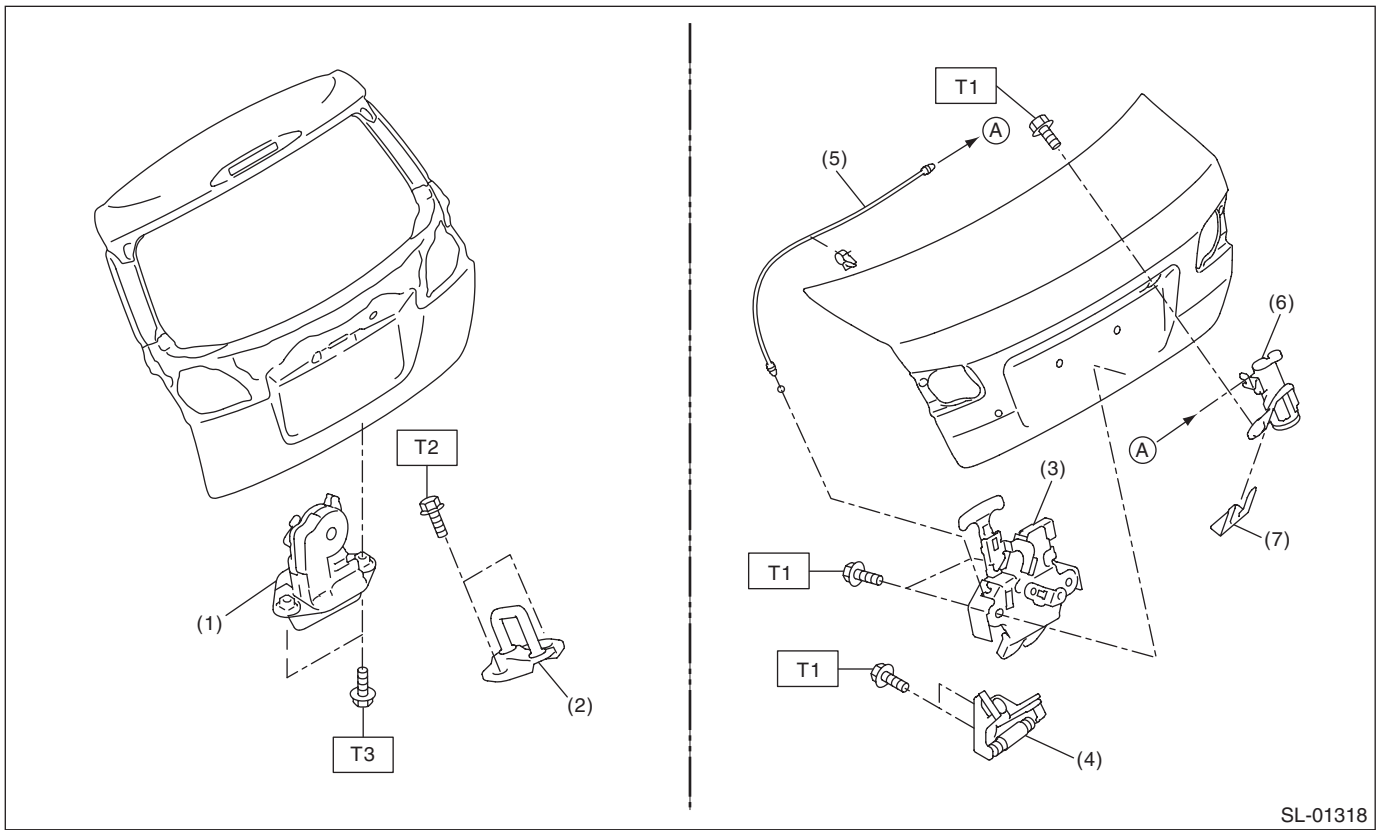

(1)	Rear gate latch and actuator ASSY	(5)	Cable	***Tightening torque:N·m (kgf-m, ft-lb)***
(2)	Rear gate striker	(6)	Key cylinder (trunk lid only)	***T1: 7.5 (0.76, 5.5)***
(3)	Trunk lid latch and actuator ASSY	(7)	Clip	***T2: 25 (2.55, 18.4)***
(4)	Trunk lid striker			***T3: 28 (2.86, 20.7)***

3. FRONT HOOD LOCK AND REMOTE OPENERS

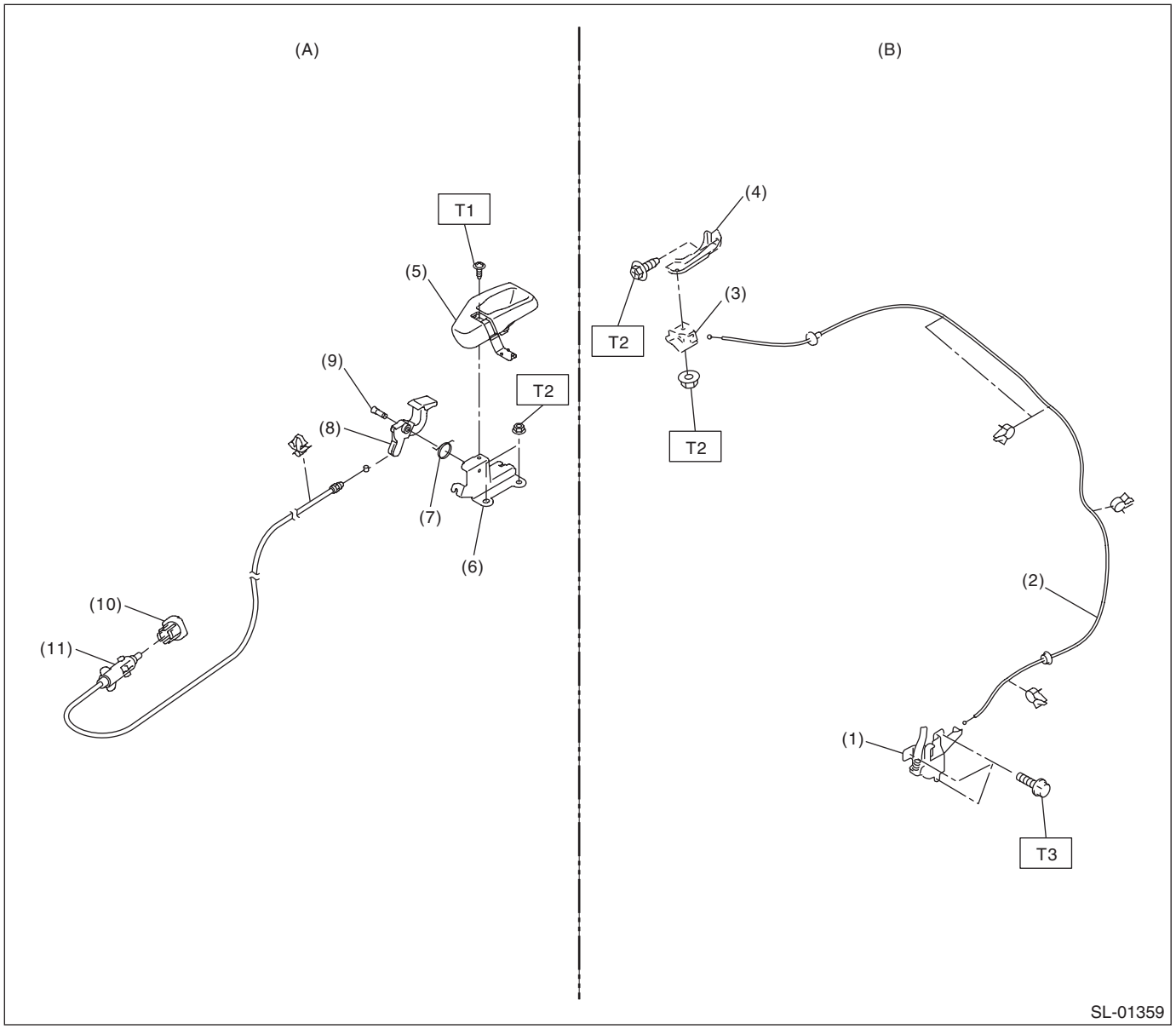

(A) Fuel lock release
(B) Hood lock release

(1) Front hood lock ASSY
(2) Cable
(3) Lever ASSY
(4) Bracket
(5) Cover
(6) Bracket
(7) Spring
(8) Pull handle ASSY
(9) Pin
(10) Holder
(11) Fuel lock

Tightening torque:N·m (kgf-m, ft-lb)
T1: 4.5 (0.46, 3.3)
T2: 7.5 (0.76, 5.5)
T3: 33 (3.36, 24.3)

4. KEYLESS ENTRY SYSTEM

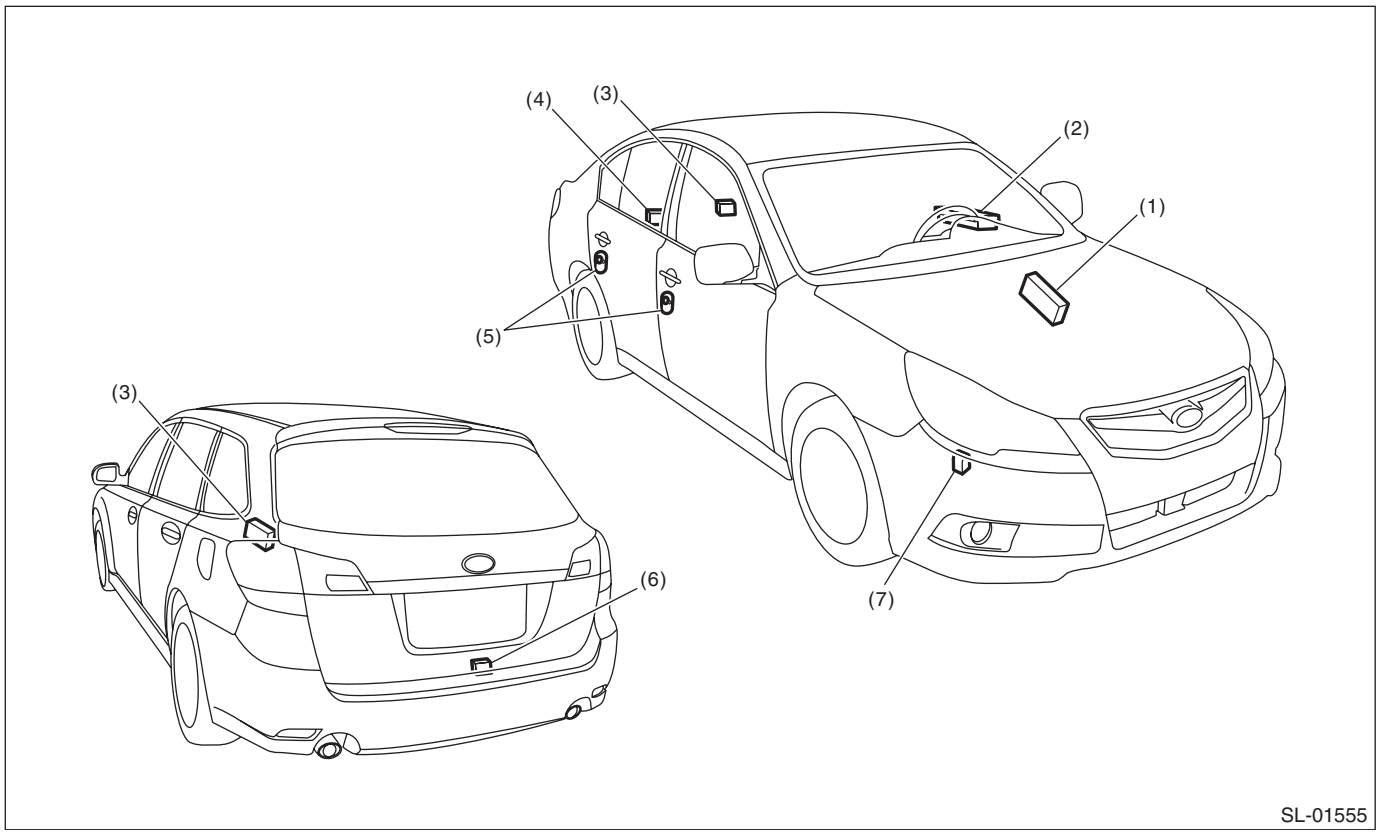

(1) Body integrated unit
(2) Power window main switch
(3) Keyless entry control module
(4) Trunk lid latch switch (sedan model)
(5) Door switch
(6) Rear gate latch switch (OUTBACK model)
(7) Keyless buzzer

5. SECURITY SYSTEM

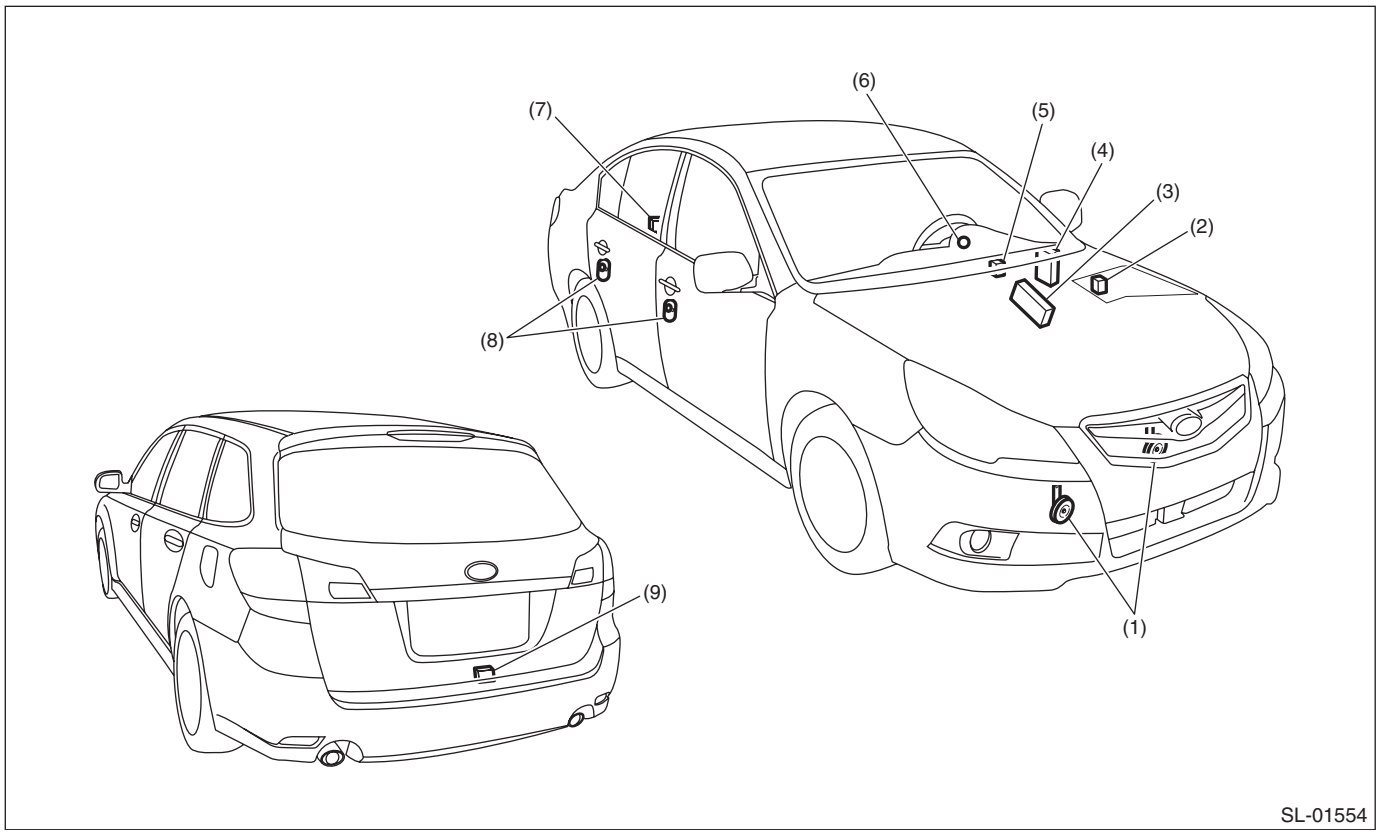

(1)	Horn	(4)	Impact sensor (driver's seat instrument panel side) (dealer option)	(7)	Trunk lid latch switch (sedan model)
(2)	Horn relay (in main fuse box)	(5)	Turn signal and hazard module	(8)	Door switch
(3)	Body integrated unit	(6)	Security indicator light (in combination meter)	(9)	Rear gate latch switch (OUTBACK model)

B: CAUTION

- Before disassembling or reassembling parts, always disconnect the battery ground cable from battery. When replacing the audio, control module and other parts provided with memory functions, record the memory contents before disconnecting the battery ground cable. Otherwise, the memory is cleared.
- Reassemble the parts in the reverse order of disassembly procedure unless otherwise indicated.
- Connect the connectors securely during reassembly.
- After reassembly, make sure that the functional parts operate normally.
- If any immobilizer related part has been replaced, make sure to register the immobilizer.
- Do not use any electrical test equipment on the airbag system wiring harnesses and connector circuits.
- Be careful not to damage the airbag system wiring harness when servicing the ignition key cylinder.

C: PREPARATION TOOL

1. SPECIAL TOOL

ILLUSTRATION	TOOL NUMBER	DESCRIPTION	REMARKS
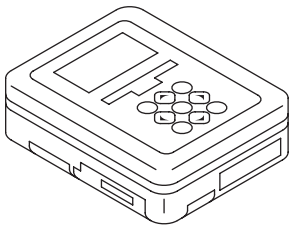 ST1B022XU0	1B022XU0	SUBARU SELECT MONITOR III KIT	Used for troubleshooting the electrical system.

2. GENERAL TOOL

TOOL NAME	REMARKS
Circuit tester	Used for measuring resistance and voltage.
Drill	Used for replacing ignition key lock.
TORX® T30	Used for removing and installing the door outer handle.
Clip remover	Used for removing trim clip.

2. Relay and Fuse

A: LOCATION

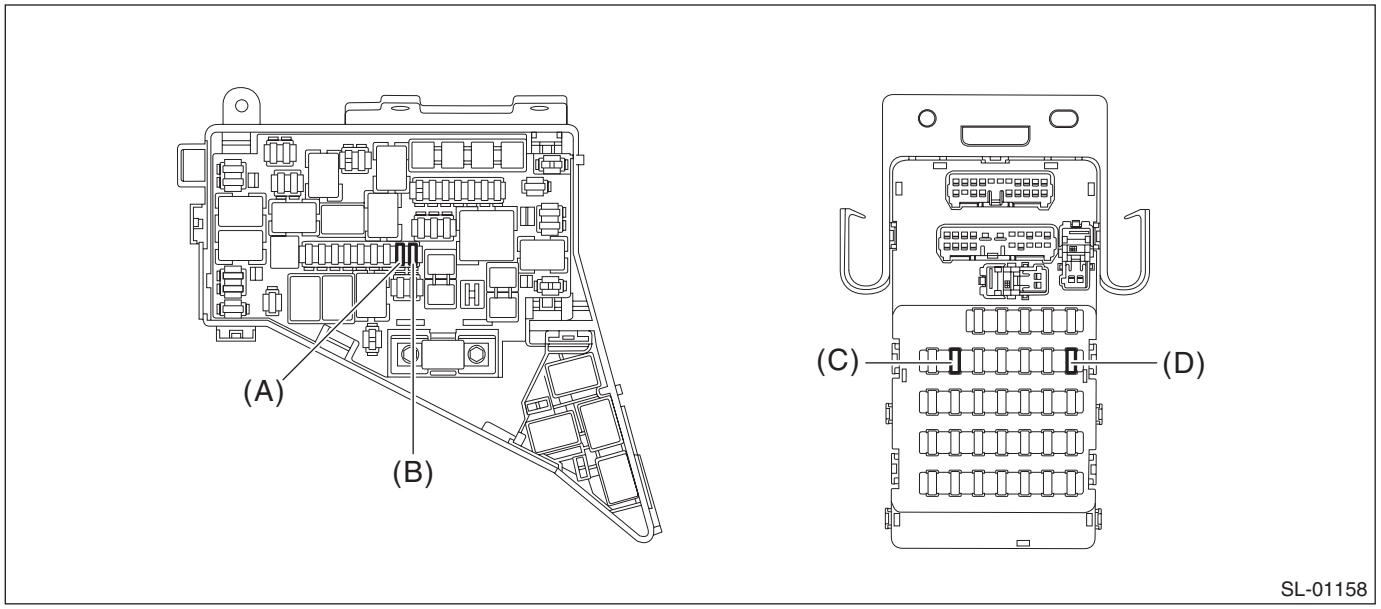

Main fuse box	Fuse 15A (K/L)	(A)
	Fuse 20A (K/L, SEC)	(B)
Relay & fuse box	Fuse 7.5A (SEC)	(C)
	Fuse 15A (SEC)	(D)

NOTE:
For other related fuses, refer to the wiring diagram. <Ref. to WI-15, Power Supply Circuit.>

B: INSPECTION

1. CHECK FUSE.

1) Remove the fuse and inspect visually.
2) If the fuse is blown out, replace the fuse.

NOTE:
If the fuse is blown again, check the system wiring harness.

3. Door Lock Control System

A: WIRING DIAGRAM

Refer to “Keyless Entry System” in the wiring diagram. <Ref. to WI-181, WIRING DIAGRAM, Keyless Entry System.>

B: ELECTRICAL SPECIFICATION

1. BODY INTEGRATED UNIT

Refer to “Control Module I/O Signal” of “BODY CONTROL SYSTEM (DIAGNOSTICS)” section. <Ref. to BC(diag)-7, ELECTRICAL SPECIFICATION, Control Module I/O Signal.>

C: INSPECTION

1. SYMPTOM CHART

Symptoms	Repair order	Reference
The door lock control system does not operate.	1. Remove and visually check the following fuses. • No. 7 (in fuse & relay box) • No. 10 (in main fuse box) • No. 19 (in main fuse box)	If the fuse is blown out, replace the fuse with a new part. When there is no defective with the fuse, check the power supply and ground circuit. <Ref. to SL-9, CHECK POWER SUPPLY AND GROUND CIRCUIT, INSPECTION, Door Lock Control System.>
	2. Check the power supply and ground circuit for body integrated unit.	<Ref. to SL-9, CHECK POWER SUPPLY AND GROUND CIRCUIT, INSPECTION, Door Lock Control System.>
	3. Check the door lock switch and the circuit.	<Ref. to SL-10, CHECK DOOR LOCK SWITCH, INSPECTION, Door Lock Control System.>
	4. Check the rear gate/trunk opener button and the circuit.	<Ref. to SL-11, CHECK REAR GATE/TRUNK OPENER BUTTON SWITCH CIRCUIT, INSPECTION, Door Lock Control System.>
	5. Check the door lock actuator and the circuit.	<Ref. to SL-12, CHECK DOOR LOCK ACTUATOR AND CIRCUIT., INSPECTION, Door Lock Control System.>
A specific door lock actuator does not operate.	Check the door lock actuator and circuit.	<Ref. to SL-12, CHECK DOOR LOCK ACTUATOR AND CIRCUIT., INSPECTION, Door Lock Control System.>

2. CHECK POWER SUPPLY AND GROUND CIRCUIT

	Step	Check	Yes	No
1	**CHECK POWER SUPPLY.** 1) Disconnect the connector of body integrated unit. 2) Measure the voltage between body integrated unit connector and chassis ground. ***Connector & terminal*** ***(i84) No. 6 (+) — Chassis ground (–):*** ***(i171) No. 1 (+) — Chassis ground (–):*** ***(B281) No. 7 (+) — Chassis ground (–):***	Is the voltage 10 V or more?	Go to step **2**.	Check the harness for open or short circuit between body integrated unit and fuse.

	Step	Check	Yes	No
2	**CHECK GROUND CIRCUIT.** Measure the resistance between body integrated unit connector and chassis ground. ***Connector & terminal*** ***(i84) No. 1 — Chassis ground:*** ***(i171) No. 29 — Chassis ground:*** ***(B280) No. 1 — Chassis ground:*** ***(B281) No. 31 — Chassis ground:***	Is the resistance less than 10 Ω?	The power supply and ground circuit are OK.	Repair or replace the harness.

3. CHECK DOOR LOCK SWITCH

	Step	Check	Yes	No
1	**CHECK DOOR LOCK SWITCH.** 1) Prepare the Subaru Select Monitor kit. 2) Turn the ignition switch to ON (engine OFF) and run the “PC application for Subaru Select Monitor”. 3) On «System Selection Menu» display, select {Integ. unit mode}. 4) Select {Current Data Display & Save}. 5) Select {Manual lock SW input}.	Does the display switch between OFF ←→ ON when each door lock switch is moved to LOCK?	Go to step **2**.	Go to step **3**.
2	**CHECK DOOR LOCK SWITCH.** From the condition in step 1), operate each door lock switch (driver’s and passenger’s) in the UNLOCK direction.	Does the display switch between OFF ←→ ON?	The door lock switch is OK.	Go to step **4**.
3	**CHECK DOOR LOCK SWITCH.** 1) Disconnect the door lock switch connector. 2) Check the continuity when the door lock switch is operated to the LOCK direction. ***Connector & terminal*** ***Driver’s side (model without AUTO UP function)*** ***(D7) No. 2 — (D7) No. 3:*** ***Driver’s side (model with AUTO UP function)*** ***(D95) No. 10 — (D7) No. 3:*** ***Passenger’s side*** ***(D125) No. 4 — (D125) No. 5:***	Did the indicator change from “No continuity” (1 MΩ or more) to “Continuity exists” (less than 10 Ω)?	Go to step **4**.	Replace the power window main switch or door lock switch.
4	**CHECK DOOR LOCK SWITCH.** Check the continuity when the door lock switch is operated to the UNLOCK direction. ***Connector & terminal*** ***Driver’s side (model without AUTO UP function)*** ***(D7) No. 1 — (D7) No. 3:*** ***Driver’s side (model with AUTO UP function)*** ***(D95) No. 2 — (D7) No. 3:*** ***Passenger’s side*** ***(D125) No. 2 — (D125) No. 5:***	Did the indicator change from “No continuity” (1 MΩ or more) to “Continuity exists” (less than 10 Ω)?	Go to step **5**.	Replace the power window main switch or door lock switch.
5	**CHECK HARNESS.** Measure the resistance between the door lock switch connector and chassis ground. ***Connector & terminal*** ***Driver’s side*** ***(D7) No. 3 — Chassis ground:*** ***Passenger’s side*** ***(D125) No. 5 — Chassis ground:***	Is the resistance less than 10 Ω?	Go to step **6**.	Repair or replace the harness.

	Step	Check	Yes	No
6	**CHECK HARNESS.** 1) Disconnect the body integrated unit connector. 2) Measure the resistance between body integrated unit connector and door lock switch connector. ***Connector & terminal*** ***Driver's side (model without AUTO UP function)*** ***(D7) No. 2 — (i84) No. 9:*** ***(D7) No. 1 — (i84) No. 20:*** ***Driver's side (model with AUTO UP function)*** ***(D95) No. 10 — (i84) No. 9:*** ***(D95) No. 2 — (i84) No. 20:*** ***Passenger's side*** ***(D125) No. 4 — (i84) No. 9:*** ***(D125) No. 2 — (i84) No. 20:***	Is the resistance less than 10 Ω?	Replace the body integrated unit. <Ref. to SL-71, Body Integrated Unit.>	Repair or replace the harness.

4. CHECK REAR GATE/TRUNK OPENER BUTTON SWITCH CIRCUIT

	Step	Check	Yes	No
1	**CHECK REAR GATE/TRUNK OPENER BUTTON.** 1) Prepare the Subaru Select Monitor kit. 2) Turn the ignition switch to ON (engine OFF) and run the "PC application for Subaru Select Monitor". 3) On «System Selection Menu» display, select {Integ. unit mode}. 4) Select {Current Data Display & Save}. 5) Select the {Rear gate/Trunk release switch}.	Does the display switch between OFF ←→ ON when the rear gate/trunk opener button is operated?	The rear gate/trunk opener button is normal.	Go to step **2**.
2	**CHECK HARNESS.** 1) Disconnect the body integrated unit connector and rear gate/trunk opener button connector. 2) Check the harness between body integrated unit connector and rear gate/trunk opener button connector. ***Connector & terminal*** ***Sedan model*** ***(i84) No. 10 — (i162) No. 4:*** ***OUTBACK model*** ***(i84) No. 10 — (D77) No. 5:***	Is harness normal?	Go to step **3**.	Repair or replace the harness.
3	**CHECK HARNESS.** Measure the resistance between the rear gate/trunk opener button connector and chassis ground. ***Connector & terminal*** ***Sedan model*** ***(i162) No. 2 — Chassis ground:*** ***OUTBACK model*** ***(D77) No. 6 — Chassis ground:***	Is the resistance less than 10 Ω?	Go to step **4**.	Repair or replace the harness.

	Step	Check	Yes	No
4	**CHECK REAR GATE/TRUNK OPENER BUTTON.** Measure the resistance between connector terminals both when the rear gate/trunk opener button is pressed and when not pressed. ***Connector & terminal*** ***Sedan model*** ***(i162) No. 4 — (i162) No. 2:*** ***OUTBACK model*** ***(D77) No. 5 — (D77) No. 6:***	Is the resistance less than 10 Ω when the switch is pressed and 1 MΩ or more when not pressed?	Replace the body integrated unit. <Ref. to SL-71, Body Integrated Unit.>	Replace the rear gate/trunk opener button.

5. CHECK DOOR LOCK ACTUATOR AND CIRCUIT

	Step	Check	Yes	No
1	**CHECK HARNESS (DOOR LOCK).** 1) Disconnect the body integrated unit connector and each door lock actuator. 2) Check the harness between body integrated unit connector and each door lock actuator connector. ***Connector & terminal*** ***Front door RH*** ***(i171) No. 2 — (D72) No. 1:*** ***Front door LH*** ***(i171) No. 2 — (D18) No. 1:*** ***Rear door RH*** ***(i171) No. 2 — (D32) No. 1:*** ***Rear door LH*** ***(i171) No. 2 — (D26) No. 1:***	Is harness normal?	Go to step **2**.	Repair or replace the harness.
2	**CHECK HARNESS (DOOR UNLOCK).** Check the harness between body integrated unit connector and each door lock actuator connector. ***Connector & terminal*** ***Front door RH*** ***(i171) No. 3 — (D72) No. 2:*** ***Front door LH*** ***(i171) No. 4 — (D18) No. 2:*** ***Rear door RH*** ***(i171) No. 3 — (D32) No. 2:*** ***Rear door LH*** ***(i171) No. 3 — (D26) No. 2:***	Is harness normal?	OUTBACK model Go to step **3**. Sedan model: Go to step **5**.	Repair or replace the harness.
3	**CHECK HARNESS (REAR GATE UNLOCK).** Check the harness between body integrated unit connector and rear gate lock actuator connector. ***Connector & terminal*** ***(i171) No. 7 — (D47) No. 1:***	Is harness normal?	Go to step **4**.	Repair or replace the harness.
4	**CHECK HARNESS (REAR GATE UNLOCK).** Measure the resistance between the rear gate lock actuator connector and chassis ground. ***Connector & terminal*** ***(D47) No. 2 — Chassis ground:***	Is the resistance less than 10 Ω?	Go to step **7**.	Repair or replace the harness.
5	**CHECK HARNESS (TRUNK UNLOCK).** Check the harness between body integrated unit connector and trunk lid lock actuator connector. ***Connector & terminal*** ***(i171) No. 7 — (R186) No. 1:***	Is harness normal?	Go to step **6**.	Repair or replace the harness.

	Step	Check	Yes	No
6	**CHECK HARNESS (TRUNK UNLOCK).** Measure the resistance between the trunk lid lock actuator connector and chassis ground. ***Connector & terminal*** ***(R186) No. 2 — Chassis ground:***	Is the resistance less than 10 Ω?	Go to step **7**.	Repair or replace the harness.
7	**CHECK BODY INTEGRATED UNIT OUTPUT SIGNAL.** 1) Connect the body integrated unit connector. 2) Measure the voltage between the terminals of the body integrated unit connector when operating the door lock switch to LOCK direction. ***Connector & terminal*** ***Except for front door LH*** ***(i171) No. 2 (+) — (i171) No. 3 (–):*** ***Front door LH*** ***(i171) No. 2 (+) — (i171) No. 4 (–):***	Does the voltage change from less than 1 V → 9 V or more? (During lock output)	Go to step **8**.	Replace the body integrated unit. <Ref. to SL-71, Body Integrated Unit.>
8	**CHECK BODY INTEGRATED UNIT OUTPUT SIGNAL.** Measure the voltage between the terminals of the body integrated unit connector when operating the door lock switch to UNLOCK direction. ***Connector & terminal*** ***Except for front door LH*** ***(i171) No. 3 (+) — (i171) No. 2 (–):*** ***Front door LH*** ***(i171) No. 4 (+) — (i171) No. 2 (–):***	Does the voltage change from less than 1 V → 9 V or more? (During unlock output)	Go to step **9**.	Replace the body integrated unit. <Ref. to SL-71, Body Integrated Unit.>
9	**CHECK BODY INTEGRATED UNIT OUTPUT SIGNAL.** Measure the voltage between body integrated unit connector and chassis ground when operating the rear gate/trunk opener button. ***Connector & terminal*** ***(i171) No. 7 (+) — Chassis ground (–):***	Does the voltage change from less than 1 V → 9 V or more? (During unlock output)	Go to step **10**.	Replace the body integrated unit. <Ref. to SL-71, Body Integrated Unit.>
10	**CHECK DOOR LOCK ACTUATOR.** Check the door lock actuator. • Front door lock actuator: <Ref. to SL-36, INSPECTION, Front Door Latch and Door Lock Actuator Assembly.> • Rear door lock actuator: <Ref. to SL-42, INSPECTION, Rear Door Latch and Door Lock Actuator Assembly.>	Is the door lock actuator OK?	OUTBACK model Go to step **11**. Sedan model: Go to step **12**.	Replace the door latch and door lock actuator assembly.
11	**CHECK REAR GATE LOCK ACTUATOR.** Check the rear gate lock actuator. <Ref. to SL-47, Rear Gate Latch and Actuator Assembly.>	Is the rear gate lock actuator normal?	Check the connection status of the harness and connector that may have a temporary poor contact.	Replace the rear gate latch and actuator assembly.
12	**CHECK TRUNK LID LOCK ACTUATOR.** Check the trunk lid lock actuator. <Ref. to SL-49, Trunk Lid Latch and Actuator Assembly.>	Is trunk lid lock actuator normal?	Check the connection status of the harness and connector that may have a temporary poor contact.	Replace the trunk lid latch & actuator assembly.

4. Keyless Entry System

A: WIRING DIAGRAM

Refer to “Keyless Entry System” in the wiring diagram. <Ref. to WI-181, WIRING DIAGRAM, Keyless Entry System.>

B: ELECTRICAL SPECIFICATION

1. KEYLESS ENTRY CONTROL MODULE

- Model without tire pressure monitoring system

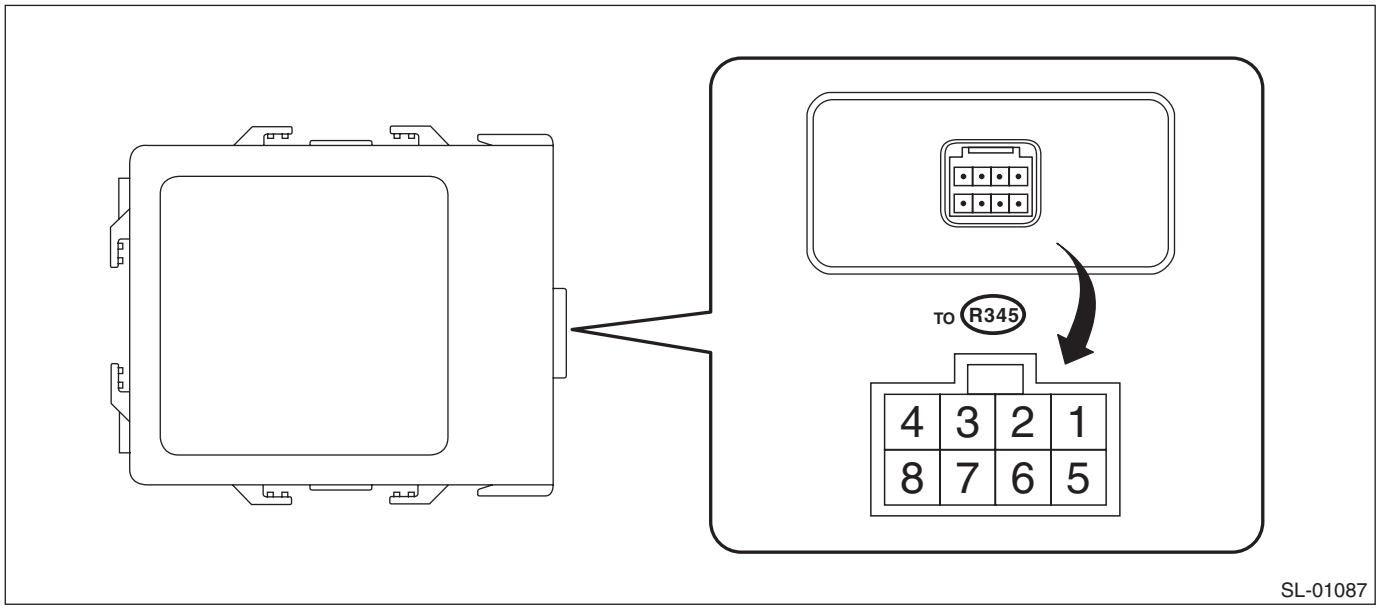

Terminal No.	Item	Measuring condition	Standard
3 (U-ART com.)	—	Cannot be measured	—
4 (+B) ←→ Chassis ground	Voltage	Always	10 — 14 V
7 (GND) ←→ Chassis ground	Resistance	Always	Less than 1 Ω

- Model with tire pressure monitoring system

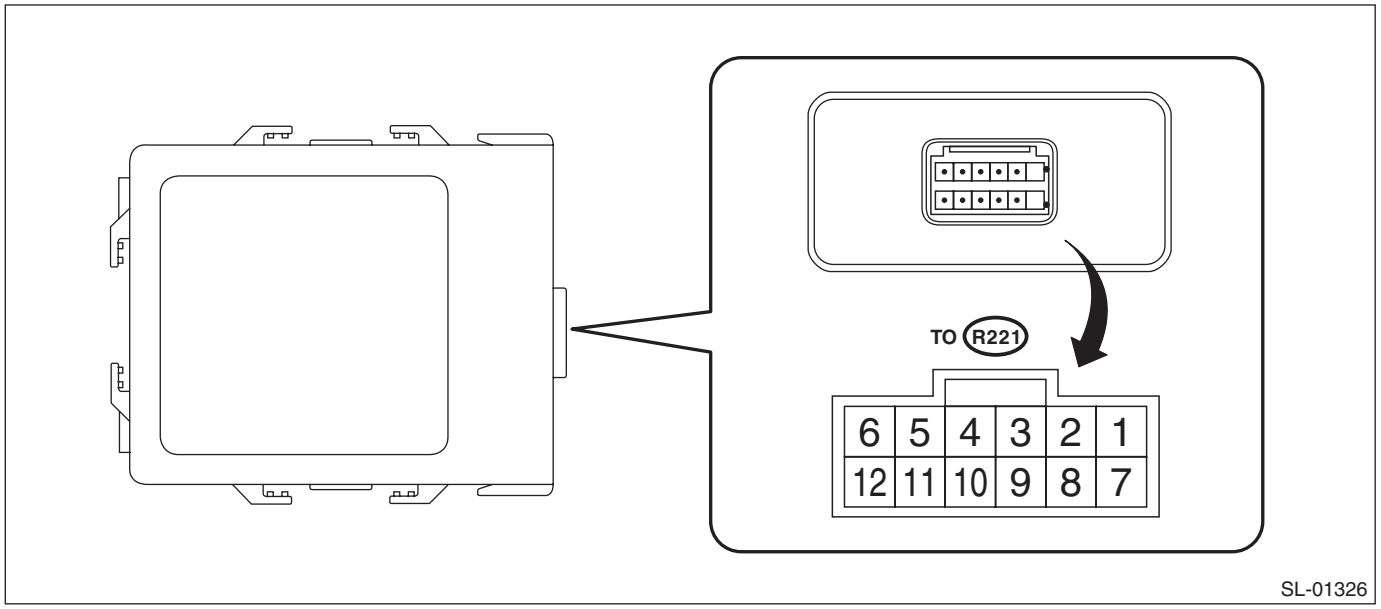

Terminal No.	Item	Measuring condition	Standard
2 ← → Chassis ground	Voltage	Tire pressure warning light: Not illuminated → Illuminated	0 V → 10 — 14 V
3 ← → Chassis ground	Waveform	Speedometer	Pulse generation
4 (IG) ←→ Chassis ground	Resistance	IG OFF → ON	0 V → 10 — 14 V
5 (GND) ←→ Chassis ground	Resistance	Always	Less than 1 Ω
6 (+B) ←→ Chassis ground	Voltage	Always	10 — 14 V
11 (U-ART com.)	—	Cannot be measured	—
12 (SSM communication)	—	Cannot be measured	—

2. BODY INTEGRATED UNIT

Refer to “Control Module I/O Signal” of “BODY CONTROL SYSTEM (DIAGNOSTICS)” section. <Ref. to BC(diag)-7, ELECTRICAL SPECIFICATION, Control Module I/O Signal.>

C: INSPECTION

1. SYMPTOM CHART

Symptoms	Repair order	Reference
None of the functions of the keyless entry system operate.	1. Check the keyless transmitter or transmitter battery.	<Ref. to SL-18, CHECK KEYLESS TRANSMITTER OR TRANSMITTER BATTERY AND FUNCTION, INSPECTION, Keyless Entry System.>
	2. Remove and visually inspect the following fuses. • No. 7 (in fuse & relay box) • No. 10 (in main fuse box) • No. 19 (in main fuse box)	If the fuse is blown out, replace the fuse with a new part. When there is no defective with the fuse, check the power supply and ground circuit. <Ref. to SL-9, CHECK POWER SUPPLY AND GROUND CIRCUIT, INSPECTION, Door Lock Control System.>
	3. Check the keyless entry control module.	<Ref. to SL-19, CHECK KEYLESS ENTRY CONTROL MODULE, INSPECTION, Keyless Entry System.>
	4. Check the power supply and ground circuit for body integrated unit.	<Ref. to SL-20, CHECK BODY INTEGRATED UNIT POWER SUPPLY AND GROUND CIRCUIT, INSPECTION, Keyless Entry System.>
	5. Check the key warning switch.	<Ref. to SL-21, CHECK KEY WARNING SWITCH., INSPECTION, Keyless Entry System.>
	6. Check the door switch signal.	<Ref. to SL-20, CHECK DOOR SWITCH, INSPECTION, Keyless Entry System.>
	7. Check the body integrated unit.	<Ref. to BC(diag)-2, Basic Diagnostic Procedure.>
The keyless transmitter cannot be registered.	1. Check the keyless transmitter or transmitter battery.	<Ref. to SL-18, CHECK KEYLESS TRANSMITTER OR TRANSMITTER BATTERY AND FUNCTION, INSPECTION, Keyless Entry System.>
	2. Check the key warning switch.	<Ref. to SL-21, CHECK KEY WARNING SWITCH., INSPECTION, Keyless Entry System.>
	3. Check the door lock switch signal.	<Ref. to SL-25, CHECK DOOR LOCK SWITCH, INSPECTION, Keyless Entry System.>
	4. Check the body integrated unit.	<Ref. to BC(diag)-2, Basic Diagnostic Procedure.>

Symptoms	Repair order	Reference
Door lock or unlock does not operate. NOTE: If the door lock control system does not operate when using the door lock switch, check the door lock control system. <Ref. to SL-9, INSPECTION, Door Lock Control System.>	1. Check the keyless transmitter or transmitter battery.	<Ref. to SL-18, CHECK KEYLESS TRANSMITTER OR TRANSMITTER BATTERY AND FUNCTION, INSPECTION, Keyless Entry System.>
	2. Check the keyless entry control module.	<Ref. to SL-19, CHECK KEYLESS ENTRY CONTROL MODULE, INSPECTION, Keyless Entry System.>
	3. Check the key warning switch.	<Ref. to SL-21, CHECK KEY WARNING SWITCH., INSPECTION, Keyless Entry System.>
	4. Check the door switch signal.	<Ref. to SL-20, CHECK DOOR SWITCH, INSPECTION, Keyless Entry System.>
	5. Check the body integrated unit.	<Ref. to BC(diag)-2, Basic Diagnostic Procedure.>
The keyless buzzer and hazard light do not operate.	1. Check the keyless buzzer operation.	<Ref. to SL-24, CHECK KEYLESS BUZZER, INSPECTION, Keyless Entry System.>
	2. Check the hazard light operation.	<Ref. to SL-23, CHECK HAZARD LIGHT OPERATION, INSPECTION, Keyless Entry System.>
	3. Check the body integrated unit.	<Ref. to BC(diag)-2, Basic Diagnostic Procedure.>
Room light does not operate.	1. Check the room light operation.	<Ref. to SL-22, CHECK ROOM LIGHT OPERATION, INSPECTION, Keyless Entry System.>
	2. Check the body integrated unit.	<Ref. to BC(diag)-2, Basic Diagnostic Procedure.>
Ignition switch illumination does not operate.	1. Check the ignition switch illumination.	<Ref. to SL-25, CHECK IGNITION SWITCH ILLUMINATION, INSPECTION, Keyless Entry System.>
	2. Check the body integrated unit.	<Ref. to BC(diag)-2, Basic Diagnostic Procedure.>

2. CHECK KEYLESS TRANSMITTER OR TRANSMITTER BATTERY AND FUNCTION

CAUTION:
Be sure to reset keyless transmitter or transmitter of other vehicles registered to the inspection target vehicle, and vehicles to which keyless transmitters or transmitter were registered for inspection, to the condition before performing the inspection. (Re-register the keyless transmitters or transmitter.)

	Step	Check	Yes	No
1	**CHECK BATTERY OF THE KEYLESS TRANSMITTER OR TRANSMITTER.** 1) Remove the battery from the keyless transmitter or transmitter. • Keyless transmitter: <Ref. to SL-72, REMOVAL, Keyless Transmitter.> • Transmitter: <Ref. to SL-75, REMOVAL, Transmitter.> 2) Check the battery voltage. • Keyless transmitter: <Ref. to SL-73, INSPECTION, Keyless Transmitter.> • Transmitter: <Ref. to SL-75, INSPECTION, Transmitter.>	Is the voltage 2.5 V or more?	Go to step **2**.	Replace the battery of keyless transmitter or transmitter.
2	**CHECK KEYLESS TRANSMITTER OR TRANSMITTER.** Register the keyless transmitter or transmitter which operates normally on other vehicles to the inspection target vehicle. • Keyless transmitter: <Ref. to SL-73, REGISTRATION OF KEYLESS TRANSMITTER WITH SUBARU SELECT MONITOR, REPLACEMENT, Keyless Transmitter.> • Transmitter: <Ref. to SL-76, REGISTRATION OF KEYLESS TRANSMITTER WITH SUBARU SELECT MONITOR, REPLACEMENT, Transmitter.> 1) Close all the doors and rear gate (OUTBACK model) or trunk lid (sedan model) of inspection target vehicle. 2) Using the keyless transmitter, lock and unlock the doors and rear gate of vehicle. For the 4 door model, unlock the trunk lid.	Can the check vehicle be locked and unlocked properly?	Go to step **3**.	Due to vehicle malfunction, continue the keyless entry system diagnosis.
3	**CHECK KEYLESS TRANSMITTER OR TRANSMITTER.** Register the keyless transmitter of the inspected vehicle to another vehicle whose keyless system operates normally. • Keyless transmitter: <Ref. to SL-73, REGISTRATION OF KEYLESS TRANSMITTER WITH SUBARU SELECT MONITOR, REPLACEMENT, Keyless Transmitter.> • Transmitter: <Ref. to SL-76, REGISTRATION OF KEYLESS TRANSMITTER WITH SUBARU SELECT MONITOR, REPLACEMENT, Transmitter.>	Is the keyless transmitter registered correctly?	Go to step **4**.	Replace the keyless transmitter or transmitter and perform registration.

Step		Check	Yes	No
4	**CHECK KEYLESS TRANSMITTER OR TRANSMITTER.** Check the registered keyless transmitter or transmitter. 1) Close all the doors and rear gate of the vehicle which keyless system operates normally. 2) Using the keyless transmitter, lock and unlock the doors and rear gate of vehicle. For the 4 door model, unlock the trunk lid.	Does the vehicle operate lock and unlock normally?	Keyless transmitter or transmitter is OK.	Replace the keyless transmitter or transmitter and perform registration.

3. CHECK KEYLESS ENTRY CONTROL MODULE

Step		Check	Yes	No
1	**CHECK DIAGNOSTIC TROUBLE CODE (DTC).** 1) Prepare the Subaru Select Monitor kit. 2) Turn the ignition switch to ON (engine OFF) and run the “PC application for Subaru Select Monitor”. 3) On «System Selection Menu» display, select {Integ. unit mode}. 4) Select {Diagnostic Code(s) Display}.	Is DTC B1500 “Keyless UART com. Malfunction” displayed?	Go to step **2**.	Keyless entry control module is normal.
2	**CHECK POWER SUPPLY.** 1) Disconnect the keyless entry control module connector. 2) Measure the voltage between keyless entry control module connector and chassis ground. ***Connector & terminal*** ***Model without tire pressure monitoring system*** ***(R345) No. 4 (+) — Chassis ground (–):*** ***Model with tire pressure monitoring system*** ***(R221) No. 6 (+) — Chassis ground (–):***	Is the voltage 10 V or more?	Go to step **3**.	Check the harness for open or short circuits between the keyless entry control module and the fuse.
3	**CHECK GROUND CIRCUIT.** Measure the resistance between keyless entry control module connector and chassis ground. ***Connector & terminal*** ***Model without tire pressure monitoring system*** ***(R345) No. 7 — Chassis ground:*** ***Model with tire pressure monitoring system*** ***(R221) No. 5 — Chassis ground:***	Is the resistance less than 10 Ω?	Go to step **4**.	Repair or replace the harness.
4	**CHECK KEYLESS ENTRY CONTROL MODULE CIRCUIT.** 1) Disconnect the body integrated unit connector. 2) Measure the resistance between keyless entry control module connector and body integrated unit connector. ***Connector & terminal*** ***Model without tire pressure monitoring system*** ***(i171) No. 11 — (R345) No. 3:*** ***Model with tire pressure monitoring system*** ***(i171) No. 11 — (R221) No. 11:***	Is the resistance less than 10 Ω?	Replace the keyless entry control module.	Repair or replace the harness.

4. CHECK BODY INTEGRATED UNIT POWER SUPPLY AND GROUND CIRCUIT

Refer to the “INSPECTION of POWER SUPPLY AND GROUND CIRCUIT” of “Door Lock Control System” for detailed procedures. <Ref. to SL-9, CHECK POWER SUPPLY AND GROUND CIRCUIT, INSPECTION, Door Lock Control System.>

5. CHECK DOOR SWITCH

	Step	Check	Yes	No
1	**CHECK INPUT CIRCUIT.** 1) Prepare the Subaru Select Monitor kit. 2) Turn the ignition switch to ON (engine OFF) and run the “PC application for Subaru Select Monitor”. 3) On «System Selection Menu» display, select {Integ. unit mode}. 4) Select {Current Data Display & Save}. 5) Select the {Driver’s door SW input}, {P-door SW input}, {Rear right door SW input}, {Rear left door SW input}, and {R Gate SW input}.	Does the display switch between OFF ←→ ON when each door, rear gate, or trunk lid is opened/closed?	The door switches, trunk lid latch switch or rear gate latch switch are normal.	Go to step **2**.
2	**CHECK HARNESS.** 1) Disconnect the body integrated unit connector. 2) Disconnect the door switch connector that the display does not change. 3) Check the harness between body integrated unit connector and defective door switch connector. ***Connector & terminal*** ***Front door RH*** ***(i84) No. 13 — (R12) No. 2:*** ***Front door LH*** ***(i84) No. 14 — (R9) No. 2:*** ***Rear door RH*** ***(i84) No. 25 — (R16) No. 2:*** ***Rear door LH*** ***(i84) No. 24 — (R22) No. 2:*** ***Trunk lid*** ***(i84) No. 33 — (R186) No. 3:*** ***Rear gate*** ***(i84) No. 33 — (D46) No. 3:***	Is harness normal?	Go to step **3**.	Repair or replace the harness.
3	**CHECK HARNESS.** Measure the resistance between the faulty door switch connector and chassis ground. ***Connector & terminal*** ***Front door RH*** ***(R12) No. 3 — Chassis ground:*** ***Front door LH*** ***(R9) No. 3 — Chassis ground:*** ***Rear door RH*** ***(R16) No. 3 — Chassis ground:*** ***Rear door LH*** ***(R22) No. 3 — Chassis ground:*** ***Trunk lid*** ***(R186) No. 2 — Chassis ground:*** ***Rear gate*** ***(D47) No. 4 — Chassis ground:***	Is the resistance less than 10 Ω?	Go to step **4**.	Repair or replace the harness.

	Step	Check	Yes	No
4	**CHECK DOOR SWITCH.** Measure the resistance between terminals of faulty door switch, trunk lid switch or rear gate latch switch. ***Connector & terminal*** ***Front RH door switch (R12) No. 2 — No. 3:*** ***Front LH door switch (R9) No. 2 — No. 3:*** ***Rear RH door switch (R16) No. 2 — No. 3:*** ***Rear LH door switch (R22) No. 2 — No. 3:*** ***Trunk lid latch switch (R186) No. 3 — No. 2:*** ***Rear gate latch switch (D47) No. 3 — No. 4:***	Is the resistance 1 MΩ or more when the door switch is pushed, or the trunk lid or rear gate is closed?	Go to step **5**.	Replace the faulty parts. • Door switch • Trunk lid latch and actuator ASSY • Rear gate latch and actuator ASSY
5	**CHECK DOOR SWITCH.** Measure the resistance between terminals of faulty door switch, trunk lid switch or rear gate latch switch. ***Connector & terminal*** ***Front RH door switch (R12) No. 2 — No. 3:*** ***Front LH door switch (R9) No. 2 — No. 3:*** ***Rear RH door switch (R16) No. 2 — No. 3:*** ***Rear LH door switch (R22) No. 2 — No. 3:*** ***Trunk lid latch switch (R186) No. 3 — No. 2:*** ***Rear gate latch switch (D47) No. 3 — No. 4:***	Is the resistance less than 10 Ω when switch is released?	Replace the body integrated unit. <Ref. to SL-71, Body Integrated Unit.>	Replace the faulty parts. • Door switch • Trunk lid latch and actuator ASSY • Rear gate latch and actuator ASSY

6. CHECK KEY WARNING SWITCH

	Step	Check	Yes	No
1	**CHECK KEY WARNING SWITCH.** 1) Prepare the Subaru Select Monitor kit. 2) On «System Selection Menu» display, select {Integ. unit mode}. 3) Select {Current Data Display & Save}. 4) Select the {key-lock warning SW}.	Is the normal input signal displayed when the key is inserted in/removed from the ignition switch?	The key warning switch is OK.	Go to step **2**.
2	**CHECK FUSE.** Remove and visually check fuse No. 18 (in the main fuse box).	Is the fuse blown out?	Replace the fuse with a new part.	Go to step **3**.
3	**CHECK KEY WARNING SWITCH CIRCUIT.** 1) Disconnect the body integrated unit connector. 2) Insert the key into ignition switch. (LOCK position) 3) Measure the voltage between body integrated unit connector and chassis ground. ***Connector & terminal*** ***(B280) No. 4 (+) — Chassis ground (–):***	Is the voltage 10 V or more?	Go to step **4**.	Go to step **5**.

	Step	Check	Yes	No
4	**CHECK KEY WARNING SWITCH CIRCUIT.** 1) Remove the key from ignition switch. 2) Measure the voltage between body integrated unit connector and chassis ground. ***Connector & terminal*** ***(B280) No. 4 (+) — Chassis ground (–):***	Is the voltage less than 1.5 V?	The key warning switch is OK.	Go to step **5**.
5	**CHECK KEY WARNING SWITCH.** 1) Disconnect the key warning switch connector. 2) Insert the key into ignition switch. (LOCK position) 3) Measure the resistance between key warning switch terminals. ***Connector & terminal*** ***(B350) No. 3 — No. 4:***	Is the resistance less than 1 Ω?	Go to step **6**.	Replace the key warning switch.
6	**CHECK KEY WARNING SWITCH.** 1) Remove the key from ignition switch. 2) Measure the resistance between key warning switch terminals. ***Connector & terminal*** ***(B350) No. 3 — No. 4:***	Is the resistance 1 MΩ or more?	Check the following: • Harness for open circuits and shorts between the key warning switch and fuse. • Harness for open or short between the body integrated unit and key warning switch	Replace the key warning switch.

7. CHECK ROOM LIGHT OPERATION

	Step	Check	Yes	No
1	**CHECK ROOM LIGHT OPERATION.** Make sure the room light illuminates when the room light switch is ON, and goes off when the switch is OFF.	Does the room light illuminate or go off?	Go to step **2**.	Check the room light circuit. <Ref. to LI-65, INSPECTION, Room Light.>
2	**CHECK ROOM LIGHT OPERATION.** 1) Turn the room light switch to the “DOOR” position. 2) Open and close any door.	Does the room light illuminate ←→ go off (including off delay) when the door is opened and closed?	Go to step **3**.	Go to step **4**.
3	**CHECK KEYLESS ENTRY OPERATION.** Press the LOCK/UNLOCK button of the keyless transmitter.	Does it operate properly?	Room light is normal.	Check keyless entry system. <Ref. to SL-16, SYMPTOM CHART, INSPECTION, Keyless Entry System.>
4	**CHECK ROOM LIGHT.** 1) Disconnect the room light connector. 2) Check the room light. <Ref. to LI-65, INSPECTION, Room Light.>	Is room light normal?	Go to step **5**.	Replace the bulb or room light assembly.
5	**CHECK HARNESS.** 1) Disconnect the body integrated unit connector. 2) Check the harness between body integrated unit connector and room light connector. ***Connector & terminal*** ***(i84) No. 4 — (R52) No. 2:***	Is harness normal?	Go to step **6**.	Repair or replace the harness.

	Step	Check	Yes	No
6	**CHECK HARNESS.** Measure the voltage between room light connector and chassis ground. ***Connector & terminal*** ***(R52) No. 3 (+) — Chassis ground (–):***	Is the voltage 10 V or more?	Replace the body integrated unit. <Ref. to SL-71, Body Integrated Unit.>	Repair or replace the harness.

8. CHECK HAZARD LIGHT OPERATION

	Step	Check	Yes	No
1	**CHECK HAZARD LIGHT OPERATION.** Make sure the hazard light blinks when hazard switch is turned to ON.	Does the hazard light blink?	Go to step **2**.	Check the hazard light circuit.
2	**CHECK BODY INTEGRATED UNIT.** 1) Prepare the Subaru Select Monitor kit. 2) Turn the ignition switch to ON (engine OFF) and run the “PC application for Subaru Select Monitor”. 3) On «System Selection Menu» display, select {Integ. unit mode}. 4) Select {Hazard answer-back setup} from {Unit customizing}.	Is the setting ON?	Go to step **3**.	Turn the setting to ON.
3	**CHECK OUTPUT TO HAZARD LIGHT.** 1) Remove the key from ignition switch. 2) Prepare the Subaru Select Monitor kit. 3) On «System Selection Menu» display, select {Integ. unit mode}. 4) From {Current Data Display & Save}, select {Hazard Output}.	Is output signal present when operating the transmitter LOCK/UNLOCK button?	Go to step **4**.	Go to step **5**.
4	**CHECK KEYLESS ENTRY OPERATION.** Press the LOCK/UNLOCK button of the keyless transmitter.	Does it operate properly?	Replace the body integrated unit. <Ref. to SL-71, Body Integrated Unit.>	Check keyless entry system. <Ref. to SL-16, SYMPTOM CHART, INSPECTION, Keyless Entry System.>
5	**CHECK HAZARD LIGHT CIRCUIT.** 1) Disconnect the body integrated unit connector. 2) Disconnect the turn signal & hazard unit connector. 3) Measure the resistance between body integrated unit connector and turn signal & hazard unit connector. ***Connector & terminal*** ***(i171) No. 18 — (i170) No. 8:***	Is the resistance less than 10 Ω?	Check body integrated unit. <Ref. to BC(diag)-2, Basic Diagnostic Procedure.>	Repair or replace the harness.

9. CHECK KEYLESS BUZZER

	Step	Check	Yes	No
1	**CHECK KEYLESS BUZZER SETTING.** 1) Prepare the Subaru Select Monitor kit. 2) Turn the ignition switch to ON (engine OFF) and run the “PC application for Subaru Select Monitor”. 3) On «System Selection Menu» display, select {Integ. unit mode}. 4) Select {Answer-back buzzer setup} from {Unit customizing}.	Is the setting ON?	Go to step **2**.	Turn the setting to ON.
2	**CHECK BODY INTEGRATED UNIT.** 1) Select the {Function check} from {Integ. unit mode}. 2) Select the {Keyless Buzzer Output} and execute it.	Does the keyless buzzer sound?	Check the keyless control module.	Go to step **3**.
3	**CHECK KEYLESS BUZZER CIRCUIT.** 1) Turn the ignition switch to OFF. 2) Disconnect the body integrated unit connector and keyless buzzer connector. 3) Measure the resistance between body integrated unit connector and keyless buzzer connector. ***Connector & terminal*** ***(B280) No. 20 — (B490) No. 1:***	Is the resistance less than 10 Ω?	Go to step **4**.	Repair or replace the harness.
4	**CHECK KEYLESS BUZZER CIRCUIT.** Measure the resistance between keyless buzzer connector and chassis ground. ***Connector & terminal*** ***(B490) No. 2 — Chassis ground:***	Is the resistance less than 10 Ω?	Go to step **5**.	Repair or replace the harness.
5	**CHECK KEYLESS BUZZER.** 1) Remove the keyless buzzer. 2) Connect the battery positive (+) terminal to terminal No. 1 of the keyless buzzer, and the negative (–) terminal to terminal No. 2, and check whether or not the buzzer will sound. <Ref. to SL-70, INSPECTION, Keyless Buzzer.>	Does the keyless buzzer sound?	Go to step **6**.	Replace the keyless buzzer.
6	**CHECK BODY INTEGRATED UNIT.** 1) Select the {Function check} from {Integ. unit mode}. 2) Select the {Keyless Buzzer Output} and execute it. 3) Measure the voltage between body integrated unit connector and chassis ground.	Is the voltage 9 V or more?	Go to step **7**.	Replace the body integrated unit. <Ref. to SL-71, Body Integrated Unit.>

	Step	Check	Yes	No
7	**CHECK OUTPUT OF BODY INTEGRATED UNIT.** 1) Select the {Current Data Display & Save} from {Integ. unit mode}. 2) Select the {Keyless Buzzer Output}. 3) Press the LOCK/UNLOCK button of the keyless transmitter.	Is output signal present when operating the LOCK/UNLOCK button?	System is normal.	Inspect the keyless entry system. If there are no problems, replace the body integrated unit. • Inspection: <Ref. to SL-16, SYMPTOM CHART, INSPECTION, Keyless Entry System.> • Replacement: <Ref. to SL-71, Body Integrated Unit.>

10.CHECK DOOR LOCK SWITCH

For procedures, refer to the “INSPECTION OF DOOR LOCK SWITCH” of the “Door Lock Control System”. <Ref. to SL-10, CHECK DOOR LOCK SWITCH, INSPECTION, Door Lock Control System.>

11.CHECK IGNITION SWITCH ILLUMINATION

	Step	Check	Yes	No
1	**CHECK IGNITION CIRCUIT.** Check the ignition circuit.	Is the circuit normal?	Go to step **2**.	Repair or replace.
2	**CHECK DOOR SWITCH CIRCUIT.** Inspect door switch circuit.	Is the circuit normal?	Go to step **3**.	Repair or replace.
3	**CHECK FUSE.** Remove and visually check fuse No. 18 (in the main fuse box).	Is the fuse blown out?	Replace the fuse with a new part.	Go to step **4**.
4	**CHECK HARNESS.** 1) Disconnect the ignition switch illumination connector. 2) Measure the voltage between ignition switch illumination connector and chassis ground. ***Connector & terminal*** ***(B350) No. 1 (+) — Chassis ground (–):***	Is the voltage 10 V or more?	Go to step **5**.	Check the harness for open or short circuits between the ignition switch illumination and fuse.
5	**CHECK IGNITION SWITCH ILLUMINATION CIRCUIT.** 1) Disconnect the body integrated unit connector. 2) Check the harness between body integrated unit connector and ignition switch illumination connector. ***Connector & terminal*** ***(B280) No. 25 — (B350) No. 2:***	Is harness normal?	Go to step **6**.	Check the harness for open circuits and shorts between the body integrated unit and ignition switch illumination.
6	**CHECK IGNITION SWITCH ILLUMINATION BULB.** Apply battery voltage to the bulb.	Does the bulb illuminate?	Replace the body integrated unit. <Ref. to SL-71, Body Integrated Unit.>	Replace the ignition switch illumination bulb. <Ref. to LI-71, REMOVAL, Ignition Switch Illumination.>

5. Security System

A: WIRING DIAGRAM

Refer to “Security System” in the wiring diagram. <Ref. to WI-236, WIRING DIAGRAM, Security System.>

B: ELECTRICAL SPECIFICATION

Refer to “Control Module I/O Signal” of “BODY CONTROL SYSTEM (DIAGNOSTICS)” section. <Ref. to BC(diag)-7, ELECTRICAL SPECIFICATION, Control Module I/O Signal.>

C: INSPECTION

1. BASIC DIAGNOSTIC PROCEDURE

	Step	Check	Yes	No
1	**INITIAL CHECK.** Check keyless entry system.	Does the keyless entry system operate normally?	Go to step **2**.	Check keyless entry system. <Ref. to SL-16, INSPECTION, Keyless Entry System.>
2	**CHECK SECURITY ON/OFF SETTING.** 1) Press the LOCK button of the keyless transmitter or transmitter. 2) Check the security indicator light blinking patterns.	Is the security indicator light blinking patterns as follows? / When monitor delay is set to 0 second: Blinks twice in 0.5 seconds at 2 second intervals/ When monitor delay is set to 30 seconds: Repeat blinking once in 0.4 seconds at 30 second intervals	Go to step **5**.	Go to step **3**.
3	**CHANGE SETTING OF SECURITY SYSTEM.** Change the setting of security system to ON. <Ref. to SL-28, SECURITY SYSTEM ON/OFF SETTING, INSPECTION, Security System.>	Is setting change completed correctly?	Go to step **4**.	• Check the ignition switch circuit. <Ref. to SL-29, CHECK IGNITION SWITCH CIRCUIT, INSPECTION, Security System.> • Check the door lock switch circuit. <Ref. to SL-25, CHECK DOOR LOCK SWITCH, INSPECTION, Keyless Entry System.>
4	**CHECK SETTING CHANGE OF SECURITY SYSTEM.** 1) Remove the key from ignition switch, and then close all doors. 2) Press the LOCK button of the keyless transmitter or transmitter. 3) Check the security indicator light blinking patterns.	Is the security indicator light blinking patterns as follows? / When monitor delay is set to 0 second: Blinks twice in 0.5 seconds at 2 second intervals/ When monitor delay is set to 30 seconds: Repeat blinking once in 0.4 seconds at 30 second intervals	Go to step **5**.	Check the security indicator light. <Ref. to SL-28, CHECK SECURITY INDICATOR LIGHT CIRCUIT, INSPECTION, Security System.>
5	**CHECK SECURITY SYSTEM OPERATION.** Press the LOCK button on the keyless transmitter or transmitter, then wait for 30 seconds.	Does the security indicator light blink twice within 0.5 seconds in 2 second intervals?	Go to step **6**.	Replace the body integrated unit. <Ref. to SL-71, Body Integrated Unit.>

	Step	Check	Yes	No
6	**CHECK SECURITY ALARM OPERATION.** 1) Unlock all doors using the door lock switch on driver's door. 2) Open any door, trunk or rear gate.	Does the security alarm operate when opening any door, trunk or rear gate?	Go to step **7**.	Check the door switch, trunk lid switch or rear gate latch switch. <Ref. to SL-20, CHECK DOOR SWITCH, INSPECTION, Keyless Entry System.>
7	**CHECK SECURITY ALARM OPERATION.** Check the security alarm operation.	Do all security alarms operate? / Horn sound / Hazard lights flash / Security indicator light illuminates	Go to step **8**.	• Check the horn. <Ref. to SL-29, CHECK HORN, INSPECTION, Security System.> • Check the hazard light. <Ref. to SL-29, CHECK HAZARD LIGHT OPERATION, INSPECTION, Security System.>
8	**CHECK SECURITY ALARM CANCEL OPERATION.** Press any button of transmitter while the security alarm is operating. Or turn the ignition switch to ON.	Do all security alarms stop? / Horn / Hazard lights	Go to step **9**.	Check the ignition switch circuit. <Ref. to SL-29, CHECK IGNITION SWITCH CIRCUIT, INSPECTION, Security System.>
9	**CHECK SECURITY SYSTEM CONDITION MEMORY.** Check that the system functions properly even when the battery is not connected temporarily. <Ref. to SL-28, CHECK SECURITY SYSTEM CONDITION MEMORY, INSPECTION, Security System.>	Does the system function properly when the battery is not connected temporarily?	Go to step **10**.	Replace the body integrated unit. <Ref. to SL-71, Body Integrated Unit.>
10	**CHECK IMPACT SENSOR (DEALER OPTION).** Check the sensibility of impact sensor. <Ref. to SL-66, CHECK IMPACT SENSOR, ADJUSTMENT, Impact Sensor.>	Is the sensibility set properly?	Press the UNLOCK button on the keyless transmitter or transmitter to finish the diagnosis.	Adjust the sensitivity. <Ref. to SL-66, IMPACT SENSITIVITY ADJUSTMENT, ADJUSTMENT, Impact Sensor.>

NOTE:
If the horn sounds when the security is turned on (monitor condition) using the keyless transmitter, check the function setting of the body integrated unit. As a cause, it is possible that the impact sensor present (ON) / not present (OFF) setting is set to ON in the customization function though there is no impact sensor. <Ref. to BC(diag)-16, User Customizing.>

2. CHECK SECURITY SYSTEM CONDITION MEMORY

1) Pull out the key from the ignition switch, or turn the ignition to OFF.
2) Close all the doors, trunk lid and rear gate.
3) Open the front hood.
4) Press the LOCK button of the keyless transmitter or transmitter.

NOTE:
Wait until the security indicator light blinks twice within 0.5 seconds at 2 second intervals.
If the 30 second monitoring lag has been set, wait for 30 seconds.
5) Disconnect the ground cable from battery.
6) Connect the battery ground terminal.
7) Check that the security indicator light blinks twice within 0.5 seconds at 2 second intervals. When it does not blink, replace the body integrated unit.

3. SECURITY SYSTEM ON/OFF SETTING

1) Close all doors, trunk lid and rear gate, and sit down on the driver seat. Press the UNLOCK button of the keyless transmitter or transmitter.
2) Turn the ignition switch to ON.
3) Press the central door lock switch and open the driver's door simultaneously. (Keep the central door lock switch pressed down.)
4) When the condition in step 3) continues for 10 seconds, the system switches to a mode reverse to the current mode.

Setting	Horn activation	Meter display
ON → OFF	Twice	[AL_OFF]
OFF → ON	Once	[AL_ON]

4. CHECK DOOR SWITCH

For operation procedure, refer to "CHECK DOOR SWITCH" of "Keyless Entry System". <Ref. to SL-20, CHECK DOOR SWITCH, INSPECTION, Keyless Entry System.>

5. CHECK SECURITY INDICATOR LIGHT CIRCUIT

For operation procedures, refer to "CHECK SECURITY INDICATOR LIGHT CIRCUIT" of "IMMOBILIZER (DIAGNOSTICS)" section. <Ref. to IM(diag)-11, CHECK SECURITY INDICATOR LIGHT CIRCUIT, INSPECTION, Diagnostics Chart for Security Indicator Light.>

6. CHECK HORN

	Step	Check	Yes	No
1	**CHECK HORN OPERATION.** Check the horn sounds when the horn switch is pushed.	Does the horn sound?	Go to step **2**.	Check the horn circuit.
2	**CHECK OUTPUT TO HORN RELAY.** 1) Connect the Subaru Select Monitor Kit. 2) Turn the ignition switch to ON (engine OFF) and run the “PC application for Subaru Select Monitor”. 3) On «System Selection Menu» display, select {Integ. unit mode}. 4) Select {Function check}. 5) Select {Horn Output} and execute.	Does the horn sound?	Horn circuit is OK.	Go to step **3**.
3	**CHECK HORN RELAY CIRCUIT.** 1) Turn the ignition switch to OFF. 2) Disconnect the body integrated unit connector. 3) Remove the horn relay. 4) Measure the resistance between body integrated unit connector and horn relay. ***Connector & terminal*** ***(B280) No. 24 — Horn relay No. 4:***	Is the resistance less than 10 Ω?	Check body integrated unit. <Ref. to BC(diag)-2, Basic Diagnostic Procedure.>	Repair or replace the harness.

7. CHECK HAZARD LIGHT OPERATION

For operation procedure, refer to “CHECK HAZARD LIGHT OPERATION” of “Keyless Entry System”. <Ref. to SL-23, CHECK HAZARD LIGHT OPERATION, INSPECTION, Keyless Entry System.>

8. CHECK IGNITION SWITCH CIRCUIT

	Step	Check	Yes	No
1	**CHECK IGNITION SWITCH VOLTAGE.** 1) Prepare the Subaru Select Monitor kit. 2) Turn the ignition switch to ON (engine OFF) and run the “PC application for Subaru Select Monitor”. 3) On «System Selection Menu» display, select {Integ. unit mode}. 4) Select the {Current Data Display & Save}. 5) Select the {BATT voltage} and {IG power supply voltage}.	Does the {IG power supply voltage} indicates 0 V when ignition is OFF or a value in a range of ±1 V from the {BATT voltage} when ignition is ON.	The ignition switch input circuit is OK.	Go to step **2**.
2	**CHECK IGNITION SWITCH CIRCUIT.** 1) Turn the ignition switch to OFF. 2) Disconnect the body integrated unit connector. 3) Turn the ignition switch to ON. 4) Measure the voltage between body integrated unit connector and chassis ground. ***Connector & terminal*** ***(i171) No. 17 (+) — Chassis ground (–):***	Is the voltage 10 V or more?	Check body integrated unit. <Ref. to BC(diag)-2, Basic Diagnostic Procedure.>	Check the harness for open or short circuit between body integrated unit and fuse.

6. Front Inner Remote

A: REMOVAL

1) Remove the door trim. <Ref. to EI-60, REMOVAL, Door Trim.>
2) Remove the screws to detach the front inner remote handle.

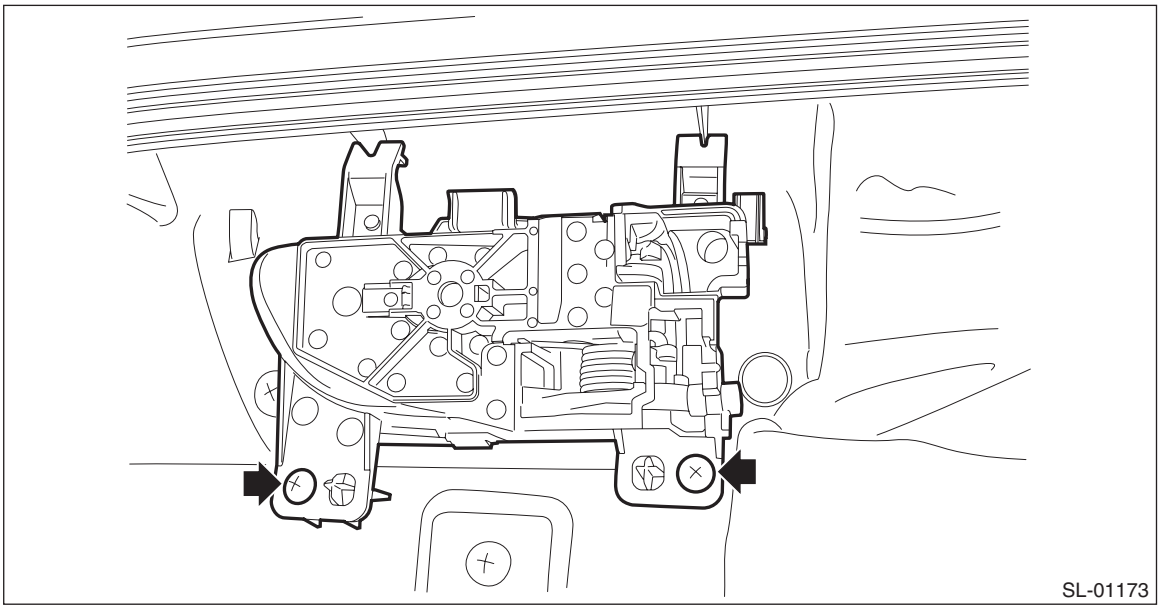

B: INSTALLATION

1) Before installation, check the following items.
- Cable is free from deformation such as fray.
- Grease is applied sufficiently to cable joints.

If grease is insufficient, add it as necessary before assembling the cable.
2) Install each part in the reverse order of removal.

C: INSPECTION

Check if the front remote handle operates normally.
- If the lever is faulty, replace the front inner remote handle.
- If the cable is deformed, replace the front door latch & door lock actuator assembly.

7. Front Outer Handle

A: REMOVAL

1) Raise the front door glass to the top position.
2) Remove the door trim. <Ref. to EI-60, REMOVAL, Door Trim.>
3) Remove the sealing cover.

CAUTION:
- **Carefully remove the butyl tape. Excessive force will easily break the cover.**
- **If the sealing cover gets broken, replace it with a new part.**

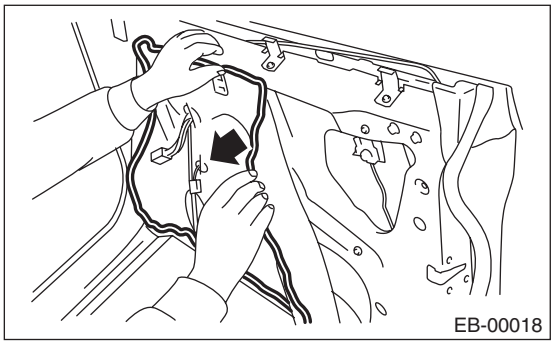

4) Release the rod from the rod clamp of outer handle.

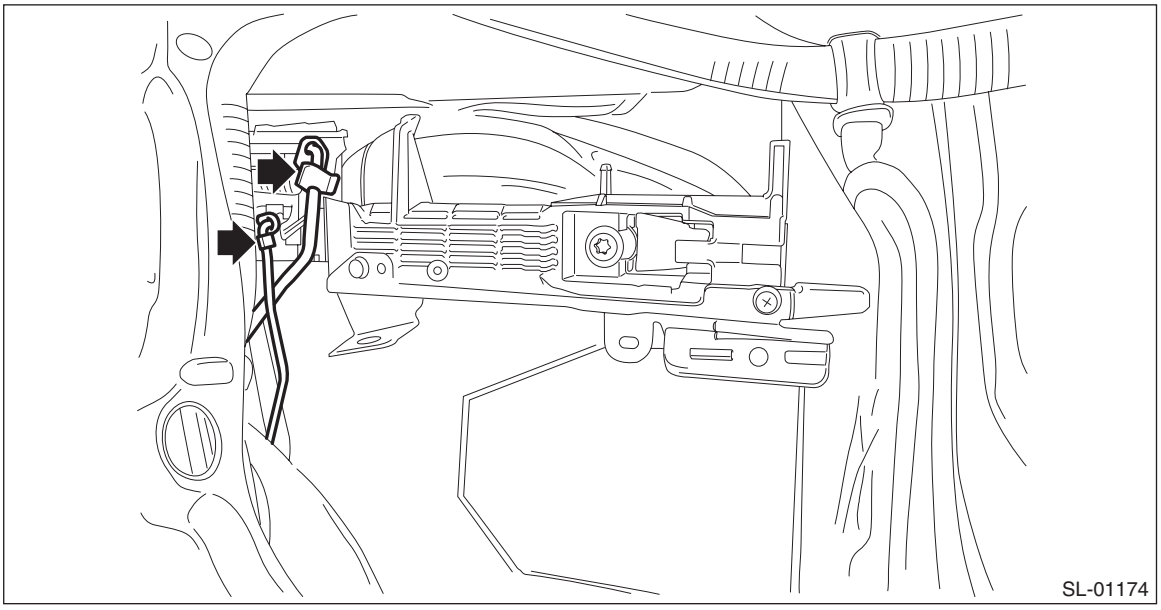

5) Remove the door outer handle cover.

Preparation tool: TORX® T30

(1) Remove the plug to the rear of the door panel.
(2) Loosen the TORX® bolt and remove the door outer handle cover.

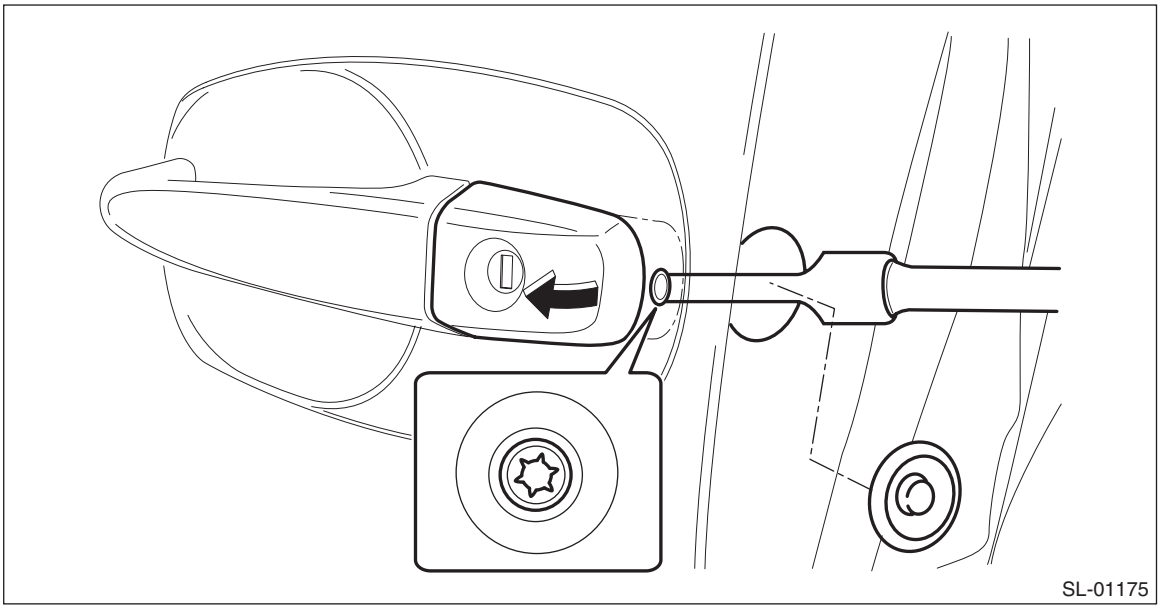

6) Move the front outer handle to the rear and remove the front outer handle.

CAUTION:
Do not apply excessive force to remove the handle from the door panel. The door panel may become deformed.

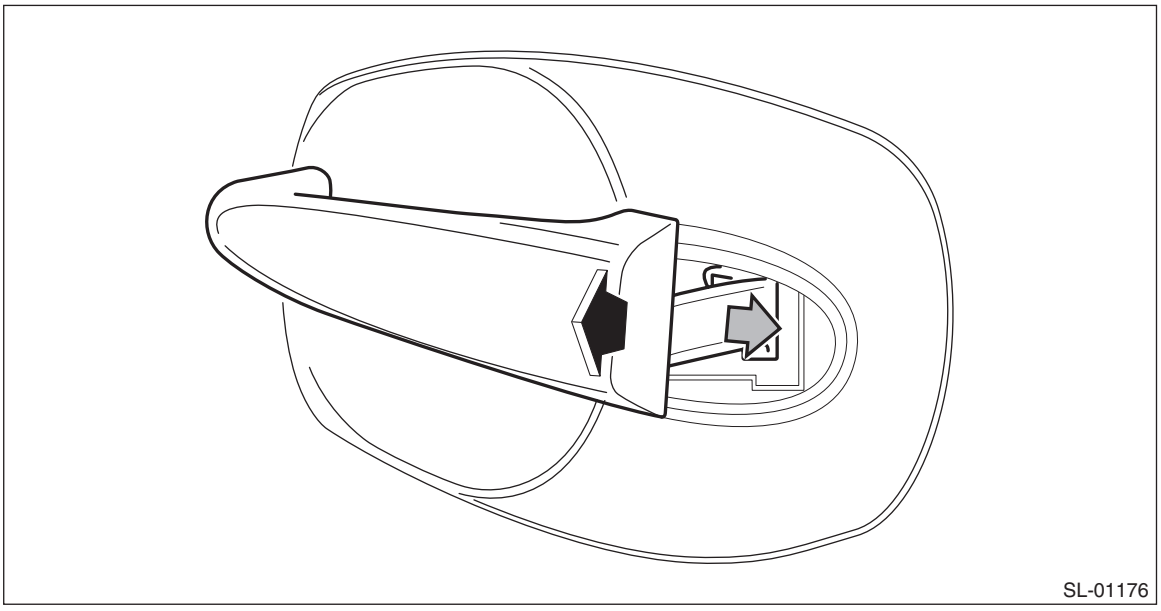

7) Remove the frame assembly.

Preparation tool: TORX® T30

(1) Remove the outer spacer.

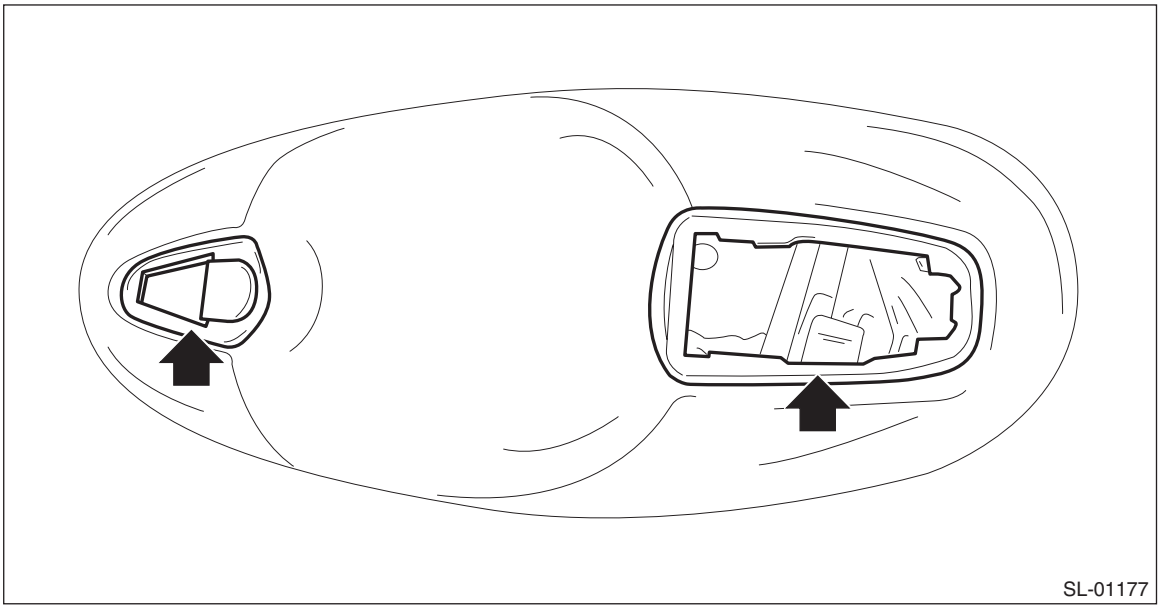

(2) Loosen the TORX® bolt and remove the frame assembly from the door panel.

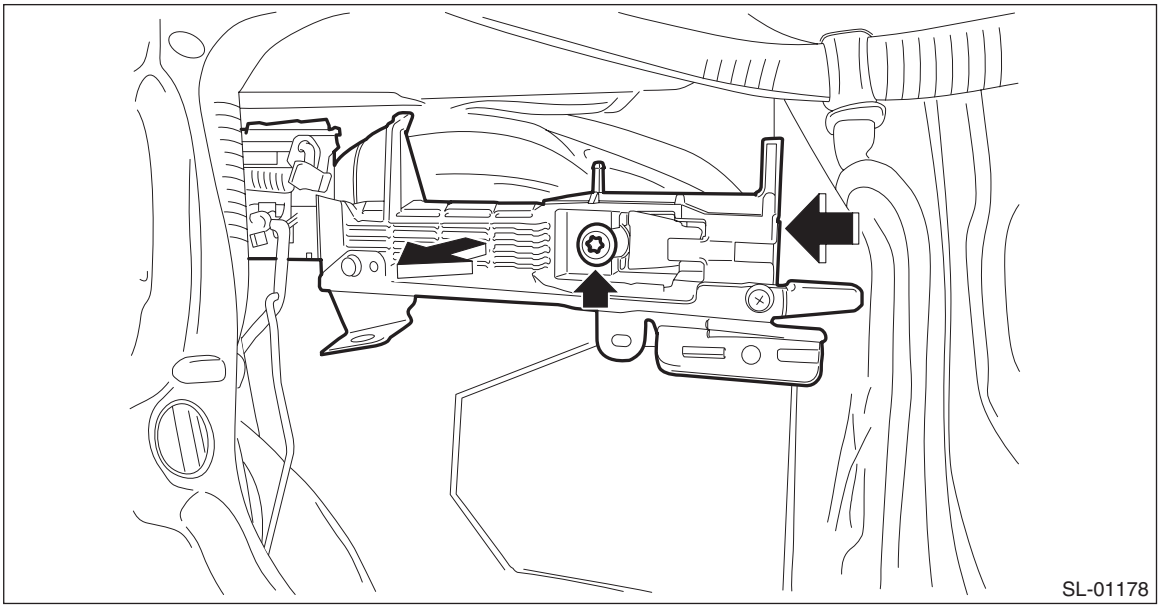

B: INSTALLATION

1) Before installation, check the following items.
- Rod is free from deformation.
- Grease is applied sufficiently to rod joints.

If grease is insufficient, add it as necessary before assembling the rod.

2) Install each part in the reverse order of removal.

Tightening torque:
Refer to "COMPONENT" of "General Description". <Ref. to SL-2, DOOR LOCK ASSEMBLY, COMPONENT, General Description.>

C: INSPECTION

Check if the front outer handle operates normally.
- If the lever is faulty, replace the front outer handle.
- If the rod is deformed, replace the front door latch & door lock actuator assembly.

8. Front Door Latch and Door Lock Actuator Assembly

A: REMOVAL

1) Raise the front door glass to the top position.
2) Remove the front door trim. <Ref. to EI-60, REMOVAL, Door Trim.>
3) Remove the sealing cover.

CAUTION:
- **Carefully remove the butyl tape. Excessive force will easily break the cover.**
- **If the sealing cover gets broken, replace it with a new part.**

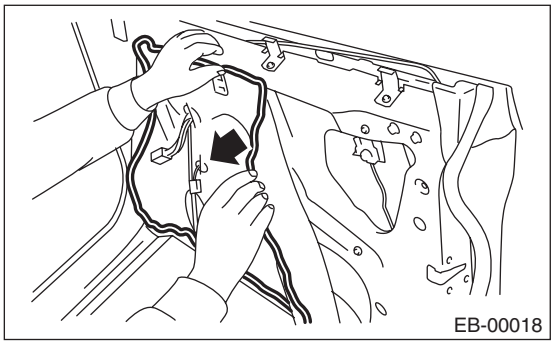

4) Remove the inner pad.
5) Remove the rod from the outer handle rod clamp.

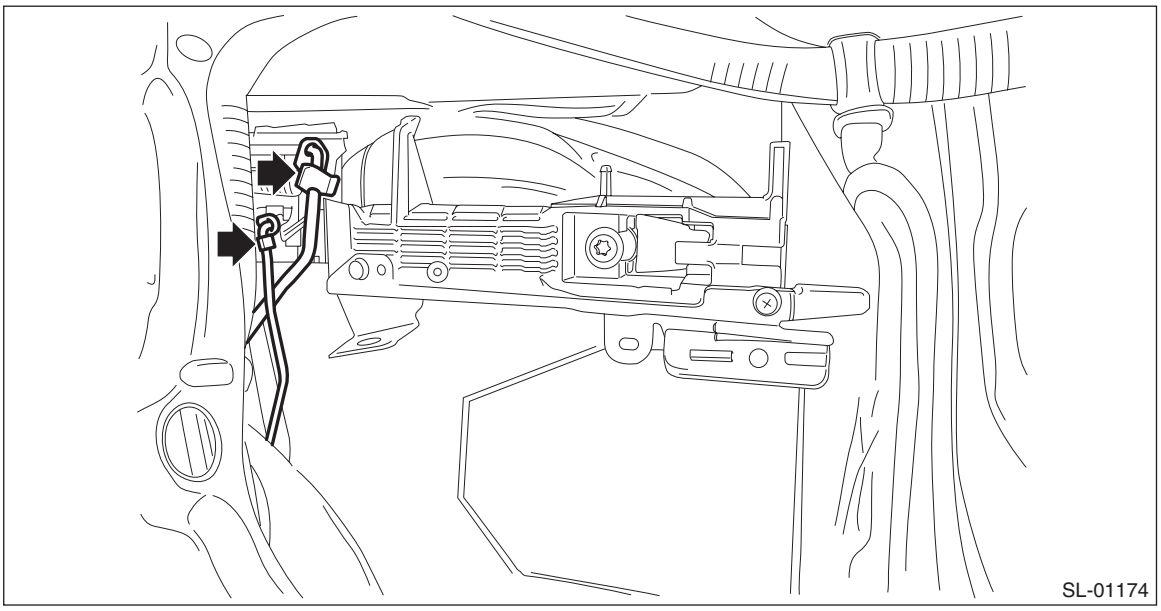

6) Remove the door sash lower.
(1) Remove the lower side of the glass run rubber.
(2) Remove the bolts, and then remove the door sash lower.

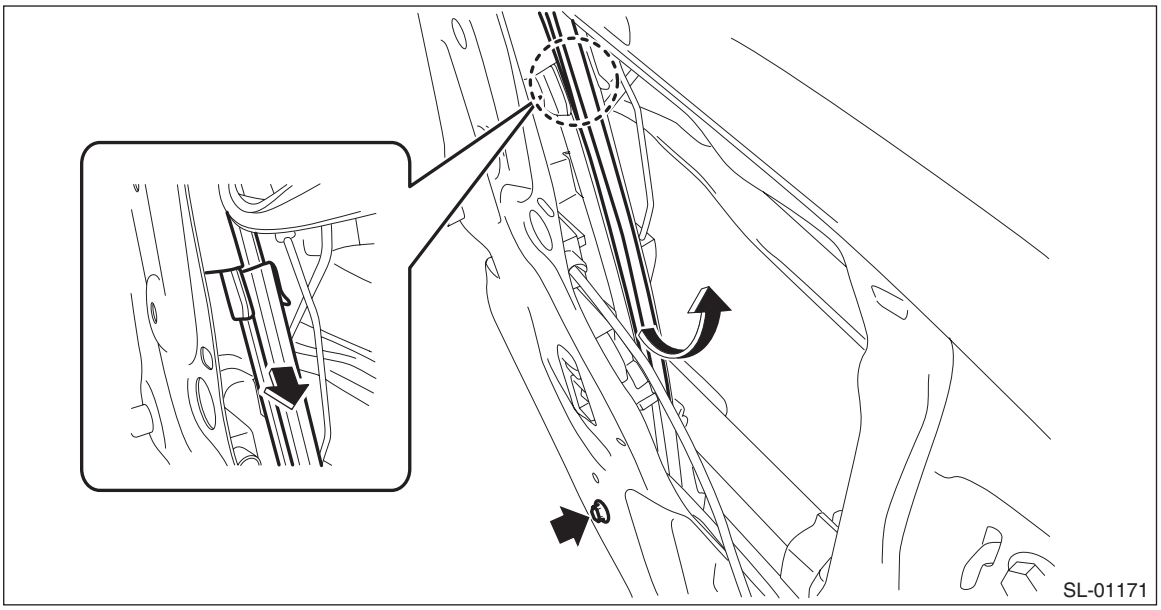

7) Remove the front door latch and door lock actuator assembly.
(1) Disconnect the connector.
(2) Remove the screws, and remove the front door latch & door lock actuator assembly.

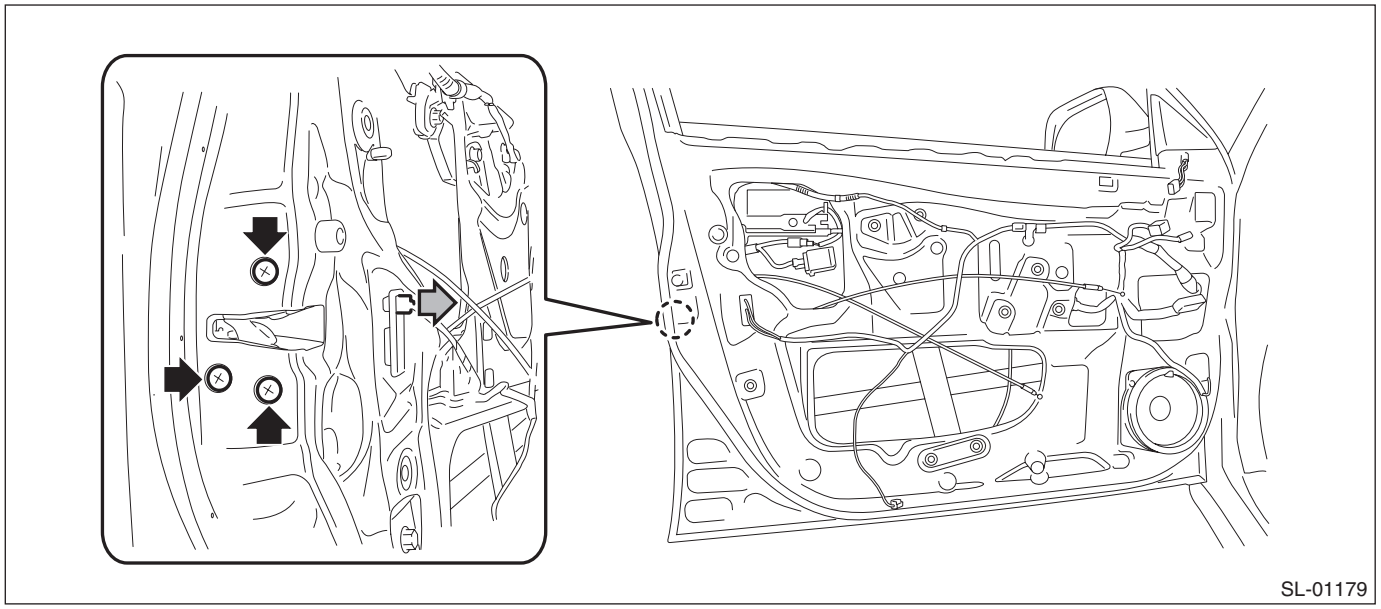

B: INSTALLATION

1) Before installation, check the following items.
- Cable and rod are free from deformation.
- Grease is applied sufficiently to rod joints.

If grease is insufficient, add it as necessary before assembling the rod.
2) Install each part in the reverse order of removal.

Tightening torque:
Refer to "COMPONENT" of "General Description". <Ref. to SL-2, DOOR LOCK ASSEMBLY, COMPONENT, General Description.>

C: INSPECTION

1. FRONT DOOR LATCH

Check if the front door latch operates normally.
If the cable or rod is faulty, replace the front door latch & door lock actuator assembly.

2. FRONT DOOR LOCK ACTUATOR

1) Disconnect the front door lock actuator connector.
2) Check the door lock operation by applying battery voltage between the terminals of front door lock actuator.

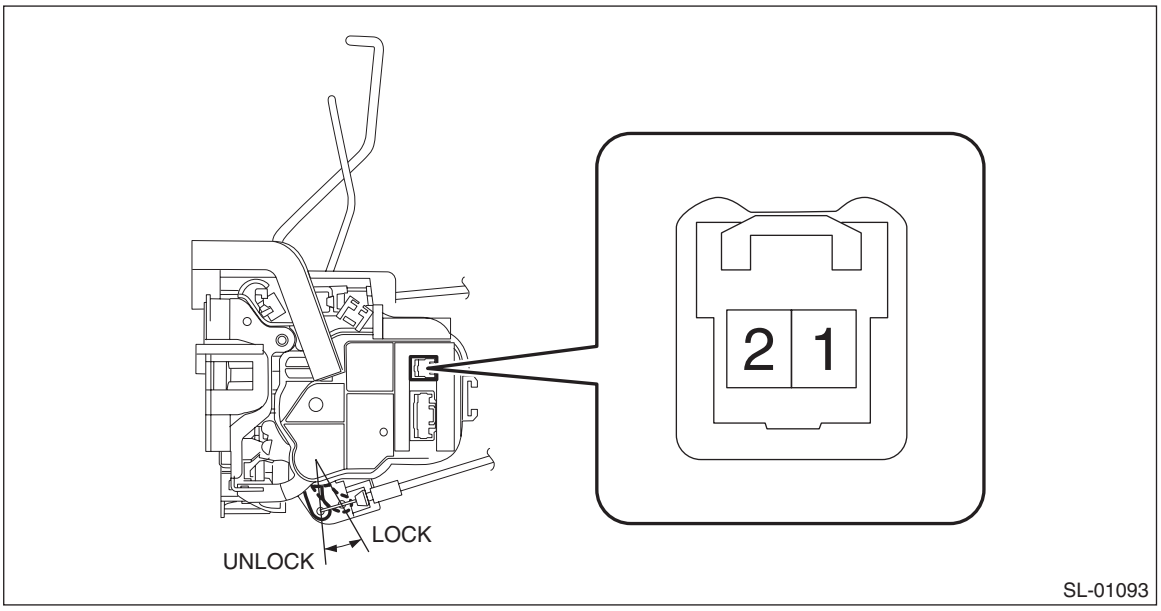

Inspection conditions	Terminal No.	
	1	2
LOCK → UNLOCK	–	+
UNLOCK → LOCK	+	–

3) If the actuator does not operate normally, replace the front door latch & door lock actuator assembly.

9. Rear Inner Remote

A: REMOVAL

1) Remove the door trim. <Ref. to EI-60, REMOVAL, Door Trim.>
2) Remove the screws and detach the rear inner remote handle.

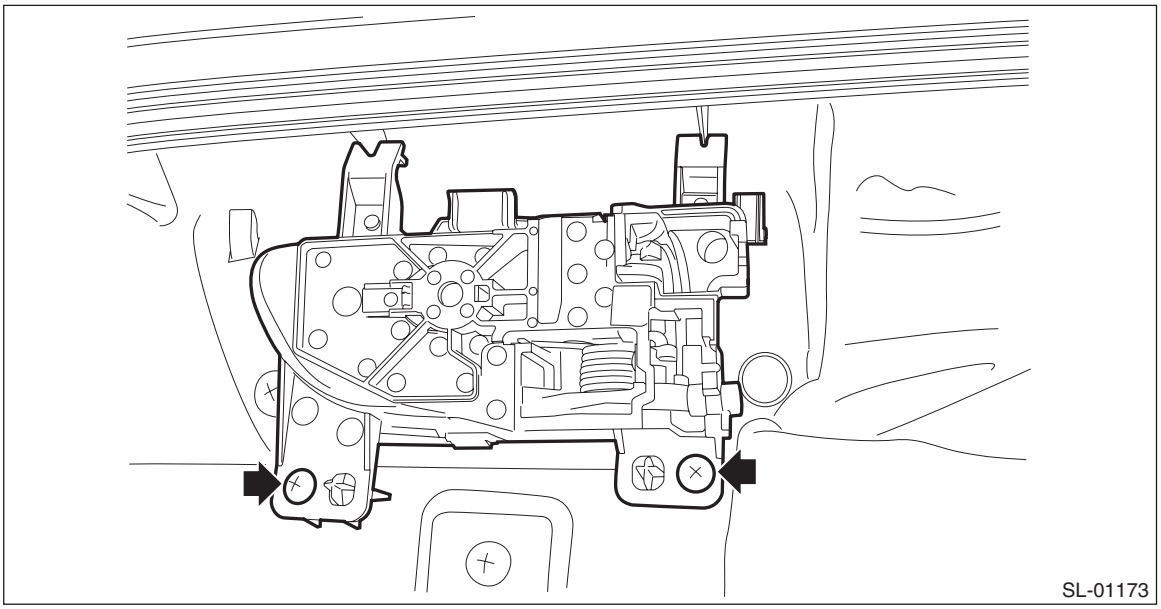

B: INSTALLATION

1) Before installation, check the following items.
- Cable is free from deformation such as fray.
- Grease is applied sufficiently to cable joints.

If grease is insufficient, add it as necessary before assembling the cable.
2) Install each part in the reverse order of removal.

C: INSPECTION

Check if the rear remote handle operates normally.
- If the lever is faulty, replace the rear inner remote handle.
- If the cable is deformed, replace the rear door latch & door lock actuator assembly.

10.Rear Outer Handle

A: REMOVAL

1) Raise the rear door glass to the top position.
2) Remove the door trim. <Ref. to EI-60, REMOVAL, Door Trim.>
3) Remove the sealing cover.

CAUTION:
- **Carefully remove the butyl tape. Excessive force will easily break the cover.**
- **If the sealing cover gets broken, replace it with a new part.**

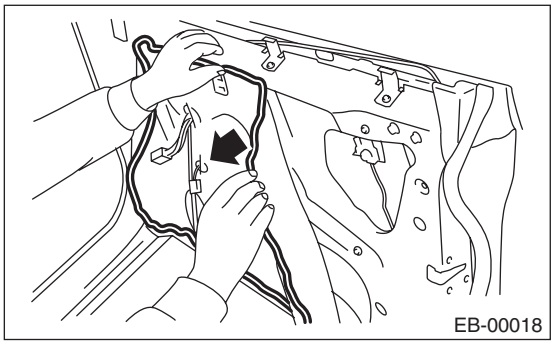

4) Move downward the rear door latch & door lock actuator assembly.
   (1) Disconnect the connector.
   (2) Remove the screws and move downward the rear door latch & door lock actuator assembly.

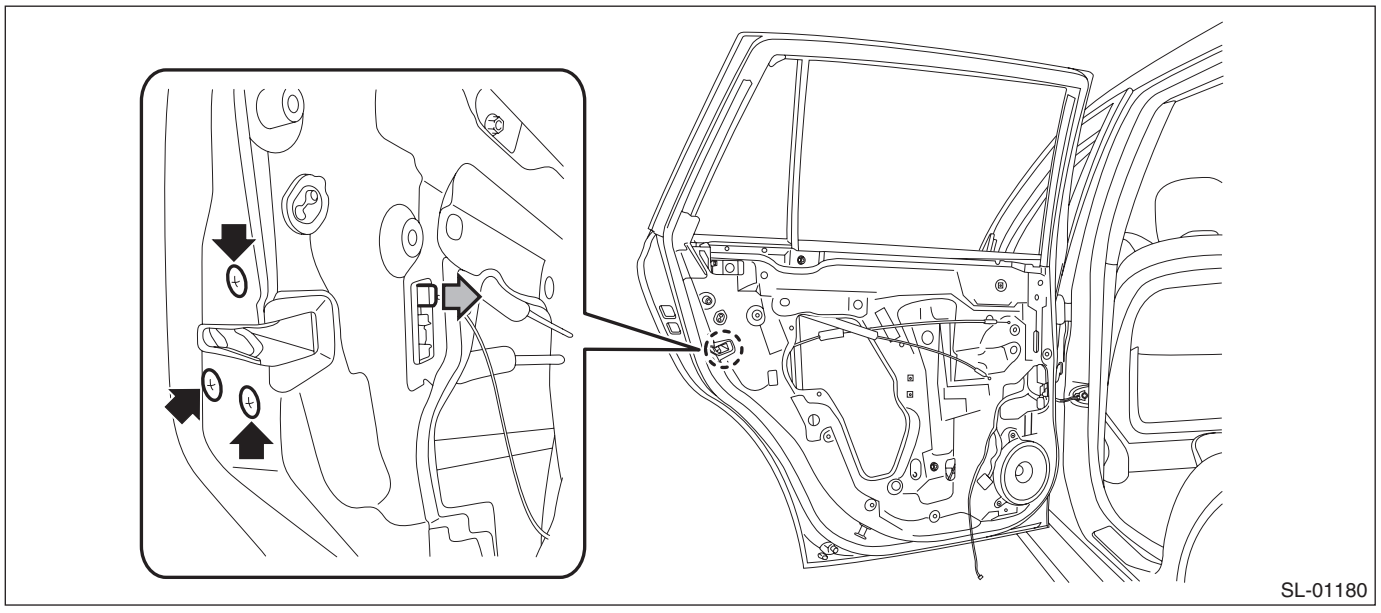

5) Remove the door outer handle cover.

Preparation tool: TORX® T30

(1) Remove the child protector cover.
(2) Loosen the TORX® bolt and remove the door outer handle cover.

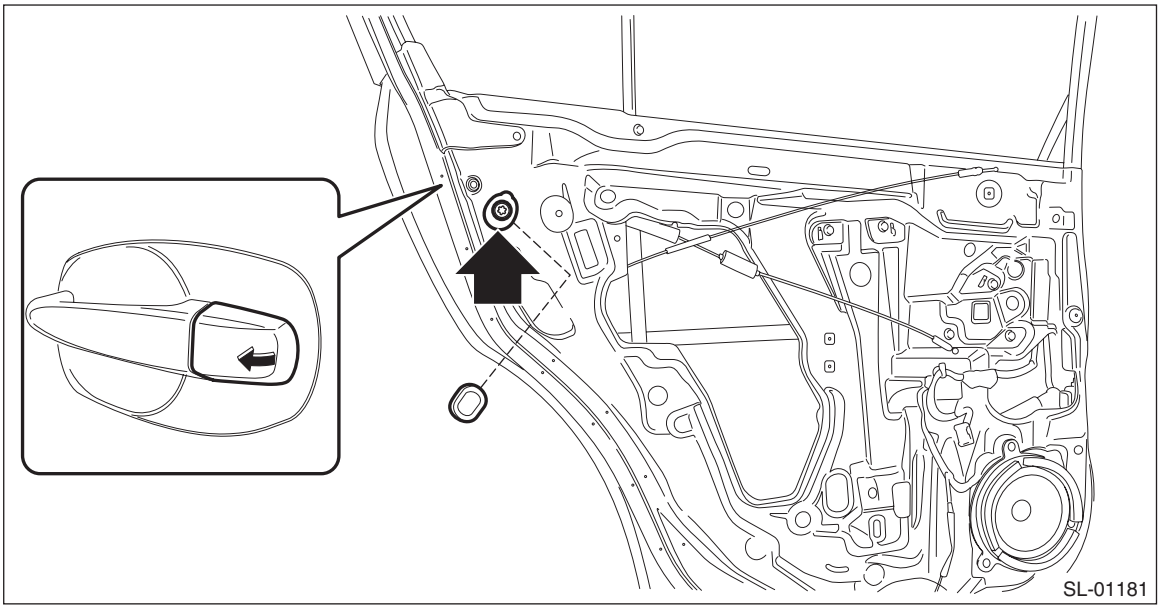

6) Remove the rear outer handle by moving it rearward.

CAUTION:
Do not apply excessive force to remove the handle from the door panel. The door panel may become deformed.

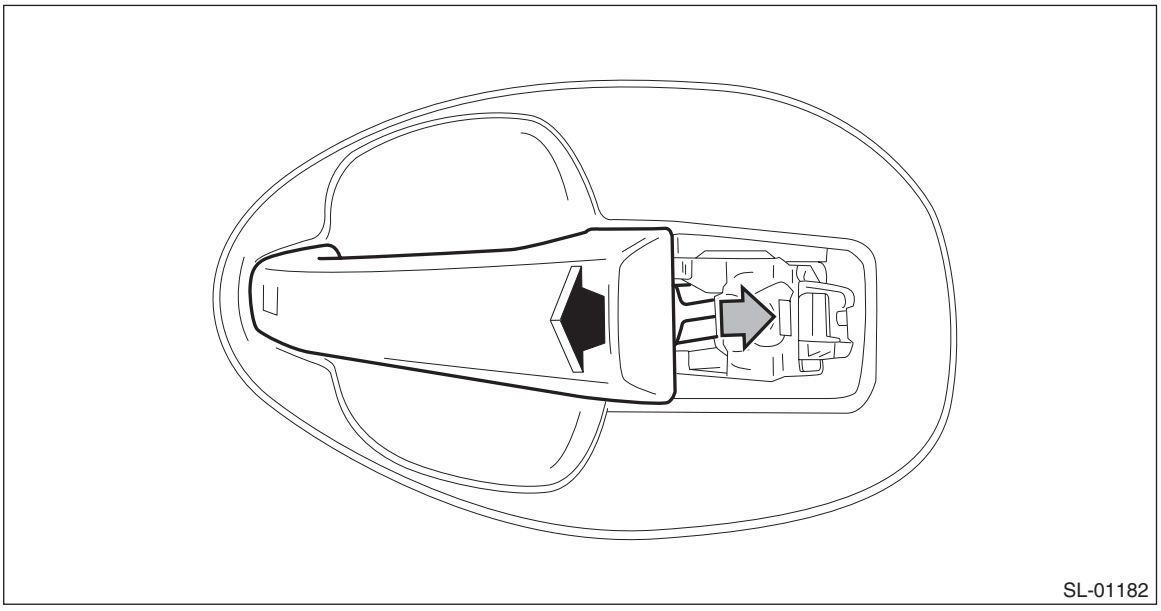

7) Remove the frame assembly.

Preparation tool: TORX® T30

(1) Remove the outer spacer.

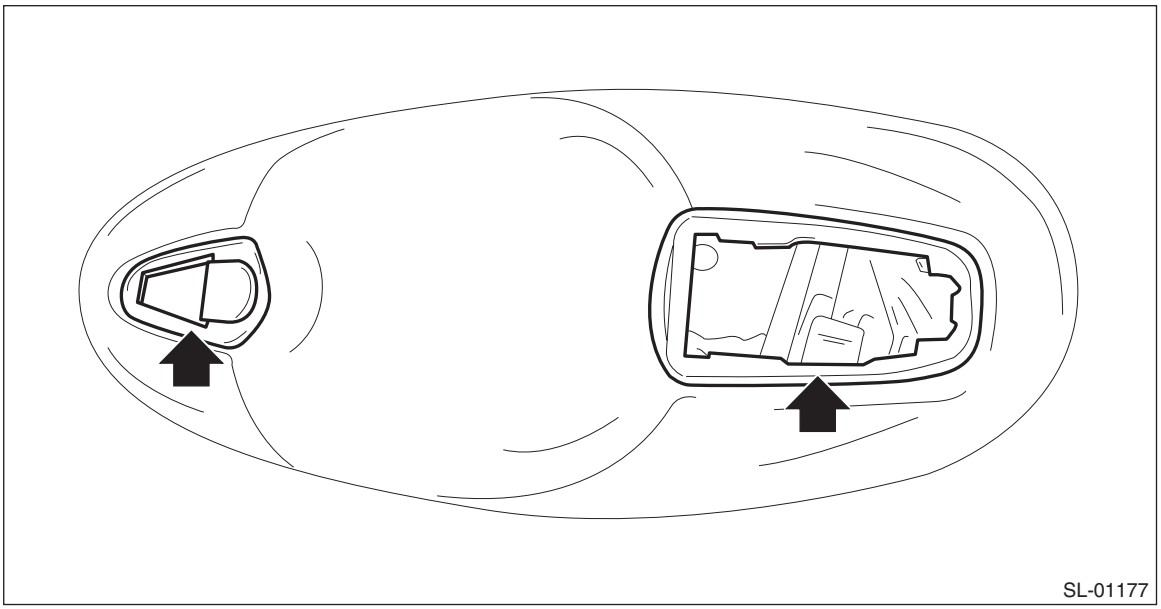

(2) Remove the TORX® bolt and remove the frame assembly from the door panel.

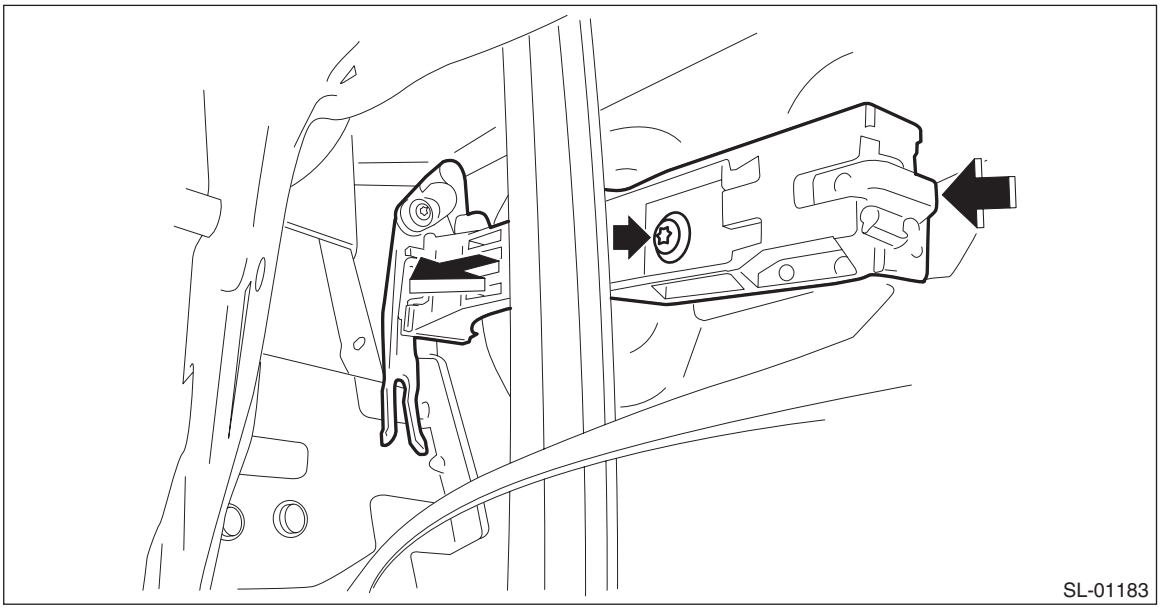

B: INSTALLATION

1) Before installation, check the following items.
- Lever is free from deformation.
- Grease is applied sufficiently to lever joints.

If grease is insufficient, add it as necessary before assembling.
2) Install each part in the reverse order of removal.

Tightening torque:
Refer to "COMPONENT" of "General Description". <Ref. to SL-2, DOOR LOCK ASSEMBLY, COMPONENT, General Description.>

C: INSPECTION

Check if the rear outer handle operates normally.
If the lever is faulty, replace the rear outer handle.

11.Rear Door Latch and Door Lock Actuator Assembly

A: REMOVAL

1) Disconnect the ground cable from battery.
2) Remove the rear door trim. <Ref. to EI-60, REMOVAL, Door Trim.>
3) Remove the sealing cover.

CAUTION:
- **Carefully remove the butyl tape. Excessive force will easily break the cover.**
- **If the sealing cover gets broken, replace it with a new part.**

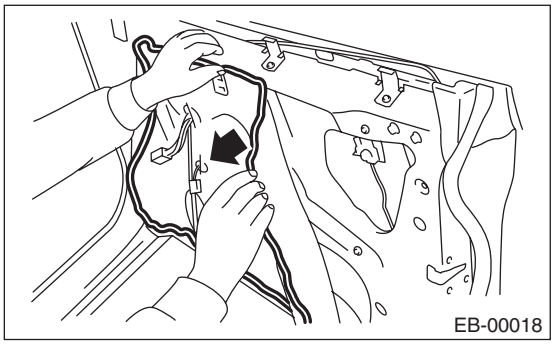

4) Remove the rear door glass. <Ref. to GW-34, REMOVAL, Rear Door Glass.>
5) Remove the rear door latch and door lock actuator assembly.
   (1) Disconnect the connector.
   (2) Remove the screws, and remove the rear door latch & door lock actuator assembly.

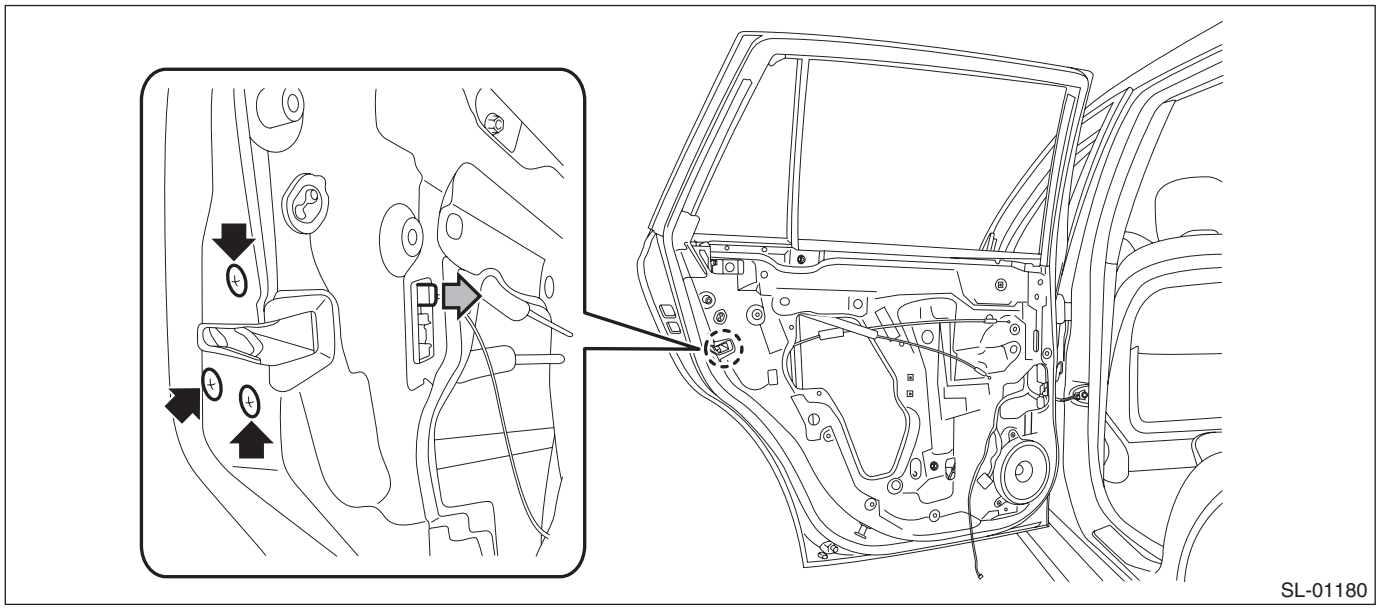

B: INSTALLATION

1) Before installation, check the following items.
- Cable is free from deformation.
- Grease is applied sufficiently to lever joints.

If grease is insufficient, add it as necessary before assembling.
2) Install each part in the reverse order of removal.

Tightening torque:
Refer to "COMPONENT" of "General Description". <Ref. to SL-2, DOOR LOCK ASSEMBLY, COMPONENT, General Description.>

NOTE:
Make sure the child safety lock works correctly after installation.

C: INSPECTION

1. REAR DOOR LATCH

Check if the rear door latch operates normally.
If the cable is faulty, replace the rear door latch & door lock actuator assembly.

2. REAR DOOR LOCK ACTUATOR

1) Disconnect the rear door lock actuator connector.
2) Check the door lock operation by applying battery voltage between the terminals of rear door lock actuator.

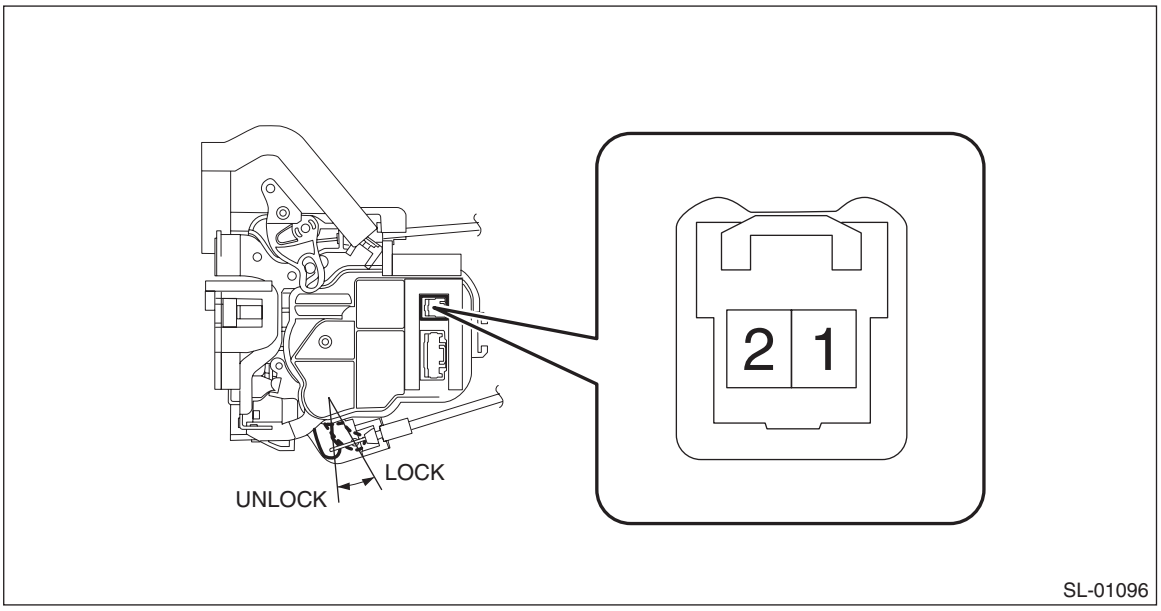

Inspection conditions	Terminal No.	
	1	2
LOCK → UNLOCK	–	+
UNLOCK → LOCK	+	–

3) If the actuator does not operate normally, replace the rear door latch & door lock actuator assembly.

12.Rear Gate Opener Button

A: REMOVAL

NOTE:
The rear gate opener button is integrated into the license plate light assembly harness.
1) Remove the rear gate trim. <Ref. to EI-160, REMOVAL, Rear Gate Trim.>
2) Remove the rear gate garnish. <Ref. to EI-164, REMOVAL, Rear Gate Garnish.>
3) Remove the rear gate opener button.
(1) Release the locks at both ends of the rear gate opener button by pushing with a flat tip screwdriver.

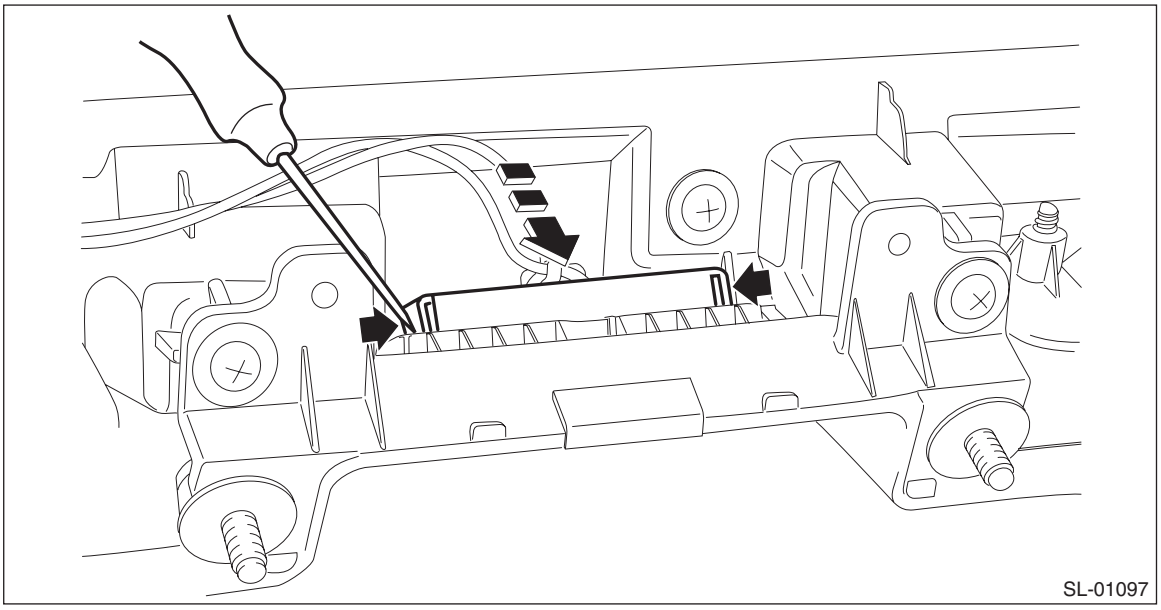
SL-01097

(2) Remove the screws and remove the license plate light.

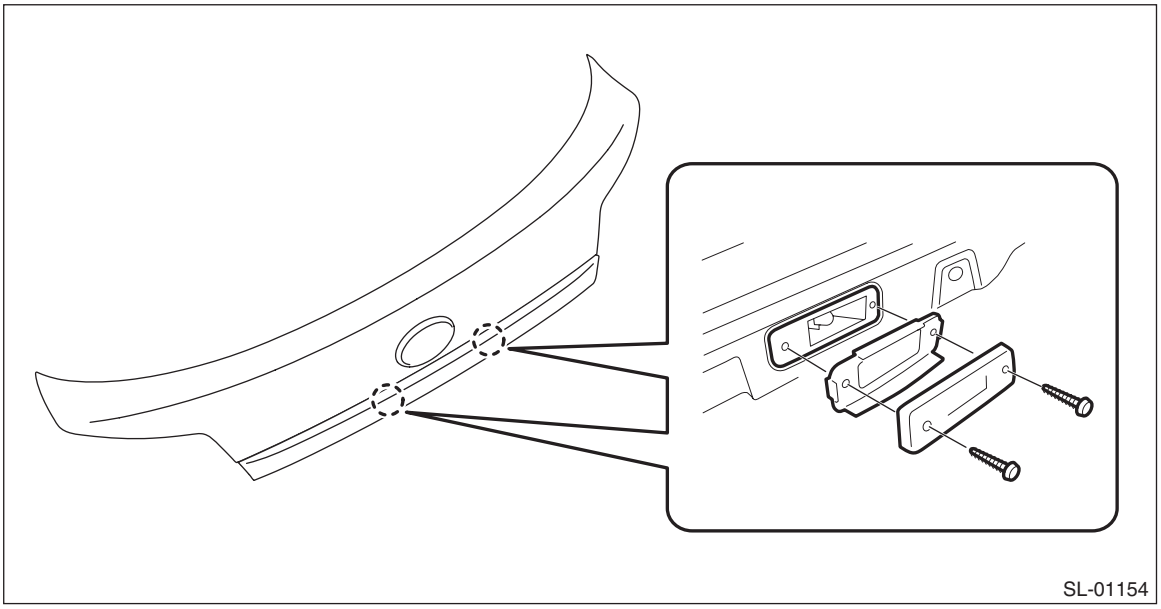
SL-01154

(3) Remove the license plate light assembly harness from the rear gate garnish.

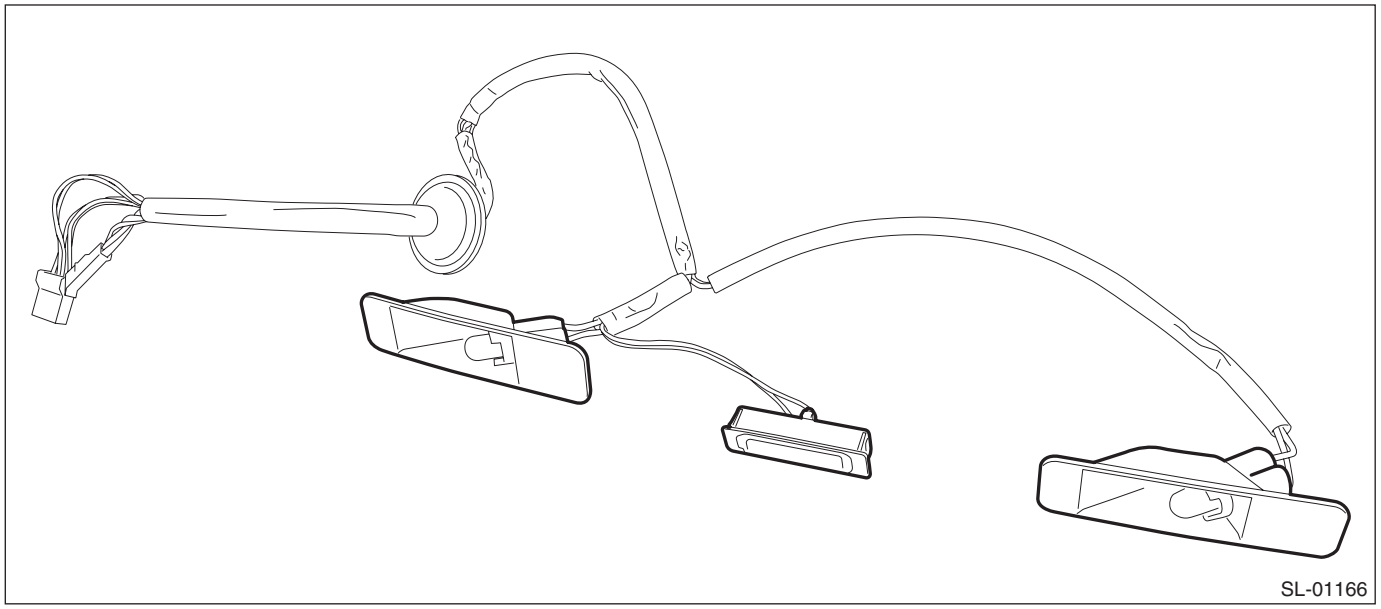

B: INSTALLATION

CAUTION:
Make sure that the harness grommet is installed securely.
Incomplete installation causes water leak.
Install each part in the reverse order of removal.

C: INSPECTION

1) Disconnect the rear gate opener button connector.
2) Measure the resistance between rear gate opener button terminals.

Preparation tool: Circuit tester

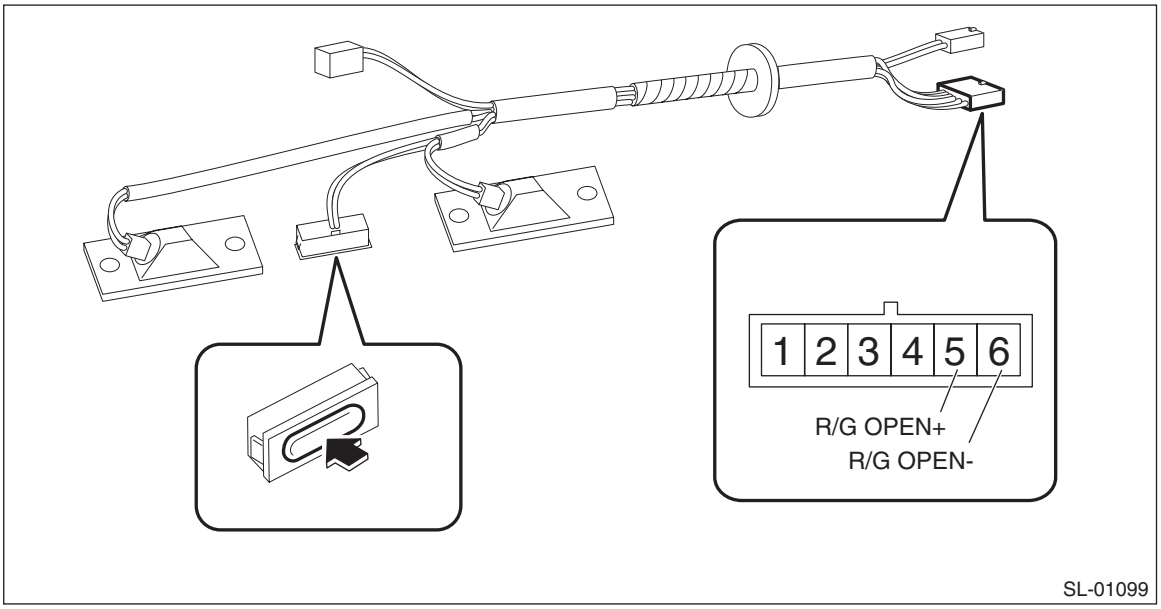

Terminal No.	Inspection conditions	Specification
5 — 6	Open	Less than 1 Ω
	Close	1 MΩ or more

3) Replace the rear gate opener button if the inspection result is not within the standard value.

13.Trunk Opener Switch

A: REMOVAL

1. TRUNK OPENER SWITCH

NOTE:
The trunk opener button is integrated with the VDC OFF switch.
1) Remove the instrument panel lower cover. <Ref. to EI-64, REMOVAL, Instrument Panel Lower Cover.>
2) Release the claws and remove the trunk opener button.

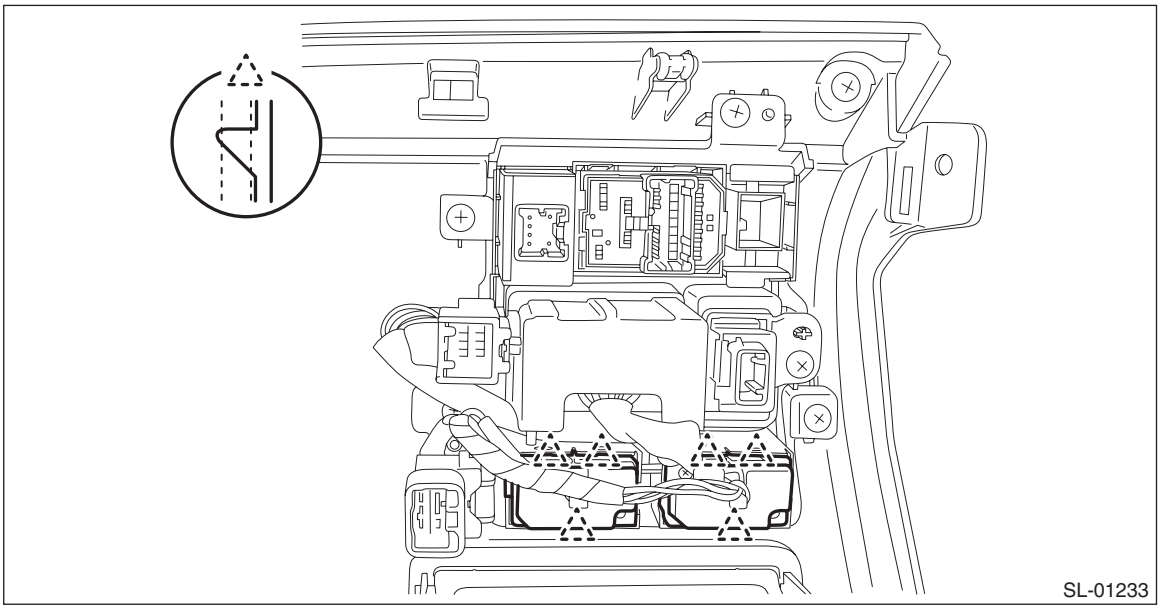

2. TRUNK OPENER CANCEL BUTTON

1) Remove the glove box. <Ref. to EI-66, REMOVAL, Glove Box.>
2) Release the claws and remove the trunk opener cancel button.

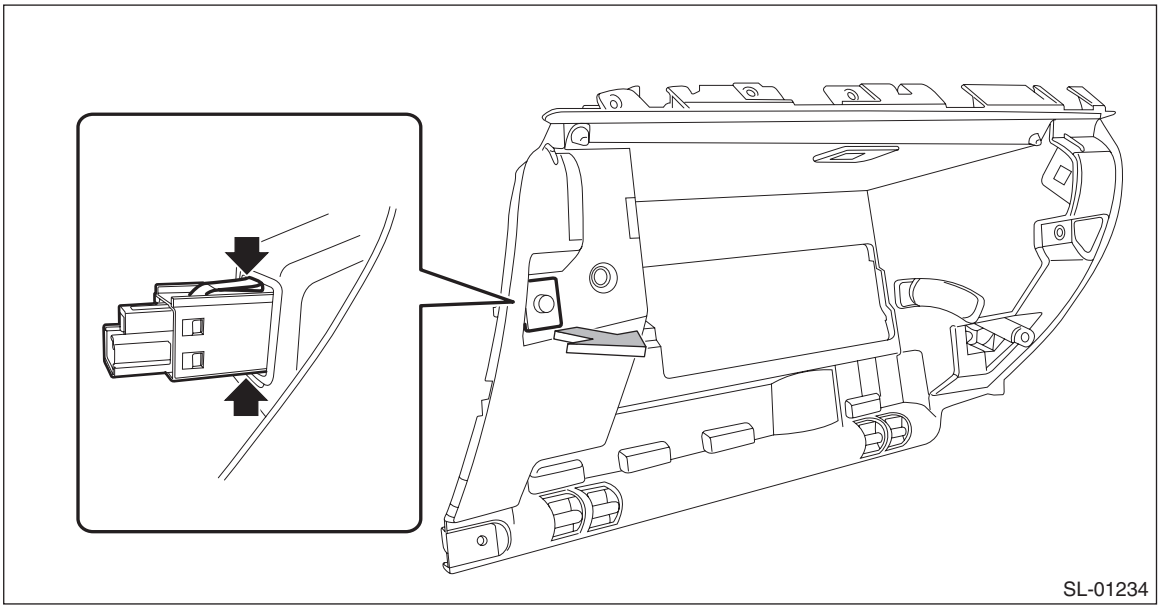

B: INSTALLATION

Install each part in the reverse order of removal.

C: INSPECTION

1. TRUNK OPENER SWITCH

1) Disconnect the trunk opener button connector.
2) Measure the resistance between trunk opener button terminals.

Preparation tool: Circuit tester

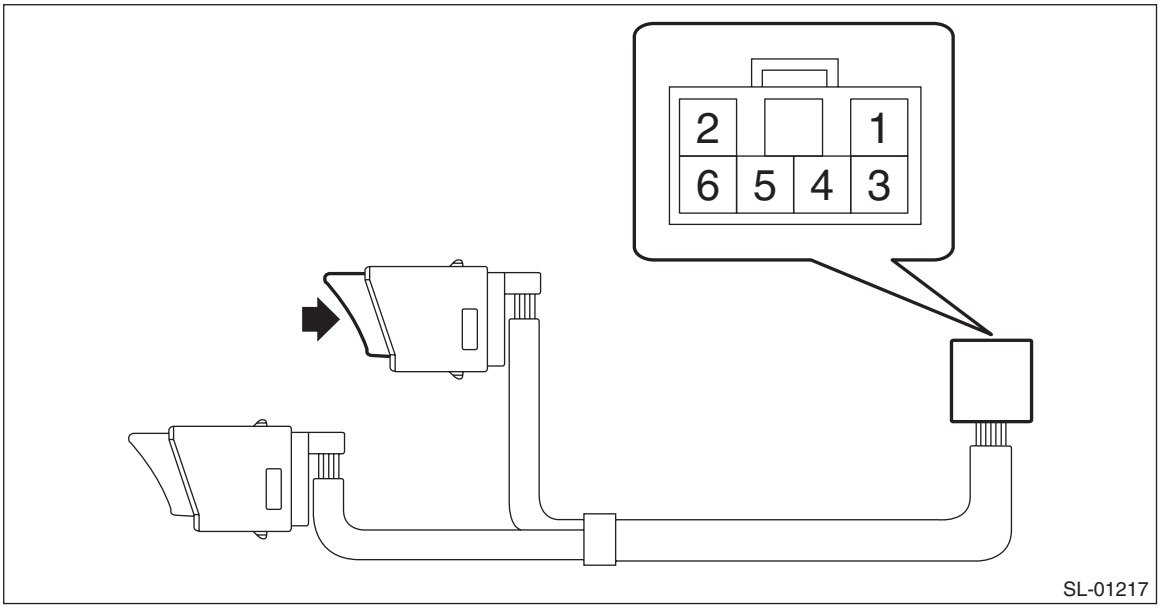

Terminal No.	Inspection conditions	Specification
4 — 2	Open	Less than 1 Ω
	Close	1 MΩ or more

3) Replace the trunk opener button if the inspection result is not within the standard value.

2. TRUNK OPENER CANCEL BUTTON

1) Disconnect the trunk opener cancel button connector.
2) Measure the resistance between trunk opener cancel button terminals.

Preparation tool: Circuit tester

Terminal No.	Inspection conditions	Specification
1 — 2	Switch ON	Less than 1 Ω
	Switch OFF	1 MΩ or more

3) Replace the trunk opener button if the inspection result is not within the standard value.

14.Rear Gate Latch and Actuator Assembly

A: REMOVAL

1) Disconnect the ground cable from battery.
2) Remove the rear gate trim. <Ref. to EI-160, REMOVAL, Rear Gate Trim.>
3) Remove the rear gate latch & actuator assembly.
   (1) Remove the bolts and pull out the rear gate latch & actuator assembly to the vehicle front.
   (2) Disconnect the connectors, and then remove the rear gate latch & actuator assembly.

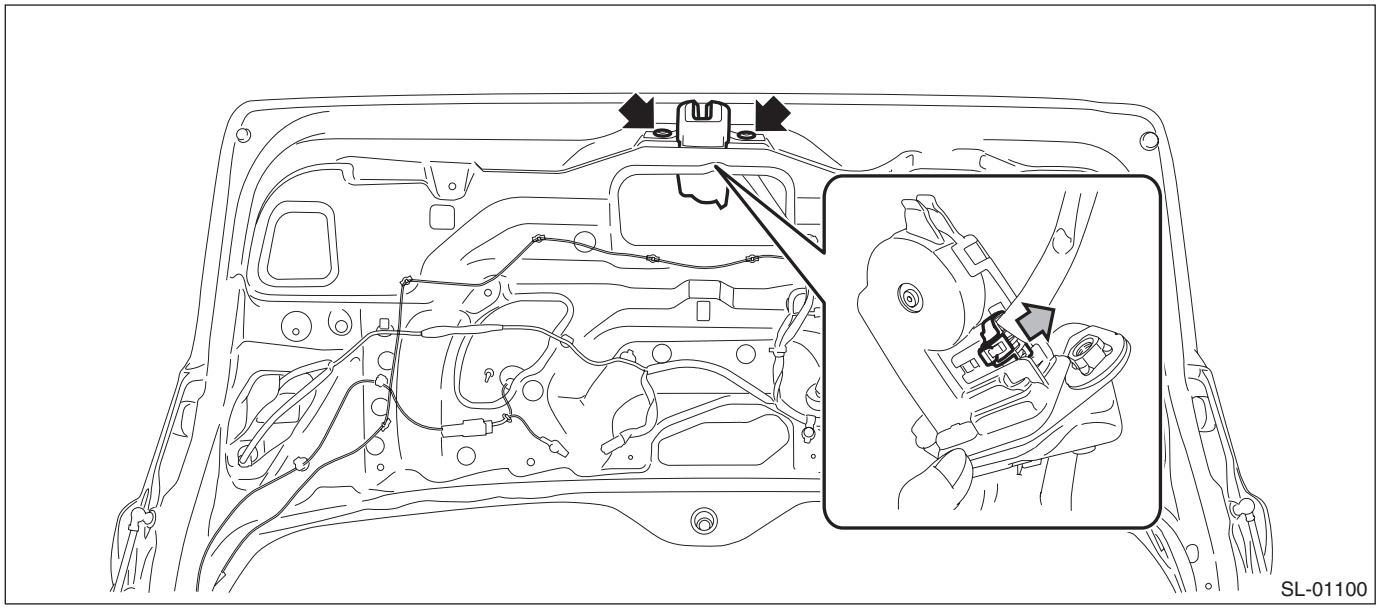

B: INSTALLATION

Install each part in the reverse order of removal.

Tightening torque:
Refer to "COMPONENT" of "General Description". <Ref. to SL-3, REAR GATE LOCK AND TRUNK LID LOCK, COMPONENT, General Description.>

C: INSPECTION

1. REAR GATE LATCH

Check if the rear gate latch operates normally.
If latch deformation, abnormal wear, or unsmooth lock operation is observed, replace the rear gate latch & actuator assembly.

2. LOCK ACTUATOR

1) Disconnect the rear gate latch & actuator assembly connector.
2) Check the door lock operation by applying battery voltage between the terminals of rear gate latch & actuator.

Preparation tool: Circuit tester

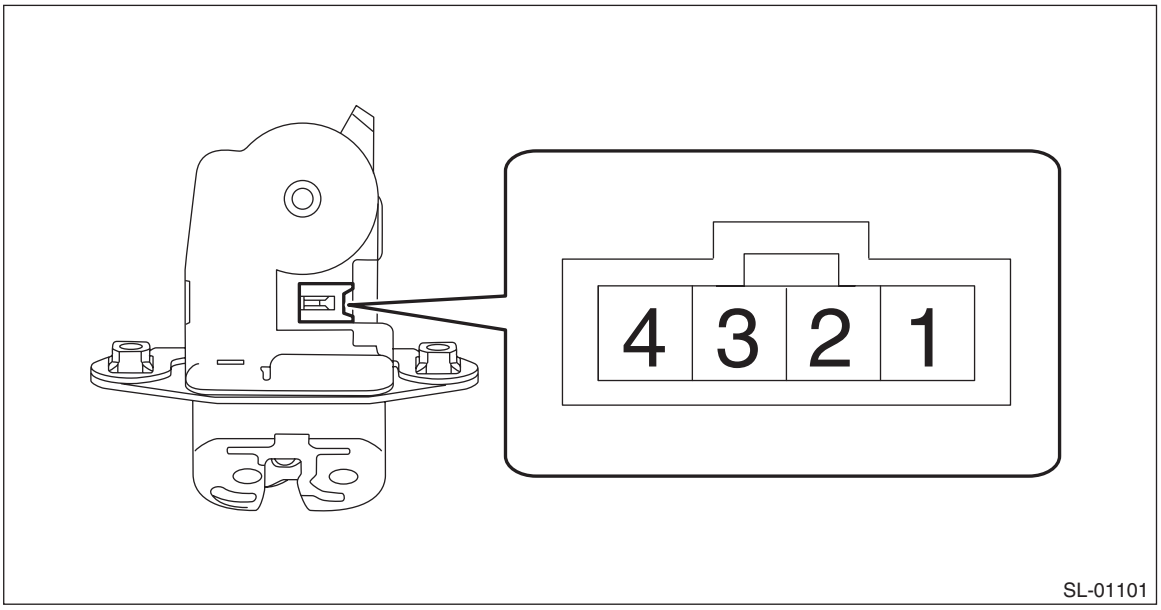

Inspection conditions	Terminal No.	
	1	2
LOCK → UNLOCK	+	–

3) If the actuator does not operate normally, replace the rear gate latch & actuator assembly.

15.Trunk Lid Latch and Actuator Assembly

A: REMOVAL

1) Disconnect the ground cable from battery.
2) Remove the trunk lid trim. <Ref. to EI-127, TRUNK LID TRIM, REMOVAL, Trunk Room Trim.>
3) Remove the trunk lid latch and actuator assembly.
   (1) Disconnect the connector.
   (2) Remove the bolts, and remove the trunk lid latch & actuator assembly.

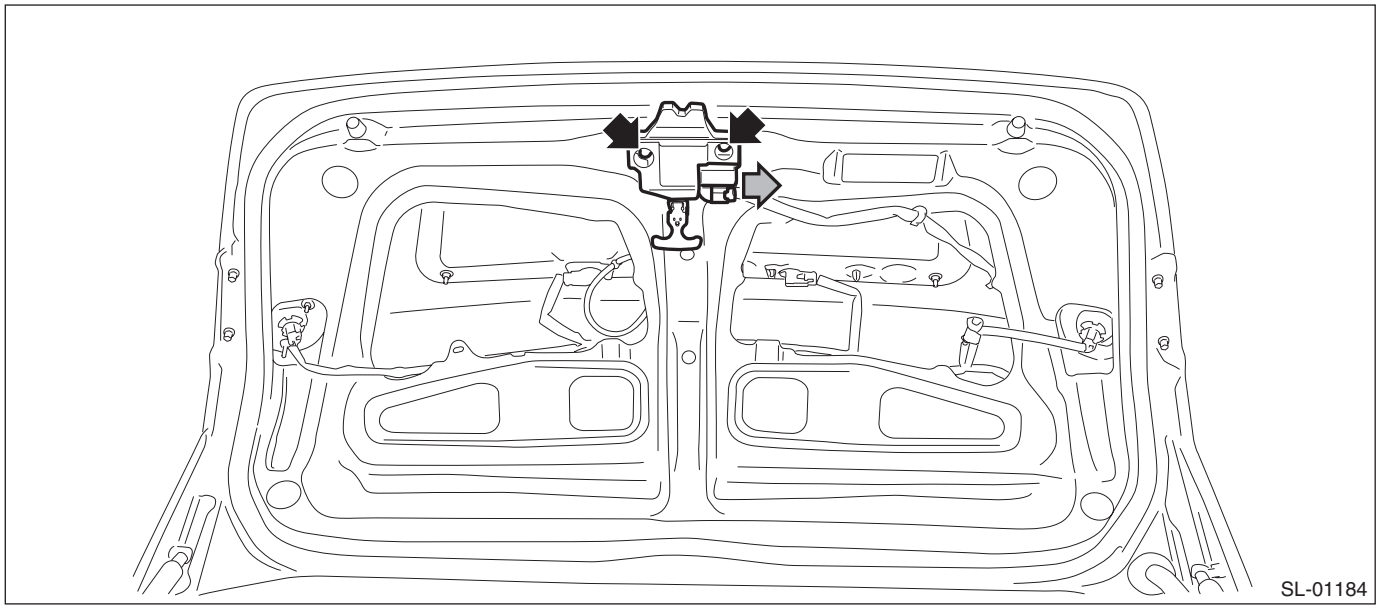

B: INSTALLATION

Install each part in the reverse order of removal.

Tightening torque:
Refer to "COMPONENT" of "General Description". <Ref. to SL-3, REAR GATE LOCK AND TRUNK LID LOCK, COMPONENT, General Description.>

C: INSPECTION

1. TRUNK LID LATCH

Check if the trunk lid latch operates normally.
If latch deformation, abnormal wear, or unsmooth lock operation is observed, replace the rear gate latch & actuator assembly.

2. LOCK ACTUATOR

1) Disconnect the trunk lid latch & actuator assembly connector.
2) Check the door lock operation by applying battery voltage between the terminals of trunk lid latch & actuator.

Preparation tool: Circuit tester

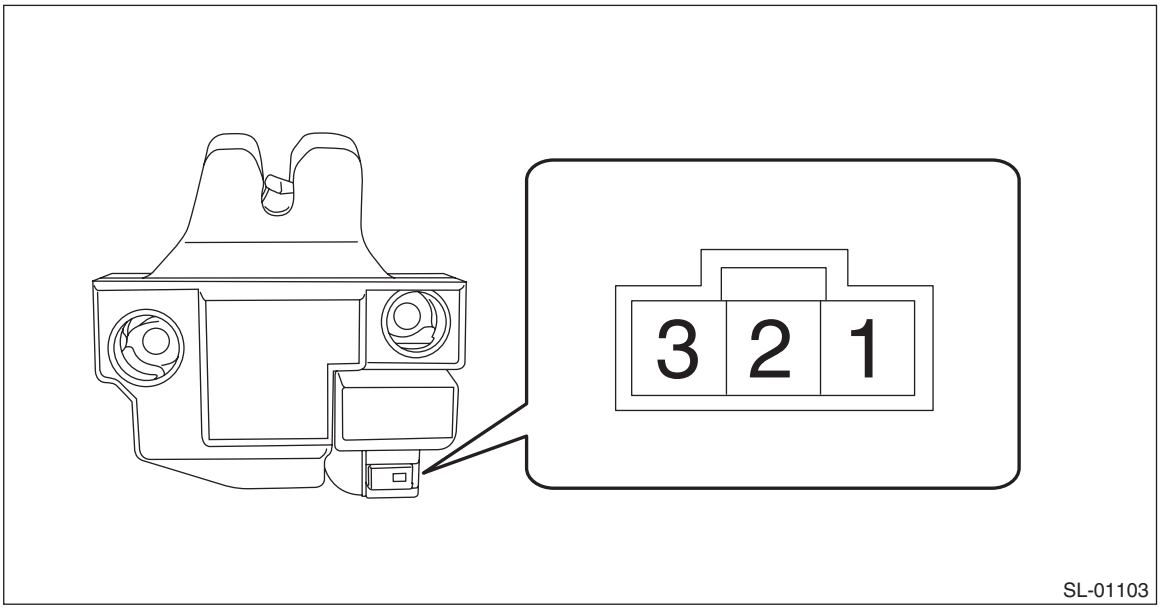

Inspection conditions	Terminal No.	
	1	2
LOCK → UNLOCK	+	–

3) If the actuator does not operate normally, replace the trunk lid latch & actuator assembly

16.Front Hood Lock Assembly

A: REMOVAL

1) Open the front hood.
2) Remove the front bumper face. <Ref. to EI-39, REMOVAL, Front Bumper.>
3) Remove the clips and remove the air intake duct.

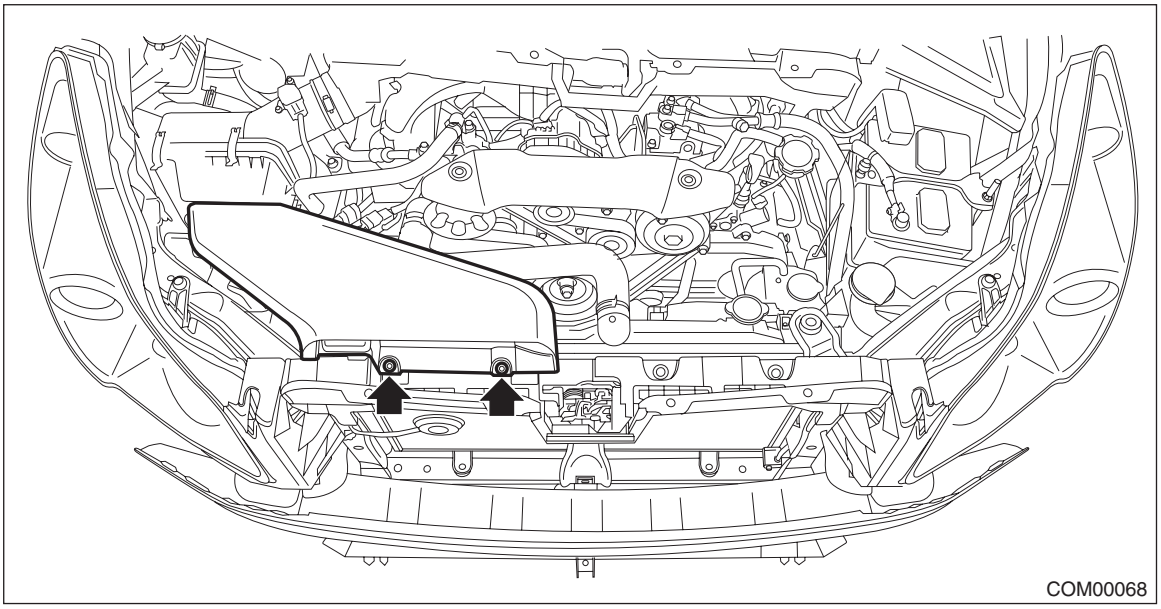

4) Remove the clips and remove the grille bracket.

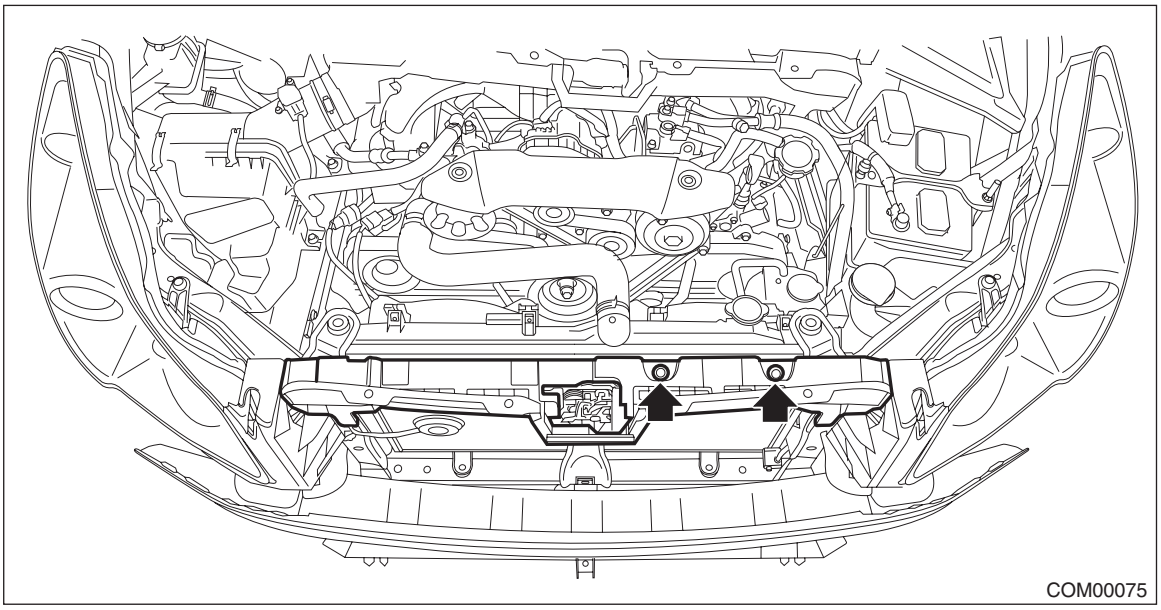

5) Remove the front hood lock assembly.
(1) Remove the bolt.

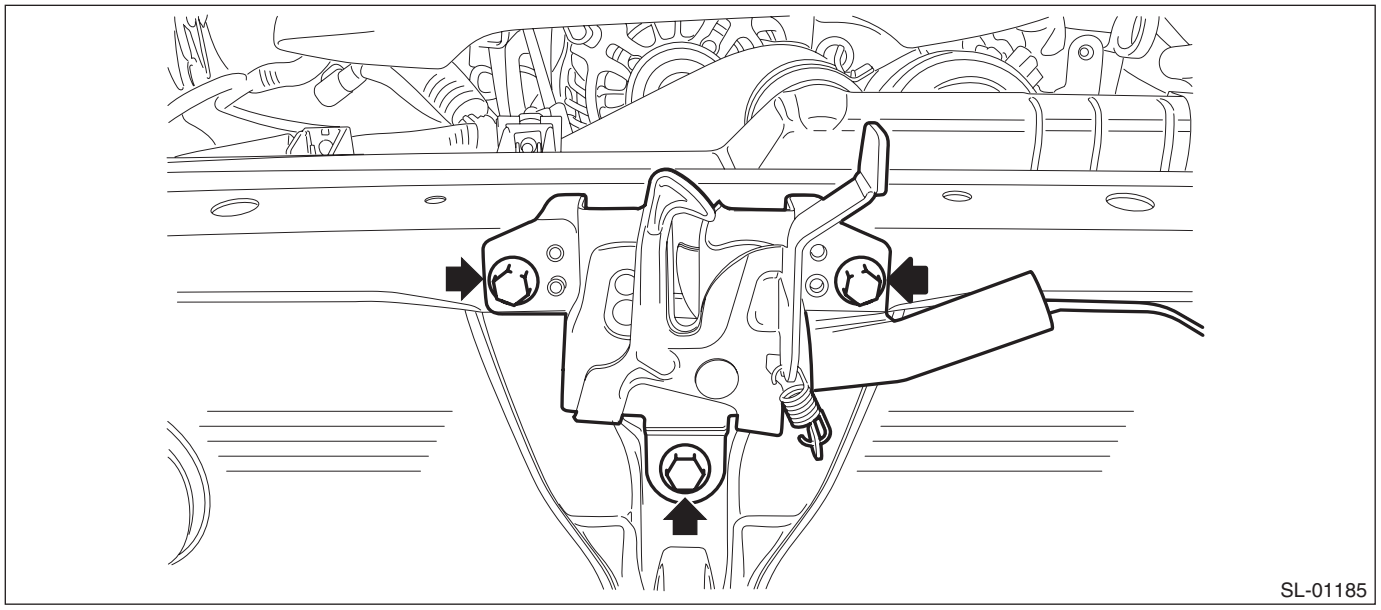
SL-01185

(2) Remove the release cable, and detach the front hood lock assembly.

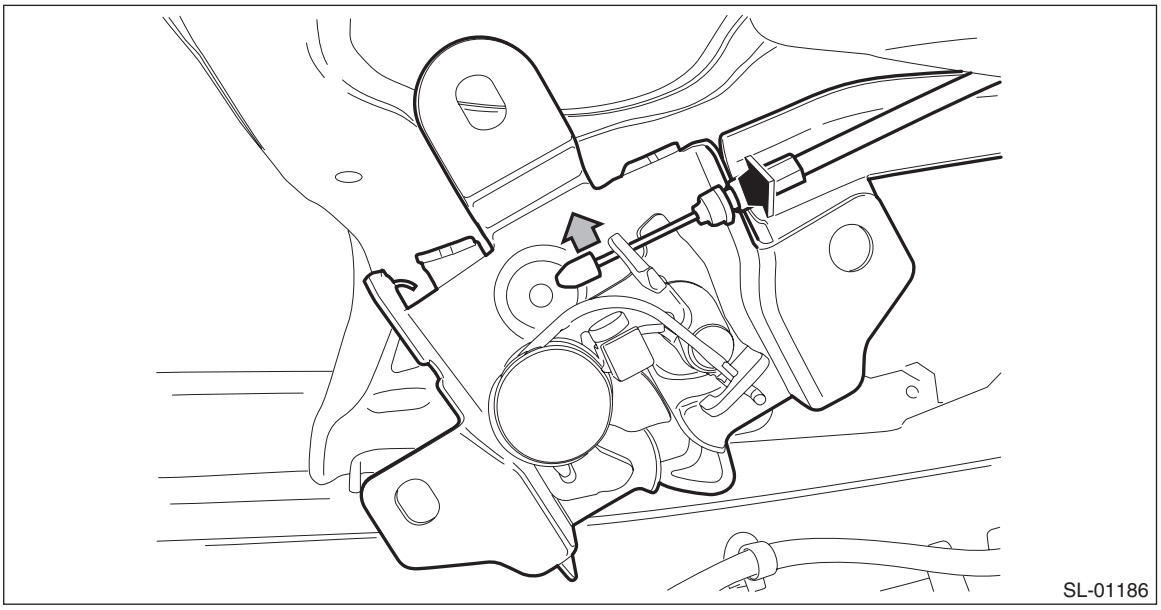
SL-01186

B: INSTALLATION

1) Before installation, check the following items.
- Grease is applied sufficiently to cable joints.

If grease is insufficient, add it as necessary before assembling the cable.
2) Install each part in the reverse order of removal.

Tightening torque:
Refer to "COMPONENT" of "General Description". <Ref. to SL-4, FRONT HOOD LOCK AND REMOTE OPENERS, COMPONENT, General Description.>
3) Adjust the fog light beam. (Model with fog light) <Ref. to LI-41, FOG LIGHT AIMING, ADJUSTMENT, Front Fog Light Assembly.>

C: ADJUSTMENT

1) Loosen the bolt, and adjust the lock assembly while moving it up and down.

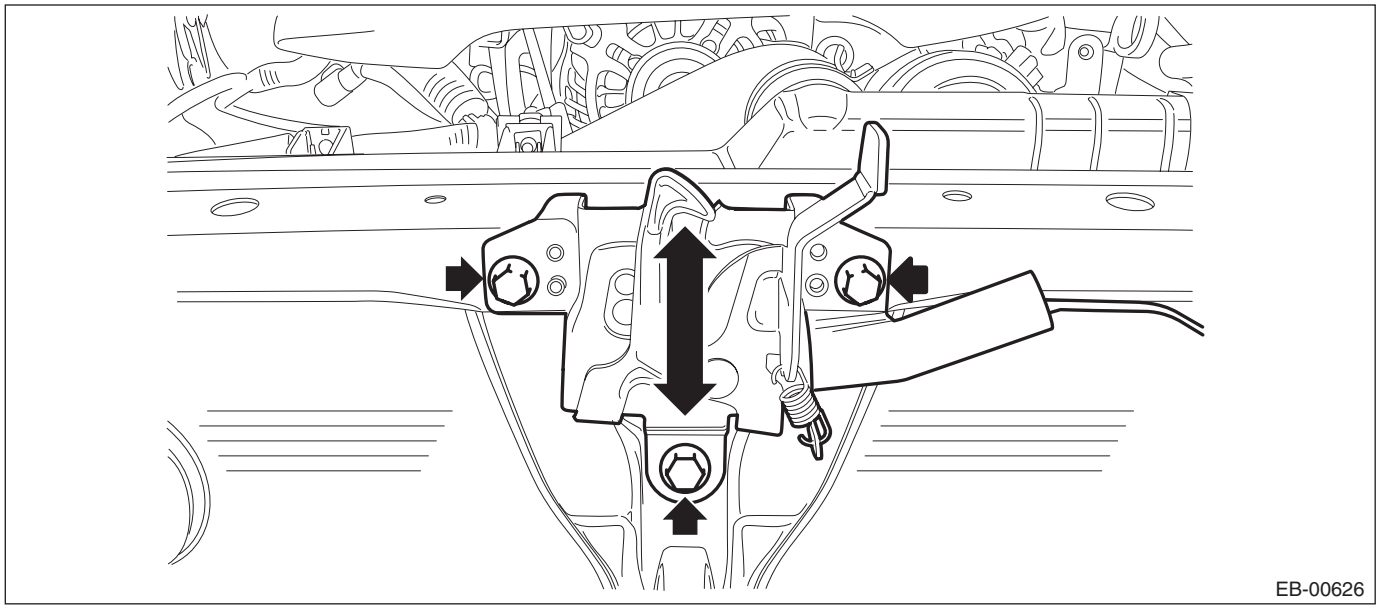

2) After adjustment, tighten the bolts securely.

Tightening torque:
Refer to "COMPONENT" of "General Description". <Ref. to SL-4, FRONT HOOD LOCK AND REMOTE OPENERS, COMPONENT, General Description.>

D: INSPECTION

Check if the front hood lock ASSY operates normally.
If latch deformation, abnormal wear, or unsmooth lock operation is observed, replace the front hood lock assembly.

17.Remote Openers

A: REMOVAL

1. FRONT HOOD OPENER

1) Remove the opener lever.
   (1) Remove the cable.
   (2) Remove the nut, and detach the opener lever.

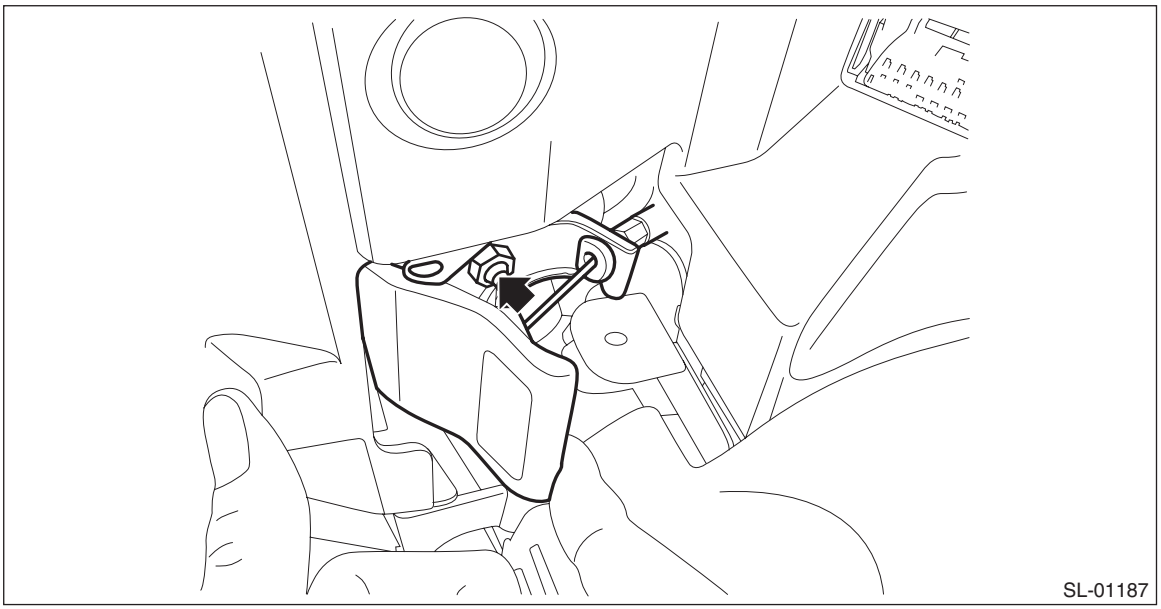

2) Remove the following parts and remove the cable clip and cable.
- Front hood lock ASSY: <Ref. to SL-51, REMOVAL, Front Hood Lock Assembly.>
- Instrument panel lower cover: <Ref. to EI-64, REMOVAL, Instrument Panel Lower Cover.>

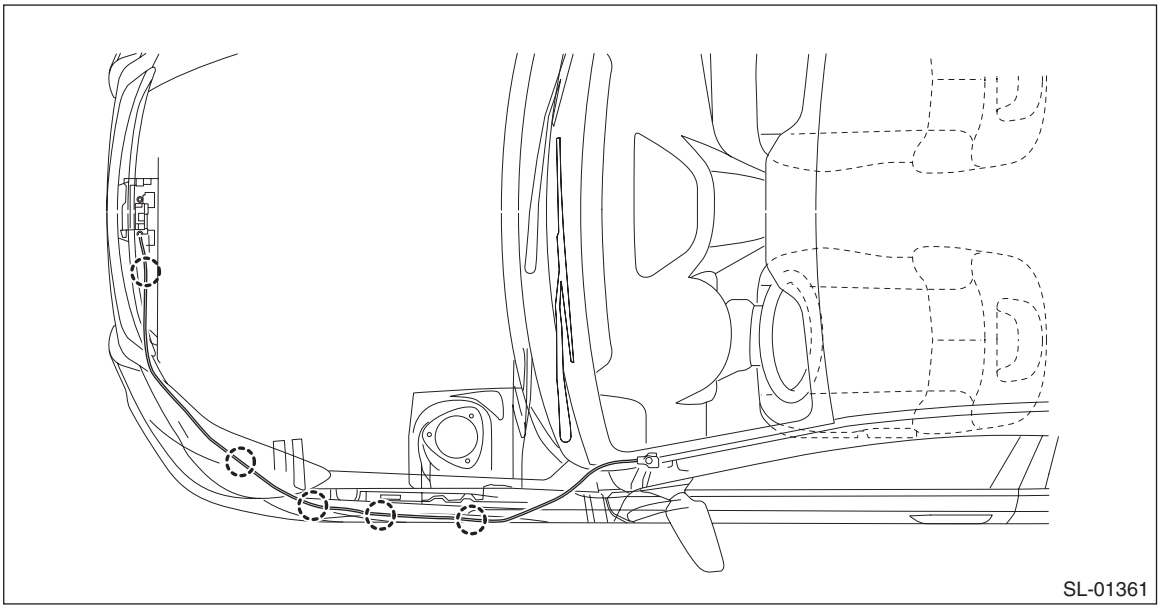

2. FUEL FLAP OPENER

1) Remove the pull handle cover.
   (1) Open the cover by using a flat tip screwdriver.
   (2) Remove the screw and remove the pull handle cover.

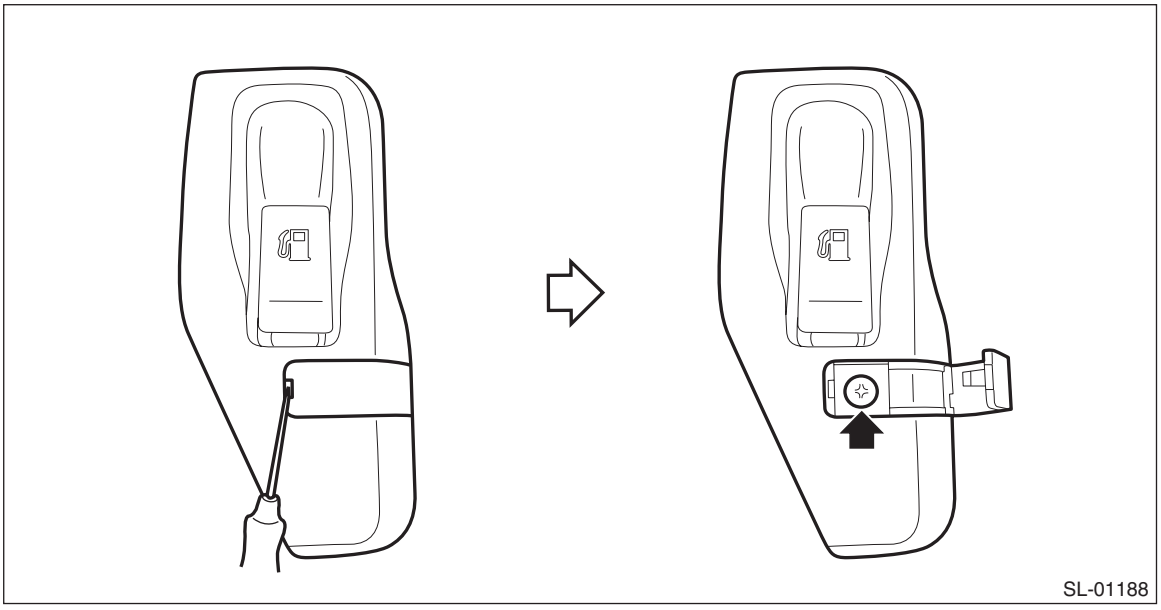

2) Remove the opener handle.
   (1) Remove the nut.
   (2) Remove the cable from opener pull handle.

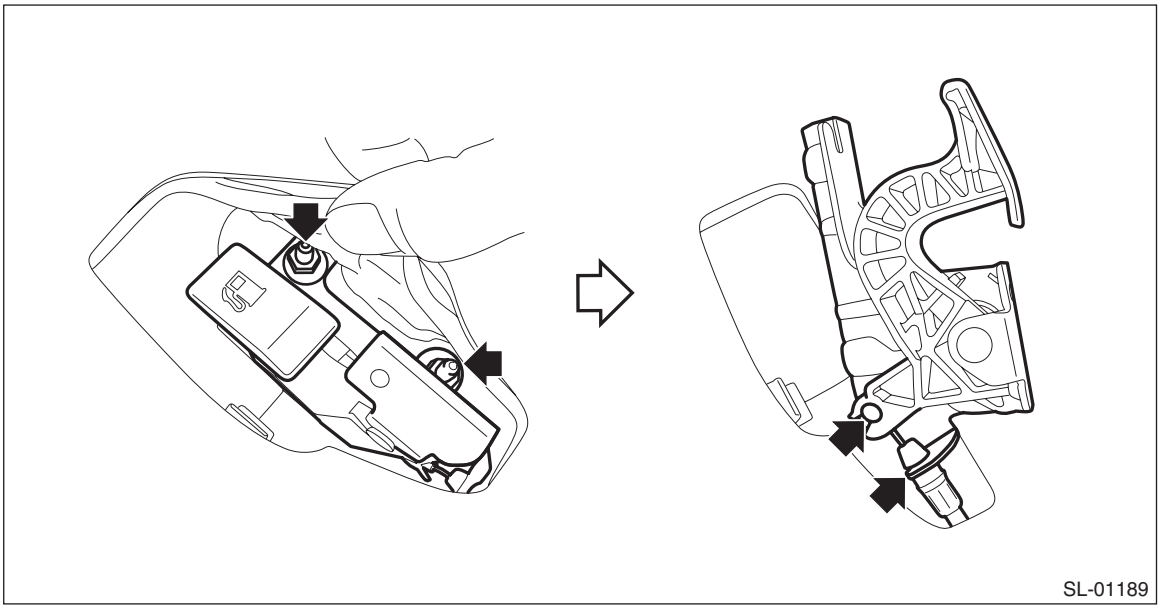

3) Remove the rear quarter trim RH. (OUTBACK model) <Ref. to EI-114, OUTBACK MODEL, REMOVAL, Rear Quarter Trim.>
4) Remove the trunk room trim (RH). (Sedan model) <Ref. to EI-127, TRUNK ROOM TRIM, REMOVAL, Trunk Room Trim.>

5) Remove the fuel lock inside the quarter panel.
   (1) Press the claws of the fuel lock.
   (2) While keeping the condition in step (1), pull the fuel lock to the rearward of the vehicle.

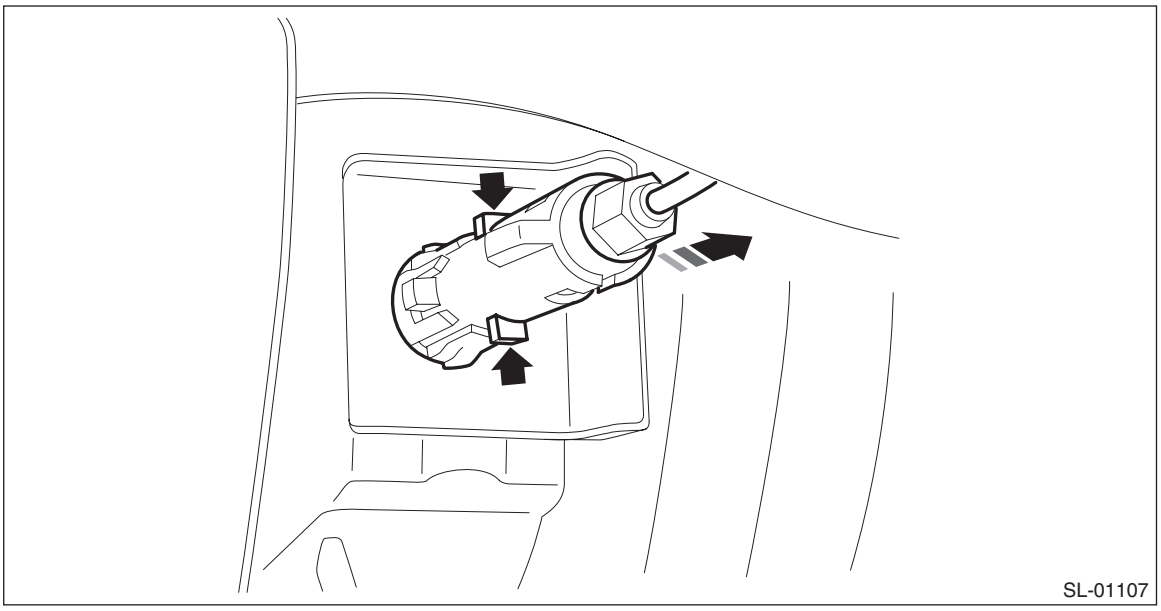
SL-01107

6) Remove the lower inner trim. <Ref. to EI-96, REMOVAL, Lower Inner Trim.>
7) Remove the cable from the clip.

- Sedan model

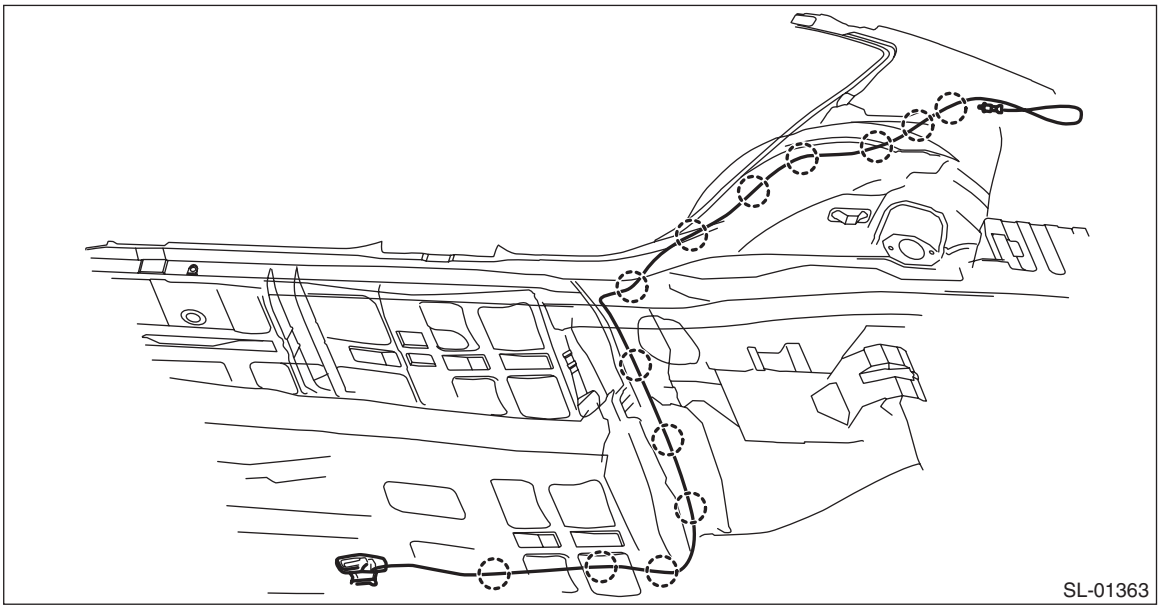
SL-01363

- OUTBACK model

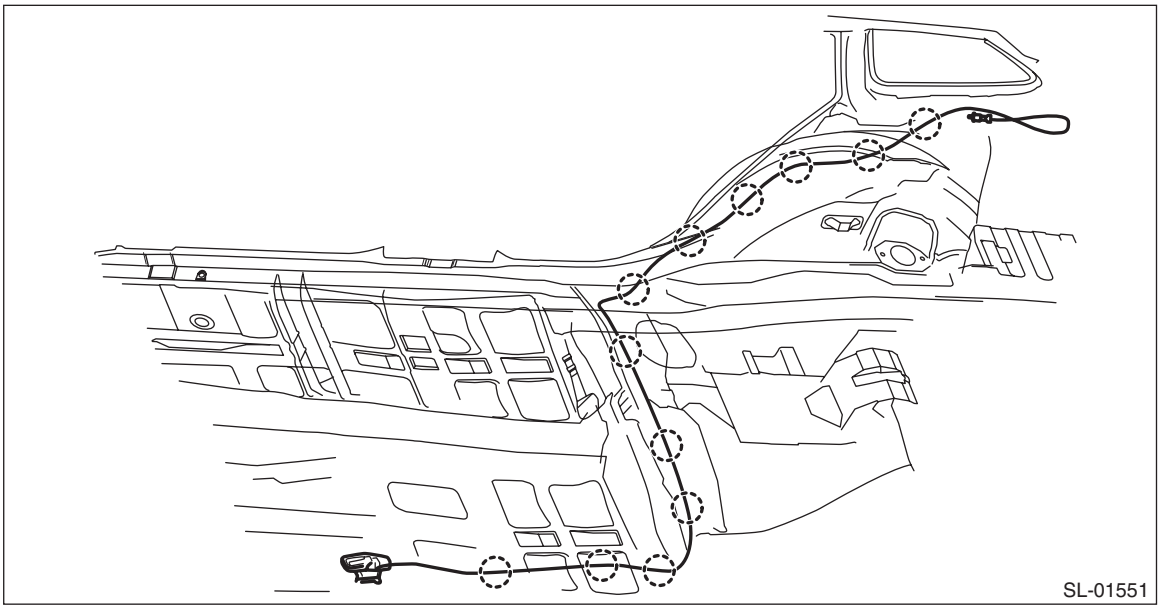

B: INSTALLATION

1) Before installation, check the following items.
- Cable is free from deformation such as fray.

2) Install each part in the reverse order of removal.

Tightening torque:
Refer to "COMPONENT" of "General Description". <Ref. to SL-4, FRONT HOOD LOCK AND REMOTE OPENERS, COMPONENT, General Description.>

C: INSPECTION

Check if the front hood and fuel flap operate normally.

18.Ignition Key Lock

A: REPLACEMENT

1) Disconnect the ground cable from battery.
2) Remove the steering column. <Ref. to PS-26, REMOVAL, Steering Column.>
3) Remove the ignition key lock.
   (1) Secure the steering column in a vise.
   (2) Drill out the bolts and remove the ignition key lock.

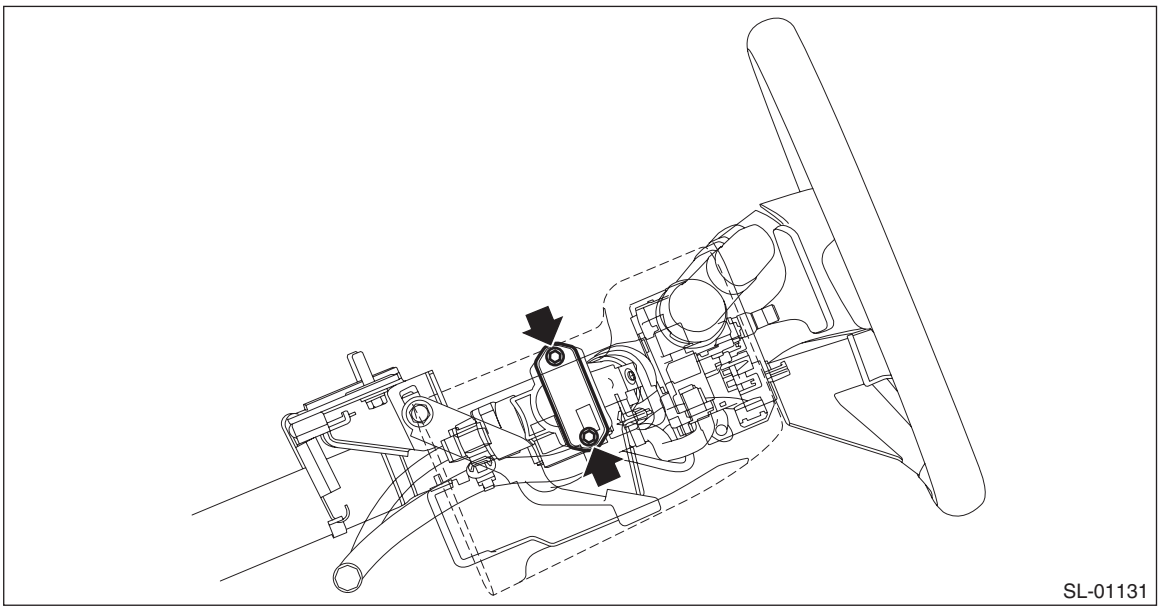

4) Install the ignition key lock.
   (1) Secure the ignition key lock to the steering column.
   (2) Use new bolts. Tighten the bolt until the bolt head is broken (bolt head wrenched off).

B: INSPECTION

1) Disconnect the ignition switch connector.
2) Measure the resistance between ignition switch terminals.

Preparation tool: Circuit tester

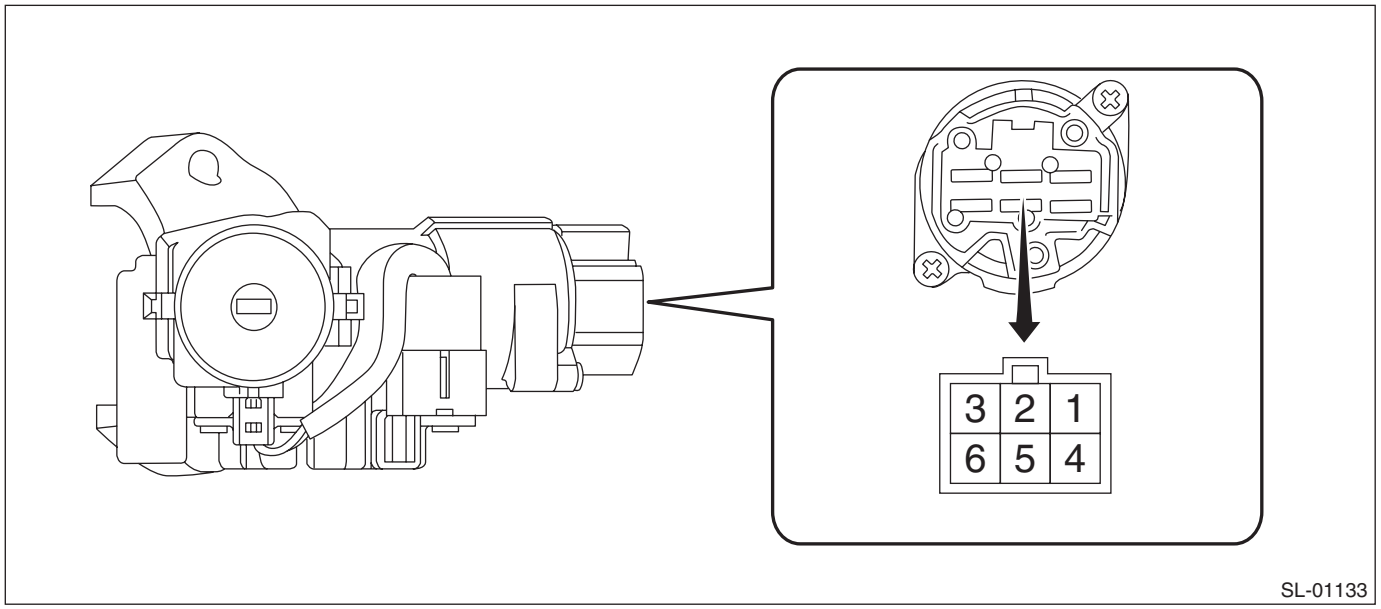

Terminal No.	Inspection Conditions	Specification
—	LOCK	—
3 — 5	ACC	Less than 1 Ω
3 — 1, 4 3 — 5	ON	Less than 1 Ω
3 — 2, 6 3 — 1, 4	ST	Less than 1 Ω

3) Replace the ignition switch if the inspection result is not within the standard value.

19.Key Lock Cylinders

A: REPLACEMENT

1. FRONT DOOR

1) Raise the front door glass to the top position.
2) Remove the door trim. <Ref. to EI-60, FRONT DOOR, REMOVAL, Door Trim.>
3) Remove the sealing cover.

CAUTION:
- **Carefully remove the butyl tape. Excessive force will easily break the cover.**
- **If the sealing cover gets broken, replace it with a new part.**

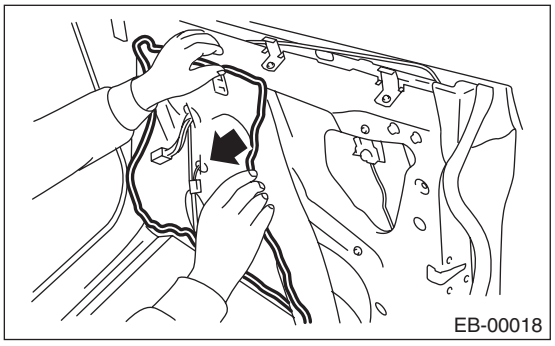

4) Remove the rod from the outer handle rod clamp.

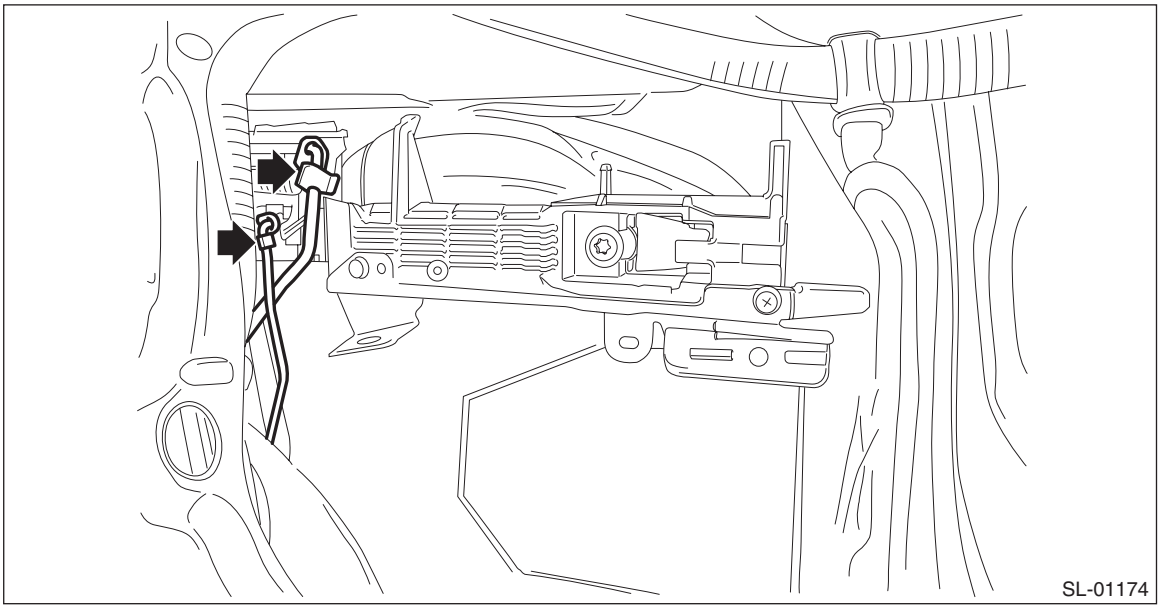

5) Remove the door outer handle cover.

Preparation tool: TORX® T30

(1) Remove the plug to the rear of the door panel.
(2) Loosen the TORX® bolt and remove the door outer handle cover.

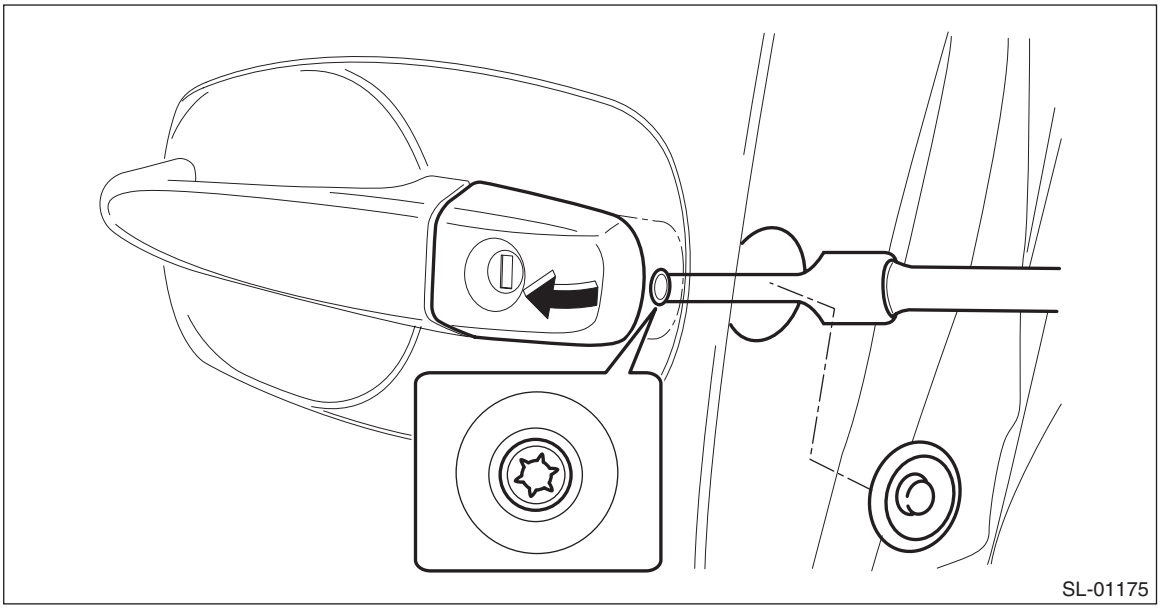

6) Remove the key cylinder from the door outer handle cover, and replace the key cylinder.

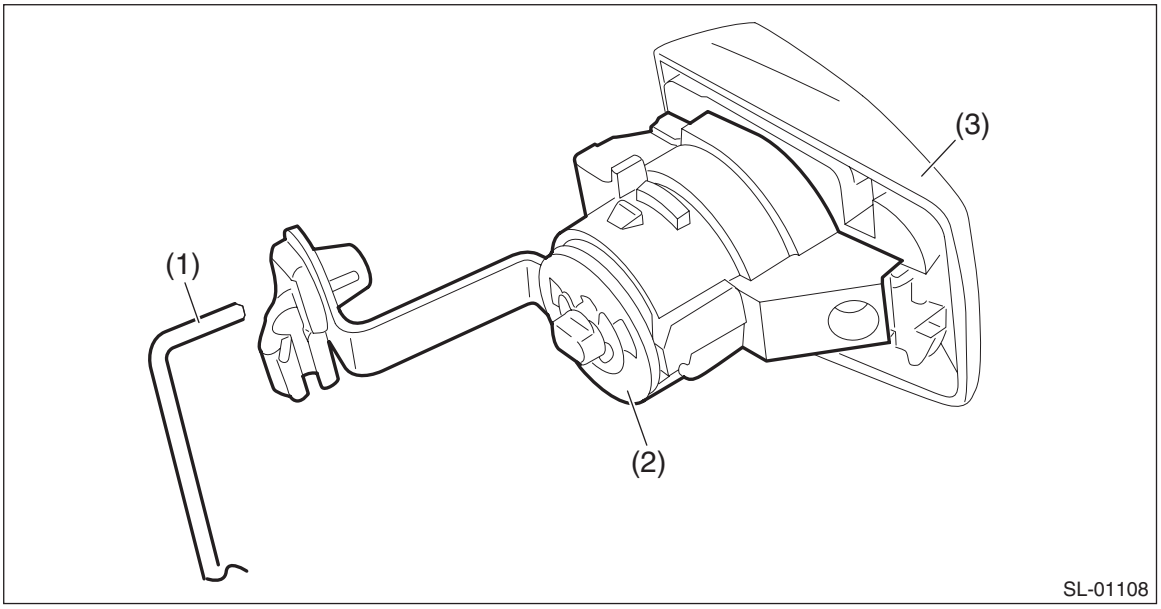

(1) Latch connection rod
(2) Key cylinder
(3) Door outer handle cover (driver's seat only)

Tightening torque:

Refer to "COMPONENT" of "General Description". <Ref. to SL-2, DOOR LOCK ASSEMBLY, COMPONENT, General Description.>

2. TRUNK LID

1) Remove the trunk lid trim. <Ref. to EI-127, TRUNK LID TRIM, REMOVAL, Trunk Room Trim.>
2) Remove the key cylinder.
   (1) Remove the cable (1), clip (2) and bolt (3).

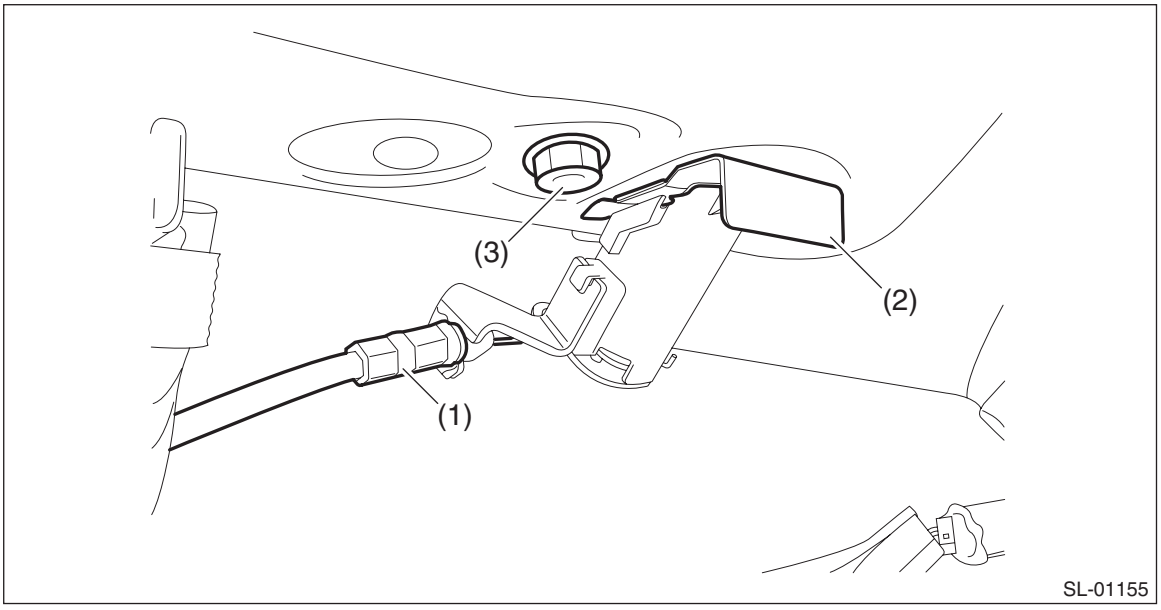

   (2) Remove the key cylinder from the trunk lid, and replace the key cylinder.

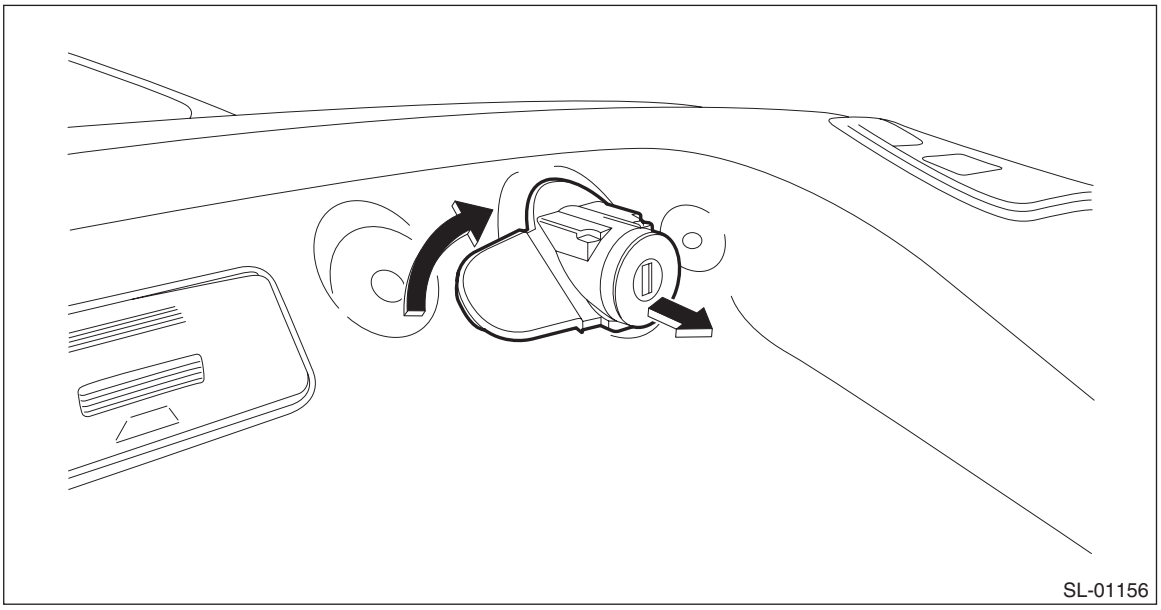

Tightening torque:
Key cylinder: 7.5 N·m (0.76 kgf-m, 5.5 ft-lb)

3. GLOVE BOX LID

1) Remove the glove box lid assembly.
   (1) Remove the glove box damper.
   (2) Release the stoppers and remove the glove box lid assembly by pulling it toward you.

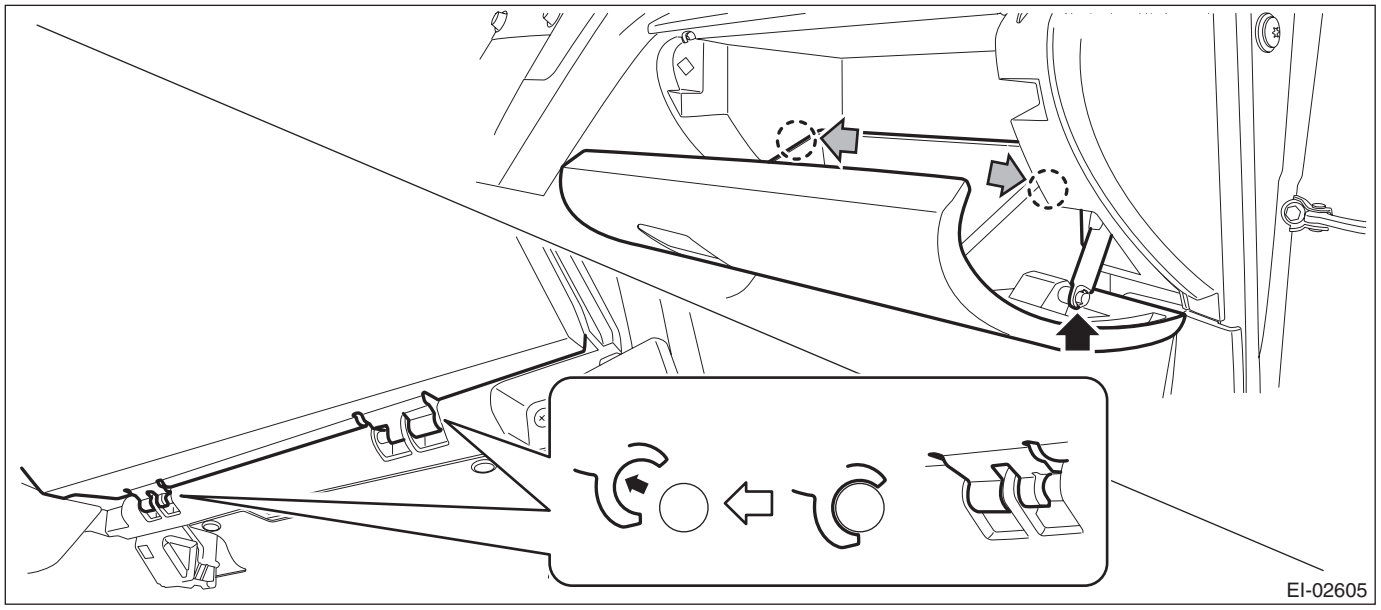

2) Remove the key cylinder.
   (1) UNLOCK the key cylinder, and pull up the lock knob.
   (2) While maintaining the condition (1), insert the key to set LOCK condition.

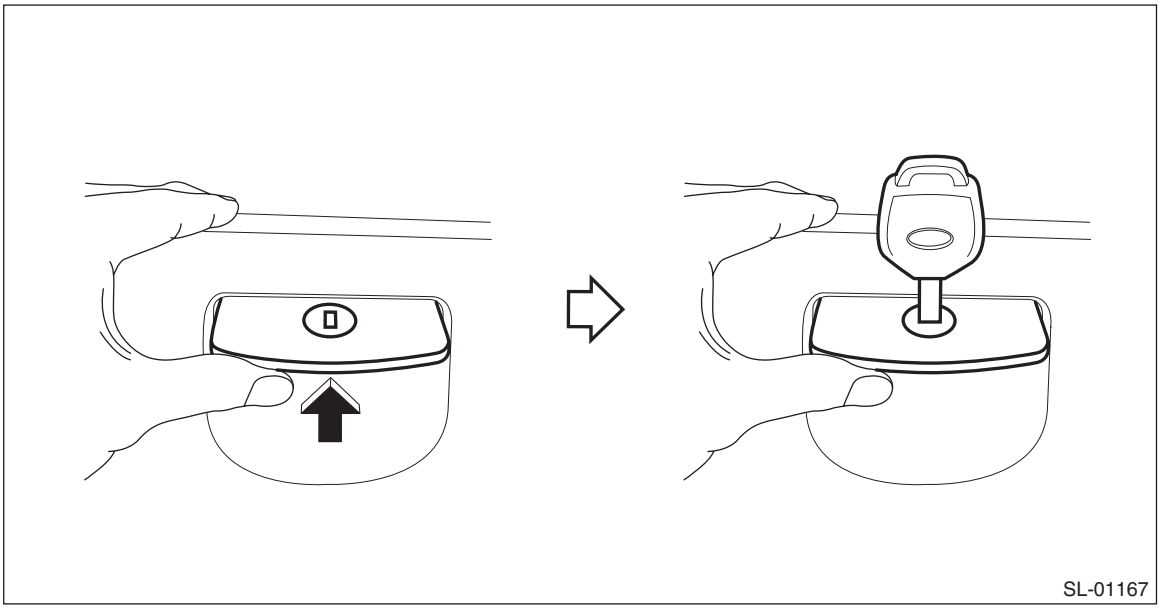

   (3) Push out the key cylinder, while pressing in the metal plate.

(4) Remove the key cylinder from lock knob, and replace the key cylinder.

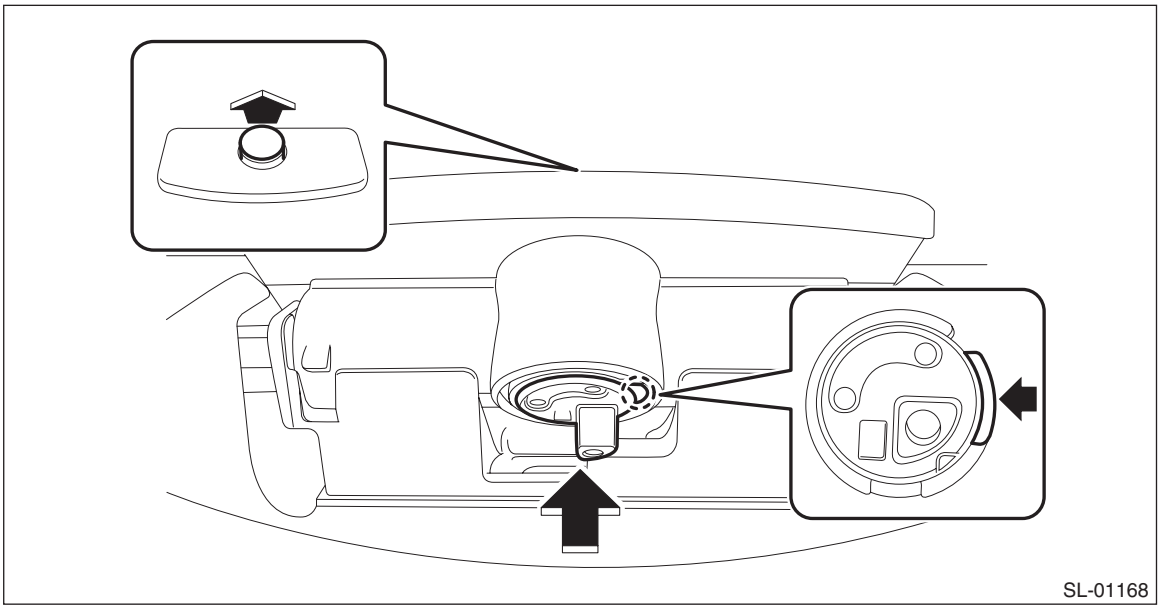

20.Security Control Module

A: REMOVAL

1) Remove the heater and cooling unit. <Ref. to AC-62, REMOVAL, Heater and Cooling Unit.>
2) Remove the security control module.
   (1) Disconnect the connector.
   (2) Remove the nuts, and remove the security control module.

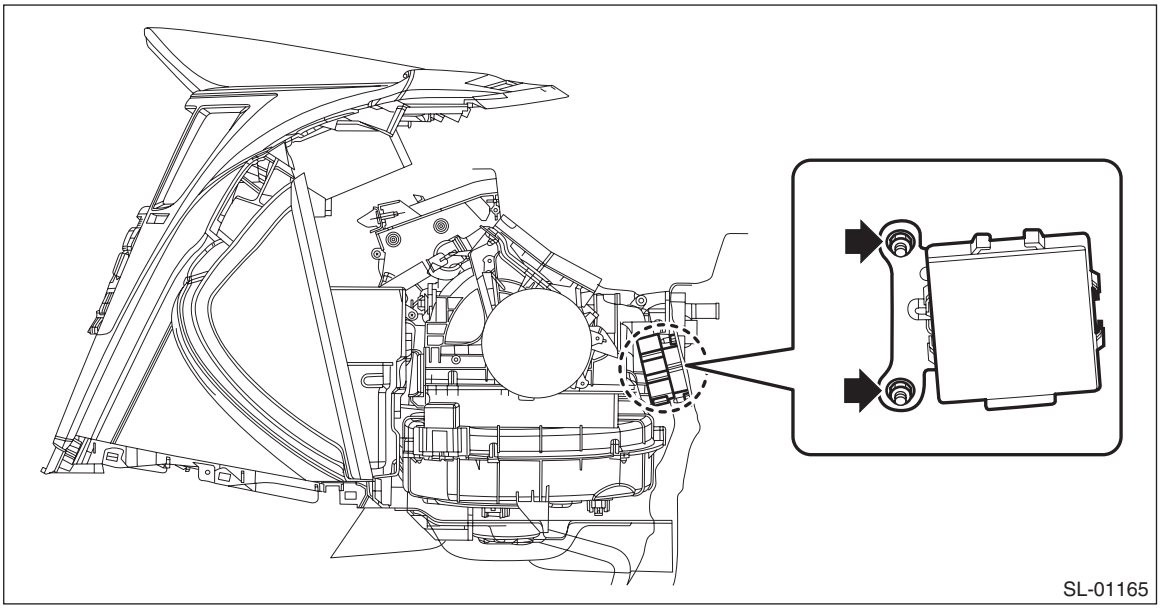

B: INSTALLATION

CAUTION:
You must register the immobilizer when a immobilizer-related control module has been replaced. For procedures, refer to the "PC application help for Subaru Select Monitor".
Install each part in the reverse order of removal.

Tightening torque:
Security control module: 7.5 N·m (0.76 kgf-m, 5.5 ft-lb)

21.Impact Sensor

A: REMOVAL

1) Remove the key from ignition switch.
2) Close all the doors and rear gate.
3) Press the UNLOCK button of the keyless transmitter.
4) Disconnect the ground cable from battery.
5) Remove the impact sensor.
6) Change the impact sensor setting using the Subaru Select Monitor.

B: INSTALLATION

1) Remove the key from ignition switch.
2) Close all the doors and rear gate.
3) Press the UNLOCK button of the keyless transmitter.
4) Disconnect the ground cable from battery.
5) Install the impact sensor.
6) Change the impact sensor setting using the Subaru Select Monitor.

C: OPERATION

1. IMPACT SENSOR SETTING USING SUBARU SELECT MONITOR

1) Prepare the Subaru Select Monitor kit.
2) Turn the ignition switch to ON (engine OFF) and run the “PC application for Subaru Select Monitor”.
3) On «System Selection Menu» display, select {Integ. unit mode}.
4) Select {ECM customizing}.
5) Perform impact sensor ON/OFF setting.
- Installed: ON
- Removed: OFF

6) Perform impact sensor ON/OFF setting.
- Installed: ON
- Removed: OFF

7) Turn the ignition switch to OFF and remove the Subaru Select Monitor.

D: ADJUSTMENT

1. CHECK IMPACT SENSOR

1) Remove the key from ignition switch.
2) Close all windows.
3) Close all the doors and rear gate. Leave the front hood open.
4) Press the LOCK button of the keyless transmitter from outside the vehicle.
5) After 30 seconds, check if the security indicator light blinks twice in 0.5 second at 2 seconds intervals.
6) For all glasses, hit the glass strongly and consecutively to see if the security alarm operates. In addition, lift the front hood by approximately 12 cm (4.7 in) or more and let it drop by its weight to see if the security alarm operates.
7) If it does not operate, adjust the impact sensitivity.

2. IMPACT SENSITIVITY ADJUSTMENT

1) Prepare the Subaru Select Monitor kit.
2) Turn the ignition switch to ON (engine OFF) and run the “PC application for Subaru Select Monitor”.
3) On «System Selection Menu» display, select {Impact Sensor}.
4) Execute the {Sensitivity Adjustment Mode}.
- The sensitivity can be adjusted in 11 levels from 0 to 10.
- The initial value is 5.
- A smaller number indicates a higher sensitivity.
- A larger number indicates a lower sensitivity.

5) Turn the ignition switch to OFF and remove the Subaru Select Monitor.

NOTE:
- Make sure that the sensitivity is set to an appropriate level so that any minor vibration typically experienced on a daily basis, such as a person leaning over a door or a ball hitting vehicle lightly, will not activate the alarm.
- The alarm should respond to significant vibrations that suggest a violence by a theft such as window glasses or doors being hit strongly and consecutively.
- The alarm may respond to substantial vibrations even though they do not mean any theft behavior, for example, road construction, multi-story parking space, train passing, vehicle getting on a ferry. Therefore, when adjusting the sensitivity, consult the customer to confirm the parking environment or other external conditions.
- If the sensitivity adjustment fails, the buzzer sounds four times. At that time, check the following points.
  - Error in CAN communication
  - Harness for open between body integrated unit and impact sensor
  - Body integrated unit, or impact sensor failure

22.Keyless Entry Control Module

A: REMOVAL

1. SEDAN MODEL

1) Disconnect the ground cable from battery.
2) Remove the rear shelf trim. <Ref. to EI-120, REMOVAL, Rear Shelf Trim.>
3) Remove the keyless entry control module.
   (1) Disconnect the connector.
   (2) Remove the bolt and remove the keyless entry control module.

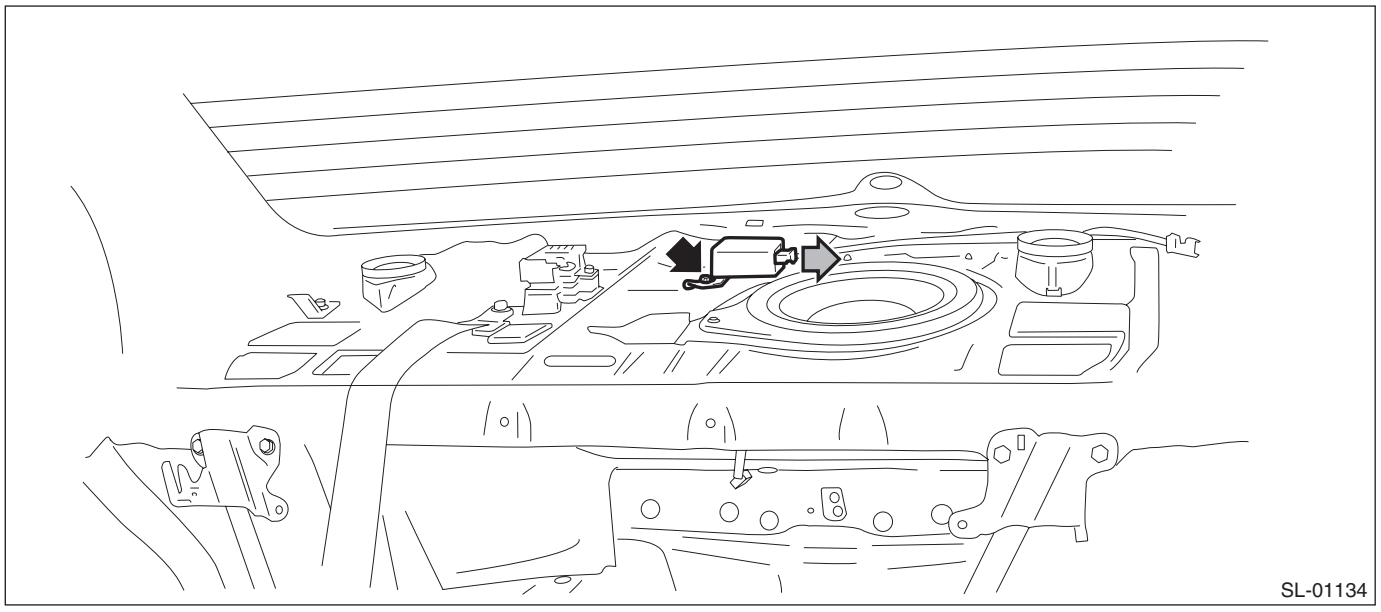

2. OUTBACK MODEL

1) Disconnect the ground cable from battery.
2) Remove the rear quarter trim LH. <Ref. to EI-110, REMOVAL, Rear Quarter Trim.>
3) Remove the keyless entry control module.
   (1) Disconnect the connector.
   (2) Remove the bolt and remove the keyless entry control module.

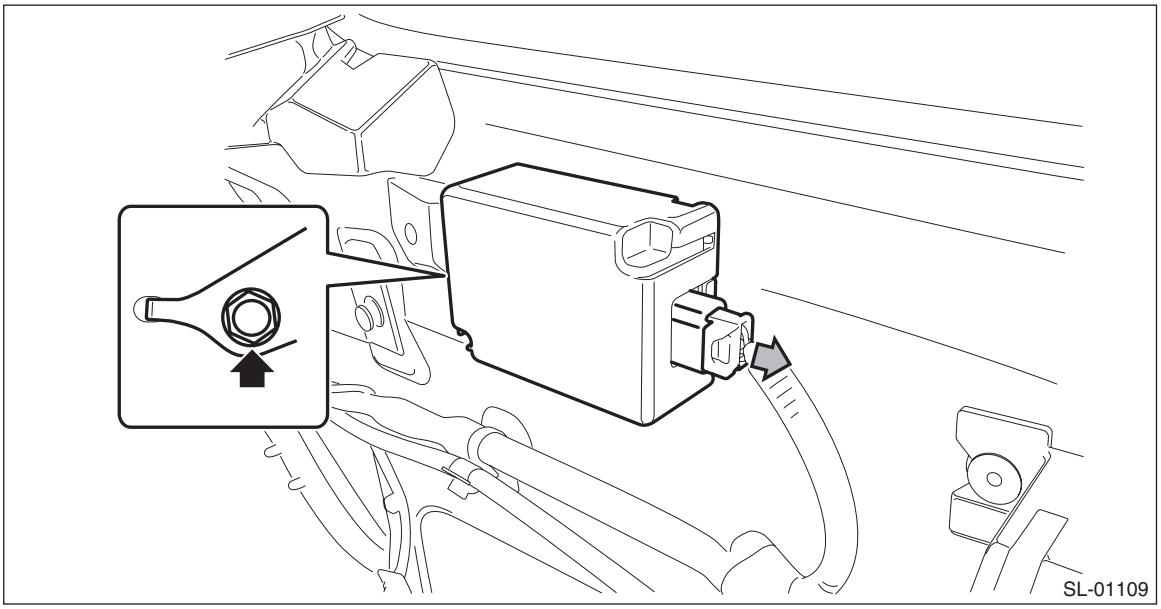

B: INSTALLATION

Install each part in the reverse order of removal.

Tightening torque:
Keyless entry control module: 7.5 N·m (0.76 kgf-m, 5.5 ft-lb)

23.Keyless Buzzer

A: REMOVAL

1) Disconnect the ground cable from battery.
2) Remove the front bumper face. <Ref. to EI-39, REMOVAL, Front Bumper.>
3) Remove the keyless buzzer.
   (1) Disconnect the connector.
   (2) Remove the clip, and remove the keyless buzzer.

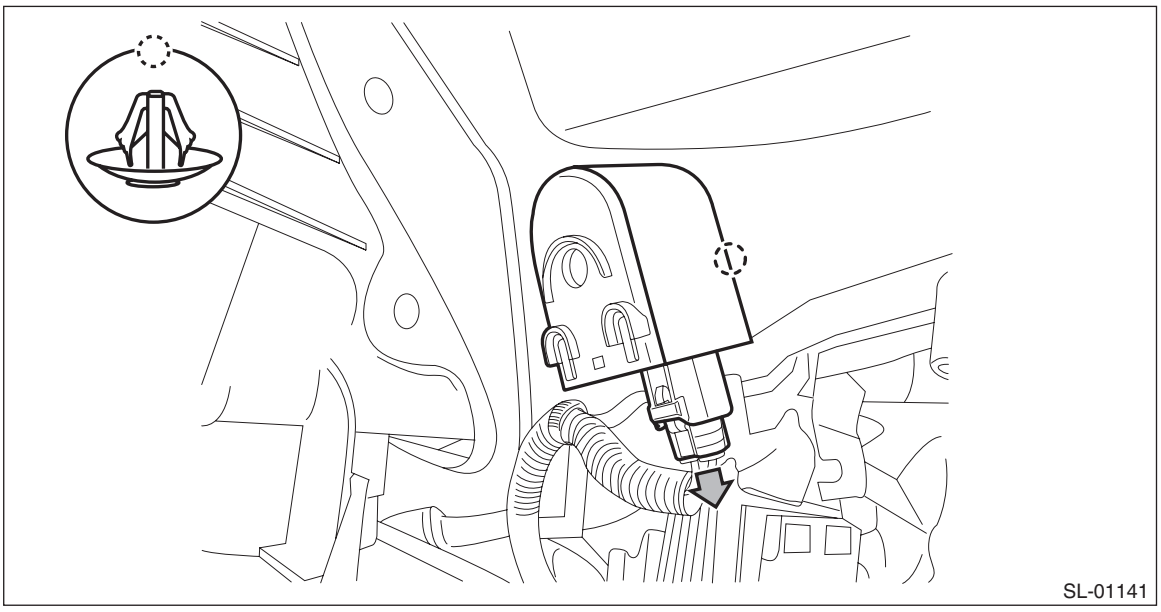

B: INSTALLATION

1) Install each part in the reverse order of removal.
2) Adjust the fog light beam. (Model with fog light) <Ref. to LI-41, FOG LIGHT AIMING, ADJUSTMENT, Front Fog Light Assembly.>

C: INSPECTION

1) Using the Subaru Select Monitor, perform forced operation of the keyless buzzer. <Ref. to BC(diag)-16, OPERATION, User Customizing.>
2) If the buzzer does not sound, replace the keyless buzzer.

24.Body Integrated Unit

A: NOTE

1. WHEN REPLACING THE BODY INTEGRATED UNIT

1) Check and record the current setting. <Ref. to BC(diag)-18, CONFIRM CURRENT SETTING., OPERATION, Registration Body Integrated Unit.>
2) Prepare the following.
- Security ID plate
- Required number of registered immobilizer keys or new (not registered) immobilizer keys.

2. AFTER REPLACING THE BODY INTEGRATED UNIT

1) Register the immobilizer. For detailed operation procedures, refer to “PC application help for Subaru Select Monitor”.
2) Set the current settings as recorded.

B: REMOVAL

1) Disconnect the ground cable from battery.
2) Remove the instrument panel lower cover. <Ref. to EI-64, REMOVAL, Instrument Panel Lower Cover.>
3) Remove the body integrated unit.

CAUTION:
Be careful to keep water and other foreign materials away from body integrated unit.
(1) Remove the harness clip and connector.
(2) Remove the bolts, and remove the body integrated unit.

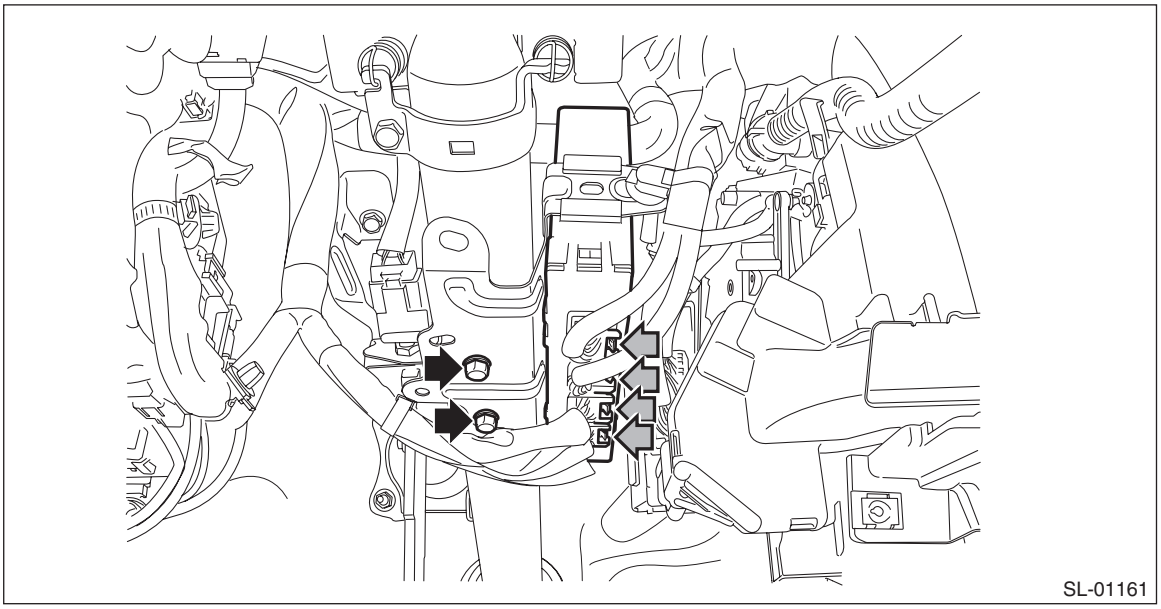

C: INSTALLATION

Install each part in the reverse order of removal.

Tightening torque:
Body integrated unit: 7.5 N·m (0.76 kgf-m, 5.5 ft-lb)

NOTE:
Make sure that there are no differences from the contents of the current settings after installation. <Ref. to BC(diag)-12, LIST, Read Current Data.>

25.Keyless Transmitter

A: REMOVAL

NOTE:
For C6 model, refer to Transmitter. <Ref. to SL-75, REMOVAL, Transmitter.>

1. KEYLESS TRANSMITTER BATTERY

CAUTION:
To prevent static electricity damage to the keyless transmitter printed circuit board, touch the steel area of building with hand to discharge static electricity carried on body or clothes before disassembling the keyless transmitter.

1) Disassemble the keyless transmitter, and take out the transmitter case (1).

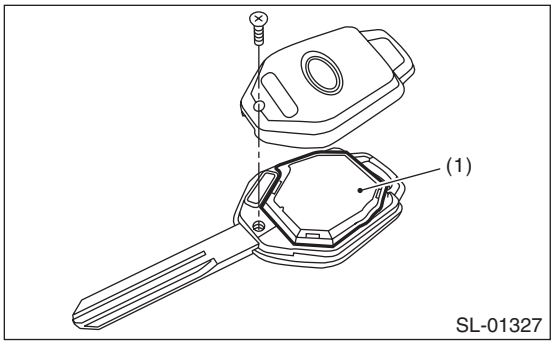

2) Release the claws, and open the transmitter case.

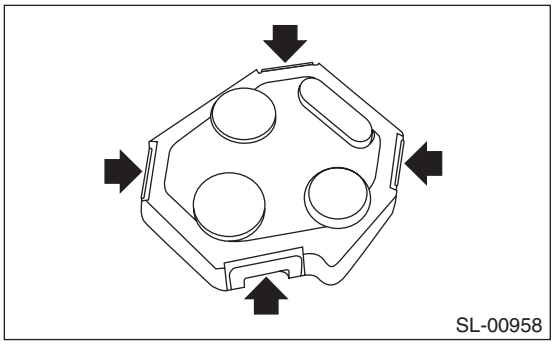

3) Remove the battery (1) from the transmitter.

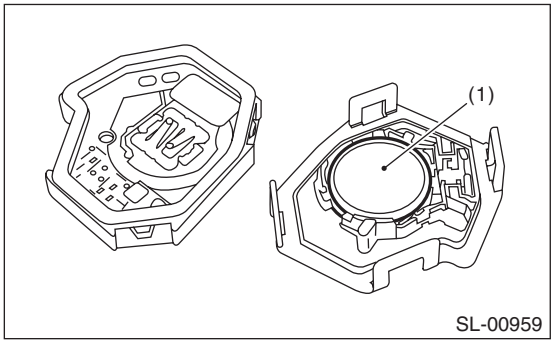

B: INSTALLATION

1. KEYLESS TRANSMITTER BATTERY

Install each part in the reverse order of removal.

C: INSPECTION

1. KEYLESS TRANSMITTER BATTERY

1) Check the keyless transmitter battery voltage.

Preparation tool: Circuit tester

NOTE:
Complete the measurement within 5 seconds because the battery discharges during measurement.

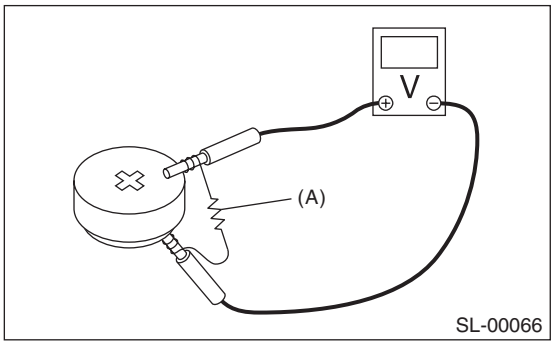

Battery terminal	Inspection Conditions	Specification
(+) — (–)	Connect resistor (A) 47 Ω	2.5 — 3.0 V

2) Replace the battery if the inspection result is not within the standard value. (Use CR1620 or equivalent.)

D: REPLACEMENT

1. REGISTRATION OF KEYLESS TRANSMITTER WITH SUBARU SELECT MONITOR

NOTE:
- A maximum of four keyless transmitter can be registered for each individual vehicle.
- When replacing or adding the keyless transmitter, new registration of transmitter is necessary.

1) Prepare the Subaru Select Monitor kit. <Ref. to SL-7, SPECIAL TOOL, PREPARATION TOOL, General Description.>

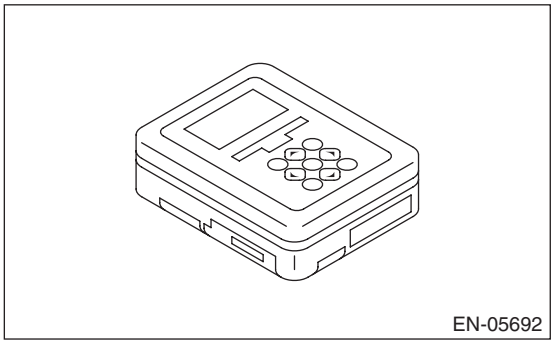

2) Prepare PC with Subaru Select Monitor installed.
3) Connect the USB cable to SDI (Subaru Diagnosis Interface) and USB port on the personal computer (dedicated port for the Subaru Select Monitor).

NOTE:
The dedicated port for the Subaru Select Monitor means the USB port which was used to install the Subaru Select Monitor.

4) Connect the diagnosis cable to SDI.

5) Connect SDI to data link connector located in the lower portion of the instrument panel (on the driver's side).

CAUTION:
Do not connect scan tools other than the Subaru Select Monitor.

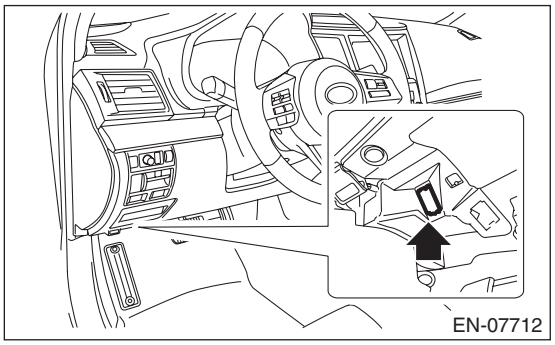

6) Start the PC.
7) Turn the ignition switch to ON (engine OFF) and run the "PC application for Subaru Select Monitor".
8) On the «Main Menu» of the Subaru Select Monitor, select the {Each System Check} → {Integ. unit mode} → {Keyless ID registration}.
9) Input the 8-digit ID number attached to the tag plate of the transmitter or inside the transmitter, from left to right. Press the [OK] key.
10) The ID number you have entered will be shown. Make sure that the ID number shown is the same as that of plastic bag or inside of transmitter.
11) Press the [OK] key if the ID number is correct. Press the [EXIT] key if incorrect, to return to the step 3) and enter the ID number again.
12) «ID is being registered...» is displayed and registration starts.
13) «ID registration completed » will be displayed when the registration process is done.
14) To exit, select «Quit: NO» to return to {Keyless ID registration}. If there are additional keyless transmitters to be registered, select «The following are registered: OK» to return to the step 4).

NOTE:
• If the registration fails, «ID cannot register Please try again» will be shown. Select the [OK] key to return to the {Keyless ID registration}. Retry starting from the step 3).
• «Quit: NO» is shown on the Subaru Select Monitor when fourth keyless transmitter has been registered. Select the [NO] key to return to {Keyless ID registration}.

26.Transmitter

A: REMOVAL

NOTE:
For models except for C6, refer to Keyless Transmitter. <Ref. to SL-72, REMOVAL, Keyless Transmitter.>

1. TRANSMITTER BATTERY

NOTE:
To prevent static electricity damage to the transmitter printed circuit board, touch the steel area of building with hand to discharge static electricity carried on body or clothes before disassembling the transmitter.
Remove the battery (1) from the transmitter.

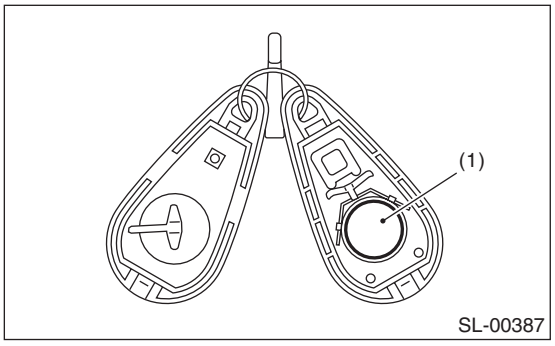

B: INSTALLATION

1. TRANSMITTER BATTERY

Install each part in the reverse order of removal.

C: INSPECTION

1. TRANSMITTER BATTERY

1) Check the transmitter battery voltage.

Preparation tool: Circuit tester

NOTE:
Complete the measurement within 5 seconds because the battery discharges during measurement.

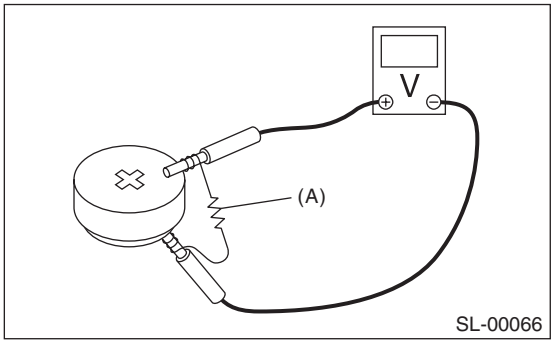

Battery terminal	Inspection conditions	Specification
(+) — (–)	Connect resistor (A) 47 Ω	2.5 — 3.0 V

2) Replace the battery if the inspection result is not within the standard value. (Use CR1620 or equivalent.)

D: REPLACEMENT

1. REGISTRATION OF KEYLESS TRANSMITTER WITH SUBARU SELECT MONITOR

NOTE:
- A maximum of four keyless transmitter can be registered for each individual vehicle.
- When replacing or adding the keyless transmitter, new registration of transmitter is necessary.

1) Prepare the Subaru Select Monitor kit. <Ref. to SL-7, SPECIAL TOOL, PREPARATION TOOL, General Description.>

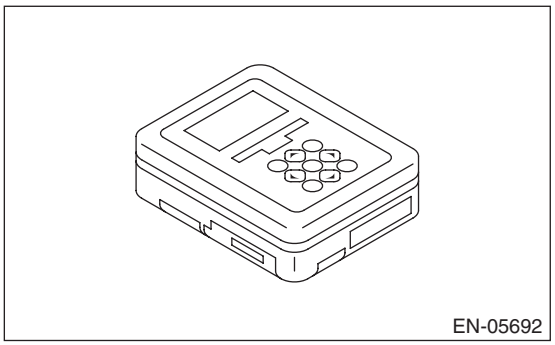
EN-05692

2) Prepare PC with Subaru Select Monitor installed.
3) Connect the USB cable to SDI (Subaru Diagnosis Interface) and USB port on the personal computer (dedicated port for the Subaru Select Monitor).

NOTE:
The dedicated port for the Subaru Select Monitor means the USB port which was used to install the Subaru Select Monitor.

4) Connect the diagnosis cable to SDI.
5) Connect SDI to data link connector located in the lower portion of the instrument panel (on the driver's side).

CAUTION:
Do not connect scan tools other than the Subaru Select Monitor.

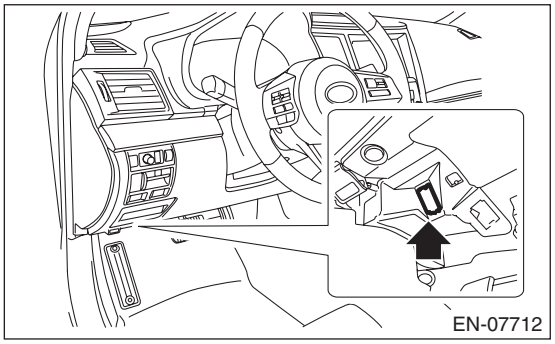
EN-07712

6) Start the PC.
7) Turn the ignition switch to ON (engine OFF) and run the "PC application for Subaru Select Monitor".
8) On the «Main Menu» of the Subaru Select Monitor, select the {Each System Check} → {Integ. unit mode} → {Keyless ID registration}.
9) Input the 8-digit ID number attached to the tag plate of the transmitter or inside the transmitter, from left to right. Press the [OK] key.
10) The ID number you have entered will be shown. Make sure that the ID number shown is the same as that of plastic bag or inside of transmitter.
11) Press the [OK] key if the ID number is correct. Press the [EXIT] key if incorrect, to return to the step 3) and enter the ID number again.
12) «ID is being registered...» is displayed and registration starts.
13) «ID registration completed » will be displayed when the registration process is done.

14) To exit, select «Quit: NO» to return to {Keyless ID registration}. If there are additional keyless transmitters to be registered, select «The following are registered: OK» to return to the step 4).

NOTE:
- If the registration fails, «ID cannot register Please try again» will be shown. Select the [OK] key to return to the {Keyless ID registration}. Retry starting from the step 3).
- «Quit: NO» is shown on the Subaru Select Monitor when fourth keyless transmitter has been registered. Select the [NO] key to return to {Keyless ID registration}.

27.Immobilizer Control Module

A: NOTE

The control of immobilizer system is carried out in body integrated unit. For operation procedures, refer to “Body Integrated Unit”.

- Removal: <Ref. to SL-71, REMOVAL, Body Integrated Unit.>
- Installation: <Ref. to SL-71, INSTALLATION, Body Integrated Unit.>

28.Immobilizer Antenna

A: REMOVAL

1) Disconnect the ground cable from battery.
2) Remove the steering column cover.
   (1) Remove the screws by turning the steering wheel to right and left.

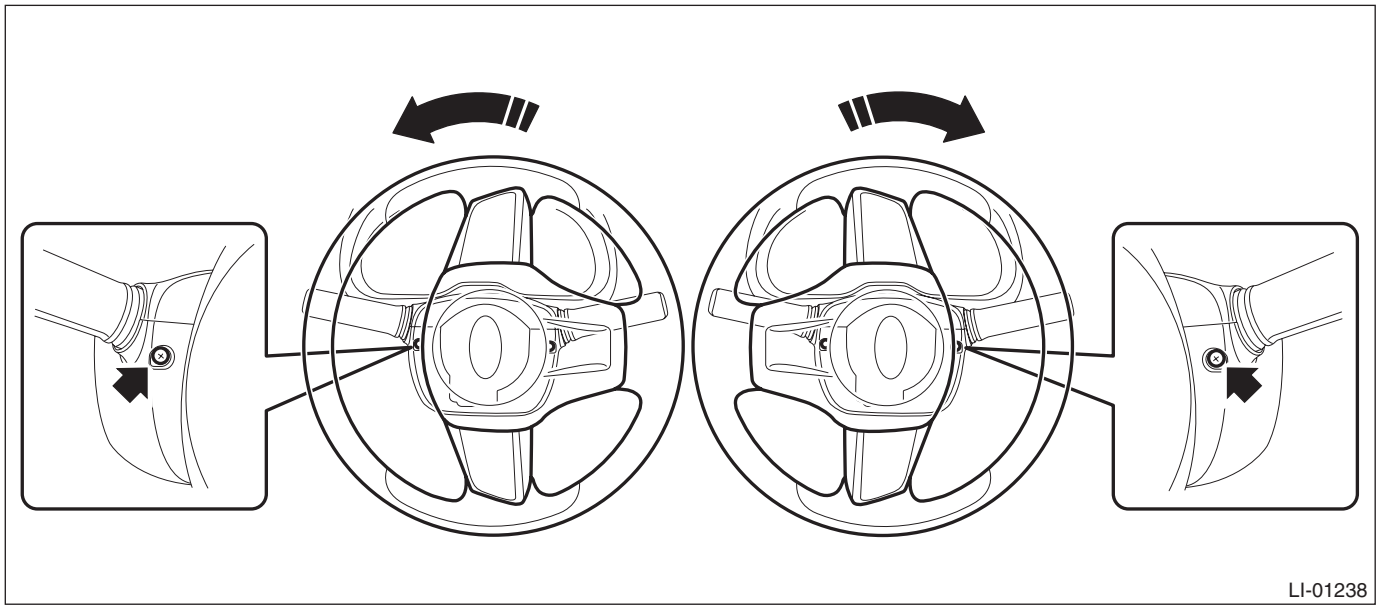

   (2) Release the claws and remove the steering column lower cover.

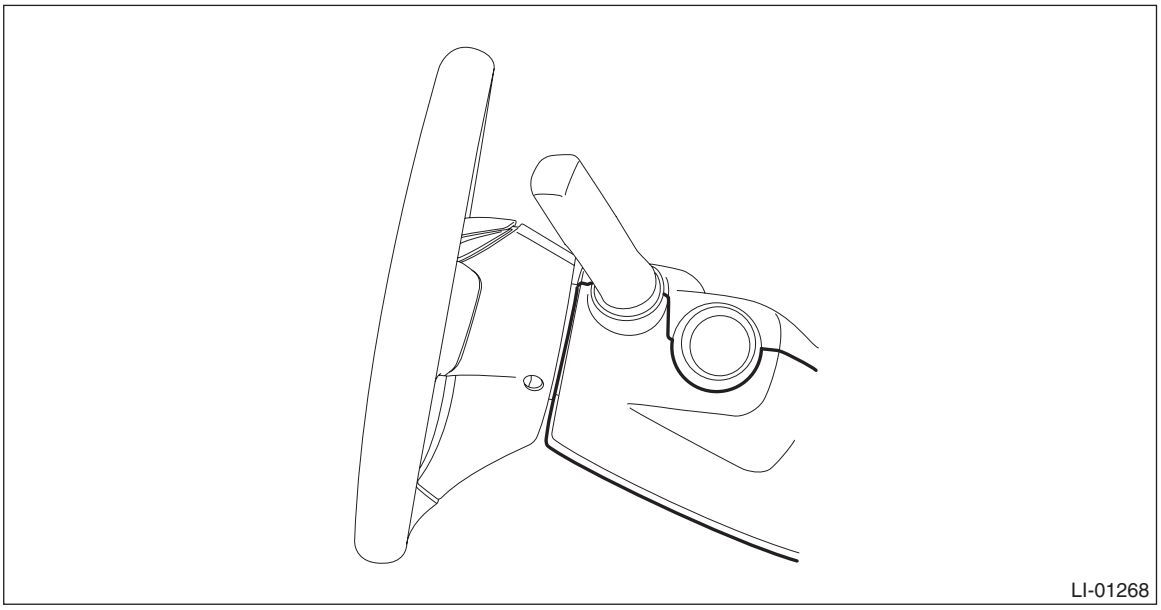

(3) Separate the steering column upper cover and steering upper cover, and remove the steering column upper cover.

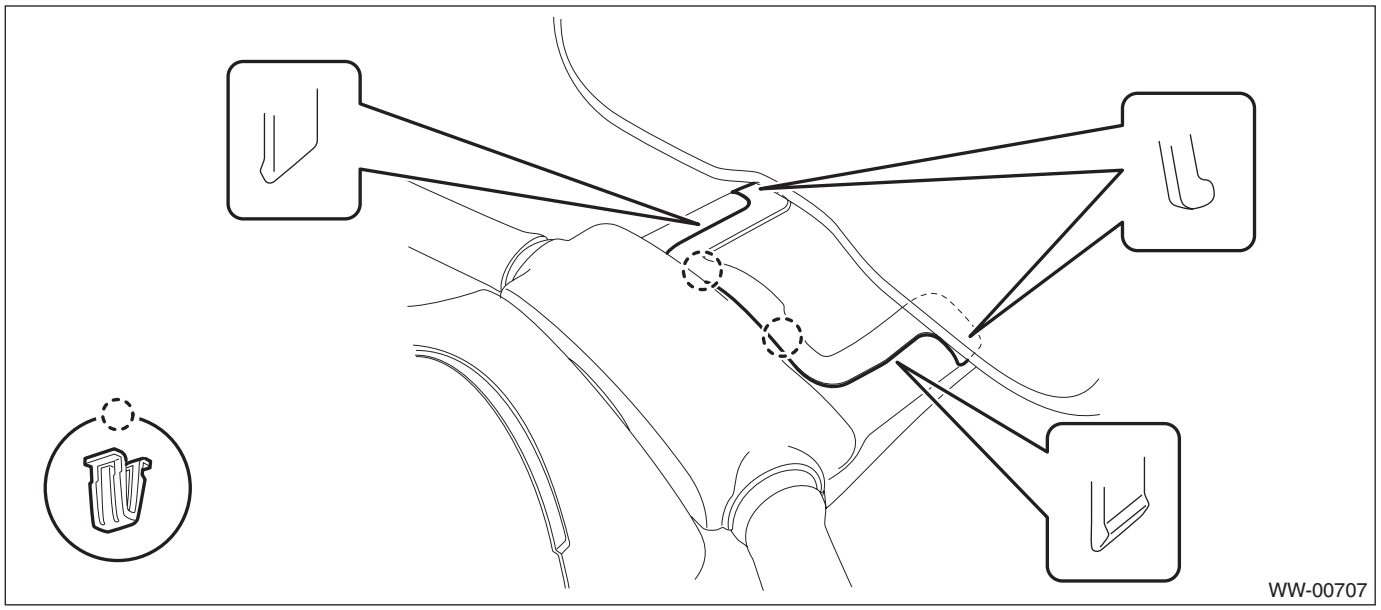

3) Remove the immobilizer antenna.

CAUTION:
Do not apply excessive force to remove the immobilizer antenna and lock. Otherwise they may be broken because those parts are the products made of a plastic.

(1) Disconnect the connector and remove the screw.
(2) Remove the ignition illumination light and release the claws, then detach the immobilizer antenna.

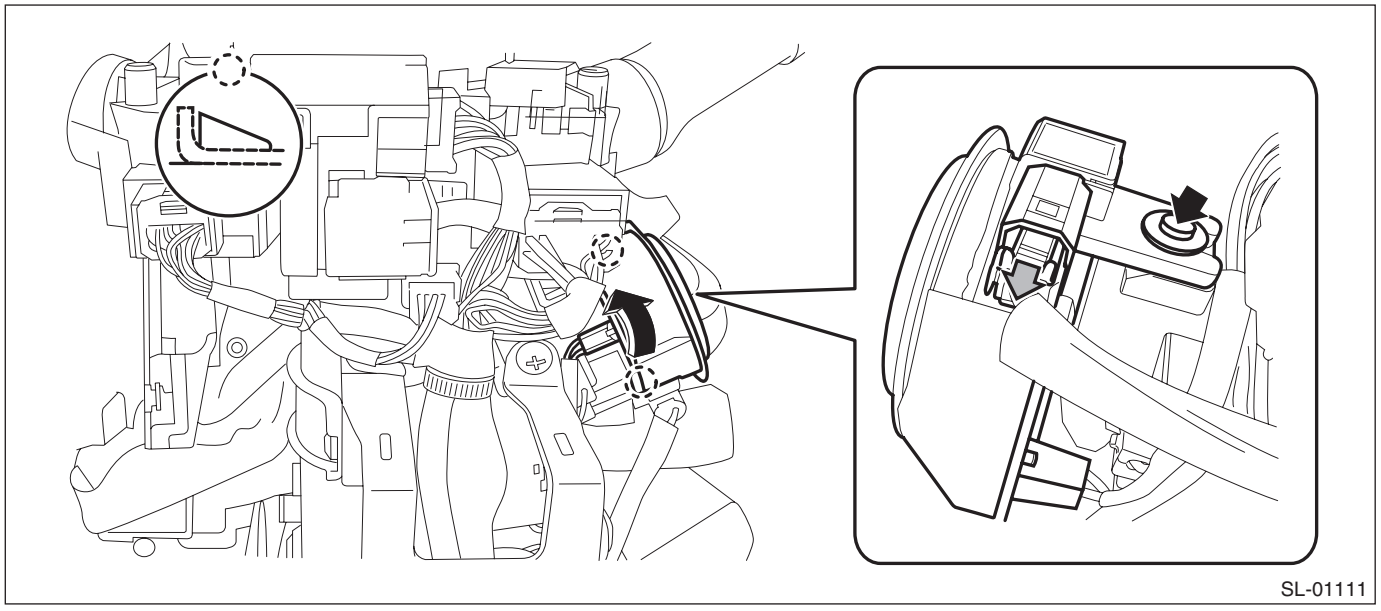

B: INSTALLATION

Install each part in the reverse order of removal.

SUNROOF/T-TOP/CONVERTIBLE TOP (SUNROOF)

SR

		Page
1.	General Description	2
2.	Relay and Fuse	4
3.	Sunroof Control System	5
4.	Glass Lid	6
5.	Sunroof Assembly	9
6.	Sunroof Motor	15
7.	Sunroof Switch	17
8.	Sunshade	19

1. General Description

A: COMPONENT

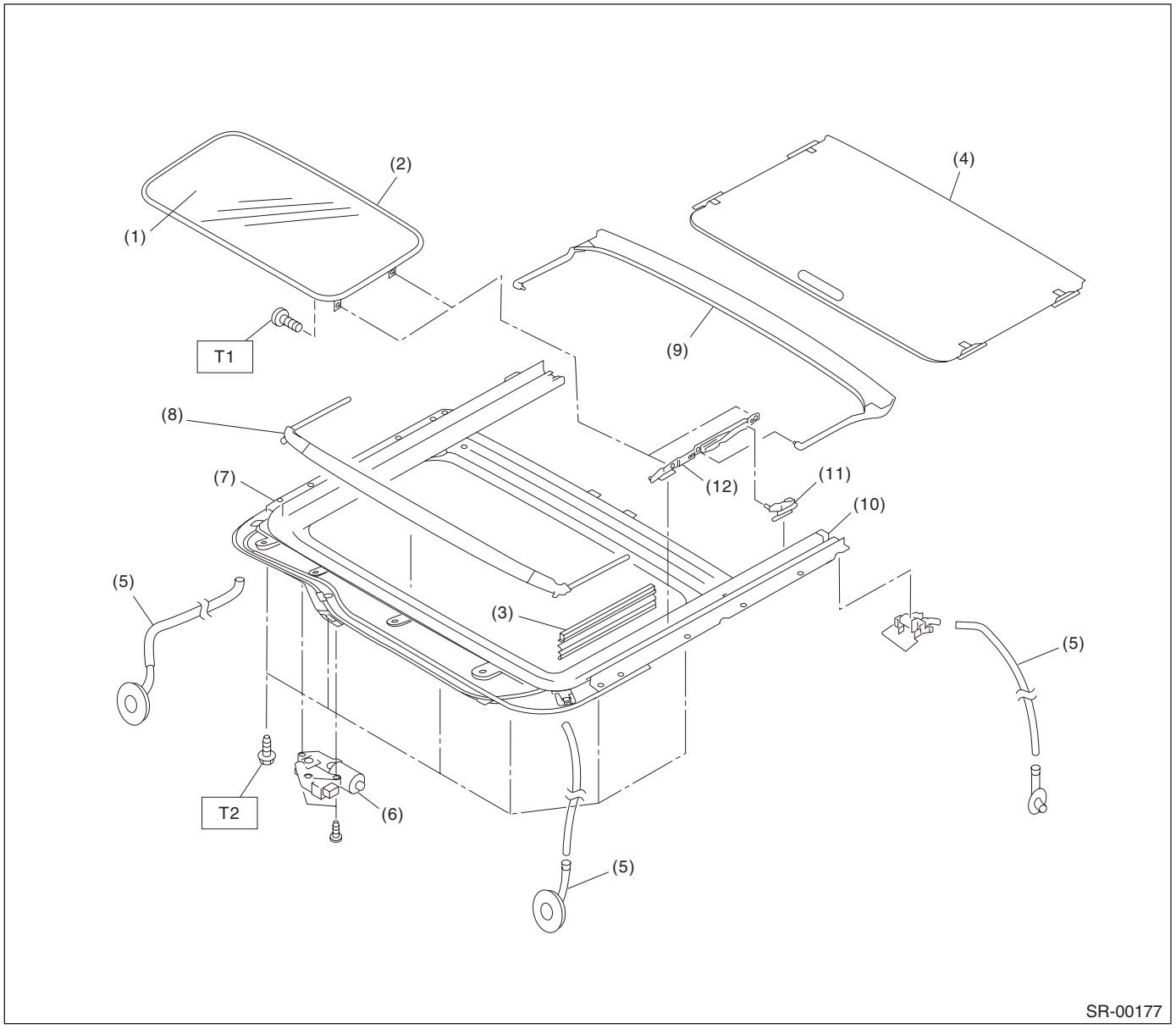

(1) Glass lid
(2) Weather strip
(3) Lid cover
(4) Sunshade
(5) Drain tube
(6) Motor ASSY
(7) Frame ASSY
(8) Deflector
(9) Drain plate
(10) Stopper rubber
(11) Link ASSY
(12) Lid bracket

Tightening torque:N·m (kgf-m, ft-lb)
T1: 4.5 (0.46, 3.3)
T2: 6.0 (0.61, 4.4)

B: CAUTION

• Before disassembling or reassembling parts, always disconnect the battery ground cable from battery. When replacing the audio, control module and other parts provided with memory functions, record the memory contents before disconnecting the battery ground cable. Otherwise, the memory is cleared.
• Reassemble the parts in the reverse order of disassembly unless otherwise indicated.
• Adjust parts to the given specifications.
• Connect the connectors securely during reassembly.
• After reassembly, make sure that the functional parts operate normally.

C: PREPARATION TOOL

1. GENERAL TOOL

TOOL NAME	REMARKS
Circuit tester	Used for measuring resistance and voltage.
Hexagon wrench	Used for forcedly driving the sunroof motor.

2. Relay and Fuse

A: LOCATION

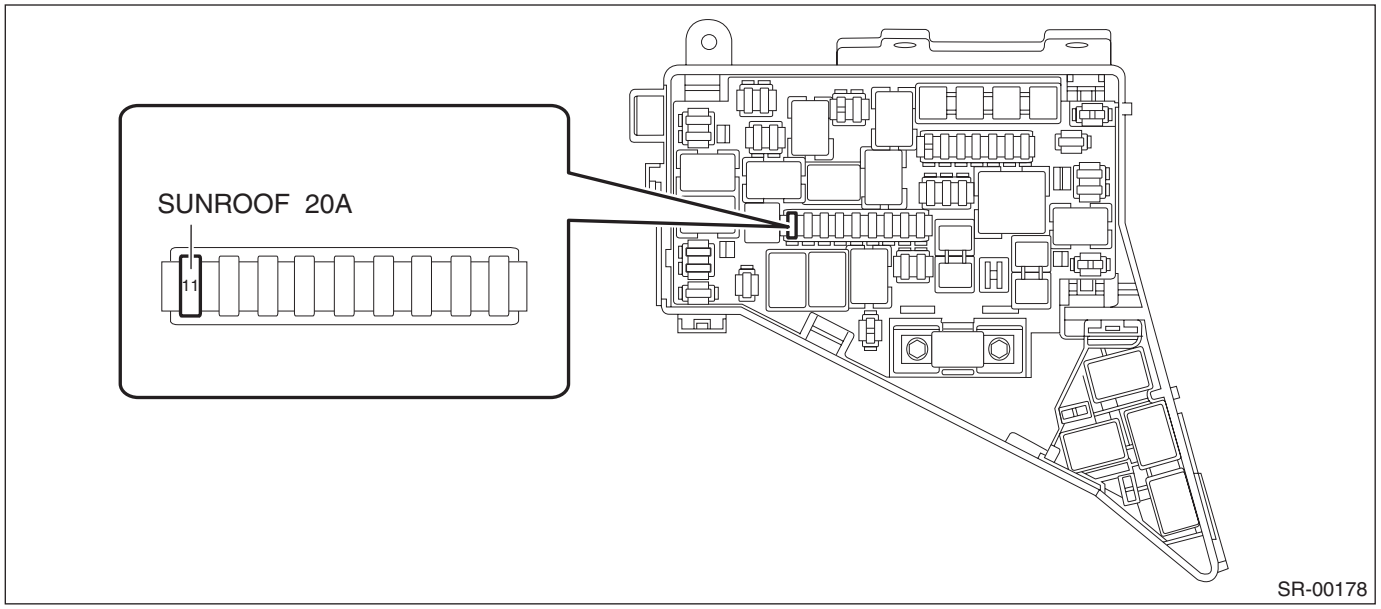

NOTE:
For other related fuses, refer to the wiring diagram. <Ref. to WI-15, Power Supply Circuit.>

B: INSPECTION

1. CHECK FUSE.

1) Remove the fuse and check visually.
2) If the fuse is blown out, replace the fuse.

3. Sunroof Control System

A: WIRING DIAGRAM

Refer to “Sunroof Control System” in the wiring diagram. <Ref. to WI-247, WIRING DIAGRAM, Sunroof Control System.>

B: INSPECTION

Symptoms	Inspection steps
Water leakage	1. Check roof panel and glass lid for improper or poor sealing. 2. Check drain tube for clogging. 3. Check sunroof frame seal and body for improper fit.
Booming noise, wind noise and other noise	1. Check glass lid and roof panel for improper clearance. 2. Check sunshade and roof trim for improper clearance.
Abnormal motor noise	1. Check installing part of motor for looseness. 2. Check gears and bearings for wear. 3. Check cable for wear. 4. Check cable pipe for deformities.
Failure of sunroof (Motor operates properly.)	1. Check guide rail for foreign particles. 2. Check guide rail for improper installation. 3. Check parts for mutual interference. 4. Check cable slider for improper clinching. 5. Check cable for improper installation.
Motor does not rotate or rotate improperly.	1. Check fuse for blown out. 2. Check switch for improper function. 3. Check motor for incorrect terminal voltage. 4. Check the relay for improper operation. 5. Check harness for open or short and terminals for poor connections.
Failure turn of glass lid	Check guide rail for foreign particles.

- Failure turn of glass lid while driving rough road.

Glass lid has auto-reverse function. When specified or more force is applied to the glass lid, the lid turns back and stops. When operating the glass lid (open or close) while driving the rough road, the lid judges vibration as a force and may causes failure turns. When the failure turn is occurred, need to perform the initialize operation with following procedure.

C: OPERATION

1. INITIALIZE OPERATION

NOTE:
When initialize operation is performed, it is necessary to press the switch repeatedly as it operates for only at the moment when the switch is pressed, even when the switch is held down.
1) Press the slide switch to close the glass lid completely.
2) Press the slide switch again and tilt up the glass lid to lock.
3) Press the slide switch for more than 0.3 seconds.
4) Initialize operation is completed.

D: NOTE

For operation procedures of each component of the sunroof control system, refer to the respective section.
- Glass lid: <Ref. to SR-6, Glass Lid.>
- Sunroof assembly: <Ref. to SR-9, Sunroof Assembly.>
- Sunroof motor: <Ref. to SR-15, Sunroof Motor.>
- Sunroof switch: <Ref. to SR-17, Sunroof Switch.>
- Sunshade: <Ref. to SR-19, Sunshade.>

4. Glass Lid

A: REMOVAL

1) Completely close the glass lid, and then open the sunshade.
2) Disconnect the claws and then remove the lid cover.

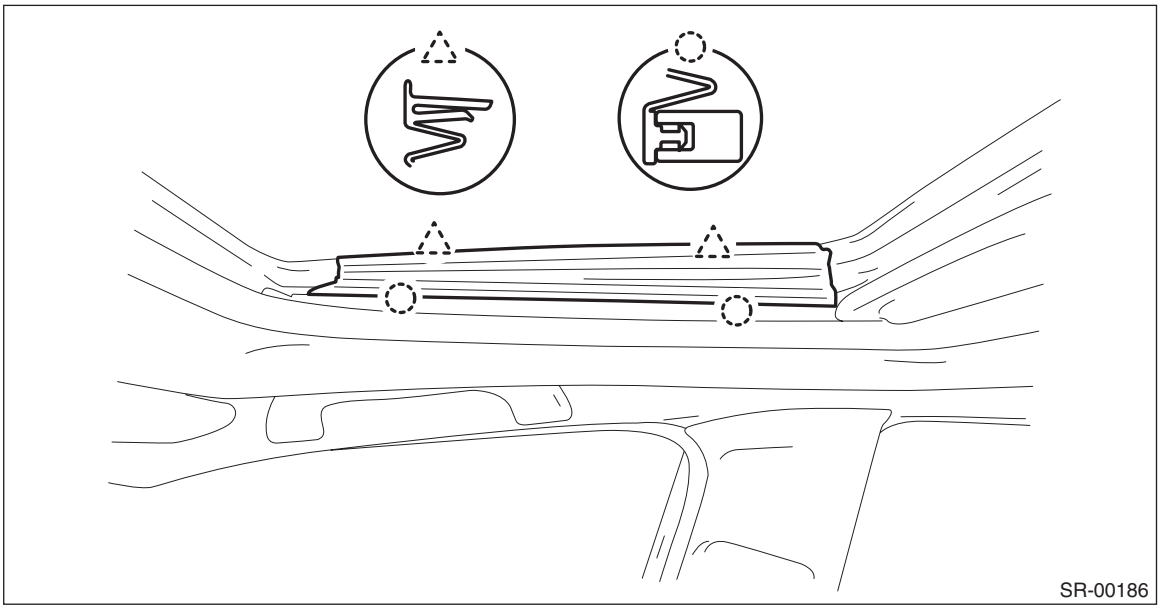

3) Remove the bolts, then remove the glass lid.

CAUTION:
Be careful not to damage the glass lid.

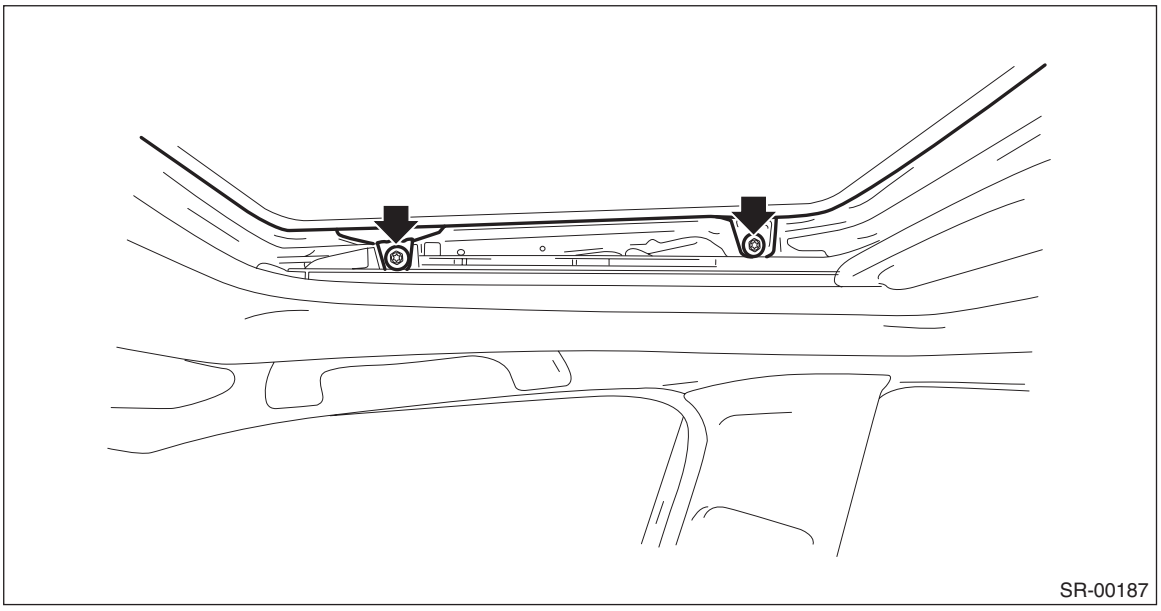

B: INSTALLATION

Install each part in the reverse order of removal.

Tightening torque:
Refer to "COMPONENT" of "General Description". <Ref. to SR-2, COMPONENT, General Description.>

C: ADJUSTMENT

Adjust the height of the glass lid and roof panel.

- Loosen the glass lid mounting bolts (A), and then adjust the height with moving the lid side.

Difference in height between weather strip and roof panel L:
0±1.0 mm (0±0.04 in)

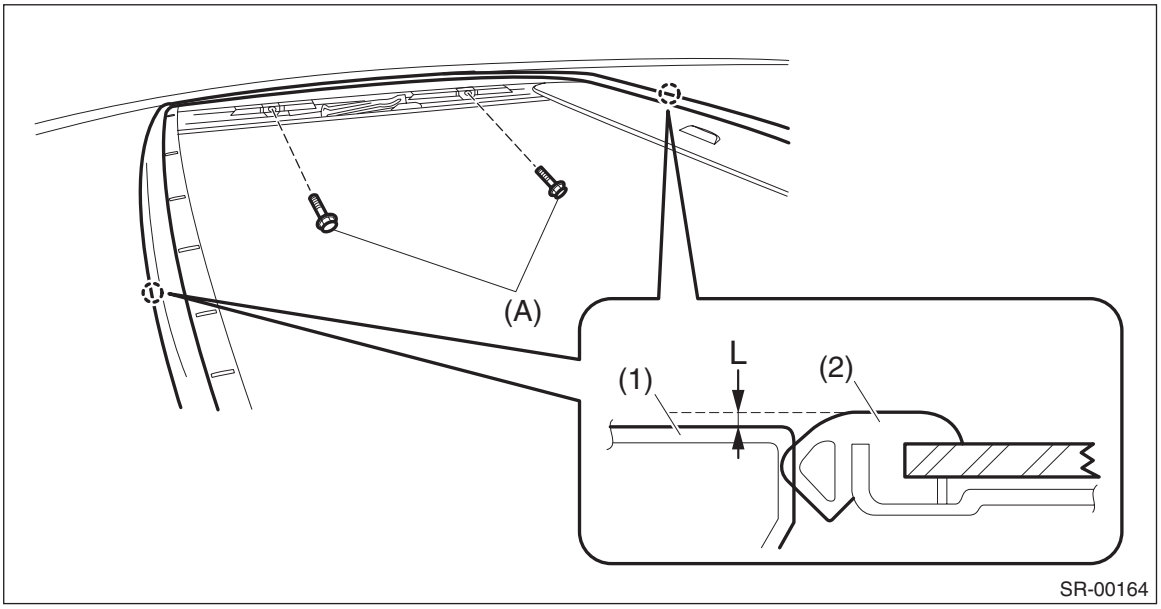

(1) Roof panel (2) Weather strip

D: FORCED DRIVE

If the glass lid does not operate or the sunroof motor is not supplied with power, move the glass lid using the hexagon wrench.

Width across flat 5 mm (0.20 in)

CAUTION:
After a forced operation, make sure to perform an initialize operation. <Ref. to SR-5, INITIALIZE OPERATION, OPERATION, Sunroof Control System.>

1) Remove the spot map light. <Ref. to LI-62, REMOVAL, Spot Map Light.>
2) Insert the hexagon wrench securely until it touches the motor shaft edge.
3) Turn the hexagon wrench, and move the glass lid.

- Turning right, the glass lid open.
- Turning left, the glass lid close.

CAUTION:
Be careful not to damage the adjacent parts with the rod end when moving the glass lid with the hexagon wrench.

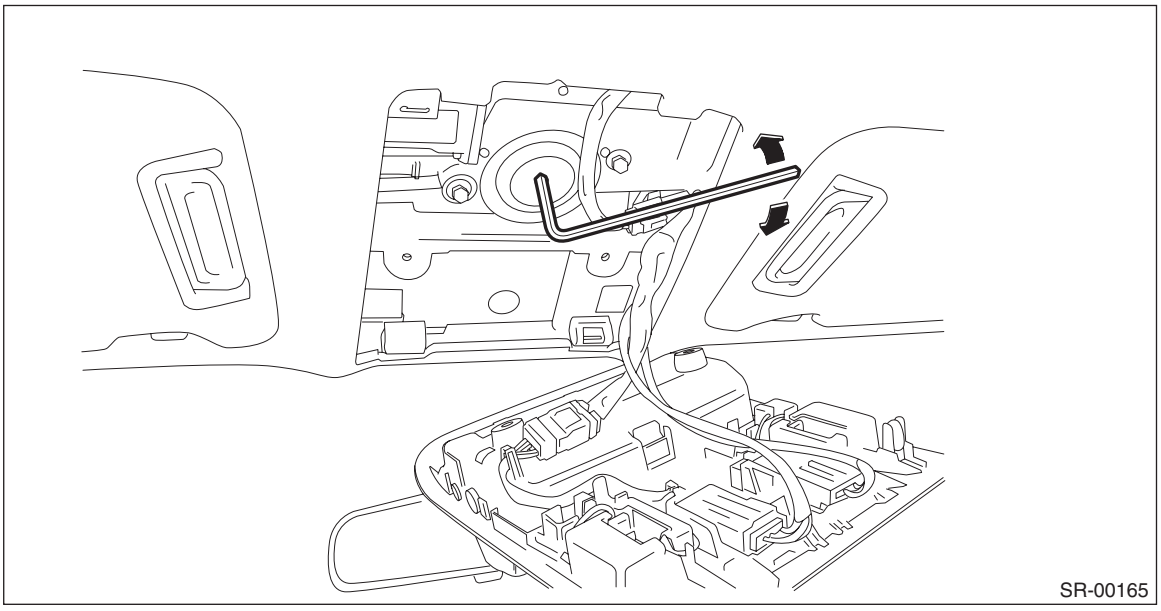

5. Sunroof Assembly

A: REMOVAL

CAUTION:
When removing the clip, use great care not to damage the roof trim.

1) Remove the glass lid.
   (1) Completely close the glass lid, and then open the sunshade.
   (2) Disconnect the claws and then remove the lid cover.

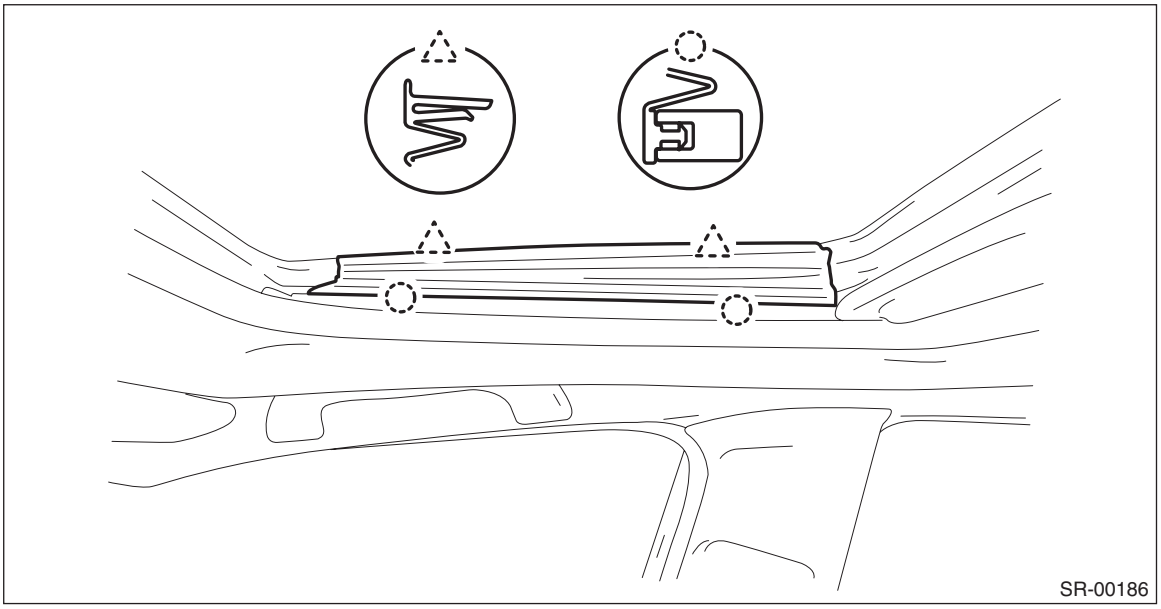

   (3) Remove the bolts, then remove the glass lid.

CAUTION:
Be careful not to damage the glass lid.

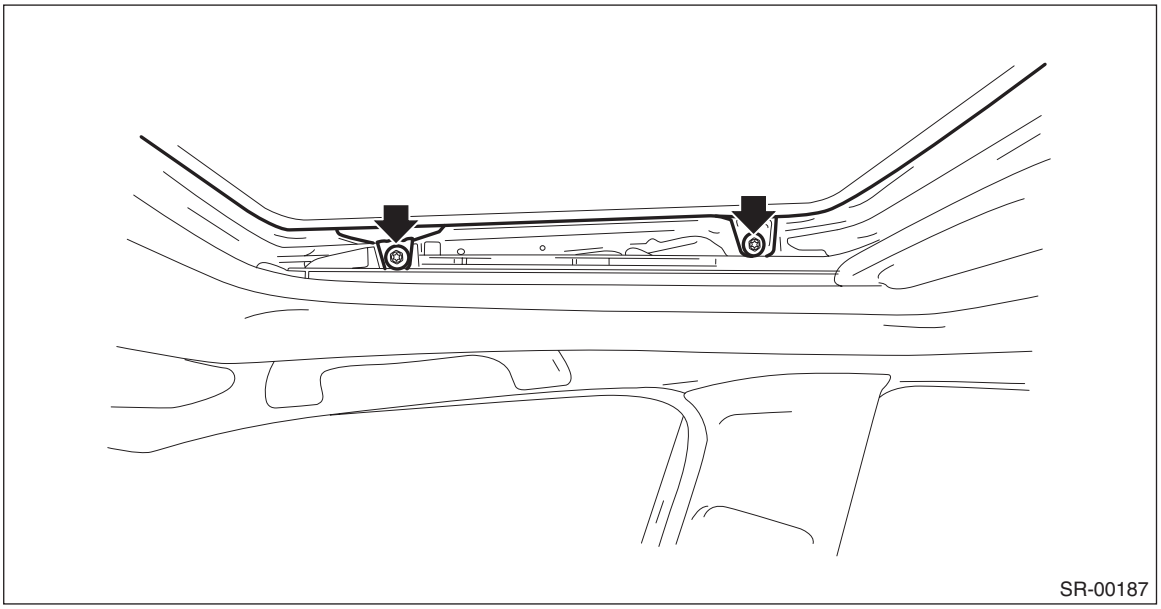

2) Remove the roof trim. <Ref. to EI-131, REMOVAL, Roof Trim.>
3) Disconnect the sunroof motor connector.

4) Remove the frame assembly.
(1) Remove the drain tube.

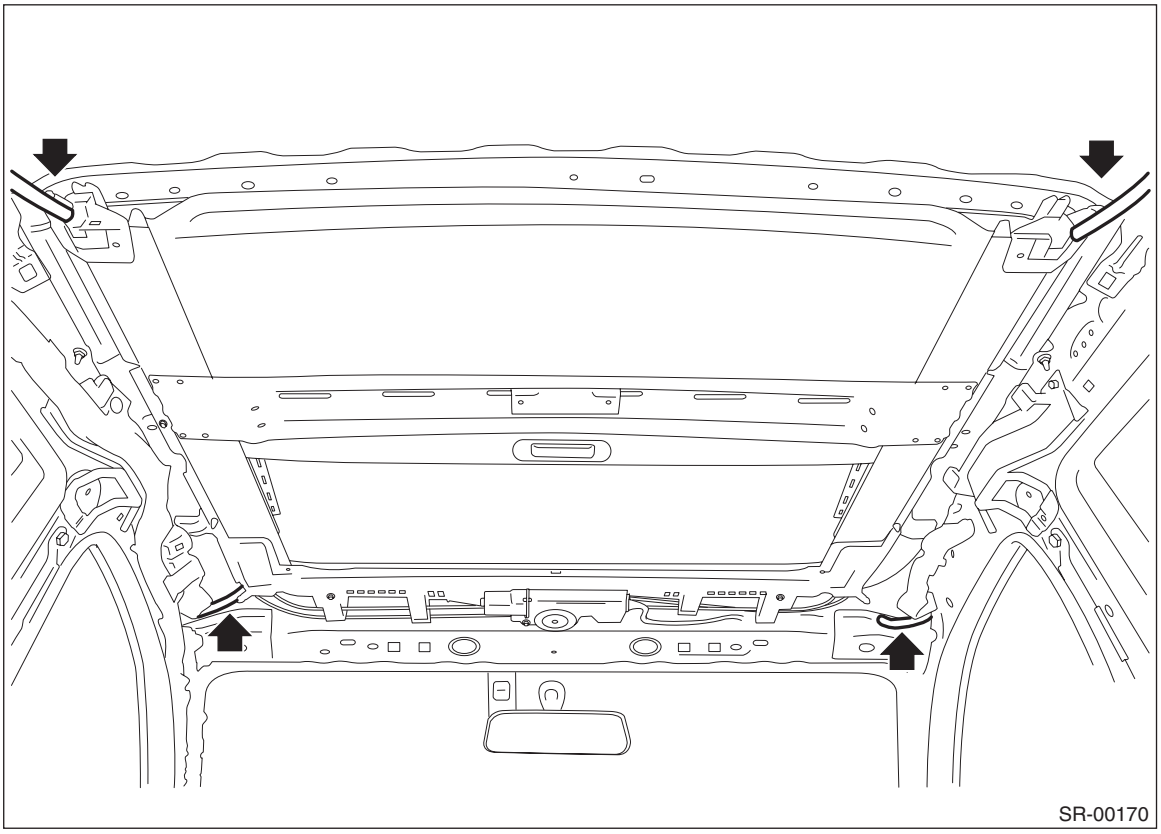

(2) Remove the bolts and then remove the sunroof bracket.

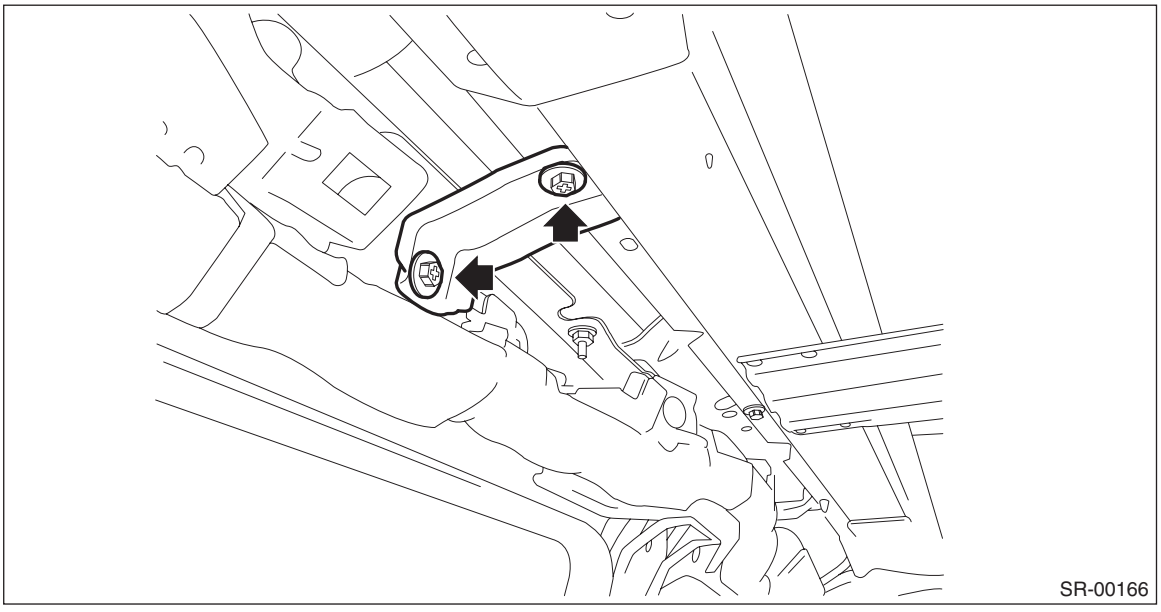

(3) Remove the bolts, then remove the frame assembly.

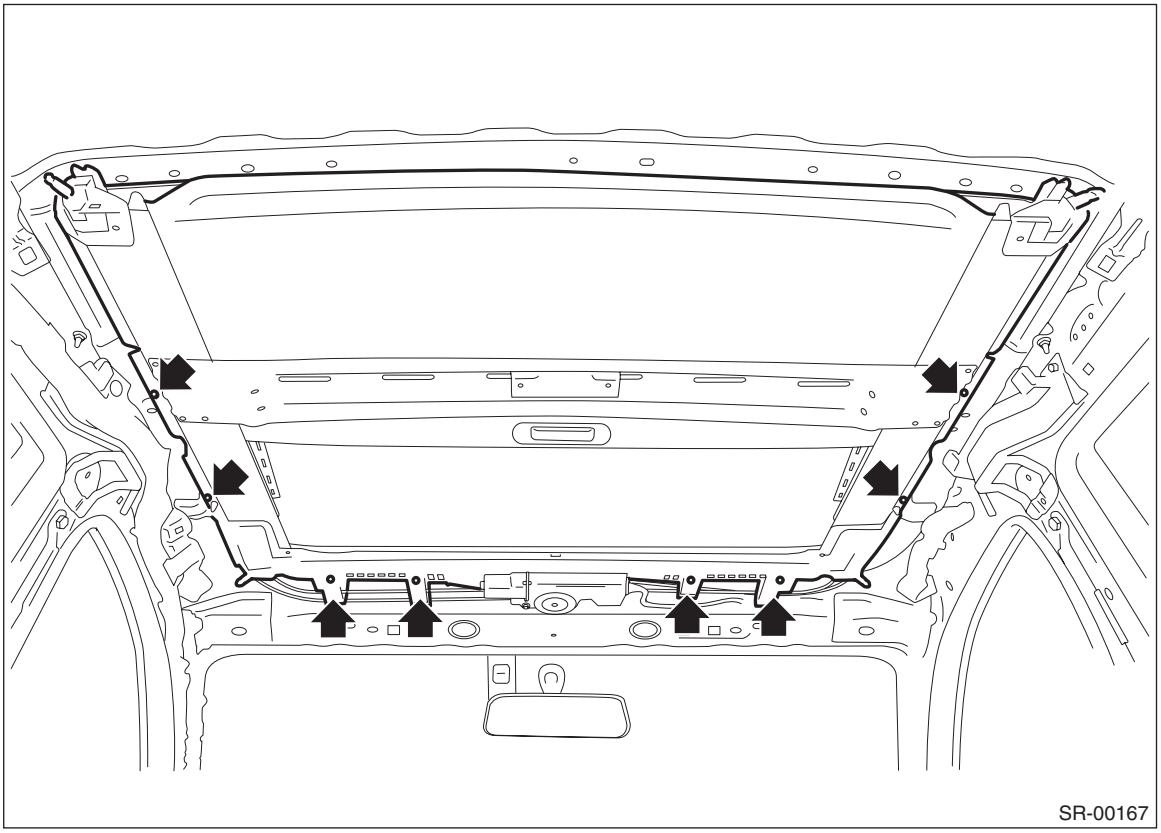

B: INSTALLATION

CAUTION:
Be careful not to snag the harness.
Install each part in the reverse order of removal.

Tightening torque:
Refer to "COMPONENT" of "General Description". <Ref. to SR-2, COMPONENT, General Description.>

NOTE:
- Be sure to connect the harness connector.
- When installing the drain tube, insert it securely into drain pipe.

Length A:
15 mm (0.59 in) or more

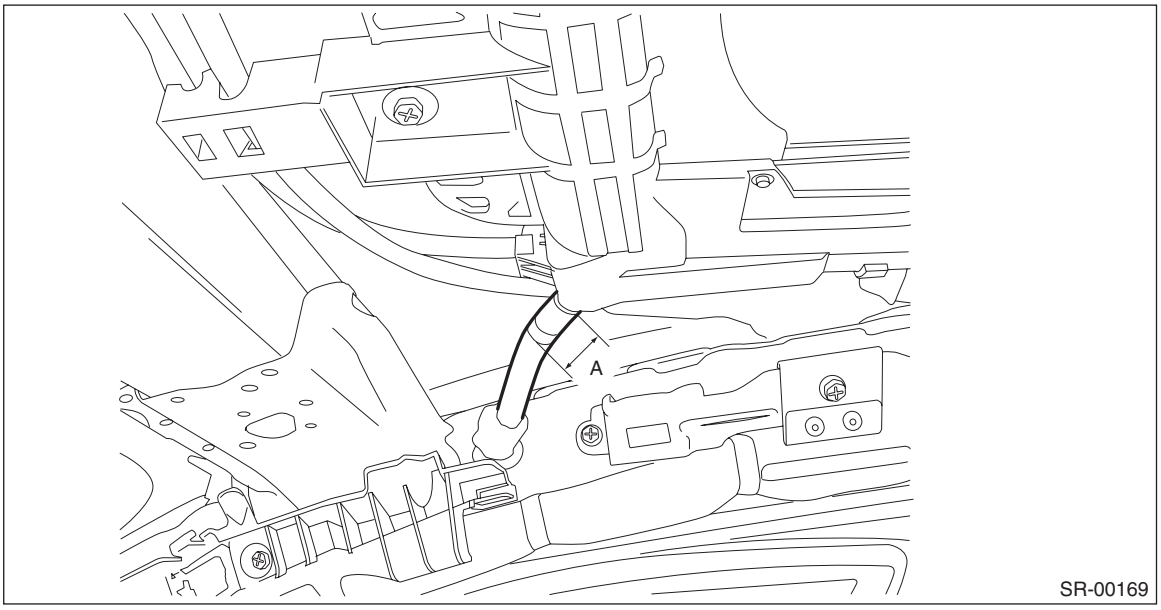

C: DISASSEMBLY

1) Remove the bolts and then remove the sunroof motor.

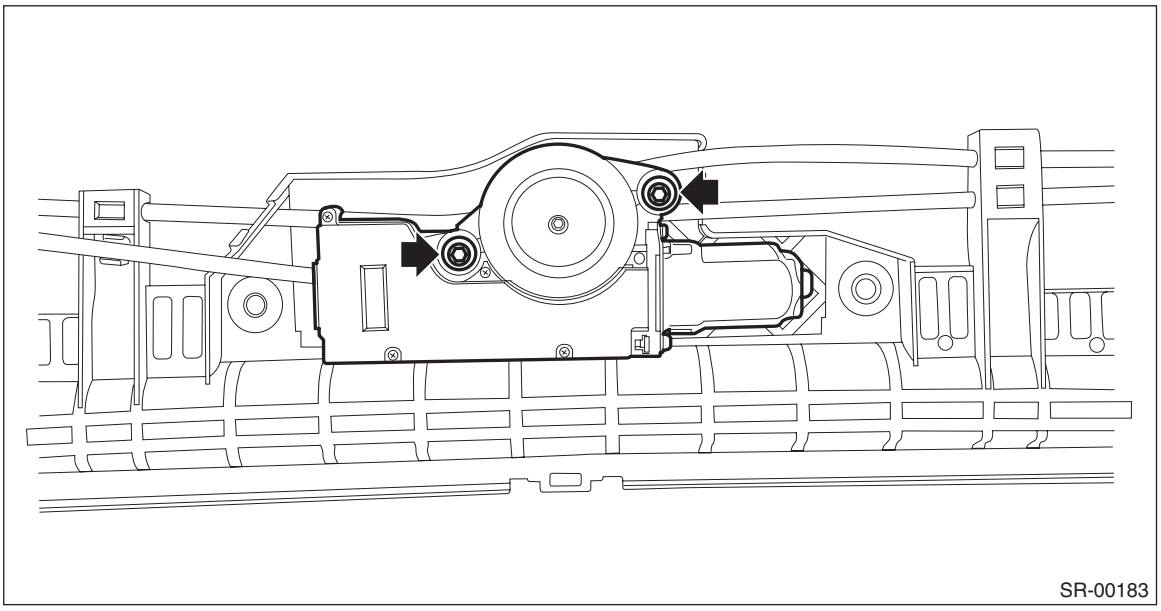

2) Remove the stopper rubber and pull out the sunshade from sunroof frame.

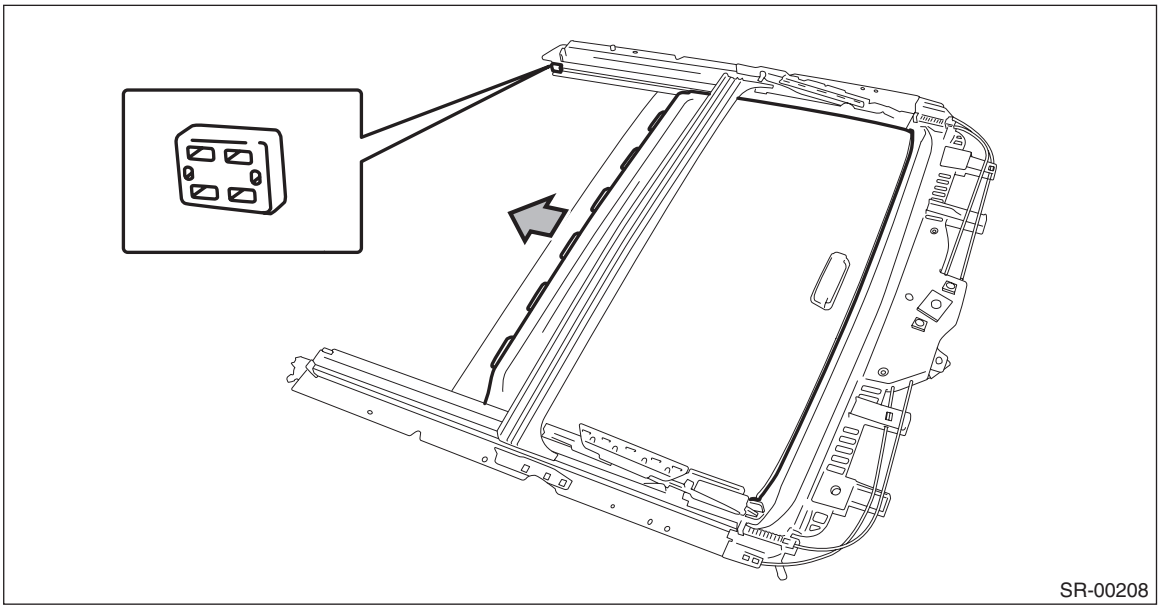

3) Remove the sunroof cable assembly.
   (1) Remove the screw and remove the drain holder.

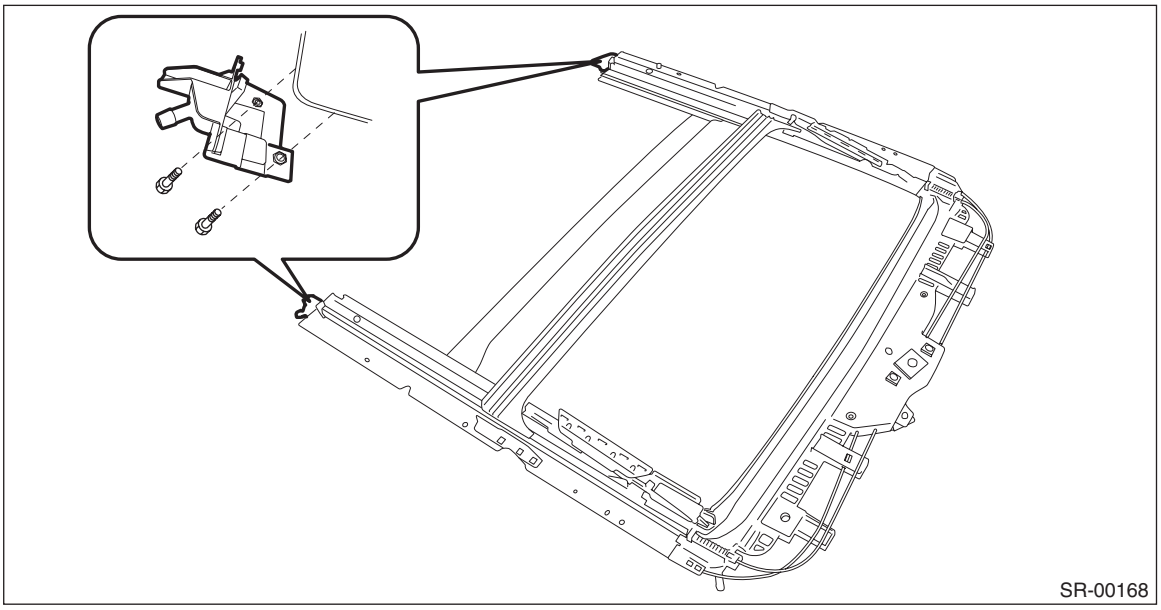

(2) Remove the screw and pull out the sunroof cable assembly from the frame roof assembly.

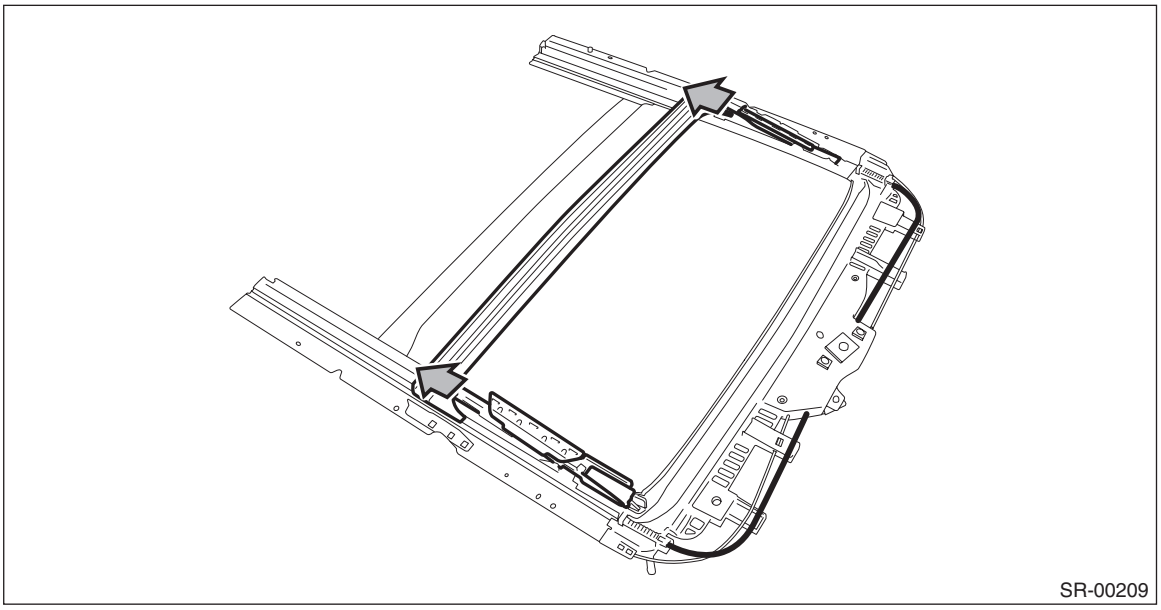

D: ASSEMBLY

Install each part in the reverse order of removal.

6. Sunroof Motor

A: REMOVAL

1) Completely close the glass lid.
2) Disconnect the ground cable from battery.
3) Remove the overhead console.
   (1) Push and open the rear end of the overhead console lid, and remove the screws.
   (2) Remove the clips and pull out the overhead console to disconnect the connectors.

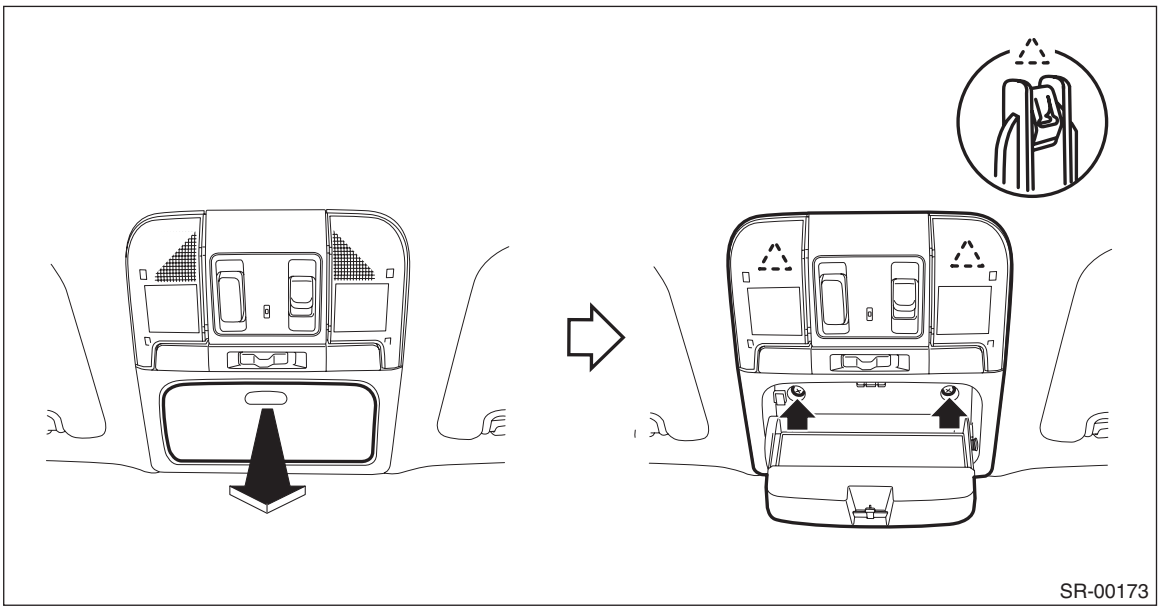

4) Remove the sunroof motor assembly.
   (1) Disconnect the connector.
   (2) Remove the bolts and remove the sunroof motor assembly.

CAUTION:
When removing the motor assembly, secure the cable wires so that it does not move.

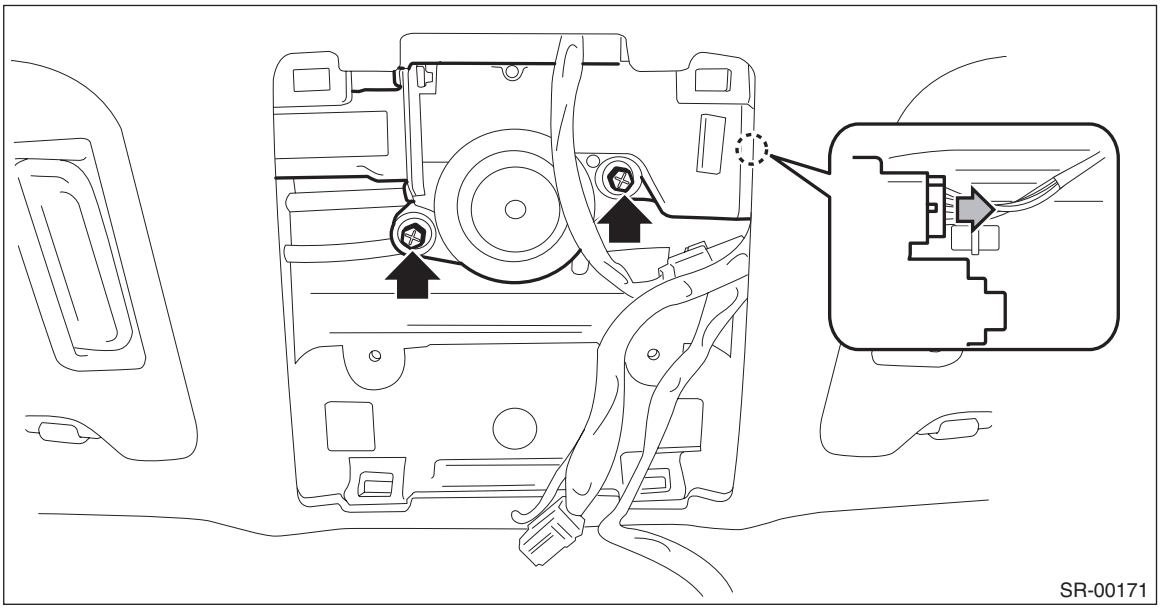

B: INSTALLATION

CAUTION:
When installing the motor assembly, be careful not to move the sunroof cable.
1) Align the lid bracket and link assembly in the same position.

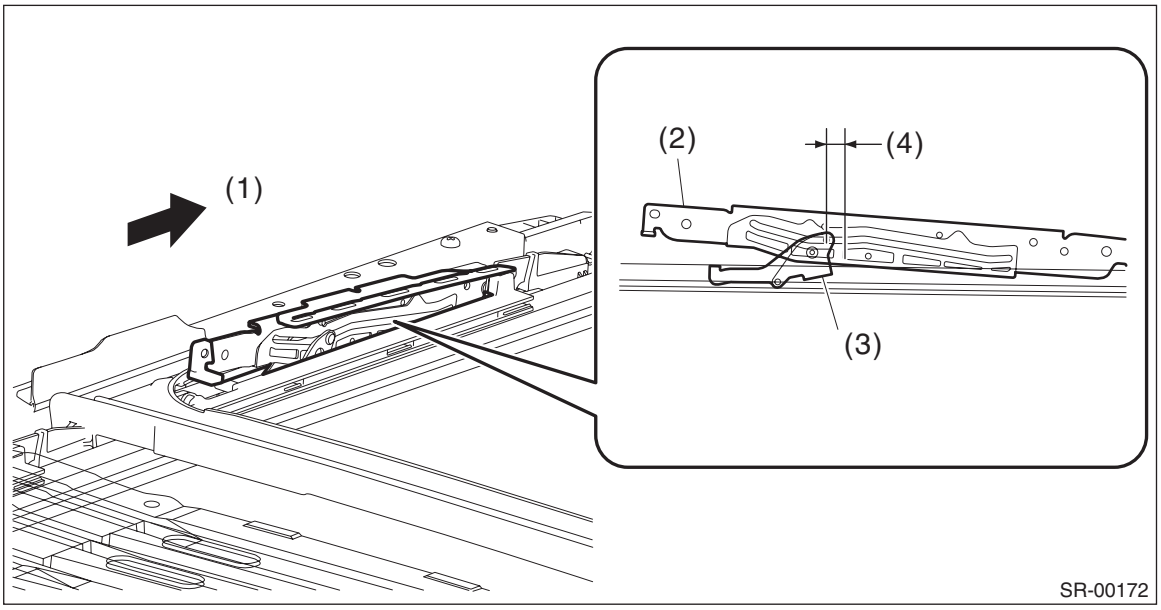

(1) Front
(2) Lid bracket
(3) Link ASSY
(4) 8.9 mm (0.35 in)

2) Install the sunroof motor assembly.
3) Install the spot map light, and connect the ground cable to the battery.
4) Perform the initialize operation. <Ref. to SR-5, INITIALIZE OPERATION, OPERATION, Sunroof Control System.>
5) Check the operation of sunroof with following table below.

Operation	Switch position
(1) Glass lid closes completely.	Close
(2) Glass lid tilt up to the top position.	Tilt up
(3) Glass lid closes completely.	Tilt down
(4) Glass lid opens 291 mm (11.46 in) away from completely closed position. (OUTBACK model)	Open
(5) Glass lid opens completely.	Open
(6) Glass lid closes completely.	Close

C: INSPECTION

Check the auto-reverse mechanism.

CAUTION:
Do not place objects in the way to check the auto-reverse mechanism.
1) Open the glass lid.
2) Forcefully push the glass lid in the opening direction while auto-closing, to check whether the window auto-reverse mechanism functions.

NOTE:
• The auto-function is cancelled when the window auto-reverse mechanism is activated more than five times.
• If the auto function is cancelled, reset it. <Ref. to SR-5, OPERATION, Sunroof Control System.>

7. Sunroof Switch

A: REMOVAL

1) Disconnect the ground cable from battery.
2) Remove the overhead console.
   (1) Push and open the rear end of the overhead console lid, and remove the screws.
   (2) Remove the clips and pull out the overhead console to disconnect the connectors.

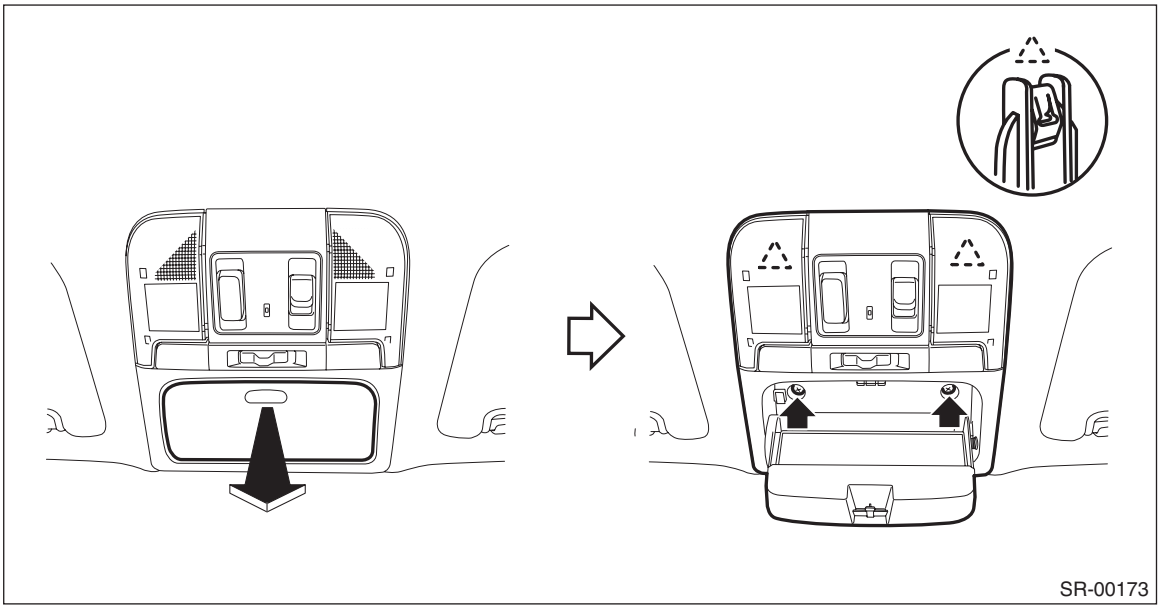

3) Release the claws and remove the sunroof switch from the overhead console.

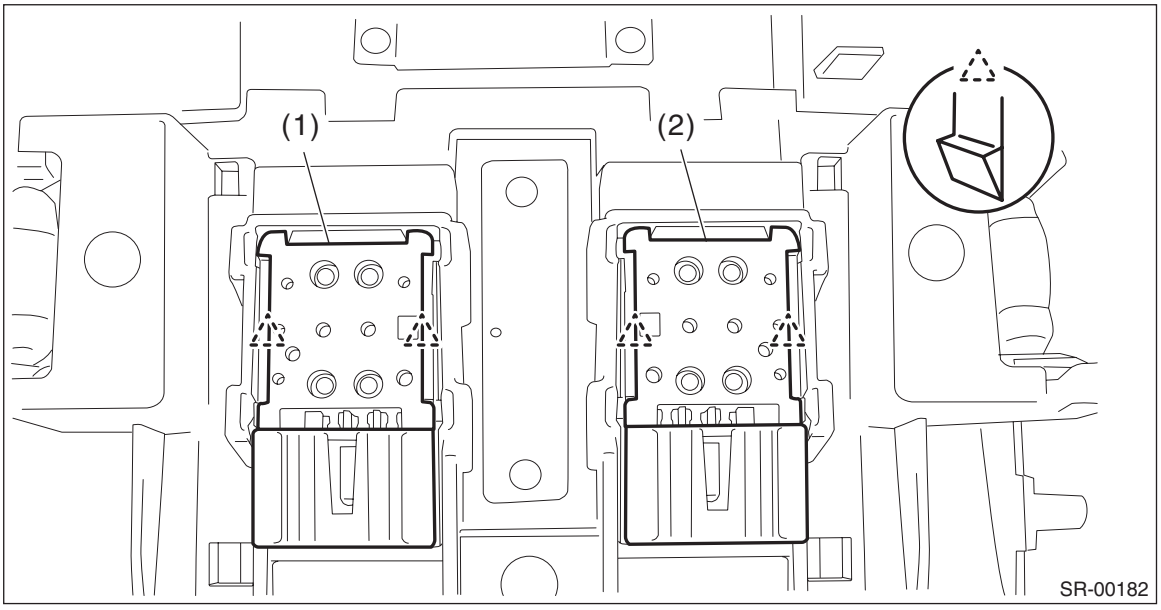

(1) Sunroof switch (tilt)
(2) Sunroof switch (slide)

B: INSTALLATION

Install each part in the reverse order of removal.

C: INSPECTION

1) Remove the overhead console.
2) Check the resistance between sunroof switch terminals.

Preparation tool: Circuit tester

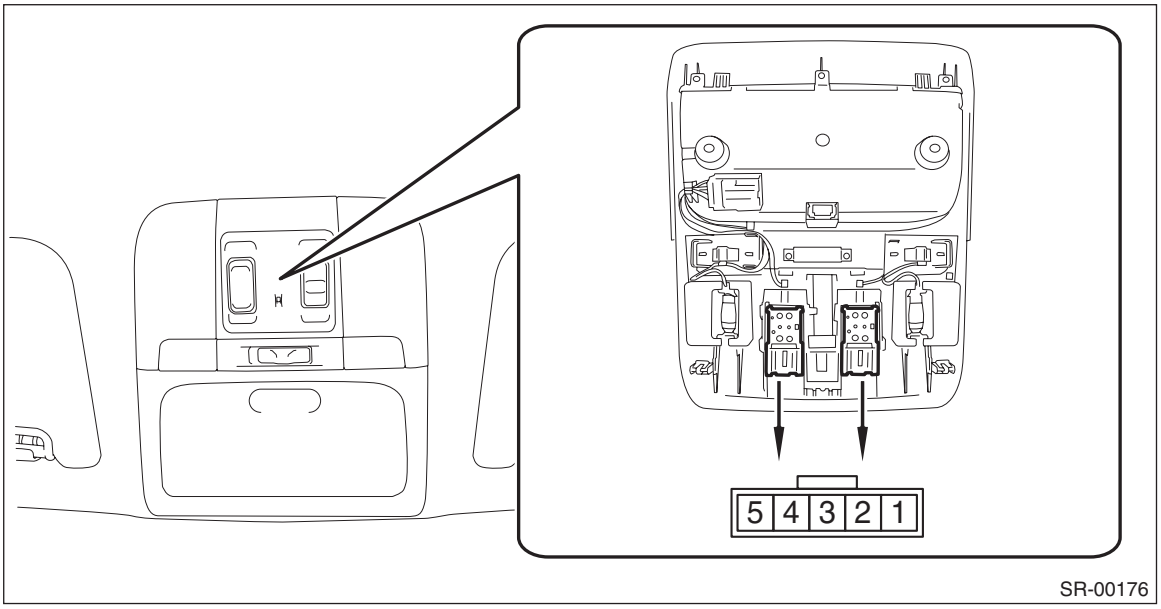

Terminal No.	Inspection conditions	Standard	Connector No.
1 — 3	Open	Less than 1 Ω	R128
4 — 3	Close	Less than 1 Ω	
1 — 3	Tilt up	Less than 1 Ω	R187
4 — 3	Tilt down	Less than 1 Ω	

3) Replace the sunroof switch if the inspection result is not within the standard value.

8. Sunshade

A: REMOVAL

CAUTION:
When removing the clip, use great care not to damage the roof trim.

1) Remove the glass lid.
   (1) Completely close the glass lid, and then open the sunshade.
   (2) Disconnect the claws and then remove the lid cover.

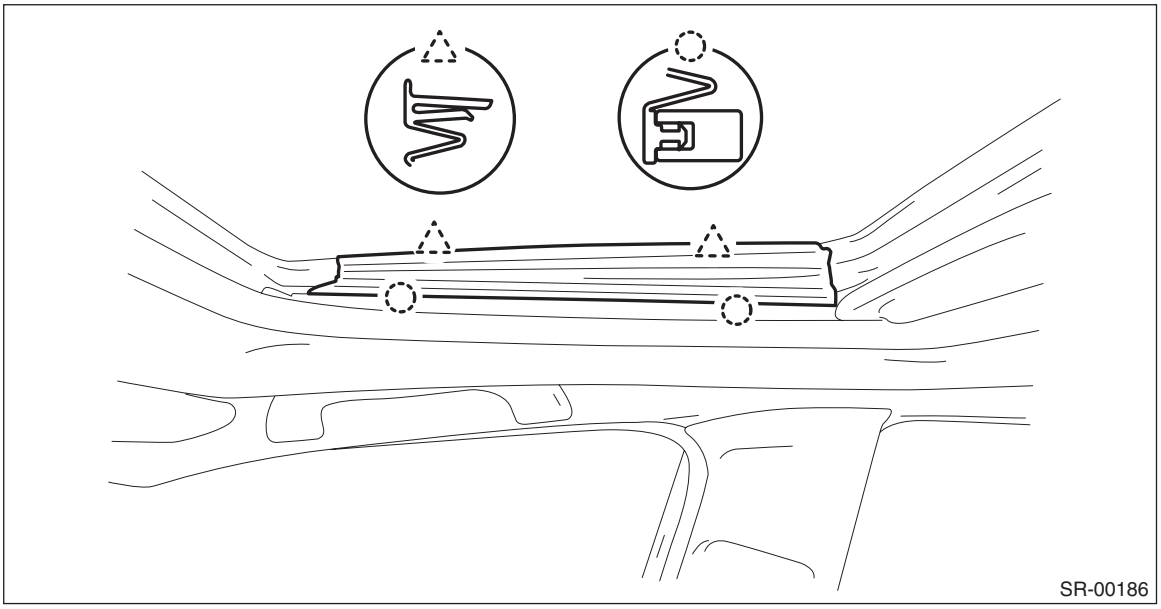

   (3) Remove the bolts, then remove the glass lid.

CAUTION:
Be careful not to damage the glass lid.

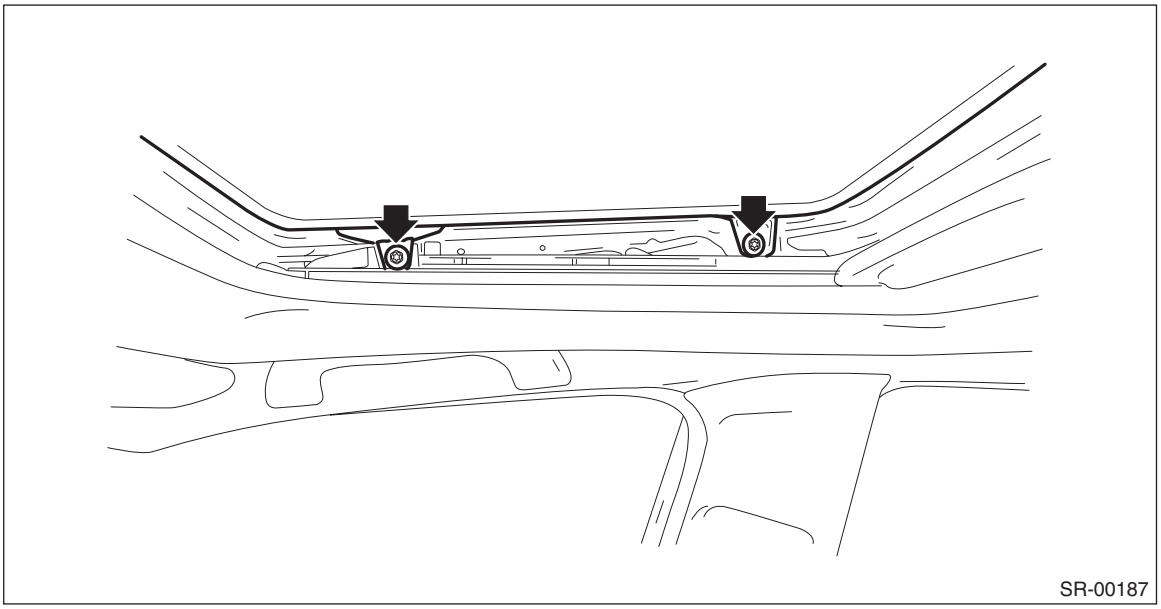

2) Remove the roof trim. <Ref. to EI-131, REMOVAL, Roof Trim.>
3) Disconnect the sunroof motor connector.

4) Remove the frame assembly.
(1) Remove the drain tube.

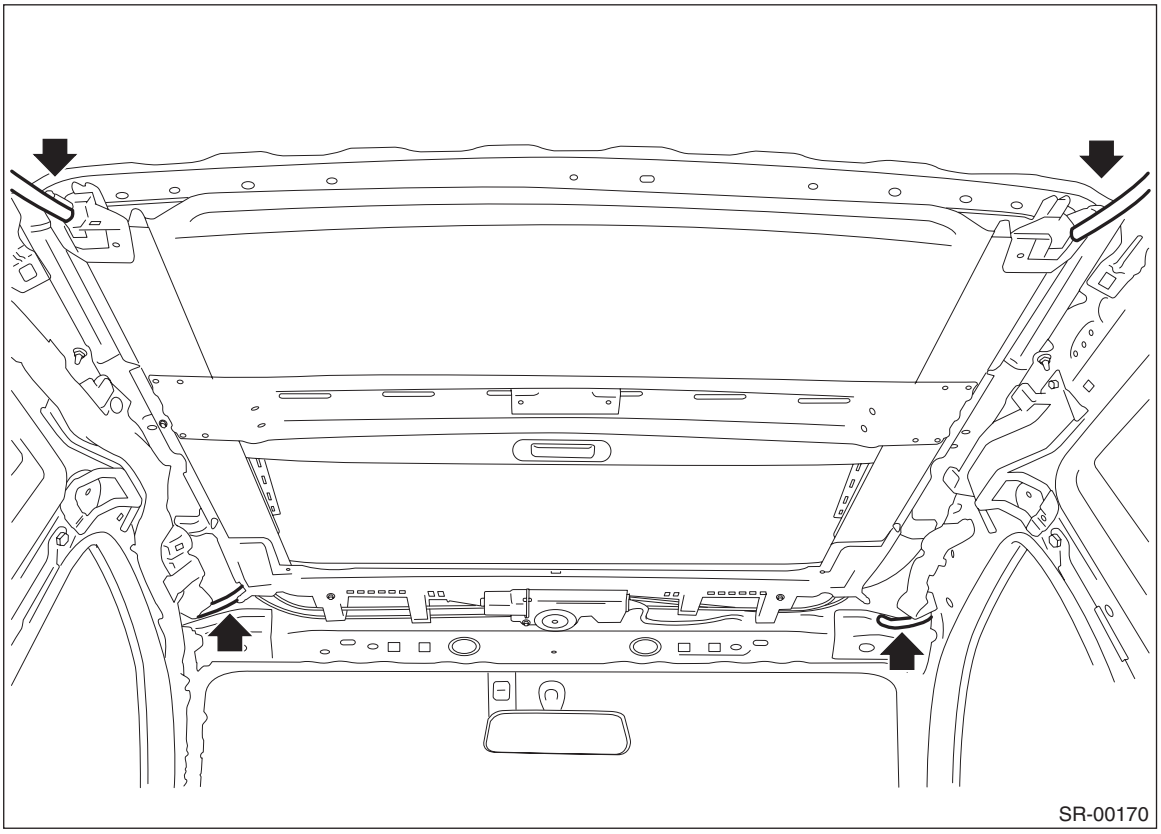

(2) Remove the bolts and then remove the sunroof bracket.

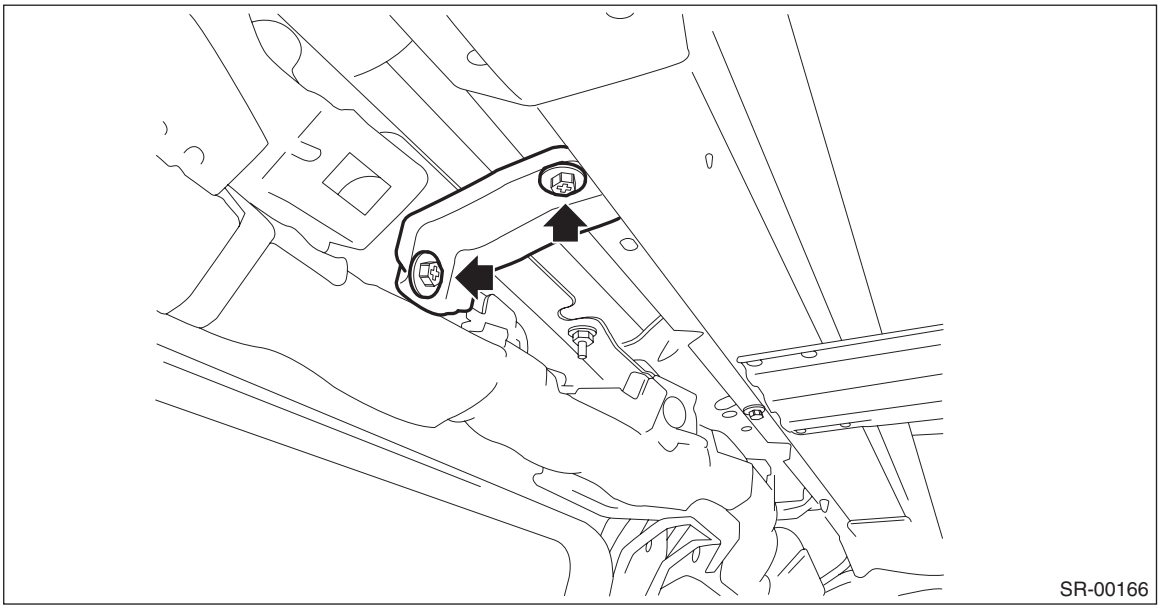

(3) Remove the bolts, then remove the frame assembly.

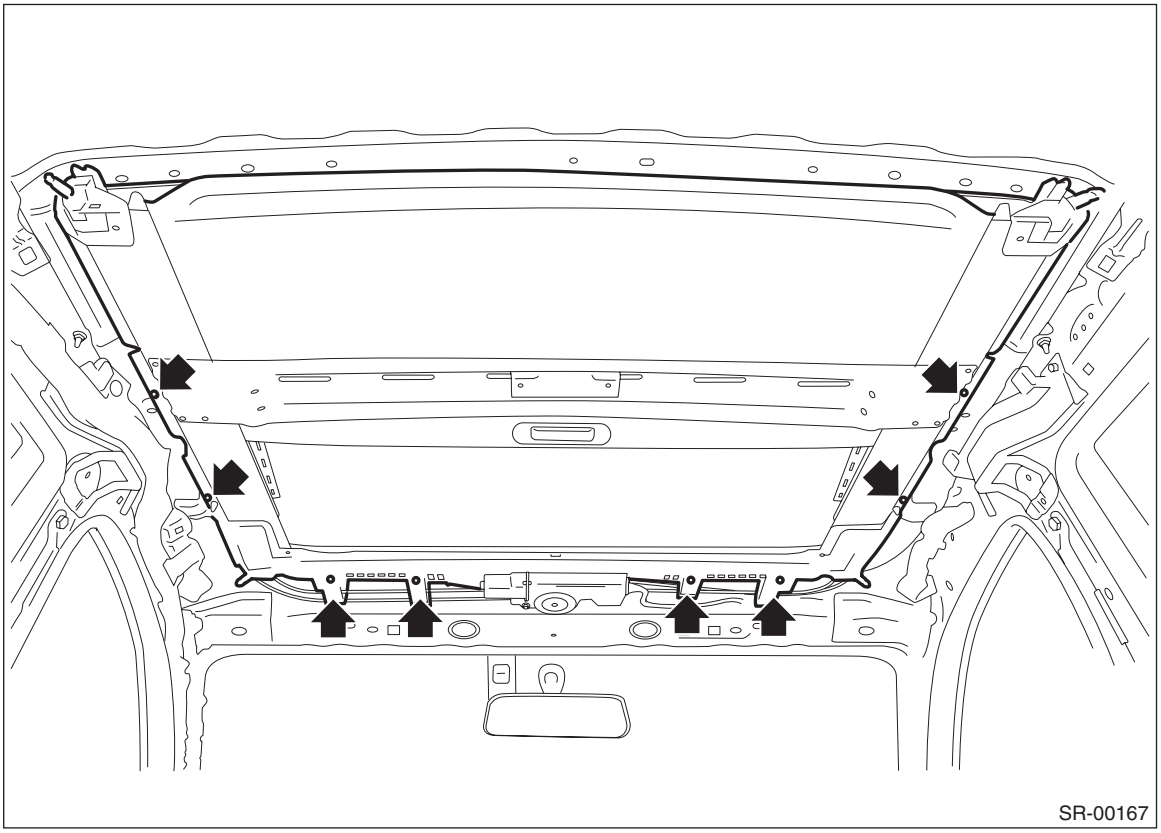

5) Remove the stopper rubber and pull out the sunshade from sunroof frame.

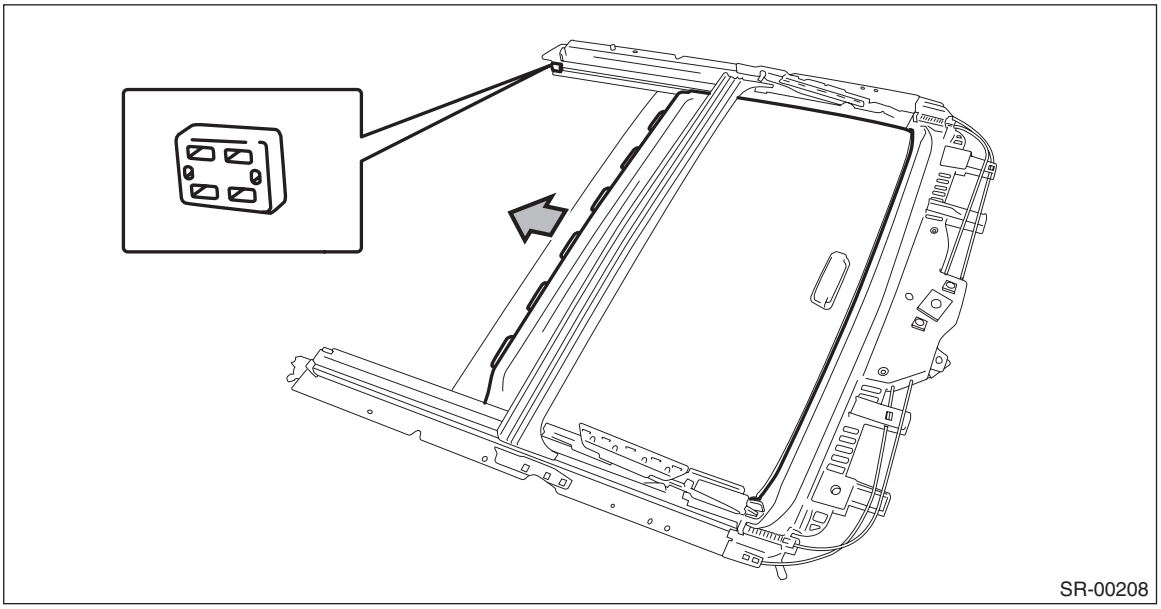

B: INSTALLATION

Install each part in the reverse order of removal.

Tightening torque:

Refer to "COMPONENT" of "General Description". <Ref. to SR-2, COMPONENT, General Description.>

C: INSPECTION

1. CHECK FOR MOVING LOAD OF SUNSHADE

1) Attach a spring scale to sunshade edge using a cloth.
2) Pull the spring scale to check the moving load of the sunshade.

Moving load of sunshade:
14±6 N (1.43 kgf, 3.1 lbf±0.61 kgf, 1.3 lbf)

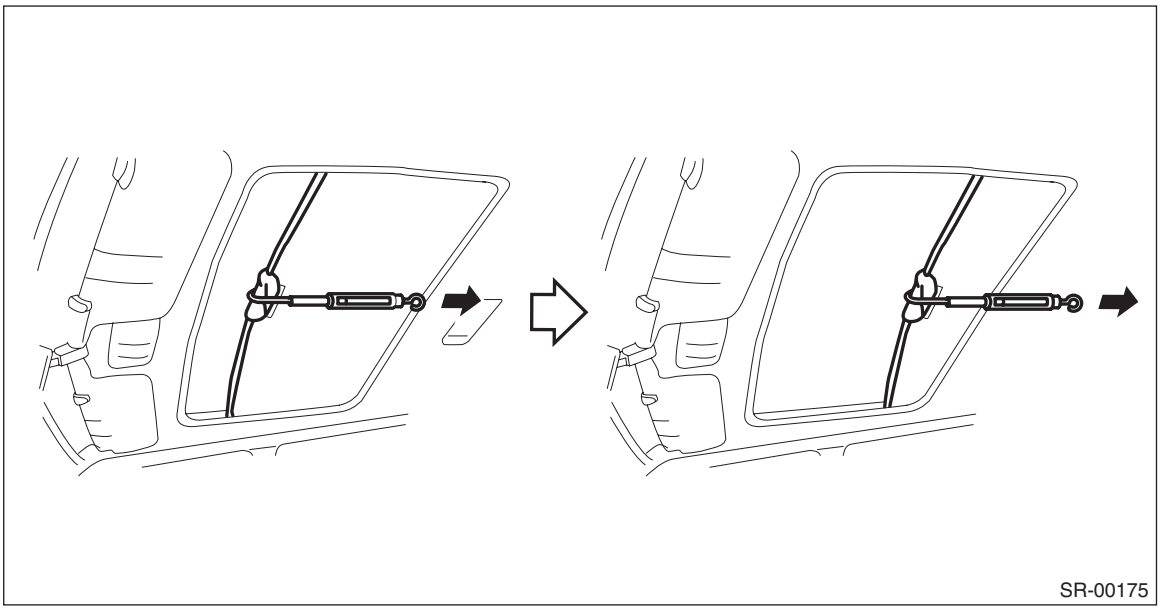

NOTE:
Moving load is larger at the beginning of pulling a spring scale, so take a spring scale reading while sunshade sliding smoothly.
3) If the inspection result exceeds the standard value, check if the installation to sunshade or frame assembly is sufficient, and replace if necessary.

EXTERIOR/INTERIOR TRIM

EI

		Page
1.	General Description	2
2.	Front Grille	26
3.	Front Hood Grille	30
4.	Cowl Panel	32
5.	Front Under Cover	35
6.	Floor Under Protector	36
7.	Fuel Tank Protector	37
8.	Mud Guard	38
9.	Front Bumper	39
10.	Rear Bumper	50
11.	Side Sill Spoiler	55
12.	Roof Molding	56
13.	Roof Rail	59
14.	Door Trim	60
15.	Instrument Panel Lower Cover	64
16.	Glove Box	66
17.	Center Console	69
18.	Console Box	73
19.	Instrument Panel Assembly	76
20.	Lower Inner Trim	96
21.	Upper Inner Trim	102
22.	Rear Quarter Trim	110
23.	Rear Shelf Trim	120
24.	Trunk Room Trim	127
25.	Sun Visor	129
26.	Assist Grip	130
27.	Roof Trim	131
28.	Rear Gate Trim	160
29.	Floor Mat	162
30.	Trunk Lid Garnish	163
31.	Rear Gate Garnish	164
32.	Heat Shield Cover	167
33.	Ornament	169

1. General Description

A: COMPONENT

1. FRONT UNDER COVER

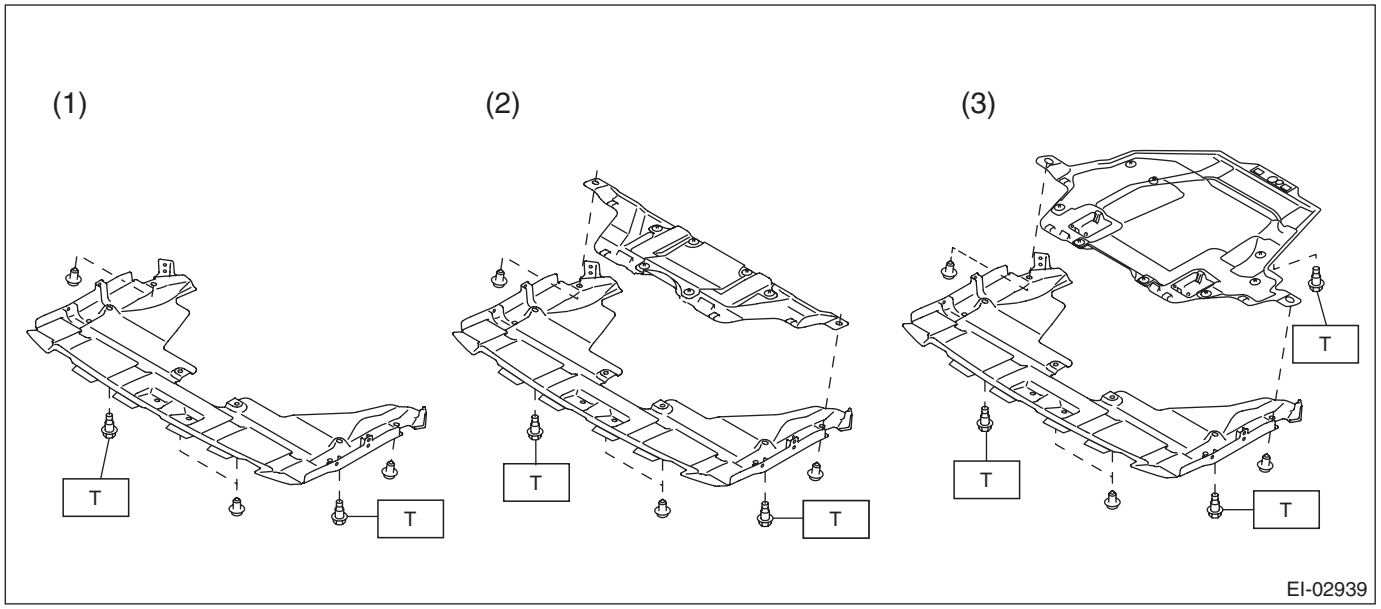

(1) Small type
(2) Medium type
(3) Large type

Tightening torque:N·m (kgf-m, ft-lb)
T: 17.5 (1.78, 12.9)

2. FLOOR UNDER PROTECTOR

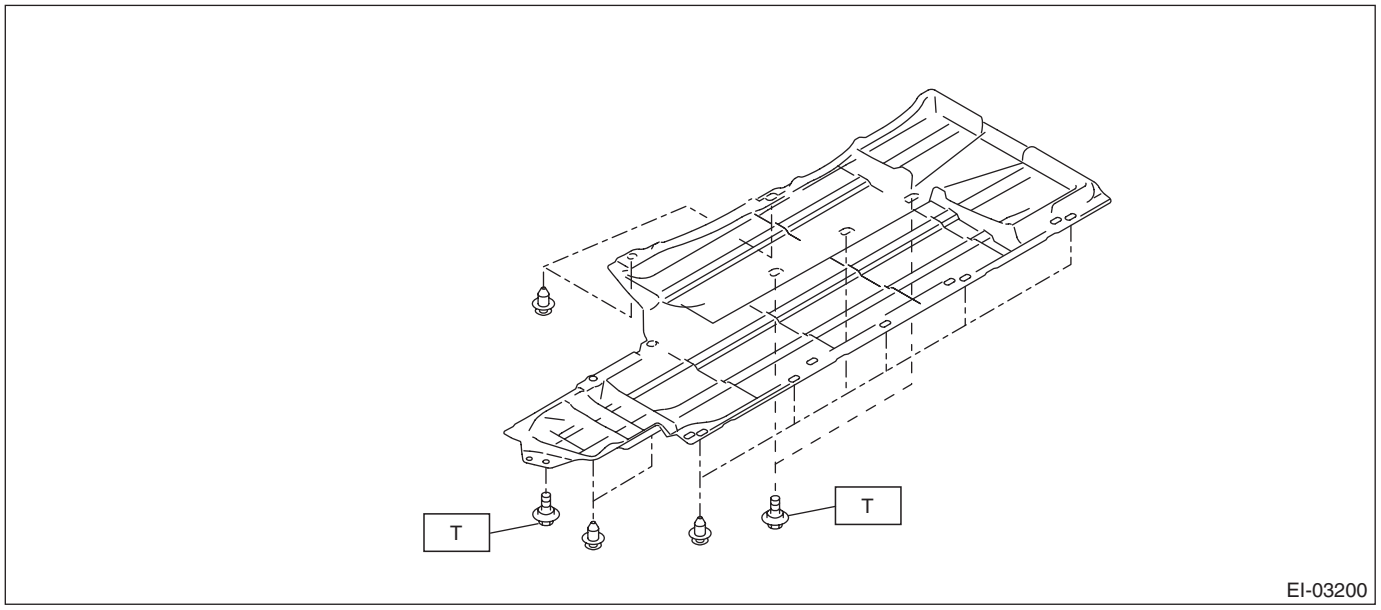

Tightening torque:N·m (kgf-m, ft-lb)
T: 7.5 (0.76, 5.5)

3. FUEL TANK PROTECTOR

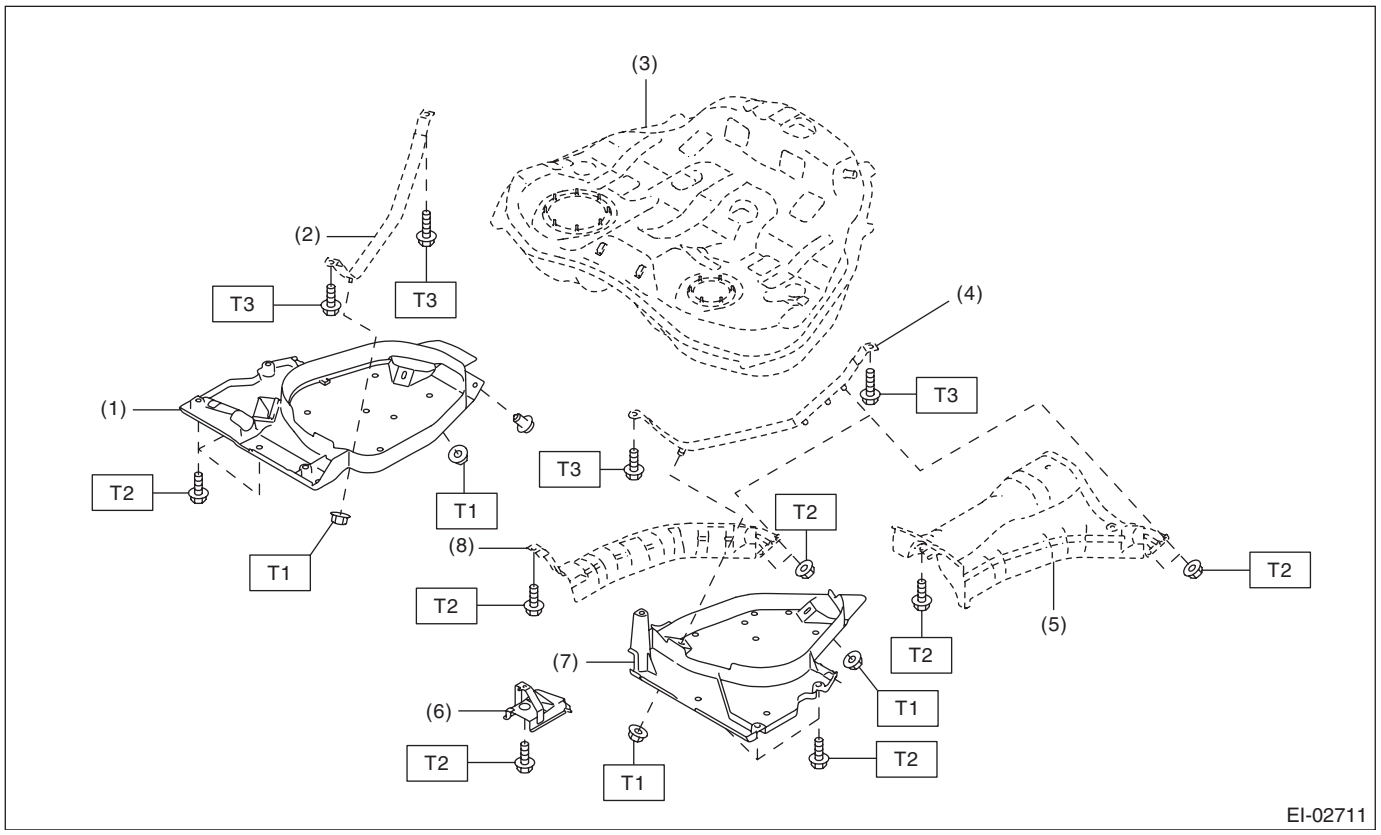

(1)	Fuel tank protector RH	(5)	Center heat shield cover (DOHC model)	***Tightening torque:N·m (kgf-m, ft-lb)***
(2)	Fuel tank band ASSY RH	(6)	Fuel tank bracket	***T1: 9 (0.92, 6.6)***
(3)	Fuel tank ASSY	(7)	Fuel tank protector LH	***T2: 18 (1.84, 13.3)***
(4)	Fuel tank band ASSY LH	(8)	Center heat shield cover (SOHC model)	***T3: 33 (3.36, 24.3)***

4. FRONT HOOD GRILLE

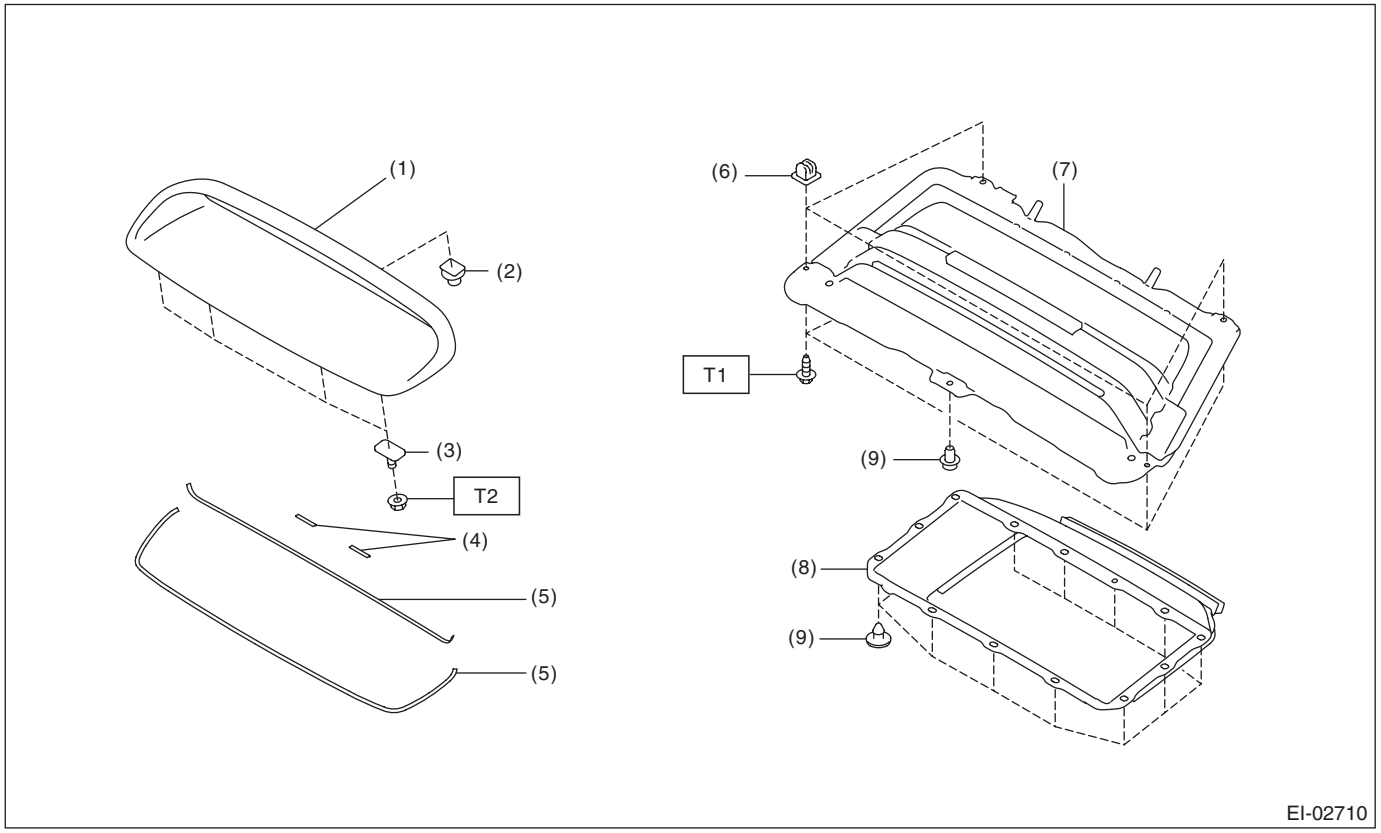

(1) Front hood grille
(2) Clip anchor
(3) Bolt
(4) Protector
(5) Gasket
(6) Grommet
(7) Hood duct
(8) Hood duct inner
(9) Clip

Tightening torque:N·m (kgf-m, ft-lb)
T1: 1.0 (0.1, 0.7)
T2: 4.5 (0.46, 3.3)

5. FRONT BUMPER

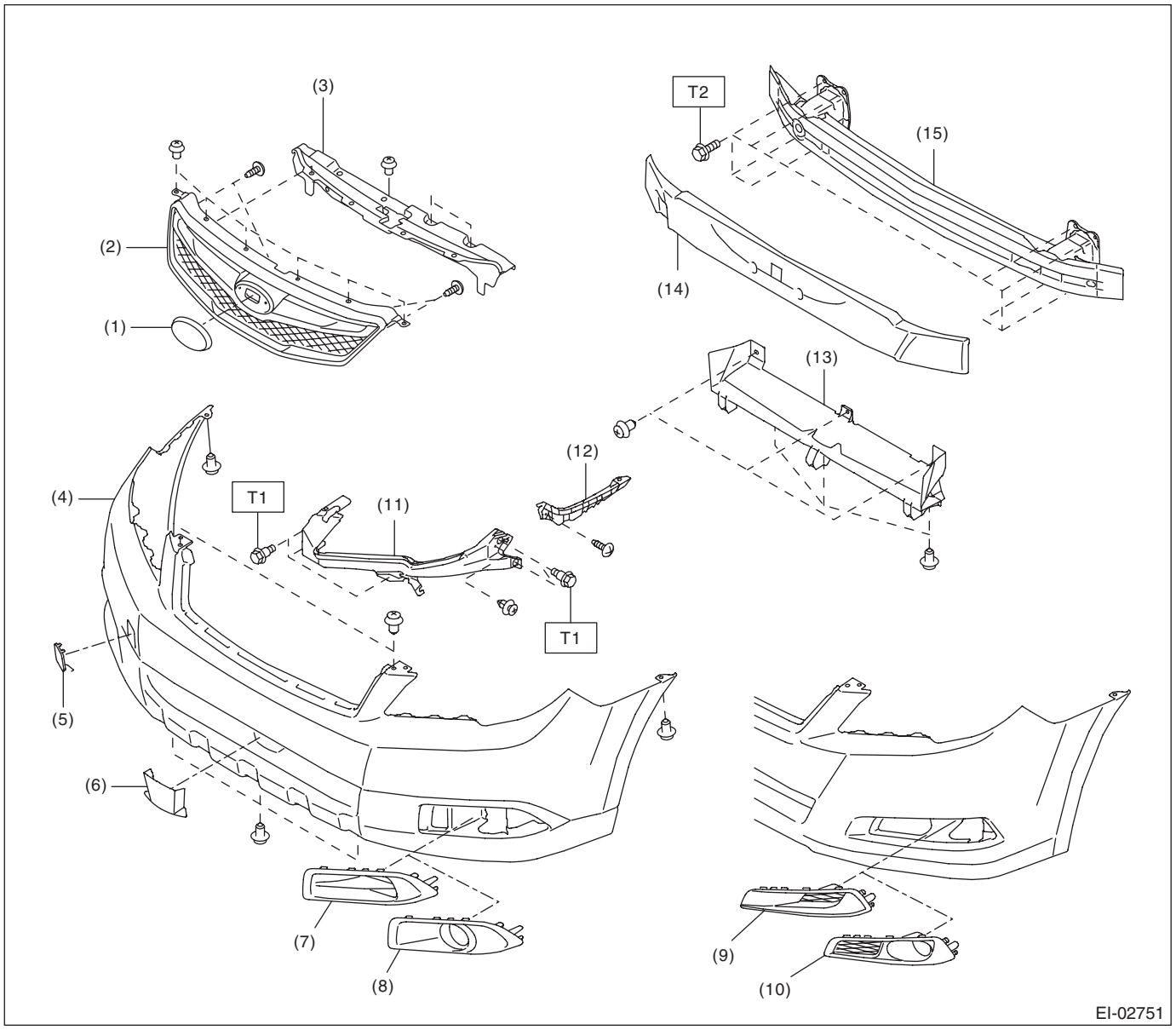

(1) Floor ornament
(2) Front grille ASSY
(3) Grille bracket
(4) Front bumper face
(5) Front hook cover
(6) Bumper cover CTR (sedan model only)
(7) Bumper cover (OUTBACK model)
(8) Fog light cover (OUTBACK model)
(9) Bumper cover (sedan model)
(10) Fog light cover (sedan model)
(11) Bracket corner front
(12) Bracket side front UPR
(13) Bracket center LWR front
(14) Energy absorber foam front
(15) Beam COMPL front

Tightening torque:N·m (kgf-m, ft-lb)
T1: 7.5 (0.76, 5.5)
T2: 32 (3.26, 23.6)

6. REAR BUMPER

- Sedan model

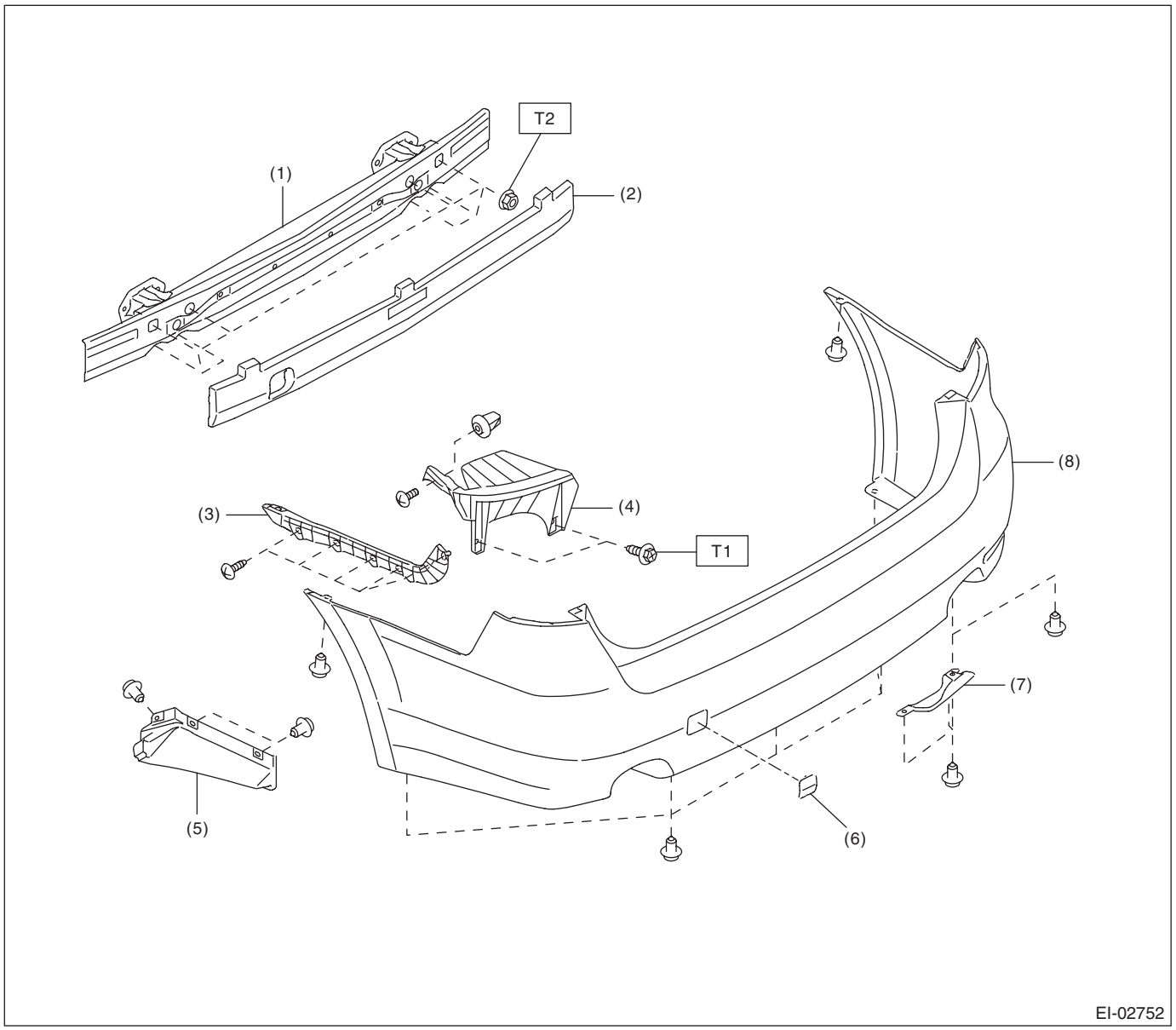

(1)	Beam COMPL rear	(5)	Bracket side rear LWR
(2)	Energy absorber foam rear	(6)	Rear hook cover
(3)	Bracket side rear UPR	(7)	Bumper cover rear
(4)	Bracket corner rear	(8)	Rear bumper face

Tightening torque:N·m (kgf-m, ft-lb)
T1: 7.5 (0.76, 5.5)
T2: 45 (4.59, 33.2)

- OUTBACK model

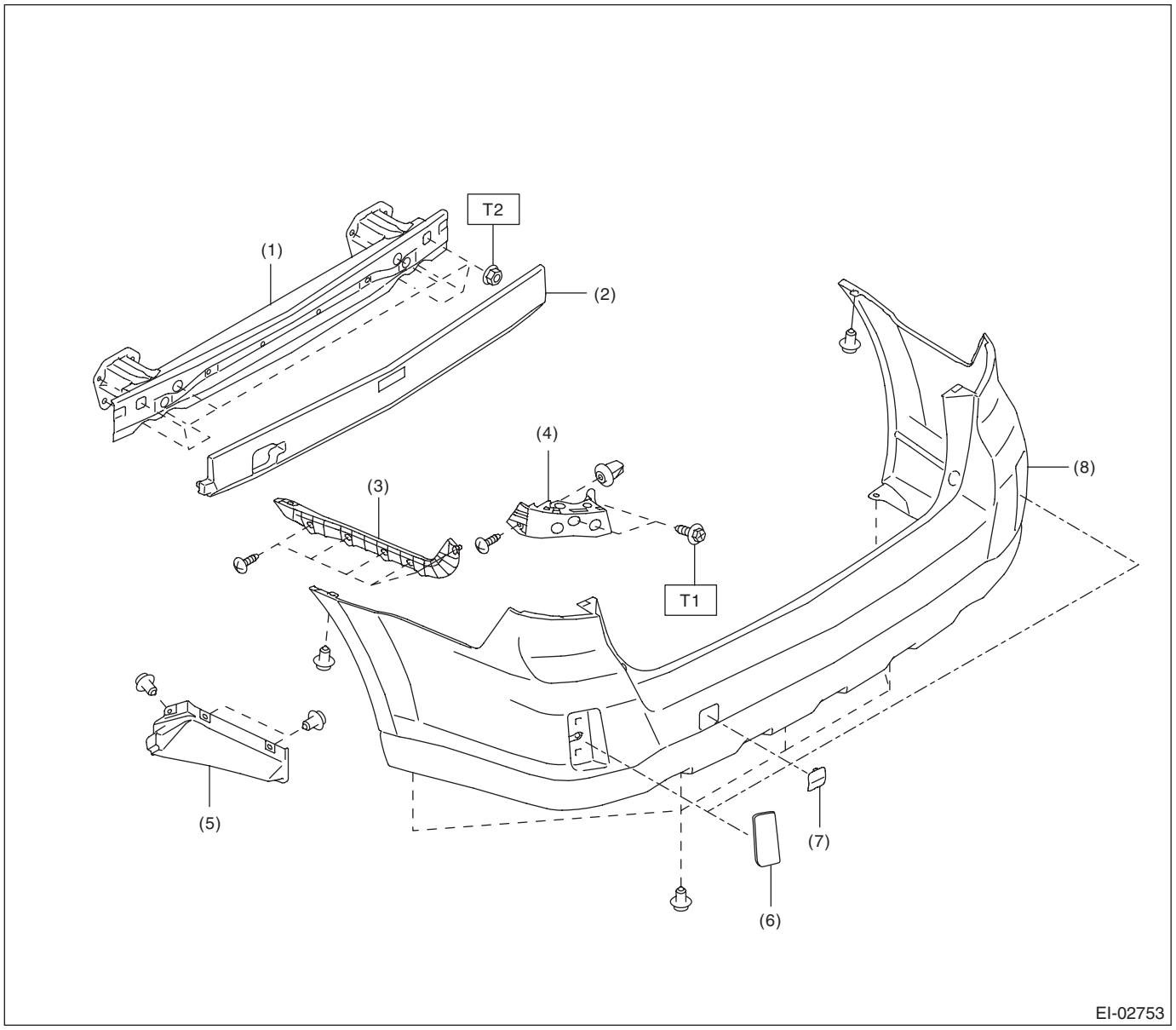

(1) Beam COMPL rear
(2) Energy absorber foam rear
(3) Bracket side rear UPR
(4) Bracket corner rear
(5) Bracket side rear LWR
(6) Reflex reflector
(7) Rear hook cover
(8) Rear bumper face

Tightening torque:N·m (kgf-m, ft-lb)
T1: 7.5 (0.76, 5.5)
T2: 45 (4.59, 33.2)

7. MUD GUARD

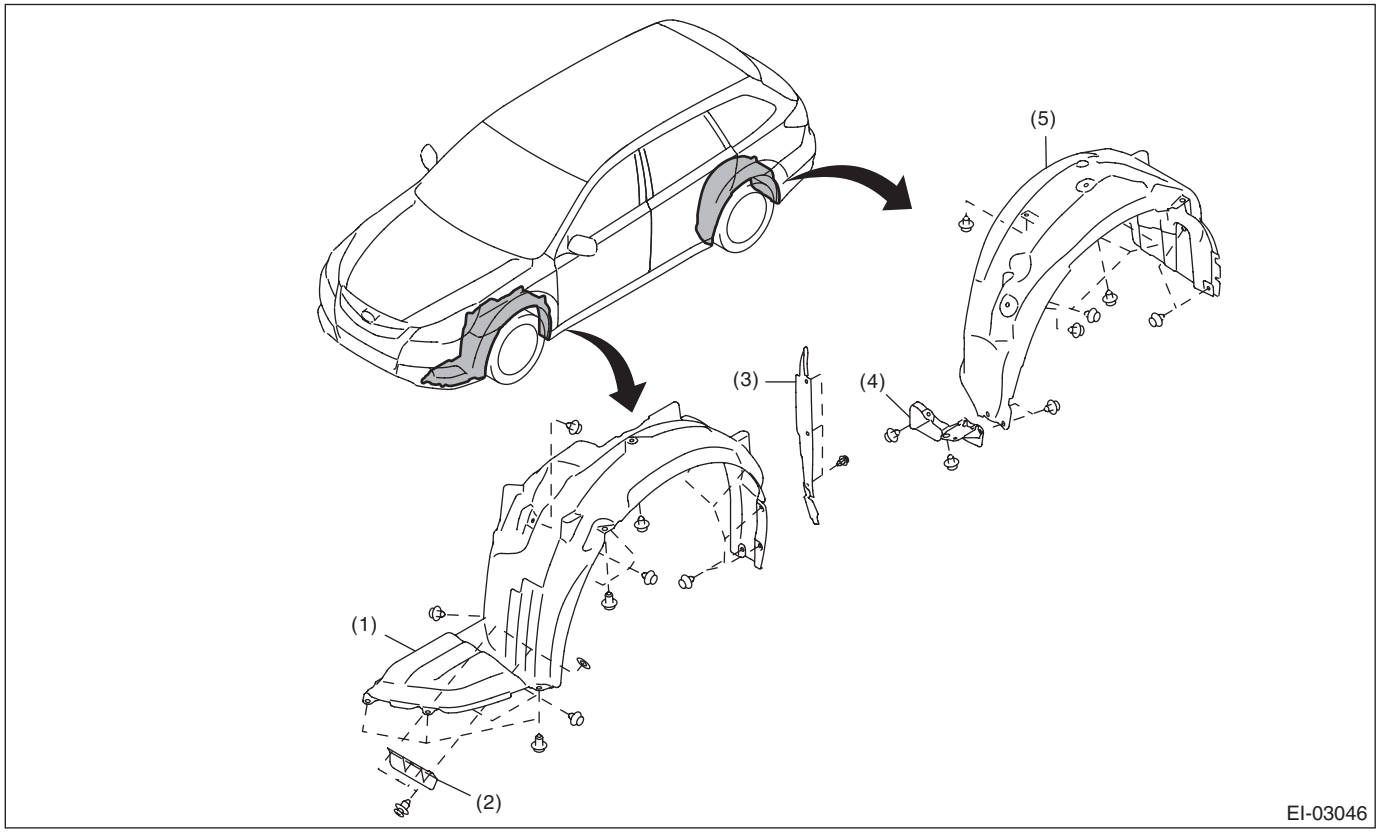

(1) Front mud guard
(2) Front air flap plate
(3) Fender cover lower
(4) Rear air flap plate
(5) Rear mud guard

8. COWL PANEL

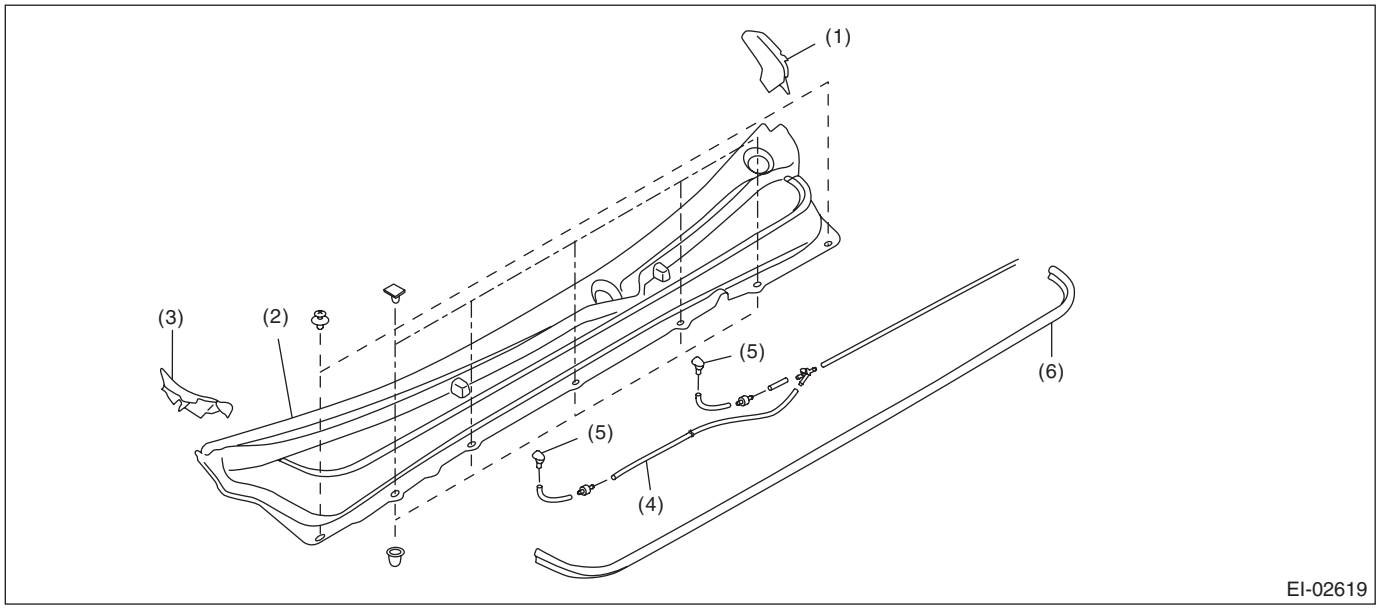

(1) Cowl panel side LH
(2) Cowl panel
(3) Cowl panel side RH
(4) Washer hose
(5) Washer nozzle
(6) Cowl panel seal

9. SIDE SILL SPOILER

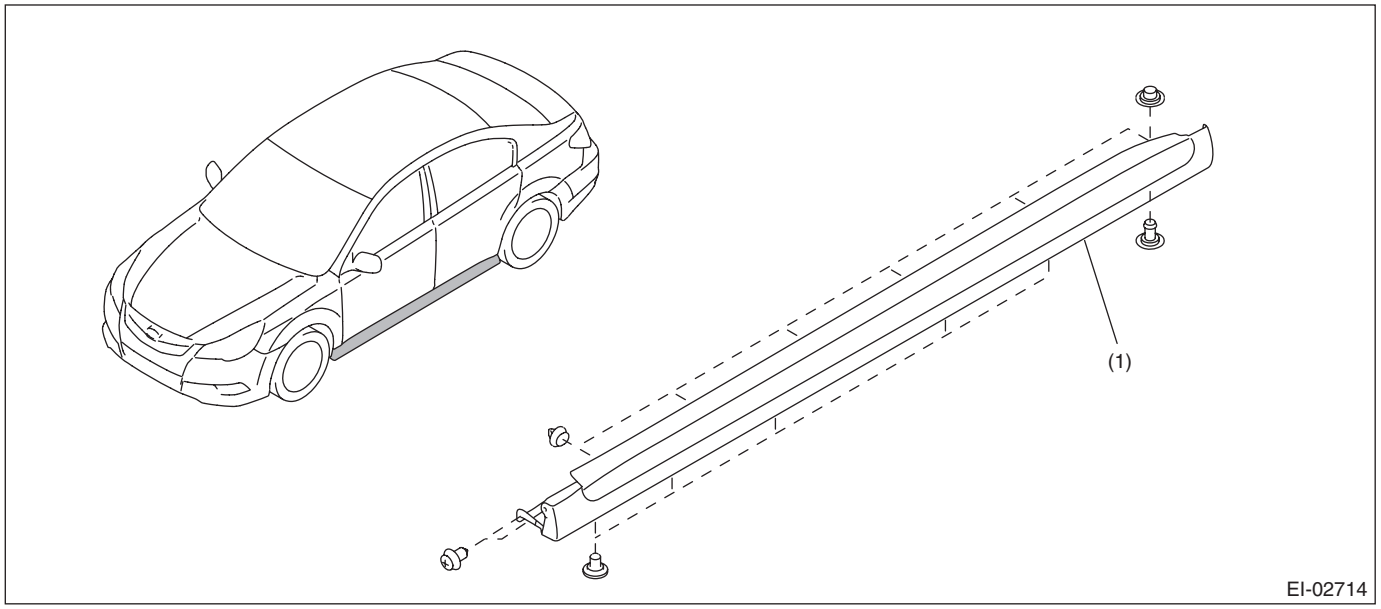

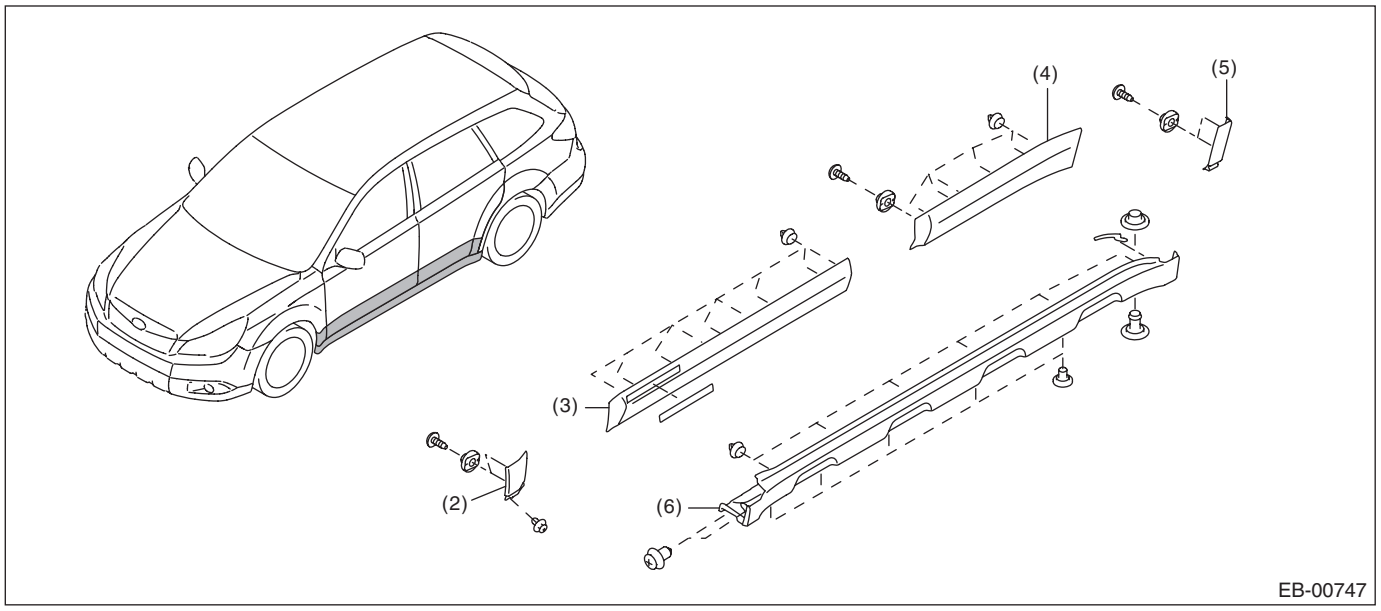

(1) Side sill garnish ASSY (sedan model)
(2) Garnish ASSY front fender (OUTBACK model)
(3) Garnish ASSY front door (OUTBACK model)
(4) Garnish ASSY rear door (OUTBACK model)
(5) Garnish ASSY rear quarter (OUTBACK model)
(6) Side sill garnish ASSY (OUTBACK model)

10.ROOF MOLDING

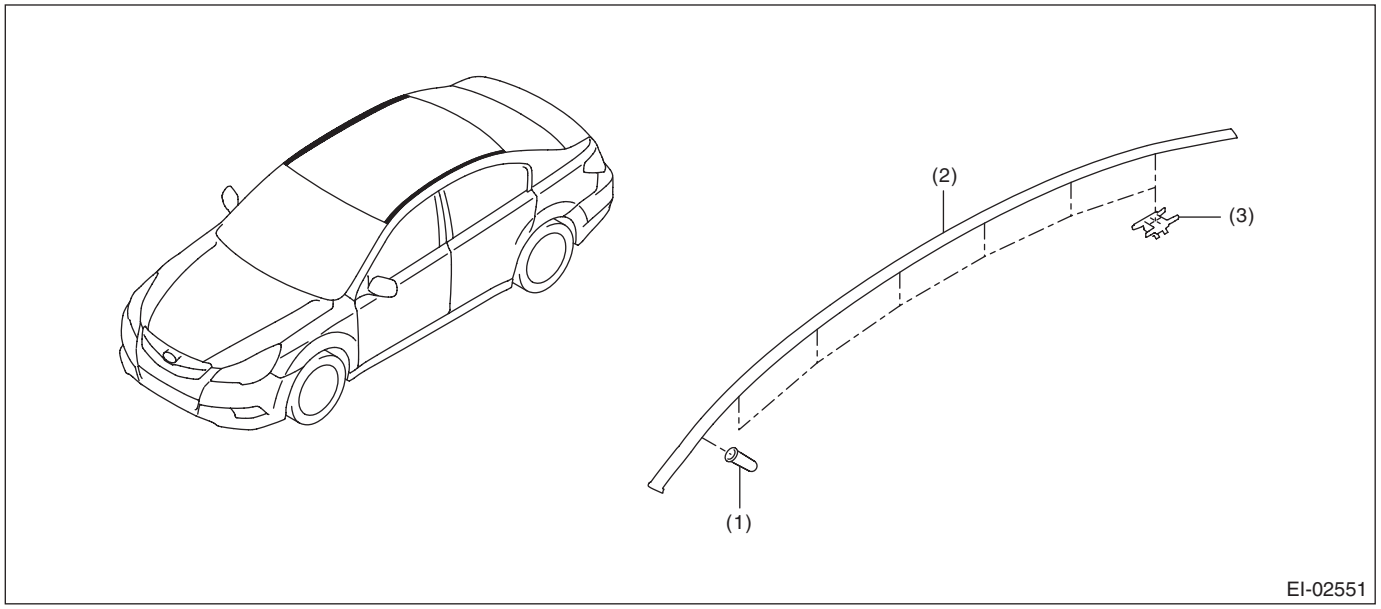

(1) Rivet
(2) Roof molding
(3) Clip

11.ROOF RAIL

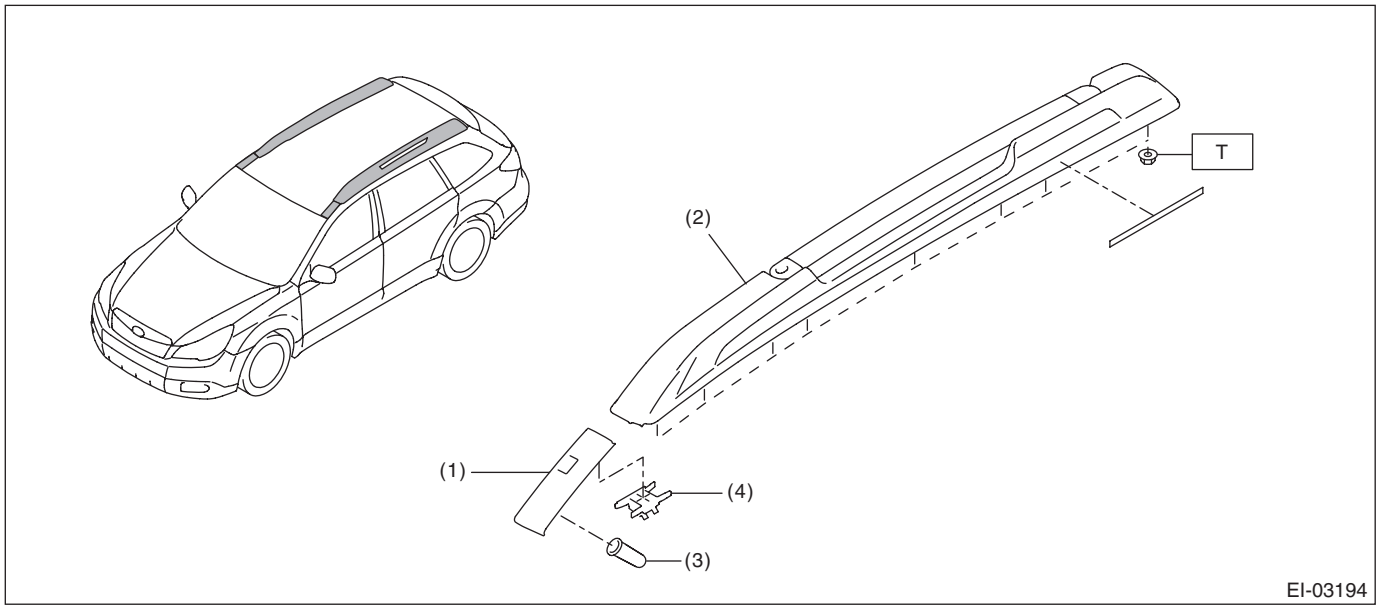

(1) Roof molding
(2) Roof rail ASSY
(3) Rivet
(4) Clip

Tightening torque:N·m (kgf-m, ft-lb)
T: 7.5 (0.76, 5.5)

12.TRUNK LID GARNISH

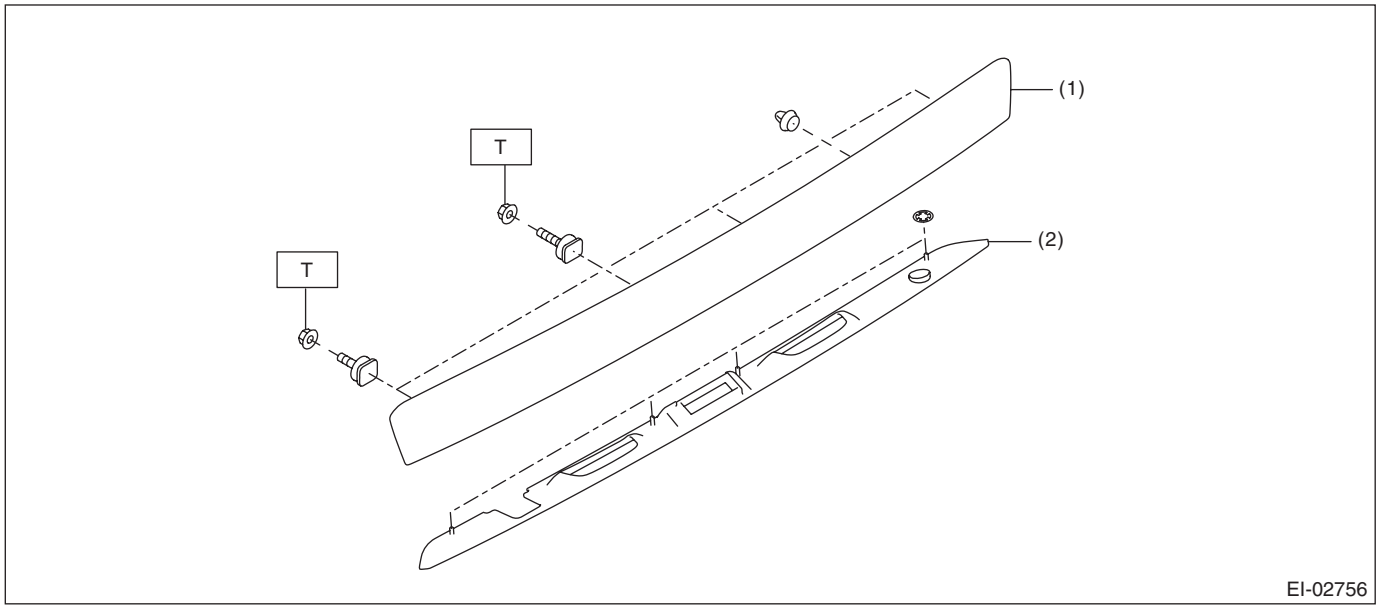

(1) Trunk lid garnish
(2) Undercover-trunk lid garnish

Tightening torque:N·m (kgf-m, ft-lb)
T: 4.5 (0.46, 3.3)

13.REAR GATE GARNISH

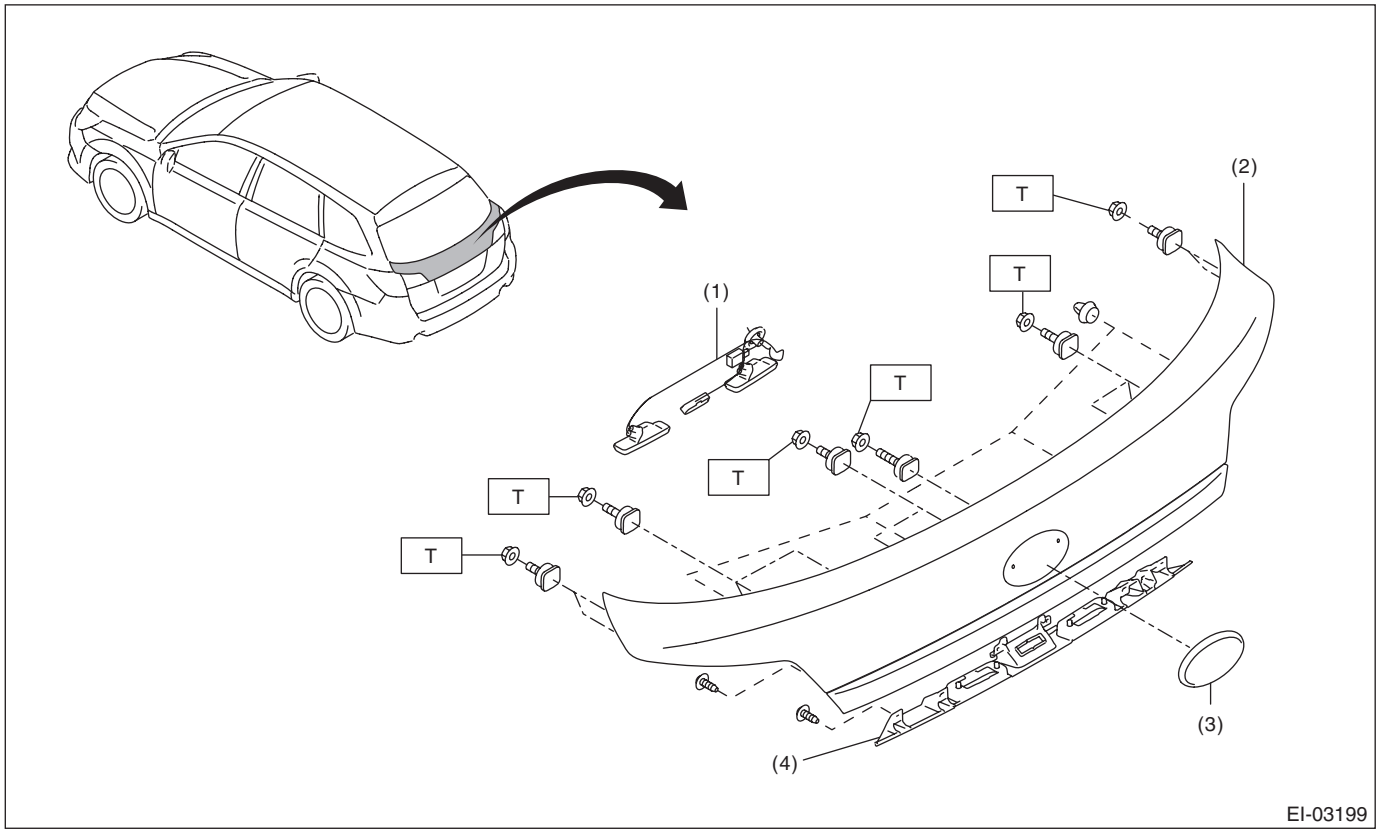

(1) License light ASSY and rear gate opener ASSY harness.
(2) Rear gate garnish
(3) Ornament
(4) Garnish LWR

Tightening torque:N·m (kgf-m, ft-lb)
T: 4.5 (0.46, 3.3)

14.DOOR TRIM

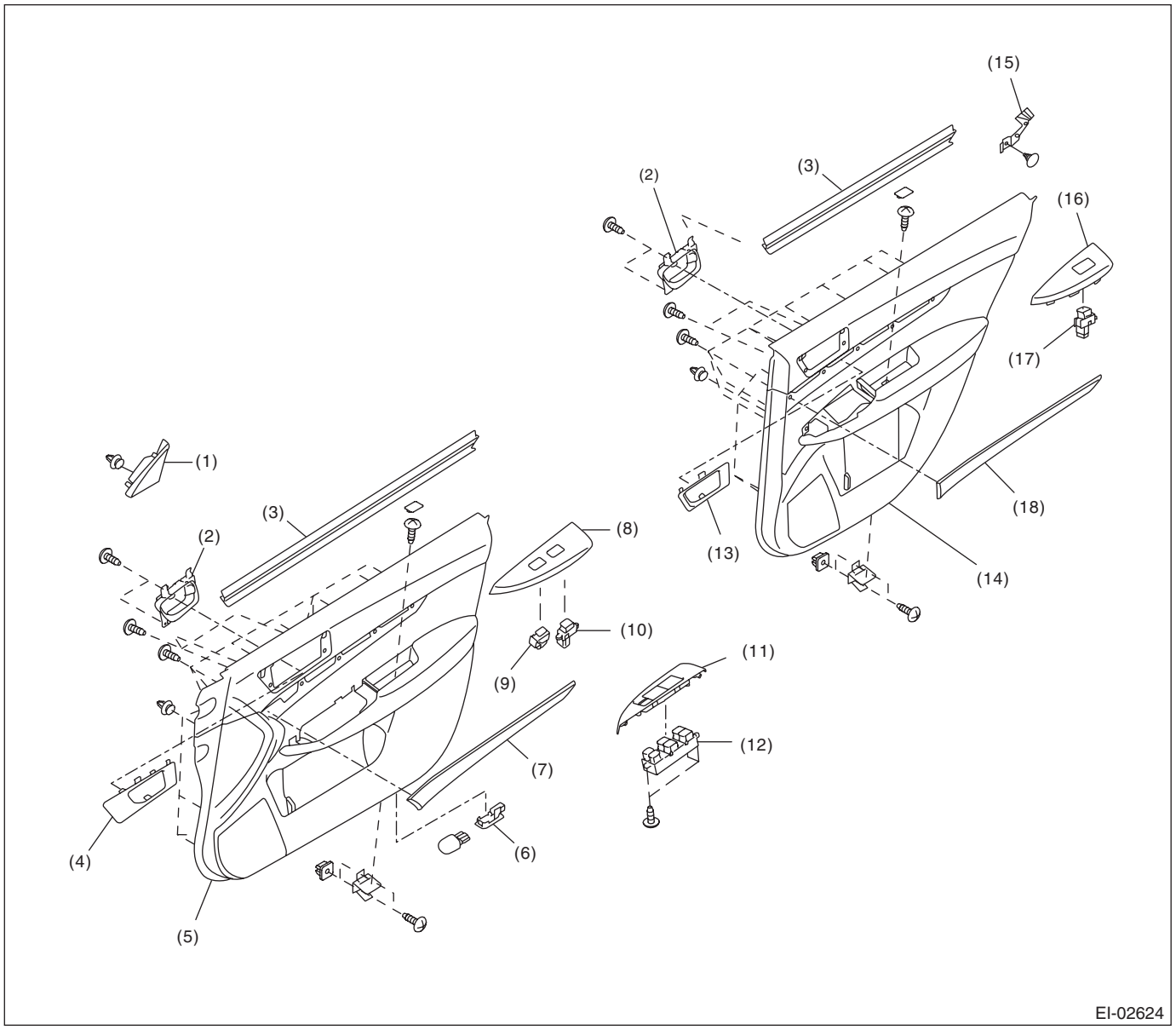

(1)	Gusset cover front	(7)	Front door ornament panel	(13)	Rear door inner remote cover
(2)	Inner remote ASSY	(8)	Power window switch panel front RH	(14)	Rear door trim
(3)	Weather strip inner	(9)	Door lock switch ASSY	(15)	Rear door cover upper
(4)	Front door inner remote cover	(10)	Power window sub-switch ASSY front	(16)	Power window switch panel rear
(5)	Front door trim ASSY	(11)	Power window switch panel front LH	(17)	Power window sub-switch ASSY rear
(6)	Door step light	(12)	Power window main switch ASSY	(18)	Rear door ornament panel

15.CONSOLE BOX

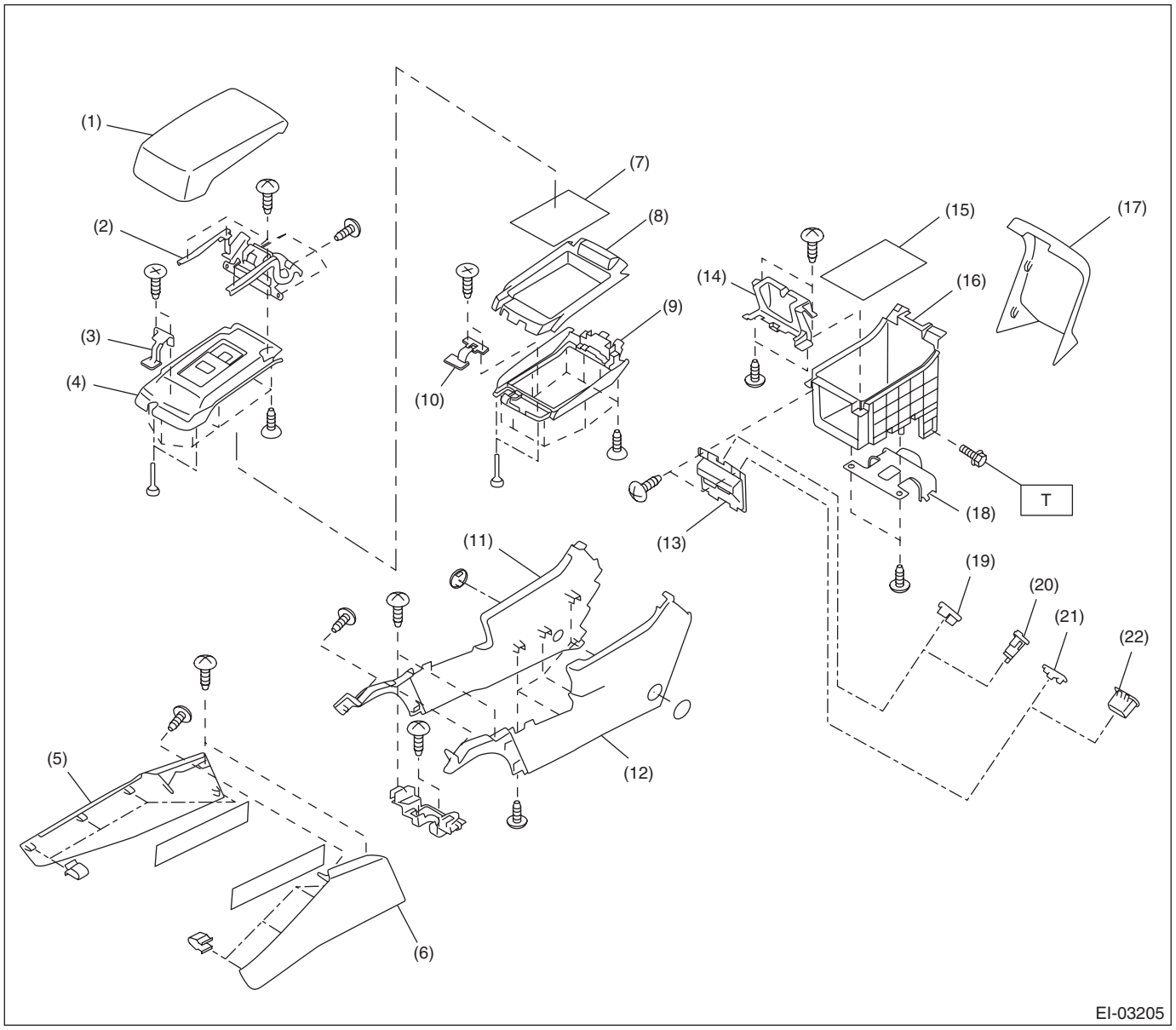

(1) Console lid COMPL
(2) Console lid hinge COMPL
(3) Lid lock UPR
(4) Lid inner UPR
(5) Console front side cover ASSY RH
(6) Console front side cover ASSY LH
(7) Mat (lid LWR)
(8) Lid inner LWR
(9) Lid outer LWR
(10) Lid lock LWR
(11) Console box LWR RH
(12) Console box LWR LH
(13) Pocket case
(14) Cover center
(15) Mat (pocket)
(16) Console pocket
(17) Console rear cover
(18) Console bracket
(19) Cover A
(20) Accessory socket
(21) Cover B
(22) AUX unit

Tightening torque:N·m (kgf-m, ft-lb)
T: 6.5 (0.66, 4.8)

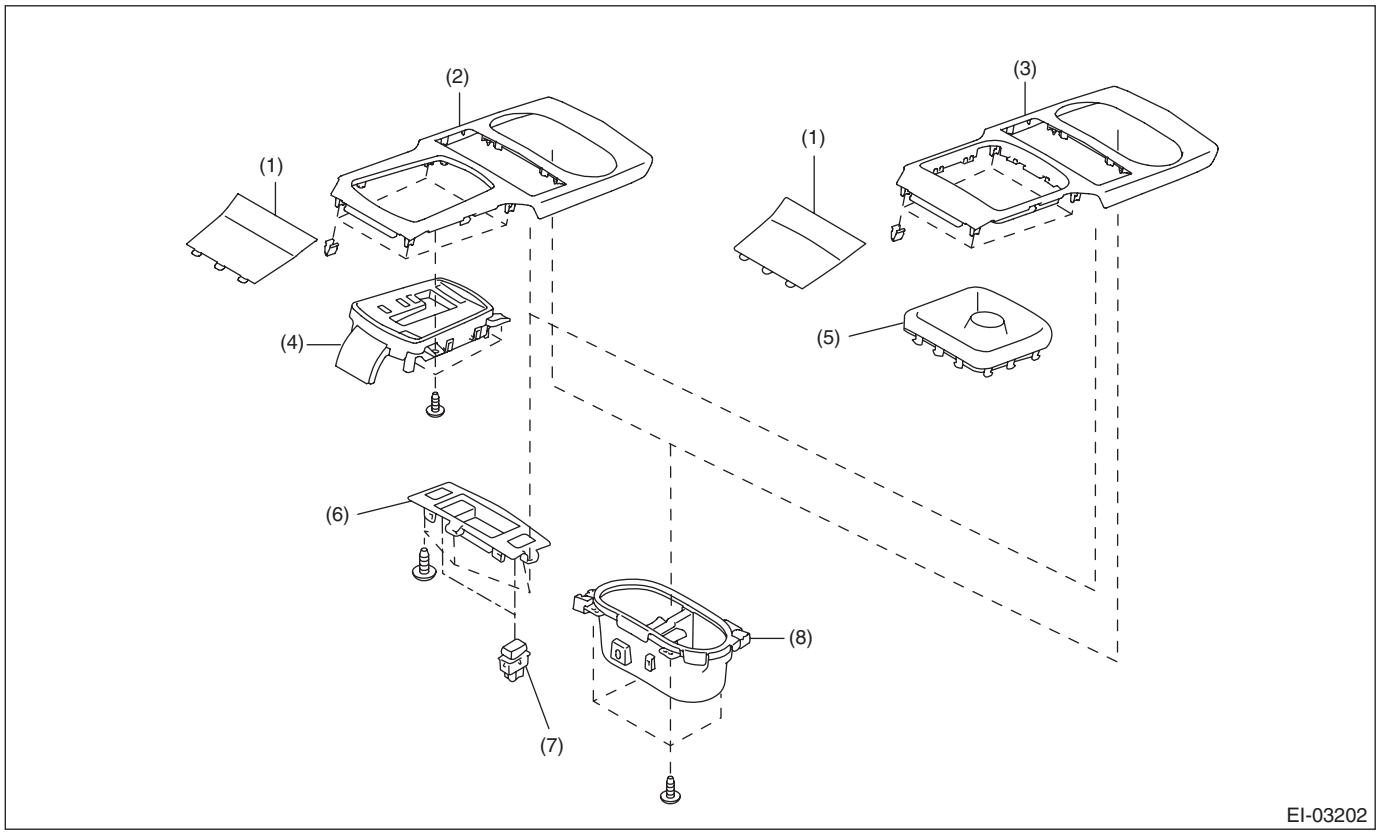

(1) Center pocket mat
(2) Front cover AT
(3) Front cover MT
(4) Indicator ASSY AT
(5) Shift boot (MT model)
(6) Switch case
(7) Seat heater switch
(8) Cup holder ASSY

16.INSTRUMENT PANEL

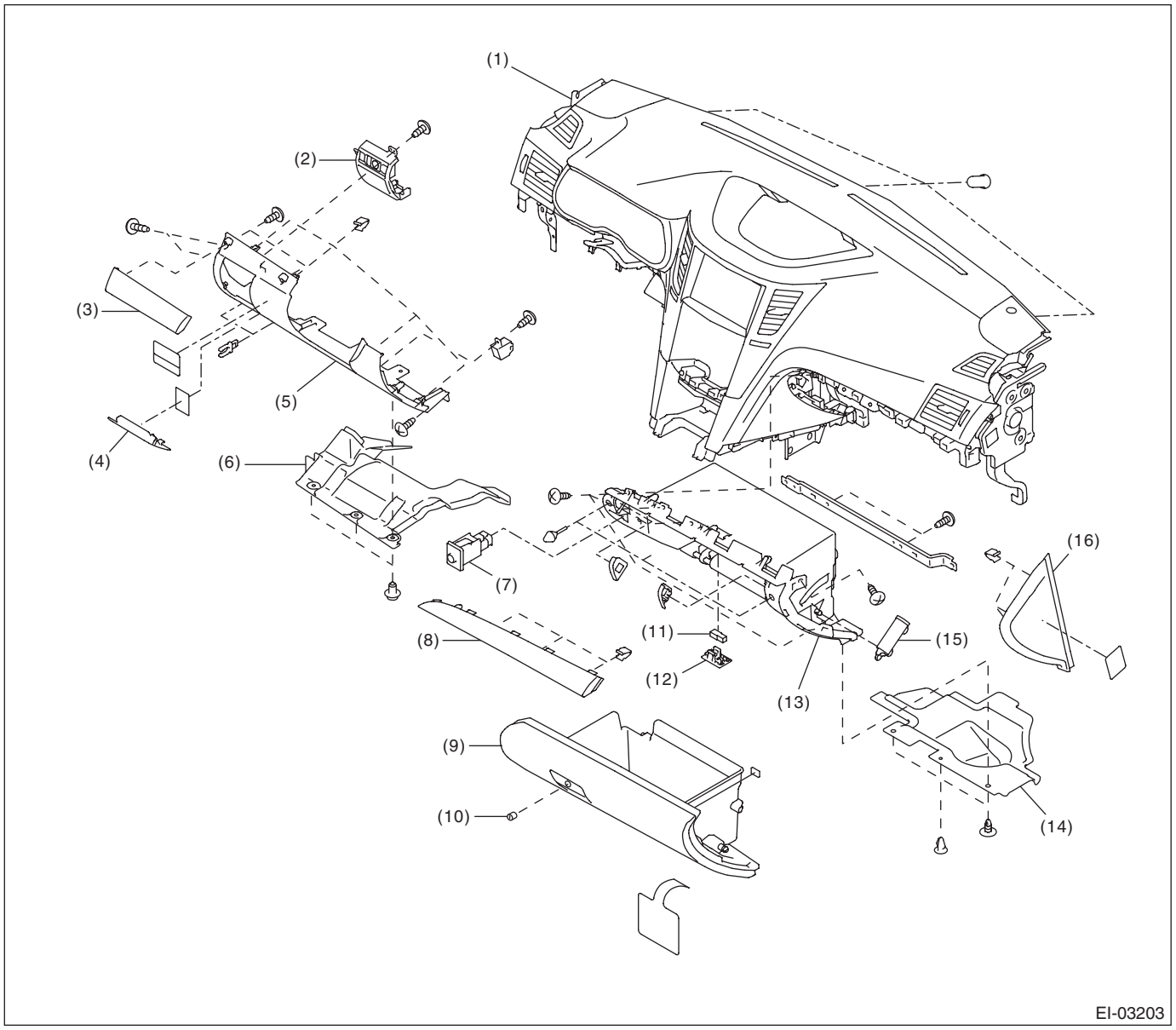

(1) Instrument panel ASSY
(2) Switch panel ASSY
(3) Ornament panel ASSY D OUT
(4) Fuse lid
(5) Instrument panel lower cover
(6) Instrument panel lower cover under
(7) Trunk opener cancel button
(8) Ornament panel ASSY P
(9) Glove box lid ASSY
(10) Key cylinder - glove box
(11) Illumination LED ASSY
(12) Illumination bracket
(13) Glove box back panel
(14) Glove box under cover
(15) Glove box damper
(16) Instrument panel side cover

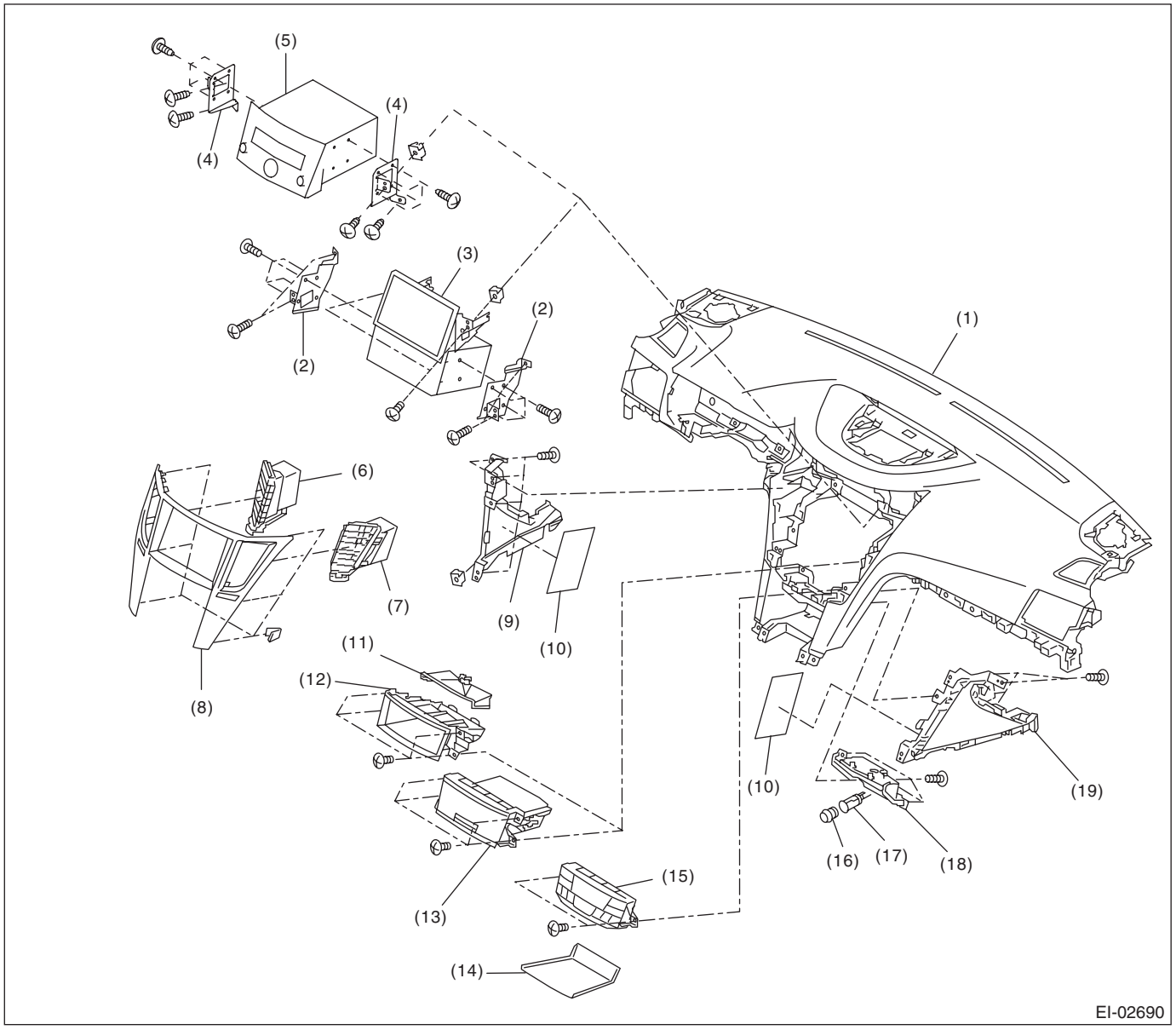

(1) Instrument panel pad and frame ASSY
(2) Navigation bracket
(3) Navigation ASSY
(4) Audio bracket
(5) Audio ASSY
(6) Center grille ASSY LH
(7) Center grille ASSY RH
(8) Center panel ASSY
(9) Center cover side RH
(10) Insulator
(11) Pocket center light
(12) Pocket ASSY (without lid)
(13) Pocket ASSY (with lid)
(14) Center pocket mat
(15) Control panel ASSY
(16) Plug
(17) Accessory socket ASSY
(18) Center pocket back panel
(19) Center cover side LH

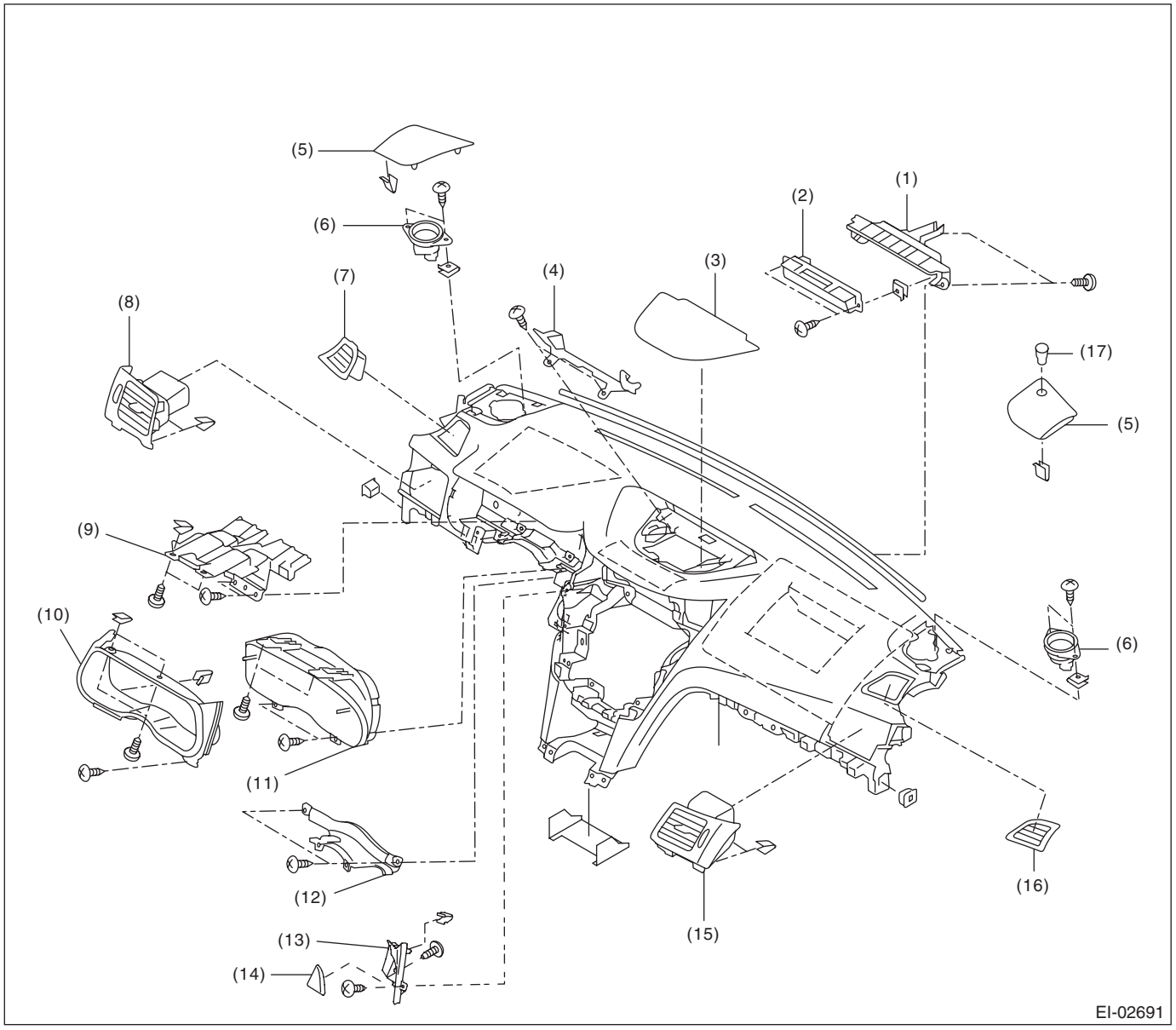

(1) Multi display panel UPR
(2) Multi display ASSY
(3) Center speaker cover
(4) Multi display panel LWR
(5) Side speaker cover
(6) Front side speaker ASSY
(7) Defroster side grille RH
(8) Side vent grille ASSY RH
(9) Meter reinforcement panel
(10) Meter visor ASSY
(11) Combination meter ASSY
(12) Steering upper cover
(13) Starter switch cover
(14) Ornament panel ASSY D INN
(15) Side vent grille ASSY LH
(16) Defroster side grille LH
(17) Sunload sensor

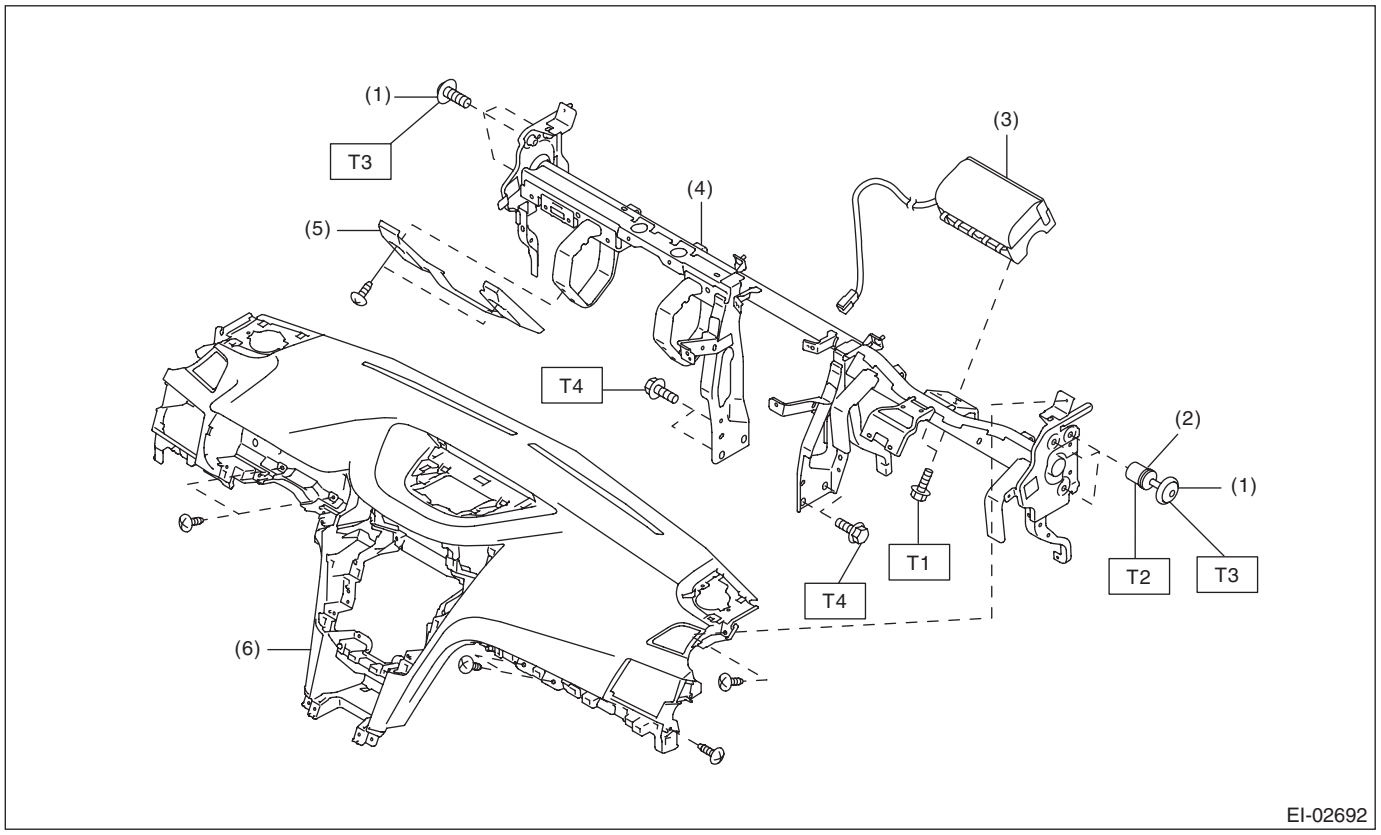

(1) TORX® bolt
(2) Adjuster bolt
(3) Passenger's airbag module ASSY
(4) Steering support beam ASSY
(5) Knee guard panel COMPL
(6) Instrument panel pad and frame ASSY

Tightening torque:N·m (kgf-m, ft-lb)
T1: 7.5 (0.76, 5.5)
T2: 3 (0.31, 2.2)
T3: 18 (1.84, 13.3)
T4: 25 (2.55, 18.4)

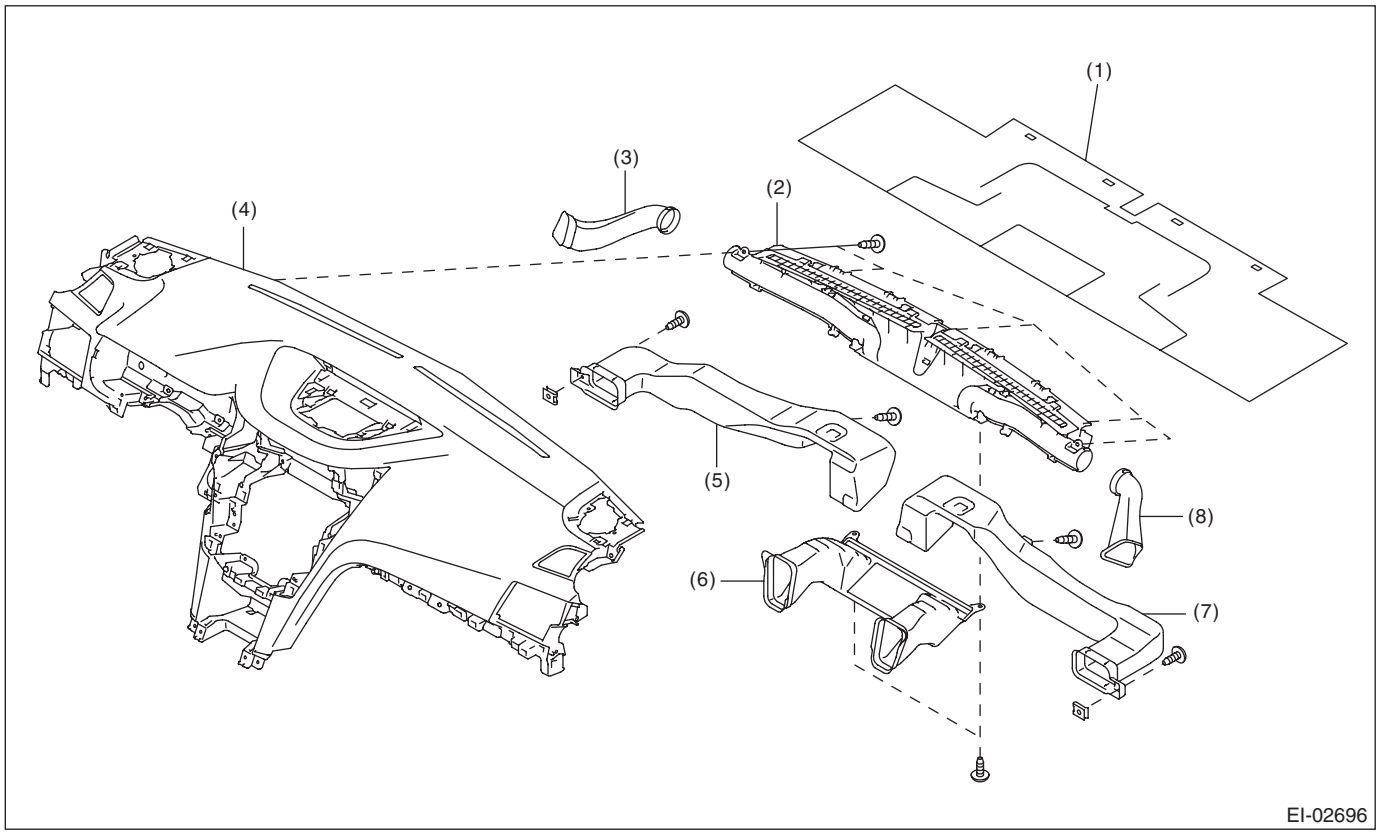

(1) Insulator
(2) Front defroster nozzle ASSY
(3) Side defroster duct RH
(4) Instrument panel pad and frame ASSY
(5) Side vent duct LH
(6) Center vent duct
(7) Side vent duct RH
(8) Side defroster duct LH

17.INNER TRIM

- Sedan model

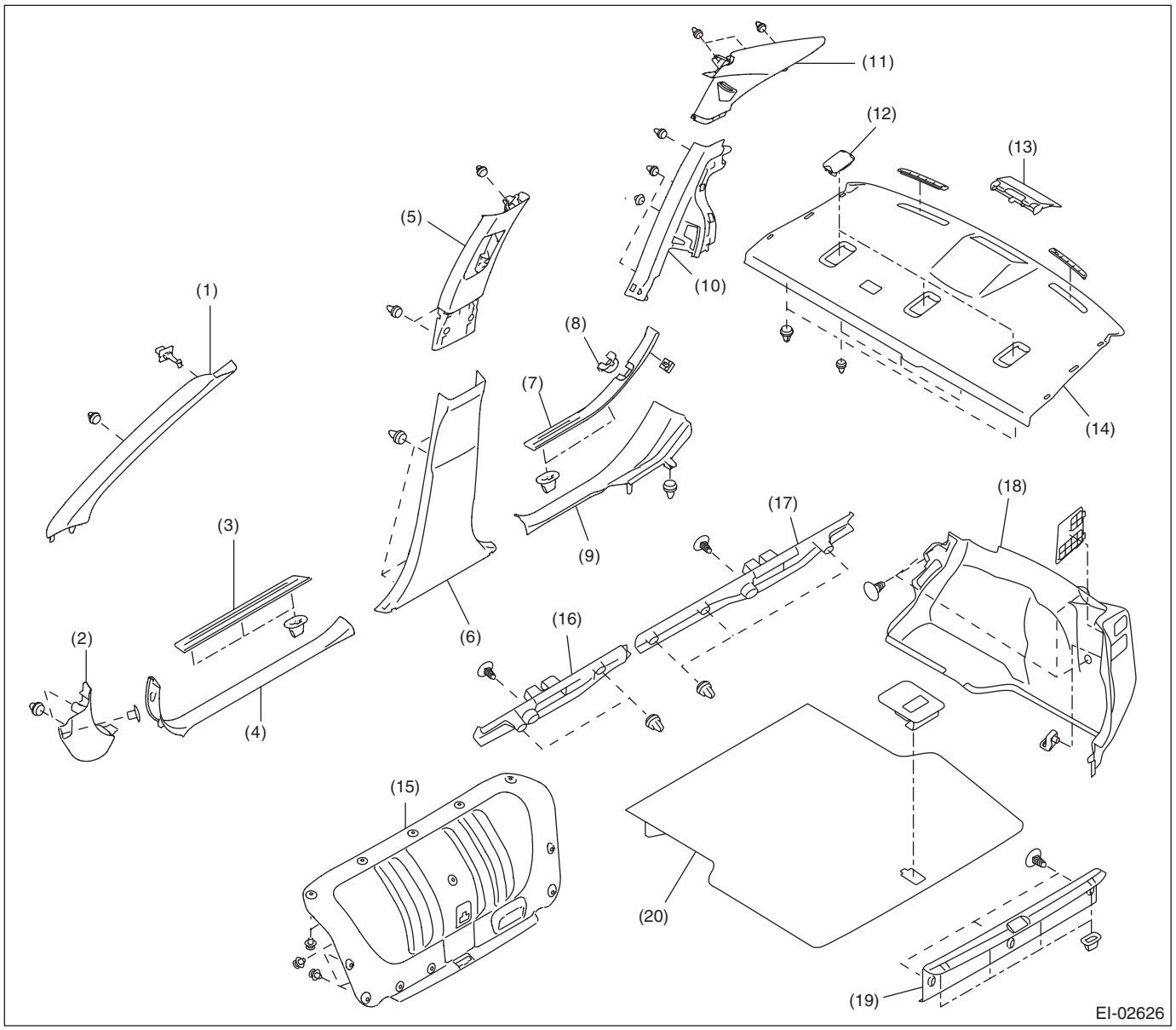

(1)	Front pillar trim	(8)	Catcher cover	(15)	Trunk lid trim
(2)	Side sill cover front	(9)	Side sill cover-rear INN	(16)	Trunk trim panel ASSY-front LH
(3)	Side sill cover-front OUT	(10)	Rear quarter trim LWR	(17)	Trunk trim panel ASSY-front RH
(4)	Side sill cover-front INN	(11)	Rear quarter trim UPR	(18)	Trunk trim panel ASSY-side
(5)	Center pillar trim UPR	(12)	Child anchor cap	(19)	Trunk trim panel ASSY-rear
(6)	Center pillar trim LWR	(13)	High-mounted stop light ASSY	(20)	Trunk mat
(7)	Side sill cover-rear OUT	(14)	Rear shelf panel		

- OUTBACK model

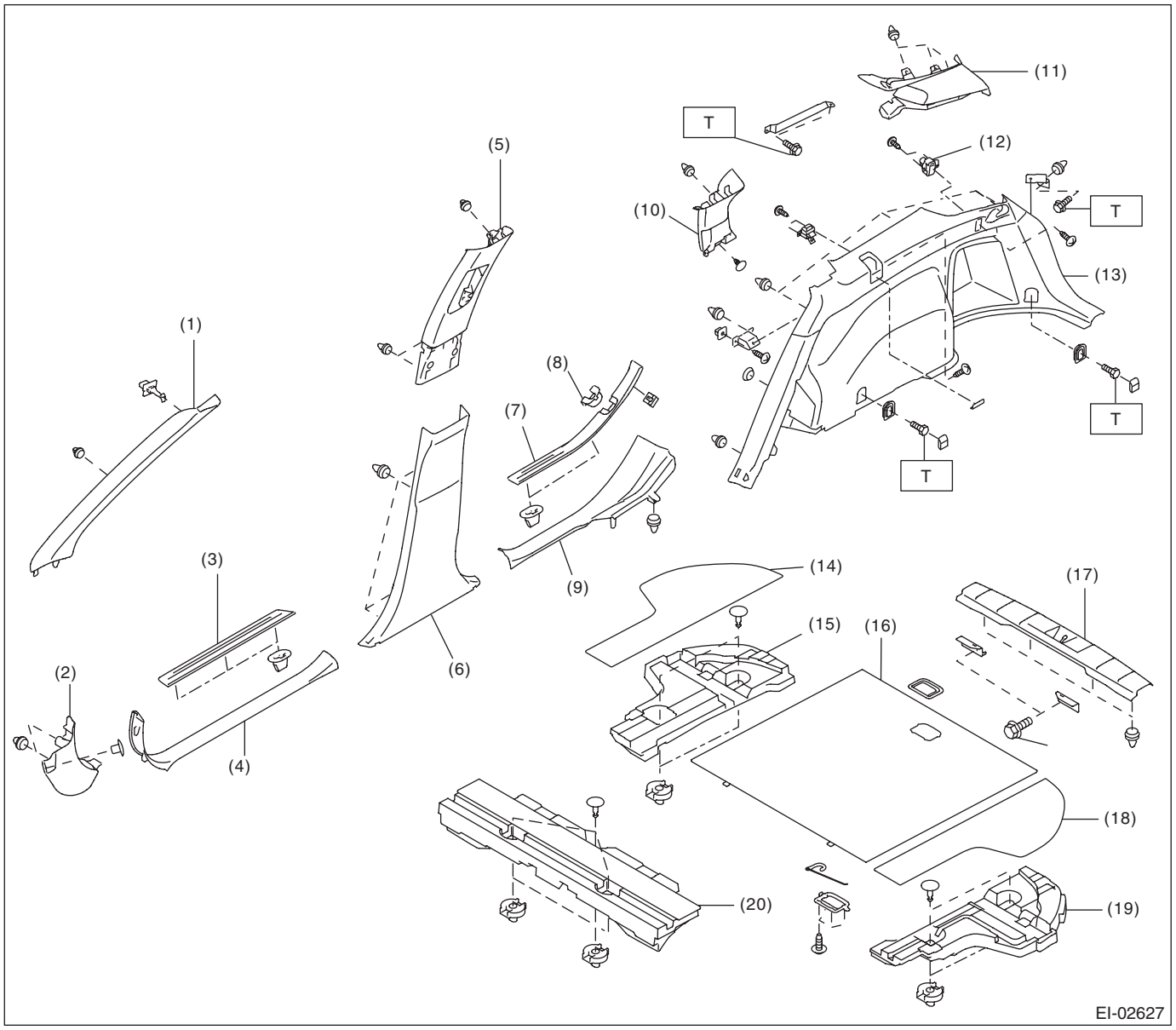

(1) Front pillar trim
(2) Side sill cover front
(3) Side sill cover-front OUT
(4) Side sill cover-front INN
(5) Center pillar trim UPR
(6) Center pillar trim LWR
(7) Side sill cover-rear OUT
(8) Catcher cover
(9) Side sill cover-rear INN
(10) Rear quarter trim UPR-front
(11) Rear quarter trim UPR-rear
(12) Hook
(13) Rear quarter trim LWR
(14) Rear floor mat RH
(15) Rear floor spacer RH
(16) Rear floor mat CTR
(17) Rear floor edge cover
(18) Rear floor mat LH
(19) Rear floor spacer LH
(20) Rear floor spacer CTR-front

Tightening torque:N·m (kgf-m, ft-lb)
T: 7.5 (0.76, 5.5)

18.REAR GATE TRIM

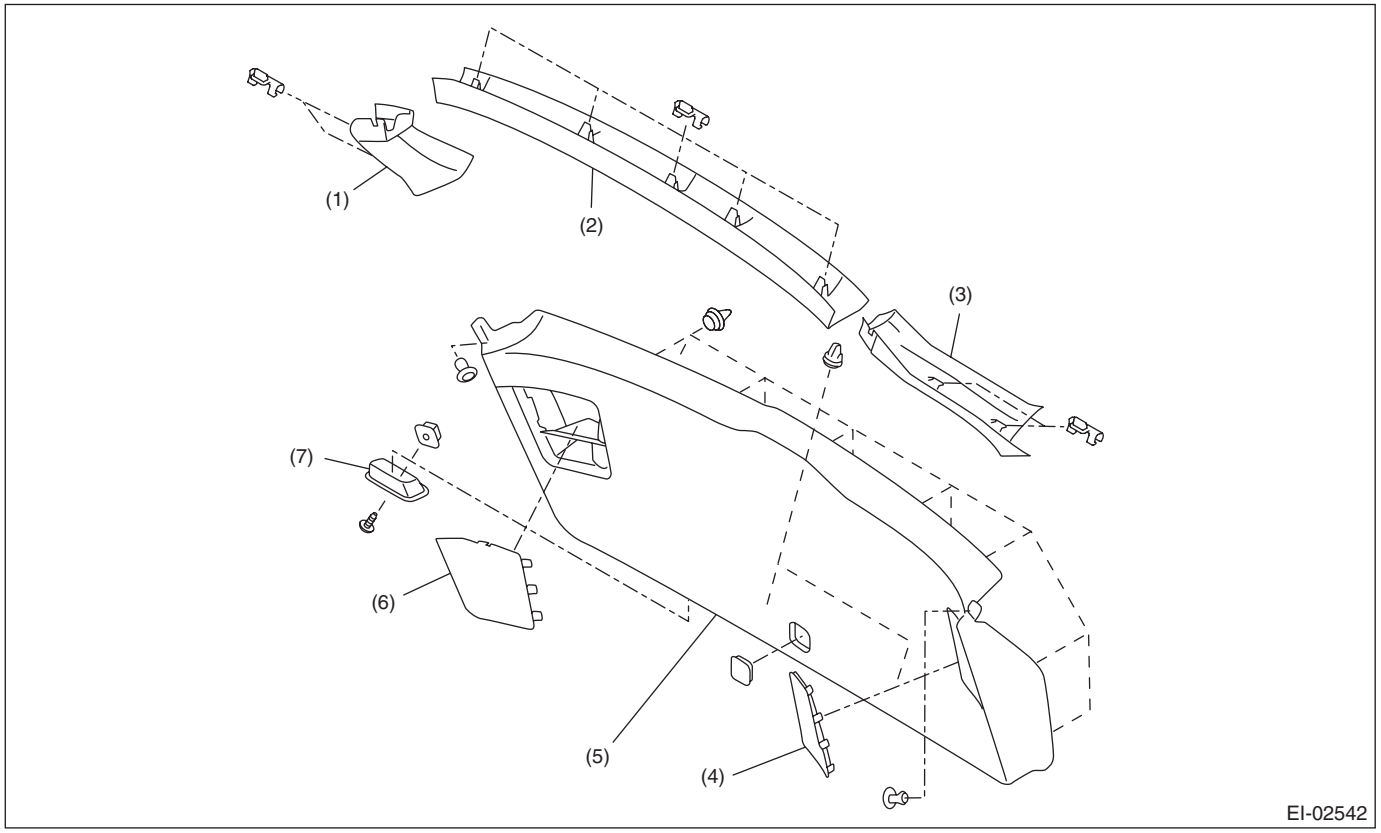

(1) Rear gate pillar trim RH
(2) Rear gate upper trim
(3) Rear gate pillar trim LH
(4) Rear gate lower cap LH
(5) Rear gate lower trim
(6) Rear gate lower cap RH
(7) Rear gate handle

19.ROOF TRIM

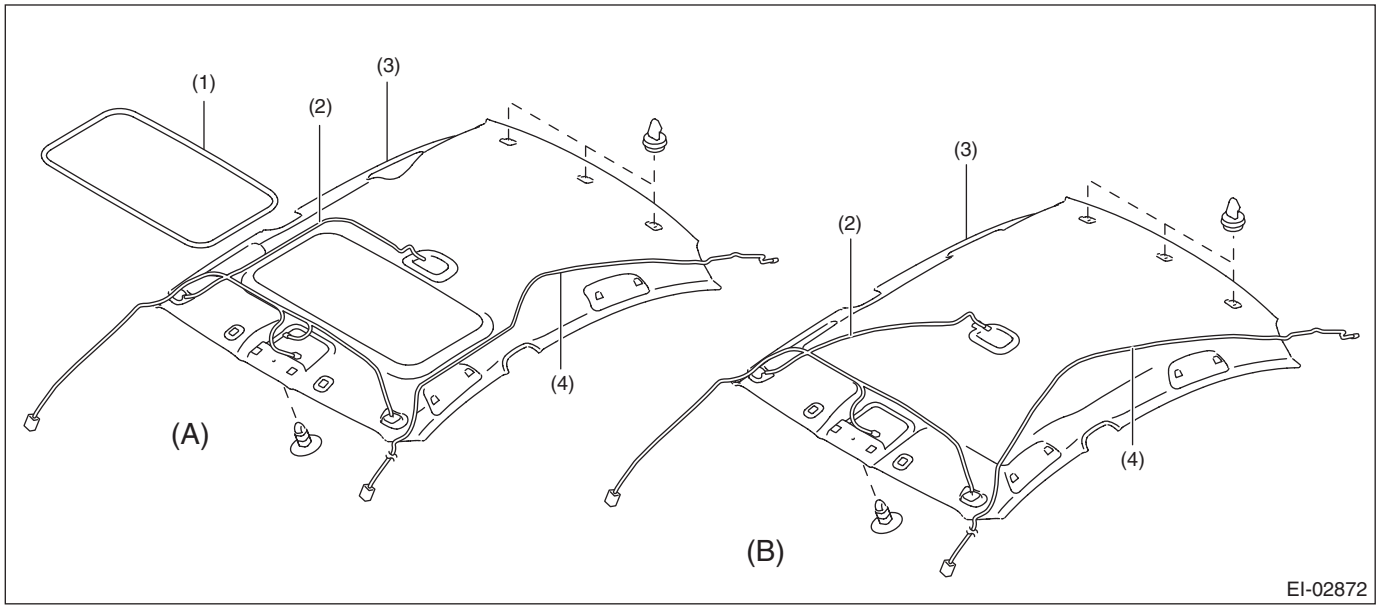

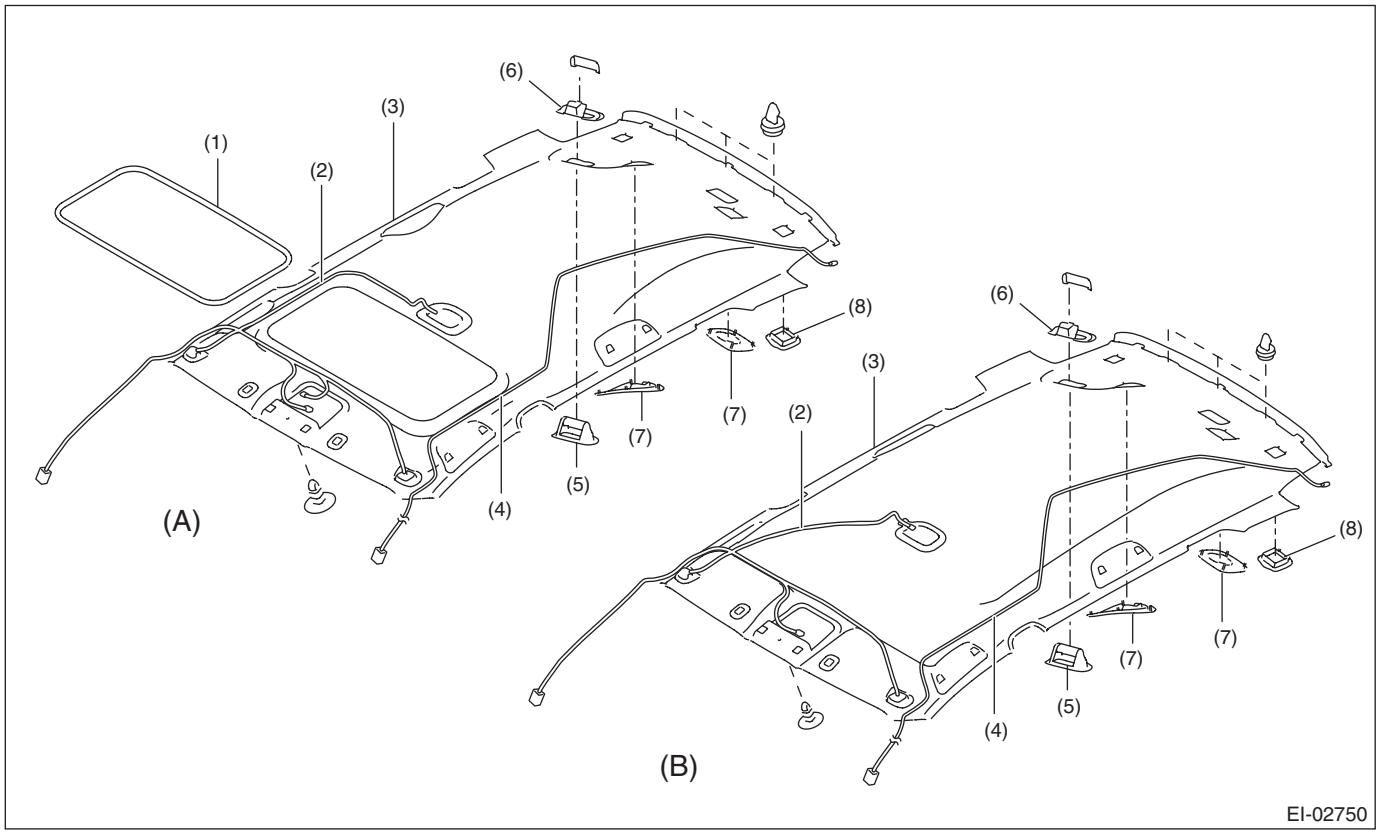

(A) Model with sunroof
(B) Normal roof model

(1) Sun roof garnish
(2) Roof cord ASSY
(3) Roof trim
(4) Feeder cord ASSY
(5) Seat belt holder cover
(6) Seat belt holder base
(7) Speaker cover
(8) Child anchor cover

20.ROOM INNER PARTS

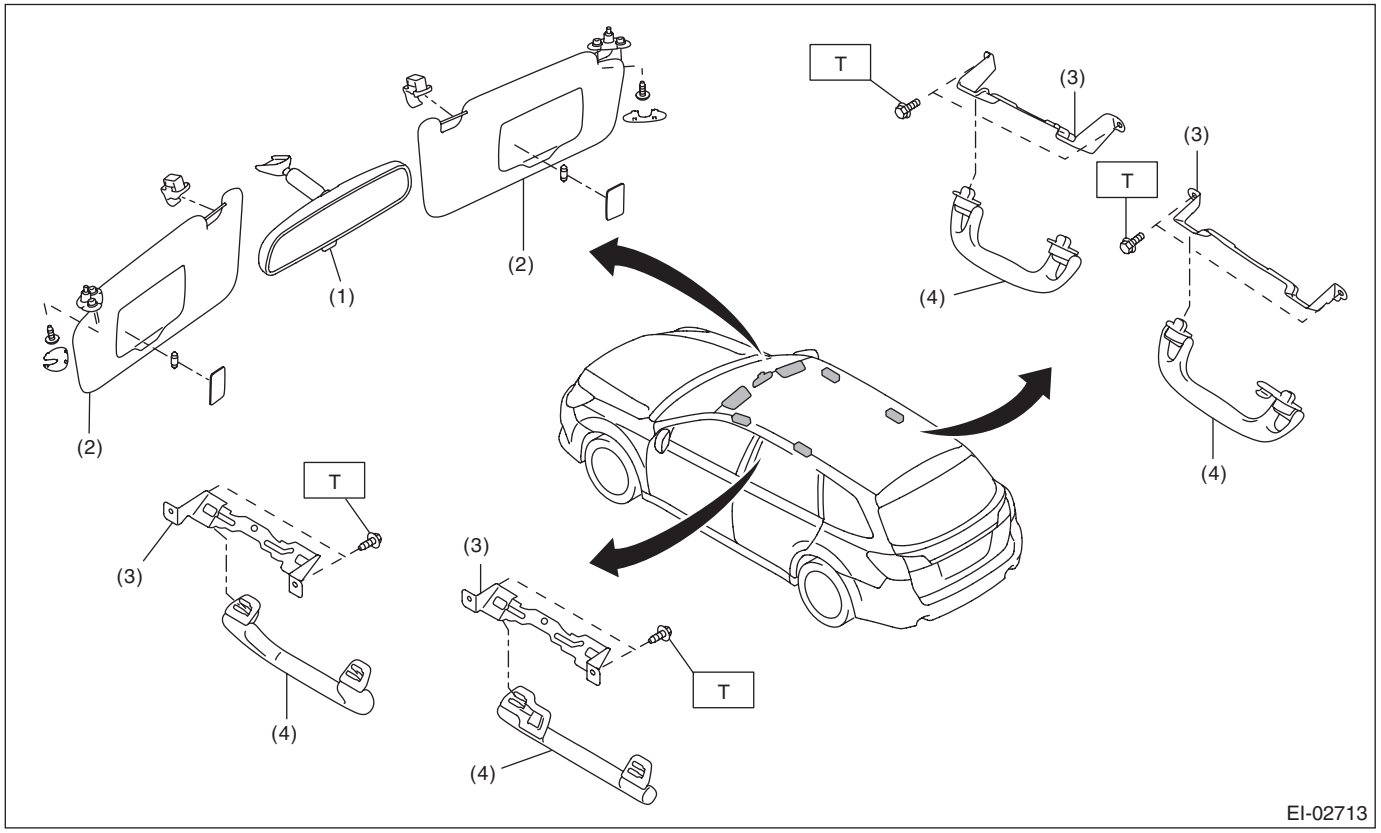

(1)	Room mirror	(3)	Assist grip bracket	***Tightening torque:N·m (kgf-m, ft-lb)***
(2)	Sun visor	(4)	Assist grip	***T: 7.5 (0.76, 5.5)***

21.HEAT SHIELD COVER

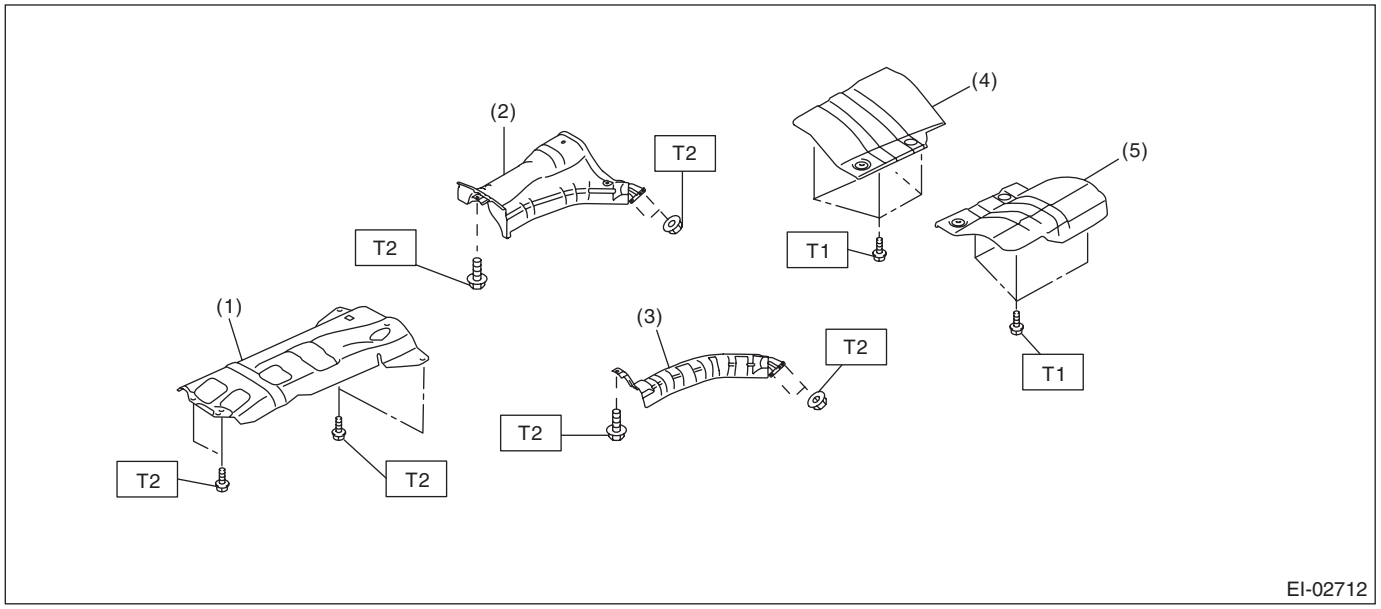

(1) Front heat shield cover
(2) Center heat shield cover (DOHC model)
(3) Center heat shield cover (SOHC model)
(4) Rear heat shield cover RH (only DOHC model)
(5) Rear heat shield cover LH

Tightening torque:N·m (kgf-m, ft-lb)

T1: 10 (1.02, 7.4)

T2: 18 (1.84, 13.3)

B: PREPARATION TOOL

TOOL NAME	REMARKS
Clip remover	Used for removing trim. • KTC AP201-10A • KTC AP201-N • KTC AP203-10A • KTC AP20L-10B or equivalent
Clip clamp pliers	Used for removal of various clips and clamps. • KTC CCP-190 or equivalent

2. Front Grille

A: REMOVAL

1) Remove the front bumper face assembly.
   (1) Remove the clips, turn over the front mud guard, and disconnect the fog light connector. (Model with fog light)

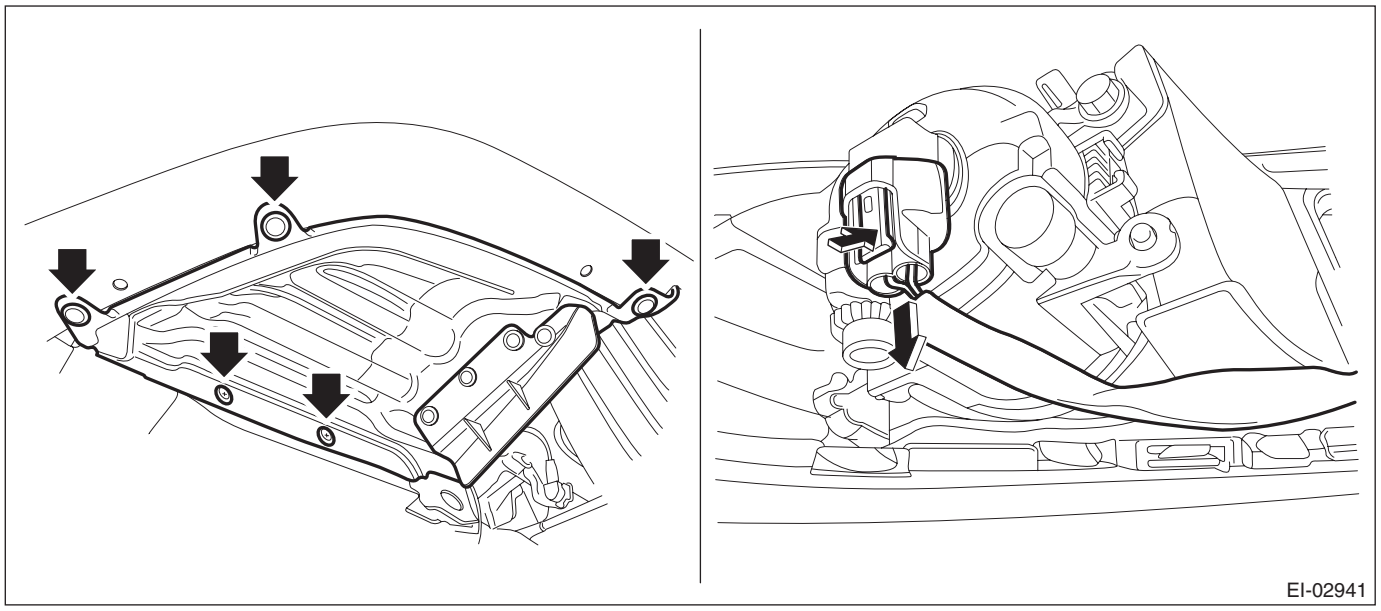

   (2) Remove the clips at the upper side of the bumper.
   (3) Remove the clips from the fender.

(4) Remove the clips at the lower side of bumper.

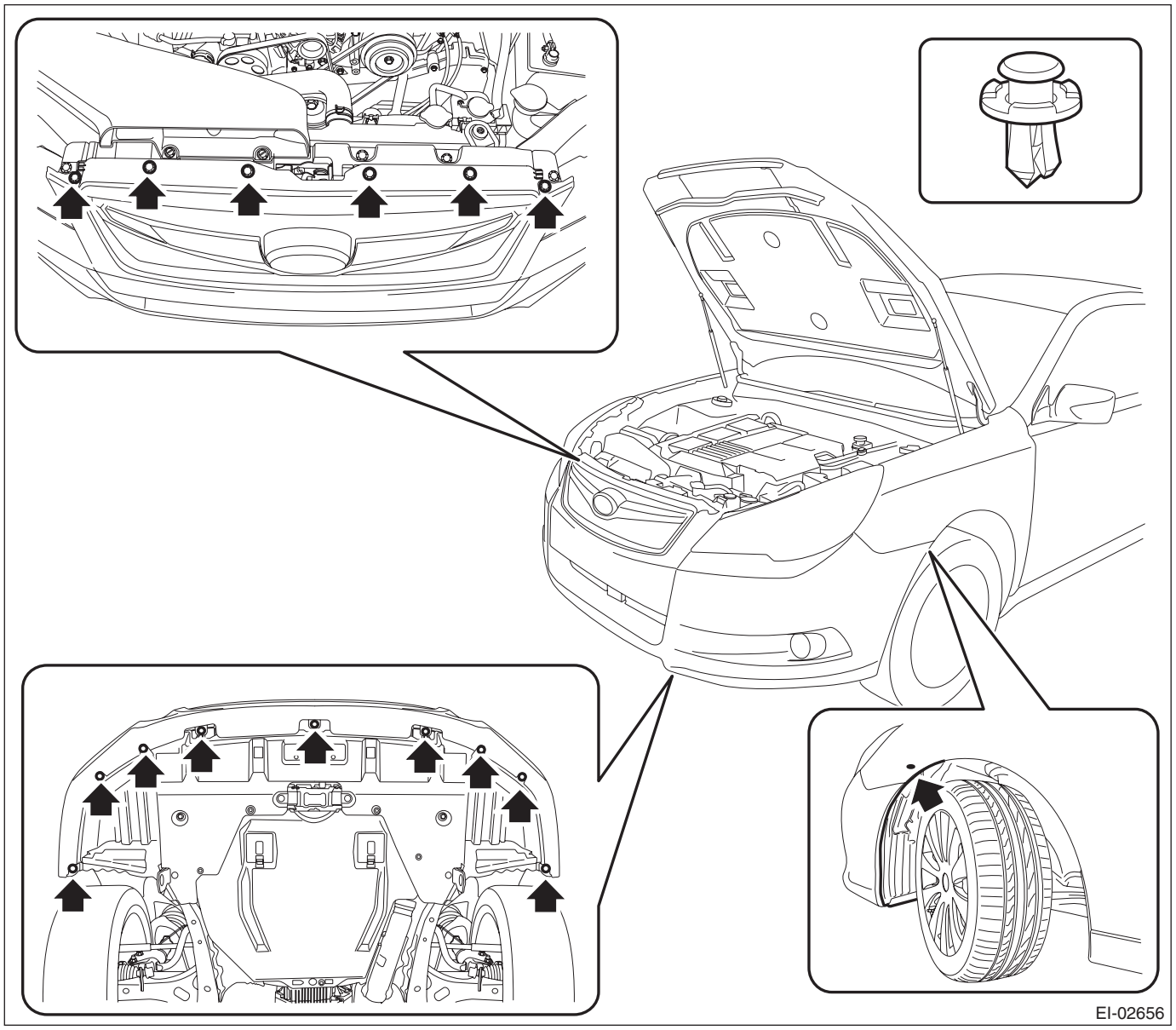

(5) Detach the flange section on the bumper face side from the bracket side front UPR.

CAUTION:
Do not pull forcibly. It may damage the flange sections of the bumper face.

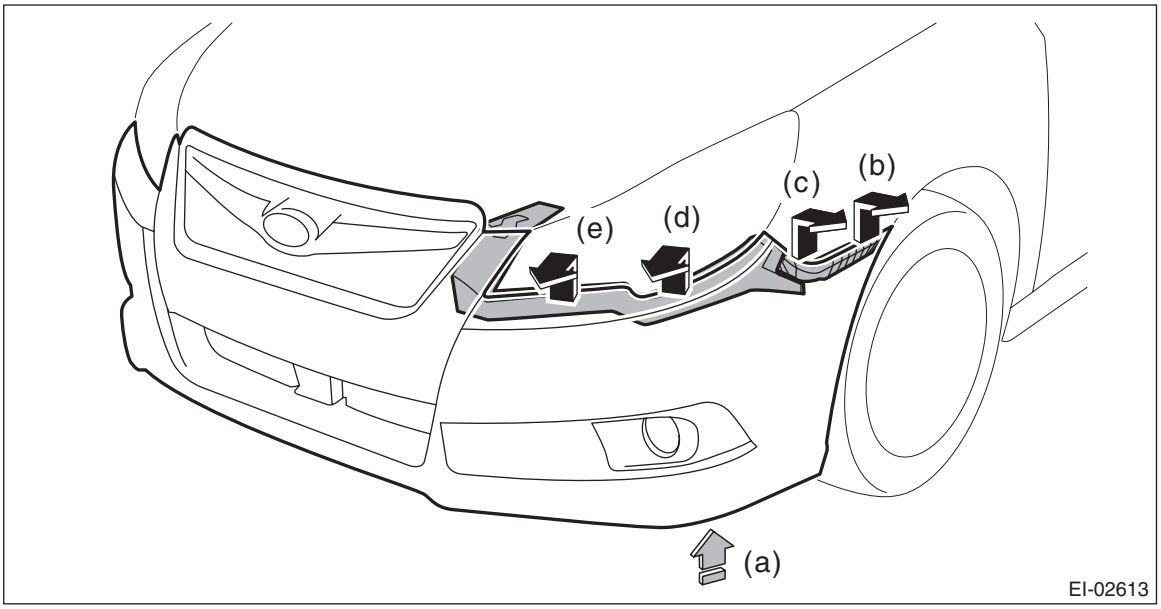

NOTE:
Pushing up the lower side (a) of the fog light, remove from (b) to (e).
Detach the opposite side in the same manner.

2) Remove the front grille assembly.
(1) Remove the screws from the back side of bumper face.
(2) Release the claws, and remove the front grille assembly.

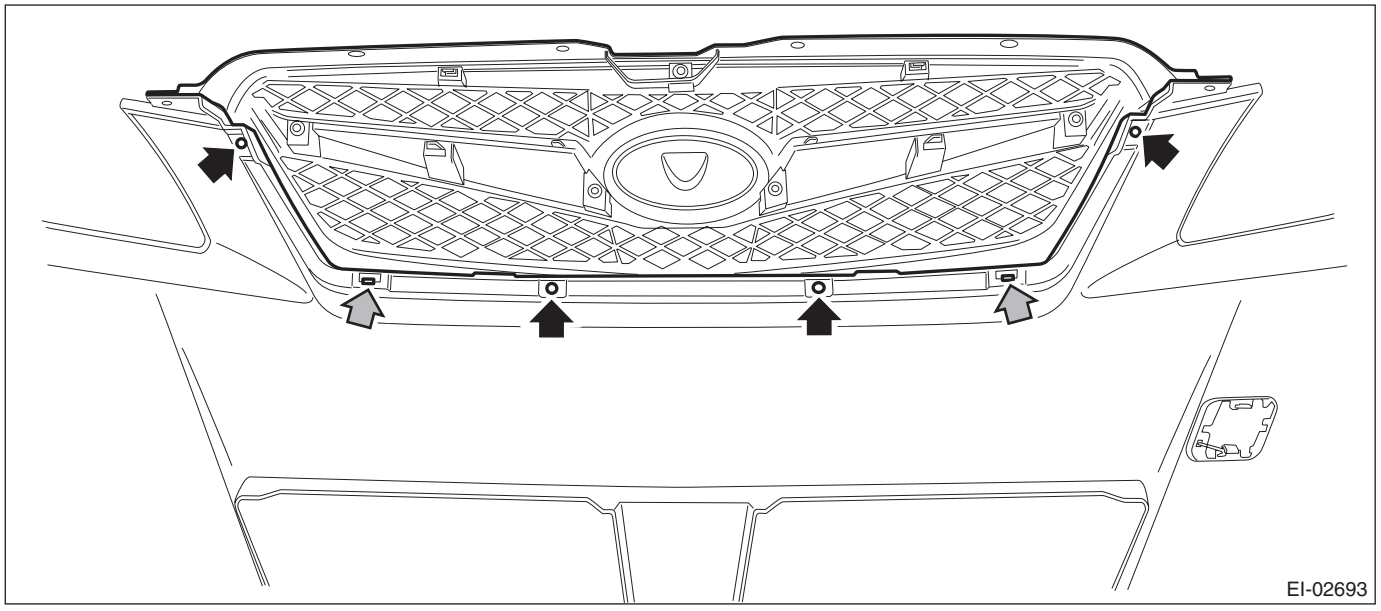

B: INSTALLATION

CAUTION:
Install the bumper face so that the under cover front end (b) comes inside the front bumper face (a).

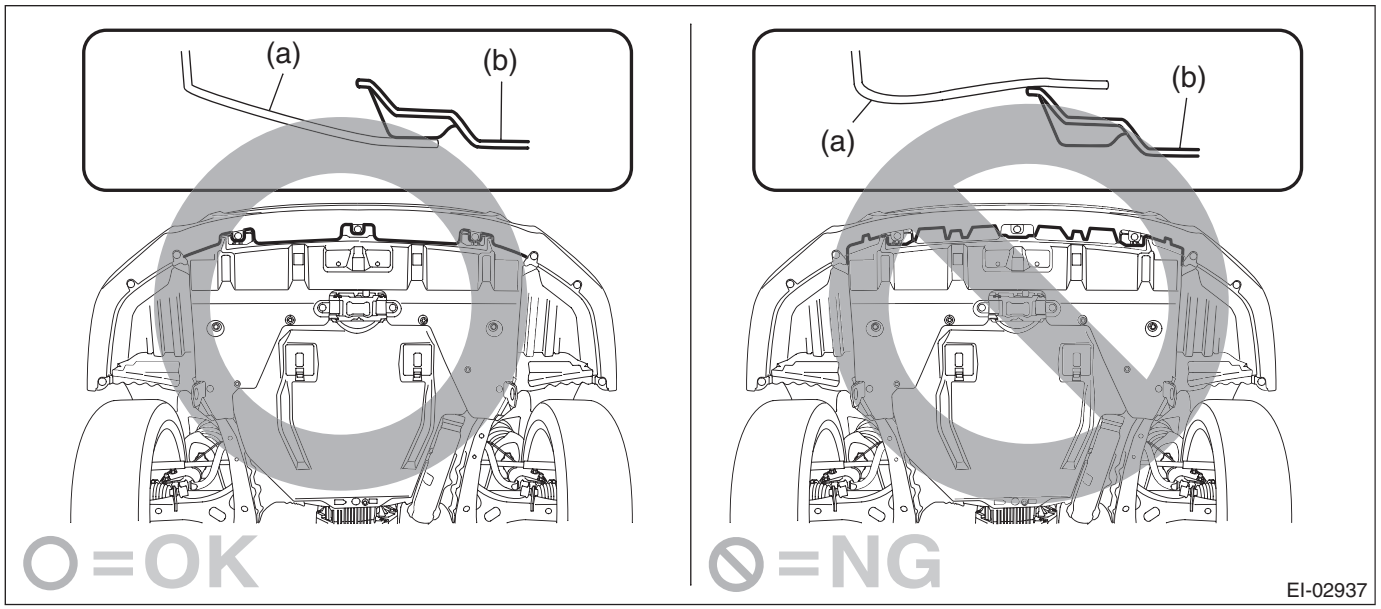

1) Install each part in the reverse order of removal.
2) Adjust the fog light beam. (Model with fog light) <Ref. to LI-41, FOG LIGHT AIMING, ADJUSTMENT, Front Fog Light Assembly.>

3. Front Hood Grille

A: REMOVAL

1) Open the front hood.
2) Remove the hood duct assembly.
   (1) Remove the screws.
   (2) Remove the clips and remove the hood duct assembly.

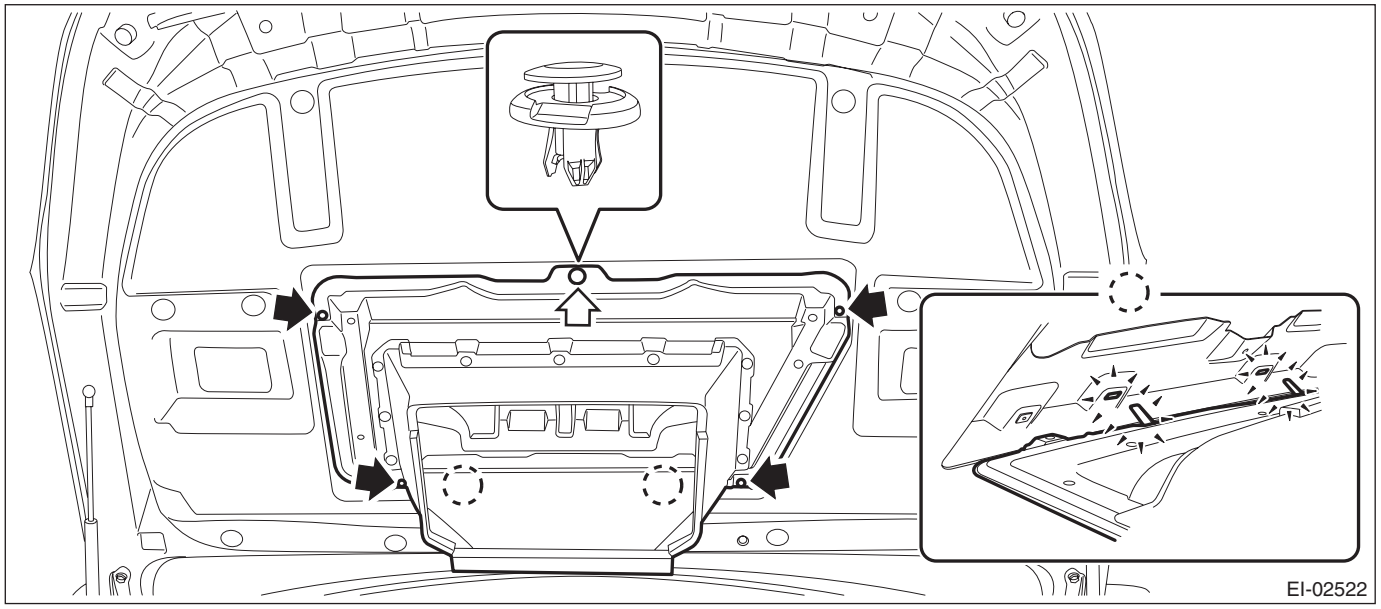

3) Release the clips to remove the front hood insulator.

CAUTION:
Do not reuse any clips damaged during removal. The damaged clip cannot fix the insulator securely. Therefore, always replace with a new part.

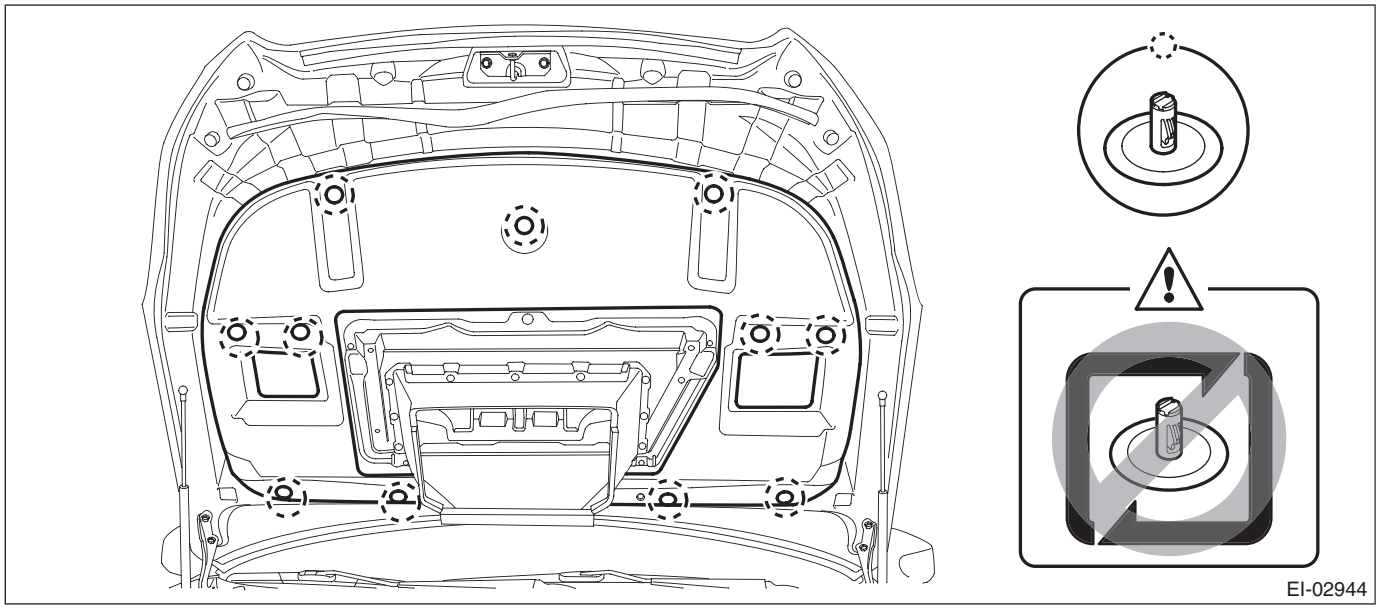

4) Remove the front hood grille.
   (1) Remove the nuts (A).
   (2) Remove clip (B), and remove the front hood grille.

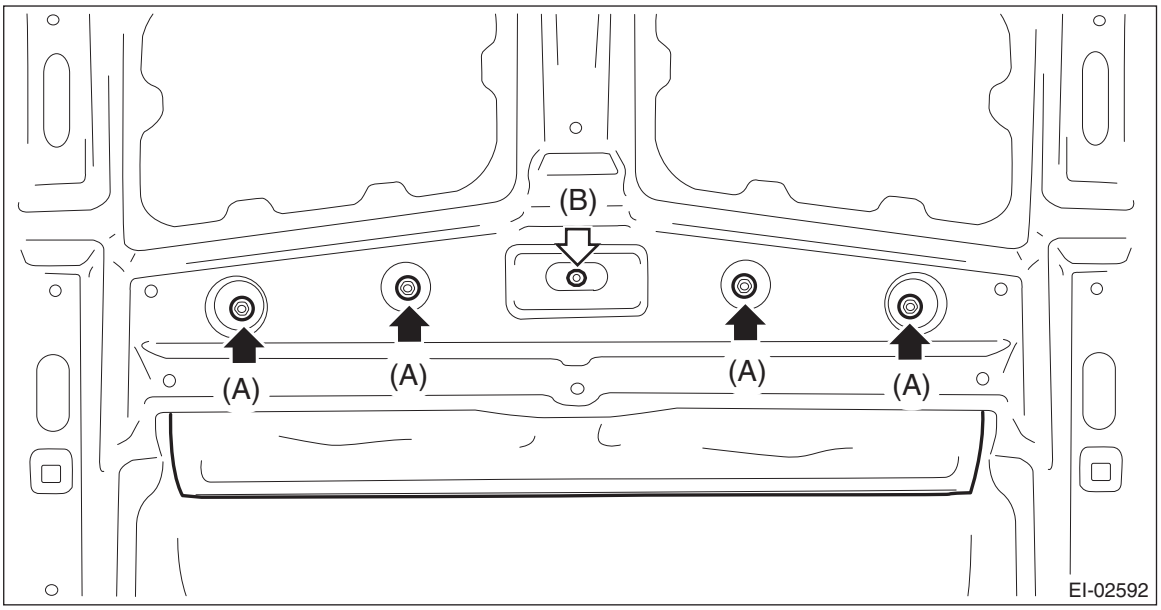

B: INSTALLATION

Install each part in the reverse order of removal.

Tightening torque:
Refer to "COMPONENT" of "General Description". <Ref. to EI-4, FRONT HOOD GRILLE, COMPONENT, General Description.>

NOTE:
Make sure that the front hood duct claws are inserted in the holes on the front hood.

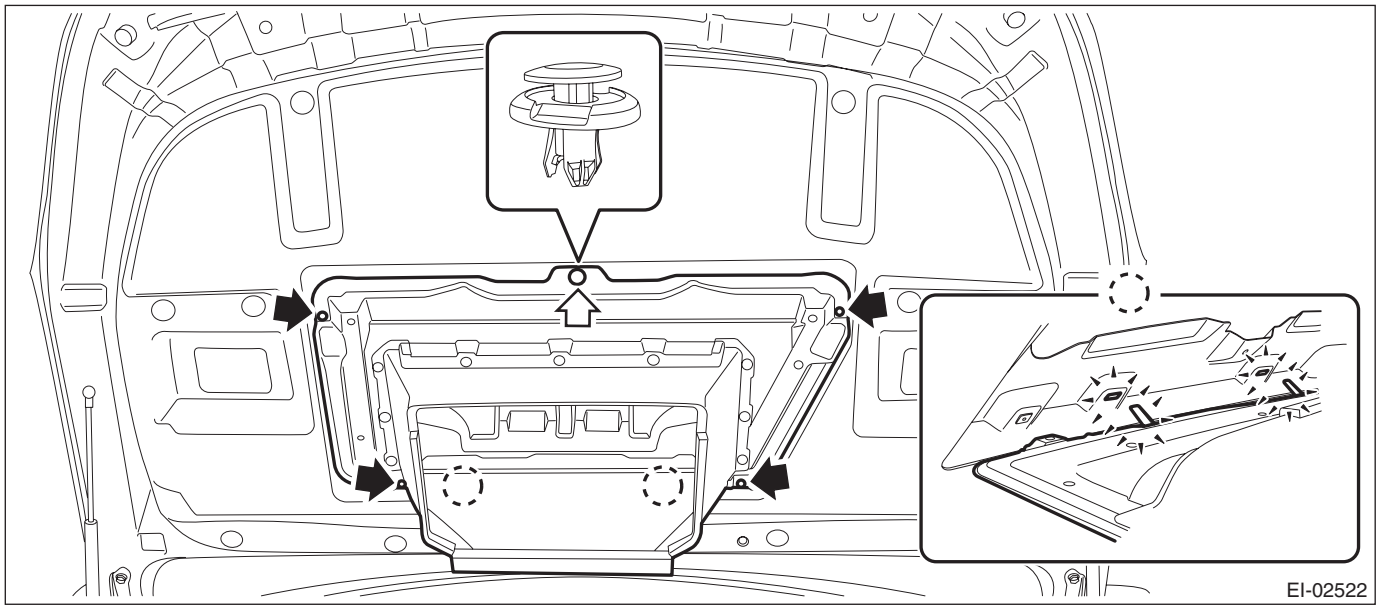

4. Cowl Panel

A: REMOVAL

1) Open the front hood.
2) Remove the front wiper arm assembly.

CAUTION:
Follow the steps below when standing up the wiper arm. Not following the steps may cause contacting of wiper arms and damages of wiper arms.
1. Stand up the driver's side wiper arm.
2. Stand up the passenger's side wiper arm.
Fold the wiper arms in the reverse order.

(1) Remove the cap.
(2) Remove the nuts, and remove the front wiper arm assembly.

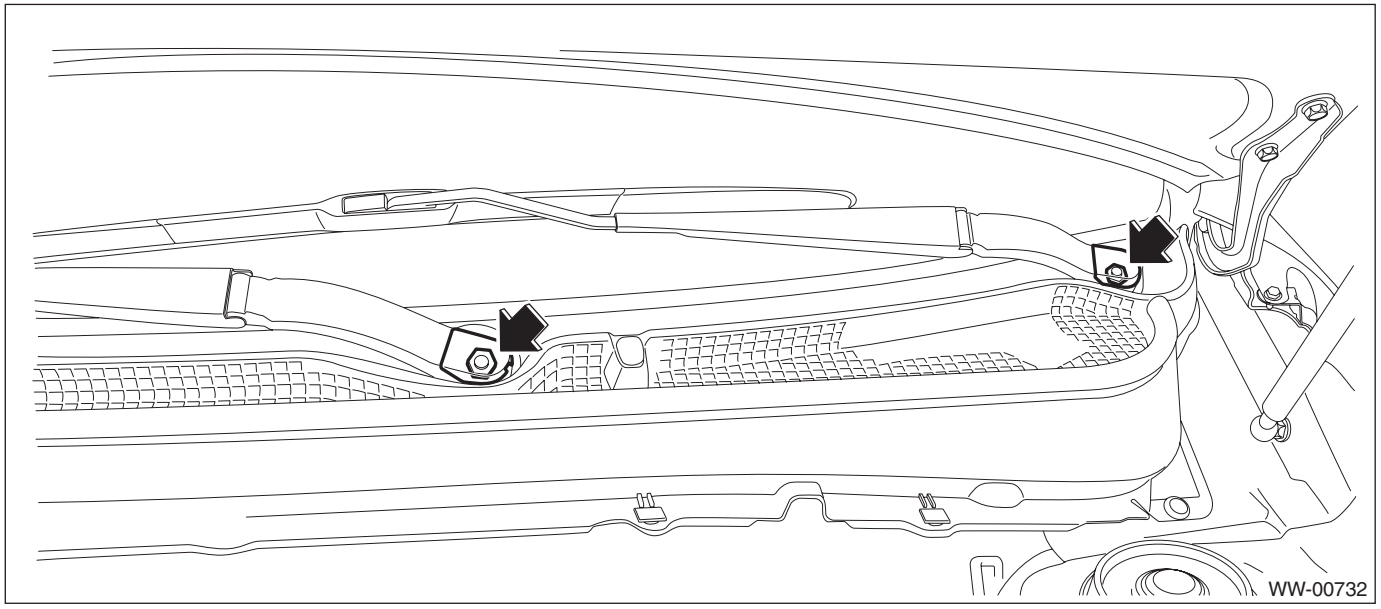

3) Remove the cowl panel side.
(1) Detach the pins of the cowl panel side.
(2) Remove the cowl panel side from inside the fender panel by pulling it.

CAUTION:
Applying excessive pulling force may damage the cowl panel side. If it is difficult to remove, use a plastic remover or equivalent tool.

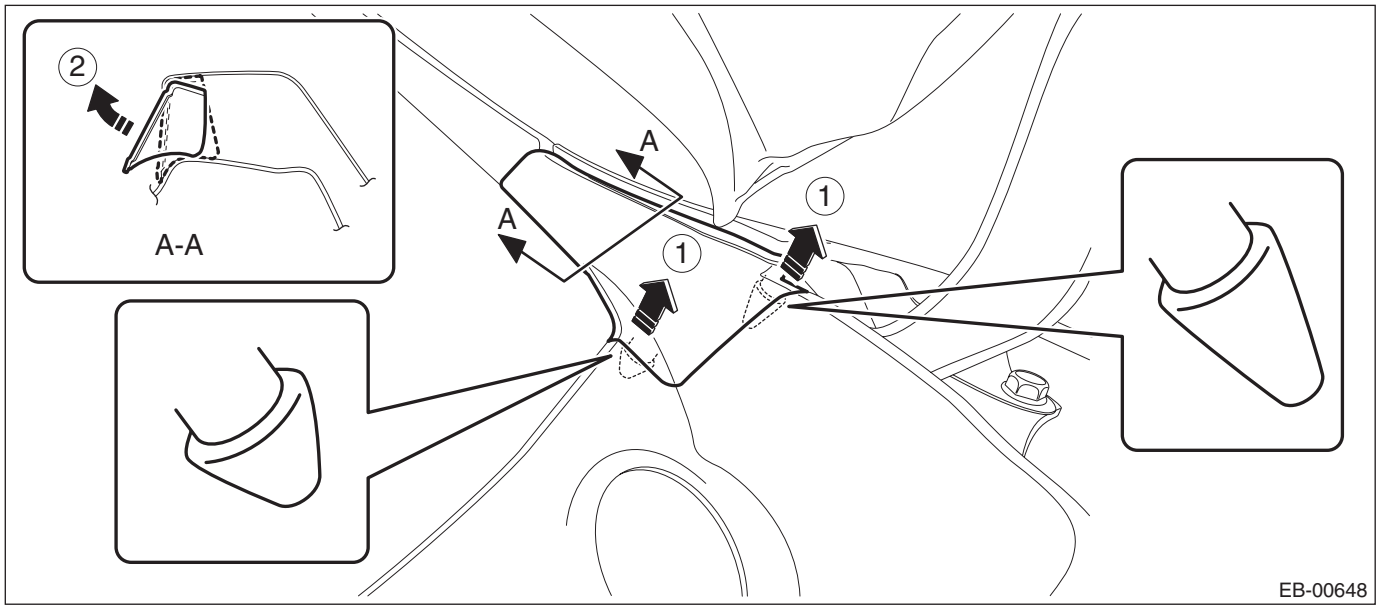

4) Remove the cowl panel.
(1) Release the clip (A).
(2) Push the claw of the clip (B) from both sides to remove it.

CAUTION:
When removing the clip (B), push the claw of the clip from both sides.
The clip may be damaged if forcibly pulled.

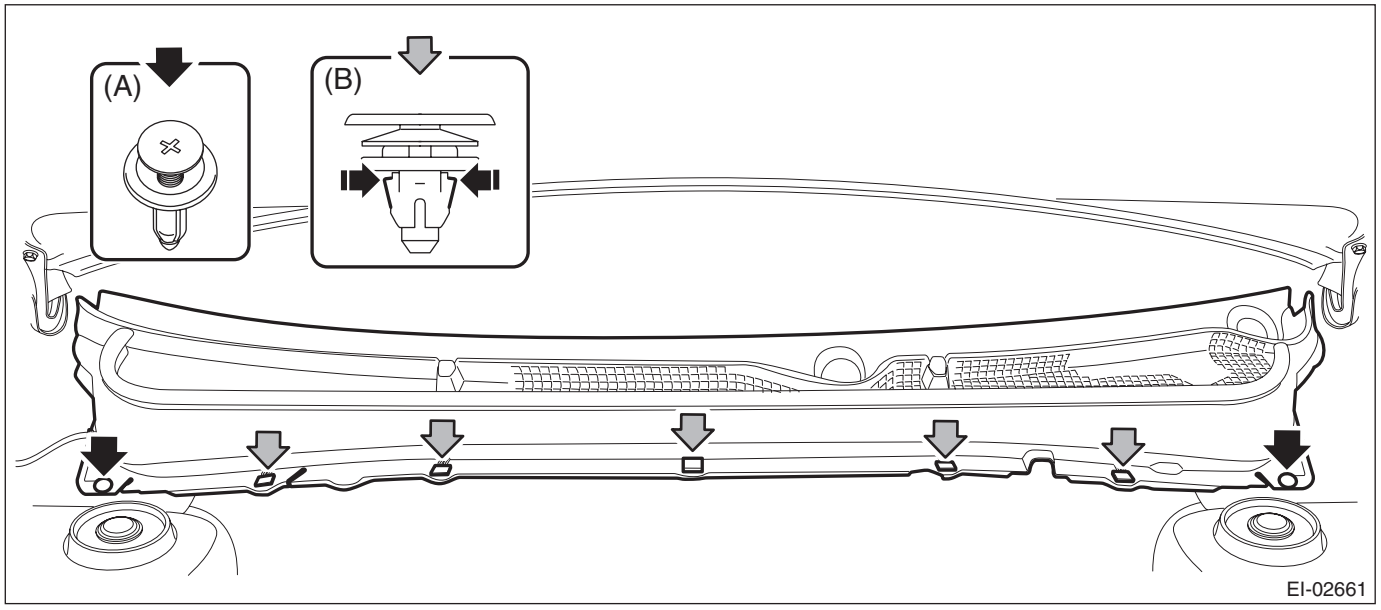

(3) Disconnect the washer hose.

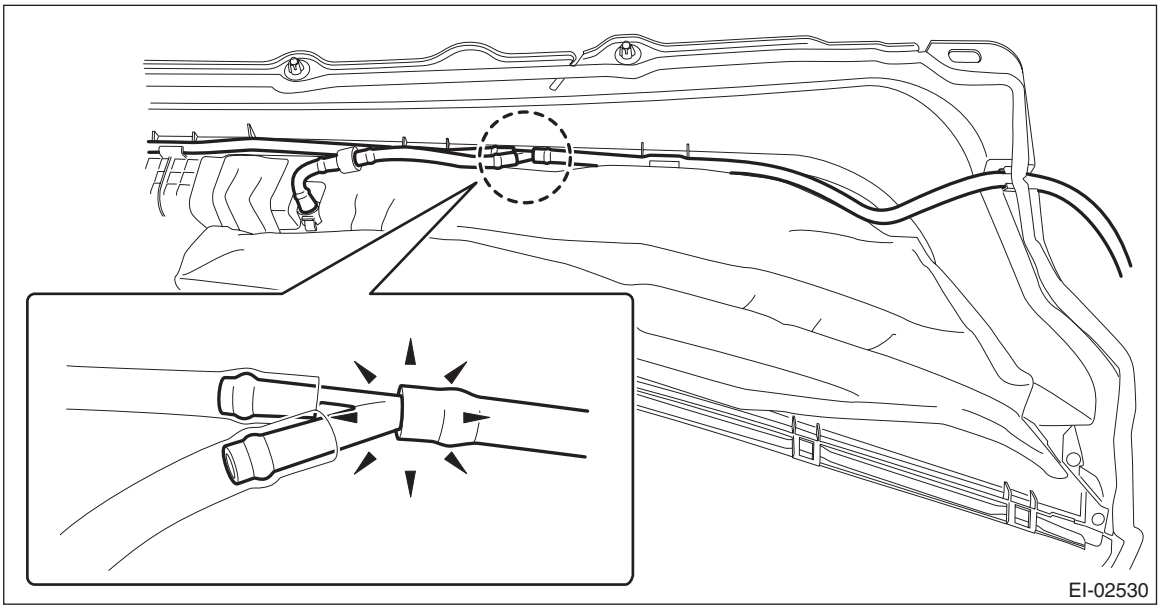

B: INSTALLATION

Install each part in the reverse order of removal.

NOTE:

- Attach the claws of cowl panel to the bottom end of windshield.

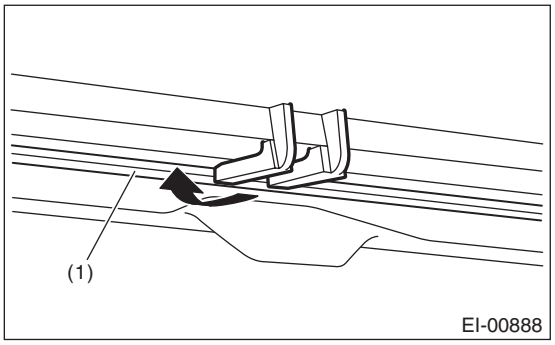

(1) Cross section of windshield

- If the washer nozzles have been removed from the cowl panel, adjust the washer spray positions. <Ref. to WW-34, ADJUSTMENT, Front Washer Nozzle.>

Tightening torque:

Front wiper arm: <Ref. to WW-3, FRONT WIPER, COMPONENT, General Description.>

5. Front Under Cover

A: REMOVAL

1) Lift up the vehicle.
2) Remove the bolts and clips, and remove the front under cover.

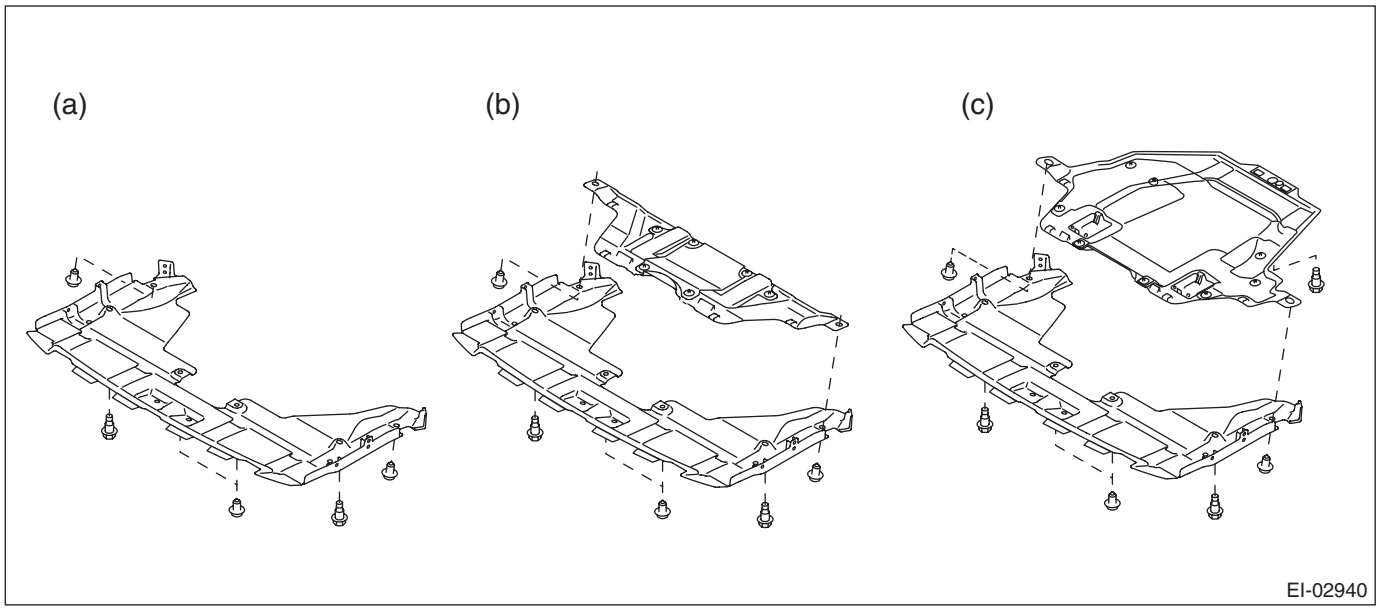

(a) Small type (b) Medium type (c) Large type

B: INSTALLATION

CAUTION:
Install the under cover so that the under cover front end (b) comes inside of the front bumper face (a).

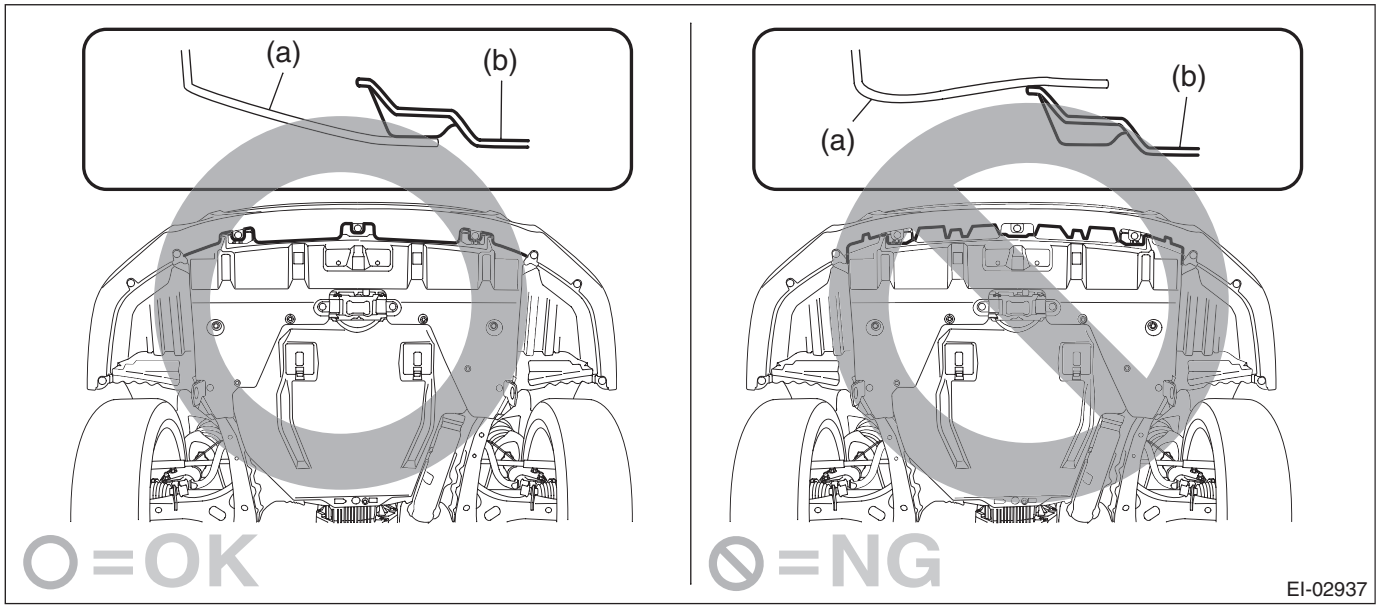

Install each part in the reverse order of removal.

Tightening torque:
17.5 N·m (1.78 kgf-m, 12.9 ft-lb)

6. Floor Under Protector

A: REMOVAL

1) Lift up the vehicle.

NOTE:
A plate type lift cannot be used.
2) Remove the bolts and clips, and remove the front under protector.

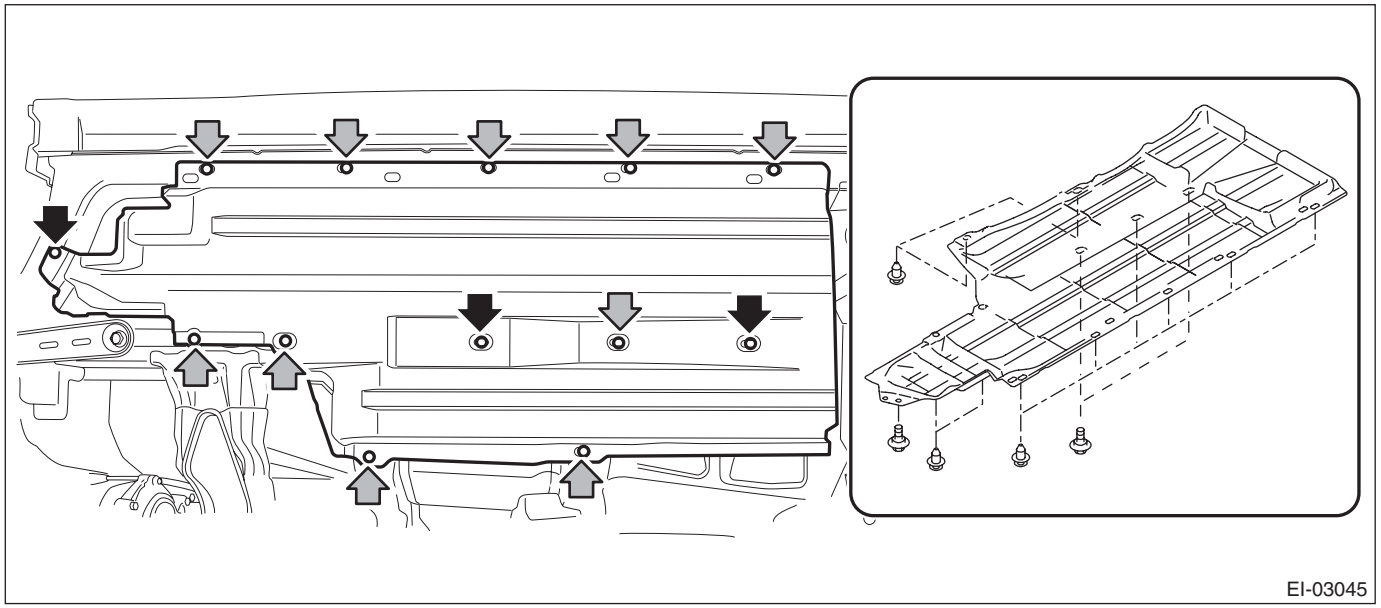

B: INSTALLATION

Install each part in the reverse order of removal.

Tightening torque:
Refer to "COMPONENT" of "General Description". <Ref. to EI-2, FLOOR UNDER PROTECTOR, COMPONENT, General Description.>

7. Fuel Tank Protector

A: REMOVAL

1) Lift up the vehicle.
2) Remove the fuel tank protector.
   (1) Remove the bolt and nuts and remove the fuel tank protector.
   (2) Remove the clip.

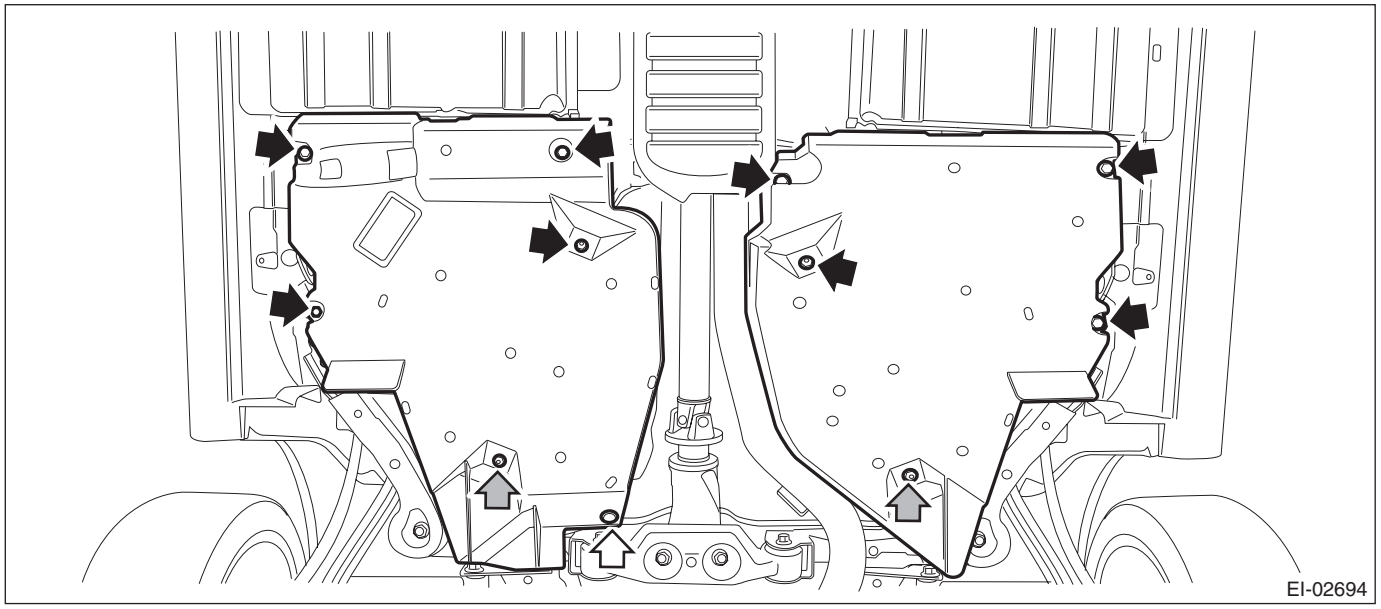

B: INSTALLATION

CAUTION:
Do not reuse the nut (self locking nut). Always replace with a new part.
Install each part in the reverse order of removal.

Tightening torque:
Refer to "COMPONENT" of "General Description". <Ref. to EI-3, FUEL TANK PROTECTOR, COMPONENT, General Description.>

8. Mud Guard

A: REMOVAL

1) Lift up the vehicle.
2) Remove the wheels.
3) Remove the clips, then remove the mud guard.

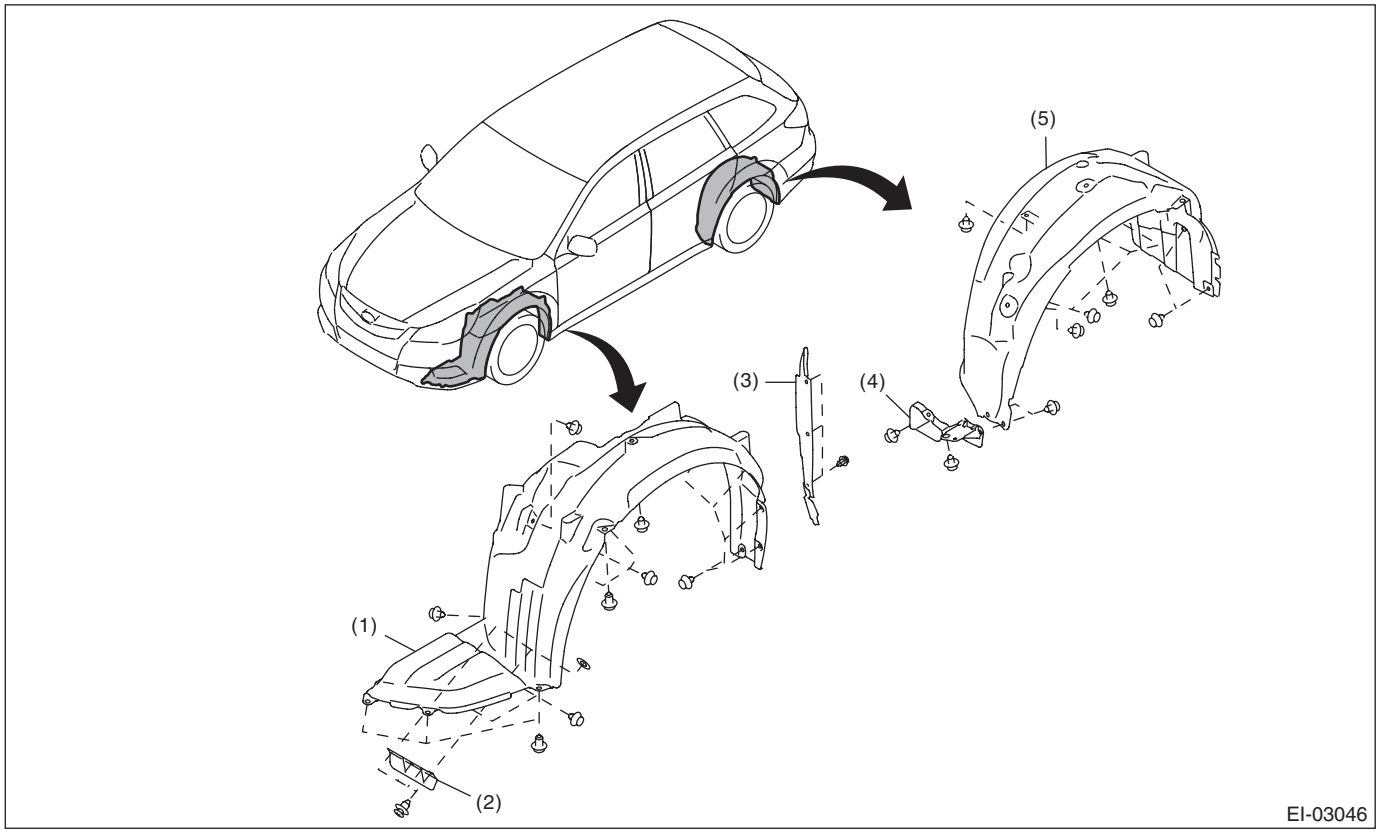

(1) Front mud guard
(2) Front air flap plate
(3) Fender cover lower
(4) Rear air flap plate
(5) Rear mud guard

B: INSTALLATION

Install each part in the reverse order of removal.

Tightening torque:
Wheel nut: 120 N·m (12.24 kgf-m, 88.5 ft-lb)

9. Front Bumper

A: REMOVAL

1) Disconnect the ground cable from battery.
2) Remove the front bumper face assembly.
   (1) Remove the clips, turn over the front mud guard, and disconnect the fog light connector. (Model with fog light)

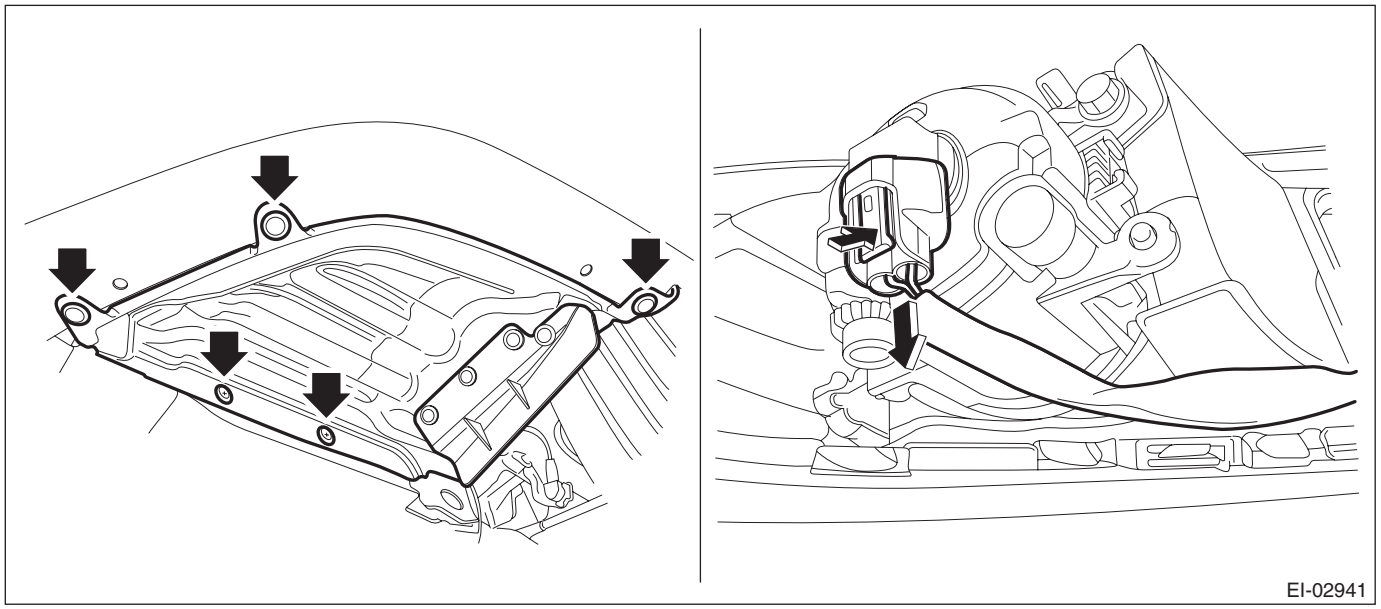

   (2) Remove the clips at the upper side of the bumper.
   (3) Remove the clips from the fender.

(4) Remove the clips at the lower side of bumper.

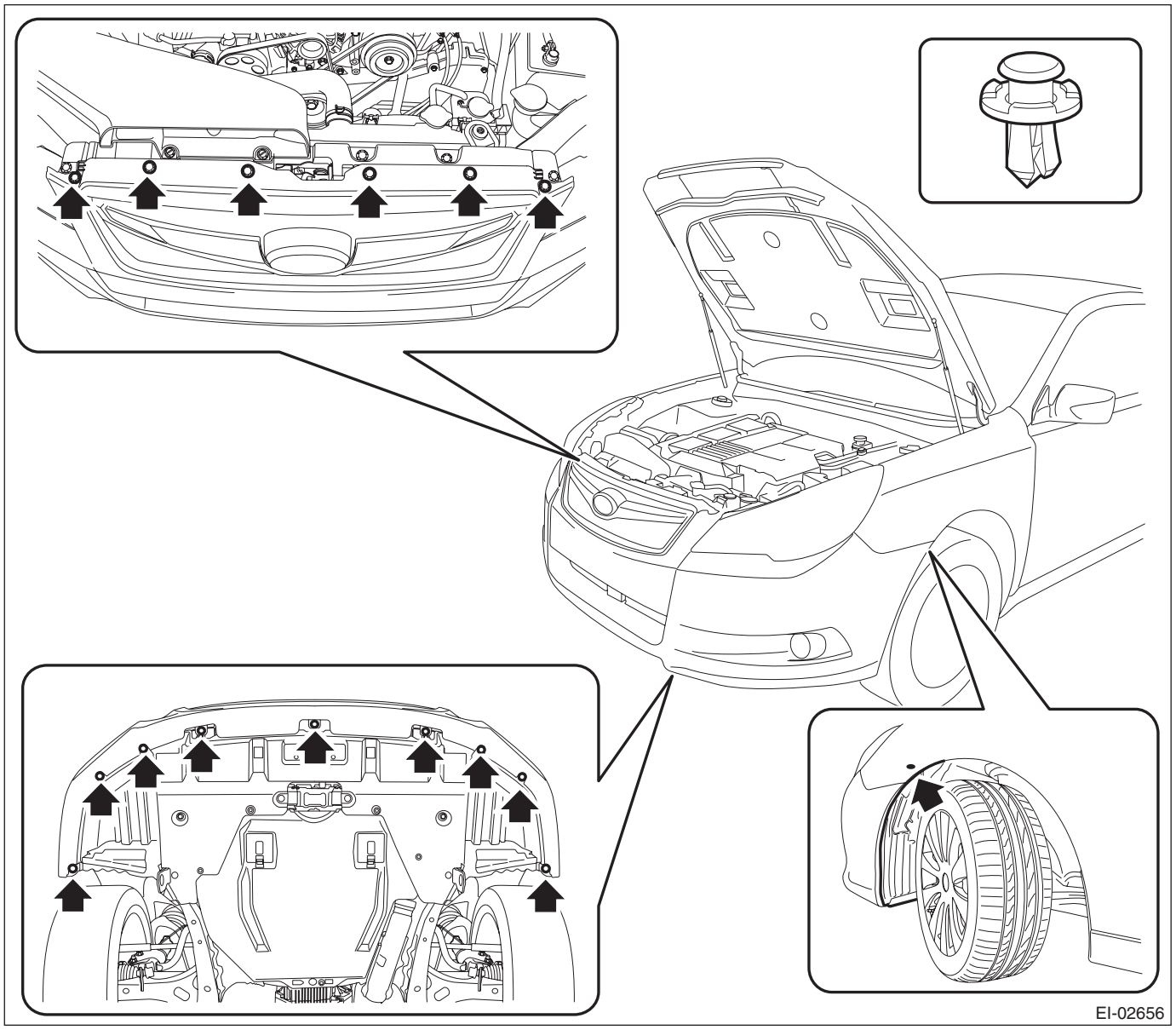

(5) Detach the flange section on the bumper face side from the bracket side front UPR.

CAUTION:
Do not pull forcibly. It may damage the flange sections of the bumper face.

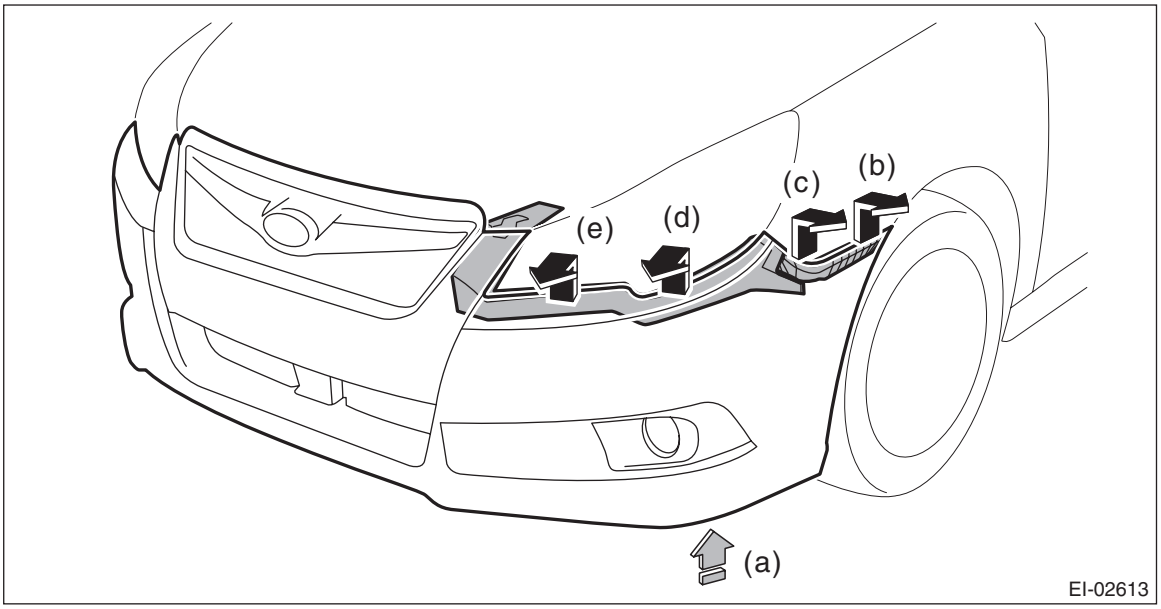

NOTE:
Pushing up the lower side (a) of the fog light, remove from (b) to (e).
Detach the opposite side in the same manner.

3) Remove the beam COMPL front ASSY.
(1) Remove the energy absorber foam.
(2) Remove the bolts, and remove the beam COMPL front from vehicle body.

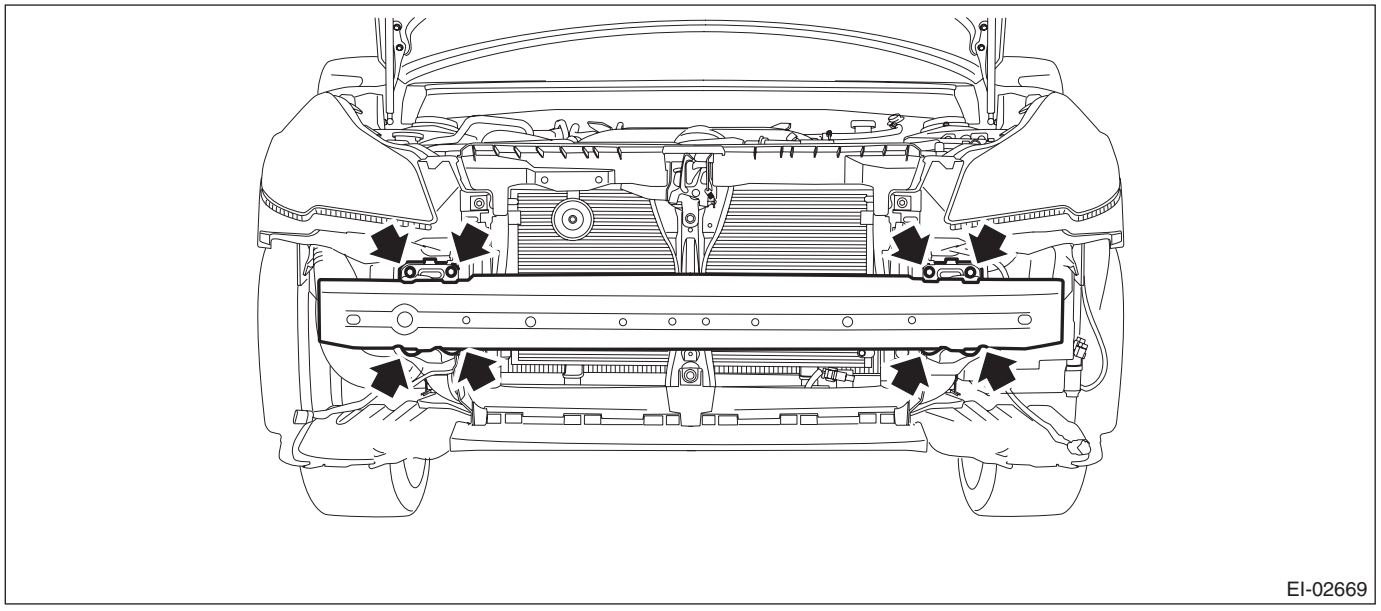

NOTE:
After all bolts are removed, raise the whole beam COMPL front a little to remove it from vehicle body.

4) Remove the bracket center LWR-front.
(1) Release the clips to remove the front under cover.

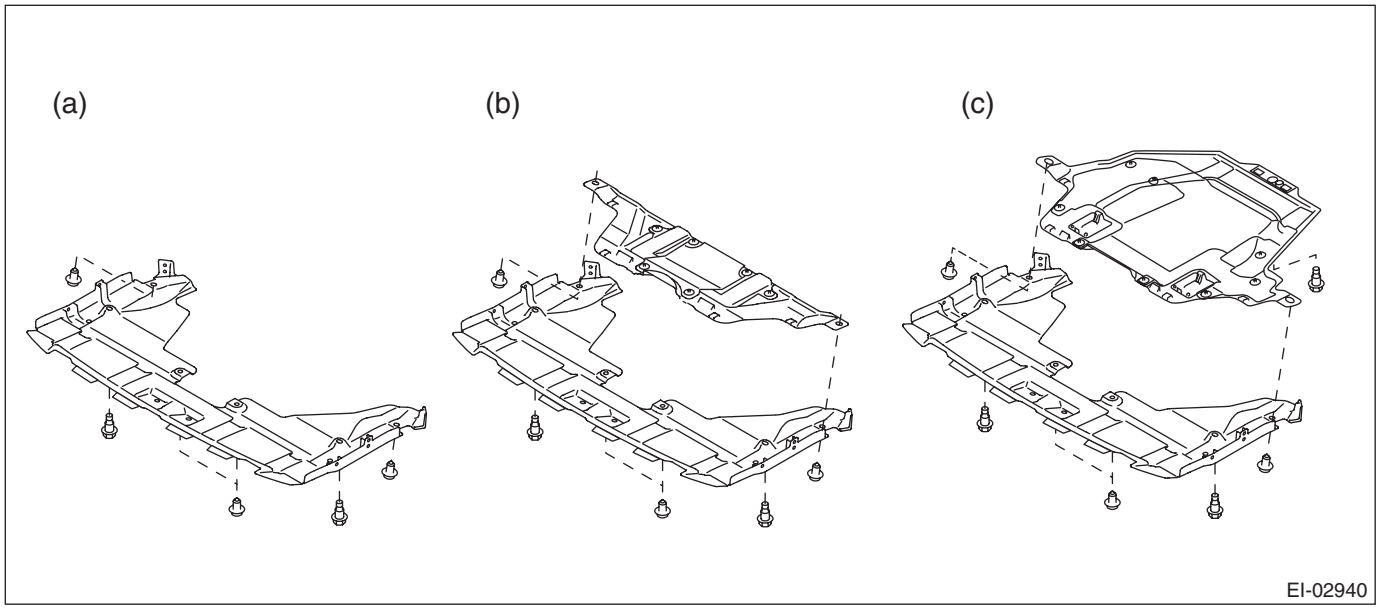

(a) Small type (b) Medium type (c) Large type

(2) Remove the clip, and remove the bracket center LWR-front.

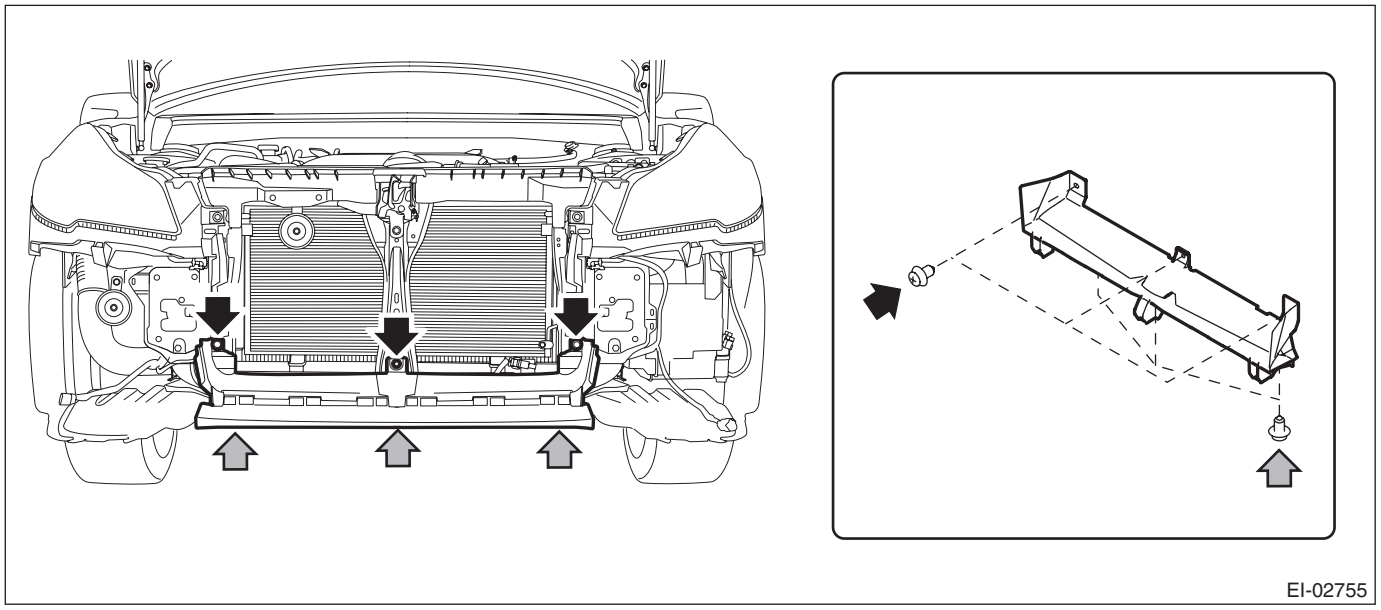

5) Remove the bracket side front UPR.
   (1) Remove the screws.
   (2) Release the claws and remove the bracket side front UPR.

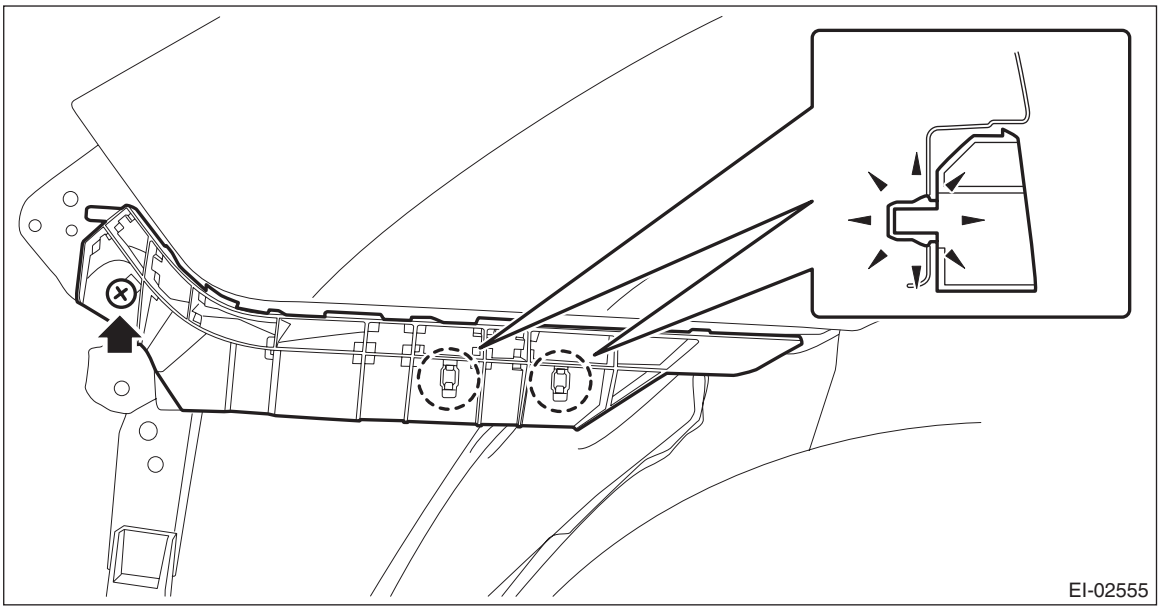
EI-02555

6) Remove the bolts and pins, and remove the front fog light assembly.

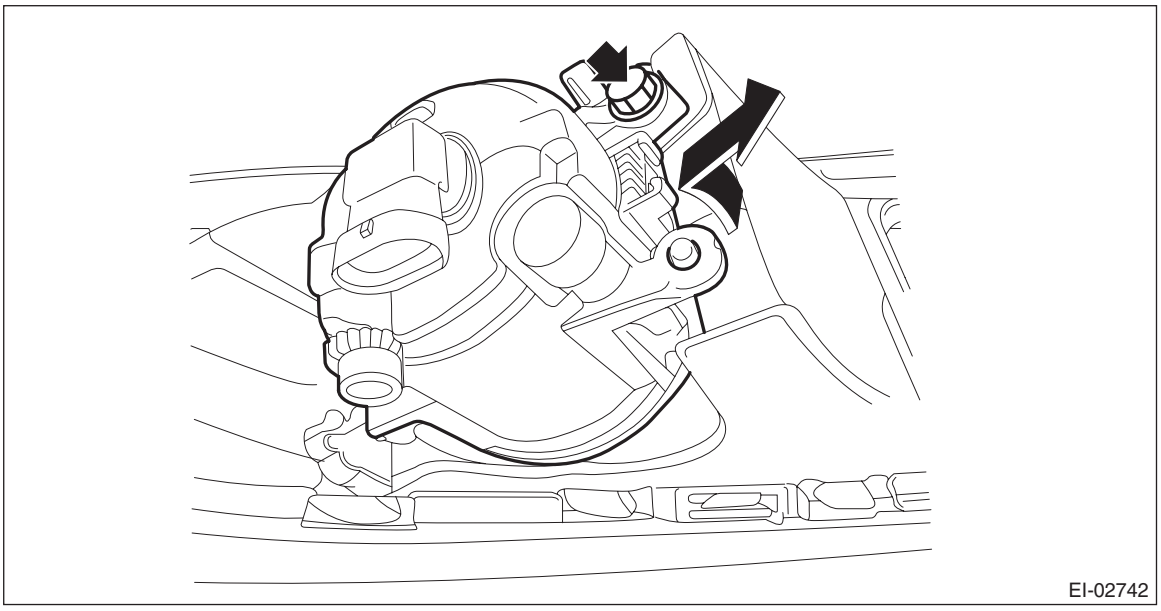
EI-02742

B: INSTALLATION

1) Install each part in the reverse order of removal.
2) Make sure that the bumper flanges are secured to the bracket side front UPR.

CAUTION:
Install the bumper face so that the under cover front end (b) comes inside the front bumper face (a).

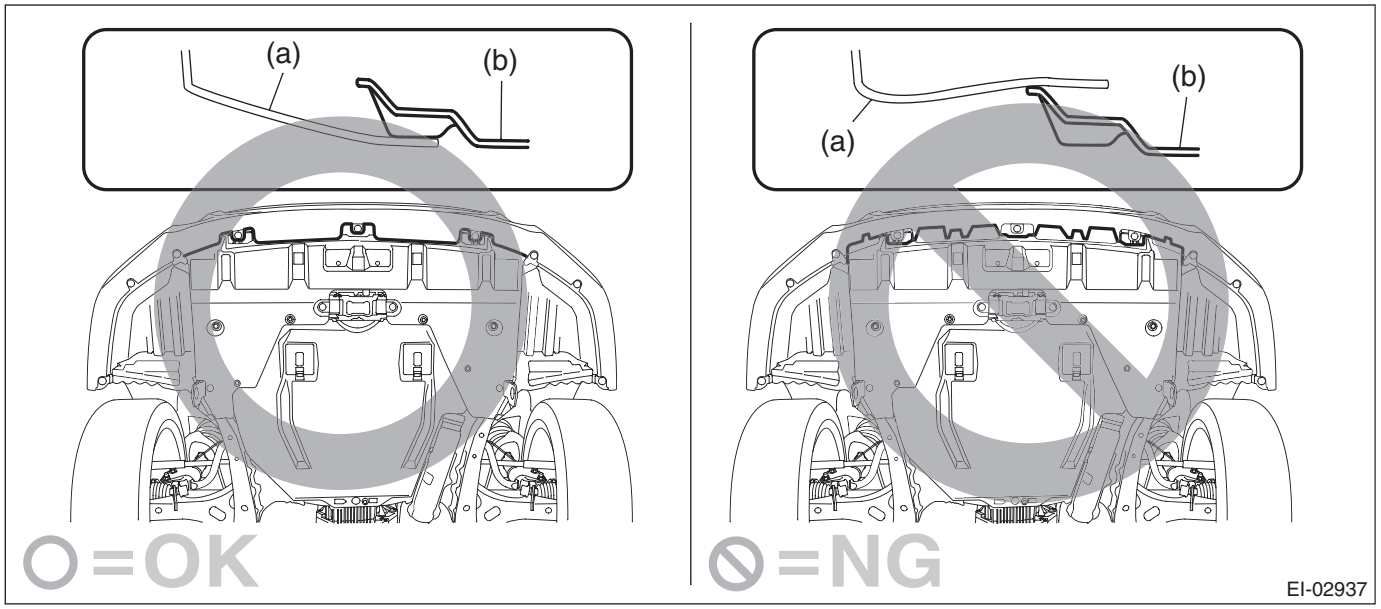

Tightening torque:
Refer to "COMPONENT" of "General Description". <Ref. to EI-5, FRONT BUMPER, COMPONENT, General Description.>

3) Adjust the fog light beam. (Model with fog light) <Ref. to LI-41, FOG LIGHT AIMING, ADJUSTMENT, Front Fog Light Assembly.>

C: REPAIR

1. COATING METHOD FOR PP BUMPER

Process No.	Process name	Job contents	
1	Bumper installation	Place the bumper on a paint worktable as required. Use the paint worktable conforming to inner shape of bumper if possible.	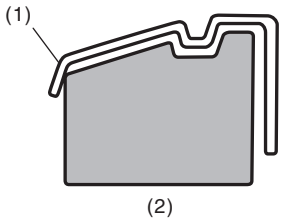 EI-00234 (1) Bumper (2) Set bumper section
2	Masking	Mask specified part (black base) with masking tape. Use masking tape for PP.	
3	Degreasing/cleaning	Clean all parts to be painted with white gasoline, normal alcohol, etc. to remove dirt, oil, fat, etc.	
4	Primer paint	Apply primer to all parts to be painted, using spray gun. Use primer (clear).	
5	Drying	Dry at normal temperature. [10 — 15 min. at 20°C (68°F)] In half-dried condition, PP primer paint is dissolved by solvent, e.g. thinner, etc. Therefore, if dust or dirt must be removed, use ordinary alcohol etc.	
6	Top coat paint (I)	Non-colored	Metallic paint
		Use section (block) paint for top coat. For paint/hardener mixture, observe the specifications recommended by the manufacturers. • Viscosity: 10 — 13 sec./20°C (68°F) • Film thickness: 35 — 45 µ • Spraying pressure: 245 — 343 kPa (2.5 — 3.5 kgf/cm^2, 36 — 50 psi)	Use section (block) paint for top coat. For paint/hardener mixture, observe the specifications recommended by the manufacturers. • Viscosity: 10 — 13 sec./20°C (68°F) • Film thickness: 15 — 20 µ • Spraying pressure: 245 — 343 kPa (2.5 — 3.5 kgf/cm^2, 36 — 50 psi)
7	Drying	Not required.	Dry at normal temperature [at least 10 min. at 20°C (68°F)]. In half-dried condition, avoid dust, dirt.
8	Top coat paint (II)	Not required.	Apply a clear coat to parts with top coat paint (I), three times at 5 — 7 minute intervals. For paint/hardener mixture, observe the specifications recommended by the manufacturers. • Viscosity: 14 — 16 sec./20°C (68°F) • Film thickness: 25 — 30 µ • Spraying pressure: 245 — 343 kPa (2.5 — 3.5 kgf/cm^2, 36 — 50 psi)
9	Drying	60°C (140°F), 60 min. or 80°C (176°F), 30 min. If the temperature is higher than 80°C (176°F), PP may be deformed. Keep maximum temperature at 80°C (176°F) or less.	
10	Inspection	Check paint.	
11	Removal of masking	Remove the masking tape applied in procedure 2.	

2. REPAIR INSTRUCTIONS FOR COLORED PP BUMPER

NOTE:
All PP bumpers are provided with a grained surface, and if the surface is damaged, it cannot normally be restored to its former condition. Damages limited to the shallow scratches that cause only a change in the luster of the base material or coating, can be almost fully restored. Before repairing a damaged area, explain this point to the customer and obtain an understanding about the matter.
Repair methods are outlined below, based on a classification of the extent of damage.
1) Minor damage causing only a change in the luster of the bumper due to a light touch
Almost restorable.

<table>
<tr><th>Process No.</th><th>Process name</th><th colspan="2">Job contents</th></tr>
<tr><td>1</td><td>Cleaning</td><td colspan="2">Clean the area to be repaired using water.</td></tr>
<tr><td>2</td><td>Sanding</td><td colspan="2">Grind the repairing area with #500 sand paper in a “feathering” motion.</td></tr>
<tr><td rowspan="3">3</td><td rowspan="3">Finish</td><td>Resin section</td><td>Coated section</td></tr>
<tr><td>Repeatedly apply wax to the affected area using soft cloth (such as flannel).
Recommended wax: Tire wax or equivalent</td><td rowspan="2">Perform either the same procedures as for the resin section or process No. 18 and subsequent in section 3), depending on the degree and nature of damage.</td></tr>
<tr><td>Polish the waxed area with clean cloth after 5 — 10 minutes.</td></tr>
</table>

2) Deep damage caused by scratching with fences etc.
A dent cannot be repaired but a whitened or swelled part can be removed.

<table>
<tr><th>Process No.</th><th>Process name</th><th colspan="2">Job contents</th></tr>
<tr><td>1</td><td>Cleaning</td><td colspan="2">Clean the damaged area with water.</td></tr>
<tr><td>2</td><td>Removal of damaged area</td><td colspan="2">Cut off protruding area, if any, due to collision, using a putty knife.</td></tr>
<tr><td>3</td><td>Sanding</td><td colspan="2">Grind the affected area with #100 — #500 sand paper.</td></tr>
<tr><td rowspan="2">4</td><td rowspan="2">Finish</td><td>Resin section</td><td>Coated section</td></tr>
<tr><td>Same as process No. 3 in section “1)”.</td><td>Perform process No. 12 and subsequent operations in section “3)”.</td></tr>
</table>

3) Deep damage such as a break or hole that requires filling
Much of the peripheral grained surface must be sacrificed for repair. The degree of restoration is not really worth the expense. (The surface, however, will become almost flush with adjacent areas.)

<table>
<tr><th>Process No.</th><th>Process name</th><th colspan="2">Job contents</th></tr>
<tr><td>1</td><td>Bumper removal</td><td colspan="2">Remove the bumper as required.</td></tr>
<tr><td>2</td><td>Removal of parts</td><td colspan="2">Remove the parts built into bumper as required.</td></tr>
<tr><td>3</td><td>Bumper placement</td><td>Place the bumper on a paint worktable as required.
It is recommended to use the paint worktable conforming to internal shape of bumper.</td><td> 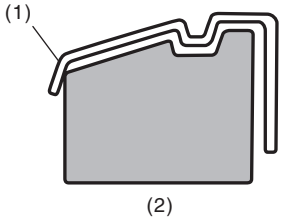

EI-00234
(1) Bumper
(2) Set bumper section</td></tr>
<tr><td>4</td><td>Surface preparation</td><td colspan="2">Remove dust, oil, etc. from areas to be repaired and surrounding areas, using a suitable solvent (white gasoline or alcohol, etc.).</td></tr>
</table>

<table>
<tr><th>Process No.</th><th>Process name</th><th colspan="2">Job contents</th></tr>
<tr><td>5</td><td>Cutting</td><td>If the damage is a crack or a hole, cut a guide slit of 20 to 30 mm (0.79 to 1.18 in) in length along the crack or hole up to the bumper base surface. Next, use a knife or grinder to carve a V-shaped groove in the area for repair.</td><td> 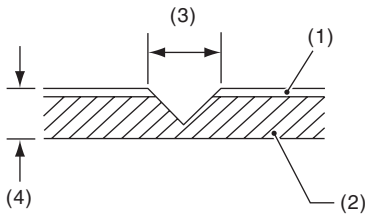

EI-00235
(1) Paint surface
(2) PP base surface
(3) 20 — 30 mm (0.79 — 1.18 in)
(4) 3 mm (0.12 in)</td></tr>
<tr><td>6</td><td>Sanding (I)</td><td colspan="2">Grind beveled surface with sand paper (#40 — #60) to smooth finish.</td></tr>
<tr><td>7</td><td>Cleaning</td><td colspan="2">Clean the sanded surface with the same solvent as used in process No. 4.</td></tr>
<tr><td rowspan="2">8</td><td rowspan="2">Temporary welding</td><td colspan="2">Grind the side just opposite the beveled area with sand paper (#40 — #60) and clean using a solvent.
Temporarily spot-weld the side, using PP welding rod and heater gun.</td></tr>
<tr><td colspan="2"> 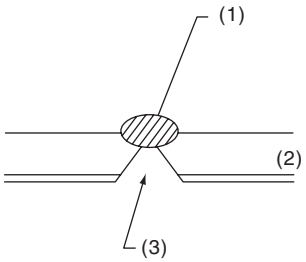

EI-00236
(1) Welded point (Use heater gun and PP welding rod)
(2) PP base surface
(3) Beveled section
NOTE:
• Do not melt welding rod until it flows out. This results in reduced strength.
• Leave the welded spot unattended until it cools completely.</td></tr>
<tr><td rowspan="2">9</td><td rowspan="2">Welding</td><td colspan="2">Using a heater gun and PP welding rod, weld the beveled spot while melting both the rod and damaged area.</td></tr>
<tr><td colspan="2"> 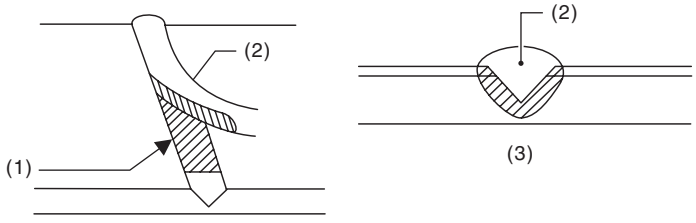

EI-00237
(1) Welding rod
(2) Melt hatched area
(3) Section
NOTE:
• Melt the sections indicated by hatched area.
• Do not melt the welding rod until it flows out, in order to provide strength.
• Always keep the heater gun 1 to 2 cm (0.4 to 0.8 in) away from the welding spot.
• Leave the welded spot unattended until it cools completely.</td></tr>
</table>

<table>
<tr><th>Process No.</th><th>Process name</th><th colspan="2">Job contents</th></tr>
<tr><td rowspan="3">10</td><td rowspan="3">Sanding (II)</td><td colspan="2">Remove excess part of weld with a putty knife. If a drill or disc wheel is used instead of the knife, operate it at a rate less than 1,500 rpm and grind the excess part little by little. A higher rpm will cause the PP substrate to melt from the heat.</td></tr>
<tr><td colspan="2"> 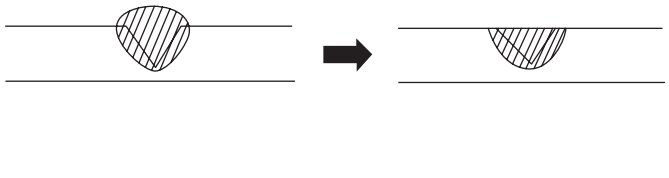
EI-00042</td></tr>
<tr><td colspan="2">Sand the welded spot smooth with #240 sand paper.</td></tr>
<tr><td>11</td><td>Masking</td><td colspan="2">Mask the black substrate section using masking tape.</td></tr>
<tr><td>12</td><td>Cleaning/degreasing</td><td colspan="2">Completely clean the entire coated area, using solvent similar to that used in process No. 4.</td></tr>
<tr><td>13</td><td>Primer coating</td><td colspan="2">Apply a coat of primer for bumpers to the repaired surface and its surrounding areas. Mask these areas, if necessary.
NOTE:
Be sure to apply a coat of primer using a spray gun at a pressure of 245 — 343 kPa (2.5 — 3.5 kgf/cm^2, 36 — 50 psi).</td></tr>
<tr><td>14</td><td>Leave unattended</td><td colspan="2">Leave the repaired area unattended at 20°C (68°F) for 10 to 15 minutes until primer is half-dry.
NOTE:
If dirt or dust comes in contact with the coated area, wipe it off with a cloth dampened with alcohol. (Do not use thinner since the coated area tends to melt.)</td></tr>
<tr><td>15</td><td>Surfacer coating</td><td colspan="2">Apply a coat of surfacer for PP bumpers to the repaired area two or three times at an interval of 3 — 5 minutes.
For surfacer/hardener mixture, viscosity and paint thickness, observe the specifications of the surfacers to be used.</td></tr>
<tr><td>16</td><td>Drying</td><td colspan="2">Allow the coated surface to dry for 20 minutes at 20°C (68°F) [or 30 minutes at 60°C (140°F)].</td></tr>
<tr><td>17</td><td>Sanding (III)</td><td colspan="2">Sand the coated surface and its surrounding areas using #400 sand paper and water.</td></tr>
<tr><td>18</td><td>Cleaning/degreasing</td><td colspan="2">Same as process No. 12.</td></tr>
<tr><td rowspan="2">19</td><td rowspan="2">Top coat (I)</td><td>Non-colored</td><td>Metallic paint</td></tr>
<tr><td>Use a “block” coating method.
For paint/hardener mixture, observe the specifications recommended by the manufacturers.
• Viscosity: 11 — 13 sec./20°C (68°F)
• Coating film thickness: 40 — 50 µ
• Spraying pressure: 245 — 343 kPa (2.5 — 3.5 kgf/cm^2, 36 — 50 psi)</td><td>Use a “block” coating method.
For paint/hardener mixture, observe the specifications recommended by the manufacturers.
• Viscosity: 11 — 13 sec./20°C (68°F)
• Coating film thickness: 20 — 30 µ
• Spraying pressure: 245 — 343 kPa (2.5 — 3.5 kgf/cm^2, 36 — 50 psi)</td></tr>
<tr><td>20</td><td>Leave unattended</td><td>Not required.</td><td>Leave unattended at 20°C (68°F) for at least 10 minutes until the topcoated area is half-dry.
NOTE:
Be careful to keep dust or dirt from coming in contact with the affected area.</td></tr>
<tr><td>21</td><td>Top coat (II)</td><td>Not required.</td><td>Apply a clear coat three times at an interval of 3 to 5 minutes.
For paint/hardener mixture, observe the specifications recommended by the manufacturers.
• Viscosity: 10 — 13 sec./20°C (68°F)
• Coating film thickness: 20 — 30 µ
• Spraying pressure: 245 — 343 kPa (2.5 — 3.5 kgf/cm^2, 36 — 50 psi)</td></tr>
<tr><td>22</td><td>Drying</td><td colspan="2">Allow the coated surface to dry for two hours at 20°C (68°F) or 30 minutes at 60°C (140°F).
NOTE:
Do not allow the temperature to exceed 80°C (176°F) since this will deform the PP substrate.</td></tr>
<tr><td>23</td><td>Inspection</td><td colspan="2">Carefully check the condition of the repaired area.</td></tr>
</table>

Process No.	Process name	Job contents
24	Removal of masking	Remove the masking tape applied in process No. 11 and 13.
25	Parts installation	Install parts on the bumper in reverse order of removal.
26	Bumper installation	Install the bumper.

10.Rear Bumper

A: REMOVAL

1) Remove the rear combination light assembly.

- Sedan model
  1. Remove the trunk room trim. <Ref. to EI-127, REMOVAL, Trunk Room Trim.>
  2. Disconnect the connector.
  3. Release the nuts and clips, then remove the rear combination light assembly.

CAUTION:
Be careful not to damage the clips.

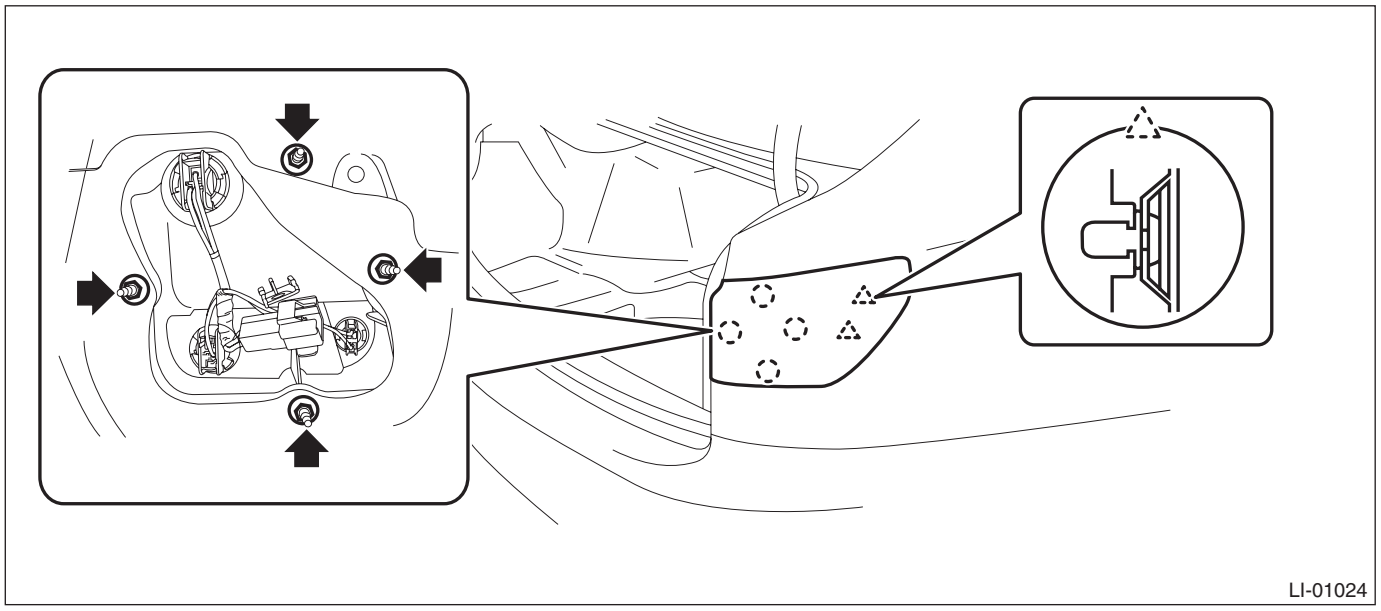

- OUTBACK model
  1. Remove the clips and detach the rear combination light covers.

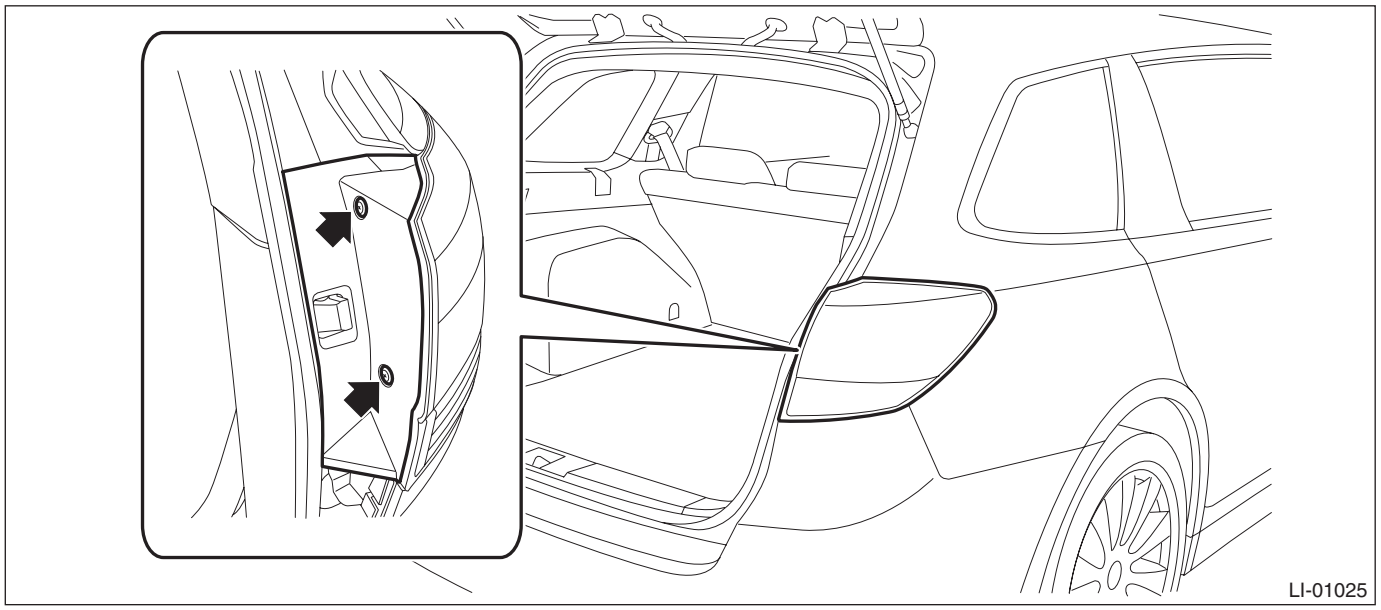

  2. Release the bolts and clips, then pull out the rear combination light assembly to the vehicle rear.
  3. Disconnect the connector and remove the rear combination light assembly.

CAUTION:
Be careful not to damage the clips.

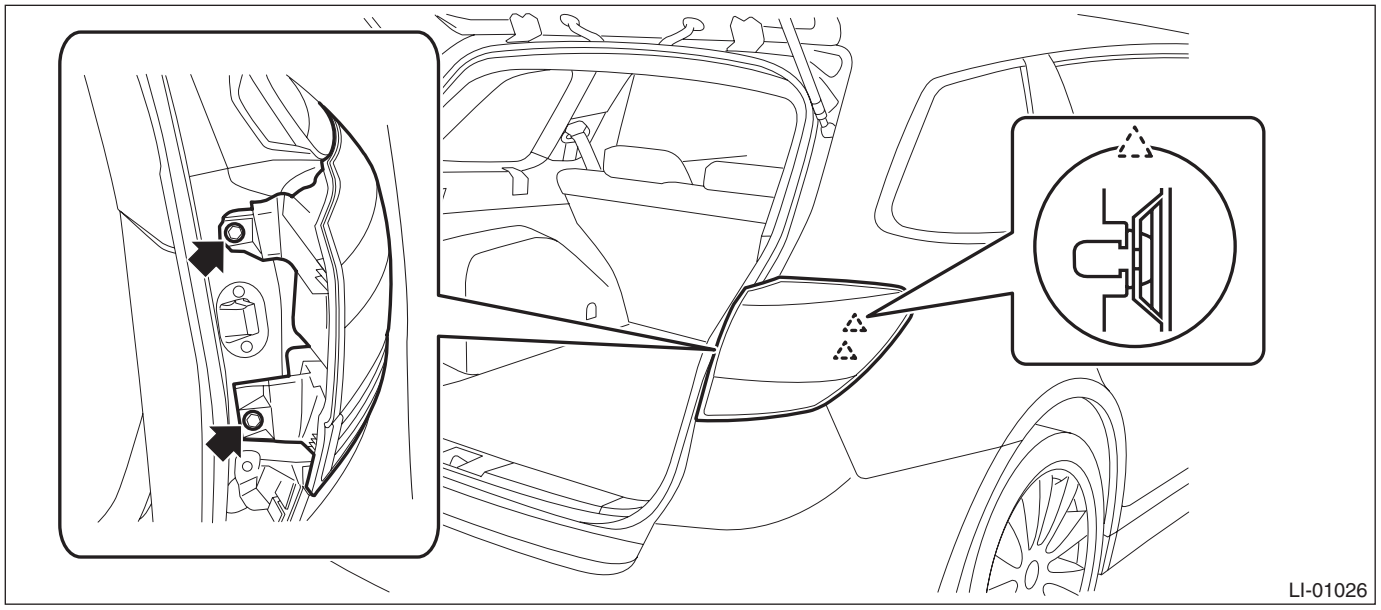

2) Remove the rear bumper face assembly.
   (1) Remove the clips inside the wheel housing.
   (2) Remove the clips at the lower side of rear bumper.

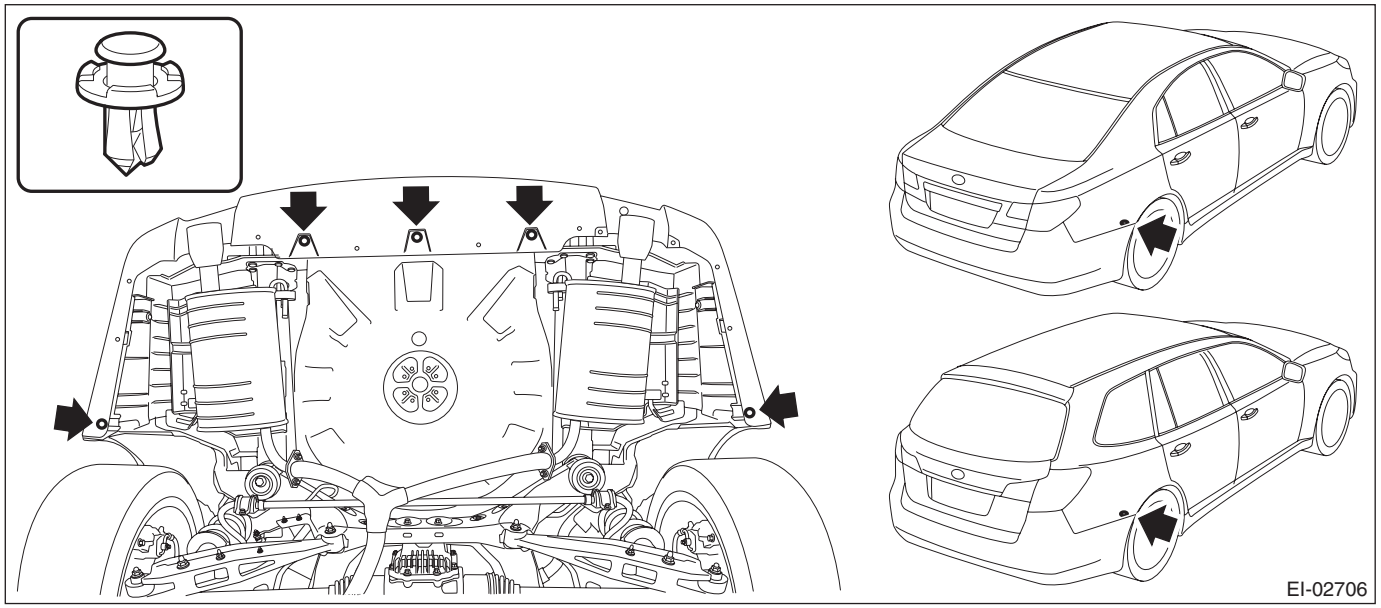

   (3) Detach the (b) and (c) while pulling up (a) of the bumper.
   (4) Detach (e) while pulling up the bumper (d).
   (5) Detach the opposite side in the same manner.
   (6) Detach in order from (f) to (h) while pulling up center part of the bumper face.

CAUTION:
Do not pull with a excessive force. Otherwise the bracket installation area may be damaged.

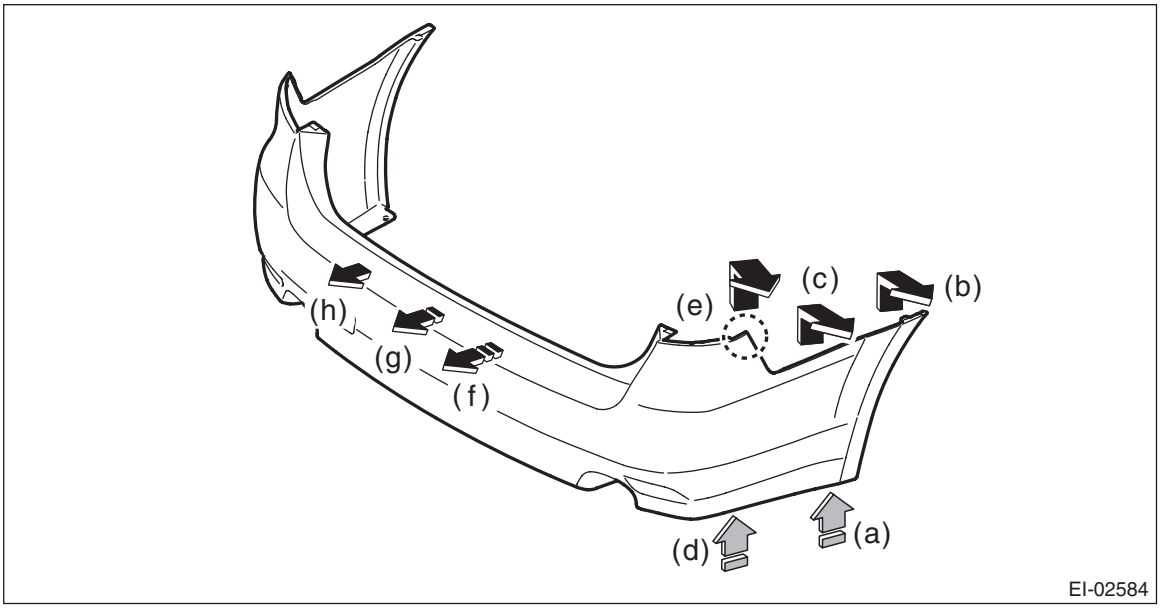

3) Remove the rear bumper beam assembly.
   (1) Remove the energy absorber foam.
   (2) Remove the nuts, and remove the rear bumper beam assembly from vehicle body.

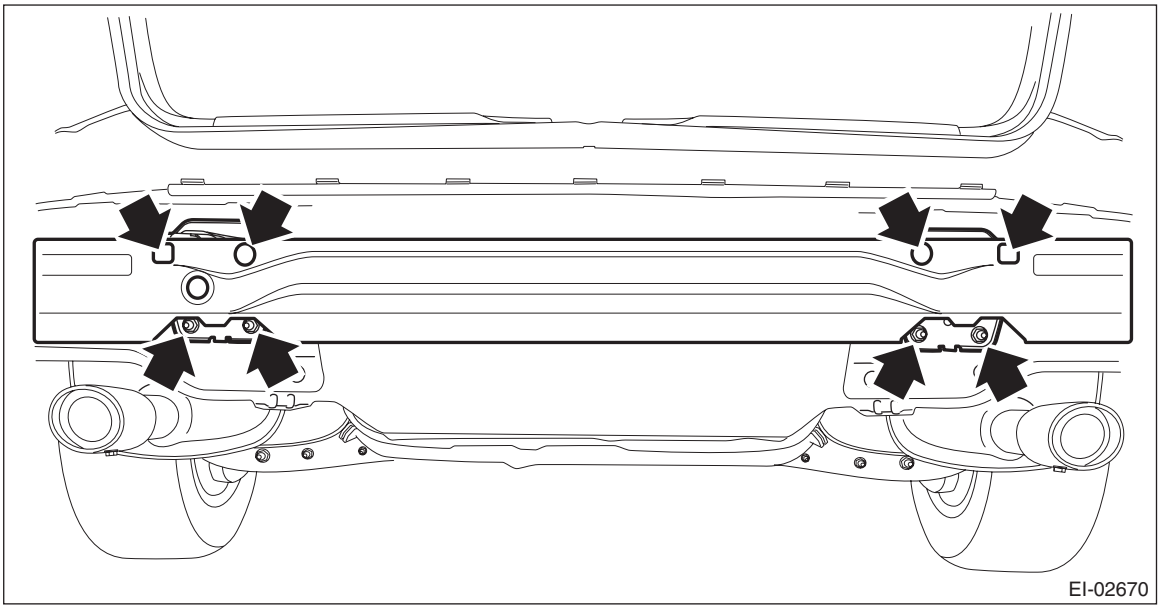

NOTE:
After all nuts are removed, raise the rear bumper beam assembly a little to remove it from vehicle body.

4) Remove bumper brackets.
- Sedan model

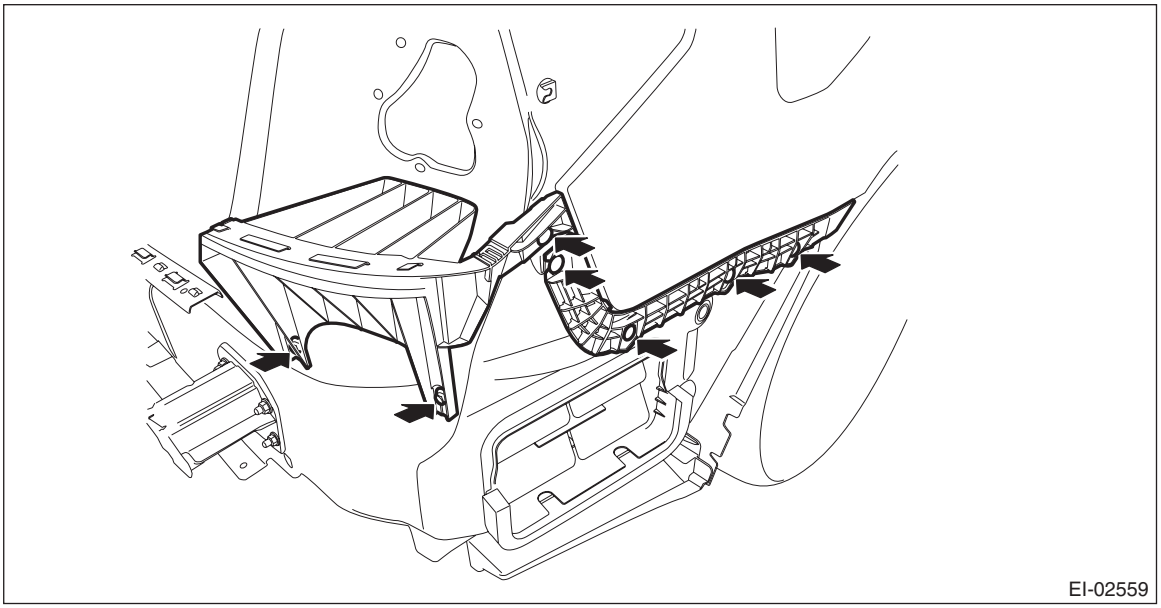
EI-02559

- OUTBACK model

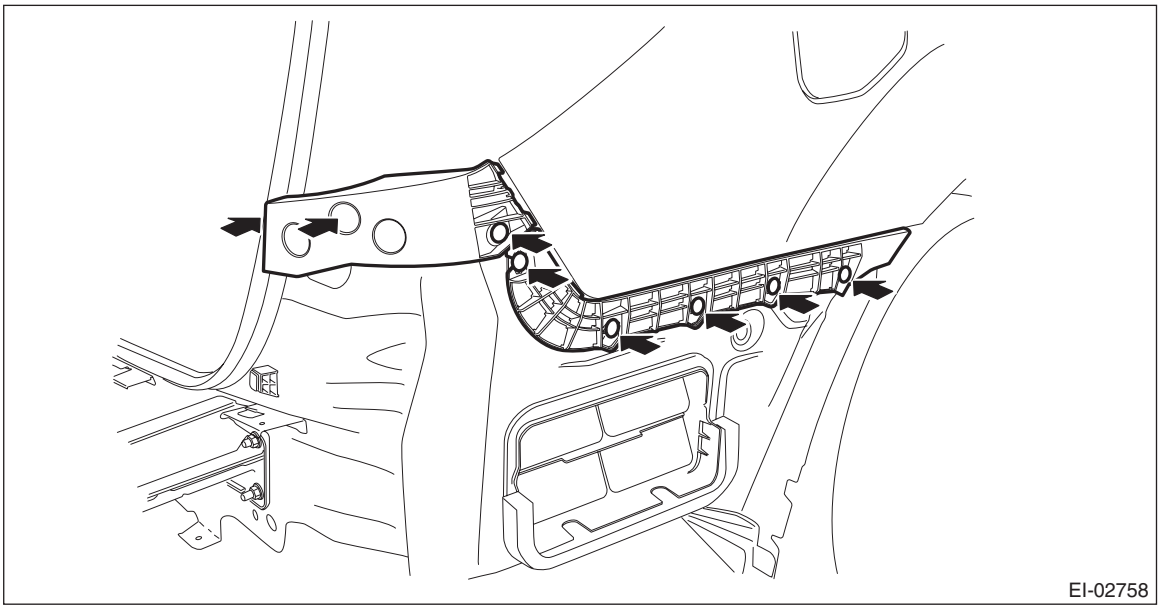
EI-02758

5) Remove the reflex reflector. (OUTBACK model)

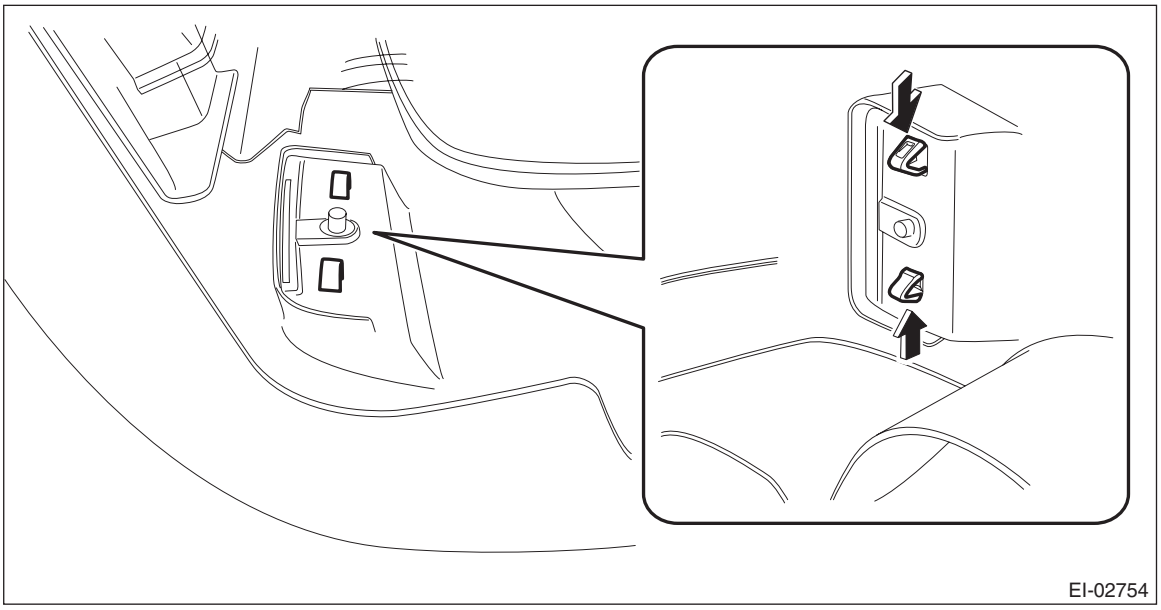

(1) Press the claws of reflex reflector from the back of the bumper face.
(2) Remove the reflex reflector.

B: INSTALLATION

Install each part in the reverse order of removal.

NOTE:
If the bumper face comes off too easily, adjust the hook of the bracket side.

Tightening torque:
Refer to "COMPONENT" of "General Description". <Ref. to EI-6, REAR BUMPER, COMPONENT, General Description.>

C: REPAIR

Refer to the front bumper repair. <Ref. to EI-45, REPAIR, Front Bumper.>

11.Side Sill Spoiler

A: REMOVAL

Remove the clips and detach the side spoiler.

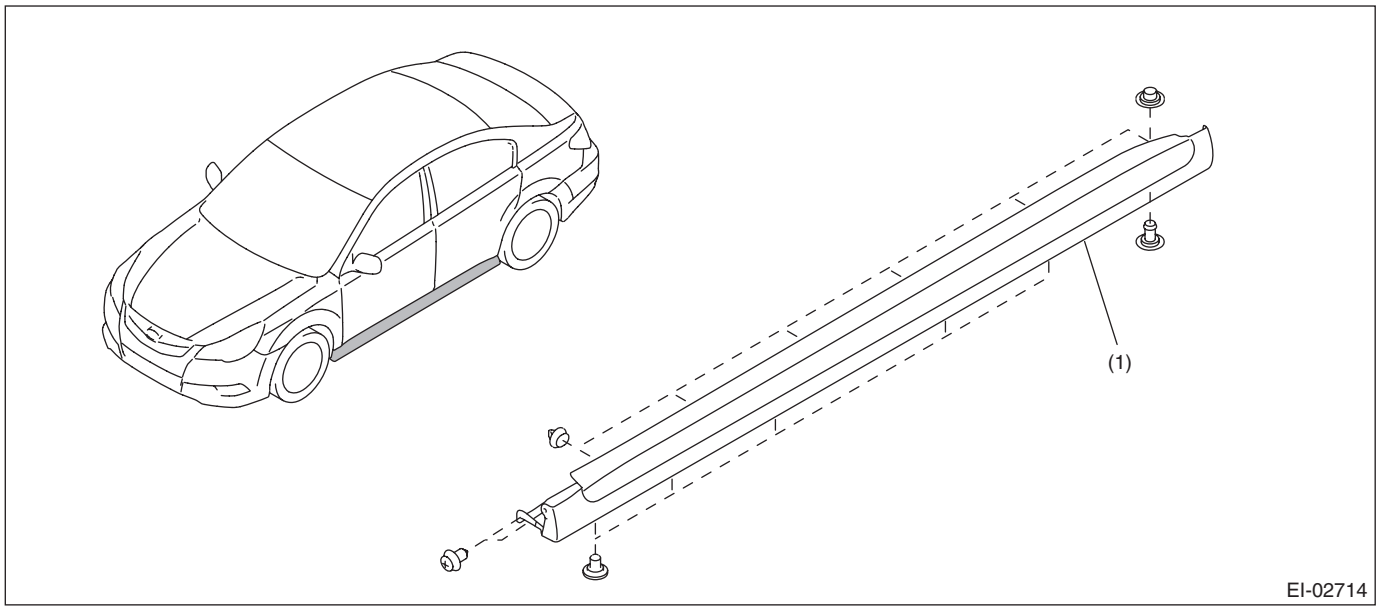

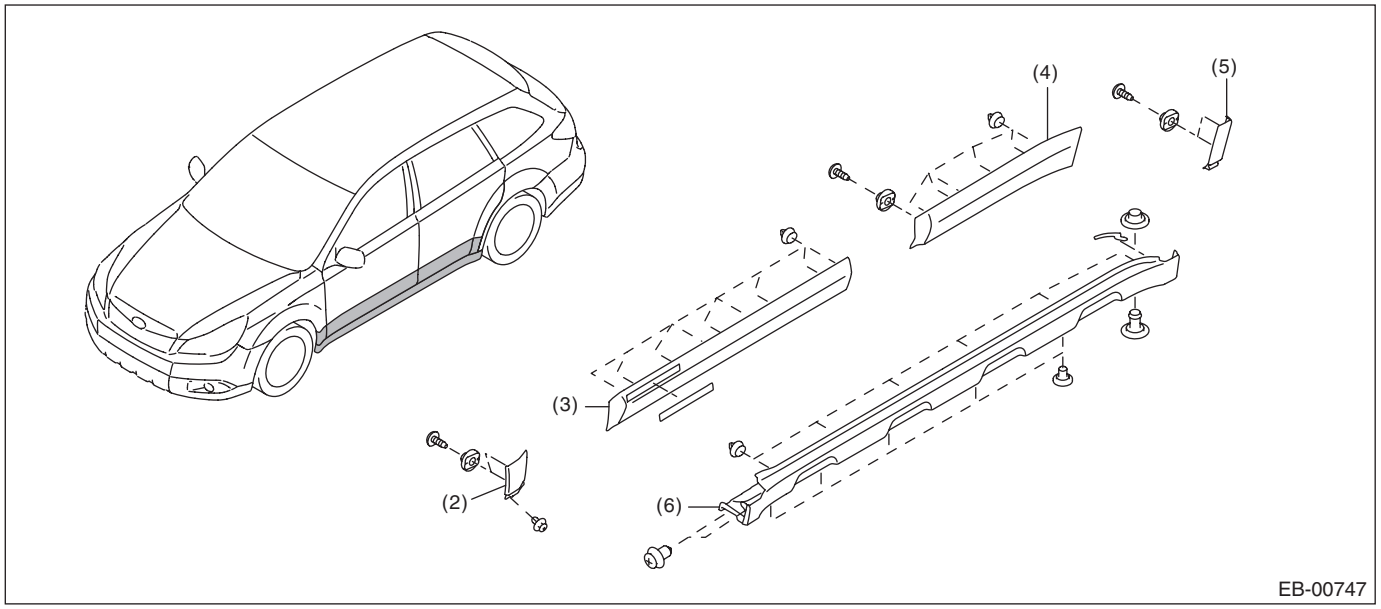

(1) Side sill garnish ASSY (sedan model)
(2) Garnish ASSY front fender (OUTBACK model)
(3) Garnish ASSY front door (OUTBACK model)
(4) Garnish ASSY rear door (OUTBACK model)
(5) Garnish ASSY rear quarter (OUTBACK model)
(6) Side sill garnish ASSY (OUTBACK model)

B: INSTALLATION

Install each part in the reverse order of removal.

12.Roof Molding

A: REMOVAL

CAUTION:
Be careful not to damage the body.

1) Remove the roof rail assembly. (OUTBACK model) <Ref. to EI-59, REMOVAL, Roof Rail.>
2) Turn over the front end of roof molding.
3) Using a flat tip screwdriver, slide the internal clip in the direction of arrow.

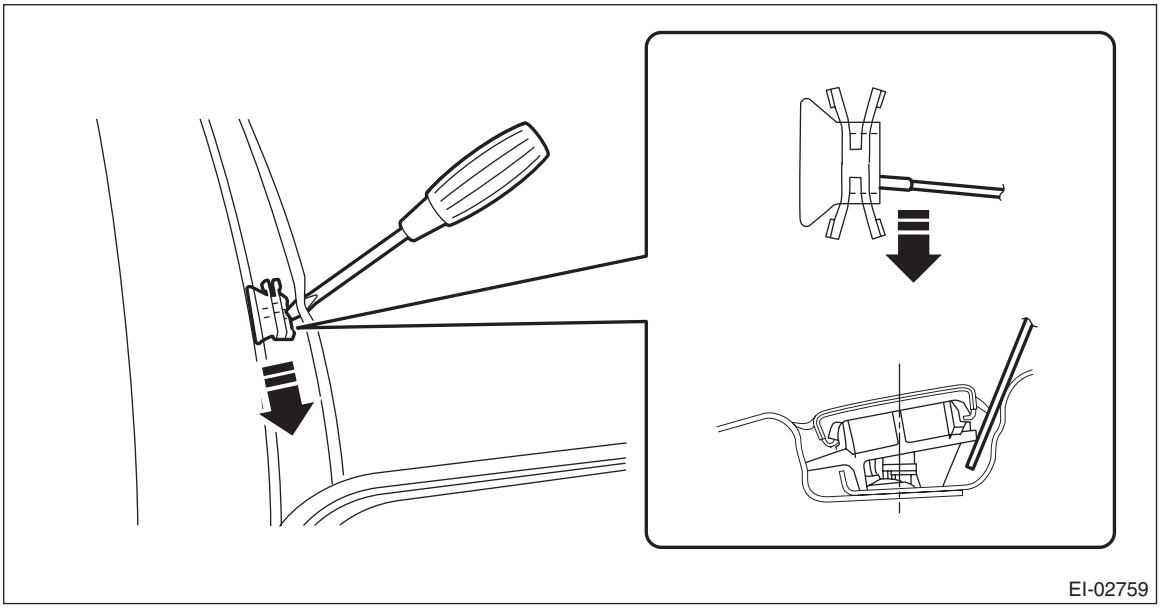
EI-02759

Right: Slide toward vehicle front.
Left: Slide toward vehicle rear.
4) Remove the clip from the stud on the body by sliding it.

- Sedan model: 6 clips per side

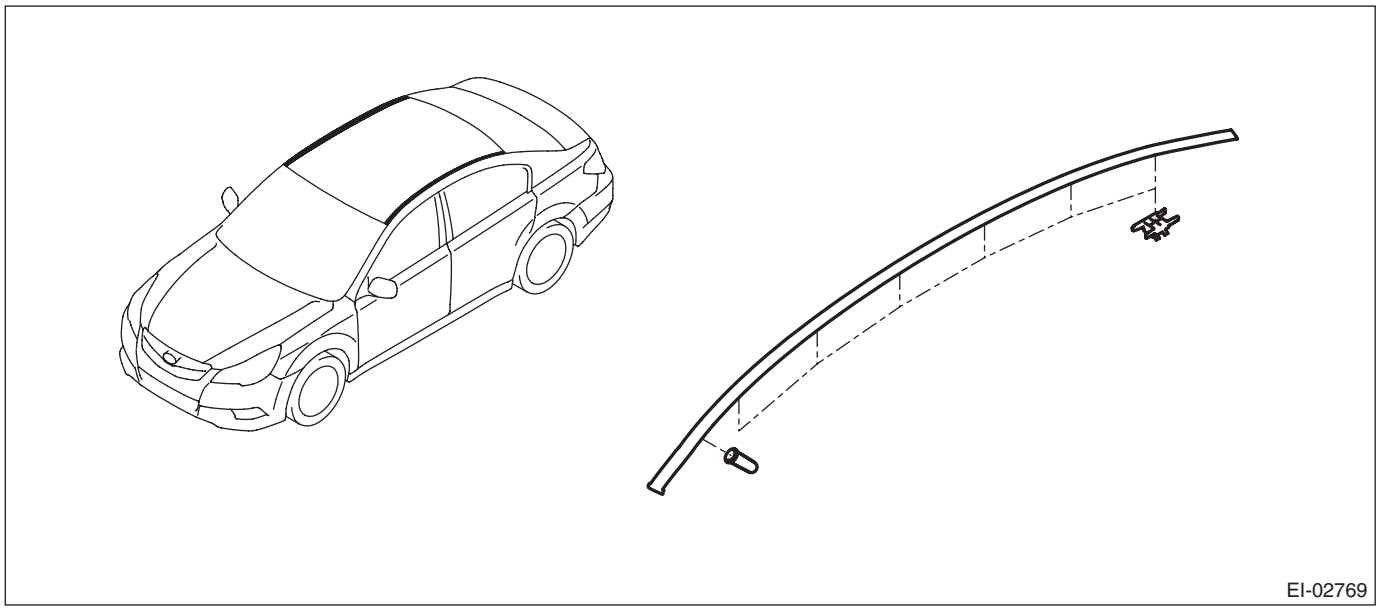
EI-02769

- OUTBACK model: 1 clip per side

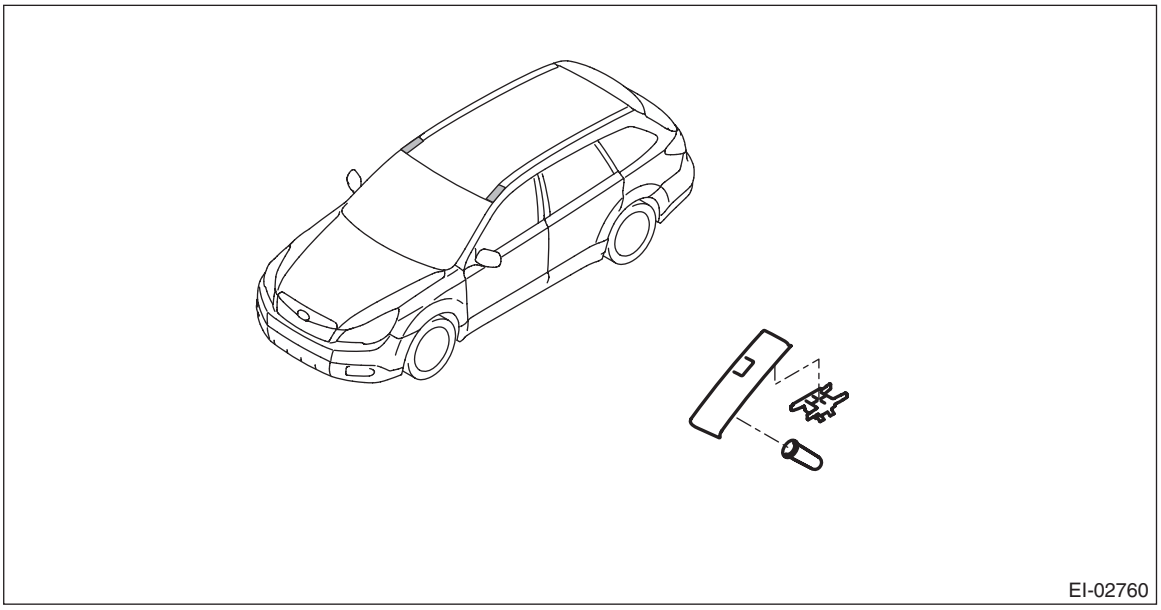

5) Remove the roof molding from the vehicle body by pulling it upward.

B: INSTALLATION

1) Remove the clips from the roof molding and attach them on the stud on body.

CAUTION:
- **Any clips damaged during roof molding removal must be replaced with new parts.**
- **While installing the roof molding, be careful not to catch the glass molding with the tip of the front side and rear side.**

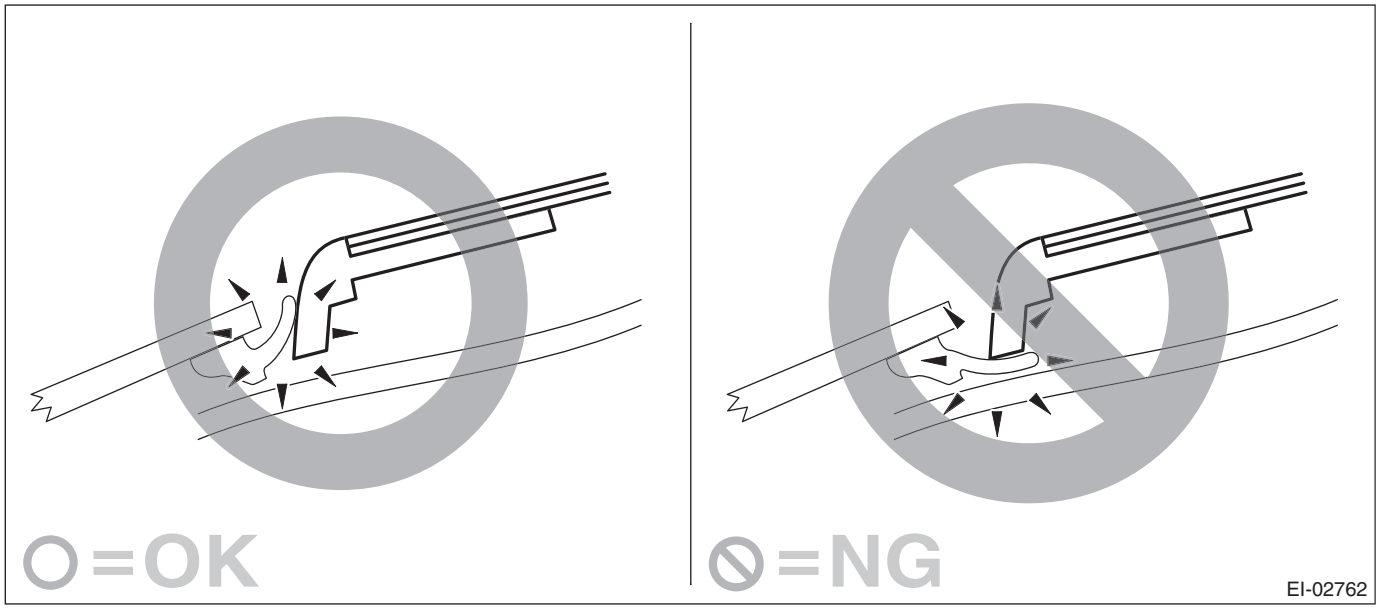

2) Apply the front end of roof molding to the front window, and attach the front positioning clip to the rivet on body.

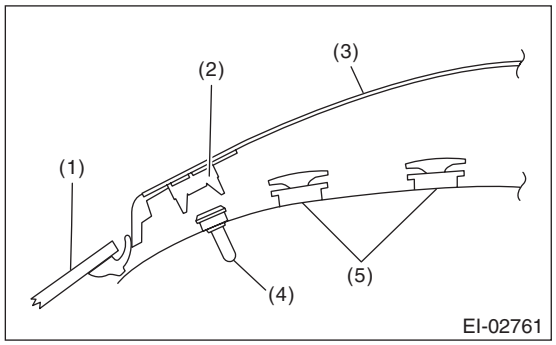

(1) Windshield
(2) Positioning clip
(3) Roof molding
(4) Rivet
(5) Clip

3) While pressing the roof molding from above, connect the roof molding with clips.

13.Roof Rail

A: REMOVAL

1) Remove the roof trim. <Ref. to EI-145, OUTBACK MODEL, REMOVAL, Roof Trim.>
2) Remove the curtain airbag module. <Ref. to AB-66, OUTBACK MODEL, REMOVAL, Curtain Airbag Module.>

CAUTION:
• Refer to "CAUTION" of "General Description" before handling the airbag module. <Ref. to AB-9, CAUTION, General Description.>
• Be careful not to damage the curtain airbag module during removal.
3) Remove the eight installing nuts.

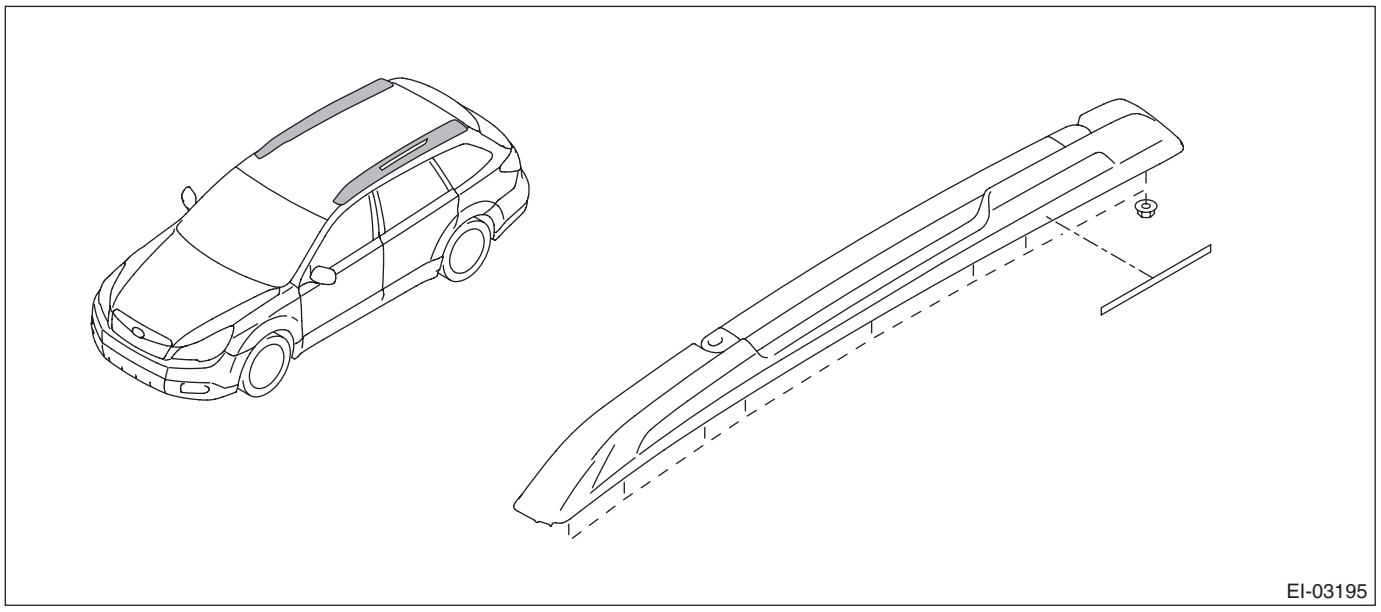

B: INSTALLATION

CAUTION:
When removing or installing the roof rail, be careful not to scratch the body panel with the stud bolt of roof rail.
Install each part in the reverse order of removal.

Tightening torque:
7.5 N·m (0.76 kgf-m, 5.5 ft-lb)

14.Door Trim

A: REMOVAL

1. FRONT DOOR

1) Disconnect the ground cable from battery.
2) Remove the gusset cover.
   (1) Attach the protective tape (a) to the door trim.
   (2) Release the clips and claws, then detach the gusset cover.

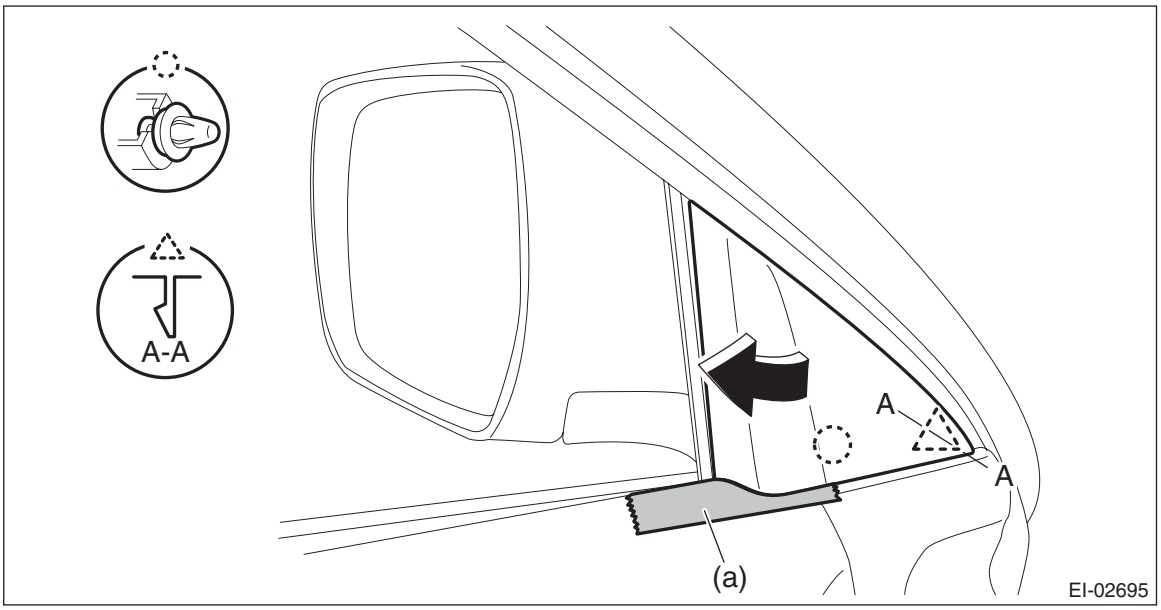

3) Remove the front door trim assembly.
   (1) Open the cover and remove the screw.
   (2) Remove the clips in the order of (A) to (J) and remove the front door trim assembly from the door panel.

CAUTION:
When removing the door trim, be sure to remove the clips in the correct order. Forcibly removing clips may damage the door panel assembly.

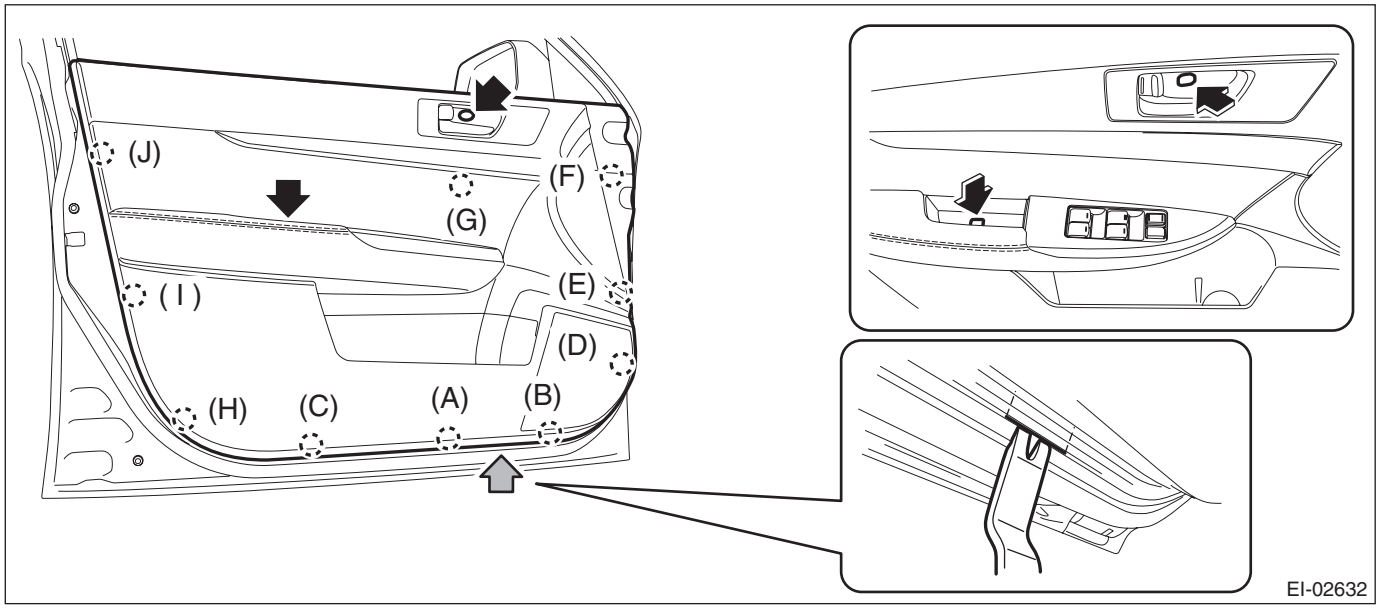

NOTE:
Insert a plastic clip remover into the slit at the bottom of the door trim, to lift the door trim.

(3) Remove the cables (a) and (b) from the cable holder of inner remote.

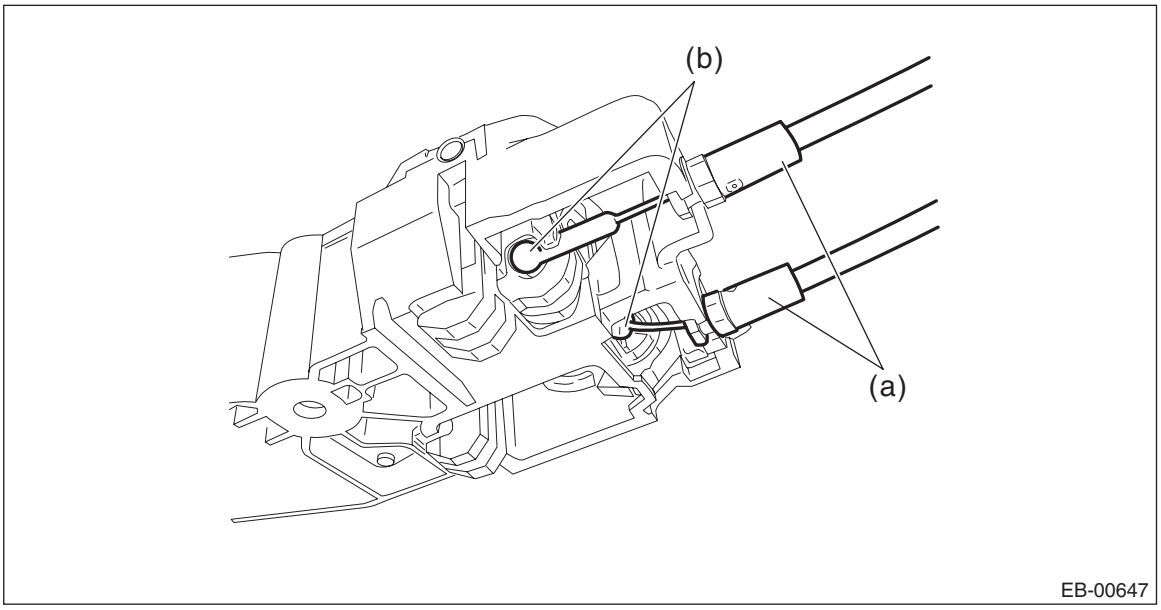

(4) Disconnect the harness connector and remove the door trim assembly.

4) Remove each part as required.

- Inner remote handle: <Ref. to SL-30, REMOVAL, Front Inner Remote.>
- Power window control switch: <Ref. to GW-12, MAIN SWITCH, REMOVAL, Power Window Control Switch.>
- Weather strip inner: <Ref. to EI-62, DISASSEMBLY, Door Trim.>

2. REAR DOOR

1) Disconnect the ground cable from battery.
2) Remove the rear door trim assembly.
   (1) Open the cover and remove the screw.
   (2) Remove the clips in the order of (A) to (H) and remove the rear door trim assembly from the door panel.

CAUTION:
When removing the door trim, be sure to remove the clips in the correct order. Forcibly removing clips may damage the door panel assembly.

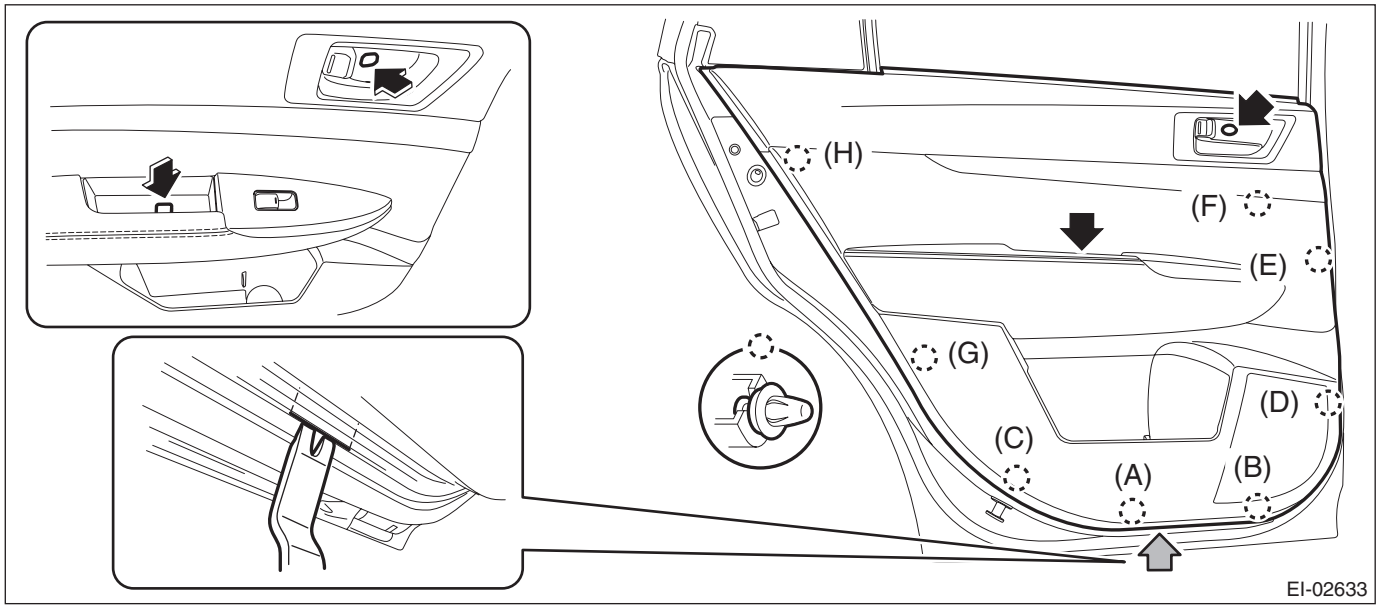

NOTE:
Insert a plastic clip remover into the slit at the bottom of the door trim, to lift the door trim.

(3) Remove the cables (a) and (b) from the cable holder of inner remote.

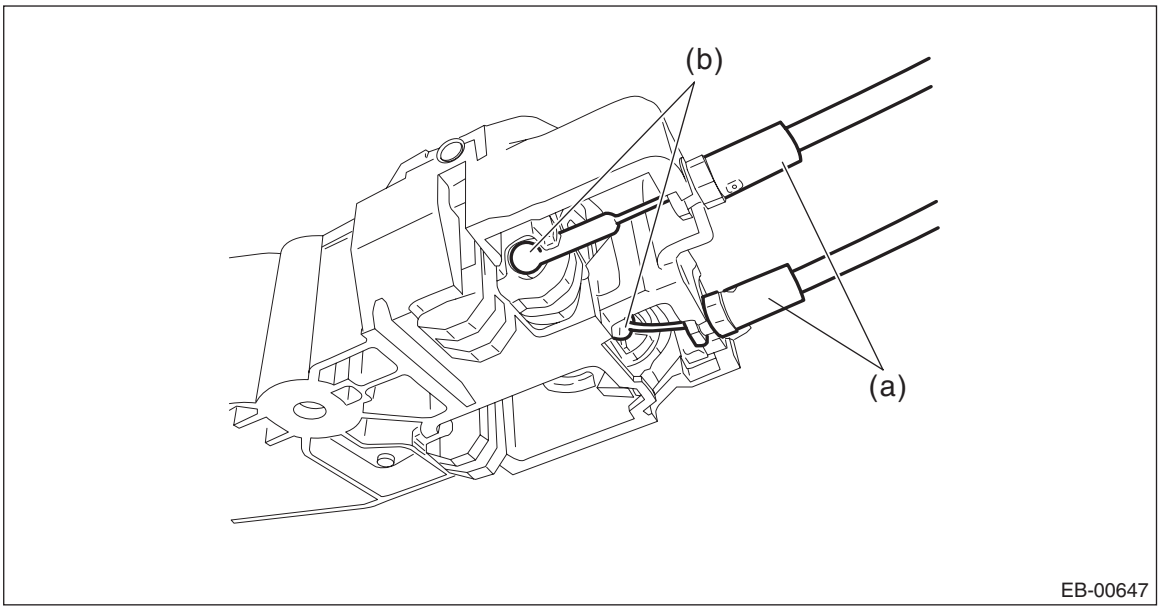

(4) Disconnect the harness connector and remove the door trim.

3) Remove each part as required.
- Inner remote handle: <Ref. to SL-37, REMOVAL, Rear Inner Remote.>
- Power window control switch: <Ref. to GW-13, SUB-SWITCH, REMOVAL, Power Window Control Switch.>
- Weather strip inner: <Ref. to EI-62, DISASSEMBLY, Door Trim.>

B: INSTALLATION

Install each part in the reverse order of removal.

C: DISASSEMBLY

1) Remove the door trim.
2) Remove the rivets and detach the claws, then remove the weather strip inner from the door trim.

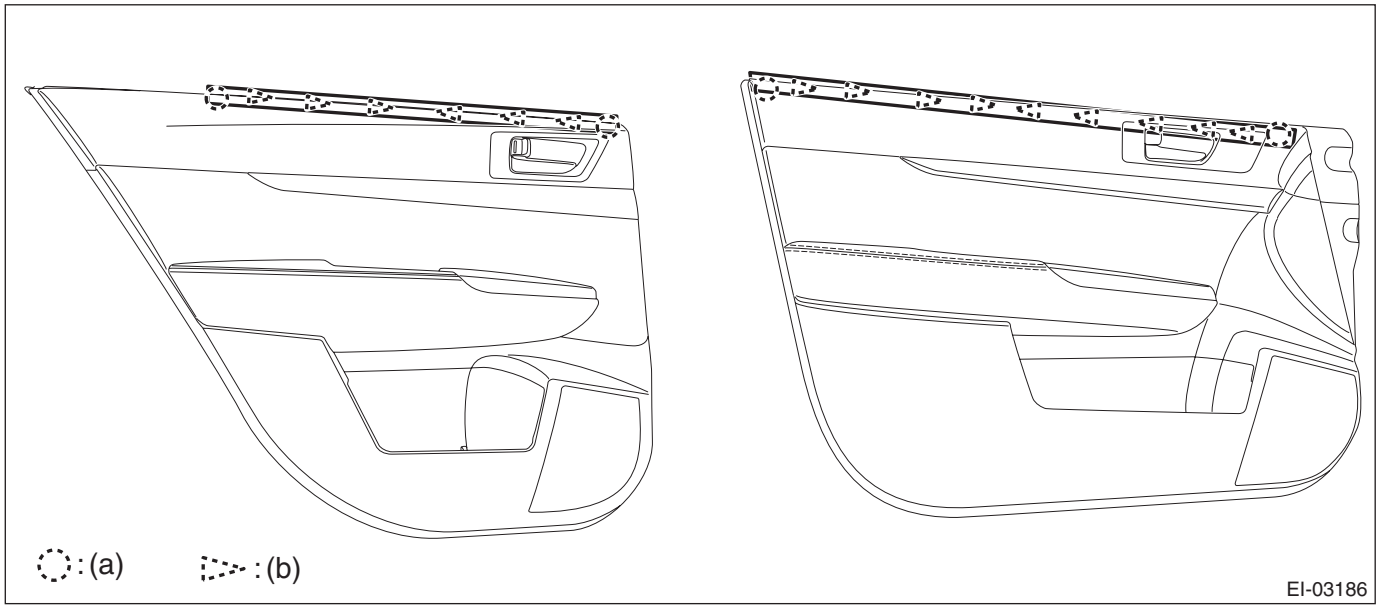

(a) Rivet (b) Claw

NOTE:
Remove the rivets with a rivet cutter or nipper, etc.

D: ASSEMBLY

1) Fold the claws while pressing the weather strip inner to the door trim.

CAUTION:
Beware of the direction of folding the claws.
2) Install the rivets and apply unwoven cloth.

CAUTION:
Set the height of rivet crimped section as 3 mm (0.12 in). If the crimp is not sufficient, press them with pliers, etc. in order not to interfere the door trim.

Preparation tool and item:
Hand riveter (corresponding to ϕ3.2 mm (0.13 in))
Rivet
Unwoven cloth (cut into 15 x 15 mm (0.59 x 0.59 in))

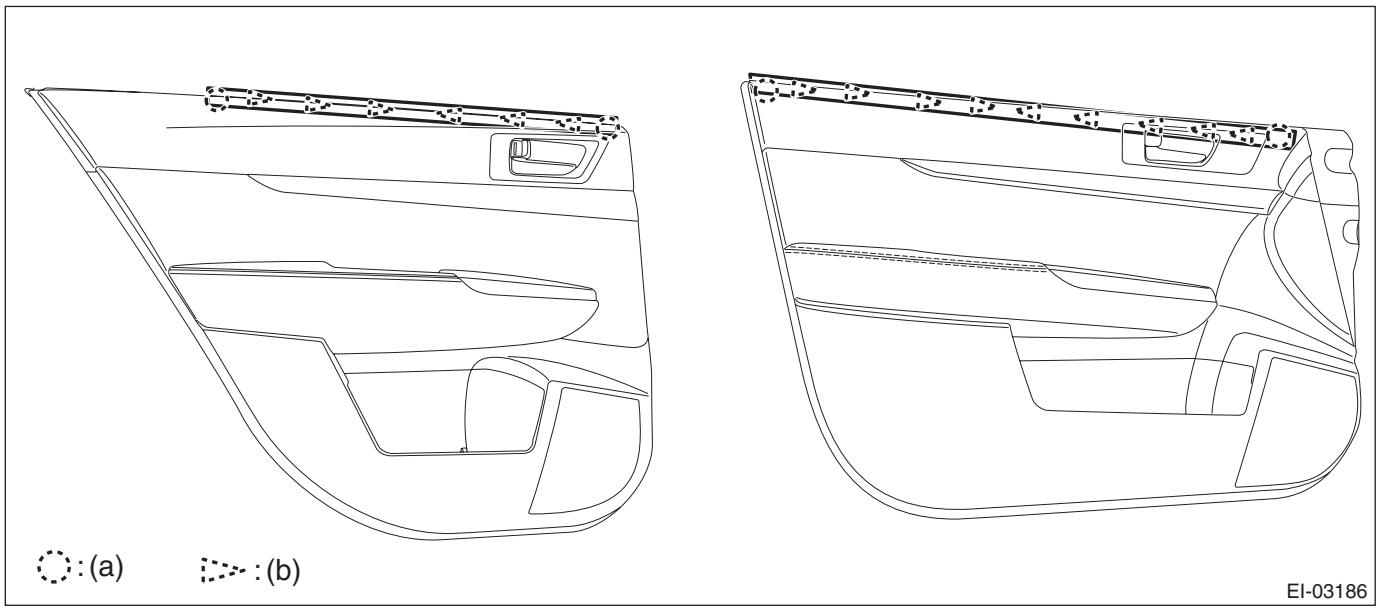

(a) Rivet (b) Direction of folding claws

3) After installing the weather strip inner, perform the following inspections.
- There is no clearance between the weather strip inner and the door trim.
- No loose fit is found when pulling the weather strip inner lightly.

15.Instrument Panel Lower Cover

A: REMOVAL

1) Disconnect the ground cable from battery.
2) Remove the clips, and remove the instrument panel side cover LH.

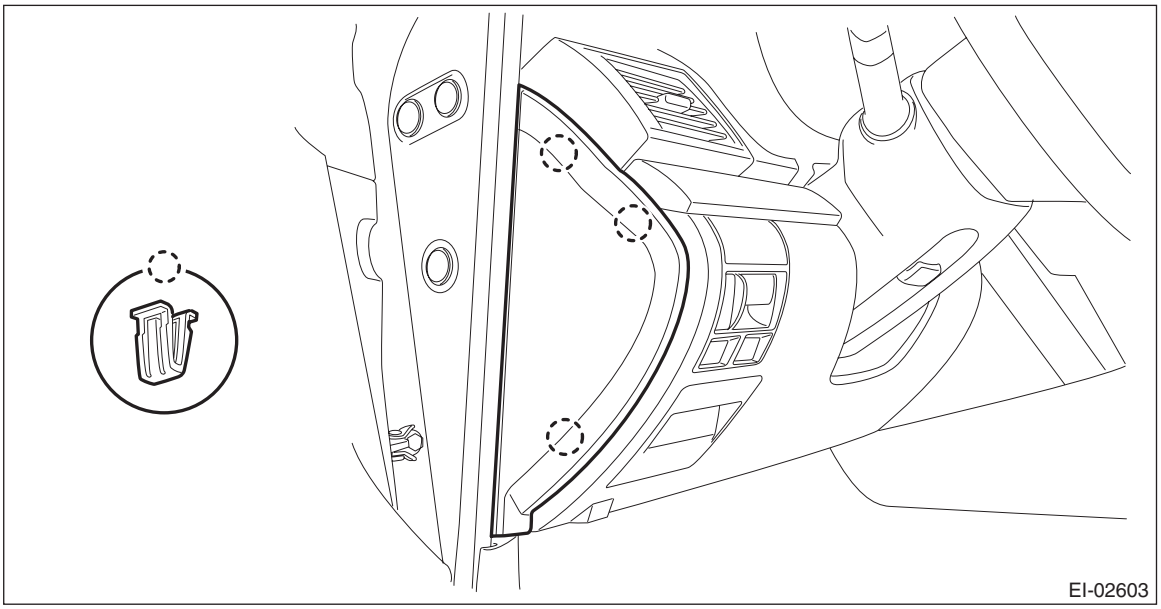

3) Remove the instrument panel lower cover.
   (1) Remove the clips and data link connector, and remove the instrument panel lower cover under.

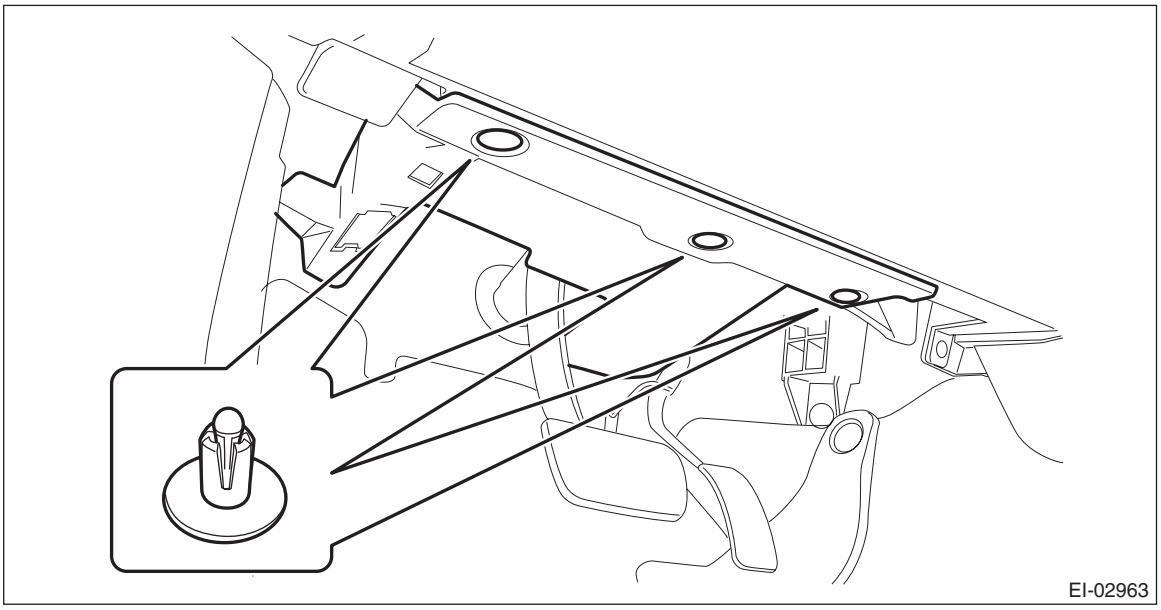

(2) Remove the screws and clips and release the claws, and remove the instrument panel lower cover while disconnecting the harness connectors.

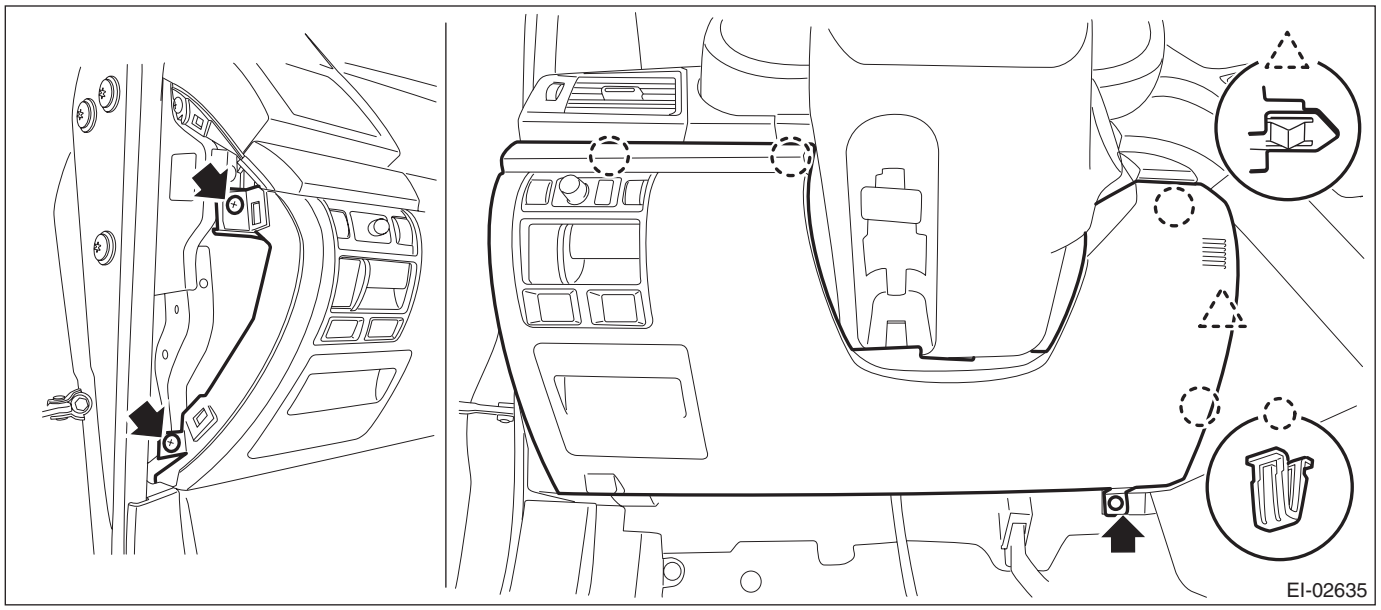

B: INSTALLATION

Install each part in the reverse order of removal.

16.Glove Box

A: REMOVAL

NOTE:
Refer to “Security and Locks” section for key cylinder replacement. <Ref. to SL-63, GLOVE BOX LID, REPLACEMENT, Key Lock Cylinders.>

1) Remove the glove box lid assembly.
   (1) Remove the glove box damper.
   (2) Release the stoppers and remove the glove box lid assembly by pulling it toward you.

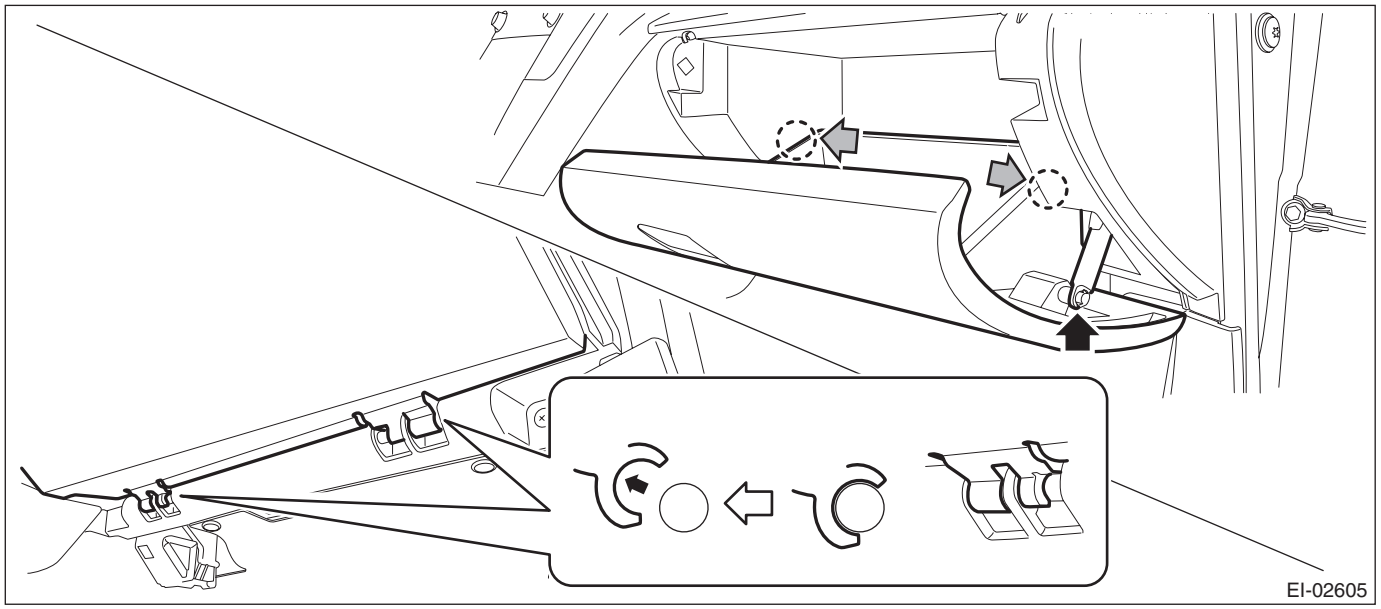

2) Release the clips, and remove the instrument panel side cover RH.

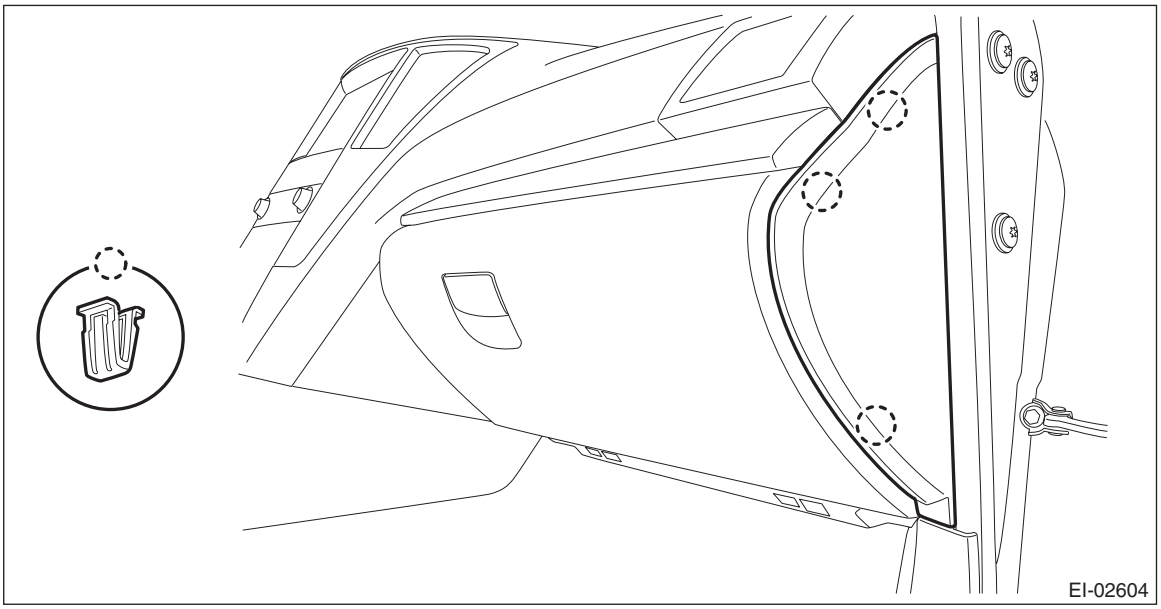

3) Remove the glove box back panel.
(1) Release the clips, and remove the glove box under cover.

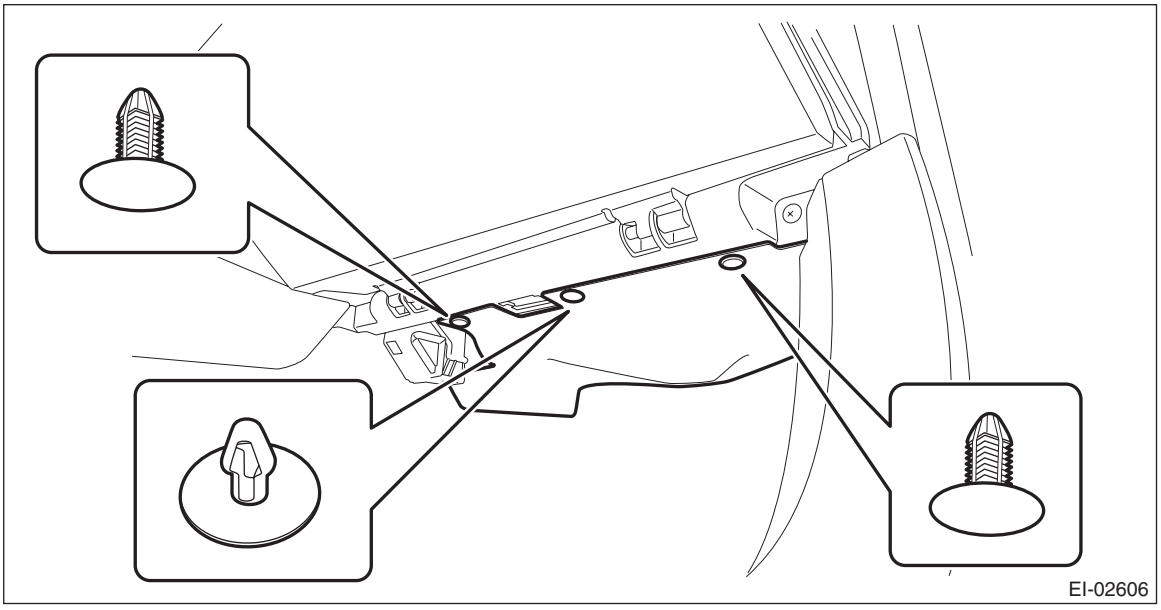

(2) Release the clips and claws, and remove the ornament panel assembly P.

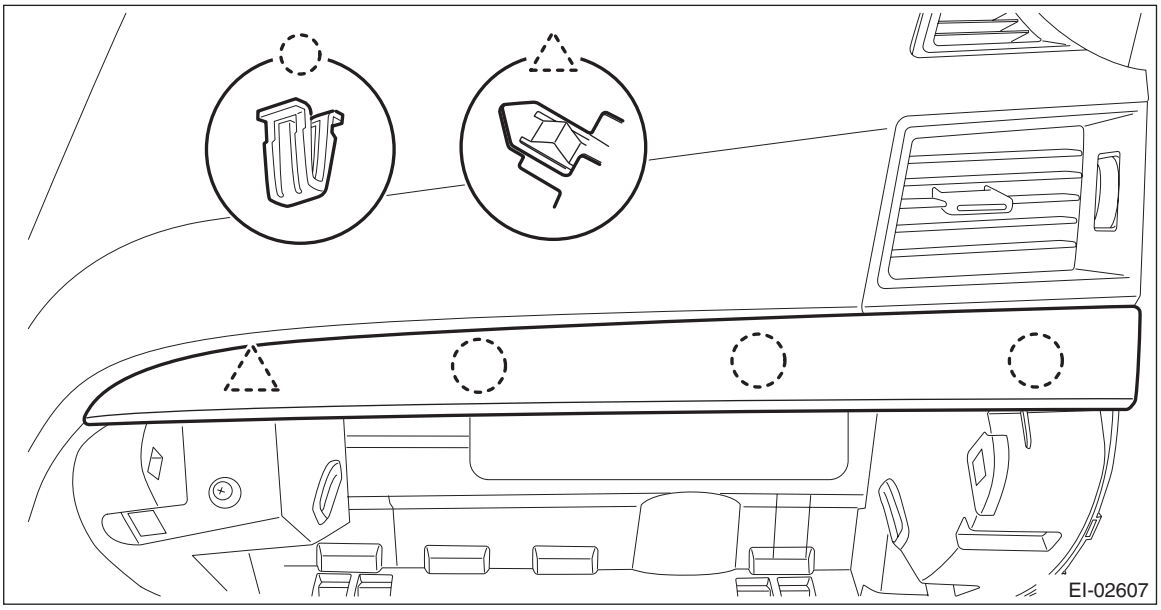

(3) Remove the screws and release the claws, then detach the glove box back panel.

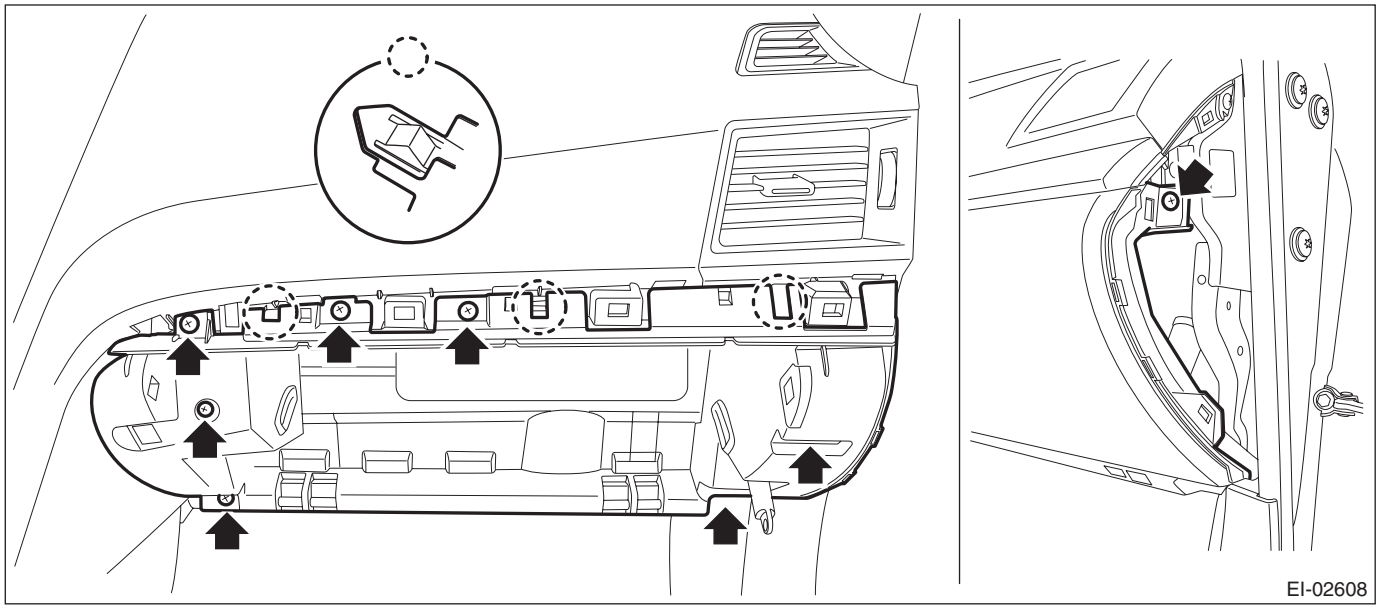

(4) Disconnect the glove box light LED connector.

B: INSTALLATION

Install each part in the reverse order of removal.

17.Center Console

A: REMOVAL

1. CENTER PANEL ASSY

1) Attach the protective tape (a) to the meter visor.
2) Remove the center panel assembly.

CAUTION:
Do not put your finger on the fin of the air vent grille. Doing so may damage the fin.

(1) Attach the protective tape (a) to the meter visor.

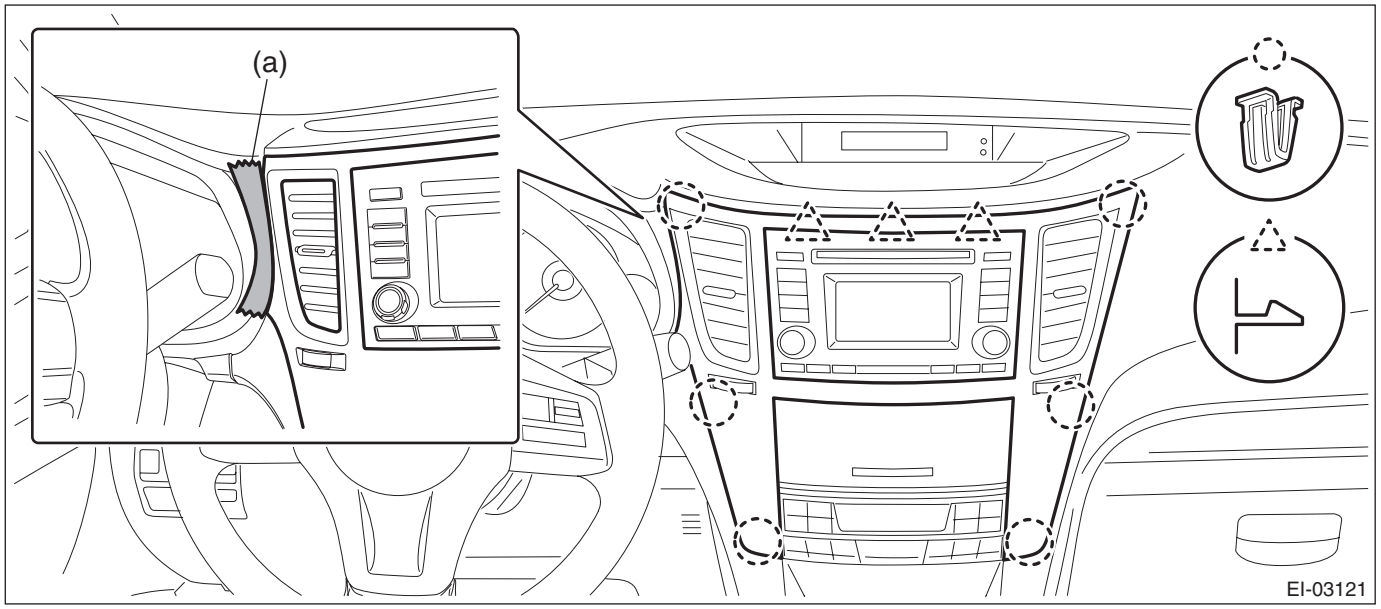

(2) Insert a finger into the air vent grille and release the left and right clips at the top of the center panel. (A), (B)
(3) Insert a finger into the air vent grille and release the left and right clips at the center of the center panel. (C), (D)

(4) Release the clips at the bottom of the center panel and remove the center panel assembly.

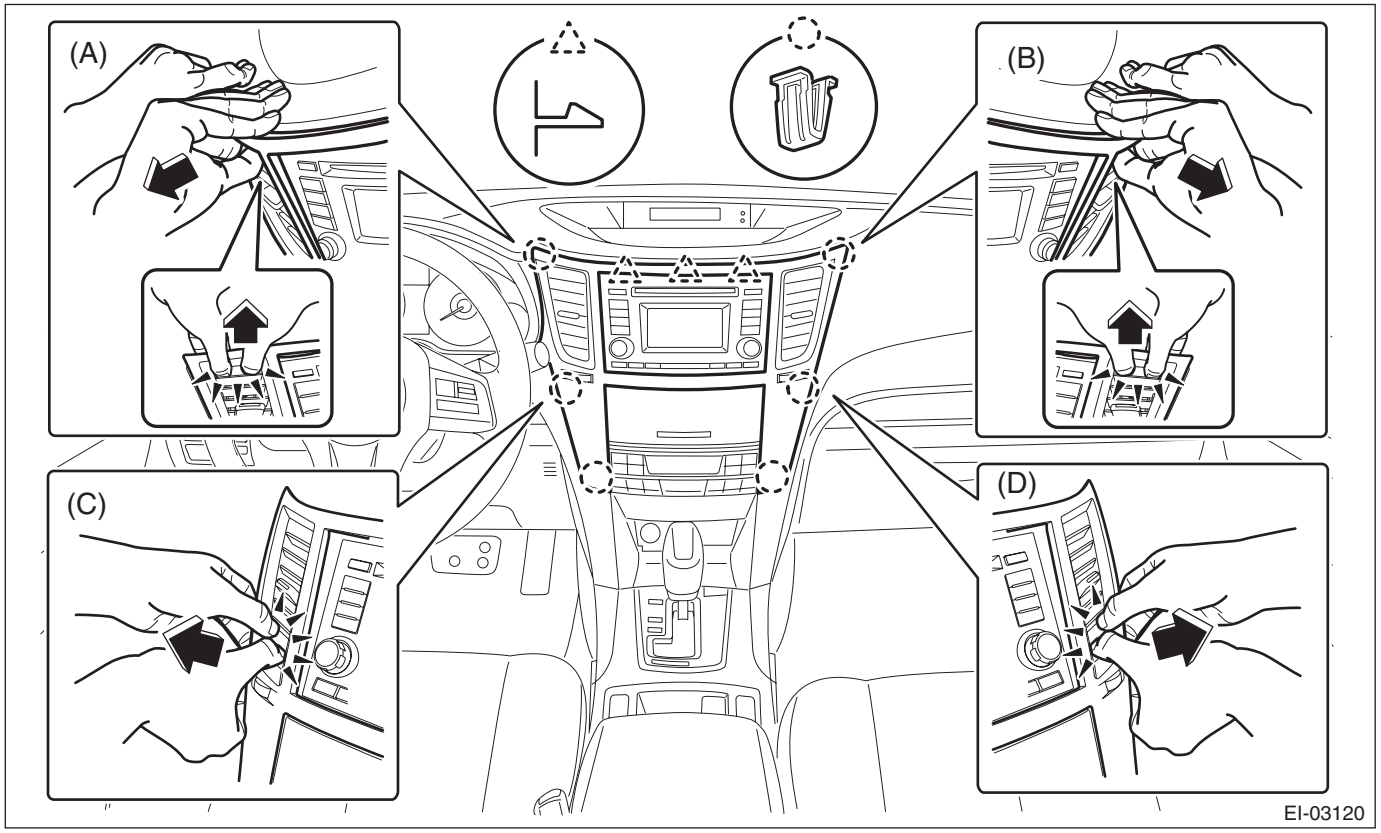

2. CONSOLE FRONT COVER

MT model

1) Remove the console front cover assembly.
(1) Remove the shift knob.

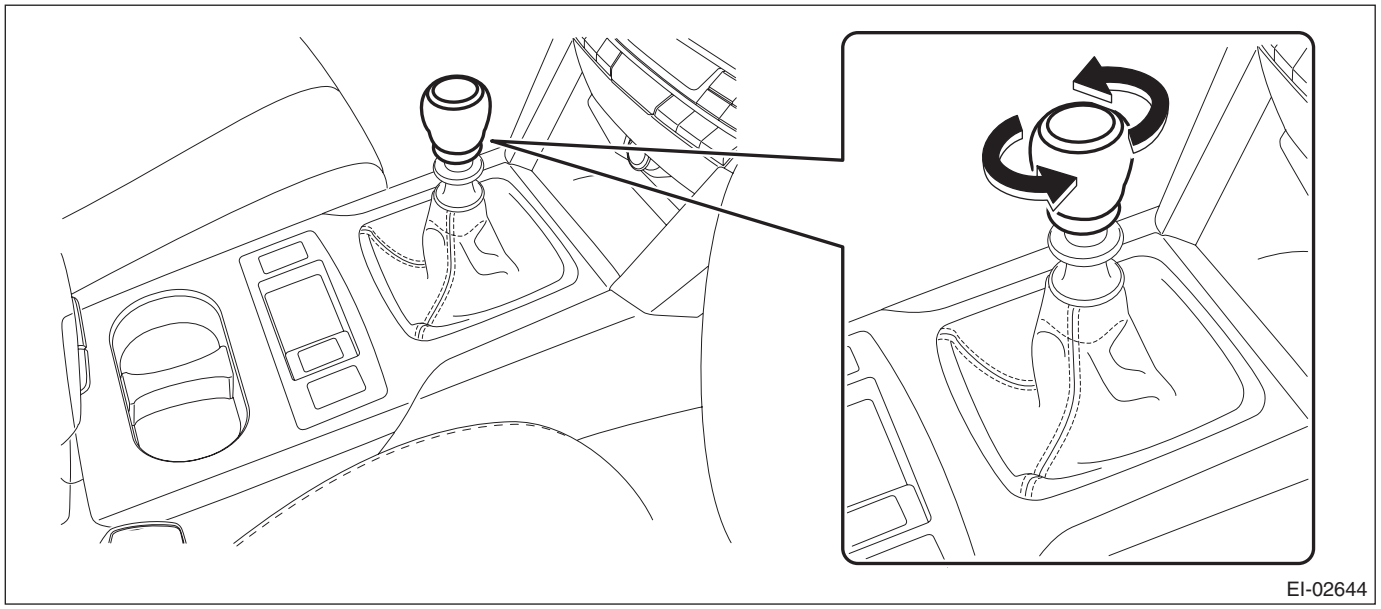

(2) Release the clips and claws, then pull up the console front cover assembly.

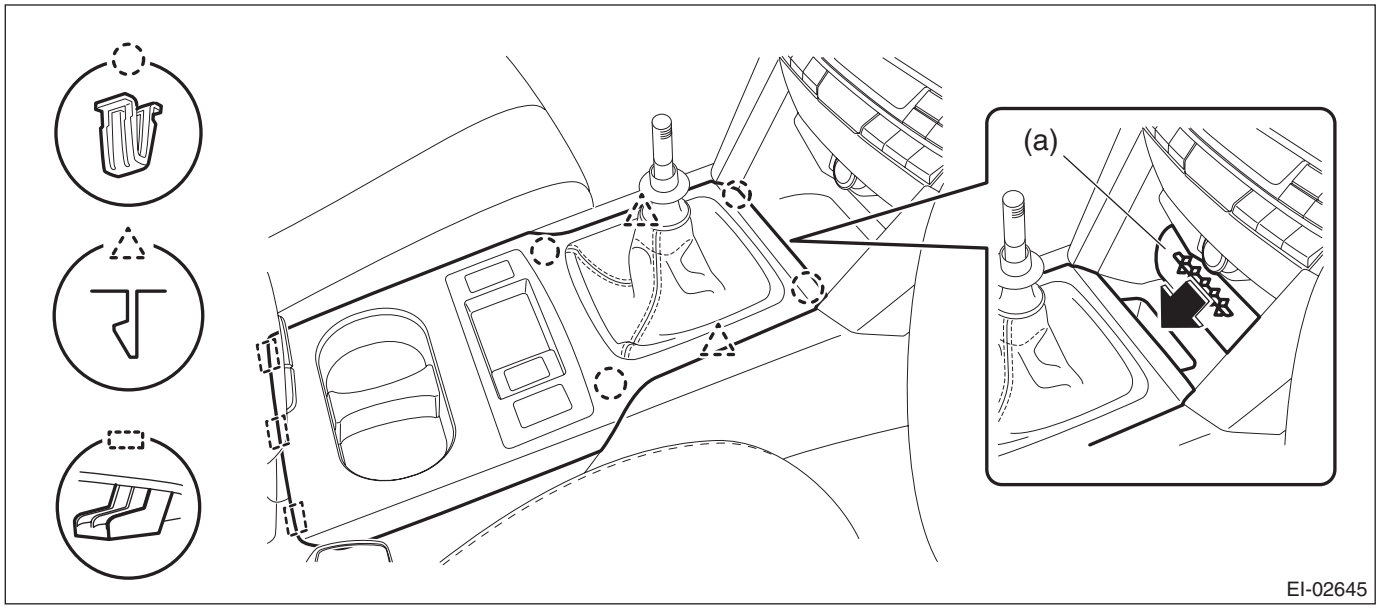

NOTE:
Turn over the front center pocket mat (a) and pull up the console front cover from the slit.

(3) Disconnect the harness connector and remove the console front cover assembly.

AT model

1) Remove the console front cover assembly.
   (1) Remove the select lever knob.
      a) Lower the cover grip AT.
      b) Remove the clamp grip pin, then remove the select lever knob.

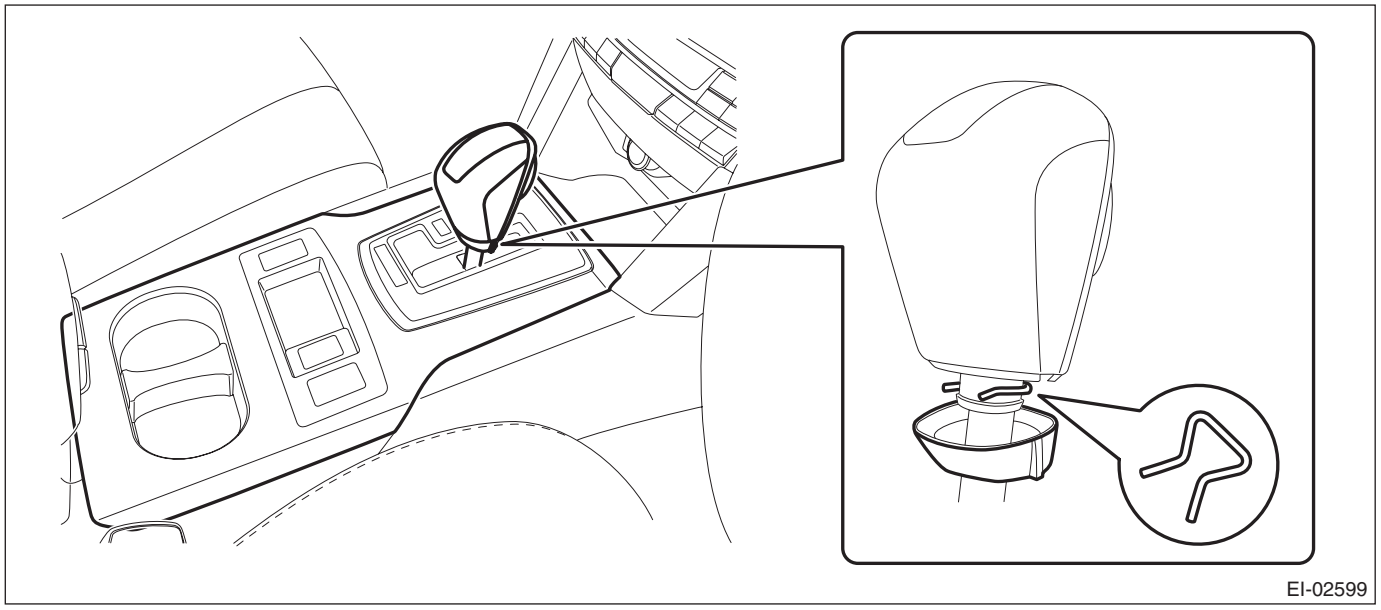

(2) Release the clips and claws, then pull up the console front cover assembly.

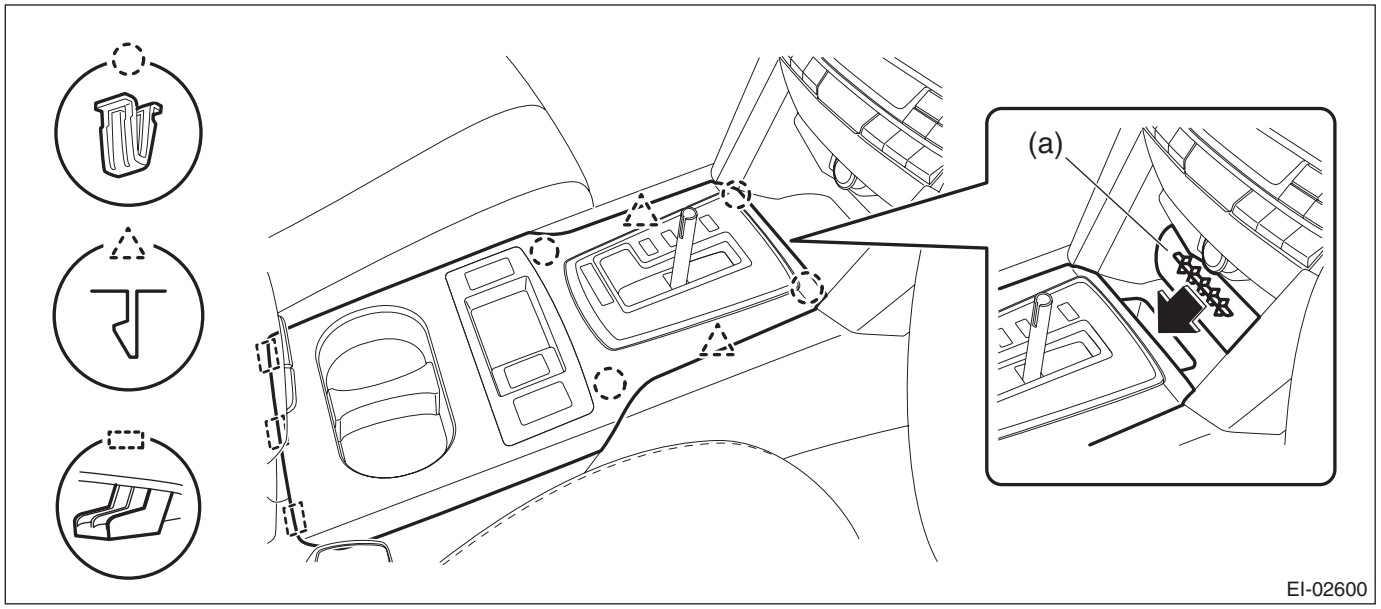

NOTE:
Turn over the front center pocket mat (a) and pull up the console front cover from the slit.

(3) Disconnect the harness connector and remove the console front cover assembly.

B: INSTALLATION

Install each part in the reverse order of removal.

18.Console Box

A: REMOVAL

1) Remove the console front cover assembly.

- MT model
  1. Remove the shift knob.
  2. Release the clips and claws, then pull up the console front cover assembly.

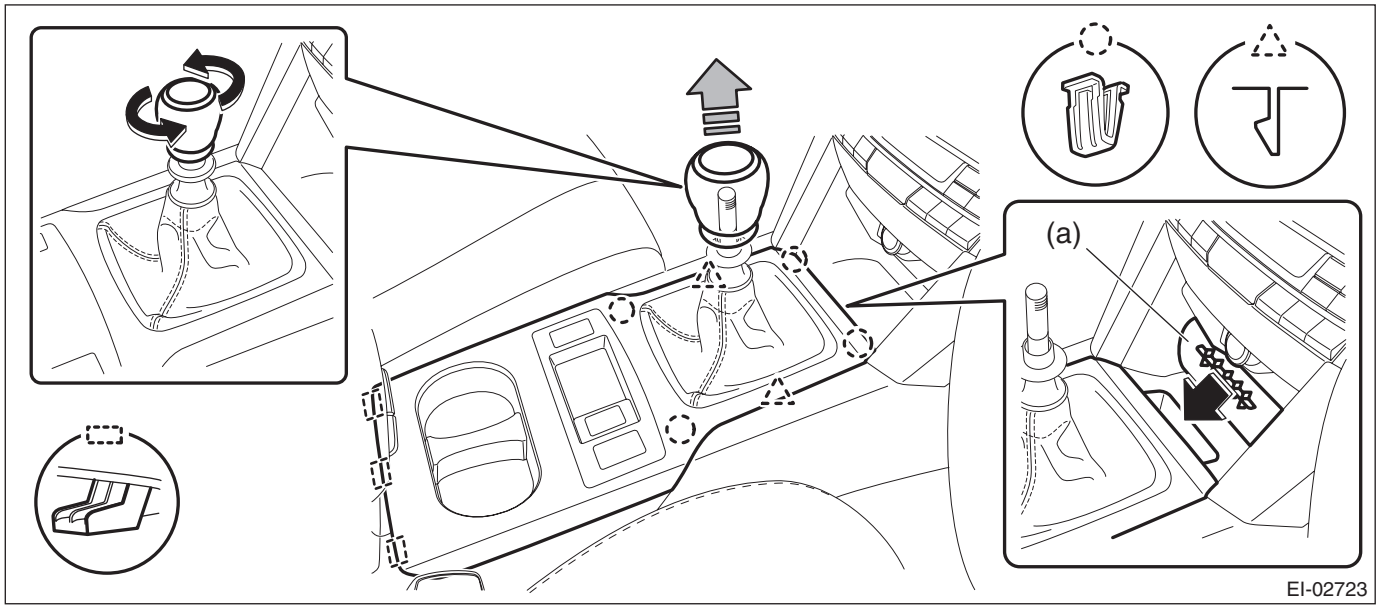

NOTE:
Turn over the front center pocket mat (a) and pull up the console front cover from the slit.

  3. Disconnect the harness connector and remove the console front cover assembly.

- AT model
  1. Remove the select lever knob.
     a. Lower the cover grip AT.
     b. Remove the clamp grip pin, then remove the select lever knob.
  2. Release the clips and claws, then pull up the console front cover assembly.

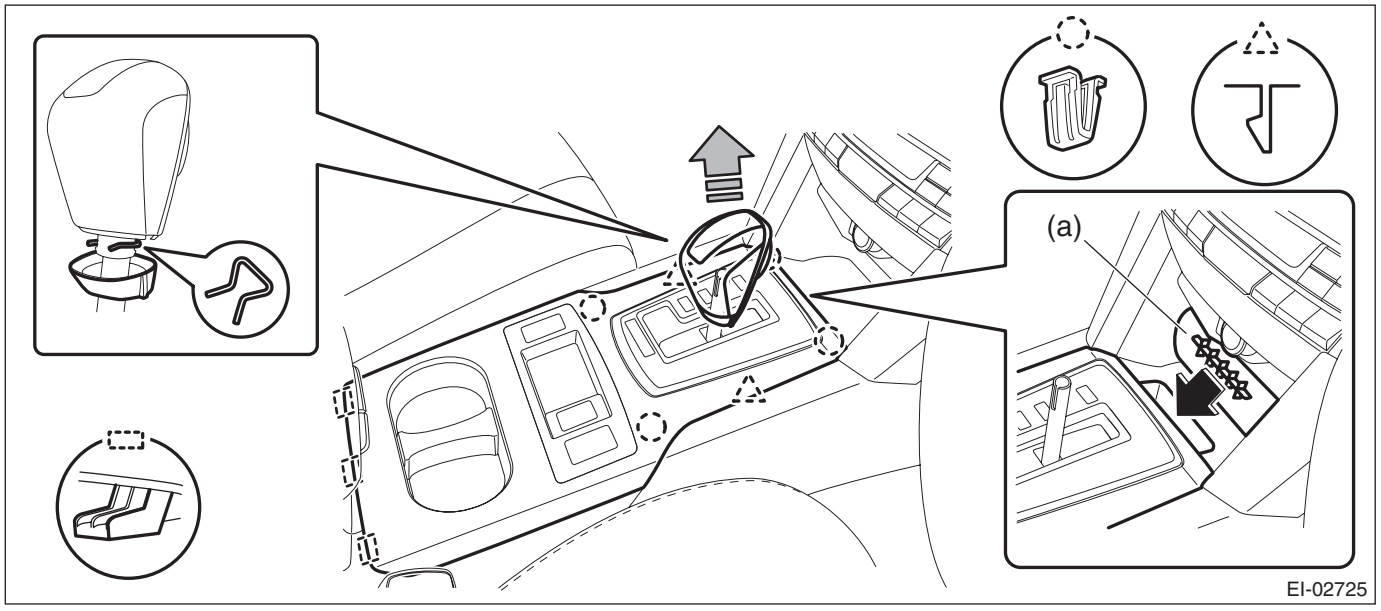

NOTE:
Turn over the front center pocket mat (a) and pull up the console front cover from the slit.

  3. Disconnect the harness connector and remove the console front cover assembly.

2) Remove the left and right console front side cover assembly.
   (1) Remove the screws and release the clip engagings (A) to (D) in order.
   (2) Remove the console front side cover assembly by pulling it up.

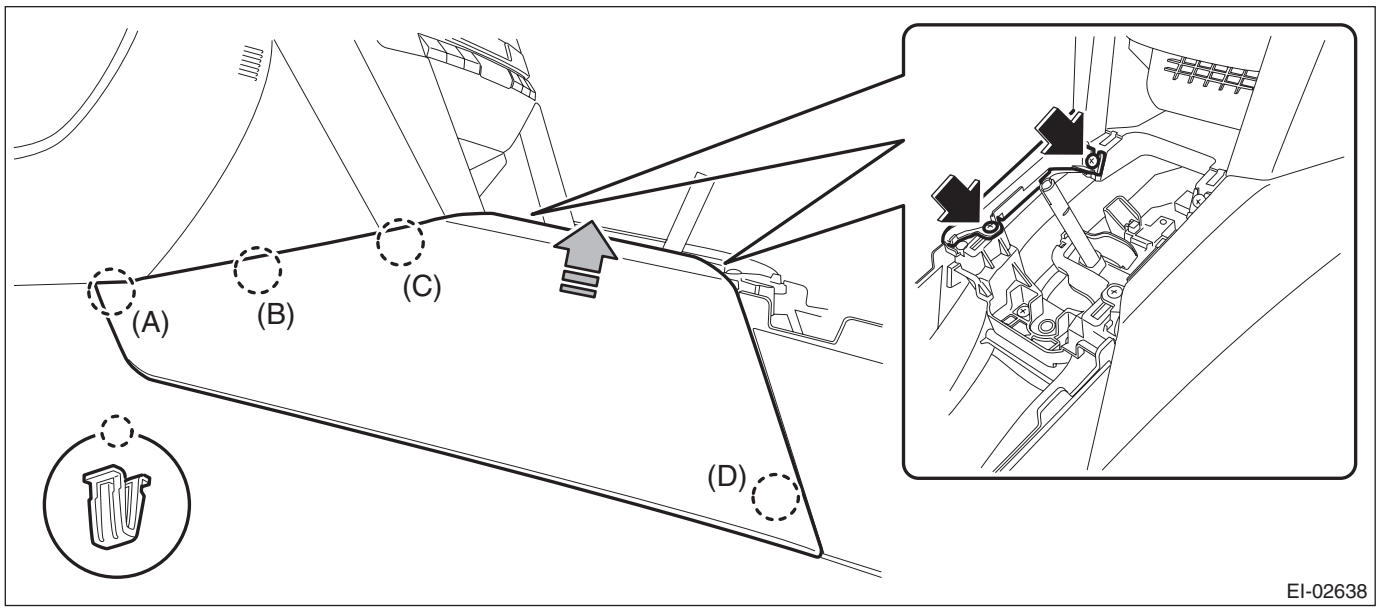

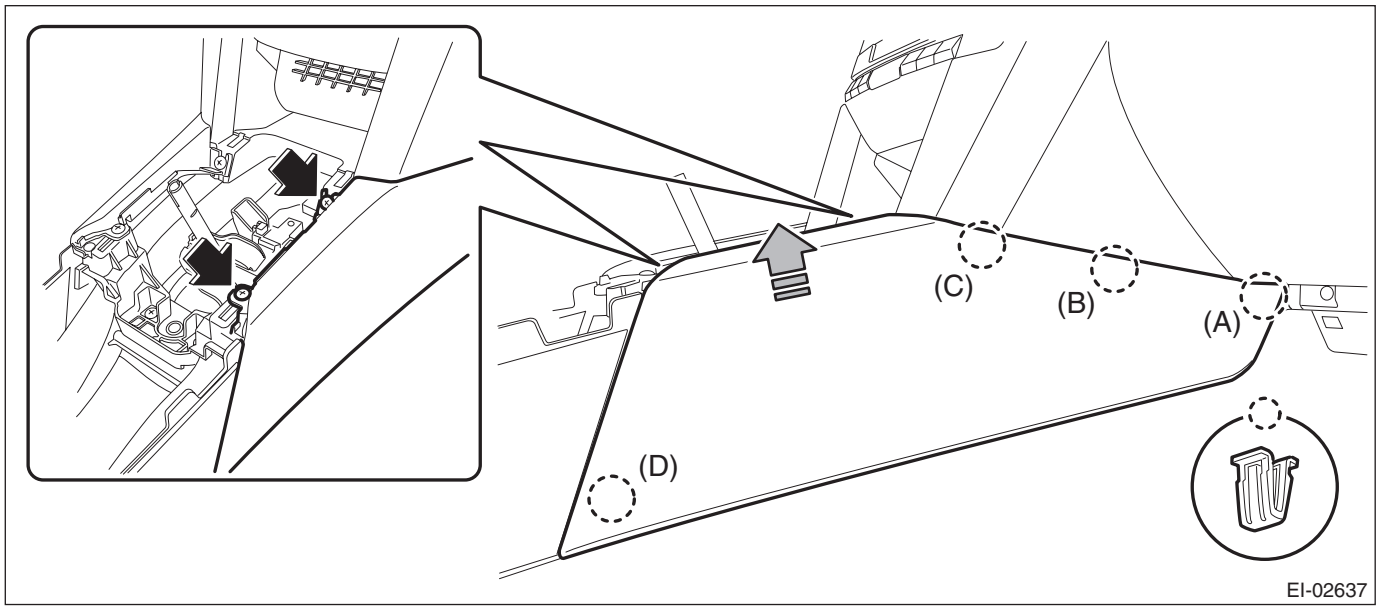

3) Remove the console box assembly.
(1) Move the seat forward, and remove the bolts after detaching the left and right caps.

NOTE:
For a model with power seat, connect the battery ground cable and move the seat. Then, disconnect the battery ground cable again and wait for 60 seconds at least before restarting the work.

(2) Remove the screws, disconnect the harness connector and remove the console box assembly.

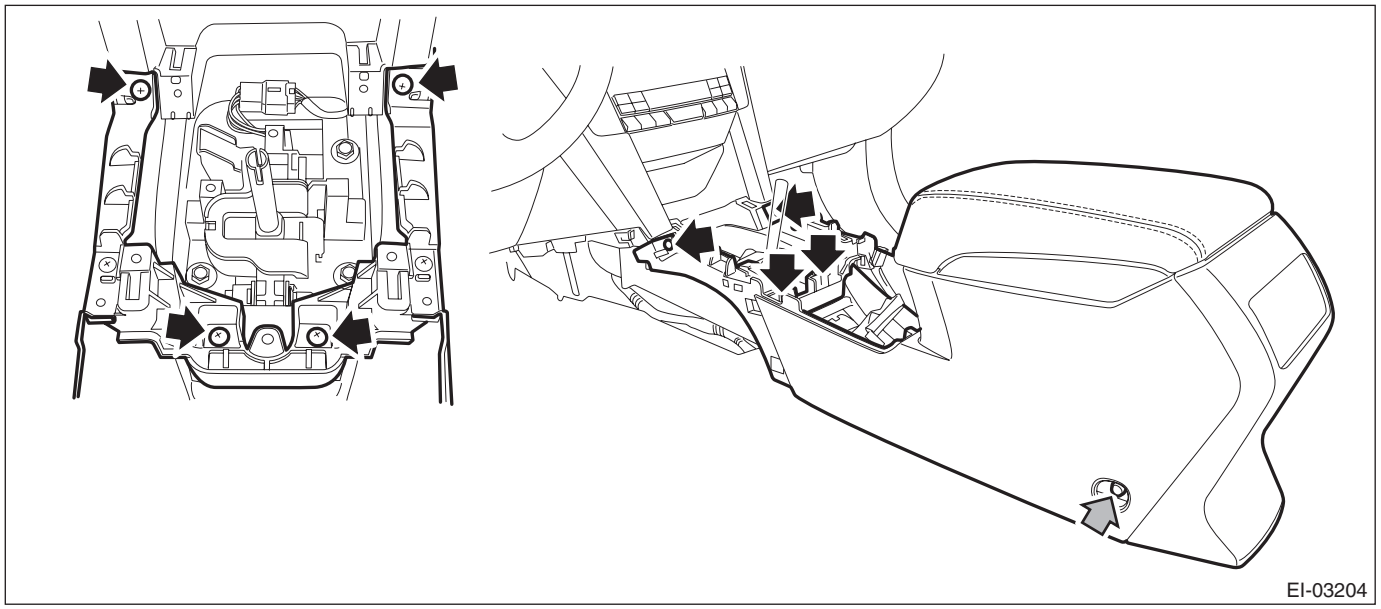

B: INSTALLATION

Install each part in the reverse order of removal.

Tightening torque:
6.5 N·m (0.66 kgf-m, 4.8 ft-lb)

19.Instrument Panel Assembly

A: REMOVAL

CAUTION:
Be careful not to damage the airbag system harness when servicing the instrument panel. Damage may cause the system to malfunction.

1) Disconnect the ground cable from battery.
2) Remove the console front cover assembly.

- MT model
  1. Remove the shift knob.
  2. Release the clips and claws, then pull up the console front cover assembly.

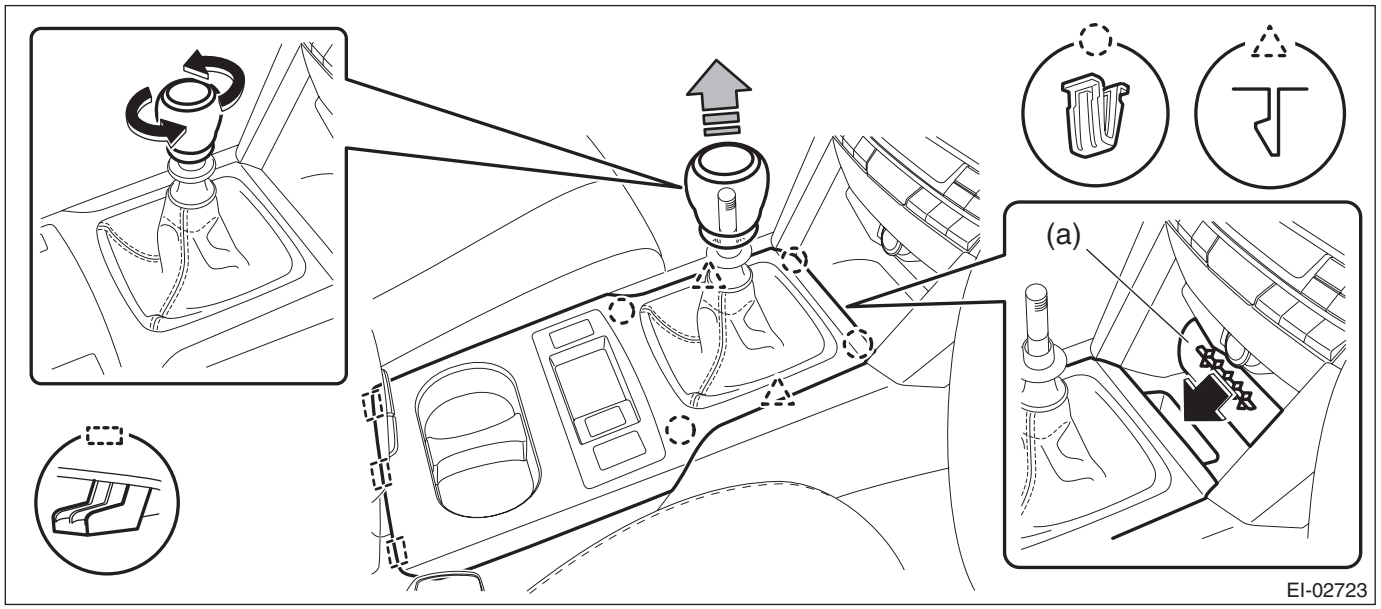

NOTE:
Turn over the front center pocket mat (a) and pull up the console front cover from the slit.

  3. Disconnect the harness connector and remove the console front cover assembly.

- AT model
  1. Remove the select lever knob.
     a. Lower the cover grip AT.
     b. Remove the clamp grip pin, then remove the select lever knob.
  2. Release the clips and claws, then pull up the console front cover assembly.

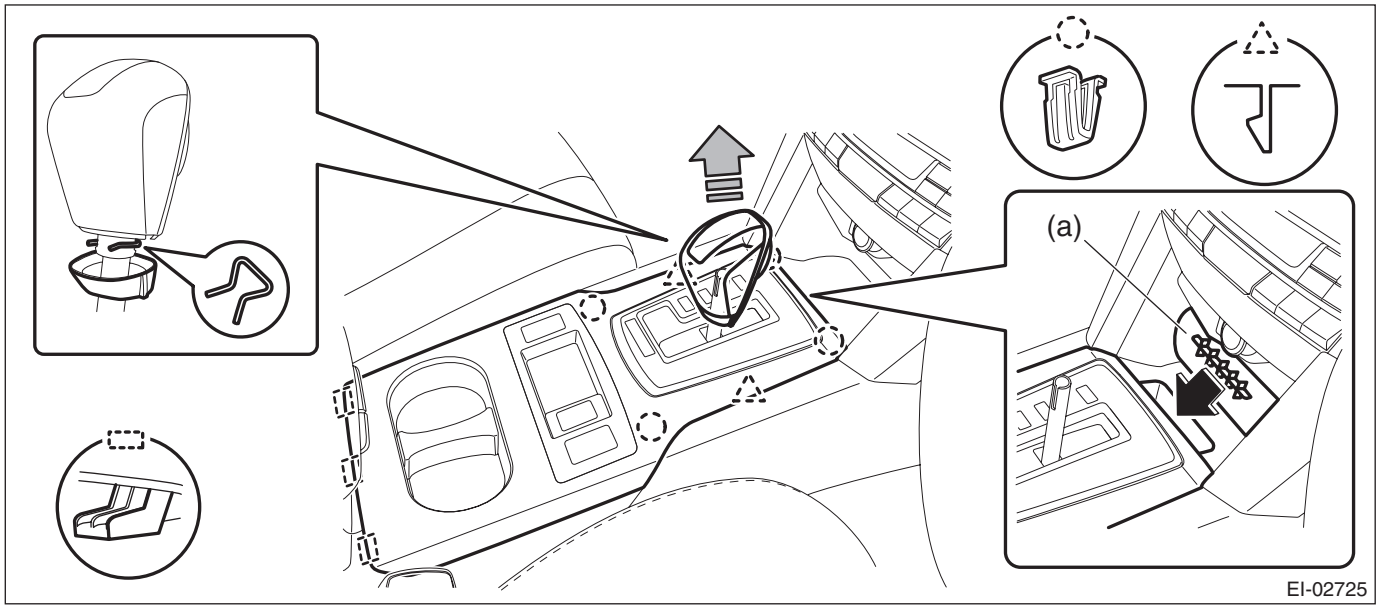

NOTE:
Turn over the front center pocket mat (a) and pull up the console front cover from the slit.

  3. Disconnect the harness connector and remove the console front cover assembly.

3) Remove the left and right console front side cover assembly.
   (1) Remove the screws and release the clips (A) to (D) in order.
   (2) Remove the console front side cover assembly by pulling it up.

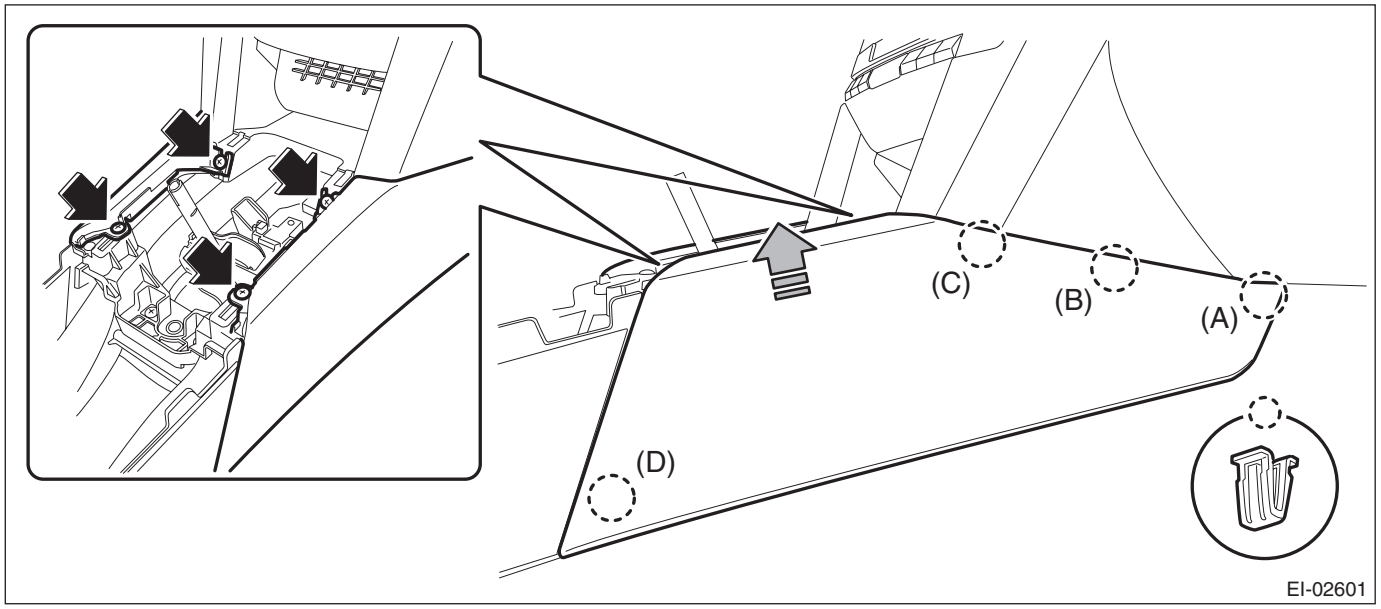

4) Remove the console box assembly.
(1) Move the seat forward, and remove the bolts after detaching the left and right caps.

NOTE:
For a model with power seat, connect the battery ground cable and move the seat. Then, disconnect the battery ground cable again and wait for 60 seconds at least before restarting the work.

(2) Remove the screws, disconnect the harness connector and remove the console box assembly.

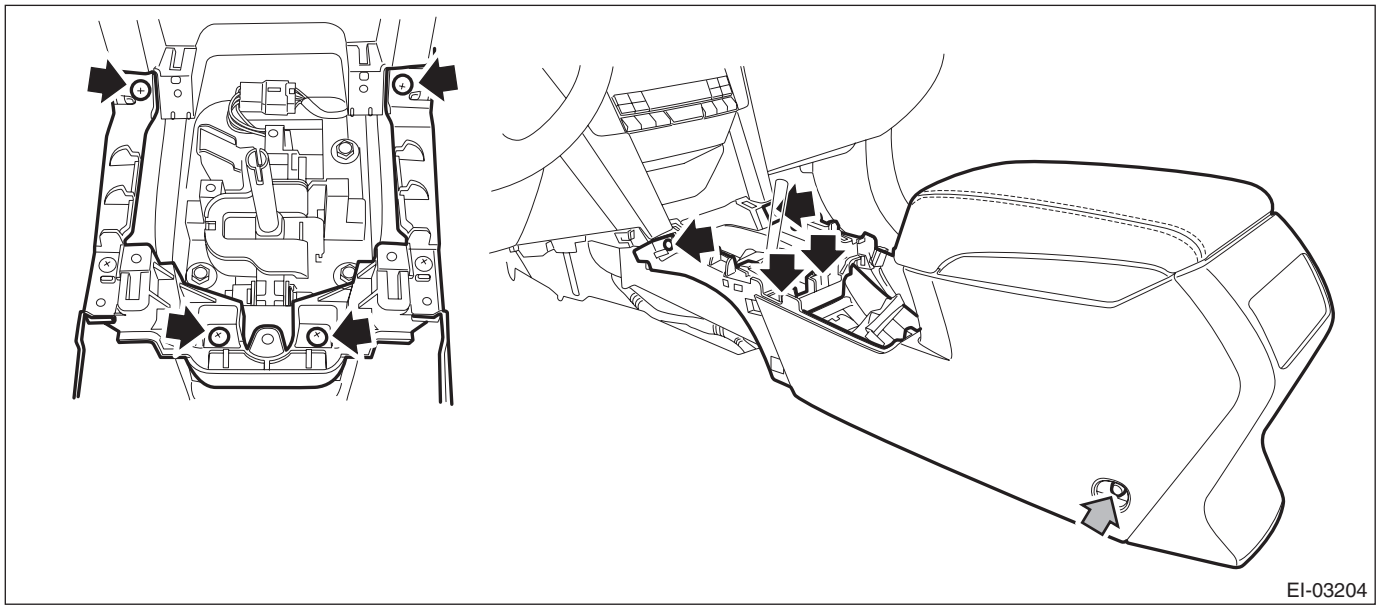

5) Remove the instrument panel lower cover.
(1) Remove the clips, and remove the instrument panel side cover LH.

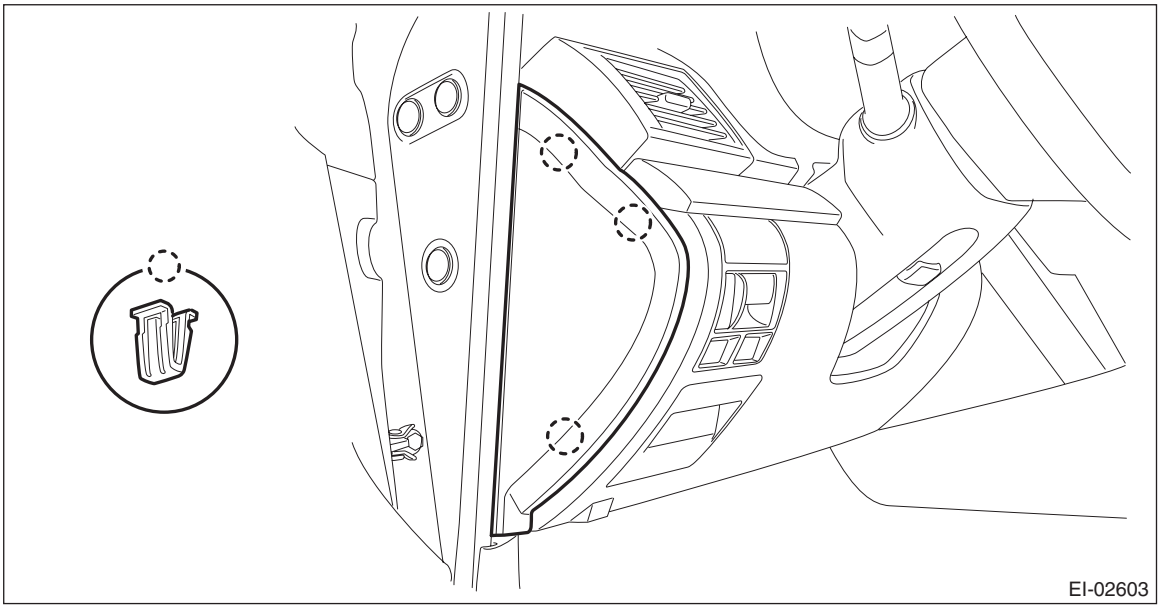

(2) Remove the clips and data link connector, and remove the instrument panel lower cover under.

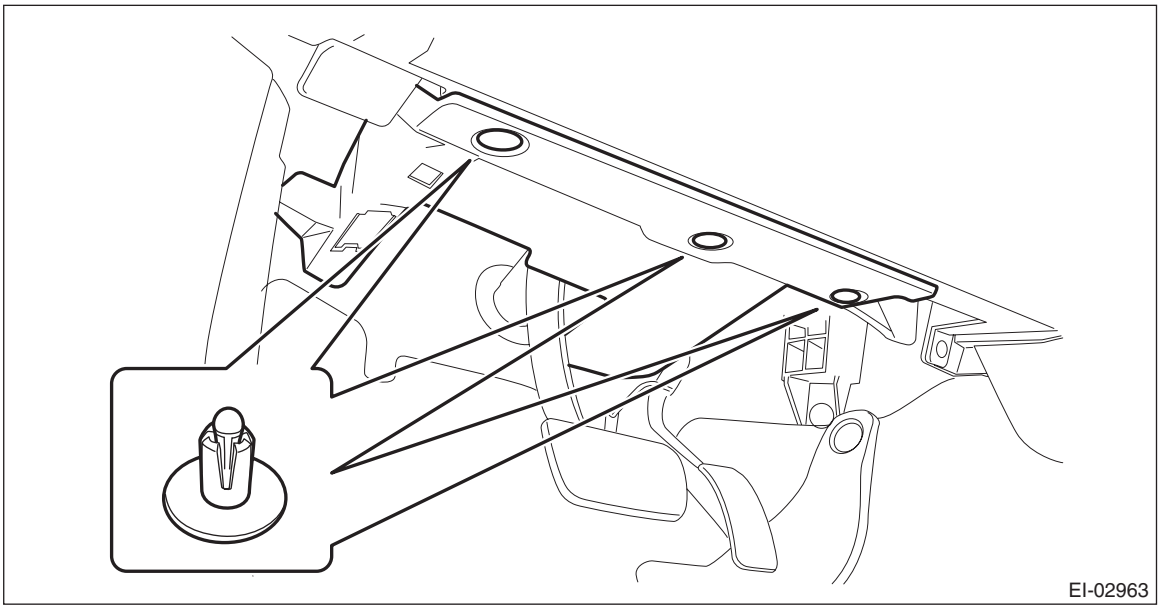

(3) Remove the screws and clips and release the claws, and remove the instrument panel lower cover while disconnecting the harness connectors.

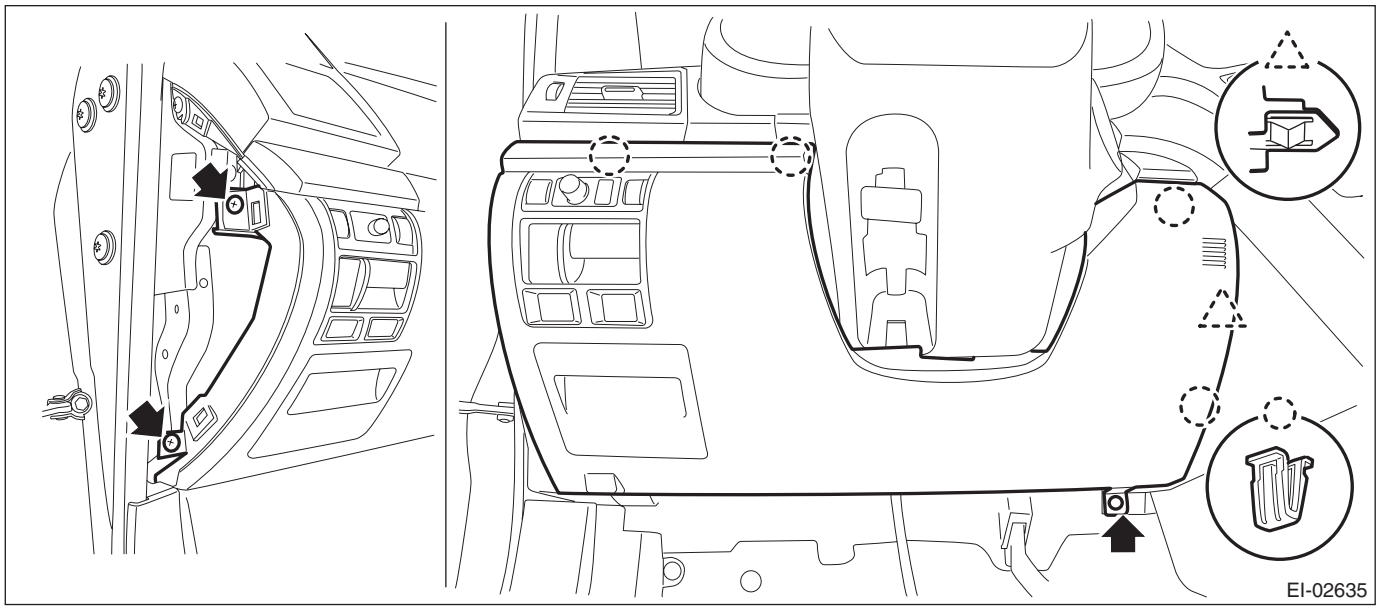

6) Remove the center panel assembly.

CAUTION:
Do not put your finger on the fin of the air vent grille. Doing so may damage the fin.

(1) Attach the protective tape (a) to the meter visor.

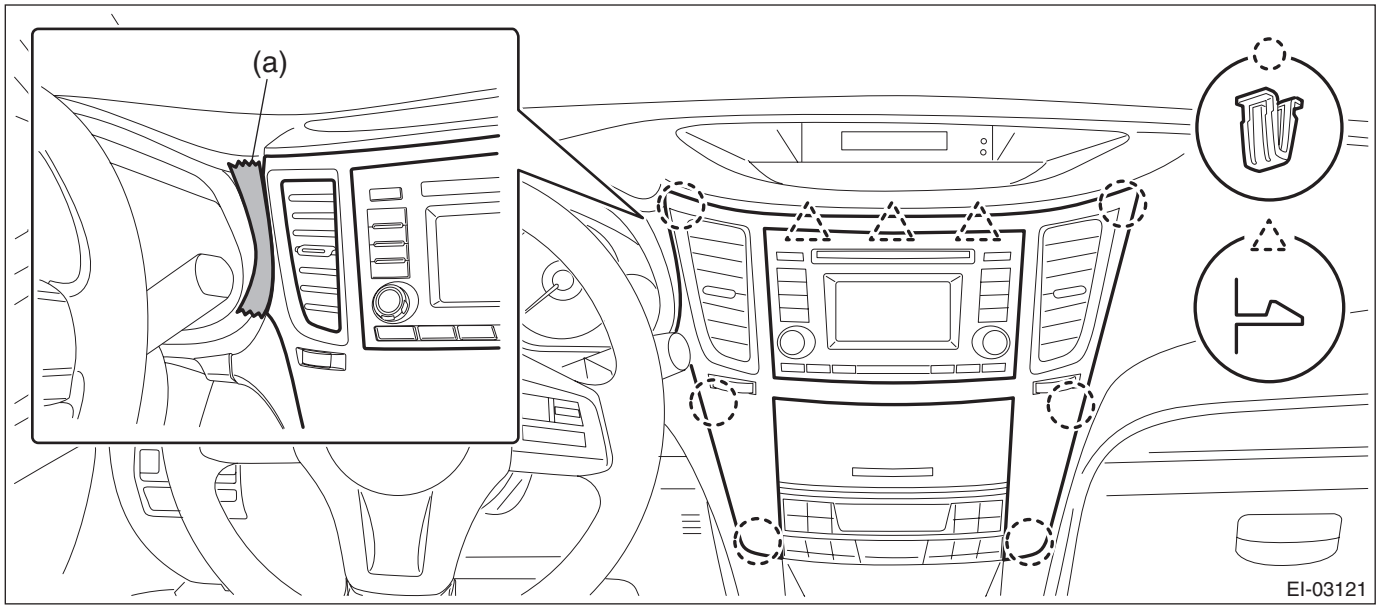

(2) Insert a finger into the air vent grille and release the left and right clips at the top of the center panel. (A), (B)

(3) Insert a finger into the air vent grille and release the left and right clips at the center of the center panel. (C), (D)

(4) Release the clips at the bottom of the center panel and remove the center panel assembly.

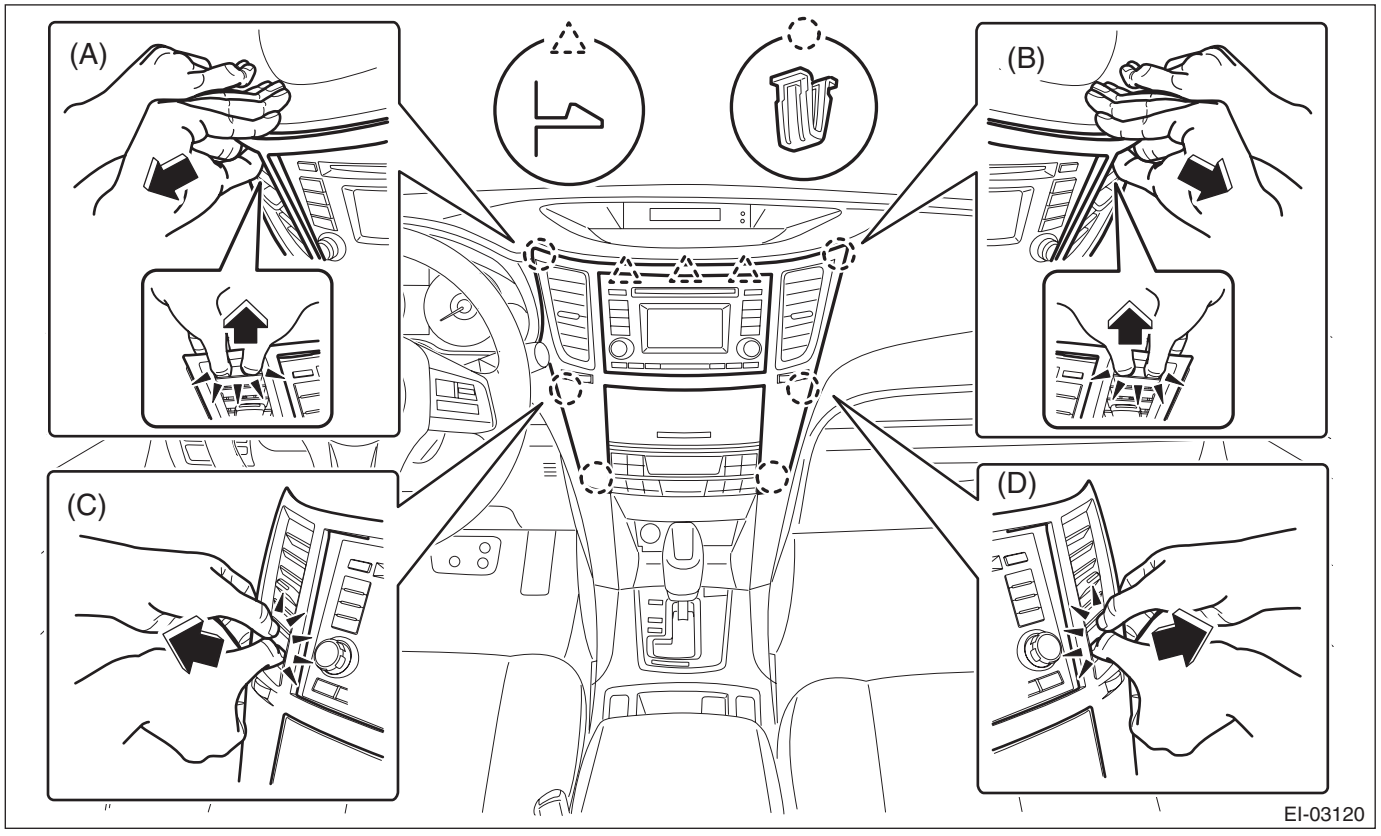

7) Remove the combination meter assembly.

CAUTION:
- **Be careful not to damage the meter or instrument panel.**
- **Pay particular attention to avoid damaging the meter glass.**

(1) Remove the screws and release the claws, then detach the starter cover assembly.

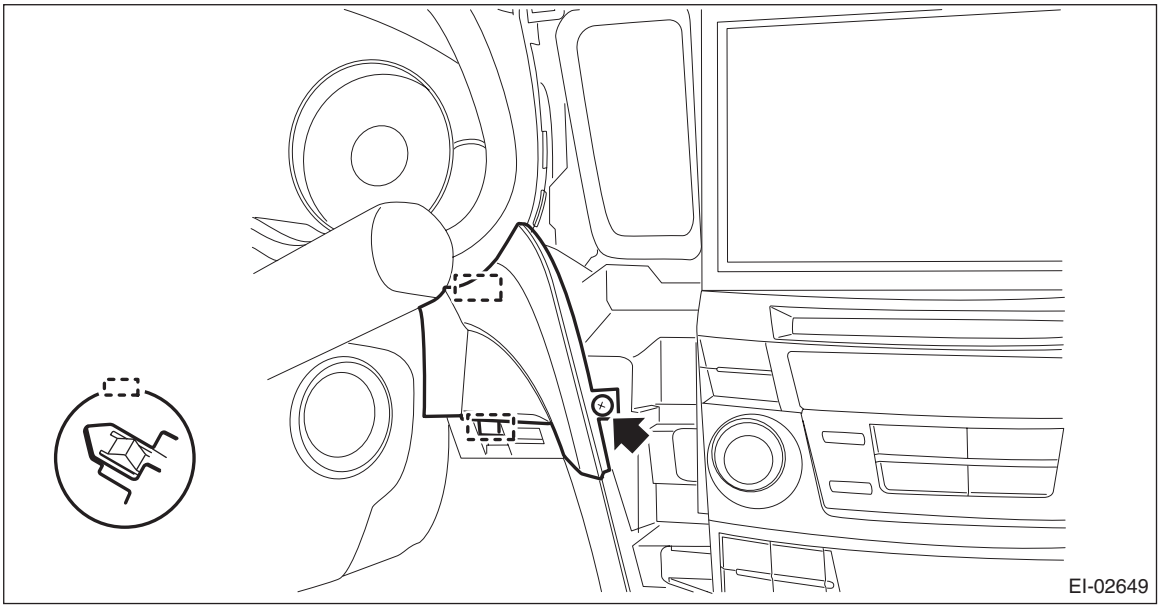

(2) Release the lock, tilt the steering column to the lowest end and fully extend the column by the telescopic system.

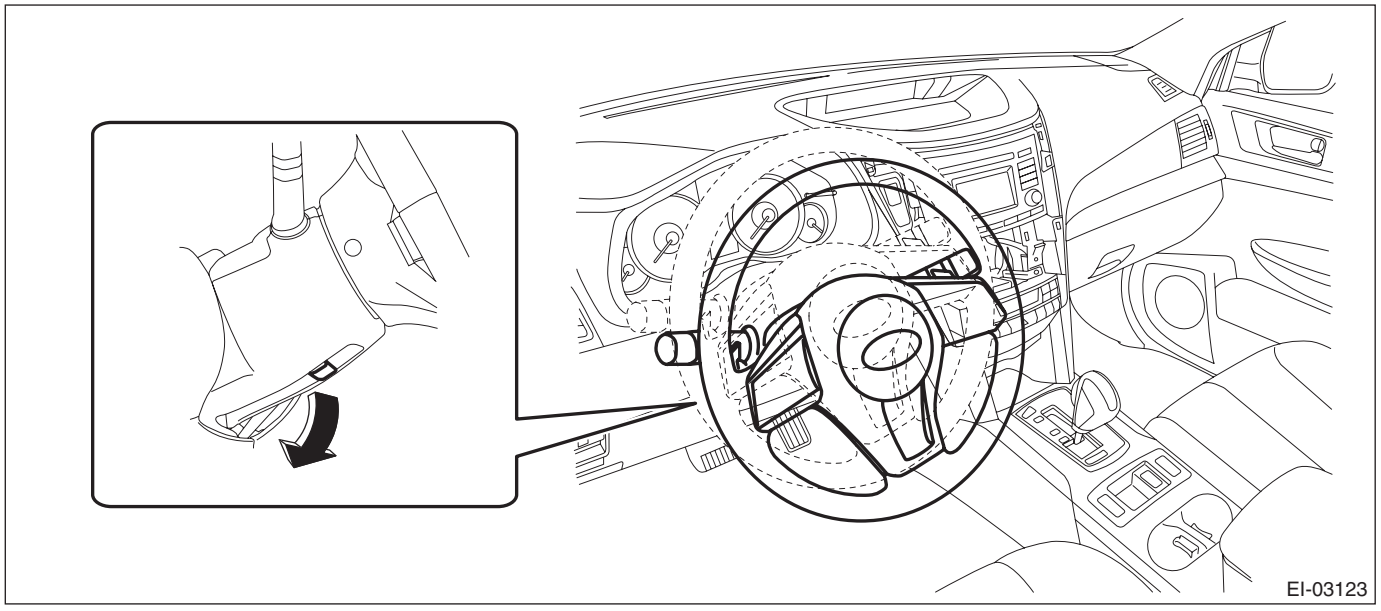

(3) Release the screws and clips, then detach the meter visor assembly.

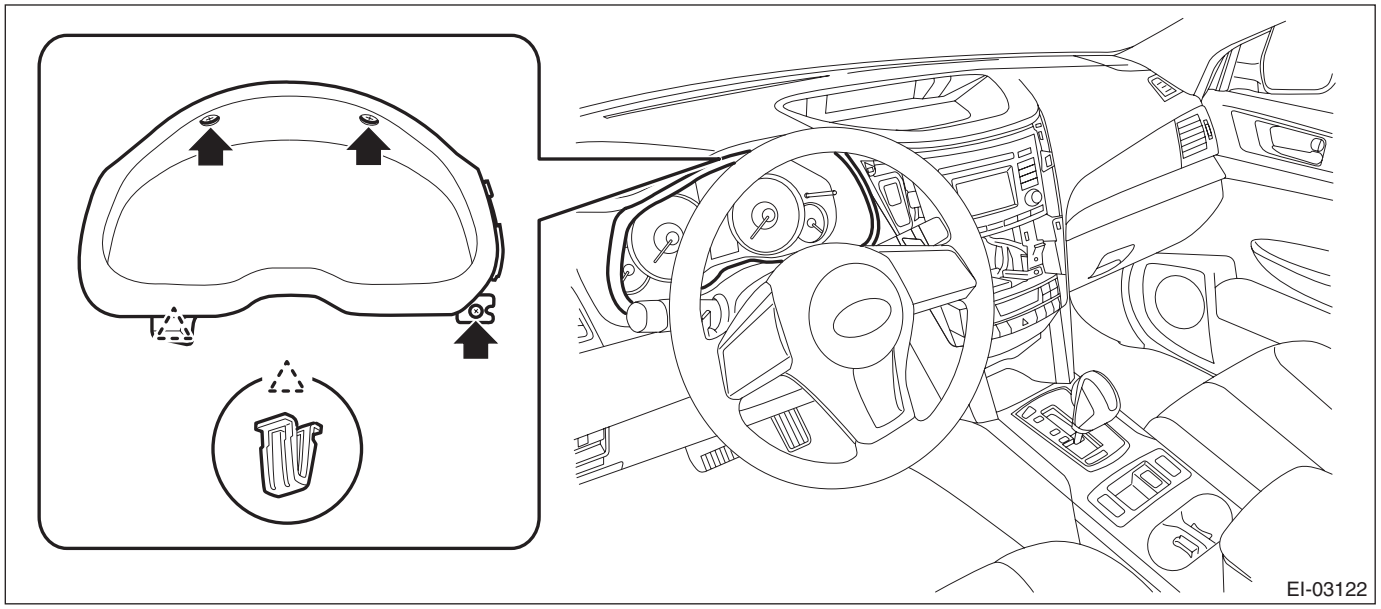

(4) Remove the screws and pull the steering COMPL upper cover toward you.

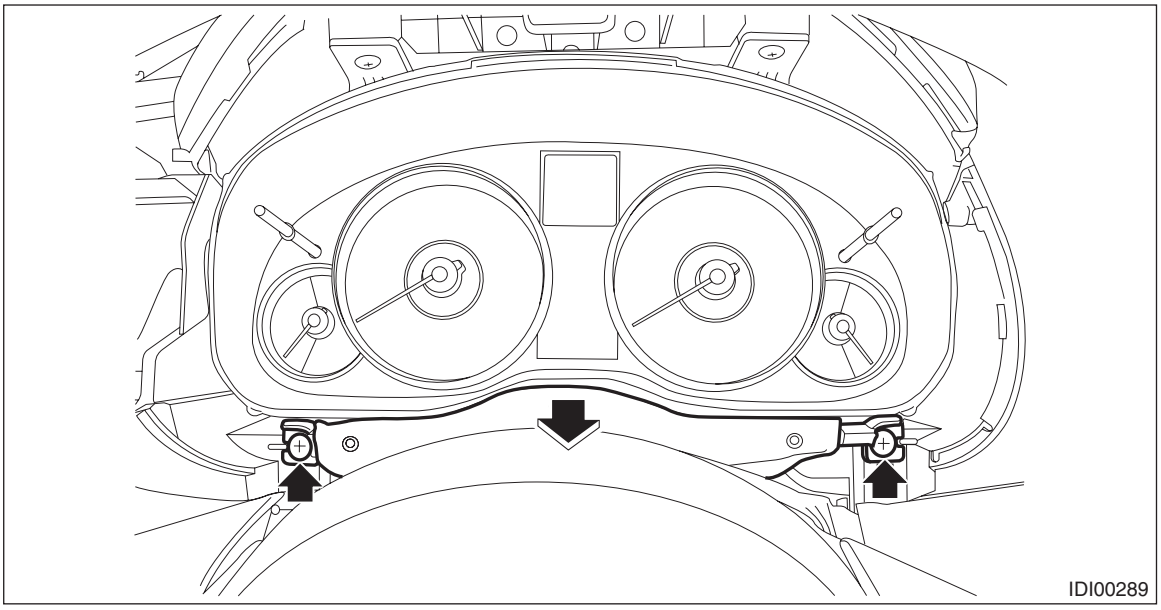

(5) Remove the four screws and pull out the combination meter toward you to disconnect the connectors.

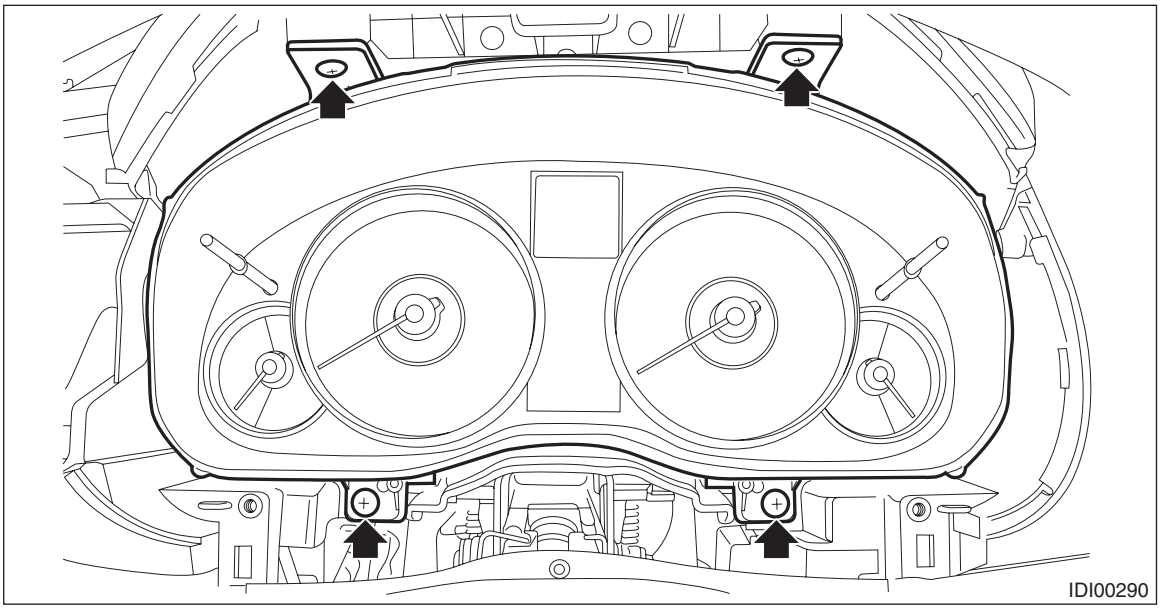

(6) Remove the combination meter assembly as shown in the figure.

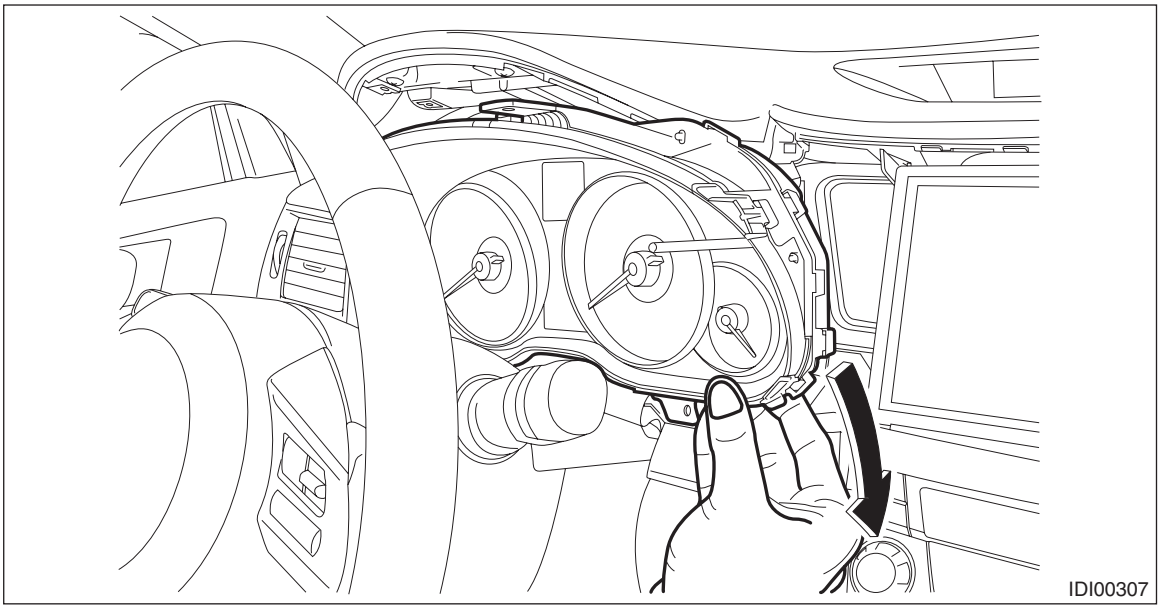

8) Remove the audio assembly.
   (1) Remove the left and right screws, and partially pull the audio out from center console.
   (2) Disconnect the connectors, and remove the audio assembly.

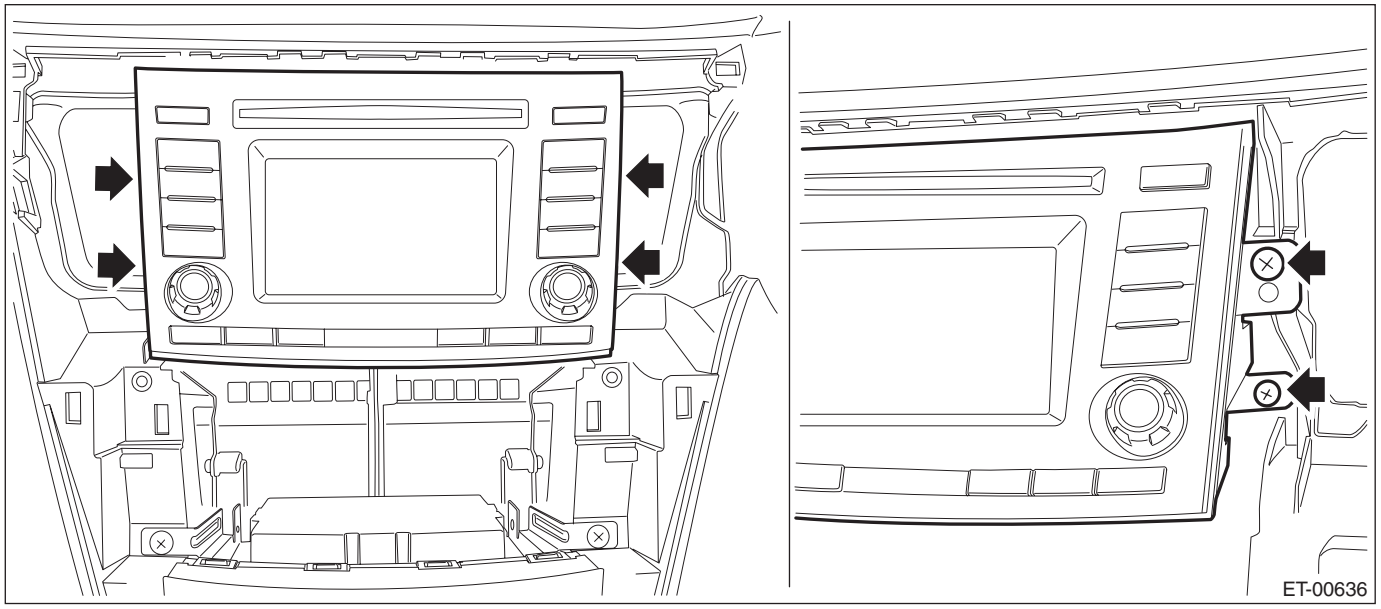

9) Remove the navigation assembly. (model with navigation)
   (1) Remove the left and right screws.
   (2) Disconnect the connectors, and remove the navigation assembly.

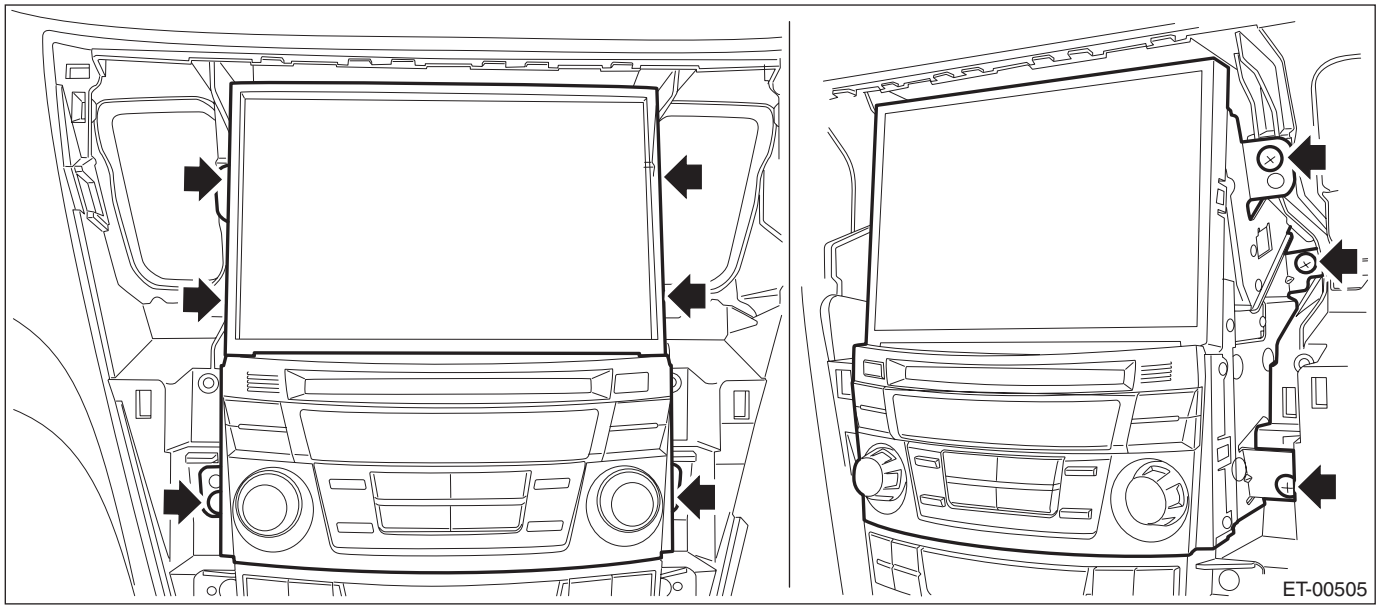

10) Remove the control panel assembly.
(1) Remove the screws, and pull out the control panel assembly toward you.
(2) Disconnect the connector, and remove the control panel assembly.

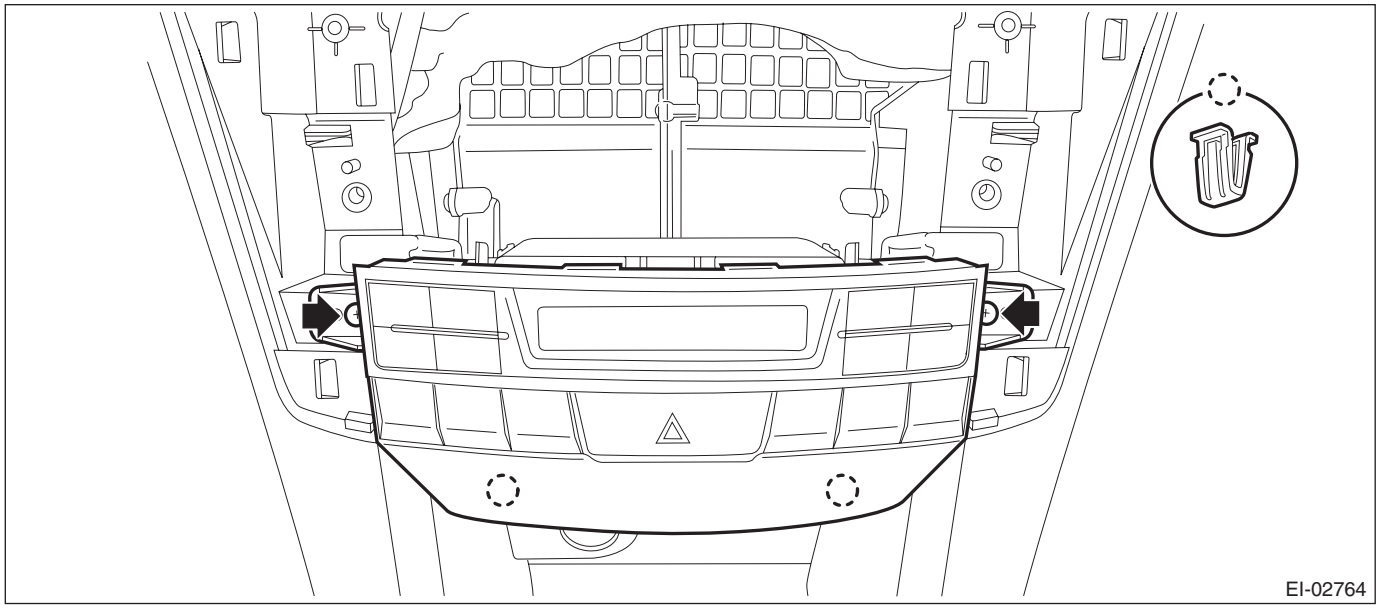

11) Remove the multi display assembly.

CAUTION:
Be careful not to damage the multi display or instrument panel.
(1) Detach the center speaker cover by releasing the claws and hooks.

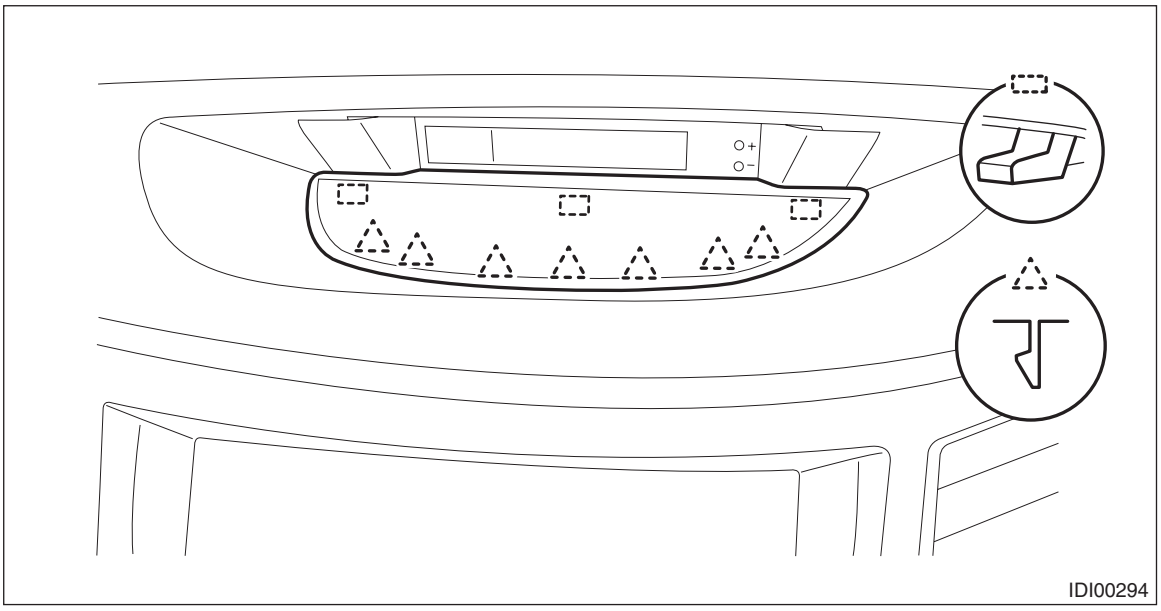

NOTE:
An easy way of removal is to first remove the audio assembly or navigation assembly and push up the cover from the backside.
(2) Release the clips and claws, detach the multi display panel LWR.

(3) Remove the screws and pull out the multi display toward you to disconnect the connectors.

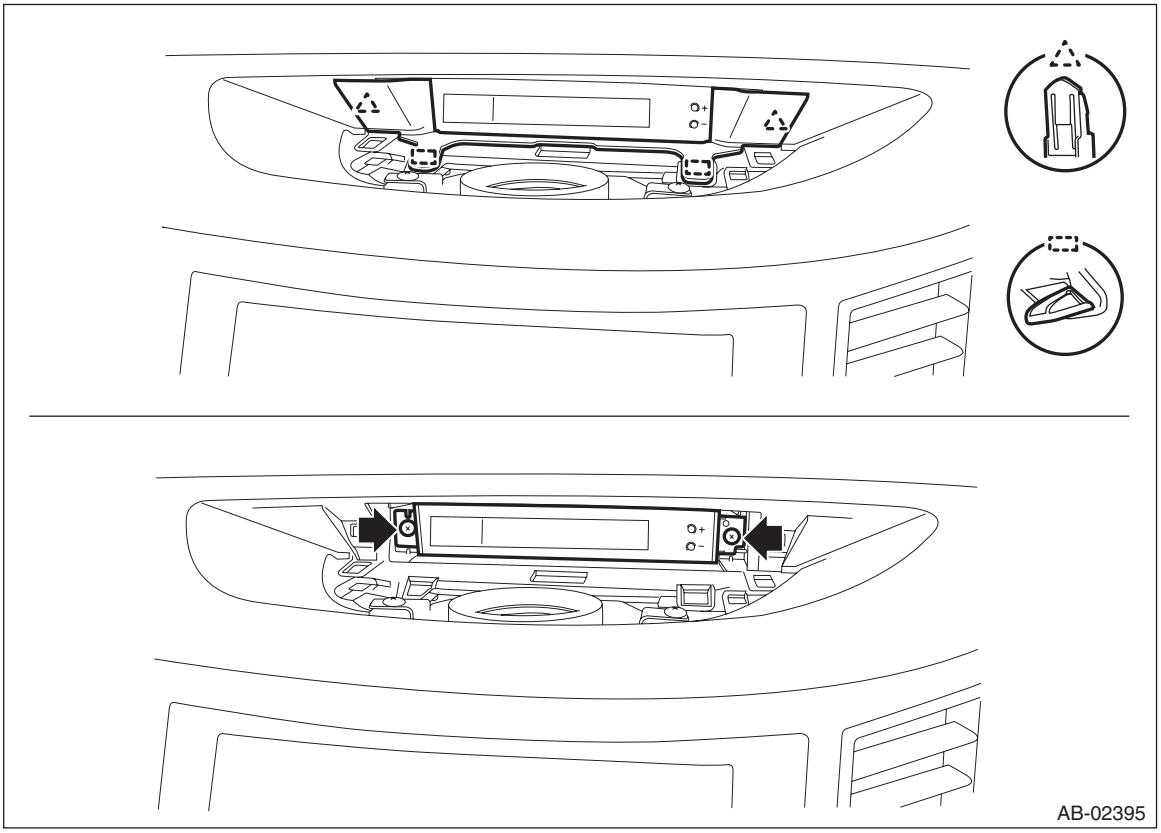

12) Remove the left and right front side speaker assembly. (Models with front side speaker)
(1) Release the clips and claws, then detach the side speaker cover.

CAUTION:
To remove the cover, use a plastic clip remover or equivalent tool.

(2) Remove the screws.

Preparation tool: Stubby screwdriver

(3) Disconnect the connector and remove the front side speaker assembly.

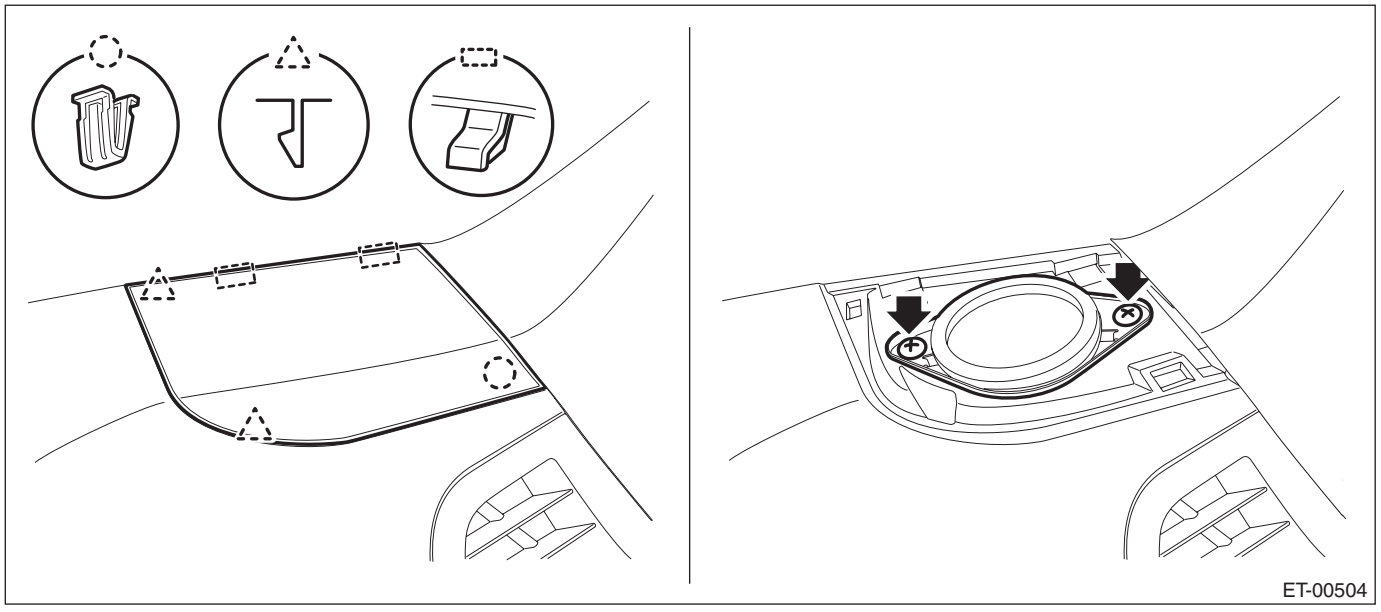

NOTE:
On the passenger's side, also disconnect the sunload sensor connector.

13) Remove the left and right front pillar trims.
(1) Pull the upper part of the front pillar trim towards the center of the vehicle.
(2) Insert long-nose pliers into the top part of the trim, grip the clip with the pliers and twist 90° in that position.

CAUTION:
Be careful not to damage the pillar trim surface and curtain airbag module when inserting the pliers.
(3) Holding the clip twisted as in the previous step, remove the front pillar trim from the clip.
(4) Remove the clip and the front pillar trim.

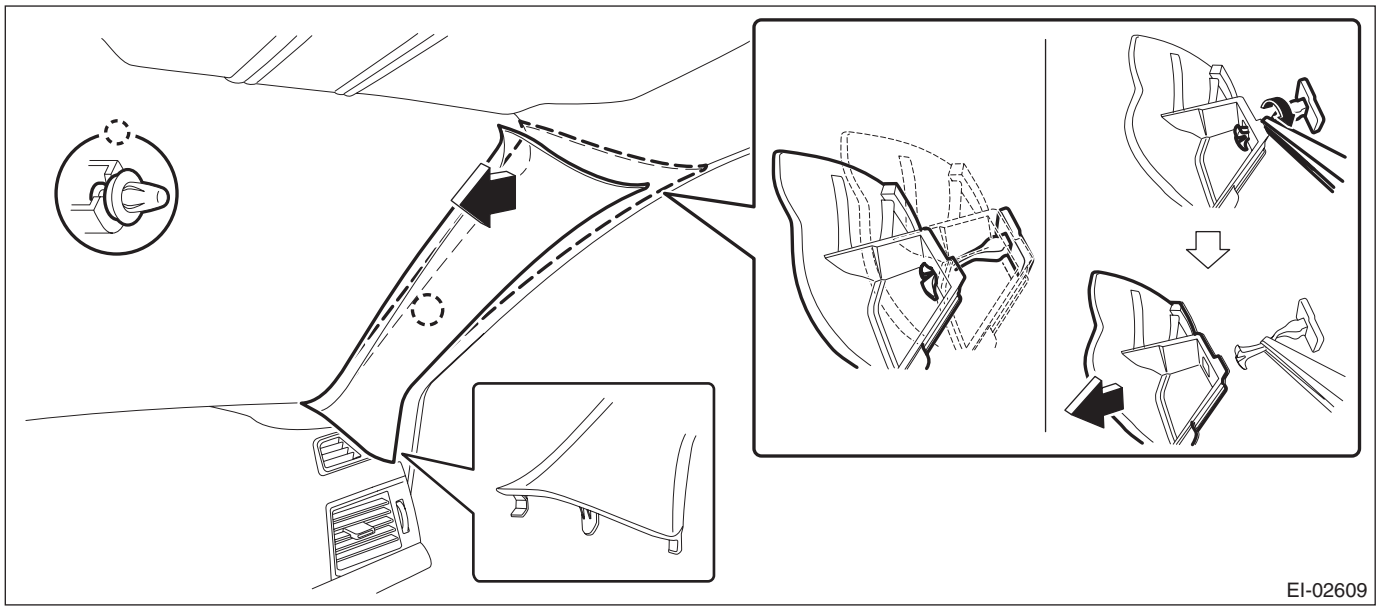
EI-02609

14) Remove the glove box lid assembly.
(1) Remove the glove box damper.
(2) Release the stoppers and remove the glove box lid assembly by pulling it toward you.

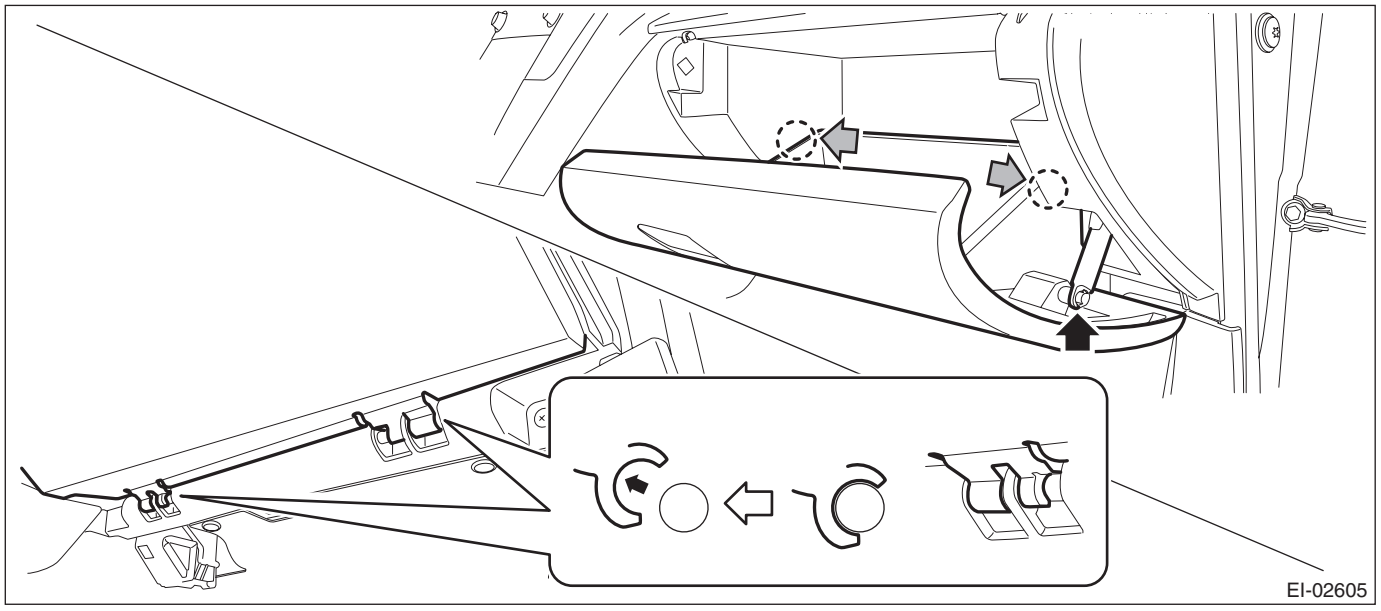
EI-02605

15) Remove the glove box back panel.
(1) Release the clips, and remove the instrument panel side cover RH.

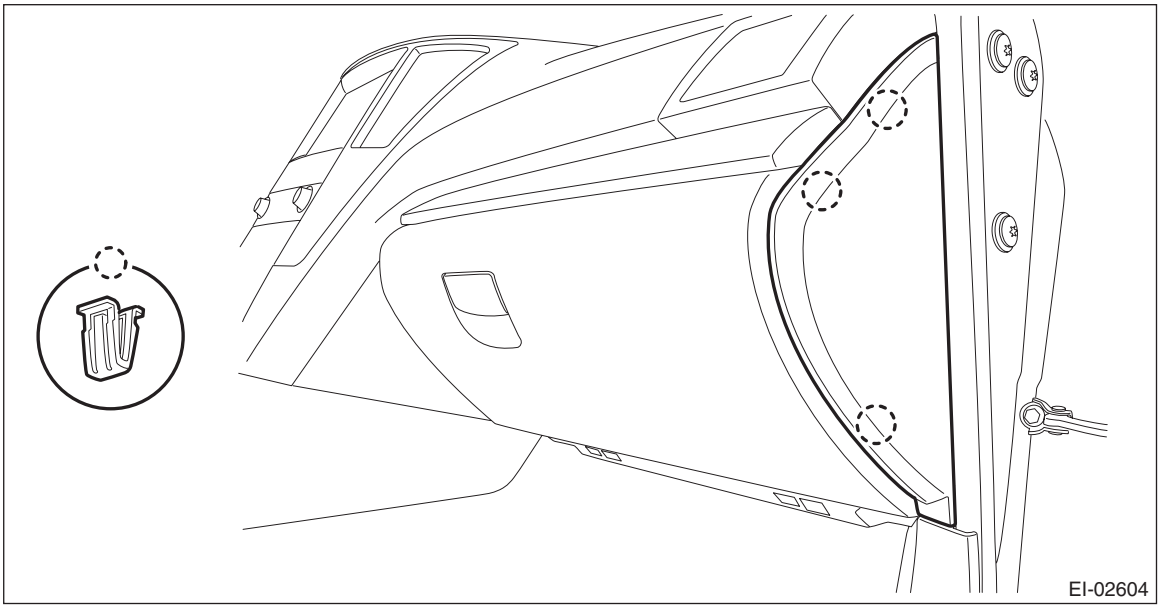

(2) Release the clips, and remove the glove box under cover.

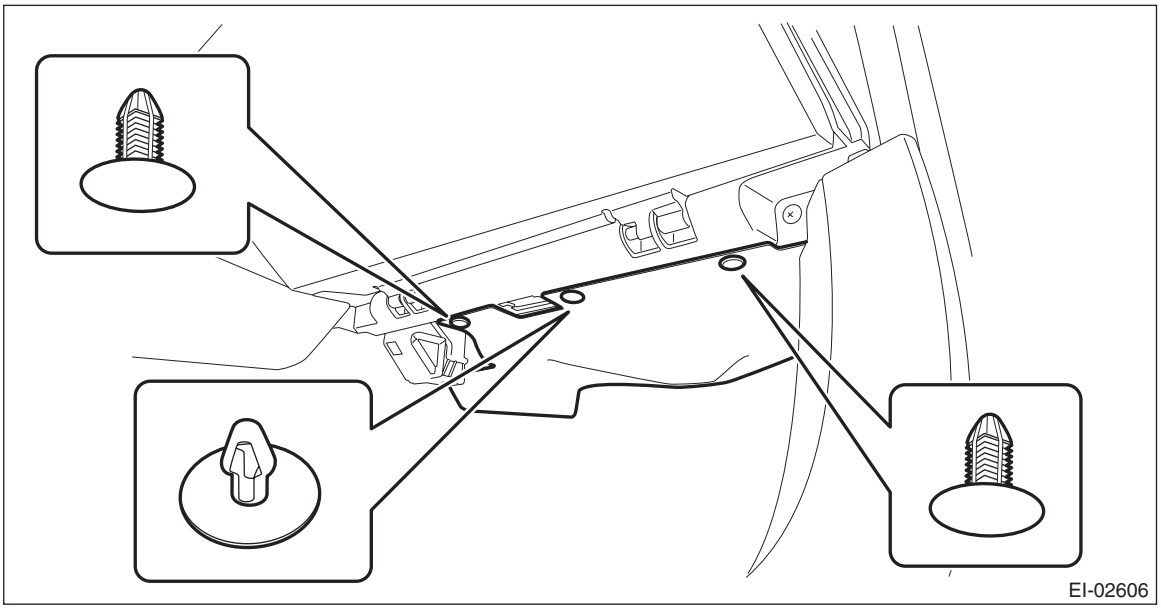

(3) Release the clips and claws, and remove the ornament panel assembly P.

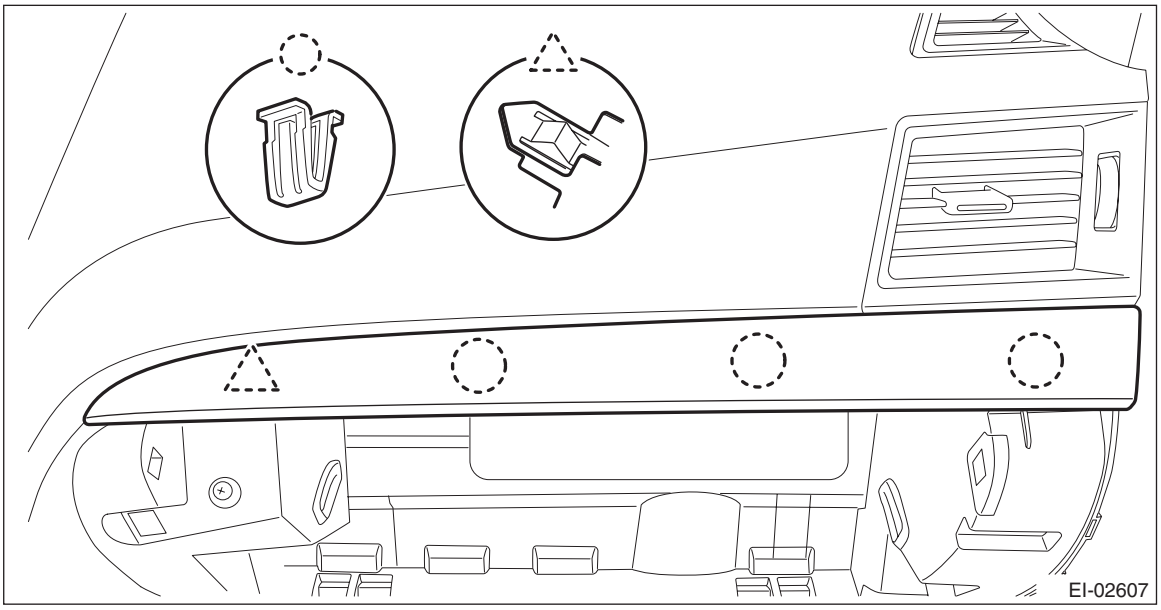

(4) Remove the screws and release the claws, then detach the glove box back panel.

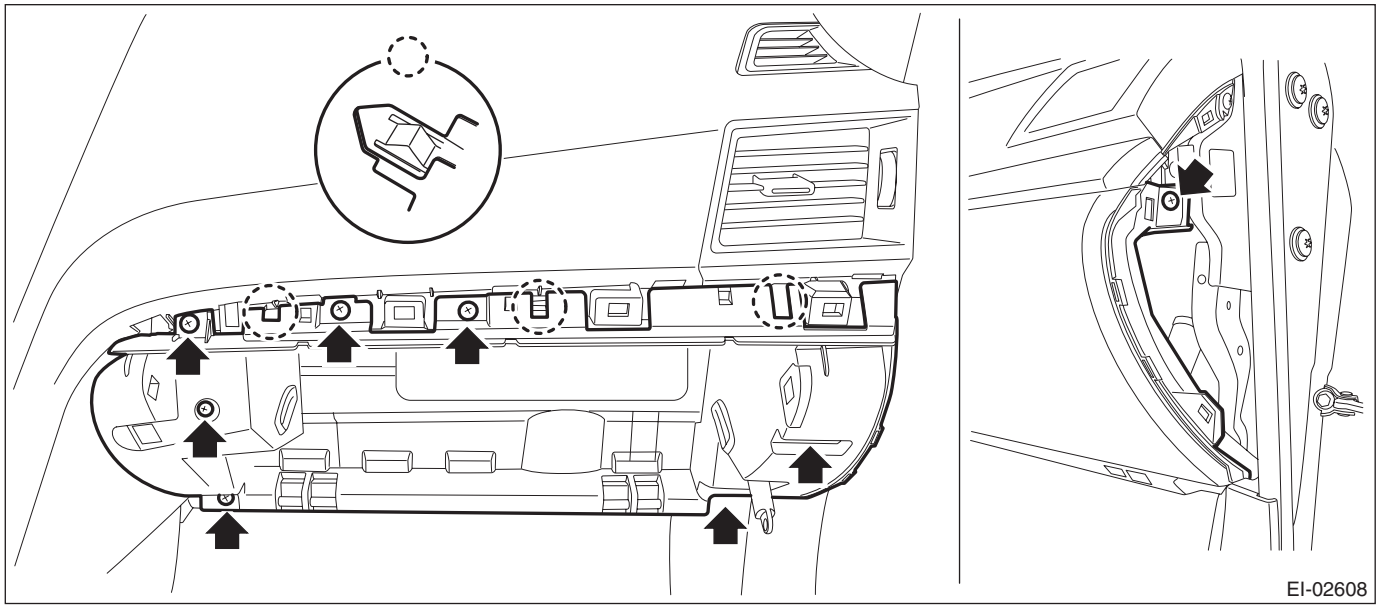

(5) Disconnect the glove box light LED connector.

16) Disconnect the connector from the passenger's airbag module assembly and remove the bolt.
(1) Release the connector and harness clamps and disconnect the airbag connector.

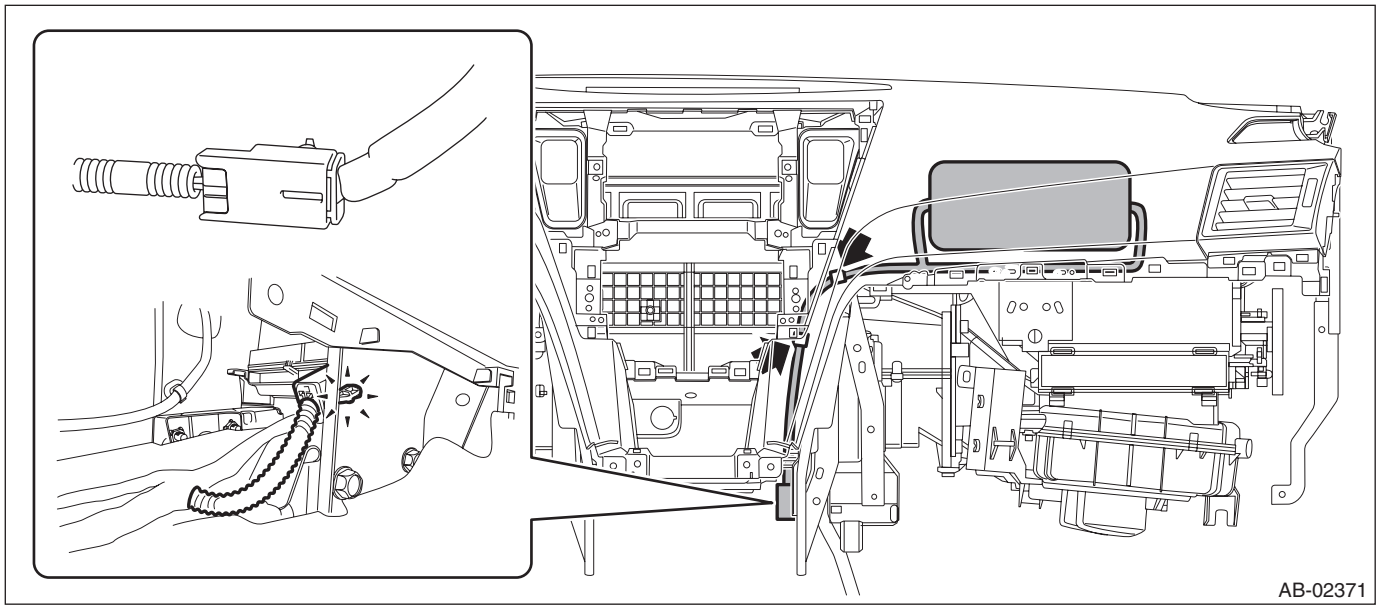

(2) Remove passenger's airbag module assembly bolts.

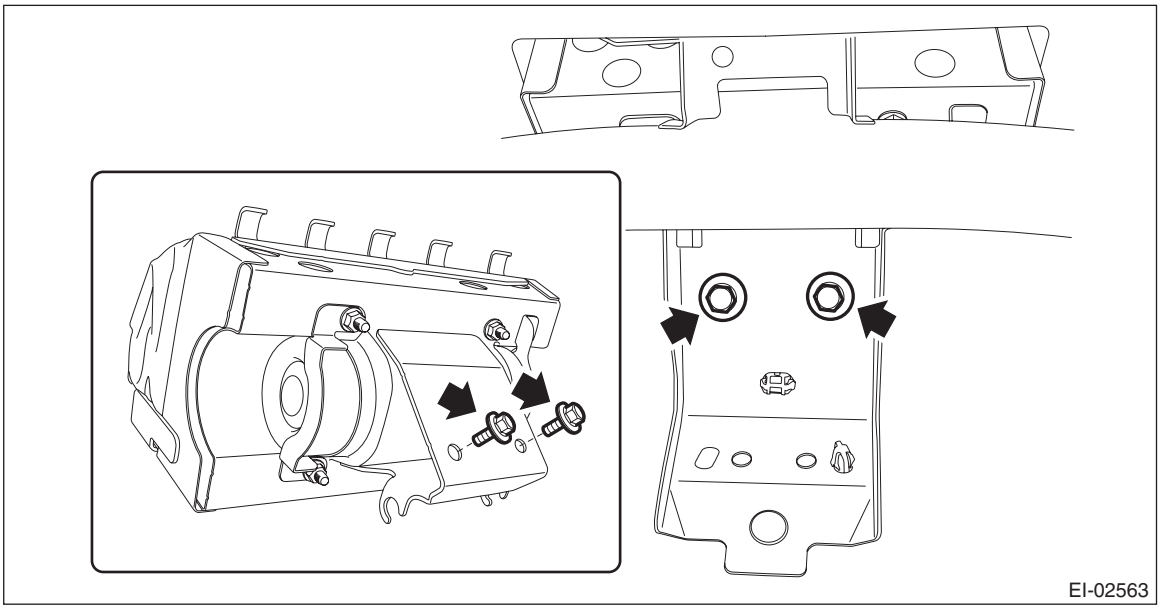

17) Remove the steering shaft assembly. <Ref. to PS-26, REMOVAL, Steering Column.>

18) Remove the instrument panel assembly.
(1) Remove the screws. (A), (B), (C), (D), (E), (F), (G), (H), (I)

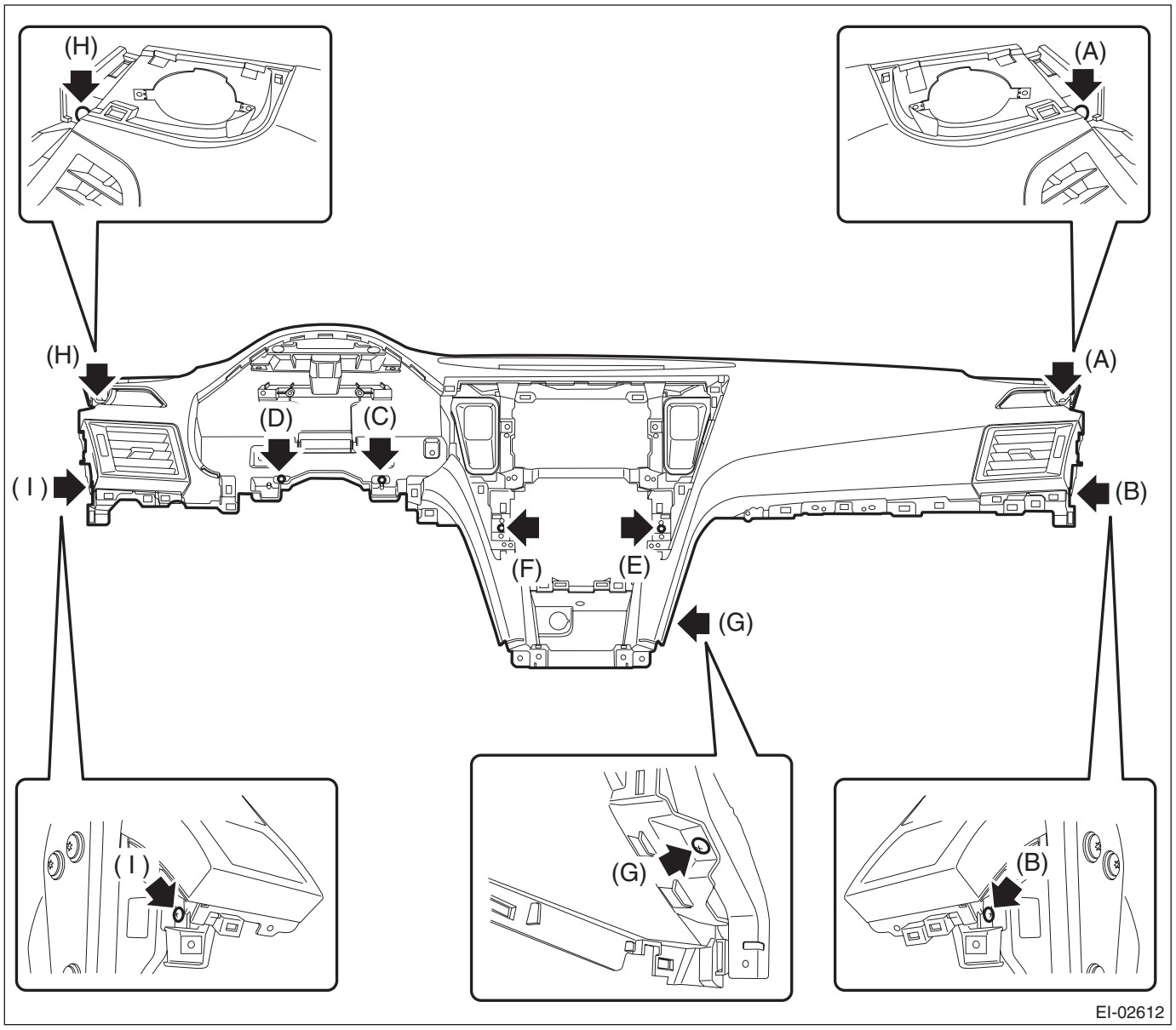

(2) Pull out the instrument panel assembly toward you and release the clamps of the left and right front side speakers.

Preparation tool: Stubby screwdriver

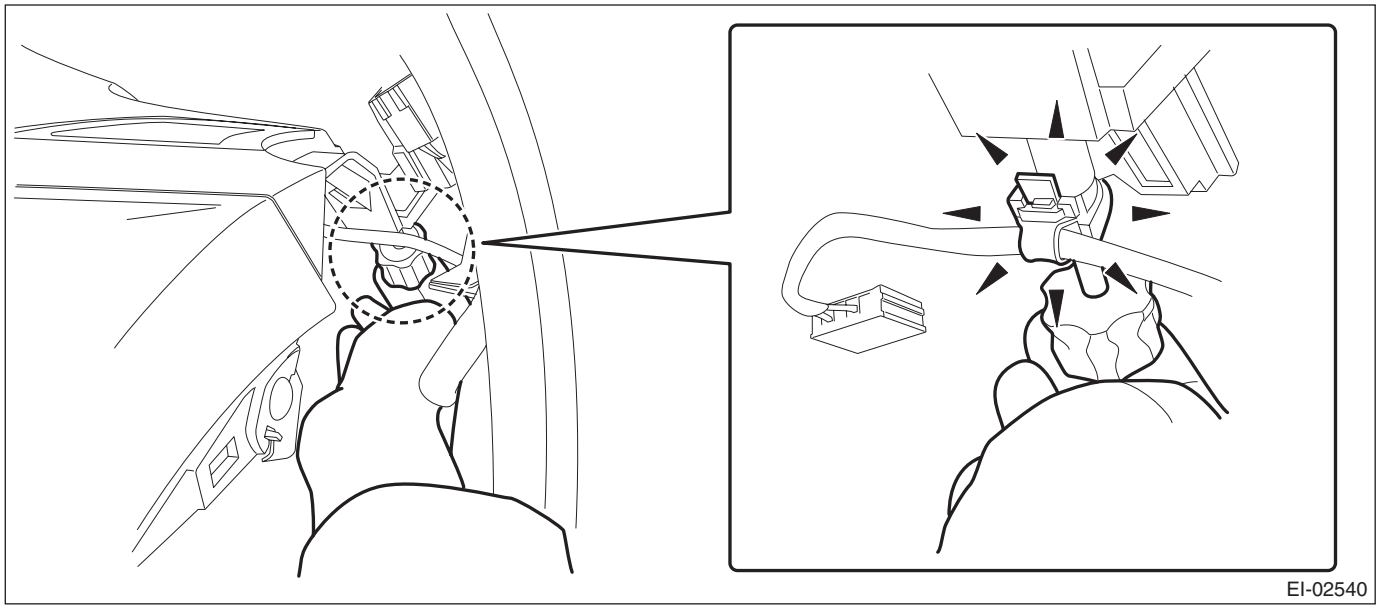

(3) After checking that all harness clamps and connectors are released and disconnected, remove the instrument panel assembly.

CAUTION:
Be careful not to damage the instrument panel surface and interior trims.

19) Release the claws, and then remove the side sill cover - front INN on the left and right sides.

CAUTION:
Do not pull with excessive force. Doing so may damage the claws of the side sill cover INN.

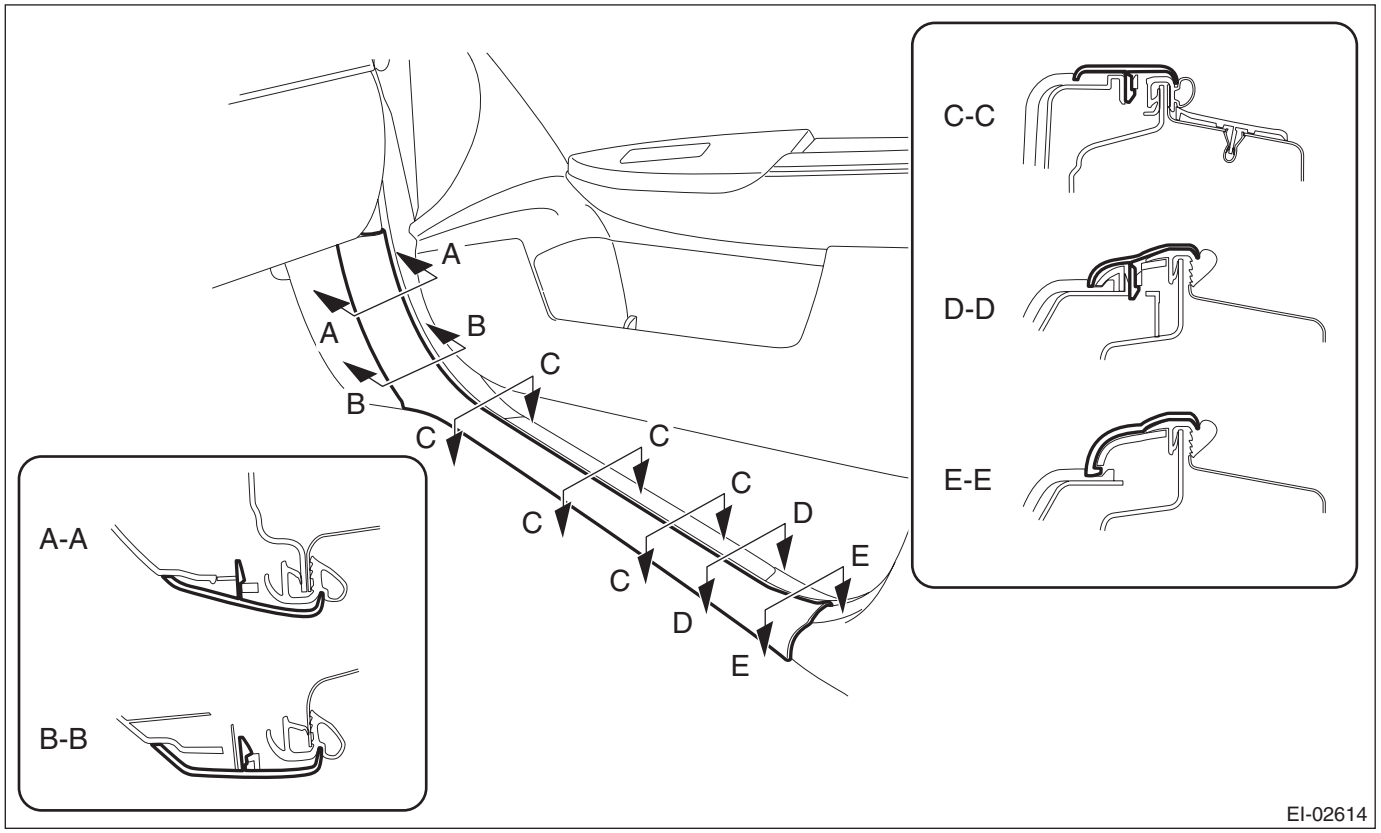

NOTE:
To release the claws of the side sill cover INN, the following steps are recommended.
1. Take out the weather strip from under the side sill cover INN.
2. Turn over the floor mat and release the claw (C-C) by accessing from behind the side sill cover INN.

20) Remove the clip, and remove the left and right side sill cover front.

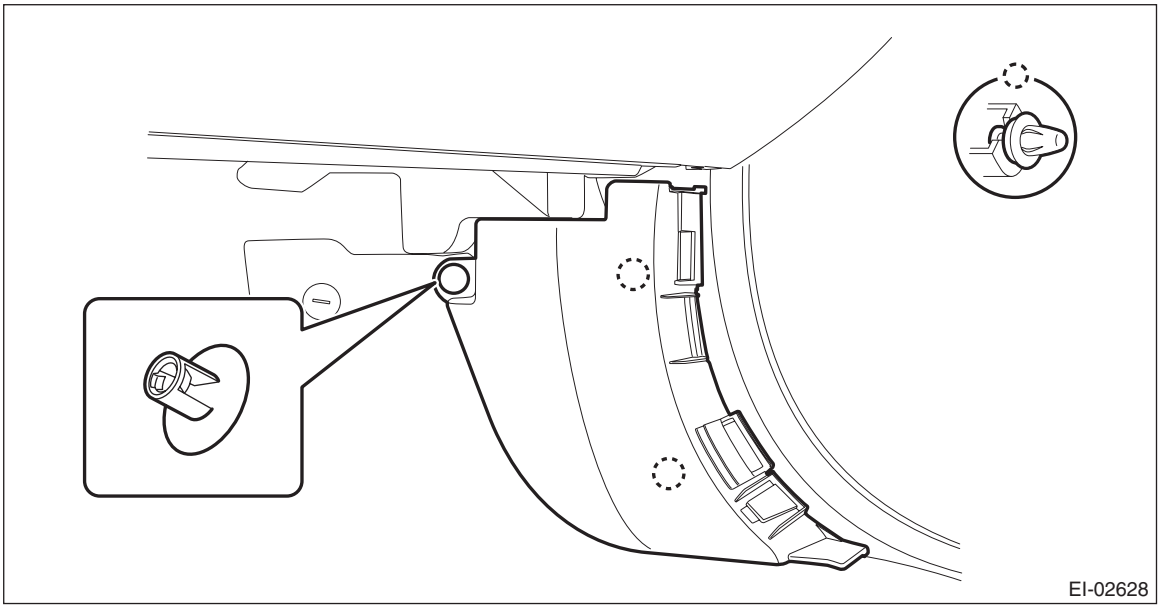

21) Remove the steering support beam assembly.
   (1) Remove the fuse box and relay box.
   (2) Remove the screws. (E)
   (3) Disconnect all harness clamps and connectors of the instrument panel harness.
   (4) Remove the TORX® bolt and adjuster bolt (a) (only passenger's side). (A), (B)

Preparation tool:

TORX® T40

Hexagon wrench (12 mm)

   (5) Remove the bolts at the floor center. (C), (D)
   (6) Remove the nut (F) and (G) behind the cooling unit.

(7) Remove the nut (H) behind the blower unit.

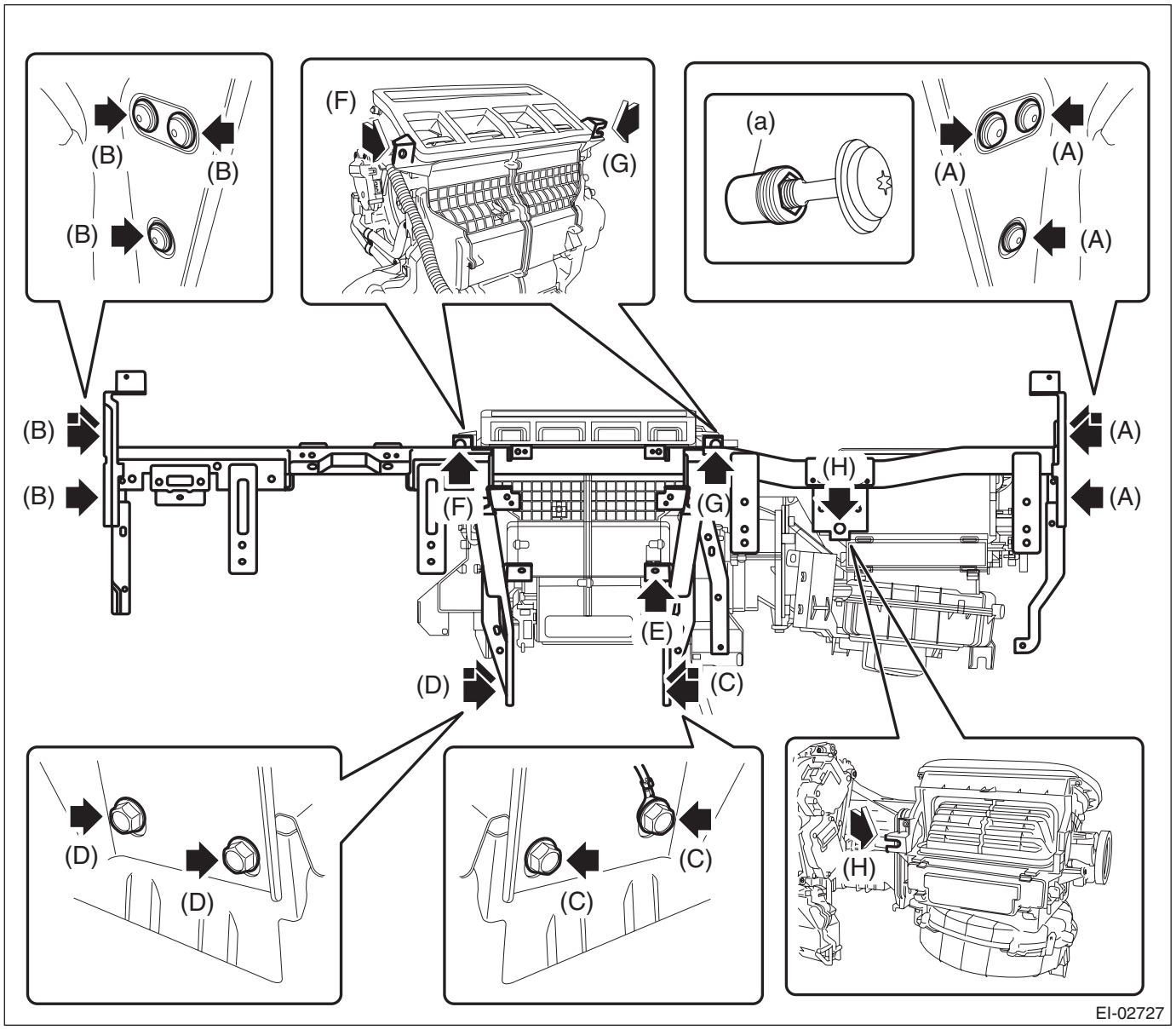

(8) Slightly lift the steering support beam assembly to detach the left and right pins. Then pull it toward you to remove the assembly.

CAUTION:
- **Check that all harness clamps and connectors are detached.**
- **Be careful not to damage interior trims.**

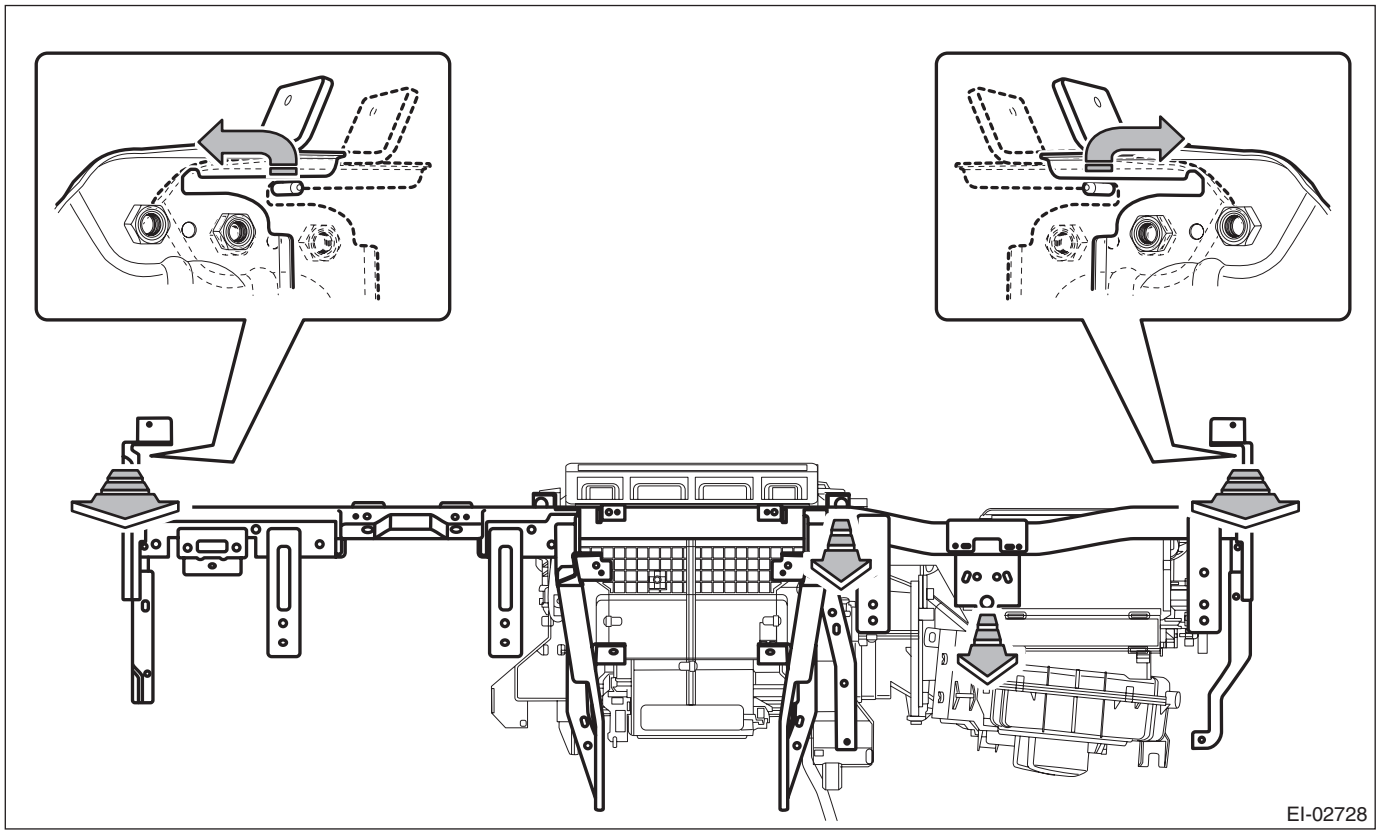

B: INSTALLATION

1) Install parts in the reverse order of removal to restore the instrument panel assembly.

NOTE:
How to install insulators
- Adhesive

Use polyurethane adhesive. When assembling the instrument panel assembly, wait until the adhesive has evaporated to prevent filling of the smell in the compartment.
- Double-sided tape

Use commercial double-sided tape. (Use strong double-sided adhesive tape.)
2) Insert the three matching pins on body into the instrument panel assembly.
3) Check that the matching pins are inserted securely, and then route the harness.
4) Install each part in the reverse order of removal.

Tightening torque:
Steering support beam: <Ref. to EI-15, INSTRUMENT PANEL, COMPONENT, General Description.>
Passenger's airbag module ASSY: 7.5 N·m (0.76 kgf-m, 5.5 ft-lb)
Steering shaft: <Ref. to PS-4, STEERING WHEEL AND COLUMN, COMPONENT, General Description.>
Console box: 6.5 N·m (0.66 kgf-m, 4.8 ft-lb)

20.Lower Inner Trim

A: REMOVAL

1) Release the claws, and then remove the side sill cover-front INN.

CAUTION:
Do not pull with excessive force. Doing so may damage the claws of the side sill cover INN.

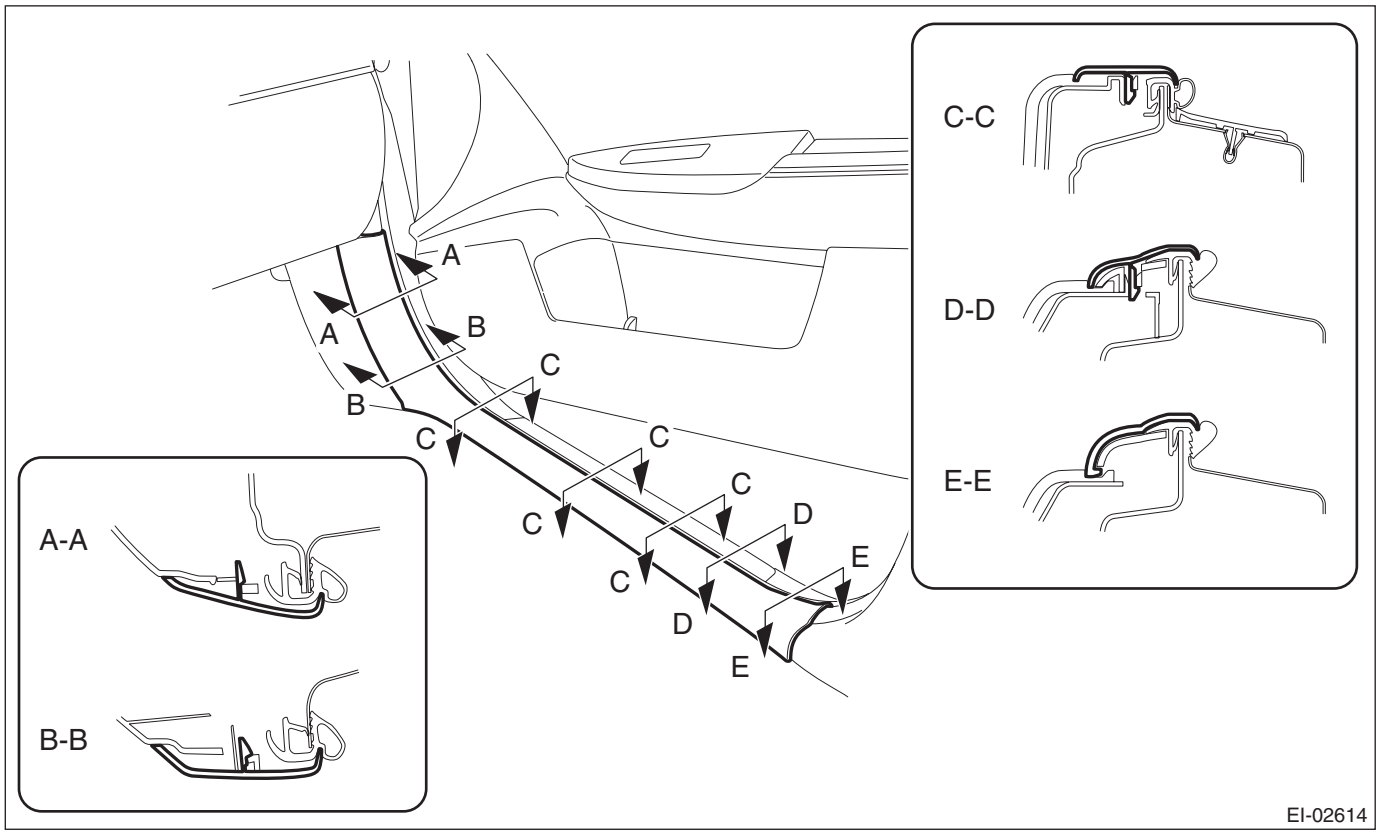

NOTE:
To release the claws of the side sill cover INN, the following steps are recommended.
1. Take out the weather strip from under the side sill cover INN.
2. Turn over the floor mat and release the claw (C-C) by accessing from behind the side sill cover INN.

2) Remove the clip, and remove the side sill cover front.

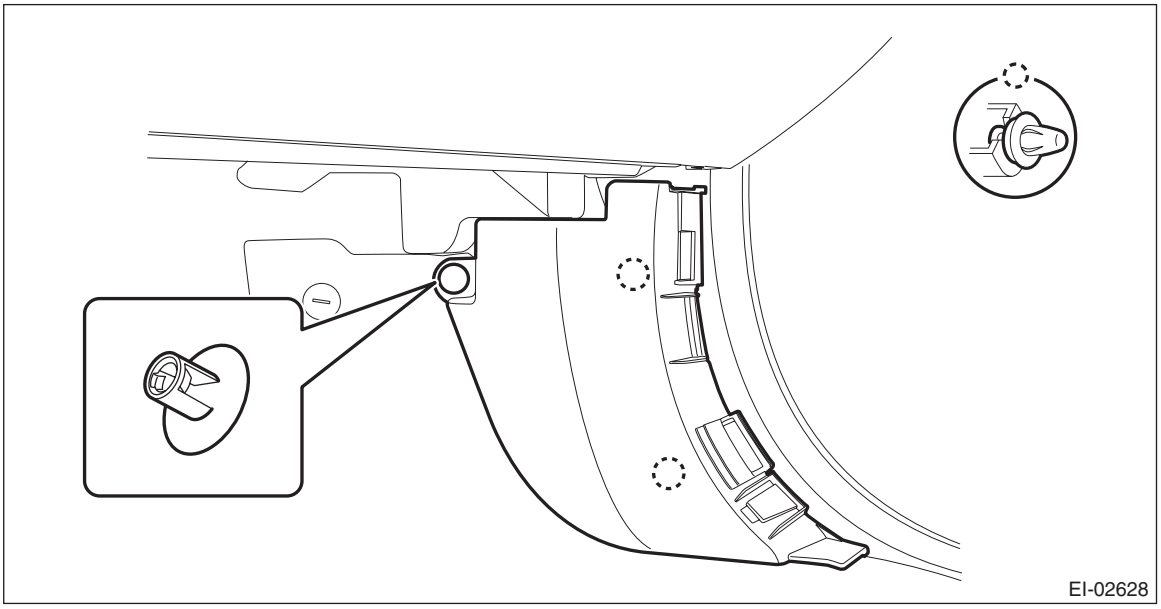

3) Remove the rear seat cushion assembly.
(1) Pull up the seat cushion and release the hook.

CAUTION:
If the hook is disconnected from the vehicle body, replace the hook with the new part to prevent the decline of the fixed force of the seat.

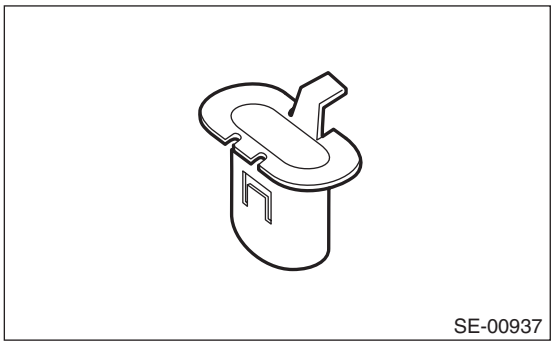
SE-00937

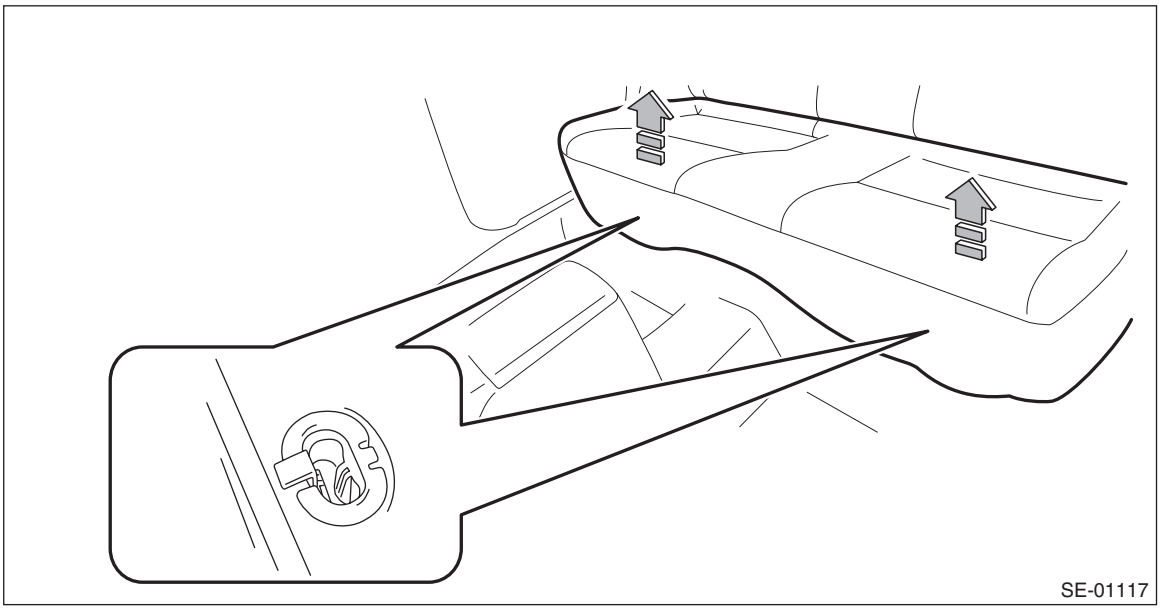
SE-01117

(2) Remove the hook (A) by pushing it back while lifting the front side of the seat cushion, and remove the seat cushion.

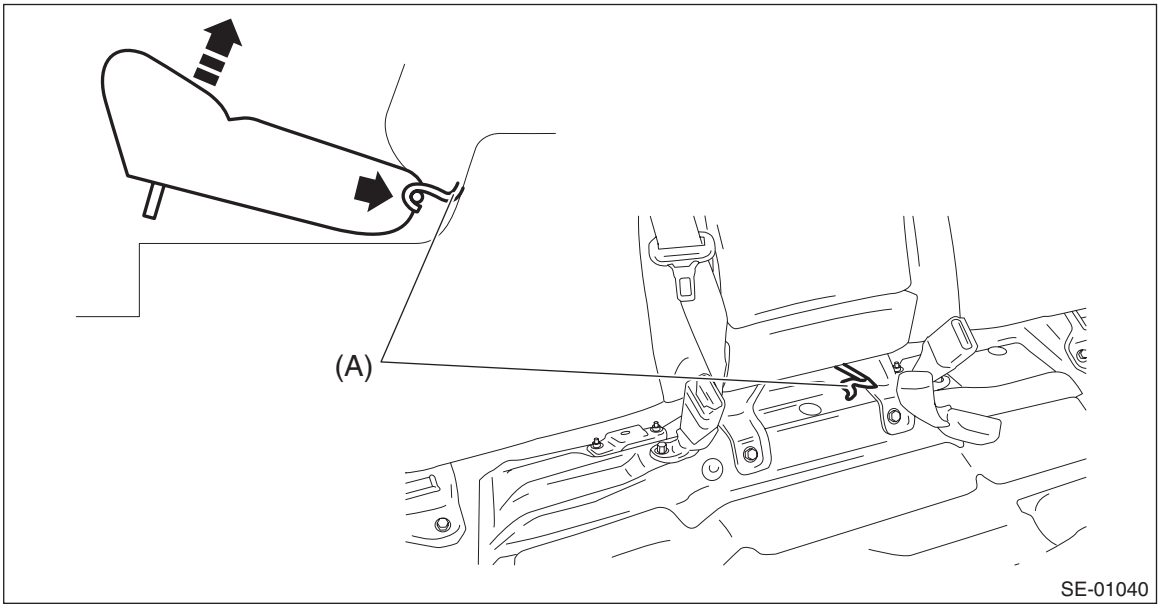

SE-01040

4) Release the clips and claws, and then remove the side sill cover - rear INN.

CAUTION:
Do not pull with excessive force. Doing so may damage the claws of the side sill cover INN.

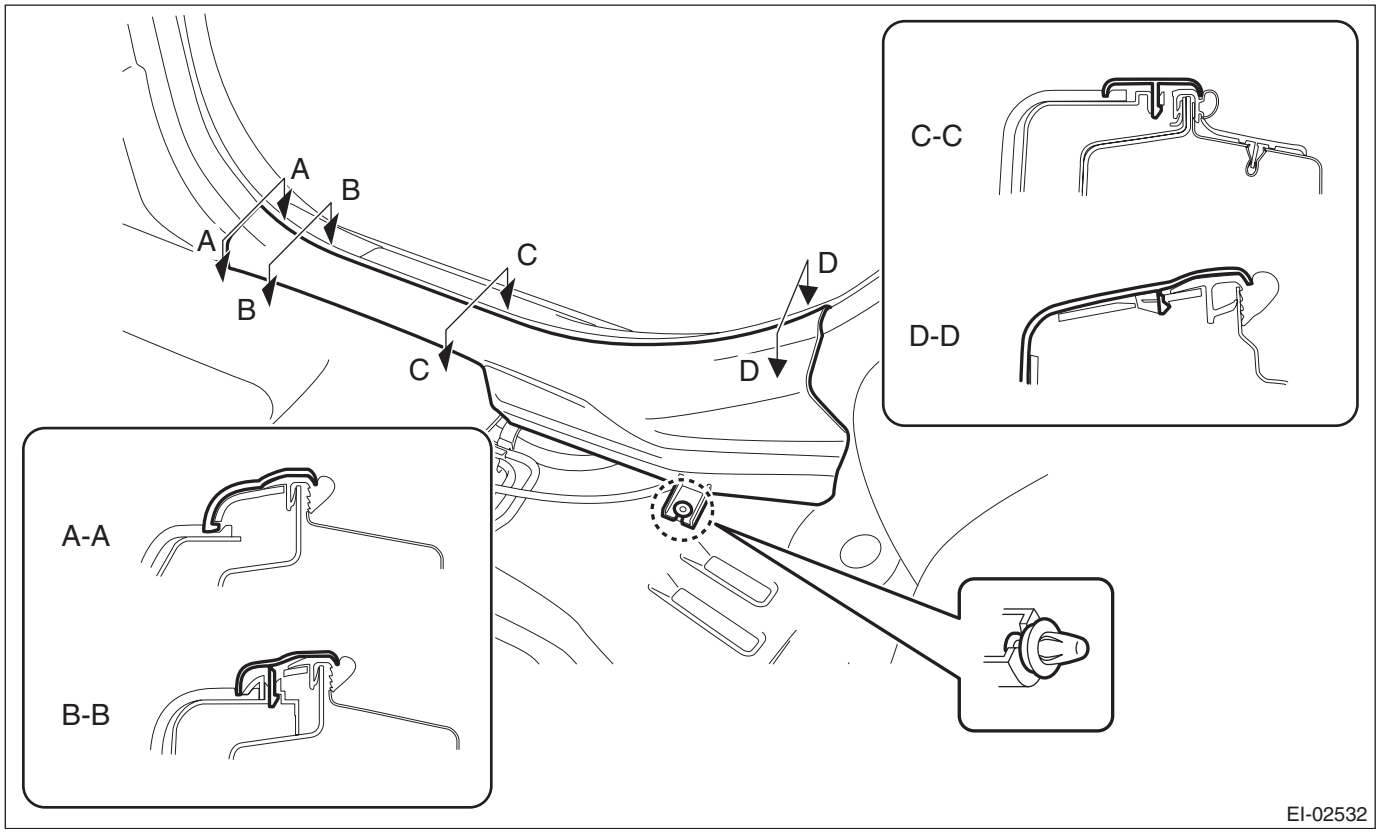

NOTE:
To release the claws of the side sill cover INN, the following steps are recommended.
1. Take out the weather strip from under the side sill cover INN.
2. Turn over the floor mat and release the claw (C-C and D-D) by accessing from behind the side sill cover INN.

5) Remove the center pillar trim LWR.
(1) Release the clip by pulling the center pillar trim LWR toward you.
(2) Expand the claws of center pillar trim LWR outward and remove it from the center pillar trim UPR.

CAUTION:
Do not expand the center pillar trim LWR excessively. Doing so may damage the trim.

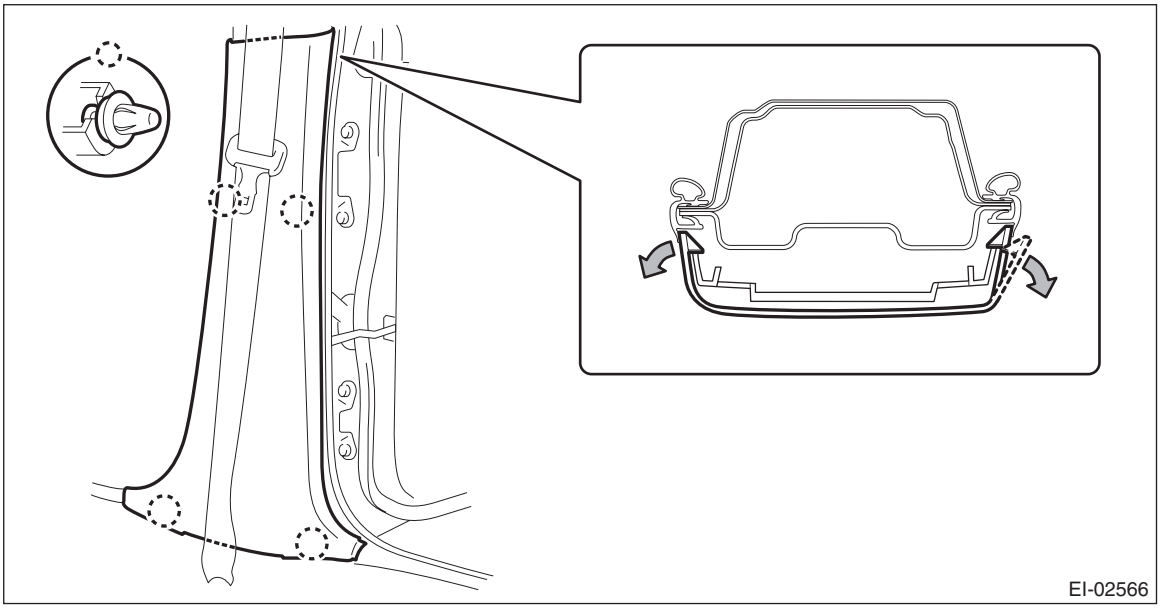
EI-02566

NOTE:
First release the claw located to the rear of the vehicle.
6) Release the claws, and then remove the side sill cover-front OUT.

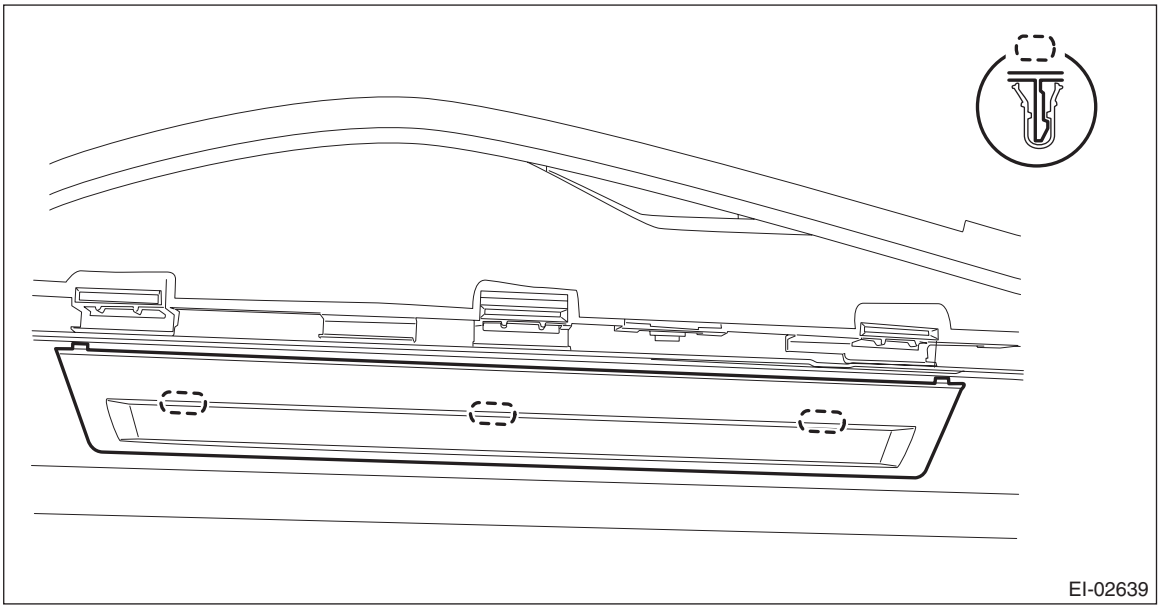
EI-02639

7) Release the claws and metal clips, and then remove the side sill cover-rear OUT.

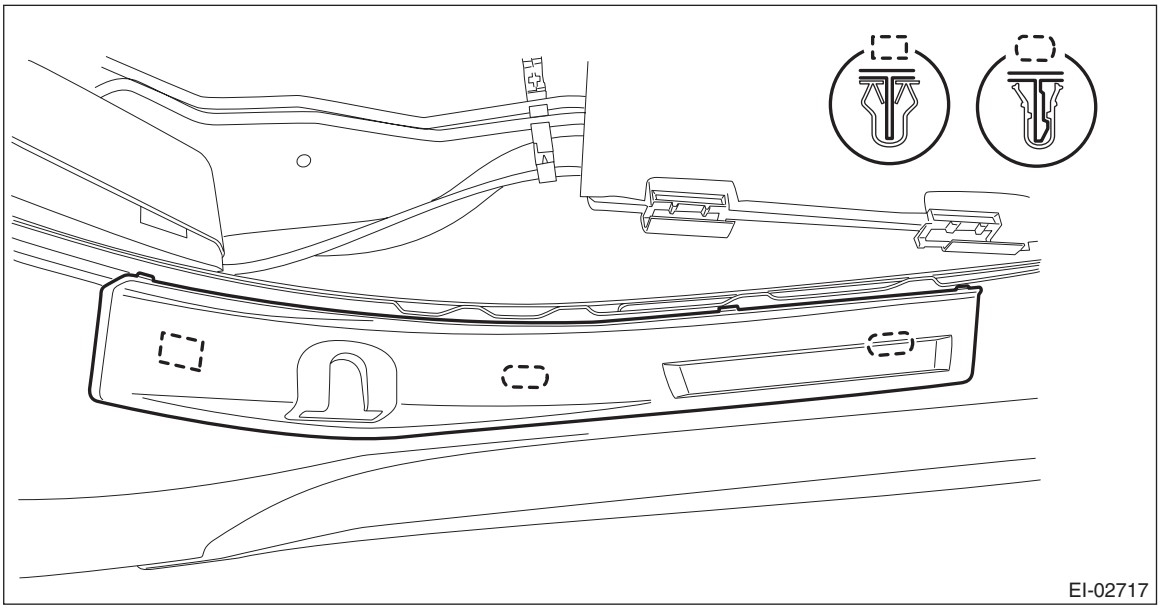

B: INSTALLATION

CAUTION:
If the hook is disconnected from the vehicle body, replace the hook with the new part to prevent the decline of the fixed force of the seat.

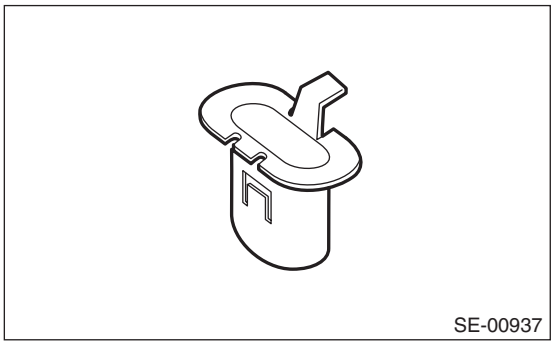
SE-00937

Install each part in the reverse order of removal.

NOTE:
Assemble the center pillar trim LWR to the center pillar trim UPR securely.

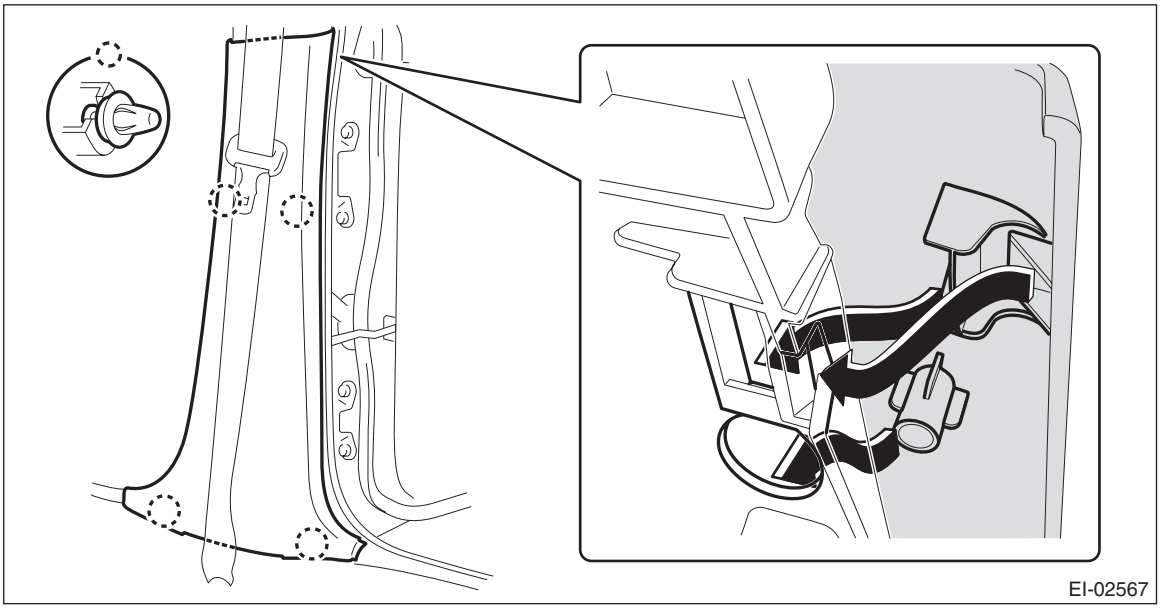
EI-02567

21.Upper Inner Trim

A: REMOVAL

1) Remove the front pillar trim.
   (1) Pull the upper part of the front pillar trim towards the center of the vehicle.
   (2) Insert long-nose pliers into the top part of the trim, grip the clip with the pliers and twist 90° in that position.

CAUTION:
Be careful not to damage the pillar trim surface and curtain airbag module when inserting the pliers.
   (3) Holding the clip twisted as in the previous step, remove the front pillar trim from the clip.
   (4) Remove the clip and the front pillar trim.

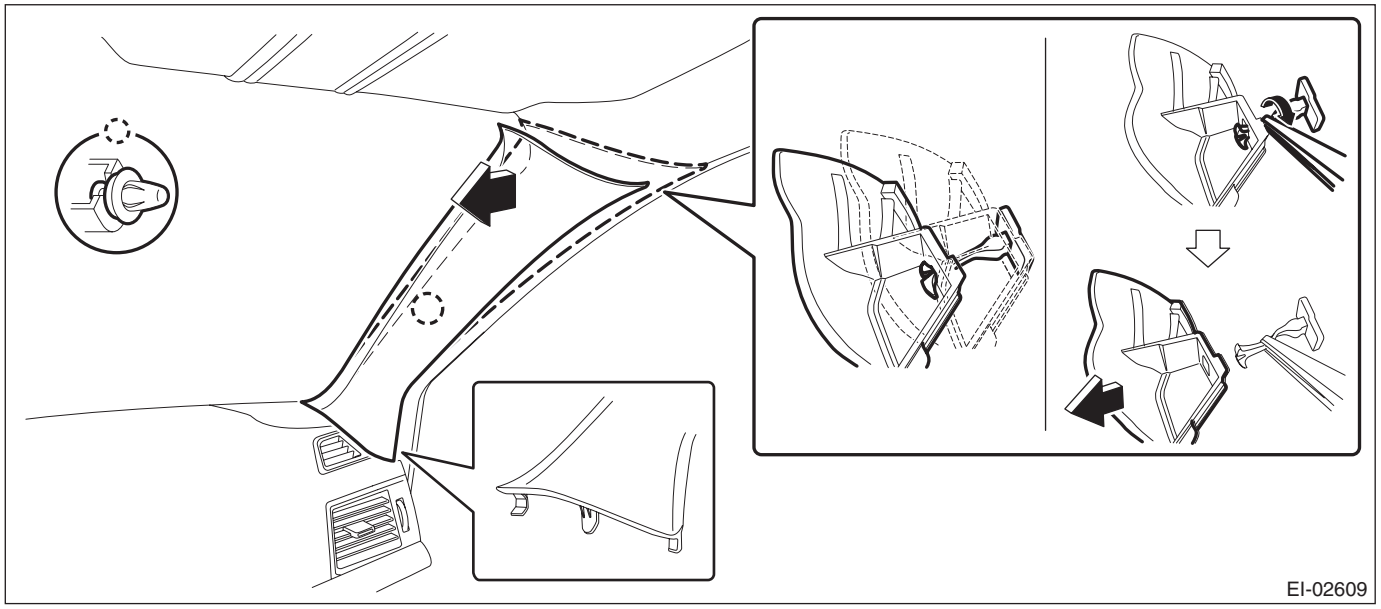

2) Release the claws, and then remove the side sill cover-front INN.

CAUTION:
Do not pull with excessive force. Doing so may damage the claws of the side sill cover INN.

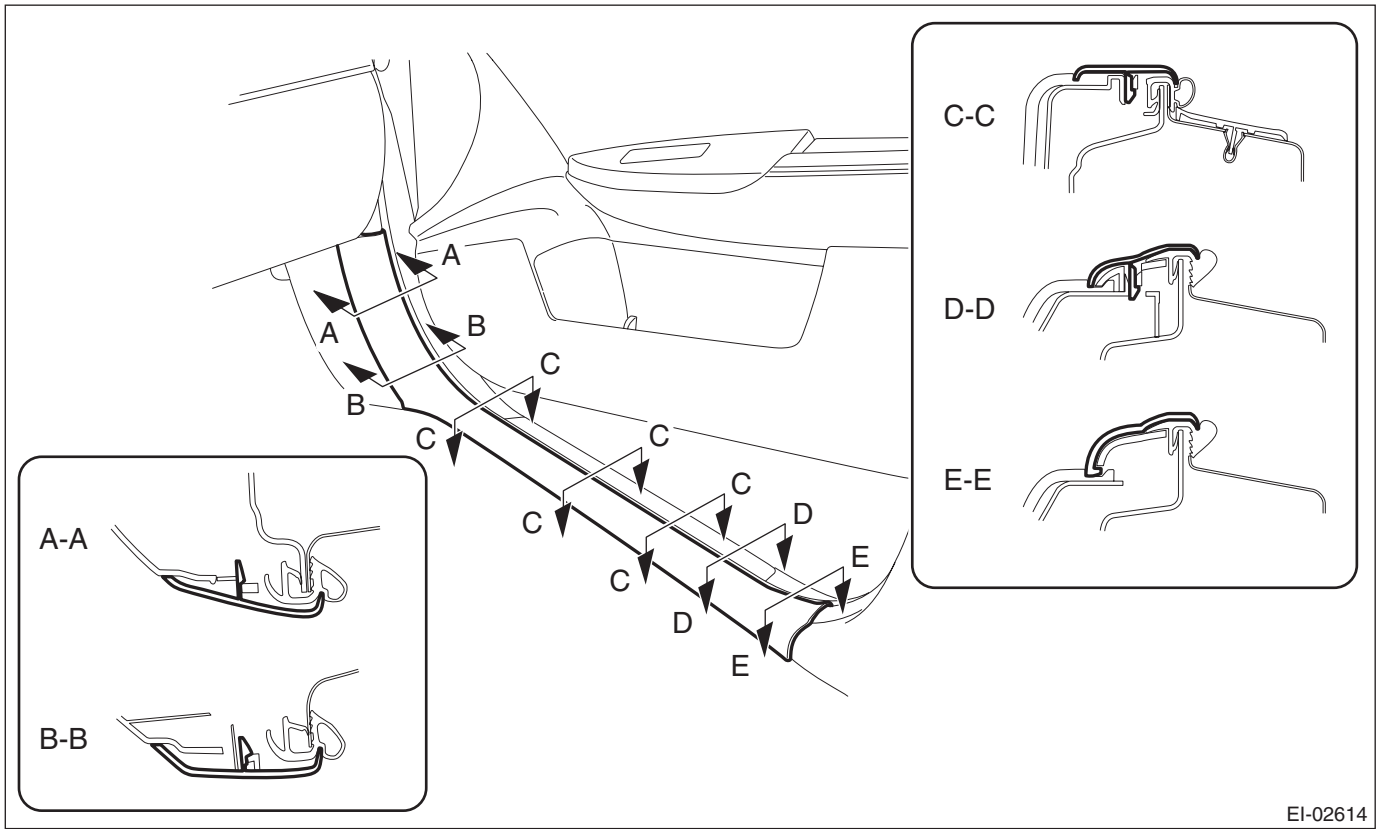

NOTE:
To release the claws of the side sill cover INN, the following steps are recommended.
1. Take out the weather strip from under the side sill cover INN.
2. Turn over the floor mat and release the claw (C-C) by accessing from behind the side sill cover INN.

3) Remove the rear seat cushion assembly.
(1) Pull up the seat cushion and release the hook.

CAUTION:
If the hook is disconnected from the vehicle body, replace the hook with the new part to prevent the decline of the fixed force of the seat.

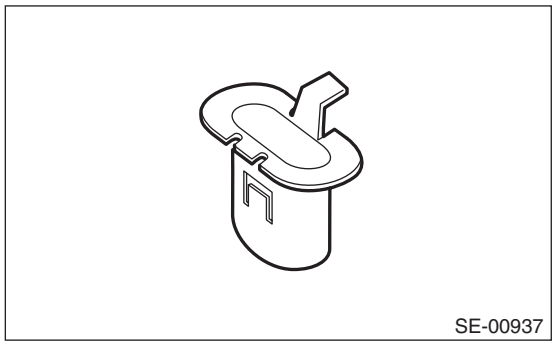
SE-00937

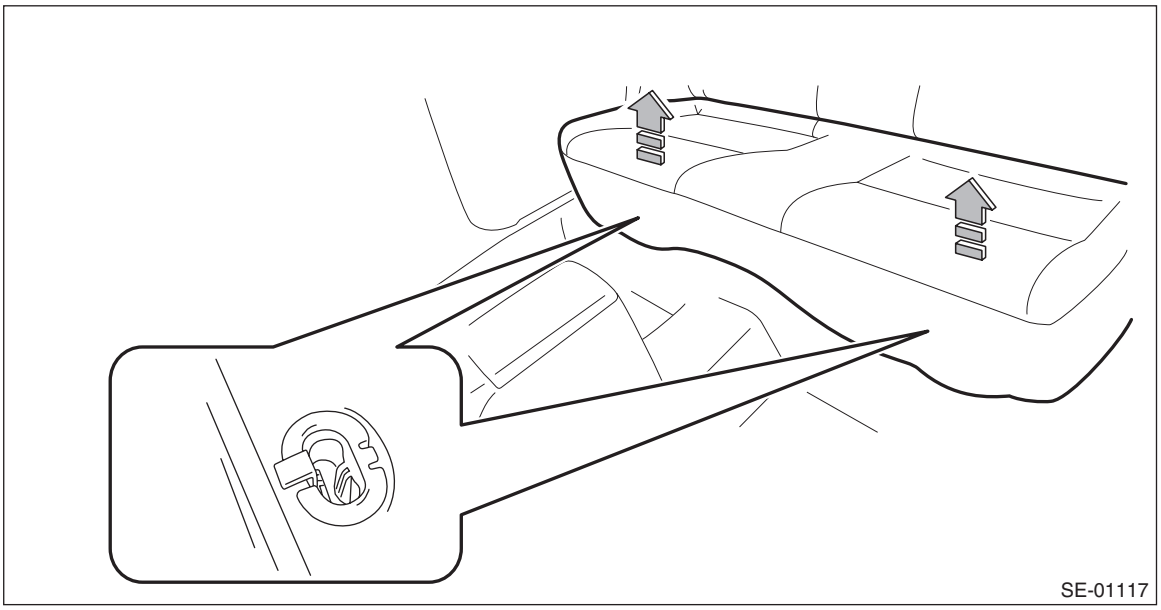
SE-01117

(2) Remove the hook (A) by pushing it back while lifting the front side of the seat cushion, and remove the seat cushion.

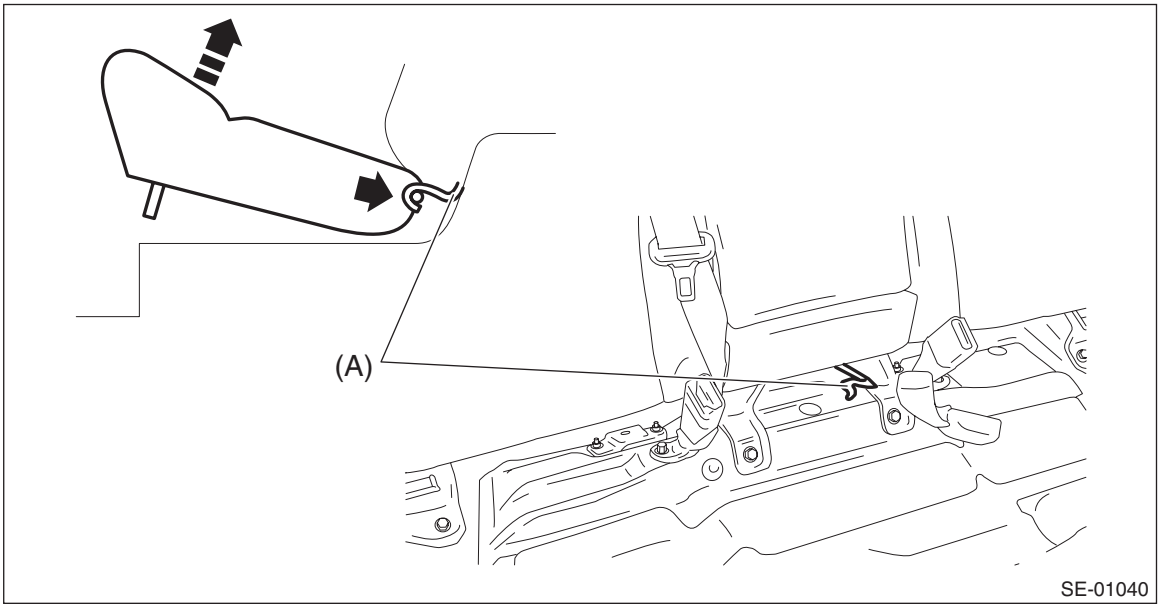

SE-01040

4) Release the clips and claws, and then remove the side sill cover - rear INN.

CAUTION:
Do not pull with excessive force. Doing so may damage the claws of the side sill cover INN.

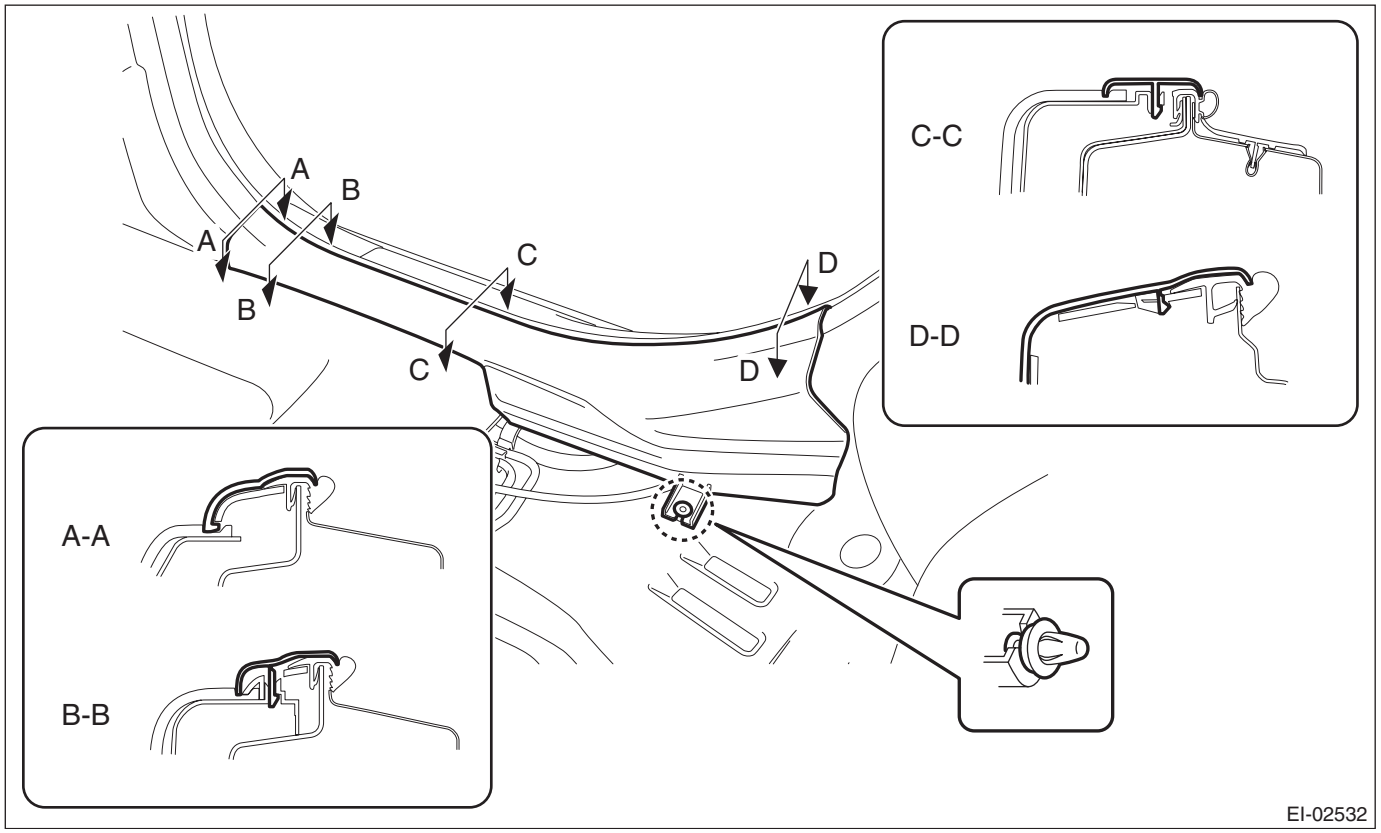

NOTE:
To release the claws of the side sill cover INN, the following steps are recommended.
1. Take out the weather strip from under the side sill cover INN.
2. Turn over the floor mat and release the claw (C-C and D-D) by accessing from behind the side sill cover INN.

5) Remove the center pillar trim LWR.
(1) Release the clip by pulling the center pillar trim LWR toward you.
(2) Expand the claws of center pillar trim LWR outward and remove it from the center pillar trim UPR.

CAUTION:
Do not expand the center pillar trim LWR excessively. Doing so may damage the trim.

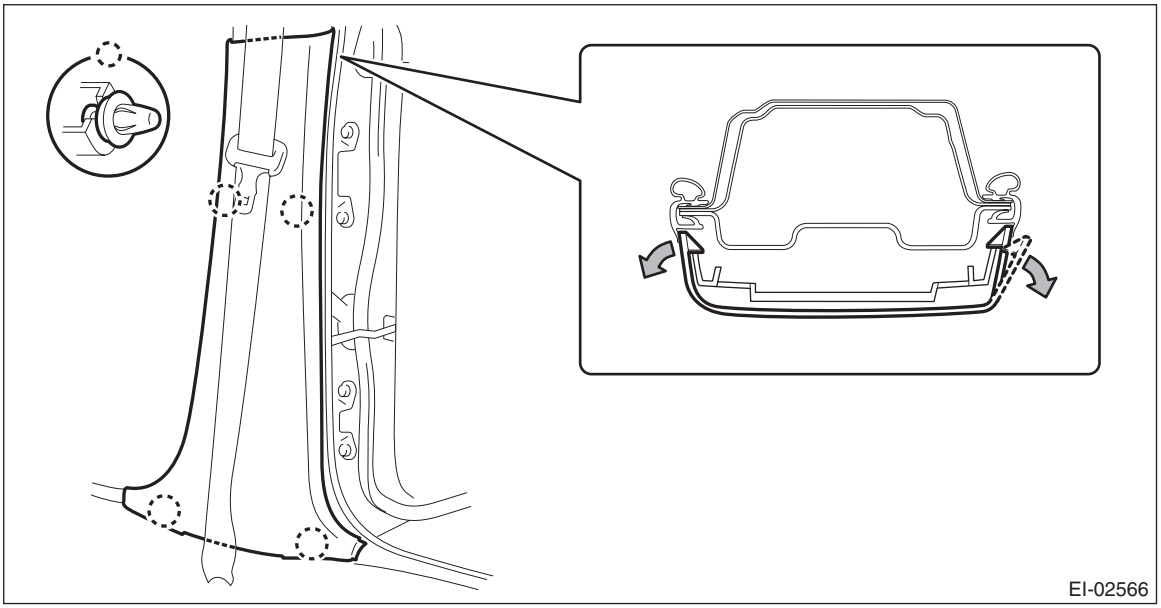
EI-02566

NOTE:
First release the claw located to the rear of the vehicle.
6) Remove the center pillar trim UPR.
(1) Remove the seat belt lower anchor bolt.

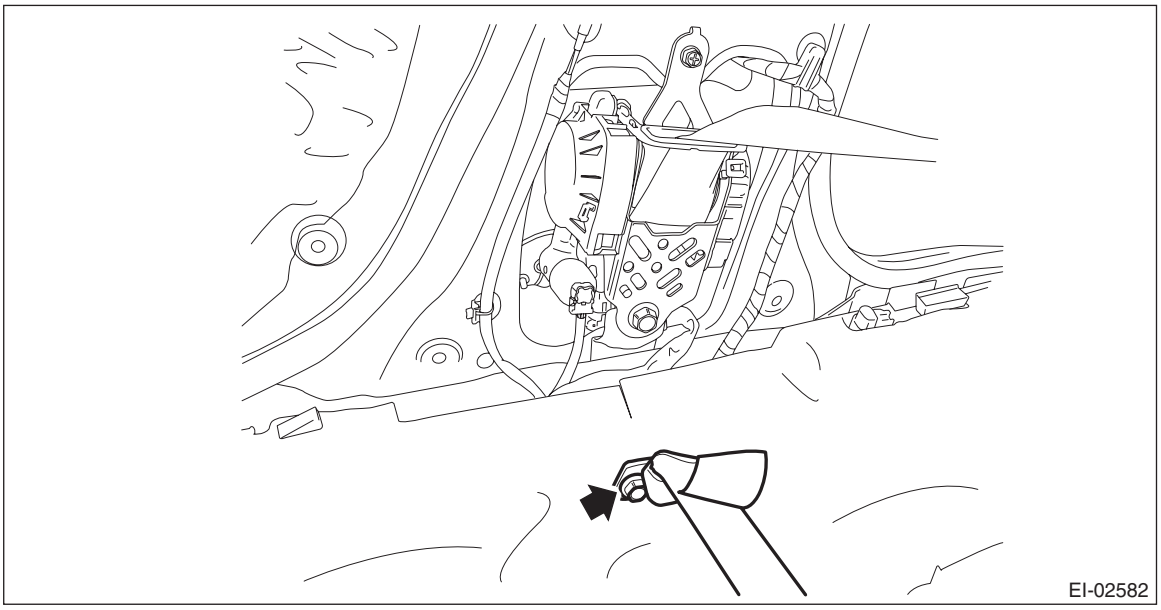
EI-02582

(2) Release the clip by pulling the center pillar trim UPR toward you.

(3) Remove the center pillar trim UPR by lowering the entire trim.

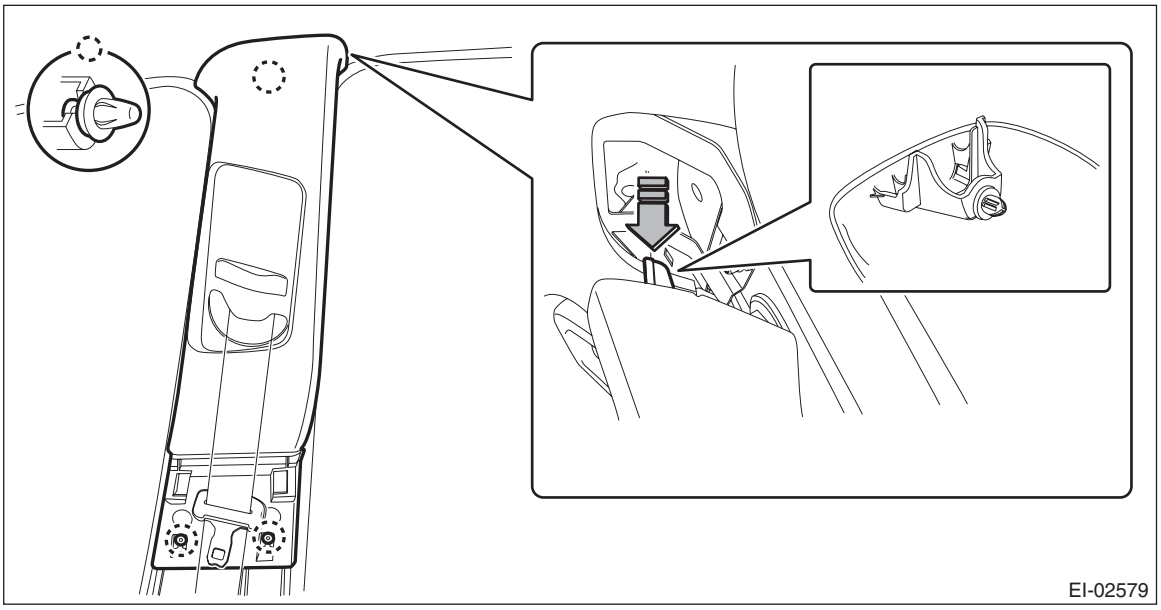

(4) Pull out the seat belt and remove the center pillar trim UPR.

B: INSTALLATION

CAUTION:
• Do not reuse the clips in the upper section of the front pillar trim. Always replace them with new ones.
Once removed from the pillar trim, the clip retention power deteriorates and the front pillar trim may come off.
• Do not reuse the clips in the upper section of the center pillar trim. Always replace them with new ones.
Once the pillar trim is removed, the clip retention power deteriorates and the center pillar trim may come off.
• Before installing the front pillar trim, check the condition of (white) protective unwoven cloth of curtain airbag. If it is damaged (airbag module cloth is exposed), replace the curtain airbag module assembly with a new part.

1) Remove any clips remaining on body.
2) Prepare new clips and attach them to the front pillar trim.

3) Install the front pillar trim.

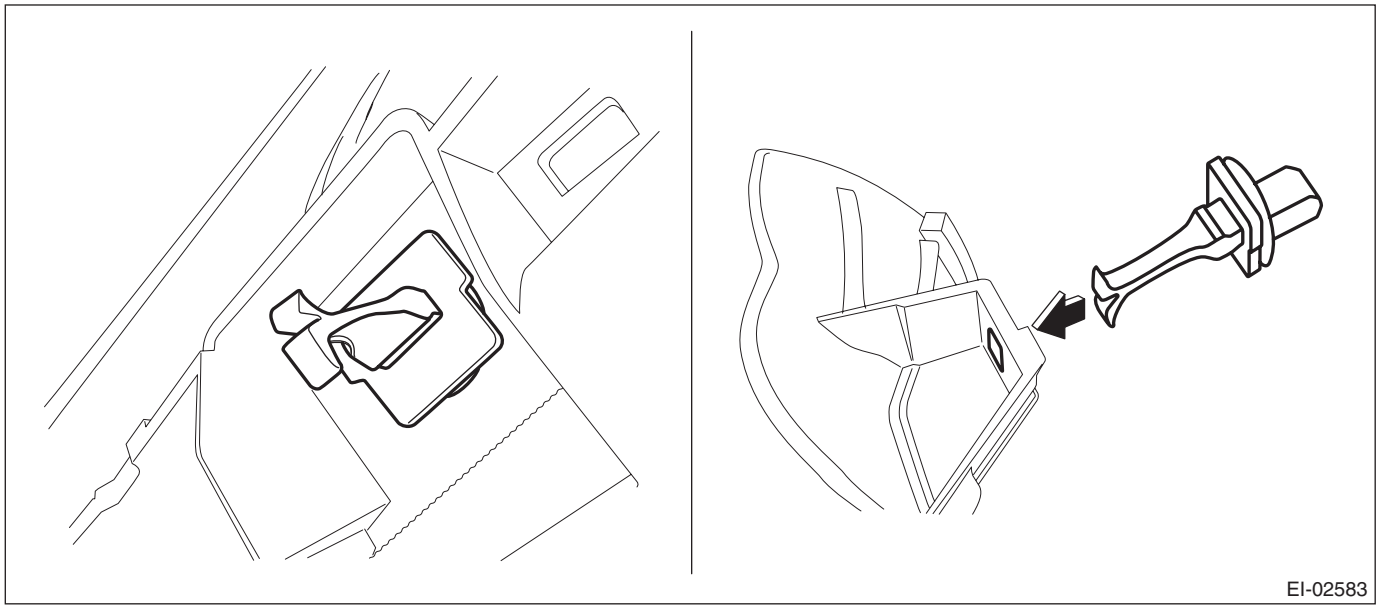

4) Assemble the center pillar trim LWR to the center pillar trim UPR securely.

CAUTION:
Do not forget to install the seat belt.

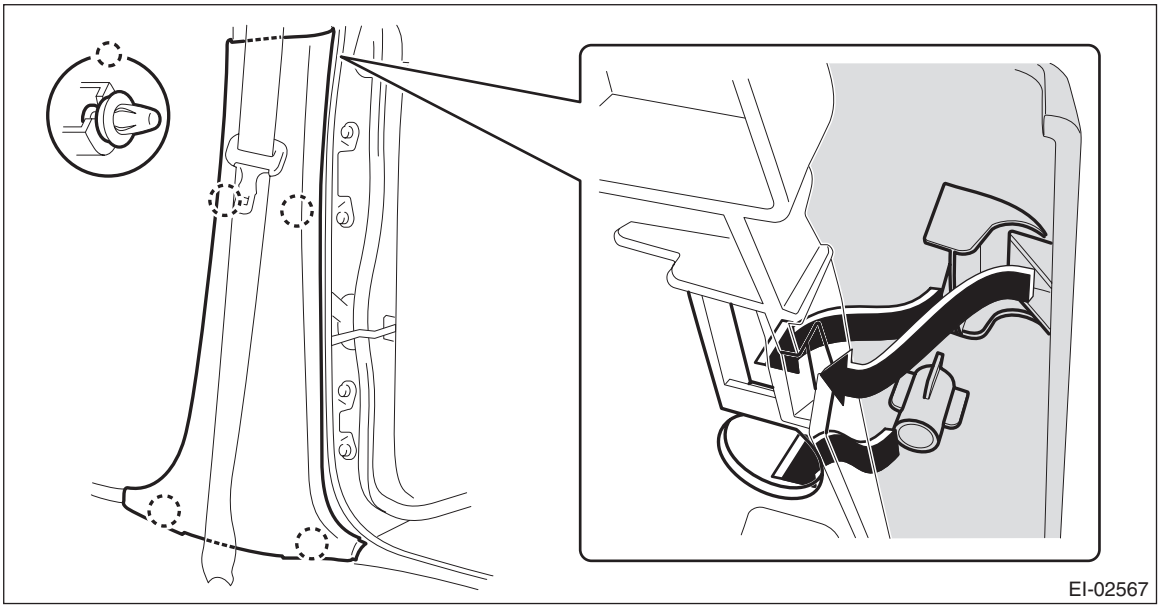

5) Assemble the center pillar trim LWR and center pillar trim UPR to the body.

CAUTION:
Do not reuse the clips in the upper section of the pillar trim. Always replace them with new ones.

(1) Guide the seat belt through the center pillar trim UPR.
(2) Insert the upper claws of the pillar trim.
(3) Attach the pillar trim by fitting the lower clips to the body.

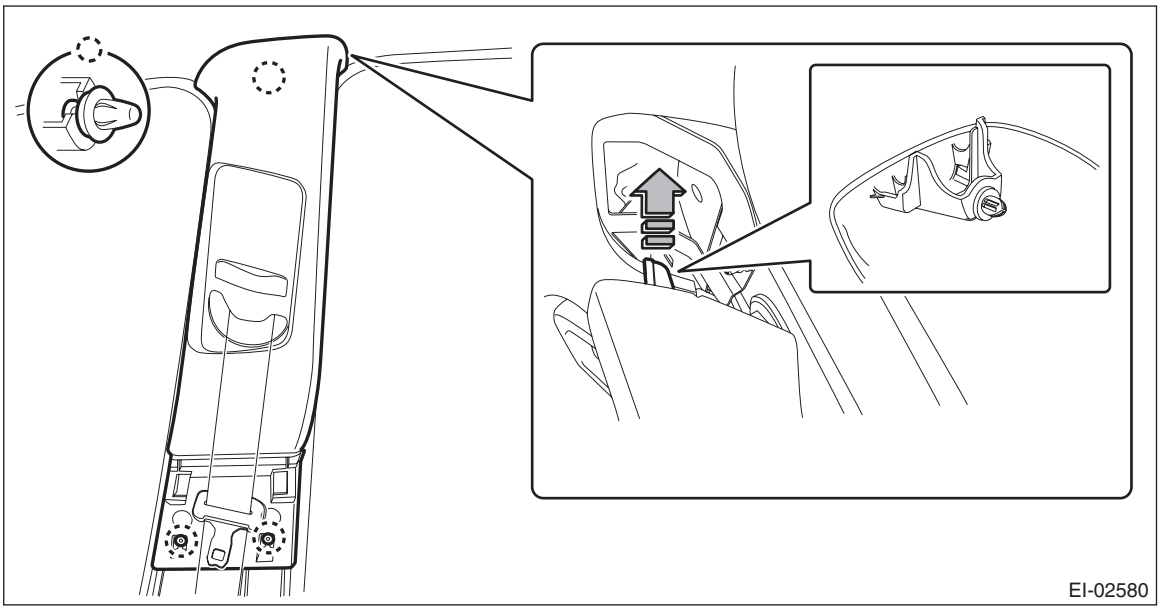

6) Install each part in the reverse order of removal.

CAUTION:
If the hook is removed from vehicle body, replace the hook with the new part to avoid the deterioration of seat securing.

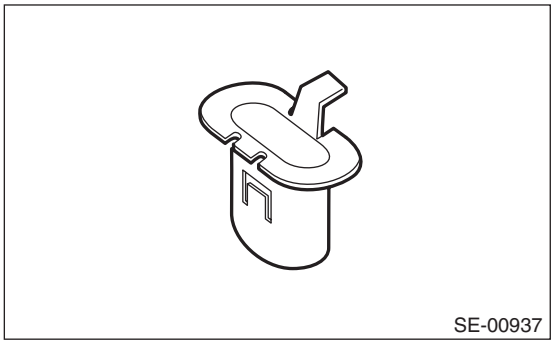

Tightening torque
Front seat belt: <Ref. to SB-2, FRONT SEAT BELT, COMPONENT, General Description.>

22.Rear Quarter Trim

A: REMOVAL

1. SEDAN MODEL

1) Disconnect the ground cable from battery and wait for at least 60 seconds before starting work.

CAUTION:
The airbag system is fitted with a backup power supply. After disconnecting the battery ground cable, the airbag may operate if you do not wait for 60 seconds before starting the service of airbag system.

2) Remove the rear seat cushion assembly.
   (1) Pull up the seat cushion and release the hook.

CAUTION:
If the hook is disconnected from the vehicle body, replace the hook with the new part to prevent the decline of the fixed force of the seat.

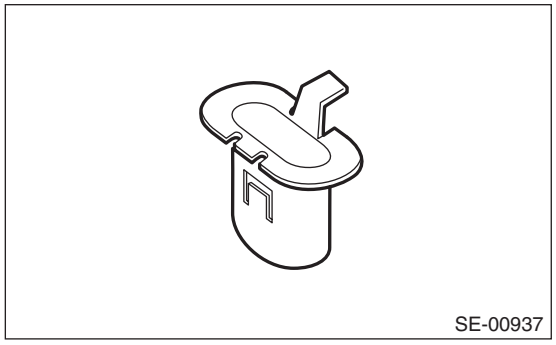
SE-00937

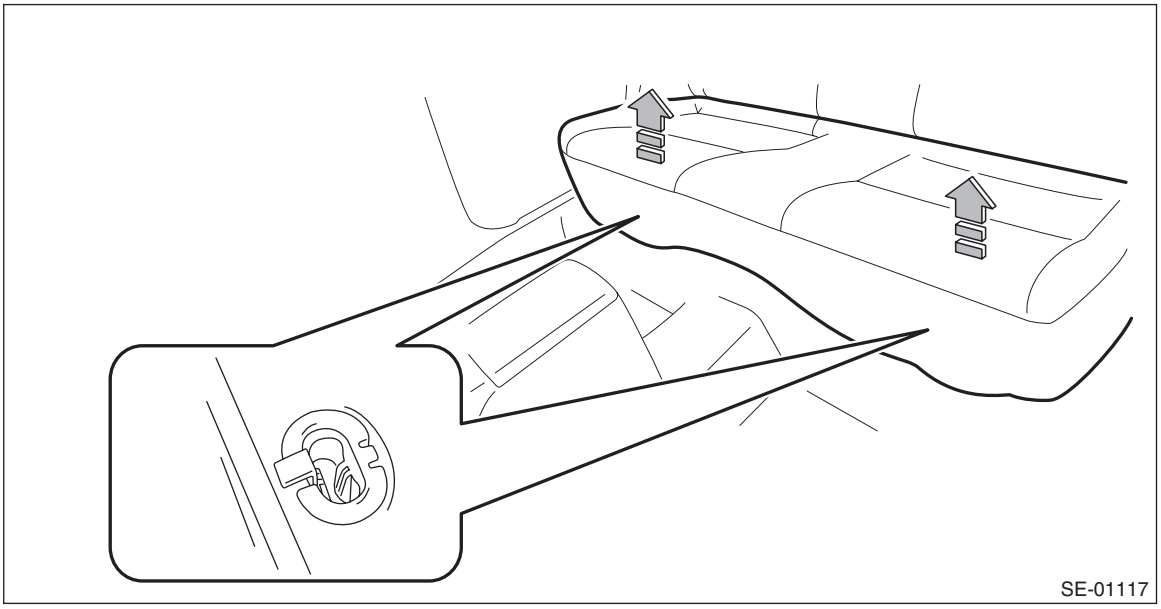
SE-01117

(2) Remove the hook (A) by pushing it back while lifting the front side of the seat cushion, and remove the seat cushion.

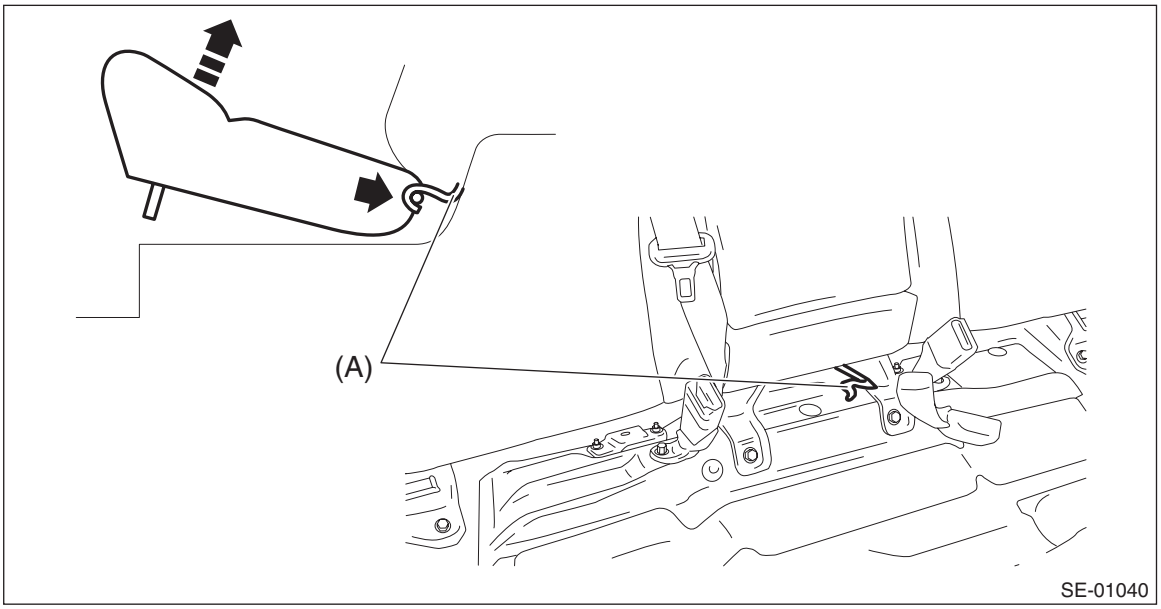

3) Release the clips and claws, and then remove the side sill cover - rear INN.

CAUTION:
Do not pull with excessive force. Doing so may damage the claws of the side sill cover INN.

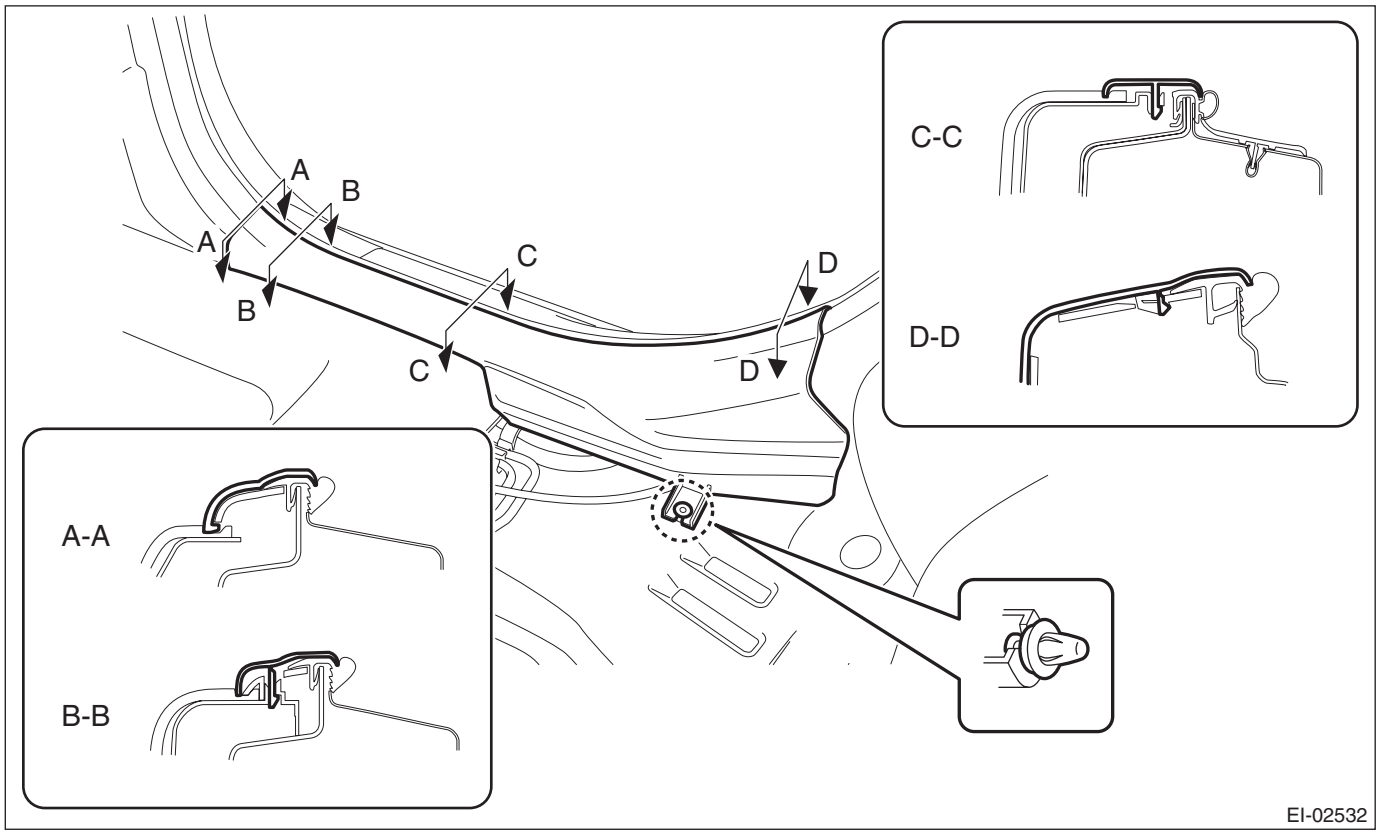

NOTE:
To release the claws of the side sill cover INN, the following steps are recommended.
1. Take out the weather strip from under the side sill cover INN.
2. Turn over the floor mat and release the claw (C-C and D-D) by accessing from behind the side sill cover INN.

4) Remove the rear quarter trim LWR.
(1) Remove the backrest side pad.
a) Remove the screws.

Preparation tool: Stubby screwdriver

b) Turn over the bottom end of the backrest side pad in the forward direction so that the claws are released.
c) Remove the backrest side pad by pulling it up.

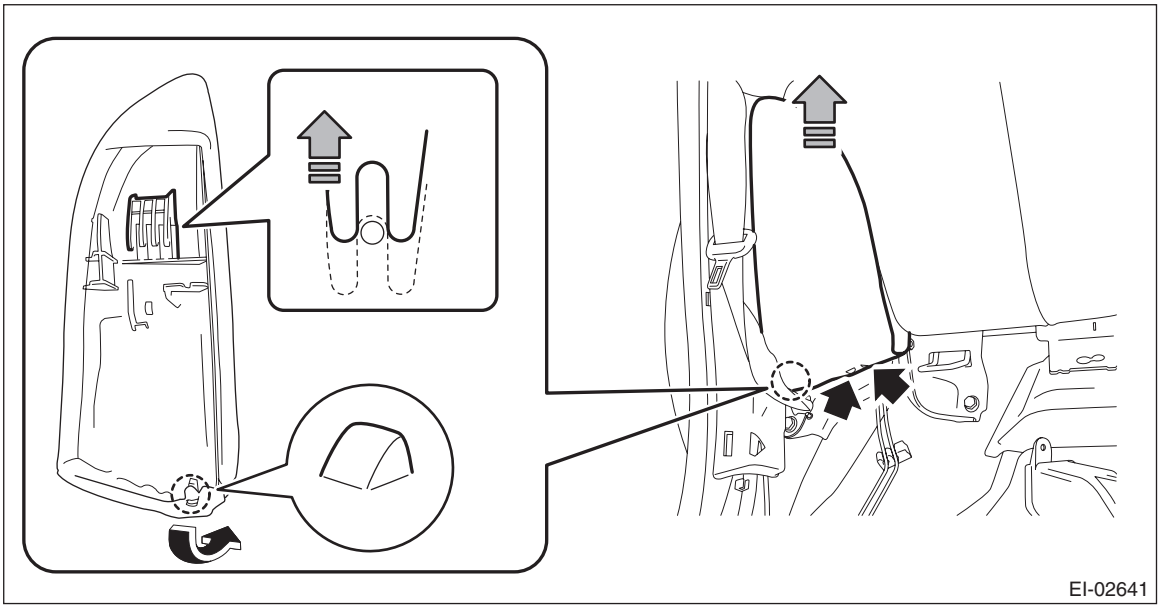

(2) Pull the release lever in the trunk room, and then tilt the backrest forward.

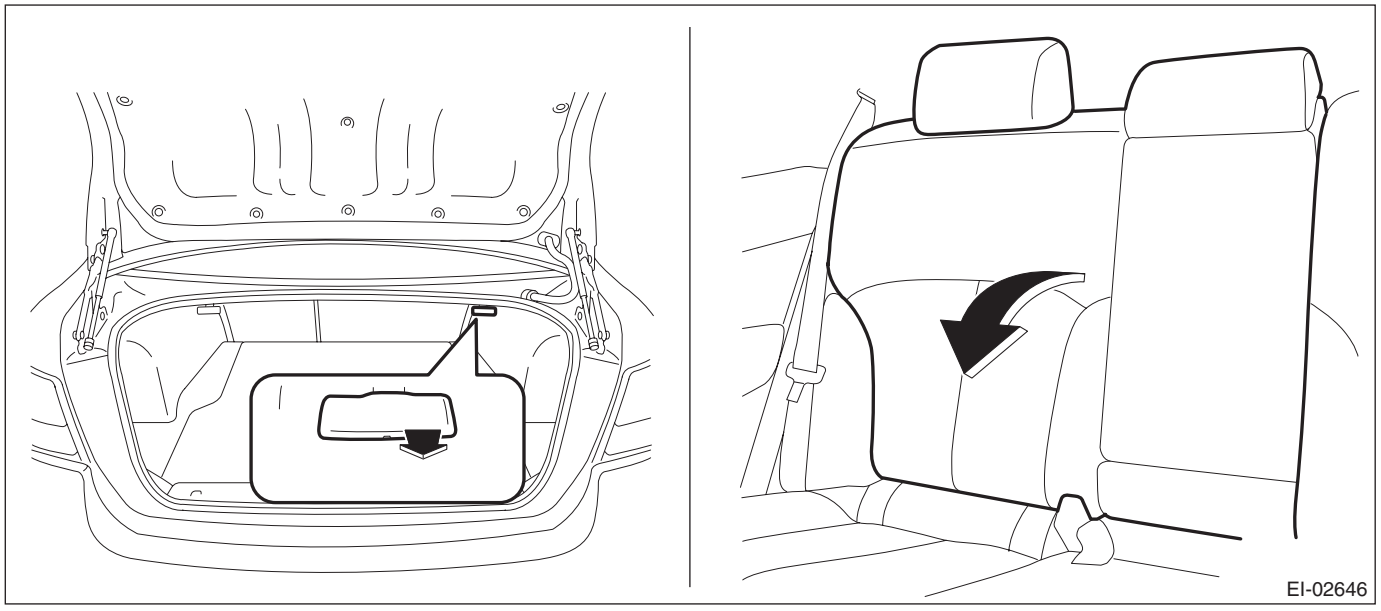

(3) Release the clips of the trunk trim panel assembly-side.

(4) Remove the clips, and remove the rear quarter trim LWR.

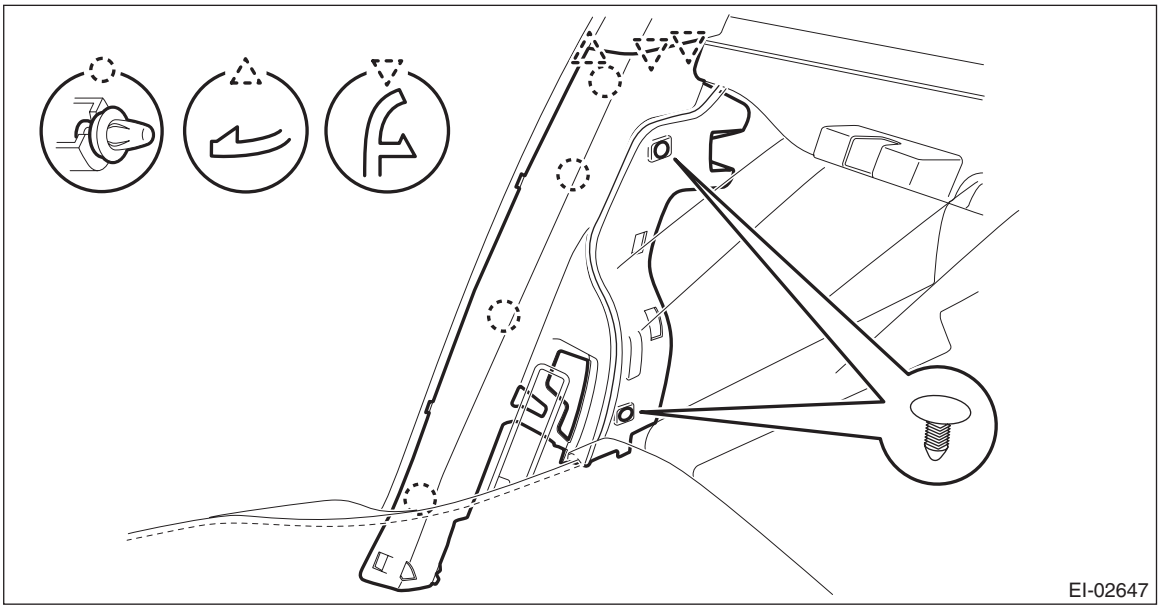

5) Remove the rear quarter trim UPR.

(1) Remove the lower anchor bolt of the outer belt assembly.

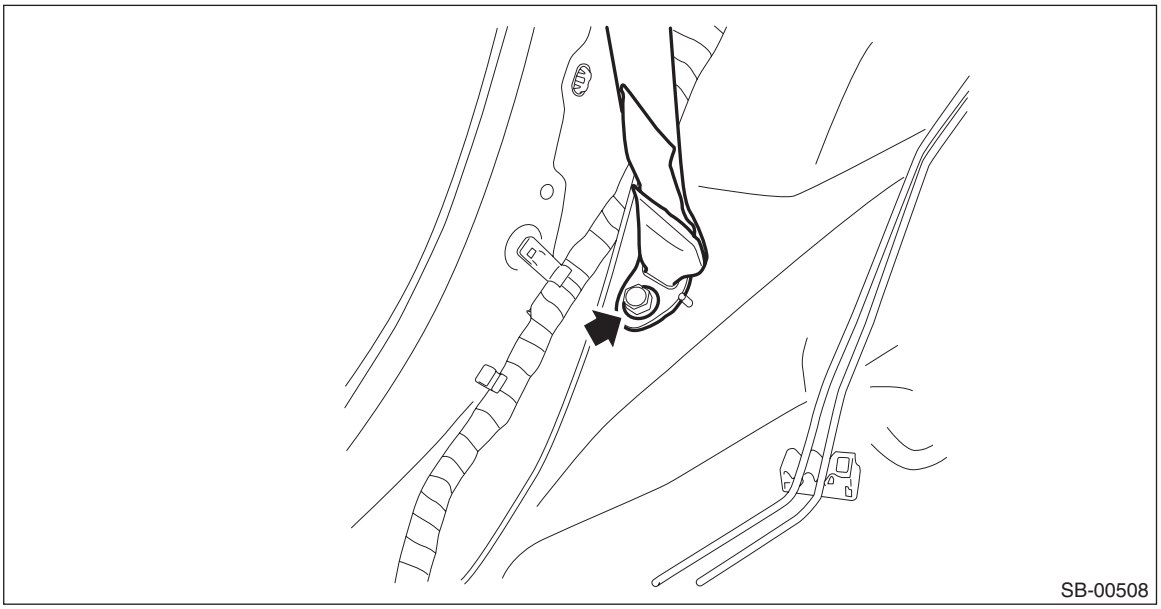

(2) Release the clips, and remove the rear quarter trim UPR.

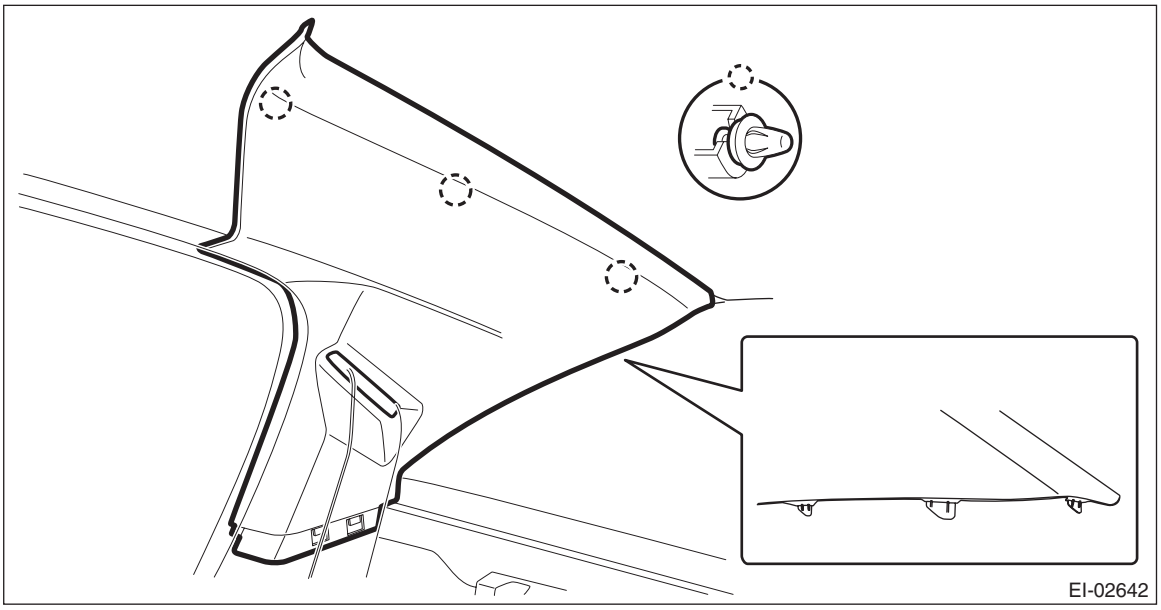

(3) Pull out the seat belt and remove the rear quarter trim UPR.

2. OUTBACK MODEL

1) Disconnect the ground cable from battery and wait for at least 60 seconds before starting work.

CAUTION:
The airbag system is fitted with a backup power supply. After disconnecting the battery ground cable, the airbag may operate if you do not wait for 60 seconds before starting the service of airbag system.

2) Remove the rear seat cushion assembly.
(1) Pull up the seat cushion and release the hook.

CAUTION:
If the hook is disconnected from the vehicle body, replace the hook with the new part to prevent the decline of the fixed force of the seat.

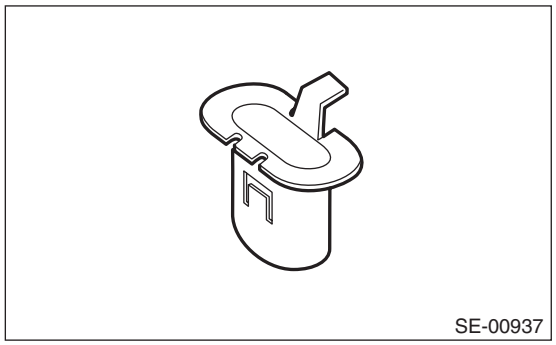
SE-00937

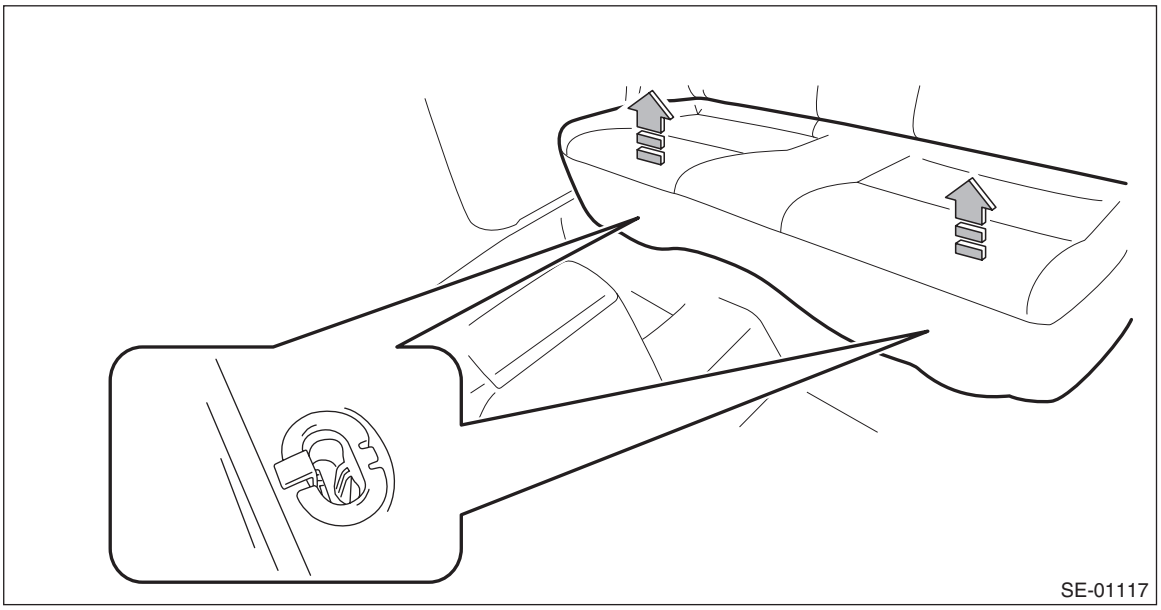
SE-01117

(2) Remove the hook (A) by pushing it back while lifting the front side of the seat cushion, and remove the seat cushion.

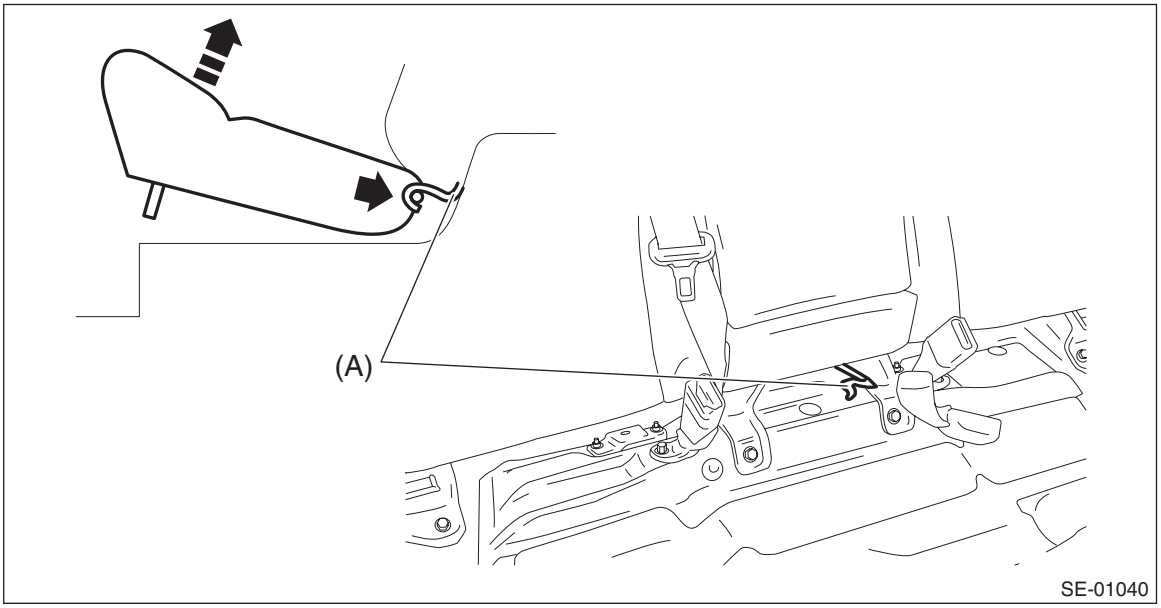

SE-01040

3) Release the clips and claws, and then remove the side sill cover - rear INN.

CAUTION:
Do not pull with excessive force. Doing so may damage the claws of the side sill cover INN.

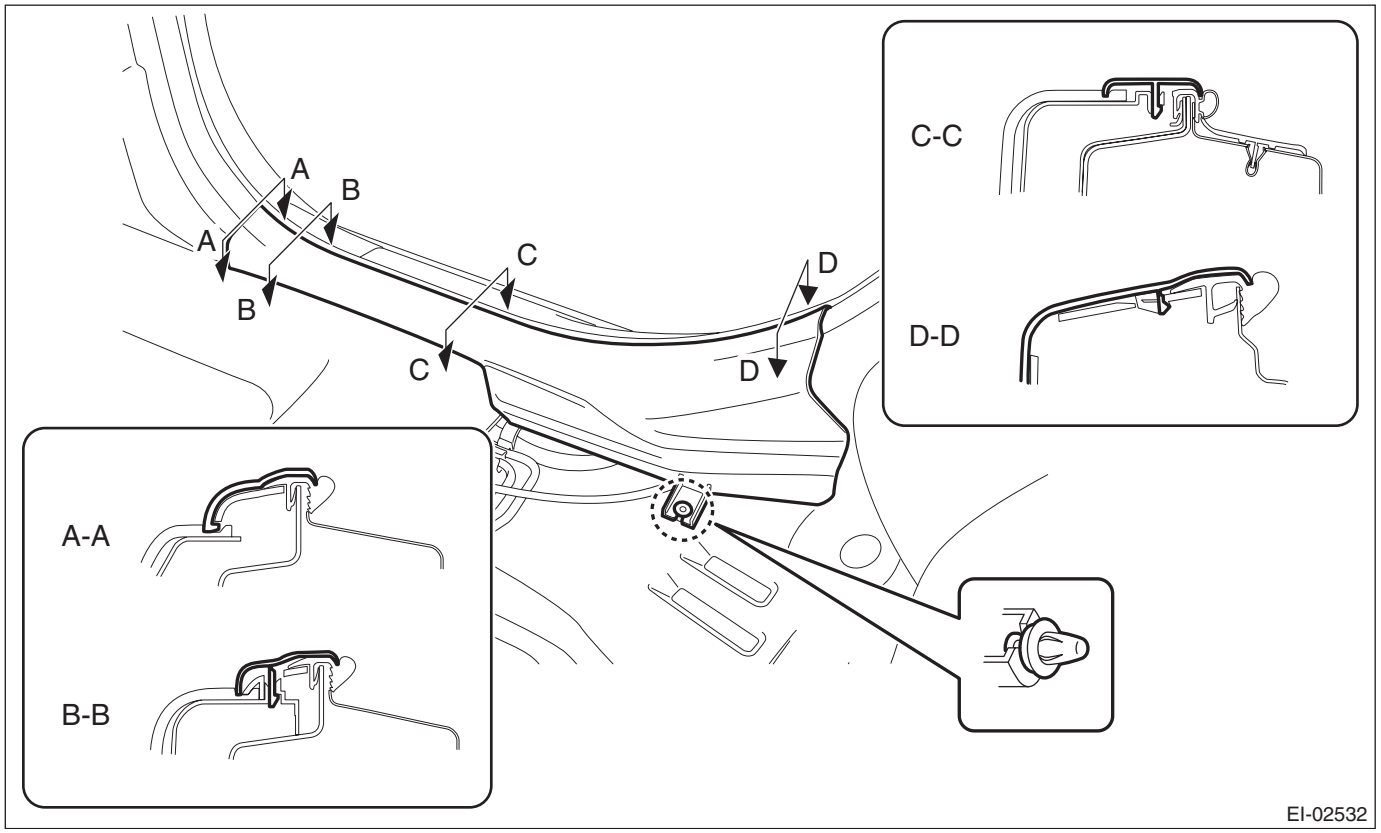

NOTE:
To release the claws of the side sill cover INN, the following steps are recommended.
1. Take out the weather strip from under the side sill cover INN.
2. Turn over the floor mat and release the claw (C-C and D-D) by accessing from behind the side sill cover INN.

4) Tilt the backrest forward, and then turn over the backrest backside mat.

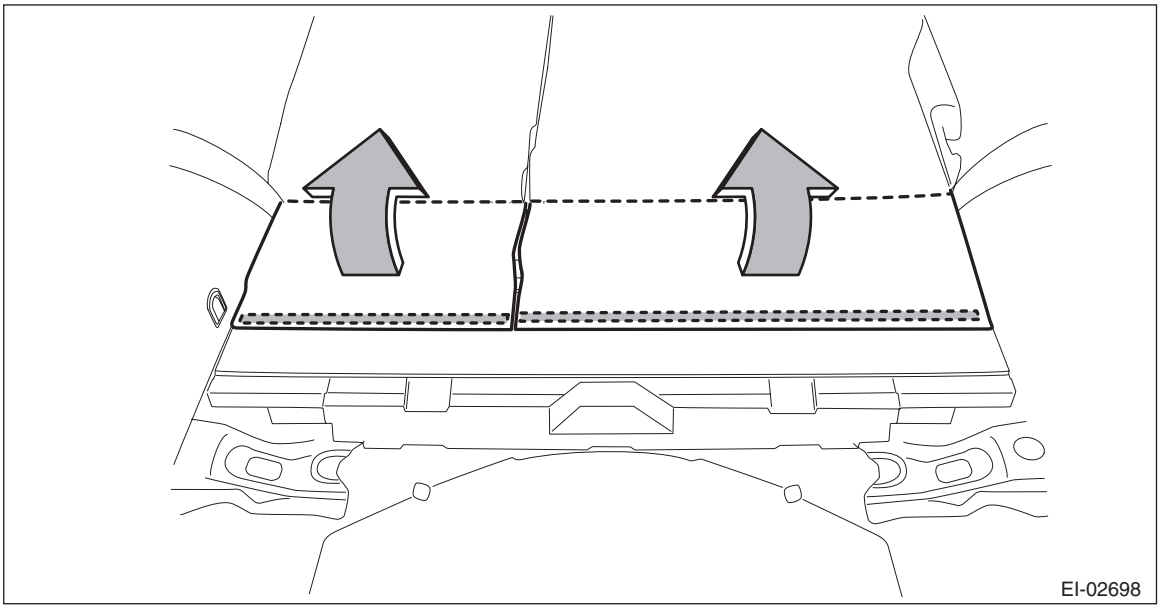

5) Remove the backrest side pad assembly.
(1) Disconnect the backrest cable and reclining lever cable.
(2) Remove the screws and remove the reclining lever assembly by pulling it downward.

Preparation tool: Stubby screwdriver

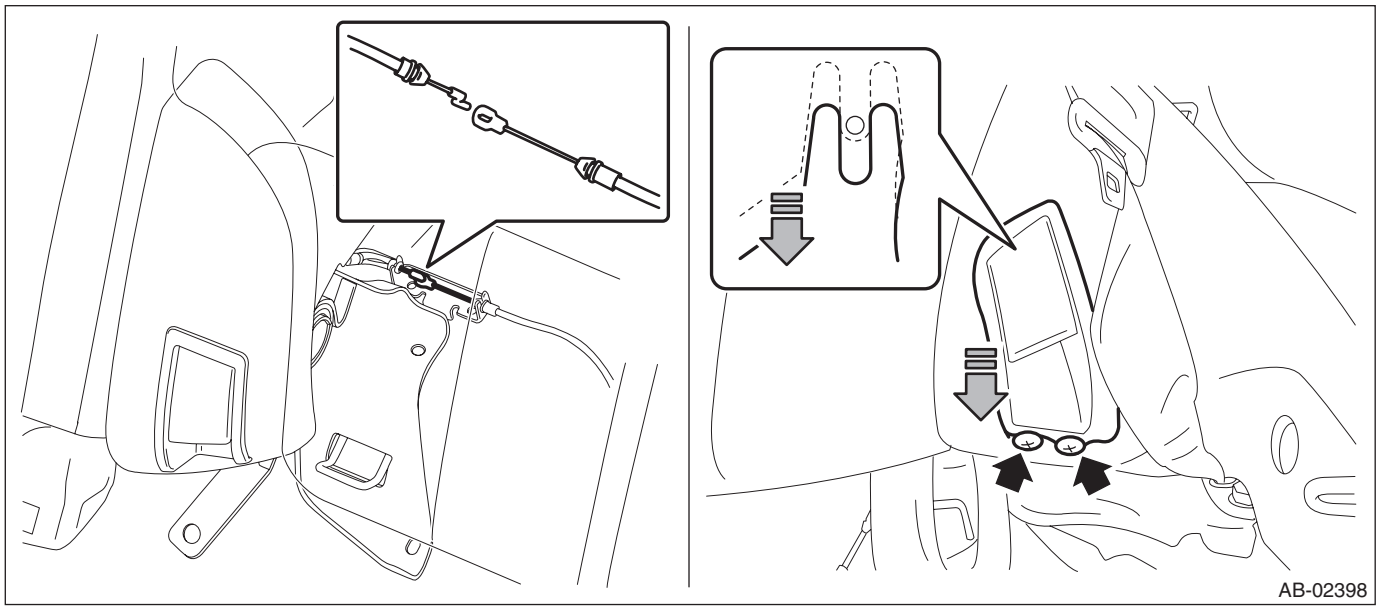

(3) Turn over the bottom end of the backrest side pad in the forward direction so that the claws are released.
(4) Remove the backrest side pad by pulling it up.

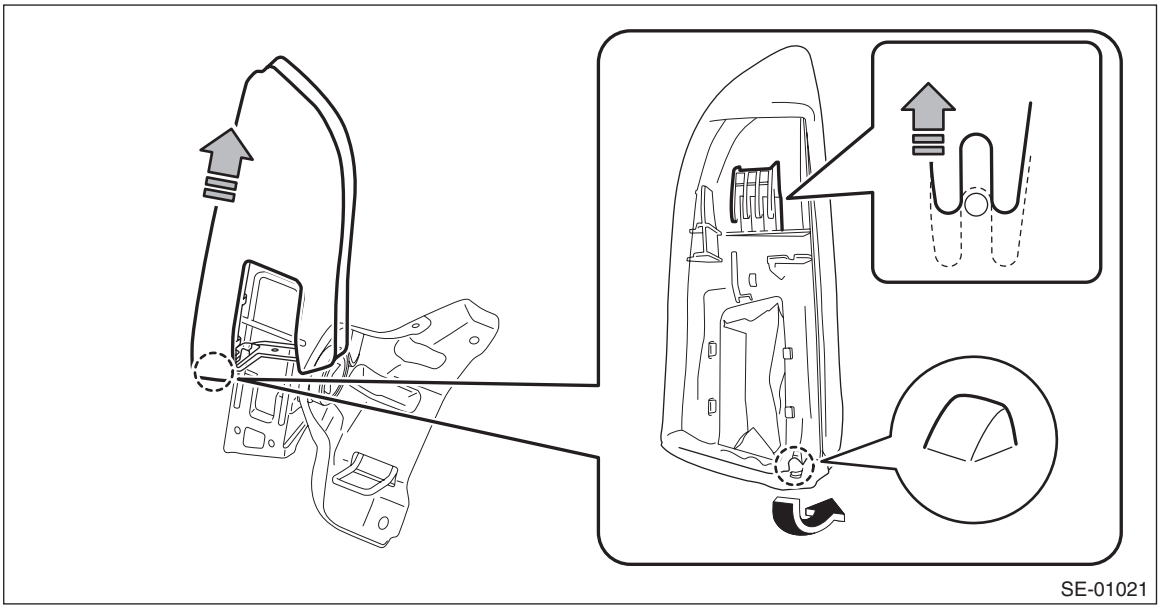

6) Remove the clips, and remove the luggage floor box and rear floor edge cover.

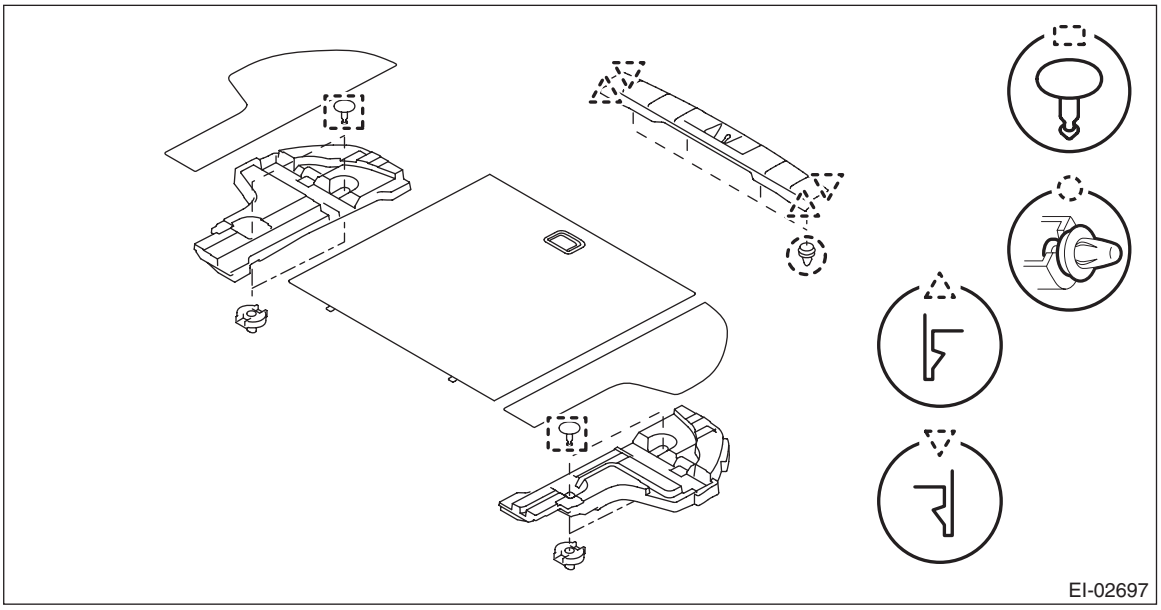

7) Remove the rear quarter trim LWR.
   (1) Remove the caps, screws, and bolts. (A), (C)
   (2) Take out the hook and remove the screw inside. (B)
   (3) Remove the clips, and remove the rear quarter trim LWR.

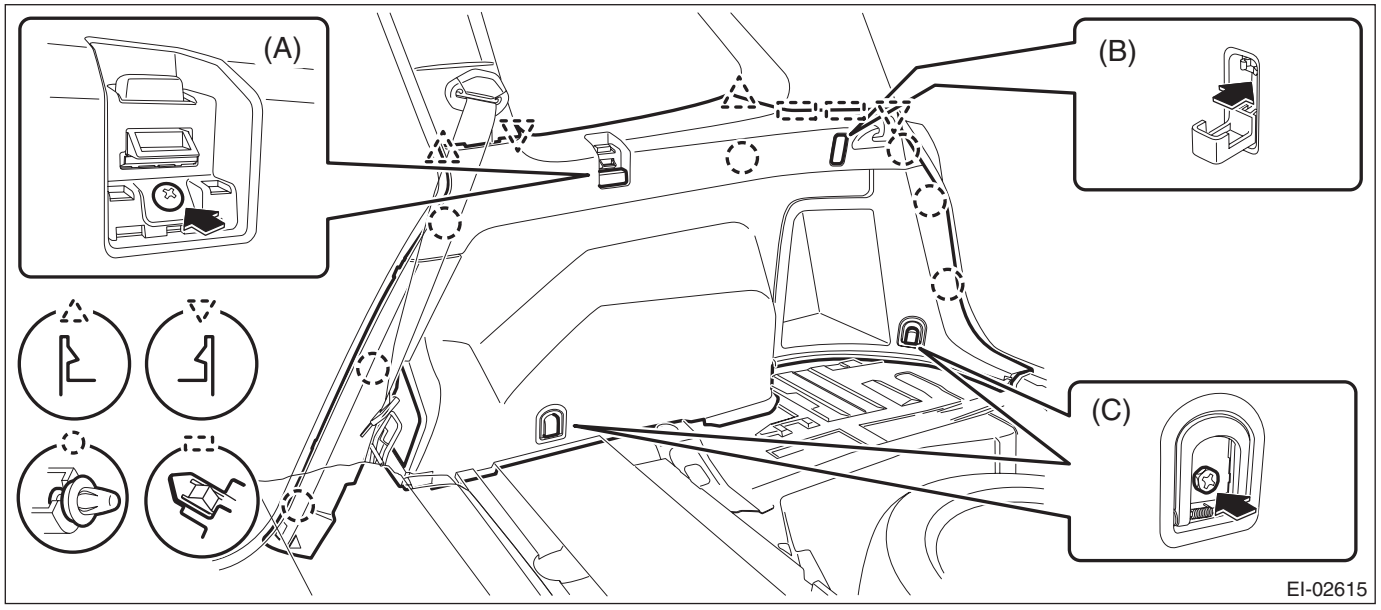

8) Remove the rear quarter trim UPR.
   (1) Open the cap and remove the bolt to remove the seat belt anchor.
   (2) Remove the clips, and remove the rear quarter trim UPR-front.
   (3) Remove the clips, and remove the rear quarter trim UPR-rear.

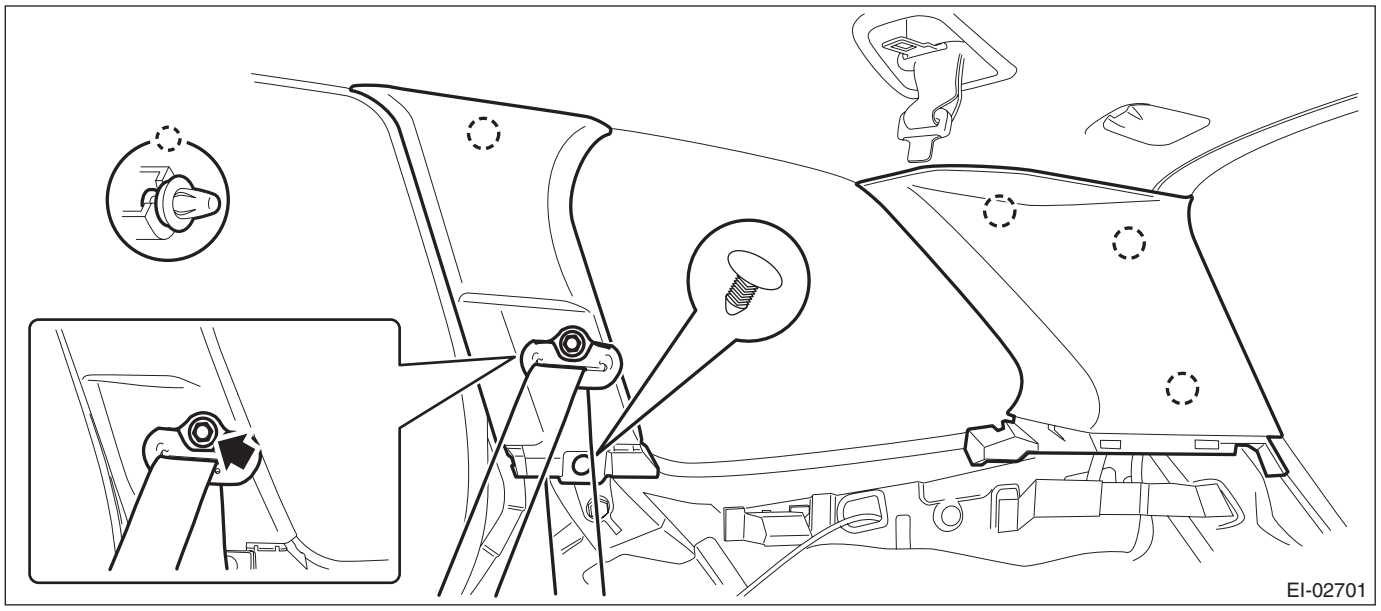

B: INSTALLATION

CAUTION:
If the hook is disconnected from the vehicle body, replace the hook with the new part to prevent the decline of the fixed force of the seat.

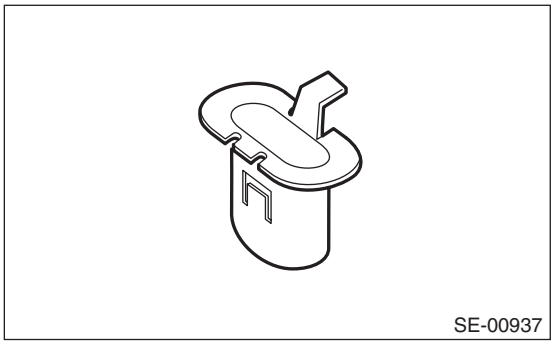

Install each part in the reverse order of removal.

Tightening torque:
Sedan model
Rear seat belt: <Ref. to SB-3, REAR SEAT BELT (SEDAN MODEL), COMPONENT, General Description.>
OUTBACK model
Rear seat belt: <Ref. to SB-4, REAR SEAT BELT (OUTBACK MODEL), COMPONENT, General Description.>

23.Rear Shelf Trim

A: REMOVAL

1) Disconnect the ground cable from battery and wait for at least 60 seconds before starting work.

CAUTION:
The airbag system is fitted with a backup power supply. After disconnecting the battery ground cable, the airbag may operate if you do not wait for 60 seconds before starting the service of airbag system.

2) Remove the rear seat cushion assembly.
   (1) Pull up the seat cushion and release the hook.

CAUTION:
If the hook is disconnected from the vehicle body, replace the hook with the new part to prevent the decline of the fixed force of the seat.

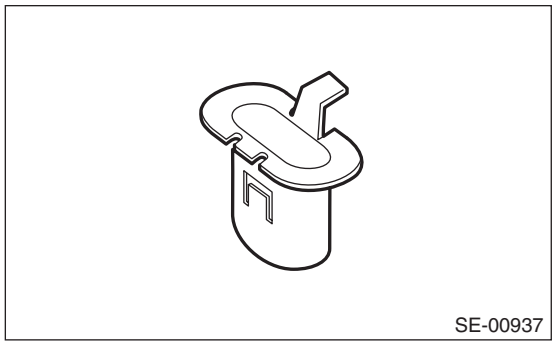
SE-00937

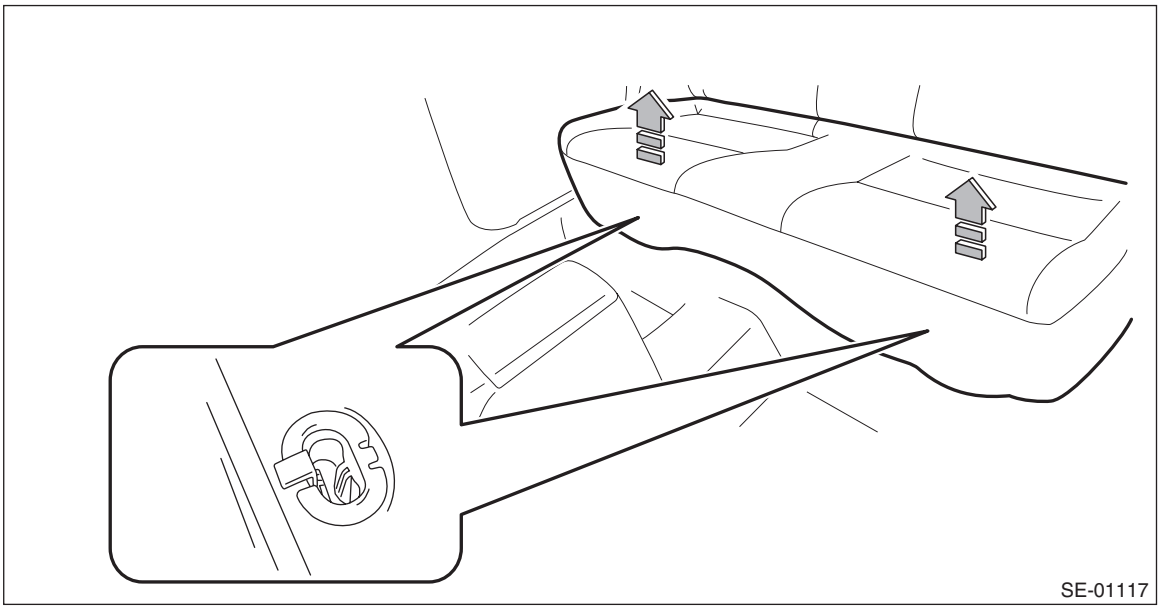
SE-01117

(2) Remove the hook (A) by pushing it back while lifting the front side of the seat cushion, and remove the seat cushion.

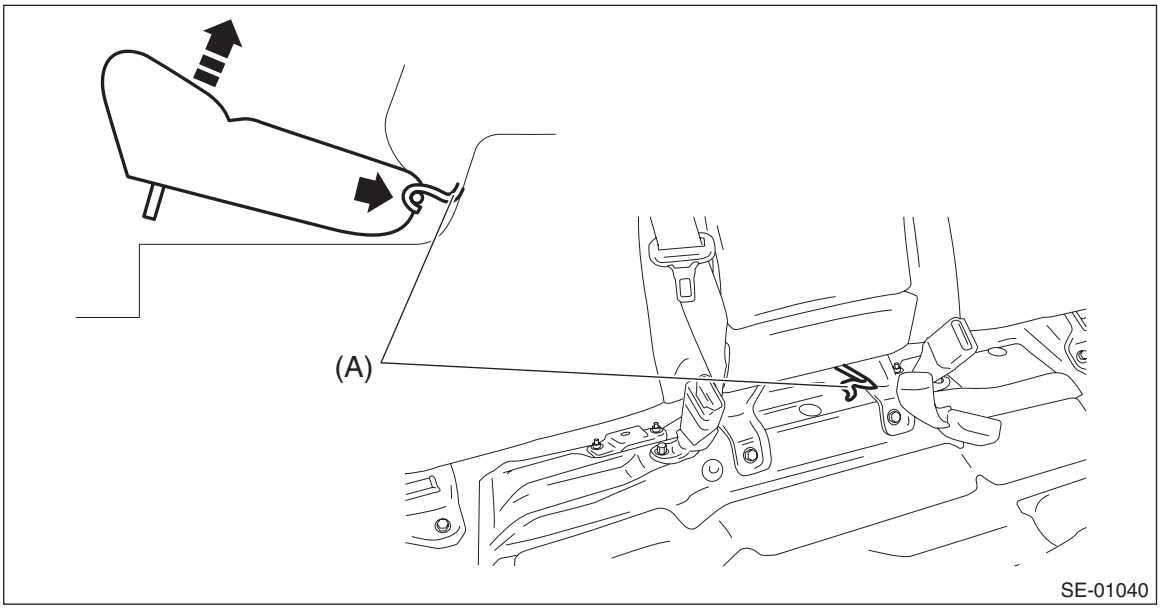

3) Release the clips and claws, and then remove the left and right side sill covers-rear INN.

CAUTION:
Do not pull with excessive force. Doing so may damage the claws of the side sill cover INN.

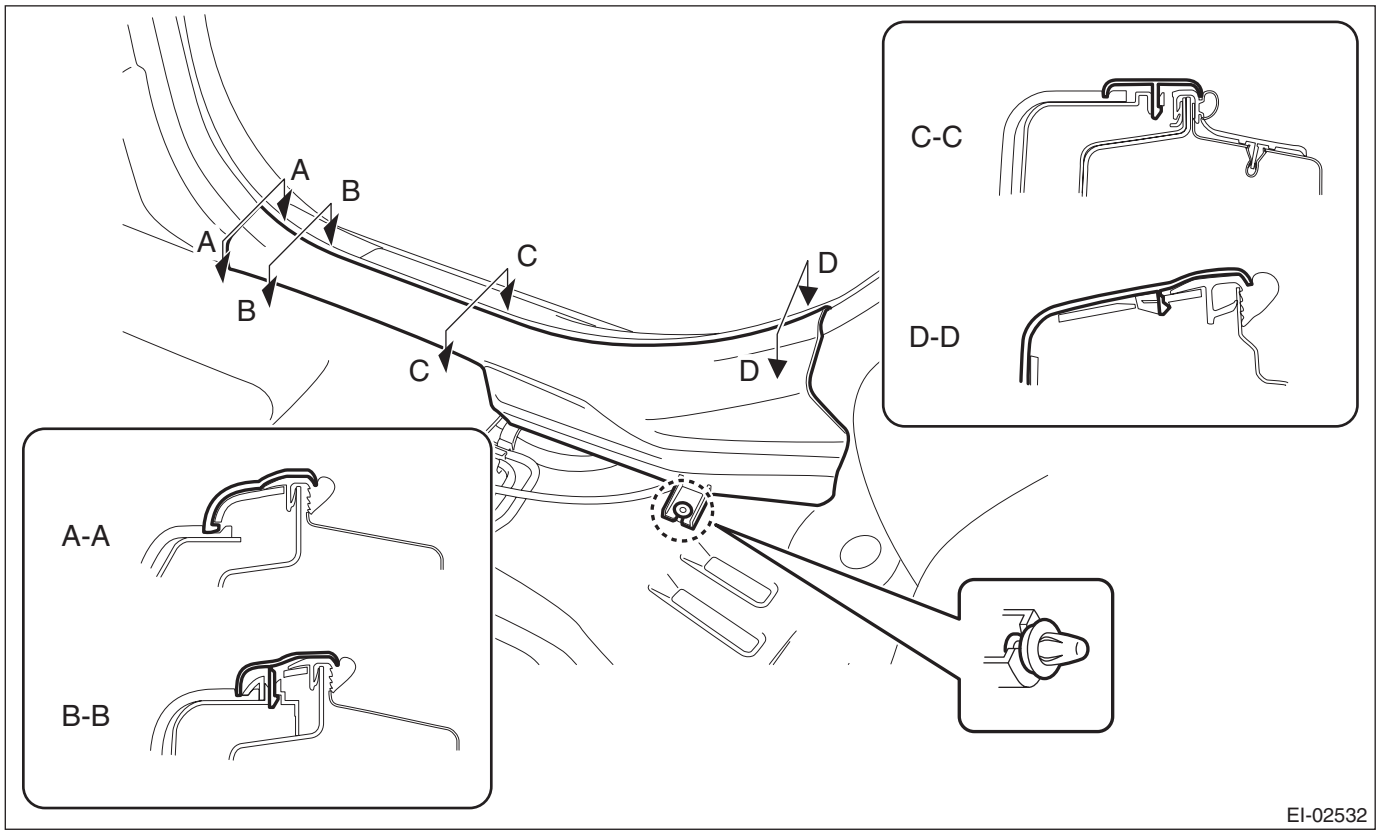

NOTE:
To release the claws of the side sill cover INN, the following steps are recommended.
1. Take out the weather strip from under the side sill cover INN.
2. Turn over the floor mat and release the claw (C-C and D-D) by accessing from behind the side sill cover INN.

4) Remove the left and right rear quarter trim LWR.
(1) Remove the backrest side pad.
a) Remove the screws.

Preparation tool: Stubby screwdriver

b) Turn over the bottom end of the backrest side pad in the forward direction so that the claws are released.
c) Remove the backrest side pad by pulling it up.

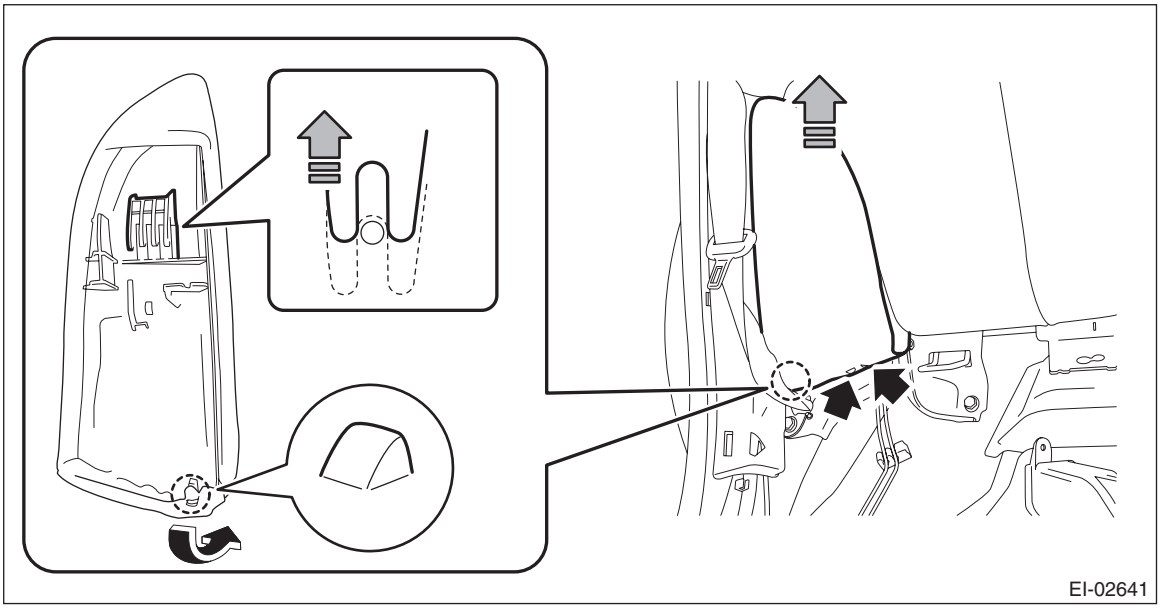

(2) Pull the release lever in the trunk room, and then tilt the backrest forward.

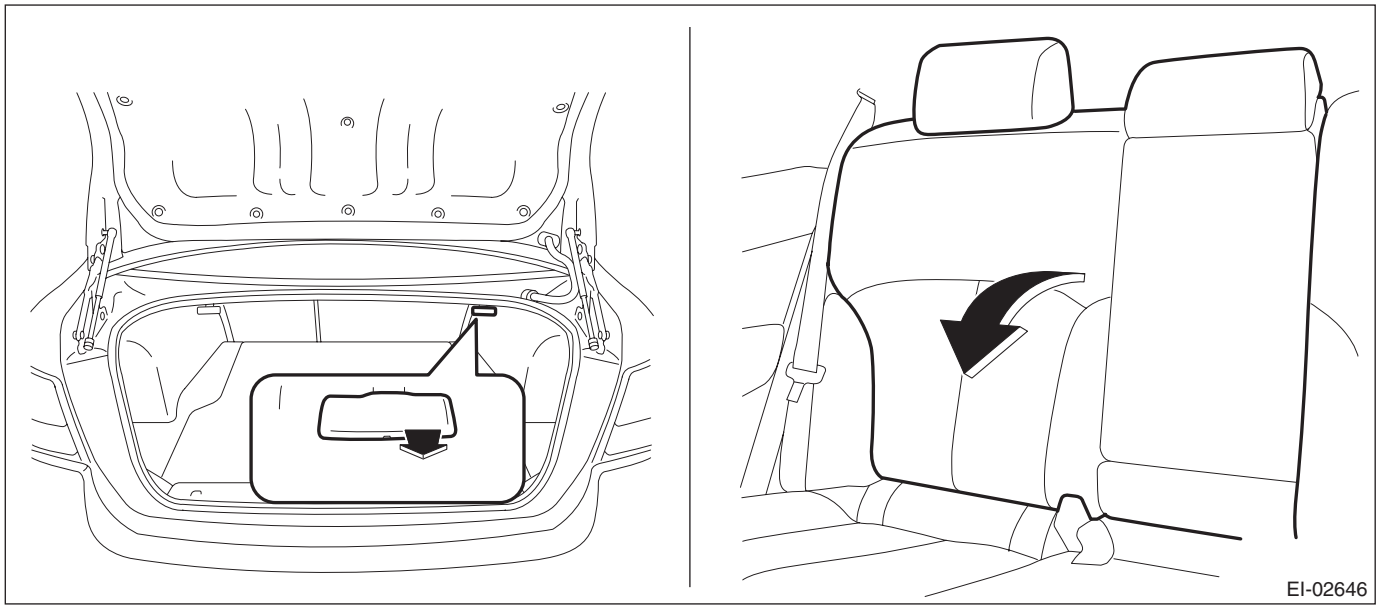

(3) Release the clips of the trunk trim panel assembly-side.

(4) Remove the clips, and remove the rear quarter trim LWR.

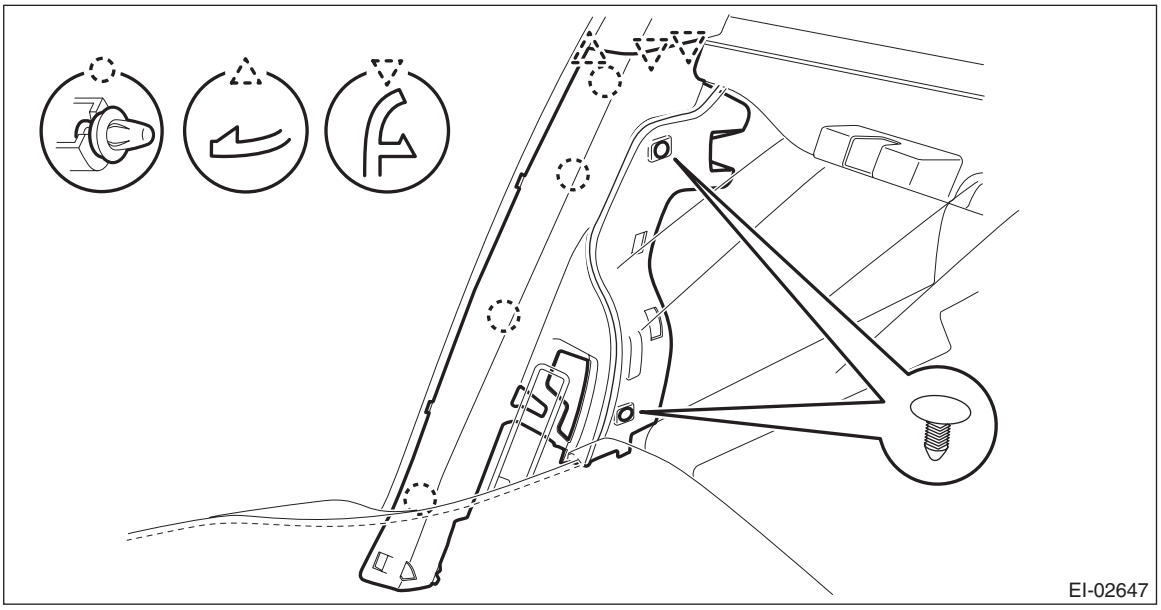

5) Remove the left and right rear quarter trim UPR.
(1) Remove the lower anchor bolt of the outer belt assembly.

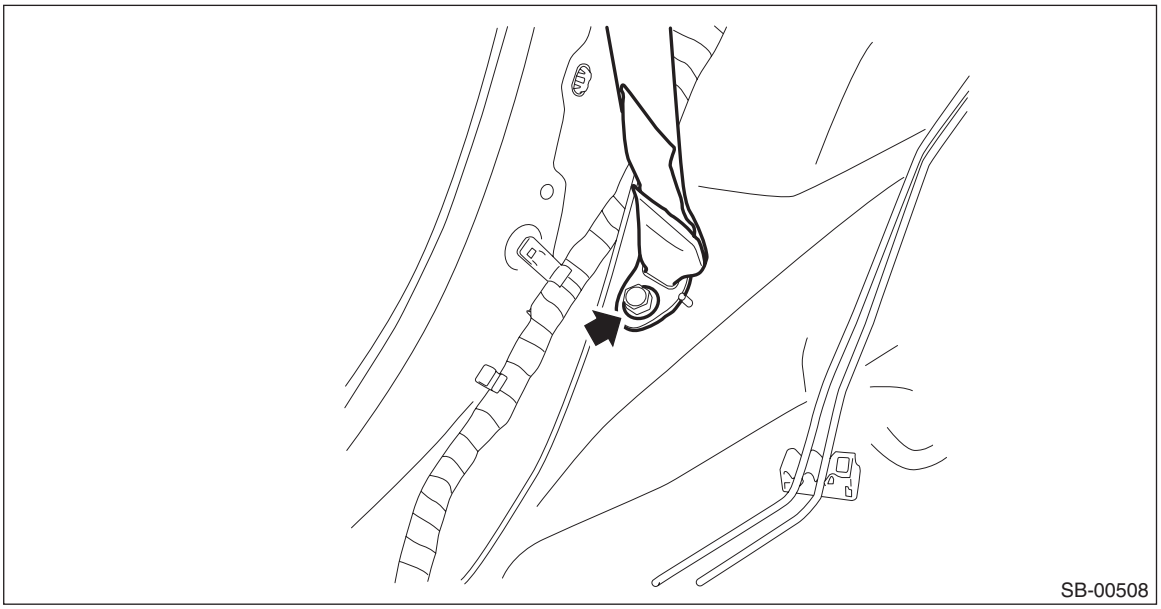

(2) Release the clips, and remove the rear quarter trim UPR.

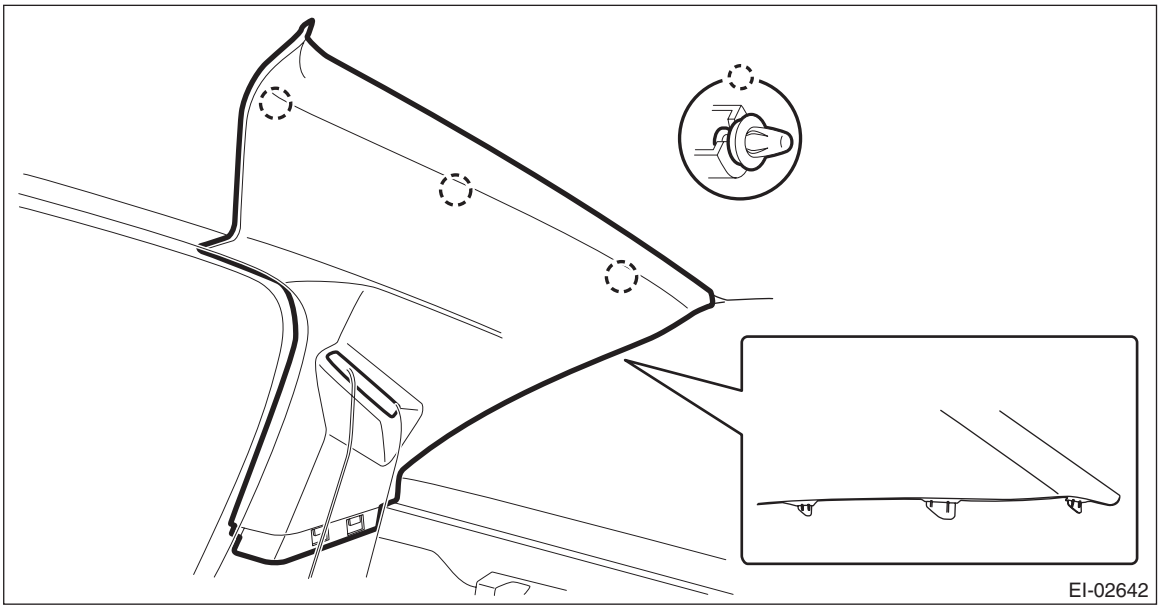

(3) Pull out the seat belt and remove the rear quarter trim UPR.

6) Release the clips and remove the left and right trunk trim panel assembly-front.

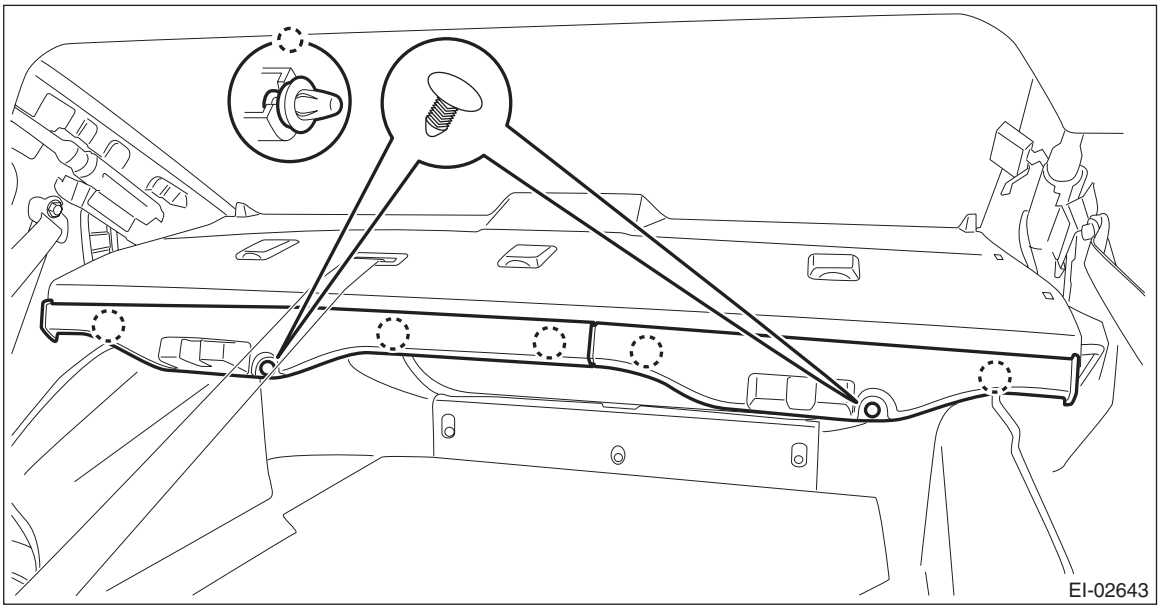

7) Remove the lower anchor of the shoulder belt assembly CTR.
   (1) Remove the nuts and remove the ISO-FIX anchor.
   (2) Remove the bolts, and remove the lower anchor of shoulder belt assembly CTR.

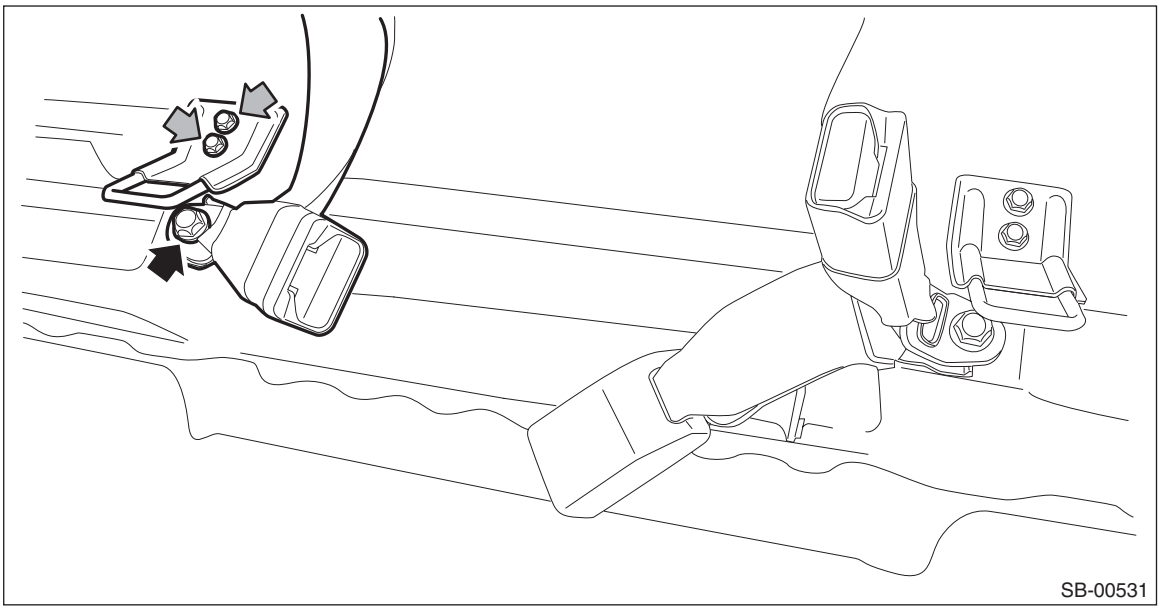

8) Remove the rear shelf panel assembly.
   (1) Release the clips to float the rear shelf panel assembly.
   (2) Release the belt guide and guide the anchor of rear center seat belt to behind the shelf panel.
   (3) Disconnect the connector of high-mounted stop light.
   (4) Remove the rear shelf panel assembly.

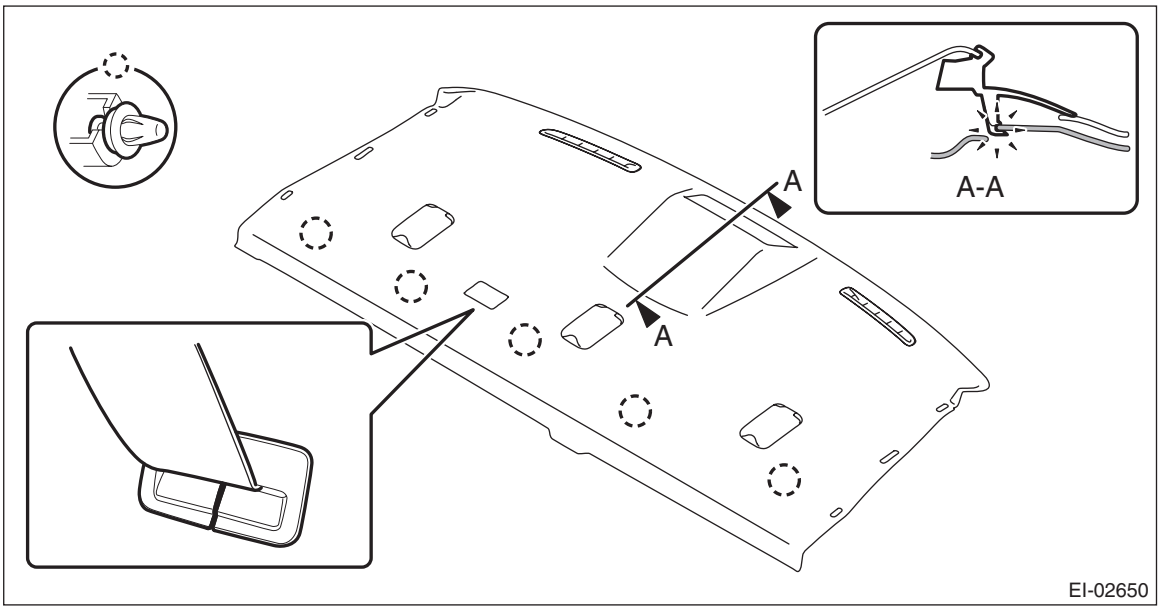

B: INSTALLATION

CAUTION:
- **Make sure to insert the claws on the back of high-mounted stop light into the rear shelf panel.**
- **If the hook is disconnected from the vehicle body, replace the hook with the new part to prevent the decline of the fixed force of the seat.**

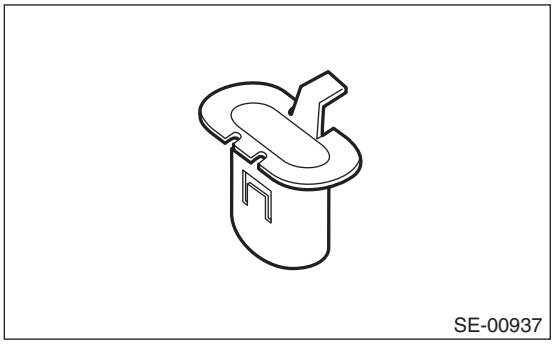

- **Make sure to insert the claws on the back of high-mounted stop light into the rear shelf panel.**

Install each part in the reverse order of removal.

Tightening torque:
ISO-FIX anchor:25 N·m (2.55 kgf-m, 18.4 ft-lb)
Rear seat belt: <Ref. to SB-3, REAR SEAT BELT (SEDAN MODEL), COMPONENT, General Description.>

24.Trunk Room Trim

A: REMOVAL

1. TRUNK LID TRIM

1) Open the trunk lid.
2) Remove the trunk handle.
3) Remove the clips and the trunk lid trim.

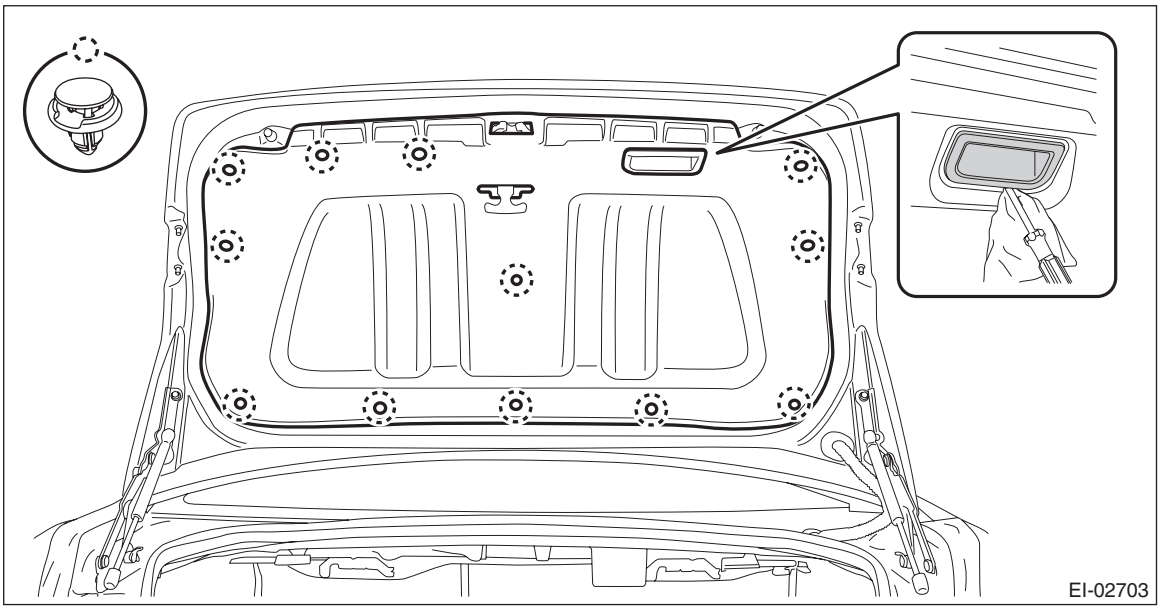

2. TRUNK ROOM TRIM

1) Pull the release lever in the trunk room, and then tilt the backrest forward.

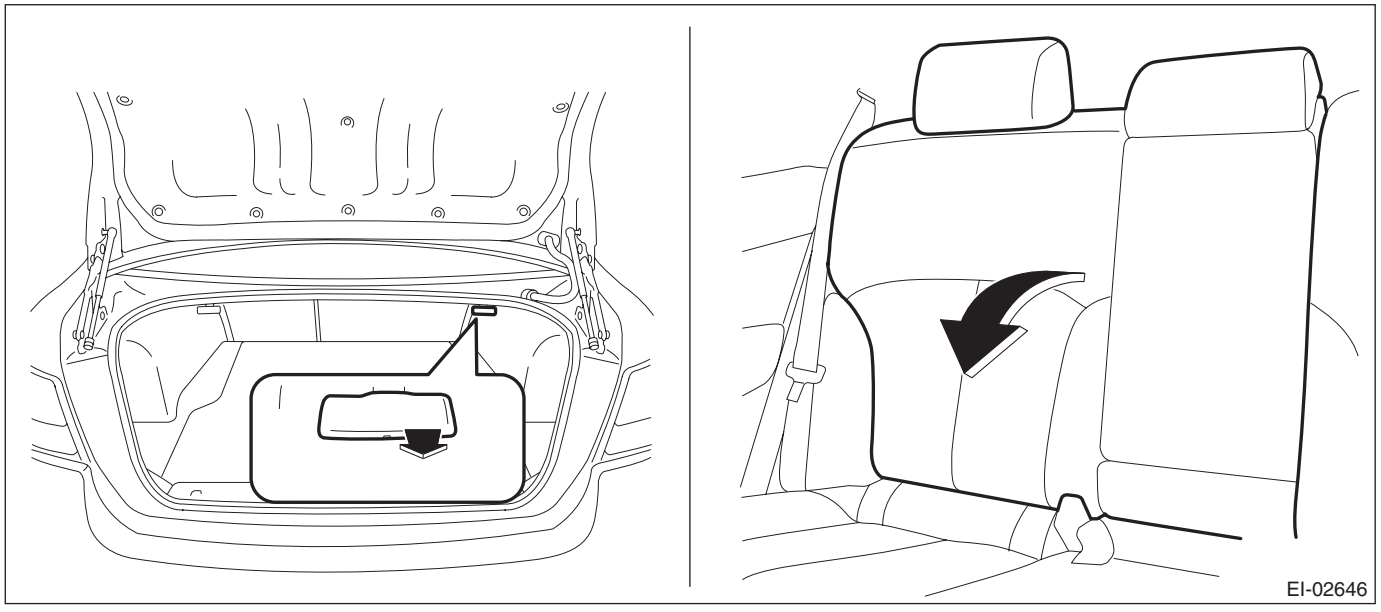

2) Remove the trunk room mat.

3) Remove the trunk trim assembly-rear.
   (1) Remove the clip.
   (2) Release the claws, and remove the trunk trim assembly-rear.

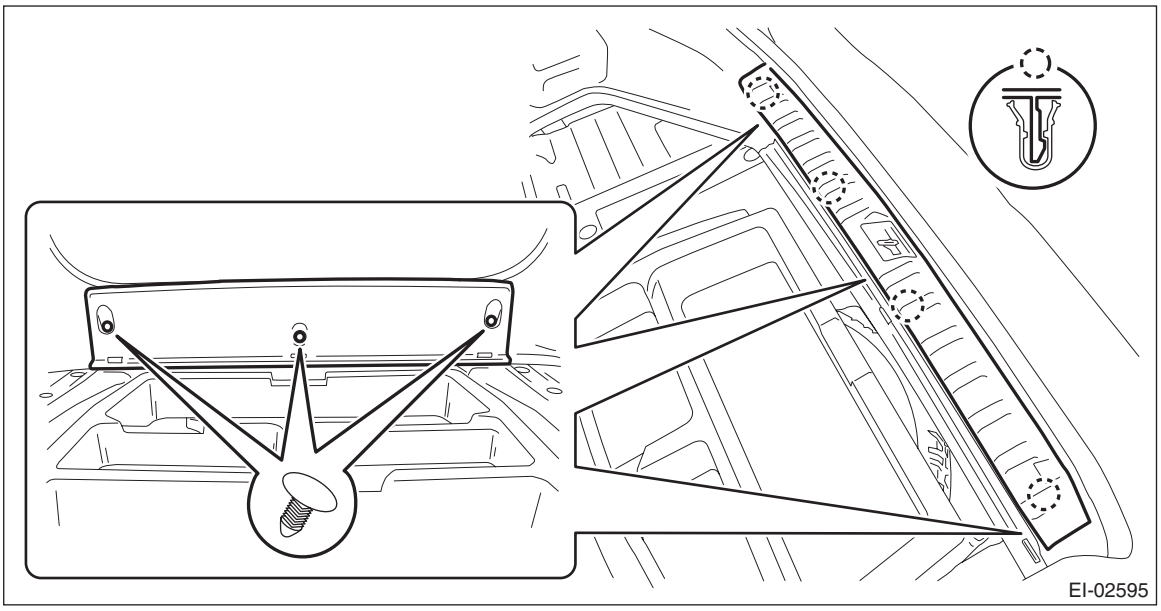

4) Remove the trunk trim panel assembly-side.
   (1) Remove the hook.
      a) Turn the hook to 90°.
      b) Press the claw using a screwdriver to detach the hook.
   (2) Release the clips and remove the trunk trim panel assembly-side.

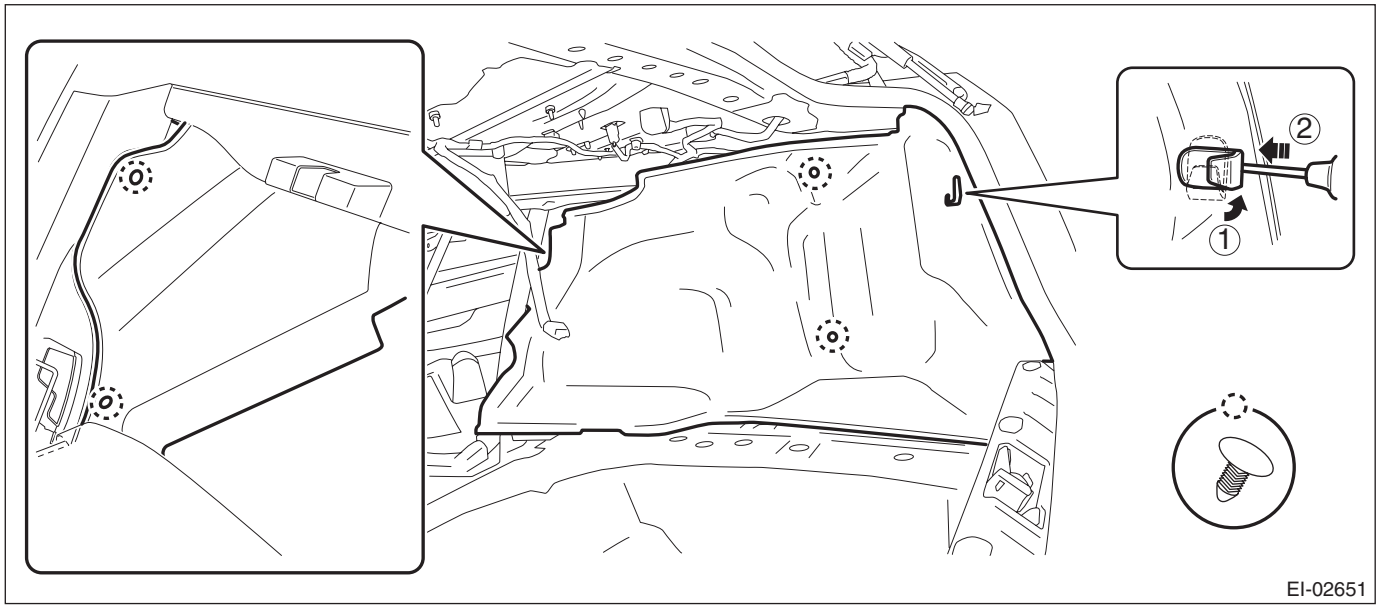

B: INSTALLATION

Install each part in the reverse order of removal.

25.Sun Visor

A: REMOVAL

1) Remove the cover, loosen the screws, and remove the sun visor assembly.
2) Remove the sun visor hook.
   (1) Press both sides using a flat tip screwdriver.
   (2) Remove the sun visor hook by pulling toward you.

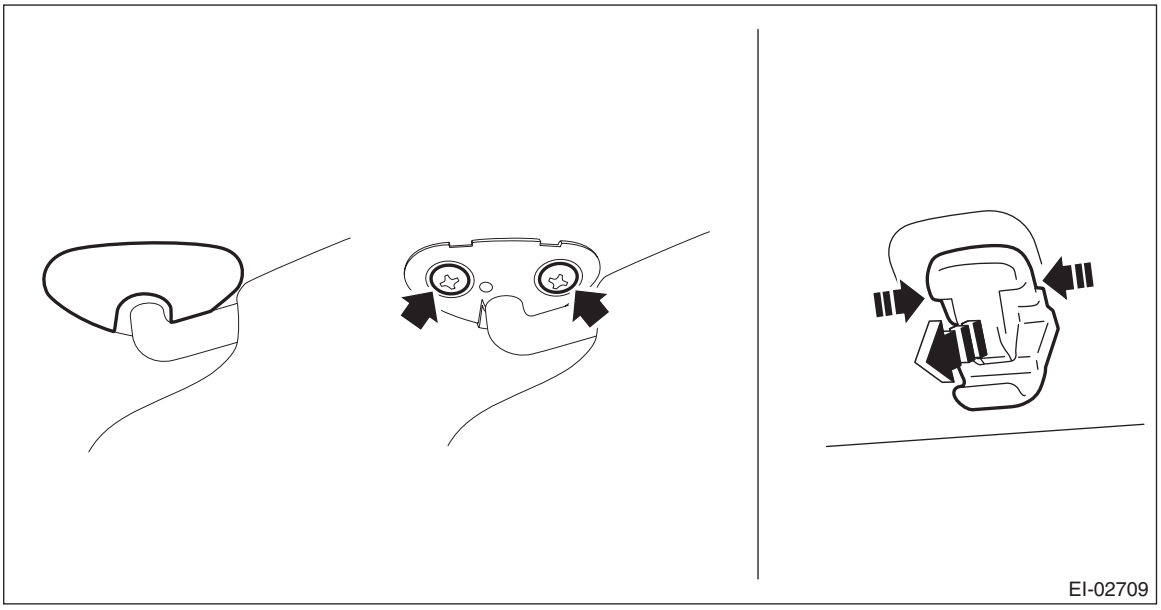

B: INSTALLATION

Install each part in the reverse order of removal.

26.Assist Grip

A: REMOVAL

Remove the assist grip assembly.
1) Remove the cap (a).
2) Pull the assist grip toward you (to the vehicle center) and remove the metal clip from the bracket.

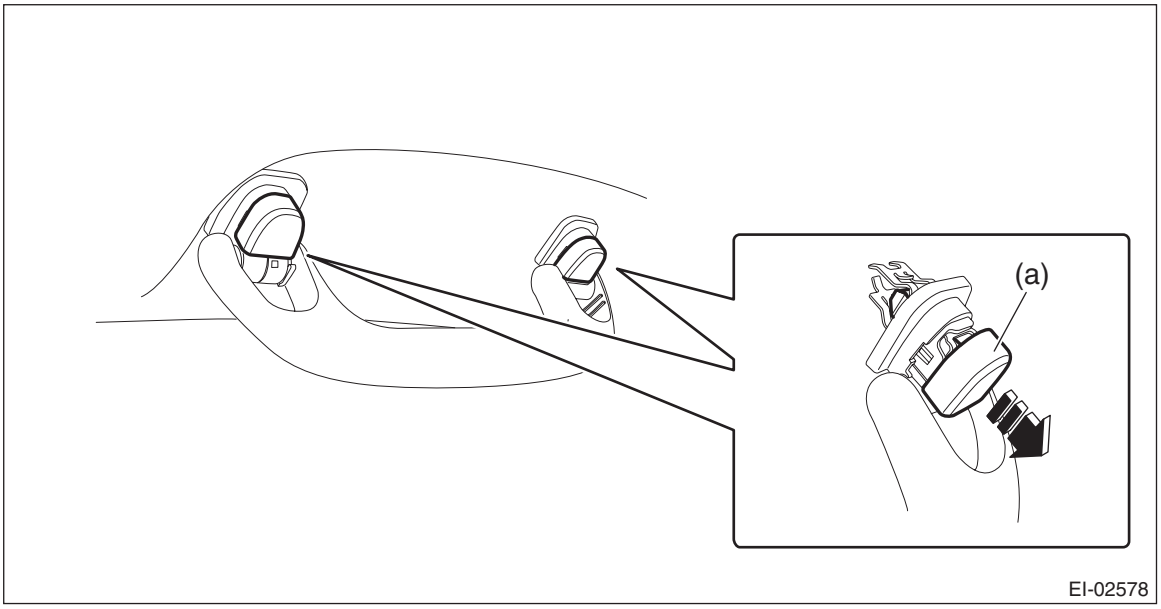

B: INSTALLATION

Install each part in the reverse order of removal.

27.Roof Trim

A: REMOVAL

1. SEDAN MODEL

1) Remove the rear seat cushion assembly.
   (1) Pull up the seat cushion and release the hook.

CAUTION:
If the hook is disconnected from the vehicle body, replace the hook with the new part to prevent the decline of the fixed force of the seat.

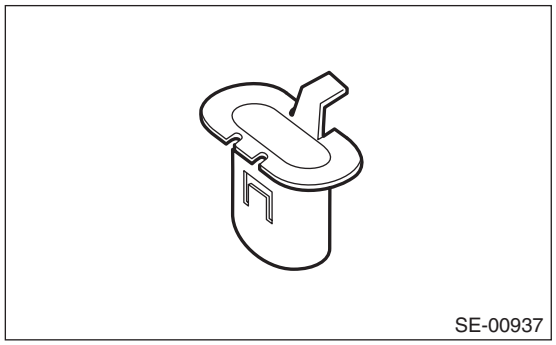
SE-00937

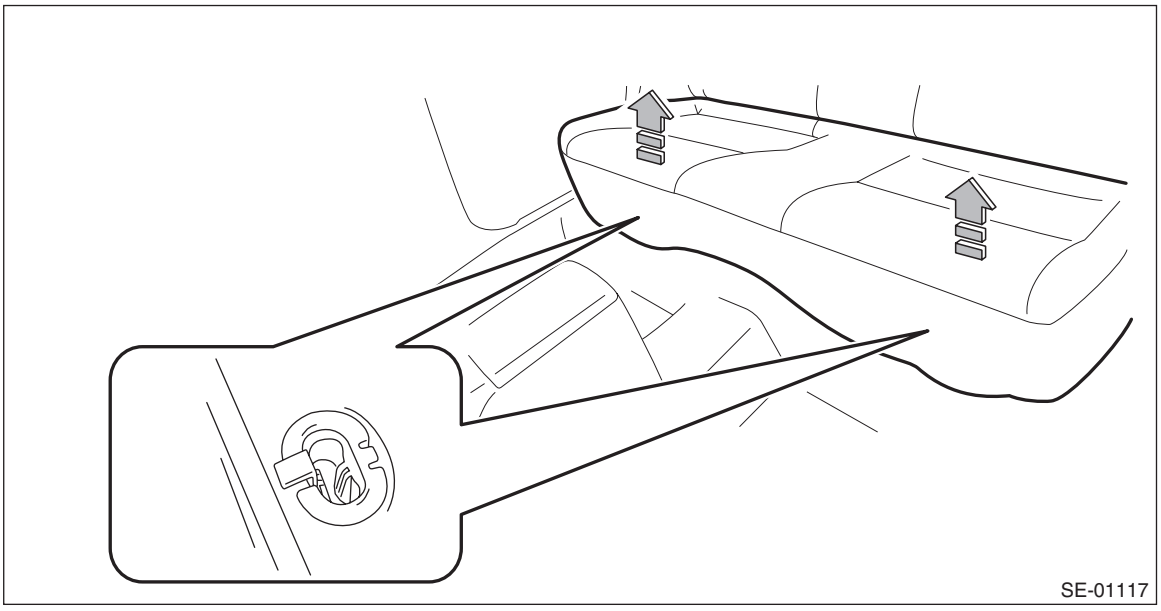
SE-01117

(2) Remove the hook (A) by pushing it back while lifting the front side of the seat cushion, and remove the seat cushion.

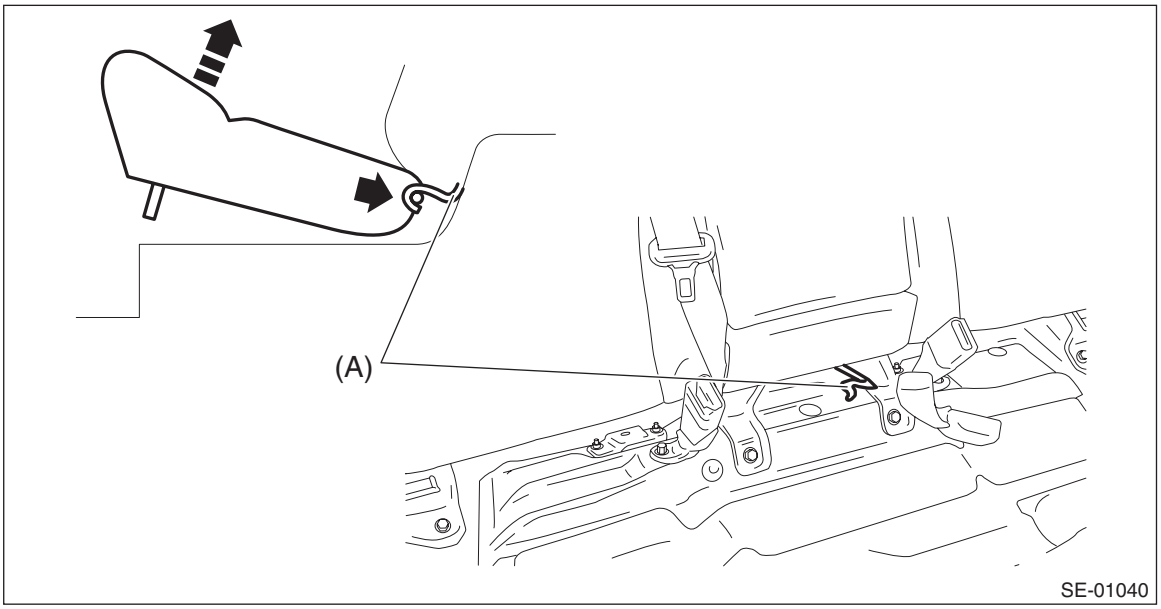

2) Release the clips and claws, and remove the side sill covers - rear INN on the left and right sides.

CAUTION:
Do not pull with excessive force. Doing so may damage the claws of the side sill cover INN.

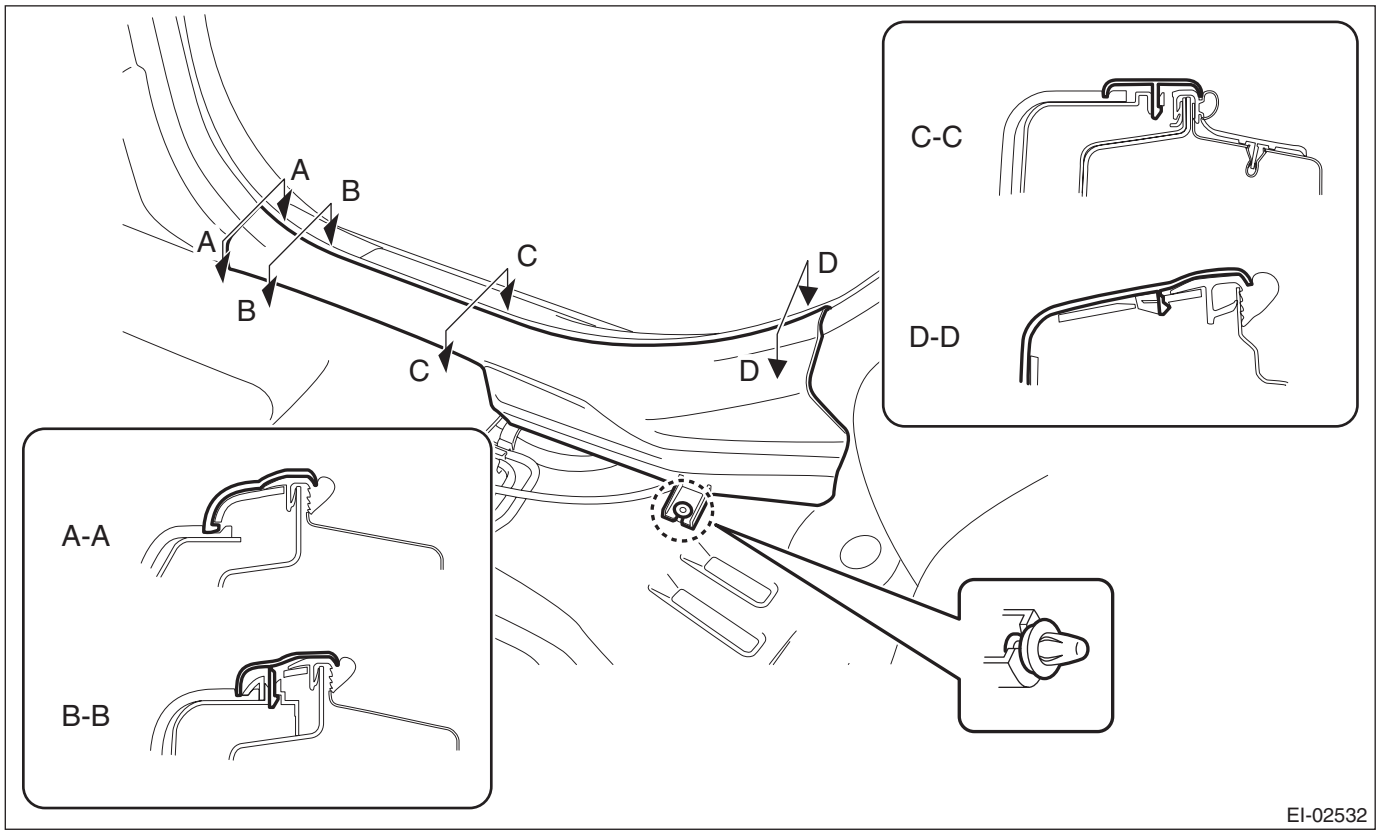

NOTE:
To release the claws of the side sill cover INN, the following steps are recommended.
1. Take out the weather strip from under the side sill cover INN.
2. Turn over the floor mat and release the claw (C-C and D-D) by accessing from behind the side sill cover INN.

3) Release the claws, and then remove the side sill cover - front INN on the left and right sides.

CAUTION:
Do not pull with excessive force. Doing so may damage the claws of the side sill cover INN.

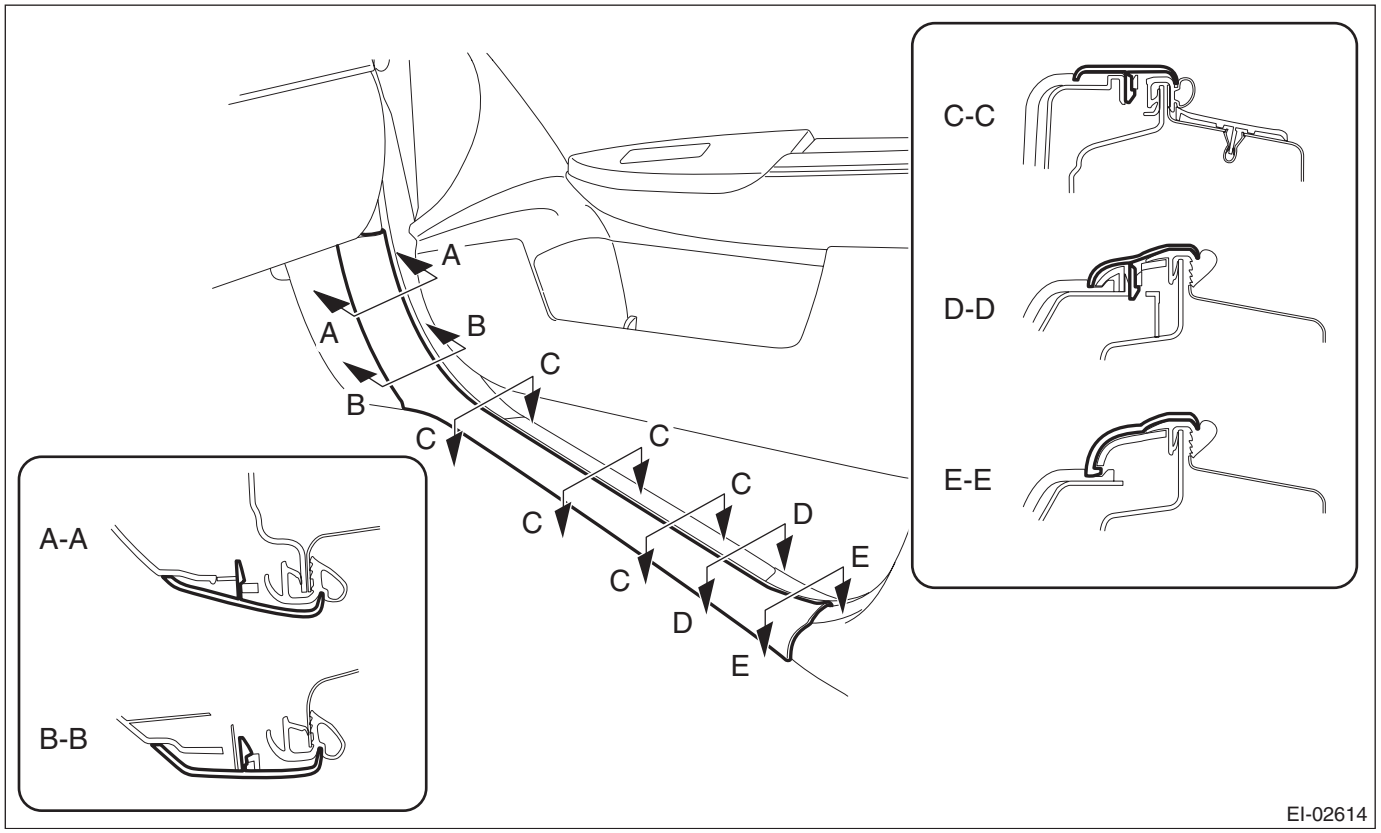

NOTE:
To release the claws of the side sill cover INN, the following steps are recommended.
1. Take out the weather strip from under the side sill cover INN.
2. Turn over the floor mat and release the claw (C-C) by accessing from behind the side sill cover INN.

4) Remove the left and right center pillar trim LWR.
(1) Release the clip by pulling the center pillar trim LWR toward you.
(2) Expand the claws of center pillar trim LWR outward and remove it from the center pillar trim UPR.

CAUTION:
Do not expand the center pillar trim LWR excessively. Doing so may damage the trim.

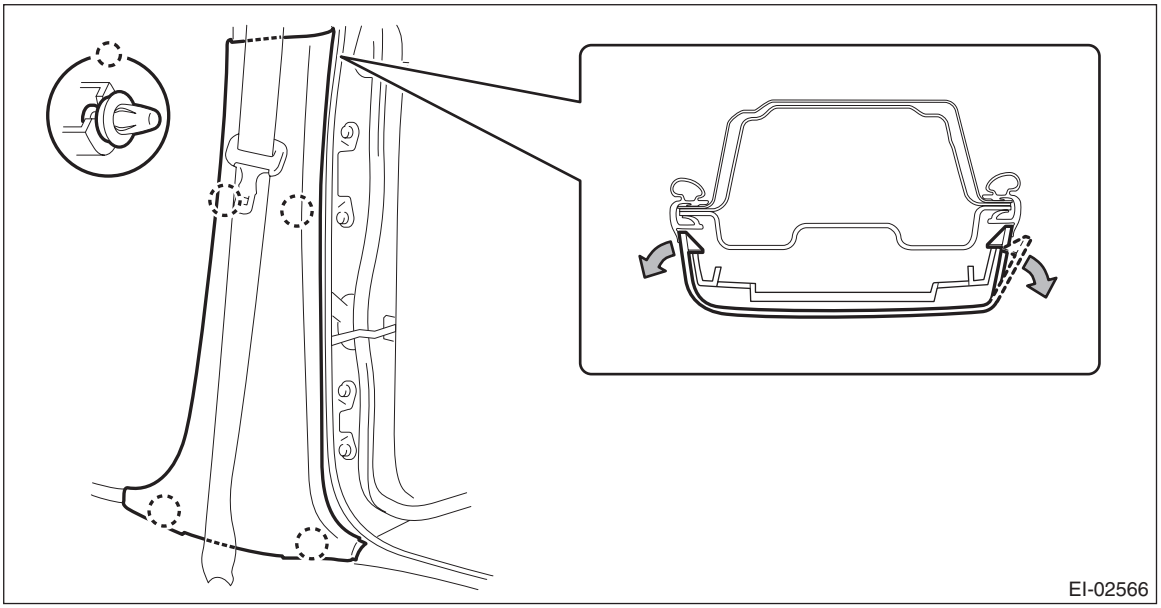

NOTE:
First release the claw located to the rear of the vehicle.
5) Disconnect the ground cable from battery and wait for at least 60 seconds before starting work.

CAUTION:
The airbag system is fitted with a backup power supply. After disconnecting the battery ground cable, the airbag may operate if you do not wait for 60 seconds before starting the service of airbag system.

NOTE:
For the power seat, adjust the front seat position before removing the battery ground.
6) Adjust the front seat position.
(1) Remove the driver's seat and passenger's seat headrests.

NOTE:
For models with headrest monitor, remove the headrest in the following procedures.
1. Fold the backrest all the way backward, and then remove the headrest.
2. Place the headrest on the seating face.
3. Return the backrest to the original position.

(2) Tilt the driver's seat backrest forward and move the seat to the front most position. (a)

(3) Tilt the passenger's seat backrest rearward and move the seat to the rearmost position. (b)

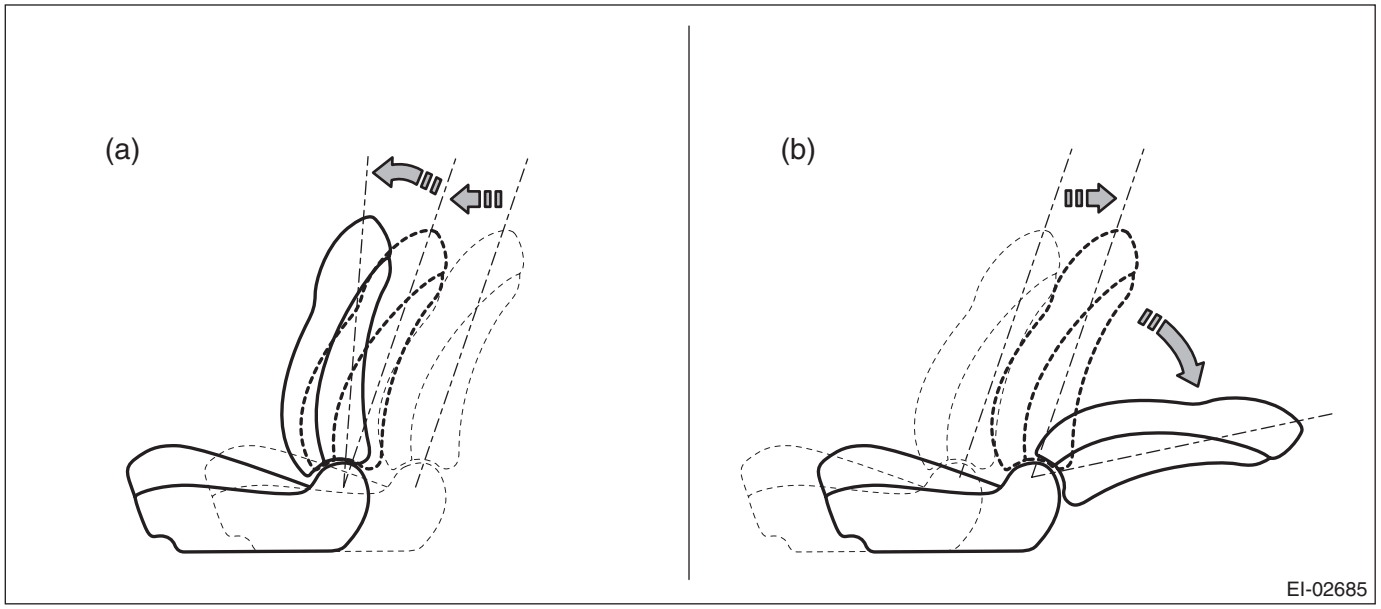

7) Cover the following areas to protect from damage.
- Steering wheel
- Instrument panel surface
- Glove box surface

8) Remove the console front cover assembly.
- MT model
  1. Remove the shift knob.
  2. Release the clips and claws, then pull up the console front cover assembly.

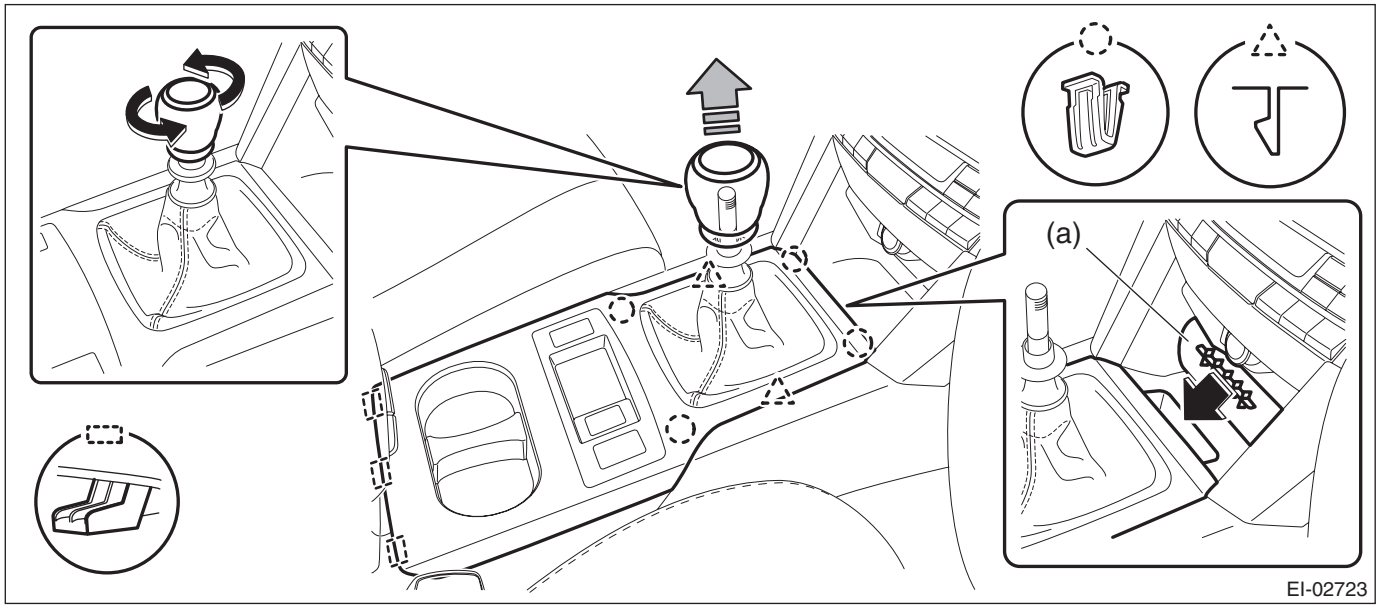

NOTE:
Turn over the front center pocket mat (a) and pull up the console front cover from the slit.

  3. Disconnect the harness connector and remove the console front cover assembly.

- AT model
  1. Remove the select lever knob.
     a. Lower the cover grip AT.
     b. Remove the clamp grip pin, then remove the select lever knob.
  2. Release the clips and claws, then pull up the console front cover assembly.

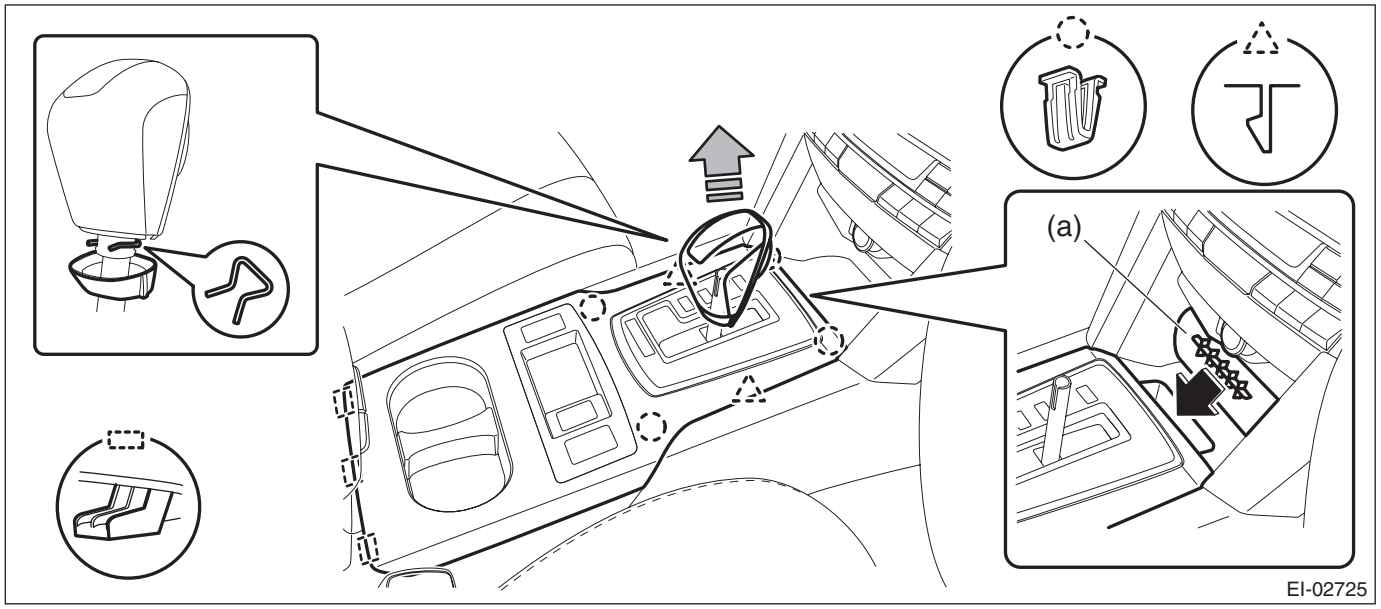

NOTE:
Turn over the front center pocket mat (a) and pull up the console front cover from the slit.

  3. Disconnect the harness connector and remove the console front cover assembly.

9) Remove the left and right console front side cover assembly.
   (1) Remove the screws and release the clips (A) to (D) in order.
   (2) Remove the console front side cover assembly by pulling it up.

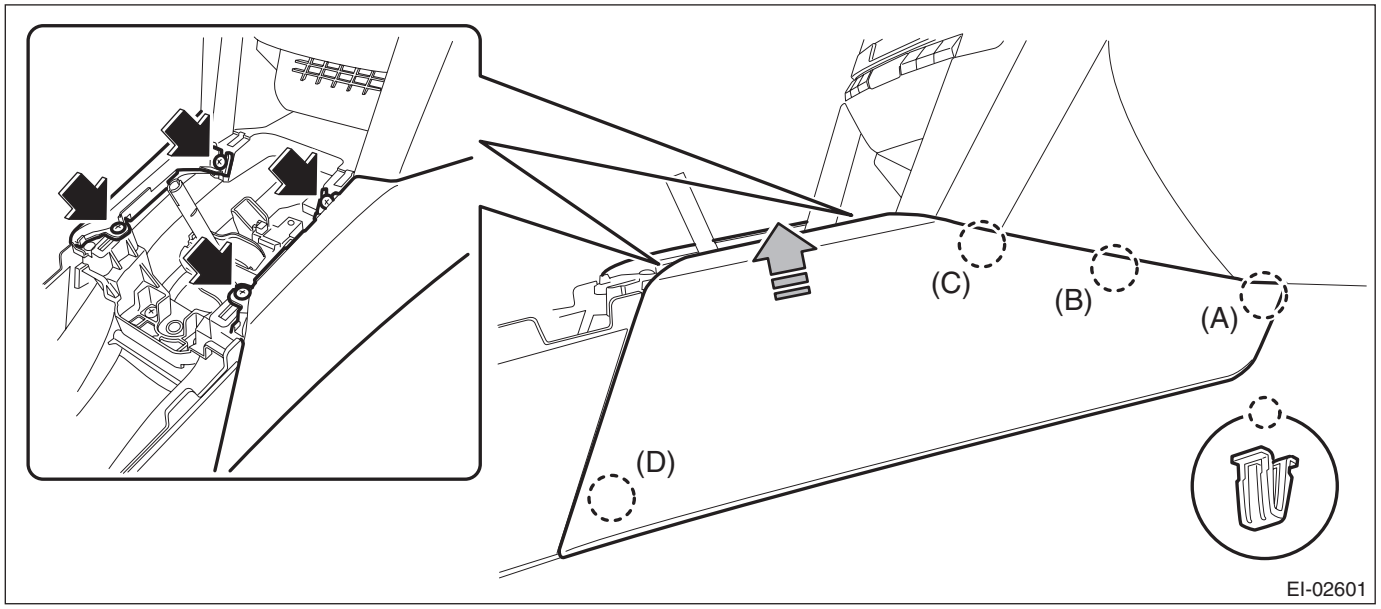

10) Remove the console box assembly.
(1) Move the seat, and remove the bolts after detaching the left and right caps.

NOTE:
For a model with power seat, connect the battery ground cable and move the seat. Then, disconnect the battery ground cable again and wait for 60 seconds at least before restarting the work.

(2) Remove the screws, disconnect the harness connector and remove the console box assembly.

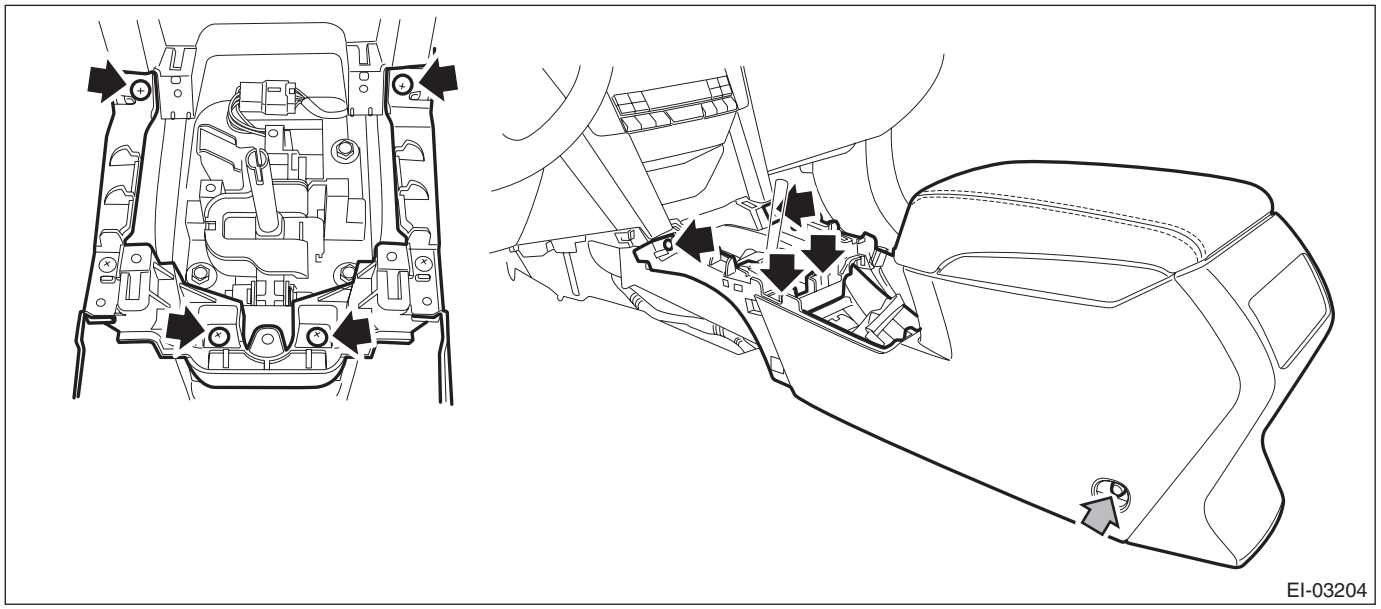

11) Remove the left and right rear quarter trim LWR.
(1) Remove the backrest side pad.
a) Remove the screws.

Preparation tool: Stubby screwdriver

b) Turn over the bottom end of the backrest side pad in the forward direction so that the claws are released.
c) Remove the backrest side pad by pulling it up.

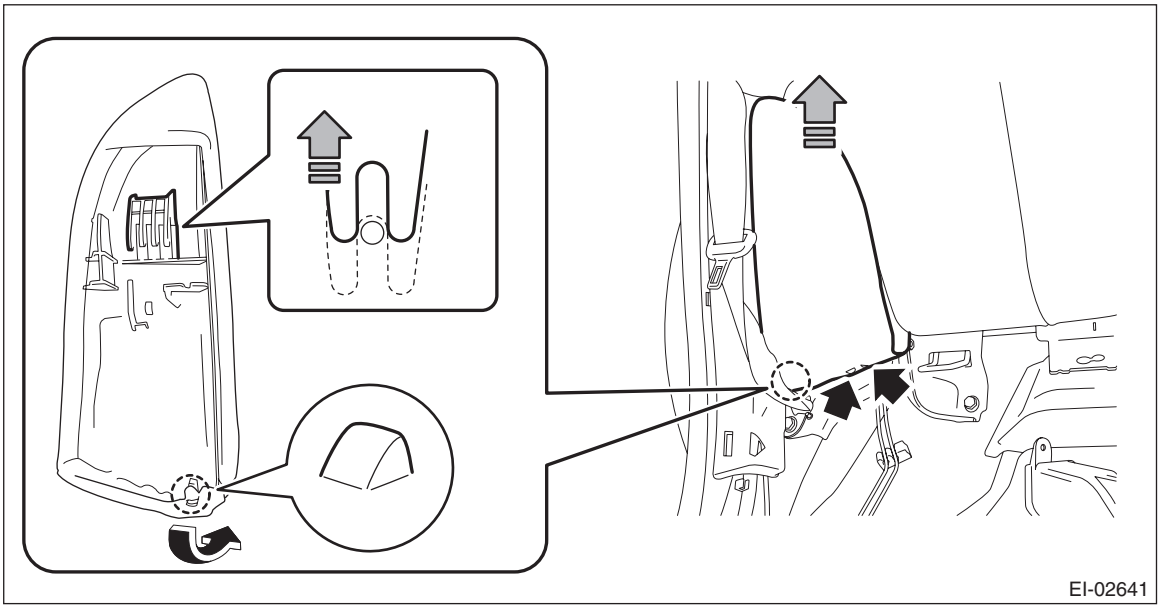

(2) Pull the release lever in the trunk room, and then tilt the backrest forward.

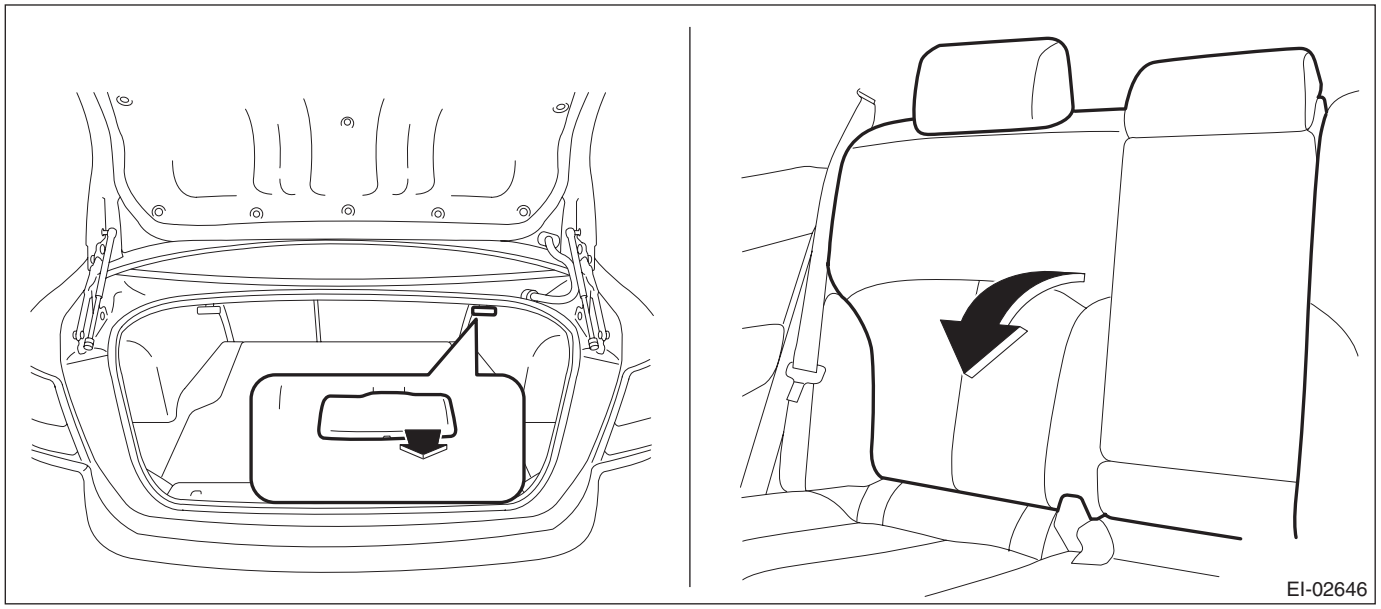

(3) Release the clips of the trunk trim panel assembly - side.
(4) Remove the clips, and remove the rear quarter trim LWR.

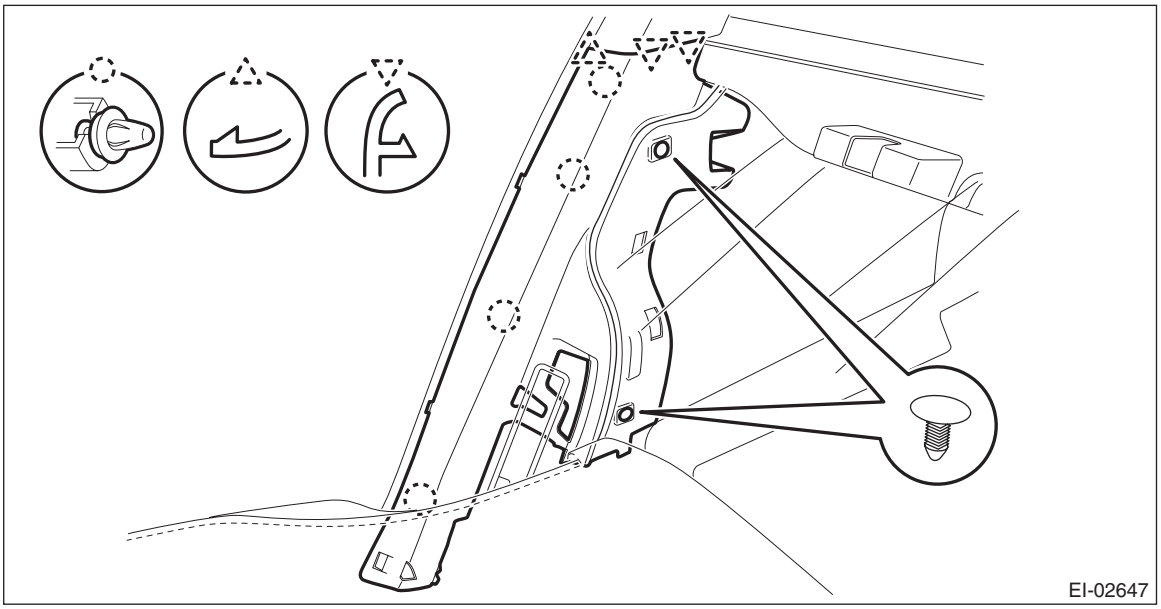

12) Remove the left and right rear quarter trim UPR.
(1) Remove the lower anchor bolt of the outer belt assembly.

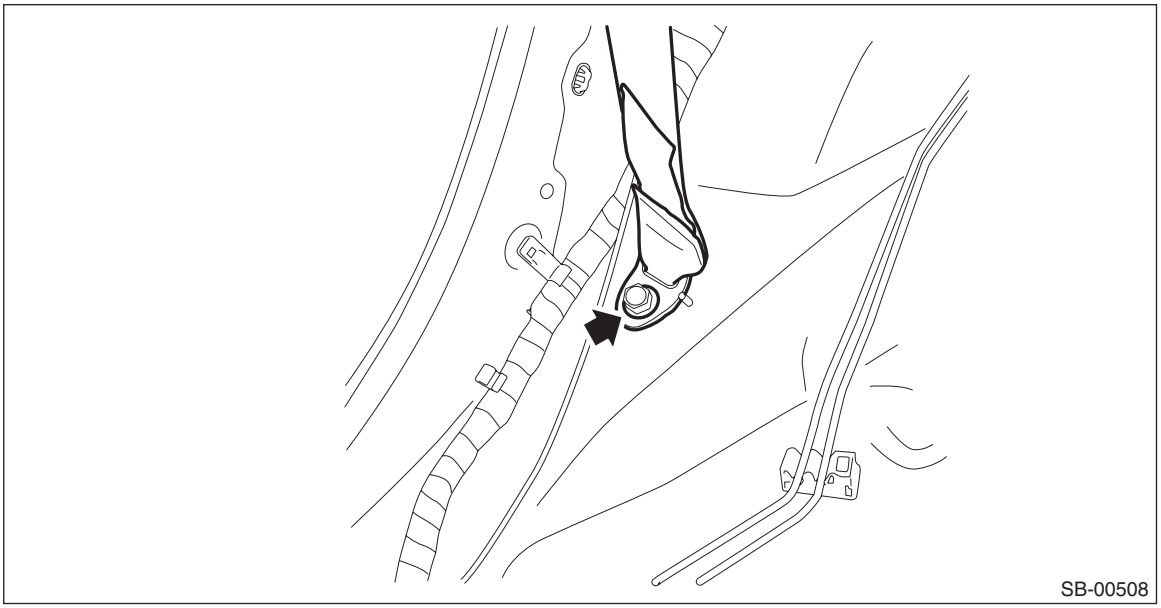

(2) Release the clips, and remove the rear quarter trim UPR.

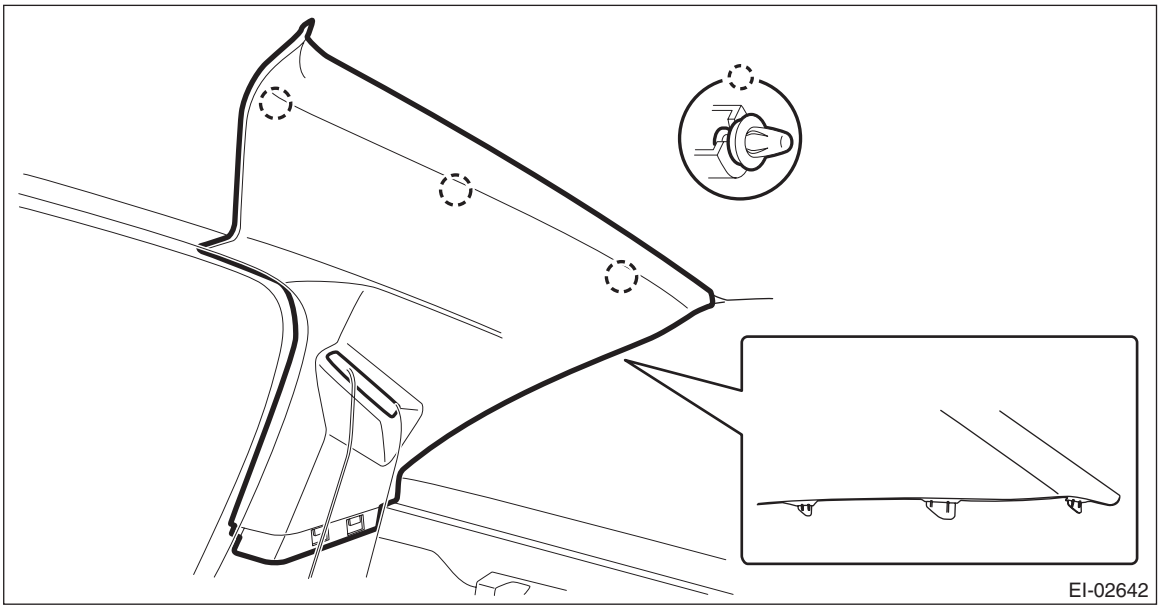

(3) Pull out the seat belt and remove the rear quarter trim UPR.

13) Remove the left and right front pillar trims.
(1) Pull the upper part of the front pillar trim towards the center of the vehicle.
(2) Insert long-nose pliers into the top part of the trim, grip the clip with the pliers and twist 90° in that position.

CAUTION:
Be careful not to damage the pillar trim surface and curtain airbag module when inserting the pliers.
(3) Holding the clip twisted as in the previous step, remove the front pillar trim from the clip.
(4) Remove the clip and the front pillar trim.

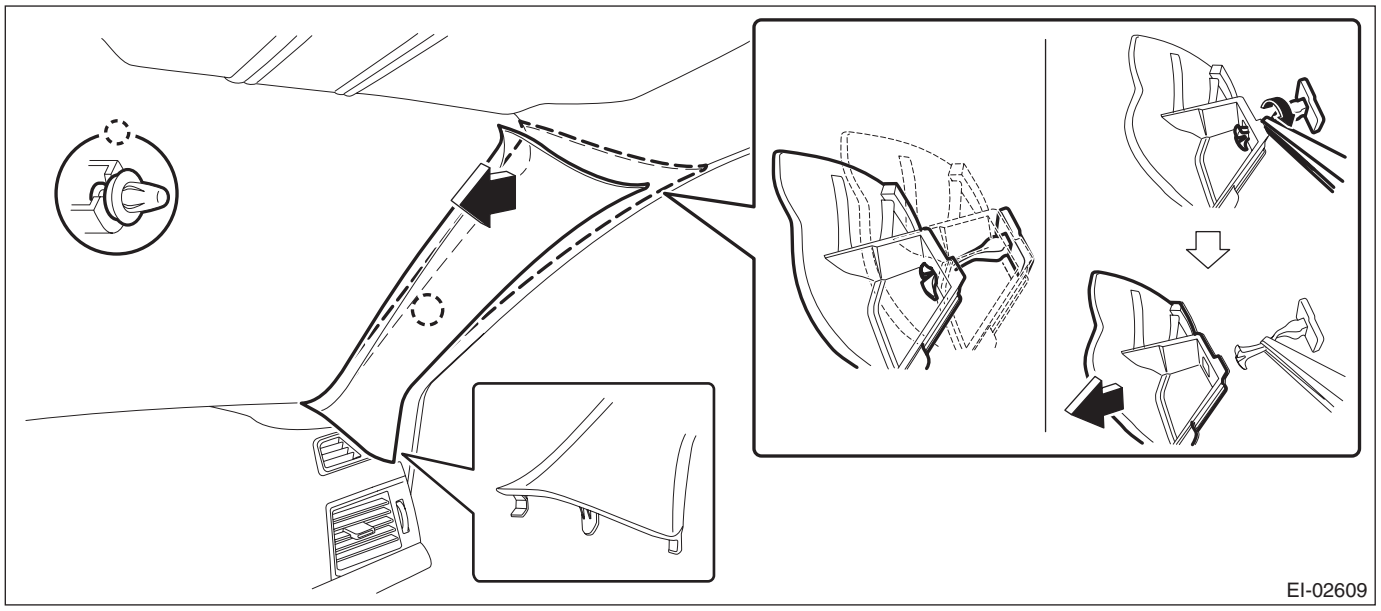
EI-02609

14) Remove the center pillar trim UPR.
(1) Remove the seat belt lower anchor bolt.

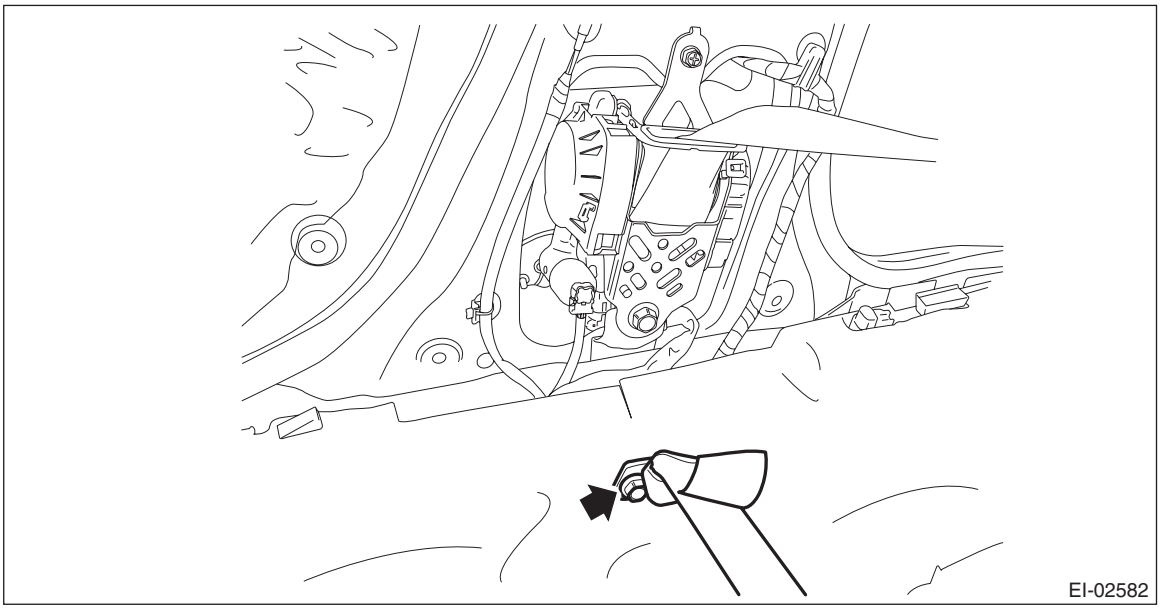
EI-02582

NOTE:
On passenger's side, disconnect the connector of the seat belt tension sensor.
(2) Release the clip by pulling the center pillar trim UPR toward you.

(3) Remove the center pillar trim UPR by lowering the entire trim.

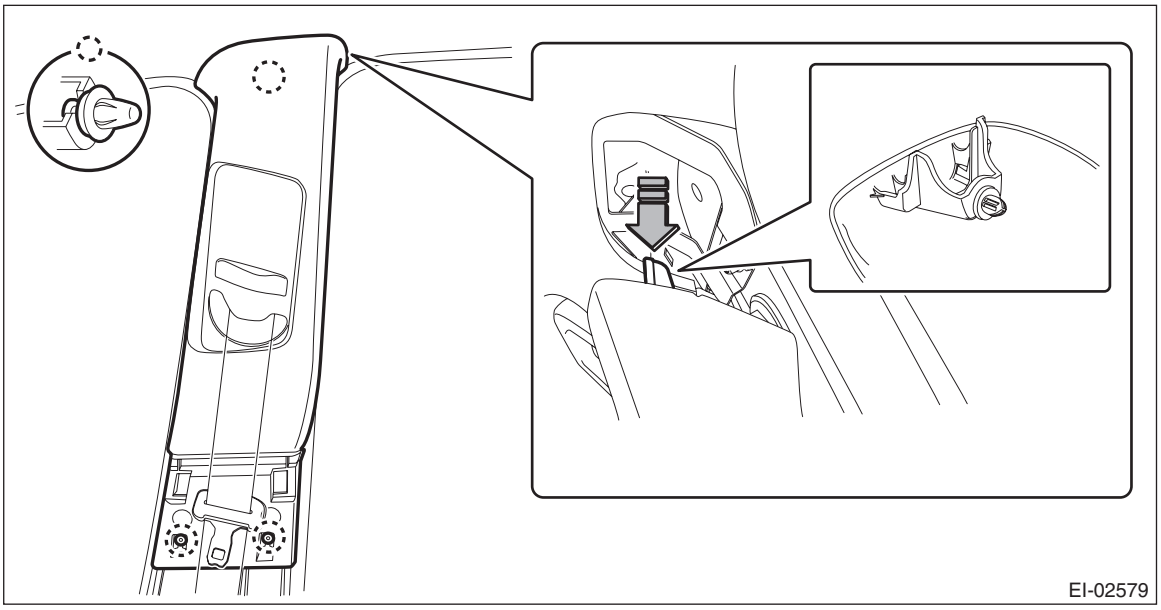

(4) Pull out the seat belt and remove the center pillar trim UPR.

15) Remove the rear door trim assembly on driver's side.
(1) Open the cover and remove the screw.
(2) Remove the clips in the order of (A) to (H) and remove the door trim from the door panel.

CAUTION:
When removing the door trim, be sure to remove the clips in the correct order. Forcibly removing clips may damage the door panel assembly.

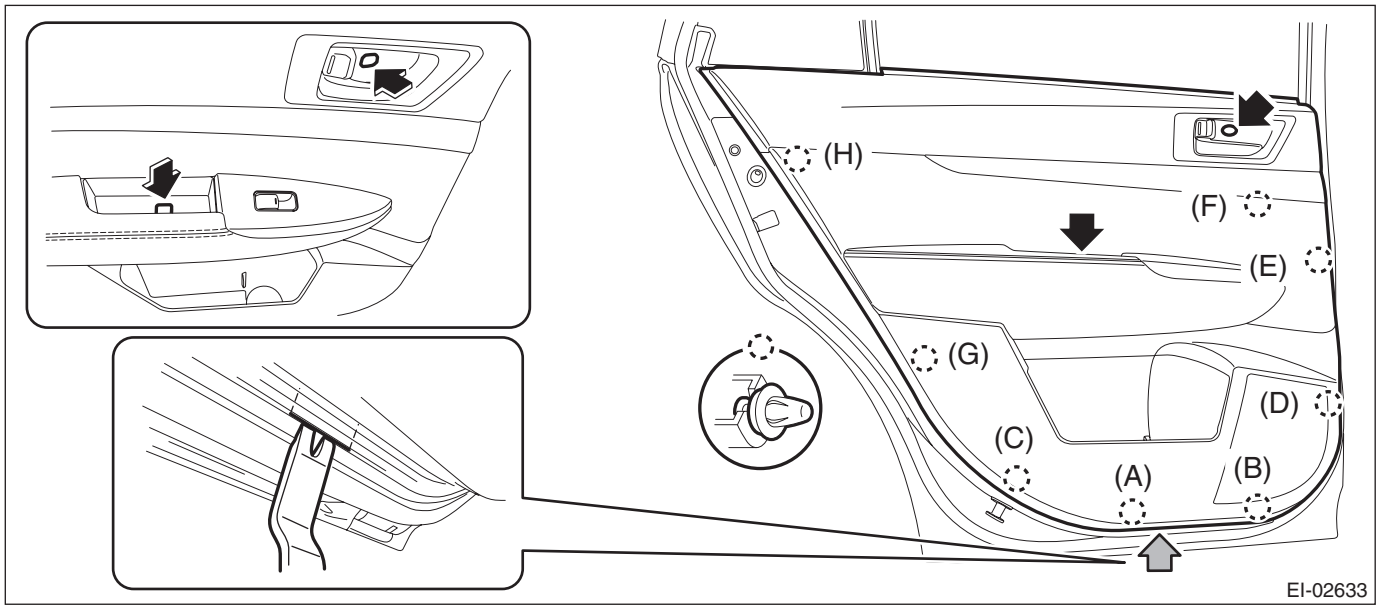

NOTE:
Insert a plastic clip remover into the slit at the bottom of the door trim, to lift the door trim.

(3) Remove the cables (a) and (b) from the cable holder of inner remote.

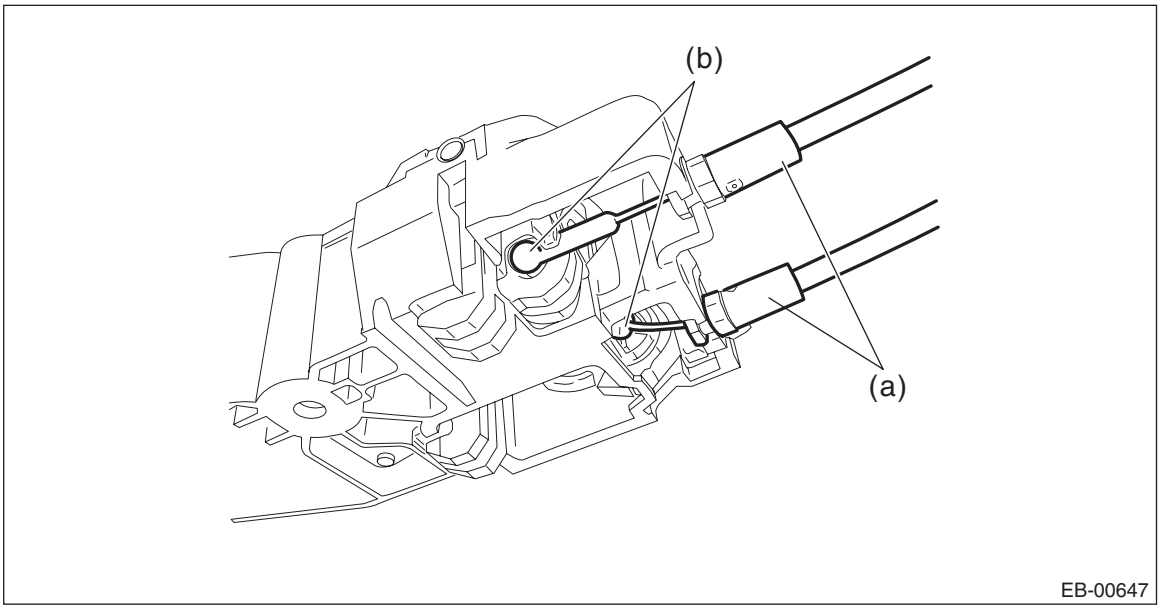

(4) Disconnect the harness connector and remove the door trim.

16) Remove the rear speaker assembly on driver's side.
(1) Remove the screws.
(2) Disconnect the harness connector and remove the rear door speaker.

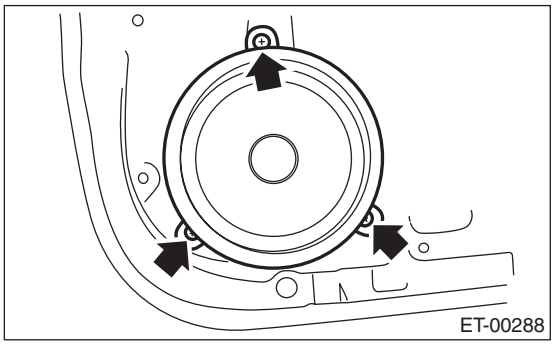

17) Remove the overhead console assembly.
(1) Push and open the rear end of the overhead console lid, and remove the screws.
(2) Disconnect the connector and remove the overhead console assembly.

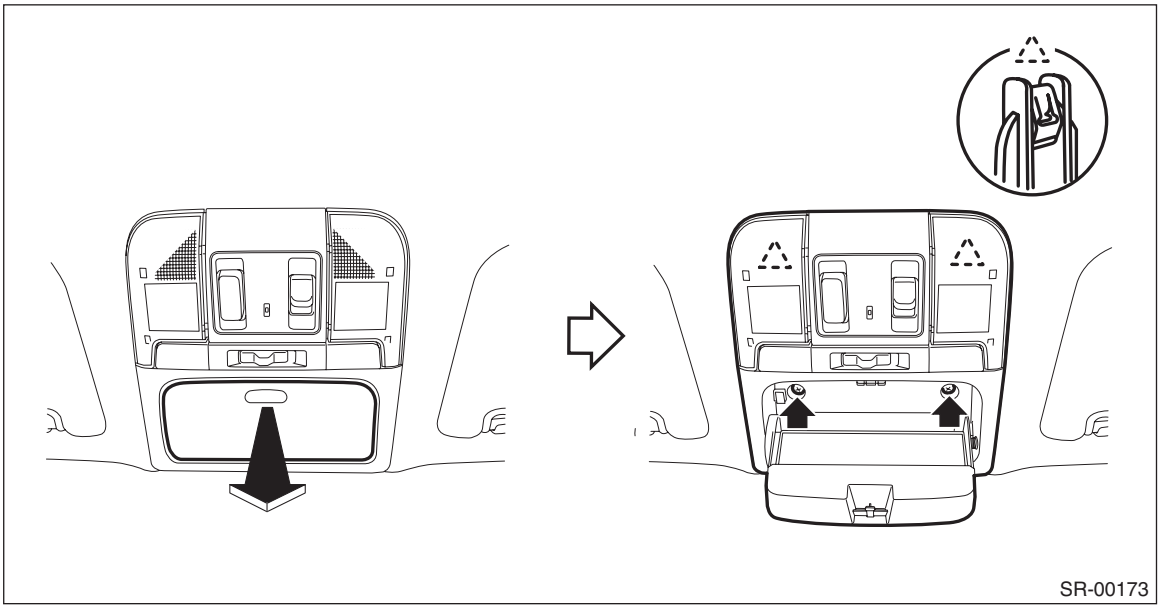

18) Remove the left and right sun visor assembly.
(1) Remove the cover, loosen the screws, and remove the sun visor assembly.
(2) Press the both sides of the sun visor hook using a flat tip screwdriver.
(3) Remove the sun visor hook by pulling toward you.

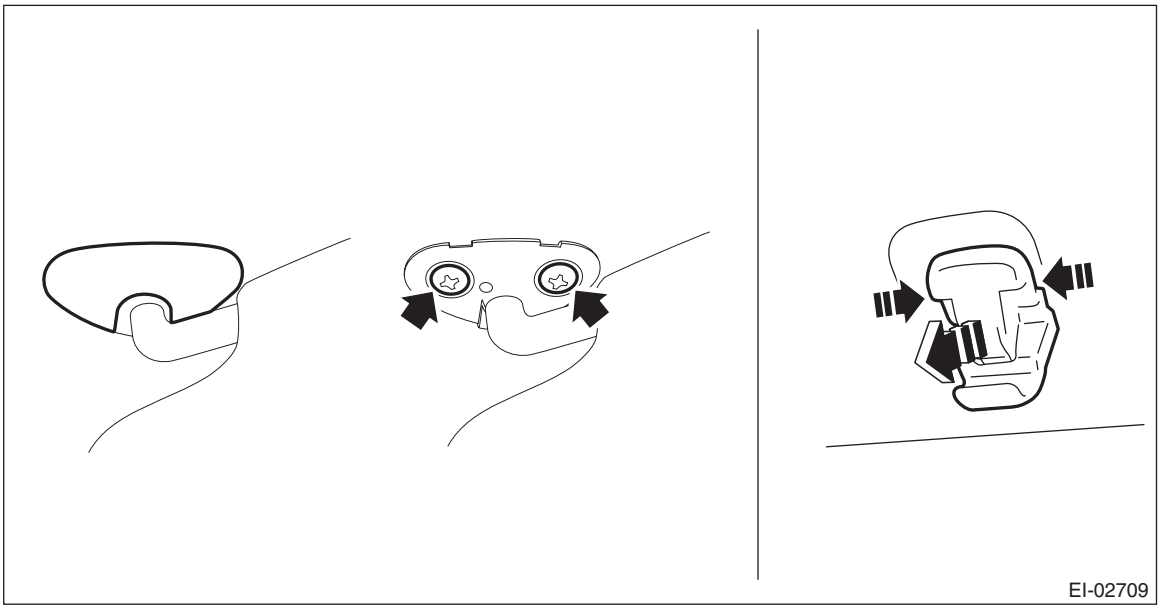

19) Remove the room light assembly.
(1) Release the claws and remove the cover.
(2) Remove the two screws.

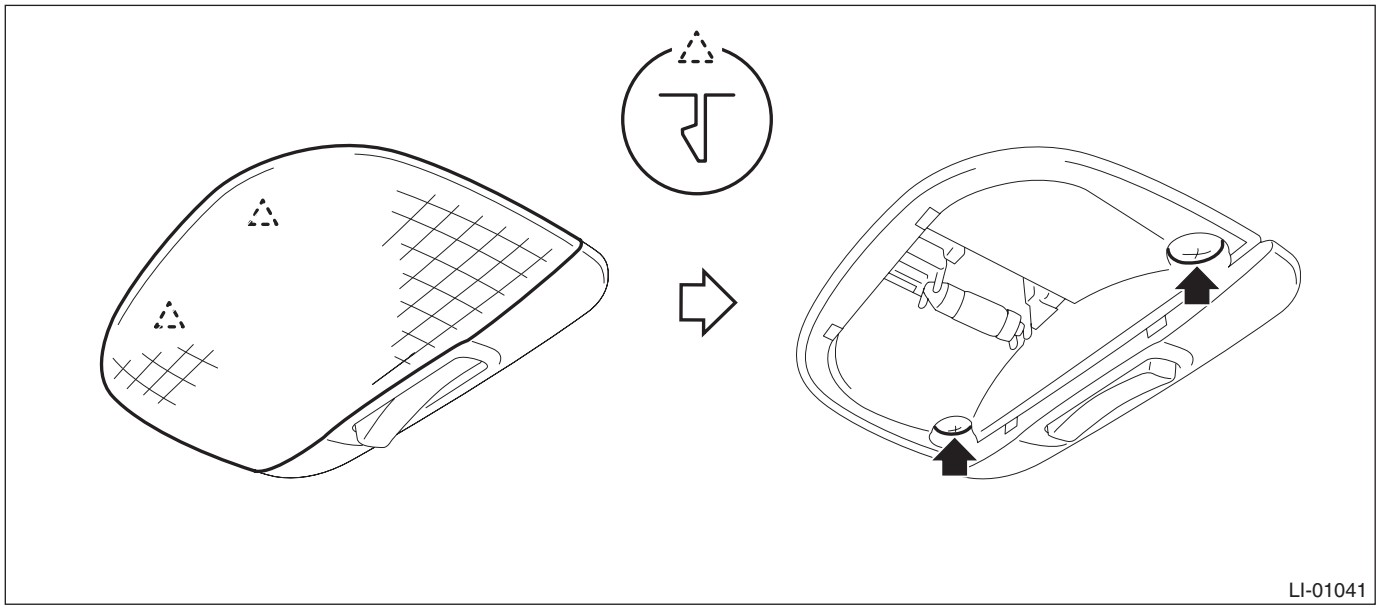

(3) Disconnect the connector and remove the room light assembly.

20) Remove all assist grip assembly.
(1) Remove the cap (a).
(2) Pull the assist grip toward you (to the vehicle center) and remove the metal clip from the bracket.

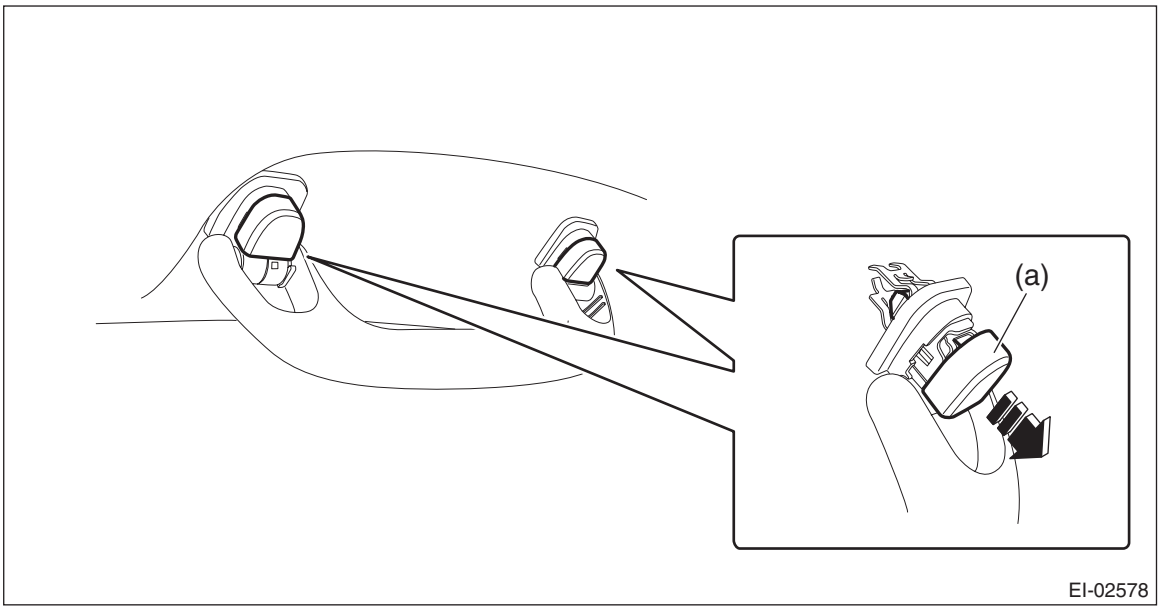

21) Remove the sun roof garnish. (model with sunroof)

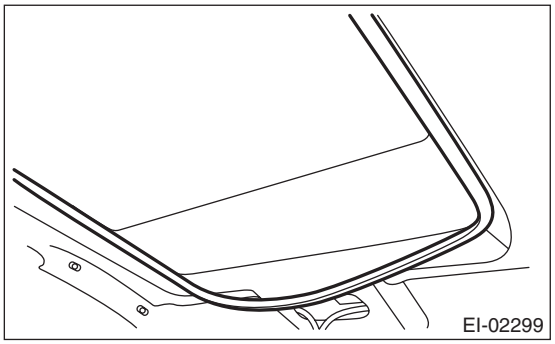

22) Disconnect the roof harness connector at the front pillar RH.
23) Remove the roof trim assembly.
(1) Remove the clips, and then remove the roof trim.
(2) Remove the feeder cord and roof cord from the roof trim.

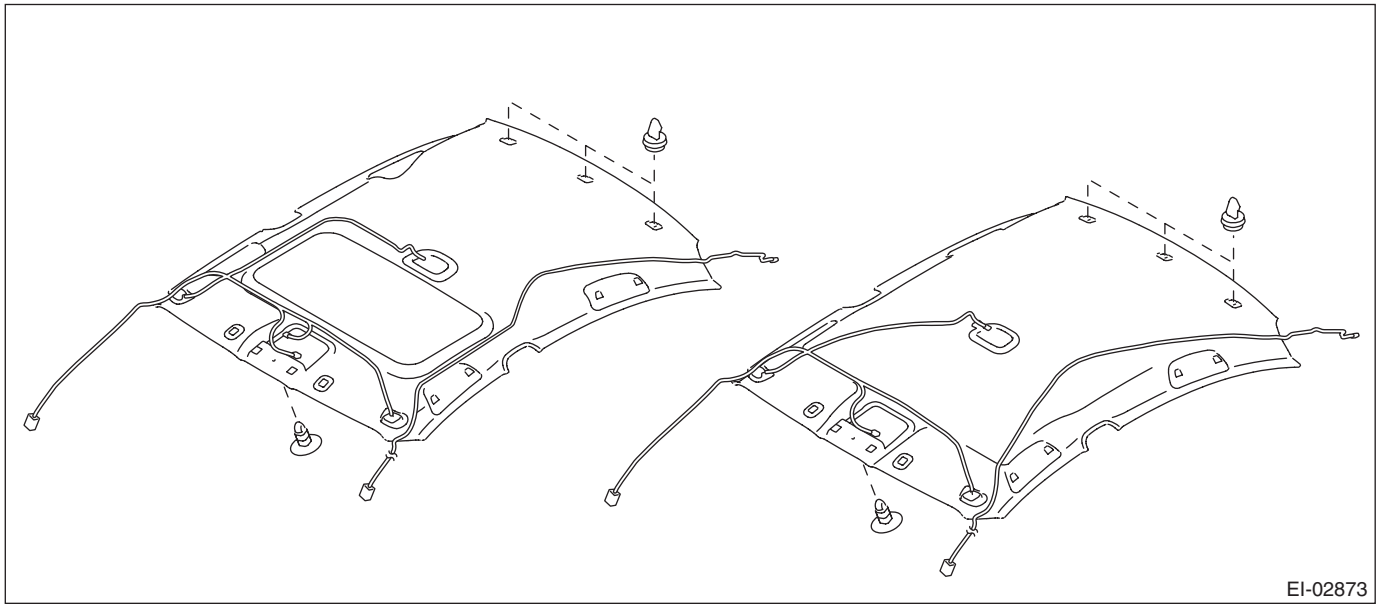

(3) Take out the roof trim assembly from inside the vehicle.
a) Align the center pillar (A) of roof trim with a corner (B) of the driver's seat and turn the roof trim obliquely.

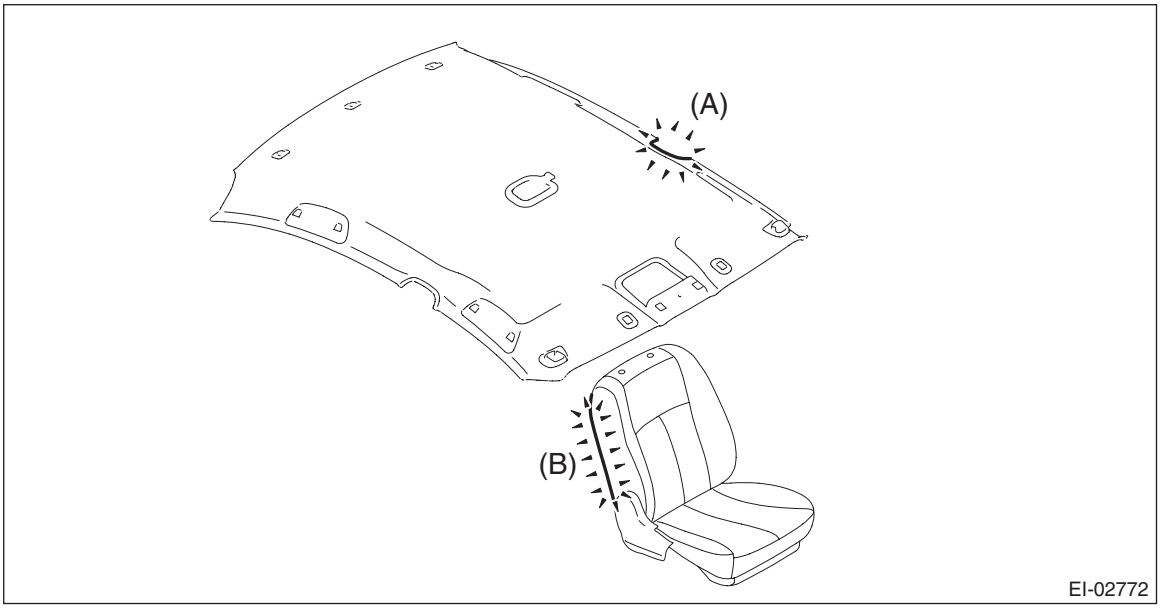

b) While holding the roof trim assembly in the condition in step a), take it out from the driver's side rear door opening.

2. OUTBACK MODEL

1) Disconnect the ground cable from battery and wait for at least 60 seconds before starting work.

CAUTION:
The airbag system is fitted with a backup power supply. After disconnecting the battery ground cable, the airbag may operate if you do not wait for 60 seconds before starting the service of airbag system.

2) Remove the rear seat cushion assembly.
(1) Pull up the seat cushion and release the hook.

CAUTION:
If the hook is disconnected from the vehicle body, replace the hook with the new part to prevent the decline of the fixed force of the seat.

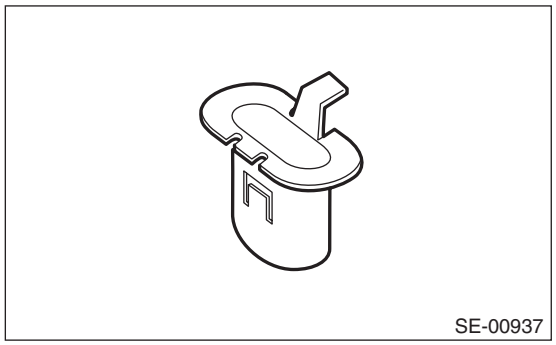
SE-00937

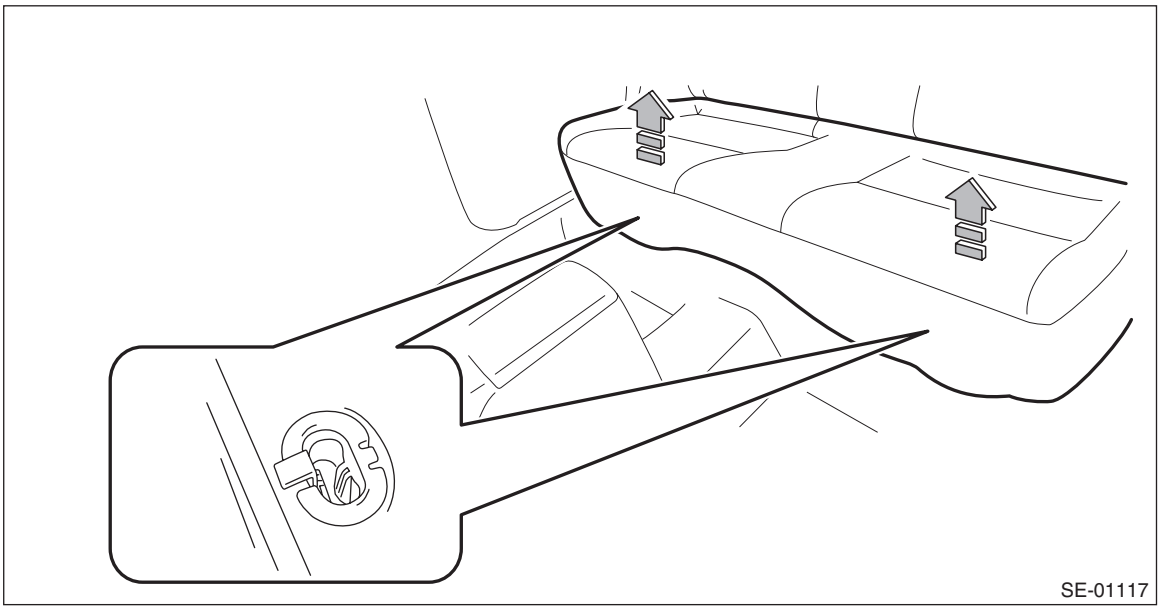
SE-01117

(2) Remove the hook (A) by pushing it back while lifting the front side of the seat cushion, and remove the seat cushion.

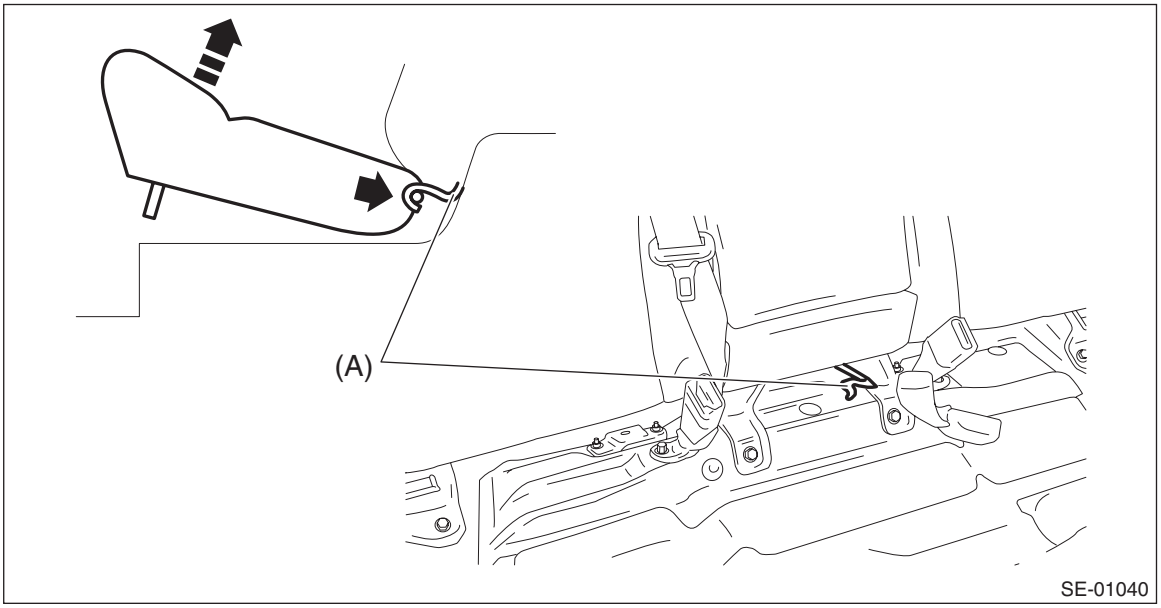

SE-01040

3) Release the clips and claws, and then remove the left and right side sill covers-rear INN.

CAUTION:
Do not pull with excessive force. Doing so may damage the claws of the side sill cover INN.

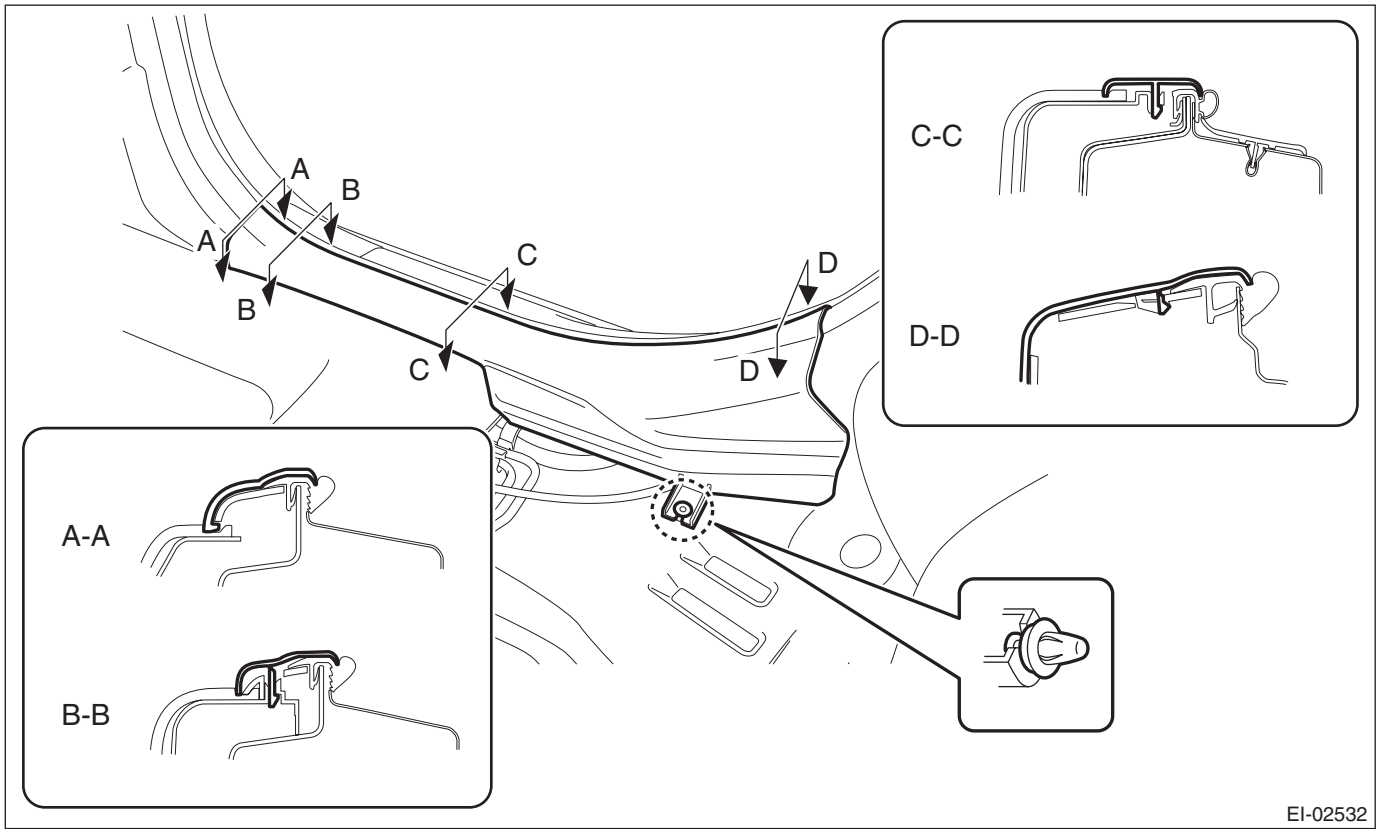

NOTE:
To release the claws of the side sill cover INN, the following steps are recommended.
1. Take out the weather strip from under the side sill cover INN.
2. Turn over the floor mat and release the claw (C-C and D-D) by accessing from behind the side sill cover INN.

4) Tilt the backrest forward and release the clips of the backrest backside mat.

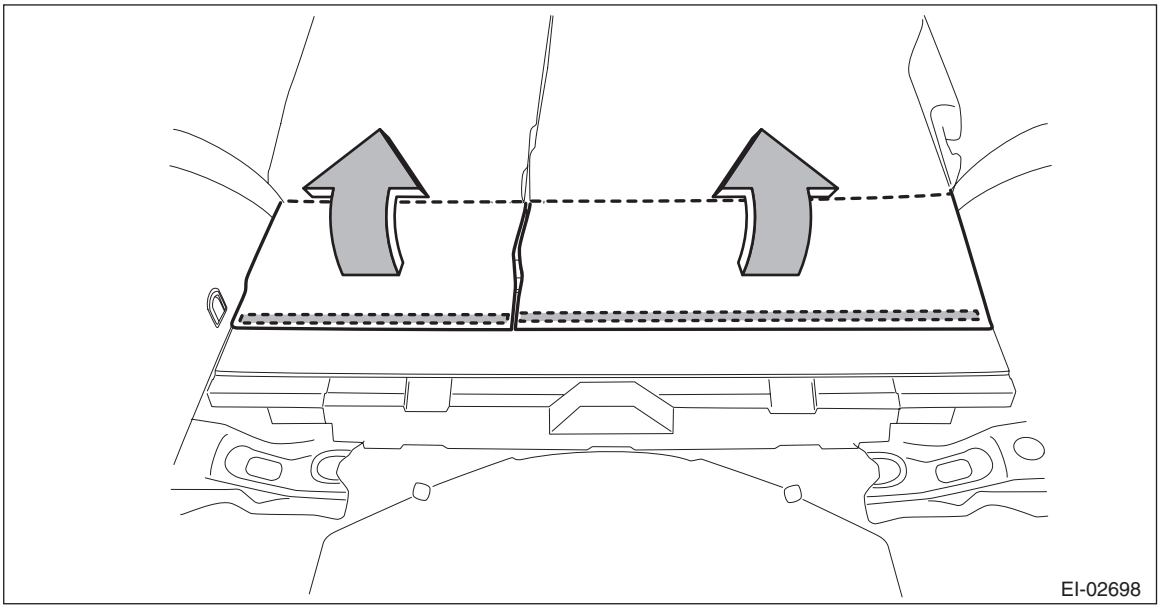

5) Remove the left and right backrest side pad assembly. (On the side where airbag sensor is removed)
(1) Disconnect the backrest cable and reclining lever cable.
(2) Remove the screws and remove the reclining lever assembly by pulling it downward.

Preparation tool: Stubby screwdriver

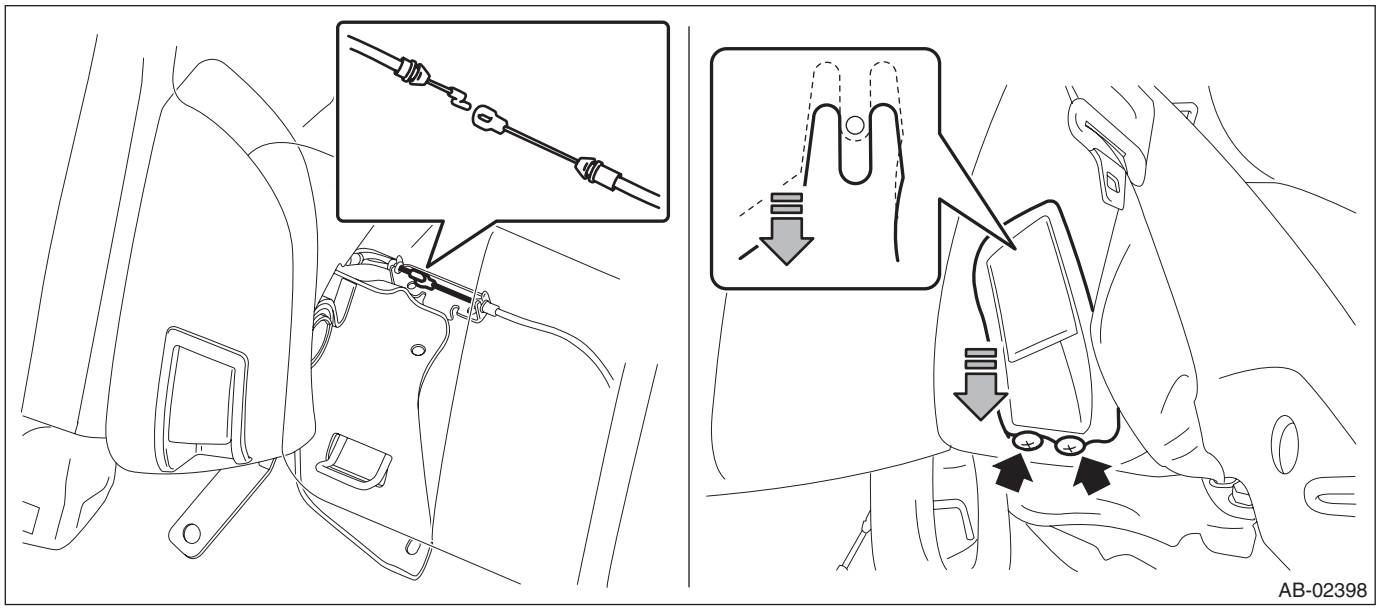

(3) Turn over the bottom end of the backrest side pad in the forward direction so that the claws are released.
(4) Remove the backrest side pad by pulling it up.

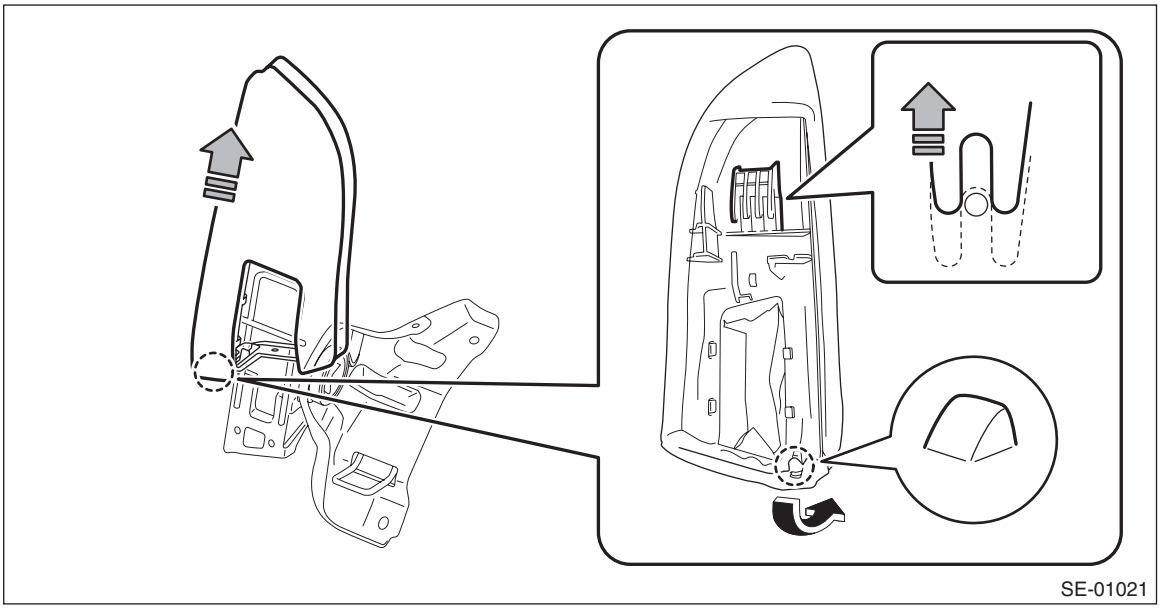

6) Remove the clips, and remove the luggage floor box and rear floor edge cover.

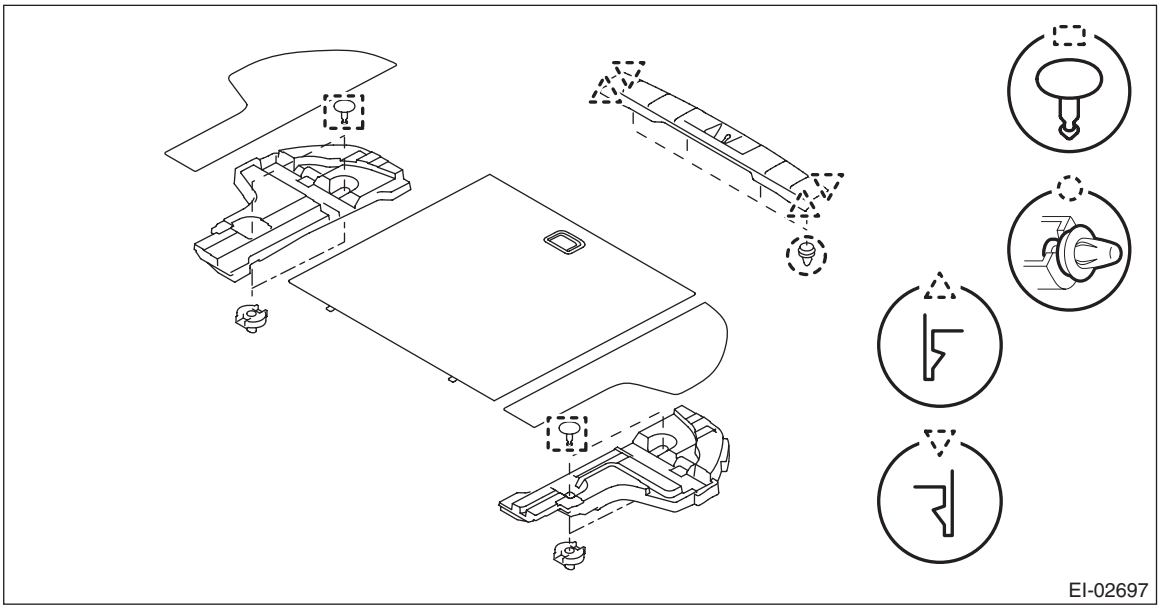

7) Remove the left and right rear quarter trim LWR.
   (1) Remove the caps, screws, and bolts. (A), (C)
   (2) Take out the hook and remove the screw inside. (B)
   (3) Remove the clips, and remove the rear quarter trim LWR.

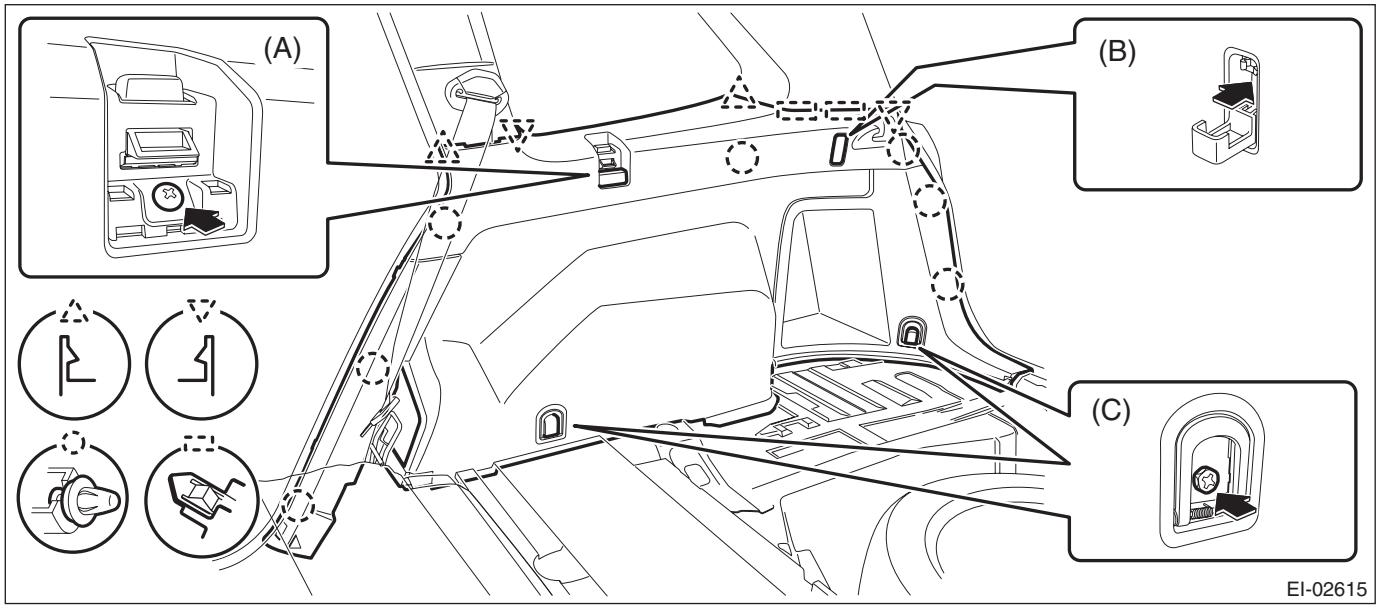

8) Remove the left and right rear quarter trim UPR.
(1) Open the cap and remove the bolt to remove the seat belt anchor.
(2) Remove the clips, and remove the rear quarter trim UPR-front.
(3) Remove the clips, and remove the rear quarter trim UPR-rear.

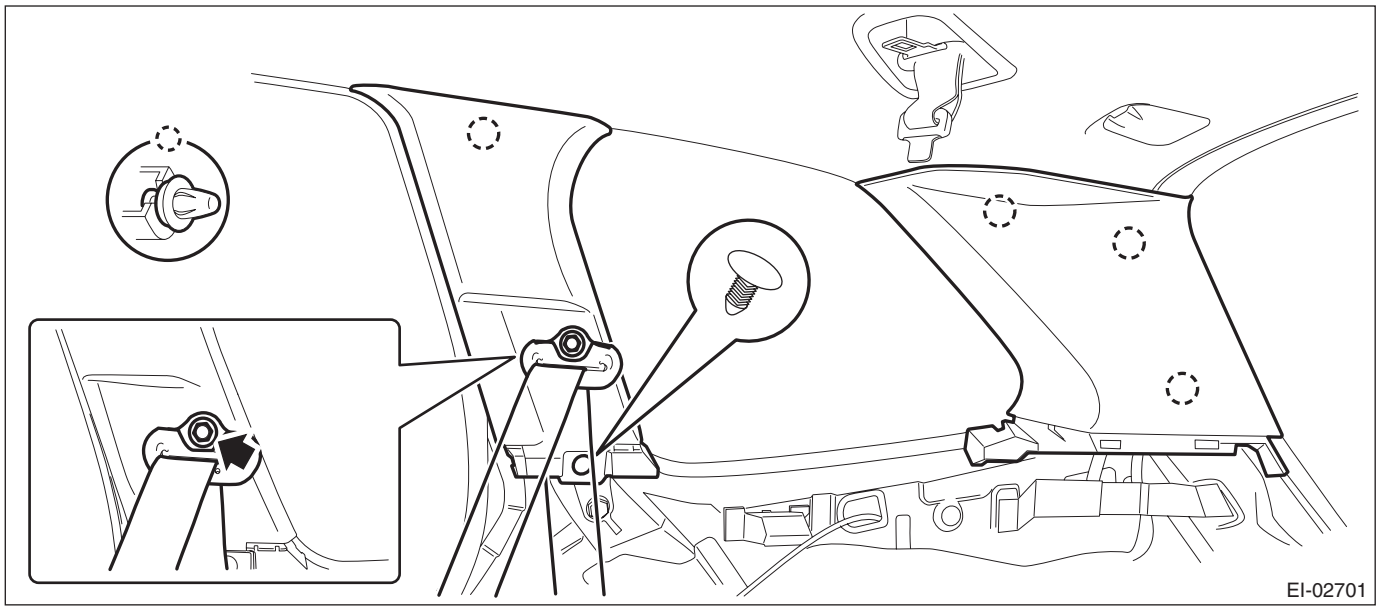

9) Remove the left and right front pillar trims.
(1) Pull the upper part of the front pillar trim towards the center of the vehicle.
(2) Insert long-nose pliers into the top part of the trim, grip the clip with the pliers and twist 90° in that position.

CAUTION:
Be careful not to damage the pillar trim surface and curtain airbag module when inserting the pliers.
(3) Holding the clip twisted as in the previous step, remove the front pillar trim from the clip.
(4) Remove the clip and the front pillar trim.

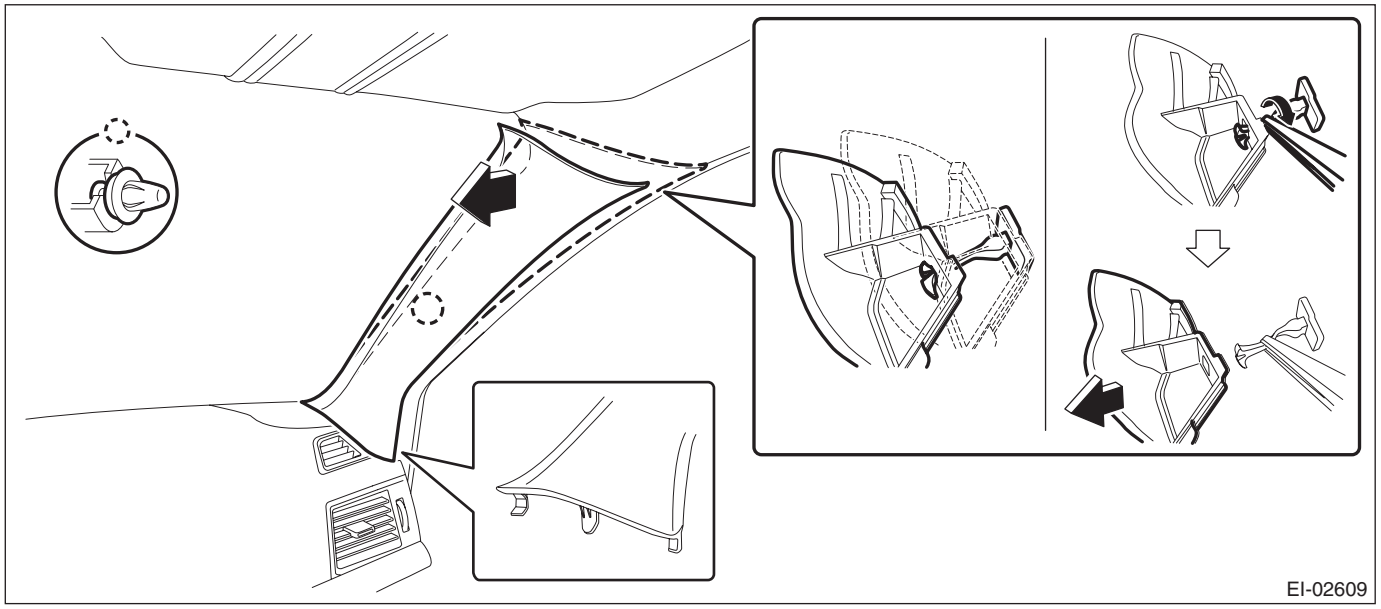

10) Release the claws, and then remove the left and right side sill cover-front INN.

CAUTION:
Do not pull with excessive force. Doing so may damage the claws of the side sill cover INN.

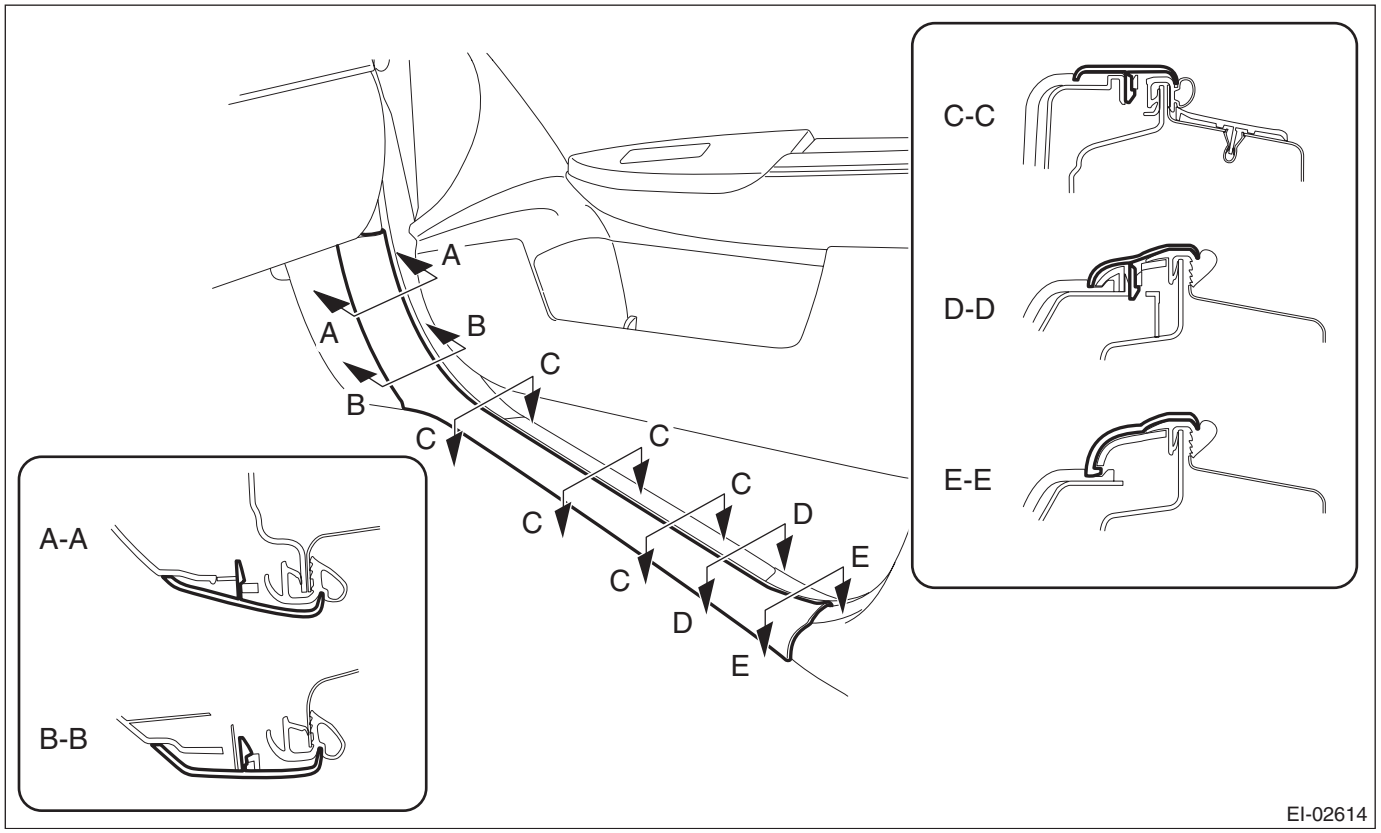

NOTE:
To release the claws of the side sill cover INN, the following steps are recommended.
1. Take out the weather strip from under the side sill cover INN.
2. Turn over the floor mat and release the claw (C-C) by accessing from behind the side sill cover INN.

11) Remove the left and right center pillar trim LWR.
(1) Release the clip by pulling the center pillar trim LWR toward you.
(2) Expand the claws of center pillar trim LWR outward and remove it from the center pillar trim UPR.

CAUTION:
Do not expand the center pillar trim LWR excessively. Doing so may damage the trim.

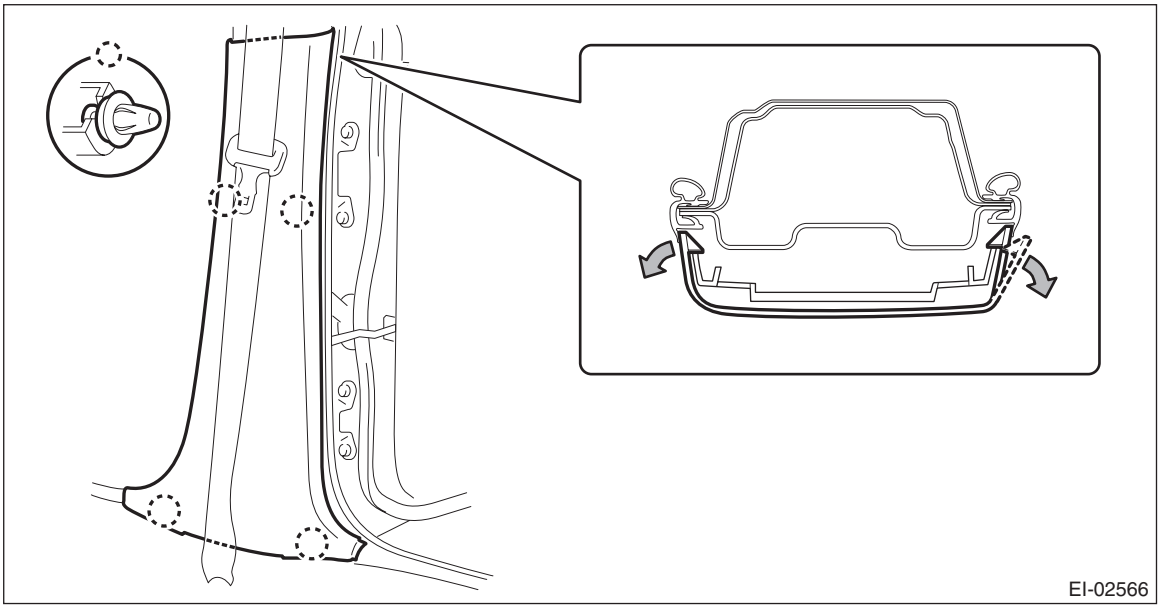

NOTE:
First release the claw located to the rear of the vehicle.
12) Remove the center pillar trim UPR.
(1) Remove the seat belt lower anchor bolt.

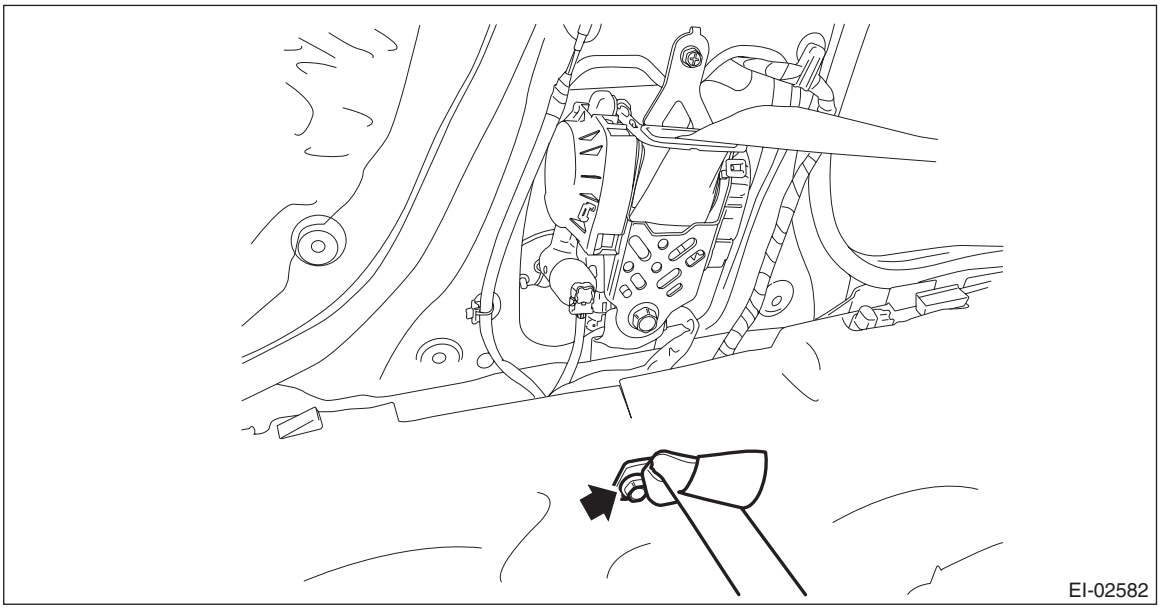

(2) Release the clip by pulling the center pillar trim UPR toward you.

(3) Remove the center pillar trim UPR by lowering the entire trim.

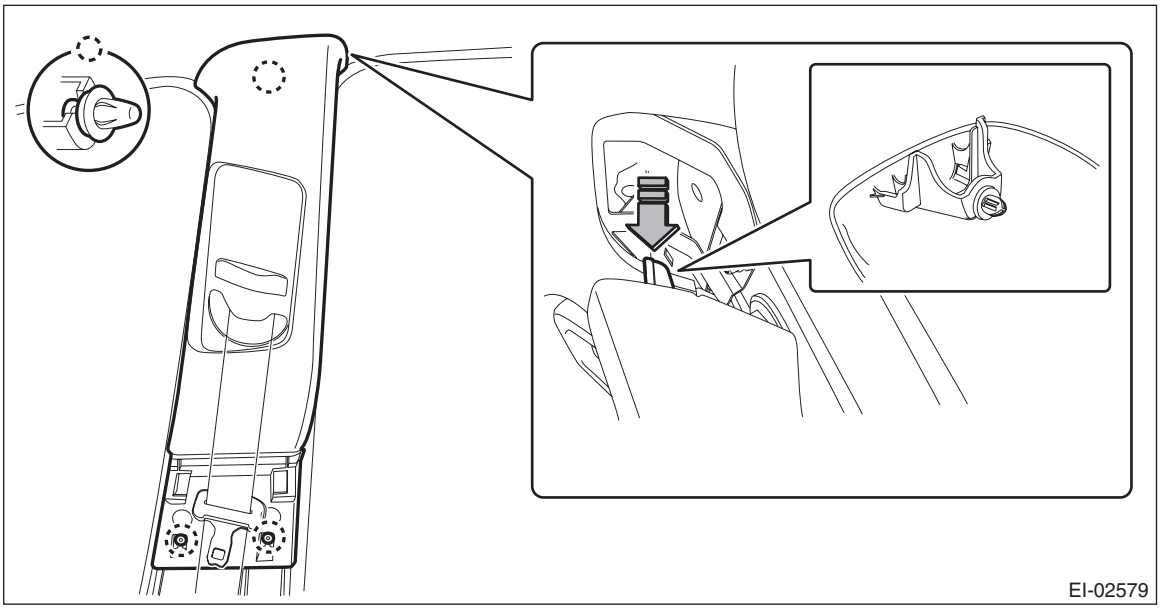

(4) Pull out the seat belt and remove the center pillar trim UPR.

13) Remove the overhead console assembly.
(1) Push and open the rear end of the overhead console lid, and remove the screws.
(2) Disconnect the connector and remove the overhead console assembly.

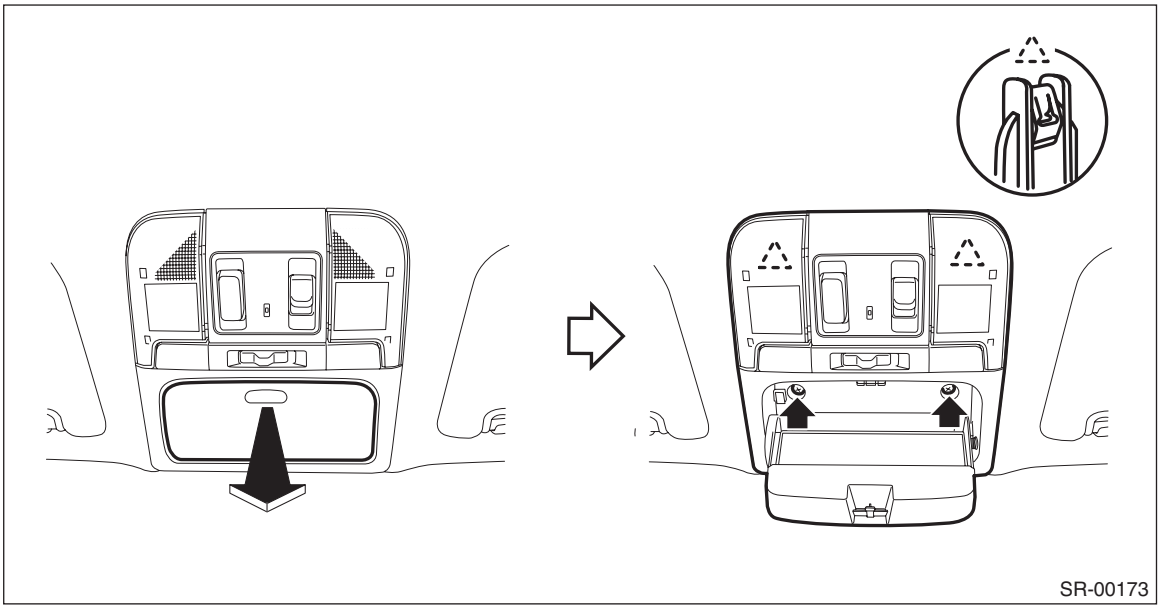

14) Remove the left and right sun visor assembly.
(1) Remove the cover, loosen the screws, and remove the sun visor assembly.
(2) Press the both sides of the sun visor hook using a flat tip screwdriver.
(3) Remove the sun visor hook by pulling toward you.

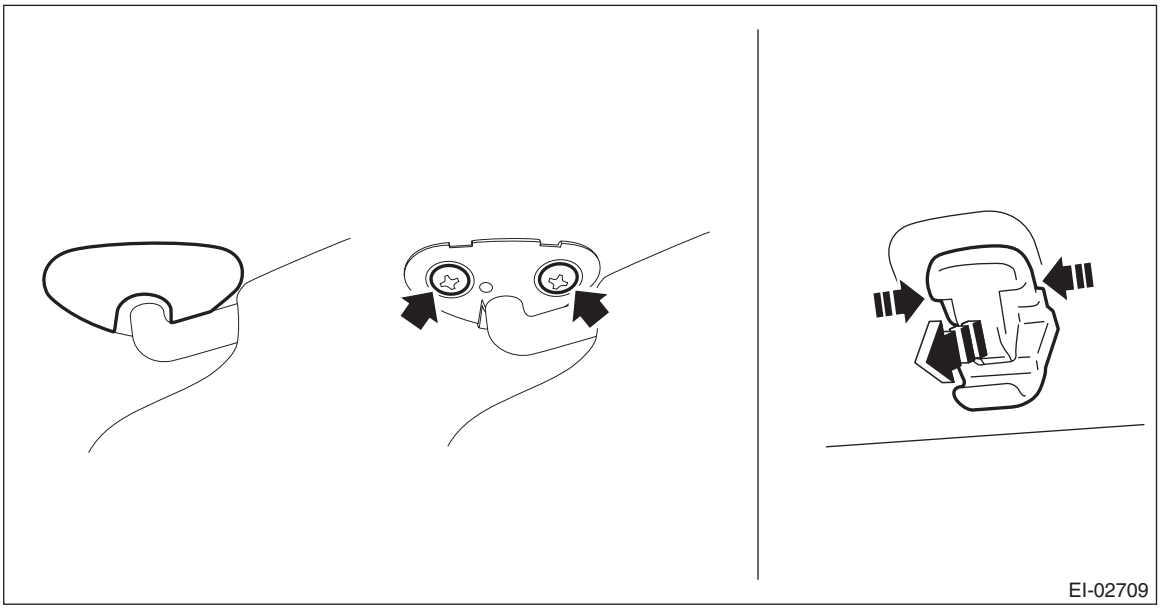

15) Remove the room light assembly.
(1) Release the claws and remove the cover.
(2) Remove the two screws.

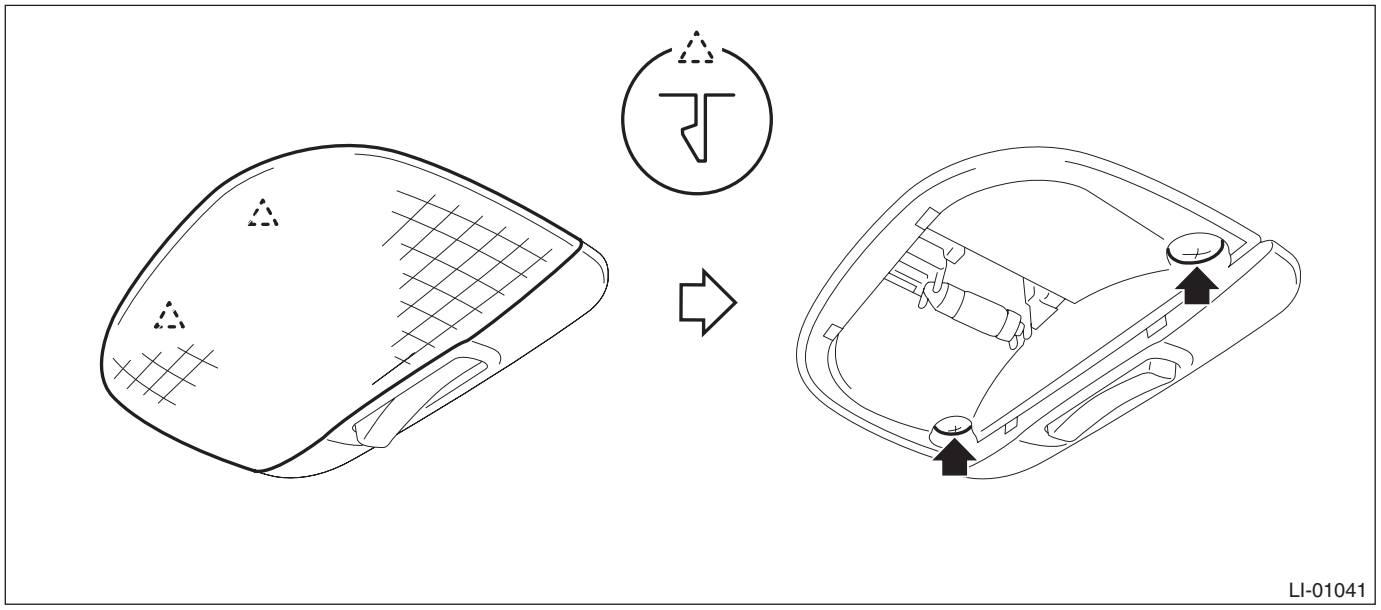

(3) Disconnect the connector and remove the room light assembly.

16) Remove the luggage light.
(1) Release the claws and remove the luggage room light main body.
(2) Disconnect the connector and remove the luggage room light.

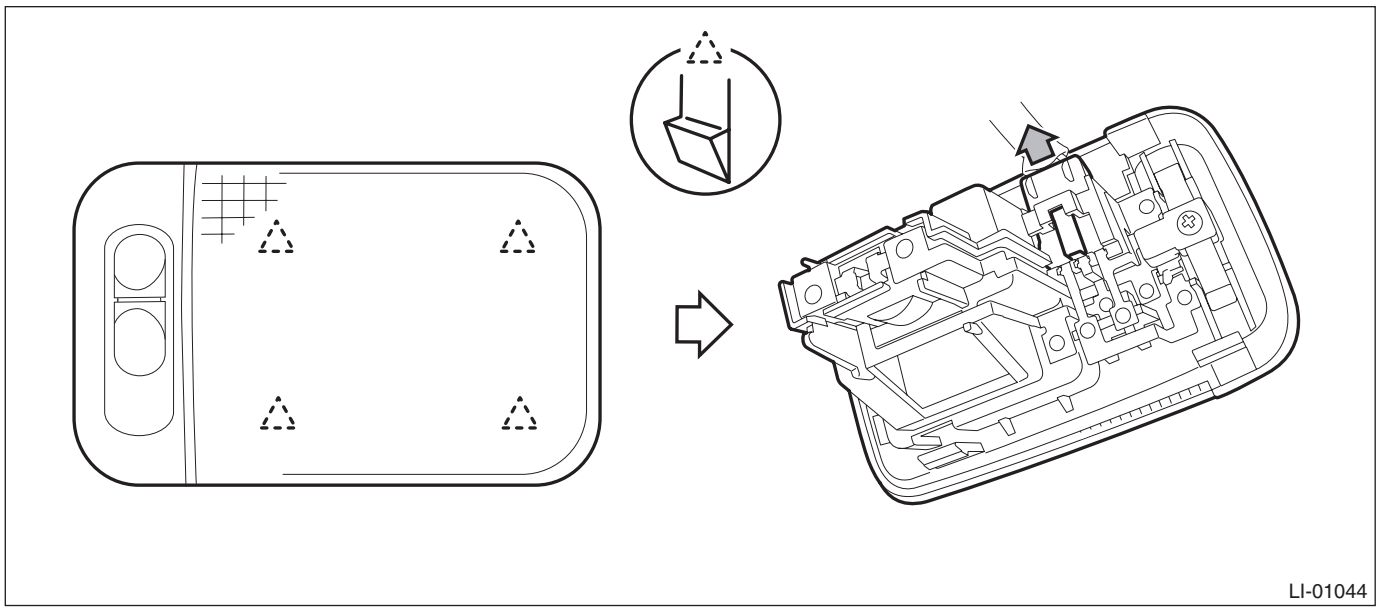

17) Remove all assist grip assembly.
(1) Remove the cap (a).
(2) Pull the assist grip toward you (to the vehicle center) and remove the metal clip from the bracket.

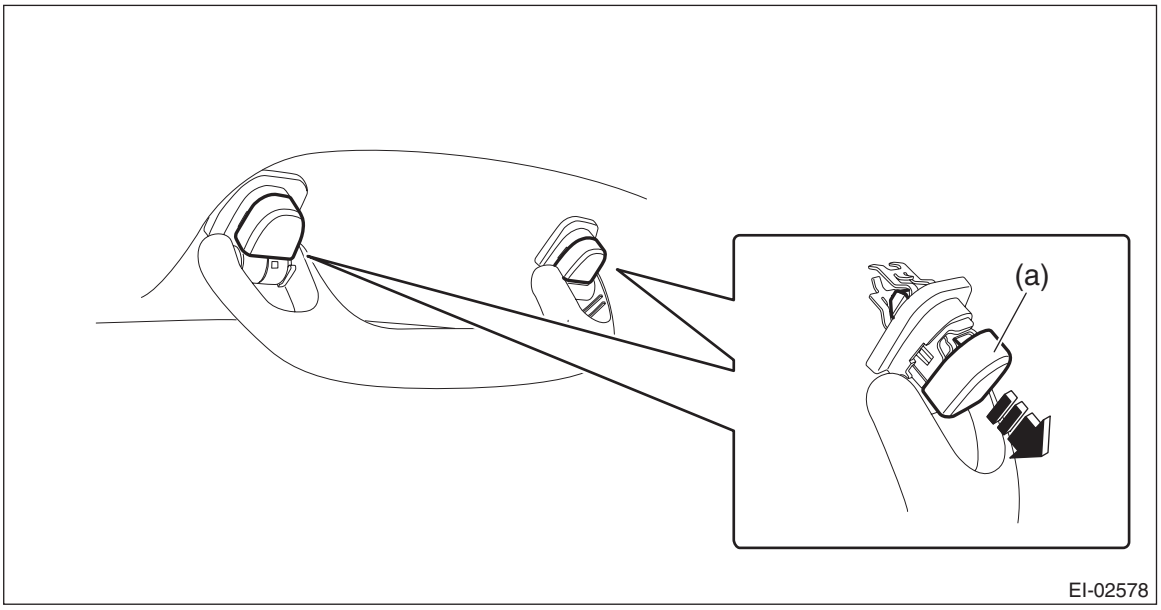

18) Remove the sun roof garnish. (model with sunroof)

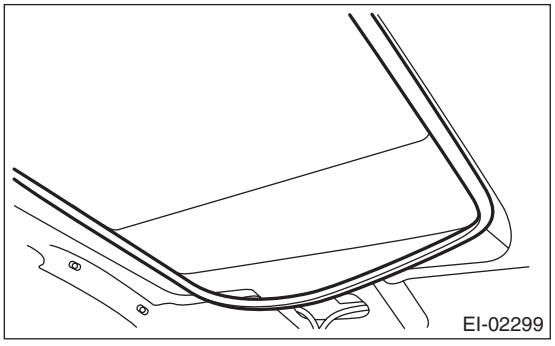

19) Disconnect the roof harness connector at the front pillar RH.
20) Remove the roof trim assembly.
(1) Release the clips and remove the feeder cord and roof cord from the roof trim.
(2) Take out the roof trim assembly from the rear gate opening to outside.

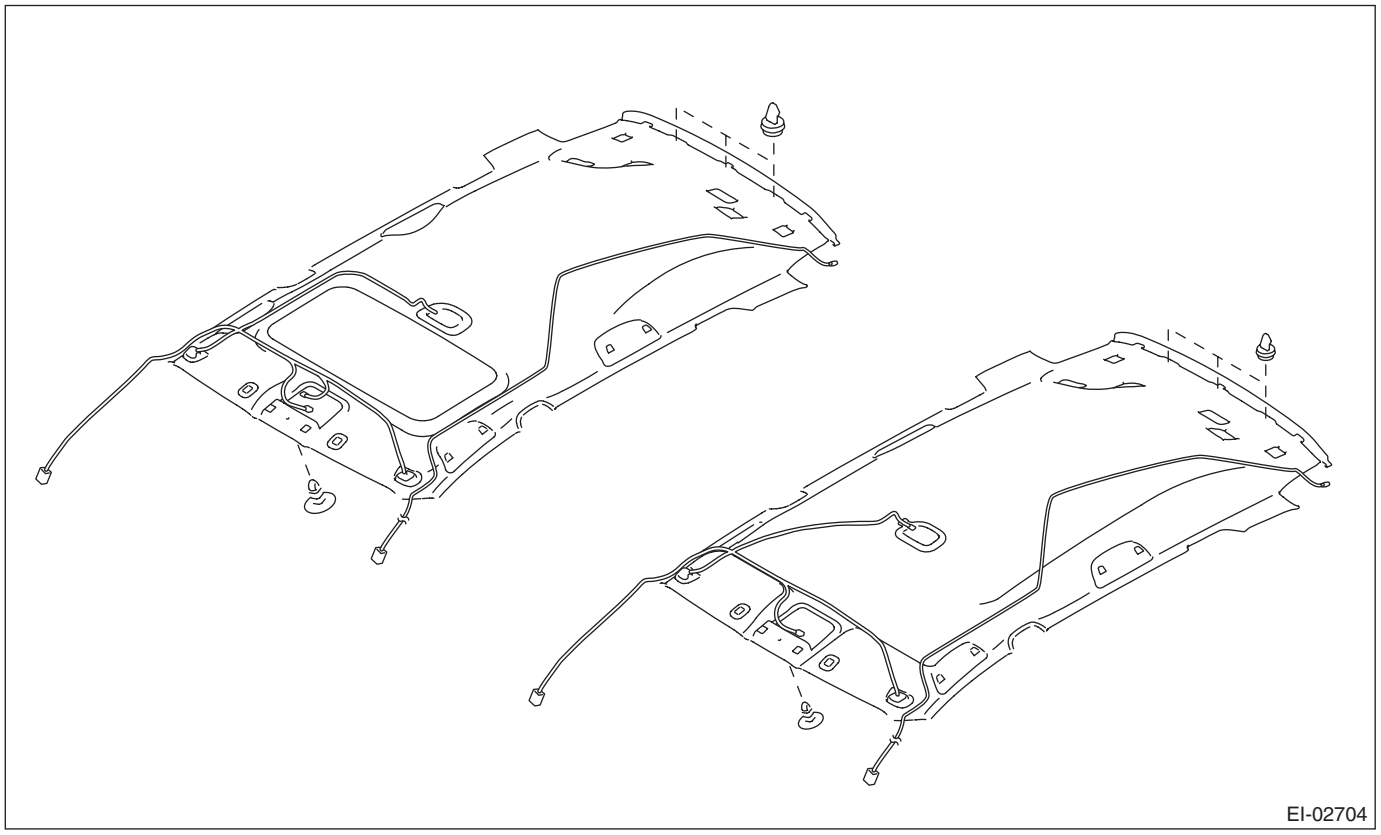

B: INSTALLATION

1) Attach the feeder cord and roof cord to the roof trim.

CAUTION:
Route each cord carefully. The cord may interfere, thus preventing normal deployment of the curtain airbag when necessary.

Tape:
Item number: 86359SC000/TAPE

NOTE:
Use the tape (service parts) by cutting into 80 mm × 50 mm (3.2 in × 2.0 in).

- Sedan model

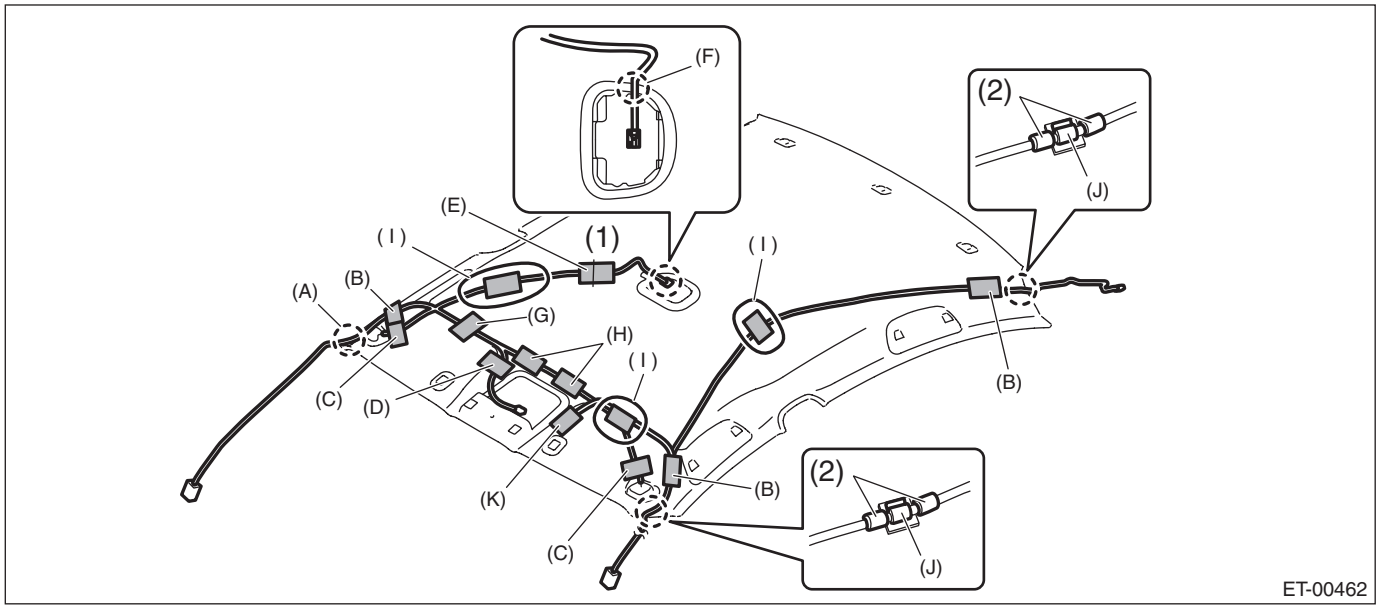

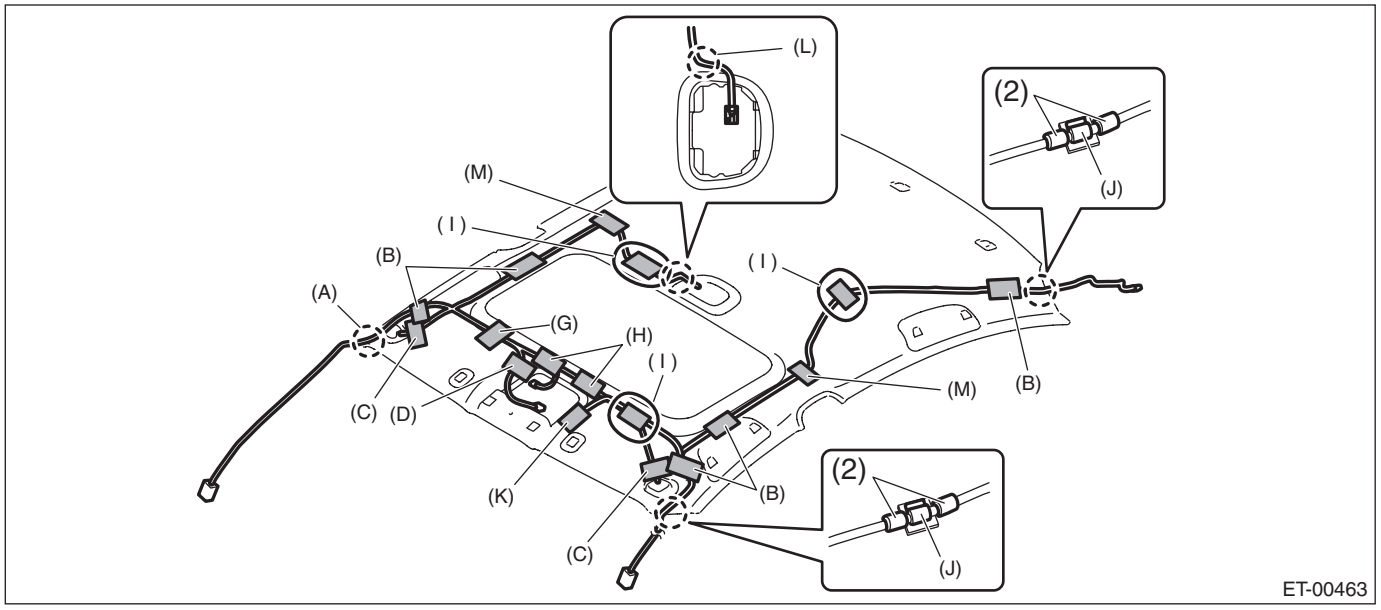

(1) Mark-off line

(2) Polyurethane tape

(A) Align the marking (white) center of cord with the clamp to secure.

(B) Affix with tape while avoiding the assist grip surface.

(C) Adjust the excess cord to 60±10 mm (2.4±0.4 in) from the hole edge, and affix with tape.

(D) Affix right after the cord branching point with tape.

(E) Affix with tape while aligning with the mark-off line.

(F) Place the marking (white) cord center to adjust the excess.

(G) Align with the center of sun visor, and affix with tape.

(H) Affix the rear left and right of the hole with tape.

(I) Adjust the excess cord at (I) position and affix with tape.

(J) Place the clamp between the polyurethane tapes (2) to secure.

(K) Affix the prewire connector with tape.

(L) Pass the marking (white) of cord under the clamp.

(M) Affix the cord at the pad rear end with tape.

- OUTBACK model

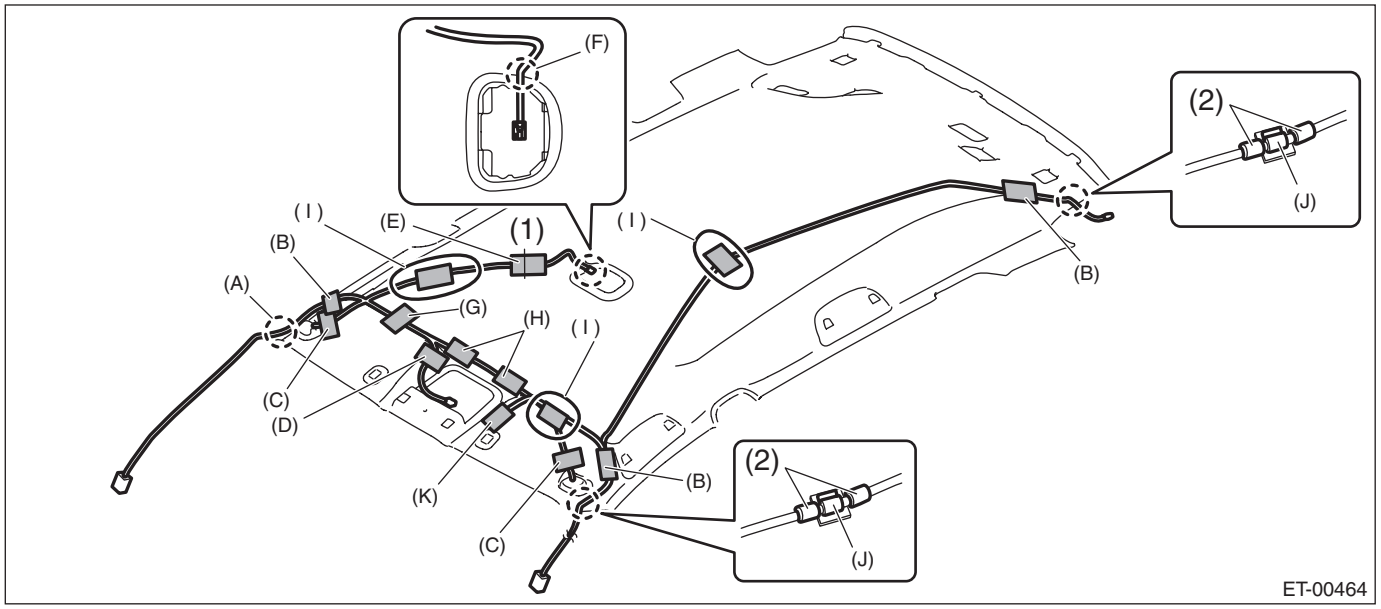

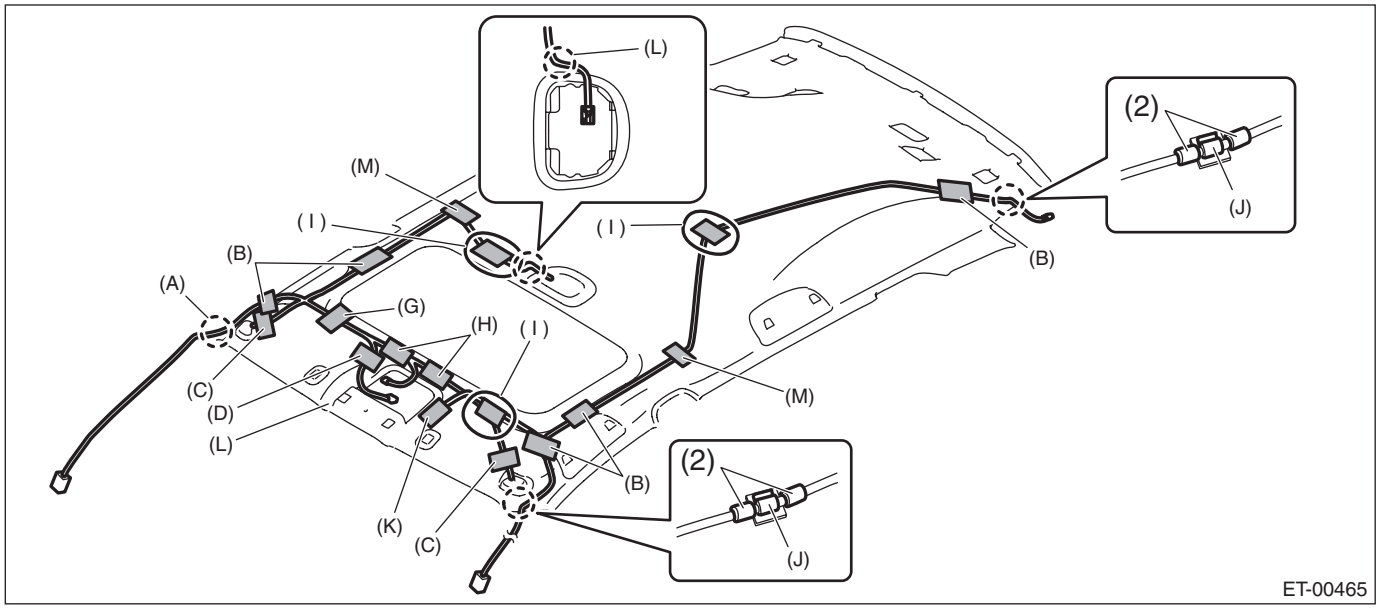

(1) Mark-off line

(2) Polyurethane tape

(A) Align the marking (white) center of cord with the clamp to secure.

(B) Affix with tape while avoiding the assist grip surface.

(C) Adjust the excess cord to 60±10 mm (2.4±0.4 in) from the hole edge, and affix with tape.

(D) Affix right after the cord branching point with tape.

(E) Affix with tape while aligning with the mark-off line.

(F) Place the marking (white) cord center to adjust the excess.

(G) Align with the center of sun visor, and affix with tape.

(H) Affix the rear left and right of the hole with tape.

(I) Adjust the excess cord at (I) position and affix with tape.

(J) Place the clamp between the polyurethane tapes (2) to secure.

(K) Affix the prewire connector with tape.

(L) Pass the marking (white) of cord under the clamp.

(M) Affix the cord at the pad rear end with tape.

2) Install each part in the reverse order of removal.

CAUTION:
If the hook is disconnected from the vehicle body, replace the hook with the new part to prevent the decline of the fixed force of the seat.

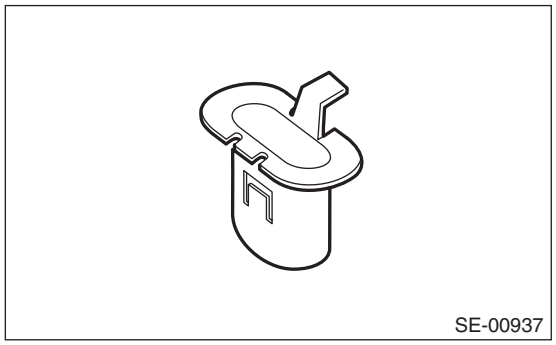
SE-00937

28.Rear Gate Trim

A: REMOVAL

1) Remove the rear gate upper trim.
   (1) Remove the claws on the trim edge.
   (2) Disconnect the claws in the center of trim, and remove the rear gate upper trim.

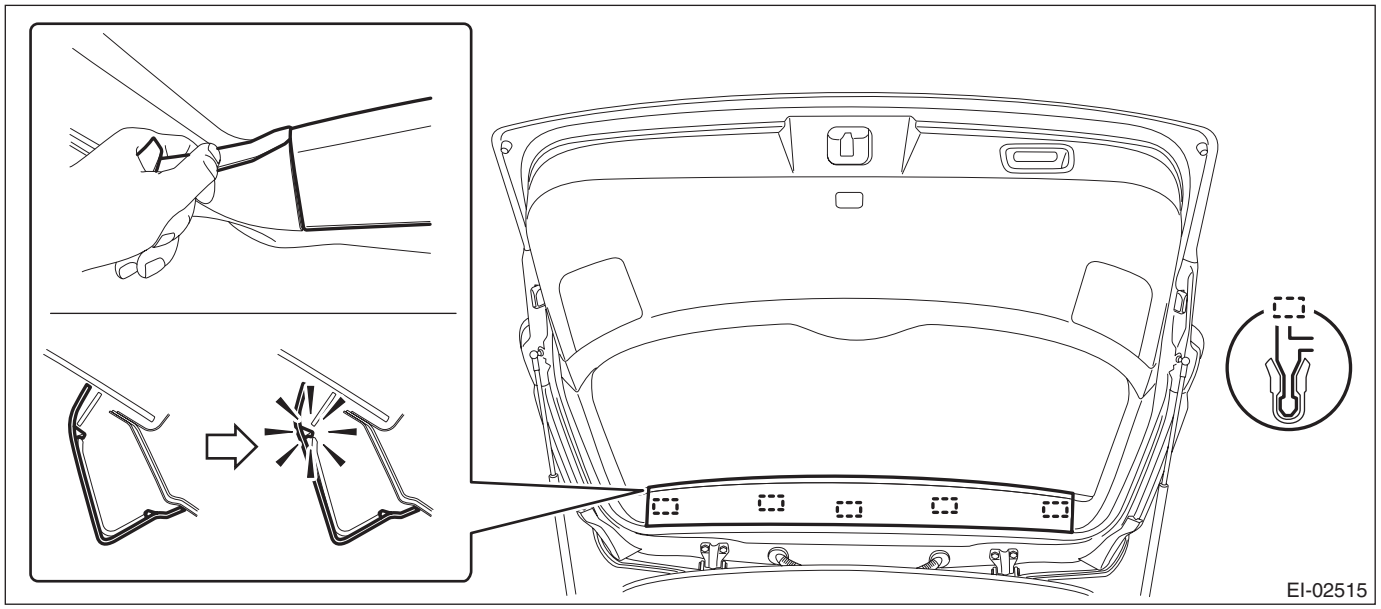

2) Remove the rear gate pillar trim.
   (1) Release the claws.
   (2) Remove the claws on the bottom of trim, and remove the rear gate pillar trim.

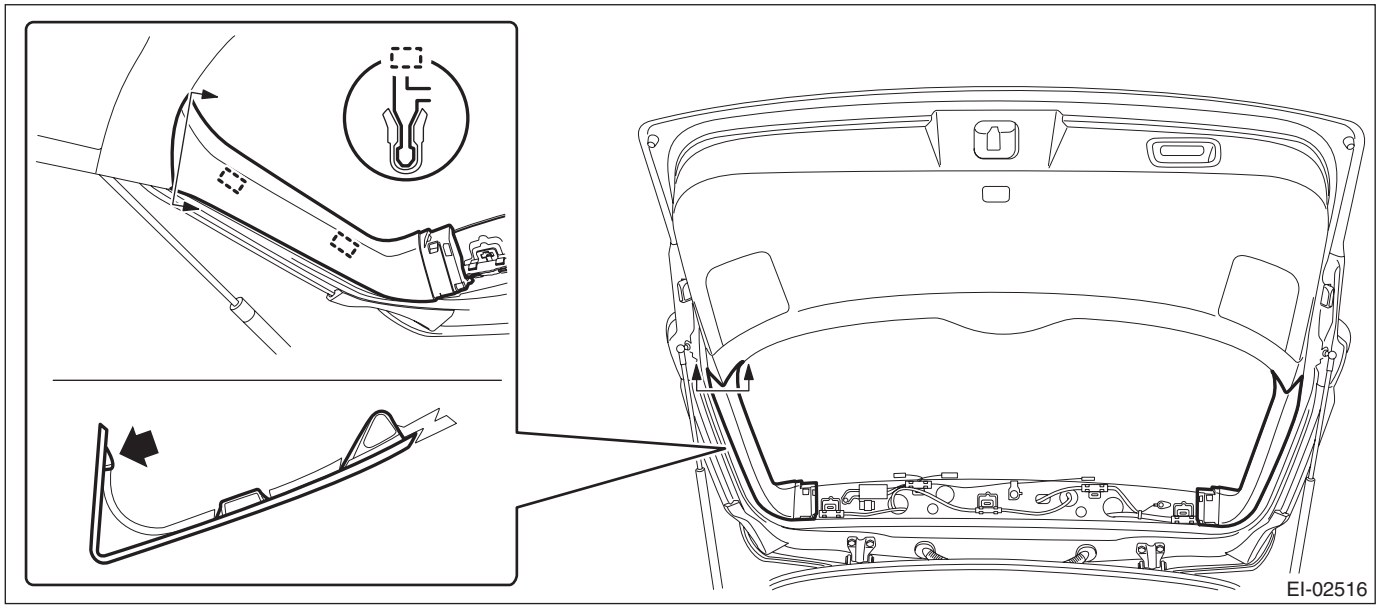

3) Remove the hand grip of rear gate.

CAUTION:
- **Be careful not to scratch the trim.**
- **To protect the trim from damage, attach a protective tape to the tool in use.**

(1) Insert a precision screwdriver (a).
(2) With the precision screwdriver inserted, push down the claw to disengage and pull it toward yourself.
(3) Remove the screws and detach the hand grip.

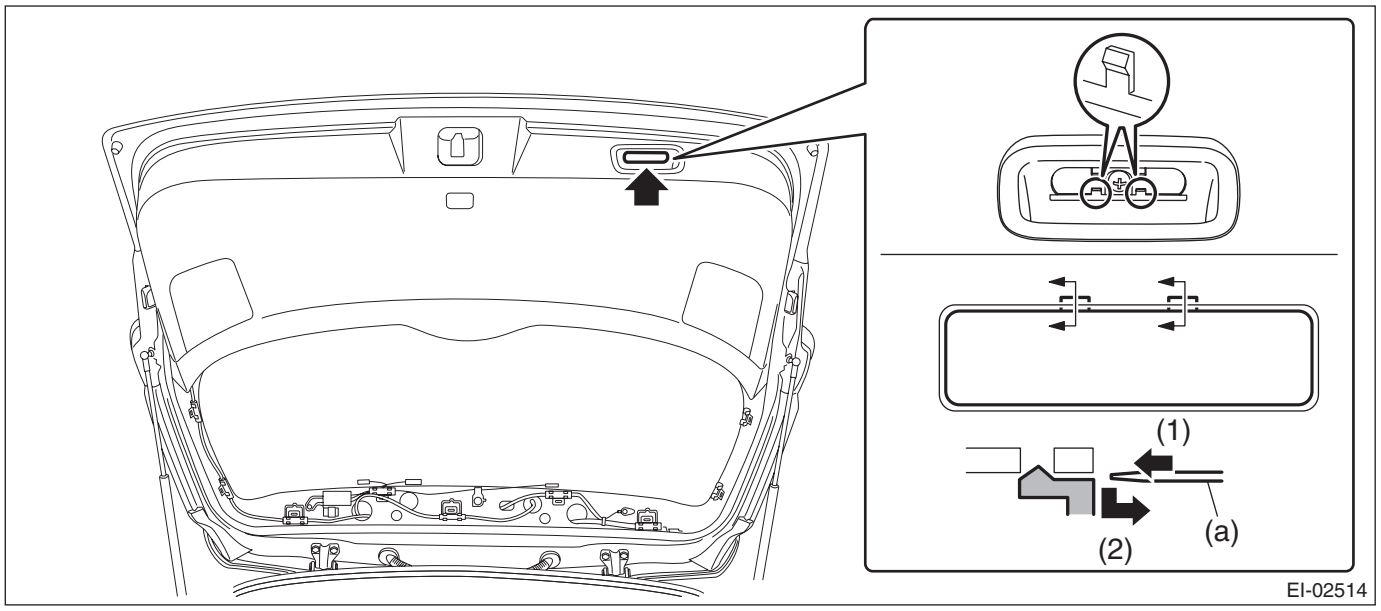

4) Remove the clips and rear gate lower trim.
(1) Remove the clips on both ends.
(2) Release the clips and remove the rear gate lower trim.

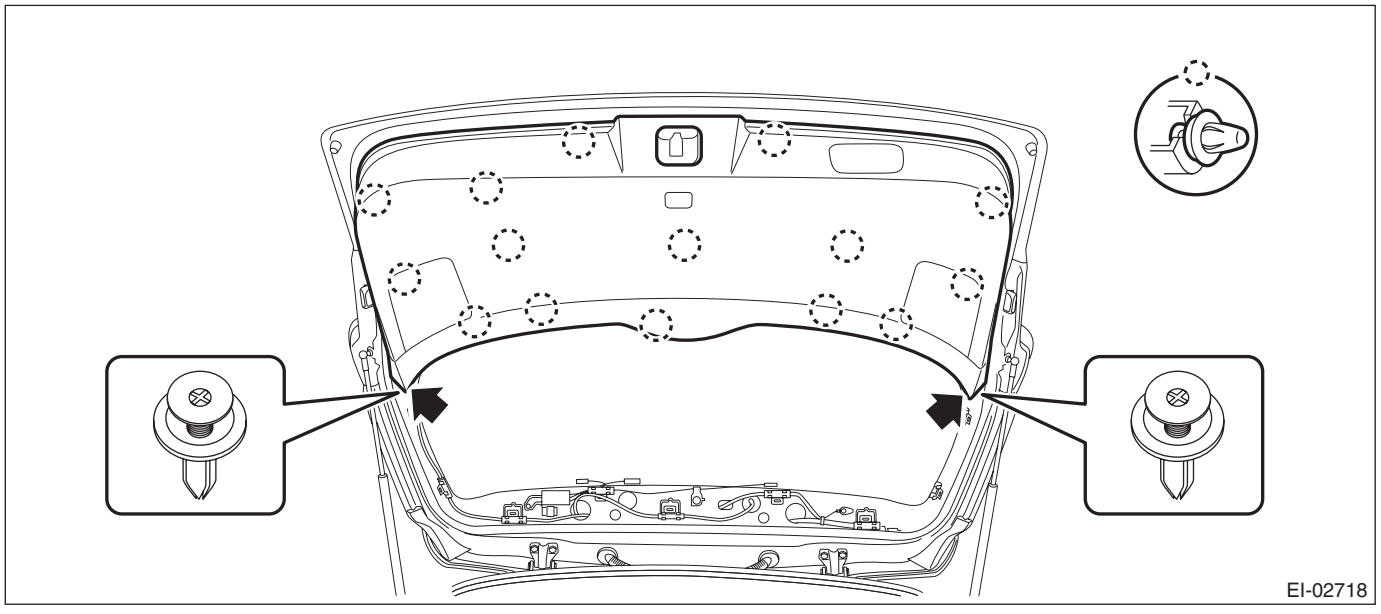

B: INSTALLATION

Install each part in the reverse order of removal.

29.Floor Mat

A: REMOVAL

1) Remove the front seat assembly. <Ref. to SE-10, REMOVAL, Front Seat.>
2) Remove the rear seat cushion assembly. <Ref. to SE-34, REMOVAL, Rear Seat.>
3) Remove the console box assembly. <Ref. to EI-73, REMOVAL, Console Box.>
4) Remove the console front side cover. <Ref. to EI-70, CONSOLE FRONT COVER, REMOVAL, Center Console.>
5) Remove the lower inner trim. <Ref. to EI-96, REMOVAL, Lower Inner Trim.>
6) Take out the floor mat from the vehicle.
   (1) Remove the clips from the floor mat.
   (2) Remove the mat hook on both sides.
   (3) Take out the floor mat after folding down.

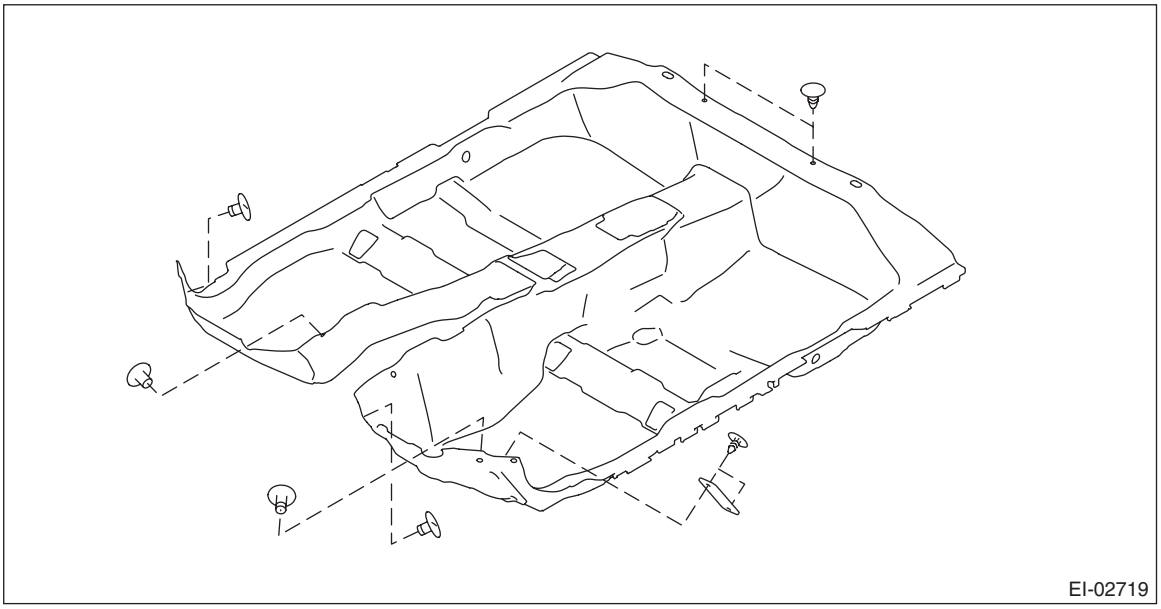

B: INSTALLATION

Install each part in the reverse order of removal.

NOTE:
Secure the mat firmly with hook and clip.

30.Trunk Lid Garnish

A: REMOVAL

1) Remove the trunk lid trim.
   (1) Remove the trunk handle.
   (2) Remove the clips and the trunk lid trim.

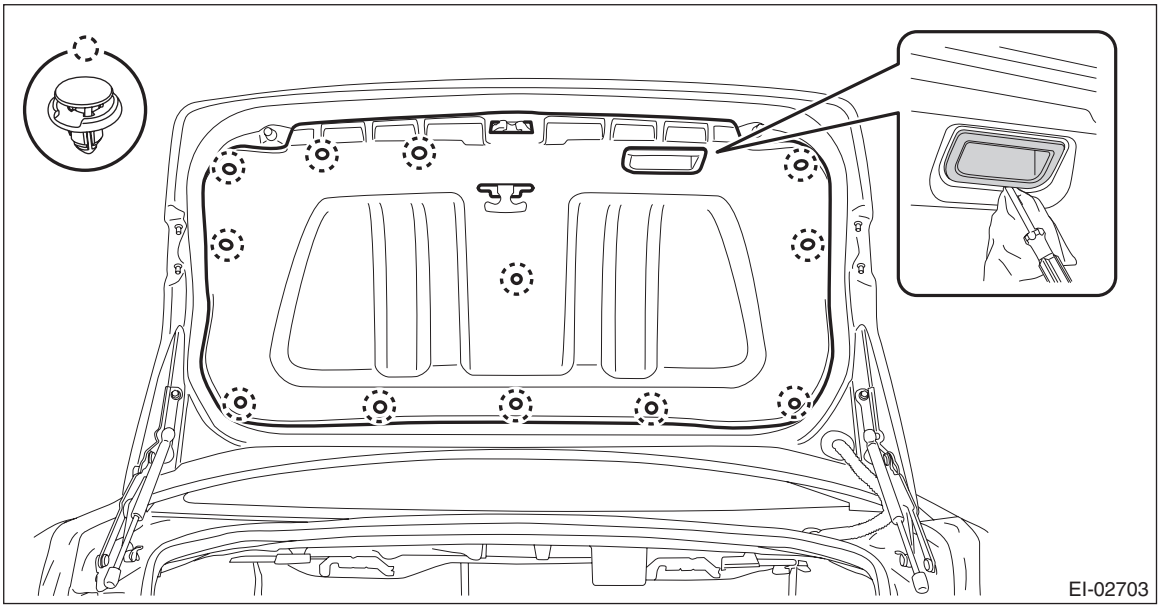

2) Remove the trunk lid garnish.
   (1) Remove the nuts.
   (2) Remove the clips and the trunk lid garnish.

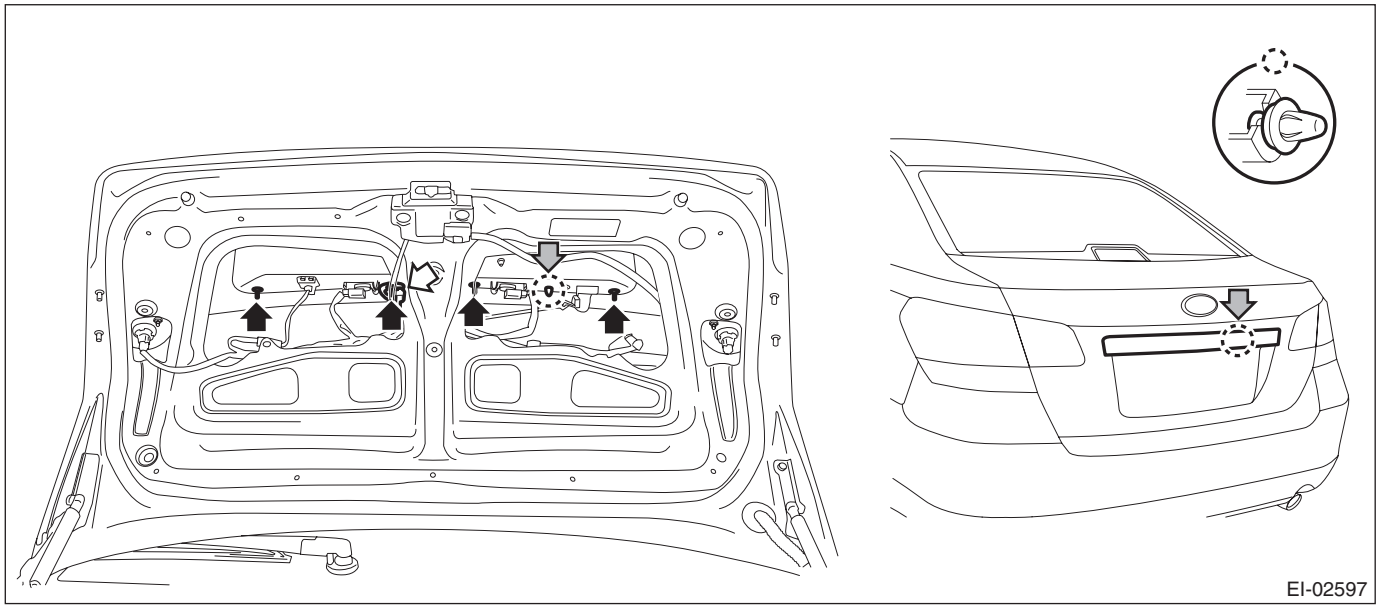

B: INSTALLATION

Install each part in the reverse order of removal.

Tightening torque:
4.5 N·m (0.46 kgf-m, 3.3 ft-lb)

31.Rear Gate Garnish

A: REMOVAL

1) Disconnect the ground cable from battery.
2) Remove the rear gate trim.
   (1) Remove the rear gate upper trim.
      a) Remove the claws on the trim edge.
      b) Disconnect the claws in the center of trim, and remove the rear gate upper trim.

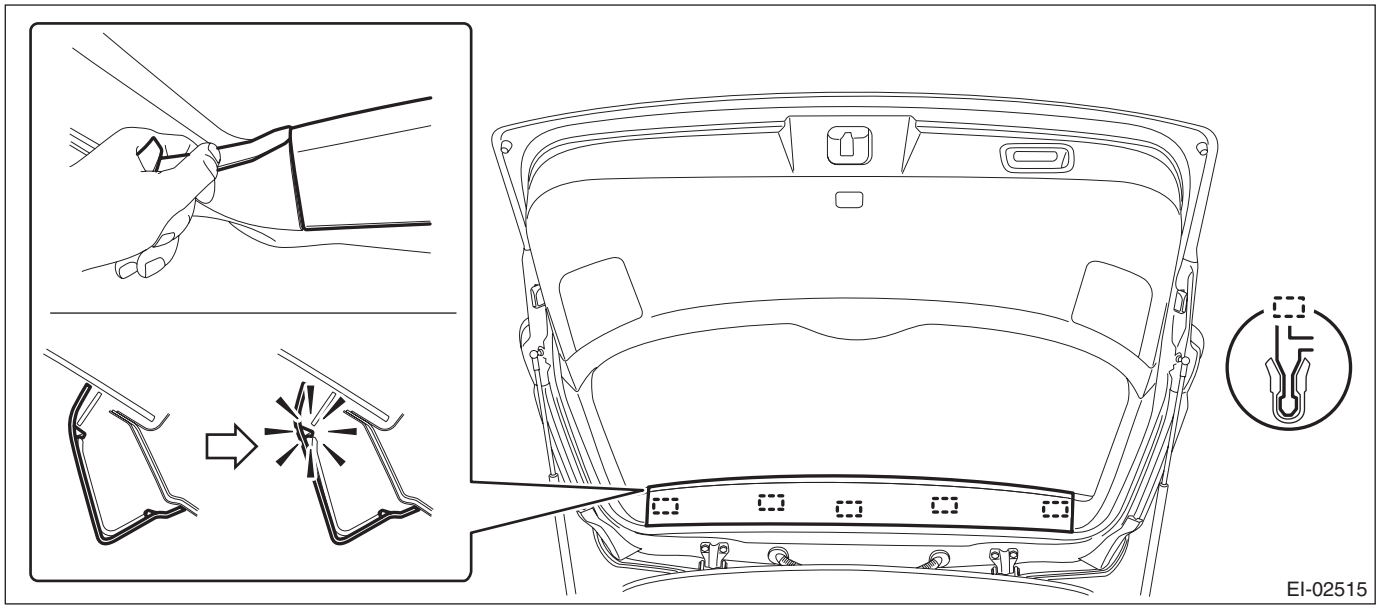

   (2) Remove the rear gate pillar trim.
      a) Release the claws.
      b) Remove the claws on the bottom of trim, and remove the rear gate pillar trim.

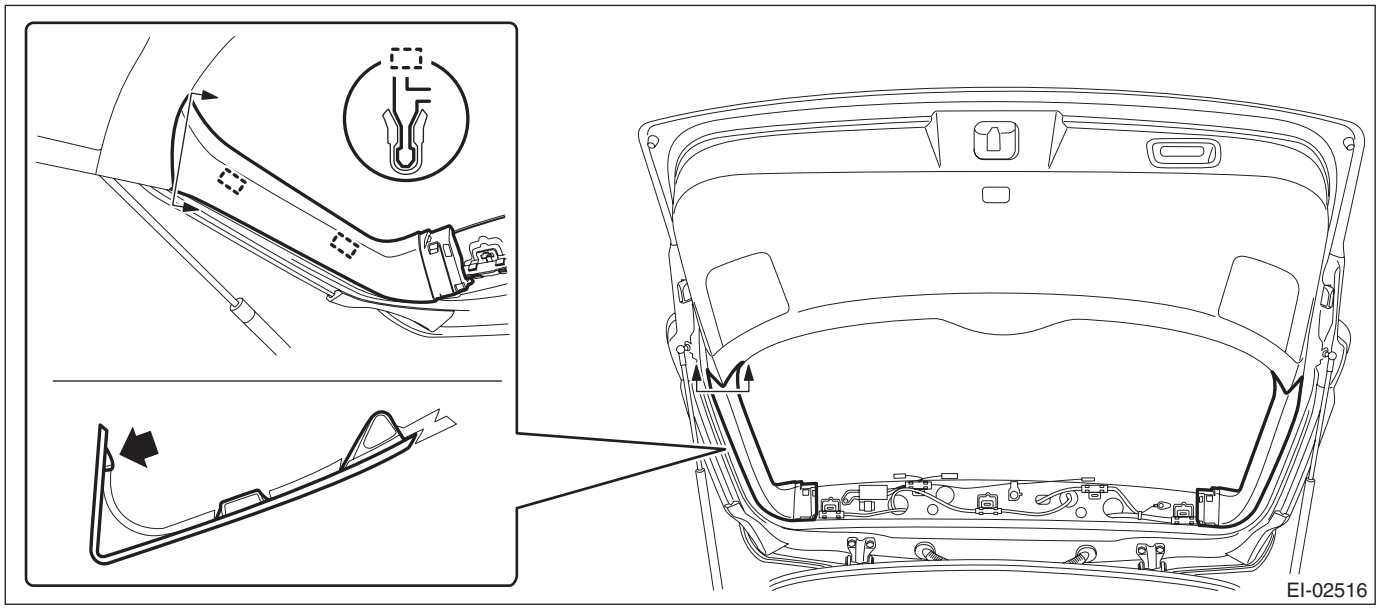

(3) Remove the hand grip of rear gate.

CAUTION:
- **Be careful not to scratch the trim.**
- **To protect the trim from damage, attach a protective tape to the tool in use.**

a) Insert a precision screwdriver (a).
b) With the screwdriver inserted, push it down to release the claw and pull it toward you.
c) Remove the screws and detach the hand grip.

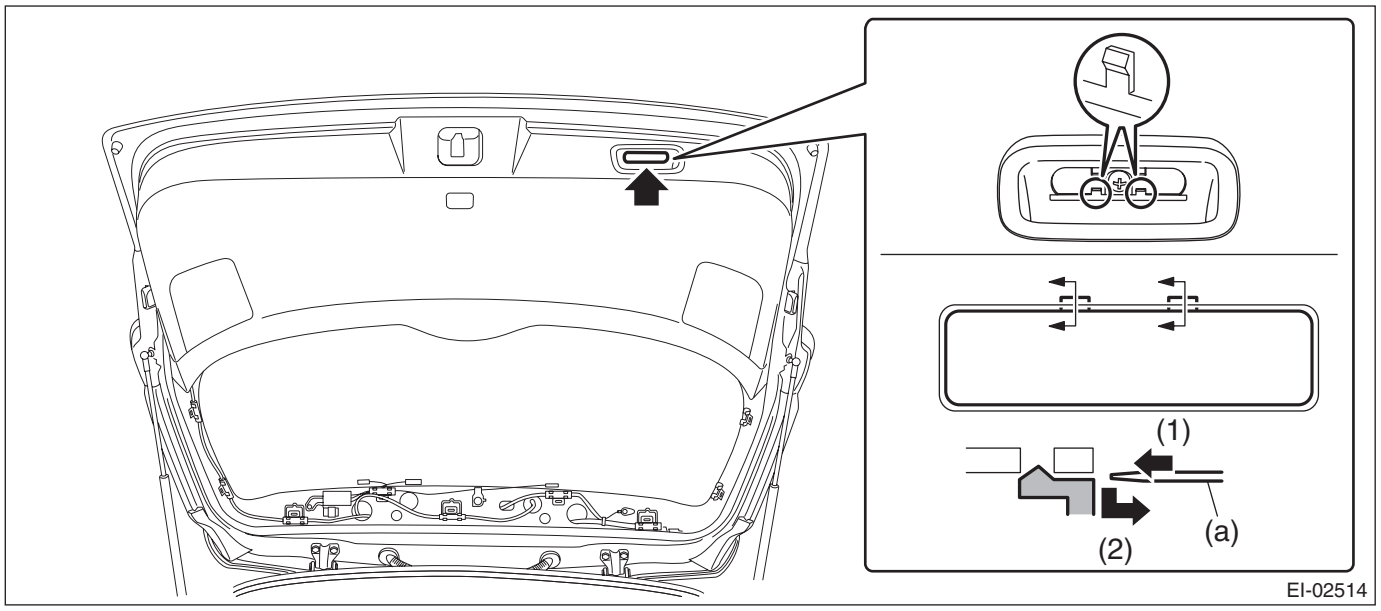

(4) Remove the rear gate lower trim.
a) Remove the clips on both ends.
b) Release the clips and remove the rear gate lower trim.

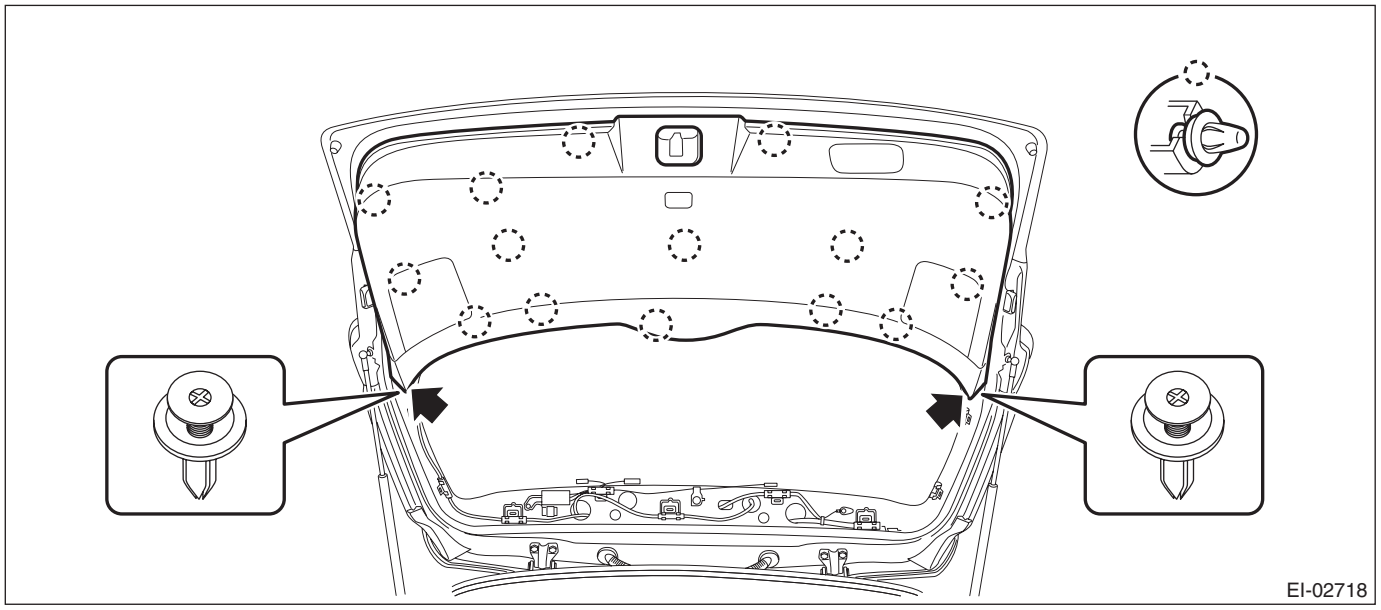

3) Remove the rear gate garnish.
(1) Release the clips and claws, then detach the rear finisher light side cover.

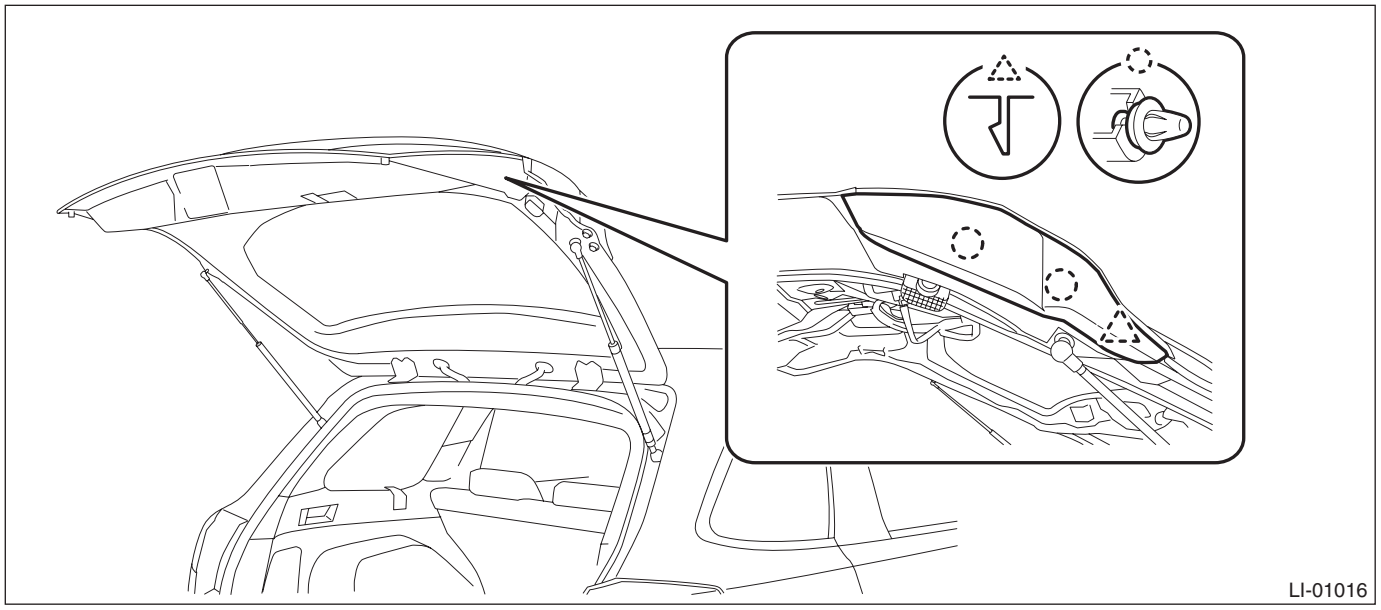

(2) Disconnect the harness connector of license plate light assembly.
(3) Remove the nuts.
(4) Remove the clips, and remove the rear gate garnish.

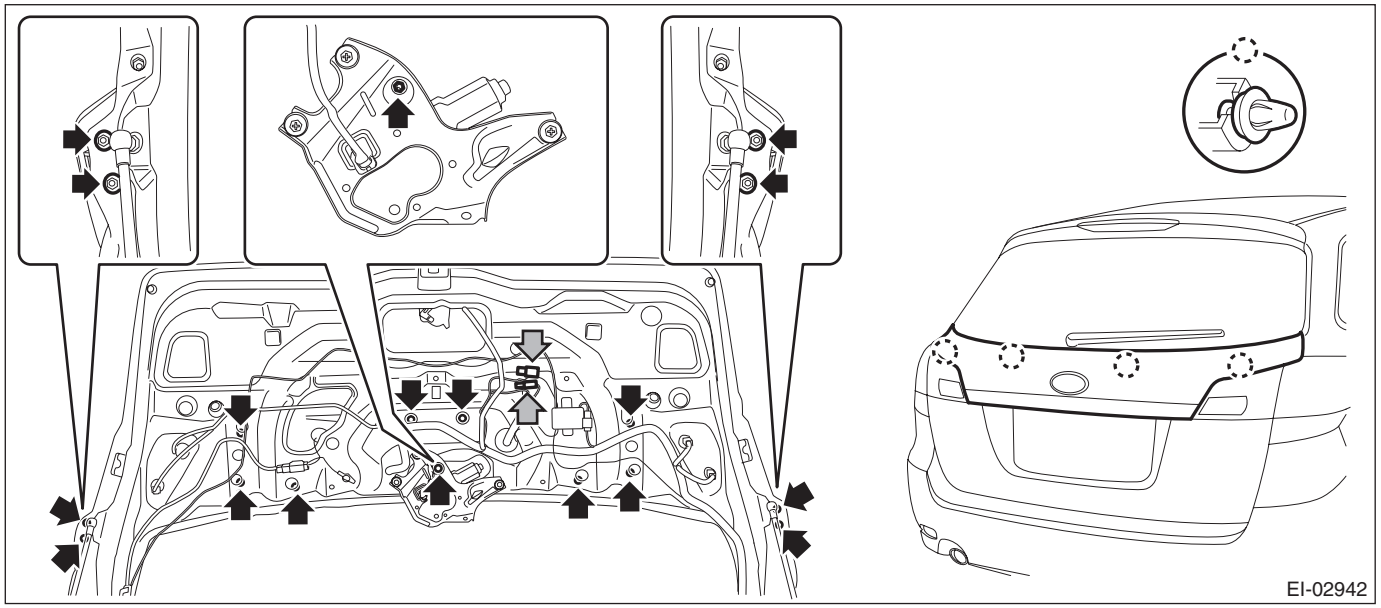

B: INSTALLATION

CAUTION:
Make sure that the harness grommet is installed securely.
Incomplete installation causes water leak.
Install each part in the reverse order of removal.

Tightening torque
Rear gate garnish: 4.5 N·m (0.46 kgf-m, 3.3 ft-lb)

32.Heat Shield Cover

A: REMOVAL

1. FRONT HEAT SHIELD COVER

1) Remove the rear exhaust pipe and muffler.

- **Rear exhaust pipe**
  - H4 turbo model: <Ref. to EX(H4DOTC)-15, REMOVAL, Rear Exhaust Pipe.>
  - H4 non-turbo model: <Ref. to EX(H4SO)-9, REMOVAL, Rear Exhaust Pipe.>
  - H6 model: <Ref. to EX(H6DO)-8, REMOVAL, Rear Exhaust Pipe.>
- **Muffler**
  - H4 turbo model: <Ref. to EX(H4DOTC)-17, REMOVAL, Muffler.>
  - H4 non-turbo model: <Ref. to EX(H4SO)-11, REMOVAL, Muffler.>
  - H6 model: <Ref. to EX(H6DO)-10, REMOVAL, Muffler.>

2) Remove the four bolts to remove the front heat shield cover.

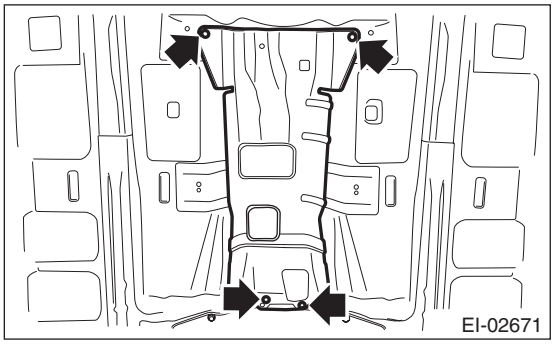

2. CENTER HEAT SHIELD COVER

1) Remove the rear exhaust pipe and muffler.

- **Rear exhaust pipe**
  - H4 turbo model: <Ref. to EX(H4DOTC)-15, REMOVAL, Rear Exhaust Pipe.>
  - H4 non-turbo model: <Ref. to EX(H4SO)-9, REMOVAL, Rear Exhaust Pipe.>
  - H6 model: <Ref. to EX(H6DO)-8, REMOVAL, Rear Exhaust Pipe.>
- **Muffler**
  - H4 turbo model: <Ref. to EX(H4DOTC)-17, REMOVAL, Muffler.>
  - H4 non-turbo model: <Ref. to EX(H4SO)-11, REMOVAL, Muffler.>
  - H6 model: <Ref. to EX(H6DO)-10, REMOVAL, Muffler.>

2) Remove the propeller shaft. (Turbo model only) <Ref. to DS-10, REMOVAL, Propeller Shaft.>

3) Remove the bolt (A), nut (B) and clip (C) to remove center heat shield cover.

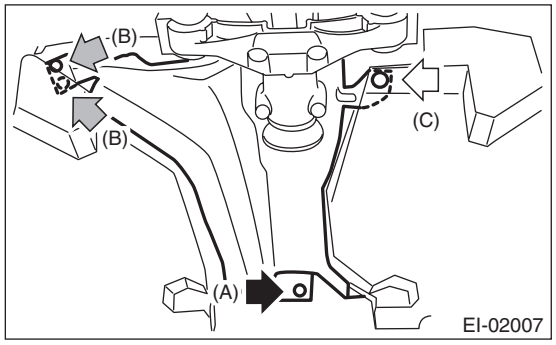

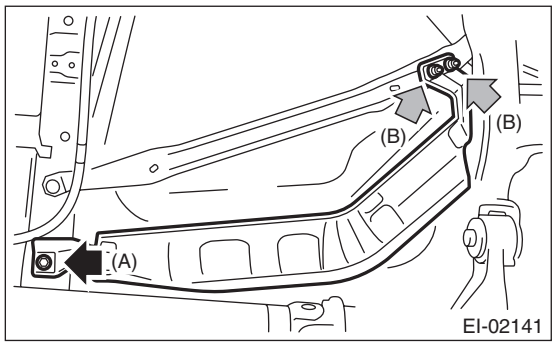

3. REAR HEAT SHIELD COVER

1) Remove the muffler.
- H4 turbo model <Ref. to EX(H4DOTC)-17, REMOVAL, Muffler.>
- H4 non-turbo model <Ref. to EX(H4SO)-11, REMOVAL, Muffler.>
- H6 model <Ref. to EX(H6DO)-10, REMOVAL, Muffler.>

2) Remove the bolts, and remove the rear heat shield cover.

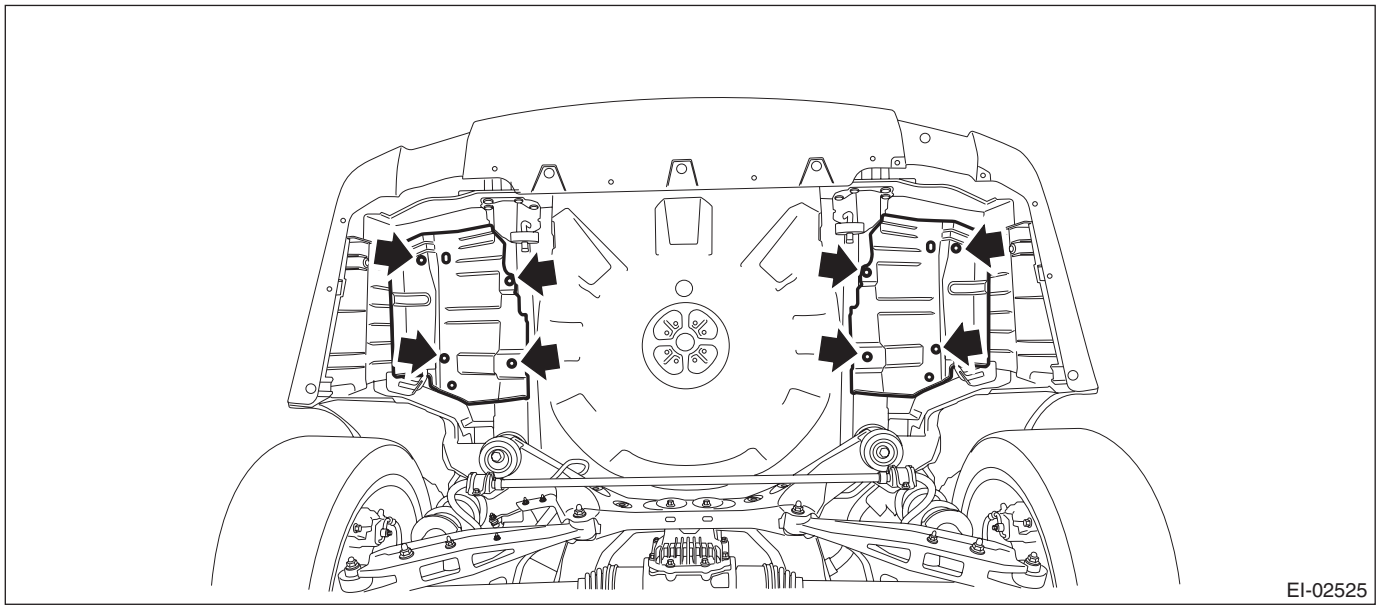

B: INSTALLATION

Install each part in the reverse order of removal.

Tightening torque:
Refer to "COMPONENT" of "General Description". <Ref. to EI-25, HEAT SHIELD COVER, COMPONENT, General Description.>

33.Ornament

A: INSTALLATION

1. LETTER MARK

Adhere the letter mark according to the following measurements.

- Sedan model

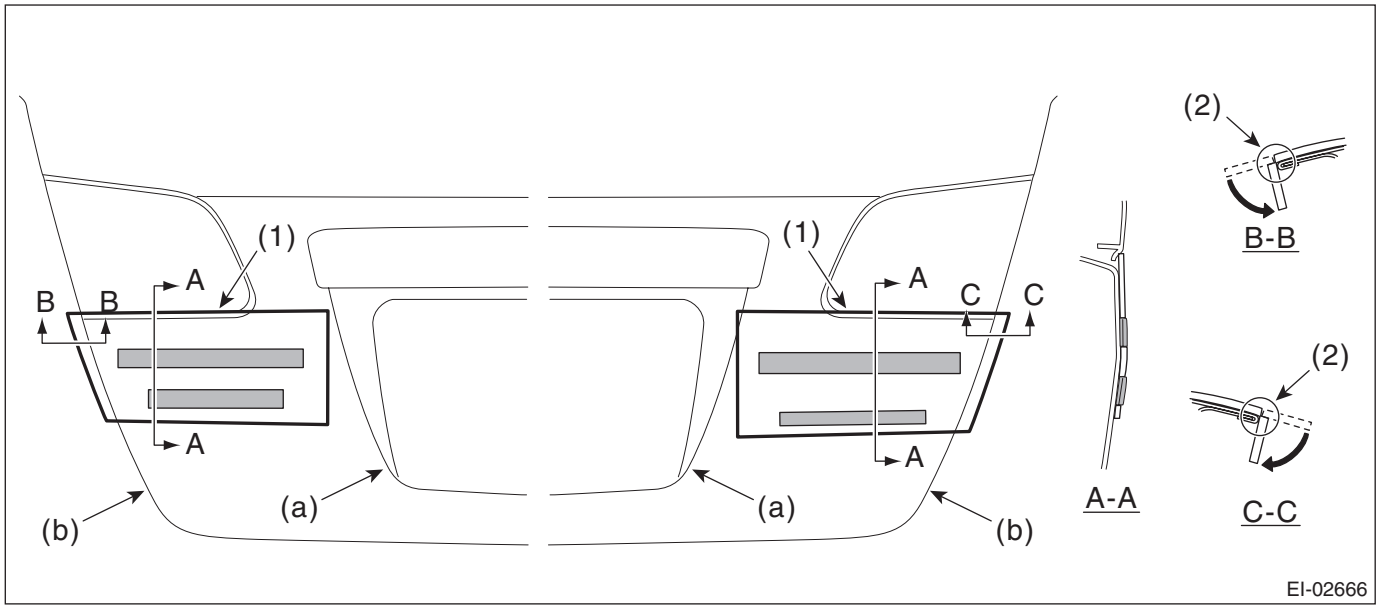

(a) Character line

(b) Trunk lid panel end

(1) Align the top end of application tape to the radius start of the rear finisher light.

(2) Align the slit of application tape to the end of trunk lid panel and break off the application tape.

- OUTBACK model

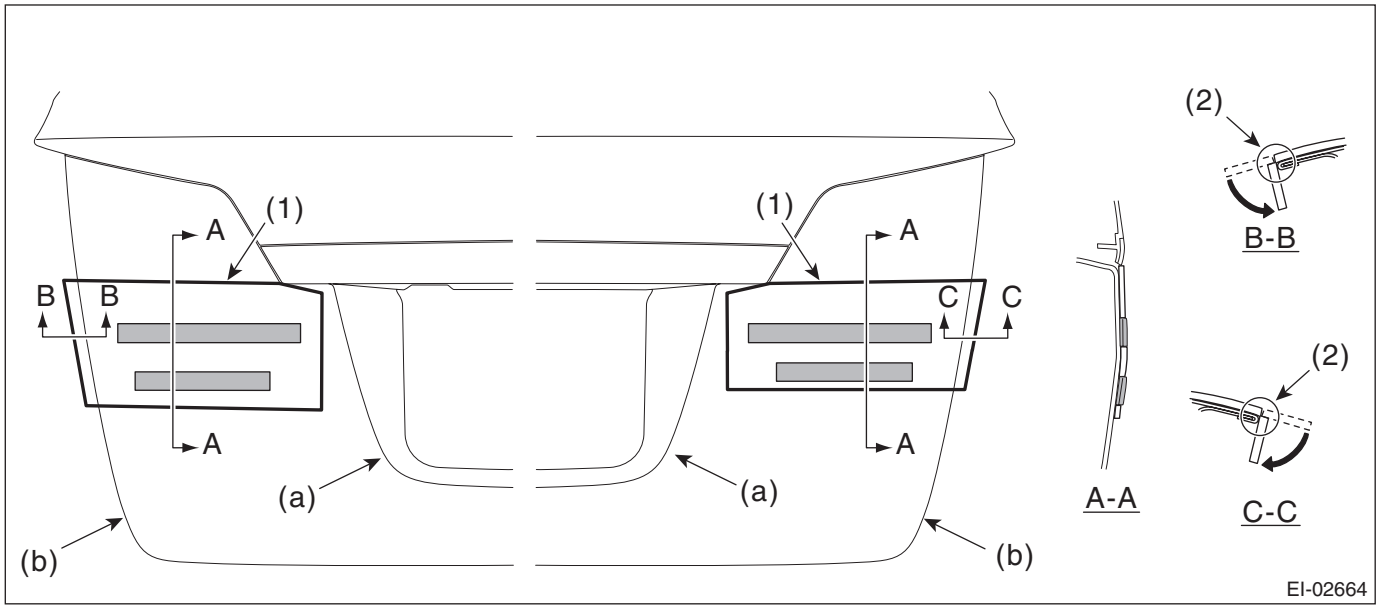

(a)	Character line	(b)	End of rear gate panel
(1)	Align the top end of application tape to the bottom of the rear finisher light.	(2)	Align the slit of application tape to the end of rear ate panel and break off the application tape.

EXTERIOR BODY PANELS

EB

		Page
1.	General Description	2
2.	Front Hood	9
3.	Front Fender	16
4.	Front Door	24
5.	Front Sealing Cover	30
6.	Rear Door	32
7.	Rear Sealing Cover	37
8.	Door Sash Tape	39
9.	Trunk Lid	43
10.	Rear Gate	48
11.	Protector Tape	55

1. General Description

A: SPECIFICATION

Refer to Body Repair Manual for the dimensions of the body.

B: COMPONENT

1. FRONT HOOD

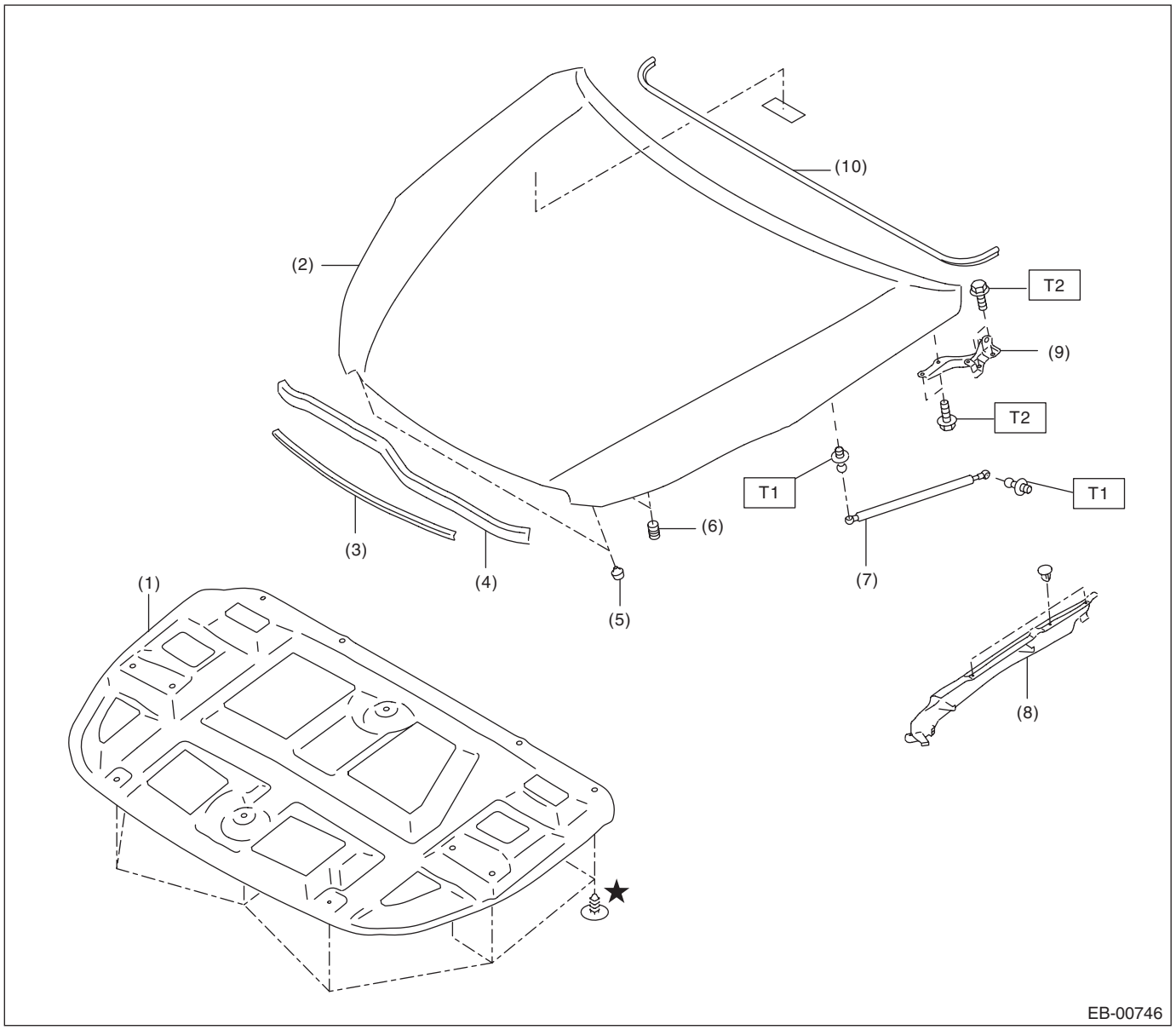

(1)	Insulator	(6)	Buffer (hood side)
(2)	Front hood panel ASSY	(7)	Damper stay ASSY
(3)	Front grille seal ASSY	(8)	Fender cover ASSY UPR
(4)	Front hood seal ASSY	(9)	Hinge
(5)	Front hood stopper	(10)	Cowl panel seal

Tightening torque:N·m (kgf-m, ft-lb)
T1: 20 (2.04, 14.8)
T2: 25 (2.55, 18.4)

2. FRONT FENDER

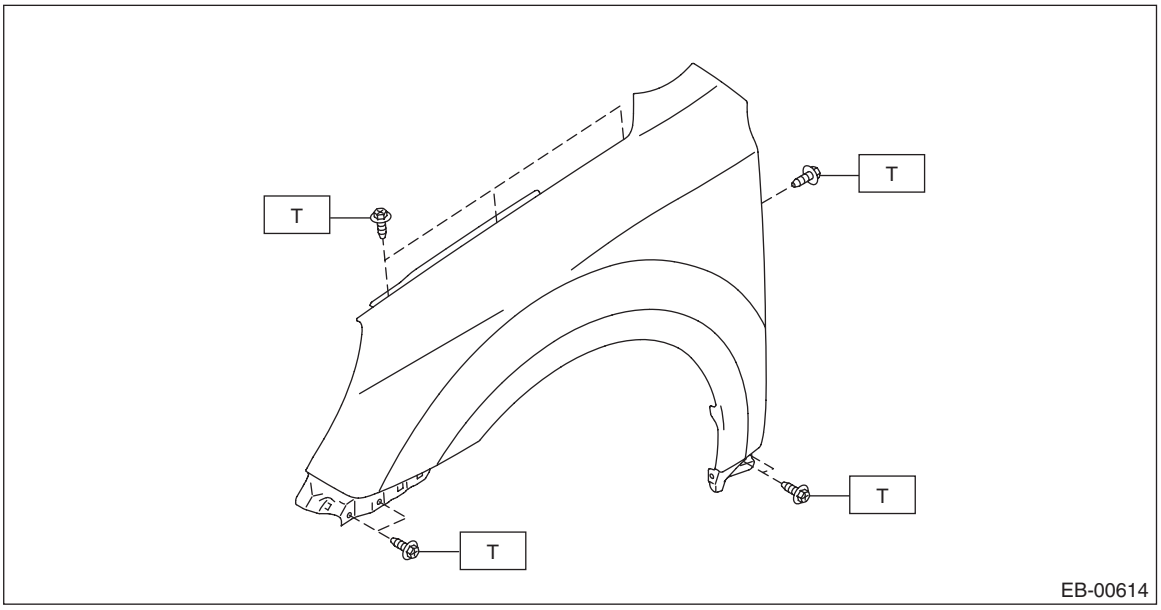

Tightening torque:N·m (kgf-m, ft-lb)
T: 7.5 (0.76, 5.5)

3. FRONT DOOR

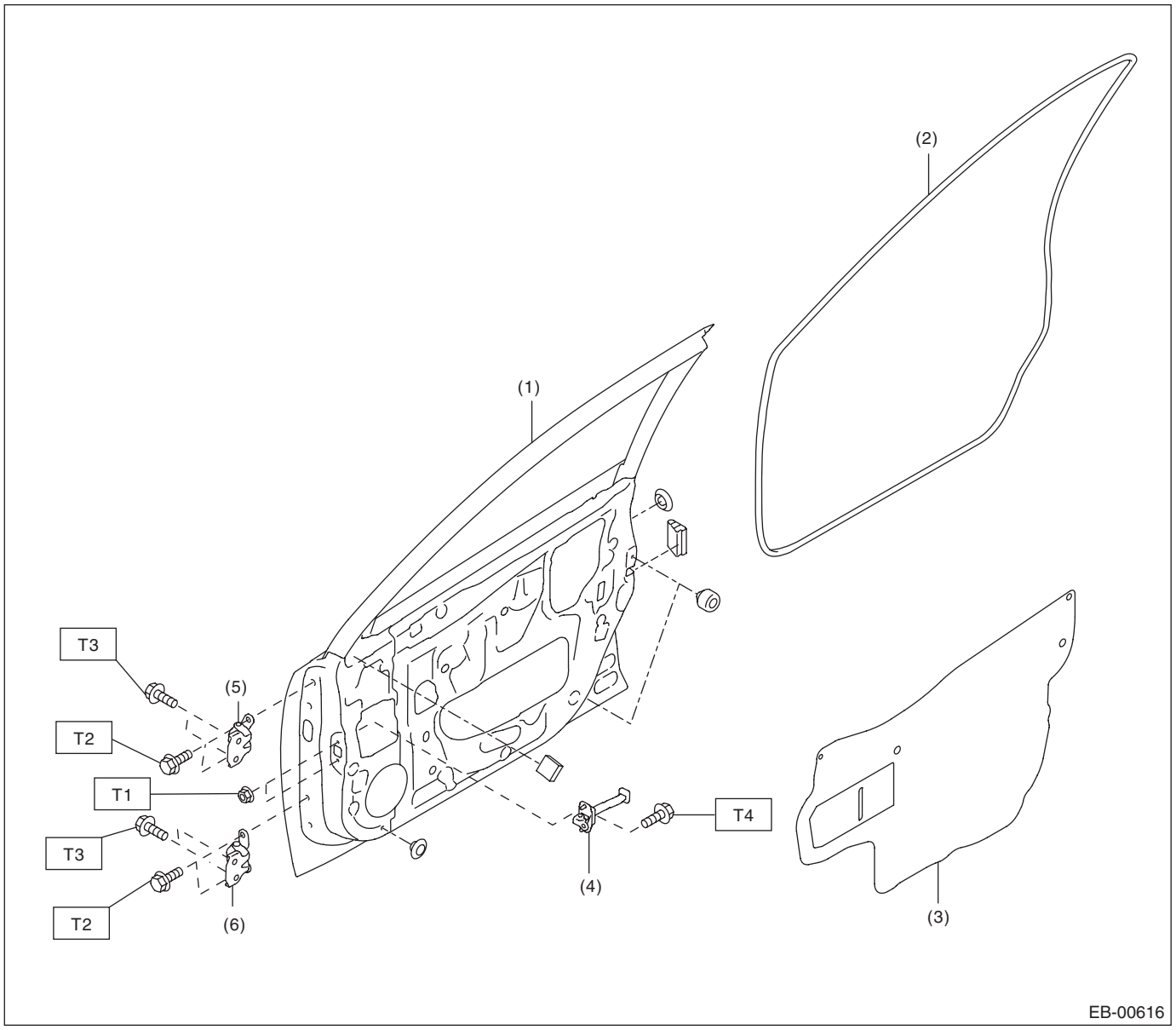

(1) Front door panel
(2) Front door weather strip
(3) Sealing cover
(4) Checker
(5) Upper hinge
(6) Lower hinge

Tightening torque:N·m (kgf-m, ft-lb)
T1: 7.5 (0.76, 5.5)
T2: 25 (2.55, 18.4)
T3: 30 (3.06, 22.1)
T4: 33 (3.36, 24.3)

4. REAR DOOR

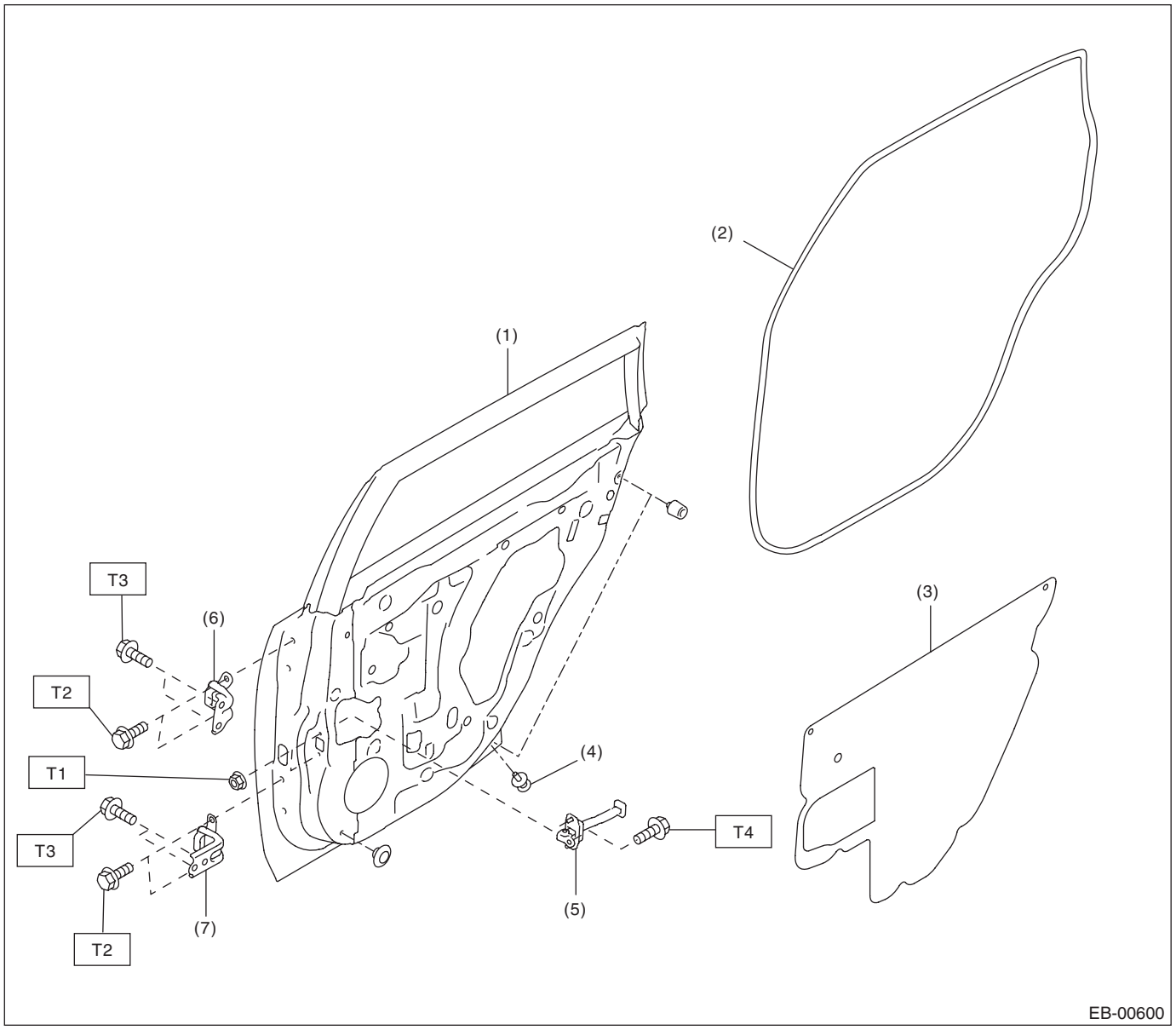

(1)	Rear door panel	(6)	Upper hinge
(2)	Rear door weather strip	(7)	Lower hinge
(3)	Sealing cover		
(4)	Rear door catcher		
(5)	Checker		

Tightening torque:N·m (kgf-m, ft-lb)
T1: 7.5 (0.76, 5.5)
T2: 25 (2.55, 18.4)
T3: 30 (3.06, 22.1)
T4: 33 (3.36, 24.3)

5. TRUNK LID PANEL

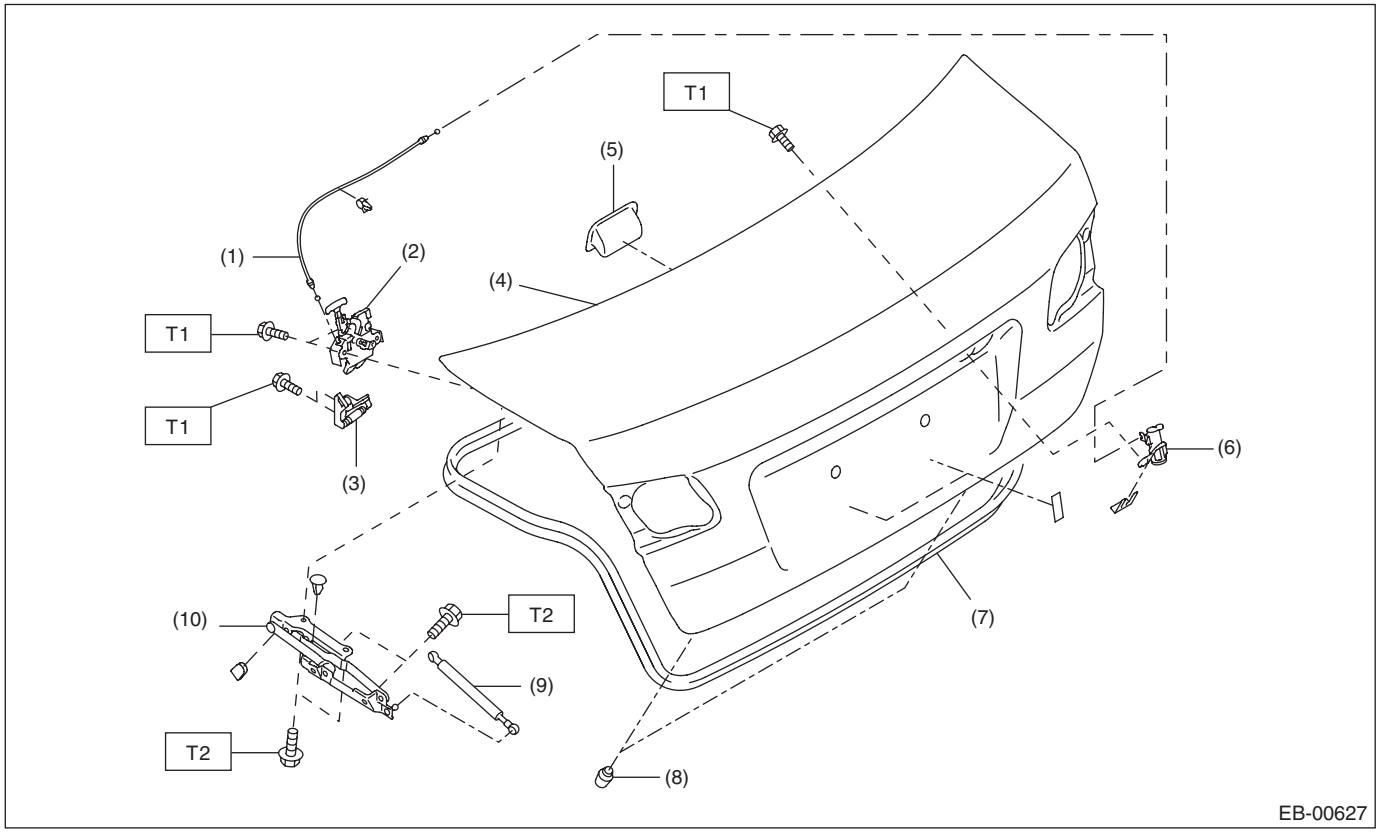

(1) Trunk release cable ASSY
(2) Trunk lid latch and actuator ASSY
(3) Striker
(4) Trunk lid panel ASSY
(5) Trunk lid inner handle
(6) Trunk lid key cylinder ASSY
(7) Weather strip
(8) Trunk lid stopper
(9) Trunk lid damper stay
(10) Trunk lid hinge ASSY

Tightening torque:N·m (kgf-m, ft-lb)
T1: 7.5 (0.76, 5.5)
T2: 25 (2.55, 18.4)

6. REAR GATE

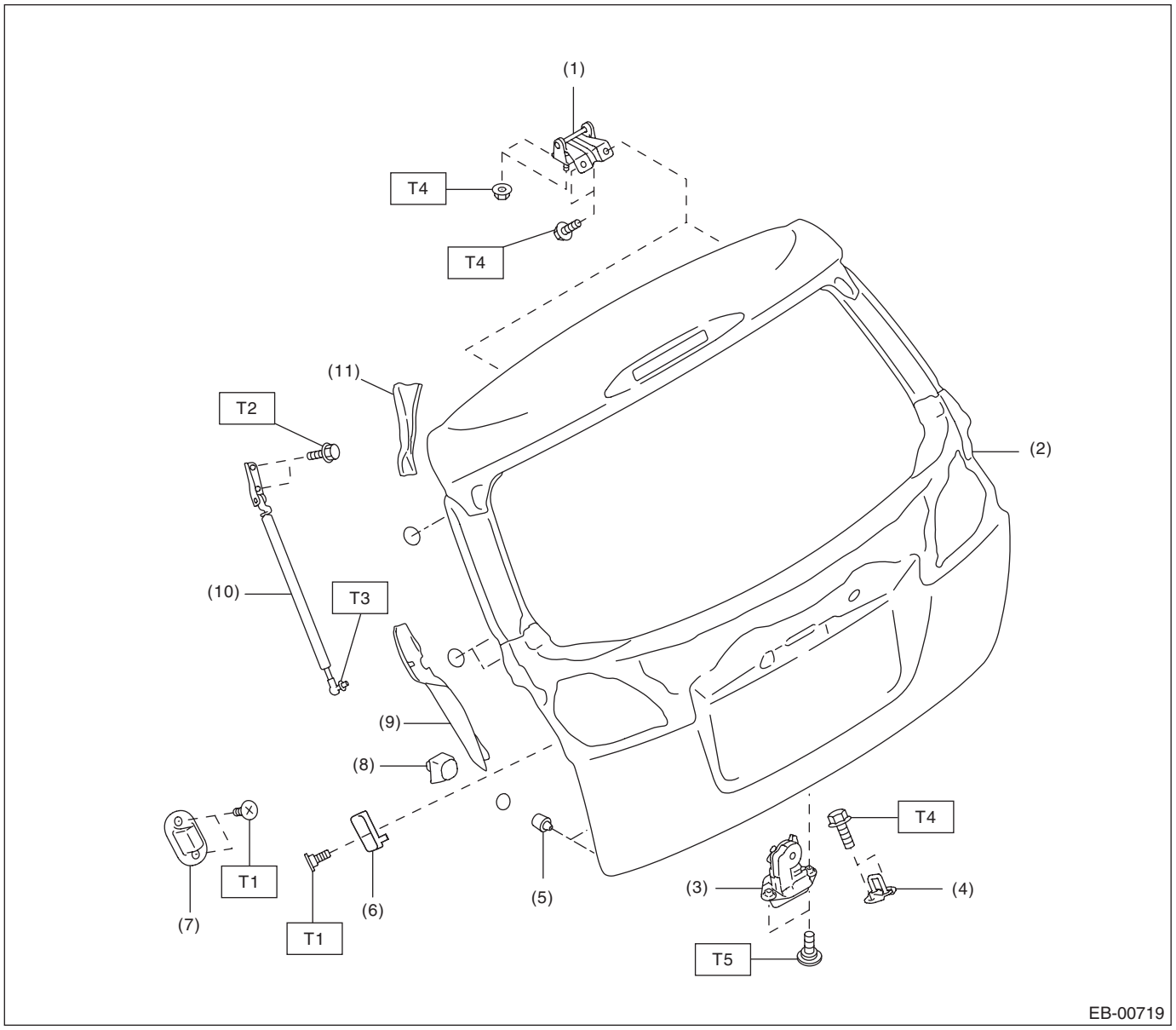

(1)	Hinge	(7)	Buffer (body side)	***Tightening torque:N·m (kgf-m, ft-lb)***
(2)	Rear gate panel	(8)	Rear gate spacer (mounted to the body)	***T1: 7.5 (0.76, 5.5)***
(3)	Rear gate latch and actuator ASSY	(9)	Rear gate cover	***T2: 16 (1.63, 11.8)***
(4)	Striker	(10)	Rear gate damper stay	***T3: 20 (2.04, 14.8)***
(5)	Stopper rubber	(11)	Rear gate drip rubber	***T4: 25 (2.55, 18.4)***
(6)	Buffer (rear gate side)			***T5: 28 (2.86, 20.7)***

C: CAUTION

Exterior body panels are heavy. When removing and installing them, do not drop and damage the panels. Also, be careful not to scratch the coated surfaces of the panels.

D: PREPARATION TOOL

1. SPECIAL TOOL

ILLUSTRATION	TOOL NUMBER	DESCRIPTION	REMARKS
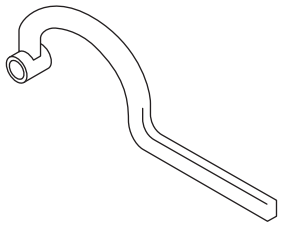 ST-925610000	925610000	WRENCH	Used for removing and installing door hinge.

2. GENERAL TOOL

TOOL NAME	REMARKS
Support jack	Used for supporting door panel.
Clip remover	Used for removing various types of clips

2. Front Hood

A: REMOVAL

1. FRONT HOOD INSULATOR

Release the clips to remove the front hood insulator.

CAUTION:
Do not reuse any clips damaged during removal. The damaged clip cannot fix the insulator securely. Therefore, always replace with a new part.

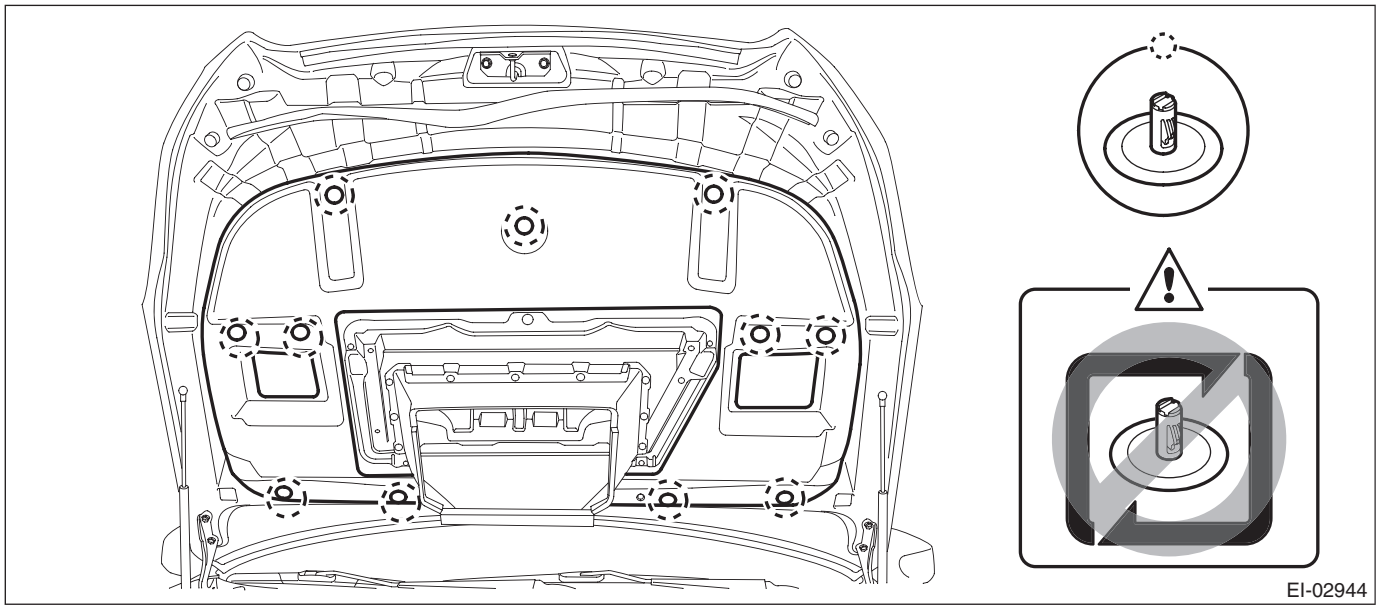

2. FRONT HOOD SEAL

Remove the clip, and remove the seal.

CAUTION:
If the weather strip clip is removed with excessive force, the seal may be damaged. Be sure to use clip remover, etc. to remove.

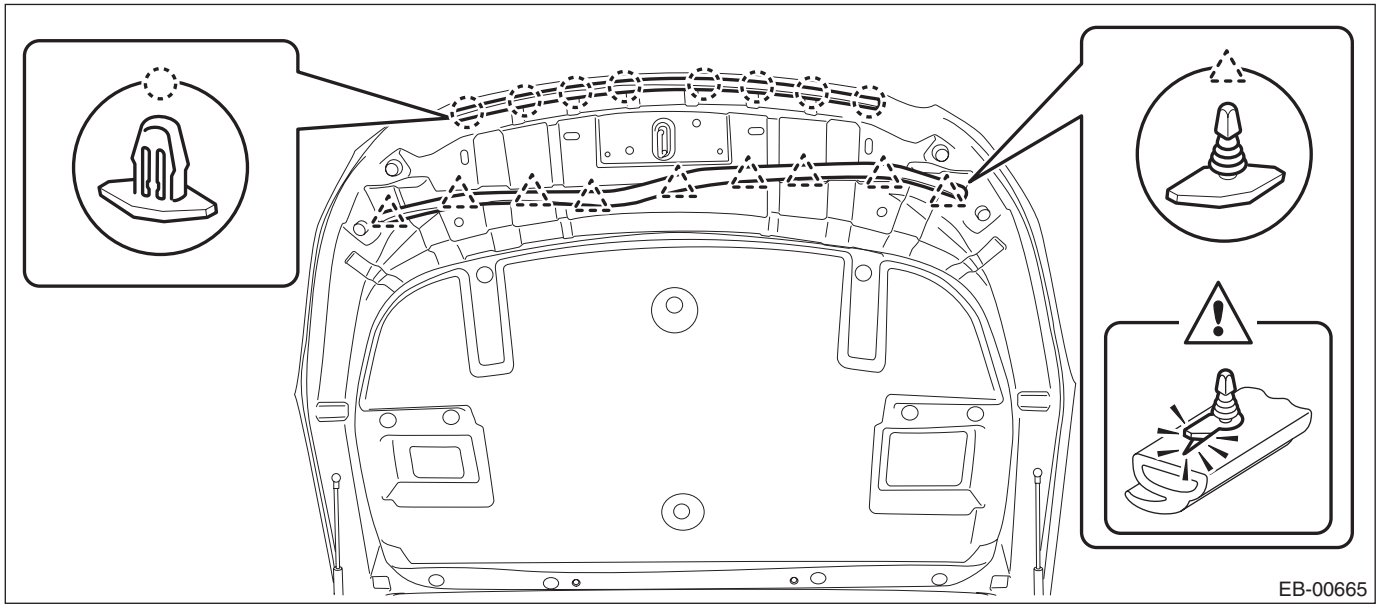

3. FRONT HOOD DAMPER

CAUTION:
- **Do not damage piston rods and oil seals.**
- **Never disassemble cylinders: They contain gas.**
- **Front hood panels are heavy. When removing and installing the damper stays and hood hinges, always work in a team of two or more persons.**

Remove the damper stay by removing mounting bolts.

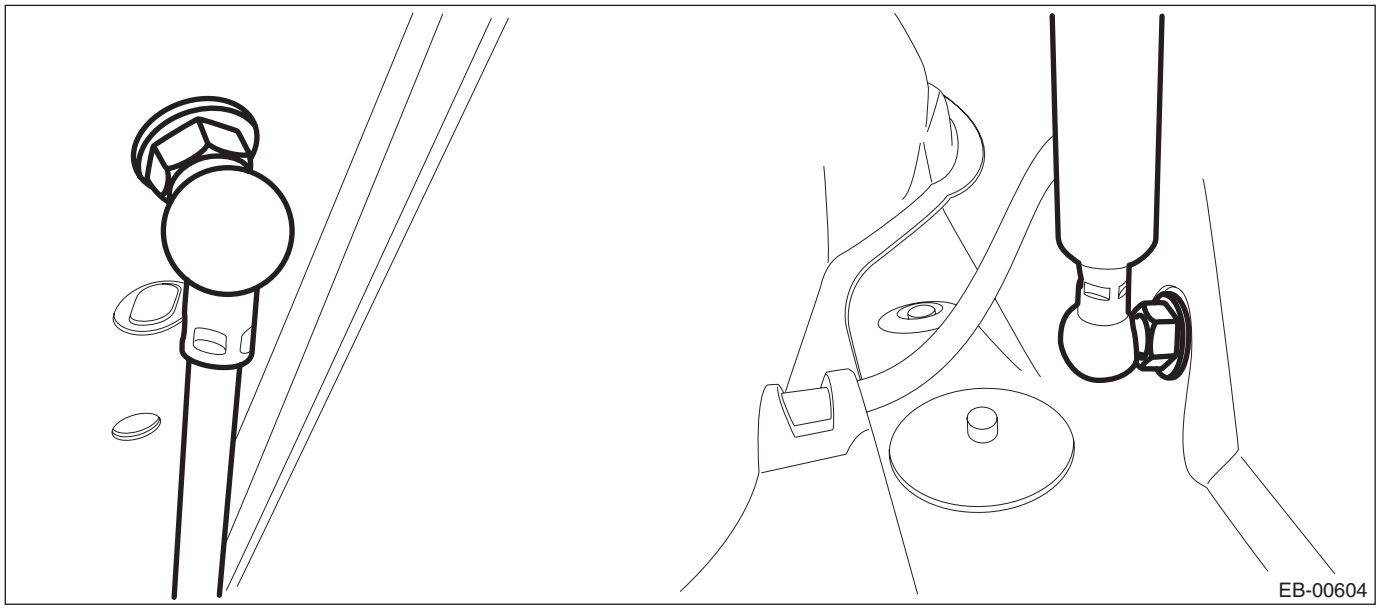

4. FRONT HOOD HINGE

CAUTION:
The front hood panel is heavy. When removing or installing the damper stay and hood hinge, be sure to work in a group of two or more.

1) Remove the fender cover assembly UPR.
   (1) Remove the clip.
   (2) Release the claws of the fender cover assembly UPR by pulling it forward and remove the fender cover.

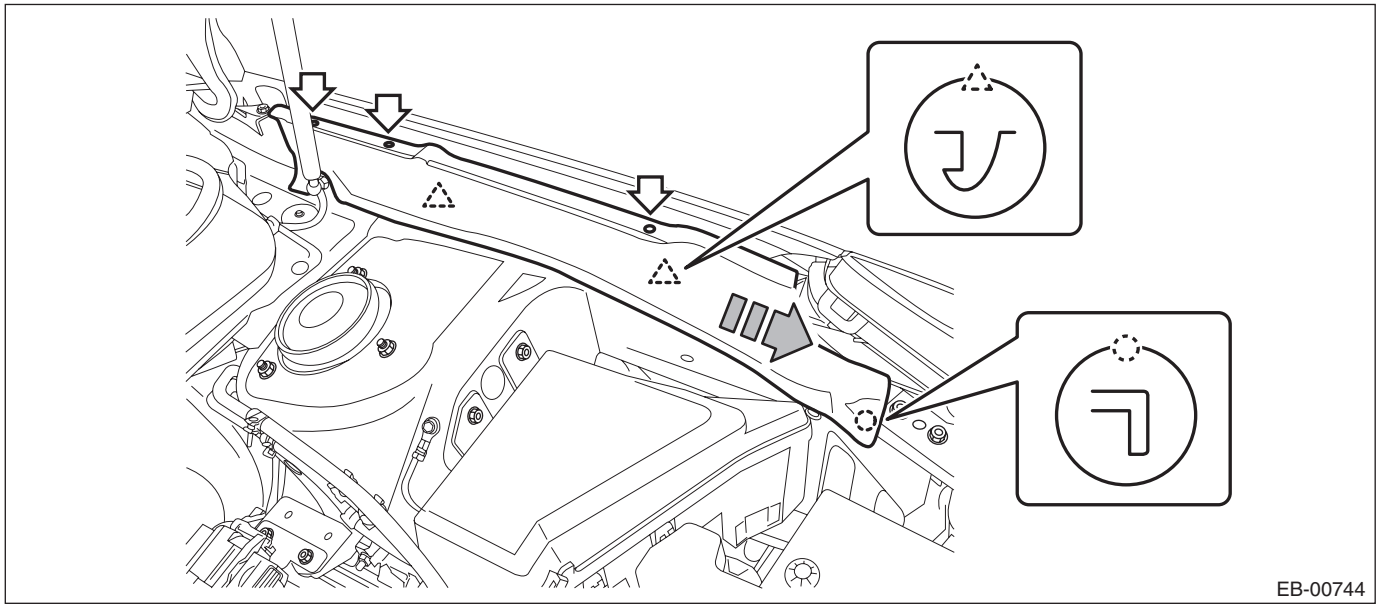

2) Remove the cowl panel side.
   (1) Detach the pins of the cowl panel side.
   (2) Remove the cowl panel side from inside the fender panel by pulling it.

CAUTION:
Applying excessive pulling force may damage the cowl panel side. If it is difficult to remove, use a plastic remover or equivalent tool.

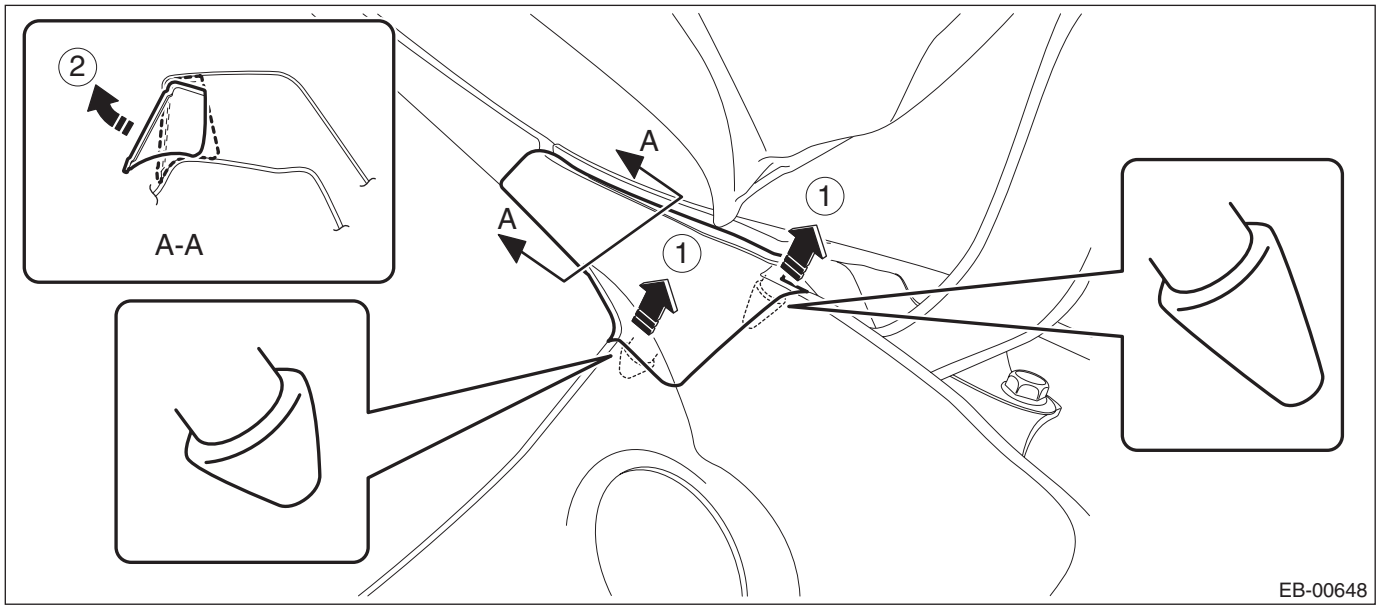

3) Remove the front fender panel. <Ref. to EB-16, REMOVAL, Front Fender.>
4) Remove the front hood panel.
   (1) Remove the damper stay mounting bolt on the hood panel side.
   (2) Remove the bolts on the hood panel, and remove the front hood panel.

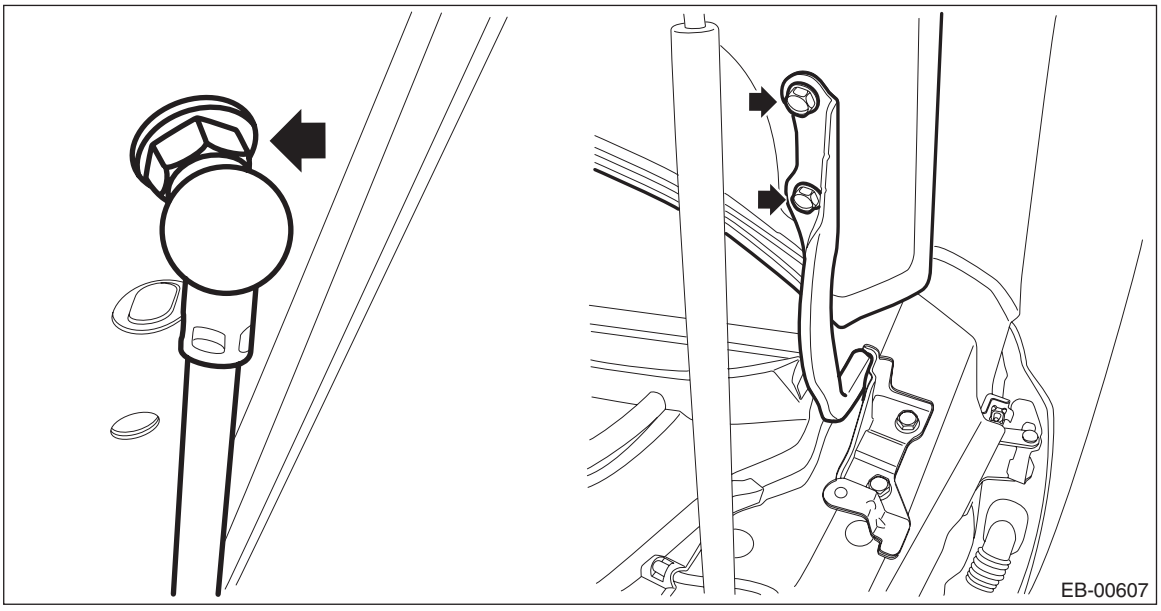

5) Remove the bolts, and remove the front hood hinge.

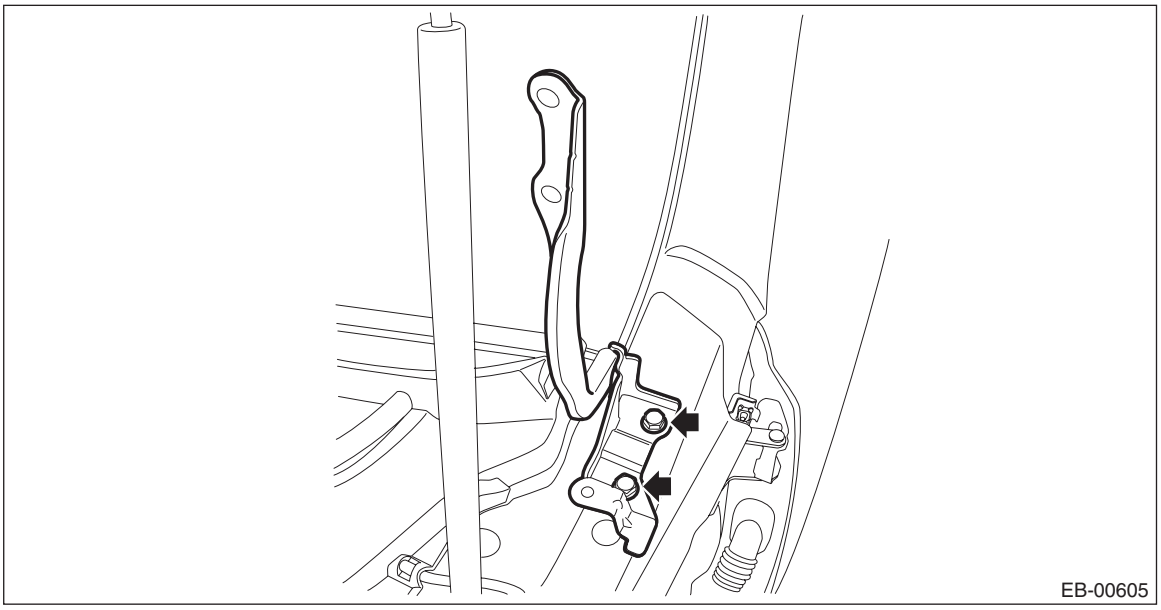

5. FRONT HOOD PANEL

CAUTION:
Front hood panels are heavy. When removing and installing the damper stays and hood hinges, always work in a team of two or more persons.

1) Remove the damper stay mounting bolt on the hood panel side.
2) Remove the bolts on the hood panel, and remove the front hood panel.

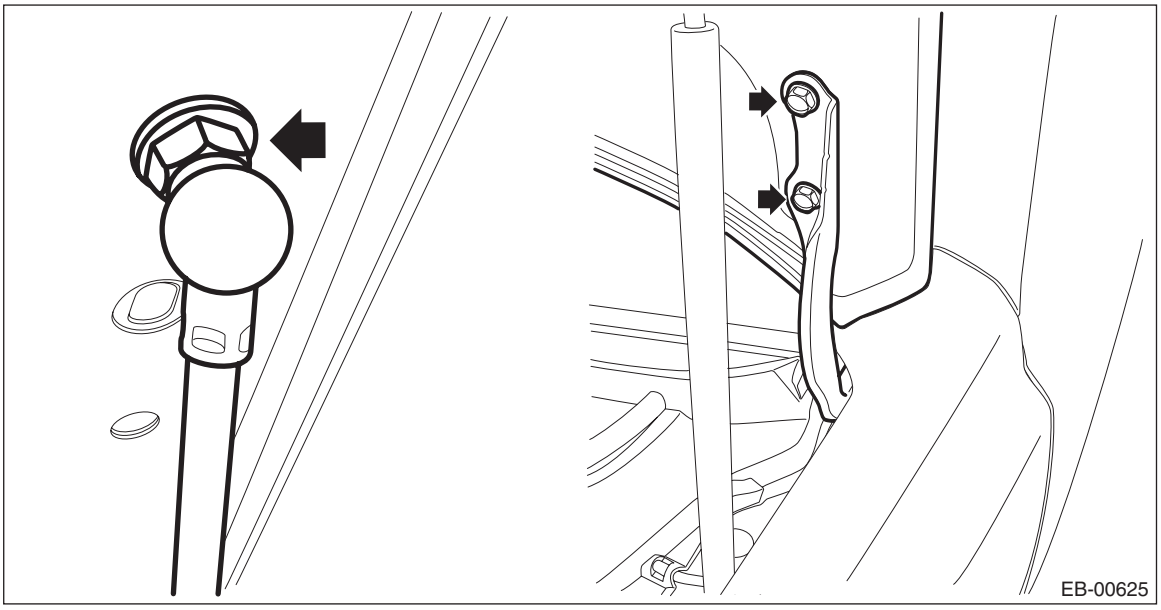

B: INSTALLATION

CAUTION:
The front hood panel is heavy. When removing or installing the damper stay and hood hinge, be sure to work in a group of two or more.
To install the front hood insulator, front hood seal, and front hood damper, follow the reverse order of removal.
To install the front hood hinges and front hood panel, follow the procedure below.
1) Install the front hood hinges to the vehicle body. (When front hood hinges are removed)
2) Temporarily install the front hood panel to the front hood hinges.

NOTE:
When installing the front hood panel, make sure that a uniform clearance is created around the panel.
3) Adjust the clearance around the front hood panel. <Ref. to EB-13, ADJUSTMENT, Front Hood.>
4) Tighten the front hood hinge bolts.

Tightening torque:
25 N·m (2.55 kgf-m, 18.4 ft-lb)
5) Install each part of the front hood in the reverse order of removal.

Tightening torque:
Front hood damper: 20 N·m (2.04 kgf-m, 14.8 ft-lb)
Front hood duct: 4.5 N·m (0.46 kgf-m, 3.3 ft-lb)

C: ADJUSTMENT

Adjust the clearance around the front hood panel as follows.

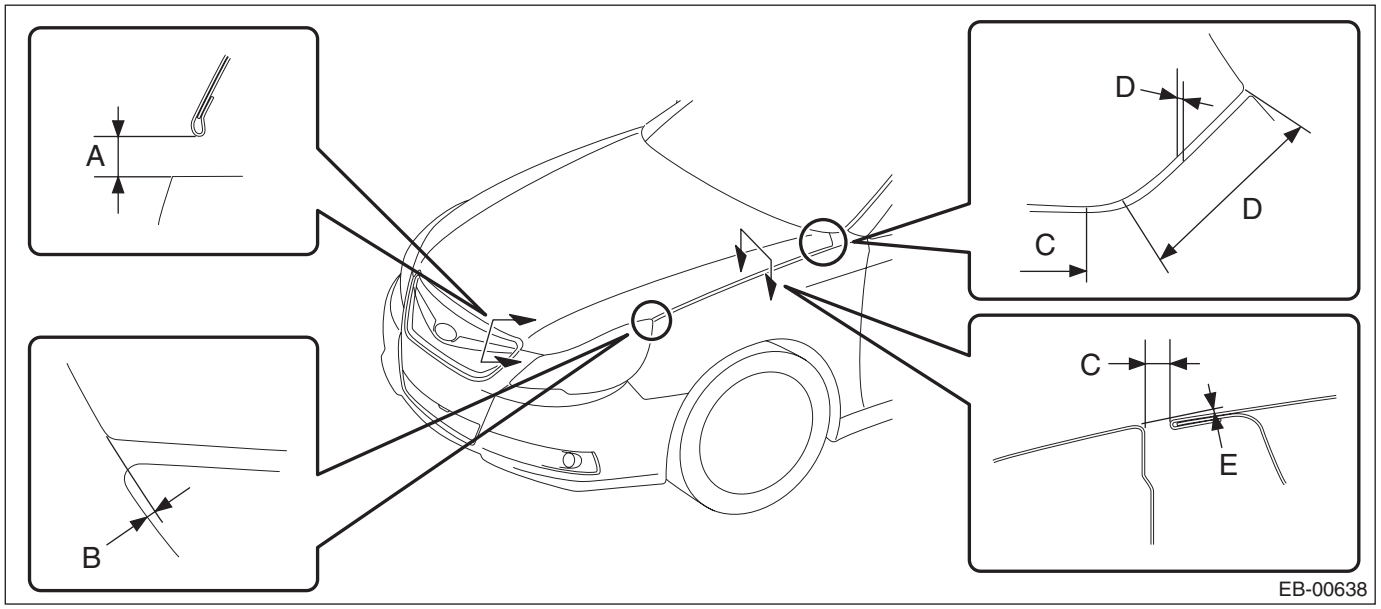

	Part	Standard
A	Front hood panel to Front bumper	6.0±1.0 mm (0.24±0.04 in)
B	Offset value between front hood panel and front fender panel tip	0+0.5, –1.0 mm (0+0.02, –0.04 in)
C	Front hood panel to Front fender panel (from front end to just before curved portion)	3.5±1.0 mm (0.14±0.04 in)
D	Front hood panel to Front fender panel (from rear end to just before curved portion)	4.1±1.0 mm (0.16±0.04 in)
E	Surface level gap between front hood panel and front fender panel	0.5+0.5, –1.0 mm (0.02+0.02, –0.04 in)

1) Adjust the horizontal position of front hood.
   (1) Loosen the left and right hinge attaching bolts.

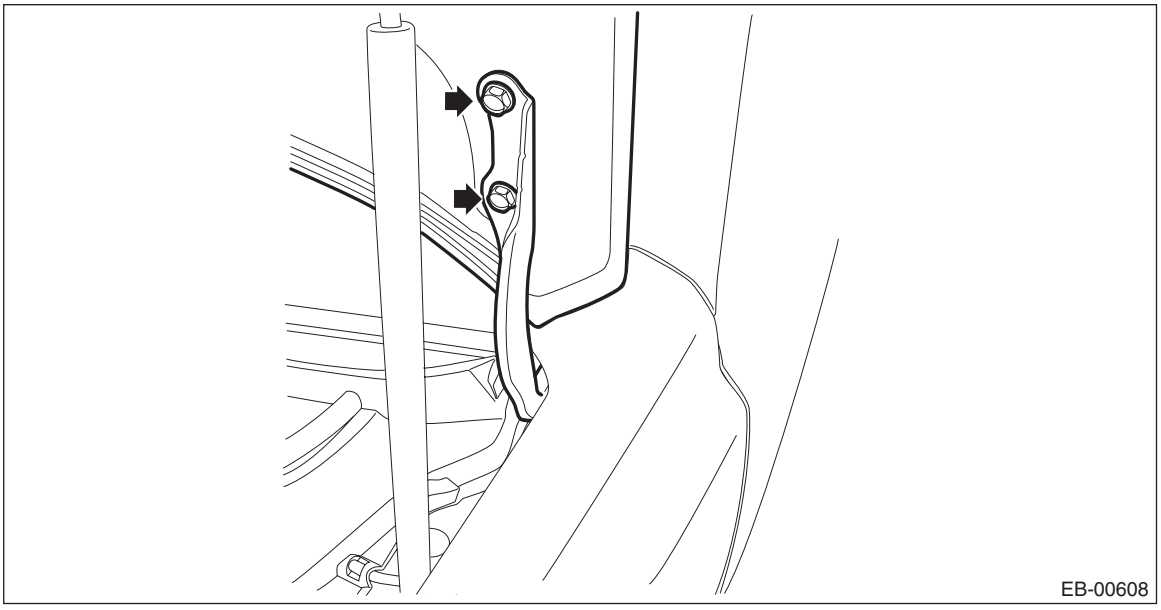

   (2) Adjust the horizontal panel gap of the front hood and tighten the hinge attaching bolts.

Tightening torque:
25 N·m (2.55 kgf-m, 18.4 ft-lb)

2) Adjust the height at the front end of hood.
   (1) Loosen the bolts of the front hood lock assembly.
   (2) Adjust the front hood lock assembly by moving it up and down.

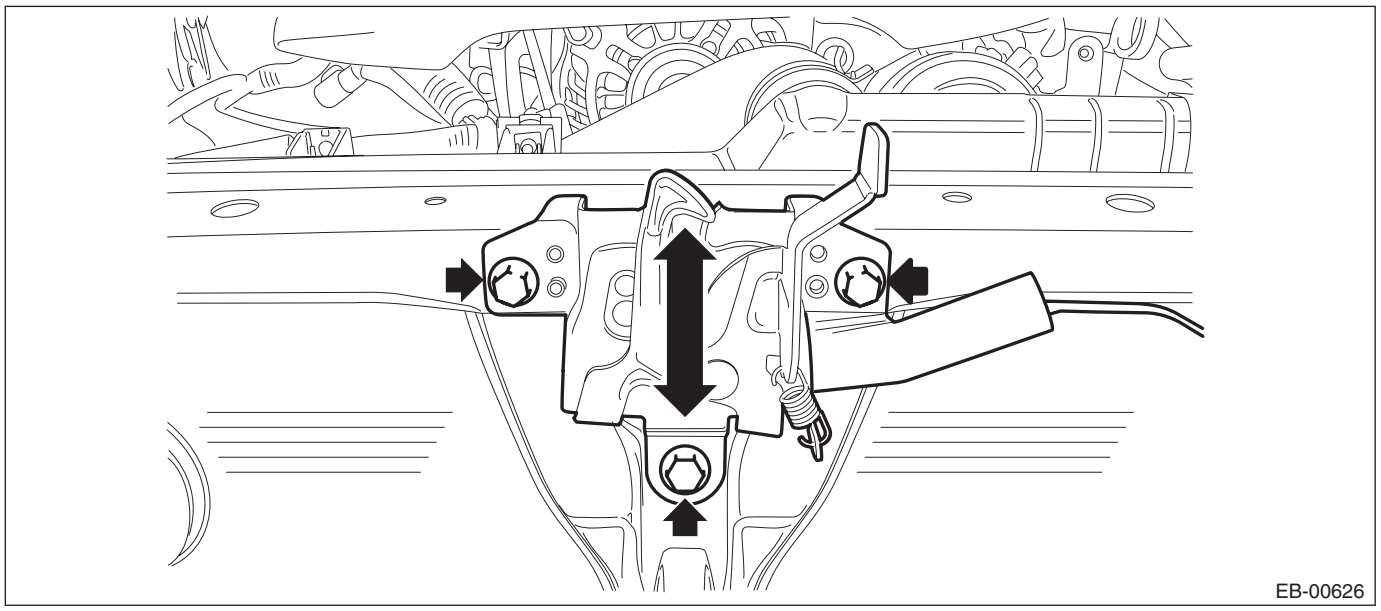

Tightening torque:
33 N·m (3.36 kgf-m, 24.3 ft-lb)

3) Rotate the front hood buffer to adjust lateral height.

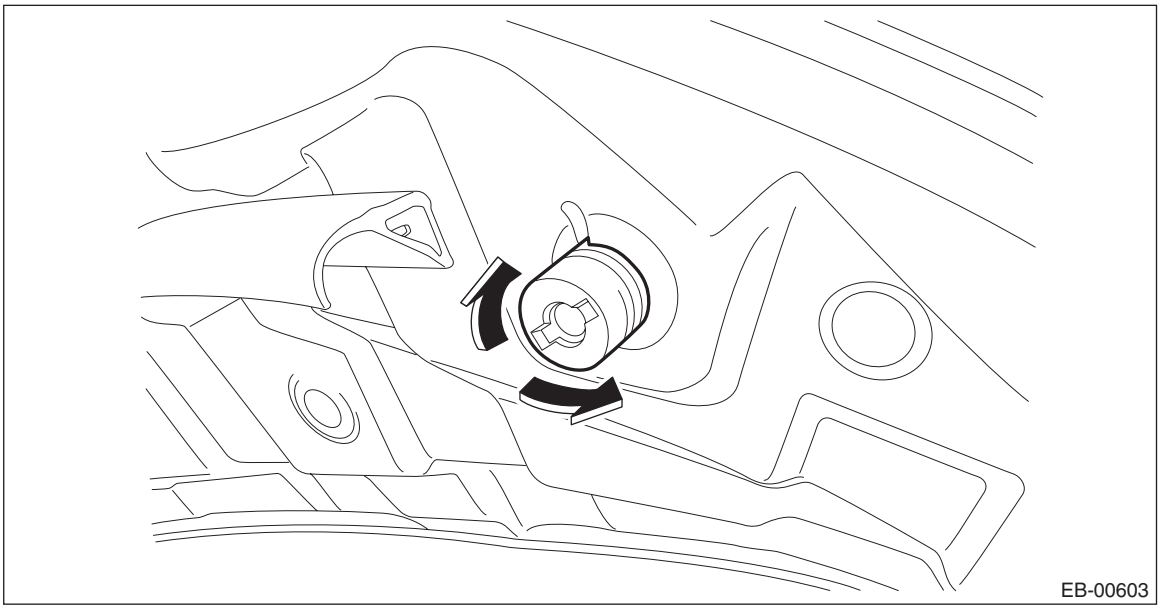

D: DISPOSAL

For the disposal procedures of front hood damper stay, refer to Disposal Procedures of “Rear Gate Damper Stay”. <Ref. to EB-53, REAR GATE DAMPER STAY, DISPOSAL, Rear Gate.>

3. Front Fender

A: REMOVAL

1) Disconnect the ground cable from battery.
2) Remove the bumper face assembly.
   (1) Remove the clips, turn over the front mud guard, and disconnect the fog light connector. (Model with fog light)

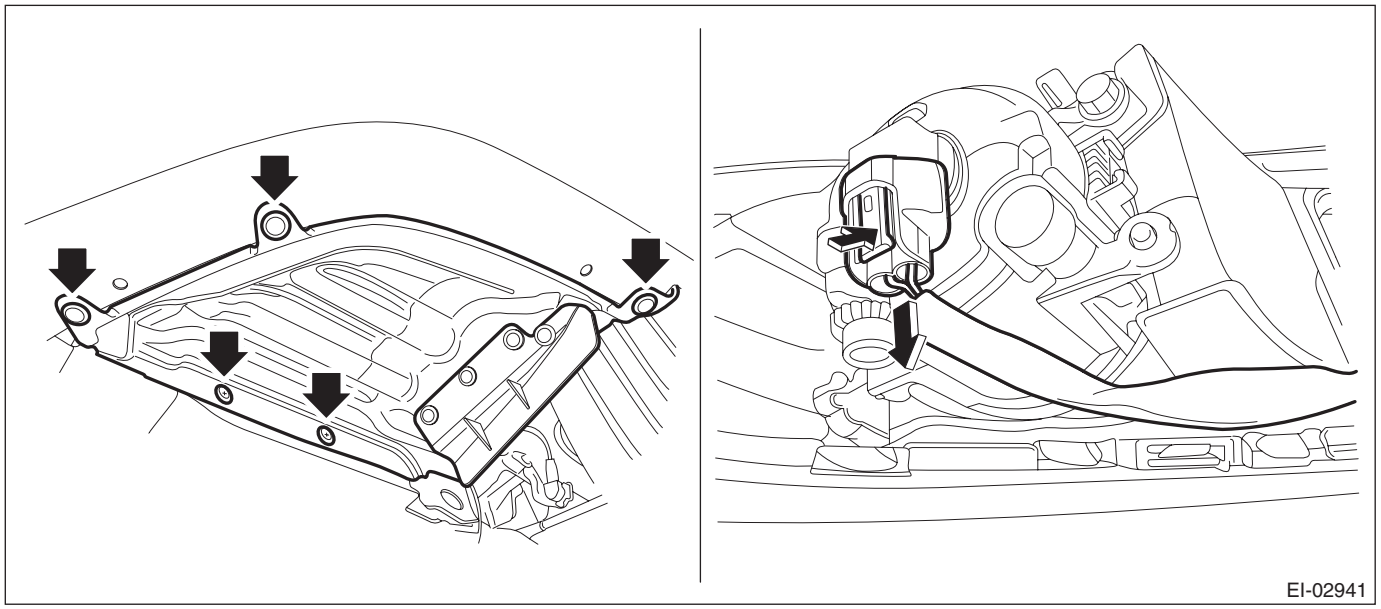

   (2) Remove the clips at the upper side of the bumper.
   (3) Remove the clips from the fender.

(4) Remove the clips at the lower side of bumper.

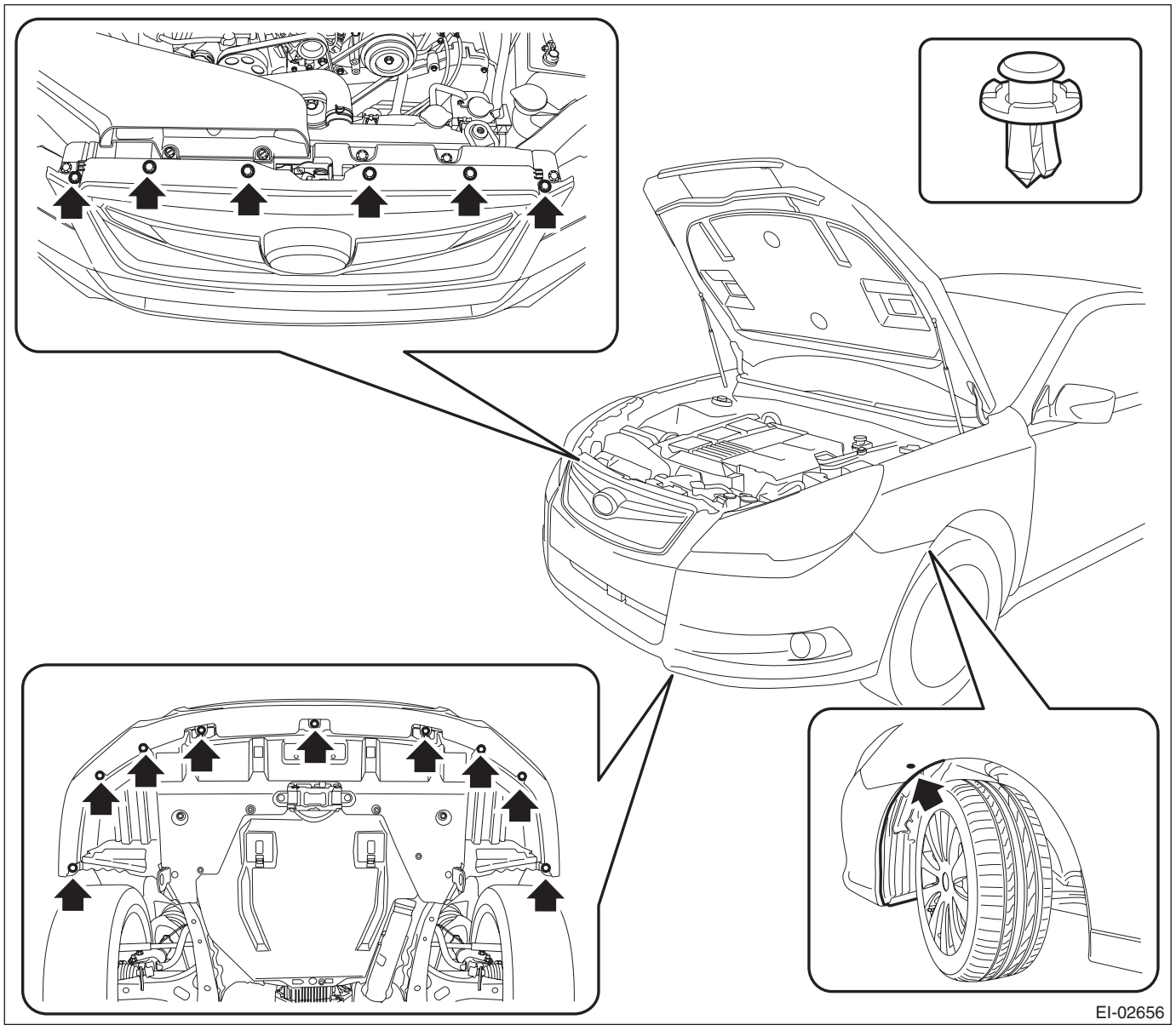

(5) Detach the flange section on the bumper face side from the bracket side front UPR.

CAUTION:
Do not pull forcibly. It may damage the flange sections of the bumper face.

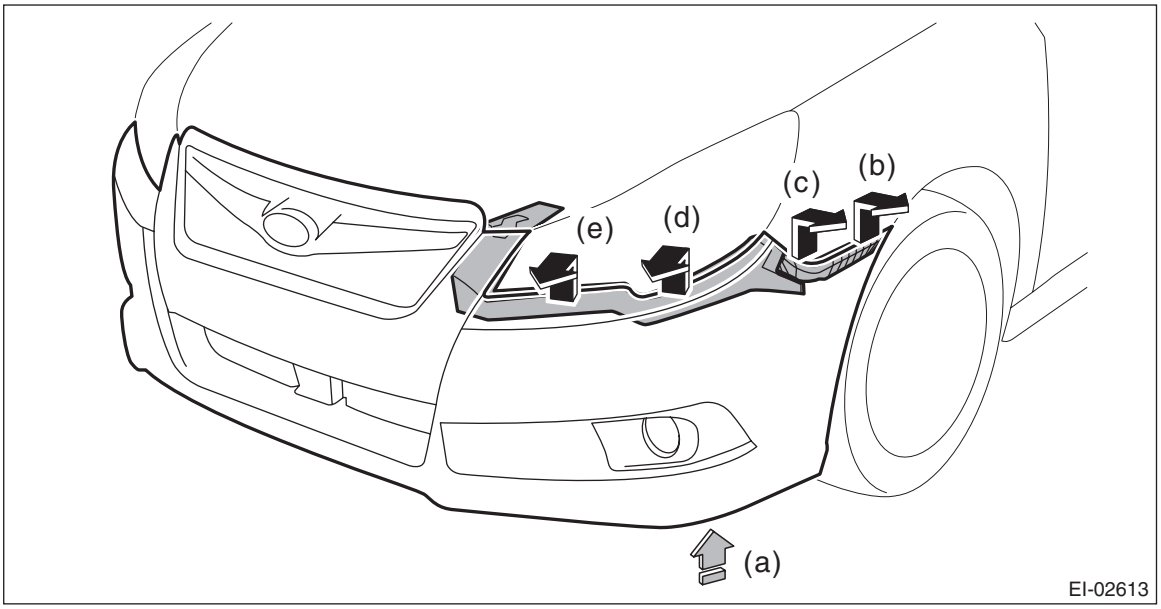

NOTE:
Pushing up the lower side (a) of the fog light, remove from (b) to (e).
Detach the opposite side in the same manner.

3) Remove the cowl panel side.
(1) Detach the pins of the cowl panel side.
(2) Remove the cowl panel side from inside the fender panel by pulling it.

CAUTION:
Applying excessive pulling force may damage the cowl panel side. If it is difficult to remove, use a plastic remover or equivalent tool.

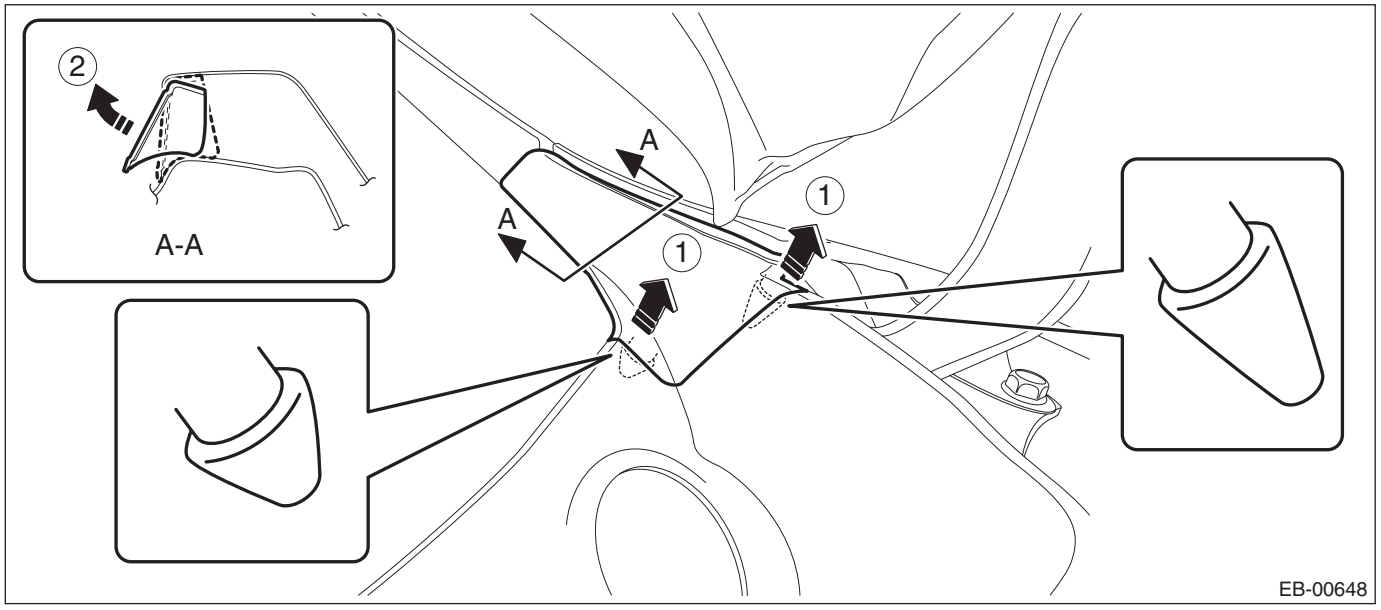

4) Remove the headlight assembly.
(1) Remove the fender cover assembly UPR.
a) Remove the clip.
b) Release the claws of the fender cover assembly UPR by pulling it forward and remove the fender cover.

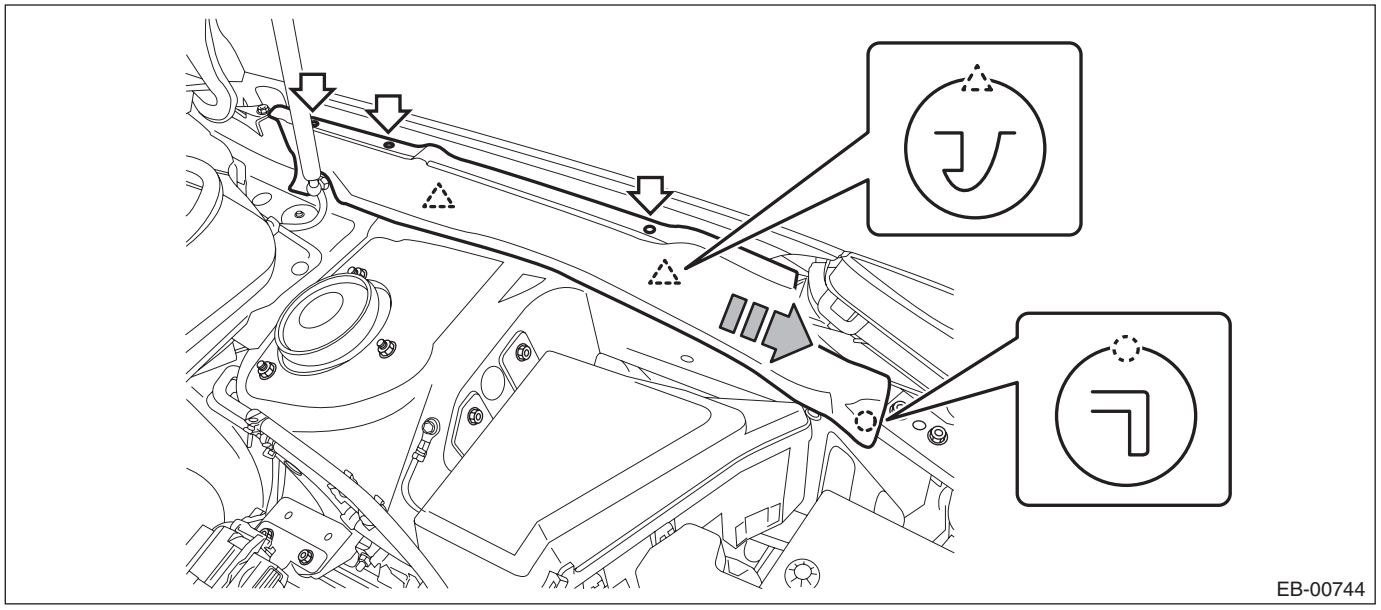

(2) Remove the headlight assembly.

NOTE:
When removing the RH headlight, remove the air intake duct.

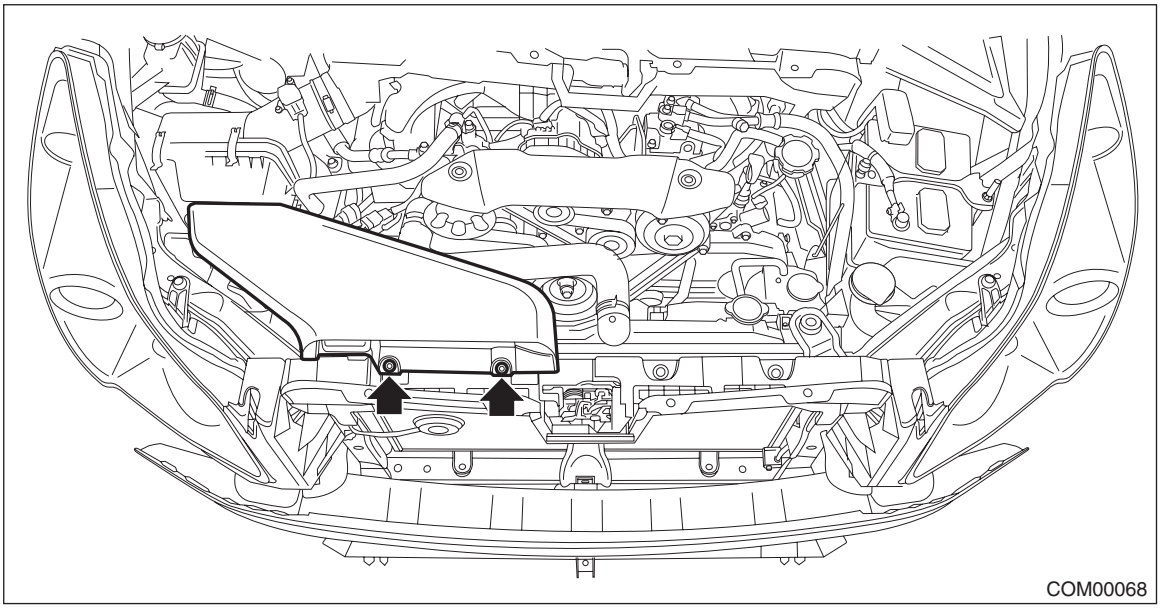

a) Remove the bolts and two clips, and pull out the headlight assembly to the front of the vehicle.

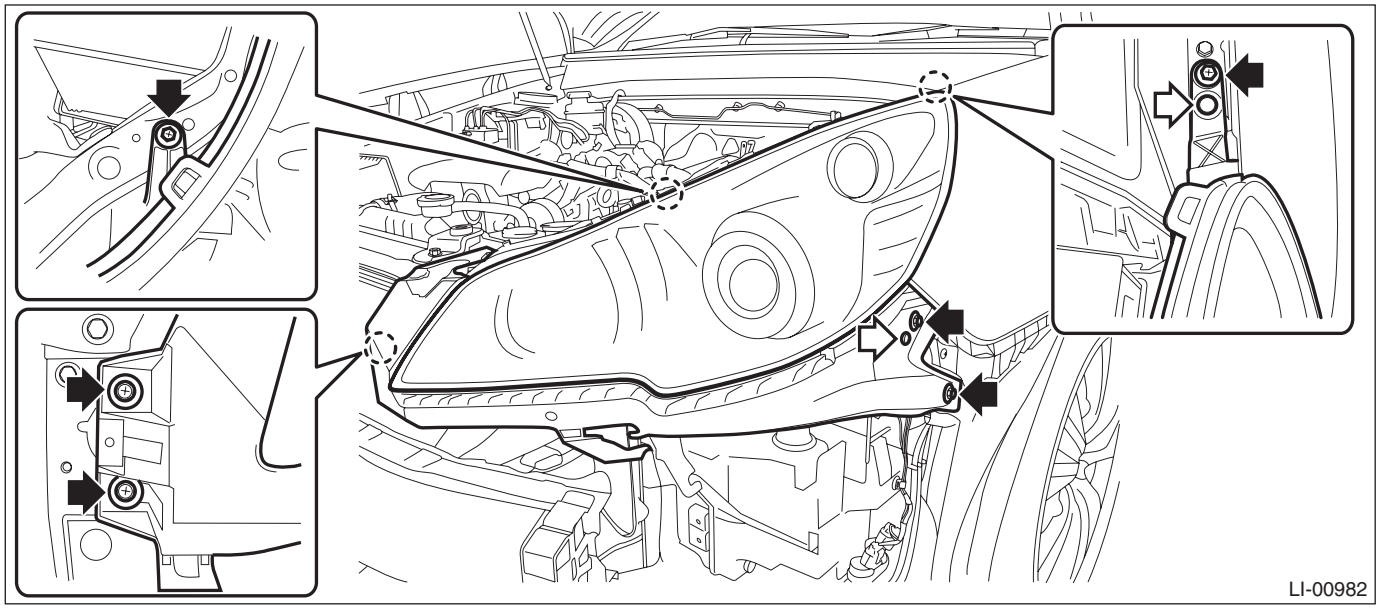

b) Disconnect the connector and remove the headlight assembly.

- Headlight connector RH

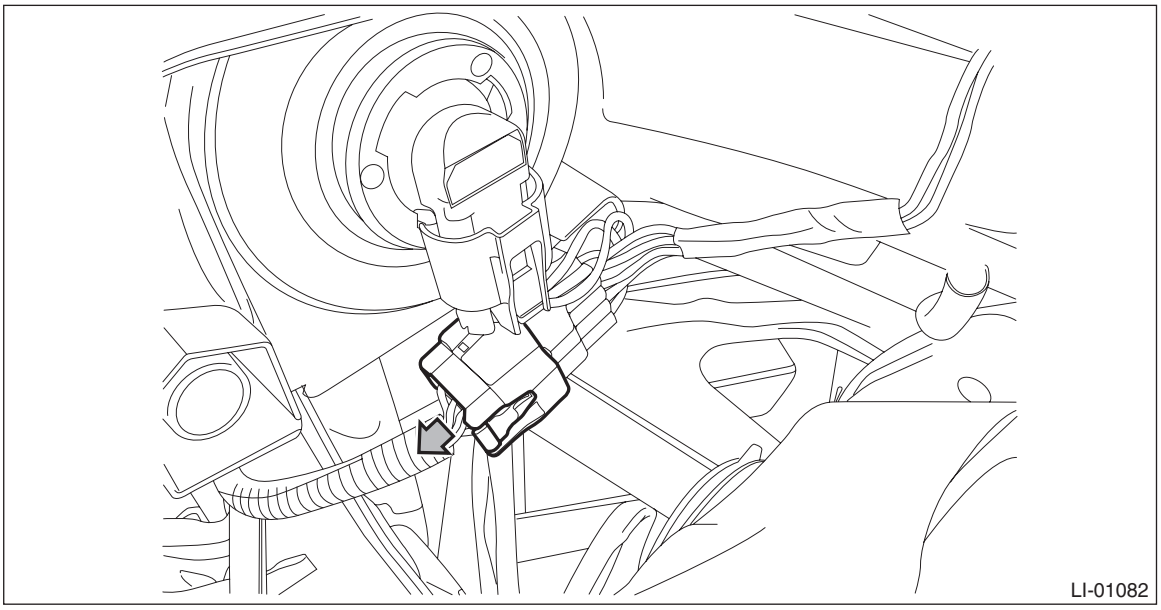

- Headlight connector LH

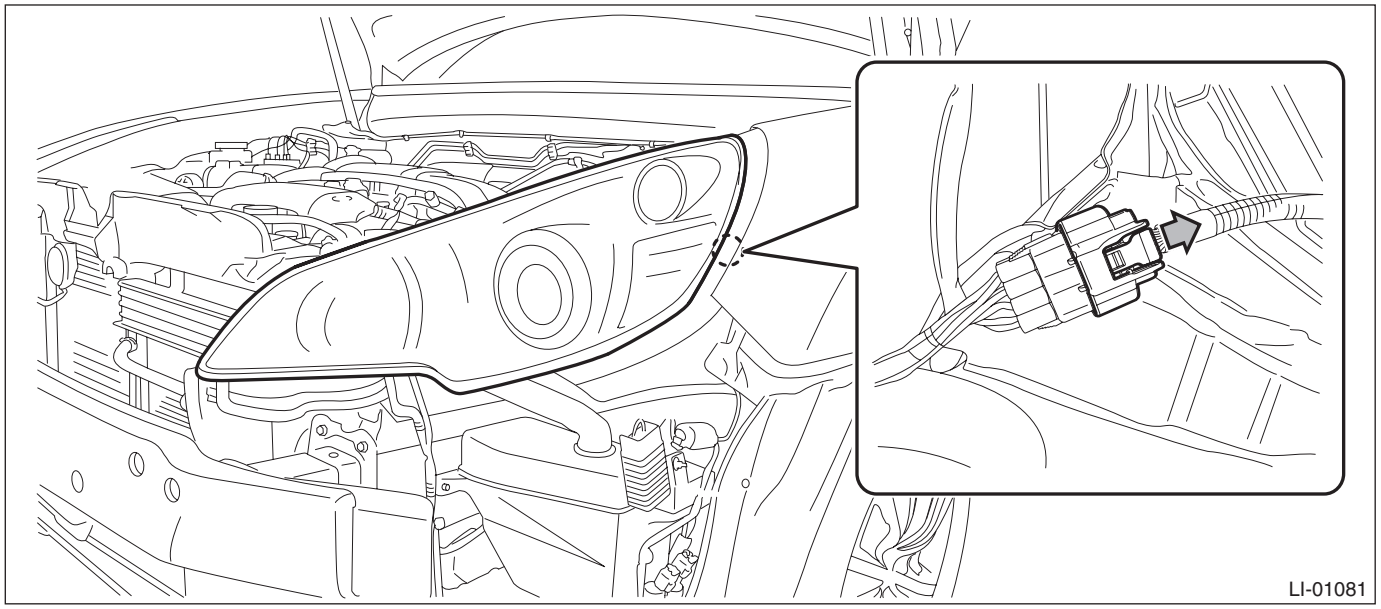

5) Remove the clips, and then remove the side sill garnish.

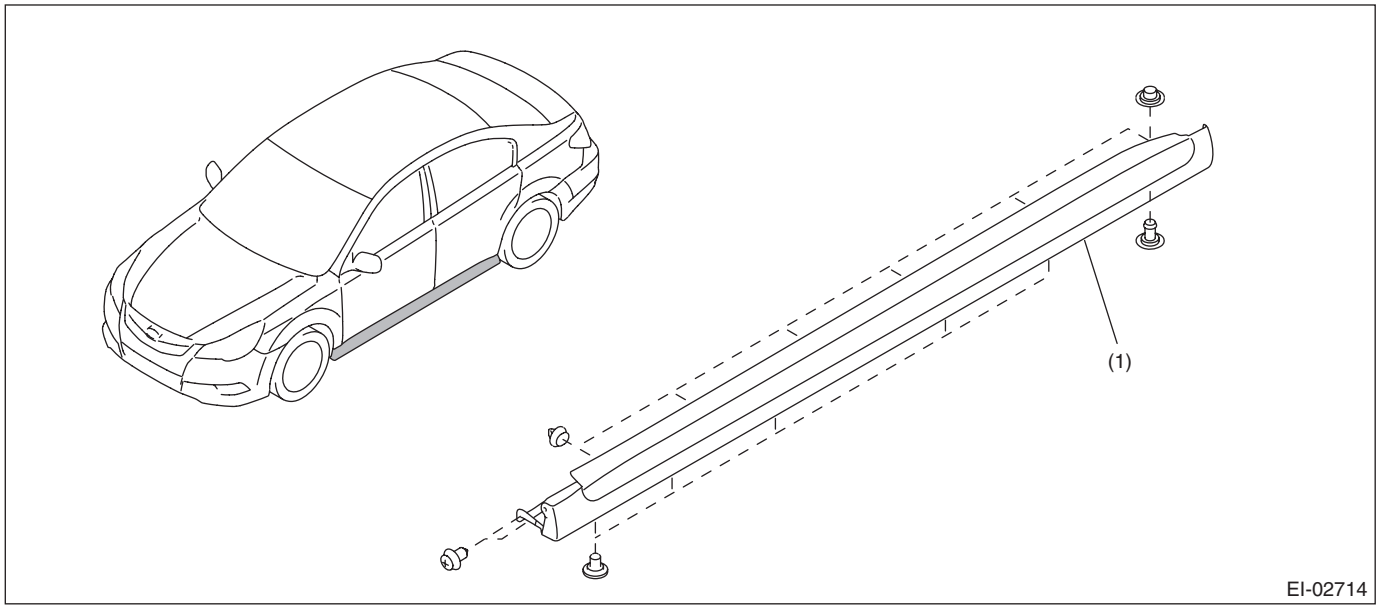

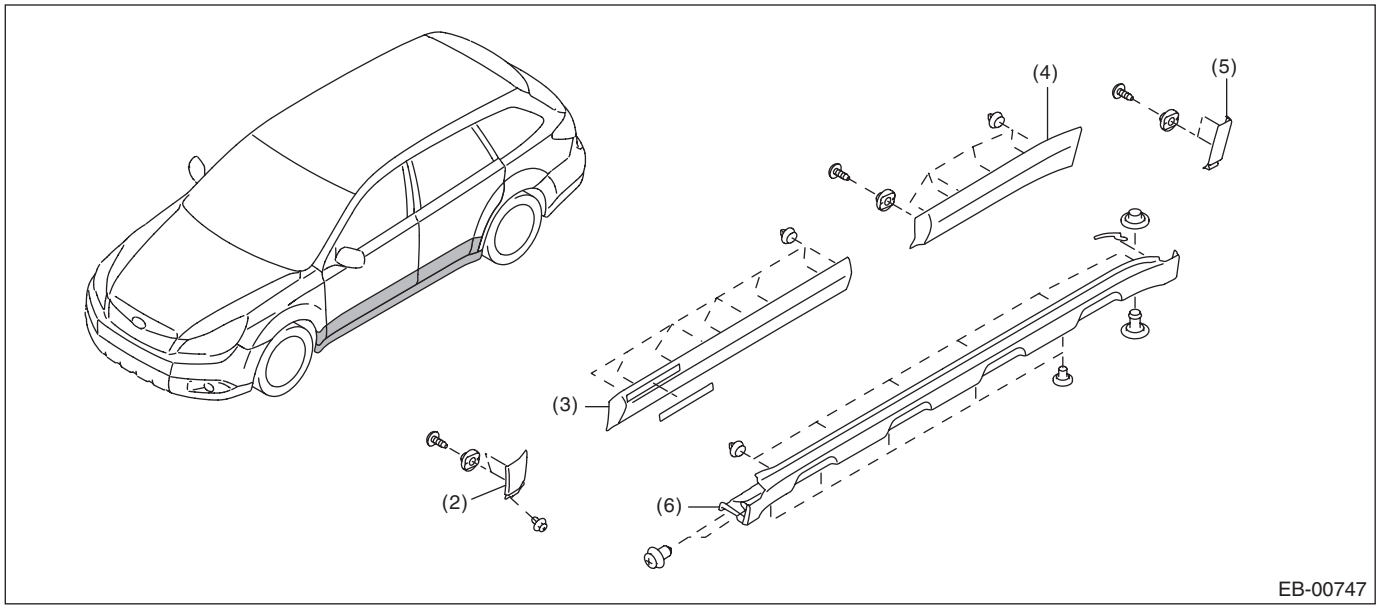

(1) Side sill garnish ASSY (sedan model)
(2) Garnish ASSY front fender (OUTBACK model)
(3) Garnish ASSY front door (OUTBACK model)
(4) Garnish ASSY rear door (OUTBACK model)
(5) Garnish ASSY rear quarter (OUTBACK model)
(6) Side sill garnish ASSY (OUTBACK model)

6) Remove the front fender panel.
(1) Remove the mud guard clips.
(2) Remove the bolt, and remove the front fender panel.

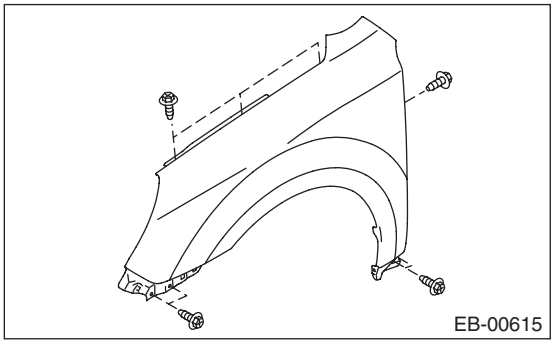

B: INSTALLATION

1) Install each part in the reverse order of removal.

CAUTION:
• After the installation of front fender panel, be sure to perform headlight beam adjustment. <Ref. to LI-27, HEADLIGHT BEAM ADJUSTMENT, ADJUSTMENT, Headlight Assembly.>
• Install the bumper face so that the under cover front end (b) comes inside the front bumper face (a).

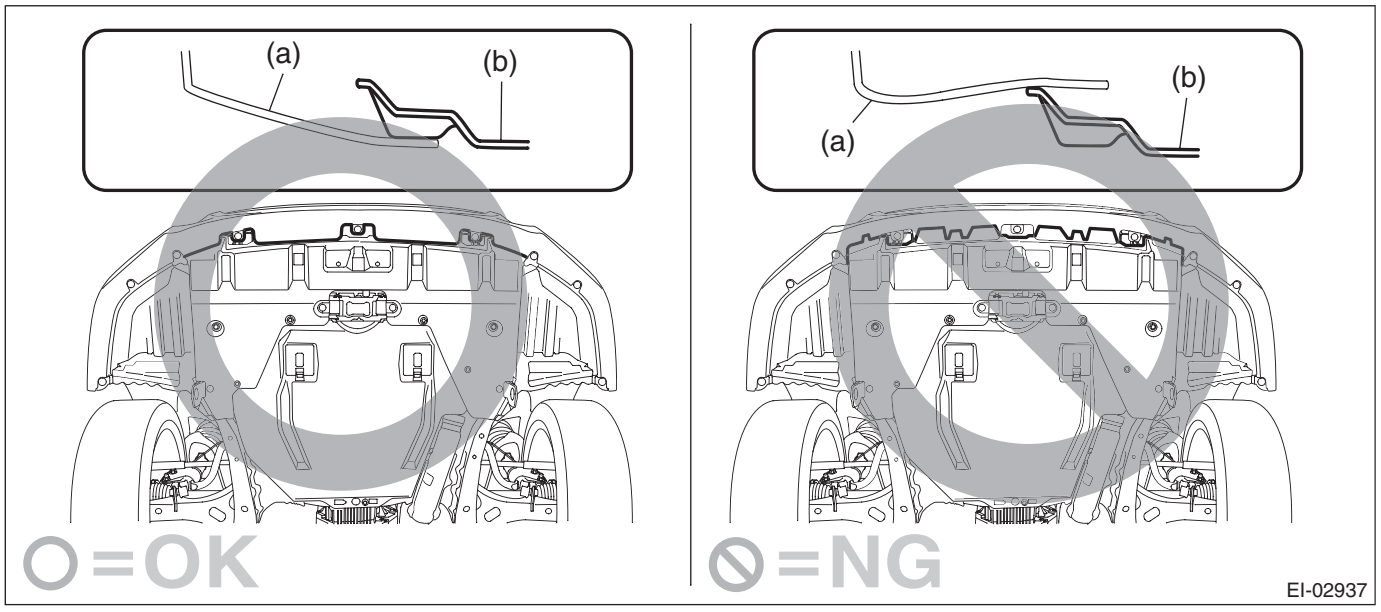

Tightening torque:
Front fender panel: 7.5 N·m (0.76 kgf-m, 5.5 ft-lb)
Headlight assembly: 7.5 N·m (0.76 kgf-m, 5.5 ft-lb)

NOTE:
Install while paying attention to make a uniform clearance around the front fender panel.
- Front fender panel — Front hood panel: <Ref. to EB-13, ADJUSTMENT, Front Hood.>
- Front fender panel — Front door panel: <Ref. to EB-28, ADJUSTMENT, Front Door.>

2) Adjust the fog light beam. (Model with fog light) <Ref. to LI-41, FOG LIGHT AIMING, ADJUSTMENT, Front Fog Light Assembly.>

4. Front Door

A: REMOVAL

1) Disconnect the ground cable from battery.
2) Remove the front door trim. <Ref. to EI-60, FRONT DOOR, REMOVAL, Door Trim.>
3) Remove the outer mirror assembly. <Ref. to GW-28, REMOVAL, Outer Mirror Assembly.>
4) Remove the front door speaker assembly.
   (1) Remove the screws.
   (2) Disconnect the harness connector and remove the front speaker assembly.

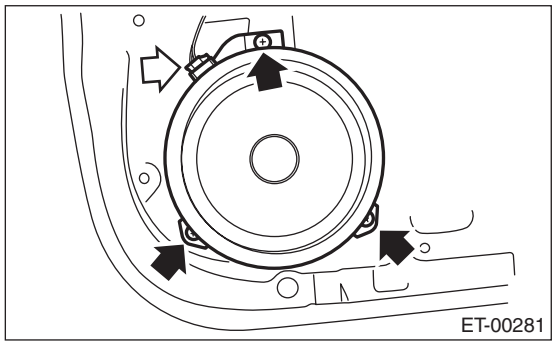

5) Remove the front sealing cover.

CAUTION:
- **Carefully remove the butyl tape. Excessive force will easily break the cover.**
- **If the sealing cover gets broken, replace it with a new part.**

   (1) Remove the screw to remove the door trim bracket.
   (2) Carefully remove the butyl tape to remove the sealing cover.

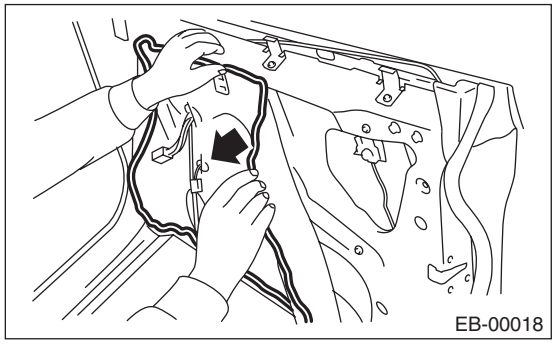

6) Remove the door sash and front door glass. <Ref. to GW-17, REMOVAL, Front Door Glass.>
7) Remove the front door regulator and motor. <Ref. to GW-19, REMOVAL, Front Regulator and Motor Assembly.>
8) Remove the front door latch assembly. <Ref. to SL-34, REMOVAL, Front Door Latch and Door Lock Actuator Assembly.>
9) Remove the front outer handle. <Ref. to SL-31, REMOVAL, Front Outer Handle.>

10) Remove the front door weather strip.

CAUTION:
If the weather strip clip is removed with excessive force, the weather strip may be damaged. Be sure to use clip remover to remove.

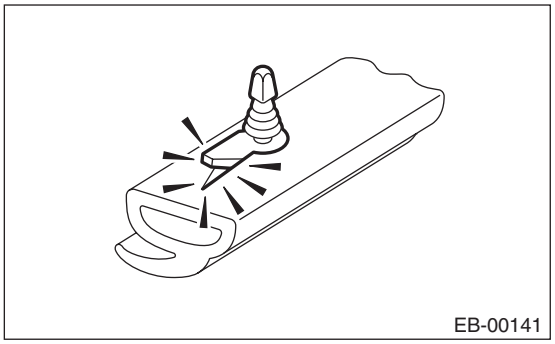

11) Remove the bolts and nuts to remove the door checker.

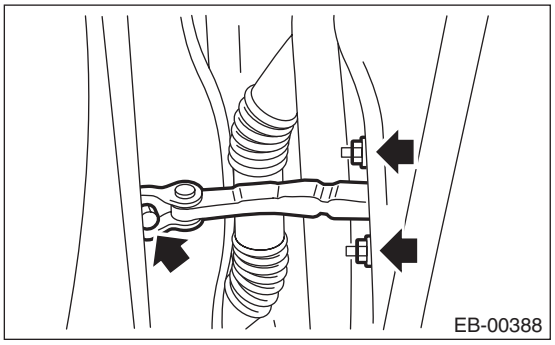

12) Release the claws, and then remove the side sill cover-front INN.

CAUTION:
Do not pull with excessive force. Doing so may damage the claws of the side sill cover INN.

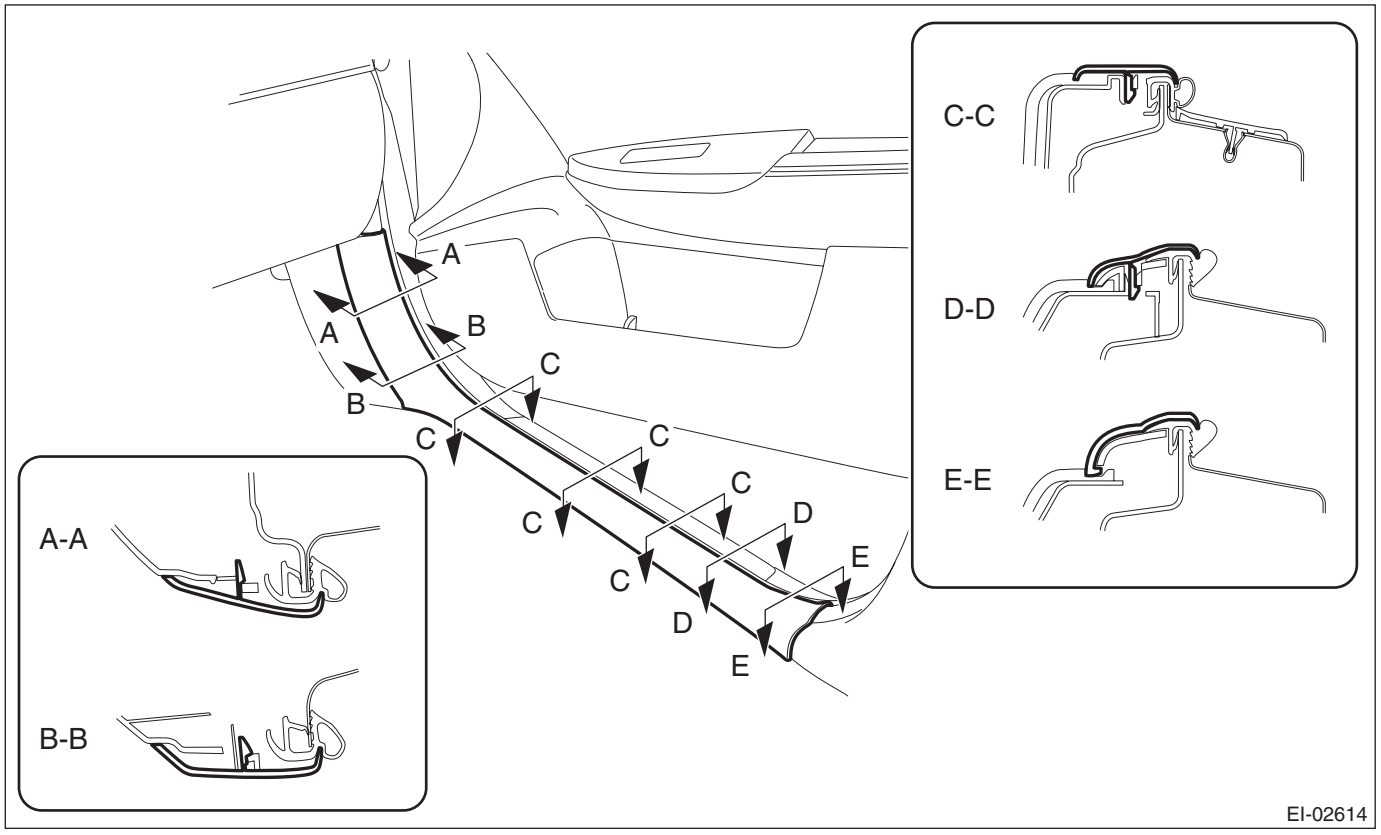

NOTE:
To release the claws of the side sill cover INN, the following steps are recommended.
1. Take out the weather strip from under the side sill cover INN.
2. Turn over the floor mat and release the claw (C-C) by accessing from behind the side sill cover INN.

13) Remove the clip, and remove the side sill cover front.

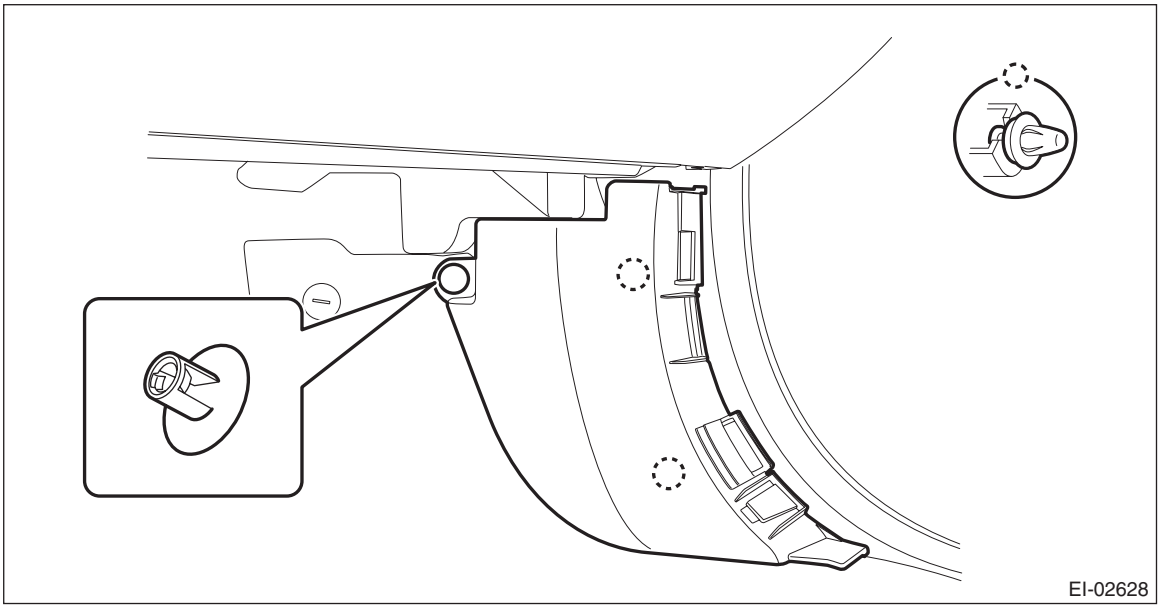

14) Disconnect the connector of door harness from body harness.

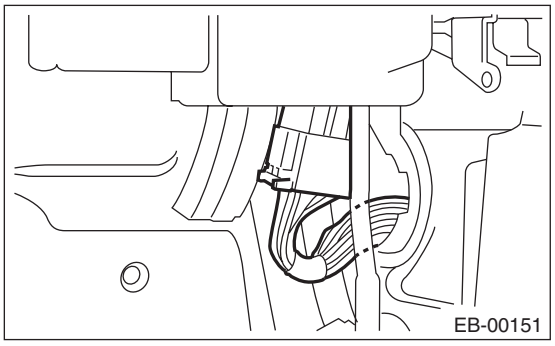

15) Before removing the door panel, make the following preparations.

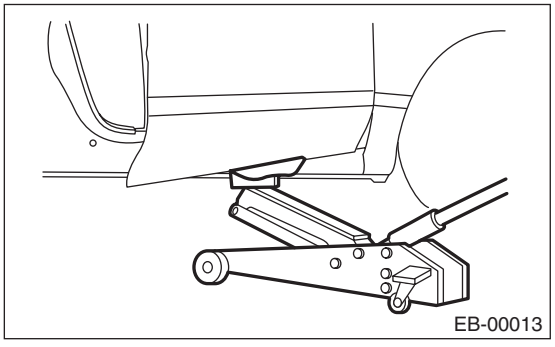

(1) Put a wooden block on a floor jack and place the jack under the front door.
(2) Support the door with a jack to protect it from damage.

CAUTION:
Do not lift the door panel with a floor jack excessively. The door hinges may be damaged.

16) Remove the door-side bolts for upper and lower hinges to remove front door panel.

CAUTION:
Door panels are heavy. When removing and installing them, always work in a team of two or more persons.

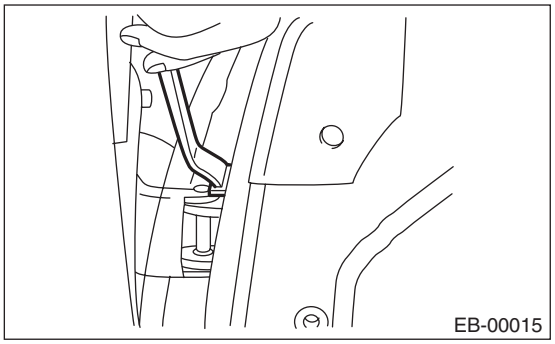

17) Remove the door hinge from vehicle.

B: INSTALLATION

1) Remove the fender cover lower from fender panel.
2) Apply grease to the sliding area of door hinges, and install the door hinge to vehicle.
3) Put a wooden block on jack and place the front door on that.

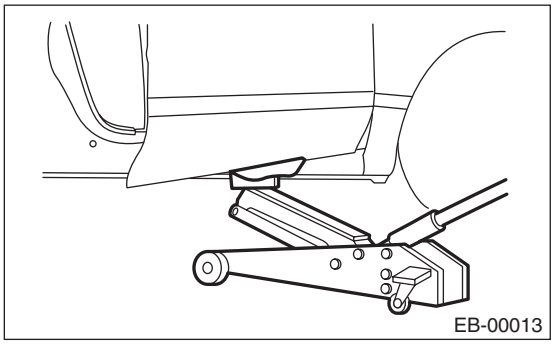

4) Temporarily install the front door to upper hinge and lower hinge after adjusting the height by jack.

NOTE:
When installing, make sure that a uniform clearance is created around the front door panel.
5) Adjust the clearance around the front door panel. <Ref. to EB-28, ADJUSTMENT, Front Door.>
6) Install the fender cover lower.
7) Tighten the bolts and nuts of door hinges and door checker.

Tightening torque:
Refer to "COMPONENT" of "General Description". <Ref. to EB-4, FRONT DOOR, COMPONENT, General Description.>

8) Install door internal parts in the reverse order of removal.
9) Connect the door harness connector, and install the front pillar lower trim.

C: ADJUSTMENT

Adjust the clearance around the front door panel as follows.

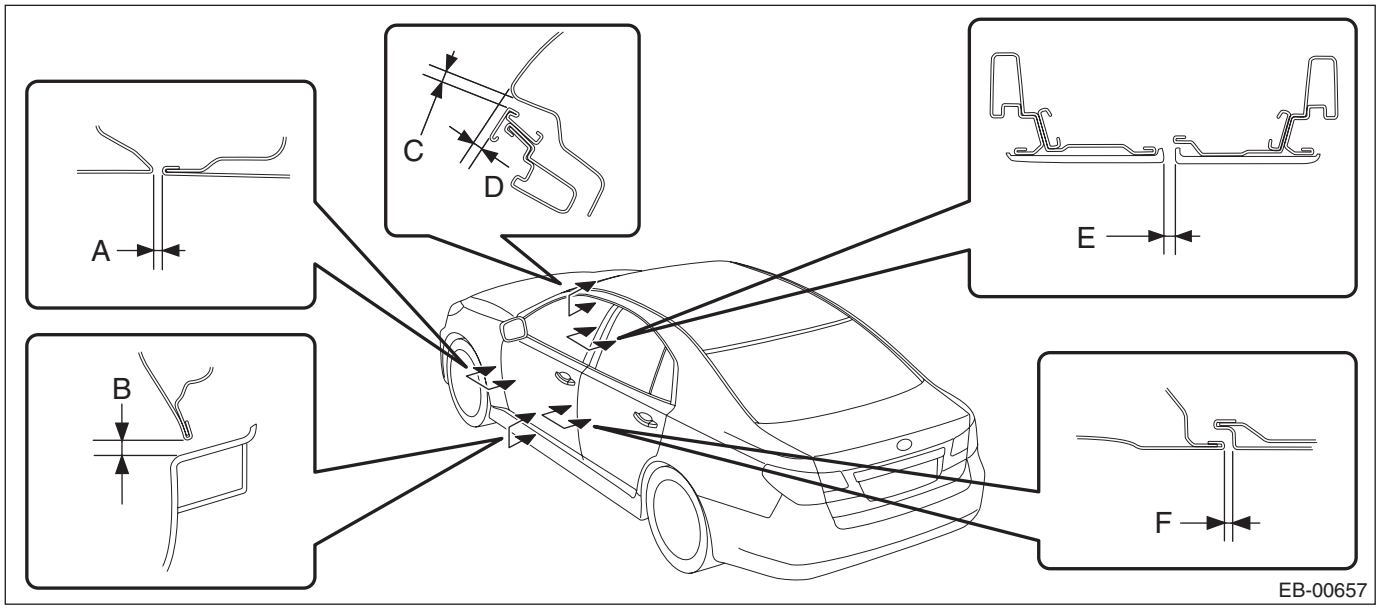

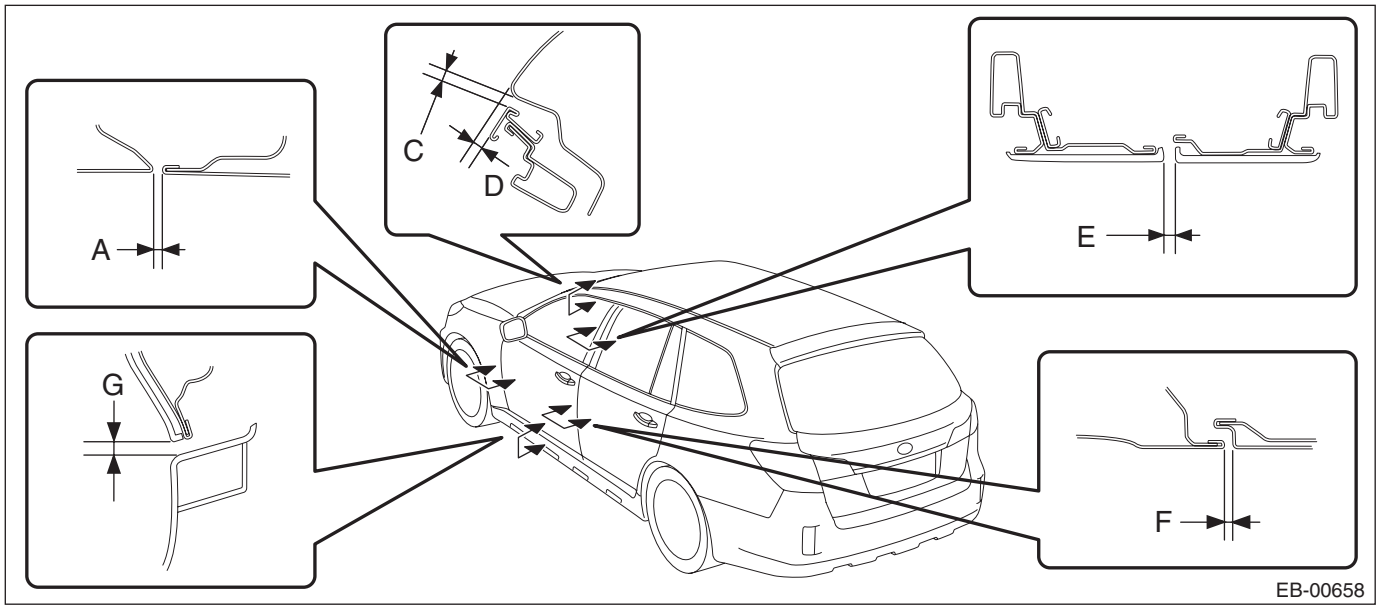

	Part	Standard
A	Front fender panel to Front door panel	4.6±1.0 mm (0.18±0.04 in)
B	Front door panel to Side sill garnish (sedan model)	6.0±1.5 mm (0.24±0.06 in)
C	Roof panel to Front door sash	5.0±1.0 mm (0.20±0.04 in)
D	Surface level gap between roof panel and front door sash	3.5±1.0 mm (0.14±0.04 in)
E	Front door sash to Rear door sash	5.5±1.0 mm (0.22±0.04 in)
F	Front door panel to Rear door panel	4.6±1.0 mm (0.18±0.04 in)
G	Front door garnish to Side sill garnish (OUTBACK model)	8.0±1.0 mm (0.31±0.04 in)

NOTE:
Common to sedan and OUTBACK models

1) Adjust the vertical and horizontal positions of front door panel.

Preparation tool:
ST: WRENCH (925610000)

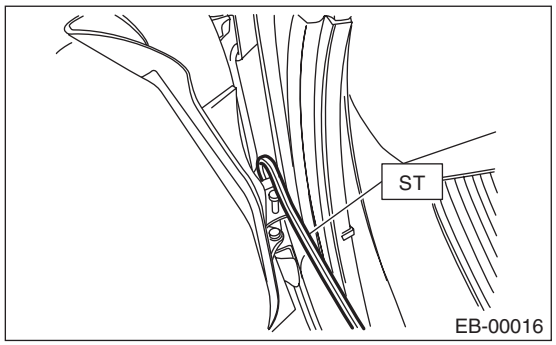

(1) Using ST, loosen the body side bolts of the upper and lower hinges.
(2) Adjust the vertical and horizontal clearance of front door panel.

2) Adjust the surface level gap between front door panel and rear door.

CAUTION:
Do not use an impact wrench. Welding area on the striker nut plate is easily broken.

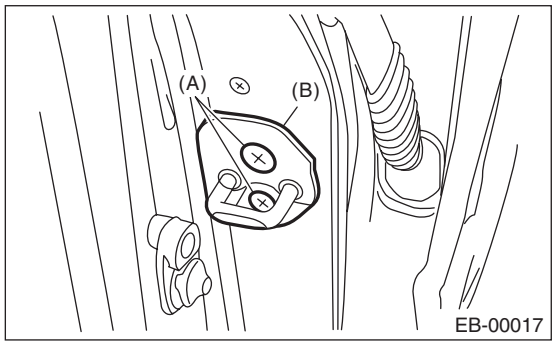

(1) Loosen the screws (A).
(2) Tap the striker (B) using a plastic hammer to adjust the surface level gap between rear end of front door panel and front end of rear door panel.

5. Front Sealing Cover

A: REMOVAL

1) Disconnect the ground cable from battery.
2) Remove the gusset cover.
   (1) Attach the protective tape (a) to the door trim.
   (2) Release the clips and claws, then detach the gusset cover.

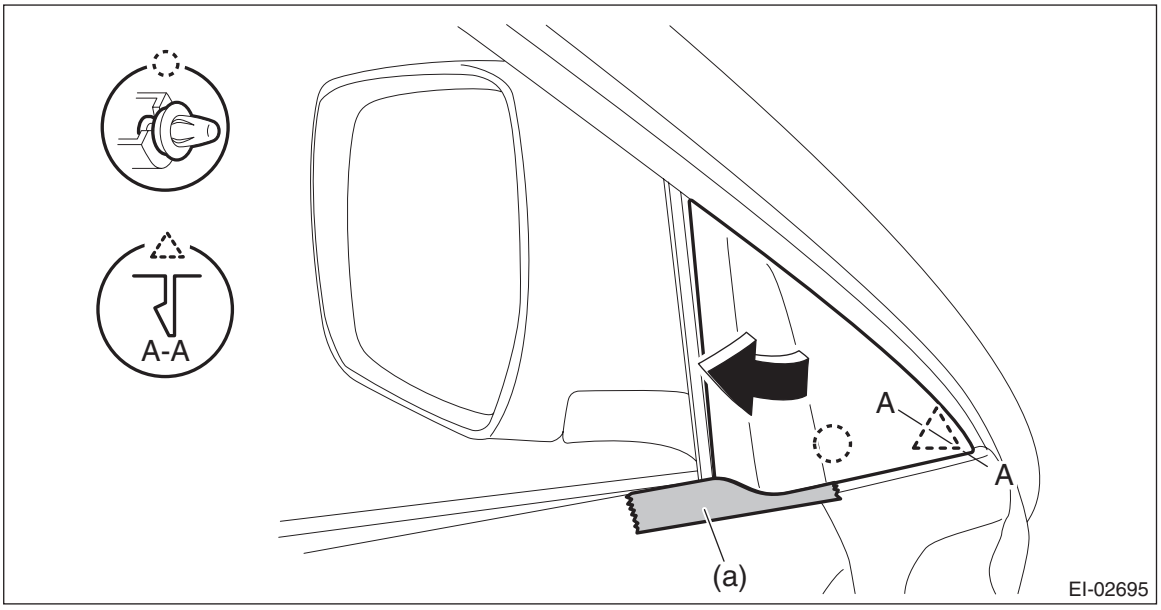

3) Remove the door trim assembly.
   (1) Open the cover and remove the screw.
   (2) Remove the clips in the order of (A) to (J) and remove the door trim assembly from the door panel.

CAUTION:
When removing the door trim, be sure to remove the clips in the correct order. Forcibly removing clips may damage the door panel assembly.

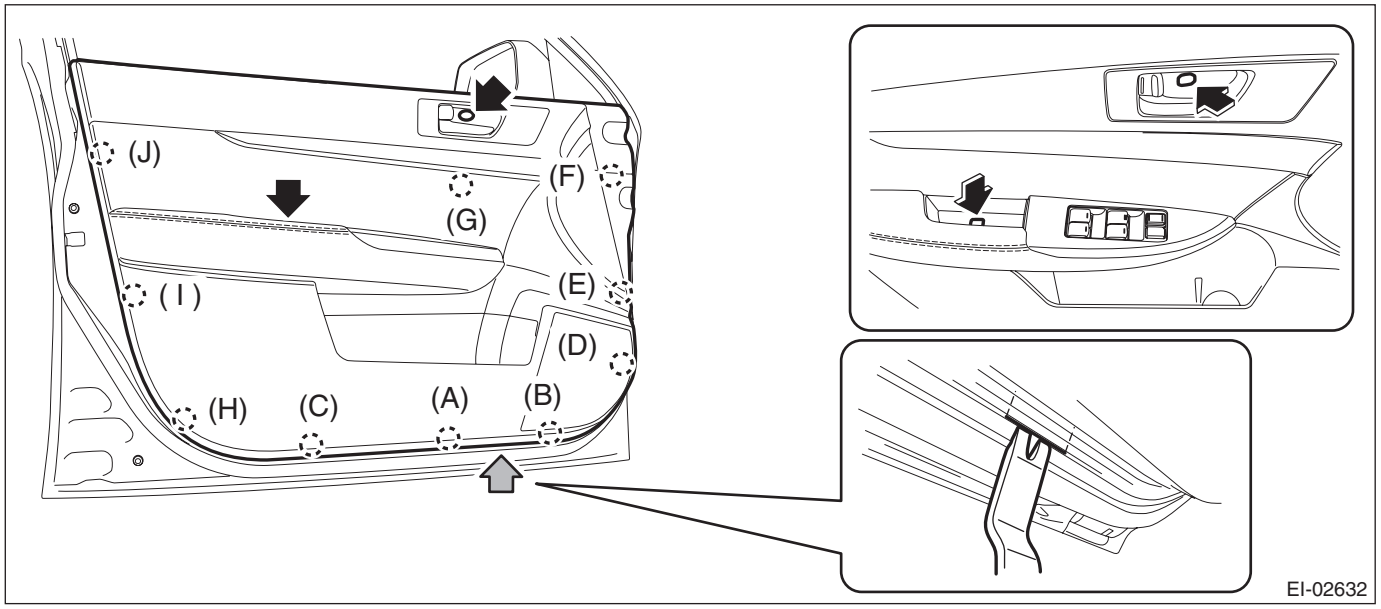

NOTE:
Insert a plastic clip remover into the slit at the bottom of the door trim, to lift the door trim.

(3) Remove the cables (a) and (b) from the cable holder of inner remote.

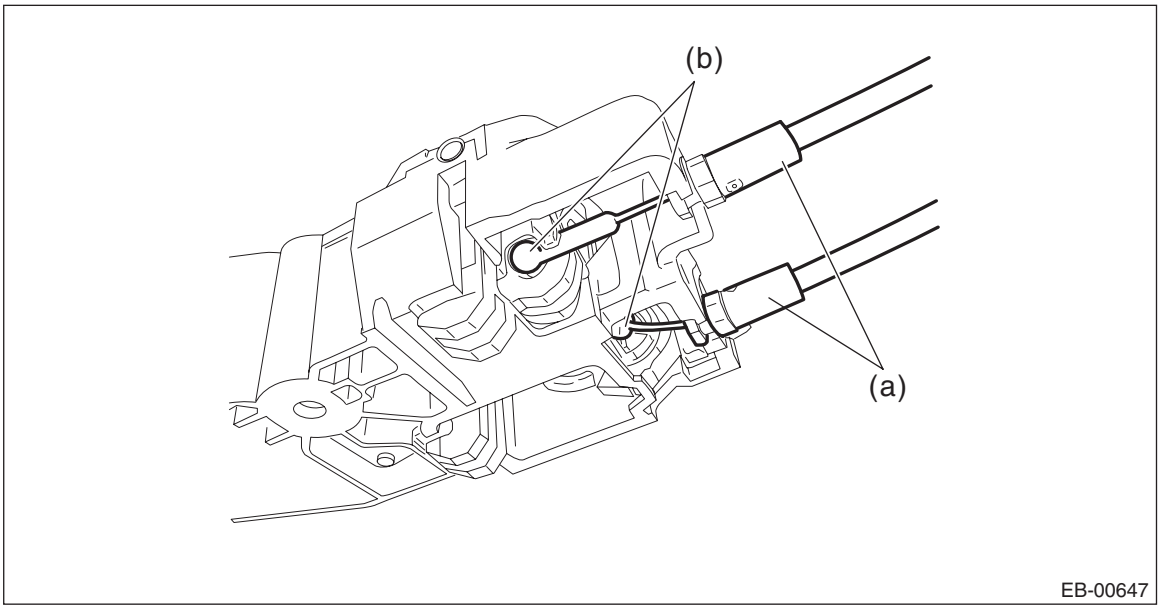

(4) Disconnect the harness connector and remove the door trim assembly.

4) Remove the sealing cover.

CAUTION:
- **Carefully remove the butyl tape. Excessive force will easily break the cover.**
- **If the sealing cover gets broken, replace it with a new part.**

(1) Remove the screw to remove the door trim bracket.
(2) Carefully remove the butyl tape to remove the sealing cover.

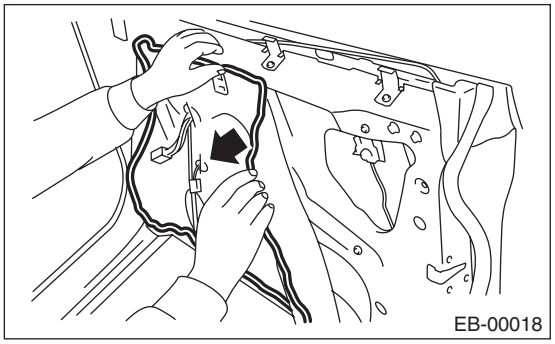

B: INSTALLATION

CAUTION:
- **If the sealing cover gets broken, replace it with a new part.**
- **Apply a uniform bead of butyl tape.**
- **Attach the sealing cover, keeping it from becoming wrinkled.**
- **Breaks in the bead will allow water leakage and contamination.**

1) Install each part in the reverse order of removal.
2) When replacing the sealing cover, use the butyl tape.
3) Press the butyl tape-applied area firmly to prevent any floating on surface.

Butyl tape:
3M8626 or equivalent

C: INSPECTION

If the sealing cover gets damaged, replace it with a new part.

6. Rear Door

A: REMOVAL

1) Disconnect the ground cable from battery.
2) Remove the rear door trim. <Ref. to EI-61, REAR DOOR, REMOVAL, Door Trim.>
3) Remove the rear door speaker assembly.
   (1) Remove the screws.
   (2) Disconnect the harness connector and remove the rear speaker assembly.

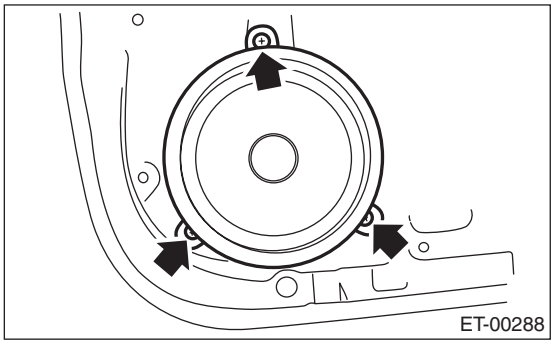

4) Remove the rear sealing cover.

CAUTION:
- **Carefully remove the butyl tape. Excessive force will easily break the cover.**
- **If the sealing cover gets broken, replace it with a new part.**

   (1) Remove the screw to remove the door trim bracket.
   (2) Carefully remove the butyl tape to remove the sealing cover.

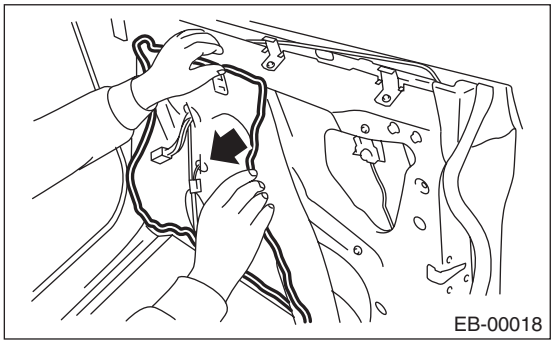

5) Remove the door sash and rear door glass. <Ref. to GW-34, REMOVAL, Rear Door Glass.>
6) Remove the rear door regulator and motor assembly. <Ref. to GW-36, REMOVAL, Rear Regulator and Motor Assembly.>
7) Remove the rear door latch. <Ref. to SL-41, REMOVAL, Rear Door Latch and Door Lock Actuator Assembly.>
8) Remove the rear outer handle. <Ref. to SL-38, REMOVAL, Rear Outer Handle.>

9) Remove the rear door weather strip.

CAUTION:
If the weather strip clip is removed with excessive force, the weather strip may be damaged. Be sure to use clip remover to remove.

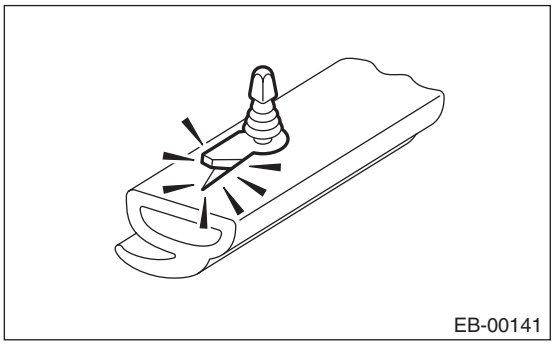
EB-00141

10) Remove the bolts and nuts to remove the door checker.

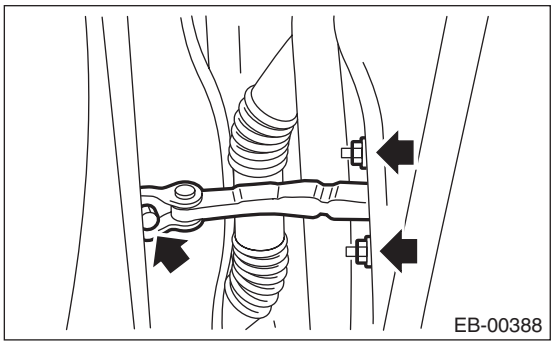
EB-00388

11) Disconnect the rear door harness connectors.

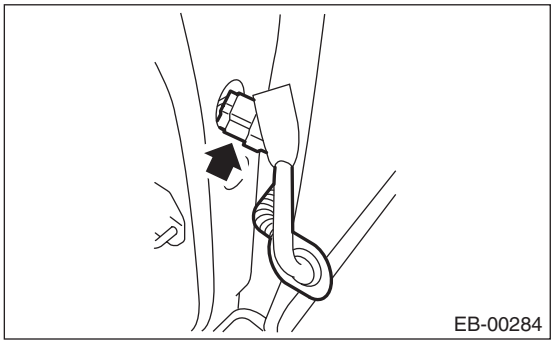
EB-00284

(1) Remove the grommet and pull out the rear door harness connector from inside the center pillar.
(2) Disconnect the rear door harness connectors.

12) Before removing the door panel, make the following preparations.

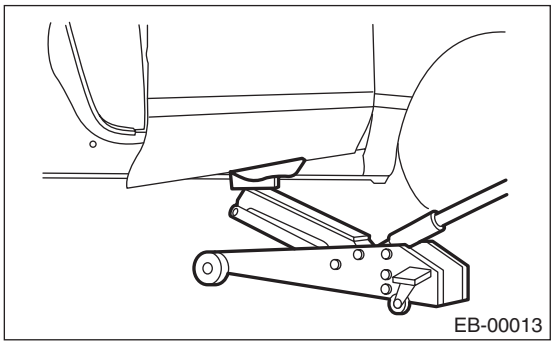
EB-00013

(1) Put a wooden block on a floor jack and place the jack under the rear door.

(2) Support the rear door with the jack to protect it from damage.

CAUTION:
Do not lift the door panel with a floor jack excessively. The door hinges may be damaged.

13) Remove the door-side bolts for upper and lower hinges to remove the rear door panel.

CAUTION:
Door panels are heavy. When removing and installing them, always work in a team of two or more persons.

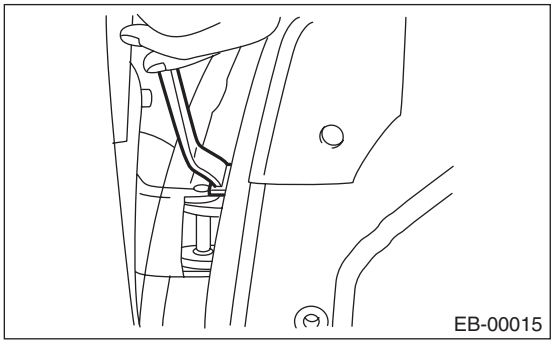

14) Remove the door hinge from vehicle.

B: INSTALLATION

1) Apply grease to the moving part of door hinges.
2) Put a wooden block on jack and place the rear door on that.

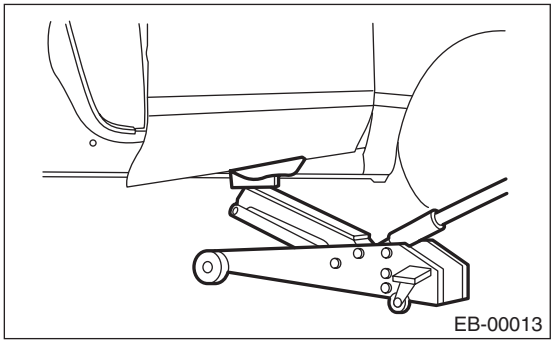

3) Temporarily install the rear door to upper hinge and lower hinge after adjusting the height by jack.

NOTE:
When installing, make sure that a uniform clearance is created around the rear door panel.

4) Adjust the clearance around the rear door panel. <Ref. to EB-35, ADJUSTMENT, Rear Door.>
5) Tighten the bolts and nuts of door hinges and door checker.

Tightening torque:
Refer to "COMPONENT" of "General Description". <Ref. to EB-5, REAR DOOR, COMPONENT, General Description.>

6) Install door internal parts in the reverse order of removal.
7) Connect the door harness connector, and install the center pillar lower trim.

C: ADJUSTMENT

Adjust the clearance around the rear door panel as follows.

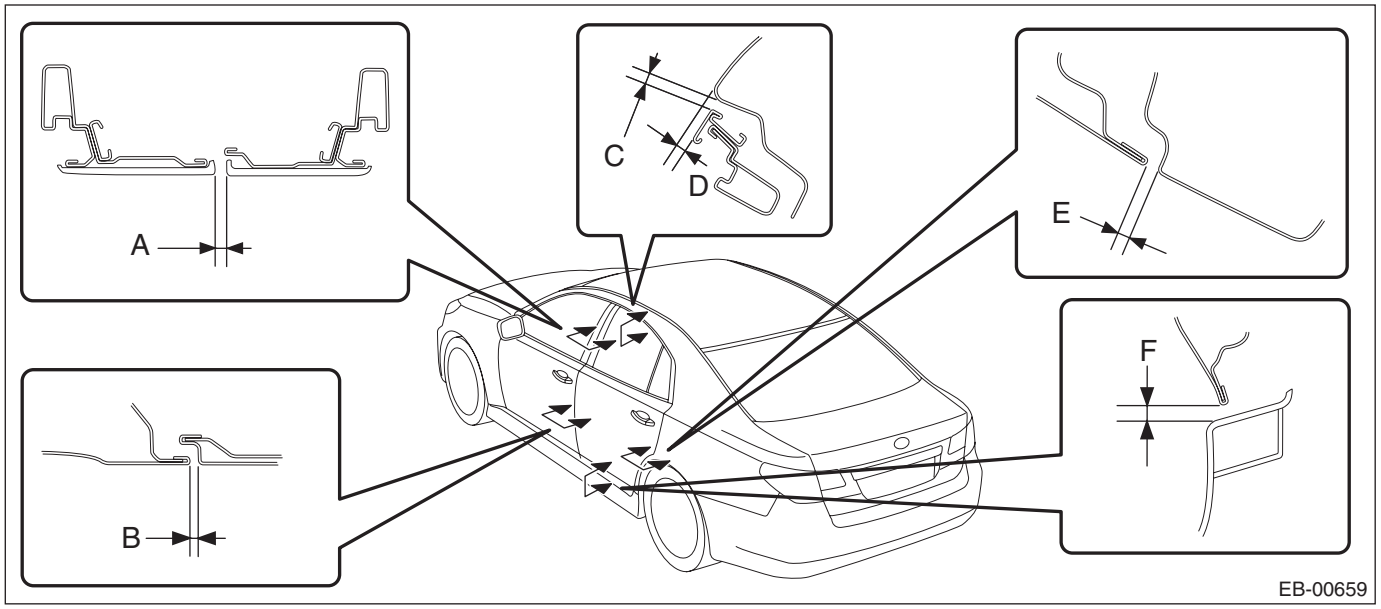

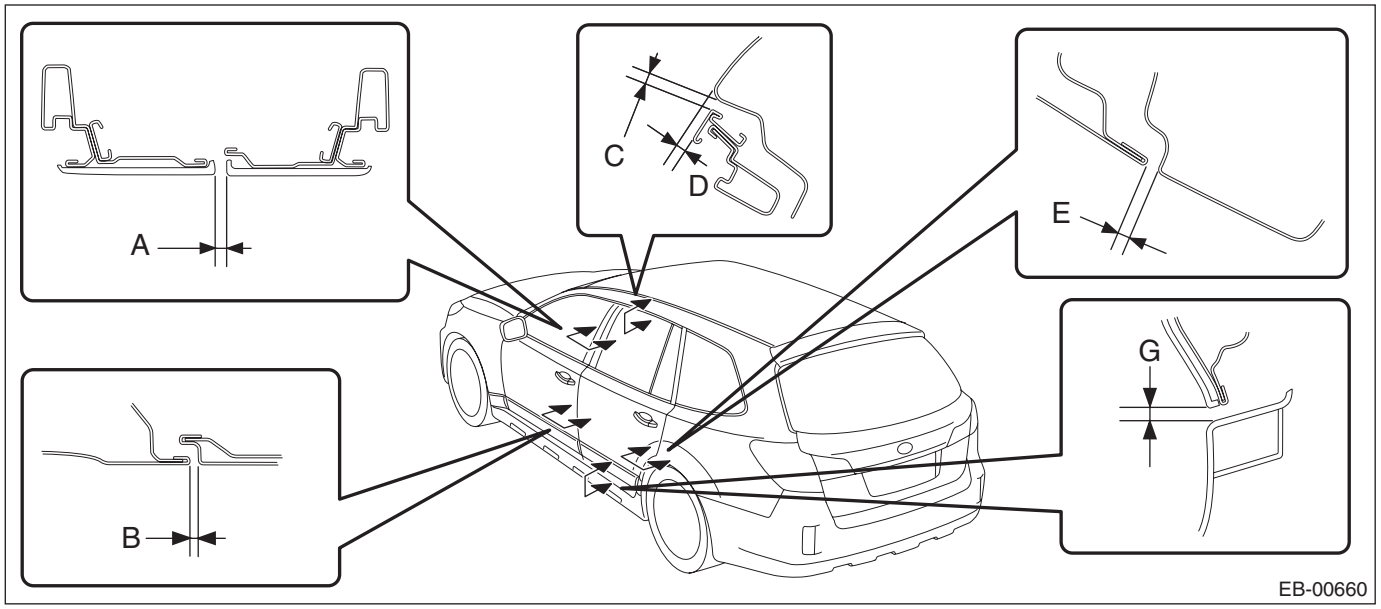

	Part	Standard
A	Front door sash to Rear door sash	5.5±1.0 mm (0.22±0.04 in)
B	Front door panel to Rear door panel	4.6±1.0 mm (0.18±0.04 in)
C	Roof panel to Rear door sash	5.0±1.0 mm (0.20±0.04 in)
D	Surface level gap between roof panel and rear door sash	3.5±1.0 mm (0.14±0.04 in)
E	Rear door panel to Rear quarter panel	4.0±1.0 mm (0.16±0.04 in)
F	Rear door panel to Side sill garnish (sedan model)	6.0±1.5 mm (0.24±0.06 in)
G	Rear door garnish to Side sill garnish (OUTBACK model)	8.0±1.0 mm (0.31±0.04 in)

1) Adjust the vertical and horizontal positions of rear door panel.

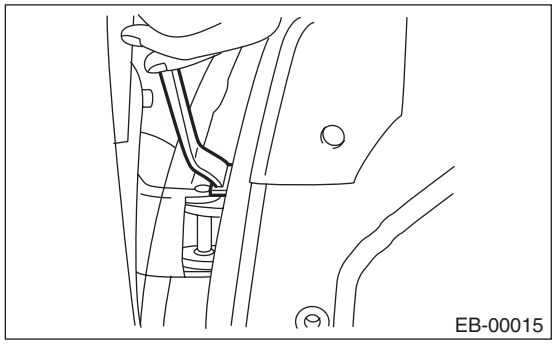

(1) Loosen the body side bolts of upper and lower hinges.
(2) Adjust the vertical and horizontal clearance of rear door panel.

2) Adjust the surface level gap between rear door panel and body.

CAUTION:
Do not use an impact wrench. Welding area on the striker nut plate is easily broken.

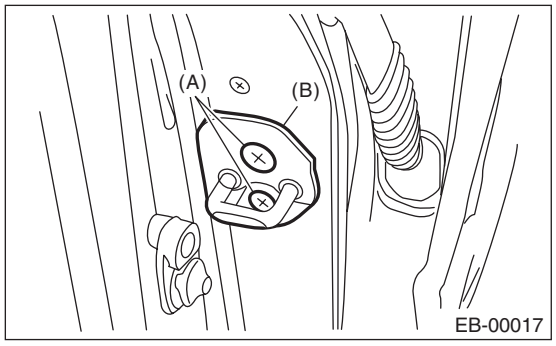

(1) Loosen the screws (A).
(2) Tap the striker (B) using a plastic hammer to adjust the surface level gap between rear end of rear door panel and rear quarter.

7. Rear Sealing Cover

A: REMOVAL

1) Disconnect the ground cable from battery.
2) Remove the door trim assembly.
   (1) Open the cover and remove the screw.
   (2) Remove the clips in the order of (A) to (H) and remove the door trim assembly from the door panel.

CAUTION:
When removing the door trim, be sure to remove the clips in the correct order. Forcibly removing clips may damage the door panel assembly.

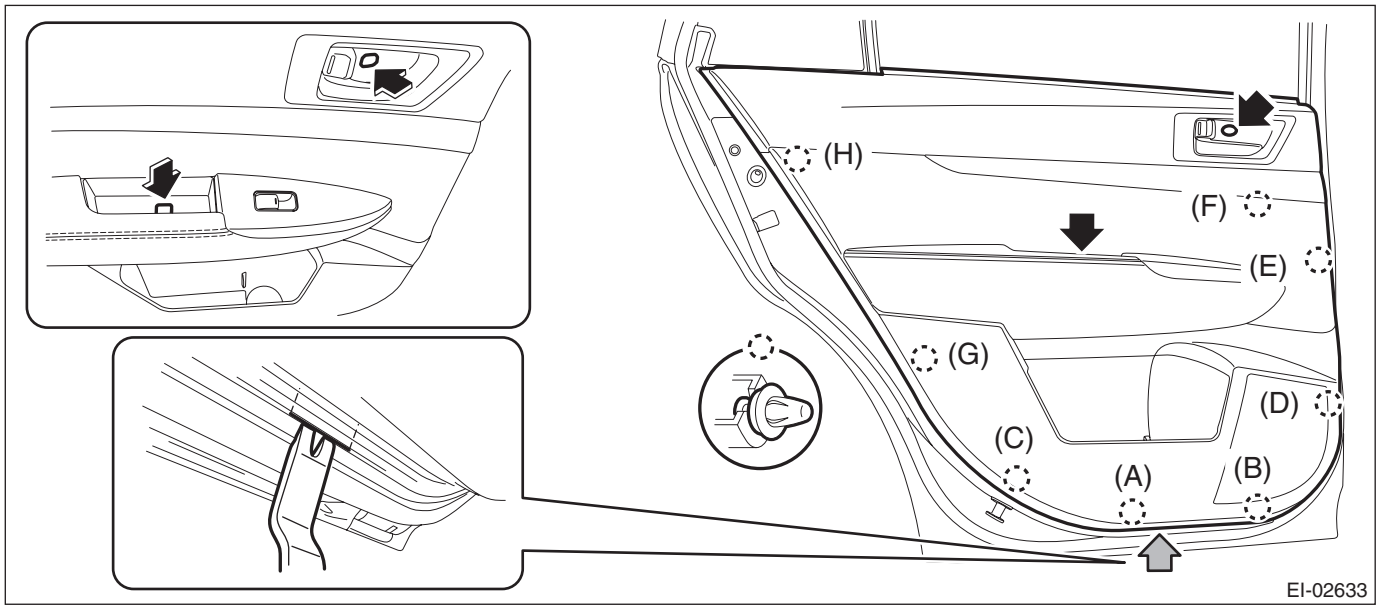

NOTE:
Insert a plastic clip remover into the slit at the bottom of the door trim, to lift the door trim.
   (3) Remove the cables (a) and (b) from the cable holder of inner remote.

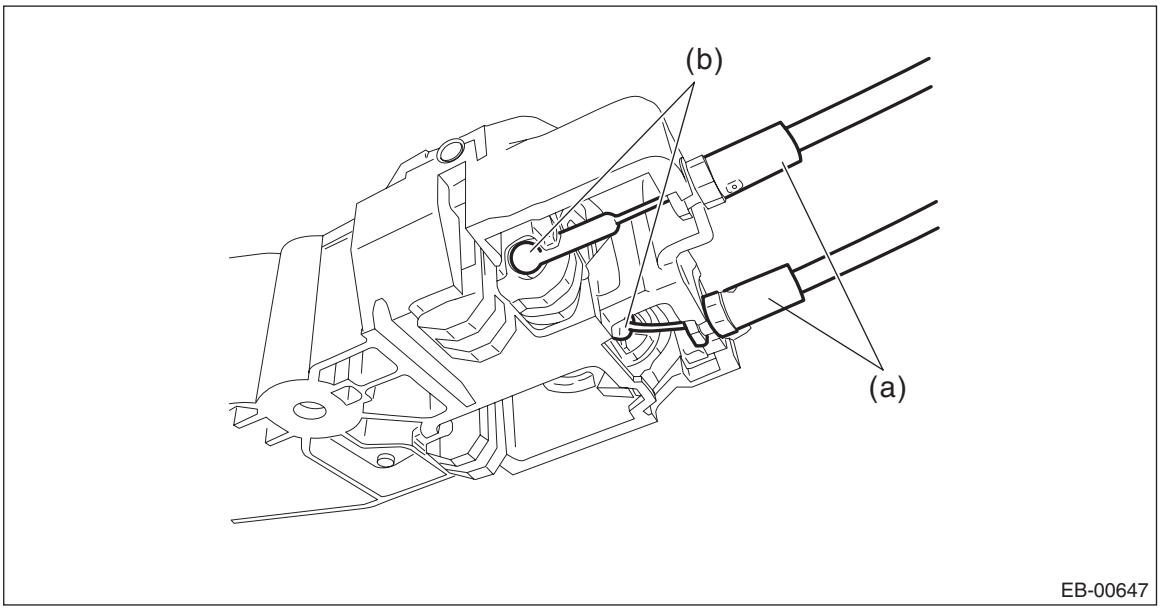

   (4) Disconnect the harness connector and remove the door trim.

3) Remove the sealing cover.

CAUTION:
- **Carefully remove the butyl tape. Excessive force will easily break the cover.**
- **If the sealing cover gets broken, replace it with a new part.**

(1) Remove the screw to remove the door trim bracket.
(2) Carefully remove the butyl tape to remove the sealing cover.

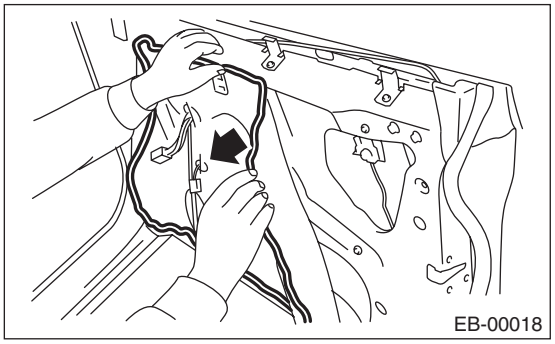

B: INSTALLATION

CAUTION:
- **If the sealing cover gets broken, replace it with a new part.**
- **Apply a butyl tape evenly.**
- **Attach the sealing cover, keeping it from becoming wrinkled.**
- **Breaks in the bead will allow water leakage and contamination.**

1) Install each part in the reverse order of removal.
2) When replacing the sealing cover, use the butyl tape.
3) Press the butyl tape-applied area firmly to prevent any floating on surface.

Butyl tape:
3M8626 or equivalent

C: INSPECTION

If the sealing cover gets damaged, replace it with a new part.

8. Door Sash Tape

A: REMOVAL

1. FRONT DOOR

1) Disconnect the ground cable from battery.
2) Remove the front door trim. <Ref. to EI-60, FRONT DOOR, REMOVAL, Door Trim.>
3) Remove the outer mirror assembly. <Ref. to GW-28, REMOVAL, Outer Mirror Assembly.>
4) Remove the sealing cover.

CAUTION:
- **Carefully remove the butyl tape. Excessive force will easily break the cover.**
- **If the sealing cover gets broken, replace it with a new part.**

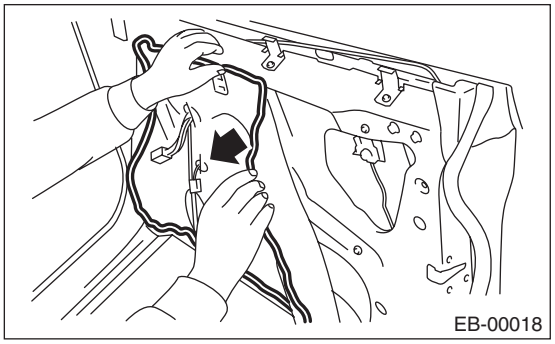
EB-00018

5) Remove the front door glass. <Ref. to GW-17, REMOVAL, Front Door Glass.>
6) Remove the glass run rubber.
7) Release the clips, and remove the inner cover.

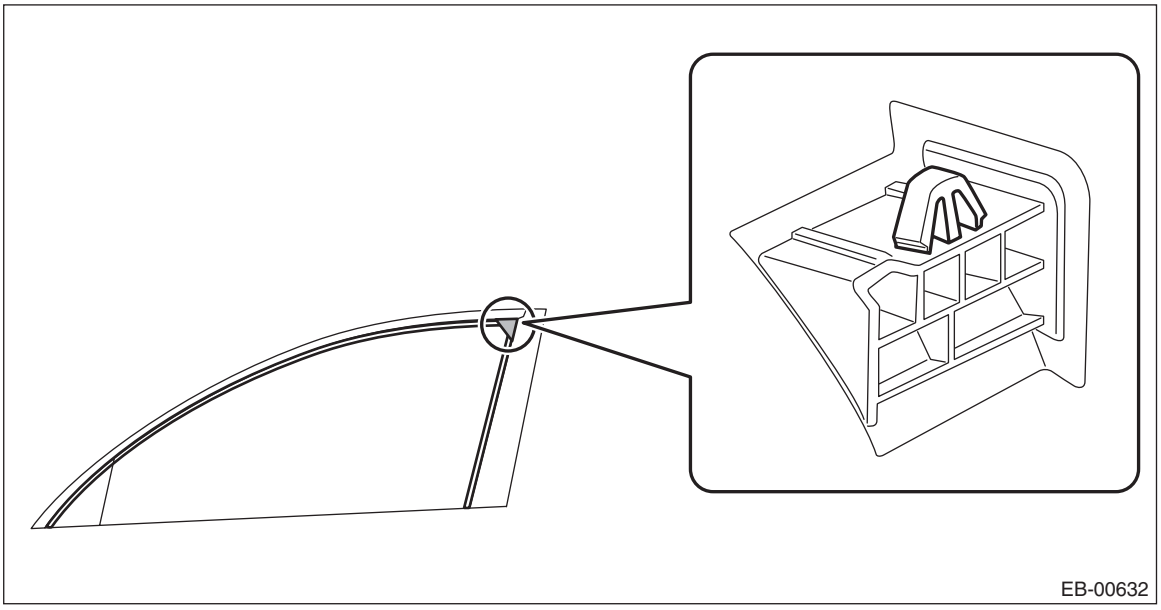
EB-00632

8) Detach the inner tape.

NOTE:
- If the tape is difficult to detach, warm it by a hot air drier.

Make sure to use a home use drier. Do not use an industrial use drier.
- Wipe away any trace of tape adhesive from the door sash.

2. REAR DOOR

1) Disconnect the ground cable from battery.
2) Remove the rear door trim. <Ref. to EI-61, REAR DOOR, REMOVAL, Door Trim.>
3) Remove the sealing cover.

CAUTION:
- **Carefully remove the butyl tape. Excessive force will easily break the cover.**
- **If the sealing cover gets broken, replace it with a new part.**

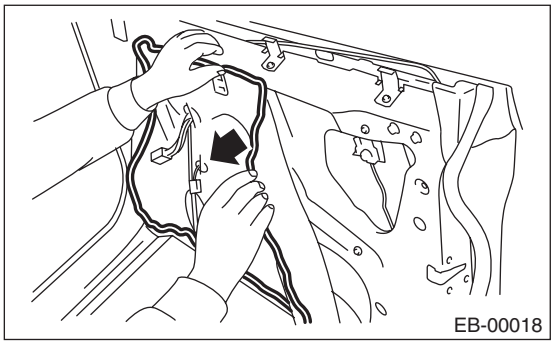

4) Remove the door sash and rear door glass. <Ref. to GW-34, REMOVAL, Rear Door Glass.>
5) Remove the glass run rubber.
6) Release the clips, and remove the inner cover.
- Sedan model

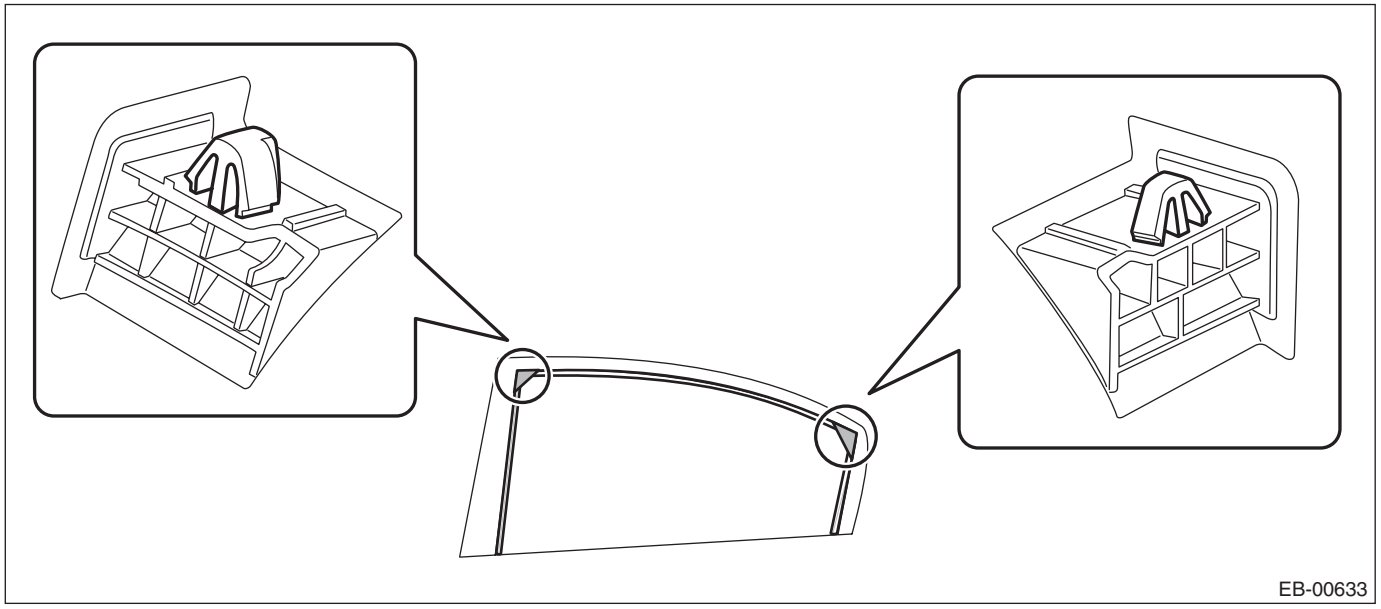

- OUTBACK model

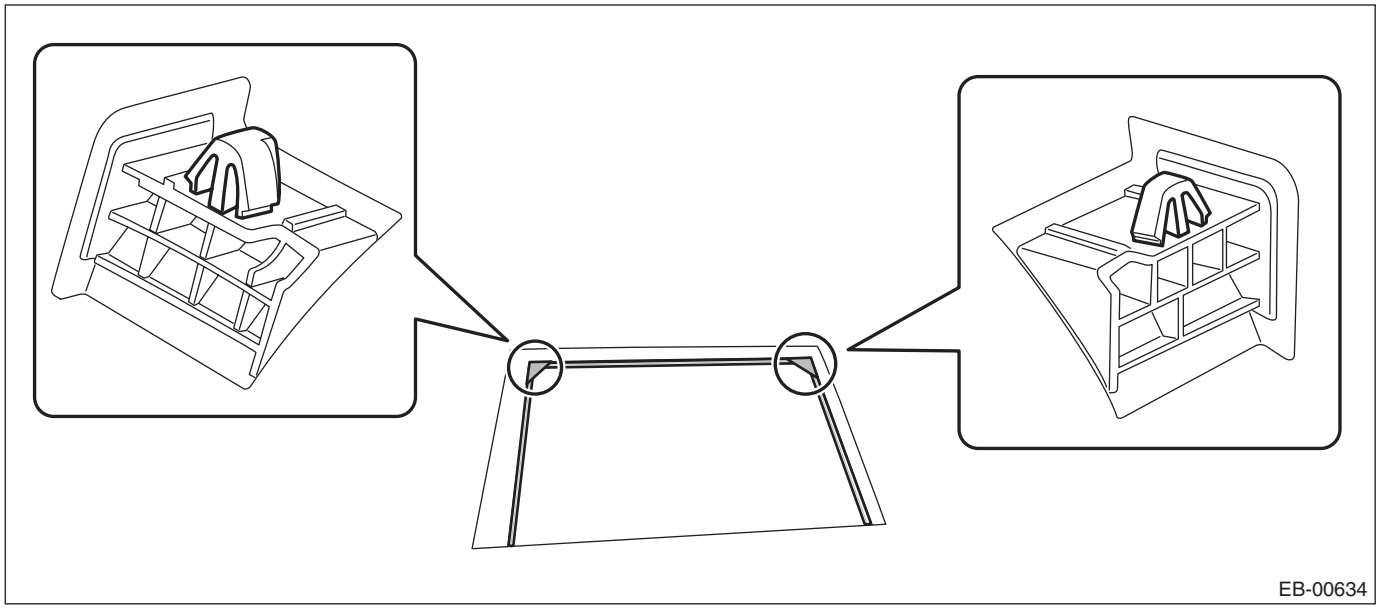

7) Detach the inner tape.

NOTE:
- If the tape is difficult to detach, warm it by a hot air drier.

Make sure to use a home use drier. Do not use an industrial use drier.
- Wipe away any trace of tape adhesive from the door sash.

B: INSTALLATION

CAUTION:
• Press evenly along the sash when applying the tape using a spatula or similar object to make sure no bubbles are formed.
If any bubbles are formed, replace the tape.
• If any wrinkles form in the tape while applying, replace the tape with new tape.
• Be sure to press the ends of the tape firmly to adhere securely. If the tape comes off at the ends or where folded, the adhesive strength is weakened and the tape may peel off.

1) Apply the inner tape along the arrow directions.
• Front

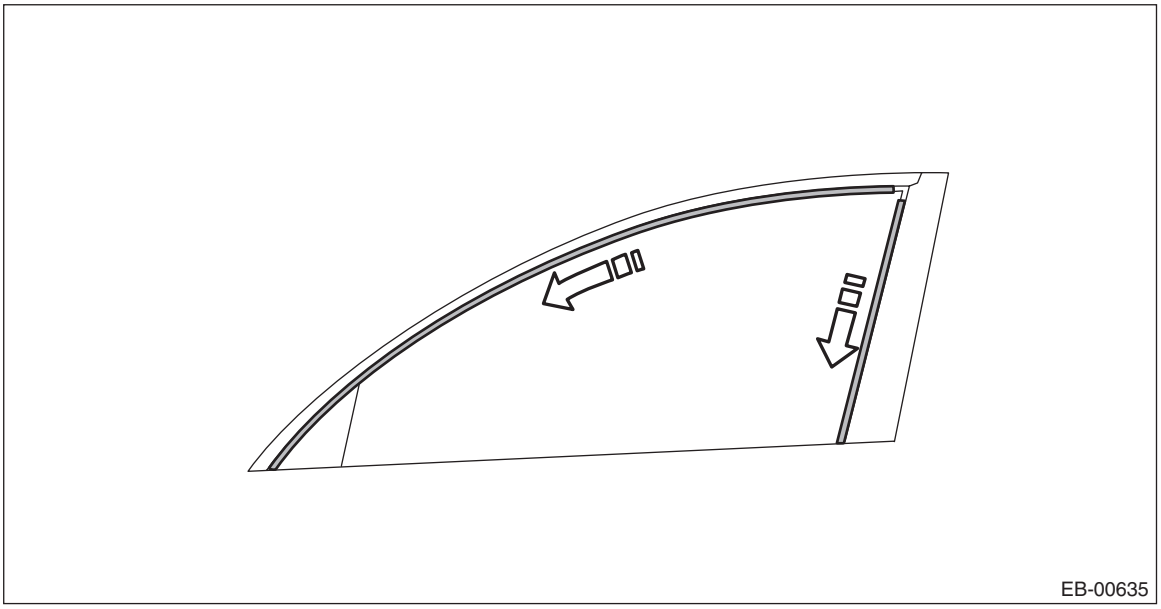

• Rear

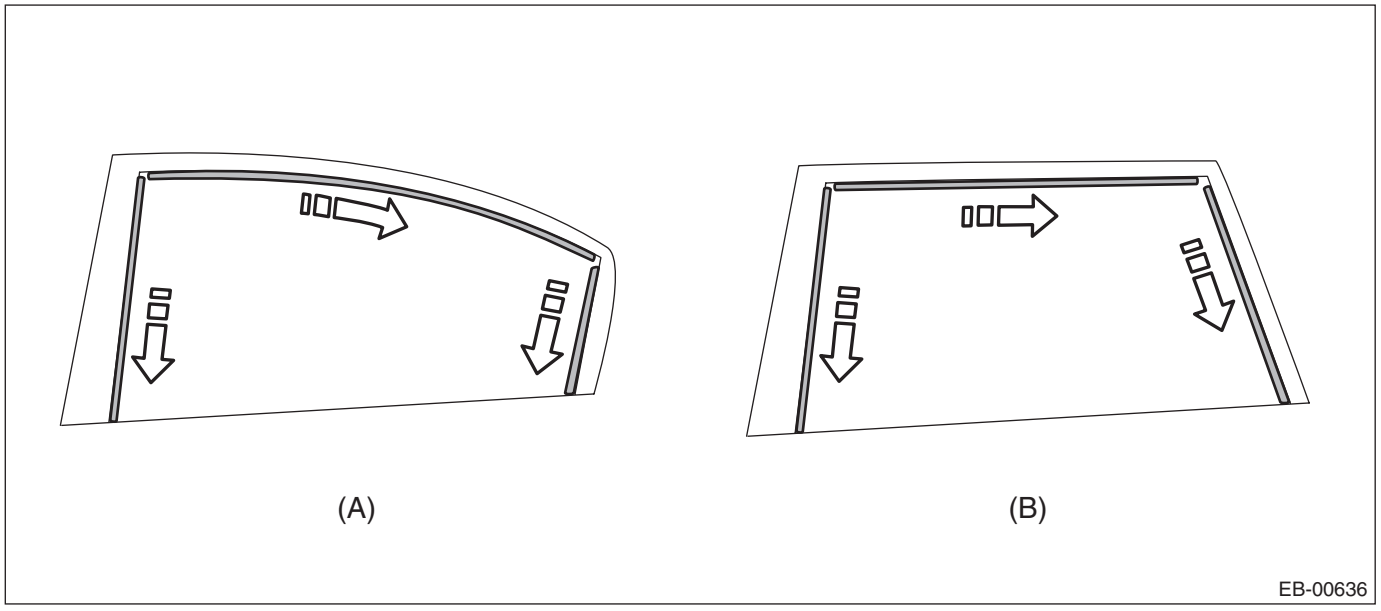

(A) Sedan model
(B) OUTBACK model

2) Install the remaining parts in the reverse order of removal.

9. Trunk Lid

A: REMOVAL

1. TRUNK LID DAMPER STAY

1) Open the trunk lid.
2) Remove the trunk lid damper stay.
   (1) Float the lock pin using a flat tip screwdriver, etc. and slide it.
   (2) Remove the trunk lid damper stay by pulling the damper stay mounting point.

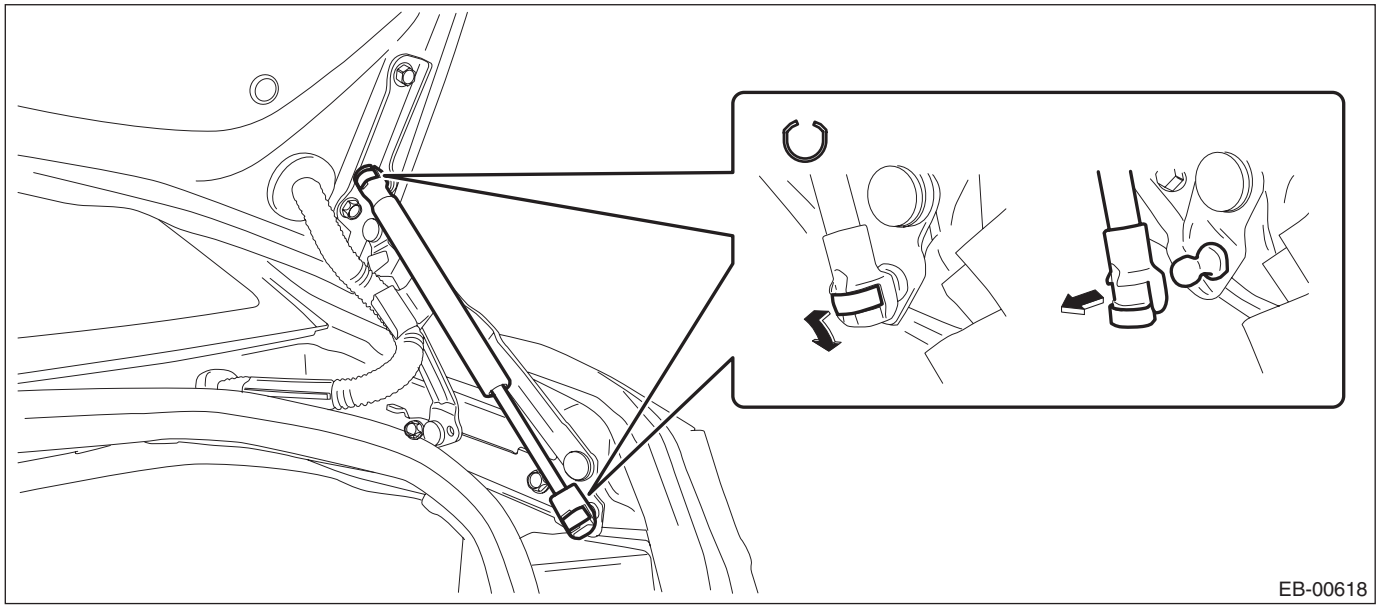

2. TRUNK LID HINGE

1) Open the trunk lid.
2) Remove the trunk lid damper stay.
   (1) Float the lock pin using a flat tip screwdriver, etc. and slide it.
   (2) Remove the trunk lid damper stay by pulling the damper stay mounting point.

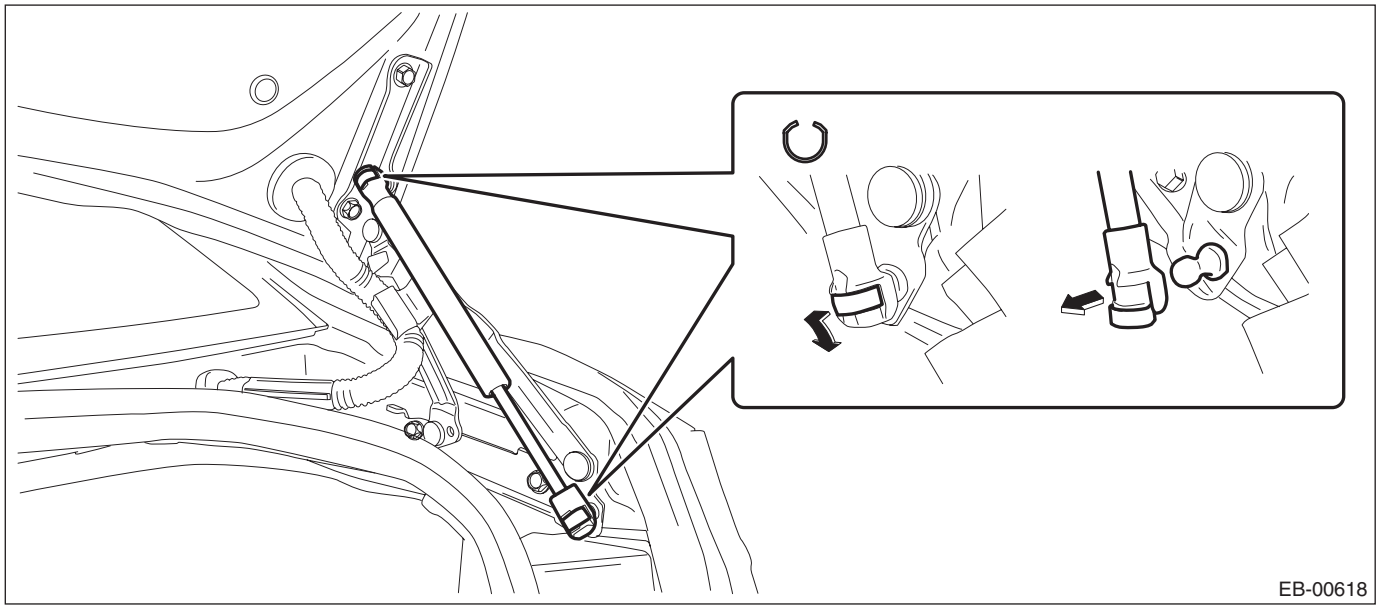

3) Remove the trunk lid trim.
   (1) Remove the trunk handle.
   (2) Remove the clips and the trunk lid trim.

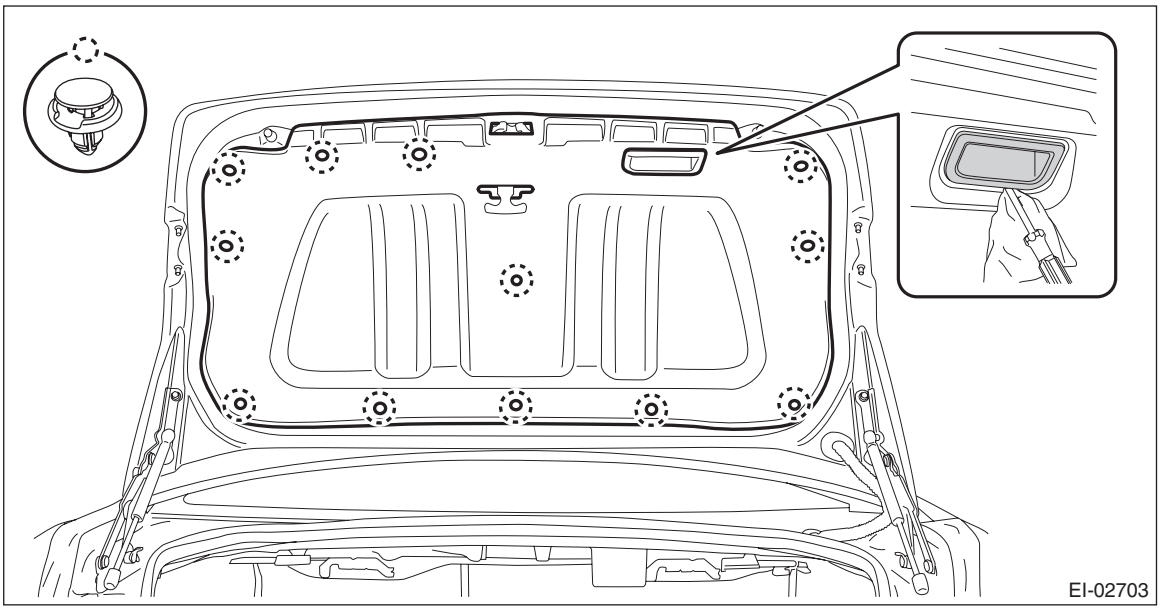

4) Remove the trunk lid hinges.
   (1) Disconnect the trunk lid harness connector and remove the grommet, and pull out the trunk lid harness.
   (2) Remove the harness clamps and bolts, and remove the trunk lid panel.
   (3) Remove the bolts, then remove the trunk lid hinge.

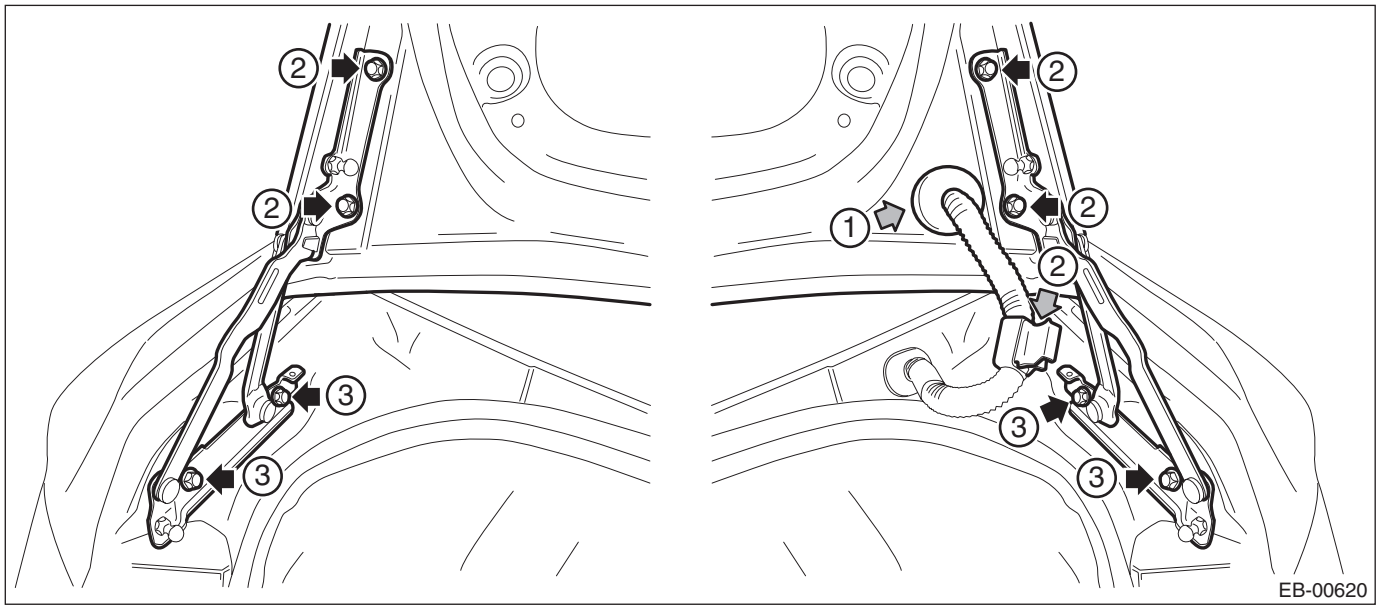

3. TRUNK LID PANEL

1) Disconnect the ground cable from battery.
2) Remove the trunk lid trim.
   (1) Remove the trunk handle.
   (2) Remove the clips and the trunk lid trim.

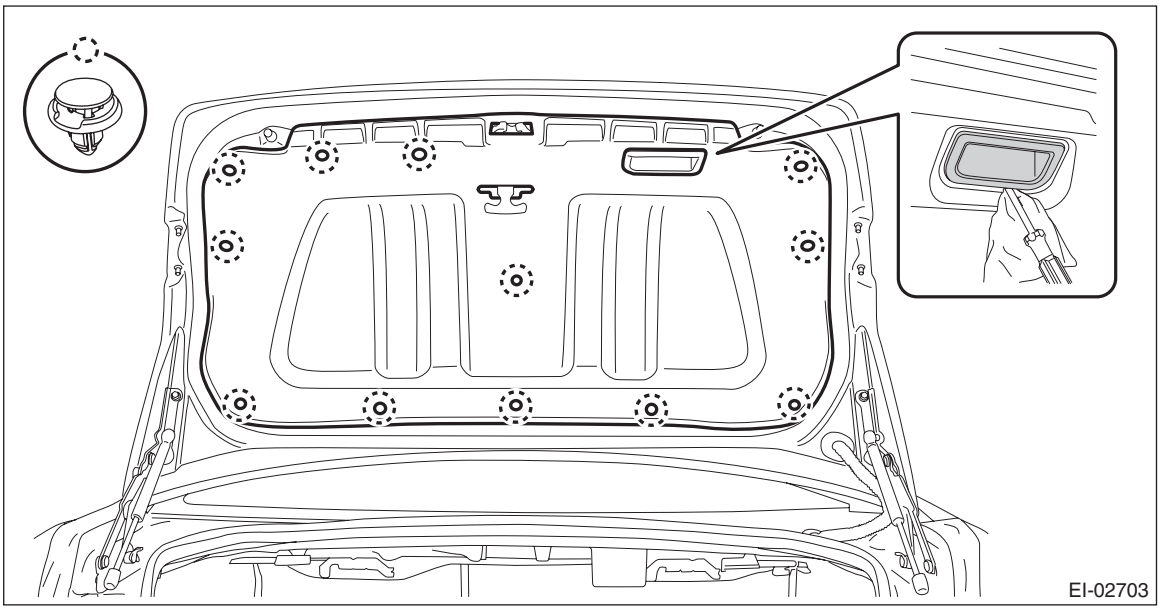

3) Disconnect the connector to remove the trunk lid harness.
4) Remove the trunk lid latch & actuator assembly. <Ref. to SL-49, REMOVAL, Trunk Lid Latch and Actuator Assembly.>
5) Remove the trunk lid garnish. <Ref. to EI-163, REMOVAL, Trunk Lid Garnish.>
6) Remove the trunk lid panel.
   (1) Remove the left and right damper stay upper.
   (2) Remove the grommet and pull out the trunk lid harness. (RH side only)
   (3) Remove the left and right bolts, and remove the trunk lid panel.

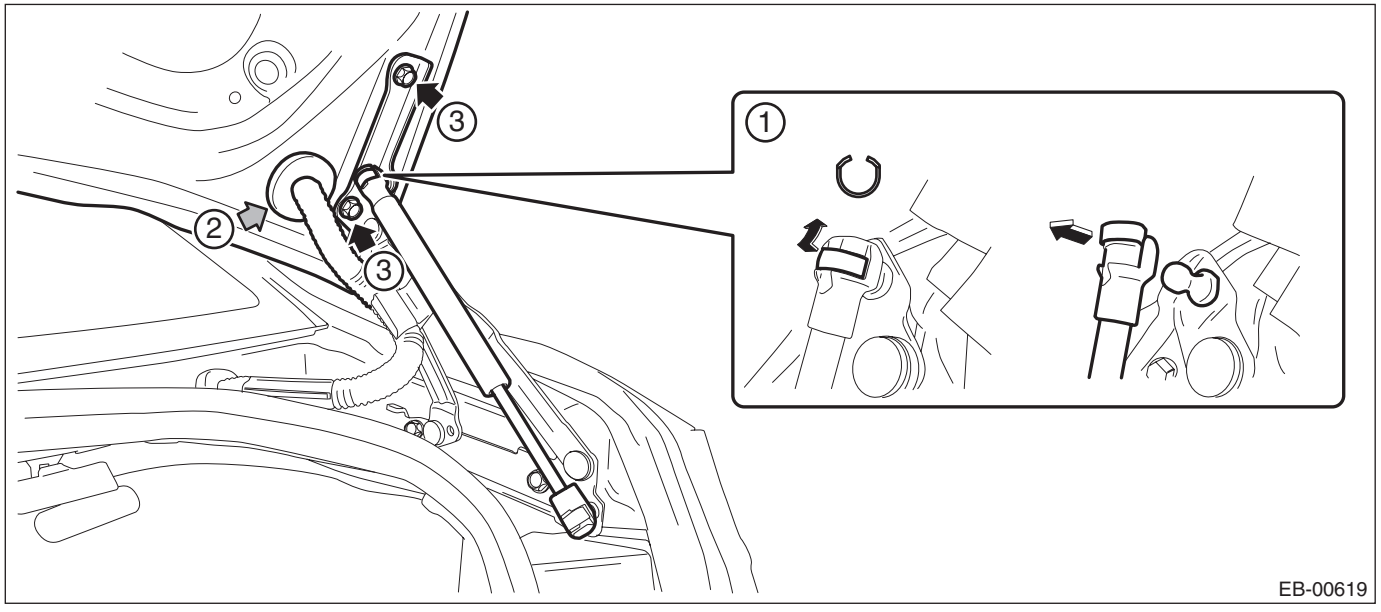

B: INSTALLATION

1) Install each part in the reverse order of removal.
2) Apply grease to the rotating area of hinges and damper stay.
3) Install while paying attention to make a uniform clearance around the trunk lid panel. <Ref. to EB-46, ADJUSTMENT, Trunk Lid.>

Tightening torque:
Refer to "COMPONENT" of "General Description". <Ref. to EB-6, TRUNK LID PANEL, COMPONENT, General Description.>

C: ADJUSTMENT

Adjust the clearance around the trunk lid panel as follows.

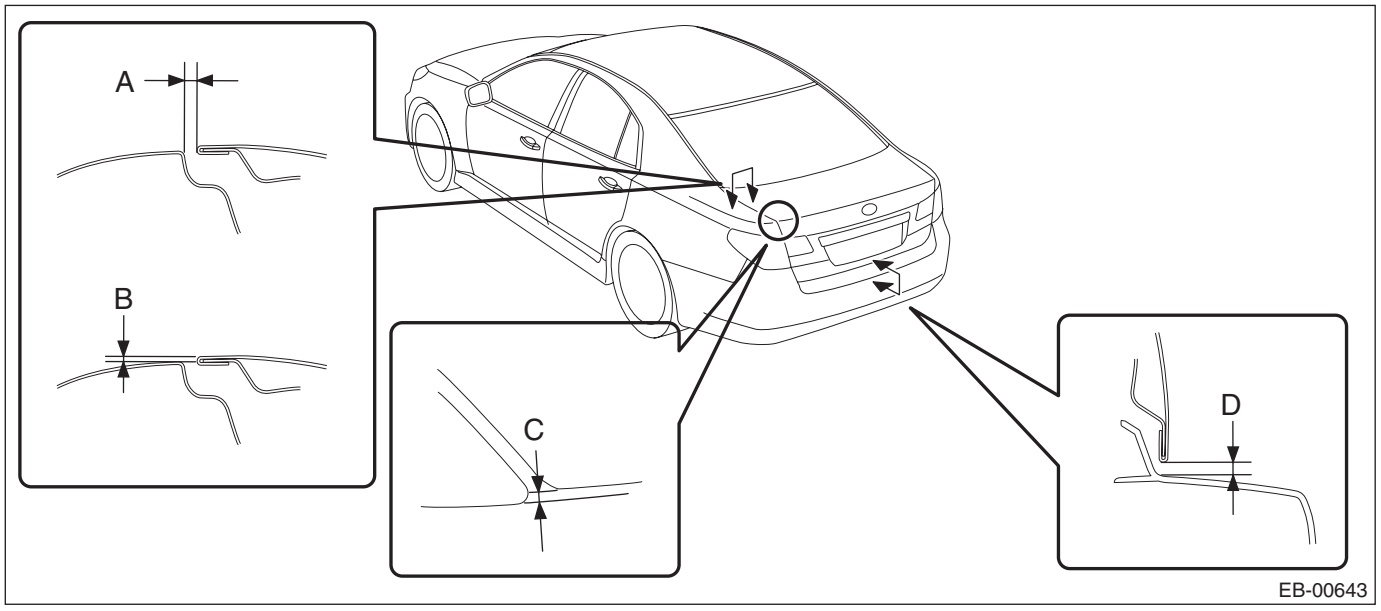

	Part	Standard
A	Trunk lid panel to Rear quarter panel	3.5±1.0 mm (0.14±0.04 in)
B	Surface level gap between trunk lid panel and rear quarter panel	–0.5+1.0, –0.5 mm (–0.02+0.04, –0.02 in)
C	Offset value between trunk lid panel and rear end of rear quarter panel	–0.5±0.7 mm (–0.02±0.03 in)
D	Trunk lid panel to Rear bumper	7.0±1.5 mm (0.28±0.06 in)

1) Adjust the trunk lid panel lateral position.
   (1) Loosen the mounting bolt.
   (2) Align the trunk lid panel lateral panel dimension.

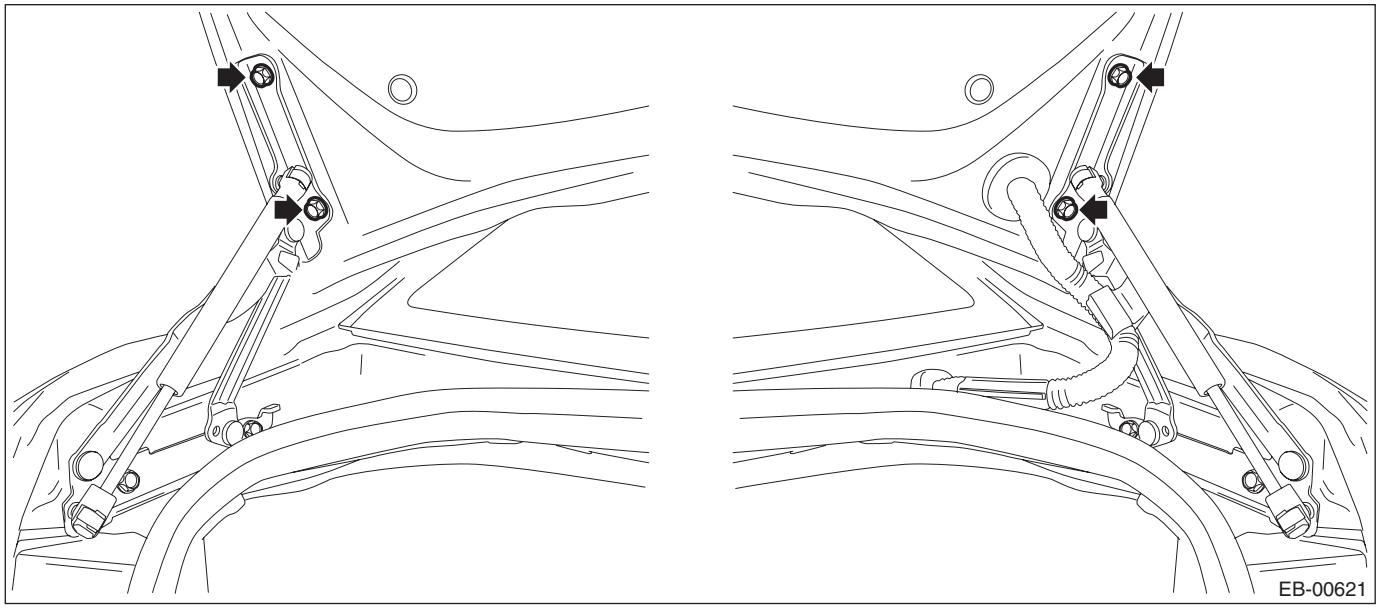

2) Adjust the gap between trunk lid panel and body surface.
   (1) Loosen the bolt.
   (2) Tap striker using plastic hammer to adjust the gap between trunk lid panel and body surface.

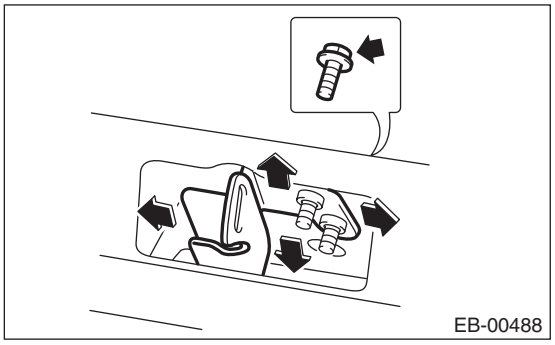

10.Rear Gate

A: REMOVAL

CAUTION:
Rear gate panels are heavy. When removing and installing them, always work in a team of two or more persons.

1. REAR GATE PANEL

1) Disconnect the ground cable from battery.
2) Remove the following parts. <Ref. to EI-164, REMOVAL, Rear Gate Garnish.>
- Rear gate trim
- Rear wiper arm assembly and rear wiper motor assembly
- Rear gate garnish

3) Remove the high-mounted stop light assembly and rear washer nozzle. <Ref. to WW-43, REMOVAL, Rear Washer.>
4) Remove the rear finisher light assembly. <Ref. to LI-54, OUTBACK MODEL, REMOVAL, Rear Finisher Light Assembly.>
5) Remove the rearview camera assembly. <Ref. to ET-46, OUTBACK MODEL, REMOVAL, Rearview Camera System.>
6) Remove the rear gate latch & actuator assembly. <Ref. to SL-47, REMOVAL, Rear Gate Latch and Actuator Assembly.>
7) Remove the clips, and then remove the rear gate drip rubber.

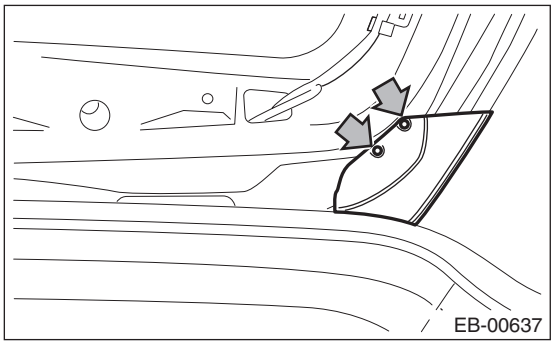

8) Disconnect the rubber duct (A) connection.

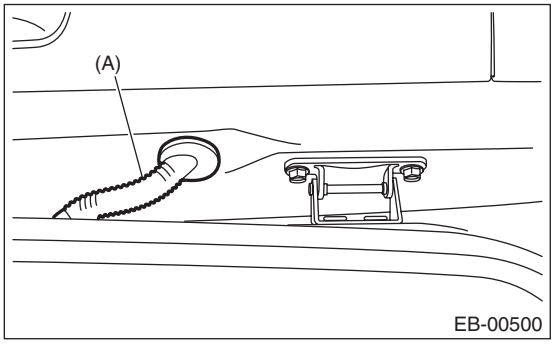

9) Pull out the harnesses and washer hose from the rear gate.
10) Remove harness clip of each connector from the rear gate panel.

11) Before removing the rear gate damper stay, prevent the rear gate from closing using prop or the like.

CAUTION:
If the prop comes off, operators may get injured and vehicle may get damaged. Make sure to support the rear gate with secure material to prevent injury or damage.

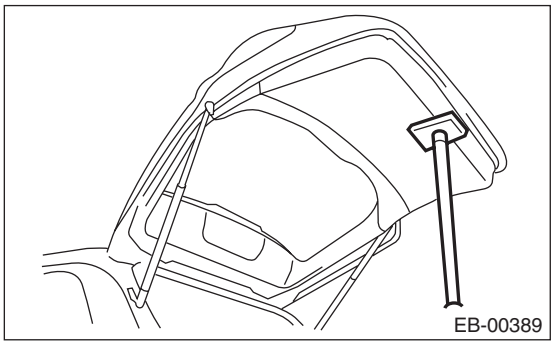

12) Remove the mounting bolt of rear gate damper stay.

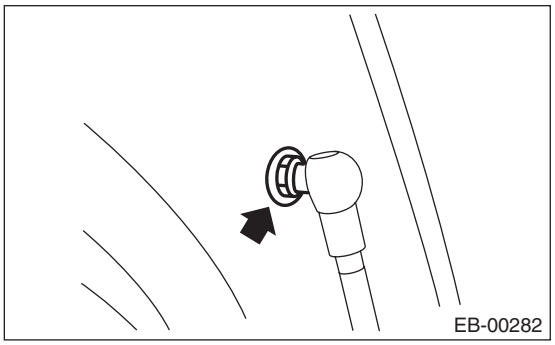

13) Remove the rear gate hinge bolt, and remove the rear gate panel.

CAUTION:
Rear gate panels are heavy. When removing and installing them, always work in a team of two or more persons.

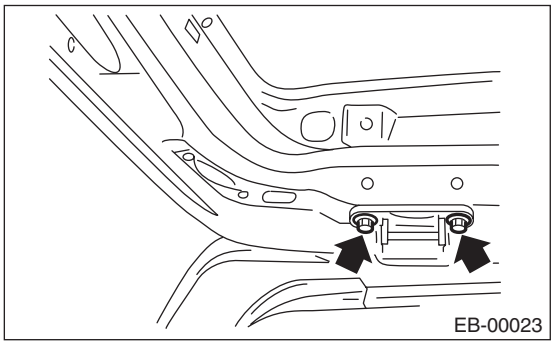

14) Remove the rear gate hinge from the vehicle.

2. REAR GATE DAMPER STAY

CAUTION:
- **Do not damage piston rods and oil seals.**
- **Never disassemble cylinders: They contain gas.**
- **Rear gate panels are heavy. When removing and installing them, always work in a team of two or more persons.**

1) Before removing the rear gate damper stay, prevent the rear gate from closing using prop or the like.

CAUTION:
If the prop comes off, operators may get injured and vehicle may get damaged. Make sure to support the rear gate with secure material to prevent injury or damage.

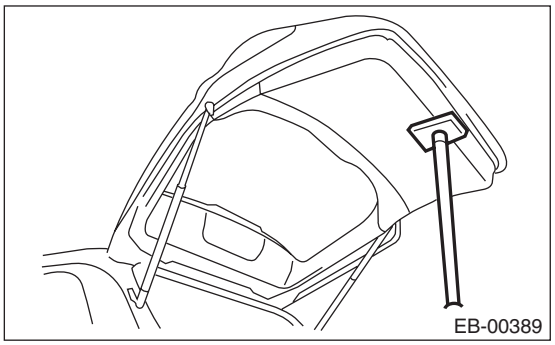

2) Remove the rear gate damper stay by removing mounting bolts.

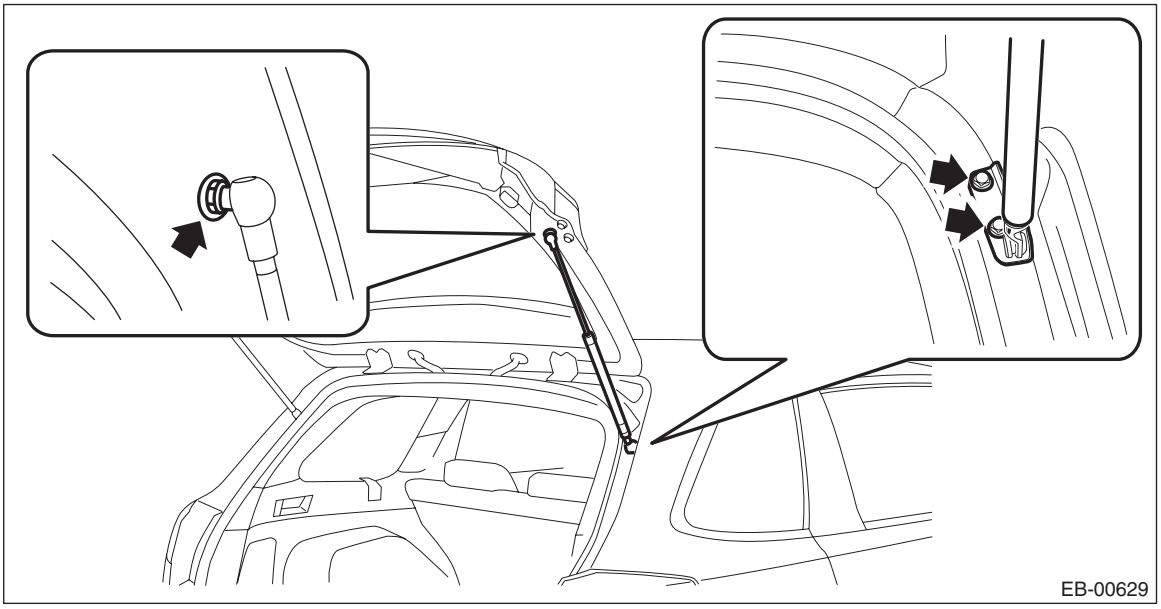

B: INSTALLATION

1. REAR GATE PANEL

CAUTION:
Rear gate panels are heavy. When removing and installing them, always work in a team of two or more persons.

1) Install the rear gate hinges to the vehicle body.
2) Temporarily install the rear gate panel to the rear gate hinges.

NOTE:
When installing, make sure that a uniform clearance is created around the rear gate panel.

3) Adjust the clearance around the rear gate panel. <Ref. to EB-52, ADJUSTMENT, Rear Gate.>
4) Tighten the rear gate hinge bolts.

Tightening torque:
25 N·m (2.55 kgf-m, 18.4 ft-lb)

5) Install each part in the reverse order of removal.

Tightening torque:
Rear gate parts: <Ref. to EB-7, REAR GATE, COMPONENT, General Description.>
Rear gate garnish: 4.5 N·m (0.46 kgf-m, 3.3 ft-lb)
Rear wiper motor & rear wiper arm: <Ref. to WW-4, REAR WIPER, COMPONENT, General Description.>

2. REAR GATE DAMPER STAY

CAUTION:
Rear gate panels are heavy. When removing and installing them, always work in a team of two or more persons.

1) Prevent the rear gate from closing using prop or the like.

CAUTION:
If the prop comes off, operators may get injured and vehicle may get damaged. Make sure to support the rear gate with secure material to prevent injury or damage.

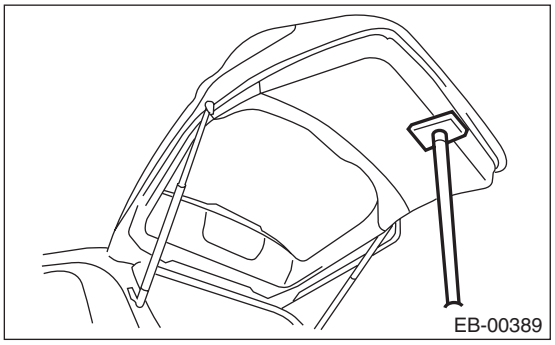

2) Install each part in the reverse order of removal.

Tightening torque:
Refer to "COMPONENT" of "General Description". <Ref. to EB-7, REAR GATE, COMPONENT, General Description.>

C: ADJUSTMENT

Adjust the clearance around the rear gate panel as follows.

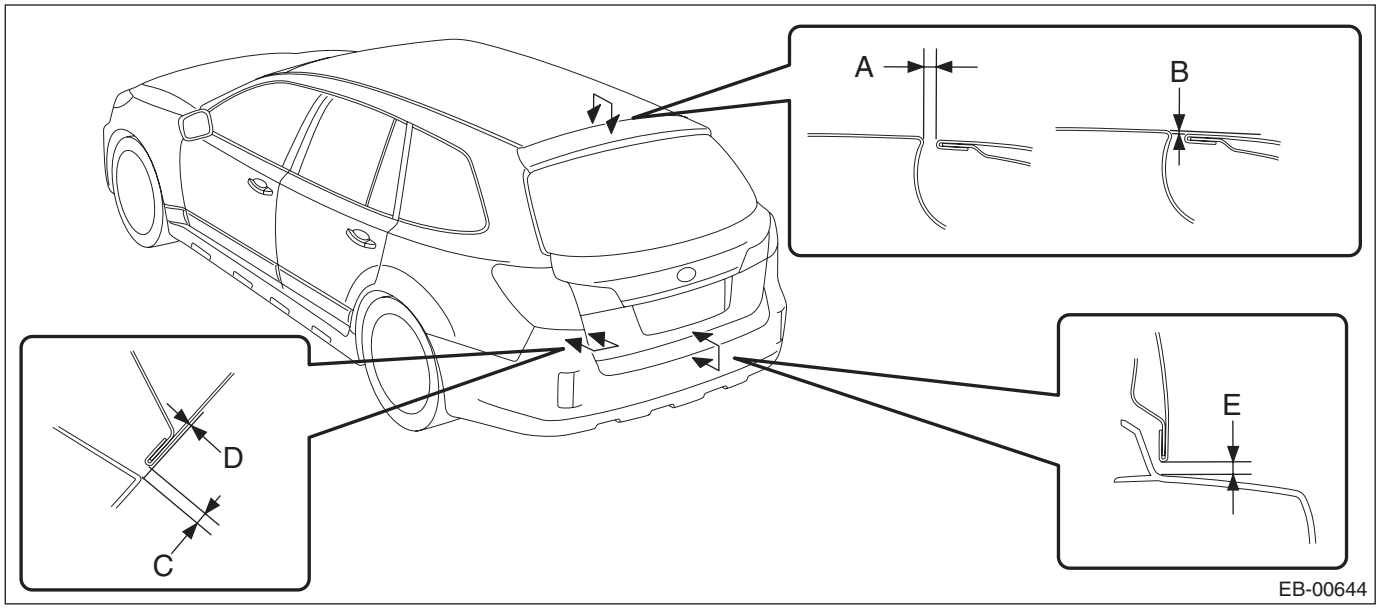

	Part	Standard
A	Rear gate panel to Roof panel	6.6+1.0, –0.5 mm (0.26+0.04, –0.02 in)
B	Surface level gap between rear gate panel and roof panel	1.0±1.0 mm (0.04±0.04 in)
C	Rear gate panel to Rear bumper	5.0±1.0 mm (0.20±0.04 in)
D	Surface level gap between rear gate panel and rear bumper	0.4±1.0 mm (0.02±0.04 in)
E	Rear gate panel to Rear bumper	8.0±1.5 mm (0.31±0.06 in)

1) Align the rear gate panel longitudinal and lateral position.

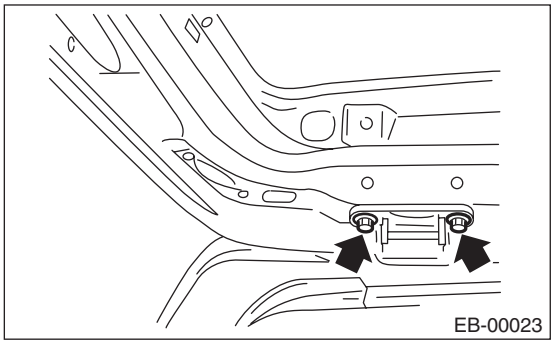

(1) Loosen the hinge attaching bolts.
(2) Align the rear gate panel longitudinal and lateral panel dimension.

Tightening torque:
25 N·m (2.55 kgf-m, 18.4 ft-lb)

2) Adjust the gap between rear gate panel and body surface.

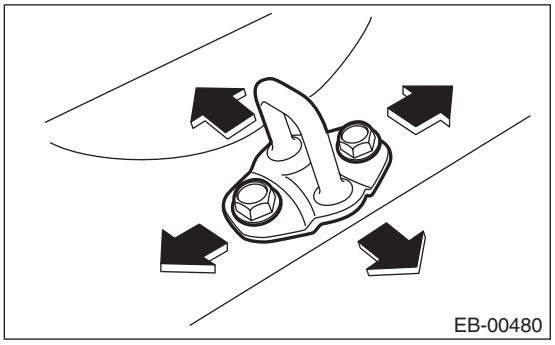

(1) Loosen the bolt.
(2) Tap striker using plastic hammer to adjust the gap between rear gate panel and body surface.

Tightening torque:
25 N·m (2.55 kgf-m, 18.4 ft-lb)

D: DISPOSAL

1. REAR GATE DAMPER STAY

CAUTION:
Gas is colorless, odorless, and harmless. However, gas pressure may spray cutting powder or oil. Be sure to wear dust-resistant goggles.

1) Cover with a vinyl sack as shown in the figure.

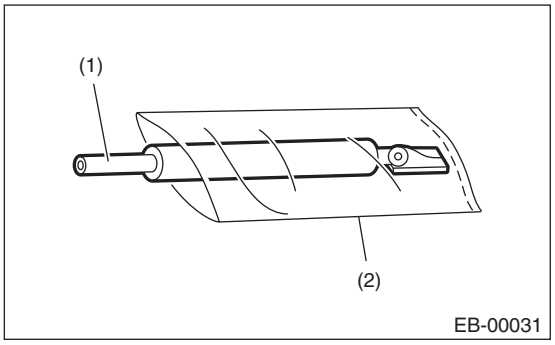

(1) Rear gate damper stay
(2) Vinyl sack

NOTE:
Prevent the vinyl sack from being caught by drill cutting edge.

2) Lift the body side slightly with piston rods fully extended, and secure the body side with vise.
Drill a hole of 2 to 3 mm (0.08 to 0.12 in) diameter at a point 10 to 200 mm (0.39 to 7.87 in) from the body side, and bleed the gas in the rear gate damper stay completely.

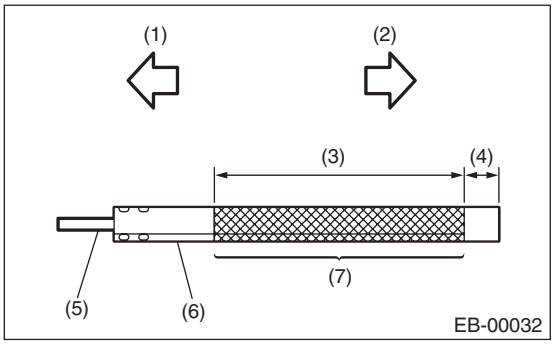

(1) Door side
(2) Body side
(3) 190 mm (7.48 in)
(4) 10 mm (0.39 in)
(5) Piston rod
(6) Cylinder
(7) Portion to be drilled

11.Protector Tape

A: INSTALLATION

Apply the protector tape by the following steps.

1. REAR DOOR PROTECTOR (OUTBACK MODEL)

- Type A

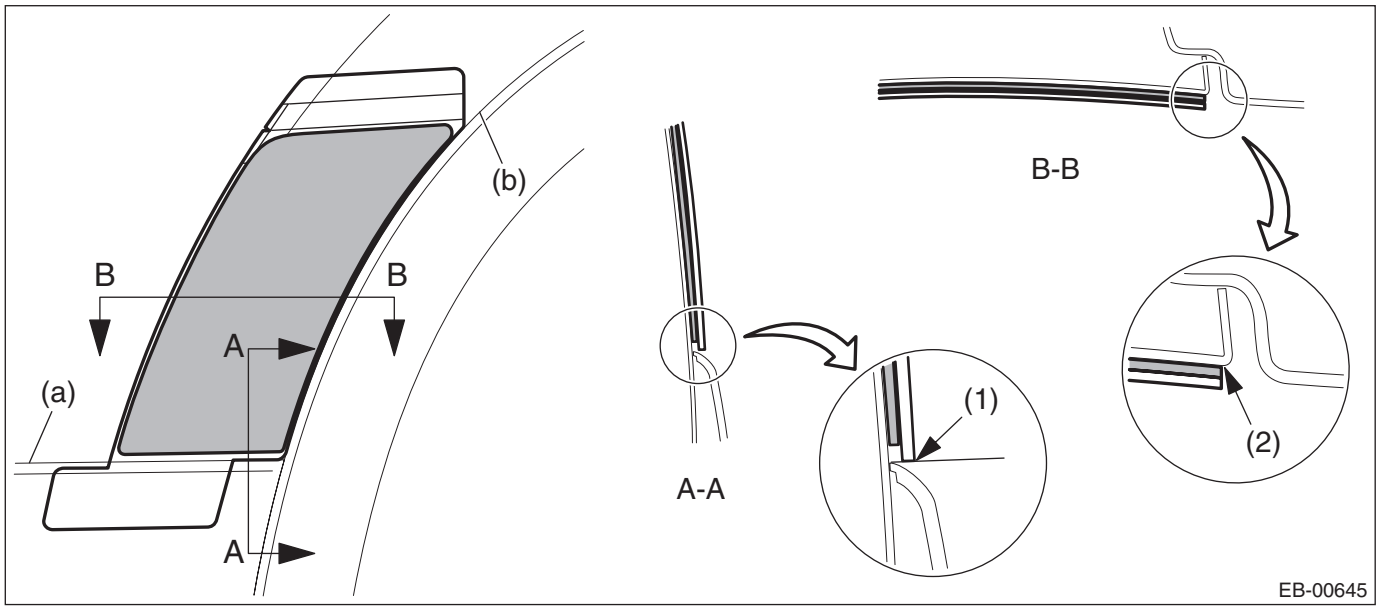

(a) Rear door garnish end

(b) Rear door panel end

(1) Align the application paper to the rear door garnish terminal.

(2) Align the protector tape to the end of rounded corner.

- Type B

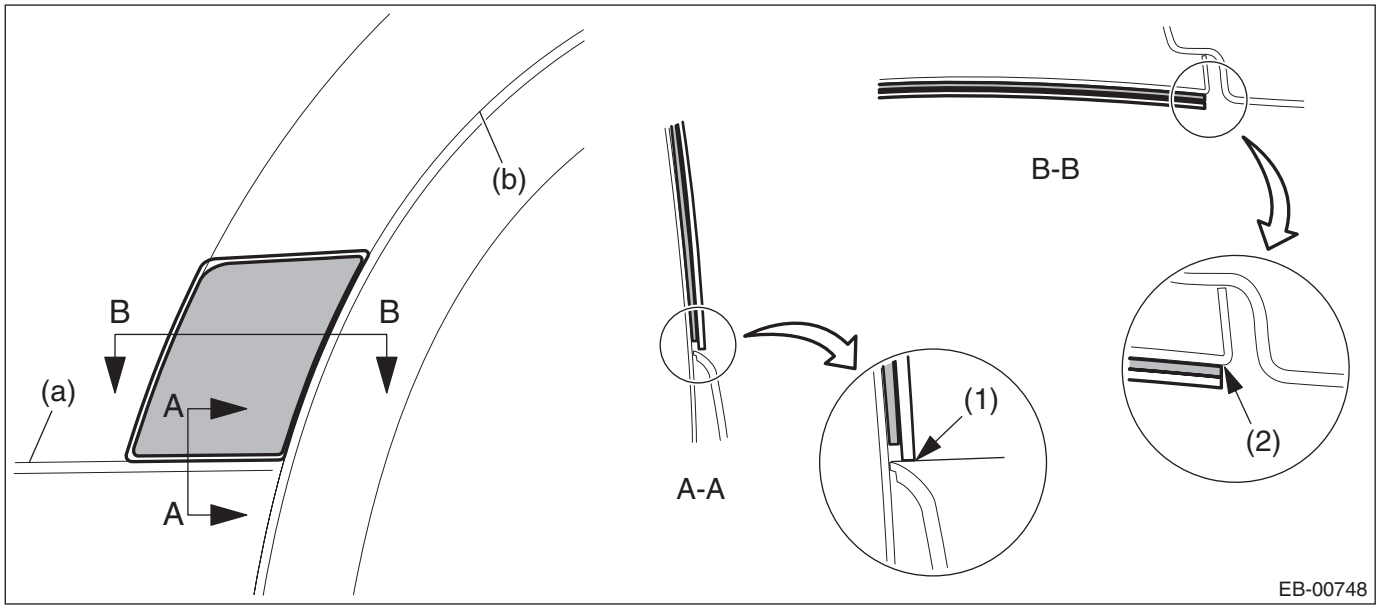

(a) Rear door garnish end

(b) Rear door panel end

(1) Align the application paper to the rear door garnish terminal.

(2) Align the protector tape to the end of rounded corner.

1) Clean the area around applying position to remove any foreign objects on body.
2) Detach the backing paper and apply the protector tape after positioning it correctly.
3) Detach the backing papers, and moisten the applying area and the backside of protector tape by spraying liquid (mild detergent solution at 3% concentration).
4) Apply the protector tape to the vehicle body.

CAUTION:
Remove the water or air bubbles out of the protector tape by using the plastic or rubber spatula.
5) Detach the application tape and temporary retention tape.

CRUISE CONTROL SYSTEM

CC

		Page
1.	General Description	2
2.	Relay and Fuse	4
3.	Cruise Control System	5
4.	Cruise Control Module	6
5.	Cruise Control Command Switch	7
6.	Combination Meter	11
7.	Stop Light & Brake Switch	12
8.	Clutch Switch	13
9.	Inhibitor Switch	14
10.	Transmission Control Module (TCM)	15
11.	Neutral Position Switch	16

1. General Description

A: COMPONENT

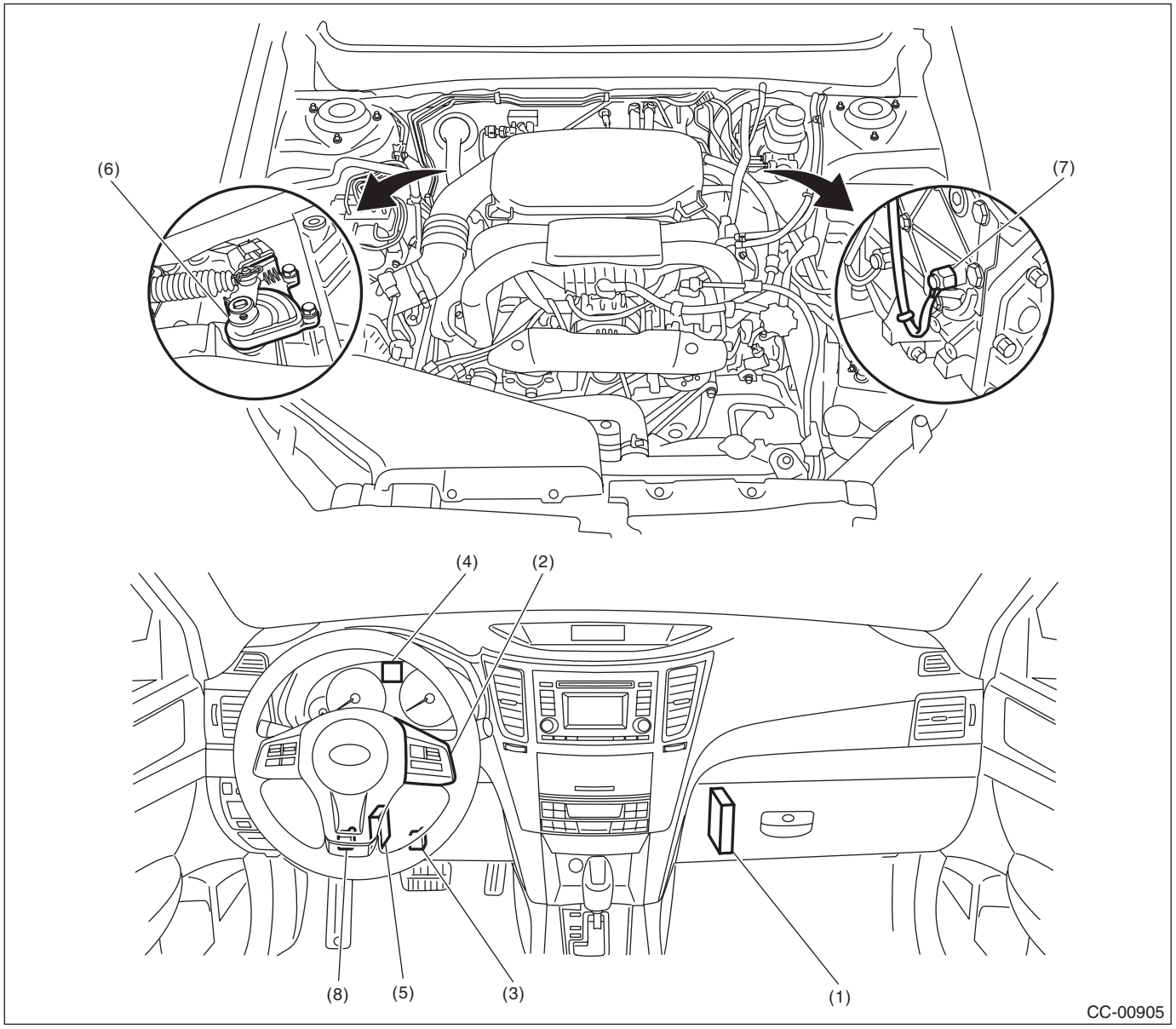

(1)	Engine control module (ECM)	(4)	Cruise indicator light and cruise set indicator light	(7)	Neutral position switch (MT model)
(2)	Cruise control command switch	(5)	Transmission control module (TCM) (AT and CVT model)	(8)	Clutch switch (MT model)
(3)	Stop light and brake switch	(6)	Inhibitor switch (CVT model)		

NOTE:
Inhibitor switch for 5AT model is installed on the valve body assembly.

B: CAUTION

- Before disassembling or reassembling parts, always disconnect the battery ground cable from battery. When replacing the audio, control module and other parts provided with memory functions, record the memory contents before disconnecting the battery ground cable. Otherwise, the memory is cleared.
- Reassemble the parts in the reverse order of disassembly procedure unless otherwise indicated.
- Adjust parts to the given specifications.
- Connect the connectors securely during reassembly.
- After reassembly, make sure that the functional parts operate normally.
- Yellow connectors and harnesses with yellow tapes around them are the connectors and harnesses for the airbag system. Using a tester above such circuits may cause malfunction of airbag system. Follow the cautions for the airbag system in this case. <Ref. to AB-9, CAUTION, General Description.>
- Be careful not to damage the airbag system wiring harness when servicing electrical parts and switches.

C: PREPARATION TOOL

TOOL NAME	REMARKS
Circuit tester	Used for measuring resistance and voltage.

2. Relay and Fuse

A: LOCATION

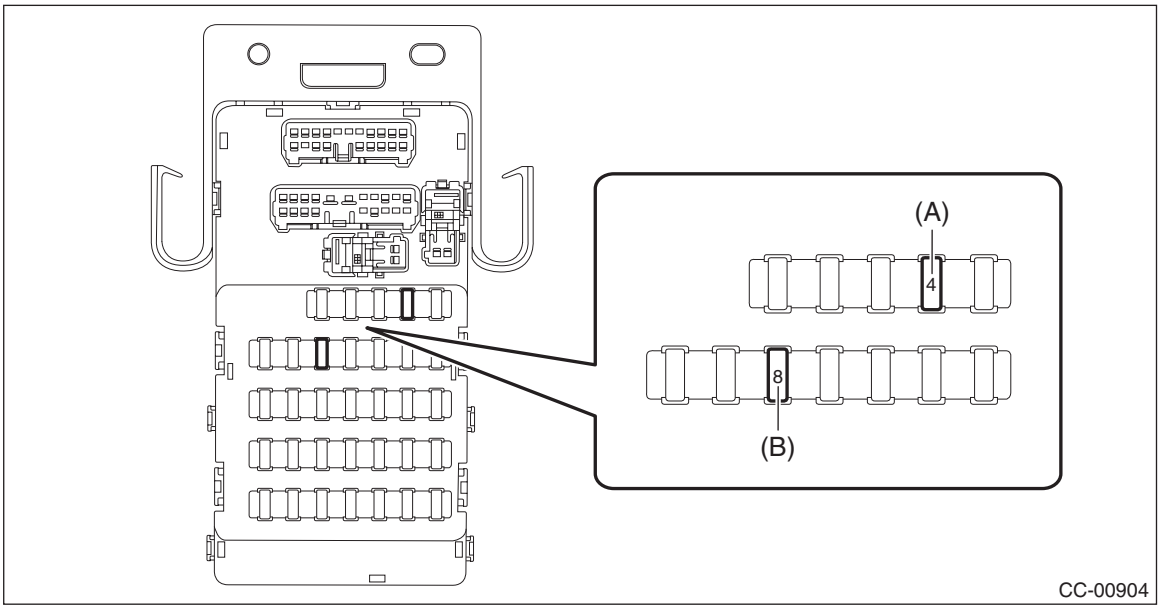

Relay & fuse box	Fuse 7.5A (ECM, stop light & brake switch, clutch switch)	(A)
	Fuse 15A (stop light & brake switch)	(B)

NOTE:
For other related fuses, refer to the wiring diagram. <Ref. to WI-15, Power Supply Circuit.>

B: INSPECTION

1. CHECK FUSE.

1) Remove the fuse and inspect visually.
2) If the fuse is blown out, replace the fuse.

NOTE:
If the fuse is blown again, check the system wiring harness.

3. Cruise Control System

A: WIRING DIAGRAM

Refer to “Cruise Control System” in the wiring diagram. <Ref. to WI-105, WIRING DIAGRAM, Cruise Control System.>

B: INSPECTION

Refer to “Basic Diagnostic Procedure” of “CRUISE CONTROL (DIAGNOSTICS)” section. <Ref. to CC(diag)-2, Basic Diagnostic Procedure.>

C: NOTE

For operation procedures of each component of the cruise control system, refer to the respective section.

- Cruise control unit: <Ref. to CC-6, Cruise Control Module.>
- Cruise control command switch: <Ref. to CC-7, Cruise Control Command Switch.>
- Combination meter: <Ref. to CC-11, Combination Meter.>
- Stop light & brake switch: <Ref. to CC-12, Stop Light & Brake Switch.>
- Clutch switch: <Ref. to CC-13, Clutch Switch.>
- Inhibitor switch: <Ref. to CC-14, Inhibitor Switch.>
- Transmission control module (TCM): <Ref. to CC-15, Transmission Control Module (TCM).>
- Neutral position switch: <Ref. to CC-16, Neutral Position Switch.>

4. Cruise Control Module

A: NOTE

The control of cruise control system is carried out in engine control module (ECM).

B: REMOVAL

- H4 non-turbo model: <Ref. to FU(H4SO)-46, REMOVAL, Engine Control Module (ECM).>
- H4 turbo model: <Ref. to FU(H4DOTC)-58, REMOVAL, Engine Control Module (ECM).>
- H6 model: <Ref. to FU(H6DO)-54, REMOVAL, Engine Control Module (ECM).>

C: INSTALLATION

- H4 non-turbo model: <Ref. to FU(H4SO)-46, INSTALLATION, Engine Control Module (ECM).>
- H4 turbo model: <Ref. to FU(H4DOTC)-58, INSTALLATION, Engine Control Module (ECM).>
- H6 model: <Ref. to FU(H6DO)-54, INSTALLATION, Engine Control Module (ECM).>

5. Cruise Control Command Switch

A: REMOVAL

1) Position the front wheels straight ahead. (After moving a vehicle 5 m (16 ft) or more with front wheels positioned straight ahead, make sure that the vehicle moves straight ahead.)
2) Turn the ignition switch to OFF.
3) Disconnect the ground cable from battery and wait for at least 60 seconds before starting work.
4) Remove the driver's airbag module assembly.

CAUTION:
Before handling the airbag module, refer to "CAUTION" of "General Description" in "AIRBAG SYSTEM". <Ref. to AB-9, CAUTION, General Description.>

(1) Using a hexagon wrench etc. wrapped by protective tape, insert the snap pins and release the locks (3 locations).

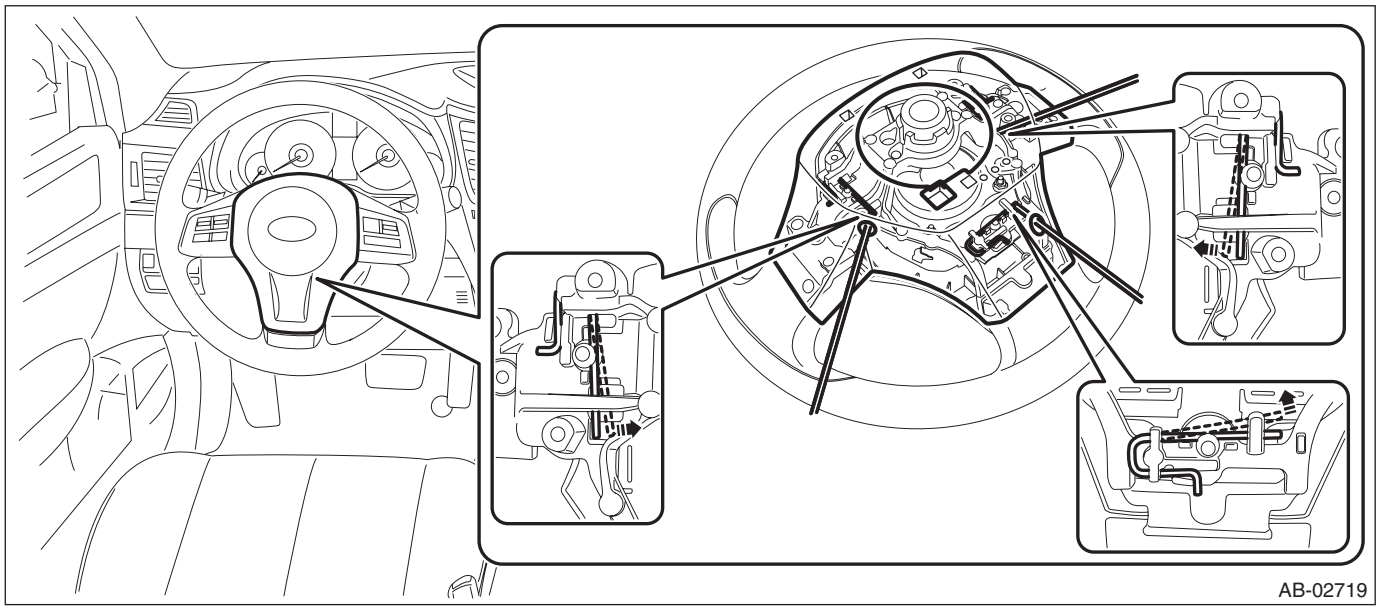

(2) Disconnect the horn harness and airbag connector and remove the airbag module assembly. <Ref. to AB-18, PROCEDURE, Airbag Connector.>

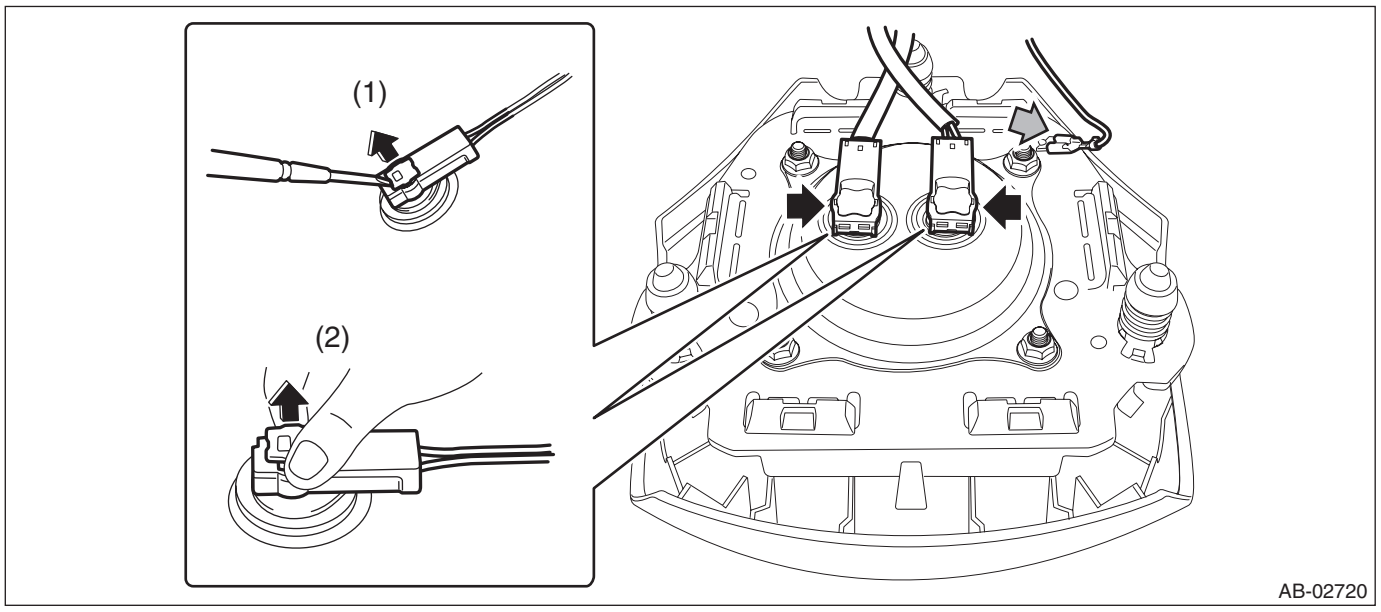

5) Remove the steering wheel.

CAUTION:
- **Always use the steering wheel puller for removal to avoid deforming the steering wheel.**
- **If the steering wheel has been removed, make sure that the roll connector is not turned from the original position.**

Preparation tool: Steering wheel puller

(1) Disconnect the connector and remove the nut.
(2) Put alignment marks and remove the steering wheel using a steering puller.

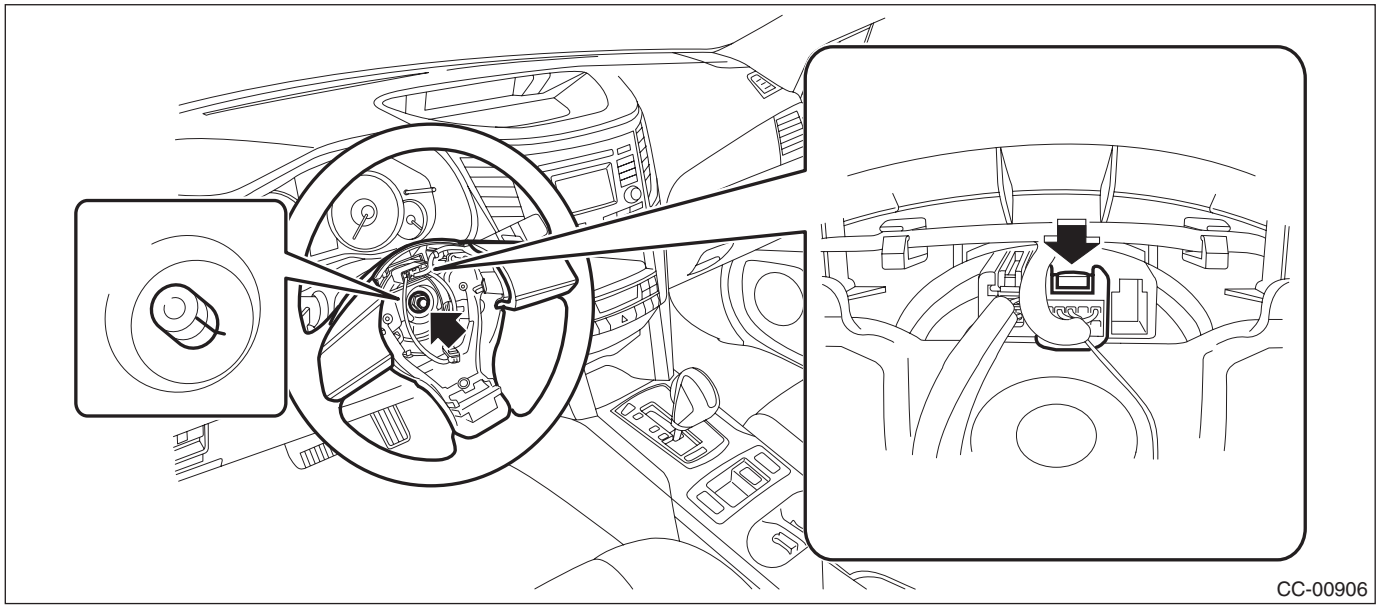

6) Remove the cruise control command switch.
(1) Remove the screw, disconnect the connector and remove the paddle shift switch. (Model with paddle shift)

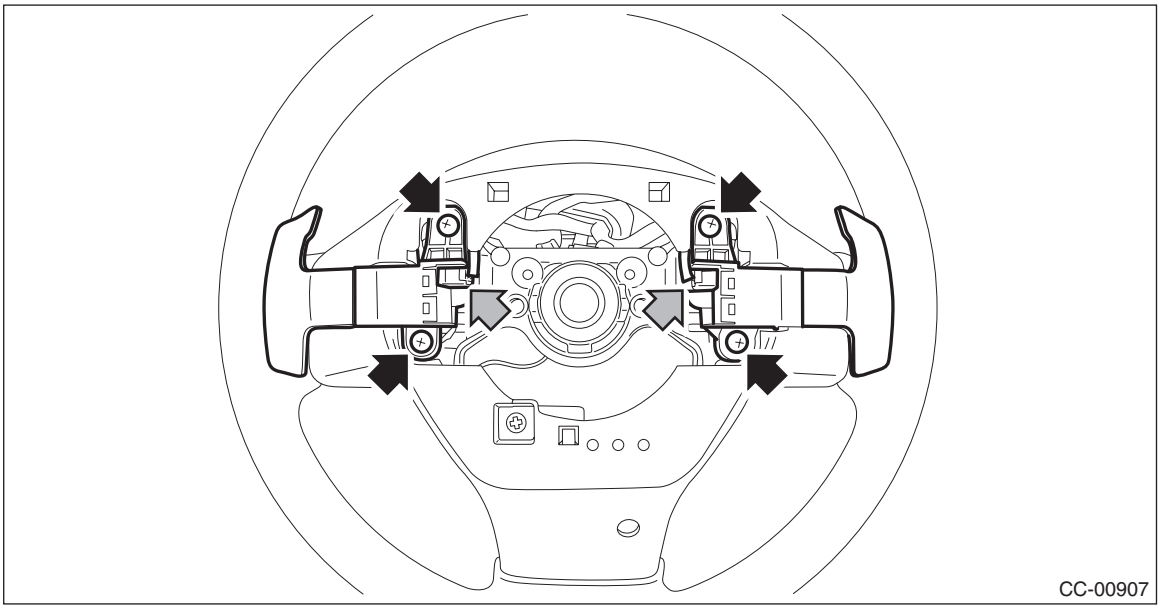

(2) Disconnect the claws and then remove the lower cover.

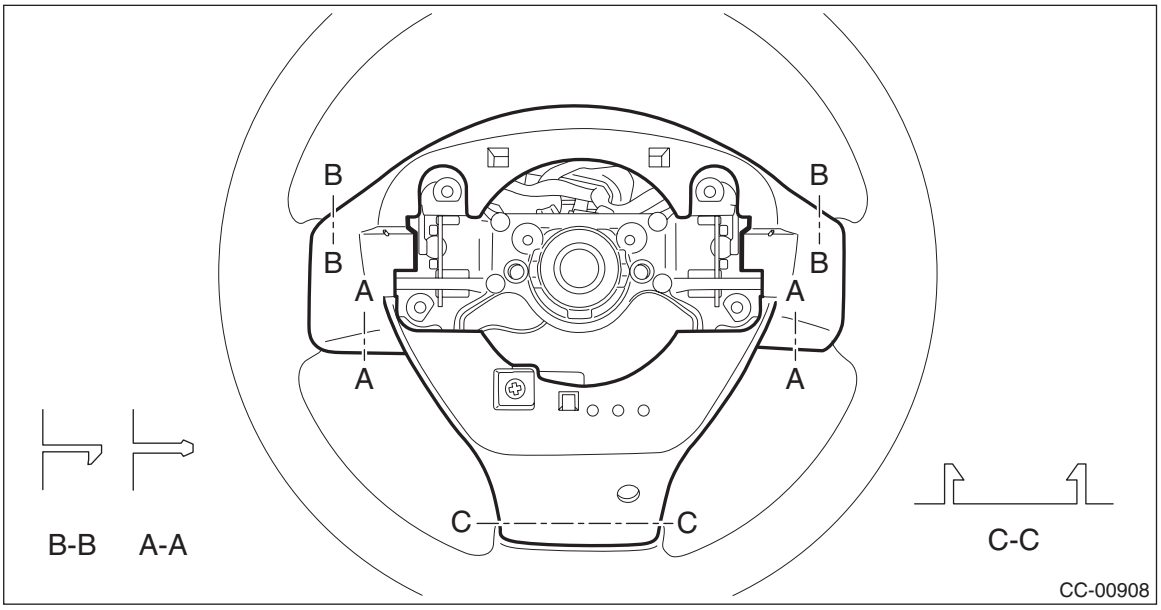

(3) Remove the screw to remove the cruise control command switch assembly.

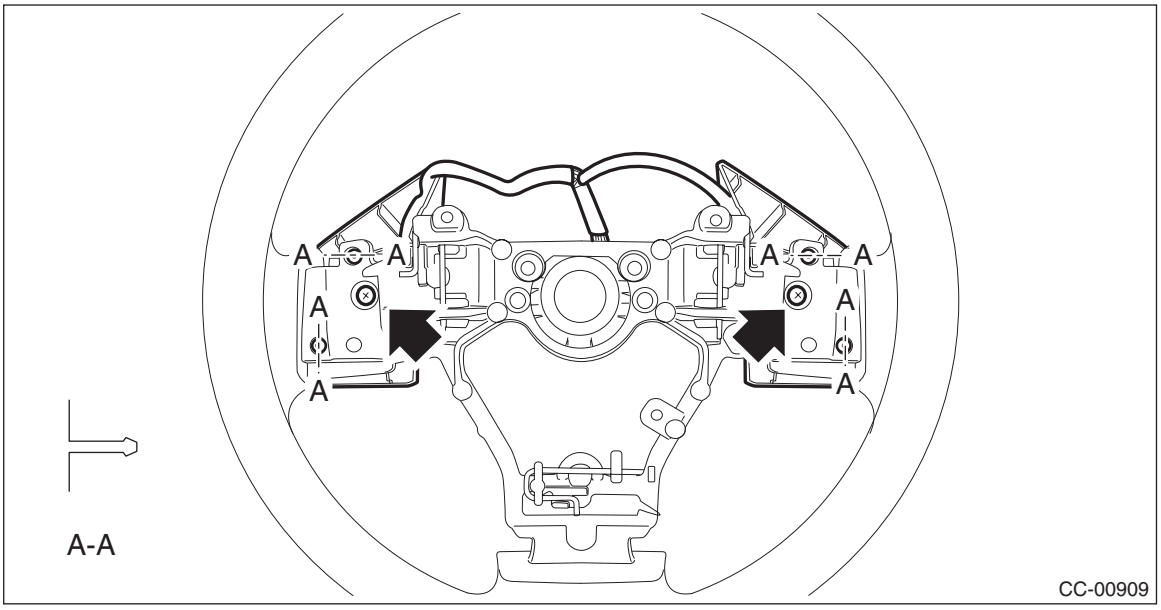

B: INSTALLATION

1) Install each part in the reverse order of removal.

CAUTION:

- **Before handling the airbag module, refer to "CAUTION" of "General Description" in "AIRBAG SYSTEM". <Ref. to AB-9, CAUTION, General Description.>**
- **Do not allow harness and connectors to interfere or get tangled up with other parts.**

2) Before installing steering wheel, be sure to adjust the direction of roll connector with steering. <Ref. to AB-101, ADJUSTMENT, Roll Connector.>

Tightening torque:

Steering wheel: 39 N·m (3.98 kgf-m, 28.8 ft-lb)

Clearance:

Between column cover and steering wheel: 2 — 4 mm (0.08 — 0.16 in)

C: INSPECTION

1) Disconnect the cruise control command switch connector.
2) Check the resistance between cruise control command switch terminals.

Preparation tool: Circuit tester

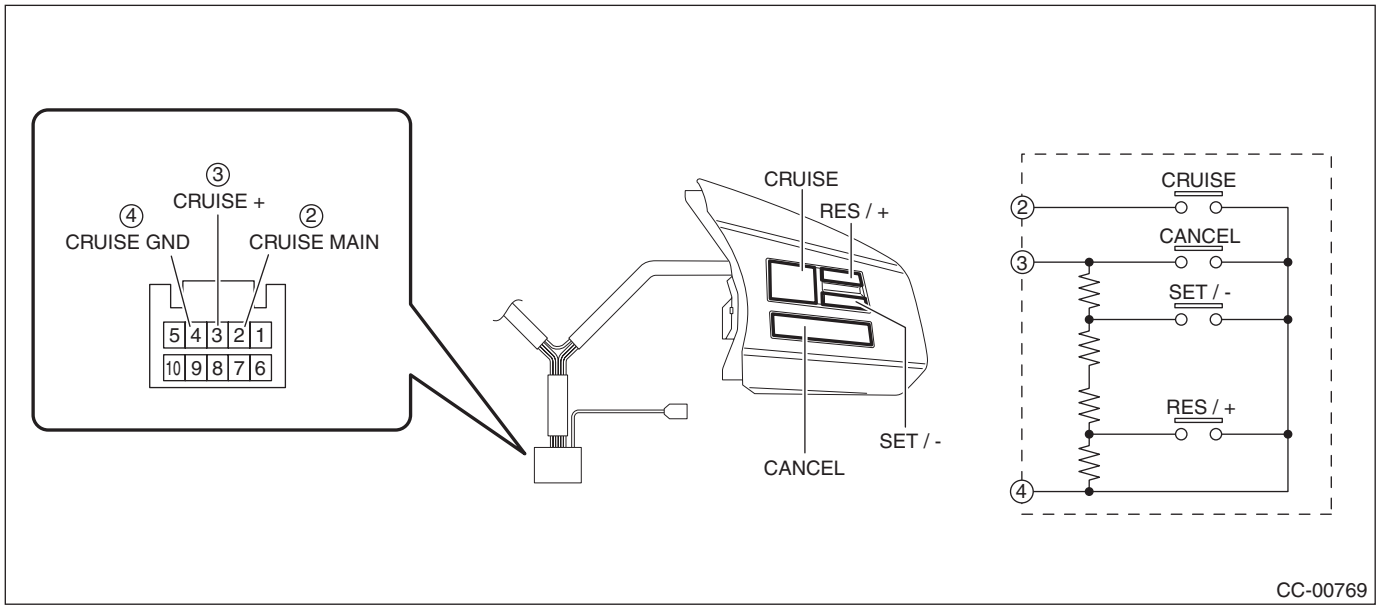

Terminal No.	Inspection conditions		Standard
3 — 4	CANCEL SET/– RES/+	All OFF	Approx. 4 kΩ
3 — 4	CANCEL	ON	Less than 1 Ω
3 — 4	SET/–	ON	Approx. 250 Ω
3 — 4	RES/+	ON	Approx. 1470 Ω
2 — 4	CRUISE (MAIN)	OFF	1 MΩ or more
2 — 4		ON	Less than 1 Ω

3) Replace the cruise control command switch if the inspection result is not within the standard value.

6. Combination Meter

A: NOTE

For the combination meter, refer to “INSTRUMENTATION/DRIVER INFO” section. <Ref. to IDI-21, Combination Meter.>

7. Stop Light & Brake Switch

A: NOTE

For stop light and brake switch, refer to “BRAKE” section. <Ref. to BR-66, INSPECTION, Stop Light Switch.>

8. Clutch Switch

A: NOTE

For clutch switch, refer to “CLUTCH” section. <Ref. to CL-31, Clutch Switch.>

9. Inhibitor Switch

A: NOTE

1. CVT MODEL

For inhibitor switch, refer to “CONTINUOUSLY VARIABLE TRANSMISSION” section. <Ref. to CVT-95, Inhibitor Switch.>

2. 5AT MODEL

Inhibitor switch cannot be removed and checked, because the inhibitor switch is installed on control valve assembly.
When a malfunction occurs, refer to “AUTOMATIC TRANSMISSION (DIAGNOSTICS)” section. <Ref. to 5AT(diag)-36, DTC P0705 TRANSMISSION RANGE SENSOR CIRCUIT (PRNDL INPUT), Diagnostic Procedure with Diagnostic Trouble Code (DTC).>

10.Transmission Control Module (TCM)

A: NOTE

For transmission control module (TCM), refer to following section.

- CVT model: <Ref. to CVT-124, Transmission Control Module (TCM).>
- 5AT model: <Ref. to 5AT-57, Transmission Control Module (TCM).>

11.Neutral Position Switch

A: NOTE

For neutral position switch, refer to “MANUAL TRANSMISSION AND DIFFERENTIAL” section. <Ref. to 6MT-37, Switches and Harness.>

CRUISE CONTROL SYSTEM (DIAGNOSTICS)

CC(diag)

		Page
1.	Basic Diagnostic Procedure	2
2.	General Description	5
3.	Electrical Component Location	6
4.	Engine Control Module (ECM) I/O Signal	7
5.	Subaru Select Monitor	8
6.	Read Cancel Code	9
7.	Real-time Diagnosis	10
8.	Diagnostics with Phenomenon	11
9.	List of Cancel Code	13
10.	Diagnostic Procedure with Cancel Code	15

1. Basic Diagnostic Procedure

A: PROCEDURE

CAUTION:
• When performing diagnosis, observe the legal speed limit on the road.
• The cancel code will be also appear when cruise control is cancelled by the driver's operation. Do not confuse them.
• Be sure to get an assistant to support the diagnosis while driving, and have him/her operate the select monitor.

	Step	Check	Yes	No
1	**CHECK MALFUNCTION INDICATOR LIGHT.** Make sure the malfunction indicator light illuminates.	Does the malfunction indicator light illuminate?	Go to step **5**.	Go to step **2**.
2	**CHECK CRUISE INDICATOR LIGHT.** Make sure the cruise indicator light blinks.	Does the cruise indicator light blink?	Go to step **7**.	Go to step **3**.
3	**CHECK CRUISE SWITCH OPERATION.** Check the CRUISE switch operation. (Check the illumination of the CRUISE indicator.)	Is the CRUISE switch turned on? (Does the CRUISE indicator illuminate?)	Go to step **4**.	Go to phenomenon 1. <Ref. to CC(diag)-11, DIAGNOSTIC PROCEDURE WITH PHENOMENON, Diagnostics with Phenomenon.>
4	**CHECK CRUISE CONTROL SET OPERATION.** Check the cruise control setting operation.	Can the cruise control be set while driving at 40 km/h (25 MPH) or more?	Go to step **8**.	Go to step **7**.
5	**CHECK DTC.** Read all DTCs using the Subaru Select Monitor.	Is an engine or ABS/VDC related DTC displayed?	Record the DTC. Go to step **6**.	Go to phenomenon 2. <Ref. to CC(diag)-11, DIAGNOSTIC PROCEDURE WITH PHENOMENON, Diagnostics with Phenomenon.>
6	**CHECK FREEZE FRAME DATA.** Using the Subaru Select Monitor, check the Freeze Frame Data or Information in Trouble State.	Was the Freeze Frame Data or Information in Trouble State recorded?	Record the data. Perform the diagnosis according to the engine or ABS/VDC related DTC.	Perform the diagnosis according to the engine or ABS/VDC related DTC.
7	**CHECK CANCEL CODE.** Using the Subaru Select Monitor, read the cancel codes. NOTE: • Do not turn the ignition switch to OFF after the cruise control is deactivated. • Do not operate the cruise control command switch after the cruise control is deactivated. If the above is performed, the cancel code will be cleared.	Is it possible to read the cancel codes?	Perform the diagnosis according to the cancel code. <Ref. to CC(diag)-13, LIST, List of Cancel Code.>	Go to step **8**.

	Step	Check	Yes	No
8	**CHECK SET INDICATOR.** Check the illumination of the SET indicator.	Does the SET indicator illuminate?	Go to step **9**.	Go to phenomenon 3. <Ref. to CC(diag)-11, DIAGNOSTIC PROCEDURE WITH PHENOMENON, Diagnostics with Phenomenon.>
9	**CHECK VEHICLE SPEED IS HELD WITHIN SET SPEED.** Make sure the vehicle speed is held within set speed.	Is the vehicle speed kept within setting speed ±3 km/h (±2 MPH)? (Make sure that on a level road.)	Go to step **10**.	Go to phenomenon 4. <Ref. to CC(diag)-11, DIAGNOSTIC PROCEDURE WITH PHENOMENON, Diagnostics with Phenomenon.>
10	**CHECK RES/+ OPERATION.** Check the RES/+ switch operation.	Does the vehicle speed increase or return to set speed after RES/+ switch has been pressed?	Go to step **11**.	Go to phenomenon 5. <Ref. to CC(diag)-11, DIAGNOSTIC PROCEDURE WITH PHENOMENON, Diagnostics with Phenomenon.>
11	**CHECK SET/– OPERATION.** Check the SET/– switch operation.	Does the vehicle speed decrease after SET/– switch has been pressed?	Go to step **12**.	Go to phenomenon 6. <Ref. to CC(diag)-11, DIAGNOSTIC PROCEDURE WITH PHENOMENON, Diagnostics with Phenomenon.>
12	**CANCEL OPERATION CHECK.** Check the CANCEL switch operation.	Is the cruise control released after CANCEL switch has been pressed?	Go to step **13**.	Go to phenomenon 7. <Ref. to CC(diag)-11, DIAGNOSTIC PROCEDURE WITH PHENOMENON, Diagnostics with Phenomenon.>
13	**CHECK CRUISE CONTROL RELEASE OPERATION.** Check the cruise control release operation.	Is the cruise control released after brake pedal has been depressed?	Go to step **14**.	Go to phenomenon 8. <Ref. to CC(diag)-11, DIAGNOSTIC PROCEDURE WITH PHENOMENON, Diagnostics with Phenomenon.>

	Step	Check	Yes	No
14	**CHECK CRUISE CONTROL RELEASE OPERATION.** Check the cruise control release operation.	Is the cruise control released after shifting to the neutral position?	Go to step **15**.	Go to phenomenon 9. <Ref. to CC(diag)-11, DIAGNOSTIC PROCEDURE WITH PHENOMENON, Diagnostics with Phenomenon.>
15	**CHECK CRUISE CONTROL RELEASE OPERATION.** Check the cruise control release operation.	Is the cruise control released after depressing the clutch pedal?	Finish the diagnosis.	Go to phenomenon 10. <Ref. to CC(diag)-11, DIAGNOSTIC PROCEDURE WITH PHENOMENON, Diagnostics with Phenomenon.>

2. General Description

A: CAUTION

Airbag system wiring harness is routed near the cruise control command switch.

CAUTION:
• Do not use the electrical test equipment on the airbag system wiring harnesses and connector circuits.
• Be careful not to damage the airbag system wiring harness when servicing the cruise control command switch. Airbag system wiring harness is routed near the cruise control command switch.

B: PREPARATION TOOL

1. SPECIAL TOOL

ILLUSTRATION	TOOL NUMBER	DESCRIPTION	REMARKS
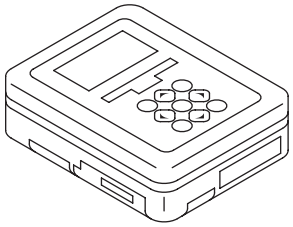 ST1B022XU0	1B022XU0	SUBARU SELECT MONITOR III KIT	Used for troubleshooting the electrical system.

2. GENERAL TOOL

TOOL NAME	REMARKS
Circuit tester	Used for measuring resistance, voltage and current.

C: INSPECTION

Measure the battery voltage and specific gravity of electrolyte.

Standard voltage:
12 V or more

Specific gravity:
1.260 or more

3. Electrical Component Location

A: LOCATION

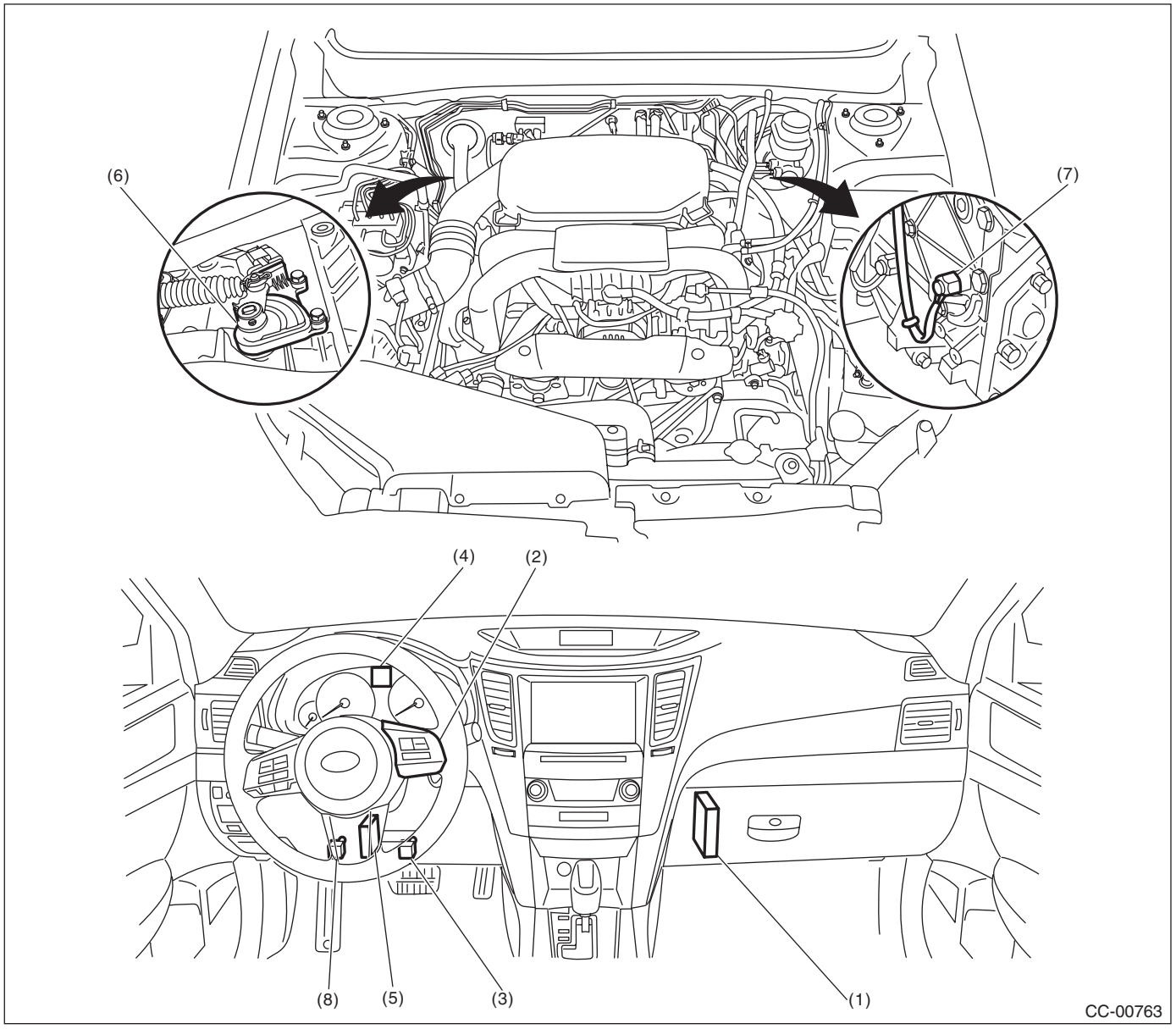

(1) Engine control module (ECM)
(2) Cruise control command switch
(3) Stop light and brake switch
(4) Cruise indicator light and cruise set indicator light
(5) Transmission control module (TCM) (AT and CVT model)
(6) Inhibitor switch (CVT model)
(7) Neutral position switch (MT model)
(8) Clutch switch (MT model)

4. Engine Control Module (ECM) I/O Signal

A: ELECTRICAL SPECIFICATION

For details on the input/output signals for the engine control module, refer to ENGINE (DIAGNOSTICS). <Ref. to EN(H4SO)(diag)-17, ELECTRICAL SPECIFICATION, Engine Control Module (ECM) I/O Signal.> <Ref. to EN(H4DOTC)(diag)-18, ELECTRICAL SPECIFICATION, Engine Control Module (ECM) I/O Signal.> <Ref. to EN(H6DO)(diag)-18, ELECTRICAL SPECIFICATION, Engine Control Module (ECM) I/O Signal.>

B: WIRING DIAGRAM

<Ref. to WI-105, WIRING DIAGRAM, Cruise Control System.>

5. Subaru Select Monitor

A: OPERATION

1. GENERAL DESCRIPTION

The on-board diagnosis function of the cruise control system uses Subaru Select Monitor.
The on-board diagnosis function operates in two categories, which are used depending on the type of problems;
1) Cruise Control Cancel Conditions Diagnosis:
(1) This category of diagnosis requires actual vehicle driving in order to determine the cause, as when cruise speed is cancelled during driving although cruise cancel condition is not entered.
(2) Cruise control memory in ECM stores the cancel code which occurred during driving. When there are multiple cancel code, they are shown on the Subaru Select Monitor.

CAUTION:
• The cruise control memory stores not only the cruise "cancel" which occurred (although "cancel" operation is not entered by the driver), but also the "cancel" condition input by the driver.
• The content of the latest memory (the latest code) is cleared when the ignition switch is turned to OFF. However, memory contents set by the diagnosis of faulty switches related to the system and cruise control will remain as trouble history (memory code) after the ignition switch is turned to OFF.
2) Real-time Diagnosis:
Real-time diagnosis function is used to determine whether or not the input signal system is in good order, according to signal emitted from switches, sensors, etc.
(1) Vehicle cannot be driven at cruise speed when the problem occurs in the cruise control system or relevant circuits.
(2) Monitor the signal conditions from switches and sensors.

2. BASIC OPERATION

For the operation procedure, refer to the "PC application help for Subaru Select Monitor".

6. Read Cancel Code

A: OPERATION

1) On «Main Menu» display, select {Each System Check}.
On «System Selection Menu» display, select {Engine Control System} and select the [OK]. Select [OK] after the engine type information is displayed.
2) Drive vehicle at 40 km/h (25 MPH) or more and set the cruise control.

CAUTION:
- **When performing diagnosis, observe the legal speed limit on the road.**
- **The cancel code will also appear when cruise control is cancelled by the driver's operation. Do not confuse them.**
- **Be sure to get an assistant to support the diagnosis while driving, and have him/her operate the select monitor.**

3) When the set speed is cancelled by itself (without any cancel operations such as applying brake) or when the cruise control could not be set by performing the setting operation, selecting the {Cancel Code(s) Display} on the engine malfunction diagnosis screen will display the cancel code on the select monitor display.

NOTE:
The {Latest Diagnostic Code(s)} and {Memorized Diagnostic Code(s)} are contained in the cancel code. The latest code recognized during current test drive is displayed in {Latest Diagnostic Code(s)}. Cancel codes resulting from fault diagnosis of switches relating to the system and cruise control are also displayed in {Memorized Diagnostic Code(s)}.
4) Perform engine DTC clear memory operation. <Ref. to EN(H4SO)(diag)-51, OPERATION, Clear Memory Mode.> <Ref. to EN(H4DOTC)(diag)-53, OPERATION, Clear Memory Mode.> <Ref. to EN(H6DO)(diag)-57, OPERATION, Clear Memory Mode.>
Cancel code of switches relating to the system and cruise control are deleted by clearing memory on the engine side.

NOTE:
- The latest code will be cleared by turning ignition switch to OFF.
- For detailed operation procedures, refer to "PC application help for Subaru Select Monitor".
- For details on cancel codes, refer to List of Cancel Code. <Ref. to CC(diag)-13, List of Cancel Code.>

7. Real-time Diagnosis

A: OPERATION

1) Select {Current Data Display & Save} in «Engine Diagnosis» display screen.
2) Make sure that normal display is shown when operated as follows:
- Depress and release the brake pedal. (Stop light switch and brake switch are turned ON.)
- Turn the “CRUISE” switch to ON.
- Turn the “CANCEL” switch to ON.
- Turn the “SET/–” switch to ON.
- Turn the “RES/+” switch to ON.
- Depress or release the clutch switch.
- Place the shift lever in any position other than neutral.

NOTE:
For detailed operation procedures, refer to “PC application help for Subaru Select Monitor”.

8. Diagnostics with Phenomenon

A: DIAGNOSTIC PROCEDURE WITH PHENOMENON

Phenomenon		Check item	Reference
1	CRUISE switch is not turned ON. (CRUISE indicator does not illuminate.) Or the cruise control is cancelled without CRUISE switch operation.	(1) Perform cruise cancel conditions diagnosis.	Perform the diagnosis according to displayed cancel code.
		(2) Perform the real-time diagnosis.	Check the input signal of cruise control system.
		(3) Check the cruise control command switch.	<Ref. to CC(diag)-15, 11, Diagnostic Procedure with Cancel Code.>
		(4) Check the CRUISE indicator.	<Ref. to CC(diag)-12, CHECK CRUISE INDICATOR LIGHT AND CRUISE SET INDICATOR LIGHT, Diagnostics with Phenomenon.>
2	Cruise control cannot be set. Or the cruise control is cancelled without canceling operation.	(1) Perform cruise cancel conditions diagnosis.	Perform the diagnosis according to displayed cancel code.
		(2) Perform the real-time diagnosis.	Check the input signal of cruise control system.
		(3) Check the cruise control command switch.	<Ref. to CC(diag)-15, 11, Diagnostic Procedure with Cancel Code.>
		(4) Check stop light switch and brake switch.	<Ref. to BR-64, Stop Light Switch.> <Ref. to CC(diag)-17, 12, Diagnostic Procedure with Cancel Code.>
		(5) Check clutch switch.	<Ref. to CL-31, Clutch Switch.> <Ref. to CC(diag)-19, 13, Diagnostic Procedure with Cancel Code.>
		(6) Check the neutral position switch.	<Ref. to CC(diag)-20, 14, Diagnostic Procedure with Cancel Code.> <Ref. to CC(diag)-24, 62, Diagnostic Procedure with Cancel Code.>
		(7) Check vehicle speed sensor.	<Ref. to CC(diag)-23, 22, Diagnostic Procedure with Cancel Code.>
3	SET indicator does not illuminate.	Check the SET indicator.	<Ref. to CC(diag)-12, CHECK CRUISE INDICATOR LIGHT AND CRUISE SET INDICATOR LIGHT, Diagnostics with Phenomenon.>
4	Vehicle speed is not held within set speed ±3 km/h (±2 MPH).	Check the vehicle speed sensor.	<Ref. to CC(diag)-23, 22, Diagnostic Procedure with Cancel Code.>
5	Vehicle speed does not increase or does not return to set speed after RES/+ switch has been pressed.	(1) Perform the real-time diagnosis.	Check the input signal of cruise control system.
		(2) Check the RES/+ switch.	<Ref. to CC(diag)-15, 11, Diagnostic Procedure with Cancel Code.>
6	Vehicle speed does not decrease after SET/– switch has been pressed.	(1) Perform the real-time diagnosis.	Check the input signal of cruise control system.
		(2) Check the SET/– switch.	<Ref. to CC(diag)-15, 11, Diagnostic Procedure with Cancel Code.>
7	Cruise control is not released after CANCEL switch has been pressed.	(1) Perform the real-time diagnosis.	Check the input signal of cruise control system.
		(2) Check the CANCEL switch.	<Ref. to CC(diag)-15, 11, Diagnostic Procedure with Cancel Code.>
8	Cruise control is not released after brake pedal has been depressed.	(1) Perform the real-time diagnosis.	Check the input signal of cruise control system.
		(2) Check stop light switch and brake switch.	<Ref. to CC(diag)-17, 12, Diagnostic Procedure with Cancel Code.> <Ref. to BR-66, INSTALLATION, Stop Light Switch.>
9	Cruise control is not released after shifting to the neutral position.	(1) Perform the real-time diagnosis.	Check the input signal of cruise control system.
		(2) Check the neutral position switch.	<Ref. to CC(diag)-20, 14, Diagnostic Procedure with Cancel Code.> <Ref. to CC-16, Neutral Position Switch.>
10	Cruise control is not released after clutch pedal has been depressed.	(1) Perform the real-time diagnosis.	Check the input signal of cruise control system.
		(2) Check clutch switch.	<Ref. to CC(diag)-19, 13, Diagnostic Procedure with Cancel Code.> <Ref. to CL-31, CLUTCH SWITCH, INSTALLATION, Clutch Switch.>

B: CHECK CRUISE INDICATOR LIGHT AND CRUISE SET INDICATOR LIGHT

TROUBLE SYMPTOM:

Cruise control can be set, but the CRUISE indicator and SET indicator do not illuminate.

	Step	Check	Yes	No
1	**CHECK CRUISE & SET INDICATORS.** Check the combination meter. <Ref. to IDI-6, OPERATION, Combination Meter System.>	Do the CRUISE & SET indicators illuminate?	Go to step **2**.	Replace the meter case assembly. <Ref. to IDI-21, Combination Meter.>
2	**CHECK LAN SYSTEM.** Perform the diagnosis for LAN system. <Ref. to LAN(diag)-2, Basic Diagnostic Procedure.>	Is a DTC of the LAN system detected?	Perform the diagnosis according to DTC for LAN system.	Replace the ECM. <Ref. to FU(H4DOTC)-58, Engine Control Module (ECM).>

9. List of Cancel Code

A: LIST

NOTE:
- The cancel code is registered even when cancel is performed intentionally by the driver.
- Cancel codes are cleared if the ignition switch is turned to OFF.
- If a different cancel code is input after a cancel code (latest code) has been input, the latest code is overwritten.
- If the cruise indicator light is flashing, a malfunction is occurring in the system or cruise control related switch. The cancel code at this time is saved even after ignition switch is OFF as a memory code of a past malfunction.
- To display a cancel code, use the Subaru Select Monitor to read the code after the cruise control is deactivated during a driving test.

Cancel code	Item	Contents of diagnosis	Note
11	Main switch	CRUISE switch of cruise control command switch is turned to OFF, and then the cruise control is released.	This code is displayed without operating the CRUISE switch. <Ref. to CC(diag)-15, 11, Diagnostic Procedure with Cancel Code.>
12	Stop & brake switch	Stop light switch or brake switch is turned to ON, and then the cruise control is released.	This code is displayed without depressing the brake pedal. <Ref. to CC(diag)-17, 12, Diagnostic Procedure with Cancel Code.>
13	Clutch switch	Clutch switch is turned to ON, and then the cruise control is released.	This code is displayed without depressing the clutch pedal. <Ref. to CC(diag)-19, 13, Diagnostic Procedure with Cancel Code.>
14	Neutral switch	Neutral position switch is turned to ON, and then the cruise control is released.	This code is displayed without shifting to neutral position. <Ref. to CC(diag)-20, 14, Diagnostic Procedure with Cancel Code.>
15	Cancel switch	Cancel switch is turned to ON, and then the cruise control is released.	This code is displayed without operating the cancel switch. <Ref. to CC(diag)-21, 15, Diagnostic Procedure with Cancel Code.>
16	Ignition switch	Ignition switch is turned to OFF, and then the cruise control is released.	This code is displayed without operating the ignition switch. <Ref. to CC(diag)-22, 16, Diagnostic Procedure with Cancel Code.>
21	Cruise control switch malfunction when the ignition switch is ON	When the ignition switch is turned to ON, each switch of cruise control command switch is already turned to ON.	This code is displayed when the ignition switch is turned to ON without operating the cruise control command switch. <Ref. to CC(diag)-22, 21, Diagnostic Procedure with Cancel Code.>
22	Abnormality of change in vehicle speed	Malfunction of vehicle speed signal variation is detected.	<Ref. to CC(diag)-23, 22, Diagnostic Procedure with Cancel Code.>
24	Abnormality of switches related to cruise control	Open circuit of the cruise control switch is detected during cruise driving. (The system is judged as model without cruise control.)	This code is displayed with normal operation. <Ref. to CC(diag)-23, 24, Diagnostic Procedure with Cancel Code.>
31	Abnormal engine speed Signal	• Abnormal increase of engine speed is detected. • Gear is placed in Neutral, 1st or Reverse position.	Cruise in 2nd shift position or more. <Ref. to CC(diag)-23, 31, Diagnostic Procedure with Cancel Code.>

List of Cancel Code

Cancel code	Item	Contents of diagnosis	Note
32	Cruse Control out of Range	• Controlled vehicle speed decreased under the limit during cruising. • Set operation was performed at vehicle speed unavailable for setting. • RESUME operation was performed without memorized vehicle speed.	This code is displayed, though the vehicle speed is increased to the speed available for cruise set and set operation was performed again. <Ref. to CC(diag)-23, 32, Diagnostic Procedure with Cancel Code.>
34	Prohibition of cruise control at continuing big Accel. angle	The vehicle has been driven at higher speed than set vehicle speed for an abnormally long time (approximately 10 minutes) during cruise driving.	This code is displayed when driving for a long period of time at higher speed than appropriate cruise set vehicle speed by operating accelerator pedal. In this case, the cruise setting is deactivated. <Ref. to CC(diag)-23, 34, Diagnostic Procedure with Cancel Code.>
35	Prohibition of cruise control at vehicle speed F/B malfunction	Set vehicle speed cannot be kept because of some reasons (steep uphill, parking brake, abnormal decrease of engine output, etc.) during cruise driving.	This code is displayed when driving condition is not suitable for cruise control. Perform cruise set operation again after clearing the possible cause. <Ref. to CC(diag)-24, 35, Diagnostic Procedure with Cancel Code.>
41	VDC/TCS/EPB Operating	Vehicle dynamics control (VDC), TCS or EPB is operated during cruise driving or cruise setting.	This code is displayed when driving condition is not suitable for cruise control. Perform cruise set operation again after clearing the possible cause. <Ref. to CC(diag)-24, 41, Diagnostic Procedure with Cancel Code.>
43	ABS/VDC Failure	ABS or Vehicle dynamics control (VDC) system malfunction is detected during cruise driving or cruise setting.	<Ref. to CC(diag)-24, 43, Diagnostic Procedure with Cancel Code.>
44	Body Integrated unit Failure	Body integrated unit system malfunction is detected during cruise driving or cruise setting.	<Ref. to CC(diag)-24, 44, Diagnostic Procedure with Cancel Code.>
45	Meter Failure	Combination meter malfunction is detected during cruise driving or cruise setting.	<Ref. to CC(diag)-24, 45, Diagnostic Procedure with Cancel Code.>
49	TCM Failure	Transmission control module (TCM) malfunction is detected during cruise driving or cruise setting.	<Ref. to CC(diag)-24, 49, Diagnostic Procedure with Cancel Code.>
61	Brake switch abnormal	Malfunction in the stop light & brake switch is detected.	<Ref. to CC(diag)-24, 61, Diagnostic Procedure with Cancel Code.>
62	Neutral switch abnormal	Neutral position switch malfunction is detected.	<Ref. to CC(diag)-24, 62, Diagnostic Procedure with Cancel Code.>
63	Abnormality 1 of change in vehicle speed	Malfunction of vehicle speed signal variation is detected.	<Ref. to CC(diag)-24, 63, Diagnostic Procedure with Cancel Code.>
64	Engine Sensor Failure 1	Malfunction related to engine is detected.	<Ref. to CC(diag)-25, 64, Diagnostic Procedure with Cancel Code.>
65	Abnormality of switches related to cruise control 1	Cruise control command switch malfunction is detected. (When the switch is pressed ON for a long time (approximately two minutes), stuck ON condition is detected.)	<Ref. to CC(diag)-25, 65, Diagnostic Procedure with Cancel Code.>
66	Cruise Control Calculation Error	Cruise control calculation (microcomputer) malfunction is detected.	<Ref. to CC(diag)-25, 66, Diagnostic Procedure with Cancel Code.>

10.Diagnostic Procedure with Cancel Code

A: 11

When CRUISE switch is pressed, or a malfunction related to CRUISE switch occurs, this is detected.

TROUBLE SYMPTOM:

- Cruise control cannot be set. (Cancelled immediately.)
- Cruise control cannot be released.

WIRING DIAGRAM:

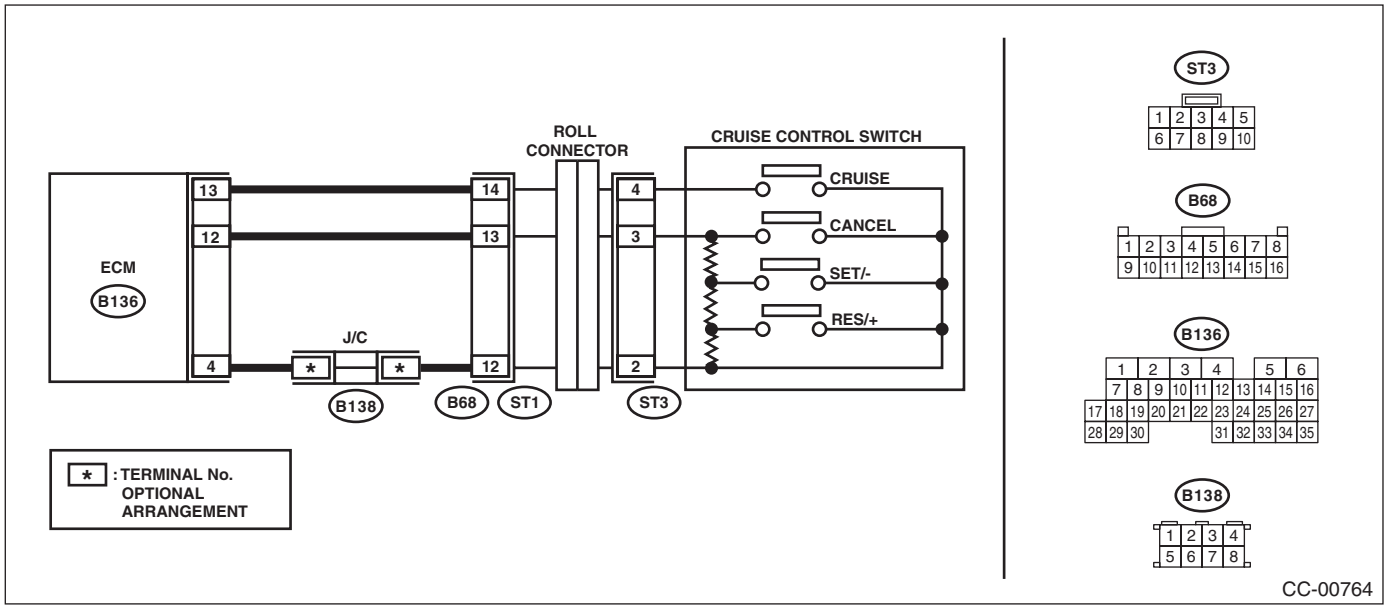

Step		Check	Yes	No
1	**CHECK CRUISE CONTROL COMMAND SWITCH CIRCUIT.** 1) Remove the driver's airbag module. <Ref. to AB-35, REMOVAL, Driver's Airbag Module.> 2) Disconnect the harness connector of cruise control command switch. 3) Turn the ignition switch to ON. 4) Measure the voltage between harness connector terminal and chassis ground. ***Connector & terminal*** ***(ST3) No. 4 (+) — Chassis ground (–):*** ***(ST3) No. 3 (+) — Chassis ground (–):***	Is the voltage 5 V or more?	Go to step **2**.	Check the harness between cruise control command switch and ECM, and the steering roll connector for open or short circuit, or for poor contact.
2	**CHECK CRUISE CONTROL COMMAND SWITCH CIRCUIT.** 1) Turn the ignition switch to OFF. 2) Remove the cruise control command switch. <Ref. to CC-7, REMOVAL, Cruise Control Command Switch.> 3) Measure the resistance between harness connector terminal and chassis ground. ***Connector & terminal*** ***(ST3) No. 2 — Chassis ground:***	Is the resistance less than 10 Ω?	Go to step **3**.	Check for open circuit between cruise control command switch, ECM, and chassis ground and check the ECM.
3	**CHECK CRUISE CONTROL COMMAND SWITCH.** Measure the resistance between switch terminals when the cruise control command switch is not depressed. ***Terminals*** ***No. 2 — No. 3:***	Is the resistance approx. 4 kΩ?	Go to step **4**.	Replace the cruise control command switch. <Ref. to CC-7, Cruise Control Command Switch.>

	Step	Check	Yes	No
4	**CHECK CANCEL SWITCH.** 1) Turn the ignition switch to OFF. 2) Remove the cruise control command switch. <Ref. to CC-7, REMOVAL, Cruise Control Command Switch.> 3) Measure the resistance between switch terminals with the CANCEL switch pressed. ***Terminals*** ***No. 2 — No. 3:***	Is the resistance approx. less than 1 Ω when the CANCEL switch is pressed?	Go to step **5**.	Replace the cruise control command switch. <Ref. to CC-7, Cruise Control Command Switch.>
5	**CHECK SET/– SWITCH.** Measure the resistance between the switch terminals with the SET/– switch pressed. ***Terminals*** ***No. 2 — No. 3:***	Is the resistance approx. 250 Ω when the SET/– switch is pressed?	Go to step **6**.	Replace the cruise control command switch. <Ref. to CC-7, Cruise Control Command Switch.>
6	**CHECK RES/+ SWITCH.** Measure the resistance between the switch terminals with the RES/+ switch pressed. ***Terminals*** ***No. 2 — No. 3:***	Is the resistance approx. 1,500 Ω when the RES/+ switch is pressed?	Replace the ECM. <Ref. to FU(H4SO)-46, Engine Control Module (ECM).> <Ref. to FU(H4DOTC)-58, Engine Control Module (ECM).> <Ref. to FU(H6DO)-54, Engine Control Module (ECM).>	Replace the cruise control command switch. <Ref. to CC-7, Cruise Control Command Switch.>

B: 12

Detected when brake pedal is depressed or malfunction related to stop light & brake switch occurs.

TROUBLE SYMPTOM:

- Cruise control cannot be set.
- Cruise control cannot be released.

WIRING DIAGRAM:

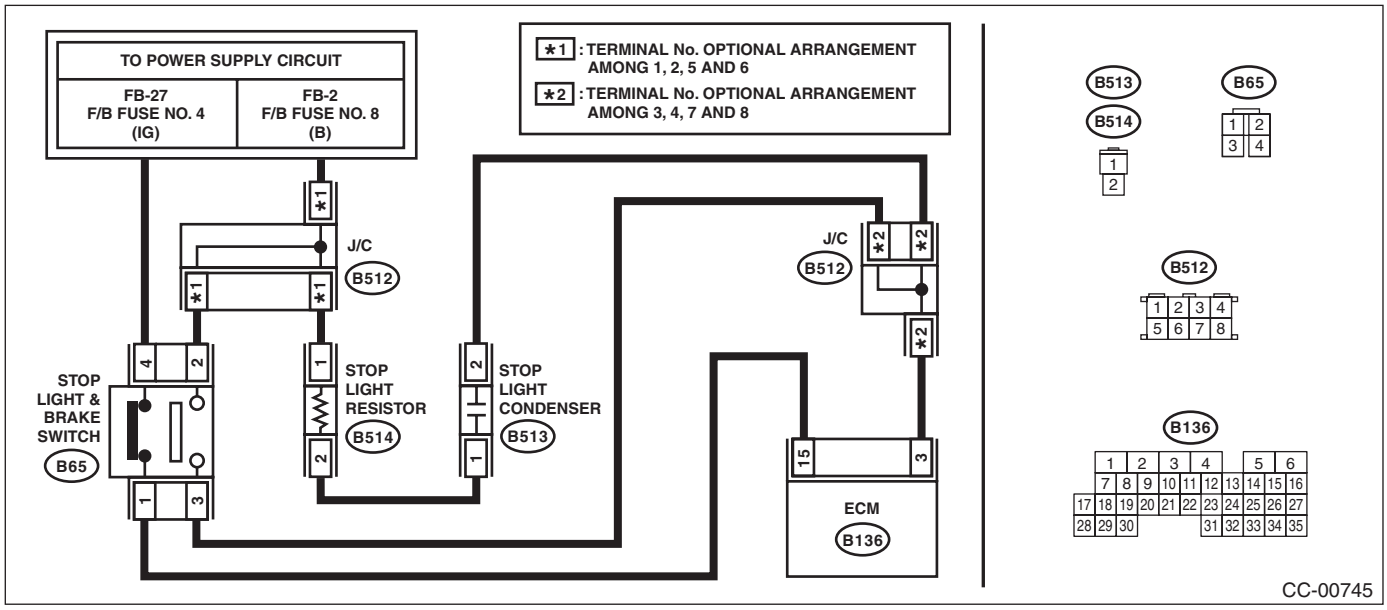

Step		Check	Yes	No
1	**CHECK STOP LIGHT & BRAKE SWITCH.** Check the stop light & brake switch. <Ref. to CC-12, Stop Light & Brake Switch.>	Is the stop light & brake switch and installation position OK?	Go to step **2**.	Replace the stop light & brake switch. Or adjust the installation position.
2	**CHECK STOP LIGHT & BRAKE SWITCH CIRCUIT.** 1) Turn the ignition switch to OFF. 2) Disconnect the stop light & brake switch harness connector. 3) Turn the ignition switch to ON. 4) Measure the voltage between harness connector terminal and chassis ground. ***Connector & terminal*** ***(B65) No. 2 (+) — Chassis ground (–):***	Is the voltage 10 V or more?	Go to step **3**.	• Check fuse No. 8 (in fuse & relay box). • Check for open or short circuit in the harness between stop light/ brake switch and fuse and relay box.
3	**CHECK STOP LIGHT & BRAKE SWITCH CIRCUIT.** Measure the voltage between harness connector terminal and chassis ground. ***Connector & terminal*** ***(B65) No. 4 (+) — Chassis ground (–):***	Is the voltage 10 V or more?	Go to step **4**.	• Check fuse No. 4 (in fuse & relay box). • Check for open or short circuit in the harness between stop light/ brake switch and fuse and relay box.

	Step	Check	Yes	No
4	**CHECK STOP LIGHT & BRAKE SWITCH CIRCUIT.** 1) Turn the ignition switch to OFF. 2) Disconnect the harness connector of ECM. 3) Measure the resistance between ECM harness connector terminal and stop light & brake switch harness connector terminal. ***Connector & terminal*** ***(B136) No. 3 — (B65) No. 3:*** ***(B136) No. 15 — (B65) No. 1:***	Is the resistance less than 10 Ω?	Replace the ECM. <Ref. to FU(H4SO)-46, Engine Control Module (ECM).> <Ref. to FU(H4DOTC)-58, Engine Control Module (ECM).> <Ref. to FU(H6DO)-54, Engine Control Module (ECM).>	Repair the harness.

C: 13

Detected when clutch pedal is depressed or malfunction related to clutch switch occurs.

TROUBLE SYMPTOM:

- Cruise control cannot be set.
- Cruise control cannot be released.

WIRING DIAGRAM:

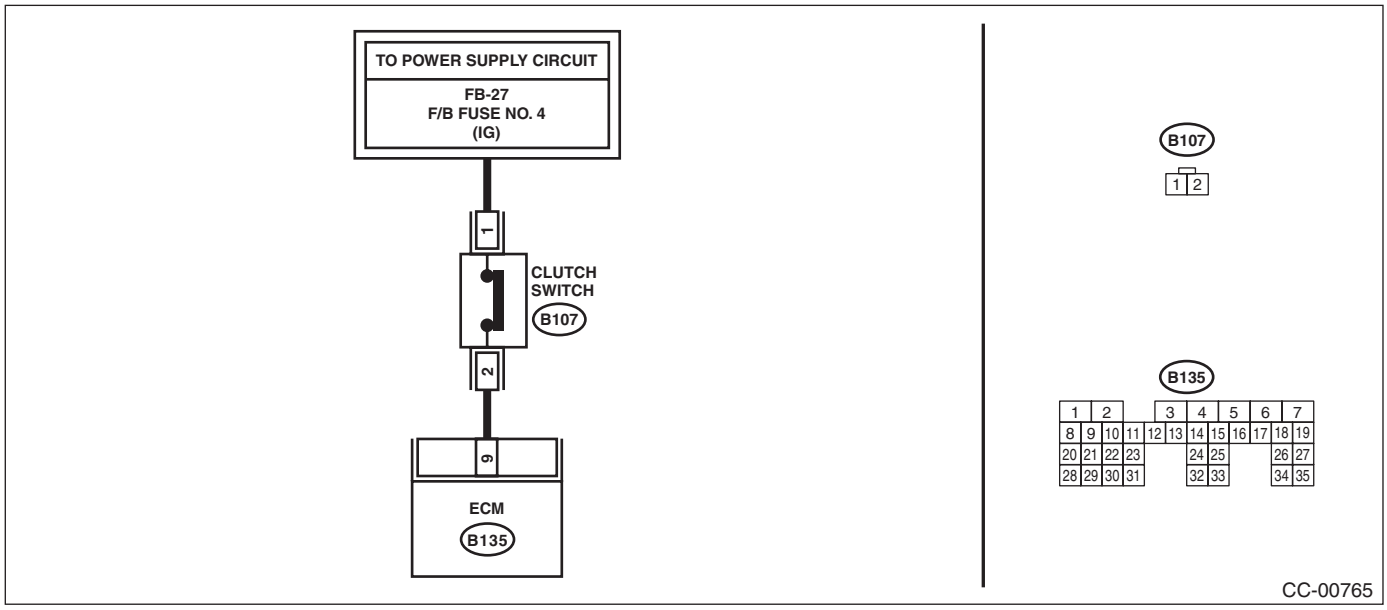

Step		Check	Yes	No
1	**CHECK CLUTCH SWITCH.** Check the clutch switch. <Ref. to CC-13, Clutch Switch.>	Is the clutch switch and installation position OK?	Go to step **2**.	Replace the clutch switch. Or adjust the installation position.
2	**CHECK CLUTCH SWITCH CIRCUIT.** 1) Turn the ignition switch to OFF. 2) Disconnect the clutch switch harness connector. 3) Turn the ignition switch to ON. 4) Measure the voltage between harness connector terminal and chassis ground. ***Connector & terminal*** ***(B107) No. 1 (+) — Chassis ground (–):***	Is the voltage 10 V or more?	Go to step **3**.	• Check fuse No. 4 (in fuse & relay box). • Check open or short circuit of harness between clutch switch and fuse & relay box.
3	**CHECK CLUTCH SWITCH CIRCUIT.** 1) Turn the ignition switch to OFF. 2) Disconnect the harness connector of ECM. 3) Measure the resistance between clutch switch harness connector terminal and ECM harness connector terminal. ***Connector & terminal*** ***(B107) No. 2 — (B135) No. 9:***	Is the resistance less than 10 Ω?	Replace the ECM. <Ref. to FU(H4SO)-46, Engine Control Module (ECM).> <Ref. to FU(H4DOTC)-58, Engine Control Module (ECM).> <Ref. to FU(H6DO)-54, Engine Control Module (ECM).>	Repair the harness.

D: 14

Detected when select lever is set in the neutral position, or when malfunction related to neutral position switch occurs.

TROUBLE SYMPTOM:

Cruise control cannot be set.

WIRING DIAGRAM:

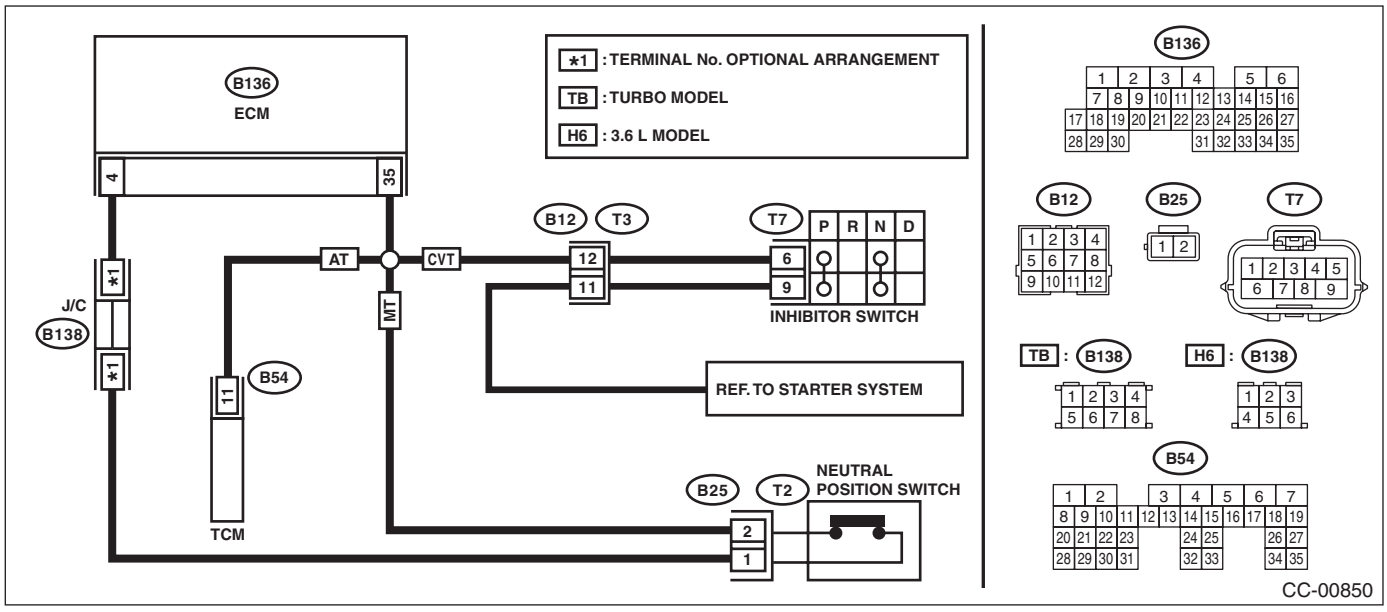

Step		Check	Yes	No
1	**CHECK SPECIFICATIONS OF CHECKED VEHICLE.** Check the vehicle destination and specification.	Is the vehicle 5AT model?	Go to step **2**.	Go to step **5**.
2	**CHECK NEUTRAL POSITION SWITCH SIGNAL.** 1) Connect the Subaru Select Monitor to data link connector. 2) Turn the ignition switch to ON and run the Subaru Select Monitor. 3) Select {Engine Control System} from the main menu. 4) Then, select the {Current Data Display & Save}. 5) Shift the select lever to "P" or "N" range, and check the signal of the neutral position switch.	If the select lever is in the "P" or the "N" range, is the Subaru Select Monitor Display ON? Or, if in a range other than "P" or "N", is the Subaru Select Monitor display OFF?	Replace the ECM. <Ref. to FU(H4DOTC)-58, Engine Control Module (ECM).> <Ref. to FU(H6DO)-54, Engine Control Module (ECM).>	Go to step **3**.
3	**CHECK TCM OUTPUT VOLTAGE.** 1) Turn the ignition switch to ON. 2) Measure the voltage between TCM harness connector terminal and chassis ground. ***Connector & terminal*** ***(B54) No. 11 (+) — Chassis ground (–):***	If the select lever is in a range other than "P" or "N" ranges, is the voltage 10V or more? Or, if in "P" or "N", is the voltage less than 1V?	Go to step **4**.	Check the TCM. <Ref. to 5AT(diag)-2, Basic Diagnostic Procedure.>
4	**CHECK HARNESS BETWEEN TCM AND ECM.** 1) Turn the ignition switch to OFF. 2) Disconnect the harness connector from TCM and ECM. 3) Measure the resistance between TCM harness connector terminal and ECM harness connector terminal. ***Connector & terminal*** ***(B136) No. 35 — (B54) No. 11:***	Is the resistance less than 10 Ω?	Replace the ECM. <Ref. to FU(H4DOTC)-58, Engine Control Module (ECM).> <Ref. to FU(H6DO)-54, Engine Control Module (ECM).>	Repair the wiring harness.

	Step	Check	Yes	No
5	**CHECK TRANSMISSION TYPE.**	Is the transmission type CVT?	Go to step **6**.	Go to step **9**. (MT model)
6	**CHECK INHIBITOR SWITCH CIRCUIT.** 1) Turn the ignition switch to OFF. 2) Disconnect the inhibitor switch harness connector. 3) Turn the ignition switch to ON. 4) Measure the voltage between harness connector terminal and chassis ground. ***Connector & terminal*** ***(T7) No. 6 (+) — Chassis ground (–):***	Is the voltage 10 V or more?	Go to step **7**.	Check for open or short in the harness between inhibitor switch and ECM.
7	**CHECK INHIBITOR SWITCH CIRCUIT.** 1) Turn the ignition switch to OFF. 2) Disconnect the starter motor harness connector. 3) Measure the resistance between inhibitor switch harness connector terminal and starter motor. ***Connector & terminal*** ***(T7) No. 9 — Starter motor:***	Is the resistance less than 10 Ω?	Go to step **8**.	Repair the harness.
8	**CHECK INHIBITOR SWITCH.** Remove and check the inhibitor switch. <Ref. to CC-14, Inhibitor Switch.>	Is the inhibitor switch working normal?	Replace the ECM. <Ref. to FU(H4SO)-46, Engine Control Module (ECM).>	Replace the inhibitor switch.
9	**CHECK NEUTRAL POSITION SWITCH CIRCUIT.** 1) Turn the ignition switch to OFF. 2) Disconnect the neutral position switch harness connector. 3) Turn the ignition switch to ON. 4) Measure the voltage between harness connector terminal and chassis ground. ***Connector & terminal*** ***(B25) No. 2 (+) — Chassis ground (–):***	Is the voltage 10 V or more?	Go to step **10**.	Check for open or short in the harness between neutral position switch and ECM.
10	**CHECK NEUTRAL POSITION SWITCH CIRCUIT.** 1) Turn the ignition switch to OFF. 2) Measure resistance between harness connector terminal of neutral position switch and chassis ground. ***Connector & terminal*** ***(B25) No. 1 — Chassis ground:***	Is the resistance less than 10 Ω?	Go to step **11**.	Repair the harness.
11	**CHECK NEUTRAL POSITION SWITCH.** Remove and check the neutral position switch. <Ref. to CC-16, Neutral Position Switch.>	Is the neutral position switch OK?	Replace the ECM. <Ref. to FU(H4SO)-46, Engine Control Module (ECM).> <Ref. to FU(H4DOTC)-58, Engine Control Module (ECM).>	Replace the neutral position switch.

E: 15

Detected when CANCEL switch is pressed or malfunction related to CRUISE switch occurs.

TROUBLE SYMPTOM:

- Cruise control cannot be set. (Cancelled immediately.)
- Cruise control cannot be released.

Refer to DTC 11 for diagnostic procedure.
<Ref. to CC(diag)-15, 11, Diagnostic Procedure with Cancel Code.>

F: 16

Detected when ignition switch is turned to OFF or malfunction related to the ignition switch occurs.
TROUBLE SYMPTOM:
Cruise control cannot be set.
WIRING DIAGRAM:

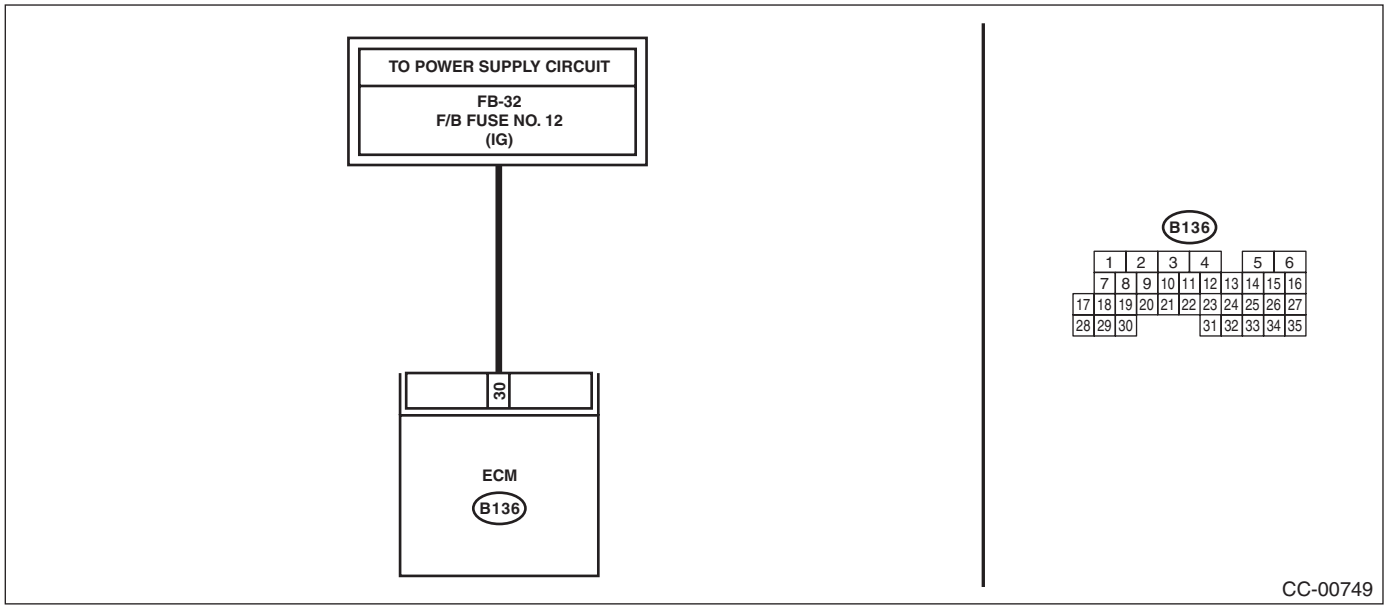

Step		Check	Yes	No
1	**CHECK IGNITION SWITCH CIRCUIT.** 1) Turn the ignition switch to OFF. 2) Disconnect the ECM harness connector. 3) Turn the ignition switch to ON. 4) Measure the voltage between harness connector terminal and chassis ground. ***Connector & terminal*** ***(B136) No. 30 (+) — Chassis ground (–):***	Is the voltage 10 V or more?	Check for poor contact of ECM connector.	• Check fuse No. 12 (in fuse & relay box). • Check the harness for open or short circuit between ignition switch and ECM.

G: 21

Cruise control command switch malfunction is detected.
TROUBLE SYMPTOM:
- Cruise control cannot be set. (Cancelled immediately.)
- Cruise control cannot be released.

Refer to DTC 11 for diagnostic procedure.
<Ref. to CC(diag)-15, 11, Diagnostic Procedure with Cancel Code.>

H: 22

Malfunction related to vehicle speed sensor is detected.
DIAGNOSIS:
Open or shorted circuit in vehicle speed sensor system.
TROUBLE SYMPTOM:
Cruise control cannot be set. (Cancelled immediately.)

	Step	Check	Yes	No
1	**CHECK ABS OR VDC WARNING LIGHT.** 1) Turn the ignition switch to ON. 2) After the initial operation of combination meter is completed, check if ABS or VDC warning light continues to illuminate.	Does the warning light continue to illuminate?	Check the VDCCM. <Ref. to VDC(diag)-2, Basic Diagnostic Procedure.>	Go to step **2**.
2	**CHECK DTC OF LAN COMMUNICATION CIRCUIT.** Read the DTC of body integrated unit using Subaru Select Monitor.	Is DTC displayed?	Perform inspection according to DTC.	Replace the ECM. <Ref. to FU(H4SO)-46, Engine Control Module (ECM).> <Ref. to FU(H4DOTC)-58, Engine Control Module (ECM).> <Ref. to FU(H6DO)-54, Engine Control Module (ECM).>

I: 24

Malfunction in cruise control-related switch is detected.
TROUBLE SYMPTOM:
- Cruise control cannot be set. (Cancelled immediately.)
- Cruise control cannot be released.

Refer to DTC 11 for diagnostic procedure.
<Ref. to CC(diag)-15, 11, Diagnostic Procedure with Cancel Code.>

J: 31

Engine speed signal malfunction is detected.
Abnormal increase of engine speed is detected.
Gear is placed in 1st or Reverse position.
After driving at the 2nd gear position or higher, perform the cruise setting again. If a cancel code is not detected, it is normal.

K: 32

This DTC is detected out of vehicle speed range.
Increase vehicle speed high enough to allow the cruise control to function, and then perform setting operation again.
If cancel code is still detected after setting cruise again, perform the diagnosis for DTC 22.
Refer to DTC 22 for diagnostic procedure.
<Ref. to CC(diag)-23, 22, Diagnostic Procedure with Cancel Code.>

L: 34

The vehicle has been driven at a speed higher than set speed for a long time (approximately 10 minutes) during cruise driving.
This cancel code is detected when driving for a long period of time at a speed higher than appropriate for cruise control setting by operating the accelerator pedal.
Perform the cruise control setting operation again. If the cancel code is not detected, it is normal.

M: 35

Detected when it is impossible to perform the vehicle speed feedback.
Set vehicle speed cannot be kept for some reasons (steep uphill, unreleased parking brake, etc.) during cruise driving.
Cancel code is detected when driving conditions are not suitable for cruise control.
Perform cruise set operation again after clearing the possible cause.

N: 41

VDC/TCS/EPB is operated.
Vehicle dynamics control (VDC) or TCS/EPB is operated during cruise driving or cruise setting.
<Ref. to VDC(diag)-2, PROCEDURE, Basic Diagnostic Procedure.>

O: 43

Malfunction of ABS/VDC is detected.
VDC malfunction is detected during cruise driving or cruise setting.
<Ref. to VDC(diag)-2, PROCEDURE, Basic Diagnostic Procedure.>

P: 44

Body integrated unit malfunction is detected.
Body integrated unit system malfunction is detected during cruise driving or cruise setting.
<Ref. to LAN(diag)-2, PROCEDURE, Basic Diagnostic Procedure.>

Q: 45

Malfunction of the combination meter is detected.
Combination meter malfunction is detected during cruise driving or cruise setting.
<Ref. to LAN(diag)-2, PROCEDURE, Basic Diagnostic Procedure.>

R: 49

Automatic transmission malfunction is detected.
Automatic transmission malfunction is detected during cruise driving or cruise setting. <Ref. to 5AT(diag)-2, PROCEDURE, Basic Diagnostic Procedure.> <Ref. to CVT(diag)-2, PROCEDURE, Basic Diagnostic Procedure.>

S: 61

Malfunction in the stop light & brake switch is detected.
TROUBLE SYMPTOM:
- Cruise control cannot be set.
- Cruise control cannot be released.

Refer to DTC 12 for diagnostic procedure.
<Ref. to CC(diag)-17, 12, Diagnostic Procedure with Cancel Code.>

T: 62

Neutral position switch malfunction is detected.
TROUBLE SYMPTOM:
Cruise control cannot be set.
Refer to DTC 14 for diagnostic procedure.
<Ref. to CC(diag)-20, 14, Diagnostic Procedure with Cancel Code.>

U: 63

Malfunction of vehicle speed signal variation is detected.
TROUBLE SYMPTOM:
Cruise control cannot be set. (Cancelled immediately.)
Refer to DTC 22 for diagnostic procedure.
<Ref. to CC(diag)-23, 22, Diagnostic Procedure with Cancel Code.>

V: 64

Malfunction related to engine is detected.
Refer to the Engine Diagnostic Procedure for diagnostic procedure.
<Ref. to EN(H4SO)(diag)-2, PROCEDURE, Basic Diagnostic Procedure.>
<Ref. to EN(H4DOTC)(diag)-2, PROCEDURE, Basic Diagnostic Procedure.>
<Ref. to EN(H6DO)(diag)-2, PROCEDURE, Basic Diagnostic Procedure.>

W: 65

Cruise control command switch malfunction is detected.
While the command switch is pressed ON for a long time (approximately two minutes), stuck ON condition is detected.
TROUBLE SYMPTOM:
- Cruise control cannot be set. (Cancelled immediately.)
- Cruise control cannot be released.

Refer to DTC 11 for diagnostic procedure.
<Ref. to CC(diag)-15, 11, Diagnostic Procedure with Cancel Code.>

X: 66

Cruise control processing malfunction is detected.
Refer to the Engine Diagnostic Procedure for diagnostic procedure.
<Ref. to EN(H4SO)(diag)-2, PROCEDURE, Basic Diagnostic Procedure.>
<Ref. to EN(H4DOTC)(diag)-2, PROCEDURE, Basic Diagnostic Procedure.>
<Ref. to EN(H6DO)(diag)-2, PROCEDURE, Basic Diagnostic Procedure.>

IMMOBILIZER (DIAGNOSTICS)

IM(diag)

Page

1. Basic Diagnostic Procedure 2
2. General Description 4
3. Electrical Component Location 6
4. Immobilizer Control Module I/O Signal 7
5. Subaru Select Monitor 8
6. Read Diagnostic Trouble Code (DTC) 9
7. Clear Memory Mode 10
8. Diagnostics Chart for Security Indicator Light 11
9. List of Diagnostic Trouble Code (DTC) 14
10. Diagnostic Procedure with Diagnostic Trouble Code (DTC) 16

1. Basic Diagnostic Procedure

A: PROCEDURE

	Step	Check	Yes	No
1	**CHECK SECURITY INDICATOR LIGHT.** 1) Turn the ignition switch to “OFF” or “ACC”. 2) Wait at least 60 seconds.	Does the security indicator light blink?	Go to step **2**.	Check the security indicator light circuit. <Ref. to IM(diag)-11, CHECK SECURITY INDICATOR LIGHT CIRCUIT, INSPECTION, Diagnostics Chart for Security Indicator Light.>
2	**CHECK KEY SWITCH.** Remove the key from ignition switch.	Does the security indicator light begin to blink within 1 second after the key is removed?	Go to step **3**.	Check the key switch circuit. <Ref. to IM(diag)-13, CHECK KEY SWITCH CIRCUIT, INSPECTION, Diagnostics Chart for Security Indicator Light.>
3	**CHECK SECURITY INDICATOR LIGHT.** Turn the ignition switch to ON.	Does the security indicator light go off?	Go to step **5**.	Go to step **4**.
4	**CHECK ENGINE START.** Turn the ignition switch to START.	Does the starter operate?	Check the LAN communication system. <Ref. to LAN(diag)-2, Basic Diagnostic Procedure.>	Go to step **7**.
5	**CHECK ENGINE START.** Turn the ignition switch to START.	Does the starter operate?	Go to step **6**.	Check the LAN communication system. <Ref. to LAN(diag)-2, Basic Diagnostic Procedure.>
6	**CHECK ENGINE START.** Turn the ignition switch to START.	Does the engine start?	Immobilizer system is normal.	Go to step **8**.
7	**CHECK DTC.** Read the DTC of body integrated unit using Subaru Select Monitor. <Ref. to IM(diag)-8, Subaru Select Monitor.>	Is the DTC displayed on screen?	Go to step **10**.	Replace the body integrated unit. <Ref. to SL-71, Body Integrated Unit.> Register all ignition keys (transponders). Refer to the “PC application help for Subaru Select Monitor”.

	Step	Check	Yes	No
8	**CHECK DTC.** Read the DTC relating the ECM using the Subaru Select Monitor. <Ref. to IM(diag)-8, Subaru Select Monitor.>	Is the DTC displayed on screen?	Go to step **9**.	Perform the diagnosis for engine system. <Ref. to EN(H4SO)(diag)-63, PROCEDURE, Diagnostics for Engine Starting Failure.> <Ref. to EN(H4DOTC)(diag)-62, PROCEDURE, Diagnostics for Engine Starting Failure.> <Ref. to EN(H6DO)(diag)-70, PROCEDURE, Diagnostics for Engine Starting Failure.>
9	**CHECK FREEZE FRAME DATA.** Using the Subaru Select Monitor, check the Freeze Frame Data.	Was the Freeze Frame Data recorded?	Record the data. Go to step **10**.	Go to step **10**.
10	**PERFORM DIAGNOSIS.** 1) Inspect using the “Diagnostic Procedure with Diagnostic Trouble Code (DTC)”. <Ref. to IM(diag)-16, Diagnostic Procedure with Diagnostic Trouble Code (DTC).> 2) Repair the trouble cause. 3) Perform the Clear Memory Mode. 4) Read DTC’s again.	Is the DTC displayed on screen?	Inspect using the “Diagnostic Procedure with Diagnostic Trouble Code (DTC)”. <Ref. to IM(diag)-16, Diagnostic Procedure with Diagnostic Trouble Code (DTC).>	Finish the diagnosis.

2. General Description

A: CAUTION

CAUTION:
• Do not use electrical test devices on any airbag system wiring harnesses and connector circuits.
• Be careful not to damage the airbag system wiring harness.
• While diagnostic items are being checked, do not operate radios, portable telephones, etc. which emit electromagnetic waves near or inside the vehicle.

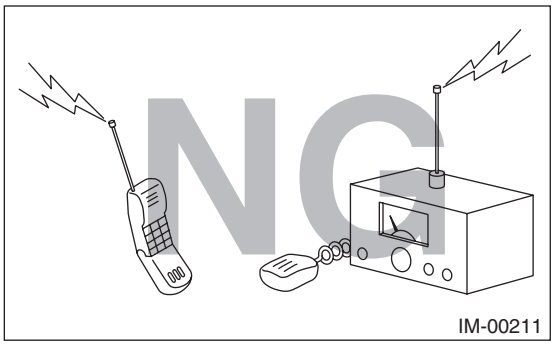

• When turning the ignition switch to ON or OFF while diagnostic items are being checked, do not allow keys with different ID codes close to the ignition switch. If the ignition key is on a key holder, remove it from the key holder before performing diagnoses.

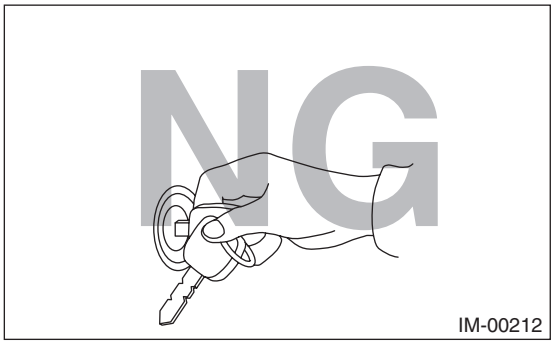

• When repeatedly turning the ignition switch to ON or OFF while diagnostic items are being checked, it should be switched in cycles of "ON" for at least 5 seconds → "OFF" for at least 8 seconds.

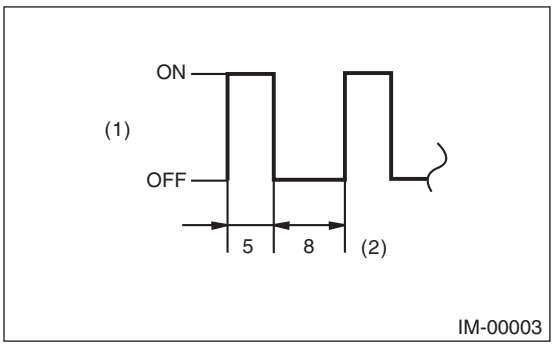

(1) Ignition switch position
(2) Sec.

• If the engine fails to start with a registered ignition key, detach the ignition key from ignition switch and wait for approx. 1 second until security indicator light begins to flash. And then start the engine again.
• Before performing the diagnostics, obtain all keys for the vehicle from the owner.
• Do not install or register a body integrated unit already registered to another vehicle to diagnose failures or inspect functions.

B: PREPARATION TOOL

1. SPECIAL TOOL

ILLUSTRATION	TOOL NUMBER	DESCRIPTION	REMARKS
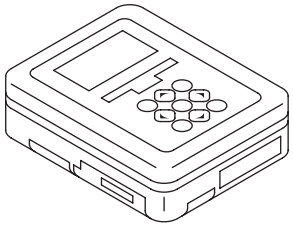 ST1B022XU0	1B022XU0	SUBARU SELECT MONITOR III KIT	Used for troubleshooting the electrical system.

2. GENERAL TOOL

TOOL NAME	REMARKS
Circuit tester	Used for measuring resistance, voltage and current.

3. Electrical Component Location

A: LOCATION

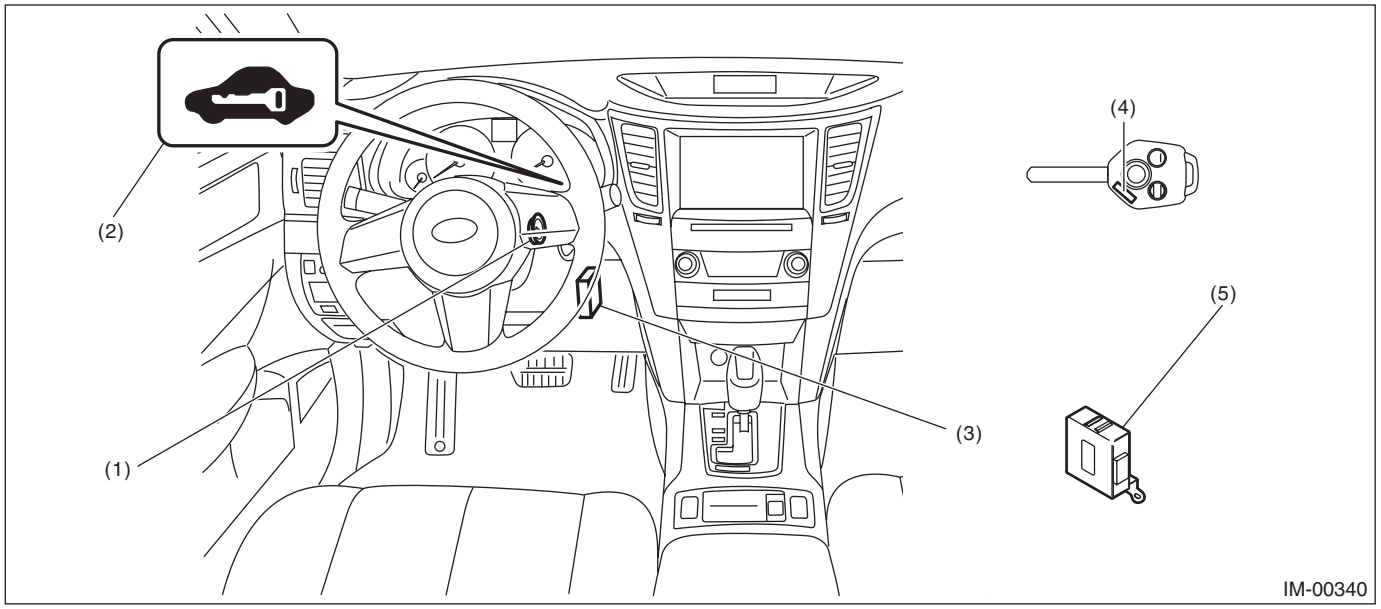

(1) Antenna
(2) Security indicator light (LED bulb)
(3) Body integrated unit
(4) Transponder
(5) Security control module (only for Canada models)

4. Immobilizer Control Module I/O Signal

A: WIRING DIAGRAM

1. IMMOBILIZER

<Ref. to WI-176, WIRING DIAGRAM, Immobilizer System.>

5. Subaru Select Monitor

A: OPERATION

1. HOW TO USE THE SUBARU SELECT MONITOR

For the operation procedure, refer to the “PC application help for Subaru Select Monitor”.

2. READ DIAGNOSTIC TROUBLE CODE (DTC) FOR ENGINE AND BODY INTEGRATED UNIT

Refer to “Read Diagnostic Trouble Code” for information about how to indicate DTC. <Ref. to IM(diag)-9, Read Diagnostic Trouble Code (DTC).>

3. COMMUNICATION LINE CHECK

The communication line between ECM and body integrated unit can be checked in “System Operation Check Mode”. This is referred to as “Communication line check”.
For the operation procedure, refer to the “PC application help for Subaru Select Monitor”.

NOTE:
If a problem is detected, repair the trouble cause. <Ref. to IM(diag)-20, DTC P1572 IMM CIRCUIT FAILURE (EXCEPT ANTENNA CIRCUIT), Diagnostic Procedure with Diagnostic Trouble Code (DTC).>

6. Read Diagnostic Trouble Code (DTC)

A: OPERATION

1. ECM

For the operation procedure, refer to the “PC application help for Subaru Select Monitor”.

NOTE:
For detailed concerning DTC, refer to the List of Diagnostic Trouble Codes (DTC). <Ref. to IM(diag)-14, LIST, List of Diagnostic Trouble Code (DTC).>

2. BODY INTEGRATED UNIT

For the operation procedure, refer to the “PC application help for Subaru Select Monitor”.

NOTE:
For detailed concerning DTC, refer to the List of Diagnostic Trouble Codes (DTC). <Ref. to IM(diag)-14, LIST, List of Diagnostic Trouble Code (DTC).>

7. Clear Memory Mode

A: OPERATION

1. ECM

For the operation procedure, refer to the “PC application help for Subaru Select Monitor”.

NOTE:
Initial diagnosis of electronic throttle control is performed after memory clearance. Wait for 10 seconds or more after turning the ignition switch to ON, and then start the engine.

2. BODY INTEGRATED UNIT

For the operation procedure, refer to the “PC application help for Subaru Select Monitor”.

8. Diagnostics Chart for Security Indicator Light

A: INSPECTION

1. CHECK SECURITY INDICATOR LIGHT CIRCUIT

WIRING DIAGRAM:

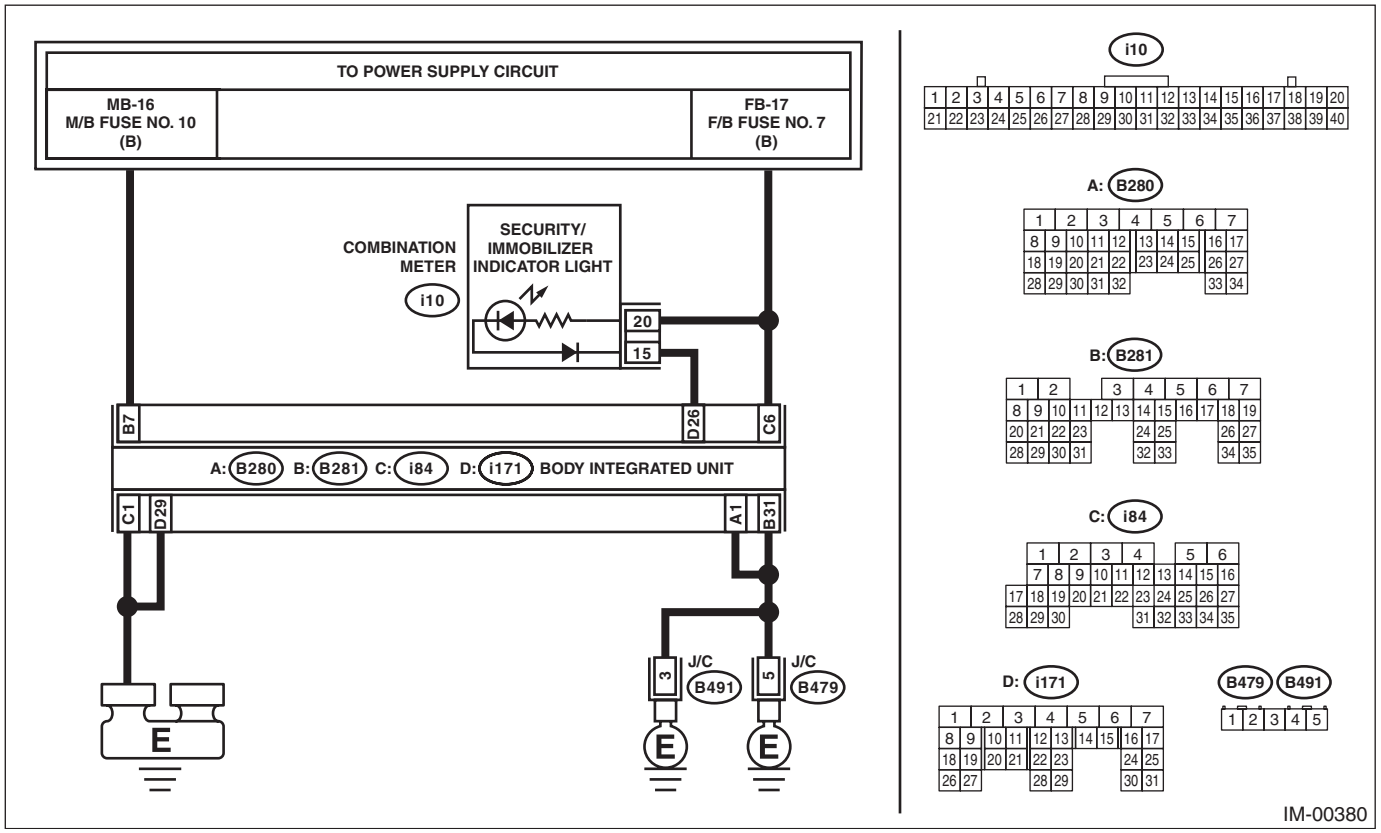

Step		Check	Yes	No
1	**CHECK FUSE.** 1) Remove the ignition key from ignition switch. 2) Check the fuse (M/B No. 10).	Is the fuse OK?	Go to step **2**.	Replace the fuse. If the replaced fuse blows out easily, repair the short circuit in the harness between the fuse and body integrated unit.
2	**CHECK SECURITY INDICATOR LIGHT.** 1) Disconnect the connector from body integrated unit. 2) Connect the resistor (100 Ω) between the body integrated unit connector terminal (i171) No. 26 and chassis ground.	Does the security indicator light illuminate?	Go to step **3**.	Go to step **5**.
3	**CHECK BODY INTEGRATED UNIT GROUND CIRCUIT.** Measure the resistance between the body integrated unit connector terminal and chassis ground. ***Connector & terminal*** ***(B280) No. 1 — Chassis ground:*** ***(B281) No. 31 — Chassis ground:*** ***(i84) No. 1 — Chassis ground:*** ***(i171) No. 29 — Chassis ground:***	Is the resistance less than 10 Ω?	Go to step **4**.	Repair the open circuit of the body integrated unit ground circuit.

	Step	Check	Yes	No
4	**CHECK BODY INTEGRATED UNIT POWER SUPPLY CIRCUIT.** Measure the voltage between the body integrated unit connector terminal and chassis ground. ***Connector & terminal*** ***(B281) No. 7 (+) — Chassis ground (–):*** ***(i84) No. 6 (+) — Chassis ground (–):***	Is the voltage 10 V or more?	Replace the body integrated unit. <Ref. to SL-71, Body Integrated Unit.> Register all ignition keys (transponders). Refer to the "PC application help for Subaru Select Monitor".	Check the harness for open or short circuit between body integrated unit and fuse.
5	**CHECK COMBINATION METER CIRCUIT.** 1) Remove the combination meter. <Ref. to IDI-21, Combination Meter.> 2) Measure the voltage between combination meter connector terminal and chassis ground. ***Connector & terminal*** ***(i10) No. 20 (+) — Chassis ground (–):***	Is the voltage 10 V or more?	Go to step **6**.	Check for an open or short circuit in the harness between the combination meter and fuse.
6	**CHECK COMBINATION METER CIRCUIT.** Measure the resistance between the body integrated unit connector terminal and combination meter connector terminal. ***Connector & terminal*** ***(i171) No. 26 — (i10) No. 15:***	Is the resistance less than 10 Ω?	LED bulb is defective. Replace the combination meter case assembly. <Ref. to IDI-26, DISASSEMBLY, Combination Meter.>	Repair the harness or connector.

2. CHECK KEY SWITCH CIRCUIT

WIRING DIAGRAM:

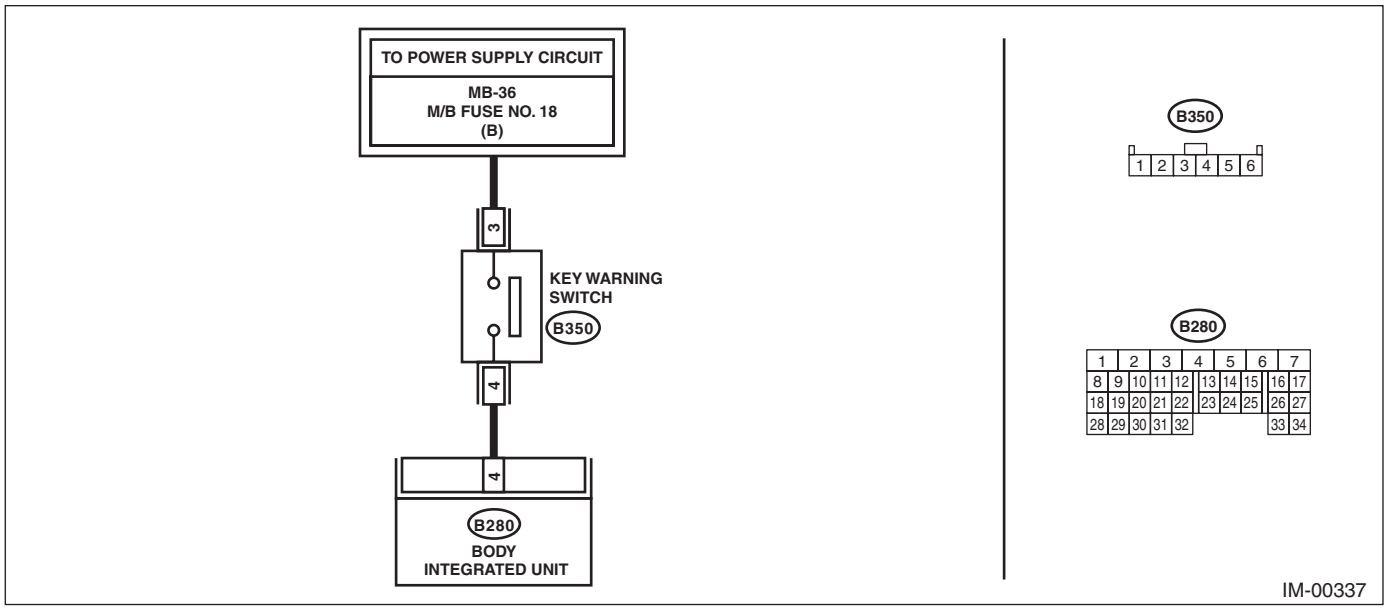

Step		Check	Yes	No
1	**CHECK POWER SUPPLY CIRCUIT.** 1) Disconnect the connector from key warning switch. 2) Measure the voltage between key warning switch connector terminal and chassis ground. ***Connector & terminal*** ***(B350) No. 3 (+) — Chassis ground (–):***	Is the voltage 10 V or more?	Go to step **2**.	Check the harness for an open or short between the key warning switch and fuse.
2	**CHECK KEY WARNING SWITCH.** 1) Insert the ignition key in the ignition switch. (OFF or ACC) 2) Measure the resistance between key warning switch connector terminals. ***Connector & terminal*** ***No. 3 — No. 4:***	Is the resistance less than 1 Ω?	Go to step **3**.	Replace the key warning switch.
3	**CHECK KEY WARNING SWITCH.** 1) Remove the ignition key from ignition switch. 2) Measure the resistance between key warning switch connector terminals. ***Connector & terminal*** ***No. 3 — No. 4:***	Is the resistance 1 MΩ or more?	Go to step **4**.	Replace the key warning switch.
4	**CHECK HARNESS BETWEEN KEY WARNING SWITCH AND BODY INTEGRATED UNIT.** 1) Disconnect the connector from body integrated unit. 2) Measure the resistance between key warning switch connector terminal and body integrated unit connector terminal. ***Connector & terminal*** ***(B350) No. 4 — (B280) No. 4:***	Is the resistance less than 10 Ω?	Replace the body integrated unit. <Ref. to SL-71, Body Integrated Unit.> Register all ignition keys (transponders). Refer to the “PC application help for Subaru Select Monitor”.	Repair the harness between key warning switch and body integrated unit.

9. List of Diagnostic Trouble Code (DTC)

A: LIST

1. ECM

DTC	Item	Contents of diagnosis	Index No.
P0513	Incorrect Immobilizer Key	Incorrect immobilizer key (Use of unregistered key in body integrated unit)	<Ref. to IM(diag)-16, DTC P0513 INCORRECT IMMOBILIZER KEY, Diagnostic Procedure with Diagnostic Trouble Code (DTC).>
P1570	Antenna	Faulty antenna	<Ref. to IM(diag)-17, DTC P1570 ANTENNA, Diagnostic Procedure with Diagnostic Trouble Code (DTC).>
P1571	Reference Code Incompatibility	Reference code incompatibility between body integrated unit and ECM	<Ref. to IM(diag)-19, DTC P1571 REFERENCE CODE INCOMPATIBILITY, Diagnostic Procedure with Diagnostic Trouble Code (DTC).>
P1572	IMM Circuit Failure (Except Antenna Circuit)	Communication failure between body integrated unit and ECM	<Ref. to IM(diag)-20, DTC P1572 IMM CIRCUIT FAILURE (EXCEPT ANTENNA CIRCUIT), Diagnostic Procedure with Diagnostic Trouble Code (DTC).>
P1574	Key Communication Failure	Communication failure between key and body integrated unit	<Ref. to IM(diag)-22, DTC P1574 KEY COMMUNICATION FAILURE, Diagnostic Procedure with Diagnostic Trouble Code (DTC).>
P1576	EGI Control Module EEPROM	ECM malfunctioning	<Ref. to IM(diag)-22, DTC P1576 EGI CONTROL MODULE EEPROM, Diagnostic Procedure with Diagnostic Trouble Code (DTC).>
P1577	IMM Control Module EEPROM	Body integrated unit malfunctioning	<Ref. to IM(diag)-23, DTC P1577 IMM CONTROL MODULE EEPROM, Diagnostic Procedure with Diagnostic Trouble Code (DTC).>
P1578	Meter Failure (Except for model for Canada)	• Reference code incompatibility between combination meter and body integrated unit • Communication failure between body integrated unit and ECM	<Ref. to IM(diag)-24, DTC P1578 METER FAILURE, Diagnostic Procedure with Diagnostic Trouble Code (DTC).>
	Meter Failure (Model for Canada)	• Reference code incompatibility between body integrated unit and security control module • Communication failure between body integrated unit and ECM	

NOTE:
Perform diagnosis of engine DTC when a DTC other than an immobilizer DTC is detected. <Ref. to EN(H4SO)(diag)-78, List of Diagnostic Trouble Code (DTC).> <Ref. to EN(H4DOTC)(diag)-75, List of Diagnostic Trouble Code (DTC).> <Ref. to EN(H6DO)(diag)-85, List of Diagnostic Trouble Code (DTC).>

2. BODY INTEGRATED UNIT

DTC	Item	Contents of diagnosis	Index No.	Relation between ECM and DTC
B1401	M Collation NG	Reference code incompatibility between combination meter and body integrated unit	<Ref. to IM(diag)-25, DTC B1401 M COLLATION NG, Diagnostic Procedure with Diagnostic Trouble Code (DTC).>	P1578
B1402	Immobilizer Key Collation NG	• Incorrect immobilizer key (Use of unregistered key in body integrated unit) • Faulty antenna	<Ref. to IM(diag)-25, DTC B1402 IMMOBILIZER KEY COLLATION NG, Diagnostic Procedure with Diagnostic Trouble Code (DTC).>	• P0513 • P1570 • P1574
B1403	E/G request NG	Communication failure between body integrated unit and ECM	<Ref. to IM(diag)-25, DTC B1403 E/G REQUEST NG, Diagnostic Procedure with Diagnostic Trouble Code (DTC).>	P1572
B1405	SCU Collation NG	Reference code incompatibility between body integrated unit and security control module	<Ref. to IM(diag)-26, DTC B1405 SCU COLLATION NG, Diagnostic Procedure with Diagnostic Trouble Code (DTC).>	P1578
B1406	SCU_EEPROM_NG	Malfunction of security control module	<Ref. to IM(diag)-26, DTC B1406 SCU_EEPROM_NG, Diagnostic Procedure with Diagnostic Trouble Code (DTC).>	P1578

NOTE:
The starter relay control is performed in immobilizer system. When the body integrated unit detects a non-conformity of reference code, it immediately outputs a starter relay cut signal to ECM, and then ECM stops the starter relay operation. In this case, engine does not start, and DTC is not recorded in ECM. Check that the engine does not start on the DTC of body integrated unit.

10.Diagnostic Procedure with Diagnostic Trouble Code (DTC)

A: DTC P0513 INCORRECT IMMOBILIZER KEY

DTC DETECTING CONDITION:

Incorrect immobilizer key (Use of unregistered key in body integrated unit)

	Step	Check	Yes	No
1	**PERFORM IGNITION KEY REGISTRATION.** Perform registration to all keys used for the vehicle. Refer to the “PC application help for Subaru Select Monitor”.	Is registration of all keys complete?	Finish the diagnosis.	Replace ignition keys (including transponder) which cannot be registered. Go to step **2**.
2	**PERFORM IGNITION KEY REGISTRATION.** Perform registration to all keys used for the vehicle. Refer to the “PC application help for Subaru Select Monitor”.	Is registration of all keys complete?	Finish the diagnosis.	Replace the body integrated unit. <Ref. to SL-71, Body Integrated Unit.> Register all ignition keys (transponders). Refer to the “PC application help for Subaru Select Monitor”.

B: DTC P1570 ANTENNA

DTC DETECTING CONDITION:
Faulty antenna
WIRING DIAGRAM:

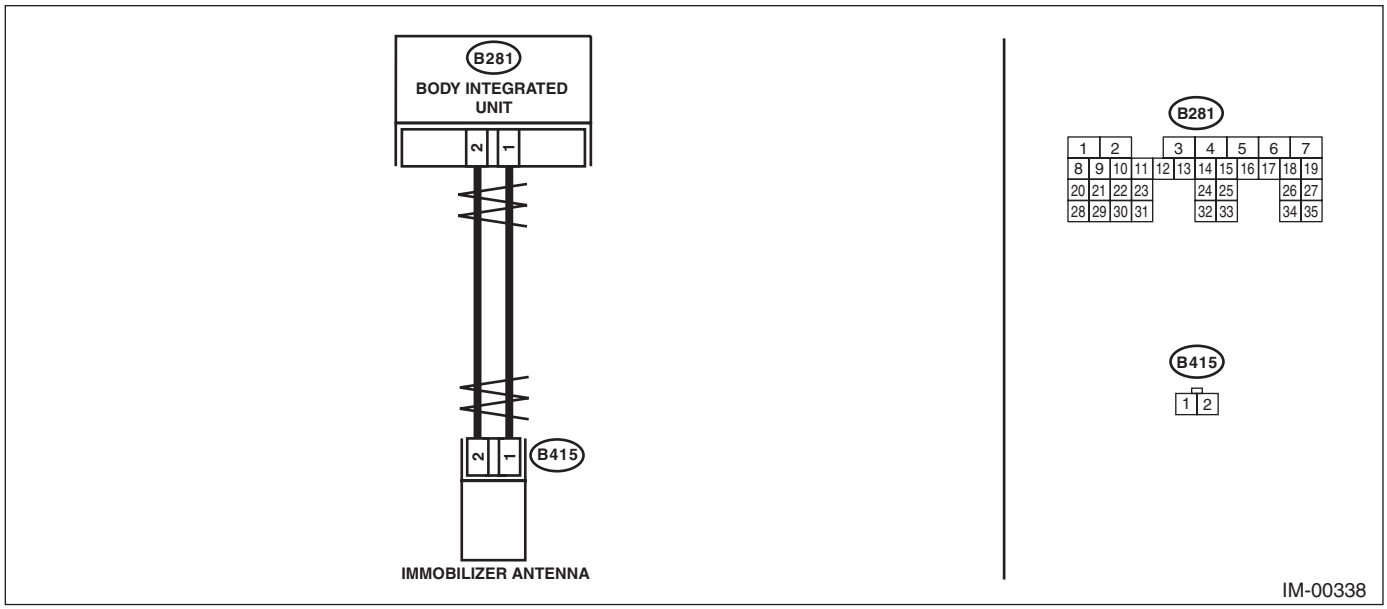

Step		Check	Yes	No
1	**CHECK ANTENNA CIRCUIT.** 1) Turn the ignition switch to OFF. 2) Disconnect the connector from the antenna. <Ref. to SL-79, Immobilizer Antenna.> 3) Measure the resistance of antenna circuit. ***Connector & terminal*** ***(B415) No. 1 — No. 2:***	Is the resistance 6 — 10 Ω?	Go to step **2**.	Replace the antenna. <Ref. to SL-79, Immobilizer Antenna.>
2	**CHECK ANTENNA CIRCUIT.** 1) Disconnect the connector from body integrated unit. 2) Measure the resistance between body integrated unit connector and antenna connector. ***Connector & terminal*** ***(B281) No. 1 — (B415) No. 1:*** ***(B281) No. 2 — (B415) No. 2:***	Is the resistance less than 10 Ω?	Go to step **3**.	Repair the harness.
3	**CHECK ANTENNA CIRCUIT.** Measure the resistance between body integrated unit connector and chassis ground. ***Connector & terminal*** ***(B281) No. 1 — Chassis ground:*** ***(B281) No. 2 — Chassis ground:***	Is the resistance 1 MΩ or more?	Go to step **4**.	Repair the harness.
4	**CHECK BODY INTEGRATED UNIT FUNCTION.** 1) Connect the connector to antenna. 2) Connect the connector to body integrated unit. 3) Insert the key into the ignition switch, then use an oscilloscope to measure changes in voltage between the antenna connectors. ***Connector & terminal*** ***(B281) No. 1 (+) — Chassis ground (–):***	Is the maximum voltage more than 40 V? (Approx. 0.1 second after inserting the key) Is the voltage 0 V? (Approx. 1 second after inserting the key)	Go to step **5**.	Replace the body integrated unit <Ref. to SL-71, Body Integrated Unit.> Register all ignition keys (transponders). Refer to the “PC application help for Subaru Select Monitor”.

	Step	Check	Yes	No
5	**CHECK IGNITION KEY (TRANSPONDER).** 1) Remove the key from ignition switch. 2) Start the engine using other key which is already registered.	Does the engine start?	Replace the ignition key (transponder). Execute the registration procedure next. Refer to the “PC application help for Subaru Select Monitor”.	Replace the body integrated unit <Ref. to SL-71, Body Integrated Unit.> Register all ignition keys (transponders). Refer to the “PC application help for Subaru Select Monitor”.

C: DTC P1571 REFERENCE CODE INCOMPATIBILITY

DTC DETECTING CONDITION:

Reference code incompatibility between body integrated unit and ECM

	Step	Check	Yes	No
1	**PERFORM REGISTRATION ON IGNITION KEY.** Perform registration on all keys of the vehicle. Refer to the “PC application help for Subaru Select Monitor”.	Is registration for all keys complete?	Finish the diagnosis.	Go to step **2**.
2	**CHECK FOR ANY OTHER DTC ON DISPLAY.**	Is any other immobilizer DTC displayed?	Check the appropriate DTC using the “List of Diagnostic Trouble Code (DTC)”. <Ref. to IM(diag)-14, List of Diagnostic Trouble Code (DTC).> Execute the registration procedure next. Refer to the “PC application help for Subaru Select Monitor”.	Replace the ECM. <Ref. to FU(H4DOTC)-58, Engine Control Module (ECM).> <Ref. to FU(H6DO)-54, Engine Control Module (ECM).> Replace the body integrated unit. <Ref. to SL-71, Body Integrated Unit.> Replace and register all ignition keys (transponders). Refer to the “PC application help for Subaru Select Monitor”.

D: DTC P1572 IMM CIRCUIT FAILURE (EXCEPT ANTENNA CIRCUIT)

DTC DETECTING CONDITION:

Communication failure between body integrated unit and ECM

WIRING DIAGRAM:

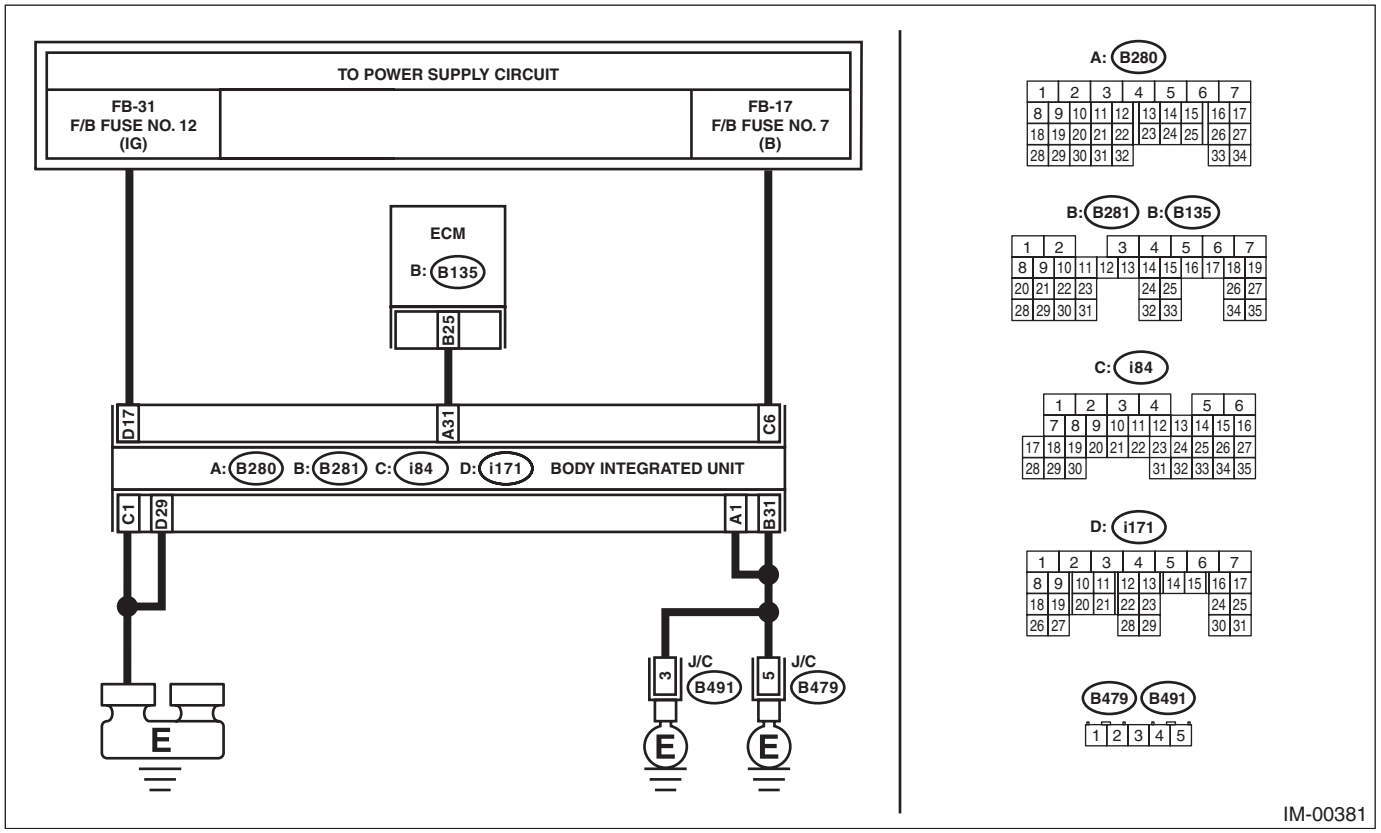

Step		Check	Yes	No
1	**CHECK BODY INTEGRATED UNIT POWER SUPPLY CIRCUIT.** 1) Turn the ignition switch to OFF. 2) Disconnect the connector from body integrated unit. 3) Measure the voltage between the body integrated unit connector terminal and chassis ground. ***Connector & terminal*** ***(i84) No. 6 (+) — Chassis ground (–):***	Is the voltage 10 V or more?	Go to step **2**.	Check the harness for open or short circuit between body integrated unit and fuse.
2	**CHECK BODY INTEGRATED UNIT POWER SUPPLY CIRCUIT.** 1) Turn the ignition switch to ON. 2) Measure the voltage between the body integrated unit connector terminal and chassis ground. ***Connector & terminal*** ***(i171) No. 17 (+) — Chassis ground (–):***	Is the voltage 10 V or more?	Go to step **3**.	Check the harness for open or short circuit between the body integrated unit and ignition switch.

	Step	Check	Yes	No
3	**CHECK BODY INTEGRATED UNIT GROUND CIRCUIT.** 1) Turn the ignition switch to OFF. 2) Measure the resistance between the body integrated unit connector terminal and chassis ground. ***Connector & terminal*** ***(B280) No. 1 — Chassis ground:*** ***(B281) No. 31 — Chassis ground:*** ***(i84) No. 1 — Chassis ground:*** ***(i171) No. 29 — Chassis ground:***	Is the resistance less than 10 Ω?	Go to step **4**.	Repair the open circuit of the body integrated unit ground circuit.
4	**CHECK GROUND CIRCUIT FOR ECM.** Measure the resistance between the ECM ground terminal and engine ground.	Is the resistance less than 10 Ω?	Go to step **5**.	Repair the ECM ground circuit.
5	**CHECK HARNESS BETWEEN BODY INTEGRATED UNIT AND ECM.** 1) Disconnect the connector from ECM. 2) Measure the resistance between body integrated unit connector terminal and ECM connector terminal. ***Connector & terminal*** ***(B280) No. 31 — (B135) No. 25:***	Is the resistance less than 10 Ω?	Go to step **6**.	Repair the open circuit of the harness between the body integrated unit and ECM.
6	**CHECK COMMUNICATION CIRCUIT HARNESS.** 1) Turn the ignition switch to ON. 2) Measure the voltage between the body integrated unit connector terminal and chassis ground. ***Connector & terminal*** ***(B280) No. 31 (+) — Chassis ground (–):***	Is the voltage 6 V or more?	Repair the harness between body integrated unit and ECM.	Go to step **7**.
7	**CHECK COMMUNICATION CIRCUIT HARNESS.** Measure the voltage between ECM connector terminal and engine ground. ***Connector & terminal*** ***(B135) No. 25 (+) — Engine ground (–):***	Is the voltage 6 V or more?	Repair the harness between body integrated unit and ECM.	Go to step **8**.
8	**CHECK ECM BY COMMUNICATION LINE CHECK.** 1) Connect the connector to ECM only. 2) Start the communication line short check. <Ref. to IM(diag)-8, COMMUNICATION LINE CHECK, OPERATION, Subaru Select Monitor.>	Is the communication line check OK?	Replace the body integrated unit. <Ref. to SL-71, Body Integrated Unit.> Register all ignition keys (transponders). Refer to the “PC application help for Subaru Select Monitor”.	Replace the ECM. <Ref. to FU(H4DOTC)-58, Engine Control Module (ECM).> <Ref. to FU(H6DO)-54, Engine Control Module (ECM).> Perform the registration procedure next. Refer to the “PC application help for Subaru Select Monitor”.

NOTE:
Refer to the following inspection when DTC is detected after inspection above. <Ref. to IM(diag)-24, DTC P1578 METER FAILURE, Diagnostic Procedure with Diagnostic Trouble Code (DTC).>

E: DTC P1574 KEY COMMUNICATION FAILURE

DTC DETECTING CONDITION:

Communication failure between key and body integrated unit

	Step	Check	Yes	No
1	**CHECK BODY INTEGRATED UNIT FUNCTION.** Insert the key into the ignition switch (LOCK position), then measure changes in voltage between the antenna connector and the chassis ground. ***Connector & terminal*** ***(B415) No. 1 (+) — Chassis ground (–):***	Is the maximum voltage more than 40 V? (Approx. 0.1 second after inserting the key) Is the voltage 0 V? (Approx. 1 second after inserting the key)	Go to step **2**.	Replace the body integrated unit. <Ref. to SL-71, Body Integrated Unit.> Register all ignition keys (transponders). Refer to the "PC application help for Subaru Select Monitor".
2	**CHECK IGNITION KEY (TRANSPONDER).** 1) Remove the key from ignition switch. 2) Start the engine using other key which is already registered.	Does the engine start?	Register ignition keys (transponders). Refer to the "PC application help for Subaru Select Monitor".	Replace the body integrated unit. <Ref. to SL-71, Body Integrated Unit.> Register all ignition keys (transponders). Refer to the "PC application help for Subaru Select Monitor".

F: DTC P1576 EGI CONTROL MODULE EEPROM

DTC DETECTING CONDITION:

- ECM malfunctioning
- Inaccessible ROM in ECM during key registration.

	Step	Check	Yes	No
1	**PERFORM REGISTRATION ON IGNITION KEY.** Perform registration on all keys of the vehicle. Refer to the "PC application help for Subaru Select Monitor".	Is registration for all keys complete?	Make sure it is possible to start the engine with all keys that have been taught. This completes the work.	Go to step **2**.
2	**PERFORM REGISTRATION ON IGNITION KEY.** Perform registration on all keys of the vehicle. Refer to the "PC application help for Subaru Select Monitor".	Is registration for all keys complete?	Make sure it is possible to start the engine with all keys that have been taught. This completes the work.	Go to step **3**.
3	**PERFORM REGISTRATION ON IGNITION KEY.** Perform registration on all keys of the vehicle. Refer to the "PC application help for Subaru Select Monitor".	Is registration for all keys complete?	Make sure it is possible to start the engine with all keys that have been taught. This completes the work.	Replace the ECM. <Ref. to FU(H4DOTC)-58, Engine Control Module (ECM).> <Ref. to FU(H6DO)-54, Engine Control Module (ECM).>

G: DTC P1577 IMM CONTROL MODULE EEPROM

DTC DETECTING CONDITION:

- Body integrated unit malfunctioning
- Failed to access ROM inside the body integrated unit.

	Step	Check	Yes	No
1	**PERFORM REGISTRATION ON IGNITION KEY.** Perform registration on all keys of the vehicle. Refer to the “PC application help for Subaru Select Monitor”.	Is registration for all keys complete?	Make sure it is possible to start the engine with all keys that have been taught. This completes the work.	Go to step **2**.
2	**PERFORM REGISTRATION ON IGNITION KEY.** Perform registration on all keys of the vehicle. Refer to the “PC application help for Subaru Select Monitor”.	Is registration for all keys complete?	Make sure it is possible to start the engine with all keys that have been taught. This completes the work.	Go to step **3**.
3	**PERFORM REGISTRATION ON IGNITION KEY.** Perform registration on all keys of the vehicle. Refer to the “PC application help for Subaru Select Monitor”.	Is registration for all keys complete?	Make sure it is possible to start the engine with all keys that have been taught. This completes the work.	Replace the body integrated unit. <Ref. to SL-71, Body Integrated Unit.> Register all ignition keys (transponders). Refer to the “PC application help for Subaru Select Monitor”.

H: DTC P1578 METER FAILURE

DTC DETECTING CONDITION:

- Except Canada models

Reference code incompatibility between combination meter and body integrated unit or communication failure between body integrated unit and ECM

- Canada models

Reference code incompatibility between security control module and body integrated unit or communication failure between body integrated unit and ECM

	Step	Check	Yes	No
1	**CHECK DTC.** Read the DTC of body integrated unit using Subaru Select Monitor.	Is any of DTC B1401, B1405 and B1406 detected?	Go to step **2**.	<Ref. to IM(diag)-20, DTC P1572 IMM CIRCUIT FAILURE (EXCEPT ANTENNA CIRCUIT), Diagnostic Procedure with Diagnostic Trouble Code (DTC).>
2	**CHECK LAN COMMUNICATION SYSTEM.** Inspect LAN communication system. <Ref. to LAN(diag)-2, Basic Diagnostic Procedure.>	Is DTC U1300, U1301, U1302, B1100 or B1101 of the body integrated unit displayed?	Perform the diagnosis according to the DTC. <Ref. to LAN(diag)-32, List of Diagnostic Trouble Code (DTC).>	Go to step **3**.
3	**CHECK DTC.** Perform inspection for the diagnosis trouble code detected in step 1.	Is DTC B1401 detected?	Go to step **4**.	Perform the diagnosis for DTC B1405 or B1406.
4	**CHECK COMBINATION METER.** Perform the registration of immobilizer. Refer to the “PC application help for Subaru Select Monitor”.	Is the immobilizer registration achieved?	Go to step **5**.	Replace the combination meter and perform the registration of immobilizer again.
5	**CHECK ENGINE START.** Start the engine.	Does the engine start?	System is normal.	Replace the combination meter, perform the registration of immobilizer again and check that the engine starts normally.

NOTE:
When the combination meter and body integrated unit are replaced at a time, the immobilizer can not be registered. In this case, it is necessary to rewrite the ID into the body integrated unit.

I: DTC B1401 M COLLATION NG

NOTE:
Refer to DTC P1578 "Meter Failure" for diagnostic procedure. <Ref. to IM(diag)-24, DTC P1578 METER FAILURE, Diagnostic Procedure with Diagnostic Trouble Code (DTC).>

J: DTC B1402 IMMOBILIZER KEY COLLATION NG

NOTE:
Refer to the following inspections for diagnostic procedure.

- DTC P0513 "Incorrect Immobilizer Key"<Ref. to IM(diag)-16, DTC P0513 INCORRECT IMMOBILIZER KEY, Diagnostic Procedure with Diagnostic Trouble Code (DTC).>
- DTC P1570 "Antenna"<Ref. to IM(diag)-17, DTC P1570 ANTENNA, Diagnostic Procedure with Diagnostic Trouble Code (DTC).>
- DTC P1574 "Key Communication Failure"<Ref. to IM(diag)-22, DTC P1574 KEY COMMUNICATION FAILURE, Diagnostic Procedure with Diagnostic Trouble Code (DTC).>

K: DTC B1403 E/G REQUEST NG

NOTE:
Refer to DTC P1572 "IMM Circuit Failure (Except Antenna Circuit)" for diagnostic procedure. <Ref. to IM(diag)-20, DTC P1572 IMM CIRCUIT FAILURE (EXCEPT ANTENNA CIRCUIT), Diagnostic Procedure with Diagnostic Trouble Code (DTC).>

L: DTC B1405 SCU COLLATION NG

DTC DETECTING CONDITION:

Reference code incompatibility between security control module and body integrated unit

	Step	Check	Yes	No
1	**CHECK SCM COLLATION MODE.** Using Subaru Select Monitor, perform the function check «SCM Collation Mode» for the body integrated unit. <Ref. to BC(diag)-20, OPERATION, Function Check.>	Is there any malfunction?	Make sure it is possible to start the engine with all keys. This completes the work.	Perform the diagnosis according to the Select Monitor display.

M: DTC B1406 SCU_EEPROM_NG

DTC DETECTING CONDITION:

- Defective security control module
- ROM of security control module cannot be accessed

	Step	Check	Yes	No
1	**PERFORM IGNITION KEY REGISTRATION.** Perform registration to all keys used for the vehicle. Refer to the “PC application help for Subaru Select Monitor”.	Is registration of all keys complete?	Make sure it is possible to start the engine with all keys that have been taught. This completes the work.	Go to step **2**.
2	**PERFORM IGNITION KEY REGISTRATION.** Perform registration to all keys used for the vehicle. Refer to the “PC application help for Subaru Select Monitor”.	Is registration of all keys complete?	Make sure it is possible to start the engine with all keys that have been taught. This completes the work.	Go to step **3**.
3	**PERFORM IGNITION KEY REGISTRATION.** Perform registration to all keys used for the vehicle. Refer to the “PC application help for Subaru Select Monitor”.	Is registration of all keys complete?	Make sure it is possible to start the engine with all keys that have been taught. This completes the work.	Replace the security control module. <Ref. to SL-65, Security Control Module.> Register all ignition keys (transponders). Refer to the “PC application help for Subaru Select Monitor”.

NOTE:
When the security control module and body integrated unit are replaced at a time, the immobilizer can not be registered. In this case, it is necessary to rewrite the ID into the body integrated unit.

LAN SYSTEM (DIAGNOSTICS)

LAN(diag)

		Page
1.	Basic Diagnostic Procedure	2
2.	Check List for Interview	3
3.	General Description	4
4.	Electrical Component Location	6
5.	Control Module I/O Signal	8
6.	Subaru Select Monitor	9
7.	Read Diagnostic Trouble Code (DTC)	10
8.	Clear Memory Mode	11
9.	CAN Communication Circuit Check	12
10.	List of Diagnostic Trouble Code (DTC)	32
11.	Diagnostic Procedure with Diagnostic Trouble Code (DTC)	48
12.	General Diagnostic Table	82

1. Basic Diagnostic Procedure

A: PROCEDURE

CAUTION:
• Subaru Select Monitor is required for reading DTC, performing diagnosis, reading current data, customizing and active test (compulsory drive).
• Remove foreign matter (dust, water, oil, etc.) from each control module connector during removal and installation.
• For model with immobilizer or model with keyless access, registration of immobilizer may be needed after the replacement of controller etc. For details, refer to the "PC application help for Subaru Select Monitor".

NOTE:
• To check harness for open or short circuits, shake the suspected trouble spot or connector.
• Check List for Interview <Ref. to LAN(diag)-3, Check List for Interview.>

	Step	Check	Yes	No
1	**CHECK PRE-INSPECTION.** Ask the customer when and how the trouble occurred using the interview check list. <Ref. to LAN(diag)-3, Check List for Interview.>	Did you interview the customer?	Go to step **2**.	Interview the customer.
2	**BASIC INSPECTION.** Check components which might affect CAN communication problem. <Ref. to LAN(diag)-4, INSPECTION, General Description.>	Is the component that might affect CAN communication problem normal?	Go to step **3**.	Repair or replace each component.
3	**CHECK DTC.** 1) Start the engine and read all DTCs. NOTE: • When the engine does not start, perform the diagnosis for the engine start malfunction. <Ref. to EN(H4SO)(diag)-63, Diagnostics for Engine Starting Failure.> • If the communication function of the Subaru Select Monitor cannot be executed properly, check the communication circuit. <Ref. to LAN(diag)-48, COMMUNICATION FOR INITIALIZING IMPOSSIBLE, Diagnostic Procedure with Diagnostic Trouble Code (DTC).> 2) Record all DTCs and freeze frame data.	Is DTC regarding CAN communication displayed on Subaru Select Monitor?	Go to step **5**.	Go to step **4**.
4	**PERFORM GENERAL DIAGNOSTICS.** Inspect using "General Diagnostics Table". <Ref. to LAN(diag)-82, General Diagnostic Table.>	Is result of inspection OK?	LAN system is normal.	Go to step **5**.
5	**PERFORM DIAGNOSIS.** 1) Correct the cause of trouble. 2) Perform the Clear Memory Mode. <Ref. to LAN(diag)-11, OPERATION, Clear Memory Mode.> 3) Read the DTC. <Ref. to LAN(diag)-10, OPERATION, Read Diagnostic Trouble Code (DTC).>	Is DTC displayed on Subaru Select Monitor?	Repeat step 5 until DTC is not shown.	Finish the diagnosis.

2. Check List for Interview

A: CHECK

Inspect the following item about the vehicle's state.

1. DISPLAY STATUS IN THE COMBINATION METER

Display status in the combination meter	Engine coolant temperature gauge display	❑ OK / ❑ NG
	Fuel gauge display	❑ OK / ❑ NG
Display of other indicators	Malfunction indicator light	❑ ON / ❑ OFF
	SPORT indicator light (AT warning light)	❑ ON / ❑ OFF
	ABS warning light/Vehicle dynamics control (VDC) warning light	❑ ON / ❑ OFF
	Immobilizer indicator light	❑ ON / ❑ Blink / ❑ OFF

2. CONDITIONS UNDER WHICH TROUBLE OCCURS

Driving condition	❑ At standstill (While idling) ❑ When the vehicle is running Vehicle speed km/h (MPH) ❑ While accelerating Acceleration km/h (MPH) to km/h (MPH) ❑ Decelerating (With braking) Deceleration km/h (MPH) to km/h (MPH) ❑ Decelerating (Without braking) Deceleration km/h (MPH) to km/h (MPH)
	❑ Flat road ❑ Uphill ❑ Downhill ❑ Gravel road ❑ Bumpy road ❑ Snowy road
	Does it occur when operating any part? Operated part: **TROUBLE SYMPTOM:**
	Are there any other troubles occurred? From where: **TROUBLE SYMPTOM:**

3. General Description

A: CAUTION

1. SUPPLEMENTAL RESTRAINT SYSTEM "AIRBAG"

Airbag system wiring harness is routed near the body integrated unit and twisted pair line.

CAUTION:
• Do not use the electrical test equipment on all airbag system wiring harnesses and connectors.
• Be careful not to damage the airbag system wiring harness when servicing the body integrated unit and LAN system.

2. LAN SYSTEM

• Bus line of LAN system is twisted pair line. Be careful not to by-pass or partly unbind the twisted pair line.
• Do not make clearance between bus lines (CAN High, CAN Low).
• Difference of bus line length should be within 10 cm (3.94 in).
• Fray near the connector should be within 8 cm (3.14 in).

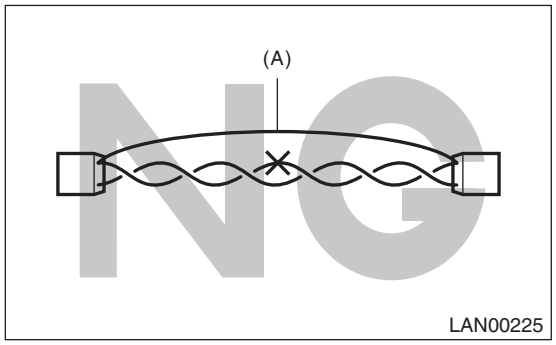

(A) Bypass wire connection

• If the characteristics of the twisted pair line are changed, it may extremely weaken against noise.
• When repairing the harness, connect the wires using soldering and protect it with insulating tape etc.

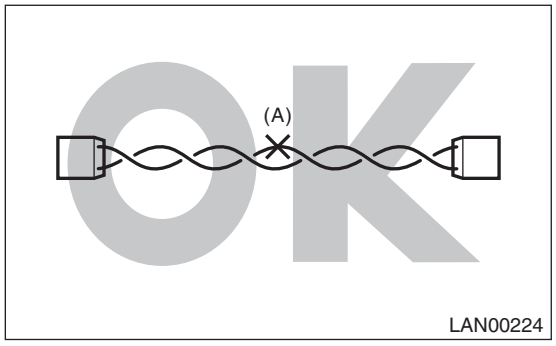

(A) Soldering and protection with insulating tape

B: INSPECTION

Before performing diagnostics, check the following item which might affect body integrated unit malfunctions.
1) Measure the battery voltage and check electrolyte.

Standard voltage: 12 V or more

Specific gravity: 1.260 or more
2) Check the fuse condition.
Make sure that ampere of the fuse is setting value, and it is not blown out.
3) Check the connecting condition of harness and harness connector.
4) Confirm settings of body integrated unit are corresponded to vehicle equipment. <Ref. to BC(diag)-18, OPERATION, Registration Body Integrated Unit.>
5) Make sure that the User Customizing of the body integrated unit matches the vehicle equipment. <Ref. to BC(diag)-16, OPERATION, User Customizing.>
6) Confirm "Factory initial setting" of body integrated unit registrations is set to "Market".
7) Confirm key illumination does not blink with ignition switch turned to ON.

C: PREPARATION TOOL

1. SPECIAL TOOL

ILLUSTRATION	TOOL NUMBER	DESCRIPTION	REMARKS
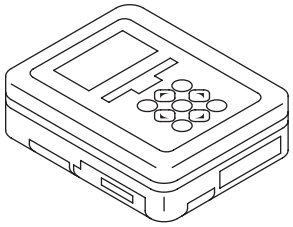 ST1B022XU0	1B022XU0	SUBARU SELECT MONITOR III KIT	Used for troubleshooting the electrical system.

2. GENERAL TOOL

TOOL NAME	REMARKS
Circuit tester	Used for measuring resistance, voltage and current.

4. Electrical Component Location

A: LOCATION

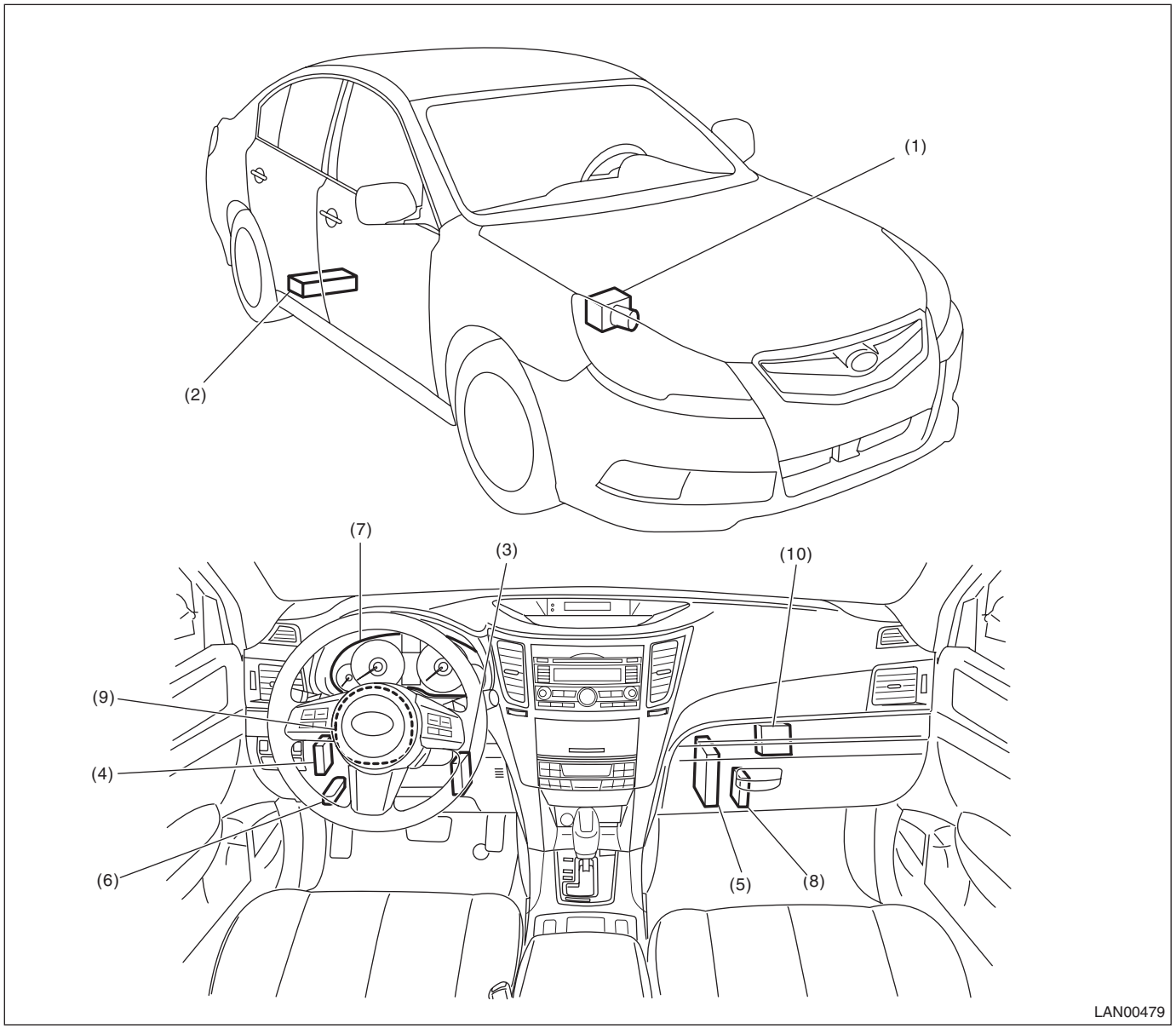

(1)	ABSCM&H/U or VDCCM&H/U (inside engine room)	(5)	Engine control module	(9)	Steering angle sensor
(2)	Electronic parking CM	(6)	Data link connector	(10)	Security CM
(3)	Body integrated unit	(7)	Combination meter		
(4)	Transmission control module (AT)	(8)	A/C CM		

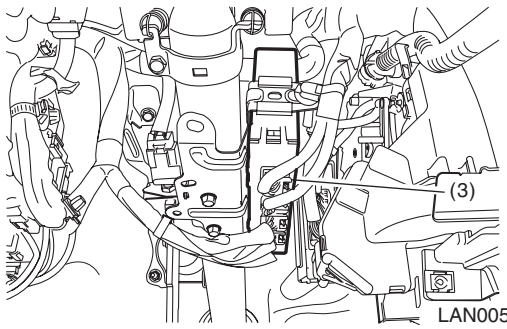
(3)
LAN00544

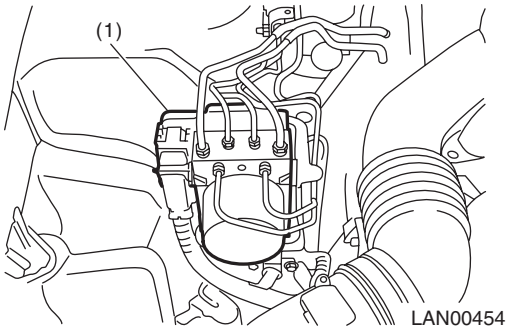
(1)
LAN00454

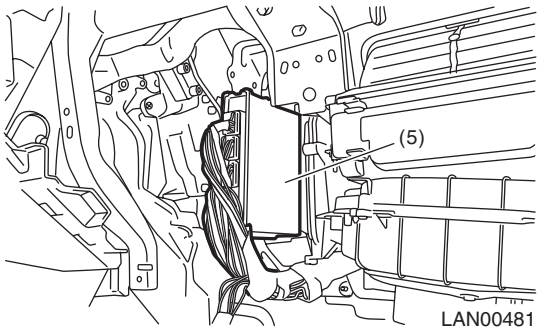
(5)
LAN00481

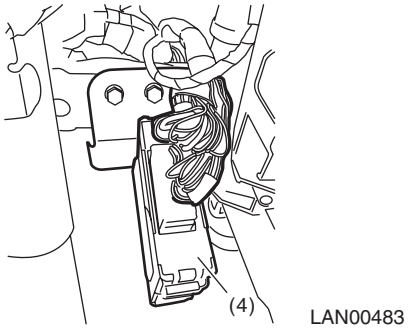
(4)
LAN00483

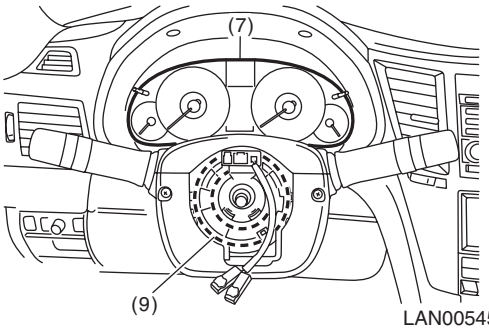
(7)
(9)
LAN00545

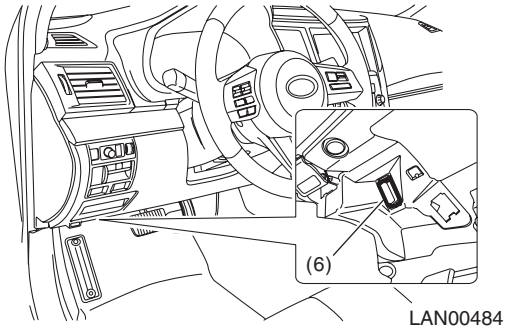
(6)
LAN00484

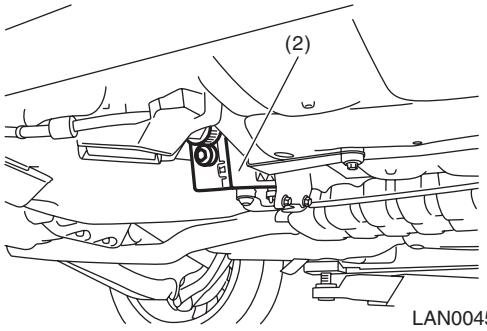
(2)
LAN00459

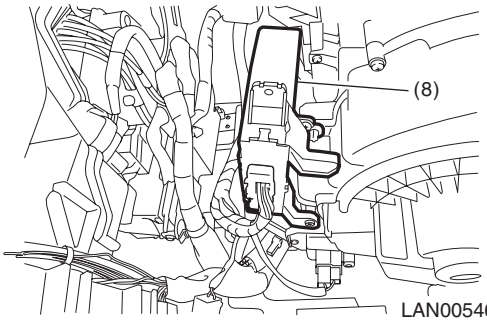
(8)
LAN00546

5. Control Module I/O Signal

A: ELECTRICAL SPECIFICATION

- Body integrated unit

For I/O signals of the body integrated unit, refer to Body Control (Diagnostics). <Ref. to BC(diag)-7, Control Module I/O Signal.>

- Engine control module

For I/O signals of ECM, refer to Engine (Diagnostics). <Ref. to EN(H4SO)(diag)-17, Engine Control Module (ECM) I/O Signal.> <Ref. to EN(H4DOTC)(diag)-18, Engine Control Module (ECM) I/O Signal.> <Ref. to EN(H6DO)(diag)-18, Engine Control Module (ECM) I/O Signal.>

- Transmission control module

For I/O signals of TCM, refer to Automatic Transmission (Diagnostics). <Ref. to 5AT(diag)-13, Transmission Control Module (TCM) I/O Signal.> <Ref. to CVT(diag)-11, Transmission Control Module (TCM) I/O Signal.>

- VDC control module

For I/O signals of VDC CM, refer to Vehicle Dynamics Control (Diagnostics). <Ref. to VDC(diag)-12, Control Module I/O Signal.>

- Electronic parking CM

For I/O signals of electronic CM, refer to Parking Brake (Diagnostics). <Ref. to PB(diag)-12, Control Module I/O Signal.>

- A/C CM

For unit I/O signals of A/C CM, refer to HVAC System (Diagnostics). <Ref. to AC(diag)-6, Control Module I/O Signal.>

- Combination meter

For I/O signals of combination meter, refer to Combination Meter System. <Ref. to WI-98, WIRING DIAGRAM, Combination Meter System.>

- Data link connector

For I/O signals of data link connector, refer to Engine (Diagnostics). <Ref. to EN(H4SO)(diag)-27, Data Link Connector.> <Ref. to EN(H4DOTC)(diag)-29, Data Link Connector.> <Ref. to EN(H6DO)(diag)-28, Data Link Connector.>

* CAN sleep state:
Hold on for approx. one minute with ignition OFF and the doors, trunk, rear gate all closed.

B: WIRING DIAGRAM

<Ref. to WI-85, WIRING DIAGRAM, CAN Communication System.>

6. Subaru Select Monitor

A: OPERATION

For details of basic operations, refer to “PC application help for Subaru Select Monitor”.

7. Read Diagnostic Trouble Code (DTC)

A: OPERATION

For details of operation procedures, refer to “PC application help for Subaru Select Monitor”.

8. Clear Memory Mode

A: OPERATION

For details of operation procedures, refer to “PC application help for Subaru Select Monitor”.

9. CAN Communication Circuit Check

A: PROCEDURE

NOTE:
When measuring the resistance of CAN communication circuit, measure it in sleep status.
To enter sleep status

- With ignition switch OFF and key or switch operation stopped, keep the doors, trunk, and rear gate all closed for one minute or more.

WIRING DIAGRAM:

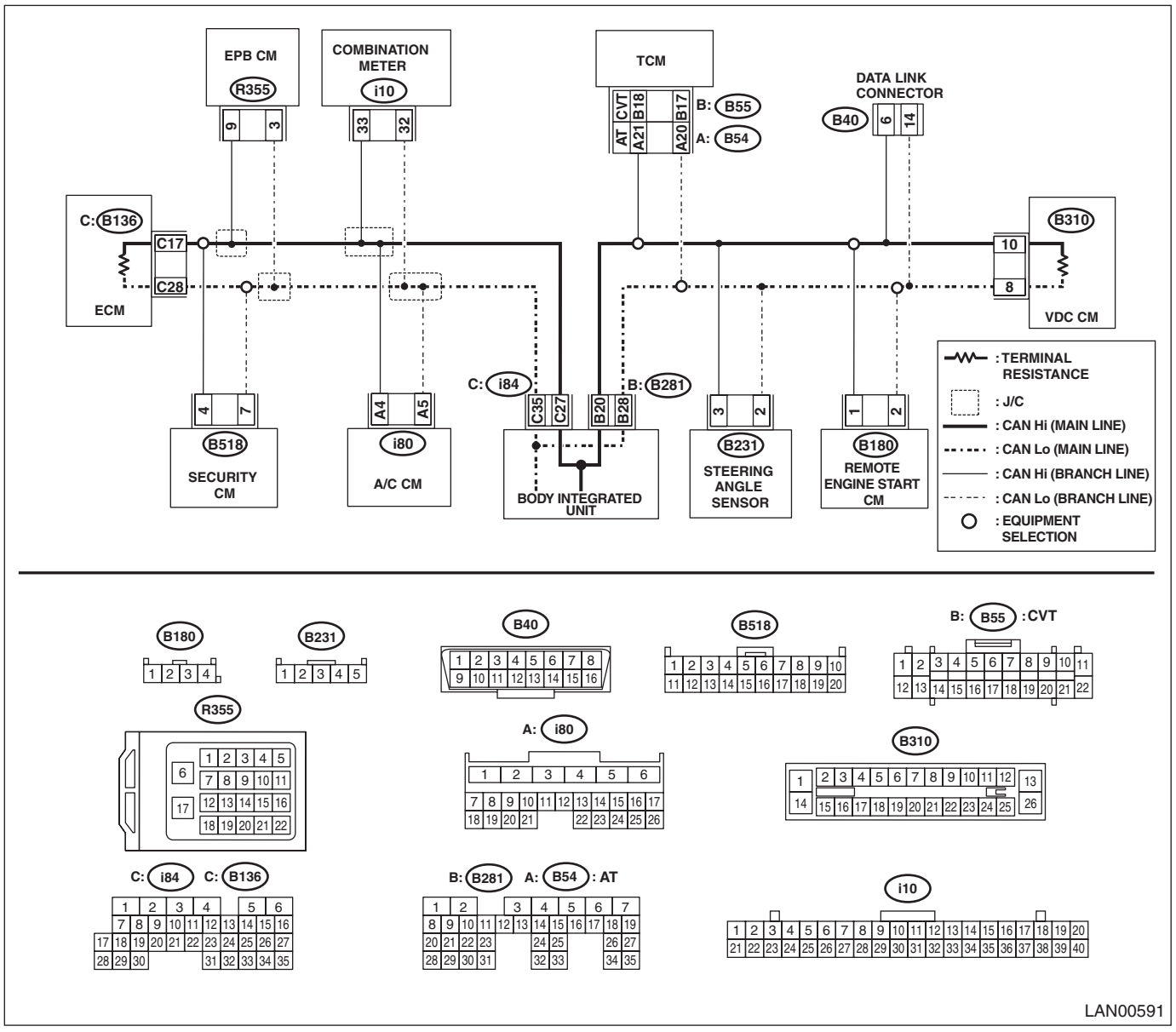

	Step	Check	Yes	No
1	**CHECK FROM DATA LINK CONNECTOR.** Using the tester, measure the resistance between terminals. ***Connector & terminal*** ***(B40) No. 6 — Chassis ground:*** ***(B40) No. 14 — Chassis ground:***	Is the resistance 10 Ω or less?	Check for ground short. <Ref. to LAN(diag)-15, GROUND SHORT INSPECTION, INSPECTION, CAN Communication Circuit Check.>	Go to step **2**.
2	**CHECK FROM DATA LINK CONNECTOR.** 1) Turn the ignition switch to ON. 2) Using the tester, measure the voltage between terminals. ***Connector & terminal*** ***(B40) No. 6 (+) — Chassis ground (–):*** ***(B40) No. 14 (+) — Chassis ground (–):***	Is the voltage 5 V or less?	Go to step **3**.	Check for battery short. <Ref. to LAN(diag)-17, BATTERY SHORT INSPECTION, INSPECTION, CAN Communication Circuit Check.>
3	**CHECK FROM DATA LINK CONNECTOR.** 1) Turn the ignition switch to OFF. 2) Using the tester, measure the resistance between terminals. ***Connector & terminal*** ***(B40) No. 6 — No. 14:***	Is the resistance 55 Ω or less?	Perform the inspection for 55 Ω or less. <Ref. to LAN(diag)-21, 55 Ω OR LESS, INSPECTION, CAN Communication Circuit Check.>	Go to step **4**.
4	**CHECK FROM DATA LINK CONNECTOR.** Using the tester, measure the resistance between terminals. ***Connector & terminal*** ***(B40) No. 6 — No. 14:***	Is the resistance 65 Ω or more?	Perform the inspection for 65 Ω or more. <Ref. to LAN(diag)-23, 65 Ω OR MORE, INSPECTION, CAN Communication Circuit Check.>	A related line may be open. Perform the inspection for 56 — 64 Ω relevant to the detected DTC. <Ref. to LAN(diag)-14, LIST, CAN Communication Circuit Check.>

B: LIST

Resistance value between CAN Hi And Lo	Contents of inspection	Remarks
Ground short inspection	<Ref. to LAN(diag)-15, GROUND SHORT INSPECTION, INSPECTION, CAN Communication Circuit Check.>	Shorted to ground in the communication circuit or control module.
Battery short inspection	<Ref. to LAN(diag)-17, BATTERY SHORT INSPECTION, INSPECTION, CAN Communication Circuit Check.>	Shorted to battery power supply in the communication circuit or control module.
56 — 64 Ω	<Ref. to LAN(diag)-19, 56 — 64 Ω, INSPECTION, CAN Communication Circuit Check.>	Combined resistance of end resistance does not have malfunction; short to ground or +B short of the CAN communication circuit is possible, however.
55 Ω or less	<Ref. to LAN(diag)-21, 55 Ω OR LESS, INSPECTION, CAN Communication Circuit Check.>	Resistance is lower than combined resistance of end resistance. Short to CAN Hi and CAN Lo on the CAN communication circuit is possible.
65 Ω or more	<Ref. to LAN(diag)-23, 65 Ω OR MORE, INSPECTION, CAN Communication Circuit Check.>	Resistance is higher than combined resistance of end resistance. Open circuit of CAN communication circuit is possible.
56 — 64 Ω (TCM)	<Ref. to LAN(diag)-25, 56 — 64 Ω (TCM), INSPECTION, CAN Communication Circuit Check.>	No TCM data is received. Perform inspection when faulty is detected.
56 — 64 Ω (Steering angle sensor)	<Ref. to LAN(diag)-27, RELATED LINES 56 — 64 Ω (STEERING ANGLE SENSOR), INSPECTION, CAN Communication Circuit Check.>	No other data is received. Perform inspection when faulty is not detected.
56 — 64 Ω (A/C CM)	<Ref. to LAN(diag)-28, 56 — 64 Ω (A/C CM), INSPECTION, CAN Communication Circuit Check.>	No A/C data is received. Perform inspection when faulty is detected.
56 — 64 Ω (Electronic parking CM)	<Ref. to LAN(diag)-29, 56 — 64 Ω (ELECTRONIC PARKING CM), INSPECTION, CAN Communication Circuit Check.>	No EPB data is received. Perform inspection when faulty is detected.
56 — 64 Ω (Combination meter)	<Ref. to LAN(diag)-30, 56 — 64 Ω (COMBINATION METER), INSPECTION, CAN Communication Circuit Check.>	No meter data is received. Perform inspection when faulty is detected.
56 — 64 Ω (Security CM)	<Ref. to LAN(diag)-31, 56 — 64 Ω (SECURITY CM), INSPECTION, CAN Communication Circuit Check.>	No security CM data is received. Perform inspection when faulty is detected.

C: INSPECTION

1. GROUND SHORT INSPECTION

WIRING DIAGRAM:

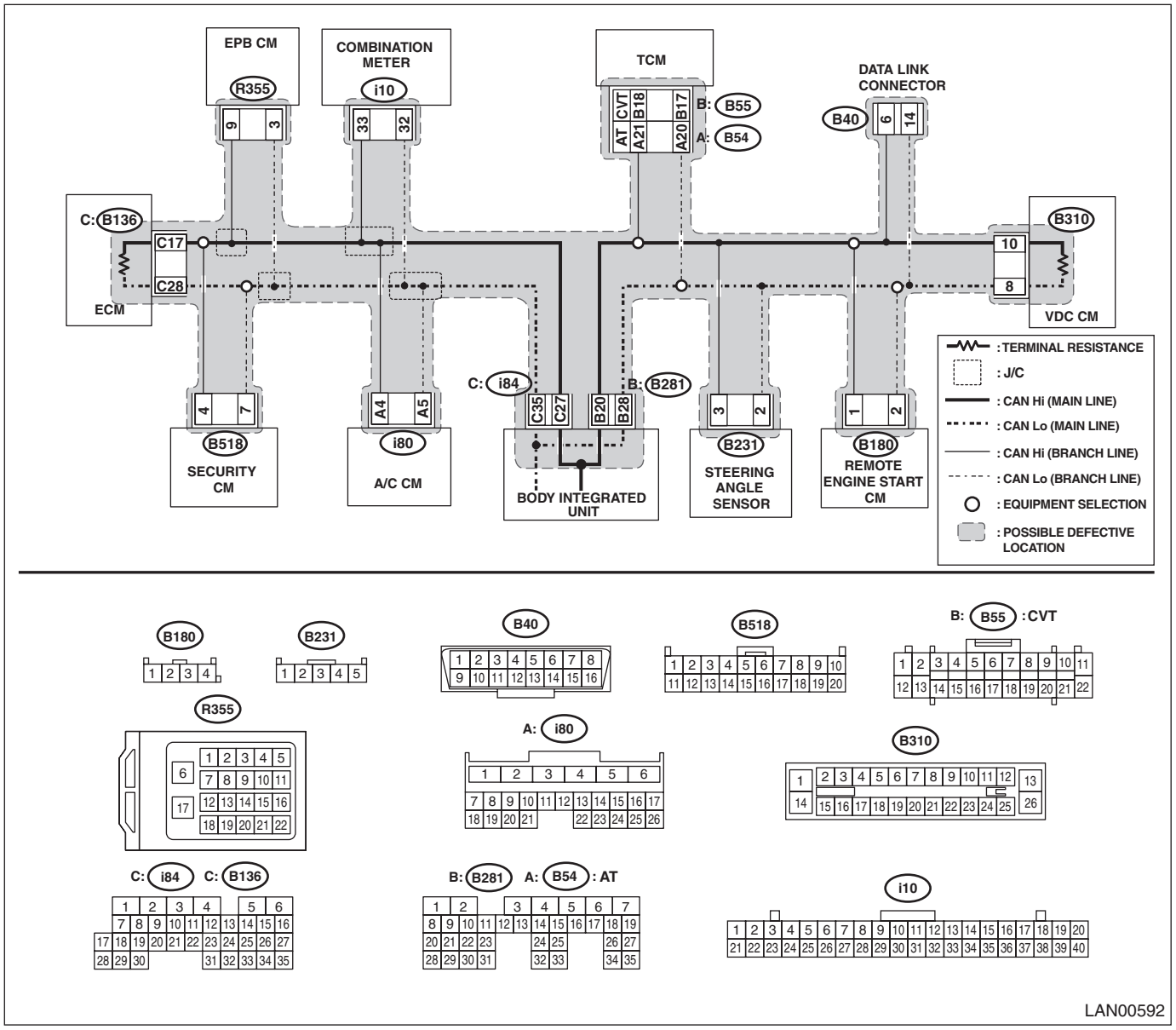

NOTE:
Main wiring harness or related lines may be shorted to ground, or shorted to ground in one of the control modules.

Step		Check	Yes	No
1	**CHECK BETWEEN RELATED LINES AND MAIN WIRING HARNESS.** Using the tester, measure the resistance between terminals. ***Connector & terminal*** ***(B40) No. 6 — Chassis ground:*** ***(B40) No. 14 — Chassis ground:***	Is the resistance 10 Ω or less?	Go to step **2**.	Repair or replace the short circuit of the harness.

	Step	Check	Yes	No
2	**CHECK CONTROL MODULE.** With the tester connected, disconnect control module. NOTE: Disconnect the body integrated unit at the end. ***Connector & terminal*** ***(B40) No. 6 — Chassis ground:*** ***(B40) No. 14 — Chassis ground:***	Did the resistance change to 10 Ω or more?	Replace the control module whose resistance has changed. When the value changed at disconnecting the body integrated unit, go to next. Go to step **3**.	Go to step **3**.
3	**CHECK BETWEEN MAIN WIRING HARNESSES.** Using the tester, measure the resistance between terminals. ***Connector & terminal*** ***(i84) No. 27 — Chassis ground:*** ***(i84) No. 35 — Chassis ground:***	Is the resistance 10 Ω or less?	Repair or replace the short circuit of the harness.	Replace the body integrated unit. <Ref. to SL-71, REMOVAL, Body Integrated Unit.>

2. BATTERY SHORT INSPECTION

WIRING DIAGRAM:

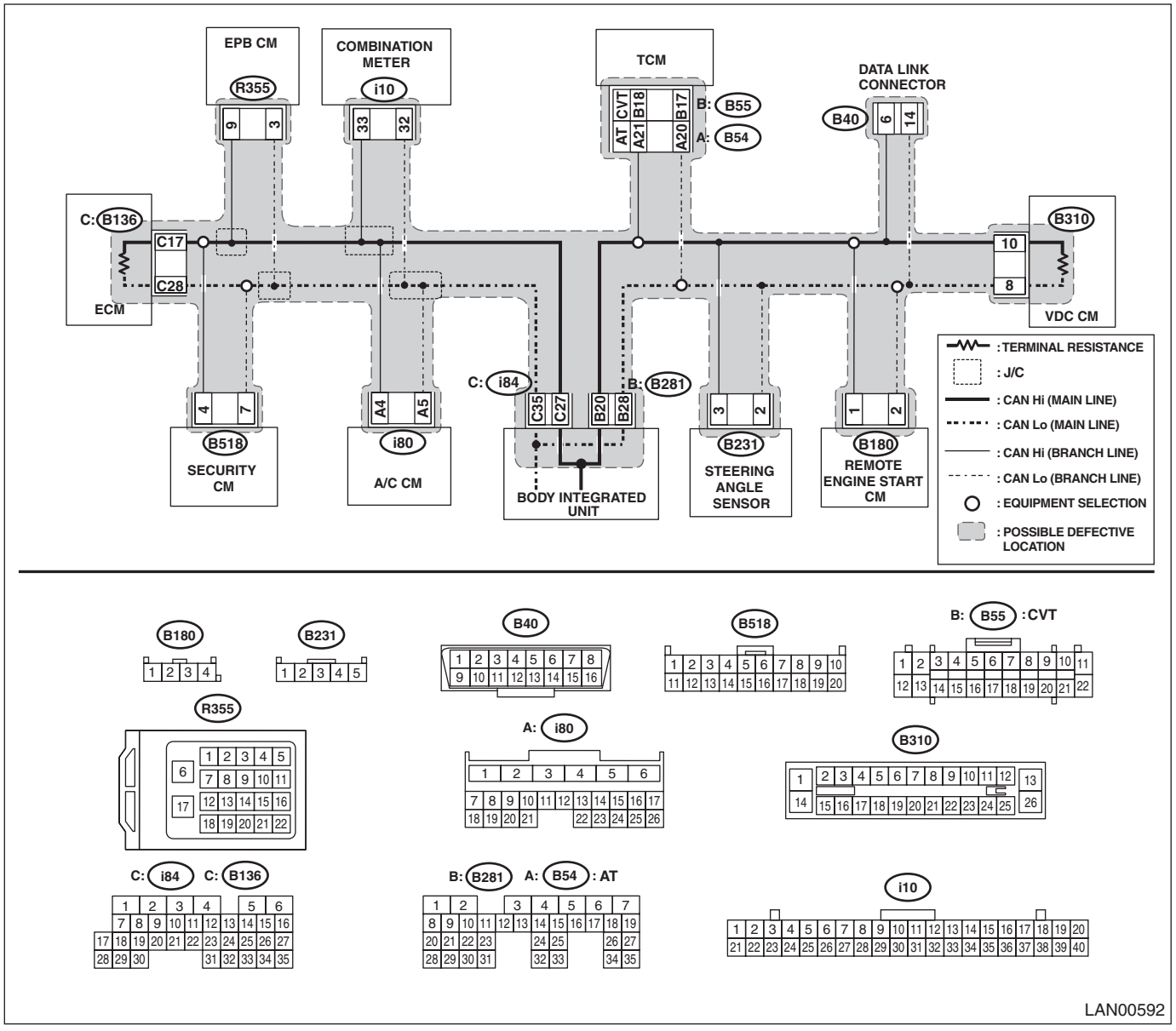

NOTE:
Main wiring harness or related lines may be shorted to battery circuit, or shorted to battery circuit in one of the control modules.

Step		Check	Yes	No
1	**CHECK BETWEEN RELATED LINES AND MAIN WIRING HARNESS.** 1) Turn the ignition switch to ON. 2) Using the tester, measure the voltage between terminals. ***Connector & terminal*** ***(B40) No. 6 (+) — Chassis ground (–):*** ***(B40) No. 14 (+) — Chassis ground (–):***	Is the voltage 5 V or less?	Currently returned to normal.	Go to step **2**.

Step		Check	Yes	No
2	**CHECK CONTROL MODULE.** With the tester connected, disconnect control module. NOTE: Disconnect the body integrated unit at the end. ***Connector & terminal*** ***(B40) No. 6 (+) — Chassis ground (–):*** ***(B40) No. 14 (+) — Chassis ground (–):***	Did the voltage change to 5 V or less?	Replace the control module whose voltage has changed. When the value changed at disconnecting the body integrated unit, go to next. Go to step **3**.	Go to step **3**.
3	**CHECK BETWEEN MAIN WIRING HARNESSES.** Using the tester, measure the voltage between terminals. ***Connector & terminal*** ***(i84) No. 27 (+) — Chassis ground (–):*** ***(i84) No. 35 (+) — Chassis ground (–):***	Is the voltage 1 V or less?	Replace the body integrated unit. <Ref. to SL-71, REMOVAL, Body Integrated Unit.>	Repair or replace the short circuit of the harness.

3. 56 — 64 Ω

WIRING DIAGRAM:

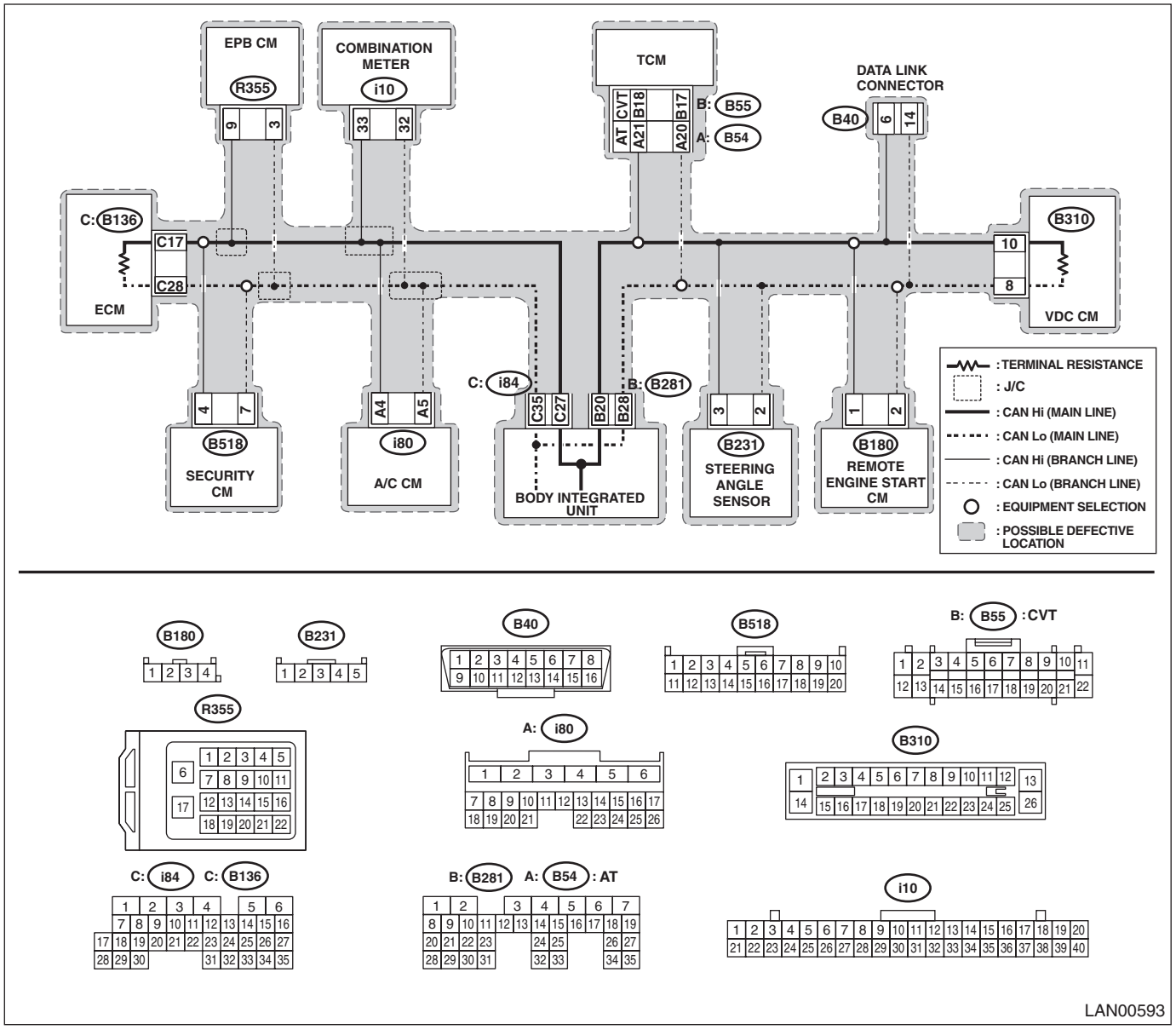

NOTE:
When the measured resistance value is 56 — 64 Ω, main wiring harness or related lines may be shorted to ground, or shorted to power supply line, or related line may be open.

Step		Check	Yes	No
1	**CHECK BETWEEN RELATED LINES AND MAIN WIRING HARNESS.** Using the tester, measure the resistance between terminals. ***Connector & terminal*** ***(B40) No. 6 — Chassis ground:*** ***(B40) No. 14 — Chassis ground:***	Is the resistance 10 Ω or less?	Go to step **2**.	Go to step **4**.

	Step	Check	Yes	No
2	**CHECK CONTROL MODULE.** With the tester connected, disconnect control module. NOTE: Disconnect the body integrated unit at the end. ***Connector & terminal*** ***(B40) No. 6 — Chassis ground:*** ***(B40) No. 14 — Chassis ground:***	Did the resistance change to 10 Ω or more?	Replace the control module whose resistance has changed. When the value changed at disconnecting the body integrated unit, go to next. Go to step **3**.	Repair or replace the short circuit of the harness.
3	**CHECK MAIN WIRING HARNESS AND RELATED LINES.** Using the tester, measure the resistance between terminals. ***Connector & terminal*** ***(i84) No. 27 — Chassis ground:*** ***(i84) No. 35 — Chassis ground:***	Is the resistance 10 Ω or less?	Repair or replace the short circuit of the harness.	Replace the body integrated unit. <Ref. to SL-71, REMOVAL, Body Integrated Unit.>
4	**CHECK BETWEEN RELATED LINES AND MAIN WIRING HARNESS.** 1) Turn the ignition switch to ON. 2) Using the tester, measure the voltage between terminals. ***Connector & terminal*** ***(B40) No. 6 (+) — Chassis ground (–):*** ***(B40) No. 14 (+) — Chassis ground (–):***	Is the voltage 5 V or less?	CAN communication circuit is normal.	Go to step **5**.
5	**CHECK CONTROL MODULE.** With the tester connected, disconnect control module. NOTE: Disconnect the body integrated unit at the end. ***Connector & terminal*** ***(B40) No. 6 (+) — Chassis ground (–):*** ***(B40) No. 14 (+) — Chassis ground (–):***	Did the voltage change to 5 V or less?	Replace the control module whose voltage has changed. When the value changed at disconnecting the body integrated unit, go to next. Go to step **6**.	Repair or replace the short circuit of the harness.
6	**CHECK HARNESS.** Using a tester, measure the voltage between terminals and chassis ground. ***Connector & terminal*** ***(i84) No. 27 (+) — Chassis ground (–):*** ***(i84) No. 35 (+) — Chassis ground (–):***	Is the voltage 5 V or less?	Replace the body integrated unit. <Ref. to SL-71, REMOVAL, Body Integrated Unit.>	Repair or replace the short circuit of the harness.

4. 55 Ω OR LESS

WIRING DIAGRAM:

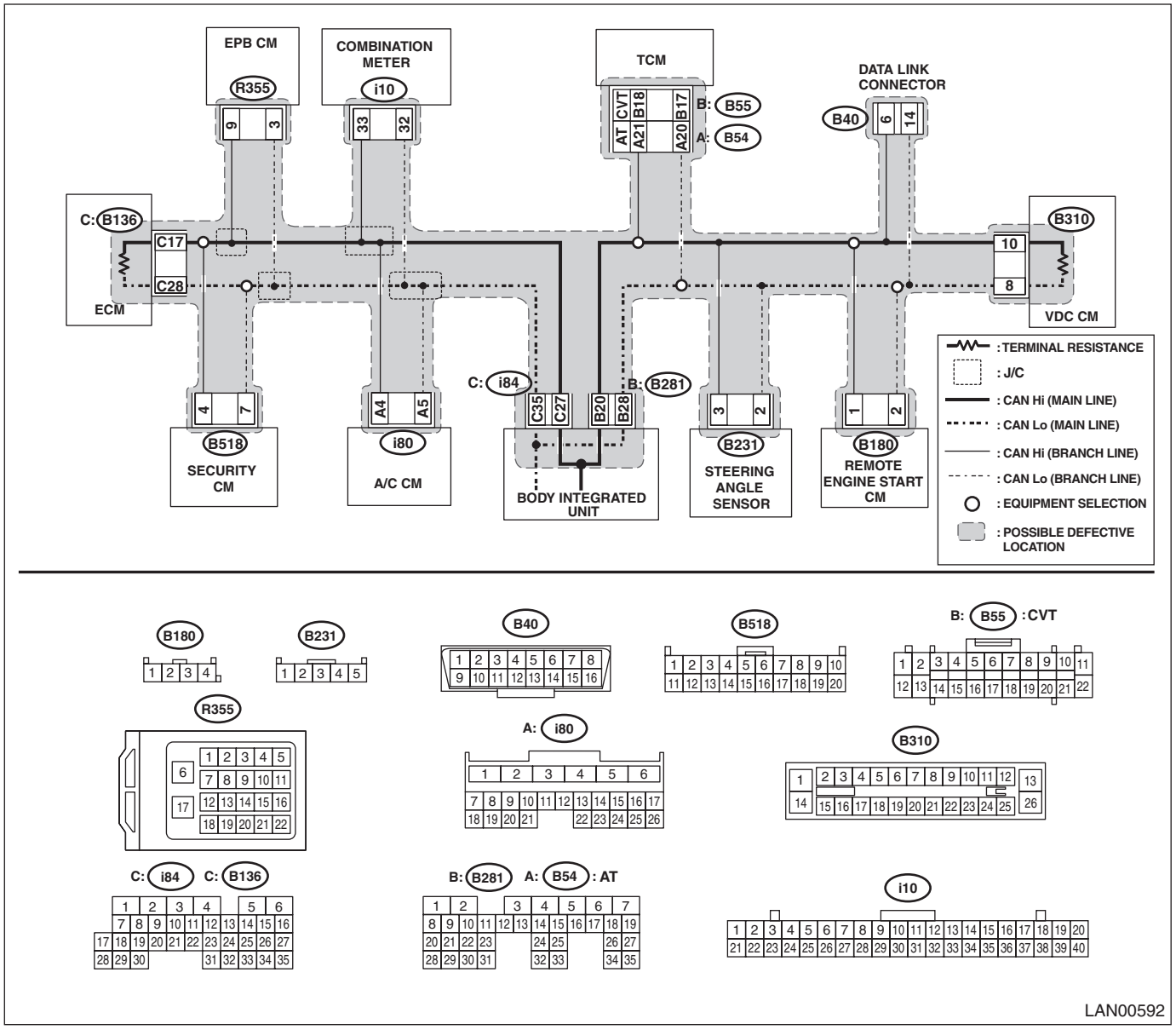

NOTE:
When the bus line is measured, combined resistance of end resistance (120 Ω) in ECM and end resistance (120 Ω) in VDC CM can be measured. The combined resistance is approximately 56 — 64 Ω. When the measured resistance value is 55 Ω or less, main wiring harness or related lines may be shorted, or combined resistance may have changed because resistance other than end resistance is created on the circuit.

	Step	Check	Yes	No
1	**CHECK BETWEEN RELATED LINES AND MAIN WIRING HARNESS.** Using the tester, measure the resistance between terminals. ***Connector & terminal (B40) No. 6 — No. 14:***	Is the resistance 10 Ω or less?	Go to step **2**.	Go to step **4**.

	Step	Check	Yes	No
2	**CHECK MAIN WIRING HARNESS AND RELATED LINES.** With a tester connected, disconnect control module connectors in order. NOTE: Disconnect the body integrated unit at the end. ***Connector & terminal*** ***(B40) No. 6 — No. 14:***	Is there any control module whose condition has changed from short state?	Replace the control module whose resistance has changed. When the value changed at disconnecting the body integrated unit, go to next. Go to step **3**.	Go to step **4**.
3	**CHECK BETWEEN MAIN WIRING HARNESSES.** Using the tester, measure the resistance between terminals. ***Connector & terminal*** ***(i84) No. 27 — No. 35:***	Is the resistance 10 Ω or less?	Repair or replace the short circuit of the harness.	Replace the body integrated unit. <Ref. to SL-71, REMOVAL, Body Integrated Unit.>
4	**CHECK CONTROL MODULE.** 1) Disconnect ECM and VDC CM connectors. 2) Using a tester, measure the resistance between control module terminals. ***Connector & terminal*** ***(B136) No. 17 — No. 28:*** ***(B310) No. 8 — No. 10:***	Is the resistance 115 — 135 Ω?	Go to step **5**.	Replace the control module whose end resistance value is out of the specified range.
5	**CHECK CONTROL MODULE.** 1) Disconnect the connector of body integrated unit. 2) Using a tester, measure the resistance between control module terminals. ***Connector & terminal*** ***(B281) No. 28 — (i84) No. 27:*** ***(B281) No. 20 — (i84) No. 35:***	Is the resistance 1425 — 1575 Ω?	Go to step **6**.	Replace the body integrated unit. <Ref. to SL-71, REMOVAL, Body Integrated Unit.>
6	**CHECK CONTROL MODULE.** Using a tester, measure the resistance between control module terminals. ***Connector & terminal*** ***(B281) No. 28 — (i84) No. 35:*** ***(B281) No. 20 — (i84) No. 27:***	Is the resistance less than 1 Ω?	Go to step **7**.	Replace the body integrated unit. <Ref. to SL-71, REMOVAL, Body Integrated Unit.>
7	**CHECK CONTROL MODULE.** 1) Disconnect the security CM connector. 2) Using a tester, measure the resistance between control module terminals. ***Connector & terminal*** ***(B40) No. 6 — No. 14:***	Is the resistance 1425 — 1575 Ω?	Go to step **8**.	Replace the security CM.
8	**CHECK HARNESS.** Using the tester, check the short circuit portion of each harness. ***Connector & terminal*** ***(B281) No. 28 — No. 20:***	Is the resistance 1 MΩ or more?	Go to step **10**.	Go to step **9**.
9	**CHECK CONTROL MODULE.** With a tester connected, disconnect control modules in order. ***Connector & terminal*** ***(B281) No. 28 — No. 20:***	Are there any control modules whose resistance changed to 1 MΩ or more?	Replace the control module that has changed.	Repair or replace the harness due to resistance component.
10	**CHECK CONTROL MODULE.** With a tester connected, disconnect control modules in order. ***Connector & terminal*** ***(i84) No. 27 — No. 35:***	Is there any control module whose resistance has changed to 1 MΩ or more?	Replace the control module that has changed.	Repair or replace the harness due to resistance component.

5. 65 Ω OR MORE

WIRING DIAGRAM:

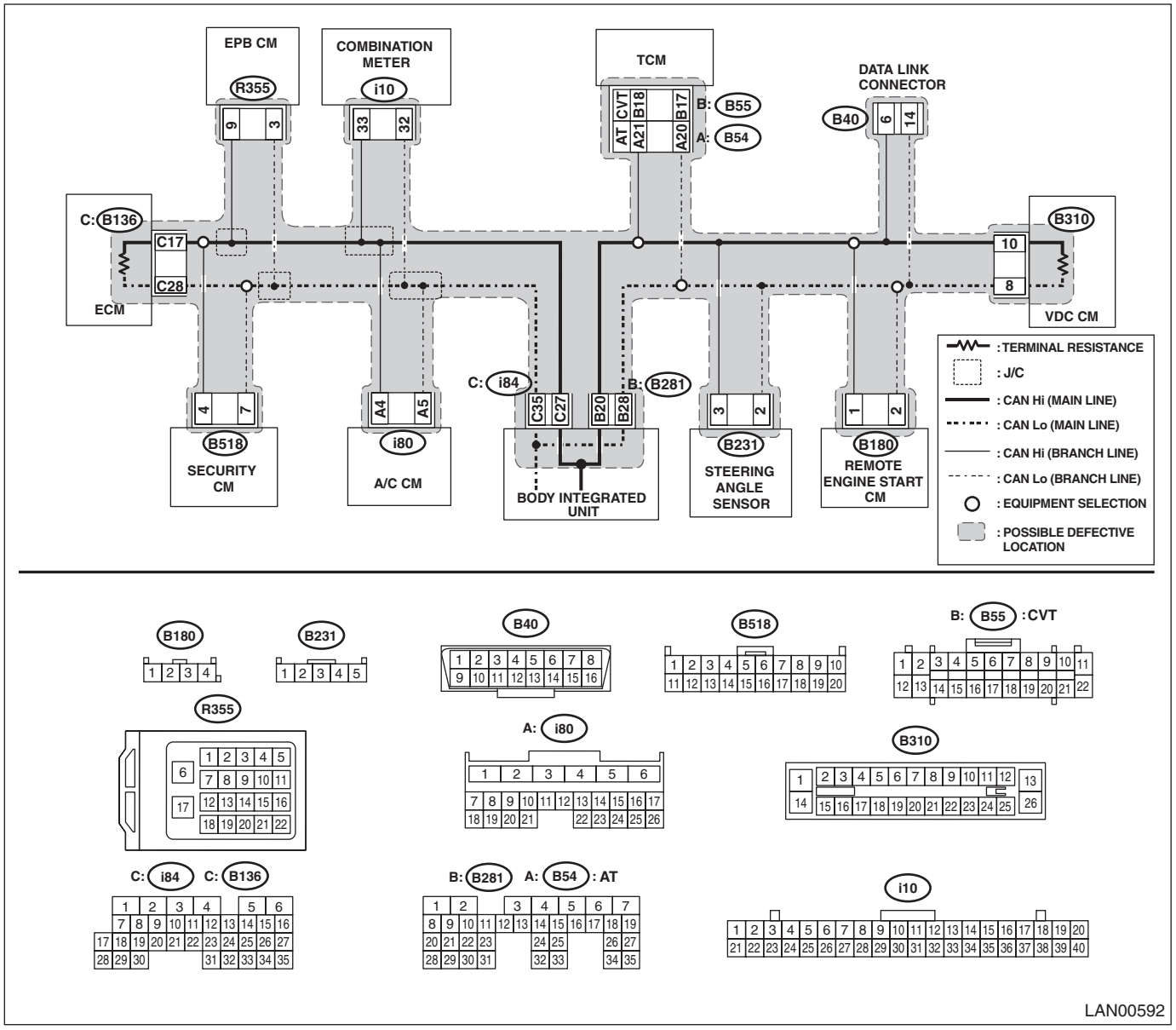

NOTE:
When CAN communication circuit is measured, combined resistance of end resistance (120 Ω) in ECM and end resistance (120 Ω) in VDC CM can be measured. The combined resistance is approximately 56 — 64 Ω. When the measured resistance value is 65 Ω or more, either of end resistance or main wiring harness may have malfunction such as open circuit.

Step		Check	Yes	No
1	**CHECK CONTROL MODULE.** 1) Disconnect ECM and VDC CM connectors. 2) Using a tester, measure the resistance between control module terminals. ***Connector & terminal*** ***(B136) No. 17 — No. 28:*** ***(B310) No. 8 — No. 10:***	Is the resistance 115 — 135 Ω?	Go to step **2**.	Replace the control module whose value is out of the specification.

	Step	Check	Yes	No
2	**CHECK CONTROL MODULE.** 1) Disconnect the connector of body control module. 2) Using a tester, measure the resistance between control module terminals. ***Connector & terminal*** ***(B281) No. 28 — (i84) No. 27:*** ***(B281) No. 20 — (i84) No. 35:***	Is the resistance 1425 — 1575 Ω?	Go to step **3**.	Replace the body integrated unit. <Ref. to SL-71, REMOVAL, Body Integrated Unit.>
3	**CHECK CONTROL MODULE.** Using the tester, measure the resistance between terminals. ***Connector & terminal*** ***(B281) No. 28 — (i84) No. 35:*** ***(B281) No. 20 — (i84) No. 27:***	Is the resistance less than 1 Ω?	Go to step **4**.	Replace the body integrated unit. <Ref. to SL-71, REMOVAL, Body Integrated Unit.>
4	**CHECK HARNESS.** Using a tester, check continuity between terminals. ***Connector & terminal*** ***(B40) No. 6 — (B310) No. 10:*** ***(B40) No. 14 — (B310) No. 8:*** ***(B40) No. 6 — (i281) No. 20:*** ***(B40) No. 14 — (i281) No. 28:***	Is there continuity?	Go to step **5**.	Repair or replace the open circuit of harness.
5	**CHECK HARNESS.** 1) Disconnect the ECM connector. 2) Using a tester, check continuity between terminals. ***Connector & terminal*** ***(B40) No. 6 — (B136) No. 17:*** ***(B40) No. 14 — (B136) No. 28:***	Is there continuity?	It is possible that temporary poor communication occurs.	Repair or replace the open circuit of harness.

6. 56 — 64 Ω (TCM)

WIRING DIAGRAM:

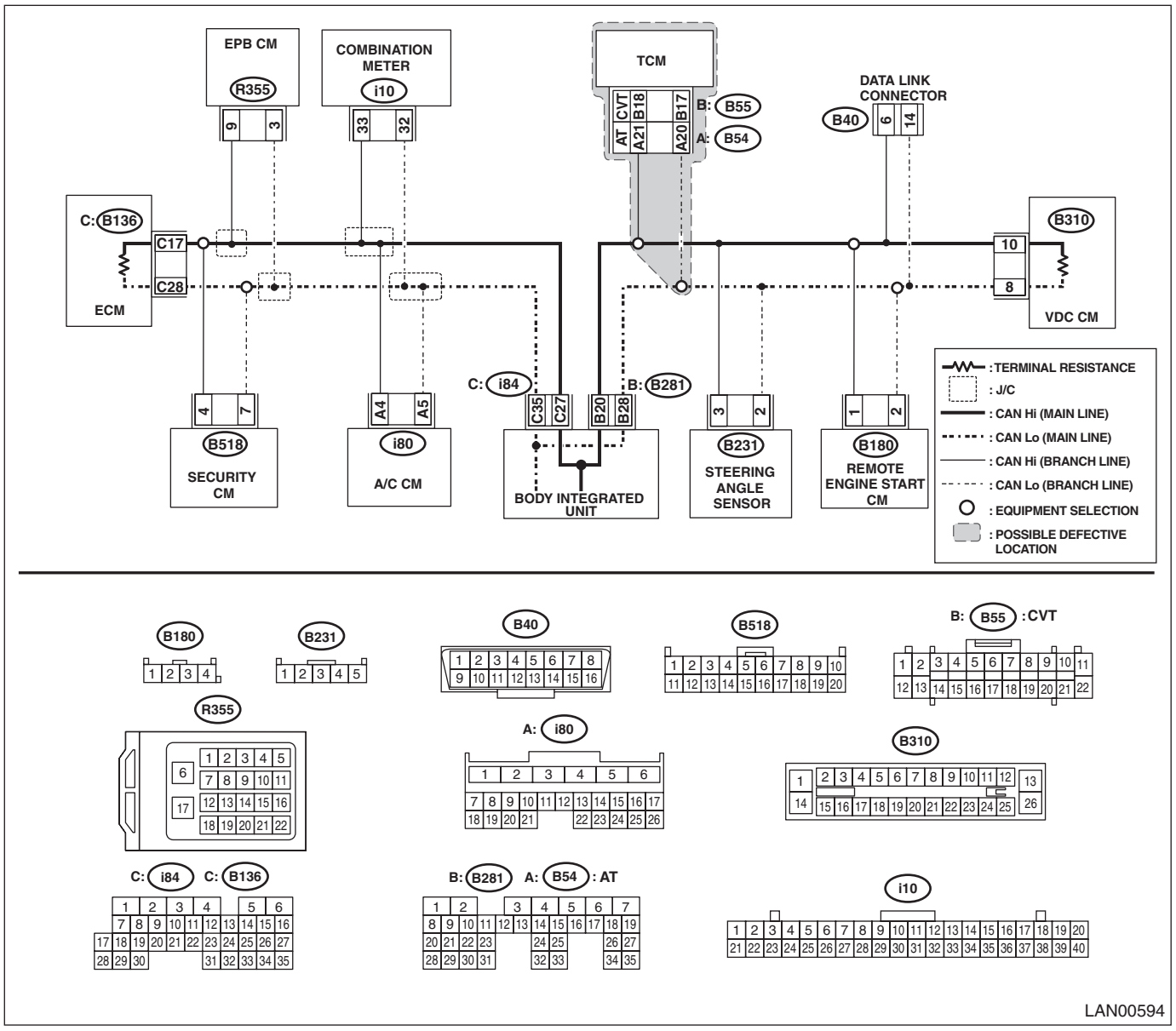

NOTE:
Perform inspection when no data is received, or faulty is detected. This is different from power supply shorted or ground shorted.

Step		Check	Yes	No
1	**CHECK BETWEEN RELATED LINES AND MAIN WIRING HARNESS.** 1) Disconnect the TCM connector. 2) Using the tester, measure the resistance between terminals. ***Connector & terminal*** ***CVT model*** ***(B55) No. 17 — No. 18:*** ***5AT model*** ***(B54) No. 20 — No. 21:***	Is the resistance 400 Ω or more?	Related lines between TCM and main wiring harness is open, or main wiring harness is open at two places or more.	Go to step **2**.

Step		Check	Yes	No
2	**CHECK RELATED LINES.** Using the tester, measure the resistance between terminals. ***Connector & terminal*** ***CVT model*** ***(B55) No. 17 — (B40) No. 14:*** ***(B55) No. 18 — (B40) No. 6:*** ***5AT model*** ***(B54) No. 20 — (B40) No. 14:*** ***(B54) No. 21 — (B40) No. 6:***	Is the resistance 10 Ω or more?	Repair or replace the open circuit portion of TCM related lines.	Check DTC of TCM. <Ref. to CVT(diag)-17, OPERATION, Read Diagnostic Trouble Code (DTC).> <Ref. to 5AT(diag)-20, OPERATION, Read Diagnostic Trouble Code (DTC).>

7. RELATED LINES 56 — 64 Ω (STEERING ANGLE SENSOR)

WIRING DIAGRAM:

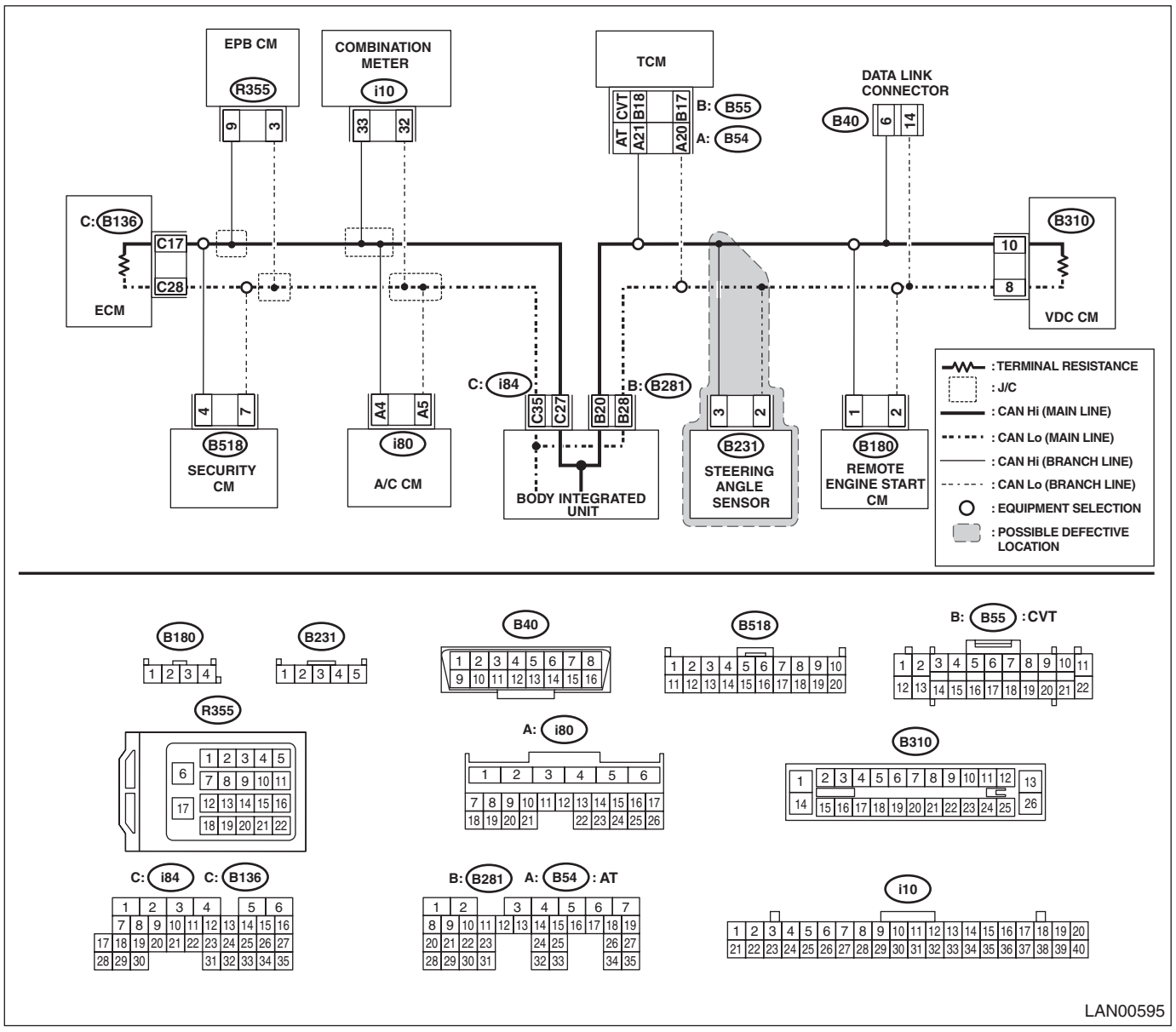

Step		Check	Yes	No
1	**CHECK BETWEEN RELATED LINES AND MAIN WIRING HARNESS.** 1) Disconnect the steering angle sensor connector. 2) Using the tester, measure the resistance between terminals. ***Connector & terminal*** ***(B231) No. 2 — No. 3:***	Is the resistance 400 Ω or more?	Related lines between steering angle sensor and main wiring harness is open, or main wiring harness is open at two places or more.	Go to step **2**.
2	**CHECK RELATED LINES.** Using the tester, measure the resistance between terminals. ***Connector & terminal*** ***(B231) No. 2 — (B40) No. 14:*** ***(B231) No. 3 — (B40) No. 6:***	Is the resistance 10 Ω or more?	Repair or replace the open circuit portion of steering angle sensor related lines.	Check DTC of VDC CM. <Ref. to VDC(diag)-23, OPERATION, Read Diagnostic Trouble Code (DTC).>

8. 56 — 64 Ω (A/C CM)

WIRING DIAGRAM:

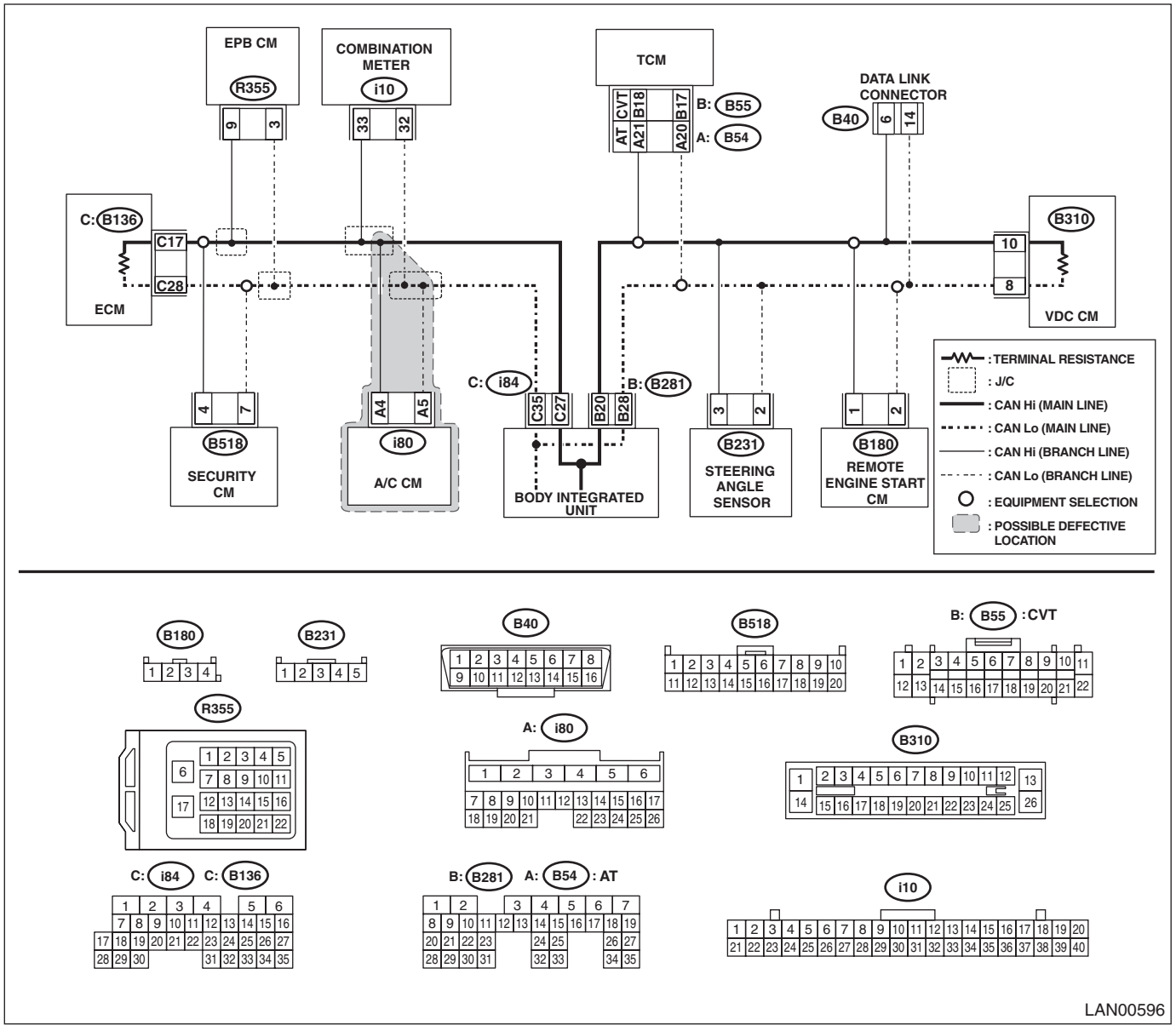

LAN00596

Step		Check	Yes	No
1	**CHECK BETWEEN RELATED LINES AND MAIN WIRING HARNESS.** 1) Disconnect the A/C CM connector. 2) Using the tester, measure the resistance between terminals. ***Connector & terminal*** ***(i80) No. 4 — No. 5:***	Is the resistance 400 Ω or more?	Related lines between A/C CM and main wiring harness is open, or main wiring harness is open at two places or more.	Go to step **2**.
2	**CHECK RELATED LINES.** Using the tester, measure the resistance between terminals. ***Connector & terminal*** ***(i80) No. 4 — (B40) No. 6:*** ***(i80) No. 5 — (B40) No. 14:***	Is the resistance 10 Ω or more?	Repair or replace the open circuit of A/C CM related lines.	Check DTC of A/C CM. <Ref. to AC(diag)-47, OPERATION, Read Diagnostic Trouble Code (DTC).>

9. 56 — 64 Ω (ELECTRONIC PARKING CM)

WIRING DIAGRAM:

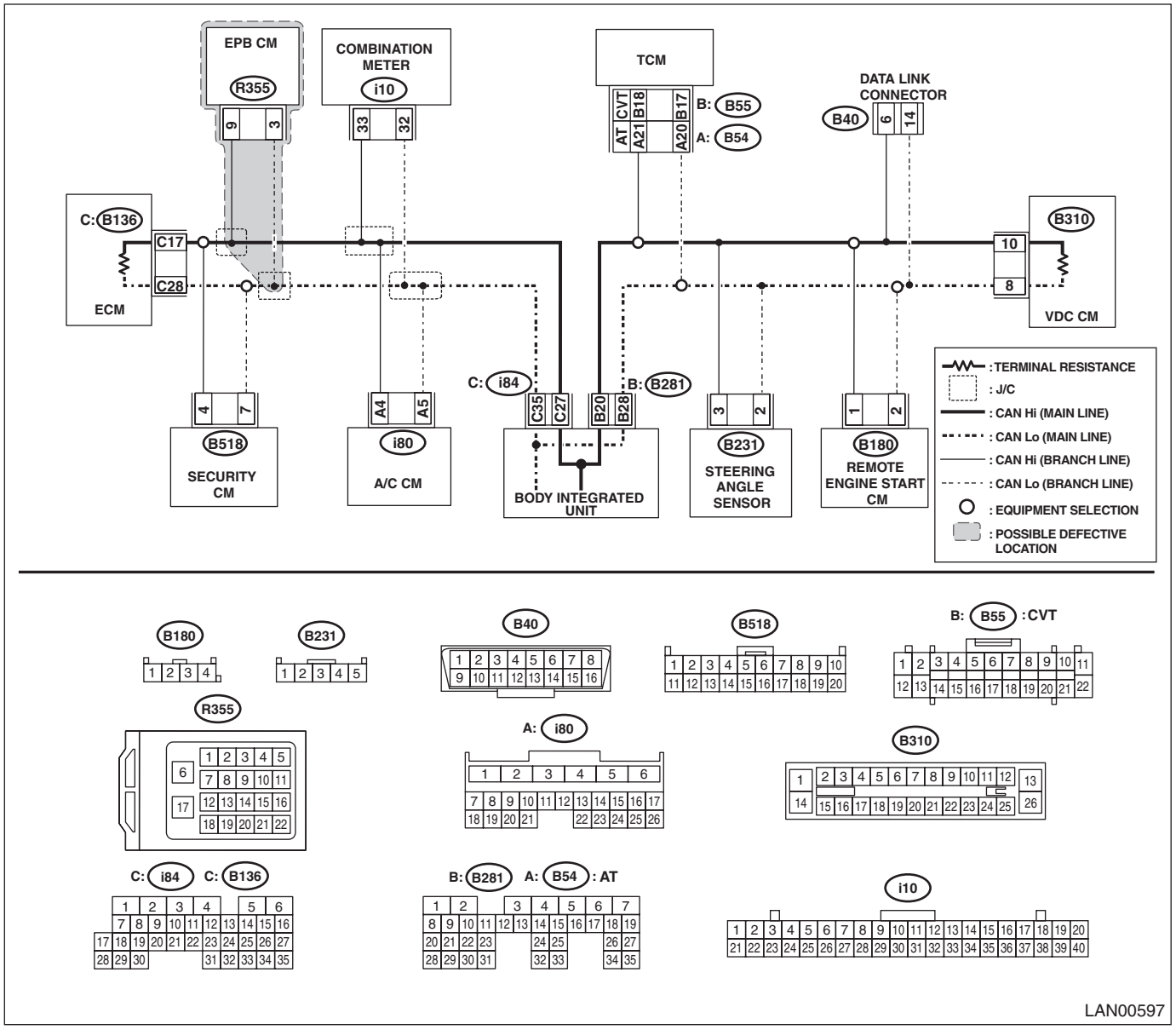

Step		Check	Yes	No
1	**CHECK BETWEEN RELATED LINES AND MAIN WIRING HARNESS.** 1) Disconnect the electronic parking CM connector. 2) Using the tester, measure the resistance between terminals. ***Connector & terminal*** ***(R355) No. 3 — No. 9:***	Is the resistance 400 Ω or more?	Related lines between electronic parking CM and main wiring harness is open, or main wiring harness is open at two places or more.	Go to step **2**.
2	**CHECK RELATED LINES.** Using the tester, measure the resistance between terminals. ***Connector & terminal*** ***(R355) No. 9 — (B40) No. 6:*** ***(R355) No. 3 — (B40) No. 14:***	Is the resistance 10 Ω or more?	Repair or replace the open circuit portion of electronic parking CM related lines.	Check DTC of electronic parking CM. <Ref. to PB(diag)-23, OPERATION, Read Diagnostic Trouble Code (DTC).>

10.56 — 64 Ω (COMBINATION METER)

WIRING DIAGRAM:

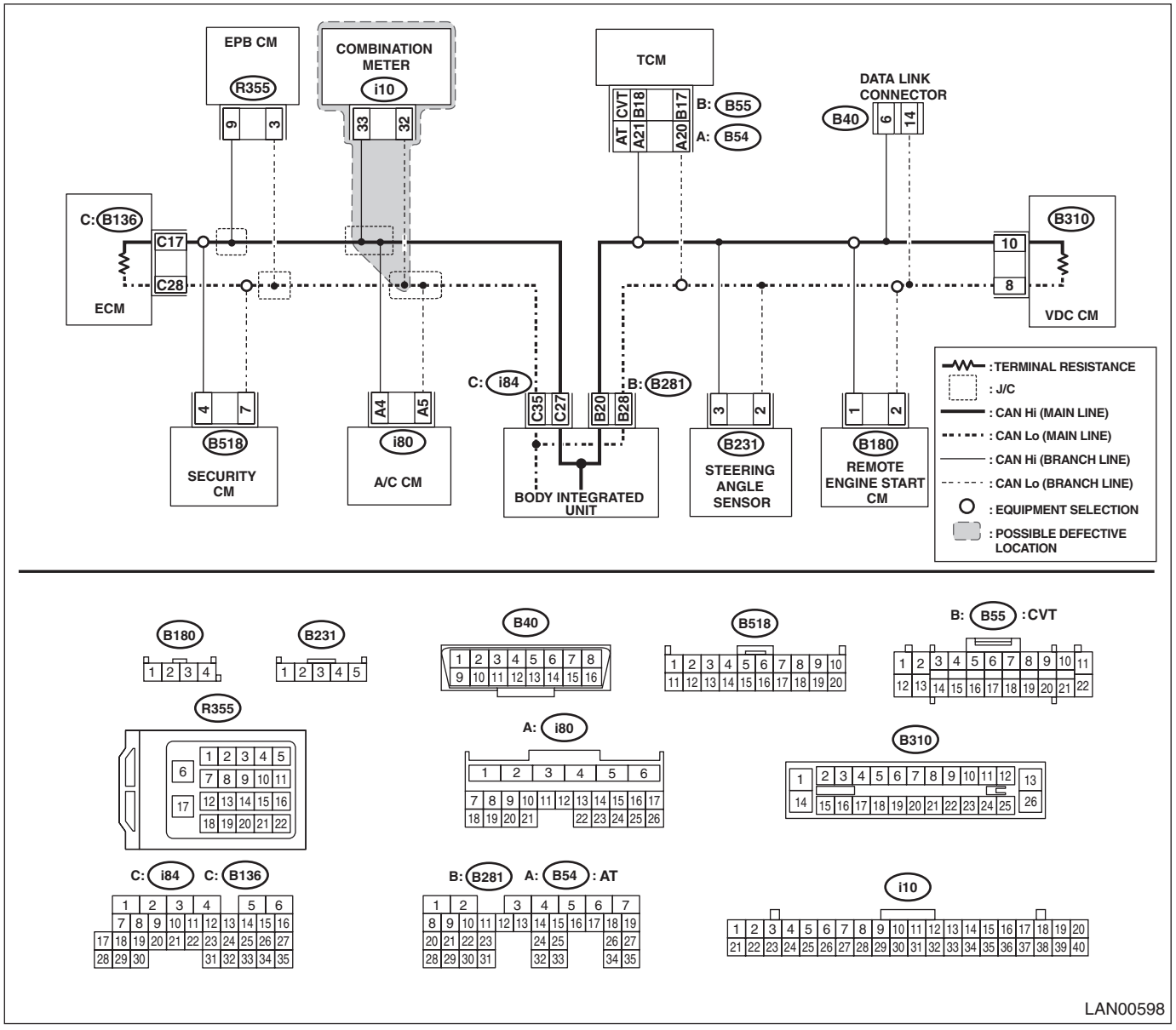

Step		Check	Yes	No
1	**CHECK BETWEEN RELATED LINES AND MAIN WIRING HARNESS.** 1) Disconnect the combination meter connector. 2) Using the tester, measure the resistance between terminals. ***Connector & terminal*** ***(i10) No. 32 — No. 33:***	Is the resistance 400 Ω or more?	Related lines between combination meter and main wiring harness is open, or main wiring harness is open at two places or more.	Go to step **2**.
2	**CHECK RELATED LINES.** Using the tester, measure the resistance between terminals. ***Connector & terminal*** ***(i10) No. 32 — (B40) No. 14:*** ***(i10) No. 33 — (B40) No. 6:***	Is the resistance 10 Ω or more?	Repair or replace the open circuit portion of combination meter related lines.	Check DTC of combination meter.

11.56 — 64 Ω (SECURITY CM)

WIRING DIAGRAM:

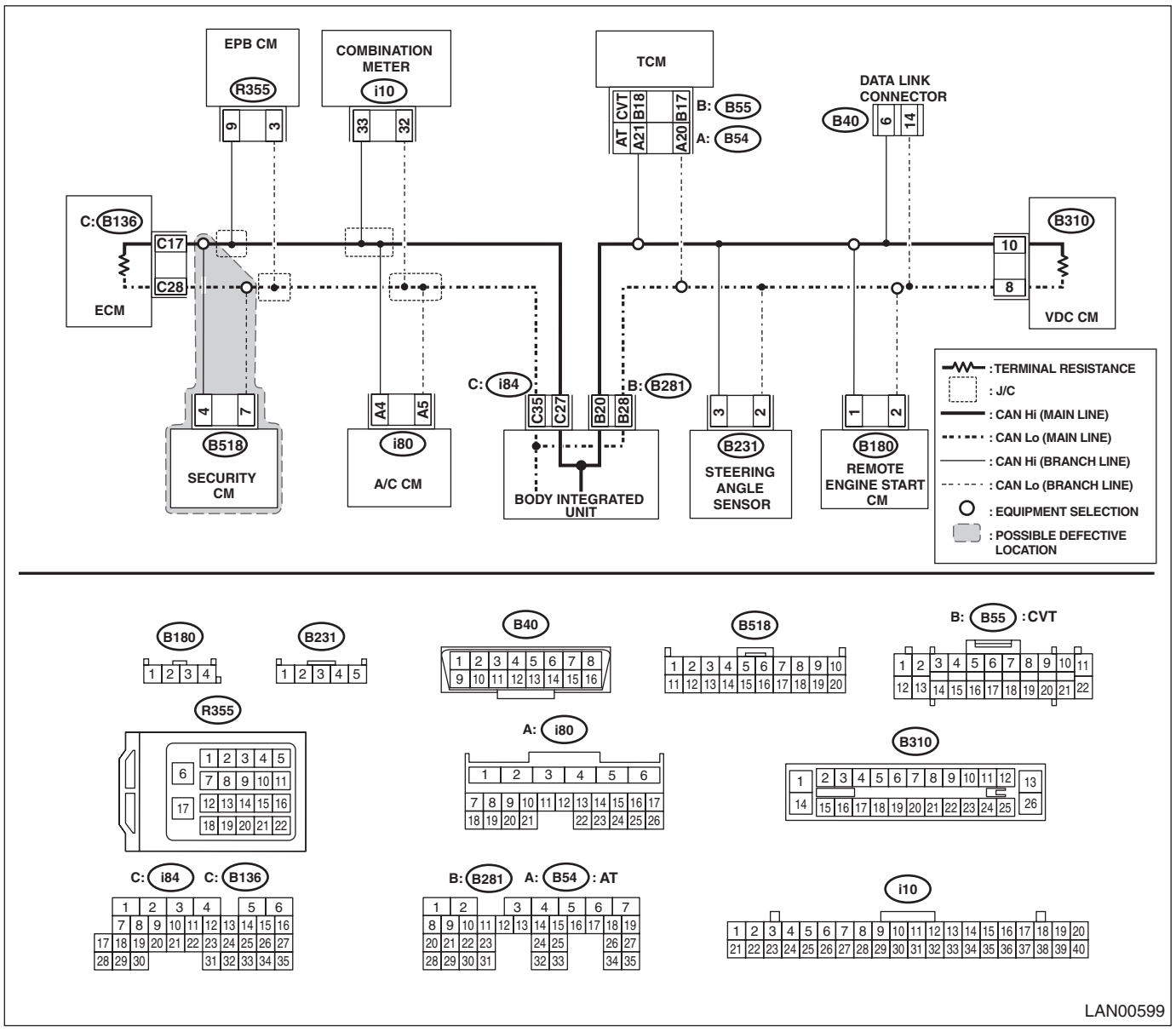

Step		Check	Yes	No
1	**CHECK BETWEEN RELATED LINES AND MAIN WIRING HARNESS.** 1) Disconnect the security CM connector. 2) Using the tester, measure the resistance between terminals. ***Connector & terminal*** ***(B518) No. 7 — No. 4:***	Is the resistance 400 Ω or more?	Related lines between security CM and main wiring harness is open, or main wiring harness is open at two places or more.	Go to step **2**.
2	**CHECK RELATED LINES.** Using the tester, measure the resistance between terminals. ***Connector & terminal*** ***(B518) No. 4 — (B40) No. 6:*** ***(B518) No. 7 — (B40) No. 14:***	Is the resistance 10 Ω or more?	Repair or replace the open circuit portion of security CM related lines.	Check DTC of immobilizer system. <Ref. to IM(diag)-9, OPERATION, Read Diagnostic Trouble Code (DTC).>

10.List of Diagnostic Trouble Code (DTC)

A: LIST

DTC	Contents	Content of diagnosis	Note
None	Communication for Initializing Impossible	Subaru Select Monitor communication is open or shorted.	<Ref. to LAN(diag)-48, COMMUNICATION FOR INITIALIZING IMPOSSIBLE, Diagnostic Procedure with Diagnostic Trouble Code (DTC).>
U1201	CAN-HS counter abnormal	High speed CAN communication error	<Ref. to LAN(diag)-50, DTC U1201 CAN-HS COUNTER ABNORMAL, Diagnostic Procedure with Diagnostic Trouble Code (DTC).>
U1202	CAN-HS Bus OFF	Communication of some module is shut down.	<Ref. to LAN(diag)-52, DTC U1202 CAN-HS BUS OFF, Diagnostic Procedure with Diagnostic Trouble Code (DTC).>
U1211	CAN-HS ECM data abnormal	Received error data from ECM.	<Ref. to LAN(diag)-54, DTC U1211 CAN-HS ECM DATA ABNORMAL, Diagnostic Procedure with Diagnostic Trouble Code (DTC).>
U1212	CAN-HS TCM data abnormal	Received error data from TCM.	<Ref. to LAN(diag)-56, DTC U1212 CAN-HS TCM DATA ABNORMAL, Diagnostic Procedure with Diagnostic Trouble Code (DTC).>
U1213	CAN-HS VDC Data Abnormal	Received error data from VDC module.	<Ref. to LAN(diag)-58, DTC U1213 CAN-HS VDC DATA ABNORMAL, Diagnostic Procedure with Diagnostic Trouble Code (DTC).>
U121A	CAN-HS Meter Unit Data Abnormal	Received error data from meter.	<Ref. to LAN(diag)-62, DTC U121A CAN-HS METER UNIT DATA ABNORMAL, Diagnostic Procedure with Diagnostic Trouble Code (DTC).>
U121B	CAN-HS A/C Data Abnormal	Received error data from A/C module.	<Ref. to LAN(diag)-64, DTC U121B CAN-HS A/C DATA ABNORMAL, Diagnostic Procedure with Diagnostic Trouble Code (DTC).>
U121C	CAN-HS SCU Data Abnormal	Received error data from SCU.	<Ref. to LAN(diag)-66, DTC U121C CAN-HS SCU DATA ABNORMAL, Diagnostic Procedure with Diagnostic Trouble Code (DTC).>
U1219	CAN-HS EPB Data Abnormal	Received error data from EPB module.	<Ref. to LAN(diag)-60, DTC U1219 CAN-HS EPB DATA ABNORMAL, Diagnostic Procedure with Diagnostic Trouble Code (DTC).>
U1221	CAN-HS ECM no-receive data	Not received data from ECM.	<Ref. to LAN(diag)-68, DTC U1221 CAN-HS ECM NO-RECEIVE DATA, Diagnostic Procedure with Diagnostic Trouble Code (DTC).>
U1222	CAN-HS TCM No-Receive Data	Not received data from TCM.	<Ref. to LAN(diag)-70, DTC U1222 CAN-HS TCM NO-RECEIVE DATA, Diagnostic Procedure with Diagnostic Trouble Code (DTC).>
U1223	CAN-HS VDC No-Receive Data	Not received data from VDC module.	<Ref. to LAN(diag)-72, DTC U1223 CAN-HS VDC NO-RECEIVE DATA, Diagnostic Procedure with Diagnostic Trouble Code (DTC).>
U122A	CAN-HS Meter No-Receive Data	Not received data from meter.	<Ref. to LAN(diag)-76, DTC U122A CAN-HS METER NO-RECEIVE DATA, Diagnostic Procedure with Diagnostic Trouble Code (DTC).>
U122B	CAN-HS A/C No-Receive Data	Not received data from A/C CM.	<Ref. to LAN(diag)-78, DTC U122B CAN-HS A/C NO-RECEIVE DATA, Diagnostic Procedure with Diagnostic Trouble Code (DTC).>
U122C	CAN-HS SCU No-Receive Data	Not received data from SCU.	<Ref. to LAN(diag)-80, DTC U122C CAN-HS SCU NO-RECEIVE DATA, Diagnostic Procedure with Diagnostic Trouble Code (DTC).>
U1229	CAN-HS EPB No-Receive Data	Not received data from EPB module.	<Ref. to LAN(diag)-74, DTC U1229 CAN-HS EPB NO-RECEIVE DATA, Diagnostic Procedure with Diagnostic Trouble Code (DTC).>

1. DTC TABLE

NOTE:
When more than one DTC codes are recorded, referring to their combination and indicator display in the combination meter will make it easy to identify the possible cause. Refer to the list for typical examples.

Combination meter display	Diagnostic Code that was displayed.						Portions with high rate of malfunction occurrence
	ECM	A/C	EPB (electronic parking brake)	Body integrated unit	TCM	VDC CM (Detailed code)	
CRUISE blink Check engine lit [S] lit [S] lit VDC OFF lit EPB operating light lit	U0122	Communication failure	Communication failure	U1222 U1223	P1718	5144 5143 5136	Hi-side circuit near the body integrated unit 1 is open
CRUISE lit Check engine lit VDC lit [S] lit	U0122 (Past)	U0002 (Past)	C0264	U1201 U1222 U1223 (Past)	P1718 (Past)	5143 5144 5136	Hi-side circuit near the body integrated unit 1 was open (restored)
CRUISE blink Check engine lit [S] lit VDC lit VDC OFF lit EPB operating light lit Shift indicator off	U0122	Communication failure	Communication failure	U1222 U1223	P1718	5144 5136	Lo-side circuit near the body integrated unit 1 is open
CRUISE blink CHECK EGI [S] blink VDC VDC OFF ABS EPB operating light lit Shift indicator off	U0122 (Past)	U0002 (Past)	C0264	U1222 U1223 (Past)	U1718 (Past)	5143 5121 5144	Lo-side circuit near the body integrated unit 1 was open (restored)
CRUISE blink CHECK EGI [S] blink VDC VDC OFF ABS EPB operating light lit Shift indicator off	U0122	Communication failure	Communication failure	U1222 U1223	P1718	5144 5136	Hi- and Lo-side circuits near the body integrated unit 1 are open
CRUISE lit CHECK EGI VDC S blink	U0122 (Past)	U0002 (Past)	C0262 C0264	U1222 U1223 (Past)	P1718 (Past)	5143 5144 5136	Hi- and Lo-side circuits near the body integrated unit 1 were open (restored)

Combination meter display	Diagnostic Code that was displayed.						Portions with high rate of malfunction occurrence
	ECM	A/C	EPB (electronic parking brake)	Body integrated unit	TCM	VDC CM (Detailed code)	
EPB OFF VDC VDC OFF Coolant temperature blink (red/blue) FUEL blink ABS EPB operating light blink EPB warning light Door off [I] blink CRUISE/blink Shift indicator off	U0073	Communication failure	Communication failure	U1201 U1202 U1221 U1223 U1229 U122A U122B	P1718	5135 5121	Hi-side circuit near the body integrated unit 1 is shorted to ground
EPB OFF VDC VDC OFF Coolant temperature blink (red/blue) FUEL blink ABS EPB operating light blink EPB warning light Door off [I] blink CRUISE/blink Shift indicator off	U0073 (Past)	U0002 (Past)	—	U1201 U1202 U1221 U1223 U1229 U122A U122B (Past)	P1718 (Past)	5143 5135 5121	Hi-side circuit near the body integrated unit 1 was shorted to ground
Normal	—	—	—	—	—	—	Lo-side circuit near the body integrated unit 1 is shorted to ground
Normal	—	—	—	—	—	—	Lo-side circuit near the body integrated unit 1 was shorted to ground
CRUISE lit CHECK EGI [S] blink VDC Shift indicator off	U0073 U0140	Communication failure	Communication failure	U1201 U1202 U1221 U1223 U1229 U122A U122B	P1718	5135 5121	Hi- and Lo-side circuits near the body integrated unit 1 are shorted
CRUISE lit CHECK EGI [S] blink VDC	U0073 U0140	U0002 (Past)	—	U1201 U1202 U1221 U1223 U1229 U122A U122B (Past)	P1718 (Past)	5143 5135 5121	Hi- and Lo-side circuits near the body integrated unit 1 were shorted

Combination meter display	Diagnostic Code that was displayed.						Portions with high rate of malfunction occurrence
	ECM	A/C	EPB (electronic parking brake)	Body integrated unit	TCM	VDC CM (Detailed code)	
CRUISE blink CHECK EGI [S] blink FUEL blink VDC VDC OFF ABS EPB operating light lit Shift indicator off	U0122	Communication failure	Communication failure	U1221 U1229 U122A U122B	P1718	5144 5136	Hi-side circuit near the body integrated unit 2 is open
CRUISE lit CHECK EGI VDC S blink	U0122 (Past)	U0002 (Past)	C0262 C0263 C0264 C0265 C0266 C0267	U1221 (Past)	P1718 (Past)	5143 5144 5136	Hi-side circuit near the body integrated unit 2 was open
CRUISE blink CHECK EGI [S] blink FUEL blink VDC VDC OFF ABS EPB operating light lit Shift indicator off	—	Communication failure	Communication failure	U1221	P1718	5144 5136	Lo-side circuit near the body integrated unit 2 is open
CRUISE lit CHECK EGI VDC S blink	—	U0002 (Past)	—	U1221 (Past)	P1718 (Past)	5143 5144 5136	Lo-side circuit near the body integrated unit 2 was open
CRUISE blink CHECK EGI [S] blink FUEL blink VDC VDC OFF ABS EPB operating light lit Shift indicator off	—	Communication failure	Communication failure	U1221	P1718	5144 5136	Hi- and Lo-side circuits near the body integrated unit 2 are open
CRUISE lit CHECK EGI VDC S blink	—	U0002 (Past)	—	U1221 (Past)	P1718 (Past)	5143 5144 5136	Hi- and Lo-side circuits near the body integrated unit 2 were open
EPB OFF VDC VDC OFF Coolant temperature blink (red/blue) FUEL blink ABS EPB operating light blink EPB warning light Door off [I] blink CRUISE/blink Shift indicator off	U0073	Communication failure	Communication failure	U1201 U1202 U1221 U1223 U1229 U122A U122B	P1718	5135 5121	Hi-side circuit near the body integrated unit 2 is shorted to ground

Combination meter display	Diagnostic Code that was displayed.						Portions with high rate of malfunction occurrence
	ECM	A/C	EPB (electronic parking brake)	Body integrated unit	TCM	VDC CM (Detailed code)	
EPB OFF VDC VDC OFF Coolant temperature blink (red/blue) FUEL blink ABS EPB operating light blink EPB warning light Door off [I] blink CRUISE/blink Shift indicator off	U0073 (Past)	U0002 (Past)	—	U1201 U1202 U1221 U1223 U1229 U122A U122B (Past)	P1718 (Past)	5143 5135 5121	Hi-side circuit near the body integrated unit 2 was shorted to ground
Normal	—	—	—	—	—	—	Lo-side circuit near the body integrated unit 2 is shorted to ground
Normal	—	—	—	—	—	—	Lo-side circuit near the body integrated unit 2 was shorted to ground
CRUISE lit CHECK EGI [S] blink VDC Shift indicator off	U0073 U0140	Communication failure	Communication failure	U1201 U1202 U1221 U1223 U1229 U122A U122B	P1718	5135 5121	Hi- and Lo-side circuits near the body integrated unit 2 are shorted
CRUISE lit CHECK EGI [S] blink VDC	U0073 U0140	U0002 (Past)	—	U1201 U1202 U1221 U1223 U1229 U122A U122B (Past)	P1718 (Past)	5143 5135 5121	Hi- and Lo-side circuits near the body integrated unit 2 were shorted
CRUISE lit CHECK EGI [S] blink VDC Shift indicator off	U0101	—	C0262	U1222	P1718 or P1725	5143 5137	Hi-side circuit near TCM is open
CRUISE lit CHECK EGI [S] blink VDC	U0101 (Past)	—	C0262	U1222 (Past)	P1718 or P1725 (Past)	5143 5137	Hi-side circuit near TCM was open
CRUISE lit CHECK EGI [S] blink VDC Shift indicator off	U0101	—	C0262	U1222	P1718 or P1725	5143 5137	Lo-side circuit near TCM is open
CRUISE lit CHECK EGI [S] blink VDC	U0101 (Past)	—	C0262	U1222 (Past)	P1718 or P1725 (Past)	5143 5137	Lo-side circuit near TCM was open

List of Diagnostic Trouble Code (DTC)

Combination meter display	Diagnostic Code that was displayed.						Portions with high rate of malfunction occurrence
	ECM	A/C	EPB (electronic parking brake)	Body integrated unit	TCM	VDC CM (Detailed code)	
CRUISE lit CHECK EGI [S] blink VDC Shift indicator off	U0101	—	C0262	U1222	P1718 or P1725	5143 5137	Hi- and Lo-side circuits near TCM are open
CRUISE lit CHECK EGI [S] blink VDC	U0101 (Past)	—	C0262	U1222 (Past)	P1718 or P1725 (Past)	5143 5137	Hi- and Lo-side circuits near TCM were open
EPB OFF VDC VDC OFF Coolant temperature blink (red/blue) FUEL blink ABS EPB operating light blink EPB warning light CHECK EGI Door off [I] blink CRUISE/blink Shift indicator off	U0073	Communication failure	Communication failure	U1201 U1202 U1221 U1223 U1229 U122A U122B	P1718 or P1725	5135 5136 5152	Hi-side circuit near TCM is shorted to ground
CRUISE lit CHECK EGI VDC S blink	U0073 (Past)	U0002 (Past)	—	U1201 U1202 U1221 U1223 U1229 U122A U122B (Past)	P1718 or P1725 (Past)	5143 5135 5136	Hi-side circuit near TCM was shorted to ground
Normal	—	—	—	—	—	—	Lo-side circuit near TCM is shorted to ground
Normal	—	—	—	—	—	—	Lo-side circuit near TCM was shorted to ground
EPB OFF VDC VDC OFF Coolant temperature blink (red/blue) FUEL blink ABS EPB operating light blink EPB warning light CHECK EGI Door off [I] blink CRUISE/blink Shift indicator off	U0073	Communication failure	Communication failure	U1201 U1202 U1221 U1223 U1229 U122A U122B	P1718 or P1725	5135 5121	Hi- and Lo-side circuits near TCM are shorted

List of Diagnostic Trouble Code (DTC)

Combination meter display	Diagnostic Code that was displayed.						Portions with high rate of malfunction occurrence
	ECM	A/C	EPB (electronic parking brake)	Body integrated unit	TCM	VDC CM (Detailed code)	
CRUISE lit CHECK EGI VDC S blink	U0073 (Past)	U0001 U0002 (Past)	C0261	U1201 U1202 U1221 U1223 U1229 U122A U122B (Past)	U1718 or P1725 (Past)	5143 5135 5121	Hi- and Lo-side circuits near TCM were shorted
CRUISE lit	—	Communication failure	—	U122B	—	—	Hi-side circuit near A/C is open
Normal	—	U0001 U0002 (Past)	—	U122B (Past)	—	—	Hi-side circuit near A/C was open
AT_OIL blink VDC CRUISE lit	—	Communication failure	—	U122B U1201	P1718 or P1725	5135 5121	Lo-side circuit near A/C is open
Normal	—	U0001 U0002	—	U1201 U122B (Past)	P1718 or P1725 (Past)	5144 5135 5121	Lo-side circuit near A/C was open
CRUISE lit	—	Communication failure	—	U122B	—	—	Hi- and Lo-side circuits near A/C are open
Normal	—	U0002 (Past)	—	U122B (Past)	—	—	Hi- and Lo-side circuits near A/C were open
EPB OFF VDC VDC OFF Coolant temperature blink (red/blue) FUEL blink ABS EPB operating light blink EPB warning light CHECK EGI Door off [I] blink CRUISE/blink Shift indicator off	U0073 U0122	Communication failure	Communication failure	U1201 U1202 U1221 U1223 U1229 U122A U122B	P1718 or P1725	5135 5137 5121	Hi-side circuit near A/C is shorted to ground
CRUISE lit CHECK EGI VDC S blink	—	U0001 U0002 (Past)	—	U1201 U1202 U1221 U1223 U1229 U122A U122B (Past)	P1718 or P1725 (Past)	5143 5135 5137	Hi-side circuit near A/C was shorted to ground
Normal	—	—	—	—	—	—	Lo-side circuit near A/C is shorted to ground
Normal	—	—	—	—	—	—	Lo-side circuit near A/C was shorted to ground

Combination meter display	Diagnostic Code that was displayed.						Portions with high rate of malfunction occurrence
	ECM	A/C	EPB (electronic parking brake)	Body integrated unit	TCM	VDC CM (Detailed code)	
EPB OFF VDC VDC OFF Coolant temperature blink (red/blue) FUEL lit ABS EPB operating light blink EPB warning light CHECK EGI Door off [I] blink CRUISE/blink Shift indicator off	U0073	Communication failure	Communication failure	U1201 U1202 U1221 U1223 U1229 U122A U122B	P1718 or P1725	5135 5136 5152	Hi- and Lo-side circuits near A/C are shorted
CRUISE lit CHECK EGI VDC S blink	U0073 (Past)	U0001 U0002 (Past)	C0261	U1201 U1202 U1221 U1223 U1229 U122A U122B (Past)	P1718 or P1725 (Past)	5143 5135 5136	Hi- and Lo-side circuits near A/C were shorted
CRUISE lit Coolant temperature blink (red/blue) CHECK EGI ATOIL I blink FUEL blink VDC EPS warning light	U0073	Communication failure	C0261 C0263	U1201 U1202 U1221	P1718	5144 5135 5121	Hi-side circuit near ECM is open
CRUISE lit CHECK EGI VDC S blink	U0073 (Past)	U0001 U0002	—	U1201 U1202 U1221 (Past)	P1718 (Past)	5143	Hi-side circuit near ECM was open
CRUISE lit Coolant temperature blink (red/blue) CHECK EGI ATOIL blink I blink FUEL blink VDC	U0073	Communication failure	C0261 C0263	U1201 U1202 U1221	P1718	5144 5135 5136	Lo-side circuit near ECM is open
CRUISE lit CHECK EGI VDC S blink	U0073 (Past)	U0001 U0002 (Past)	C0261 C0263	U1201 U1202 U1221 (Past)	P1718 (Past)	5143 5144 5135	Lo-side circuit near ECM was open

Combination meter display	Diagnostic Code that was displayed.						Portions with high rate of malfunction occurrence
	ECM	A/C	EPB (electronic parking brake)	Body integrated unit	TCM	VDC CM (Detailed code)	
CRUISE lit Coolant temperature blink (red/blue) CHECK EGI ATOIL blink I blink FUEL blink VDC	U0073	U0002	C0263	U1221 U1201	P1718	5144 5136	Hi- and Lo-side circuits near ECM are open
CRUISE lit CHECK EGI VDC S blink	U0073 (Past)	U0001 U0002 (Past)	C0263	U1201 U1221 (Past)	P1718 (Past)	5143 5144 5136	Hi- and Lo-side circuits near ECM were open
EPB OFF VDC VDC OFF Coolant temperature blink (red/blue) FUEL blink ABS EPB operating light blink EPB warning light CHECK EGI Door off [I] blink CRUISE/blink Shift indicator off	U0073	Communication failure	Communication failure	U1201 U1202 U1221 U1223 U1229 U122A U122B	P1718	5135 5121	Hi-side circuit near ECM is shorted to ground
CRUISE lit CHECK EGI VDC S blink	U0073 (Past)	U0001 U0002	—	U1201 U1202 U1221 U1223 U1229 U122A U122B (Past)	P1718 (Past)	5143 5135 5121	Hi-side circuit near ECM was shorted to ground
Normal	—	—	—	—	—	—	Lo-side circuit near ECM is shorted to ground
Normal	—	—	—	—	—	—	Lo-side circuit near ECM was shorted to ground
EPB OFF VDC VDC OFF Coolant temperature blink (red/blue) FUEL blink ABS EPB operating light blink EPB warning light CHECK EGI Door off [I] blink CRUISE/blink Shift indicator off	U0073 U0122	Communication failure	Communication failure	U1201 U1202 U1221 U1223 U1229 U122A U122B	P1718	5143 5135 5144	Hi- and Lo-side circuits near ECM are shorted

Combination meter display	Diagnostic Code that was displayed.						Portions with high rate of malfunction occurrence
	ECM	A/C	EPB (electronic parking brake)	Body integrated unit	TCM	VDC CM (Detailed code)	
CRUISE lit CHECK EGI VDC S blink	U0073 U0122 (Past)	U0001 U0002 (Past)	C0261	U1201 U1202 U1221 U1223 U1229 U122A U122B (Past)	P1718 (Past)	5143 5135 5144	Hi- and Lo-side circuits near ECM were shorted
EPB OFF VDC VDC OFF Coolant temperature blink (red/blue) FUEL blink ABS EPB operating light blink EPB warning light Door off [I] blink CRUISE/blink Shift indicator off	—	U0002	C0267	U122A	—	—	Hi-side circuit near meter is open
Normal	—	U0002 (Past)	C0267	U122A (Past)	—	—	Hi-side circuit near meter was open
EPB OFF VDC VDC OFF Coolant temperature blink (red/blue) FUEL blink ABS EPB operating light blink EPB warning light Door off [I] blink CRUISE/blink Shift indicator off	—	U0002	C0267	U122A	—	—	Lo-side circuit near meter is open
Normal	—	U0002	C0267	U122A (Past)	—	—	Lo-side circuit near meter was open
EPB OFF VDC VDC OFF Coolant temperature blink (red/blue) FUEL blink ABS EPB operating light blink EPB warning light Door off [I] blink CRUISE/blink Shift indicator off	—	U0002	C0267	U122A	—	—	Hi- and Lo-side circuits near meter are open

Combination meter display	Diagnostic Code that was displayed.						Portions with high rate of malfunction occurrence
	ECM	A/C	EPB (electronic parking brake)	Body integrated unit	TCM	VDC CM (Detailed code)	
Normal	—	U0002	C0267	U122A (Past)	—	—	Hi- and Lo-side circuits near meter were open
CRUISE lit CHECK EGI VDC S blink	U0122 U0073	Communication failure	Communication failure	U1201 U1202 U1221 U1223 U1229 U122A U122B	P1718 or P1725	5135 5137 5136	Hi-side circuit near meter is shorted to ground
CRUISE lit CHECK EGI VDC S blink	U0122 U0073 (Past)	U0001 U0002 (Past)	C0261	U1201 U1202 U1221 U1223 U1229 U122A U122B (Past)	P1718 or P1725 (Past)	5143 5135 5137	Hi-side circuit near meter was shorted to ground
Normal	—	—	—	—	—	—	Lo-side circuit near meter is shorted to ground
Normal	—	—	—	—	—	—	Lo-side circuit near meter was shorted to ground
EPB OFF VDC VDC OFF Coolant temperature blink (red/blue) FUEL blink ABS EPB operating light blink EPB warning light CHECK EGI Door off [I] blink CRUISE/blink Shift indicator off	U0073	Communication failure	Communication failure	U1201 U1202 U1221 U1223 U1229 U122A U122B	P1718 or P1725	5135 5121	Hi- and Lo-side circuits near meter are shorted
CRUISE lit CHECK EGI VDC S blink	U0073 (Past)	U0001 U0002 (Past)	C0261	U1201 U1202 U1221 U1223 U1229 U122A U122B (Past)	P1718 or P1725 (Past)	5134 5135 5121	Hi- and Lo-side circuits near meter were shorted
EPB OFF EPB operating light blink EPB warning light CRUISE/lit	—	—	Communication failure	U1229	—	—	Hi-side circuit near electronic parking brake is open
Normal	—	—	C0261	U1229	—	—	Hi-side circuit near electronic parking brake was open

Combination meter display	Diagnostic Code that was displayed.						Portions with high rate of malfunction occurrence
	ECM	A/C	EPB (electronic parking brake)	Body integrated unit	TCM	VDC CM (Detailed code)	
EPB OFF EPB operating light blink EPB warning light CRUISE/lit	—	—	Communication failure	U1229	—	—	Lo-side circuit near electronic parking brake is open
Normal	—	—	C0261	U1229	—	—	Lo-side circuit near electronic parking brake was open
EPB OFF EPB operating light blink EPB warning light CRUISE/lit	—	—	Communication failure	U1229	—	—	Hi- and Lo-side circuits near electronic parking brake are open
Normal	—	—	C0261	U1229	—	—	Hi- and Lo-side circuits near electronic parking brake were open
EPB OFF VDC VDC OFF Coolant temperature blink (red/blue) FUEL blink ABS EPB operating light blink EPB warning light CHECK EGI Door off [I] blink CRUISE/blink Shift indicator off	U0073 U0122	Communication failure	Communication failure	U1201 U1202 U1221 U1229 U122A U122B	P1718 or P1725	51335 5137 5121	Hi-side circuit near electronic parking brake is shorted to ground
CRUISE lit CHECK EGI VDC S blink	U0073 U0122 (Past)	U0001 U0002 (Past)	C0261	U1201 U1202 U1221 U1223 U1229 U122A U122B (Past)	P1718 or P1725 (Past)	5143 5135 5137	Hi-side circuit near electronic parking brake was shorted to ground
Normal	—	—	—	—	—	—	Lo-side circuit near electronic parking brake is shorted to ground
Normal	—	—	—	—	—	—	Lo-side circuit near electronic parking brake was shorted to ground

Combination meter display	Diagnostic Code that was displayed.						Portions with high rate of malfunction occurrence
	ECM	A/C	EPB (electronic parking brake)	Body integrated unit	TCM	VDC CM (Detailed code)	
EPB OFF VDC VDC OFF Coolant temperature blink (red/blue) FUEL blink ABS EPB operating light blink EPB warning light CHECK EGI Door off [I] blink CRUISE/blink Shift indicator off	U0073	Communication failure	Communication failure	U1201 U1202 U1221 U1223 U1229 U122A U122B	P1718 or P1725	5135 5121	Hi- and Lo-side circuits near electronic parking brake are shorted
CRUISE lit CHECK EGI VDC S blink	U0073 (Past)	U0001 U0002 (Past)	C0261	U1201 U1202 U1221 U1223 U1229 U122A U122B (Past)	P1718 or P1725	5143 5135 5121	Hi- and Lo-side circuits near electronic parking brake were shorted
CRUISE lit VDC OFF CHECK EGI ATOIL blink VDC S blink EPS warning light ABS	U0122	U0002	C0264	U1223	P1718	5135 5136 5137	Hi-side circuit near VDC is open
CRUISE lit CHECK EGI VDC S blink	—	—	C0264	U1223 (Past)	—	5143	Hi-side circuit near VDC was open
CRUISE lit VDC OFF CHECK EGI ATOIL blink VDC S blink EPS warning light ABS	U0122	U0002	C0264	U1201 U1202 U1223	P1718	5135 5136 5152	Lo-side circuit near VDC is open
CRUISE lit CHECK EGI VDC S blink	—	—	C0264	U1201 U1202 U1223 (Past)	—	5143	Lo-side circuit near VDC was open
CRUISE lit VDC OFF CHECK EGI ATOIL blink VDC S blink EPS warning light ABS	U0122	U0002	C0264	U1223	P1718	5135 5136 5137	Hi- and Lo-side circuits near VDC are open

Combination meter display	Diagnostic Code that was displayed.						Portions with high rate of malfunction occurrence
	ECM	A/C	EPB (electronic parking brake)	Body integrated unit	TCM	VDC CM (Detailed code)	
CRUISE lit CHECK EGI VDC S blink	—	—	C0264	U1223 (Past)	—	5143	Hi- and Lo-side circuits near VDC were open
EPB OFF VDC VDC OFF Coolant temperature blink (red/blue) FUEL blink ABS EPB operating light blink EPB warning light CHECK EGI Door off [I] blink CRUISE/blink Shift indicator off	U0073	Communication failure	Communication failure	U1201 U1202 U1221 U1223 U1229 U122A U122B	P1718	5135 5121	Hi-side circuit near VDC is shorted to ground
CRUISE lit CHECK EGI VDC S blink	—	U0001 U0002	C0261	U1201 U1202 U1221 U1223 U1229 U122A U122B (Past)	—	5143	Hi-side circuit near VDC was shorted to ground
Normal	—	—	—	—	—	—	Lo-side circuit near VDC is shorted to ground
Normal	—	U0028	—	—	—	—	Lo-side circuit near VDC was shorted to ground
EPB OFF VDC VDC OFF Coolant temperature blink (red/blue) FUEL blink ABS EPB operating light blink EPB warning light CHECK EGI Door off [I] blink CRUISE/blink Shift indicator off	U0073	Communication failure	Communication failure	U1201 U1202 U1221 U1223 U1229 U122A U122B	P1718	5135 5152 5136	Hi- and Lo-side circuits near VDC are shorted
CRUISE lit CHECK EGI VDC S blink	U0073 (Past)	U0028	—	U1201 U1202 U1221 U1223 U1229 U122A U122B (Past)	P1718 (Past)	5143	Hi- and Lo-side circuits near VDC were shorted

Combination meter display	Diagnostic Code that was displayed.						Portions with high rate of malfunction occurrence
	ECM	A/C	EPB (electronic parking brake)	Body integrated unit	TCM	VDC CM (Detailed code)	
CRUISE lit VDC	—	—	—	U1201 U1202	—	5121	Hi-side circuit near steering angle sensor is open
Normal	—	—	—	U1201 U1202 (Past)	—	5121	Hi-side circuit near steering angle sensor was open
CRUISE lit VDC	—	—	—	U1201	—	5121	Lo-side circuit near steering angle sensor is open
Normal	—	—	—	U1201 (Past)	—	5121	Lo-side circuit near steering angle sensor was open
CRUISE lit VDC	—	U0028 (Past)	—	—	—	5121	Hi- and Lo-side circuits near steering angle sensor are open
Normal	—	U0028 (Past)	—	—	—	5121	Hi- and Lo-side circuits near steering angle sensor were open
EPB OFF VDC VDC OFF Coolant temperature blink (red/blue) FUEL blink ABS EPB operating light blink EPB warning light CHECK EGI Door off [I] blink CRUISE/blink Shift indicator off	U0073	Communication failure	Communication failure	U1201 U1202 U1221 U1223 U1229 U122A U122B	P1718 or P1725	5135 5137	Hi-side circuit near steering angle sensor is shorted to ground
VDC CHECK EGI [S] blink CRUISE lit	U0073 (Past)	U0001 U0002 (Past)	C0261	U1201 U1202 U1221 U1223 U1229 U122A U122B (Past)	P1718 or P1725 (Past)	5143 5135	Hi-side circuit near steering angle sensor was shorted to ground
Normal	—	—	—	—	—	—	Lo-side circuit near steering angle sensor is shorted to ground
Normal	—	—	—	—	—	—	Lo-side circuit near steering angle sensor was shorted to ground

List of Diagnostic Trouble Code (DTC)

Combination meter display	Diagnostic Code that was displayed.						Portions with high rate of malfunction occurrence
	ECM	A/C	EPB (electronic parking brake)	Body integrated unit	TCM	VDC CM (Detailed code)	
EPB OFF VDC VDC OFF Coolant temperature blink (red/blue) FUEL blink ABS EPB operating light blink EPB warning light CHECK EGI Door off [I] blink CRUISE/blink Shift indicator off	U0073	Communication failure	Communication failure	U1201 U1202 U1221 U1223 U1229 U122A U122B	P1718 or P1725	5135 5152 5136	Hi- and Lo-side circuits near steering angle sensor are shorted
VDC CHECK EGI [S] blink CRUISE lit	U0073 (Past)	U0001 U0002 (Past)	C0261	U1201 U1202 U1221 U1223 U1229 U122A U122B (Past)	P1718 or P1725 (Past)	5143 5135 5152	Hi- and Lo-side circuits near steering angle sensor were shorted

11.Diagnostic Procedure with Diagnostic Trouble Code (DTC)

A: COMMUNICATION FOR INITIALIZING IMPOSSIBLE

NOTE:
• This is an inspection method for control modules using the Subaru Select Monitor communication line (K-line).
• For the control modules that read trouble code and current data using CAN communication circuit, perform diagnosis following DTCs for CAN communications.

DIAGNOSIS:
Subaru Select Monitor communication line (K-line) is open or shorted.

TROUBLE SYMPTOM:
Not communicable with Subaru Select Monitor.

WIRING DIAGRAM:

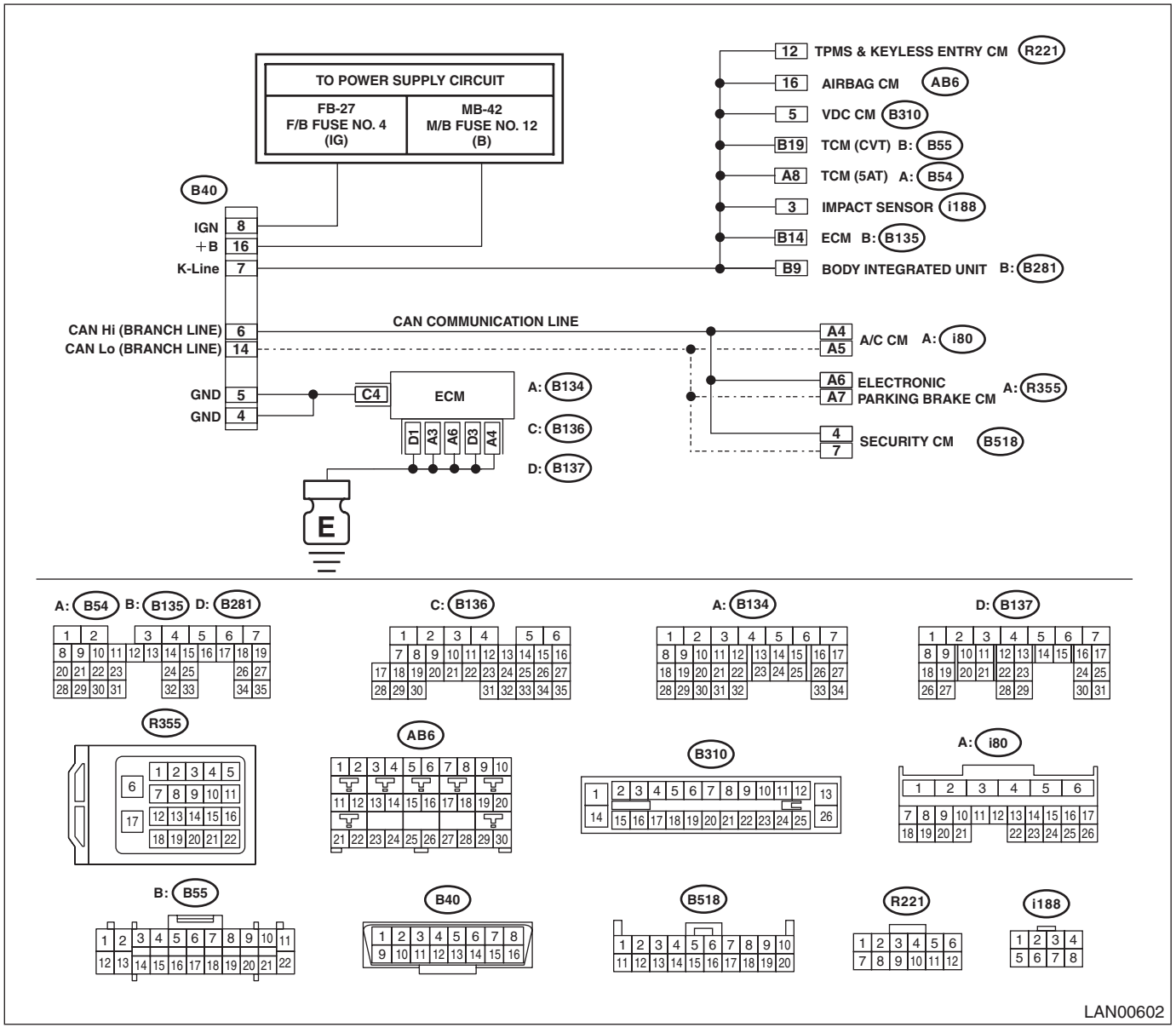

Step		Check	Yes	No
1	**CHECK COMBINATION METER.** 1) Connect the Subaru Select Monitor. 2) Start the engine. 3) Check display of combination meter.	Does the warning lights illuminate or gauge have display error?	Go to step **2**.	Go to step **4**.

	Step	Check	Yes	No
2	**CHECK SUBARU SELECT MONITOR.** 1) Connect the Subaru Select Monitor to another vehicle. 2) Check communication condition between Subaru Select Monitor and vehicle.	Is communication performed normally?	Go to step **3**.	Subaru Select Monitor unit or diagnosis cable is faulty.
3	**CHECK CAN COMMUNICATION CIRCUIT.** Check CAN communication circuit. (Refer to the inspection for CAN communication circuit.) <Ref. to LAN(diag)-12, CAN Communication Circuit Check.>	Is the CAN communication circuit normal?	Replace the modules that did not perform communication.	Repair the CAN communication circuit.
4	**CHECK K-LINE.** 1) Perform communication between Subaru Select Monitor and all modules. 2) Check continuity between the modules that did not communicate with Subaru Select Monitor. ***Connector & terminal*** ***(B40) No. 7 — (AB6) No. 16:*** ***(B40) No. 7 — (B310) No. 5:*** ***(B40) No. 7 — (B55) No. 19 (CVT):*** ***(B40) No. 7 — (B54) No. 8 (5AT):*** ***(B40) No. 7 — (B135) No. 14:*** ***(B40) No. 7 — (B281) No. 9:*** ***(B40) No. 7 — (R221) No. 12 (TPMS):*** ***(B40) No. 7 — (i188) No. 3 (OP):***	Is there continuity?	Go to step **5**.	Repair or replace the open circuit.
5	**CHECK K-LINE.** Check continuity between K-line and chassis ground. ***Connector & terminal*** ***(B40) No. 7 — Chassis ground:***	Is there continuity?	Repair or replace the short circuit portion.	Go to step **6**.
6	**CHECK K-LINE.** Check voltage between K-line and chassis ground. ***Connector & terminal*** ***(B40) No. 7 — Chassis ground:***	Is the voltage 5 V or more with IG ON?	Repair or replace the short circuit portion.	Go to step **7**.
7	**CHECK GROUND CIRCUIT.** Check continuity of ground circuit. ***Connector & terminal*** ***(B40) No. 4 — Chassis ground:*** ***(B40) No. 5 — Chassis ground:***	Is there continuity?	Go to step **9**.	Go to step **8**.
8	**CHECK HARNESS.** 1) Disconnect the ECM connector. 2) Check continuity between data link connector and ECM. ***Connector & terminal*** ***(B40) No. 4 — (B137) No. 4:*** ***(B40) No. 5 — (B137) No. 4:***	Is there continuity?	Check ECM ground.	Repair or replace the open circuit.
9	**CHECK POWER SUPPLY CIRCUIT.** Check the power supply circuit for data link connector. ***Connector & terminal*** ***(B40) No. 8 (+) — Chassis ground (–):*** ***(B40) No. 16 (+) — Chassis ground (–):***	Is the voltage 10 V or more?	The vehicle is normal.	Check the power supply circuits to the data link connector.

CAUTION:
When replacing body integrated unit on the model with immobilizer system, refer to the "PC application help for Subaru Select Monitor"

B: DTC U1201 CAN-HS COUNTER ABNORMAL

DTC DETECTING CONDITION:

Communication is unstable because of high speed CAN communication error.

TROUBLE SYMPTOM:

- Display of combination meter indicates faulty.
- Control faulty may occur due to CAN communication error.

WIRING DIAGRAM:

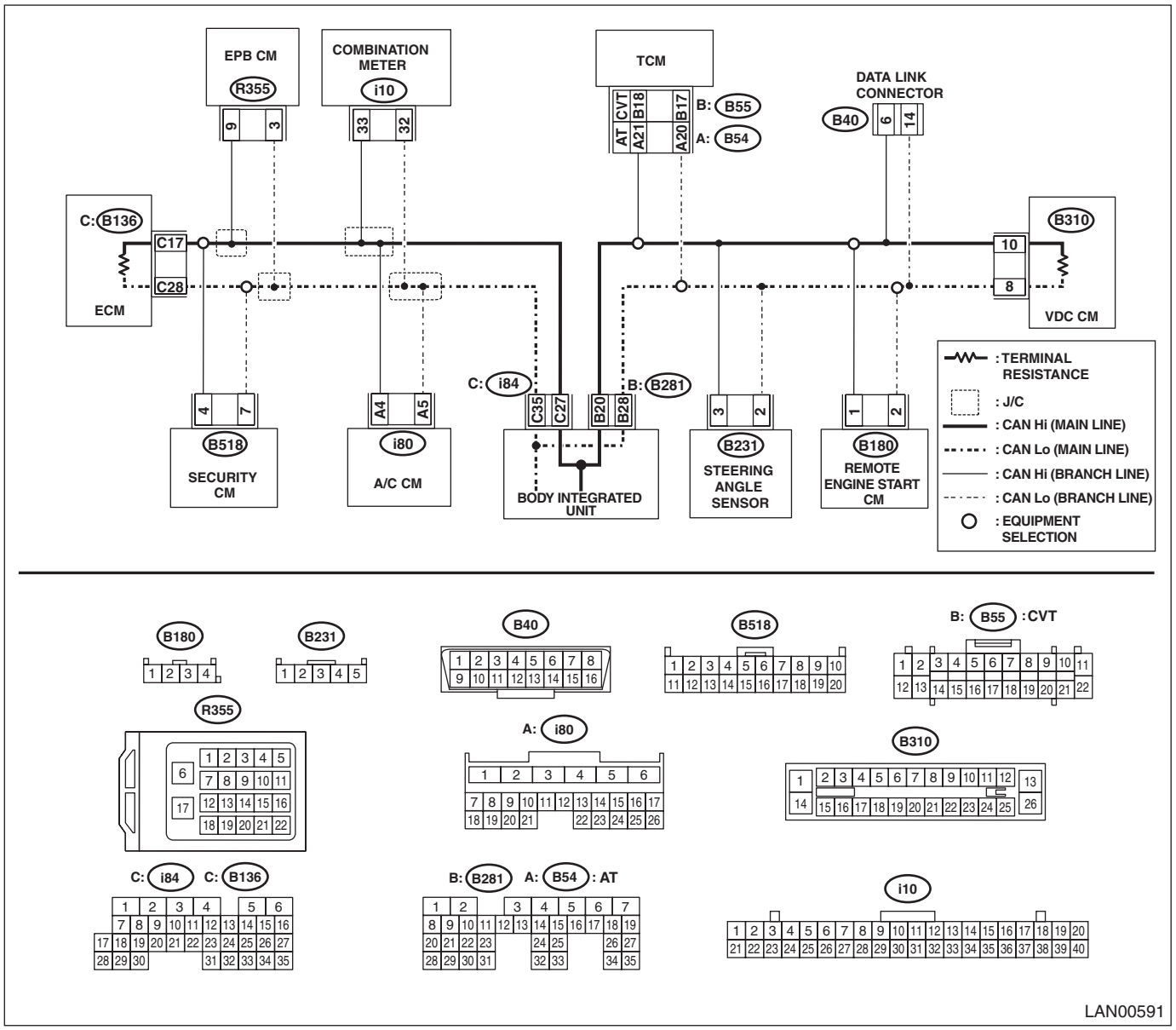

Step		Check	Yes	No
1	**CHECK CAN COMMUNICATION CIRCUIT.** Check CAN communication circuit. <Ref. to LAN(diag)-12, PROCEDURE, CAN Communication Circuit Check.>	Is CAN communication circuit faulty?	Repair the faulty portion, following the diagnosis procedure.	Go to step **2**.

	Step	Check	Yes	No
2	**CHECK DTC.** 1) Start the engine. 2) Using the Subaru Select Monitor, read DTC of CAN system.	Is U1202 a current malfunction?	Perform the diagnosis of U1202. <Ref. to LAN(diag)-50, DTC U1201 CAN-HS COUNTER ABNORMAL, Diagnostic Procedure with Diagnostic Trouble Code (DTC).>	Go to step **3**.
3	**CHECK DTC.** Check the displayed DTC.	Is U1201 a current malfunction?	Go to step **4**.	It is possible that temporary poor communication occurs. Perform the clear memory.
4	**CHECK DTC.** 1) Turn the ignition switch to ON. 2) Using the Subaru Select Monitor, read DTC of CAN system.	Is U1201 a current malfunction?	Go to step **5**.	It is possible that temporary poor communication occurs. Perform the clear memory.
5	**CHECK CONTROL MODULE.** 1) Turn the ignition switch to OFF. 2) Disconnect the control modules other than body integrated unit in order. NOTE: When disconnecting ECM or VDC CM, connect resistance of 120 Ω between CAN Hi and CAN Lo as an alternative of end resistance. 3) Turn the ignition switch to ON. 4) Using the Subaru Select Monitor, read DTC of CAN system.	Is there any control module that U1201 is not detected as current malfunction?	Replace the control module.	Repeat 1) to 4) in step 5 until U1201 is not detected.

C: DTC U1202 CAN-HS BUS OFF

DTC DETECTING CONDITION:
Integrated unit communication is shut down because of high speed CAN error.
TROUBLE SYMPTOM:
CAN communication is not normal.
WIRING DIAGRAM:

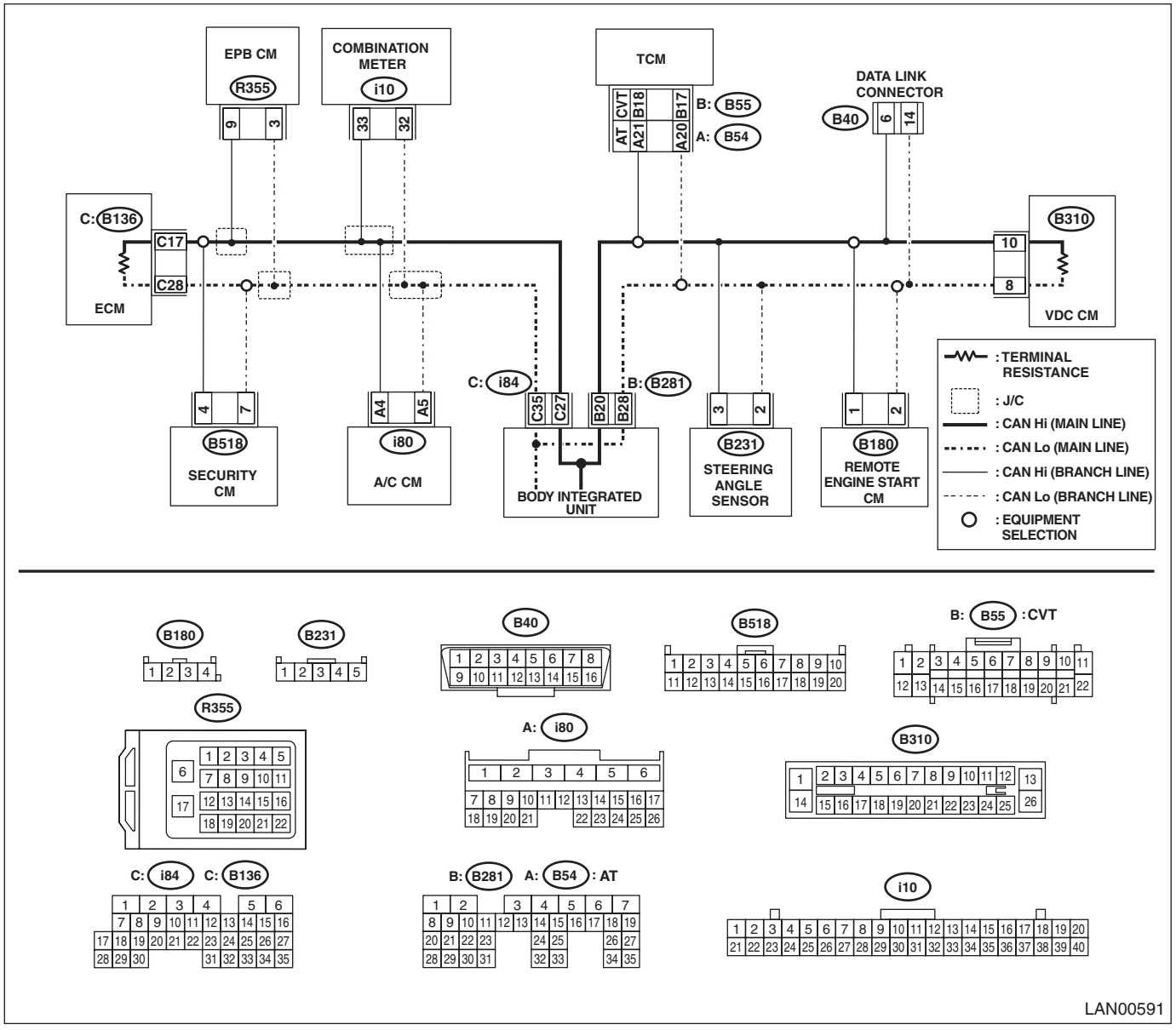

Step		Check	Yes	No
1	**CHECK CAN COMMUNICATION CIRCUIT.** Check CAN communication circuit. <Ref. to LAN(diag)-12, PROCEDURE, CAN Communication Circuit Check.>	Is CAN communication circuit faulty?	Repair the faulty portion, following the diagnosis procedure.	Go to step **2**.
2	**CHECK DTC.** 1) Start the engine. 2) Using the Subaru Select Monitor, read DTC of CAN system.	Is U1202 a current malfunction?	Go to step **3**.	It may be a temporary poor contact. Perform the clear memory.

	Step	Check	Yes	No
3	**CHECK CONTROL MODULE.** 1) Turn the ignition switch to OFF. 2) Disconnect the control modules other than body integrated unit in order. NOTE: When disconnecting ECM or VDC CM, connect resistance of 120 Ω between CAN Hi and CAN Lo as an alternative of end resistance. 3) Turn the ignition switch to ON. 4) Using the Subaru Select Monitor, read DTC of CAN system.	Is there any control module that U1201 is not detected as current malfunction?	Replace the control module.	Repeat 1) to 4) in step 3 until U1202 is not detected.

D: DTC U1211 CAN-HS ECM DATA ABNORMAL

DTC DETECTING CONDITION:
Defective data from ECM.
TROUBLE SYMPTOM:
Defective data on CAN communication occurs.
WIRING DIAGRAM:

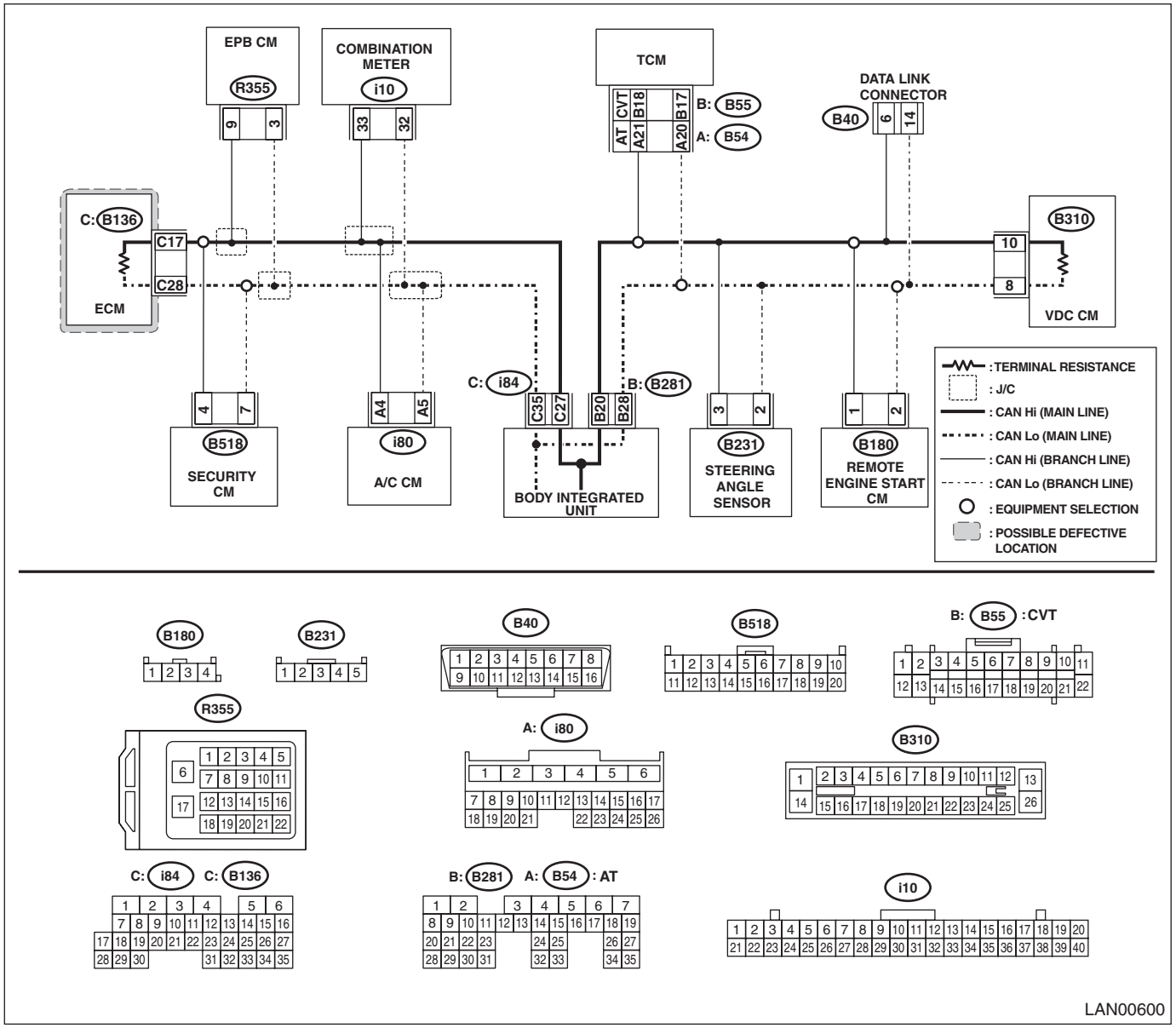

Step		Check	Yes	No
1	**CHECK DTC.** Using the Subaru Select Monitor, read all DTCs.	Is there DTC other than CAN system?	Perform the diagnosis according to DTCs for other control modules.	Go to step **2**.
2	**CHECK DTC.** Check DTC indicated in CAN system.	Is U1211 a current malfunction?	Go to step **3**.	Go to step **4**.

	Step	Check	Yes	No
3	**CHECK DTC.** 1) Turn the ignition switch to OFF. 2) Disconnect the ECM connector. 3) Connect the disconnected connectors. 4) Using the Subaru Select Monitor, read DTC of CAN system.	Is U1211 a current malfunction?	Replace the ECM. <Ref. to FU(H6DO)-54, Engine Control Module (ECM).>	Go to step **4**.
4	**CHECK HARNESS.** 1) Shake the harness, and check for poor contact. 2) Using the Subaru Select Monitor, read DTC of CAN system.	Is U1211 a current malfunction?	Repair the poor contact of harness, or replace the harness.	Go to step **5**.
5	**CHECK CONNECTOR.** Check the connector used for high speed CAN for poor contact.	Is there poor contact of connector?	Repair the connector that has poor contact, or replace harness.	It is possible that temporary poor communication occurs. Delete the DTC.

E: DTC U1212 CAN-HS TCM DATA ABNORMAL

DTC DETECTING CONDITION:
Received error data from TCM.
TROUBLE SYMPTOM:
SPORT indicator light blinks.
WIRING DIAGRAM:

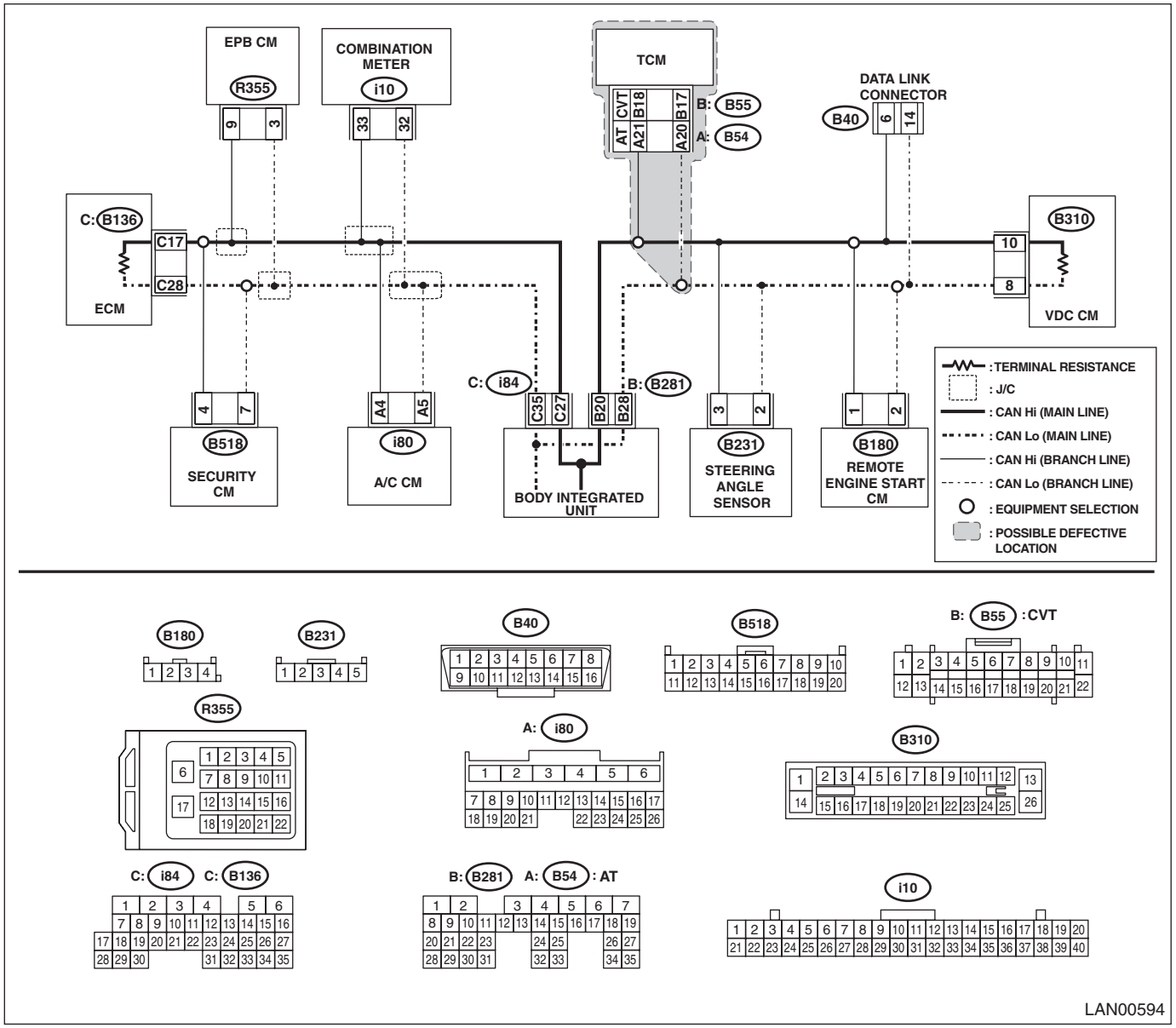

LAN00594

Step		Check	Yes	No
1	**CHECK DTC.** Using the Subaru Select Monitor, read all DTCs.	Is there DTC other than CAN system?	Perform the diagnosis according to DTCs for other control modules.	Go to step **2**.
2	**CHECK DTC.** Check DTC indicated in CAN system.	Is U1212 a current malfunction?	Go to step **3**.	Go to step **4**.

	Step	Check	Yes	No
3	**CHECK DTC.** 1) Turn the ignition switch to OFF. 2) Disconnect the TCM connector. 3) Connect the disconnected connectors. 4) Using the Subaru Select Monitor, read DTC of CAN system.	Is U1212 a current malfunction?	Replace the TCM. <Ref. to 5AT-57, Transmission Control Module (TCM).>	Go to step **4**.
4	**CHECK HARNESS.** 1) Shake the harness, and check for poor contact. 2) Using the Subaru Select Monitor, read DTC of CAN system.	Is U1212 a current malfunction?	Repair the poor contact of harness, or replace the harness.	Go to step **5**.
5	**CHECK CONNECTOR.** Check the connector used for high speed CAN for poor contact.	Is there poor contact of connector?	Repair the connector that has poor contact, or replace harness.	A temporary communication failure may be a possible cause. Clear the DTC memory.

F: DTC U1213 CAN-HS VDC DATA ABNORMAL

DTC DETECTING CONDITION:
Data from VDCCM is faulty.
TROUBLE SYMPTOM:
ABS warning light and VDC warning light illuminate.
WIRING DIAGRAM:

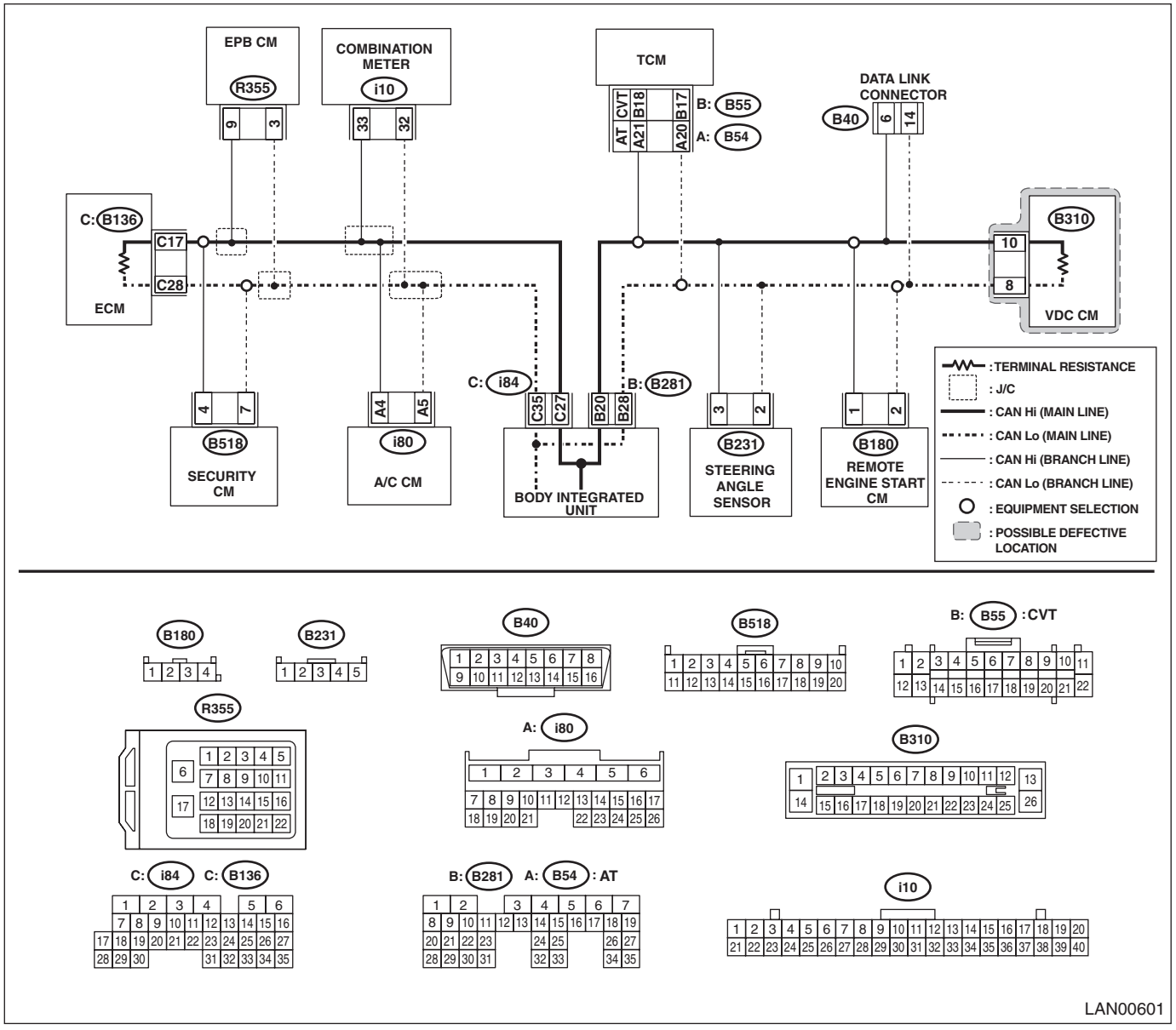

LAN00601

Step		Check	Yes	No
1	**CHECK DTC.** Using the Subaru Select Monitor, read all DTCs.	Is there DTC other than CAN system?	Perform the diagnosis according to DTCs for other control modules.	Go to step **2**.
2	**CHECK DTC.** Check DTC indicated in CAN system.	Is U1213 a current malfunction?	Go to step **3**.	Go to step **4**.

	Step	Check	Yes	No
3	**CHECK DTC.** 1) Turn the ignition switch to OFF. 2) Disconnect the VDC CM connector. 3) Connect the disconnected connectors. 4) Using the Subaru Select Monitor, read DTC of CAN system.	Is U1213 a current malfunction?	Replace the VDC CM. <Ref. to VDC-9, VDC Control Module and Hydraulic Control Unit (VDCCM&H/U).>	Go to step **4**.
4	**CHECK HARNESS.** 1) Shake the harness, and check for poor contact. 2) Using the Subaru Select Monitor, read DTC of CAN system.	Is U1213 a current malfunction?	Repair the poor contact of harness, or replace the harness.	Go to step **5**.
5	**CHECK CONNECTOR.** Check the connector used for high speed CAN for poor contact.	Is there poor contact of connector?	Repair the connector that has poor contact, or replace harness.	A temporary communication failure may be a possible cause. Clear the DTC memory.

G: DTC U1219 CAN-HS EPB DATA ABNORMAL

DTC DETECTING CONDITION:
Defective data was transmitted from electronic parking brake control module.
TROUBLE SYMPTOM:
Electronic parking brake cooperation control does not operate.
WIRING DIAGRAM:

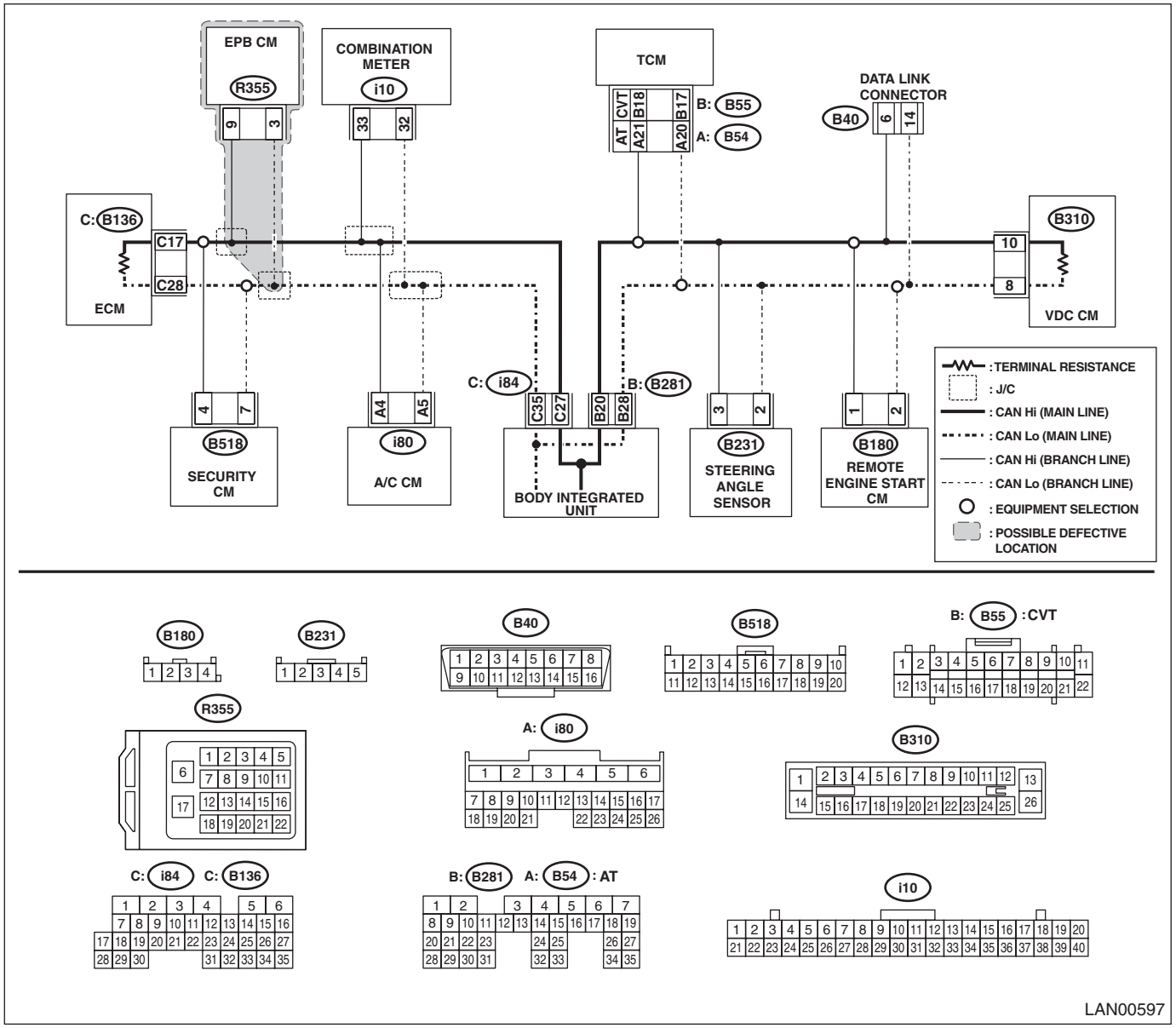

Step		Check	Yes	No
1	**CHECK DTC.** Using the Subaru Select Monitor, read all DTCs.	Is there DTC other than CAN system?	Perform the diagnosis according to DTCs for other control modules.	Go to step **2**.
2	**CHECK DTC.** Check DTC indicated in CAN system.	Is U1219 a current malfunction?	Go to step **3**.	Go to step **4**.

	Step	Check	Yes	No
3	**CHECK DTC.** Turn the ignition switch to OFF, and read the DTC again.	Is U1219 a current malfunction?	Replace the electronic parking CM. <Ref. to PB-6, REMOVAL, Parking Brake Actuator.>	Go to step **4**.
4	**CHECK ELECTRIC PARKING CM.** 1) Disconnect the electronic parking CM connector. 2) Using the Subaru Select Monitor, perform the clear memory. 3) Using the Subaru Select Monitor, read DTC of CAN system.	Is the displayed DTC other than U1219?	Go to step **5**.	Replace the electronic parking CM. <Ref. to PB-6, REMOVAL, Parking Brake Actuator.>
5	**CHECK ELECTRIC PARKING CM.** 1) Connect the electronic parking CM connector. 2) Using the Subaru Select Monitor, read DTC of electronic parking CM. <Ref. to PB(diag)-14, OPERATION, Subaru Select Monitor.>	Is DTC other than CAN system displayed?	Perform the diagnosis according to DTC.	Replace the body integrated unit. <Ref. to SL-71, REMOVAL, Body Integrated Unit.>

H: DTC U121A CAN-HS METER UNIT DATA ABNORMAL

DTC DETECTING CONDITION:
Defective data was transmitted from combination meter.
TROUBLE SYMPTOM:
Display of combination meter does not operate properly.
WIRING DIAGRAM:

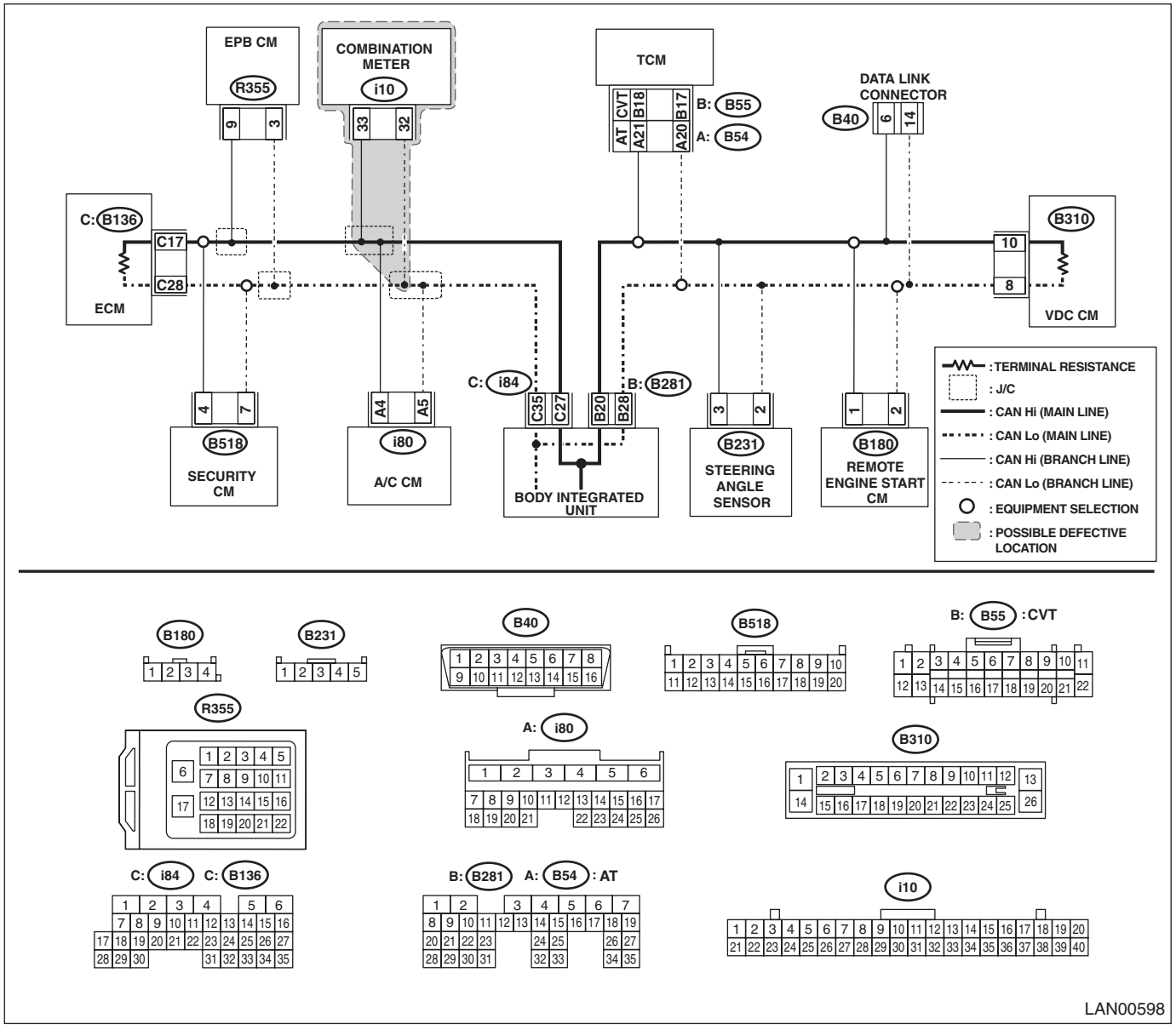

LAN00598

Step		Check	Yes	No
1	**CHECK DTC.** Using the Subaru Select Monitor, read all DTCs.	Is there DTC other than CAN system?	Perform the diagnosis according to DTCs for other control modules.	Go to step **2**.
2	**CHECK DTC.** Check DTC indicated in CAN system.	Is U121A a current malfunction?	Go to step **3**.	Go to step **4**.
3	**CHECK DTC.** Turn the ignition switch to OFF, and read the DTC again.	Is U121A a current malfunction?	Replace the combination meter. <Ref. to IDI-21, REMOVAL, Combination Meter.>	Go to step **4**.

	Step	Check	Yes	No
4	**CHECK COMBINATION METER.** 1) Disconnect the combination meter connector. 2) Using the Subaru Select Monitor, perform the clear memory. 3) Using the Subaru Select Monitor, read DTC of CAN system.	Is the displayed DTC other than U121A?	Go to step **5**.	Replace the combination meter. <Ref. to IDI-21, REMOVAL, Combination Meter.>
5	**CHECK COMBINATION METER.** 1) Connect the combination meter connector. 2) Using the Subaru Select Monitor, read DTC of combination meter. <Ref. to IDI-6, SELF-DIAGNOSIS DISPLAY MODE, OPERATION, Combination Meter System.>	Is DTC other than CAN system displayed?	Perform the diagnosis according to DTC.	Replace the body integrated unit. <Ref. to SL-71, REMOVAL, Body Integrated Unit.>

I: DTC U121B CAN-HS A/C DATA ABNORMAL

DTC DETECTING CONDITION:
Defective data was transmitted from A/C CM.
TROUBLE SYMPTOM:
Cooperation control of air conditioner does not operate properly.
WIRING DIAGRAM:

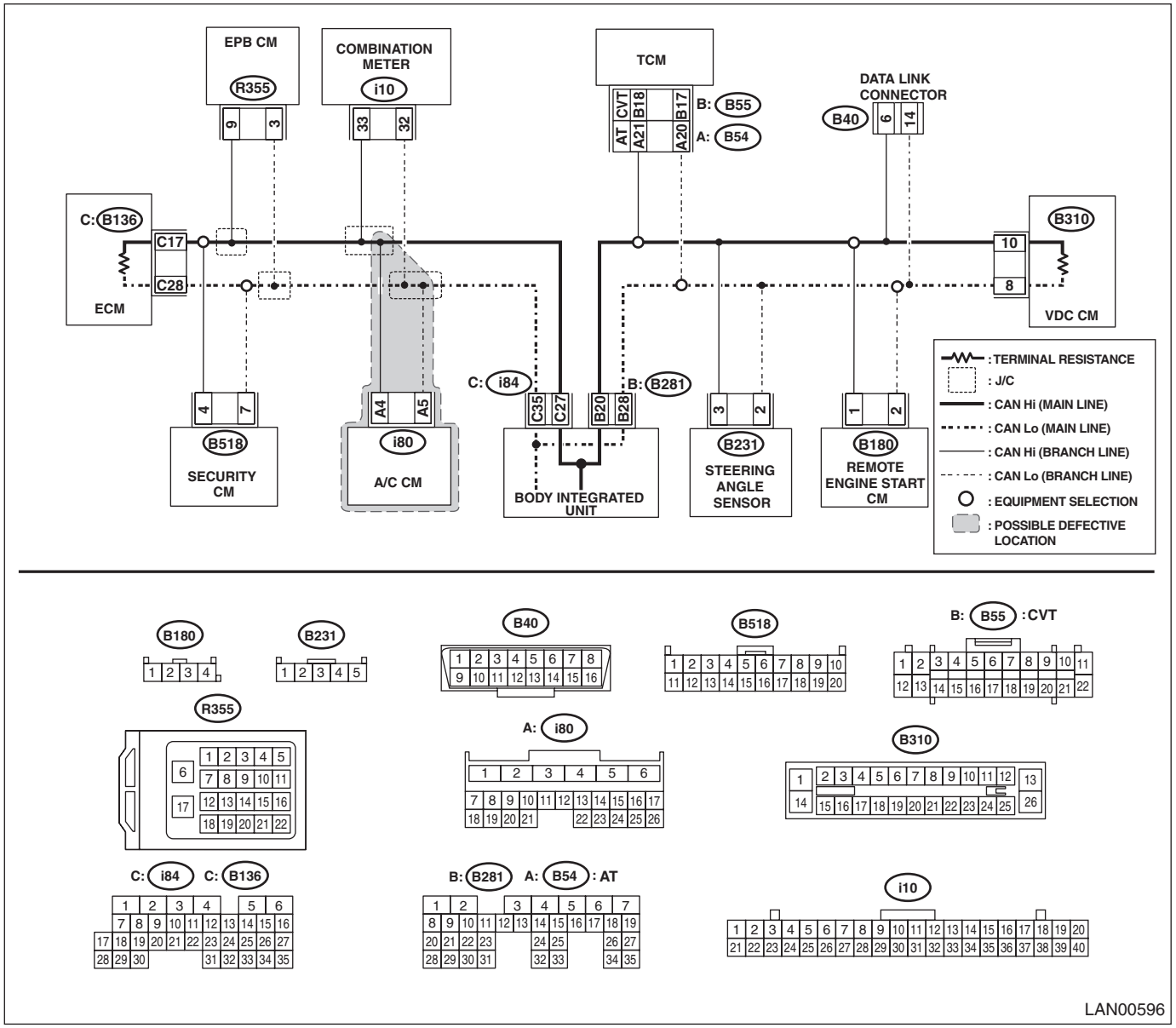

Step		Check	Yes	No
1	**CHECK DTC.** Using the Subaru Select Monitor, read all DTCs.	Is there DTC other than CAN system?	Perform the diagnosis according to DTCs for other control modules.	Go to step **2**.
2	**CHECK DTC.** Check DTC indicated in CAN system.	Is U121B a current malfunction?	Go to step **3**.	Go to step **4**.
3	**CHECK DTC.** Turn the ignition switch to OFF, and read the DTC again.	Is U121B a current malfunction?	Replace the A/C CM. <Ref. to AC-54, REMOVAL, Control Unit.>	Go to step **4**.

	Step	Check	Yes	No
4	**CHECK A/C CM.** 1) Disconnect the A/C CM connector. 2) Using the Subaru Select Monitor, perform the clear memory. 3) Using the Subaru Select Monitor, read DTC of CAN system.	Is the displayed DTC other than U121B?	Go to step **5**.	Replace the A/C CM. <Ref. to AC-54, REMOVAL, Control Unit.>
5	**CHECK A/C CM.** 1) Connect the A/C CM connector. 2) Using the Subaru Select Monitor, read DTC of A/C CM. <Ref. to AC(diag)-46, OPERATION, Subaru Select Monitor.>	Is DTC other than CAN system displayed?	Perform the diagnosis according to DTC.	Replace the body integrated unit. <Ref. to SL-71, REMOVAL, Body Integrated Unit.>

J: DTC U121C CAN-HS SCU DATA ABNORMAL

DTC DETECTING CONDITION:
Defective data was transmitted from SCM.
TROUBLE SYMPTOM:
Immobilizer does not operate normally.
WIRING DIAGRAM:

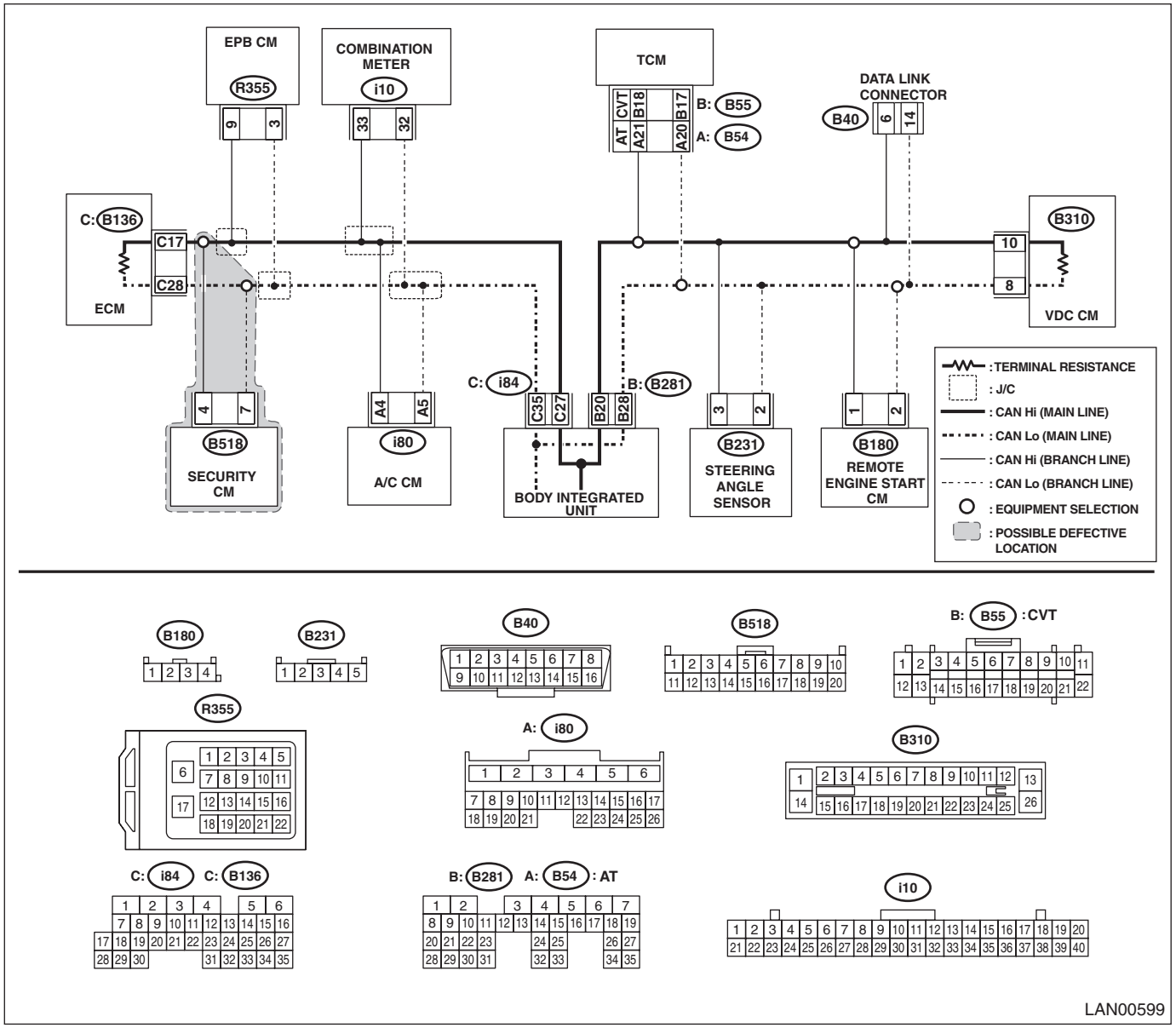

LAN00599

Step		Check	Yes	No
1	**CHECK DTC.** Using the Subaru Select Monitor, read all DTCs.	Is there DTC other than CAN system?	Perform the diagnosis according to DTCs for other control modules.	Go to step **2**.
2	**CHECK DTC.** Check DTC indicated in CAN system.	Is U121C a current malfunction?	Go to step **3**.	Go to step **4**.
3	**CHECK DTC.** Turn the ignition switch to OFF, and read the DTC again.	Is U121C a current malfunction?	Replace SCM. <Ref. to SL-65, REMOVAL, Security Control Module.>	Go to step **4**.

	Step	Check	Yes	No
4	**CHECK SCM.** 1) Disconnect the connector from SCM. 2) Using the Subaru Select Monitor, perform the clear memory. 3) Using the Subaru Select Monitor, read DTC of CAN system.	Is the displayed DTC other than U121C?	Go to step **5**.	Replace SCM. <Ref. to SL-65, REMOVAL, Security Control Module.>
5	**CHECK SCM.** 1) Connect the SCM connector. 2) Using the Subaru Select Monitor, read DTC of immobilizer. <Ref. to IM(diag)-9, OPERATION, Read Diagnostic Trouble Code (DTC).>	Is DTC other than CAN system displayed?	Perform the diagnosis according to DTC.	Replace the body integrated unit. <Ref. to SL-71, REMOVAL, Body Integrated Unit.>

K: DTC U1221 CAN-HS ECM NO-RECEIVE DATA

DTC DETECTING CONDITION:
Not received data from ECM.
TROUBLE SYMPTOM:
Cooperation control of transmission may not operate properly.
WIRING DIAGRAM:

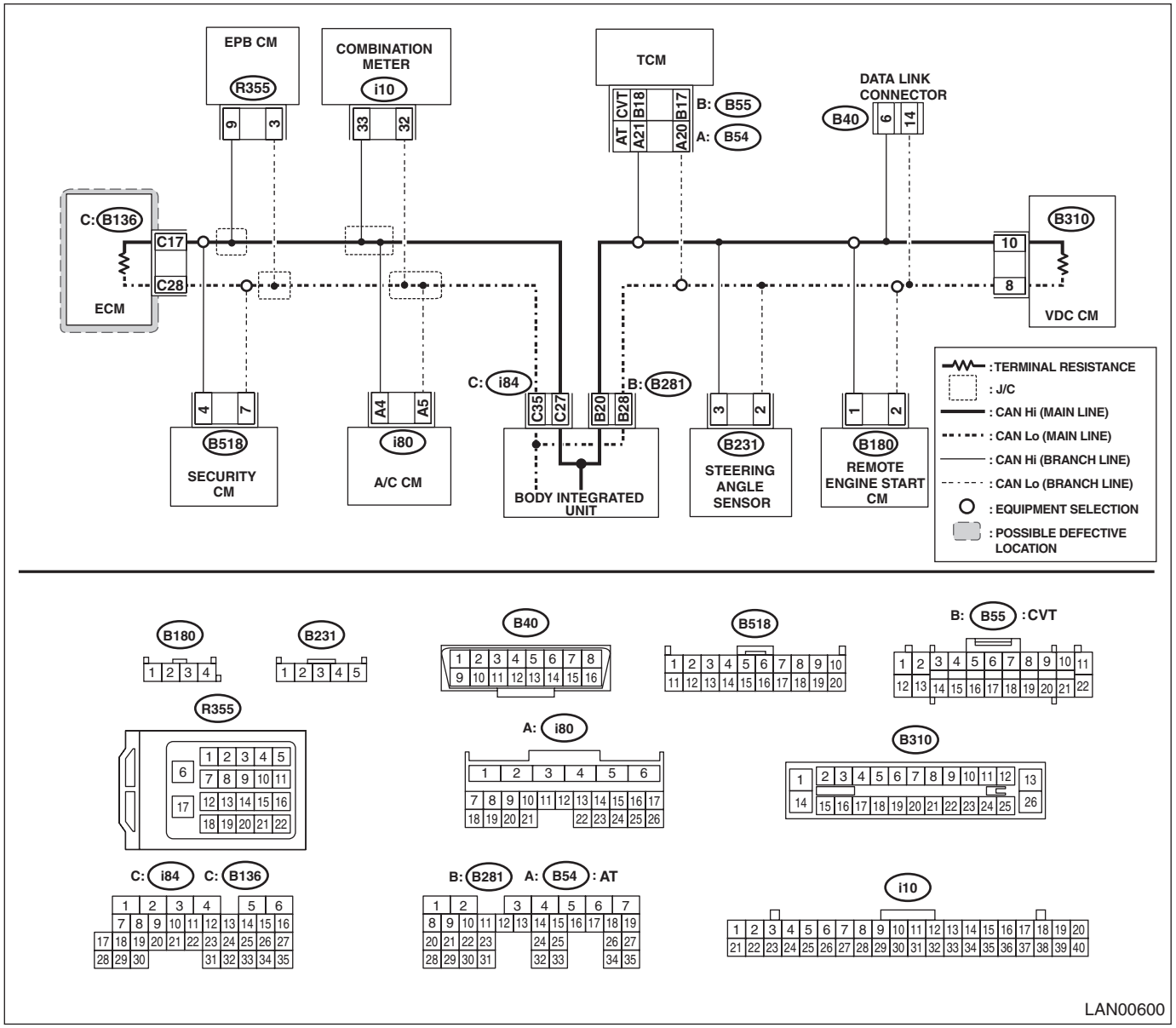

Step		Check	Yes	No
1	**CHECK DTC.** Using the Subaru Select Monitor, read all DTCs.	Is there DTC other than CAN system?	Perform the diagnosis according to DTCs for other control modules.	Go to step **2**.
2	**CHECK DTC.** Check DTC indicated in CAN system.	Is U1221 a current malfunction?	Go to step **3**.	Go to step **7**.

	Step	Check	Yes	No
3	**CHECK DTC.** 1) Turn the ignition switch to OFF. 2) Disconnect the control module connector that is connected to high speed CAN. 3) Connect the disconnected connectors. 4) Using the Subaru Select Monitor, read DTC of CAN system.	Is U1221 a current malfunction?	Go to step **4**.	Go to step **7**.
4	**CHECK HARNESS.** 1) Turn the ignition switch to OFF. 2) Disconnect the control module connector that is connected to high speed CAN. 3) Using the tester, measure the resistance between terminals. ***Connector & terminal*** ***(B40) No. 6 — (B136) No. 17:*** ***(B40) No. 14 — (B136) No. 28:***	Is the resistance 10 Ω or less?	Go to step **5**.	Repair the open circuit of harness or replace harness.
5	**CHECK DTC.** 1) Connect the disconnected connectors. 2) Start the engine. 3) Turn the ignition switch to OFF. 4) Using the Subaru Select Monitor, read DTC of CAN system.	Is U1221 a current malfunction?	Go to step **6**.	Go to step **7**.
6	**CHECK DTC.** Using the Subaru Select Monitor, read all DTCs.	Is P1718, C0044, C0045 detected?	Replace the ECM. <Ref. to FU(H4DOTC)-58, REMOVAL, Engine Control Module (ECM).>	Replace the body integrated unit. <Ref. to SL-71, REMOVAL, Body Integrated Unit.>
7	**CHECK HARNESS.** 1) Shake the harness, and check for poor contact. 2) Using the Subaru Select Monitor, read DTC of CAN system.	Is U1221 a current malfunction?	Repair the poor contact of harness, or replace the harness.	Go to step **8**.
8	**CHECK CONNECTOR.** Check the connector used for high speed CAN for poor contact.	Is there poor contact of connector?	Repair the connector, or replace harness.	It is possible that temporary poor communication occurs. Delete the DTC.

L: DTC U1222 CAN-HS TCM NO-RECEIVE DATA

DTC DETECTING CONDITION:
Not received data from TCM.
TROUBLE SYMPTOM:
Cooperation control with transmission is not performed.
WIRING DIAGRAM:

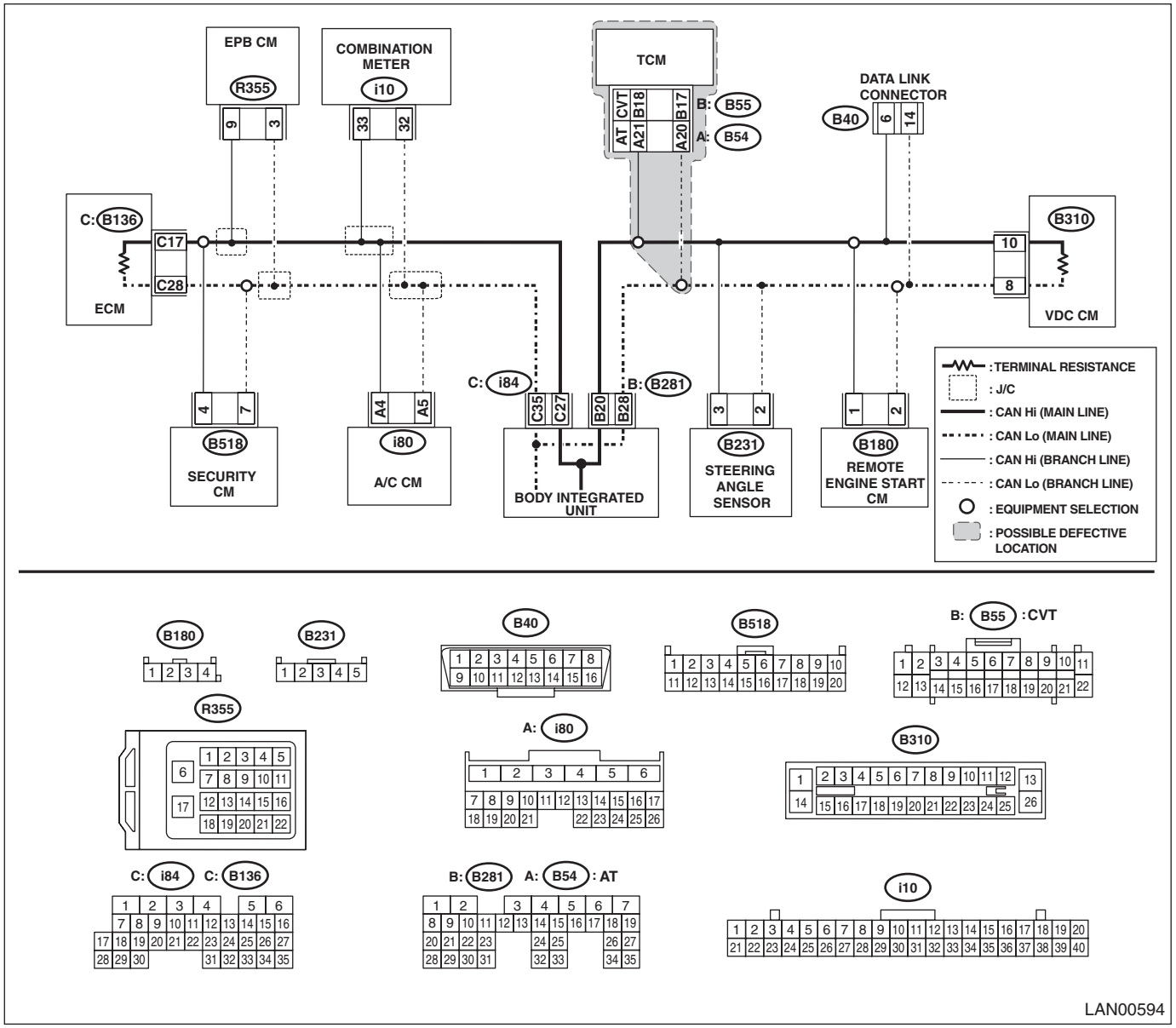

Step		Check	Yes	No
1	**CHECK DTC.** Using the Subaru Select Monitor, read all DTCs.	Is there DTC other than CAN system?	Perform the diagnosis according to DTCs for other control modules.	Go to step **2**.
2	**CHECK DTC.** Check DTC indicated in CAN system.	Is U1222 a current malfunction?	Go to step **3**.	Go to step **7**.

	Step	Check	Yes	No
3	**CHECK DTC.** 1) Turn the ignition switch to OFF. 2) Disconnect the control module connector that is connected to high speed CAN. 3) Connect the disconnected connectors. 4) Using the Subaru Select Monitor, read DTC of CAN system.	Is U1222 a current malfunction?	Go to step **4**.	Go to step **7**.
4	**CHECK HARNESS.** 1) Turn the ignition switch to OFF. 2) Disconnect the control module connector that is connected to high speed CAN. 3) Using the tester, measure the resistance between terminals. ***Connector & terminal*** ***(B40) No. 6 — (B55) No. 18 (CVT):*** ***(B40) No. 14 — (B55) No. 17 (CVT):*** ***(B40) No. 6 — (B54) No. 21 (5AT):*** ***(B40) No. 14 — (B54) No. 20 (5AT):***	Is the resistance 10 Ω or less?	Go to step **5**.	Repair the open circuit of harness or replace harness.
5	**CHECK DTC.** 1) Connect the disconnected connectors. 2) Start the engine. 3) Turn the ignition switch to OFF (stop the engine). 4) Using the Subaru Select Monitor, read DTC of CAN system.	Is U1222 a current malfunction?	Go to step **6**.	Go to step **7**.
6	**CHECK DTC.** Using the Subaru Select Monitor, read all DTCs.	Is P1718, C0044, C0045 detected?	Replace the TCM. <Ref. to 5AT-57, REMOVAL, Transmission Control Module (TCM).>	Replace the body integrated unit. <Ref. to SL-71, REMOVAL, Body Integrated Unit.>
7	**CHECK HARNESS.** 1) Shake the harness, and check for poor contact. 2) Using the Subaru Select Monitor, read DTC of CAN system.	Is U1222 a current malfunction?	Repair the open circuit of harness or replace harness.	Go to step **8**.
8	**CHECK CONNECTOR.** Check the connector used for high speed CAN for poor contact.	Is there poor contact of connector?	Repair the connector, or replace harness.	It is possible that temporary poor communication occurs. Delete the DTC.

M: DTC U1223 CAN-HS VDC NO-RECEIVE DATA

DTC DETECTING CONDITION:
No data from VDCCM is received.
TROUBLE SYMPTOM:
ABS warning light and VDC warning light illuminate.
WIRING DIAGRAM:

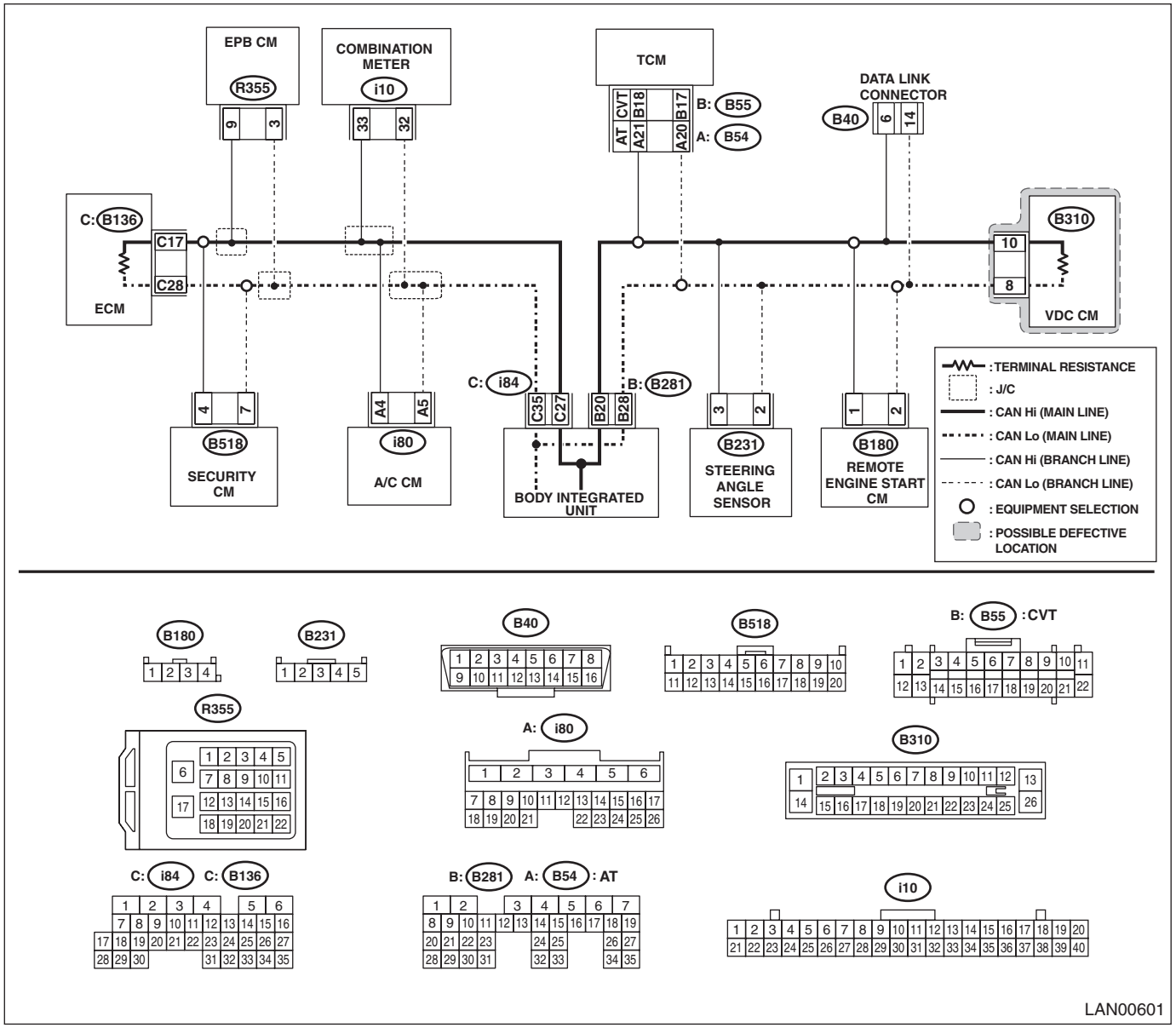

Step		Check	Yes	No
1	**CHECK DTC.** Using the Subaru Select Monitor, read all DTCs.	Is there DTC other than CAN system?	Perform the diagnosis according to DTCs for other control modules.	Go to step **2**.
2	**CHECK DTC.** Check DTC indicated in CAN system.	Is U1223 a current malfunction?	Go to step **3**.	Go to step **7**.

	Step	Check	Yes	No
3	**CHECK DTC.** 1) Turn the ignition switch to OFF. 2) Disconnect the control module connector that is connected to high speed CAN. 3) Connect the disconnected connectors. 4) Using the Subaru Select Monitor, read DTC of CAN system.	Is U1223 a current malfunction?	Go to step **4**.	Go to step **7**.
4	**CHECK HARNESS.** 1) Turn the ignition switch to OFF. 2) Disconnect the control module connector that is connected to high speed CAN. 3) Using the tester, measure the resistance between terminals. ***Connector & terminal*** ***(B40) No. 6 — (B310) No. 10:*** ***(B40) No. 6 — (B231) No. 3:*** ***(B40) No. 14 — (B310) No. 8:*** ***(B40) No. 14 — (B231) No. 2:***	Is the resistance 10 Ω or less?	Go to step **5**.	Repair the open circuit of harness or replace harness.
5	**CHECK DTC.** 1) Connect the disconnected connectors. 2) Start the engine. 3) Turn the ignition switch to OFF. 4) Using the Subaru Select Monitor, read DTC of CAN system.	Is U1223 a current malfunction?	Go to step **6**.	Go to step **7**.
6	**CHECK DTC.** Using the Subaru Select Monitor, read all DTCs.	Is P1718 detected?	Replace the VDC CM. <Ref. to VDC-9, REMOVAL, VDC Control Module and Hydraulic Control Unit (VDCCM&H/U).>	Replace the body integrated unit. <Ref. to SL-71, REMOVAL, Body Integrated Unit.>
7	**CHECK HARNESS.** 1) Shake the harness, and check for poor contact. 2) Using the Subaru Select Monitor, read DTC of CAN system.	Is U1223 a current malfunction?	Repair the poor contact of harness, or replace the harness.	Go to step **8**.
8	**CHECK CONNECTOR.** Check the connector used for high speed CAN for poor contact.	Is there poor contact of connector?	Repair the connector, or replace harness.	It is possible that temporary poor communication occurs. Delete the DTC.

N: DTC U1229 CAN-HS EPB NO-RECEIVE DATA

DTC DETECTING CONDITION:
No data from electronic parking brake control module is received.
TROUBLE SYMPTOM:
Electronic parking brake cooperation control does not operate.
WIRING DIAGRAM:

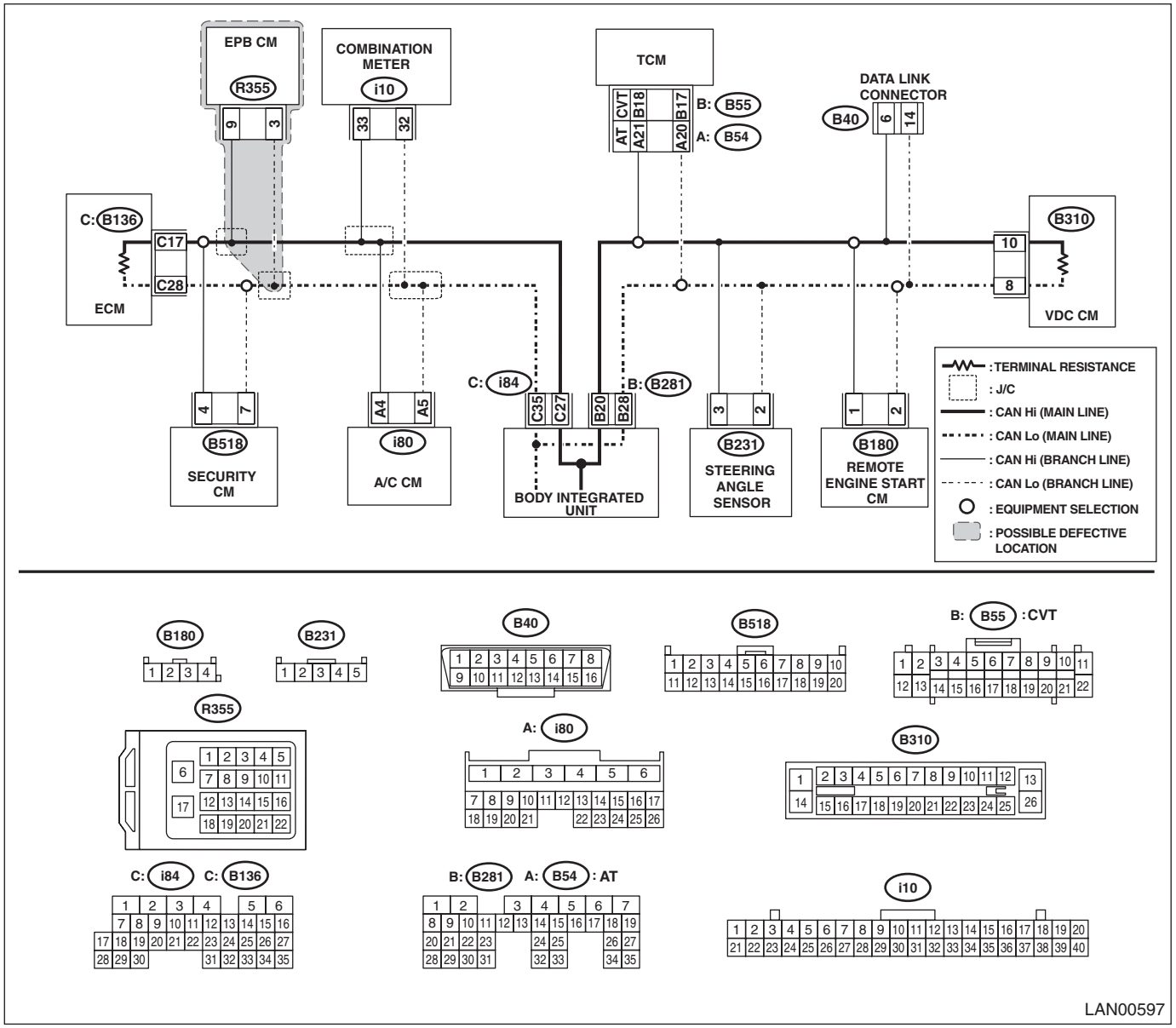

Step		Check	Yes	No
1	**CHECK DTC.** Using the Subaru Select Monitor, read all DTCs.	Is there DTC other than CAN system?	Perform the diagnosis according to DTCs for other control modules.	Go to step **2**.
2	**CHECK DTC.** Check DTC indicated in CAN system.	Is U1229 a current malfunction?	Go to step **3**.	Go to step **4**.

	Step	Check	Yes	No
3	**CHECK DTC.** Turn the ignition switch to OFF, and read the DTC again.	Is U1229 a current malfunction?	Replace the electronic parking CM. <Ref. to PB-6, REMOVAL, Parking Brake Actuator.>	Go to step **4**.
4	**CHECK ELECTRIC PARKING CM.** 1) Disconnect the electronic parking CM connector. 2) Using the Subaru Select Monitor, perform the clear memory. 3) Using the Subaru Select Monitor, read DTC of CAN system.	Is the displayed DTC other than U1229?	Go to step **5**.	Replace the electronic parking CM. <Ref. to PB-6, REMOVAL, Parking Brake Actuator.>
5	**CHECK ELECTRIC PARKING CM.** 1) Connect the electronic parking CM connector. 2) Using the Subaru Select Monitor, read DTC of electronic parking CM. <Ref. to PB(diag)-14, OPERATION, Subaru Select Monitor.>	Is DTC other than CAN system displayed?	Perform the diagnosis according to DTC.	Replace the body integrated unit. <Ref. to SL-71, REMOVAL, Body Integrated Unit.>

O: DTC U122A CAN-HS METER NO-RECEIVE DATA

DTC DETECTING CONDITION:
No data received from combination meter.
TROUBLE SYMPTOM:
Display of combination meter does not operate properly.
WIRING DIAGRAM:

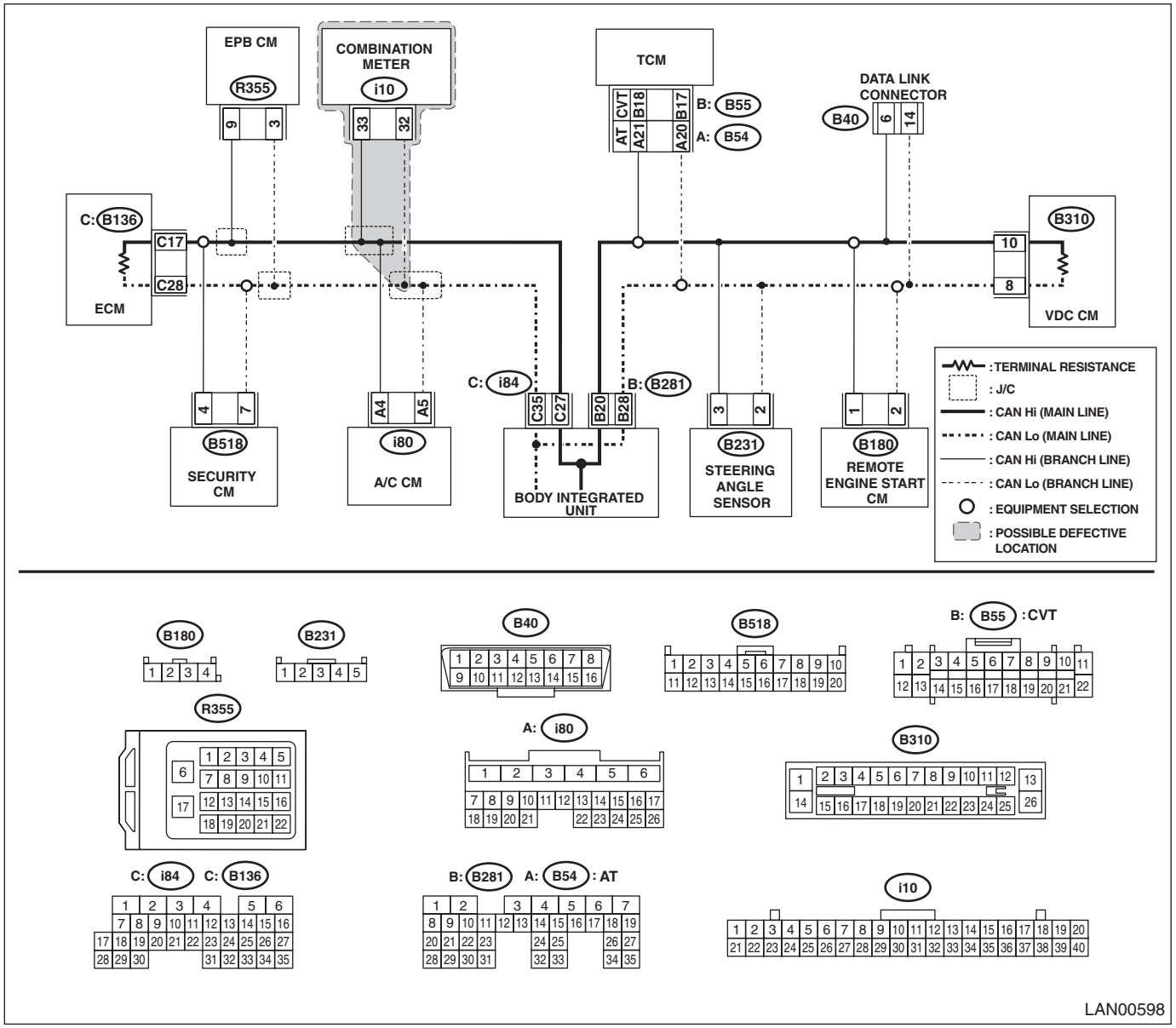

Step		Check	Yes	No
1	**CHECK DTC.** Using the Subaru Select Monitor, read all DTCs.	Is there DTC other than CAN system?	Perform the diagnosis according to DTCs for other control modules.	Go to step **2**.
2	**CHECK DTC.** Check DTC indicated in CAN system.	Is U122A a current malfunction?	Go to step **3**.	Go to step **4**.
3	**CHECK DTC.** Turn the ignition switch to OFF, and read the DTC again.	Is U122A a current malfunction?	Replace the combination meter. <Ref. to IDI-21, REMOVAL, Combination Meter.>	Go to step **4**.

	Step	Check	Yes	No
4	**CHECK COMBINATION METER.** 1) Disconnect the combination meter connector. 2) Using the Subaru Select Monitor, perform the clear memory. 3) Using the Subaru Select Monitor, read DTC of CAN system.	Is the displayed DTC other than U122A?	Go to step **5**.	Replace the combination meter. <Ref. to IDI-21, REMOVAL, Combination Meter.>
5	**CHECK COMBINATION METER.** 1) Connect the combination meter connector. 2) Using the Subaru Select Monitor, read DTC of combination meter. <Ref. to IDI-6, SELF-DIAGNOSIS DISPLAY MODE, OPERATION, Combination Meter System.>	Is DTC other than CAN system displayed?	Perform the diagnosis according to DTC.	Replace the body integrated unit. <Ref. to SL-71, REMOVAL, Body Integrated Unit.>

P: DTC U122B CAN-HS A/C NO-RECEIVE DATA

DTC DETECTING CONDITION:
No data received from A/C CM.
TROUBLE SYMPTOM:
Cooperation control of air conditioner does not operate properly.
WIRING DIAGRAM:

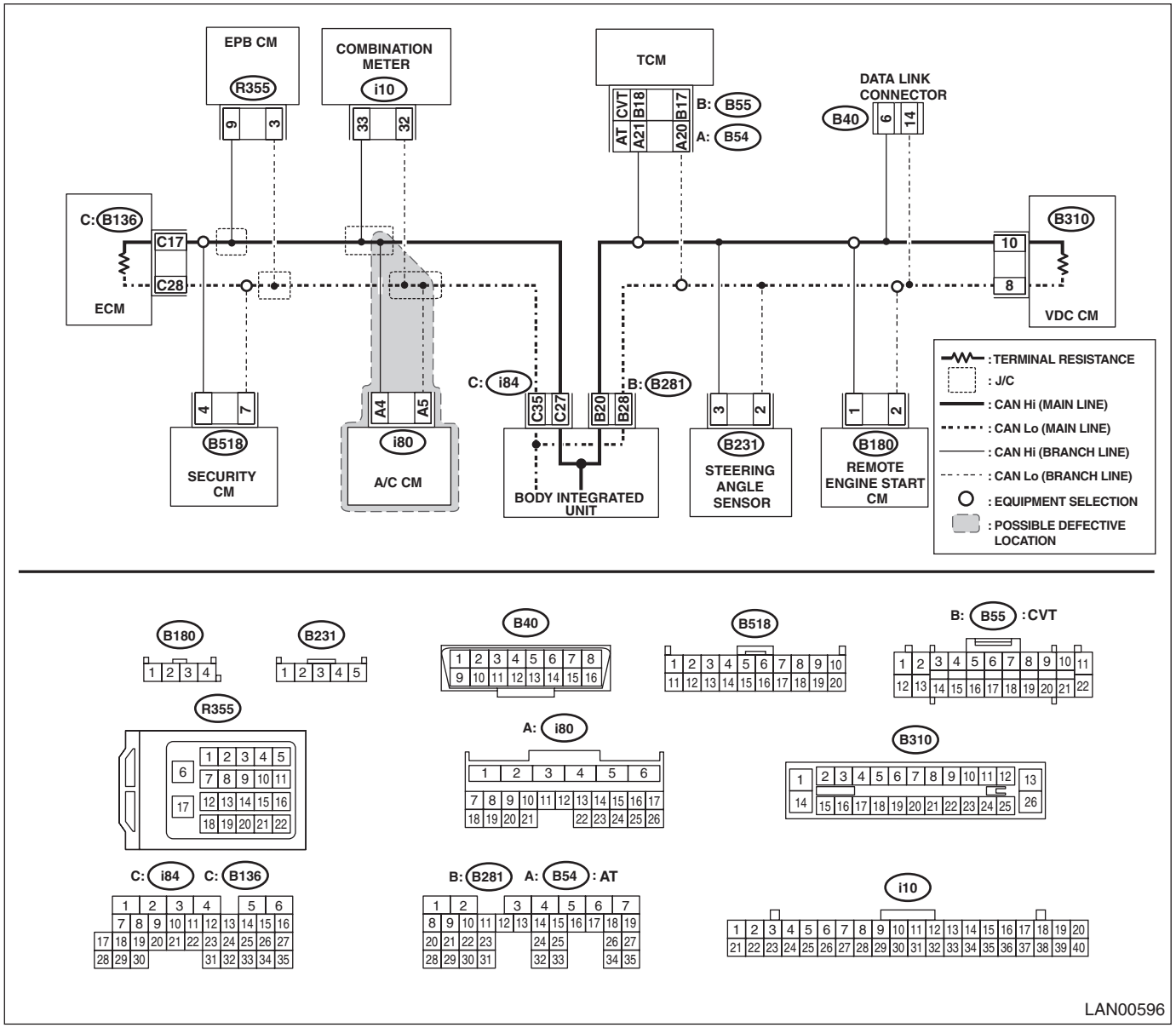

LAN00596

Step		Check	Yes	No
1	**CHECK DTC.** Using the Subaru Select Monitor, read all DTCs.	Is there DTC other than CAN system?	Perform the diagnosis according to DTCs for other control modules.	Go to step **2**.
2	**CHECK DTC.** Check DTC indicated in CAN system.	Is U122B a current malfunction?	Go to step **3**.	Go to step **4**.
3	**CHECK DTC.** Turn the ignition switch to OFF, and read the DTC again.	Is U122B a current malfunction?	Replace the A/C CM. <Ref. to AC-54, REMOVAL, Control Unit.>	Go to step **4**.

	Step	Check	Yes	No
4	**CHECK A/C CM.** 1) Disconnect the A/C CM connector. 2) Using the Subaru Select Monitor, perform the clear memory. 3) Using the Subaru Select Monitor, read DTC of CAN system.	Is the displayed DTC other than U122B?	Go to step **5**.	Replace the A/C CM. <Ref. to AC-54, REMOVAL, Control Unit.>
5	**CHECK A/C CM.** 1) Connect the A/C CM connector. 2) Using the Subaru Select Monitor, read DTC of A/C CM. <Ref. to AC(diag)-46, OPERATION, Subaru Select Monitor.>	Is DTC other than CAN system displayed?	Perform the diagnosis according to DTC.	Replace the body integrated unit. <Ref. to SL-71, REMOVAL, Body Integrated Unit.>

Q: DTC U122C CAN-HS SCU NO-RECEIVE DATA

DTC DETECTING CONDITION:
No data received from SCM.
TROUBLE SYMPTOM:
Immobilizer does not operate normally.
WIRING DIAGRAM:

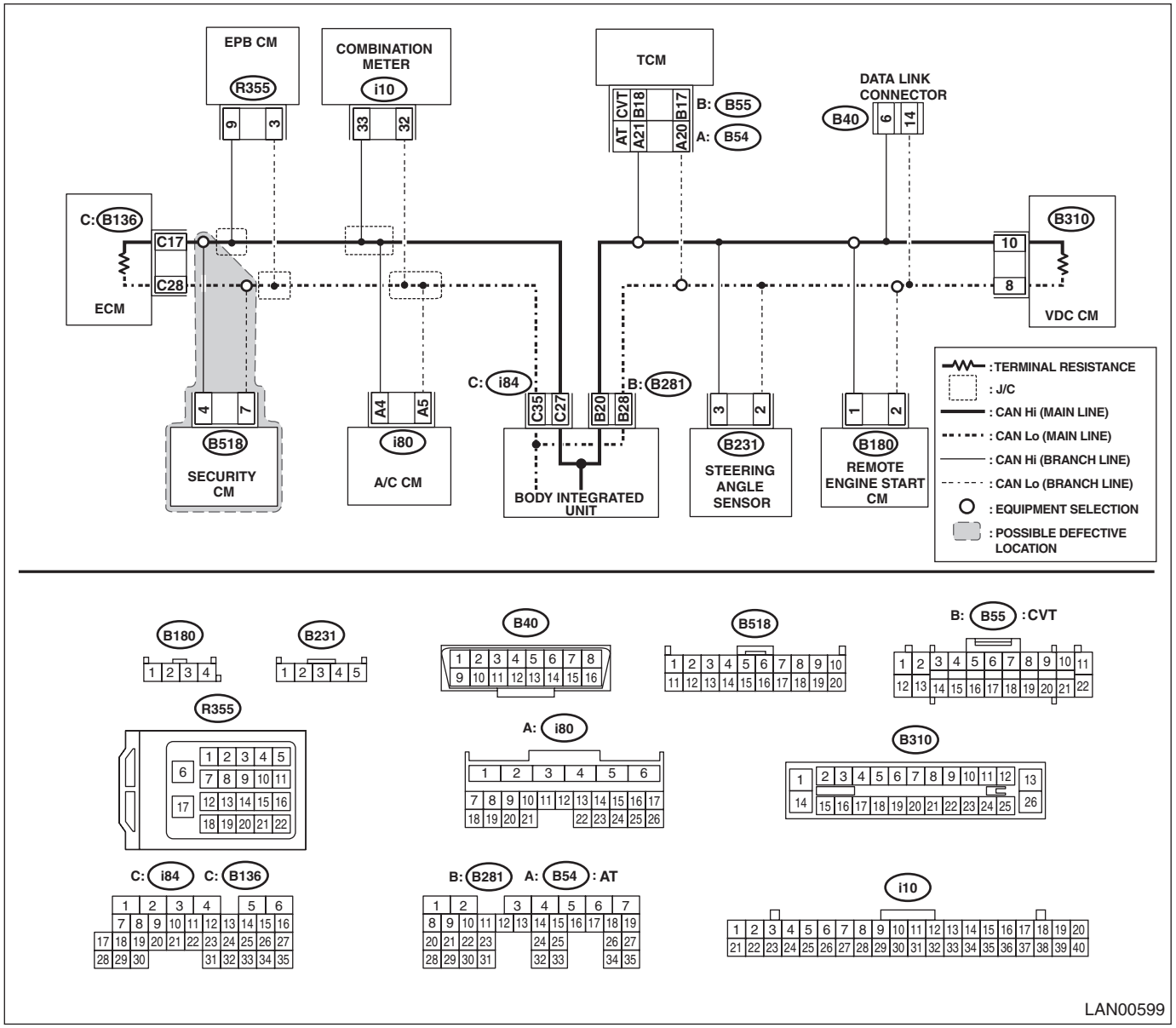

Step		Check	Yes	No
1	**CHECK DTC.** Using the Subaru Select Monitor, read all DTCs.	Is there DTC other than CAN system?	Perform the diagnosis according to DTCs for other control modules.	Go to step **2**.
2	**CHECK DTC.** Check DTC indicated in CAN system.	Is U122C a current malfunction?	Go to step **3**.	Go to step **4**.
3	**CHECK DTC.** Turn the ignition switch to OFF, and read the DTC again.	Is U122C a current malfunction?	Replace SCM. <Ref. to SL-65, REMOVAL, Security Control Module.>	Go to step **4**.

	Step	Check	Yes	No
4	**CHECK SCM.** 1) Disconnect the connector from SCM. 2) Using the Subaru Select Monitor, perform the clear memory. 3) Using the Subaru Select Monitor, read DTC of CAN system.	Is the displayed DTC other than U122C?	Go to step **5**.	Replace SCM. <Ref. to SL-65, REMOVAL, Security Control Module.>
5	**CHECK SCM.** 1) Connect the SCM connector. 2) Using the Subaru Select Monitor, read DTC of immobilizer. <Ref. to IM(diag)-8, OPERATION, Subaru Select Monitor.>	Is DTC other than CAN system displayed?	Perform the diagnosis according to DTC.	Replace the body integrated unit. <Ref. to SL-71, REMOVAL, Body Integrated Unit.>

12.General Diagnostic Table

A: INSPECTION

Contents	Operation	Specifications		Note
		YES	NO	
Diagnostic code	DTC is displayed when inspecting all DTCs.	Perform the diagnosis according to DTC.	System is normal.	—
Speedometer	Faster vehicle speed than the actual speed is displayed.	VDC CM data may not be received.	System is normal.	Also, check vehicle speed pulse circuit.
Fuel gauge	Fuel is present, but displayed less than actual amount.	Communication error may be present.	System is normal.	Also, check the fuel gauge.
Fuel level warning light	Fuel is present, but the light illuminates.	Communication error may be present.	System is normal.	Also, check the fuel gauge.
Engine coolant temperature light	Engine coolant temperature illuminates in red or blue.	Communication error may be present.	System is normal.	Check the engine coolant light related items.
[S], [I] or [S#] indicator	Blinking.	Communication error may be present.	System is normal.	Check the intelligent switch.
VDC indicator	Illuminating.	Communication error may be present.	System is normal.	Check that VDC is not operating.
VDC OFF indicator	Illuminating.	Communication error may be present.	System is normal.	Check that VDC is not OFF.
Electronic parking brake warning, etc.	Blinking.	Communication error may be present.	System is normal.	Check the electronic parking system as well.
Brake warning, etc.	Illuminating.	Brake fluid may be low in amount, or communication error may be present.	System is normal.	Check brake related items.
Shift position	Not displayed.	Communication error may be present.	System is normal.	Also, check AT system.
AT temperature light	Blinking.	Communication error may be present.	System is normal.	Also, check AT system.
Door indicator	Not displayed.	Communication error may be present.	System is normal.	Check the door switch.
Clearance indicator	Not illuminating.	Communication error may be present.	System is normal.	Check the combination switch.
Hi beam indicator	Not illuminating.	Communication error may be present.	System is normal.	Check the combination switch.
Front fog indicator	Not illuminating.	Communication error may be present.	System is normal.	Check the combination switch.
Illumination	Illuminating at the maximum brightness.	Communication error may be present.	System is normal.	Also, check the illumination switch.
Cruise control indicator	Not illuminating.	Communication error may be present.	System is normal.	Check the cruise control system.
AWD indicator	Not illuminating.	Communication error may be present.	System is normal.	Check TCM.
Hill hold indicator	Not illuminating.	Communication error may be present.	System is normal.	Also, check VDC CM.

BODY CONTROL SYSTEM (DIAGNOSTICS)

BC(diag)

		Page
1.	Basic Diagnostic Procedure	2
2.	Check List for Interview	3
3.	General Description	4
4.	Electrical Component Location	6
5.	Control Module I/O Signal	7
6.	Read Diagnostic Trouble Code (DTC)	10
7.	Clear Memory Mode	11
8.	Read Current Data	12
9.	User Customizing	16
10.	Registration Body Integrated Unit	18
11.	Function Check	20
12.	List of Diagnostic Trouble Code (DTC)	21
13.	Diagnostic Procedure with Diagnostic Trouble Code (DTC)	22
14.	General Diagnostic Table	36

1. Basic Diagnostic Procedure

A: PROCEDURE

CAUTION:
• Subaru Select Monitor is required for reading DTC, performing diagnosis and reading current data.
• Remove foreign matter (dust, water, oil, etc.) from the body integrated unit connector during removal and installation.
• Registration of the immobilizer is necessary after the replacement of the control module, etc. For details, refer to the "PC application help for Subaru Select Monitor".

NOTE:
• To check harness for open or short circuits, shake the suspected trouble spot or connector.
• Check List for Interview <Ref. to BC(diag)-3, Check List for Interview.>

	Step	Check	Yes	No
1	**CHECK PRE-INSPECTION.** Ask the customer when and how the trouble occurred using the interview check list. <Ref. to BC(diag)-3, Check List for Interview.>	Did you interview the customer?	Go to step **2**.	Interview the customer.
2	**BASIC INSPECTION.** Check components which might affect body control. <Ref. to BC(diag)-4, INSPECTION, General Description.>	Is the component that might influence the body control problem normal?	Go to step **3**.	Repair or replace each component.
3	**CHECK DTC.** 1) Read the DTC. <Ref. to BC(diag)-10, OPERATION, Read Diagnostic Trouble Code (DTC).> NOTE: If the communication function of the Subaru Select Monitor cannot be executed properly, check the communication circuit. <Ref. to LAN(diag)-48, COMMUNICATION FOR INITIALIZING IMPOSSIBLE, Diagnostic Procedure with Diagnostic Trouble Code (DTC).> 2) Record all DTCs and freeze frame data.	Is DTC displayed on Subaru Select Monitor?	Go to step **5**.	Go to step **4**.
4	**PERFORM GENERAL DIAGNOSTICS.** Inspect using the "General Diagnostics Table". <Ref. to BC(diag)-36, General Diagnostic Table.>	Is result of inspection OK?	The body control system is normal.	Go to step **5**.
5	**PERFORM DIAGNOSIS.** 1) Correct the cause of trouble. 2) Perform the Clear Memory Mode. <Ref. to BC(diag)-11, OPERATION, Clear Memory Mode.> 3) Read the DTC. <Ref. to BC(diag)-10, OPERATION, Read Diagnostic Trouble Code (DTC).>	Is DTC displayed on Subaru Select Monitor?	Repeat step 5 until DTC is not shown.	Finish the diagnosis.

2. Check List for Interview

A: CHECK

Inspect the following items regarding the vehicle's state.

Body Control System Check List for Interview		Date of Vehicle Bring-in	Year Month Day
Customer's name		Registration No.	Initial year of registration Year Month Date
		Vehicle model	Frame number
Interviewer	Inspector	Engine type	Odometer reading
Customer specified content			
Date and time when the trouble occurred		Frequency of trouble occurrence	
Condition of trouble occurrence		Weather	
Road conditions		Occurrence location	
Accessory installation condition			
Trouble condition			
❑ Diagnostic code			❑ ( )

3. General Description

A: CAUTION

1. SRS AIRBAG SYSTEM

Airbag system wiring harness is routed near the body integrated unit and body control circuits.

CAUTION:
• Do not use the electrical test equipment on all airbag system wiring harnesses and connectors.
• Be careful not to damage the airbag system wiring harness, when servicing the body control system.

B: INSPECTION

Before performing diagnosis, check the following items which might affect body control system problems.
1) Measure the battery voltage and check electrolyte.

Standard voltage: 12 V or more

Specific gravity: 1.260 or more
2) Check the fuse condition.
Make sure that ampere of the fuse is setting value, and it is not blown out.
3) Check the connecting condition of harness and harness connector.
4) Confirm settings of body integrated unit are corresponded to vehicle equipment. <Ref. to BC(diag)-18, OPERATION, Registration Body Integrated Unit.>
5) Make sure that the User Customizing of the body integrated unit matches the vehicle equipment. <Ref. to BC(diag)-16, OPERATION, User Customizing.>
6) Confirm “Factory initial setting” of body integrated unit registrations is “Market”.
7) Confirm key illumination does not blink with ignition switch turned to ON.

C: PREPARATION TOOL

1. SPECIAL TOOL

ILLUSTRATION	TOOL NUMBER	DESCRIPTION	REMARKS
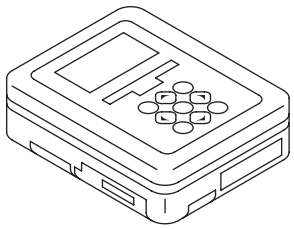 ST1B022XU0	1B022XU0	SUBARU SELECT MONITOR III KIT	Used for troubleshooting the electrical system.

2. GENERAL TOOL

TOOL NAME	REMARKS
Circuit tester	Used for measuring resistance, voltage and current.

4. Electrical Component Location

A: LOCATION

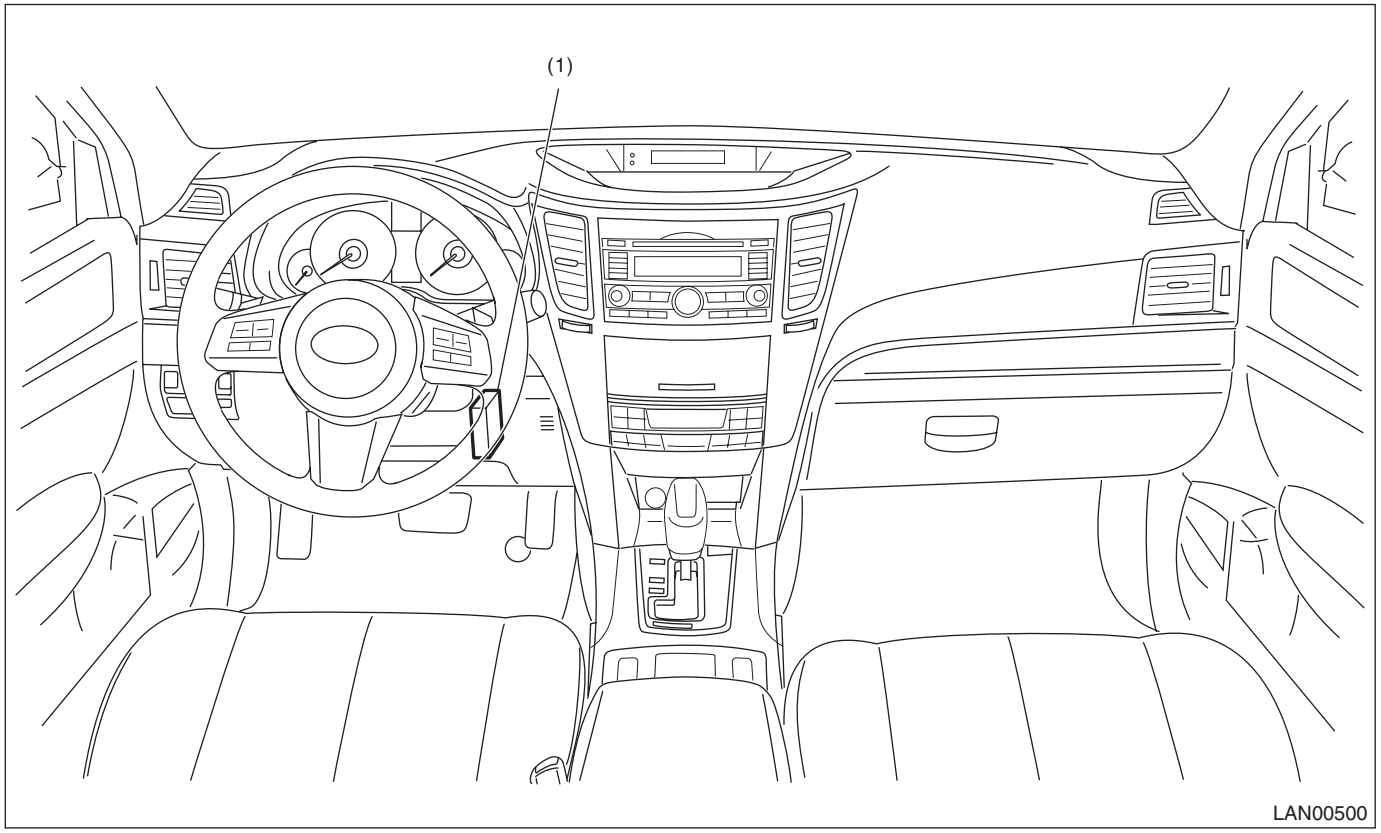

(1) Body integrated unit

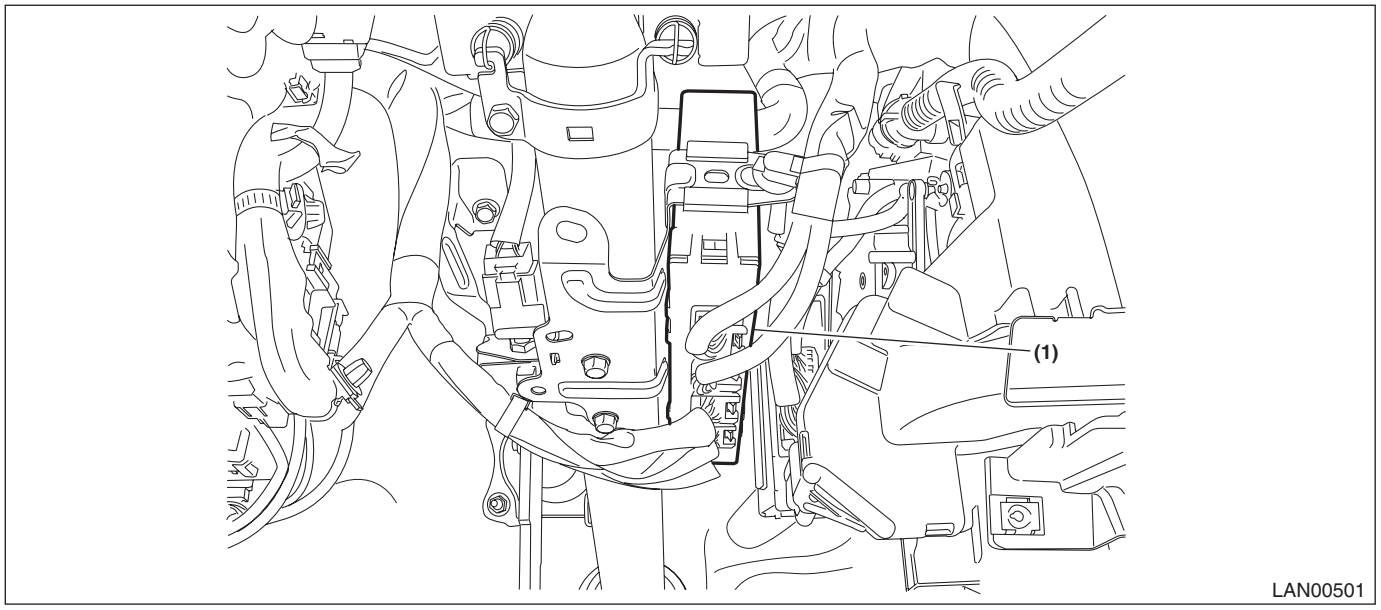

5. Control Module I/O Signal

A: ELECTRICAL SPECIFICATION

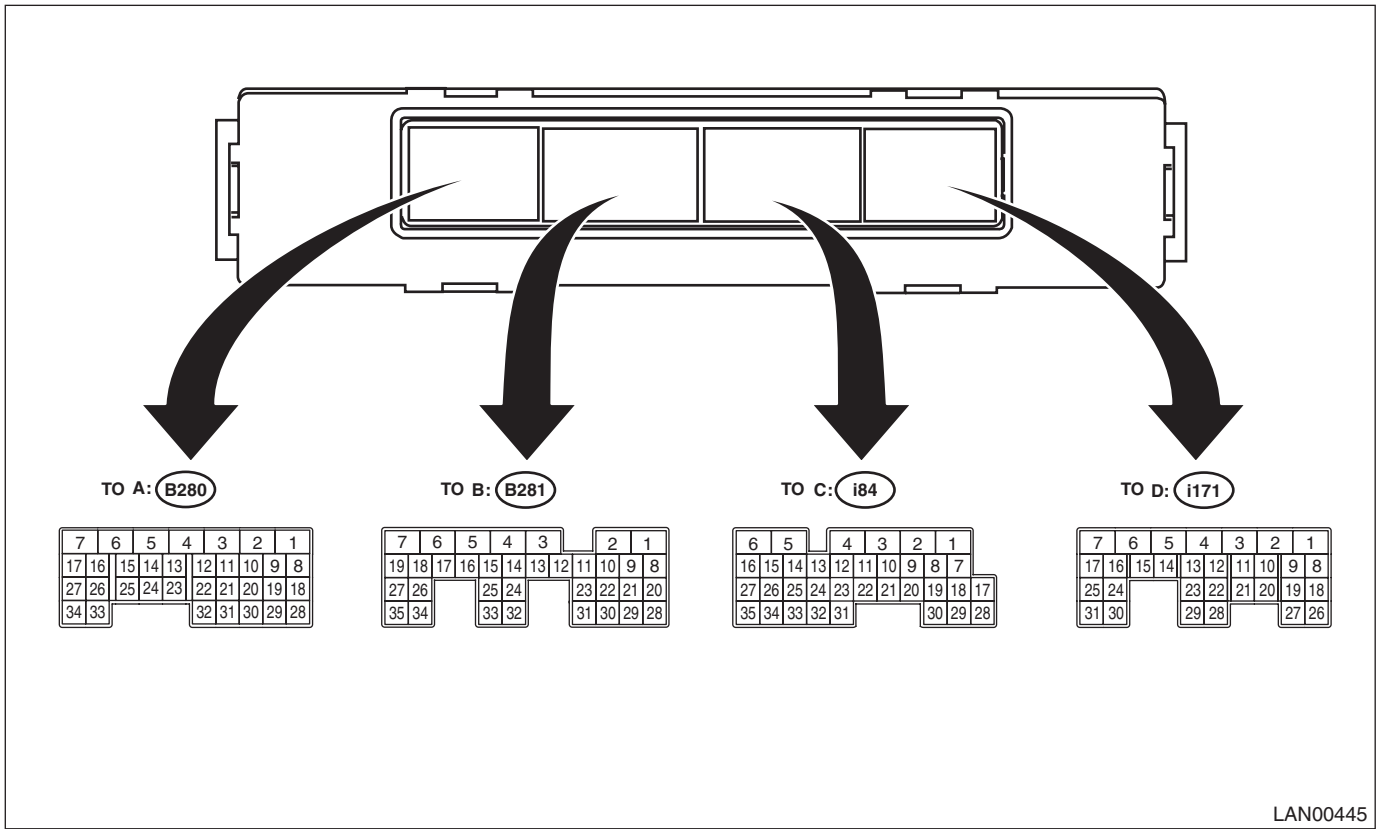

Description	Terminal No.	Signal (V or Ω)	Note
		Ignition switch ON (engine OFF)	
Ignition power supply (rear wiper)	A5 ←→ chassis ground	Less than 1.5 V → 10 — 13 V	Ignition switch OFF → ON
Battery power supply (shift lock/key lock)	B6 ←→ chassis ground	10 — 13 V	Always
Battery power supply (door lock)	D1 ←→ chassis ground	10 — 13 V	Always
Battery power supply (control)	C6 ←→ chassis ground	10 — 13 V	Always
Ground	A1 ←→ chassis ground	Less than 1.5 V	Always
	B31←→chassisground		
	C1 ←→ chassis ground		
	D29←→chassisground		
Battery power supply (back-up)	B7 ←→ chassis ground	10 — 13 V	Always
Ignition power supply	D17←→chassisground	Less than 1.5 V → 10 — 13 V	Ignition switch OFF → ON
ACC power supply	D25←→chassisground	Less than 1.5 V → 10 — 13 V	Ignition switch OFF → Accessory ON
Key-in switch	A4 ←→ chassis ground	Less than 1.5 V → 10 — 13 V	Key inserted
P range SW	B21←→chassisground	8 V or more → less than 1.5 V	P range to other than P range
Stop light SW	A10←→chassisground	Less than 1.5 V → 8 V or more	Stop light switch OFF → ON
Door SW (driver's)	C14←→chassisground	8 V or more → less than 1.5 V	Front right door closed → open
Door SW (passenger's)	C13←→chassisground	8 V or more → less than 1.5 V	Front left door closed → open
Door SW (rear right)	C25←→chassisground	8 V or more → less than 1.5 V	Rear right door closed → open

Description	Terminal No.	Signal (V or Ω)	Note
		Ignition switch ON (engine OFF)	
Door SW (rear left)	C24←→chassisground	8 V or more → less than 1.5 V	Rear left door closed → open
Accessory connector	B30←→chassisground	8 V or more → less than 1.5 V	Rear gate/trunk closed → open
Rear gate SW/trunk SW	C33←→chassisground	8 V or more → less than 1.5 V	Rear gate/trunk closed → open
Opener SW (trunk/rear gate)	C10←→chassisground	8 V or more → less than 1.5 V	Rear gate/trunk opener switch ON
Manual switch (LOCK)	C9 ←→ chassis ground	8 V or more → less than 1.5 V	Door lock switch ON
Manual switch (UNLOCK)	C20←→chassisground	8 V or more → less than 1.5 V	Door unlock switch ON
Door lock status switch (driver's)	C12	Less than 1 Ω	Door in UNLOCK status
Door lock status switch (passenger's)	C23	Less than 1 Ω	Door in UNLOCK status
Door lock status switch (driver's)	C12←→chassisground	8 V or more → less than 1.5 V	Door in UNLOCK status
Door lock status switch (passenger's)	C23←→chassisground	8 V or more → less than 1.5 V	Door in UNLOCK status
Lighting AUTO	B16←→chassisground	8 V or more → less than 1.5 V	Switch at AUTO position
Lighting II	A34←→chassisground	8 V or more → less than 1.5 V	Switch at II position
	B34←→chassisground		
Lighting I	B17←→chassisground	8 V or more → less than 1.5 V	Switch at I position
Dimmer passing	B25←→chassisground	8 V or more → less than 1.5 V	Switch at passing position
Dimmer Hi beam	B15←→chassisground	8 V or more → less than 1.5 V	Switch at Hi beam position
Front fog light SW	B26←→chassisground	8 V or more → less than 1.5 V	Front fog light switch ON
TPMS	C34	Less than 1 Ω	At answer-back of transmitter registration
Illumination sensor power supply	A9 ←→ A29	Less than 1.5 V → 8 V or more	Ignition switch OFF → ON
Illumination sensor signal	A19	47 — 1200 Hz	When AUTO
Ground (illumination sensor)	A29←→chassisground	Less than 1.5 V	Always
Rear wiper SW ON	A12←→chassisground	8 V or more → less than 1.5 V	Switch at ON position
Rear wiper SW INT	A22←→chassisground	8 V or more → less than 1.5 V	Switch at INT position
Rear washer SW	A32←→chassisground	8 V or more → less than 1.5 V	Switch at ON position
Illumination SW (Vi1)	D12←→chassisground	Approx. 5 V	While clearance light illuminates
Illumination SW (Vi2)	D22←→chassisground	0.3 — 4.5 V	
Illumination SW (Vi3)	D28←→chassisground	Less than 1.5 V	Always
Bright SW	C21←→chassisground	8 V or more → less than 1.5 V	Switch at ON position
Reverse SW (MT)	B22←→chassisground	Less than 1.5 V → 8 V or more	Reverse SW ON
Fuel level sensor	C17←→chassisground	15.4 — 416 Ω	Always
Seat belt SW (driver's)	C30←→chassisground	Less than 1.5 V → 8 V or more	Buckle removal → insert
Seat belt SW (passenger's)	C29←→chassisground	Less than 1.5 V → 8 V or more	Buckle removal → insert
Impact sensor	C28←→chassisground	Less than 1.5 V → 8 V or more	Apply an impact
Hi-speed CAN communication circuit 1 (Hi)	B20	Serial communication	Except for sleep status*1
Hi-speed CAN communication circuit 1 (Lo)	B28		
Hi-speed CAN communication circuit 2 (Hi)	C27	Serial communication	Except for sleep status*1
Hi-speed CAN communication circuit 2 (Lo)	C35		
Low-speed CAN circuit (Hi)	A11	Serial communication	Except for sleep status*1
Low-speed CAN circuit (Lo)	A21		
K-line	B9	Serial communication	Select Monitor communication in progress

Description	Terminal No.	Signal (V or Ω)	Note
		Ignition switch ON (engine OFF)	
Audio/Navigation communication circuit	D21	Serial communication	
Keyless entry communication line	D11	Serial communication	
Immobilizer antenna	B1 ←→ chassis ground	-20 — 20 V	Communication with ignition key in progress
	B2 ←→ chassis ground	0 — 5 V	
Shift lock solenoid	B5 ←→ chassis ground	Less than 1.5 V → 8 V or more	When shift lock is operating (AT models)
Key lock solenoid (LOCK)	B4 ←→ B3	Less than 1.5 V → 8 V or more	LOCK status ON (AT models)*2
Key lock solenoid (UNLOCK)	B3 ←→ B4		UNLOCK status ON (AT models)*2
Rear wiper ON output	A7 ←→ chassis ground	Less than 0.5 V → 8 V or more	Rear wiper operation in progress
Rear wiper return output	A6 ←→ chassis ground	Less than 0.5 V → 8 V or more	Wiper reversed operation in progress
Door LOCK output	D2 ←→ chassis ground	Less than 0.5 V → 8 V or more	When LOCK signal is output
Door UNLOCK output	D3 ←→ chassis ground	Less than 0.5 V → 8 V or more	When UNLOCK signal is output
Rear gate/trunk UNLOCK output	D7 ←→ chassis ground	Less than 0.5 V → 8 V or more	When UNLOCK signal is output
Lighting relay power supply	A3 ←→ chassis ground	10 — 13 V	ACC or key-in SW ON
	B19←→chassisground	10 — 13 V	ACC or key-in SW ON
Lighting relay Hi output	A17←→chassisground	8 V or more → less than 1.0 V	Dimmer SW at Hi position
Lighting relay Lo output	B35←→chassisground	8 V or more → less than 1.0 V	Dimmer SW at Lo position
Lighting Lo relay output 2	A27←→chassisground	8 V or more → less than 1.0 V	Lighting II SW at ON position
Lighting relay I output	A16←→chassisground	8 V or more → less than 1.0 V	Lighting I SW at ON position
Front fog light output	A15←→chassisground	8 V or more → less than 1.0 V	Front fog light SW at ON position
DRL cancel output	D19←→chassisground	8 V or more → less than 1.0 V	Headlight switch ON or Hi beam ON, passing switch ON
Illumination output	B8	Pulse output	Illumination ON
	C16	Pulse output	Illumination ON
Key ring illumination	A25	Pulse output	Illumination ON
Room light output	C4	Pulse output	Room light ON (doors interlocked)
Map light output	D8	Pulse output	Map light ON (keyless answer-back, etc.)
Luggage/trunk light output	C3	Pulse output	Luggage/trunk at open state
Rear defogger relay output	A26←→chassisground	8 V or more → less than 1.0 V	Rear defogger SW ON
Wiper deicer relay output	D9 ←→ chassis ground	8 V or more → less than 1.0 V	Wiper deicer SW ON
Turn/hazard output	D18←→chassisground	8 V or more → less than 1.0 V	When answer-back is output
Security horn output	A24←→chassisground	8 V or more → less than 1.0 V	When security is operating
Security light	D26	Pulse control	When security light is illuminating
Answer-back buzzer output	A20←→chassisground	8 V or more → less than 1.0 V	When answer-back operates
Immobilizer communication	A31	Serial communication	

*1: For CAN sleep state, hold on for approx. one minute with ignition OFF and the doors, trunk, and rear gate all closed.
*2: Use an oscilloscope for measurement due to short output time.

6. Read Diagnostic Trouble Code (DTC)

A: OPERATION

For details concerning the work procedure, refer to the “PC application help for Subaru Select Monitor”.

NOTE:
For details concerning DTC, refer to List of Diagnostic Trouble Code (DTC). <Ref. to BC(diag)-21, List of Diagnostic Trouble Code (DTC).>

7. Clear Memory Mode

A: OPERATION

For details concerning the work procedure, refer to the “PC application help for Subaru Select Monitor”.

8. Read Current Data

A: OPERATION

For details concerning the work procedure, refer to the “PC application help for Subaru Select Monitor”.

B: LIST

Items to be displayed	Unit of measure	Remarks	Note
BATT voltage (control)	10 — 15 V	Body integrated unit input value	Always
BATT voltage (BACKUP)	10 — 15 V	Body integrated unit input value	Always
IG power supply voltage	10 — 15 V	Body integrated unit input value	Ignition switch ON
ACC voltage	10 — 15 V	Body integrated unit input value	Ignition switch ACC
Illumination VR Voltage	0 — 5 V	Body integrated unit input value	Input value from illumination volume
Illumi. output d-ratio	0 — 100%	Body integrated unit output value	Small light ON Illumination volume is other than bright.
Ambient Temperature	–40 — 87.5°C	CAN data input value	Ignition switch ON
Fuel level voltage	0 — 8.89 V	Body integrated unit input value	Ignition switch ON
Fuel level resistance input value	0 — 500 Ω	Body integrated unit input value	Ignition switch ON
number of regist.	0 — 4	Number of keyless key registered	
Front Wheel Speed	km/h	CAN data input value	Reception from VDC module
Blower fan steps	OFF, 1 — 5 steps, MAX	CAN data input value	Reception from air conditioner ECM
Fuel level resistance output value	0 — 102.3 Ω	CAN data output value	Reception from body integrated unit
Fuel consumption	cc/s	CAN data input value	Reception from ECM
Coolant Temperature	–40 — 130°C	CAN data input value	Reception from ECM
Vehicle longitudinal G	m/s^2	CAN data input value	Reception from VDC module
Shift Position	1 — 4, D, N, R, P	CAN data input value	Reception from TCM
Buzzer beeping request	No beeping Belt warning Key warning Beeping pattern 1 Beeping pattern 2 Free beeping ---	CAN data output value	Reception from body integrated unit
EPB Operating status	Error Cancel Operate Operating Cancelling Dynamic parking	CAN data input value	Reception from EPB
D-belt warning light O/P	Light ON Light blinking Light OFF	CAN data output value	Reception from body integrated unit
P-belt warning light O/P	Light ON Light blinking Light OFF	CAN data output value	Reception from body integrated unit
Engine displacement	1.5L — 3.6L	CAN data input value	Display engine equipped
Destination Code	0 — 16	CAN data input value	—
Illumination Sensor Output	0 — 1250 Hz	CAN data input value	—
key-lock warning SW	ON/OFF	Body integrated unit input value	ON when ignition key inserted
Stop light SW	ON/OFF	Body integrated unit input value	ON when brake pedal is depressed
Front fog lamp SW input	ON/OFF	Body integrated unit input value	When front fog light switch is ON
TPMS input	ON/OFF	Body integrated unit input value	TPMS registration answer-back signal

Items to be displayed	Unit of measure	Remarks	Note
Driver's door SW input	ON/OFF	Body integrated unit input value	ON when driver's door is open
P-door SW input	ON/OFF	Body integrated unit input value	ON when passenger's door is open
Rear right door SW input	ON/OFF	Body integrated unit input value	ON when rear right door is open
Rear left door SW input	ON/OFF	Body integrated unit input value	ON when rear left door is open
R Gate SW input	ON/OFF	Body integrated unit input value	ON when rear gate/trunk open
Manual lock SW input	ON/OFF	Body integrated unit input value	Manual lock switch ON
Manual unlock SW input	ON/OFF	Body integrated unit input value	Manual unlock switch ON
Bright SW input	ON/OFF	Body integrated unit input value	Bright switch ON
P SW	ON/OFF	Body integrated unit input value	ON when shift range is in parking Shift lever P switch signal
MT Reverse Switch	ON/OFF	Body integrated unit input value	Reverse switch ON (for MT vehicle only)
R wiper ON SW input	ON/OFF	Body integrated unit input value	Rear wiper switch ON
R wiper INT SW input	ON/OFF	Body integrated unit input value	Rear wiper switch (INT ON)
R washer SW input	ON/OFF	Body integrated unit input value	Rear washer switch ON
Driver's Seat SW input	ON/OFF	Body integrated unit input value	Driver's seat buckle switch ON
P seatbelt SW input	ON/OFF	Body integrated unit input value	Passenger's seat buckle switch ON
Fr wiper input	ON/OFF	Body integrated unit input value	ON when front wiper is operating
R gate lock status SW input	ON/OFF	Body integrated unit input value	Displays latch state, ON when locked
Rear gate/Trunk release switch	ON/OFF	Body integrated unit input value	Rear gate/trunk release switch ON
Rr Defogger output	ON/OFF	Body integrated unit output value	ON when rear defogger relay is operating
lock actuat. LOCK output	ON/OFF	Body integrated unit output value	ON when LOCK signal is output
All seat UNLOCK output	ON/OFF	Body integrated unit output value	ON when unlock signal is output
D-seat UNLOCK output	ON/OFF	Body integrated unit output value	ON when unlock signal is output
R gate/trunk UNLK output	ON/OFF	Body integrated unit output value	ON when rear gate/trunk unlock signal is output
R wiper output	ON/OFF	Body integrated unit output value	ON when rear wiper motor is operating
Shift Lock Solenoid	ON/OFF	Body integrated unit output value	ON when shift lock solenoid is operating (only AT)
Key Lock solenoid	lock/unlock	Body integrated unit output value	LOCK when the key is locked
wiper deicer output	ON/OFF	Body integrated unit output value	ON when wiper deicer relay is operating
Hazard Output	ON/OFF	Body integrated unit output value	ON when answer-back signal is received or when hazard is operating
Keyless Buzzer Output	ON/OFF	Body integrated unit output value	ON when lock/unlock signal is received
Horn Output	ON/OFF	Body integrated unit output value	ON when security warning is operating
Illumination lamp O/P	ON/OFF	Body integrated unit output value	ON when illumination is illuminated
Room lamp output	ON/OFF	Body integrated unit output value	ON when keyless lock/unlock signal is received (when key in switch connector is removed)
key illumi. lamp o/p	ON/OFF	Body integrated unit output value	ON when key illumination light is illuminated
Immobilizer lamp output	ON/OFF	Body integrated unit output value	ON when immobilizer pilot light blinks

Items to be displayed	Unit of measure	Remarks	Note
Keyless operation 1	Regist./Normal	Body integrated unit input value	When keyless registration connector connected
Keyless operation 2	Deletion/Normal	Body integrated unit input value	When keyless registration is deleted
Small Light SW	ON/OFF	Body integrated unit input value	ON when small light is illuminated
Headlamp	ON/OFF	Body integrated unit input value	ON when headlight Lo is illuminated
High Beam	ON/OFF	Body integrated unit input value	ON when headlight Hi is illuminated
Rr Defogger SW	ON/OFF	CAN data input value	Rear defogger switch ON
Number of cylinders	4 Cylinder/6 Cylinder	CAN data input value	Display engine equipped
Cam shaft specification	SOHC/DOHC	CAN data input value	Display engine equipped
Turbo	TURBO/Without turbo	CAN data input value	Display engine equipped
AT Vehicle ID Signal	ON/OFF	CAN data input value	Display transmission equipped
Blower fan information	ON/OFF	CAN data input value	Reception from air conditioner CM
Auto A/C failure	OK/NG	CAN data input value	Reception from air conditioner CM
Lighting I Switch Input	ON/OFF	Body integrated unit input value	Small light switch ON
Lighting II Switch Input	ON/OFF	Body integrated unit input value	Headlight switch ON
Lighting AUTO input	ON/OFF	Body integrated unit input value	Headlight AUTO switch ON
Dimmer Hi Switch Input	ON/OFF	Body integrated unit input value	Dimmer Hi switch ON
Dimmer Pass Switch Input	ON/OFF	Body integrated unit input value	Dimmer Pass switch ON
Illumination sensor flag	ON/OFF	Body integrated unit input value	Reception from air conditioner CM
Lighting I Lamp Output	ON/OFF	Relay drive	ON when small light is illuminated
Lighting II Lamp Output	ON/OFF	Relay drive	ON when headlight is illuminated
Lighting Hi Lamp Output	ON/OFF	Relay drive	ON when headlight Hi is illuminated
Front Fog Lamp Output	ON/OFF	Relay drive	When front fog light relay ON output
DRL Cancel Output	ON/OFF	Relay drive	When DRL cancel relay ON output
Power Supply Tr	ON/OFF	Inner Tr drive	Headlight auxiliary power supply ON
Map lamp output	ON/OFF	Body integrated unit output value	ON when map light is illuminated
Luggage/Trunk lamp output	ON/OFF	Body integrated unit output value	ON when luggage/trunk light is illuminated
Off delay time	OFF — Long	Body integrated unit setting	Customize setting
Auto Light Sensitivity Adjustment	0 — 3	Body integrated unit setting	Customize setting
Rr defogger op. mode	Continuous/Normal	Body integrated unit setting	Customize setting
Security Alarm Setup	ON/OFF	Body integrated unit setting	Customize setting
Impact Sensor Setup	ON/OFF	Body integrated unit setting	Customize setting
Alarm delay setup	ON/OFF	Body integrated unit setting	Customize setting
Lockout prevention	ON/OFF	Body integrated unit setting	Customize setting
Impact sensor	ON/OFF	Body integrated unit setting	Customize setting
Answer-back buzzer setup	ON/OFF	Body integrated unit setting	Customize setting
Hazard answer-back setup	ON/OFF	Body integrated unit setting	Customize setting
Ans.-back Buzzer	ON/OFF	Body integrated unit setting	Customize setting
Auto locking	ON/OFF	Body integrated unit setting	Customize setting
Passive Alarm	ON/OFF	Body integrated unit setting	Customize setting
Door open warning	ON/OFF	Body integrated unit setting value	Customize setting
Dome Light Alarm Setting	ON/OFF	Body integrated unit setting value	Customize setting
Belt Warning Switch	ON/OFF	Body integrated unit setting value	Customize setting

Items to be displayed	Unit of measure	Remarks	Note
A/C ECM setting	ON/OFF	Body integrated unit setting value	Customize setting
Line Navigation Setting	ON/OFF	Body integrated unit setting value	Customize setting
wiperdeicer	ON/OFF	Body integrated unit setting value	Customize setting
Sedan/Wagon Setting	Sedan/Wagon	Body integrated unit setting value	Customize setting
MT/AT Setting	MT/AT	Body integrated unit setting value	Customize setting
6MT Setting	6MT/Other than 6MT	Body integrated unit setting value	Customize setting
Destination Setting	0 — 16	Body integrated unit setting value	Displays body integrated unit customizing
Factory initial setting	Market/Factory	Body integrated unit setting value	Displays body integrated unit customizing
SCU applicable	Applicable/ Not applicable	Body integrated unit setting value	(Models for Canada only)

NOTE:
For detailed operation procedures, refer to “PC application help for Subaru Select Monitor”.

9. User Customizing

A: OPERATION

1) On «Main Menu» display, select {Each System Check}.
2) On «System Selection Menu» display, select {Integ. unit mode}.
3) On «Integ. unit mode failure diag.» display, select {Unit customizing}.
4) Change the setting with UP/DOWN key and set with the [OK] key.

List of User Customizing item

Data	Initial setting value	Customize setting	Remarks
Off delay time	Long		Delay time below can be selected by setting.
		OFF	0 seconds
		Short	10 seconds
		Normal	20 seconds
		Long	30 seconds
Auto Light Sensitivity Adjustment	Normal	Dull	Slow response
		Normal	Standard
		Sensitive	Quick response
		Very sensitive	Fairly quick response
Rr defogger op. mode	Normal	Normal	Automatically stops in 15 minutes after switch is turned to ON.
		Continuous	Repeats active condition for 15 minutes and inactive condition for 2 minutes until switch is turned to OFF.
Security Alarm Setup	ON	ON	Security alarm (hazard, horn or siren) in active condition
		OFF	Security alarm in inactive condition
Impact Sensor Setup	OFF	ON	Workable when Impact Sensor Setup is set to “ON”. Impact sensor function becomes activated.
		OFF	Impact sensor in inactive condition (Set to “OFF” in models without sensors.)
Alarm delay setup	ON		After the keyless lock operation, the alarm monitor starts after the following delay time has passed.
		ON	Delay time is 30 seconds.
		OFF	Delay time is 0 second.
Lockout prevention	ON	ON	key lockout prevention function is activated. (The function does not operate if safety knob is locked by hand.)
		OFF	Key lockout prevention function is deactivated.
Impact sensor (OP)	OFF	ON	Vehicle is controlled in impact sensor equipped mode. (Make sure to set to “OFF” for models without the impact sensor. When “ON”, hazard, horn or siren become activated by keyless lock (alarm monitor start).)
		OFF	Vehicle is controlled in no impact sensor mode.
Answer-back buzzer setup	ON	ON	When lock/unlock is selected by keyless entry system operation, buzzer operates.
		OFF	When lock/unlock is selected by keyless entry system operation, buzzer does not operate.
Hazard answer-back setup	ON	ON	When lock/unlock is selected by keyless entry system operation, hazard blinks.
		OFF	When lock/unlock is selected by keyless entry system operation, hazard does not interlock.
Initial keyless setting	—	—	
		Execution	
Initial button setting	—	—	
		Execution	

Data	Initial setting value	Customize setting	Remarks
Passive Alarm	OFF	ON	
		OFF	
Door open warning	ON	ON	
		OFF	
Dome Light Alarm Setting	OFF	ON	Room light illuminates interlocking with alarm.
		OFF	Room light does not illuminate interlocking with alarm.
Belt Warning Switch	ON	ON	Belt warning buzzer beeps.
		OFF	Belt warning buzzer stops.

5) After setting, make sure that the setting changed in the {Current Data Display & Save} is same as vehicle equipment.

CAUTION:
- **The above settings must match the actual vehicle equipment.**
- **Do not change settings except for setting above while setting the functions.**
- **Be sure not to change Factory initial setting except when installing a new body integrated unit.**

NOTE:
For detailed operation procedures, refer to “PC application help for Subaru Select Monitor”.

10.Registration Body Integrated Unit

A: OPERATION

1. CONFIRM CURRENT SETTING.

1) On «Main Menu» display, select {Others}.
2) On «Other Menu» display, select {Customized Setting}.
3) Save the setting.

Required items for new registration. (Except for system not equipped)

Item	Item to confirm				Remarks
number of regist.	1	2	3	4	Number of registered ID
Off delay time	OFF	Long	Normal	Short	Setting for lighting off time
Auto Light Sensitivity Adjustment	Dull	Normal (Standard)	Sensitive	Very sensitive	1st (slow) — 4th (fairly quick)
Rr defogger op. mode	Normal		Continuous		
Security Alarm Setup	ON		OFF		
Impact Sensor Setup	ON		OFF		Option setting
Alarm delay setup	ON		OFF		
Lockout prevention	ON		OFF		
Impact sensor	ON		OFF		Option setting
Answer-back buzzer setup	ON		OFF		
Hazard answer-back setup	ON		OFF		
Passive Alarm	ON		OFF		
Door open warning	ON		OFF		
Dome Light Alarm Setting	ON		OFF		
Belt Warning Switch	ON		OFF		
A/C ECM setting	ON		OFF		
Line Navigation Setting	ON		OFF		Models with line navigation
wiperdeicer	ON		OFF		Option setting
Sedan/Wagon Setting	Wagon		Sedan		
MT/AT Setting	MT		AT		
6MT Setting	6MT		Other than 6MT		
Destination Setting	C0, C5		U4, U5, U6, C6		Set for Canada model only.
Seat Memory Setting	ON		OFF		Option setting
Factory initial setting	Factory		Market		Do not change to factory mode.

2. REGISTRATION BODY INTEGRATED UNIT (FUNCTION SETTING)

CAUTION:
For the body integrated unit, function selection is available to control the entire vehicle systems. It is possible to control the original functions of vehicle when registrations of body integrated unit and function setting are corresponded to vehicle equipment.
If registrations and function setting are different from vehicle equipment, vehicle system does not operate normally and diagnosis cannot be performed correctly. Pay attention to following item.
- **Be sure to correspond registrations, or User Customizing settings to vehicle equipment.**
- **Do not change the settings of vehicle improperly.**
- **Make sure that the key illumination does not blink with ignition switch ON, or that the body integrated unit registration item, "Factory initial setting", is set as "Market". If "Factory initial setting" is set to "Factory", key illumination blinks when ignition key is turned ON, to notify that the settings are unconfirmed.**
- **Key illumination does not blink with ignition switch turned to ON and go off with door closed.**
- **Be sure to register immobilizer if body integrated unit is replaced with a new part.**
- **Make a registration of immobilizer when the parts related to immobilizer have been replaced. Refer to the "PC application help for Subaru Select Monitor".**

1) On «Main Menu» display, select {Each System Check}.
2) On «System Selection Menu» display, select {Integ. unit mode}.
3) Click the [OK] button after the control module name {Integ. Unit} is displayed.
4) On «Integ. unit mode failure diag.» display, select {Integ. Unit customizing}.
5) Change the setting to the contents saved at confirmation of current setting.

CAUTION:
- **To perform normal operation of vehicle and diagnosis, the above settings must match the actual vehicle equipment.**
- **When the body integrated unit is new or in Factory mode, the key illumination blinks, and user customizing is incomplete. Check the user customizing settings.**
- **Be sure not to change Factory initial setting except when installing a new body integrated unit.**

NOTE:
"Factory" mode:
- Body integrated unit has not been set yet. It can be recognized by key illumination blinking with ignition switch turned to ON.
- All replacement body integrated units are set to "Factory" mode. When replacing a body integrated unit, be sure to perform the registration operation.

"Market" mode:
- Each settings have been set. It can be recognized by key ring illumination coming on in concocting with room light and going off with ignition switch turned to ON.

6) Perform the Factory initial setting. On the «Integ. Unit customizing» display screen of Subaru Select Monitor, select the {Factory initial setting}.
7) Change the mode from Factory to Market.
8) Turn the ignition switch to OFF to settle the setting.
9) Change the Subaru Select Monitor system selection to «Immobilizer» to register the immobilizer key.
10) Perform procedures according to the "PC application help for Subaru Select Monitor".
11) When key registration is completed, "Do you want to register remote engine start?" is displayed. Perform registration only for equipped models.
12) Perform the User Customizing. <Ref. to BC(diag)-16, OPERATION, User Customizing.>

NOTE:
For detailed operation procedures, refer to "PC application help for Subaru Select Monitor".

11.Function Check

A: OPERATION

NOTE:
In order to check the body integrated unit function, inspect the body integrated unit and actuator using Subaru Select Monitor without operating switches.
1) On «Main Menu» display, select {Each System Check}.
2) On «System Selection Menu» display, select {Integ. unit mode}.
3) On «Integ. unit mode failure diag.» display, select {Function check}.
4) Select an item to be operated on «Function check» display, and press the [OK] button.
5) Pressing [Next] starts, [End] cancels the operation and [OK] returns to the System Operation Check Mode display screen.

NOTE:
- If not equipped (based on area or condition), process will not go on.
- For detailed operation procedures, refer to “PC application help for Subaru Select Monitor”.

12.List of Diagnostic Trouble Code (DTC)

A: LIST

DTC	Item	Content of diagnosis	Note
None	Communication for Initializing Impossible	Subaru Select Monitor communication is open or shorted.	<Ref. to LAN(diag)-48, COMMUNICATION FOR INITIALIZING IMPOSSIBLE, Diagnostic Procedure with Diagnostic Trouble Code (DTC).>
B1100	Integ. Unit System Error	Body integrated unit internal error	<Ref. to BC(diag)-22, DTC B1100 INTEG. UNIT SYSTEM ERROR, Diagnostic Procedure with Diagnostic Trouble Code (DTC).>
B1101	BATT p/supply malfunction cont	Voltage malfunction caused by poor contact of battery power supply control circuits	<Ref. to BC(diag)-23, DTC B1101 BATT P/SUPPLY MALFUNCTION CONT, Diagnostic Procedure with Diagnostic Trouble Code (DTC).>
B1102	BATT p/supply malfunction backup	Voltage malfunction caused by poor contact of battery power supply backup circuits	<Ref. to BC(diag)-25, DTC B1102 BATT P/SUPPLY MALFUNCTION BACKUP, Diagnostic Procedure with Diagnostic Trouble Code (DTC).>
B1103	Ignition power failure	Voltage malfunction caused by poor contact of IGN power supply circuits	<Ref. to BC(diag)-27, DTC B1103 IGNITION POWER FAILURE, Diagnostic Procedure with Diagnostic Trouble Code (DTC).>
B1104	ACC power failure	Voltage malfunction caused by poor contact of ACC power supply circuits	<Ref. to BC(diag)-29, DTC B1104 ACC POWER FAILURE, Diagnostic Procedure with Diagnostic Trouble Code (DTC).>
B1106	shift lock circuit Failure	Voltage malfunction caused by poor contact of shift lock circuits	<Ref. to BC(diag)-31, DTC B1106 SHIFT LOCK CIRCUIT FAILURE, Diagnostic Procedure with Diagnostic Trouble Code (DTC).>
B1401	M Collation NG	Malfunction related immobilizer	<Ref. to BC(diag)-33, DTC B1401 M COLLATION NG, Diagnostic Procedure with Diagnostic Trouble Code (DTC).>
B1402	Immobilizer Key Collation NG	Malfunction related immobilizer	<Ref. to BC(diag)-33, DTC B1402 IMMOBILIZER KEY COLLATION NG, Diagnostic Procedure with Diagnostic Trouble Code (DTC).>
B1403	E/G request NG	Malfunction related immobilizer	<Ref. to BC(diag)-33, DTC B1403 E/G REQUEST NG, Diagnostic Procedure with Diagnostic Trouble Code (DTC).>
B1405	SCU Collation NG	Malfunction related immobilizer	<Ref. to BC(diag)-33, DTC B1405 SCU COLLATION NG, Diagnostic Procedure with Diagnostic Trouble Code (DTC).>
B1406	SCU_EEPROM_NG	Malfunction related immobilizer	<Ref. to BC(diag)-33, DTC B1406 SCU_EEPROM_NG, Diagnostic Procedure with Diagnostic Trouble Code (DTC).>
B1500	Keyless UART com. Malfunction	Open or short circuit in keyless UART circuit	<Ref. to BC(diag)-34, DTC B1500 KEYLESS UART COM. MALFUNCTION, Diagnostic Procedure with Diagnostic Trouble Code (DTC).>

13.Diagnostic Procedure with Diagnostic Trouble Code (DTC)

A: DTC B1100 INTEG. UNIT SYSTEM ERROR

DTC DETECTING CONDITION:
System error in body integrated unit
TROUBLE SYMPTOM:
LAN communication immobilizer function may not be executed normally.

	Step	Check	Yes	No
1	**CHECK DTC.** Check DTC indicated by body integrated unit.	Is B1100 current malfunction?	Go to step **2**.	Temporary EEPROM access error occurred.
2	**CHECK CONNECTOR.** 1) Turn the ignition switch to OFF. 2) Disconnect the body integrated unit connector. 3) Connect the disconnected connectors. 4) Read the DTC of body integrated unit using Subaru Select Monitor.	Is B1100 current malfunction?	Replace the body integrated unit. <Ref. to SL-71, REMOVAL, Body Integrated Unit.>	Temporary EEPROM access error occurred.

B: DTC B1101 BATT P/SUPPLY MALFUNCTION CONT

DTC DETECTING CONDITION:

- Voltage malfunction caused by poor contact of battery power supply control circuit
- Battery voltage of body integrated unit is not within the 8.5 — 16.5 V range.

TROUBLE SYMPTOM:

Functions of body integrated unit stop.

NOTE:

When B1102 BATT p/supply malfunction backup is output at the same time, all the function of body integrated unit may not operate.

WIRING DIAGRAM:

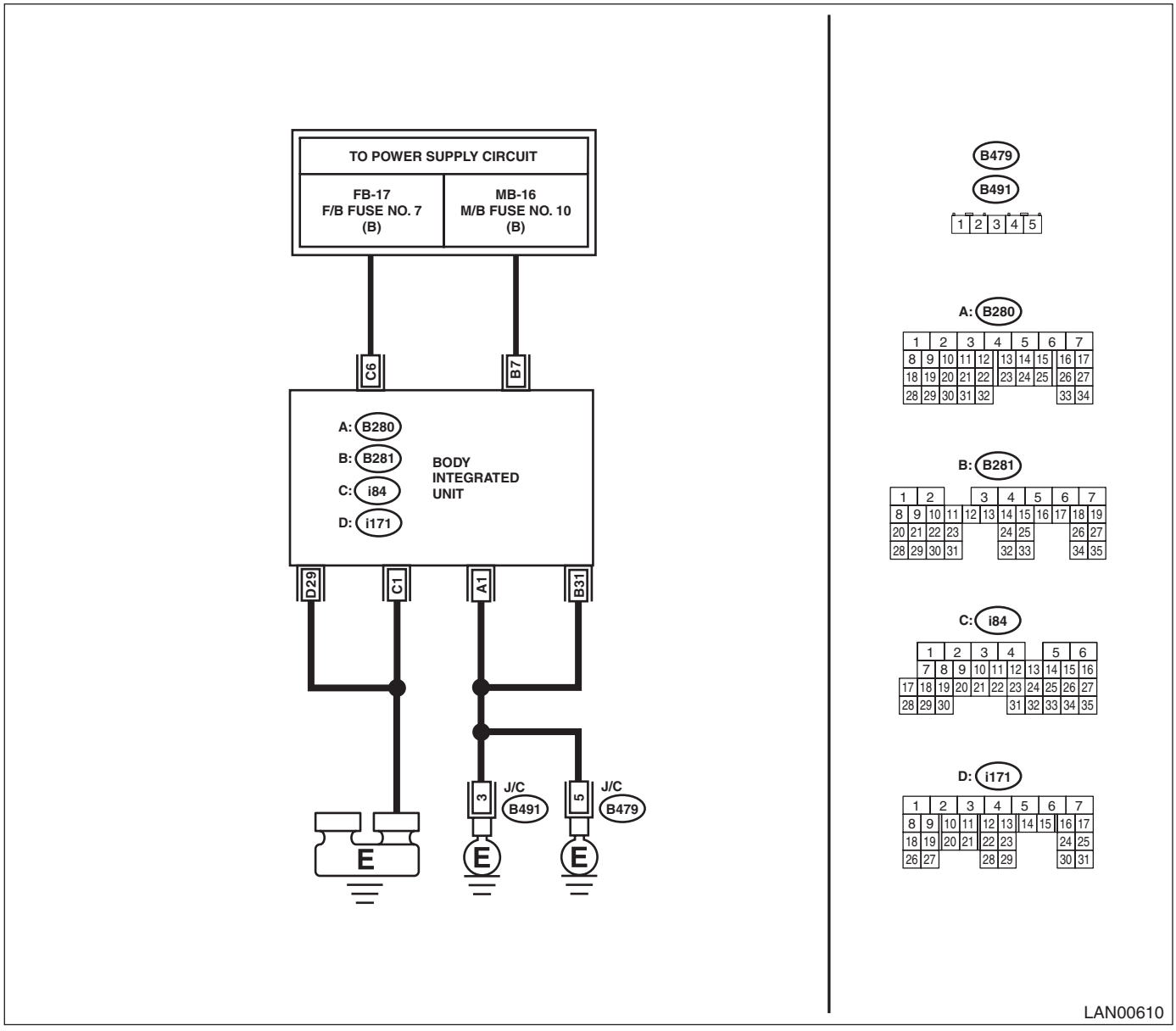

Step		Check	Yes	No
1	**CHECK DTC.** Read the DTC of body integrated unit using Subaru Select Monitor.	Is B1101 current malfunction?	Go to step **2**.	Go to step **5**.

	Step	Check	Yes	No
2	**CHECK DTC.** 1) Turn the ignition switch to OFF. 2) Disconnect and then connect the body integrated unit connector. 3) Wait approx. 2 minutes. 4) Turn the ignition switch to ON. 5) Read the DTC of body integrated unit using Subaru Select Monitor.	Is B1101 current malfunction?	Go to step **3**.	Go to step **5**.
3	**CHECK FUSE.** 1) Turn the ignition switch to OFF. 2) Check the fuse.	Is the fuse OK?	Go to step **4**.	Replace the defective fuse.
4	**CHECK HARNESS.** 1) Disconnect the body integrated unit connector. 2) Using the tester, measure the voltage between terminals. ***Connector & terminal*** ***(i84) No. 6 (+) — Chassis ground (–):***	Is the voltage 8.5 — 16.5 V?	Replace the body integrated unit. <Ref. to SL-71, REMOVAL, Body Integrated Unit.>	Repair the harness between body integrated unit and fuse.
5	**CHECK CONNECTOR.** 1) Turn the ignition switch to OFF. 2) Disconnect the body integrated unit connector.	Is there poor contact of connector?	Repair or replace the poor contact of connector.	A temporary change of voltage occurred.

C: DTC B1102 BATT P/SUPPLY MALFUNCTION BACKUP

DTC DETECTING CONDITION:
Voltage malfunction caused by poor contact of battery power supply backup circuits

TROUBLE SYMPTOM:
Illuminations for the keyless entry, map light, luggage light, trunk light, room light, and ignition switch do not turn on.

NOTE:
When B1101 BATT p/supply malfunction cont is output at the same time, all function of body integrated unit may not operate.

WIRING DIAGRAM:

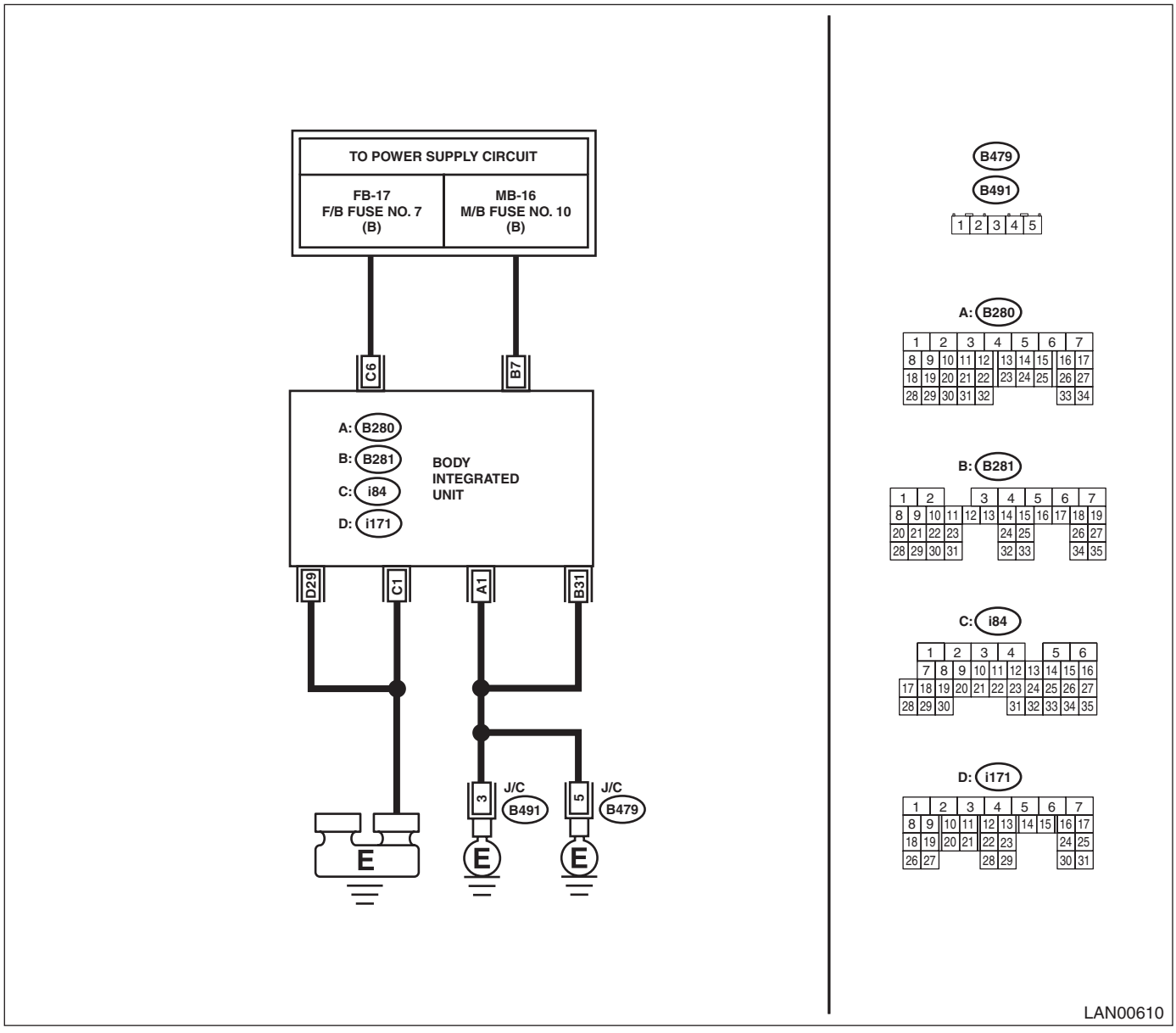

Step		Check	Yes	No
1	**CHECK DTC.** Read the DTC of body integrated unit using Subaru Select Monitor.	Is B1102 current malfunction?	Go to step **2**.	Go to step **5**.

	Step	Check	Yes	No
2	**CHECK DTC.** 1) Turn the ignition switch to OFF. 2) Disconnect and then connect the body integrated unit connector. 3) Wait approx. 2 minutes. 4) Turn the ignition switch to ON. 5) Read the DTC of body integrated unit using Subaru Select Monitor.	Is B1102 current malfunction?	Go to step **3**.	Go to step **5**.
3	**CHECK FUSE.** 1) Turn the ignition switch to OFF. 2) Check the fuse.	Is the fuse OK?	Go to step **4**.	Replace the defective fuse.
4	**CHECK HARNESS.** 1) Disconnect the body integrated unit connector. 2) Using the tester, measure the voltage between terminals. ***Connector & terminal*** ***(B281) No. 7 (+) — Chassis ground (–):***	Is the voltage 8.5 — 16.5 V?	Replace the body integrated unit. <Ref. to SL-71, REMOVAL, Body Integrated Unit.>	Repair the harness between body integrated unit and fuse.
5	**CHECK CONNECTOR.** 1) Turn the ignition switch to OFF. 2) Disconnect the body integrated unit connector.	Is there poor contact of connector?	Repair or replace the poor contact of connector.	A temporary change of voltage occurred.

D: DTC B1103 IGNITION POWER FAILURE

DTC DETECTING CONDITION:
Voltage malfunction caused by poor contact of IGN power supply circuits
TROUBLE SYMPTOM:
Symptoms such as shift lock, reverse lock or wiper not operating may occur.
WIRING DIAGRAM:

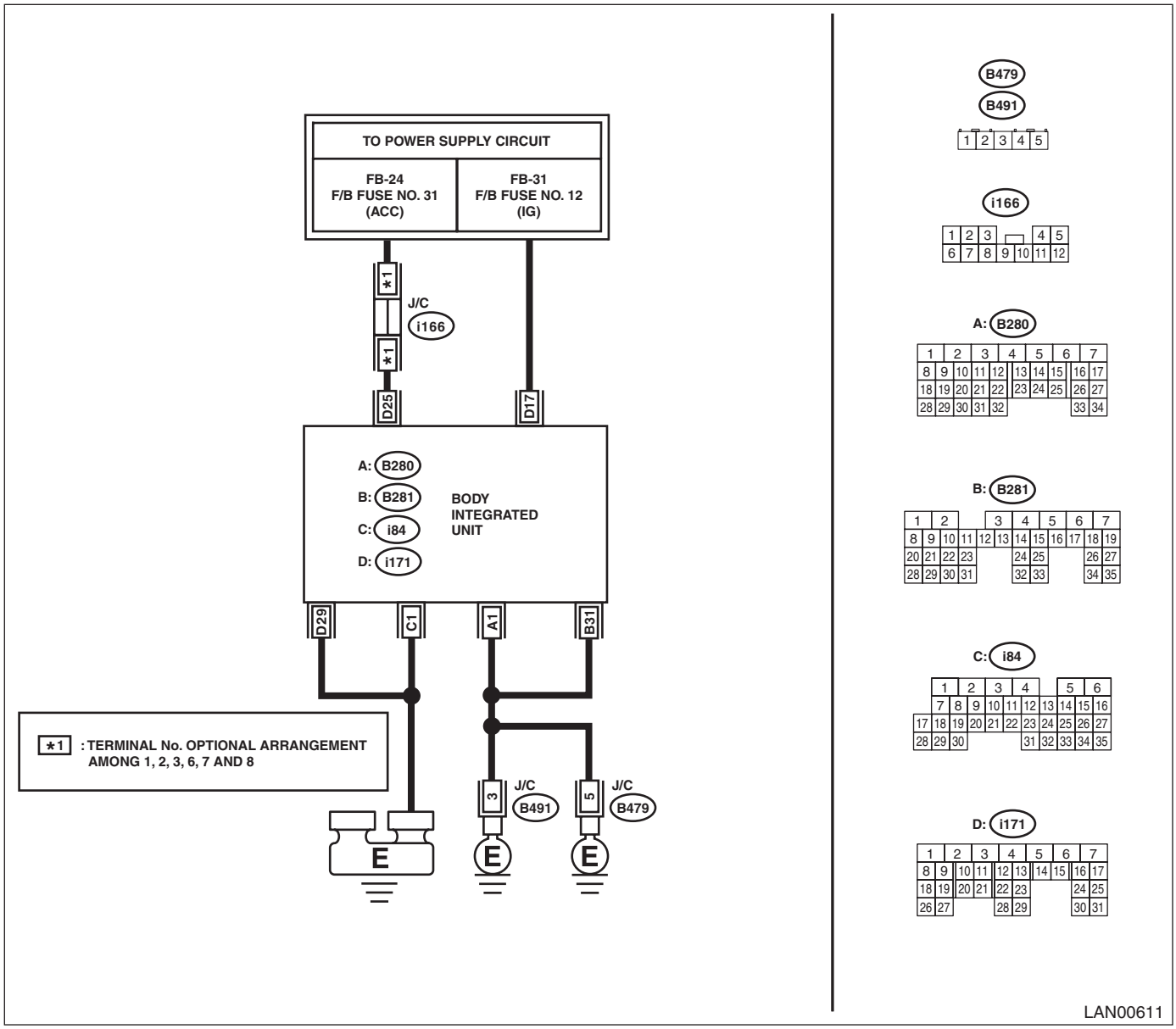

Step		Check	Yes	No
1	**CHECK DTC.** Read the DTC of body integrated unit using Subaru Select Monitor.	Is B1103 current malfunction?	Go to step **2**.	Go to step **5**.
2	**CHECK DTC.** 1) Turn the ignition switch to OFF. 2) Disconnect and then connect the body integrated unit connector. 3) Wait approx. 2 minutes. 4) Turn the ignition switch to ON. 5) Read the DTC of body integrated unit using Subaru Select Monitor.	Is B1103 current malfunction?	Go to step **3**.	Go to step **5**.

	Step	Check	Yes	No
3	**CHECK FUSE.** 1) Turn the ignition switch to OFF. 2) Check the fuse.	Is the fuse OK?	Go to step **4**.	Replace the defective fuse.
4	**CHECK HARNESS.** 1) Disconnect the body integrated unit connector. 2) Using the tester, measure the voltage between terminals. ***Connector & terminal*** ***(i171) No. 17 (+) — Chassis ground (–):***	Is the voltage 8.5 — 16.5 V?	Replace the body integrated unit. <Ref. to SL-71, REMOVAL, Body Integrated Unit.>	Repair the harness between body integrated unit and fuse.
5	**CHECK CONNECTOR.** 1) Turn the ignition switch to OFF. 2) Disconnect the body integrated unit connector.	Is there poor contact of connector?	Repair or replace the poor contact of connector.	A temporary change of voltage occurred.

E: DTC B1104 ACC POWER FAILURE

DTC DETECTING CONDITION:
Voltage malfunction caused by poor contact of ACC power supply circuit
TROUBLE SYMPTOM:
DRL may not illuminate.
WIRING DIAGRAM:

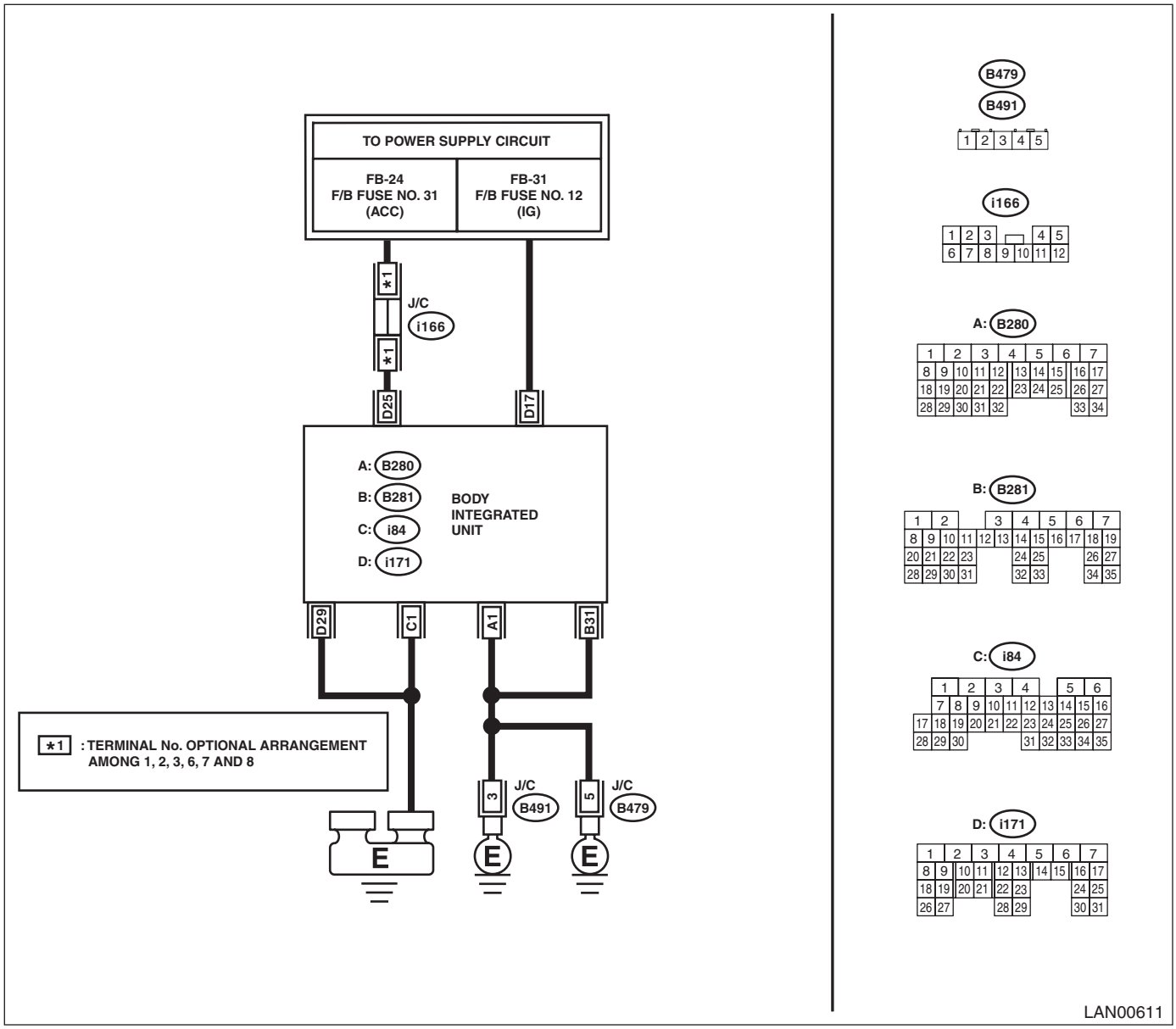

Step		Check	Yes	No
1	**CHECK DTC.** Read the DTC of body integrated unit using Subaru Select Monitor.	Is B1104 current malfunction?	Go to step **2**.	Go to step **5**.
2	**CHECK DTC.** 1) Turn the ignition switch to OFF. 2) Disconnect and then connect the body integrated unit connector. 3) Wait approx. 2 minutes. 4) Turn the ignition switch to ON. 5) Read the DTC of body integrated unit using Subaru Select Monitor.	Is B1104 current malfunction?	Go to step **3**.	Go to step **5**.

	Step	Check	Yes	No
3	**CHECK FUSE.** 1) Turn the ignition switch to OFF. 2) Check the fuse.	Is the fuse OK?	Go to step **4**.	Replace the defective fuse.
4	**CHECK HARNESS.** 1) Disconnect the body integrated unit connector. 2) Using the tester, measure the voltage between terminals. ***Connector & terminal*** ***(i171) No. 25 (+) — Chassis ground (–):***	Is the voltage 8.5 — 16.5 V?	Replace the body integrated unit. <Ref. to SL-71, REMOVAL, Body Integrated Unit.>	Repair the harness between body integrated unit and fuse.
5	**CHECK CONNECTOR.** 1) Turn the ignition switch to OFF. 2) Disconnect the body integrated unit connector.	Is there poor contact of connector?	Repair or replace the poor contact of connector.	A temporary change of voltage occurred.

F: DTC B1106 SHIFT LOCK CIRCUIT FAILURE

DTC DETECTING CONDITION:

Open or power supply-output short, GND-output short in shift lock circuit.

TROUBLE SYMPTOM:

Shift lock does not be released or remain locked.

WIRING DIAGRAM:

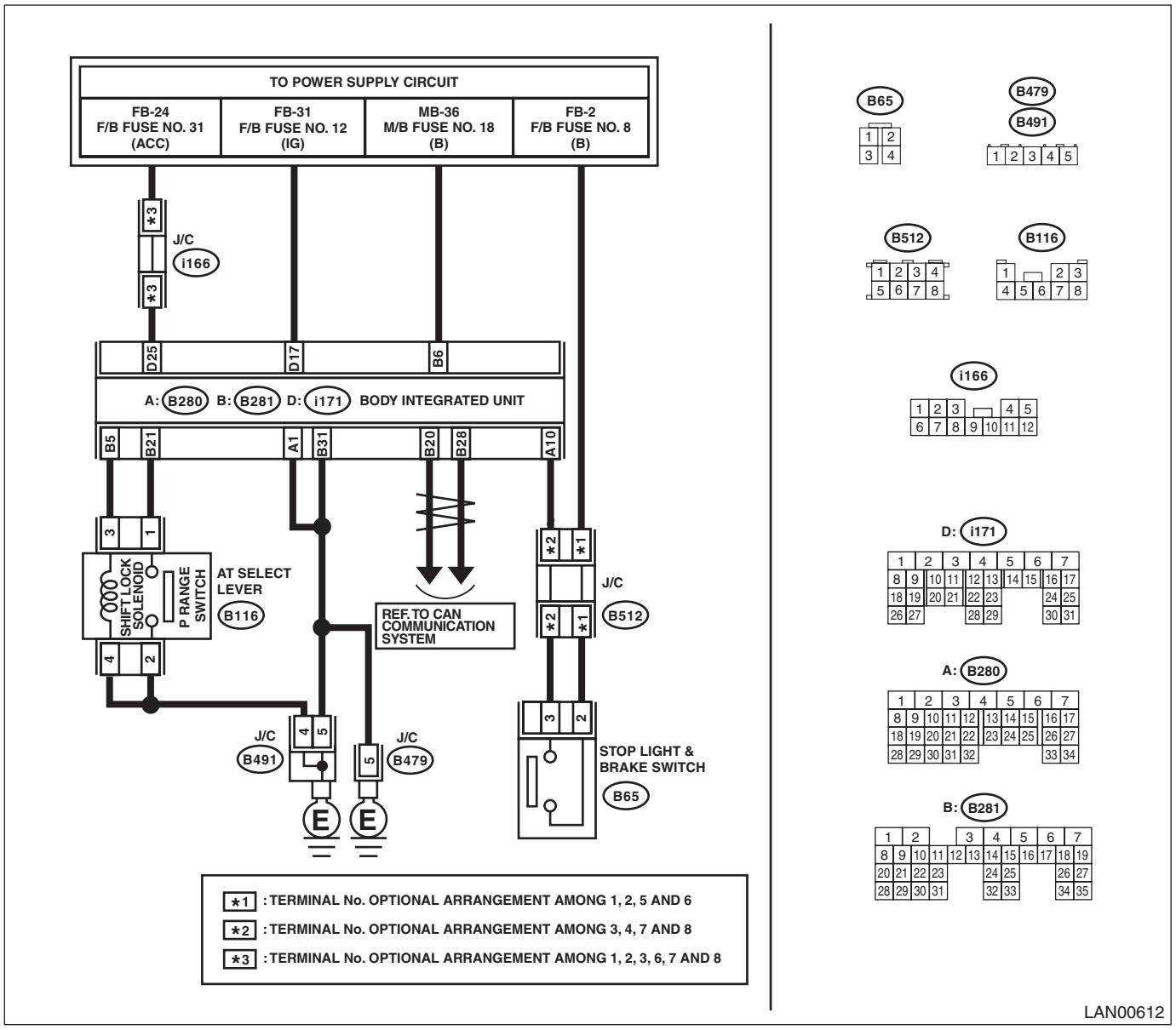

Step		Check	Yes	No
1	**CHECK DTC.** 1) Turn the ignition switch to ON. 2) Keep the Parking range for approx. 5 seconds. 3) Read the DTC of body integrated unit using Subaru Select Monitor.	Is B1106 current malfunction?	Go to step **6**.	Go to step **2**.

	Step	Check	Yes	No
2	**CHECK DTC.** 1) Turn the ignition switch to OFF. 2) Disconnect the shift lock solenoid connector. 3) Connect the disconnected connectors. 4) Turn the ignition switch to ON, then keep the Parking range for approx. 5 seconds. 5) Read the DTC of body integrated unit using Subaru Select Monitor.	Is B1106 current malfunction?	Go to step **3**.	Go to step **7**.
3	**CHECK HARNESS.** 1) Turn the ignition switch to OFF. 2) Disconnect the shift lock solenoid connector. 3) Using the tester, measure the resistance between terminals. ***Connector & terminal*** ***(B116) No. 4 — Chassis ground:***	Is the resistance less than 10 Ω?	Go to step **4**.	Repair or replace the open circuit of harness.
4	**CHECK SHIFT LOCK SOLENOID.** Using a tester, measure the resistance between shift lock solenoid terminals. ***Connector & terminal*** ***(B116) No. 4 — No. 3:***	Is the resistance less than 27 — 31 Ω?	Go to step **5**.	Replace the shift lock solenoid. <Ref. to CS-31, DISASSEMBLY, Select Lever.>
5	**CHECK SHIFT LOCK SOLENOID.** Connect the battery terminal to shift lock solenoid. ***Connector & terminal*** ***(B116) No. 3 — positive terminal:*** ***(B116) No. 4 — ground terminal:***	Does the shift lock solenoid operate and then release the lock?	Go to step **6**.	Replace the shift lock solenoid. <Ref. to CS-31, DISASSEMBLY, Select Lever.>
6	**CHECK HARNESS.** Use a tester to measure the resistance between harness terminals. ***Connector & terminal*** ***(B116) No. 3 — (B281) No. 5:*** NOTE: If body integrated unit and shift lock connector are not disconnected, disconnect them first and then perform measurement.	Is the resistance less than 10 Ω?	Replace the body integrated unit. <Ref. to SL-71, Body Integrated Unit.>	Repair or replace the open circuit of harness.
7	**CHECK DTC.** 1) Depress the brake pedal at the parking range. 2) Read the DTC of body integrated unit using Subaru Select Monitor.	Is B1106 current malfunction?	Go to step **8**.	Go to step **9**.
8	**CHECK DTC.** 1) Turn the ignition switch to OFF. 2) Disconnect the body integrated unit connector and shift lock connector. 3) Connect the disconnected connectors. 4) Turn the ignition switch to ON. 5) Depress the brake pedal at the parking range. 6) Read the DTC of body integrated unit using Subaru Select Monitor.	Is B1106 current malfunction?	Go to step **4**.	Go to step **9**.
9	**CHECK CONNECTOR.** 1) Turn the ignition switch to OFF. 2) Disconnect the body integrated unit connector and shift lock connector.	Is there poor contact of connector terminal?	Repair or replace the poor contact of terminal.	It is possible that temporary poor contact occurs.

G: DTC B1401 M COLLATION NG

For detailed diagnosis procedure, refer to IMMOBILIZER (DIAG). <Ref. to IM(diag)-25, DTC B1401 M COLLATION NG, Diagnostic Procedure with Diagnostic Trouble Code (DTC).>

H: DTC B1402 IMMOBILIZER KEY COLLATION NG

For detailed diagnosis procedure, refer to IMMOBILIZER (DIAG). <Ref. to IM(diag)-25, DTC B1402 IMMOBILIZER KEY COLLATION NG, Diagnostic Procedure with Diagnostic Trouble Code (DTC).>

I: DTC B1403 E/G REQUEST NG

For detailed diagnosis procedure, refer to IMMOBILIZER (DIAG). <Ref. to IM(diag)-25, DTC B1403 E/G REQUEST NG, Diagnostic Procedure with Diagnostic Trouble Code (DTC).>

J: DTC B1405 SCU COLLATION NG

For detailed diagnosis procedure, refer to IMMOBILIZER (DIAG). <Ref. to IM(diag)-26, DTC B1405 SCU COLLATION NG, Diagnostic Procedure with Diagnostic Trouble Code (DTC).>

K: DTC B1406 SCU_EEPROM_NG

For detailed diagnosis procedure, refer to IMMOBILIZER (DIAG). <Ref. to IM(diag)-26, DTC B1406 SCU_EEPROM_NG, Diagnostic Procedure with Diagnostic Trouble Code (DTC).>

L: DTC B1500 KEYLESS UART COM. MALFUNCTION

DTC DETECTING CONDITION:

UART between the keyless control module and body integrated unit is open or shorted, or has communication failure.

TROUBLE SYMPTOM:

Door lock does not operate with keyless.

WIRING DIAGRAM:

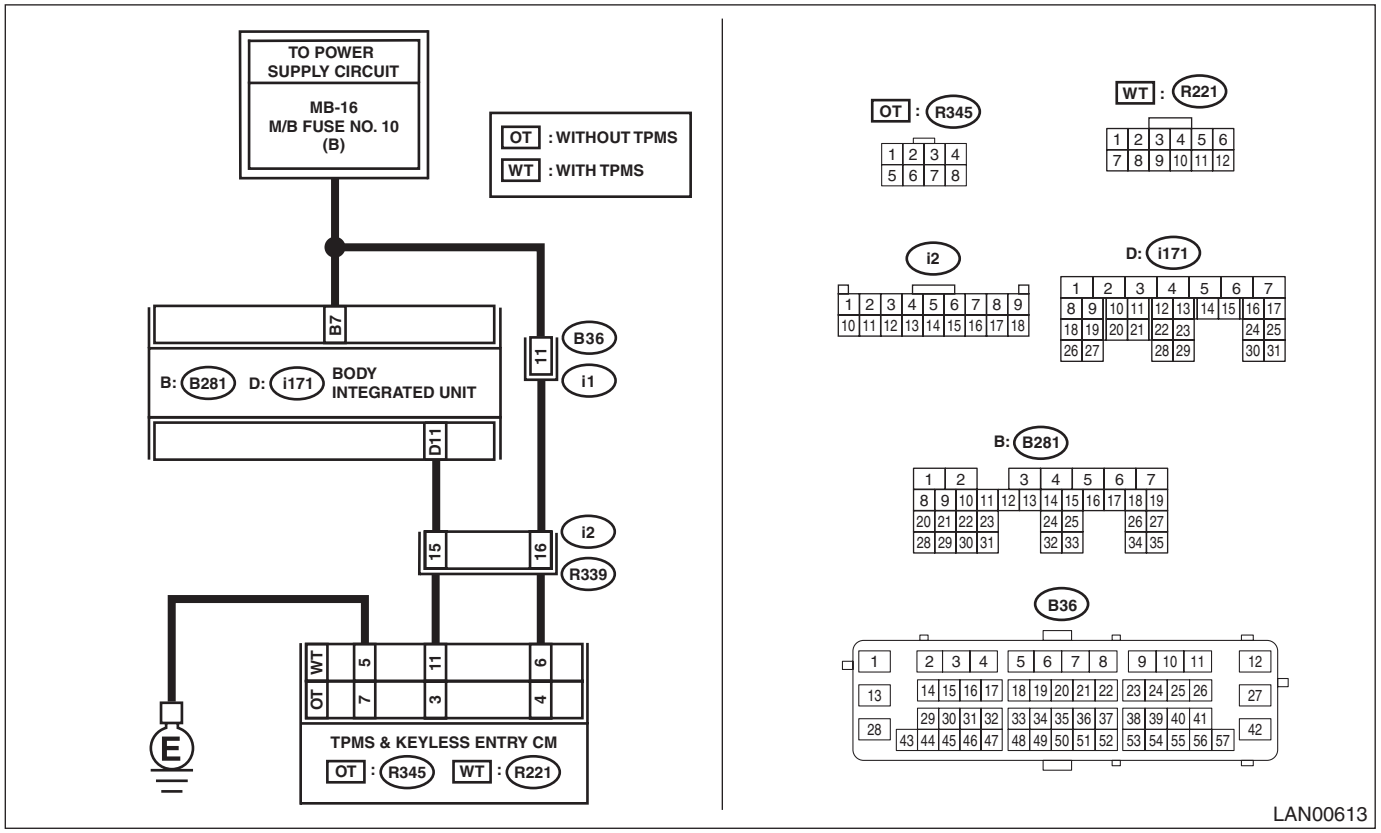

Step		Check	Yes	No
1	**CHECK DTC.** 1) Insert the ignition key to the ignition key cylinder and remove. 2) Read the DTC of body integrated unit using Subaru Select Monitor.	Is B1500 current malfunction?	Go to step **2**.	Go to step **7**.
2	**CHECK DTC.** 1) Turn the ignition switch to OFF. 2) Disconnect the body integrated unit and keyless entry control module connector. 3) Connect the disconnected connectors. 4) Insert the ignition key to the ignition key cylinder and remove. 5) Read the DTC of body integrated unit using Subaru Select Monitor.	Is B1500 current malfunction?	Go to step **3**.	Go to step **7**.

	Step	Check	Yes	No
3	**CHECK HARNESS.** 1) Turn the ignition switch to OFF. 2) Disconnect the body integrated unit and keyless entry control module connector. 3) Using the tester, measure the resistance between terminals. ***Connector & terminal*** ***With TPMS*** ***(i171) No. 11 — (R221) No. 11:*** ***Without TPMS*** ***(i171) No. 11 — (R345) No. 3:***	Is the resistance 10 Ω or less?	Go to step **4**.	Repair the open circuit of harness or replace harness.
4	**CHECK HARNESS.** 1) Turn the ignition switch to OFF. 2) Use a tester to measure the voltage between the terminals. ***Connector & terminal*** ***With TPMS*** ***(R221) No. 6 (+) — Chassis ground (–):*** ***Without TPMS*** ***(R345) No. 4 (+) — Chassis ground (–):***	Is the voltage 10 V or more?	Go to step **5**.	Repair the power supply circuit.
5	**CHECK HARNESS.** Using the tester, measure the resistance between terminals. ***Connector & terminal*** ***With TPMS*** ***(R221) No. 5 — Chassis ground:*** ***Without TPMS*** ***(R345) No. 7 — Chassis ground:***	Is the resistance 10 Ω or less?	Go to step **6**.	Repair the ground circuit.
6	**CHECK CONTROL MODULE.** 1) Turn the ignition switch to OFF. 2) Remove the keyless entry control module. 3) Install a keyless entry control module that was operating normally on another vehicle.	Does it operate with the remote control key of another vehicle?	Replace the keyless entry control module. <Ref. to SL-68, REMOVAL, Keyless Entry Control Module.>	Replace the body integrated unit.
7	**CHECK CONNECTOR.** Check for poor contact of connectors used for low-speed CAN.	Is there poor contact of connector?	Repair the connector that has poor contact, or replace harness.	It is possible that temporary poor communication occurs. Delete the DTC.

14.General Diagnostic Table

A: INSPECTION

Using the Subaru Select Monitor, read DTC, or check the following data on the current data display to make judgments.

Item	Operation	Specifications		Note
		YES	NO	
Diagnostic code	DTC is not displayed when inspecting all DTCs.	DTC is not displayed.	Perform the diagnosis according to DTC.	—
Remaining fuel level	Fuel gauge displays correctly.	System is normal.	Check the combination meter system and LAN system.	—
	Remaining fuel level warning light is not illuminating.	System is normal.		
Clearance light (Low beam) (High beam)	Clearance light and low/high beams illuminate normally when the switch is operated. Indicator in the meter illuminates at the same time.	System is normal.	Check the lighting system, combination meter system and LAN system.	—
Fog light	Front fog light illuminates when the switch is operated. Indicator in the meter illuminates at the same time.	System is normal.	Check the lighting system, combination meter system and LAN system.	—
Rear defogger	Rear defogger operates when the switch is operated. The indicator illuminates at the same time.	System is normal.	Check the rear window defogger system and A/C system.	—
Wiper deicer	Wiper deicer operates when the switch is operated. The indicator illuminates at the same time. When the ambient temperature is 5°C (41°F) or higher, press the switch 3 seconds or more to forcibly activate the system.	System is normal.	Check the wiper deicer system and A/C system.	Wiper deicer operates when “Wiper deicer setting” of the body integrated unit is set to on.
DRL	After starting the engine and releasing the parking brake, the DRL illuminates.	System is normal.	Check the lighting system and LAN system.	—
Rear wiper	Rear wiper operates when the switch is operated.	System is normal.	Check wiper or washer system.	Depending on user customizing “Sedan/Wagon Setting” of the body integrated unit, vehicle sensory time varies.
Key interlock	• Key cannot be removed in other than P range. • Key can be removed in other than P range.	System is normal.	Check the body control system.	—
Shift lock	The select lever can be moved from the P range to other ranges only when the brake pedal is depressed with IG ON.	System is normal.	Check the body control system.	—
Key warning switch alarm	When the driver’s door is open without the key removed, the buzzer sounds.	System is normal.	Check the combination meter and body control system.	—
Seat belt warning alarm	Indicator in the meter blinks and the alarm sounds when the driver’s seat belt is not fastened. Indicator in the clock blinks when the passenger’s seat is occupied without the passenger’s seat belt fastened. When the vehicle speed exceeds 15 km/h (9 MPH) with the belt unfastened, the buzzer sounds.	System is normal.	Check the seat belt system and combination meter LAN system.	—

Item	Operation	Specifications		Note
		YES	NO	
Door lock	The doors lock/unlock when the door switch is operated. Rear gate/trunk opens when the rear gate/trunk release switch is operated.	System is normal.	Check the security & lock and body control system.	If user customizing “Sedan/ Wagon Setting” is different, trunk and rear gate do not open.
Keyless entry	The lock locks/unlocks when the keyless transmitter is operated. Trunk/rear gate unlocks when trunk/rear gate unlock button is operated.	System is normal.	Check the keyless entry and body control system.	—
Answer back	Answer-back operates when the keyless entry locks/unlocks.	System is normal.	Check the security & lock system, and LAN system.	—
Room light	The light illuminates/goes off according to the door open/close.	System is normal.	Check the room light system, security & lock system, and LAN system.	—
Map light	The light illuminates/goes off according to the door open/close. (Except for rear gate)	System is normal.	Check the spot map light, security & lock system, and LAN system.	—
Luggage/trunk light	The light illuminates/goes off according to the rear gate open/close.	System is normal.	Check the luggage/ trunk light, security & lock system, and LAN system.	—
Key illumination	The light illuminates/goes off according to the driver’s door open/close.	System is normal.	Check the ignition switch illumination, security & lock, and LAN system.	—
Illumination control	Illumination volume control is available.	System is normal.	Check the illumination control switch, combination meter, and body control system.	Illumination volume control is not available when user customizing “Illumination Control On/Off” of the body integrated unit is set to off.
Engine start	Engine starts.	System is normal.	Check the engine system, immobilizer, and LAN system.	—
Vehicle security	Security monitoring/security canceling can be performed by operating the keyless entry.	System is normal.	Check the security & lock system, and LAN system.	Security monitoring starts and at the same time the warning buzzer sounds, when impact sensor is not connected and user customizing “Impact Sensor” of the body integrated unit is set to on.

WIRING SYSTEM SECTION

This service manual has been prepared to provide SUBARU service personnel with the necessary information and data for the correct maintenance and repair of SUBARU vehicles.
This manual includes the procedures for maintenance, disassembling, reassembling, inspection and adjustment of components and diagnostics for guidance of experienced mechanics.
Please peruse and utilize this manual fully to ensure complete repair work for satisfying our customers by keeping their vehicle in optimum condition. When replacement of parts during repair work is needed, be sure to use SUBARU genuine parts.

All information, illustration and specifications contained in this manual are based on the latest product information available at the time of publication approval.

WIRING SYSTEM

WI

		Page
1.	Basic Diagnostic Procedure	3
2.	Working Precautions	14
3.	Power Supply Circuit	15
4.	Ground Circuit	24
5.	Airbag System	45
6.	Air Conditioning System	53
7.	AT Control System	62
8.	Audio System	69
9.	Back-up Light System	82
10.	CAN Communication System	85
11.	Charging System	88
12.	Clearance Light and Illumination Light System	89
13.	Clock System	96
14.	Combination Meter System	98
15.	Coolant Temperature System	103
16.	Cruise Control System	105
17.	CVT Control System	112
18.	Engine Electrical System	120
19.	Front Accessory Power Supply Socket System	166
20.	Front Fog Light System	167
21.	Front Wiper and Washer System	169
22.	Fuel Gauge System	171
23.	Headlight System	172
24.	Horn System	175
25.	Immobilizer System	176
26.	Interior Light System	177
27.	Keyless Entry System	181
28.	Navigation System	185
29.	Occupant Detection System	191
30.	Oil Pressure Warning Light System	193
31.	Parking Brake / Brake Fluid Level Warning Light System	194
32.	Power Seat System	198
33.	Power Window System	200
34.	Radiator Fan System	208
35.	Rear Accessory Power Supply Socket System	211
36.	Rear Defogger System	212
37.	Rearview Camera System	213
38.	Rearview Mirror System	217
39.	Rear Wiper and Washer System	219
40.	Remote Control Mirror System	221
41.	Remote Engine Start System	223
42.	Seat Belt Warning System	226
43.	Seat Heater System	234
44.	Security System	236
45.	Shift Lock Control System	239

46. Speedometer System 240
47. Starter System 241
48. Stop Light System 244
49. Sunroof Control System 247
50. Tire Pressure Monitoring System 248
51. Turn Signal Light and Hazard Light System 249
52. Vehicle Dynamics Control System 251
53. Wiper Deicer System 255
54. Harness Components Location 256
55. Front Wiring Harness 258
56. Bulkhead Wiring Harness (In Engine Compartment) 259
57. Bulkhead Wiring Harness (In Compartment) 265
58. Engine Wiring Harness and Transmission Cord 272
59. Instrument Panel Wiring Harness 280
60. Rear Wiring Harness 283
61. Door Cord 295
62. Rear Wiring Harness and Trunk Lid Cord 297
63. Rear Wiring Harness and Rear Gate Cord 299

1. Basic Diagnostic Procedure

A: BASIC PROCEDURES

1. GENERAL DESCRIPTION

The most important purpose of diagnostics is to quickly determine which part is malfunctioning, to save time and labor.

2. IDENTIFICATION OF TROUBLE SYMPTOM

Determine what the problem is based on the symptom.

3. PROBABLE CAUSE OF TROUBLE

Look at the wiring diagram and check the system's circuit. Then check the switch, relay, fuse, ground, etc.

4. LOCATION AND REPAIR OF TROUBLE

1) Using the diagnostics, narrow down the causes.
2) If necessary, use a voltmeter, ohmmeter, etc.
3) Before replacing certain component parts (switch, relay, etc.), check the power supply, ground, for open wiring harness, poor connectors, etc. If no problem is encountered, check the component parts.

5. SYSTEM OPERATION CHECK

After repairing, ensure that the system operates properly.

B: BASIC INSPECTION

1. VOLTAGE MEASUREMENT

1) Using a voltmeter, connect the negative lead to a good ground point or negative battery terminal and the positive lead to the connector or component terminal.
2) Contact the positive lead of the voltmeter on connector (A). The voltmeter will indicate a voltage.
3) Shift the positive lead to connector (B). The voltmeter will indicate no voltage.

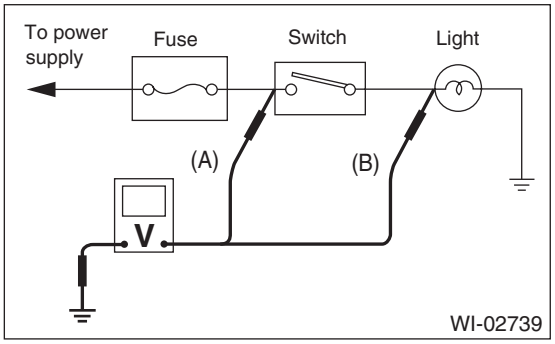

4) With the test set-up held as it is, turn the switch to ON. The voltmeter will indicate a voltage and, at the same time, the light will illuminate.
5) The circuit is in good order. If a problem such as a light failing to illuminate occurs, use the procedures outlined above to track down the malfunction.

2. CIRCUIT CONTINUITY CHECKS

1) Disconnect the battery terminal or connector so there is no voltage between the check points.
Contact the two leads of an ohmmeter to each of the check points.
If the circuit has diodes, reverse the two leads and check again.
2) Use an ohmmeter to check for diode continuity.
When contacting the negative lead to the diode positive side and the positive lead to the negative side, there should be continuity.
When contacting the two leads in reverse, there should be no continuity.

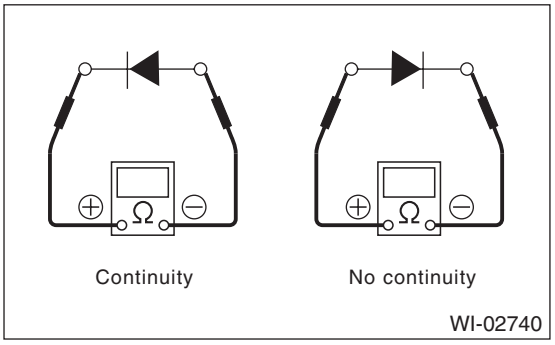

3) The symbol "❍ — ❍" indicates that continuity exists between two points or terminals. For example, when a switch position is at "3", continuity exists among terminals 1, 3 and 6, as shown in the table below.

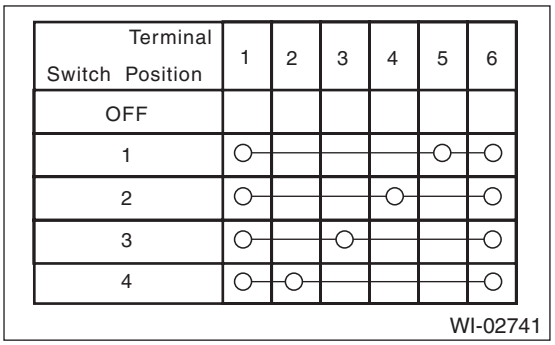

Terminal / Switch Position	1	2	3	4	5	6
OFF						
1	○				○	○
2	○			○		○
3	○		○			○
4	○	○				○

WI-02741

3. HOW TO DETERMINE AN OPEN CIRCUIT

1) WITH VOLTMETER:
An open circuit is determined by measuring the voltage between respective connectors and ground using a voltmeter, starting with the connector closest to the power supply. The power supply must be turned ON so that current flows in the circuit. If voltage is not present between a particular connector and ground, the circuit between that connector and the previous connector is open.

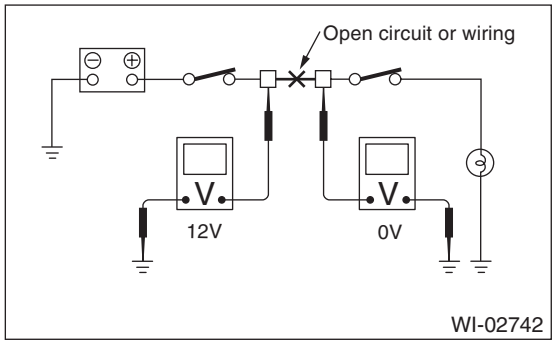

2) WITH OHMMETER:
Disconnect all connectors affected, and check continuity in the wiring between adjacent connectors. When the ohmmeter indicates “infinite”, the wiring is open.

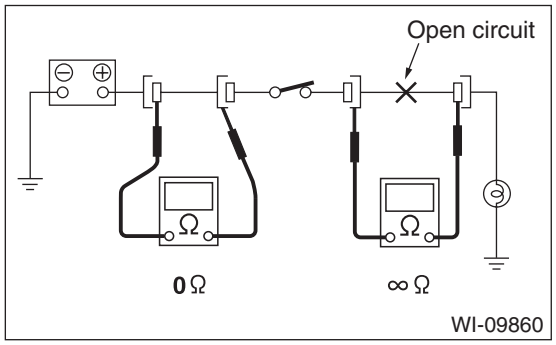

4. HOW TO DETERMINE A SHORT CIRCUIT

1) WITH TEST LIGHT:
Connect a test light (rated at approx. 3 watts) in place of the blown fuse and allow current to flow through the circuit. Disconnect one connector at a time from the circuit. Starting with the one located farthest from the power supply. If the test light goes out when a connector is disconnected, the wiring between that connector and the next connector (farther from the power supply) is shorted.

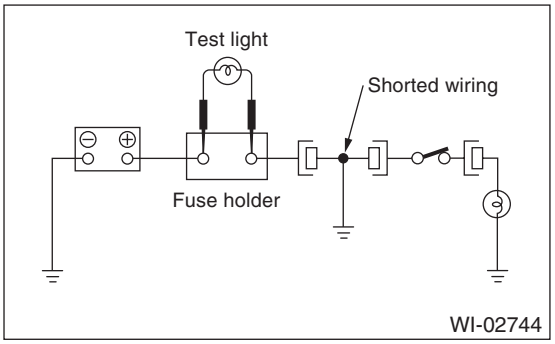

2) WITH OHMMETER:
Disconnect all affected connectors, and check continuity between each connector and ground. When the ohmmeter indicates continuity between a particular connector and a ground, that connector is shorted.

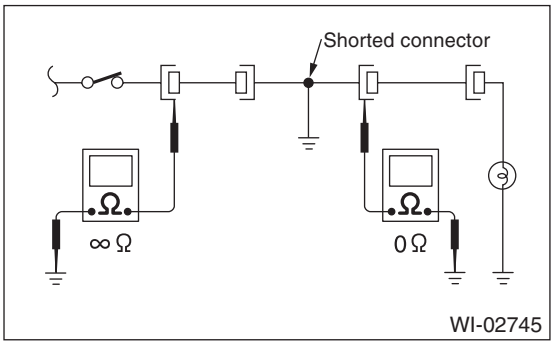

C: HOW TO READ WIRING DIAGRAMS

1. WIRING DIAGRAM

The wiring diagram of each system is illustrated so that you can understand the path through which the electric current flows from the battery.
Sketches and codes are used in the diagrams. They should read as follows:

- Each connector and its terminal position are indicated by a sketch of the connector in a disconnected state which is viewed from the front.

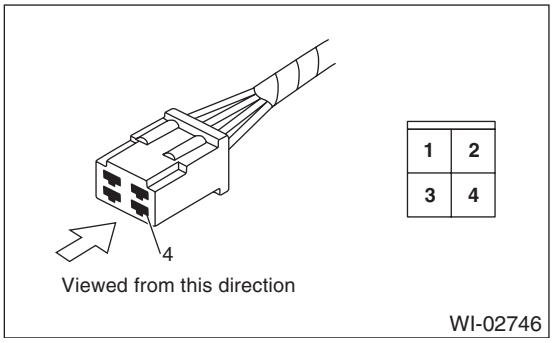

- The number of poles or pins, presence of a lock are indicated in the sketch of each connector. In the sketch, the highest pole number refers to the number of poles which the connector has. For example, the sketch of the connector shown in figure indicates the connector has 9 poles.

Connector used in vehicle	Connector shown in wiring diagram		
	Sketch	Symbol	Number of poles
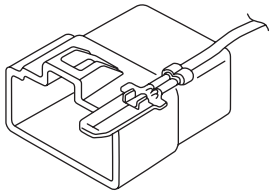	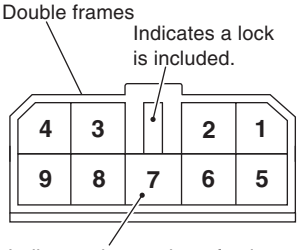	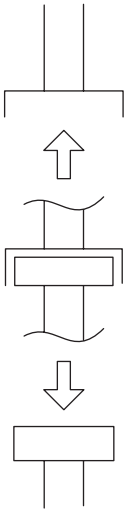	Numbered in order from upper right to lower left.
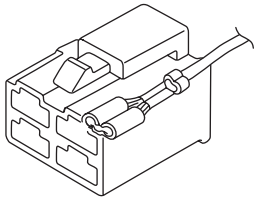	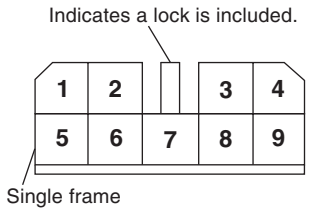		Numbered in order from upper left to lower right.

WI-02747

• When one set of connectors is viewed from the front side, the pole numbers of one connector are symmetrical to those of the other. When these two connectors are connected as a unit, the poles which have the same number are joined.

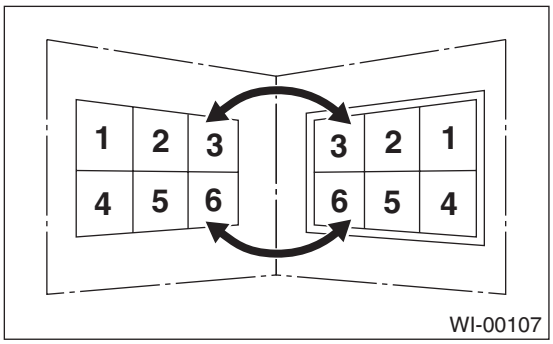

• WIRING DIAGRAM:
The connectors are numbered along with the number of poles, external colors, and mating connections in the accompanying list.
• The sketch of each connector in the wiring diagram usually shows the (A) side of the connector. The relationship between the wire color, terminal number and connector is described in the figure.

NOTE:
A wire which runs in one direction from a connector terminal sometimes may have a different color from that which runs in the other direction from that terminal.

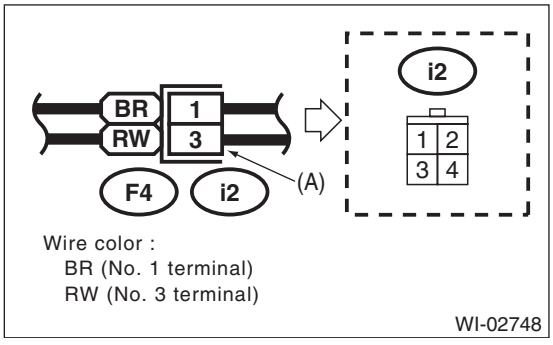

• In the wiring diagram, connectors which have no terminal number refer to one-pole types. Sketches of these connectors are omitted intentionally.

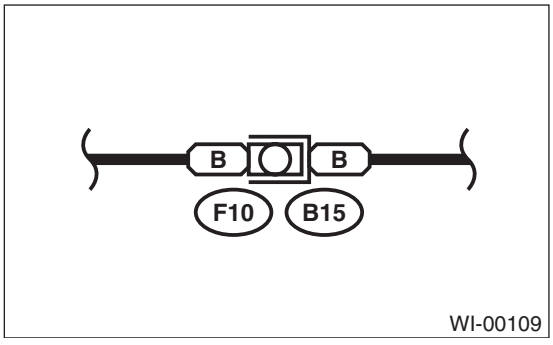

• The following color codes are used to indicate the colors of the wires.

Color code	Color
L	Blue
B	Black
Y	Yellow
G	Green
R	Red
W	White
Br	Brown
Lg	Light green
Gr	Gray
P	Pink
Or	Orange
Sb	Light blue
V	Violet
SA	Sealed (Inner)
SB	Sealed (Outer)

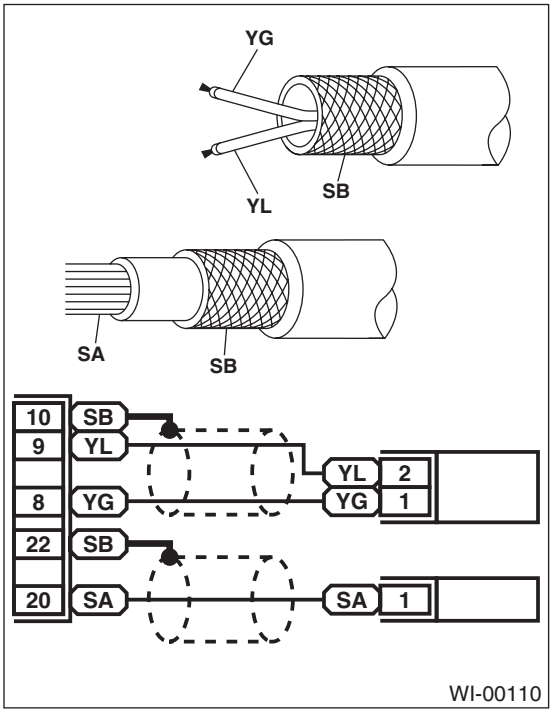

• The wire color code, which consists of two letters (or three letters including Br or Lg), indicates the standard color (base color of the wire covering) by its first letter and the stripe marking by its second letter.

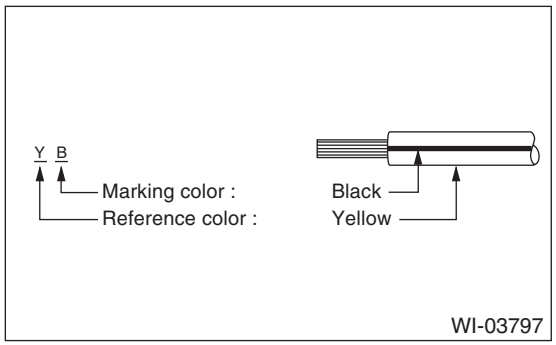

• The table lists the nominal sectional areas and allowable currents of the wires.

CAUTION:
When replacing or repairing a wire, be sure to use the same size and type of the wire which was originally used.

NOTE:
• The allowable current in the table indicates the tolerable amperage of each wire at an ambient temperature of 40°C (104°F).
• The allowable current changes with ambient temperature. Also, it changes if a bundle of more than two wires is used.

Nominal sectional area mm^2	No. of strands/ strand diameter	Outside diameter of wiring mm	Allowable current Amps/ 40°C (104°F)
0.3	7/0.26	1.8	7
0.5	7/0.32	2.2 (or 2.0)	12
0.75	30/0.18	2.6 (or 2.4)	16
0.85	11/0.32	2.4 (or 2.2)	16
1.25	16/0.32	2.7 (or 2.5)	21
2	26/0.32	3.1 (or 2.9)	28
3	41/0.32	3.8 (or 3.6)	38
5	65/0.32	4.6 (or 4.4)	51
8	50/0.45	5.5	67

• Each unit is either directly grounded to the body or indirectly grounds through a harness ground terminal. Different symbols are used in the wiring diagram to identify the two grounding systems.

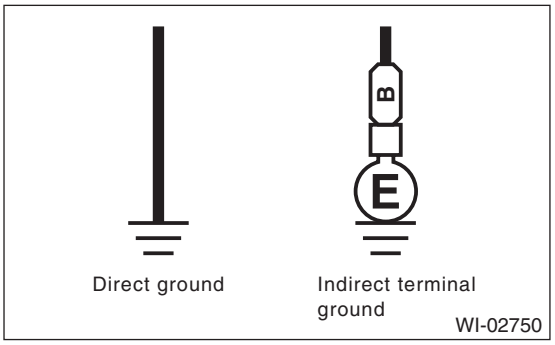

• The ground points shown in the wiring diagram refer to the following:

NOTE:
All wiring harnesses are provided with a ground point which should be securely connected.

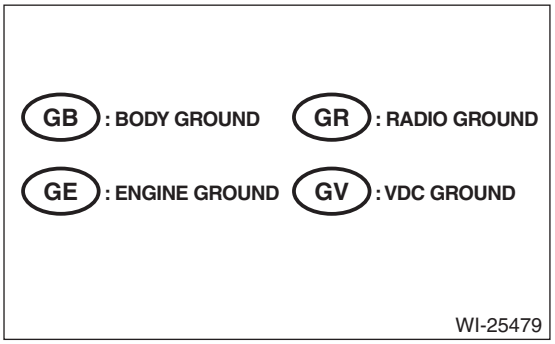

- Relays are classified as normally-open or normally-closed.

The normally-closed relay has one or more contacts. The wiring diagram shows the relay mode when the energizing circuit is OFF.

Relay type		Energizing circuit OFF	Energizing circuit ON
Normally-open type	4-pole	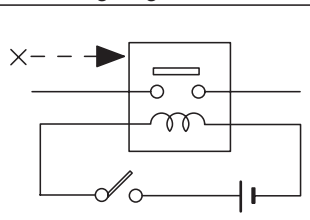	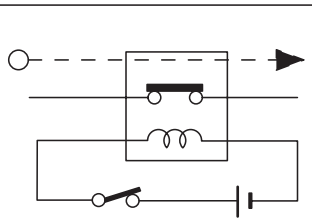
	6-pole	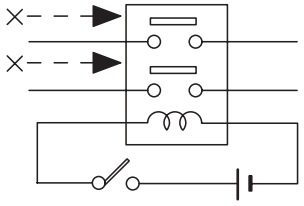	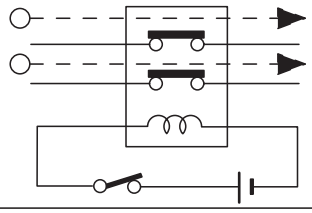
Normally-closed type	4-pole	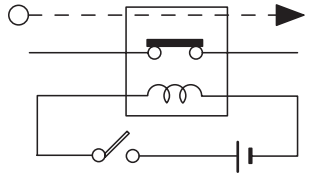	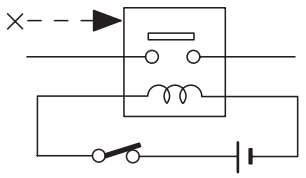
Mixed type	6-pole	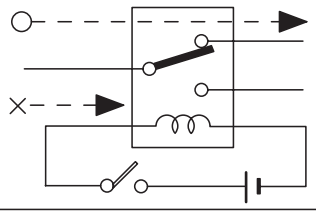	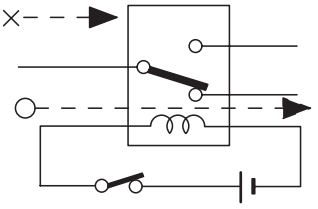

Key to symbols:

○ ⟶ : Current flows.

× ⟶ : Current does not flow.

WI-16724

• Each connector number shown in the wiring diagram corresponds to that in the wiring harness. The location of each connector in the actual vehicle is determined by reading the first character of the connector (for example, a “F” for F8, “i” for i16, etc.) and the type of wiring harness. The first character of each connector number corresponds to the area or system of the vehicle.

Symbol	Wiring harness and cord
F	Front wiring harness
B	Bulkhead wiring harness
E	Engine wiring harness
T	Transmission cord
D	Door cord LH & RH, Rear gate cord Rear door cord LH & RH
i	Instrument panel wiring harness
R	Rear wiring harness, Fuel tank cord, Roof cord, Rear gate cord,
AB	Airbag wiring harness

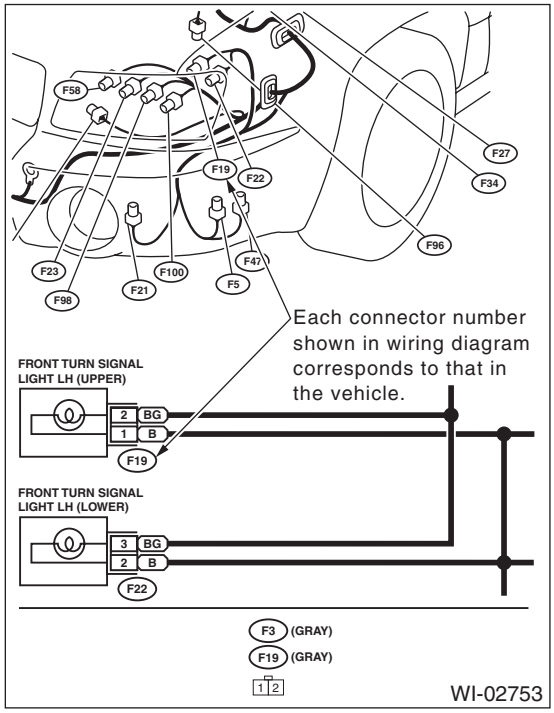

D: SYMBOLS IN WIRING DIAGRAMS

A number of symbols are used in each wiring diagram to easily identify parts or circuits.

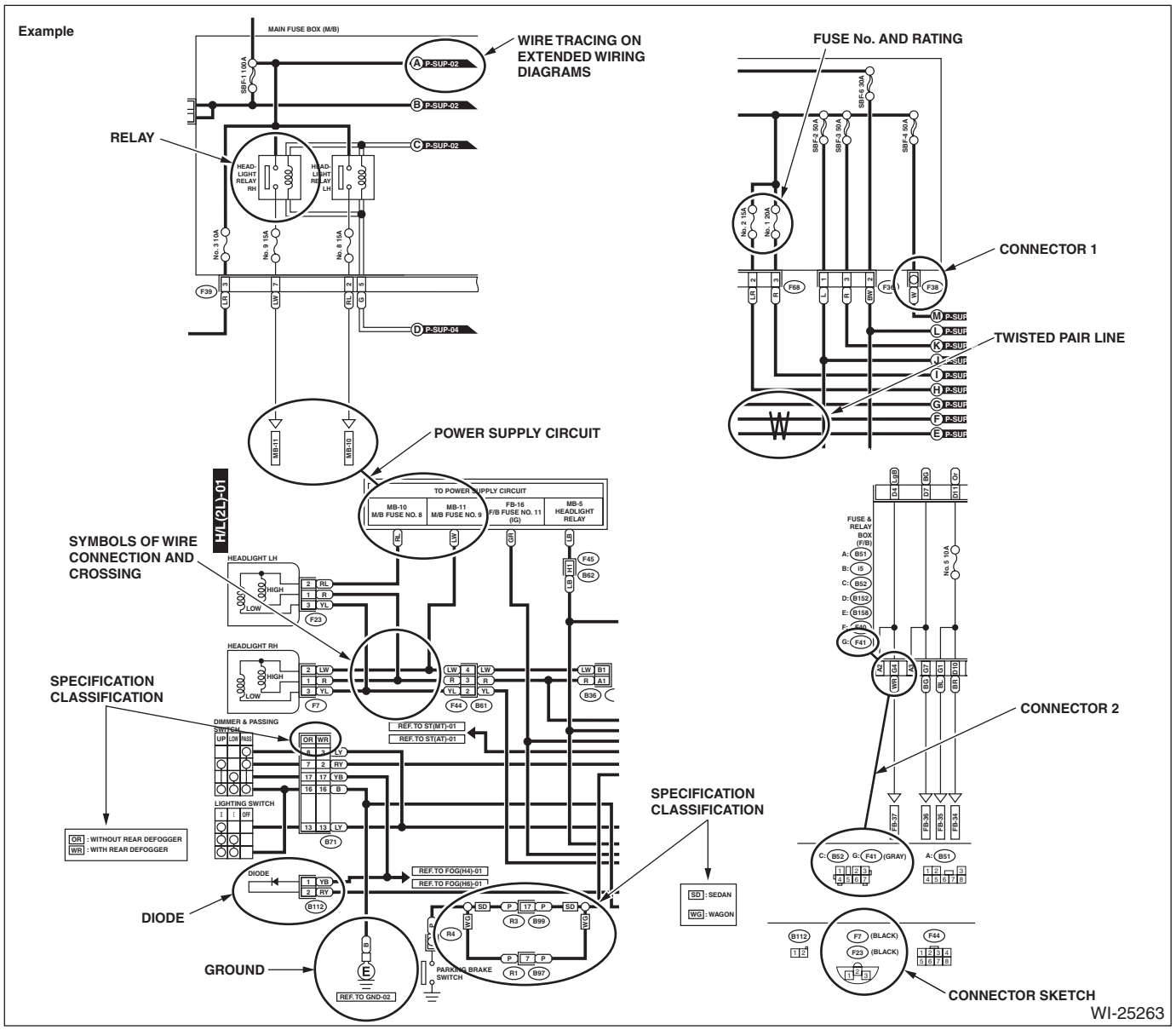

1. RELAY

A symbol used to indicate a relay.

2. CONNECTOR 1

The sketch of the connector indicates the one-pole types.

3. WIRING CONNECTION

Some wiring diagrams are indicated in foldouts for convenience. Wiring destinations are indicated where necessary by corresponding symbols. (When two pages are needed for clear indication)

4. FUSE NO. & RATING

The “FUSE No. & RATING” corresponds with that used in the fuse box (main fuse box, fuse and joint box).

5. CONNECTOR 2

- Each connector is indicated by a symbol.
- Each terminal number is indicated in the corresponding wiring diagram in an abbreviated form.
- For example, terminal number “G4” refers to No. 4 terminal of connector (G: F41) shown in the connector sketch.

6. CONNECTOR SKETCH

- Each connector sketch clearly identifies the shape and color of a connector as well as terminal locations. Non-colored connectors are indicated in white or natural color.
- When more than two types of connector number are indicated in a connector sketch, it means that the same type connectors are used.

7. GROUND

Each grounding point can be located easily by referring to the corresponding wiring harness.

8. DIODE

A symbol is used to indicate a diode.

9. WIRE TRACING ON EXTENDED WIRING DIAGRAMS

For a wiring diagram extending over at least two pages, a symbol (consisting of the same characters with arrows), facilitates wire tracing from one page to the next.

A ←→ A, B ←→ B

10.SYMBOLS OF WIRE CONNECTION AND CROSSING

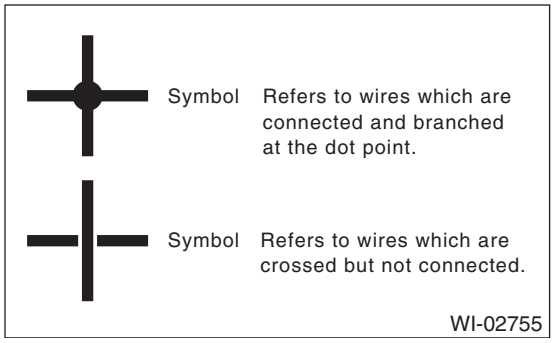

11.POWER SUPPLY CIRCUIT

A symbol is used to indicate the power supply in each wiring diagram.

“MB — 5”, “MB — 6”, etc., which are used as power- supply symbols throughout the text, correspond with those shown in the “DC POWER SUPPLY CIRCUIT” in the wiring diagram.

Accordingly, using the “DC POWER SUPPLY CIRCUIT” and wiring diagrams permits service personnel to understand the entire electrical arrangement of a system.

12.CLASSIFICATION BY SPECIFICATION

When the wiring diagram differ according to vehicle specifications, the specification difference is described by using abbreviations.

13.TWISTED PAIR LINE

Twisted pair lines are indicated in the following manner in the wiring diagrams.

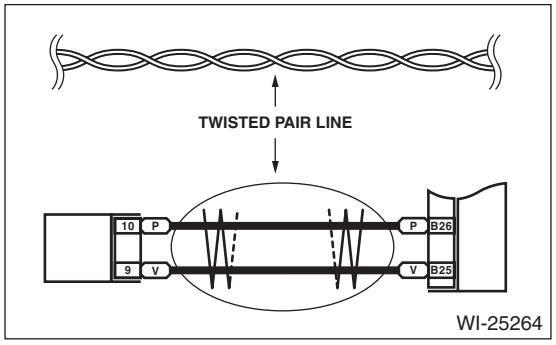

E: CONNECTOR SYMBOL IN WIRING HARNESS

A number of connector symbols are used in each wiring diagram to easily identify the wiring harness connectors.

Standard type: Female		
Pole: From 1 to 8	Pole: From 9 to 20	Pole: More than 21
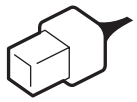	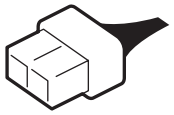	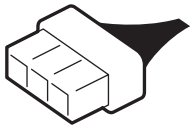
		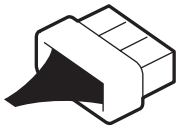
Standard type: Male		
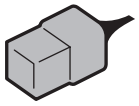	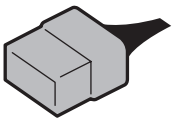	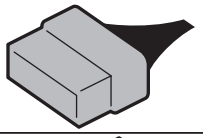
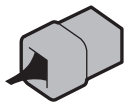	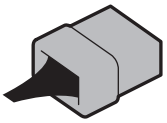	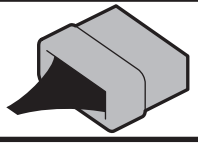

Water proof type: Female		
Pole: From 1 to 8	Pole: From 9 to 20	Pole: More than 21
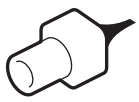		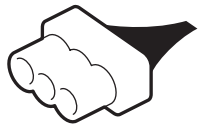
Water proof type: Male		
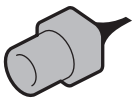	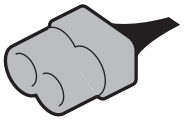	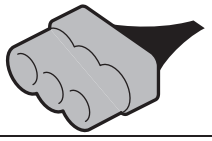
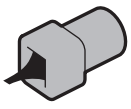	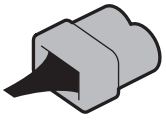	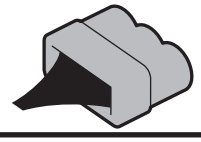

WI-02756

F: ABBREVIATION IN WIRING DIAGRAMS

Abbr.	Full name
A/B	Airbag
A/C	Air Conditioner
A/F	Air/Fuel (Air fuel ratio sensor)
ABS	Anti-lock Brake System
ACC	Accessory
ALT	Generator
ASSY	Assembly
AT	Automatic Transmission
ATF	Automatic Transmission Fluid
AWD	All Wheel Drive
B, BAT	Battery
CAN	Communication Area Network
CM	Control module
CVT	Continuously Variable Transmission
D	Drive Range
DN	Down
E	Ground
ECO	Economy
ECM	Engine Control Module
EEPROM	Electrically Erasable Programmable Read-Only Memory
EGR	Exhaust Gas Recirculation
EPB	Electronic Parking Brake
F/B	Fuse & Relay Box
FL	Front Left
FR	Front Right
G	Gravity (G sensor)
H/L	Headlight
HI	High
I/F	Interface
IG	Ignition
ILLUMI	Illumination
INT	Intermittent
J/C	Joint connector
LCD	Liquid Crystal Display
L, LH	Left Hand
LO	Low
M	Motor
M/B	Main Fuse Box
MIST	Wiper for mist (one touch)
MT	Manual Transmission
N	Neutral Range
NA	Natural Aspiration
OP	Optional Parts or Open
P	Parking Range
PASS	Passing
R	Reverse Range
R, RH	Right Hand

Abbr.	Full name
RL	Rear Left
RR	Rear Right
SBF	Slow Blow Fuse
ST	Starter
SW	Switch
TCM	Transmission Control Module
TPMS	Tire Pressure Monitor System
UP	Up
VDC	Vehicle Dynamics Control
VFD	Vacuum Fluorescent Display
WASH	Washer

2. Working Precautions

A: PRECAUTIONS WHEN WORKING WITH THE PARTS MOUNTED ON THE VEHICLE

1) When working under a vehicle which is jacked-up, always be sure to use rigid rack.
2) The parking brake must always be applied during working. Also, in automatic transmission vehicles, keep the select lever set to the P (Parking) range.
3) Be sure the workshop is properly ventilated when running the engine. Further, be careful not to touch the belt or fan while the engine is operating.
4) Be careful not to touch hot metal parts, especially the radiator and exhaust system immediately after the engine has been turned off.

B: PRECAUTIONS IN TROUBLE DIAGNOSIS AND REPAIR OF ELECTRIC PARTS

1) The battery cable must be disconnected from the battery's (–) terminal, and the ignition switch must be set to the OFF position, unless otherwise required by the diagnostics.
2) Securely fasten the wiring harness with clamps and clips so that the harness does not interfere with the body end parts or edges and bolts or screws.
3) When installing parts, be careful not to catch them on the wiring harness.
4) When disconnecting a connector, do not pull the wires, but pull while holding the connector body.

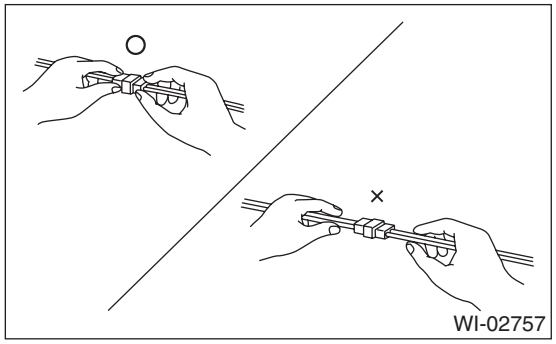

5) Some connectors are provided with a lock. One type of such a connector is disconnected by pushing the lock, and the other, by moving the lock up. In either type the lock shape must be identified before attempting to disconnect the connector.
To connect, insert the connector until it snaps and confirm that it is connected securely.

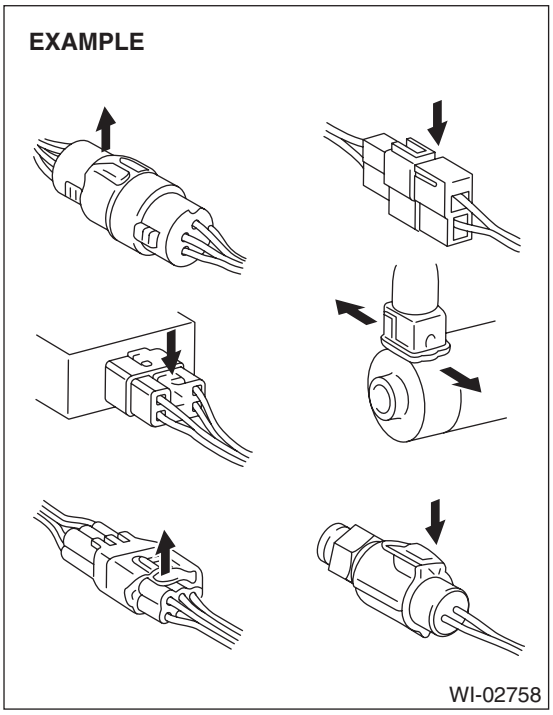

6) When checking continuity between connector terminals, or measuring voltage across the terminal and ground, always contact tester probe(s) on terminals from the wiring connection side. If the probe is too thick to gain access to the terminal, use "mini" test leads.
To check water-proof connectors (which are not measurable from the wiring side), contact test probes on the terminal side. Be careful not to bend or damage the terminals.

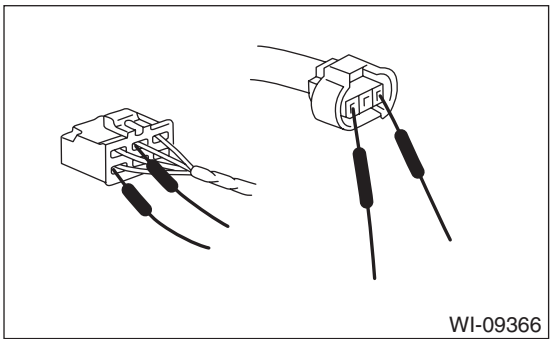

7) Sensors, relays, electrical unit, etc., are sensitive to strong impacts.
Handle them with care so that they are not dropped or mishandled.

3. Power Supply Circuit

A: WIRING DIAGRAM

- **Engine room side**

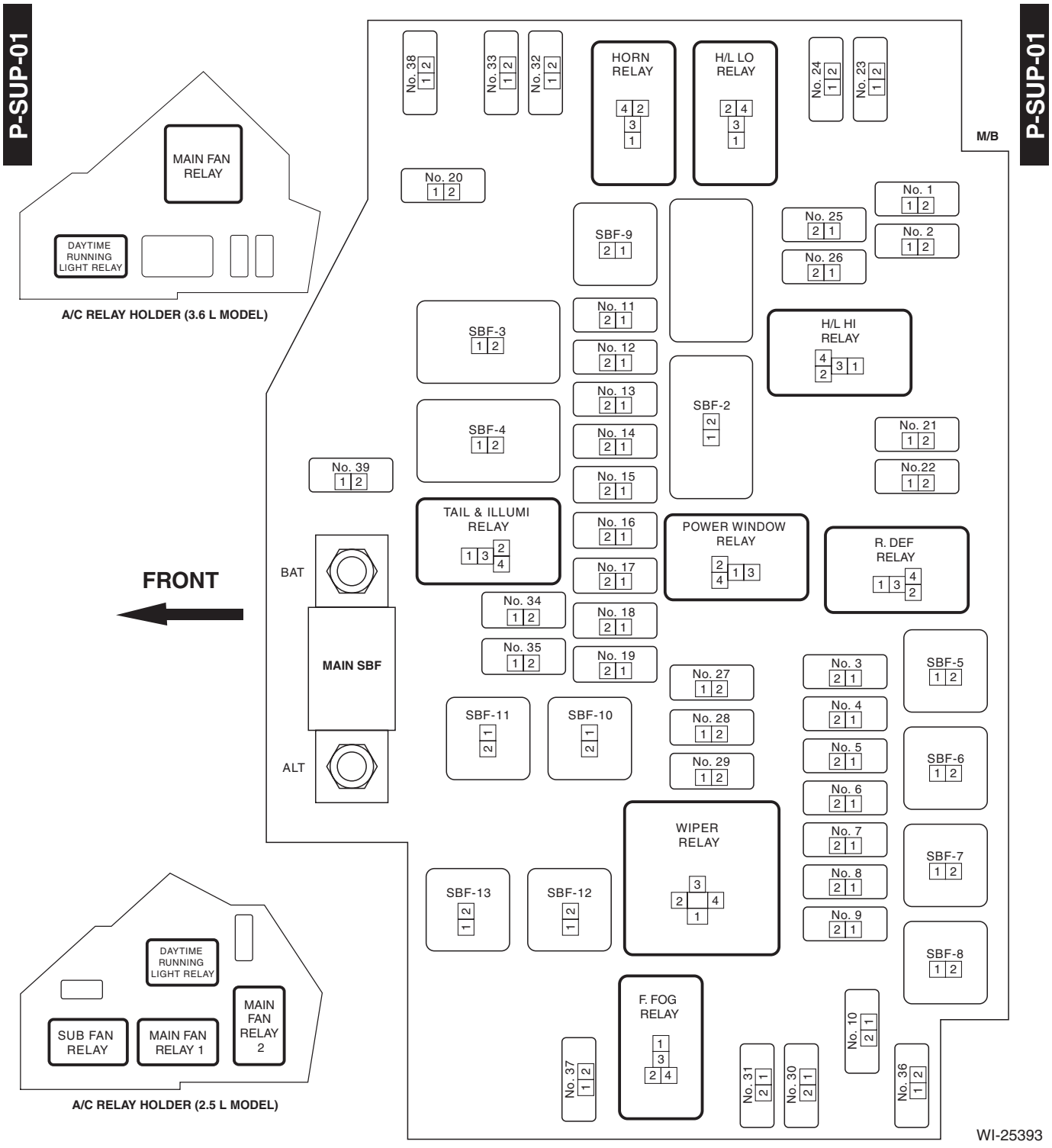

- **Passenger room side**

P-SUP-02

P-SUP-02

F/B FRONT SIDE

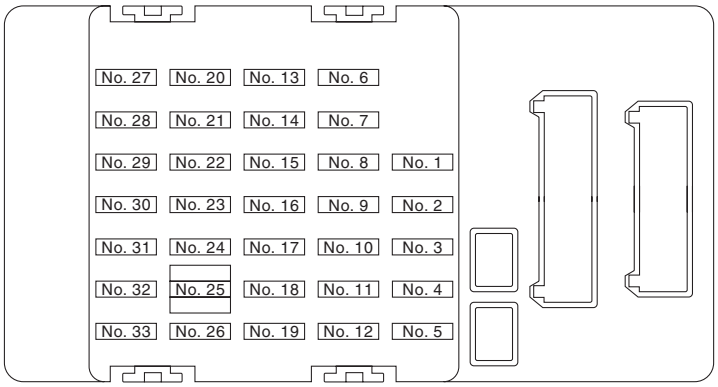

F/B BACK SIDE

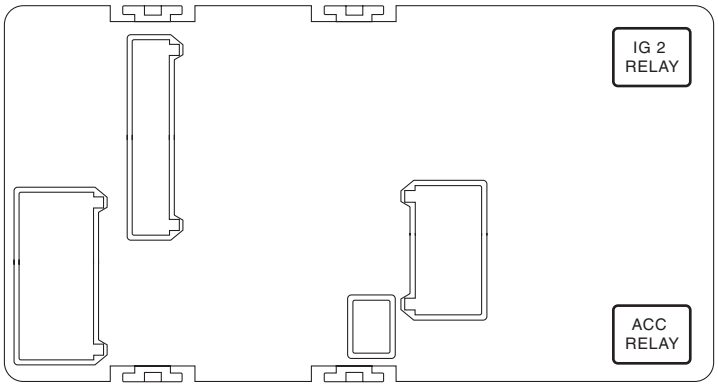

RELAY HOLDER

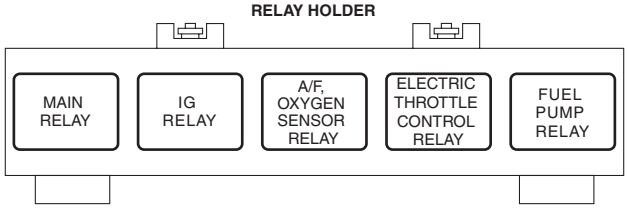

WI-24813

Power Supply Circuit

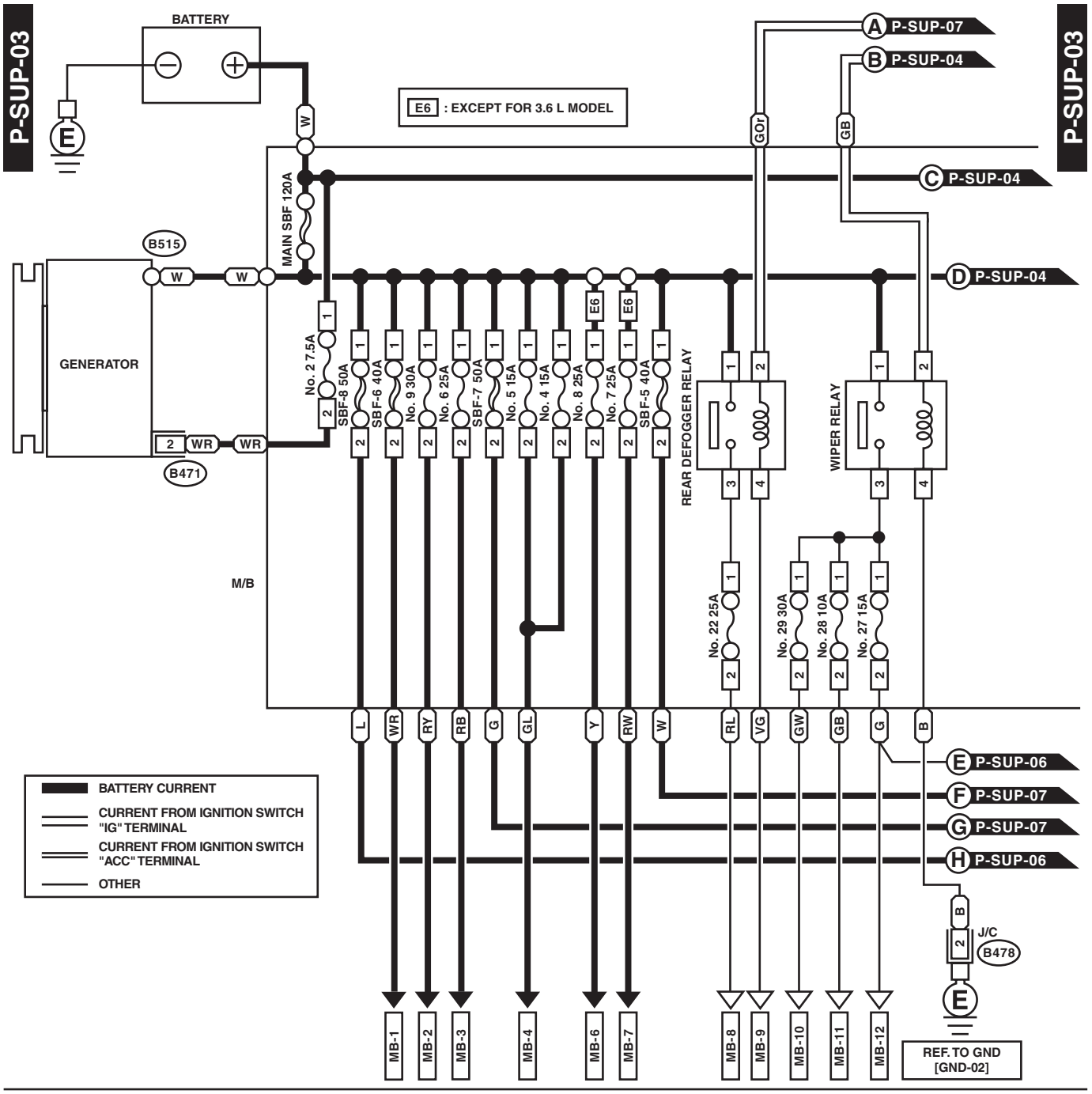

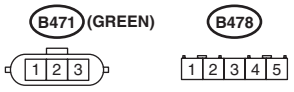

WI-33170

Power Supply Circuit

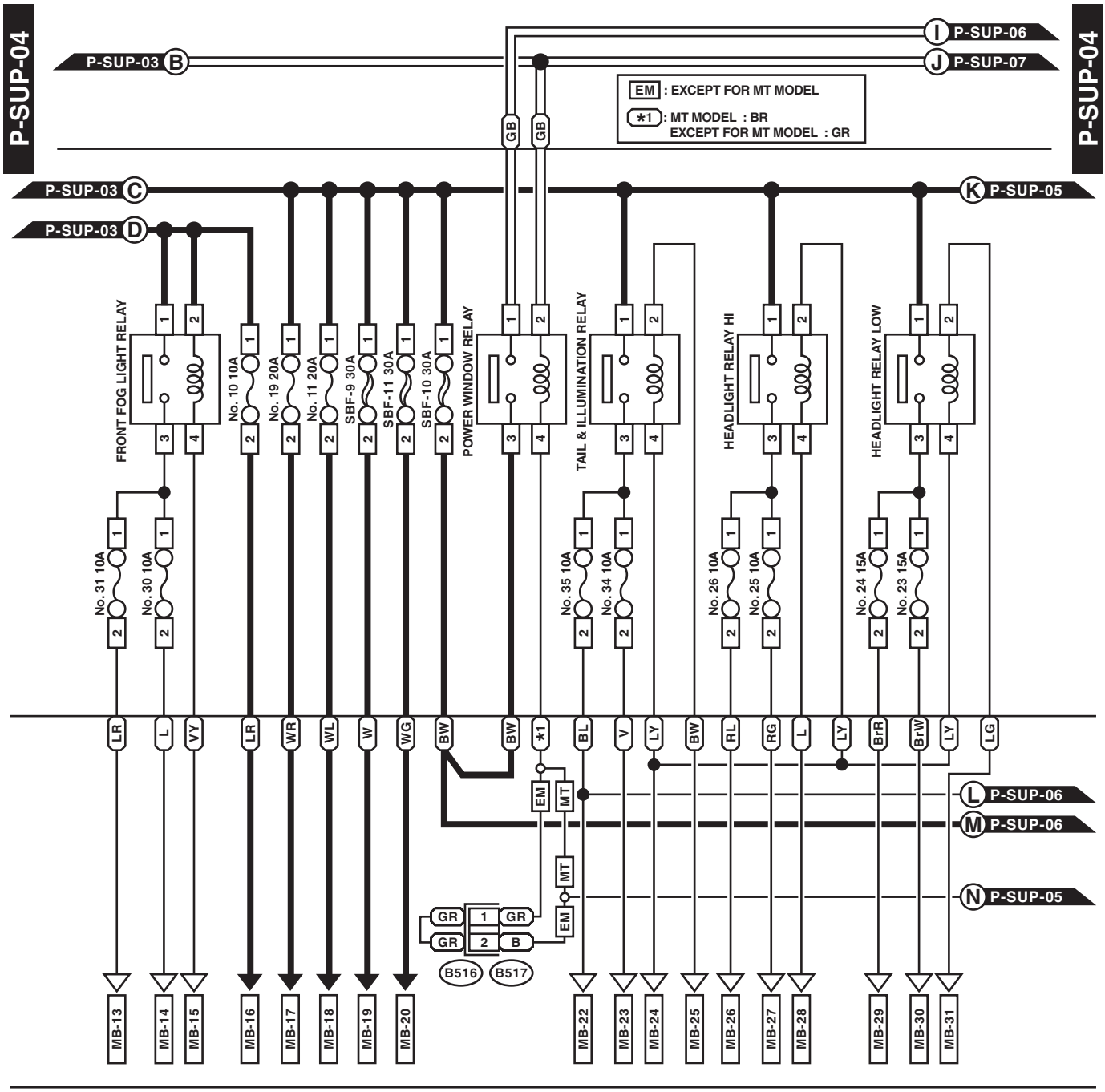

WI-33171

Power Supply Circuit

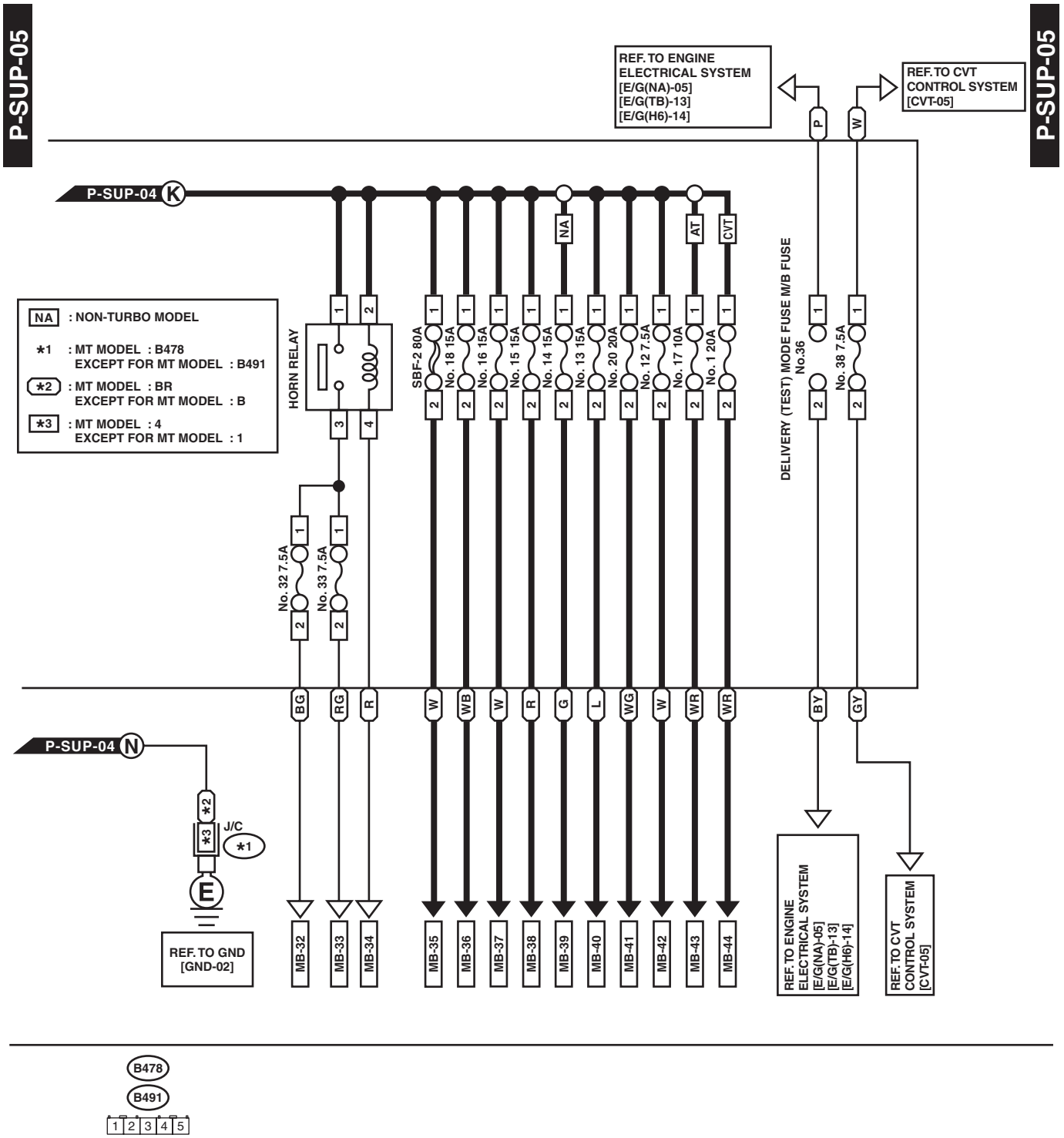

WI-30961

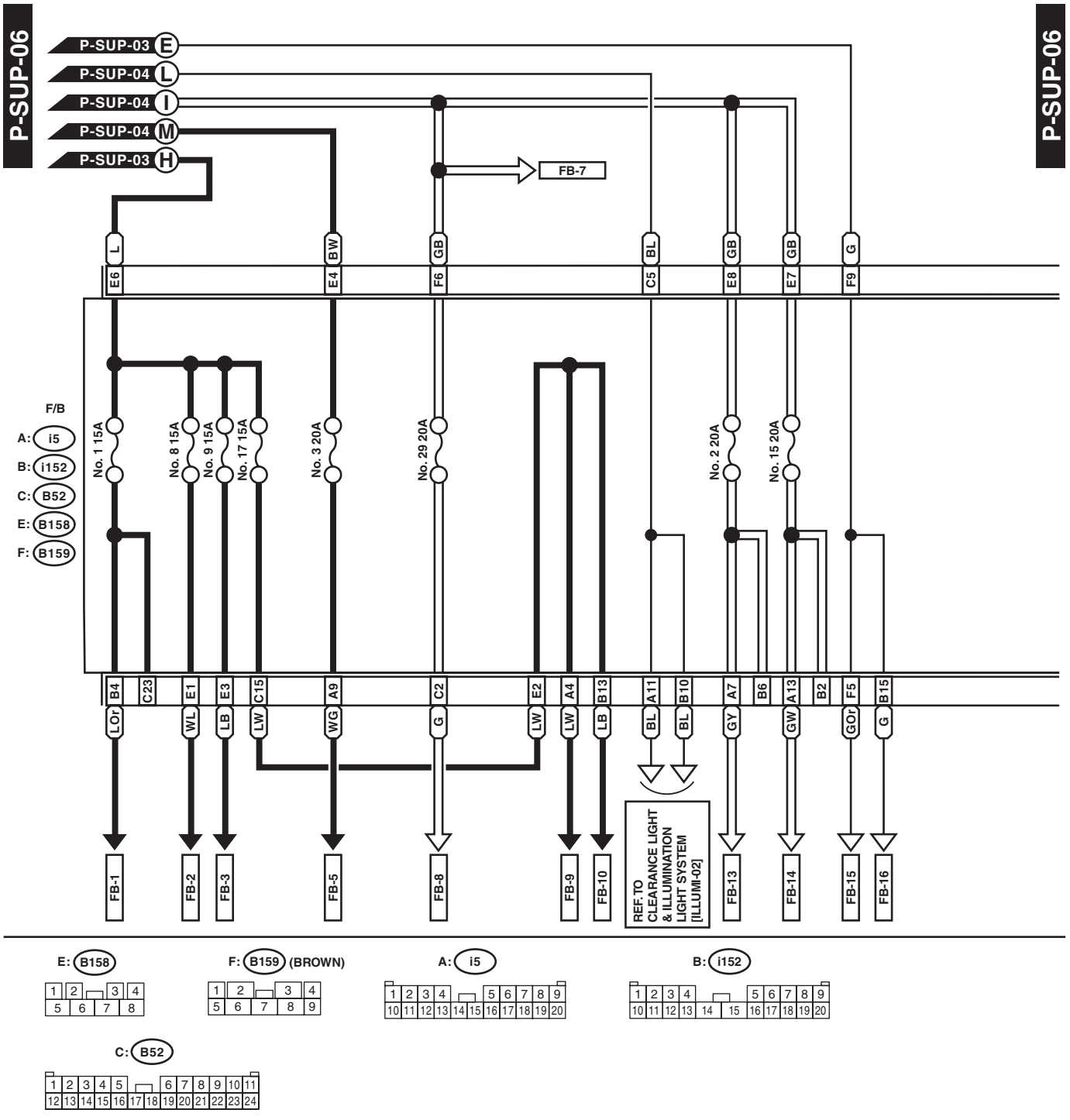
P-SUP-06
P-SUP-06
P-SUP-03 E
P-SUP-04 L
P-SUP-04 I
P-SUP-04 M
P-SUP-03 H
FB-7
L
BW
GB
BL
GB
GB
G
E6
E4
F6
C5
E8
E7
F9
F/B
A: i5
B: i152
C: B52
E: B158
F: B159
No. 1 15A
No. 8 15A
No. 9 15A
No. 17 15A
No. 3 20A
No. 29 20A
No. 2 20A
No. 15 20A
B4
C23
E1
E3
C15
A9
C2
E2
A4
B13
A11
B10
A7
B6
A13
B2
F5
B15
LOr
WL
LB
LW
WG
G
LW
LW
LB
BL
BL
GY
GW
GOr
G
FB-1
FB-2
FB-3
FB-5
FB-8
FB-9
FB-10
REF. TO CLEARANCE LIGHT & ILLUMINATION LIGHT SYSTEM [ILLUMI-02]
FB-13
FB-14
FB-15
FB-16
E: B158
F: B159 (BROWN)
A: i5
B: i152
C: B52

WI-25397

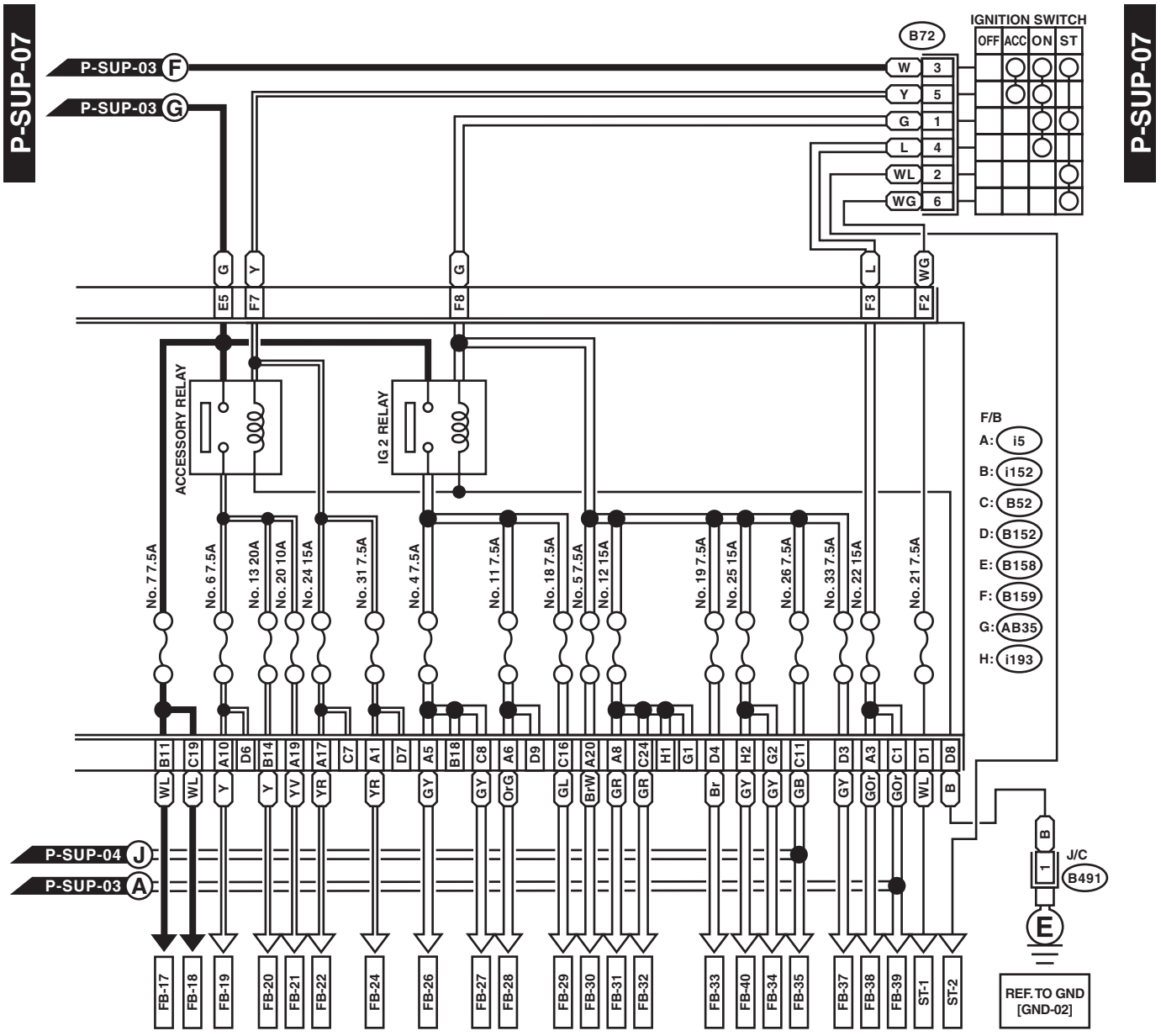
P-SUP-07
P-SUP-07
P-SUP-03 F
P-SUP-03 G
P-SUP-04 J
P-SUP-03 A
IGNITION SWITCH
OFF ACC ON ST
B72
W 3
Y 5
G 1
L 4
WL 2
WG 6
E5 G
F7 Y
F8 G
F3 L
F2 WG
ACCESSORY RELAY
IG 2 RELAY
No. 7 7.5A
No. 6 7.5A
No. 13 20A
No. 20 10A
No. 24 15A
No. 31 7.5A
No. 4 7.5A
No. 11 7.5A
No. 18 7.5A
No. 5 7.5A
No. 12 15A
No. 19 7.5A
No. 25 15A
No. 26 7.5A
No. 33 7.5A
No. 22 15A
No. 21 7.5A
F/B
A: i5
B: i152
C: B52
D: B152
E: B158
F: B159
G: AB35
H: i193
B11 C19 A10 D6 B14 A19 A17 C7 A1 D7 A5 B18 C8 A6 D9 C16 A20 A8 C24 H1 G1 D4 H2 G2 C11 D3 A3 C1 D1 D8
WL WL Y Y YV YR YR GY GY OrG GL BrW GR GR Br GY GY GB GY GOr GOr WL B
FB-17 FB-18 FB-19 FB-20 FB-21 FB-22 FB-24 FB-26 FB-27 FB-28 FB-29 FB-30 FB-31 FB-32 FB-33 FB-40 FB-34 FB-35 FB-37 FB-38 FB-39 ST-1 ST-2
B 1
J/C B491
E
REF. TO GND [GND-02]

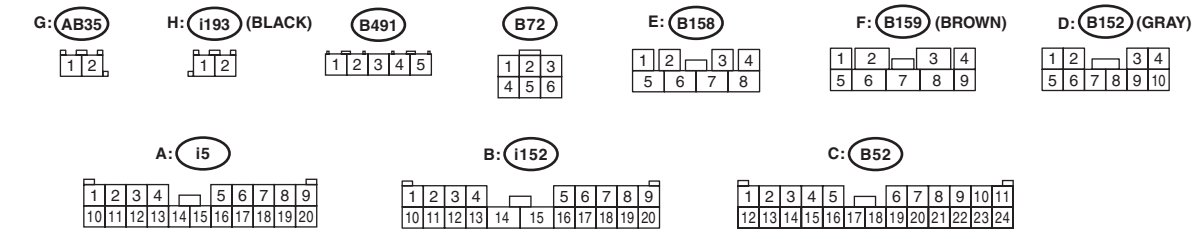
G: AB35
H: i193 (BLACK)
B491
B72
E: B158
F: B159 (BROWN)
D: B152 (GRAY)

A: i5
B: i152
C: B52

WI-30595

No.	Load
MB-1	VDC CM
MB-2	VDC CM
MB-3	Audio connector
	Audio
	Navigation unit
	Audio amplifier (McIntosh)
MB-4	Blower motor relay
MB-6	Main fan relay 1
MB-7	Sub fan relay
MB-8	Mirror heater relay
	Rear defogger
MB-9	Body integrated unit
MB-10	Front wiper motor
	Combination switch (wiper)
MB-11	Front washer motor
MB-12	Rear washer motor
MB-13	Front fog light RH
MB-14	Front fog light LH
MB-15	Body integrated unit
MB-16	Body integrated unit
	Clock
	Audio connector
	Audio
	Navigation unit
	Luggage room light
	Door step light LH
	Door step light RH
	Trunk room light
	Spot map light
	Room light
	Vanity mirror light LH
	Vanity mirror light RH
	TPMS & keyless entry CM
	Keyless entry CM
	Puddle light LH
	Puddle light RH
	Rearview mirror (with rearview display)
MB-17	Body integrated unit
MB-18	Sunroof motor assembly
MB-19	EPB CM
MB-20	Power seat LH
	Power seat RH
MB-22	Front combination light LH (clearance light)
	Front combination light RH (clearance light)
	F/B

No.	Load
MB-23	Satellite switch illumination
	AT select lever illumination
	Illumination control switch
	Remote control mirror switch
	Lower cover switch
	Glove box light
	Hill hold switch
	Audio
	Navigation unit
	Seat heater switch (power seat)
	Shower light
	A/C control panel
	EPB control switch
MB-24	Body integrated unit
	Daytime running light relay
MB-25	Body integrated unit
MB-26	Front combination light RH (headlight)
MB-27	Front combination light LH (headlight)
MB-28	Body integrated unit
MB-29	Front combination light RH (headlight)
MB-30	Front combination light LH (headlight)
MB-31	Body integrated unit
MB-32	Horn
MB-33	Horn
MB-34	Body integrated unit
	Horn switch
MB-35	Main fan relay
MB-36	Body integrated unit
	Key warning switch
	Turn signal and hazard unit
MB-37	Main relay
MB-38	A/F, oxygen sensor relay
MB-39	IG relay
MB-40	Electronic throttle control relay
MB-41	Fuel pump relay
MB-42	ECM
	Data link connector
MB-43	TCM
MB-44	Self shut relay
	TCM
ST-1	Inhibitor relay
	Starter relay
ST-2	Starter relay
FB-1	Trailer connector
FB-2	Stop light and brake switch
	Stop light register
FB-3	Seat heater relay
FB-5	Power window main switch
FB-7	Power window circuit breaker
FB-8	Front power window sub-switch

No.	Load
FB-9	Wiper deicer relay
FB-10	Mirror heater relay
FB-13	Rear power window sub-switch LH
FB-14	Rear power window sub-switch RH
FB-15	Body integrated unit
FB-16	Rear wiper motor
FB-17	Combination meter
	Body integrated unit
	Impact sensor
	EPB control switch
	A/C CM
FB-18	Security CM
FB-19	Remote control mirror switch
	Seat heater relay
	Rearview mirror (without rearview display)
FB-20	Rear accessory power supply socket
FB-21	Front accessory power supply socket
FB-22	Audio connector
	Audio
	Navigation unit
FB-24	Body integrated unit
	A/C control panel
	A/C CM
FB-26	Impact sensor
	Wiper deicer relay
	A/C control panel
	Navigation unit
	Rearview mirror (with rearview display)
	Sunroof motor assembly
	TPMS & keyless entry CM
FB-27	ECM
	Data link connector
	Stop light and brake switch
	Clutch switch
FB-28	Turn signal and hazard unit
FB-29	Inhibitor switch
	Back-up light switch
	Back-up light relay
FB-30	Combination meter
	Clock
FB-31	A/C CM
	Body integrated unit
	Light control sensor
FB-32	TCM
	ECM
	Fuel pump relay
	Ignition coil No. 1 (turbo model)
	Ignition coil No. 2 (turbo model)
	Ignition coil No. 3 (turbo model)
	Ignition coil No. 4 (turbo model)

No.	Load
FB-33	Hill hold switch
	EPB CM
FB-34	Airbag CM
FB-35	Main fan relay 1 (Except for 3.6 L model)
	Main fan relay 2 (Except for 3.6 L model)
	Main fan relay (3.6 L model)
FB-37	VDC CM
	Steering angle sensor
FB-38	Blower motor relay
	Intake door actuator
FB-39	Sub fan relay
FB-40	Occupant detection control module

4. Ground Circuit

A: WIRING DIAGRAM

1. CHASSIS GROUND

- **Vehicle identification number: Sedan model 002017 or later OUTBACK model 200013 or later**

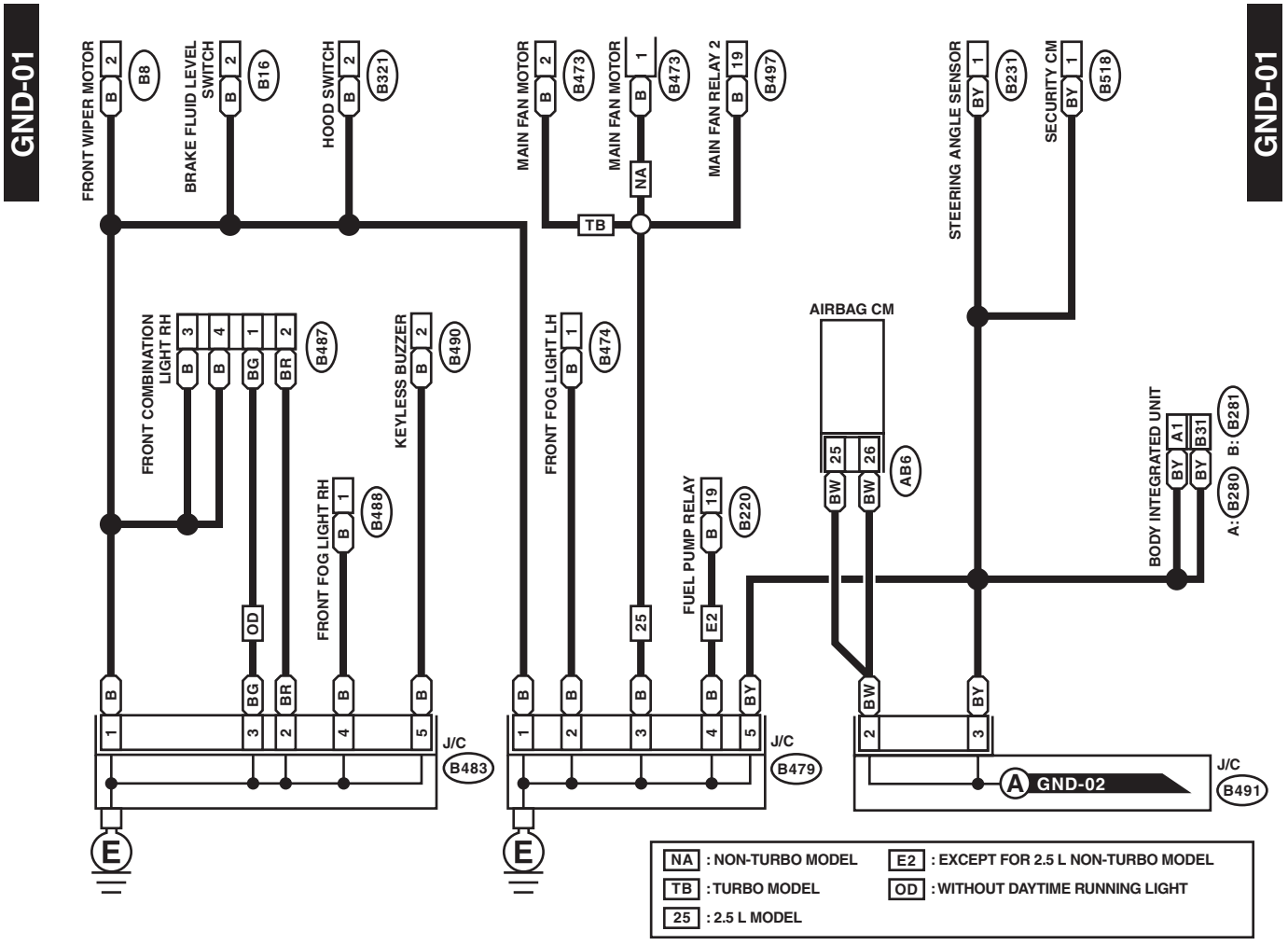

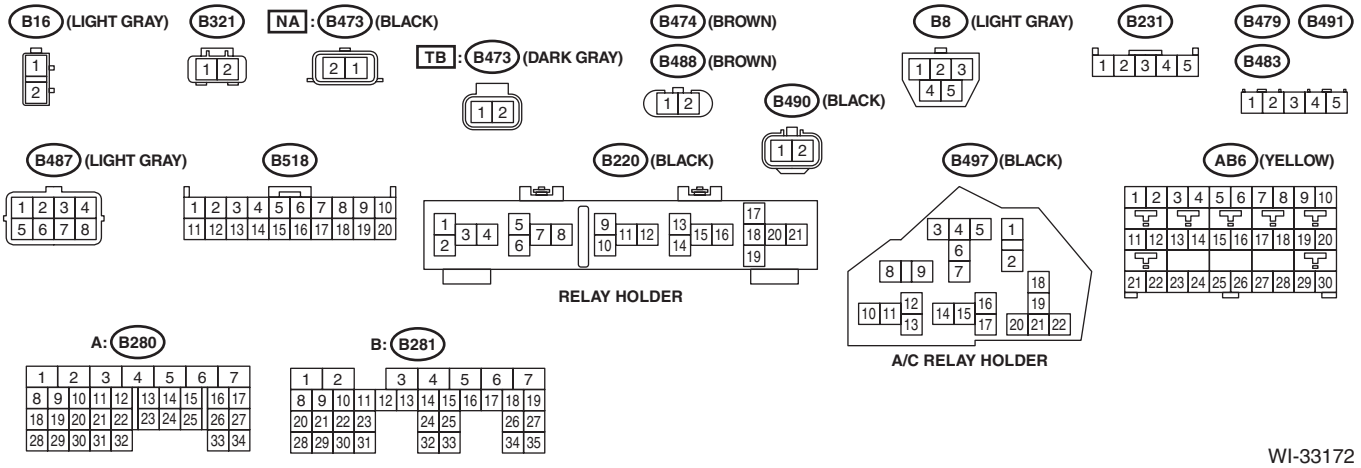

WI-33172

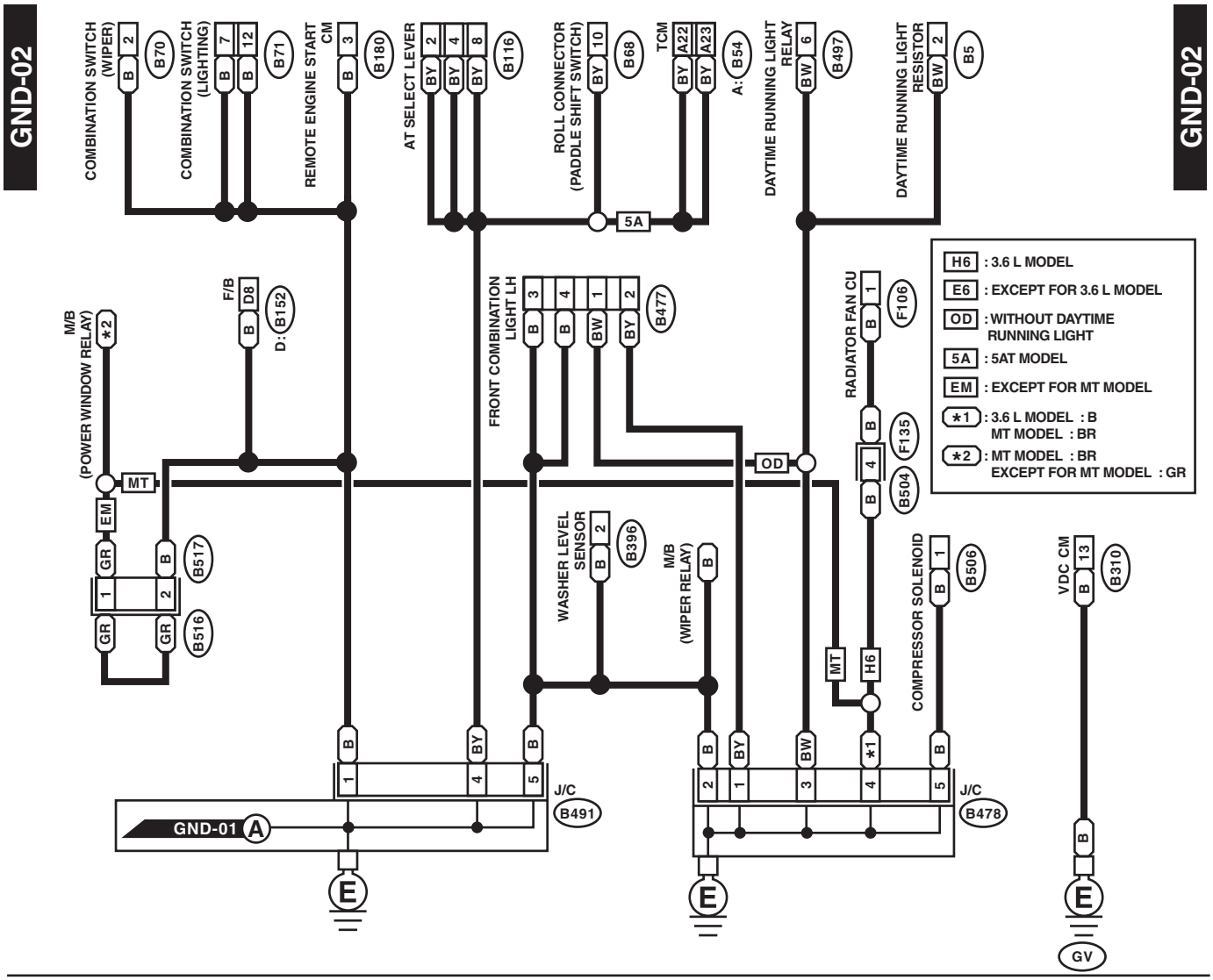
GND-02
GND-02
COMBINATION SWITCH (WIPER)
COMBINATION SWITCH (LIGHTING)
REMOTE ENGINE START CM
AT SELECT LEVER
ROLL CONNECTOR (PADDLE SHIFT SWITCH)
TCM
DAYTIME RUNNING LIGHT RELAY
DAYTIME RUNNING LIGHT RESISTOR
5A
F/B
M/B (POWER WINDOW RELAY)
FRONT COMBINATION LIGHT LH
RADIATOR FAN CU
OD
MT
EM
WASHER LEVEL SENSOR
M/B (WIPER RELAY)
COMPRESSOR SOLENOID
VDC CM
H6
J/C
GND-01
GV
H6 : 3.6 L MODEL
E6 : EXCEPT FOR 3.6 L MODEL
OD : WITHOUT DAYTIME RUNNING LIGHT
5A : 5AT MODEL
EM : EXCEPT FOR MT MODEL
*1 : 3.6 L MODEL : B MT MODEL : BR
*2 : MT MODEL : BR EXCEPT FOR MT MODEL : GR

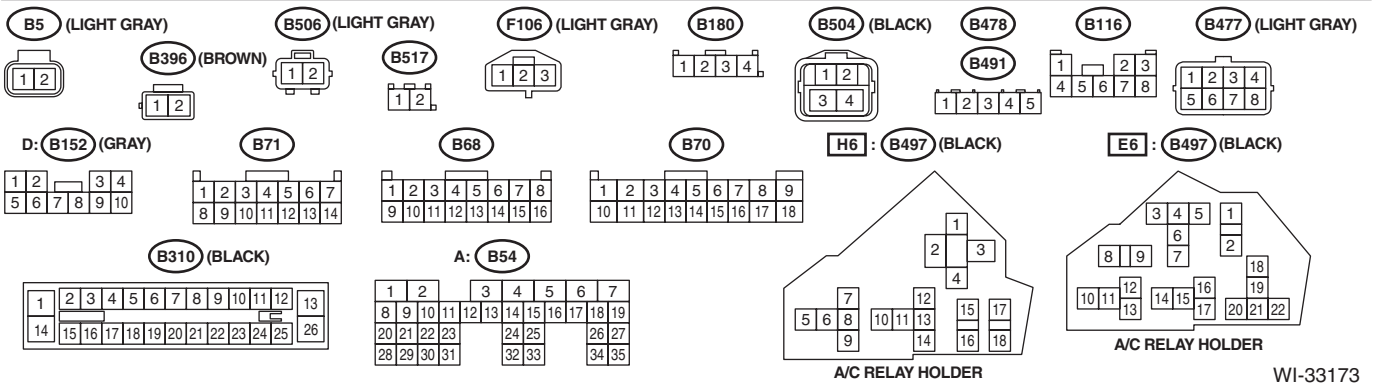
B5 (LIGHT GRAY)
B396 (BROWN)
B506 (LIGHT GRAY)
B517
F106 (LIGHT GRAY)
B180
B504 (BLACK)
B478
B491
B116
B477 (LIGHT GRAY)
D: B152 (GRAY)
B71
B68
B70
H6 : B497 (BLACK)
E6 : B497 (BLACK)
B310 (BLACK)
A: B54
A/C RELAY HOLDER
A/C RELAY HOLDER

WI-33173

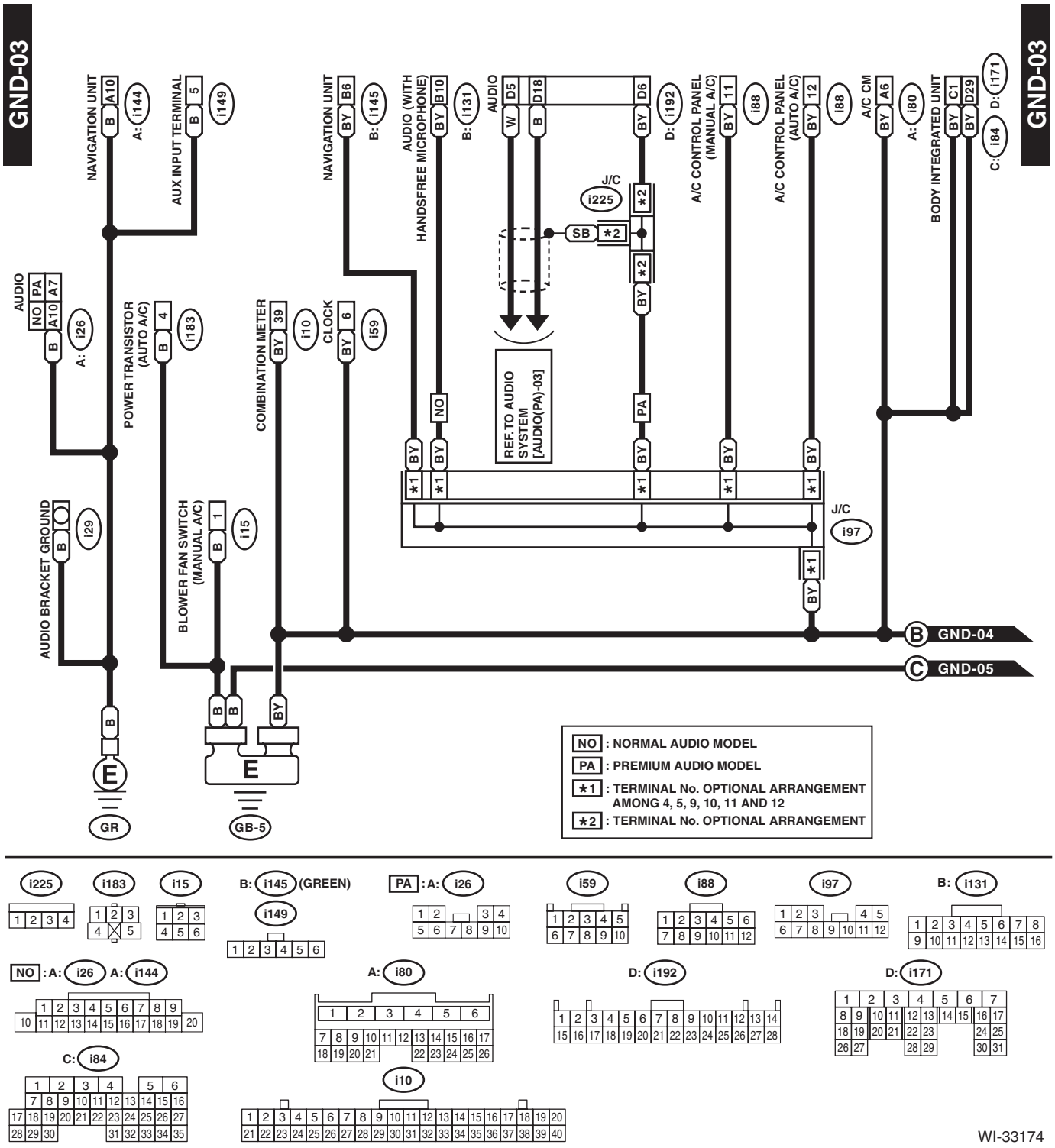
GND-03
GND-03
NAVIGATION UNIT
AUX INPUT TERMINAL
AUDIO
POWER TRANSISTOR (AUTO A/C)
COMBINATION METER
CLOCK
NAVIGATION UNIT
AUDIO (WITH HANDSFREE MICROPHONE)
AUDIO
J/C i225
REF. TO AUDIO SYSTEM [AUDIO(PA)-03]
A/C CONTROL PANEL (MANUAL A/C)
A/C CONTROL PANEL (AUTO A/C)
A/C CM
BODY INTEGRATED UNIT
J/C i97
AUDIO BRACKET GROUND
BLOWER FAN SWITCH (MANUAL A/C)
GND-04
GND-05
GR
GB-5
NO : NORMAL AUDIO MODEL
PA : PREMIUM AUDIO MODEL
*1 : TERMINAL No. OPTIONAL ARRANGEMENT AMONG 4, 5, 9, 10, 11 AND 12
*2 : TERMINAL No. OPTIONAL ARRANGEMENT

i225
i183
i15
B: i145 (GREEN)
i149
PA : A: i26
i59
i88
i97
B: i131
NO : A: i26 A: i144
A: i80
D: i192
D: i171
C: i84
i10

WI-33174

Ground Circuit

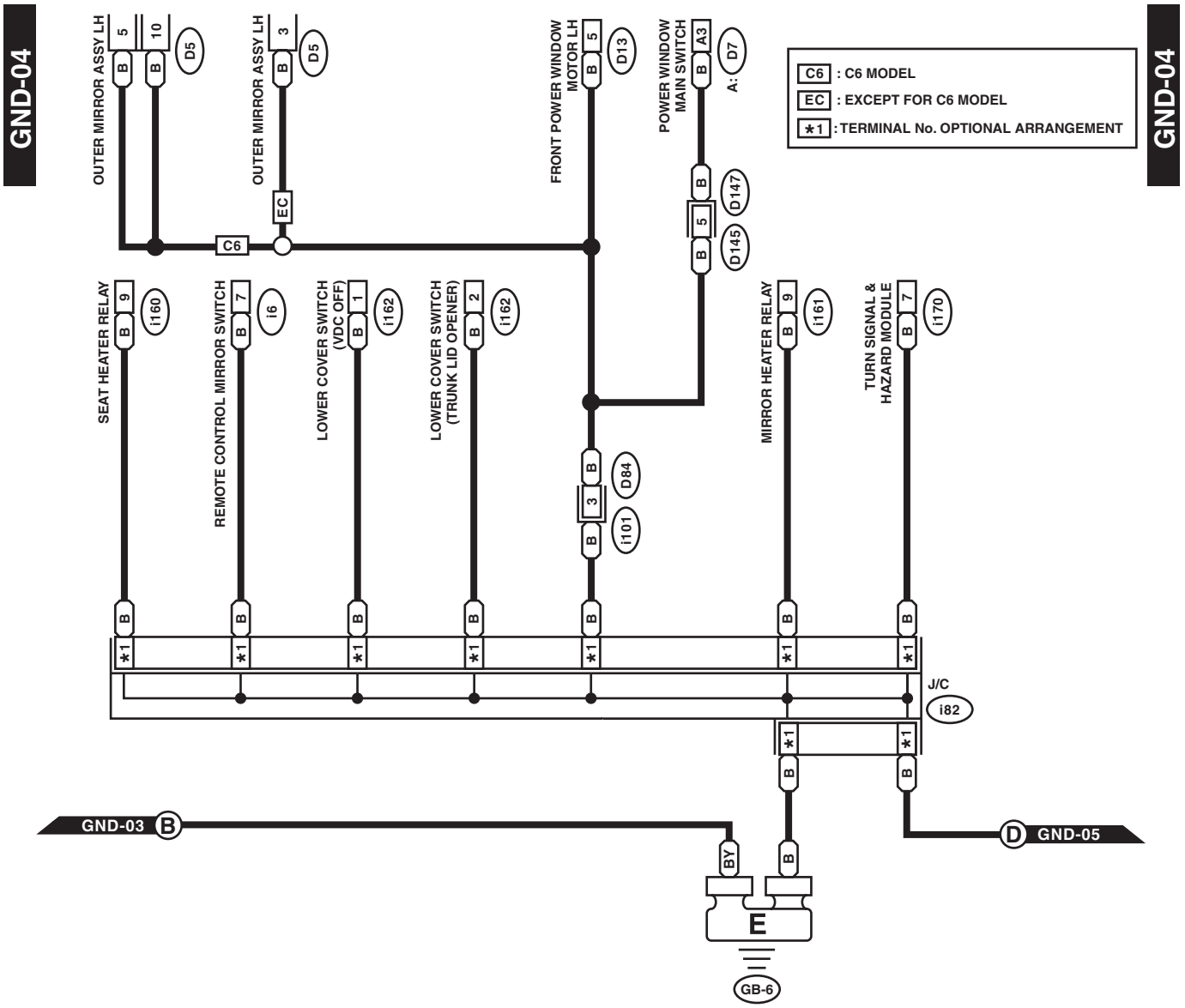

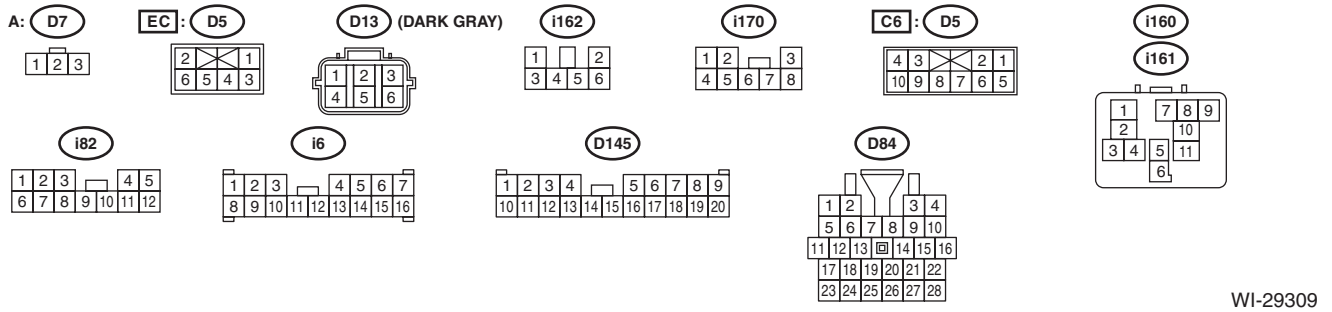

WI-29309

Ground Circuit

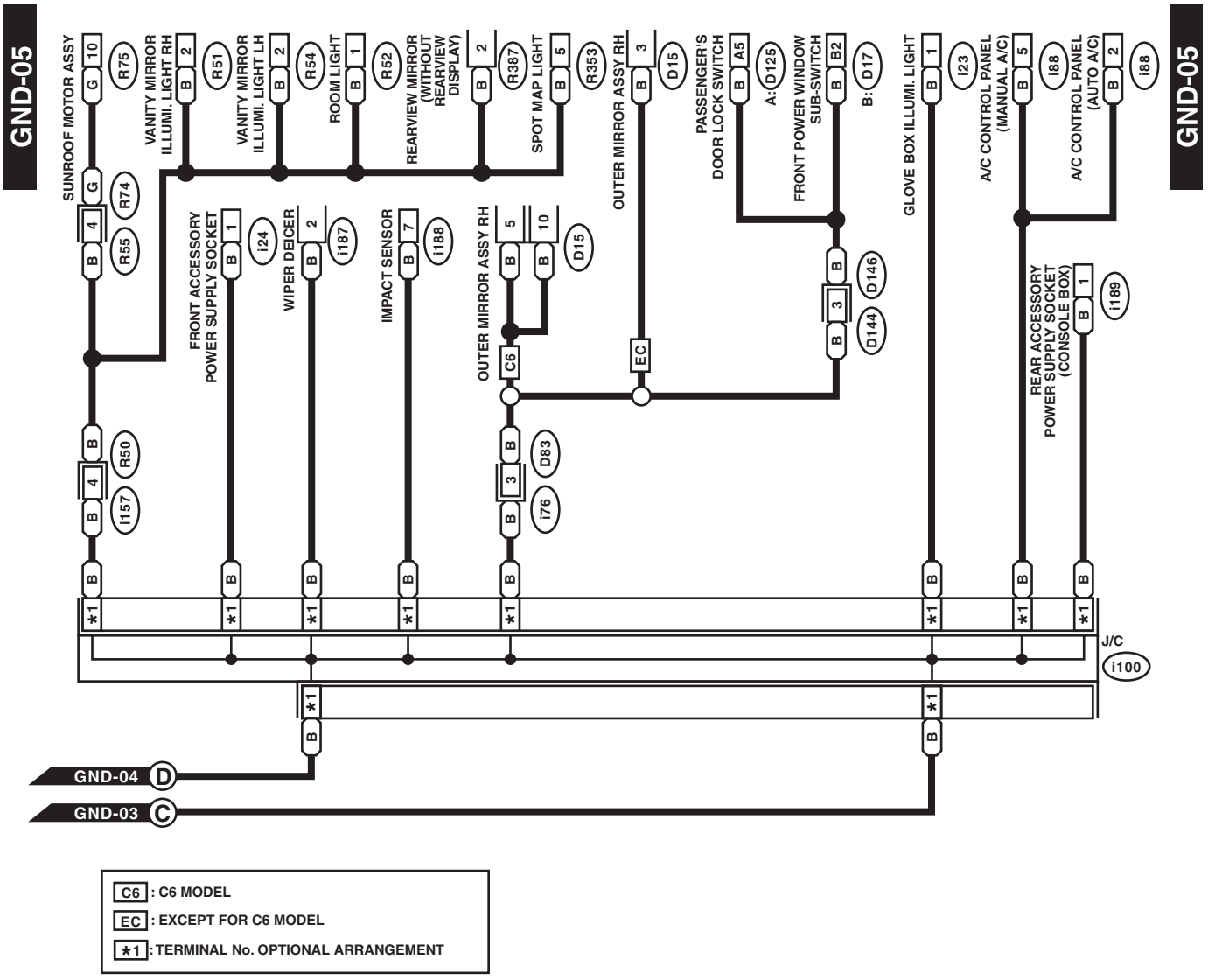

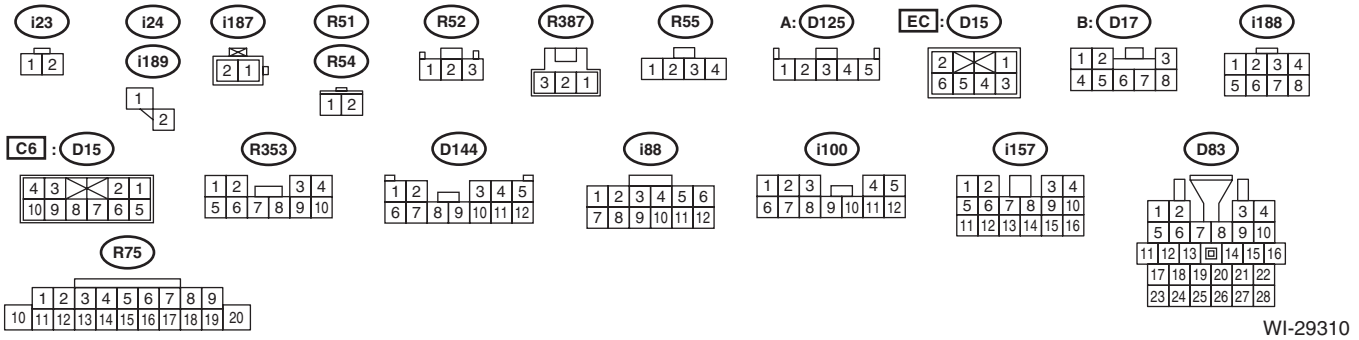

WI-29310

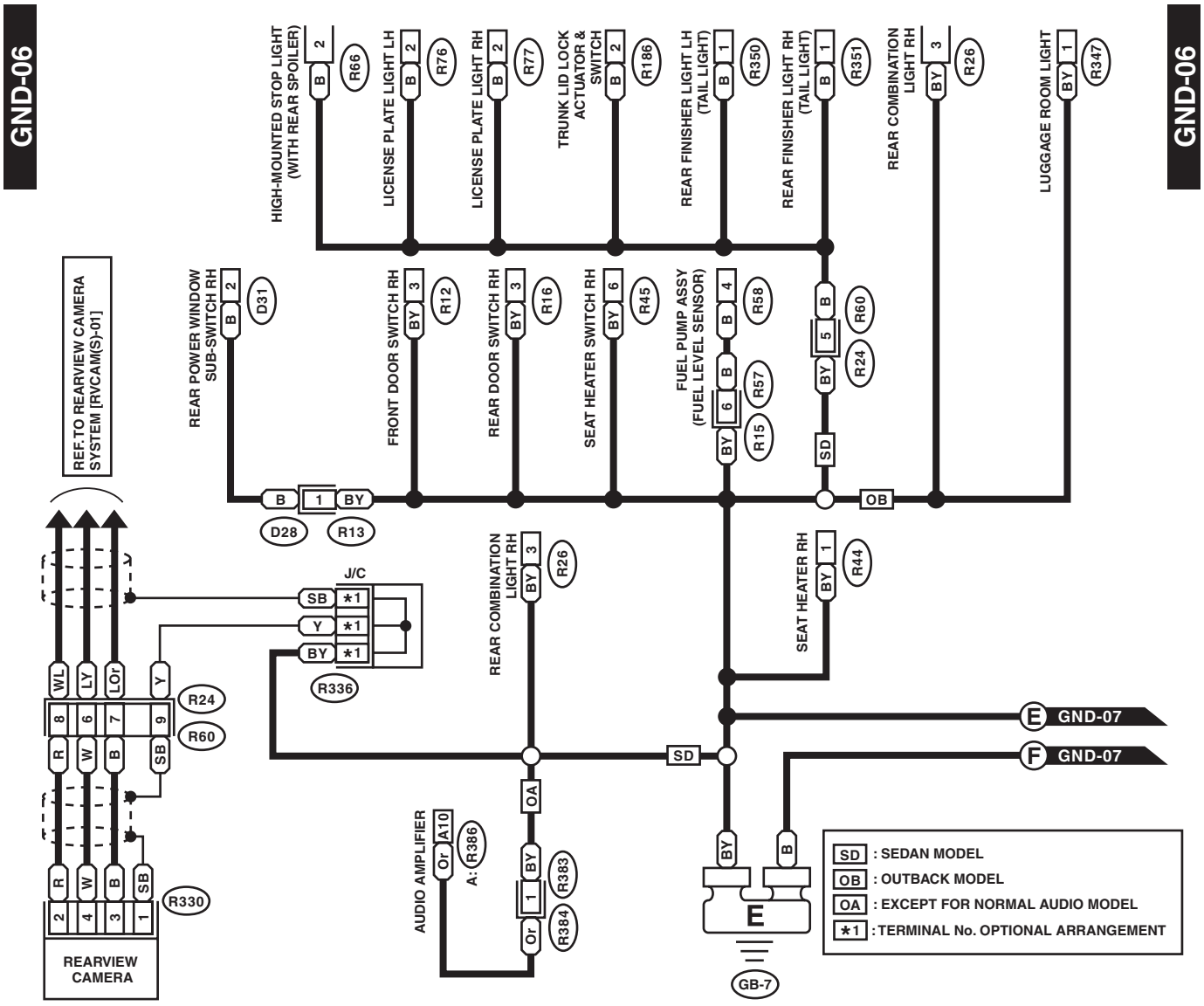
GND-06
GND-06
HIGH-MOUNTED STOP LIGHT (WITH REAR SPOILER)
LICENSE PLATE LIGHT LH
LICENSE PLATE LIGHT RH
TRUNK LID LOCK ACTUATOR & SWITCH
REAR FINISHER LIGHT LH (TAIL LIGHT)
REAR FINISHER LIGHT RH (TAIL LIGHT)
REAR COMBINATION LIGHT RH
LUGGAGE ROOM LIGHT
REAR POWER WINDOW SUB-SWITCH RH
FRONT DOOR SWITCH RH
REAR DOOR SWITCH RH
SEAT HEATER SWITCH RH
FUEL PUMP ASSY (FUEL LEVEL SENSOR)
REF. TO REARVIEW CAMERA SYSTEM [RVCAM(S)-01]
J/C
REAR COMBINATION LIGHT RH
SEAT HEATER RH
AUDIO AMPLIFIER
REARVIEW CAMERA
GND-07
GND-07
SD : SEDAN MODEL
OB : OUTBACK MODEL
OA : EXCEPT FOR NORMAL AUDIO MODEL
*1 : TERMINAL No. OPTIONAL ARRANGEMENT
GB-7
R66
R76
R77
R12
R16
R186
R350
R351
R347
OB : R26
R44
R383
R330
R336
SD : R26
R45 (BROWN)
R58
D31
R13
R60
R57
A: R386

WI-29311

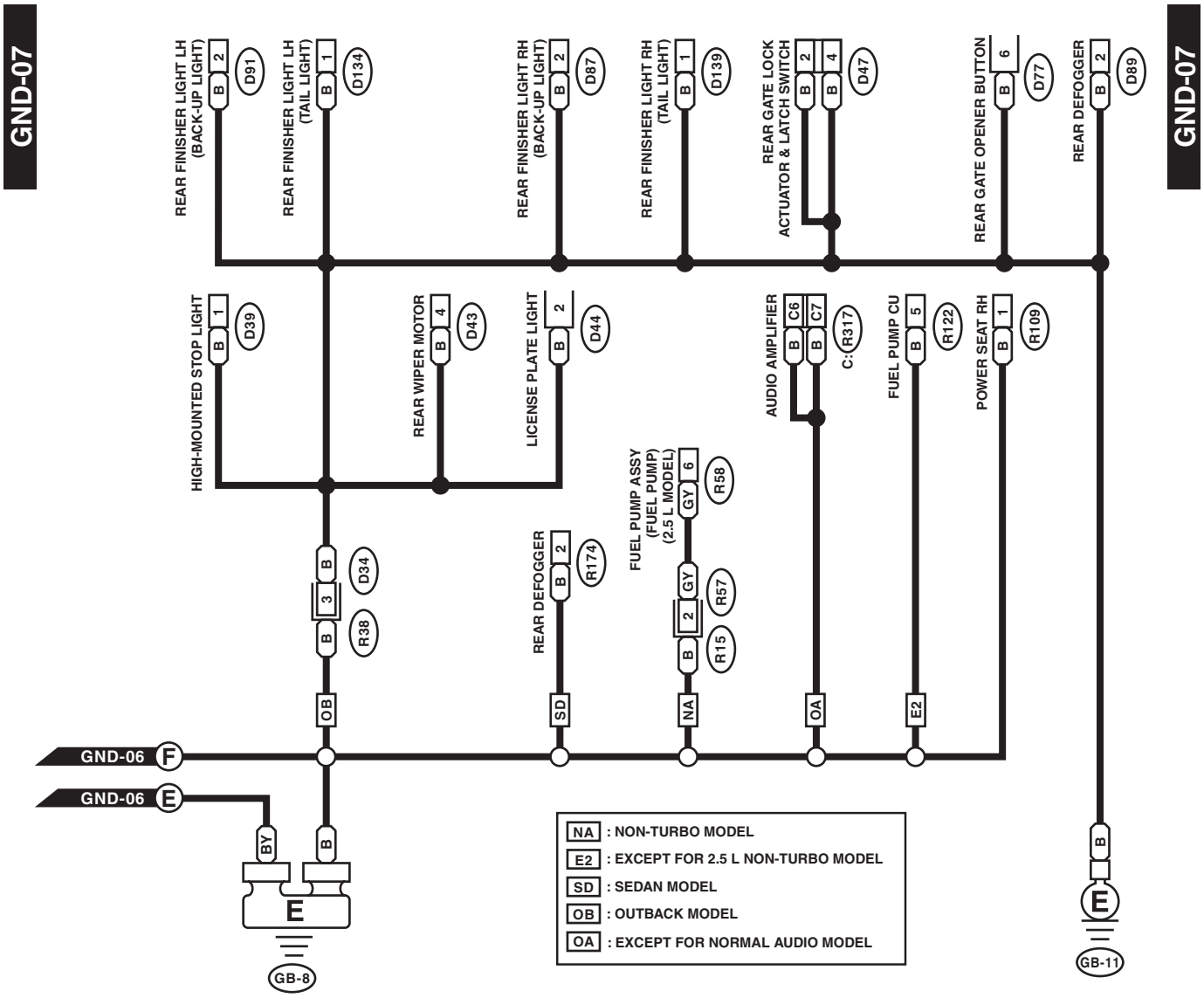
GND-07
GND-07
REAR FINISHER LIGHT LH (BACK-UP LIGHT)
REAR FINISHER LIGHT LH (TAIL LIGHT)
REAR FINISHER LIGHT RH (BACK-UP LIGHT)
REAR FINISHER LIGHT RH (TAIL LIGHT)
REAR GATE LOCK ACTUATOR & LATCH SWITCH
REAR GATE OPENER BUTTON
REAR DEFOGGER
HIGH-MOUNTED STOP LIGHT
REAR WIPER MOTOR
LICENSE PLATE LIGHT
AUDIO AMPLIFIER
C: R317
FUEL PUMP CU
POWER SEAT RH
FUEL PUMP ASSY (FUEL PUMP) (2.5 L MODEL)
REAR DEFOGGER
GND-06 F
GND-06 E
GB-8
GB-11
NA : NON-TURBO MODEL
E2 : EXCEPT FOR 2.5 L NON-TURBO MODEL
SD : SEDAN MODEL
OB : OUTBACK MODEL
OA : EXCEPT FOR NORMAL AUDIO MODEL

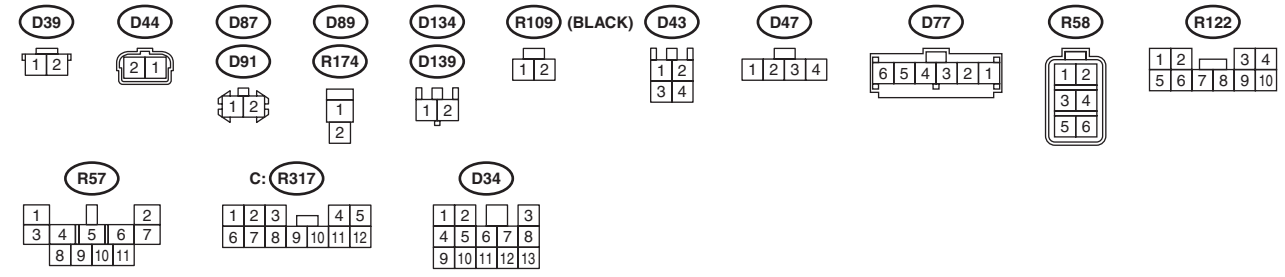
D39
D44
D87
D91
D89
R174
D134
D139
R109 (BLACK)
D43
D47
D77
R58
R122
R57
C: R317
D34

WI-25405

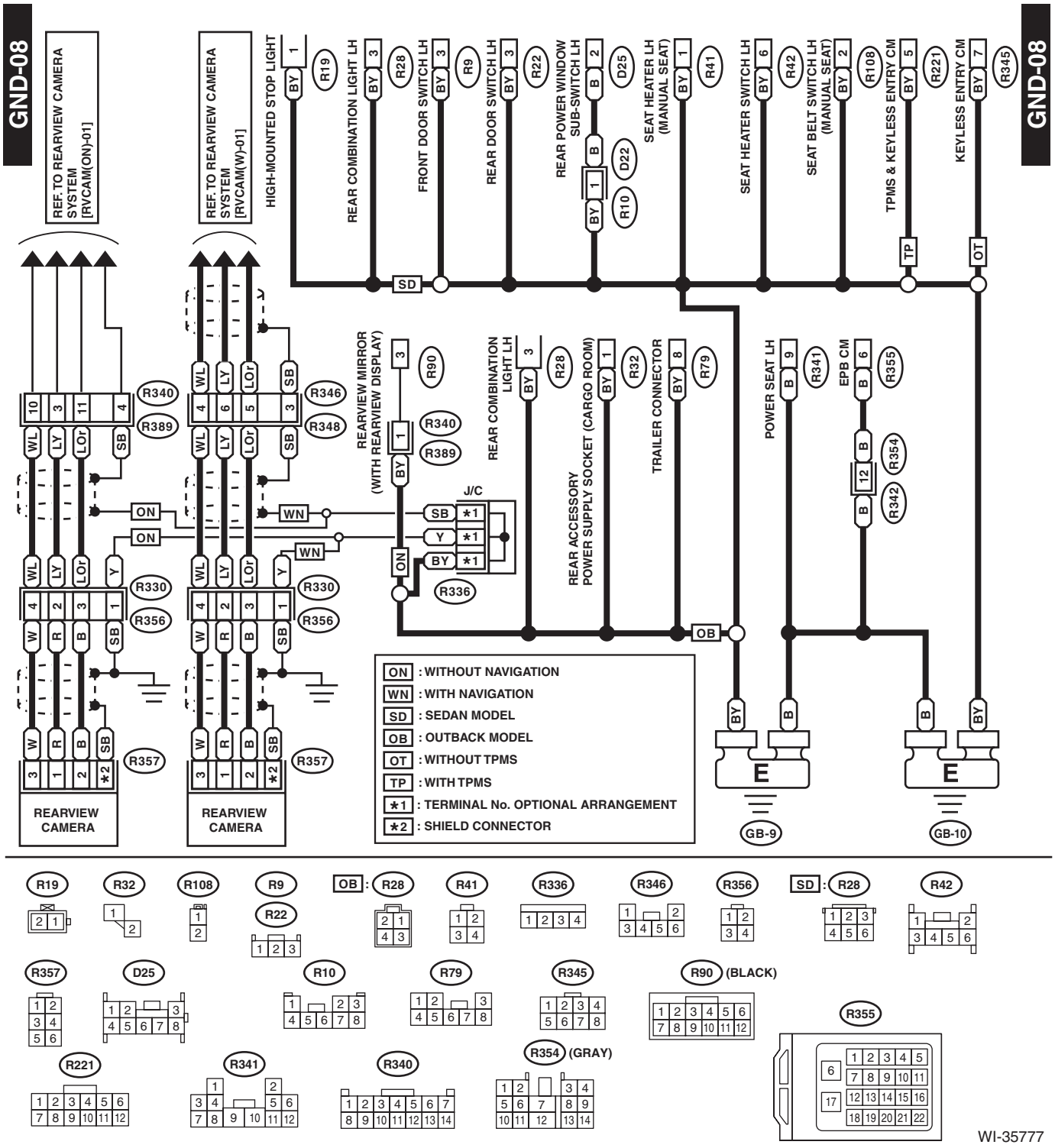
GND-08
GND-08
REF. TO REARVIEW CAMERA SYSTEM [RVCAM(ON)-01]
REF. TO REARVIEW CAMERA SYSTEM [RVCAM(W)-01]
HIGH-MOUNTED STOP LIGHT
REAR COMBINATION LIGHT LH
FRONT DOOR SWITCH LH
REAR DOOR SWITCH LH
REAR POWER WINDOW SUB-SWITCH LH
SEAT HEATER LH (MANUAL SEAT)
SEAT HEATER SWITCH LH
SEAT BELT SWITCH LH (MANUAL SEAT)
TPMS & KEYLESS ENTRY CM
KEYLESS ENTRY CM
REARVIEW MIRROR (WITH REARVIEW DISPLAY)
REAR COMBINATION LIGHT LH
REAR ACCESSORY POWER SUPPLY SOCKET (CARGO ROOM)
TRAILER CONNECTOR
POWER SEAT LH
EPB CM
J/C
SD
OT
TP
OB
ON : WITHOUT NAVIGATION
WN : WITH NAVIGATION
SD : SEDAN MODEL
OB : OUTBACK MODEL
OT : WITHOUT TPMS
TP : WITH TPMS
*1 : TERMINAL No. OPTIONAL ARRANGEMENT
*2 : SHIELD CONNECTOR
REARVIEW CAMERA
REARVIEW CAMERA
GB-9
GB-10
R19
R32
R108
R9
R22
OB : R28
R41
R336
R346
R356
SD : R28
R42
R357
D25
R10
R79
R345
R90 (BLACK)
R355
R221
R341
R340
R354 (GRAY)

WI-35777

- **Vehicle identification number: Sedan model 002016 or older OUTBACK model 200012 or older**

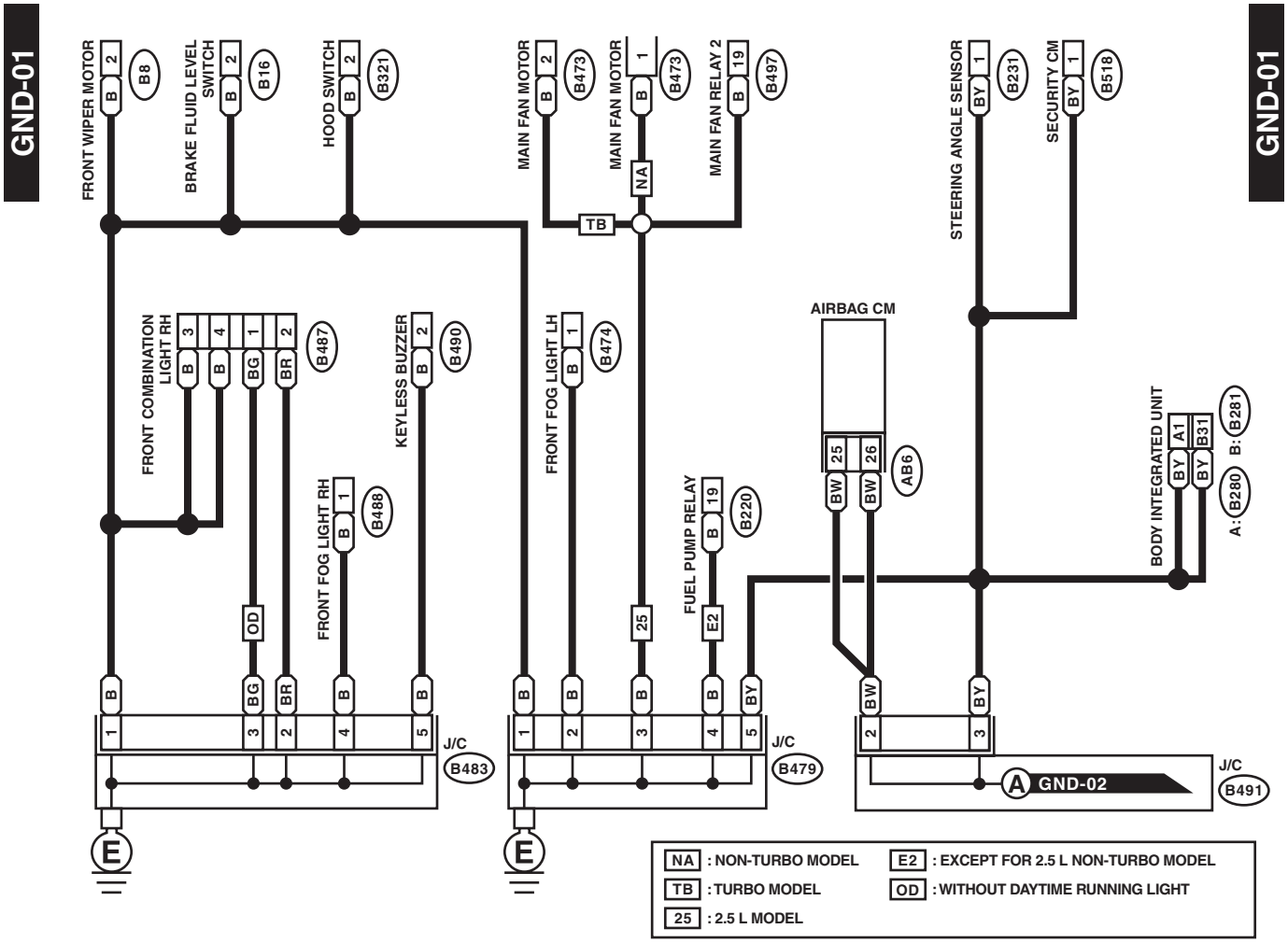

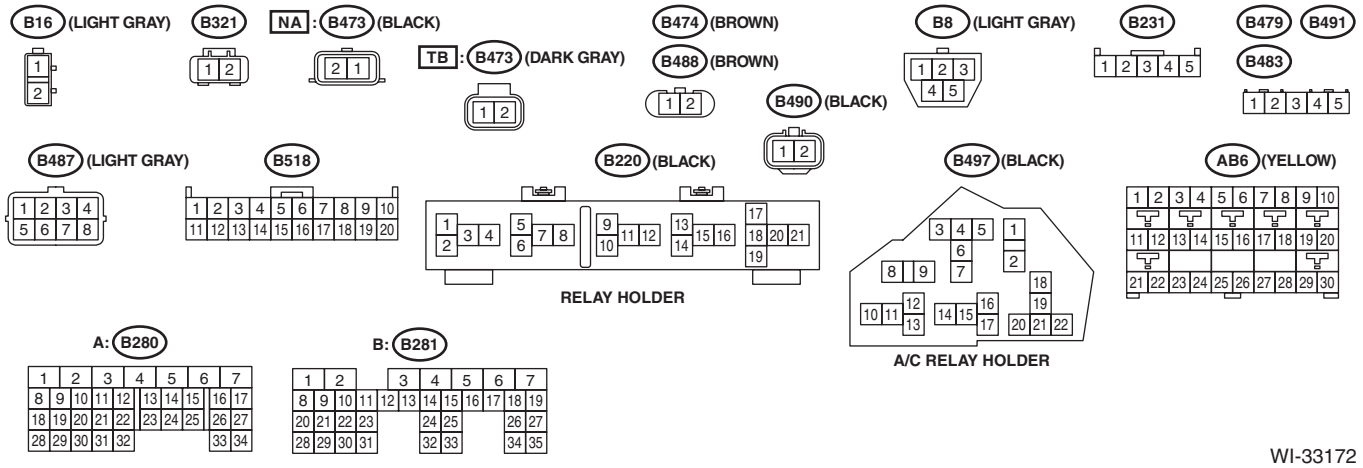

WI-33172

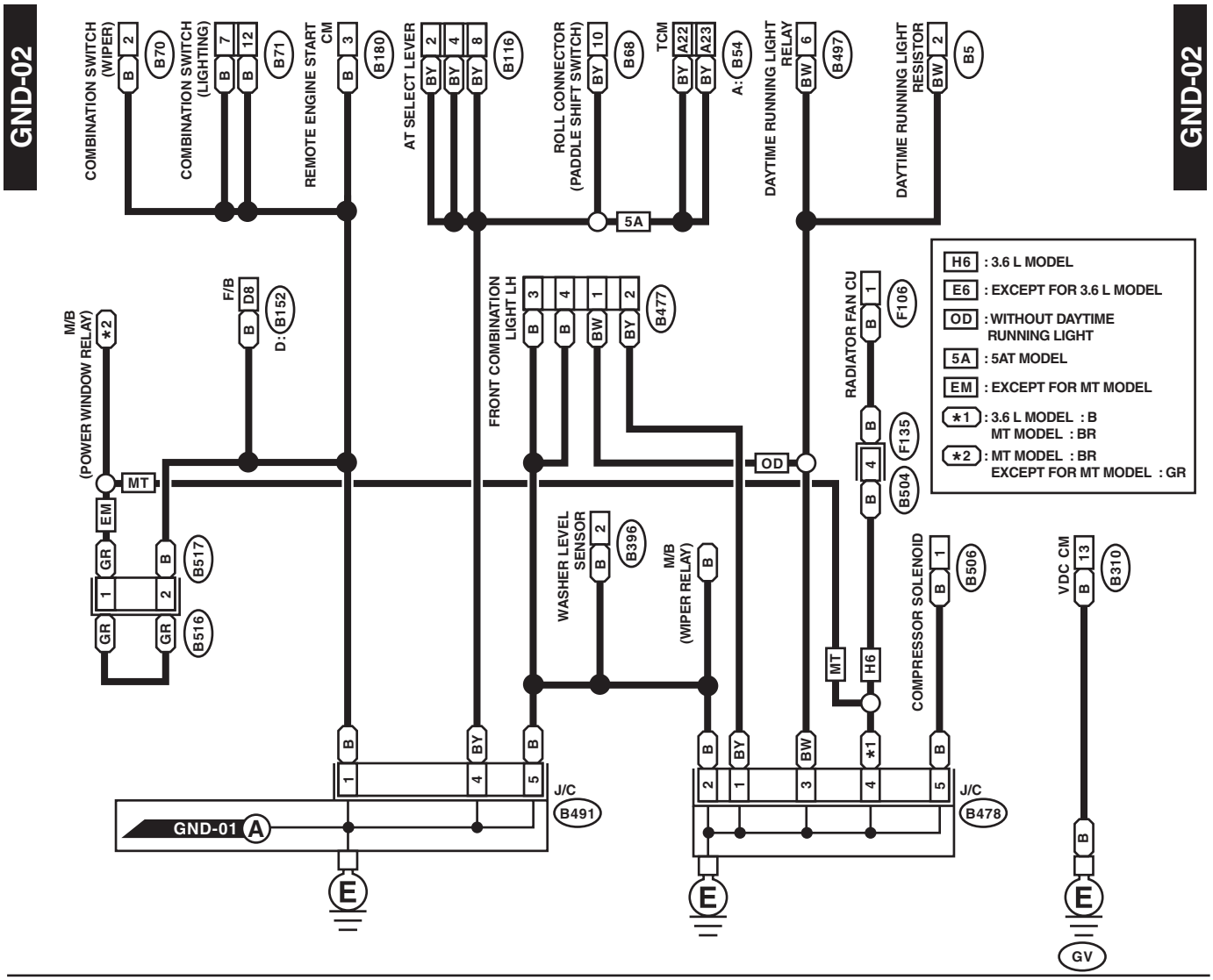
GND-02
GND-02
COMBINATION SWITCH (WIPER)
COMBINATION SWITCH (LIGHTING)
REMOTE ENGINE START CM
AT SELECT LEVER
ROLL CONNECTOR (PADDLE SHIFT SWITCH)
TCM
DAYTIME RUNNING LIGHT RELAY
DAYTIME RUNNING LIGHT RESISTOR
5A
H6 : 3.6 L MODEL
E6 : EXCEPT FOR 3.6 L MODEL
OD : WITHOUT DAYTIME RUNNING LIGHT
5A : 5AT MODEL
EM : EXCEPT FOR MT MODEL
*1 : 3.6 L MODEL : B MT MODEL : BR
*2 : MT MODEL : BR EXCEPT FOR MT MODEL : GR
M/B (POWER WINDOW RELAY)
F/B
FRONT COMBINATION LIGHT LH
RADIATOR FAN CU
MT
EM
OD
H6
WASHER LEVEL SENSOR
M/B (WIPER RELAY)
COMPRESSOR SOLENOID
VDC CM
J/C
GND-01 A
GV

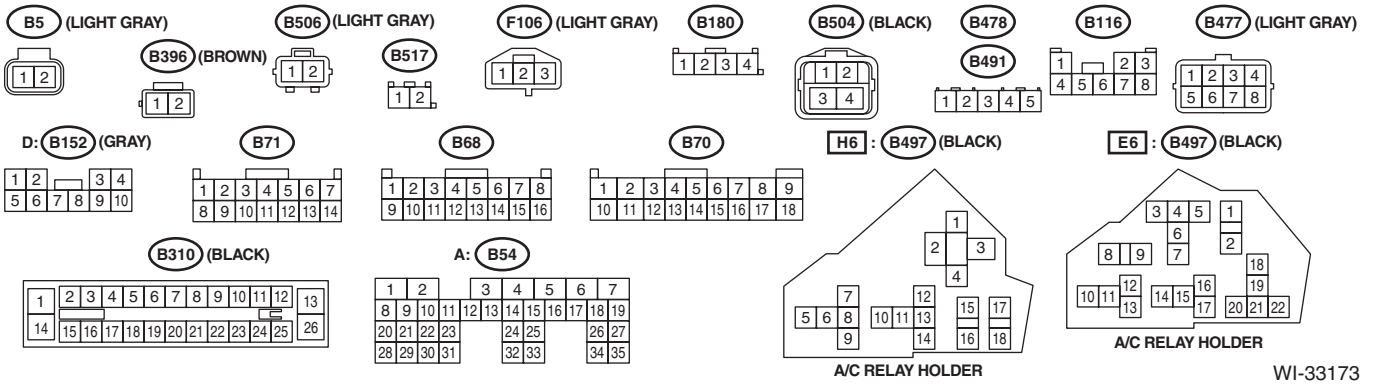
B5 (LIGHT GRAY)
B396 (BROWN)
B506 (LIGHT GRAY)
B517
F106 (LIGHT GRAY)
B180
B504 (BLACK)
B478
B491
B116
B477 (LIGHT GRAY)
D: B152 (GRAY)
B71
B68
B70
H6 : B497 (BLACK)
E6 : B497 (BLACK)
B310 (BLACK)
A: B54
A/C RELAY HOLDER
A/C RELAY HOLDER

WI-33173

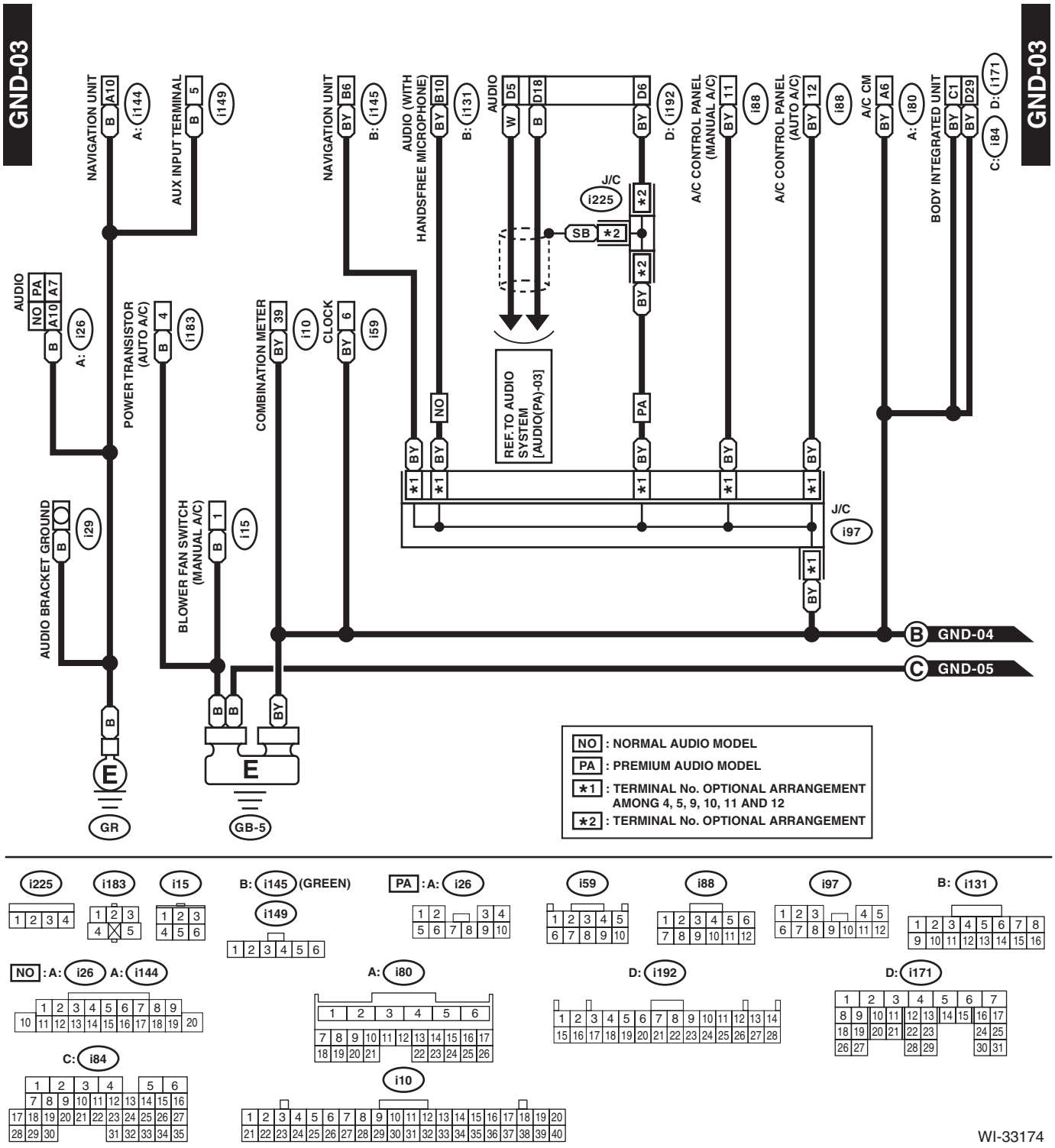
GND-03
GND-03
NAVIGATION UNIT
AUX INPUT TERMINAL
AUDIO
POWER TRANSISTOR (AUTO A/C)
COMBINATION METER
CLOCK
NAVIGATION UNIT
AUDIO (WITH HANDSFREE MICROPHONE)
AUDIO
J/C i225
REF. TO AUDIO SYSTEM [AUDIO(PA)-03]
A/C CONTROL PANEL (MANUAL A/C)
A/C CONTROL PANEL (AUTO A/C)
A/C CM
BODY INTEGRATED UNIT
J/C i97
AUDIO BRACKET GROUND
BLOWER FAN SWITCH (MANUAL A/C)
B GND-04
C GND-05
GR
GB-5
NO : NORMAL AUDIO MODEL
PA : PREMIUM AUDIO MODEL
*1 : TERMINAL No. OPTIONAL ARRANGEMENT AMONG 4, 5, 9, 10, 11 AND 12
*2 : TERMINAL No. OPTIONAL ARRANGEMENT

i225
i183
i15
B: i145 (GREEN)
i149
PA : A: i26
i59
i88
i97
B: i131
NO : A: i26 A: i144
A: i80
D: i192
D: i171
C: i84
i10

WI-33174

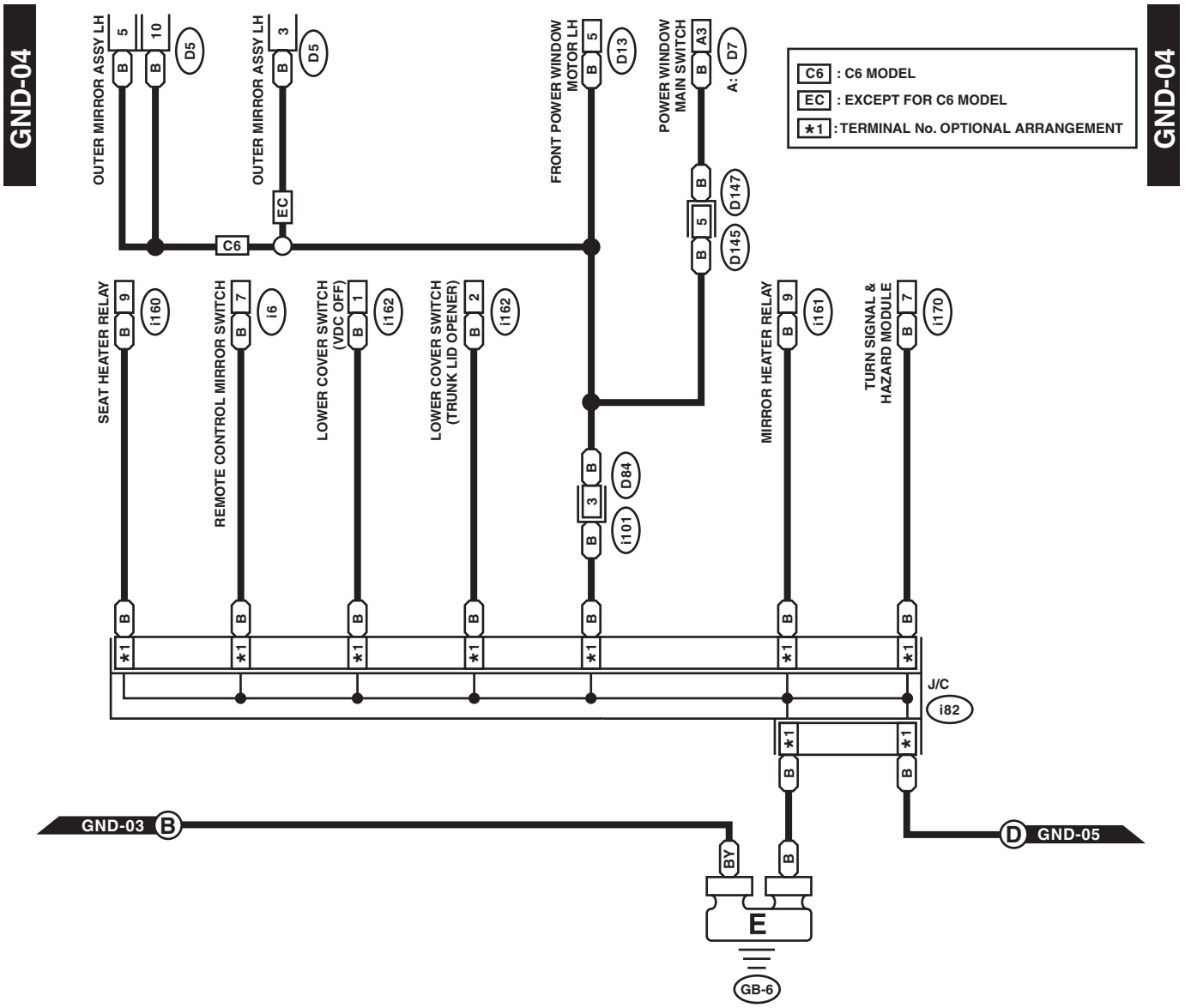
GND-04
GND-04
OUTER MIRROR ASSY LH
OUTER MIRROR ASSY LH
FRONT POWER WINDOW MOTOR LH
POWER WINDOW MAIN SWITCH
A:
C6 : C6 MODEL
EC : EXCEPT FOR C6 MODEL
*1 : TERMINAL No. OPTIONAL ARRANGEMENT
C6
EC
SEAT HEATER RELAY
REMOTE CONTROL MIRROR SWITCH
LOWER COVER SWITCH (VDC OFF)
LOWER COVER SWITCH (TRUNK LID OPENER)
MIRROR HEATER RELAY
TURN SIGNAL & HAZARD MODULE
J/C
i82
GND-03 B
D GND-05
E
GB-6

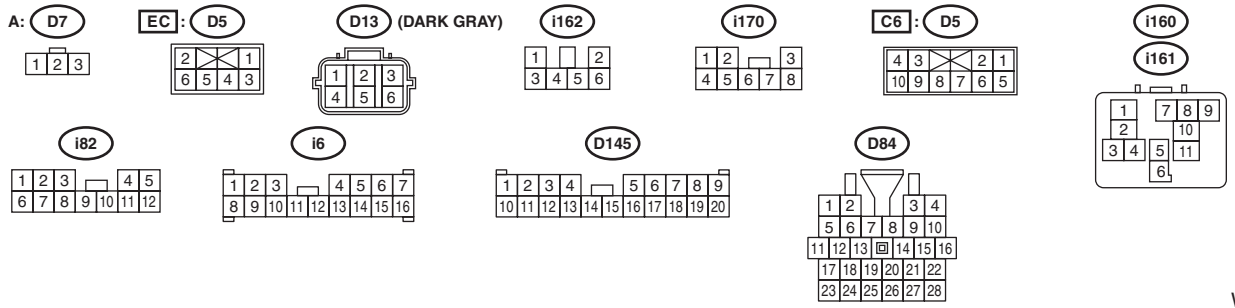
A: D7
EC : D5
D13 (DARK GRAY)
i162
i170
C6 : D5
i160
i161
i82
i6
D145
D84

WI-29309

Ground Circuit

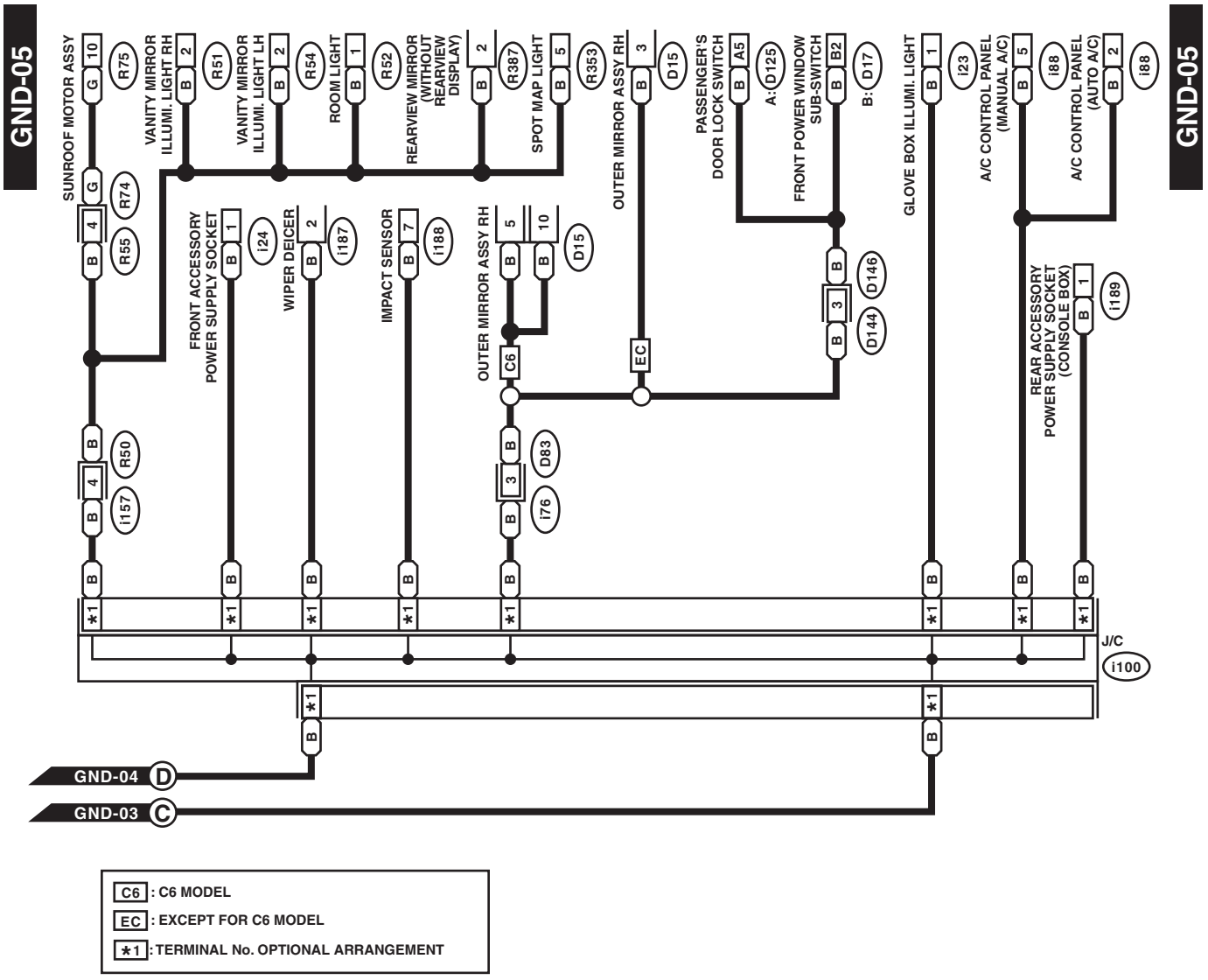

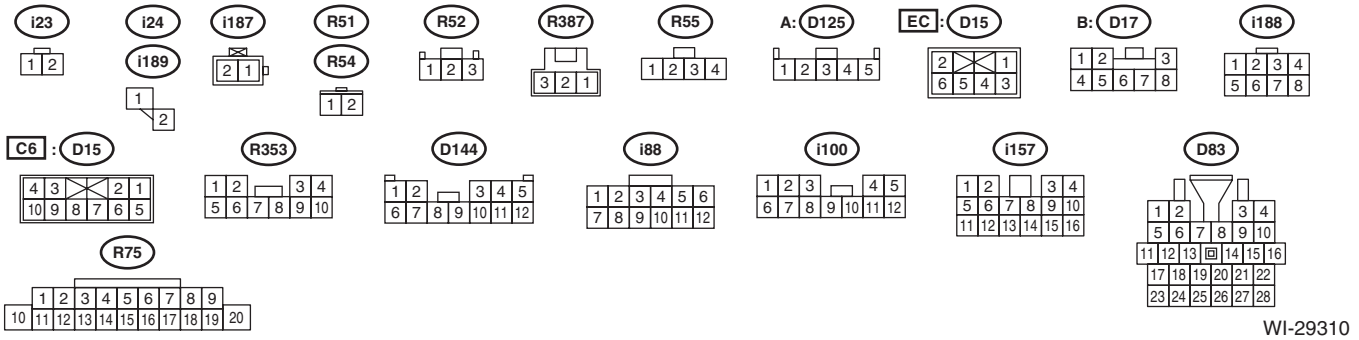

WI-29310

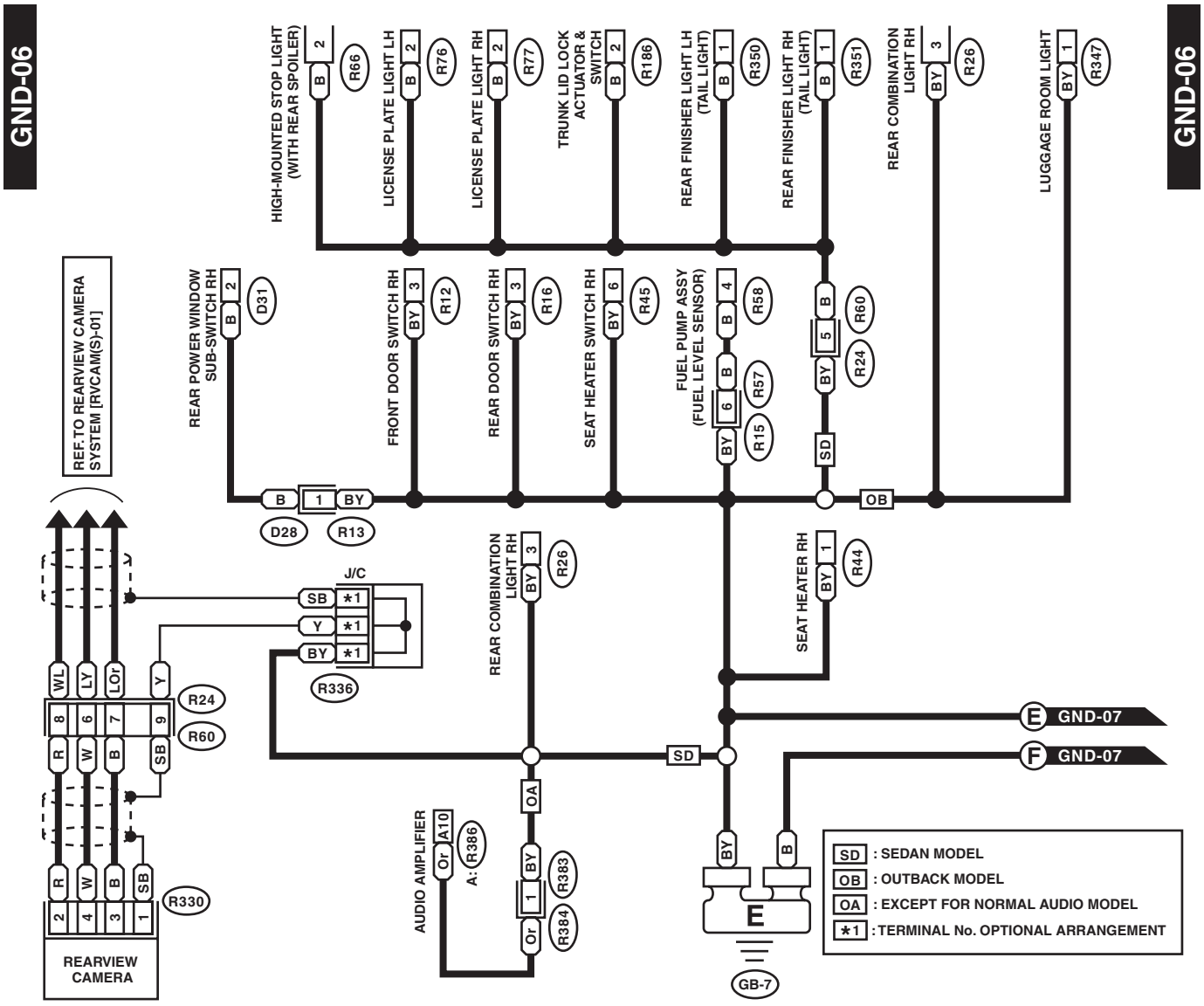
GND-06
GND-06
HIGH-MOUNTED STOP LIGHT (WITH REAR SPOILER)
LICENSE PLATE LIGHT LH
LICENSE PLATE LIGHT RH
TRUNK LID LOCK ACTUATOR & SWITCH
REAR FINISHER LIGHT LH (TAIL LIGHT)
REAR FINISHER LIGHT RH (TAIL LIGHT)
REAR COMBINATION LIGHT RH
LUGGAGE ROOM LIGHT
REAR POWER WINDOW SUB-SWITCH RH
FRONT DOOR SWITCH RH
REAR DOOR SWITCH RH
SEAT HEATER SWITCH RH
FUEL PUMP ASSY (FUEL LEVEL SENSOR)
REF. TO REARVIEW CAMERA SYSTEM [RVCAM(S)-01]
J/C
REAR COMBINATION LIGHT RH
SEAT HEATER RH
AUDIO AMPLIFIER
REARVIEW CAMERA
GND-07
GND-07
SD : SEDAN MODEL
OB : OUTBACK MODEL
OA : EXCEPT FOR NORMAL AUDIO MODEL
*1 : TERMINAL No. OPTIONAL ARRANGEMENT
R66
R76
R77
R12
R16
R186
R350
R351
R347
OB : R26
R44
R383
R330
R336
SD : R26
R45 (BROWN)
R58
D31
R13
R60
R57
A: R386

WI-29311

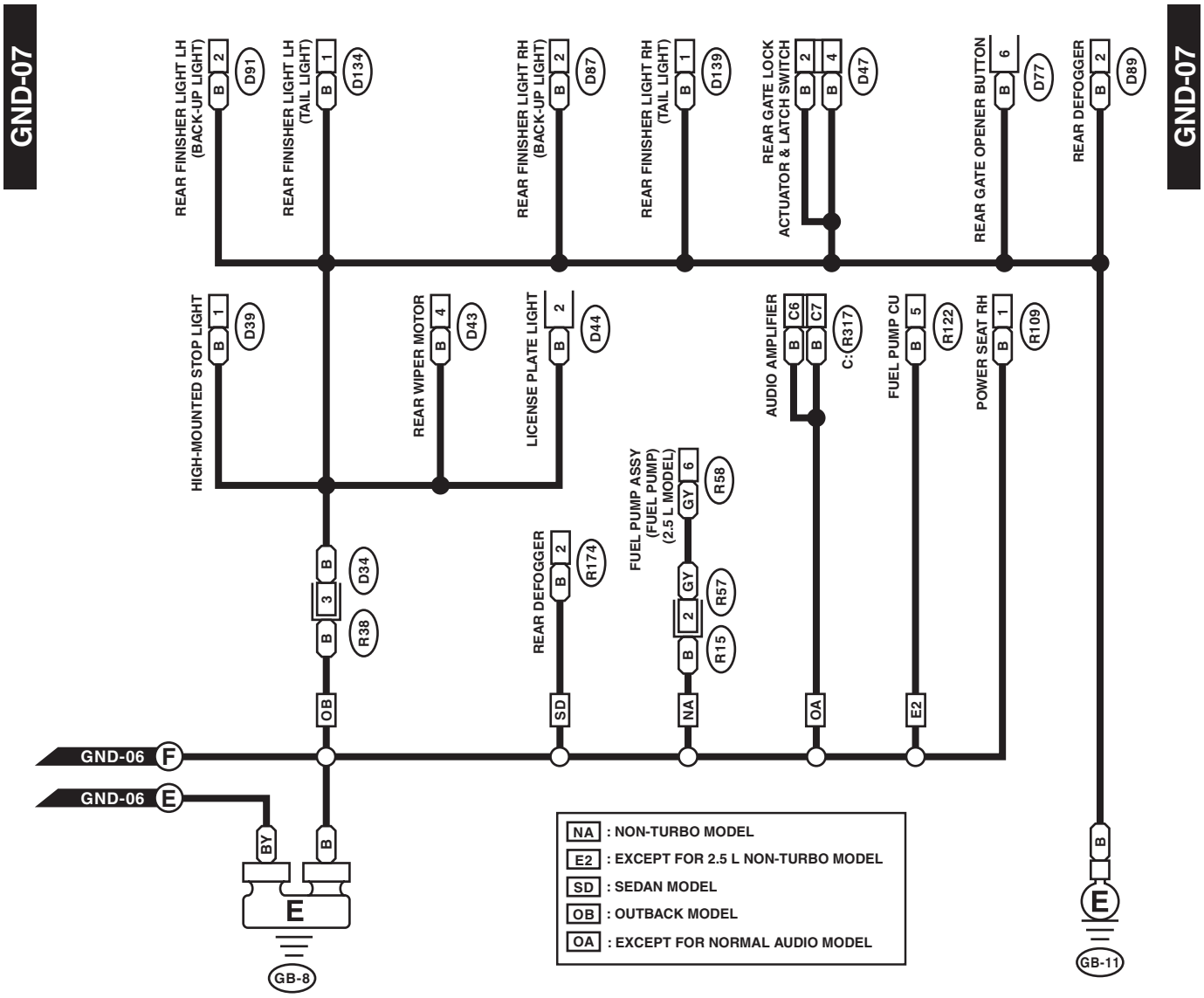
GND-07
GND-07
REAR FINISHER LIGHT LH (BACK-UP LIGHT)
REAR FINISHER LIGHT LH (TAIL LIGHT)
REAR FINISHER LIGHT RH (BACK-UP LIGHT)
REAR FINISHER LIGHT RH (TAIL LIGHT)
REAR GATE LOCK ACTUATOR & LATCH SWITCH
REAR GATE OPENER BUTTON
REAR DEFOGGER
HIGH-MOUNTED STOP LIGHT
REAR WIPER MOTOR
LICENSE PLATE LIGHT
AUDIO AMPLIFIER
C: R317
FUEL PUMP CU
POWER SEAT RH
FUEL PUMP ASSY (FUEL PUMP) (2.5 L MODEL)
REAR DEFOGGER
GND-06 F
GND-06 E
GB-8
GB-11
NA : NON-TURBO MODEL
E2 : EXCEPT FOR 2.5 L NON-TURBO MODEL
SD : SEDAN MODEL
OB : OUTBACK MODEL
OA : EXCEPT FOR NORMAL AUDIO MODEL

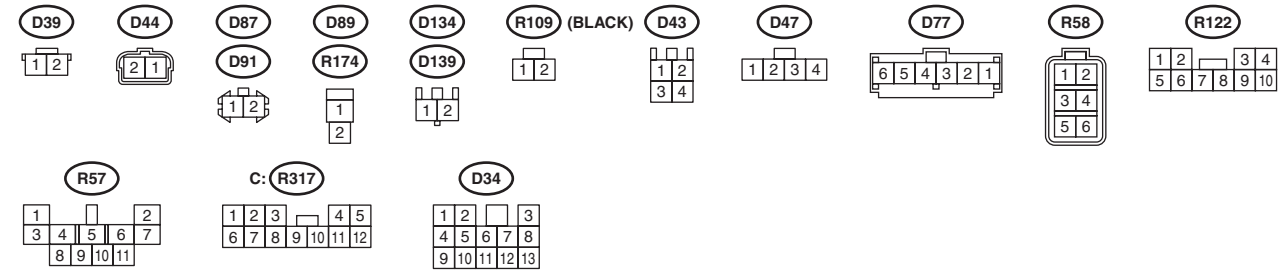
D39
D44
D87
D91
D89
R174
D134
D139
R109 (BLACK)
D43
D47
D77
R58
R122
R57
C: R317
D34

WI-25405

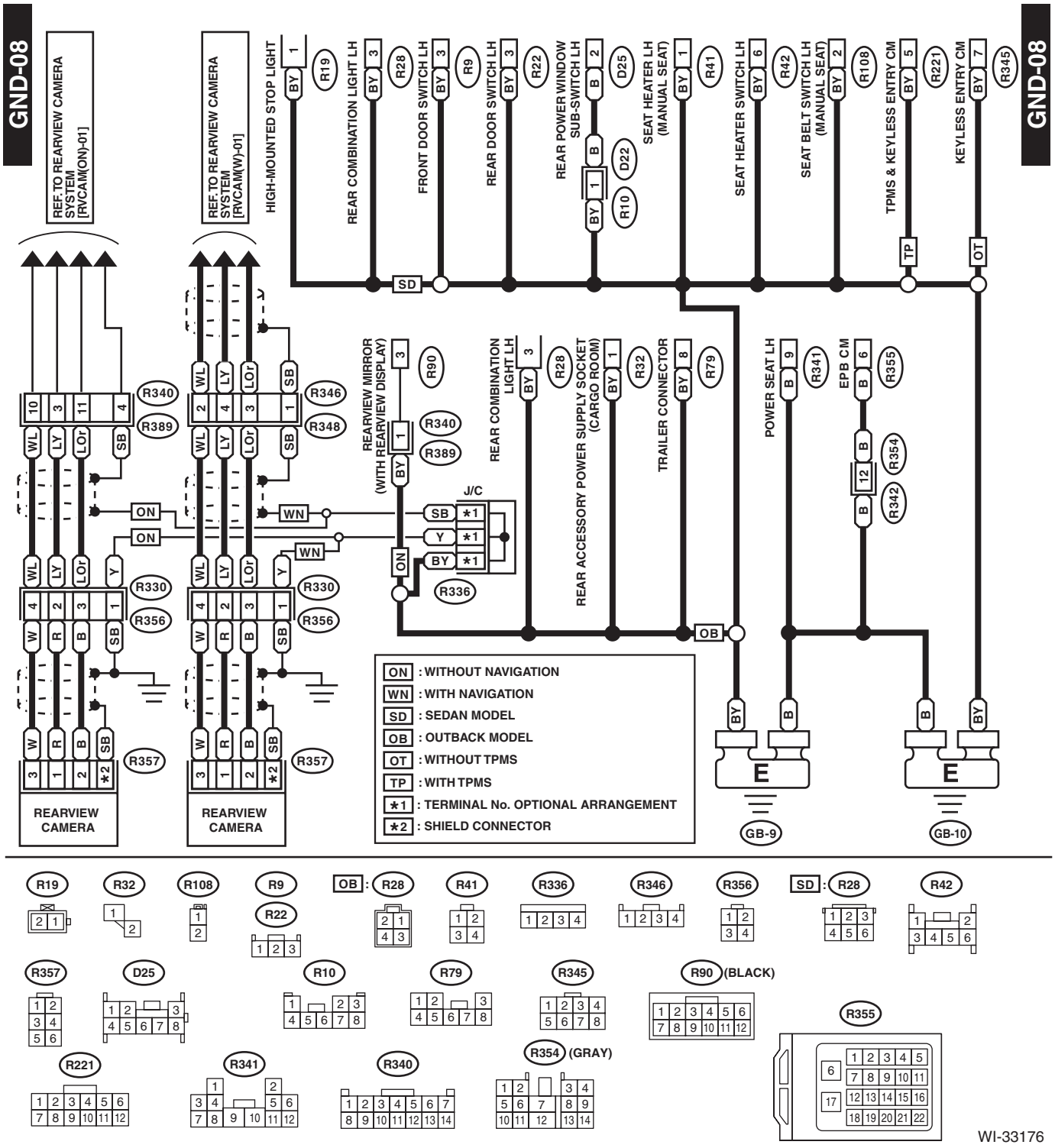
GND-08
GND-08
REF. TO REARVIEW CAMERA SYSTEM [RVCAM(ON)-01]
REF. TO REARVIEW CAMERA SYSTEM [RVCAM(WN)-01]
HIGH-MOUNTED STOP LIGHT
REAR COMBINATION LIGHT LH
FRONT DOOR SWITCH LH
REAR DOOR SWITCH LH
REAR POWER WINDOW SUB-SWITCH LH
SEAT HEATER LH (MANUAL SEAT)
SEAT HEATER SWITCH LH
SEAT BELT SWITCH LH (MANUAL SEAT)
TPMS & KEYLESS ENTRY CM
KEYLESS ENTRY CM
REARVIEW MIRROR (WITH REARVIEW DISPLAY)
REAR COMBINATION LIGHT LH
REAR ACCESSORY POWER SUPPLY SOCKET (CARGO ROOM)
TRAILER CONNECTOR
POWER SEAT LH
EPB CM
J/C
REARVIEW CAMERA
REARVIEW CAMERA
ON : WITHOUT NAVIGATION
WN : WITH NAVIGATION
SD : SEDAN MODEL
OB : OUTBACK MODEL
OT : WITHOUT TPMS
TP : WITH TPMS
*1 : TERMINAL No. OPTIONAL ARRANGEMENT
*2 : SHIELD CONNECTOR
GB-9
GB-10
WI-33176

2. ENGINE GROUND (2.5 L NON-TURBO MODEL)

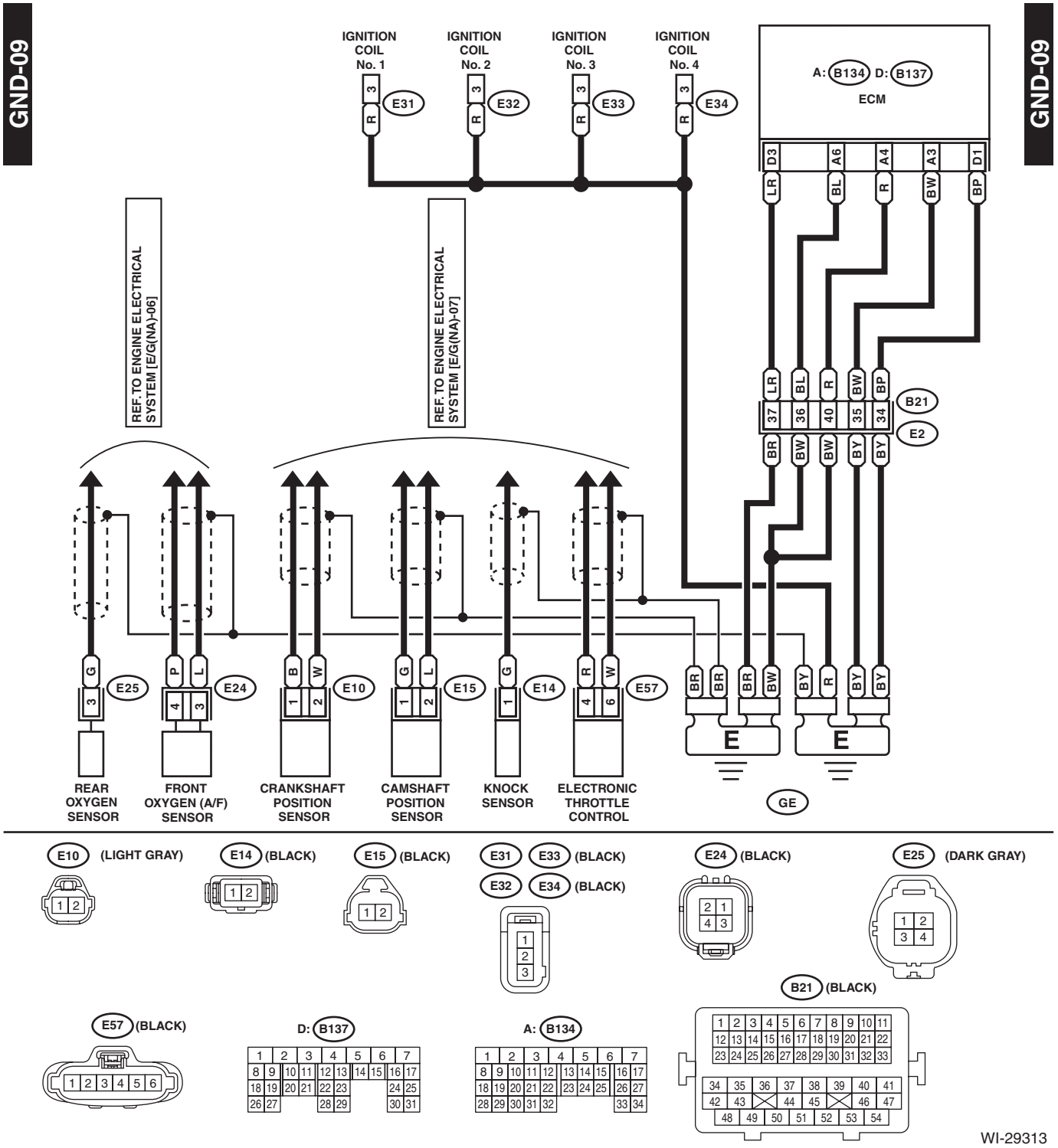

3. ENGINE GROUND (2.5 L TURBO MODEL)

GND-10

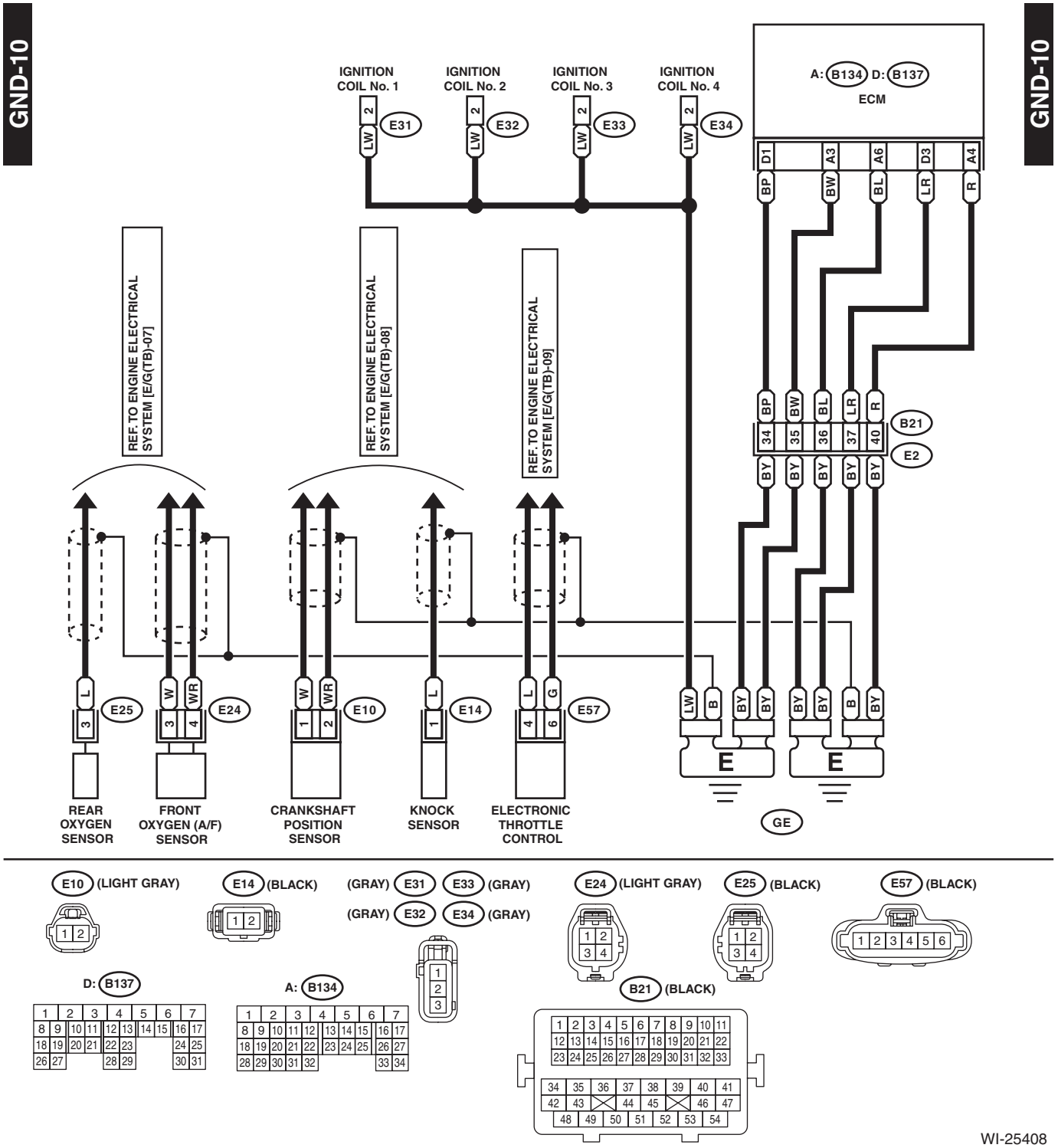

WI-25408

4. ENGINE GROUND (3.6 L MODEL)

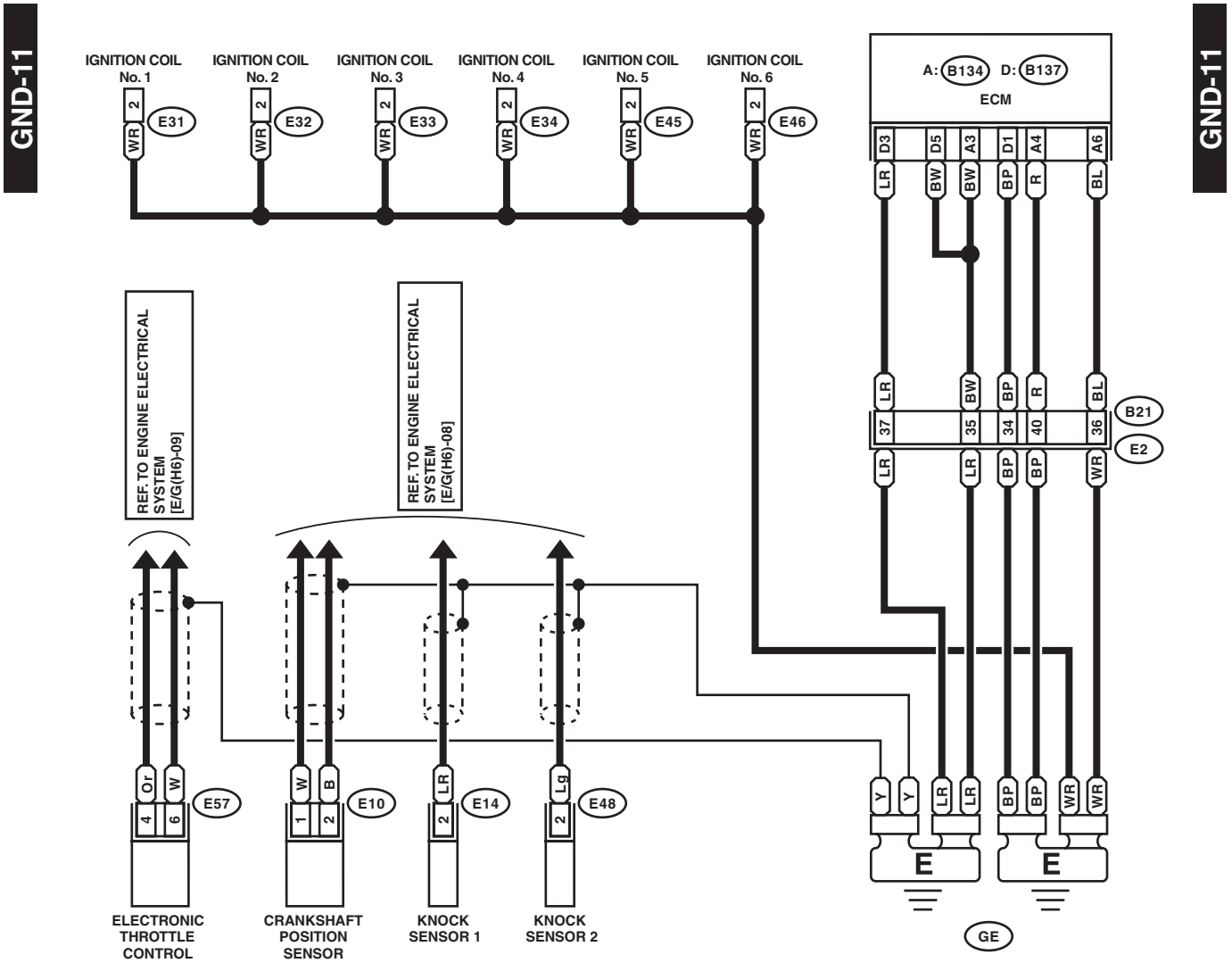

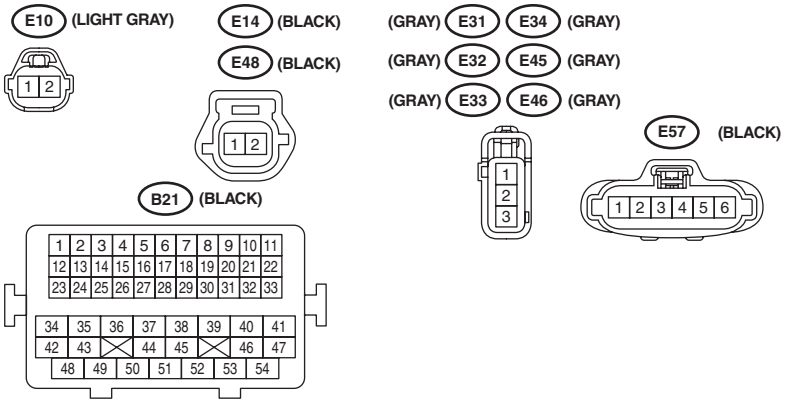

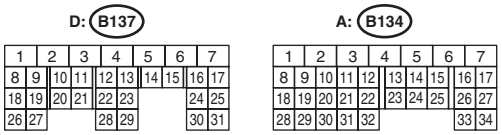

WI-33177

5. TRANSMISSION GROUND (AT MODEL)

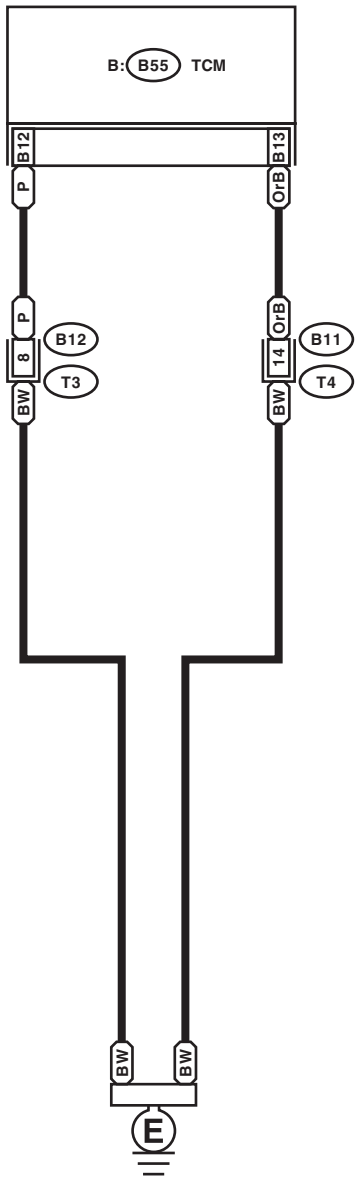

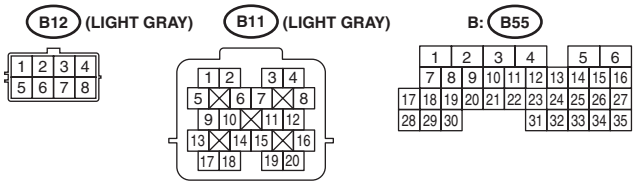

WI-25410

6. TRANSMISSION GROUND (CVT MODEL)

GND-13

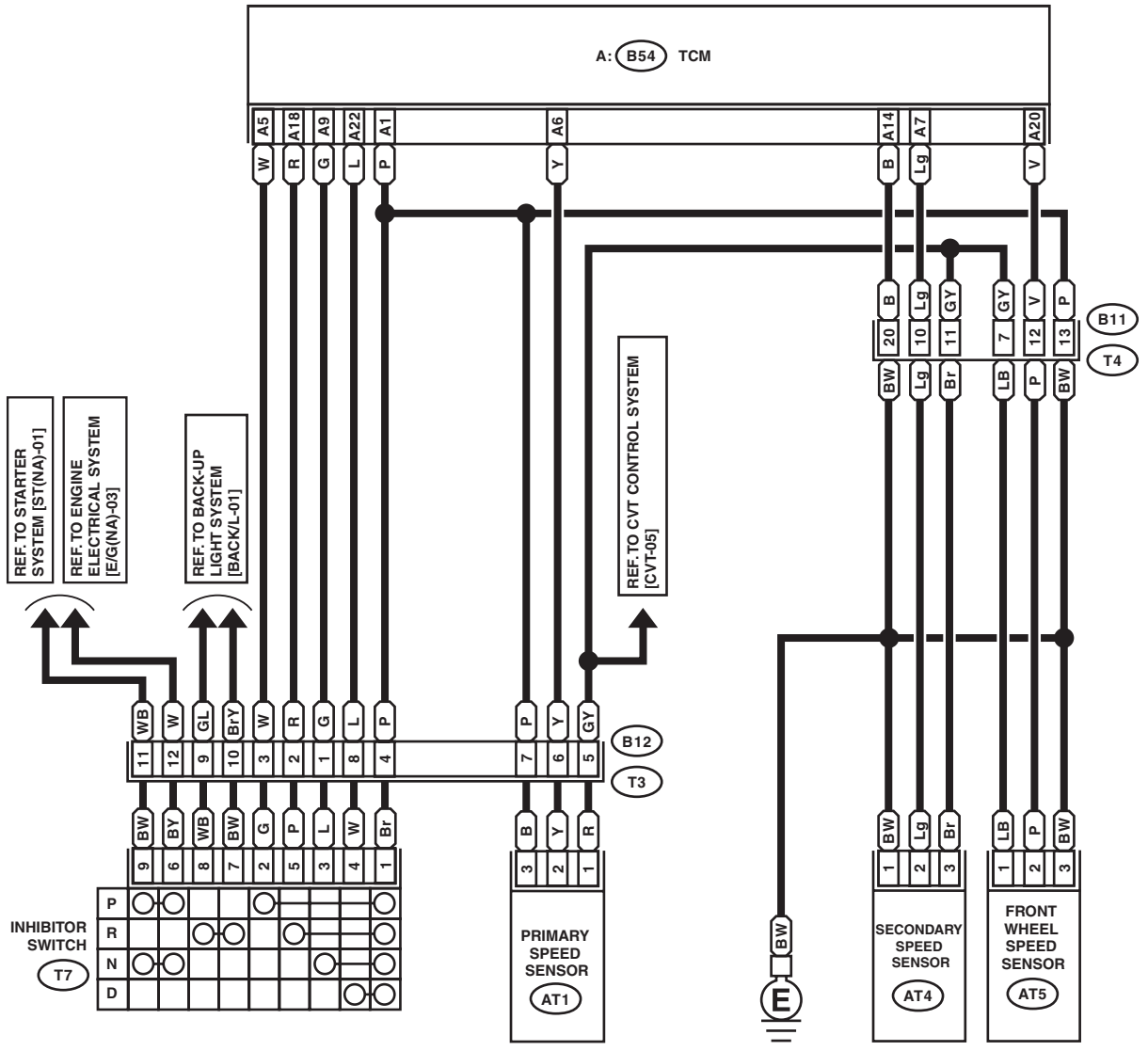

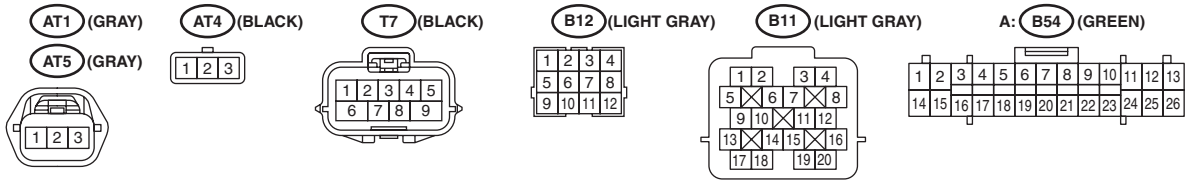

WI-25411

5. Airbag System

A: WIRING DIAGRAM

1. VEHICLE IDENTIFICATION NUMBER: SEDAN MODEL 002017 OR LATER OUTBACK MODEL 200013 OR LATER

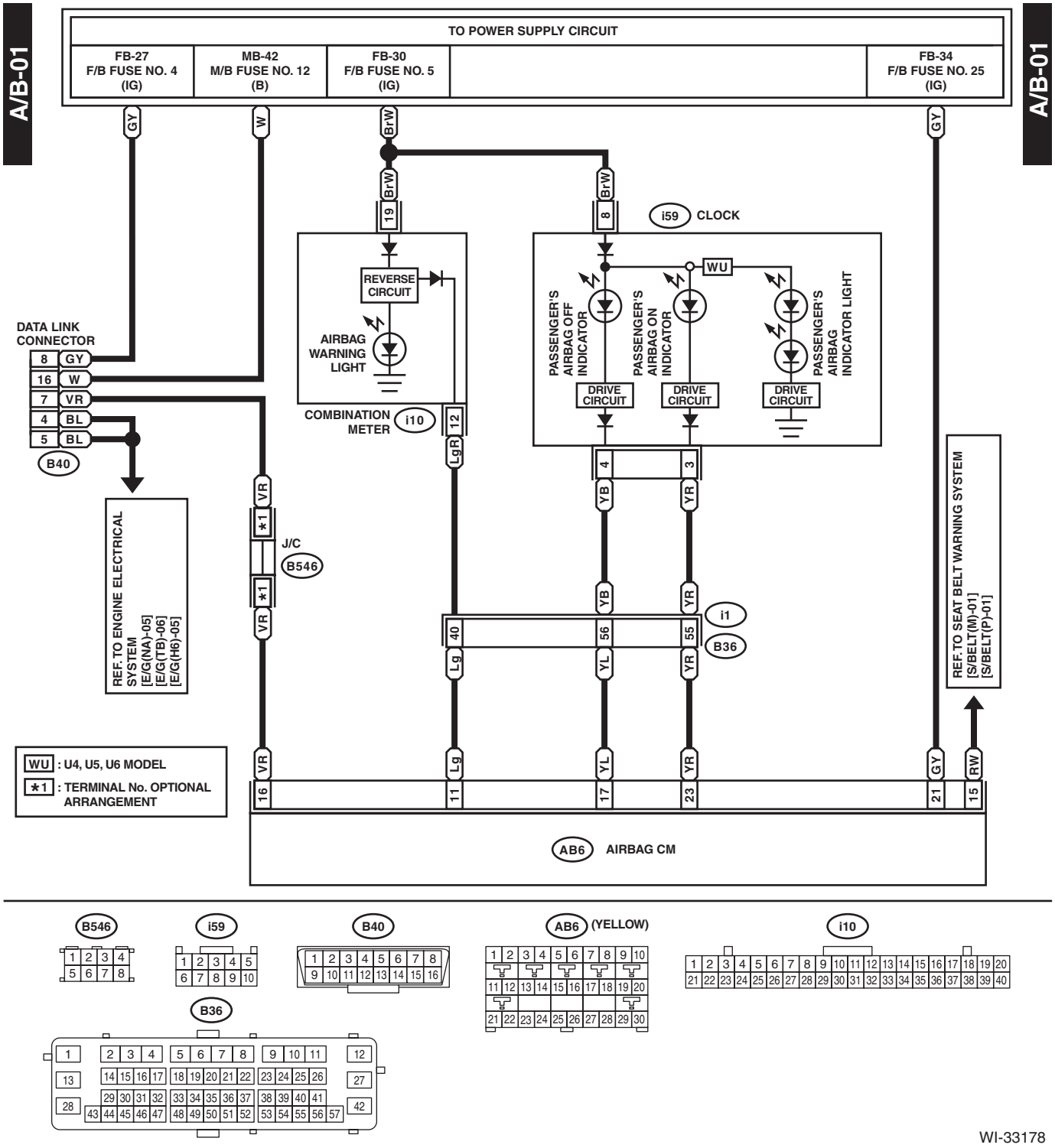

WI-33178

A/B-02

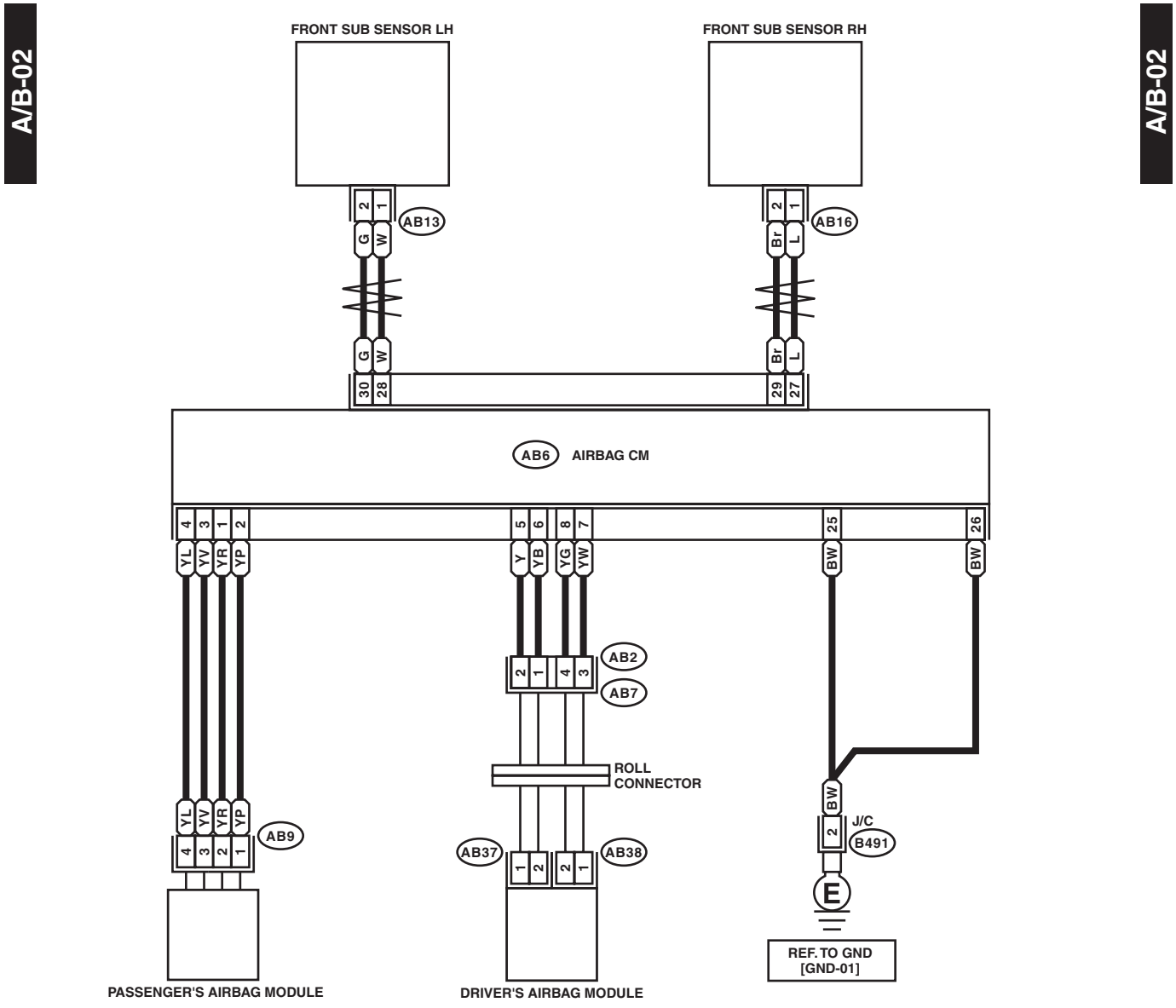

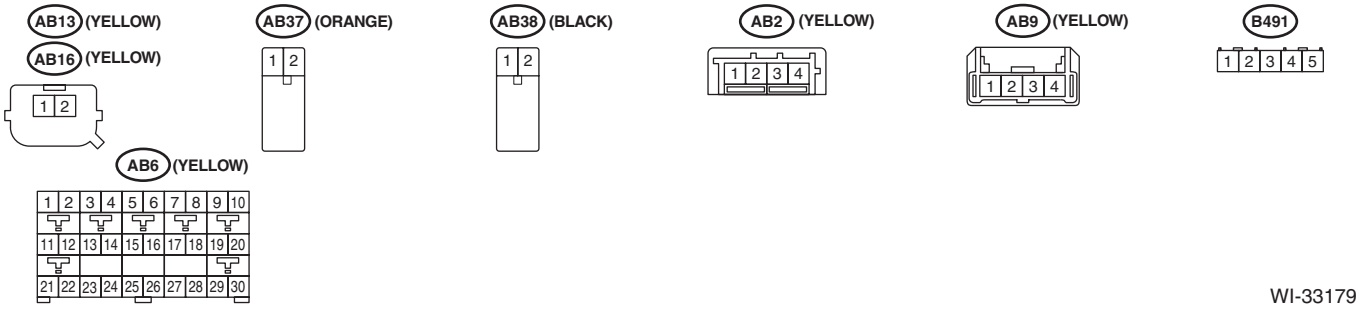

WI-33179

A/B-03

A/B-03

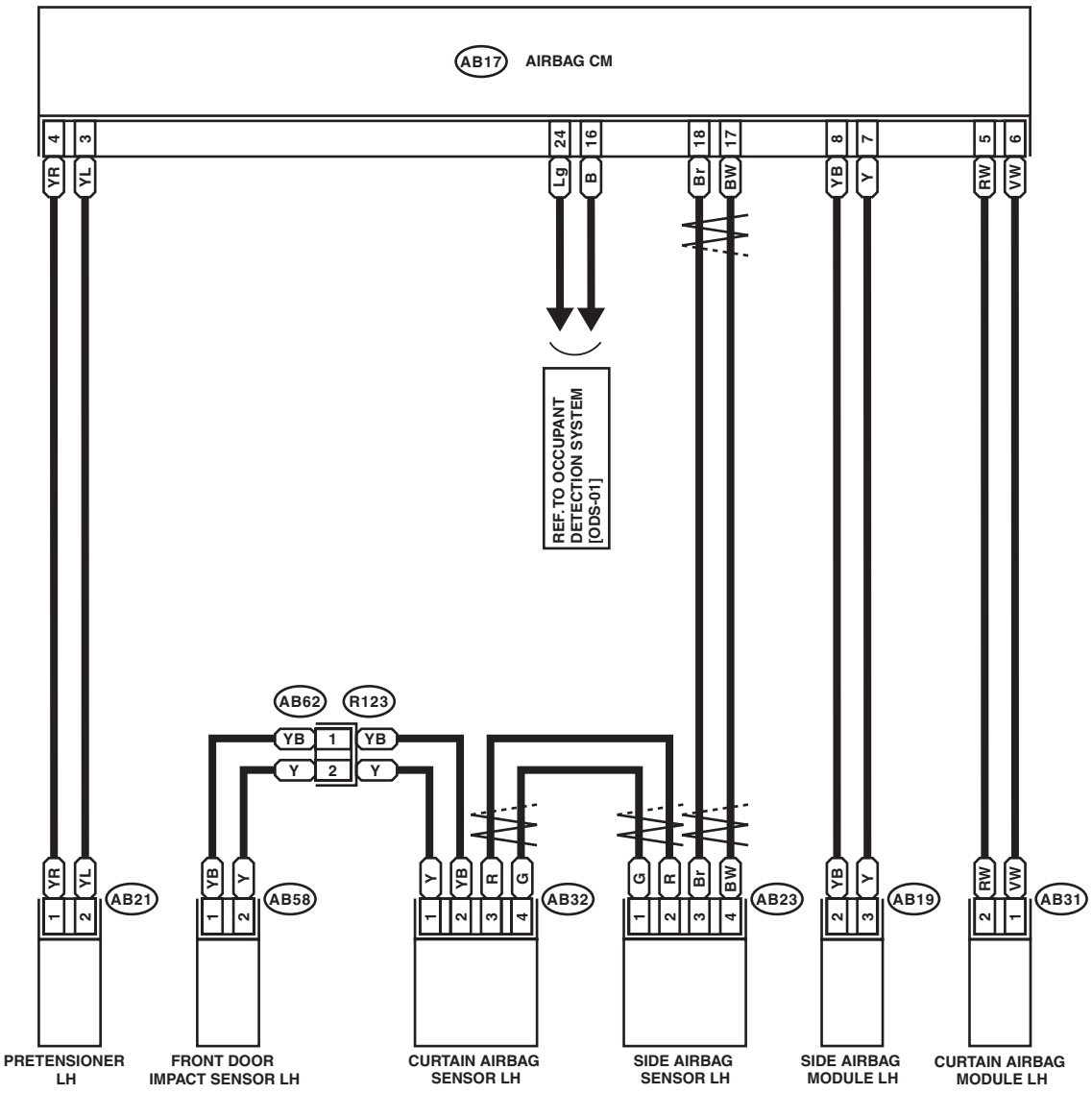

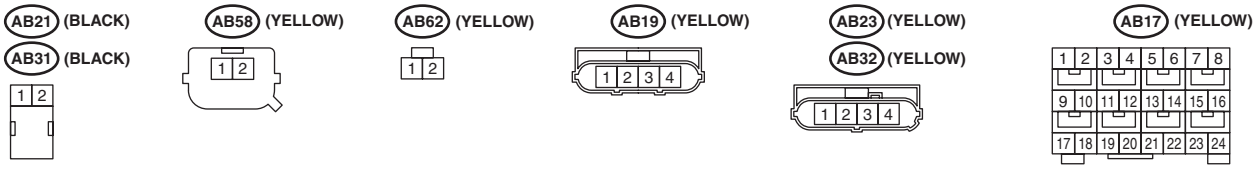

WI-35778

A/B-04

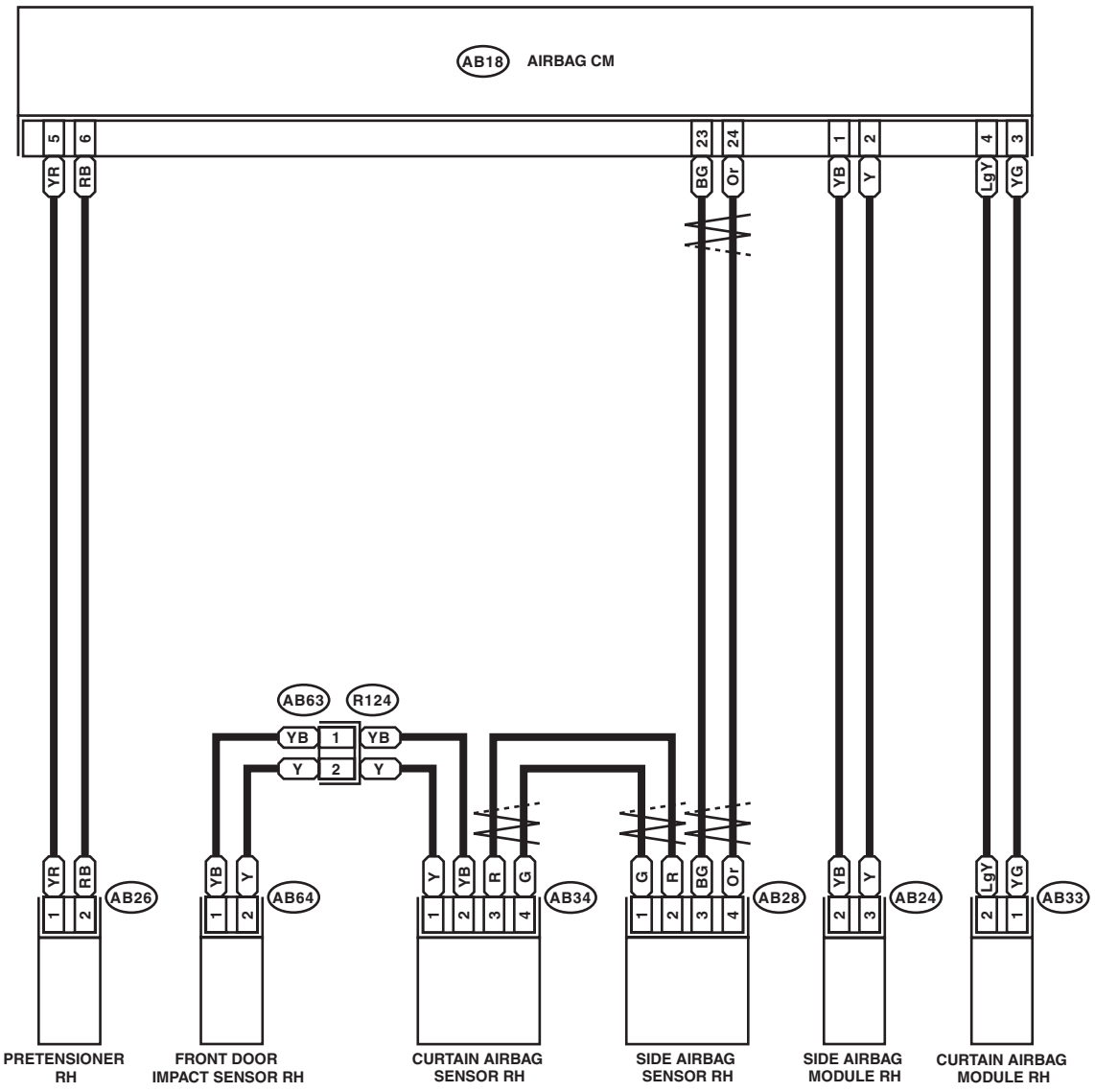

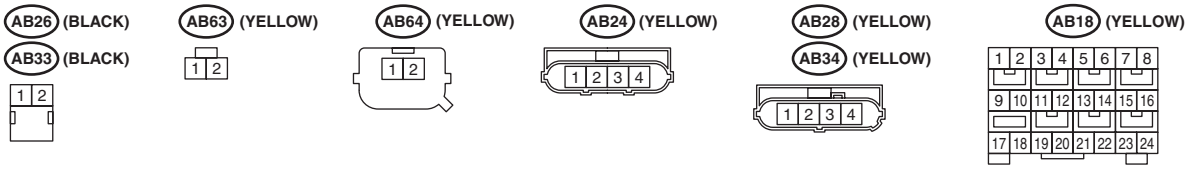

WI-35779

2. VEHICLE IDENTIFICATION NUMBER: SEDAN MODEL 002016 OR OLDER OUTBACK MODEL 200012 OR OLDER

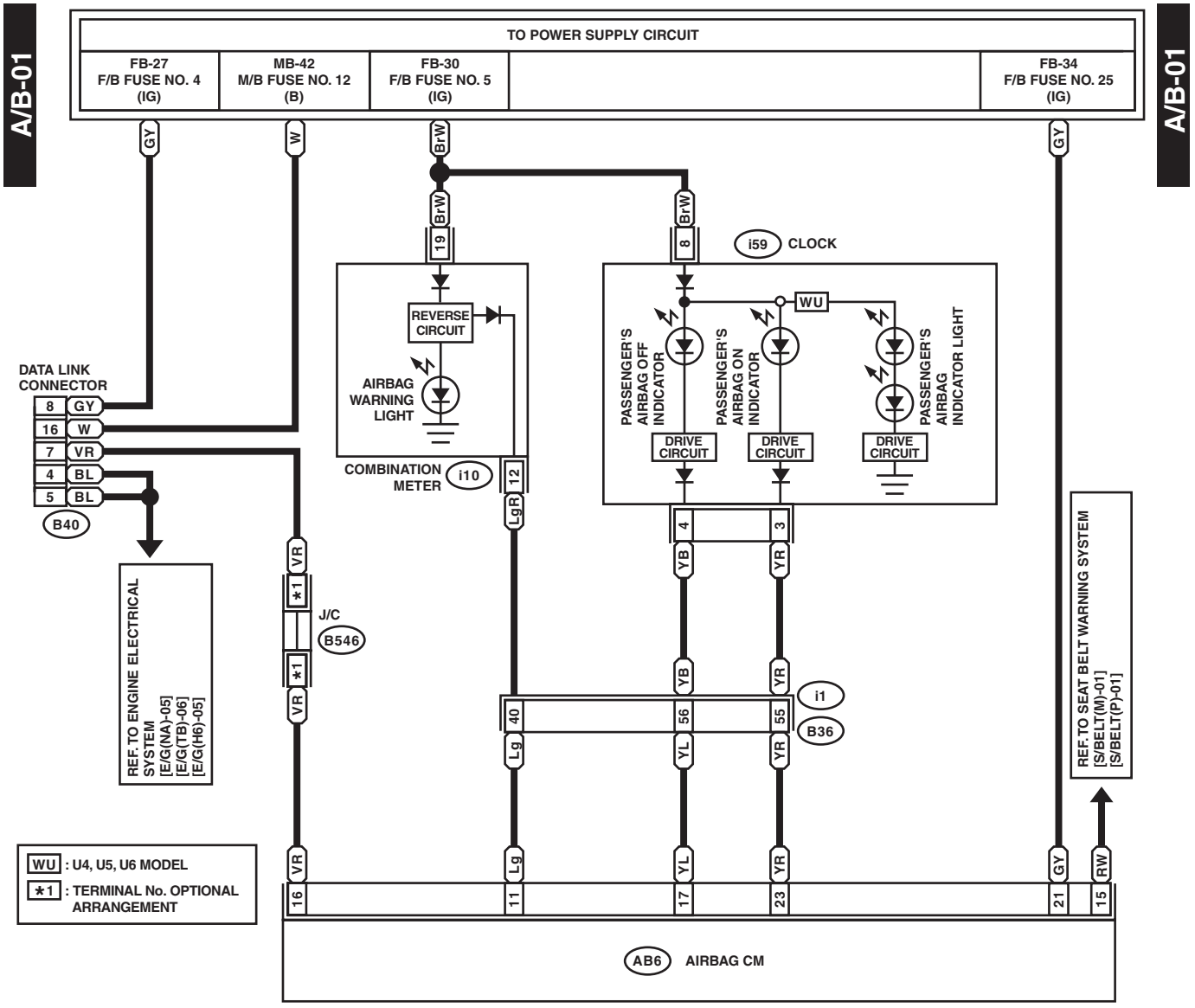

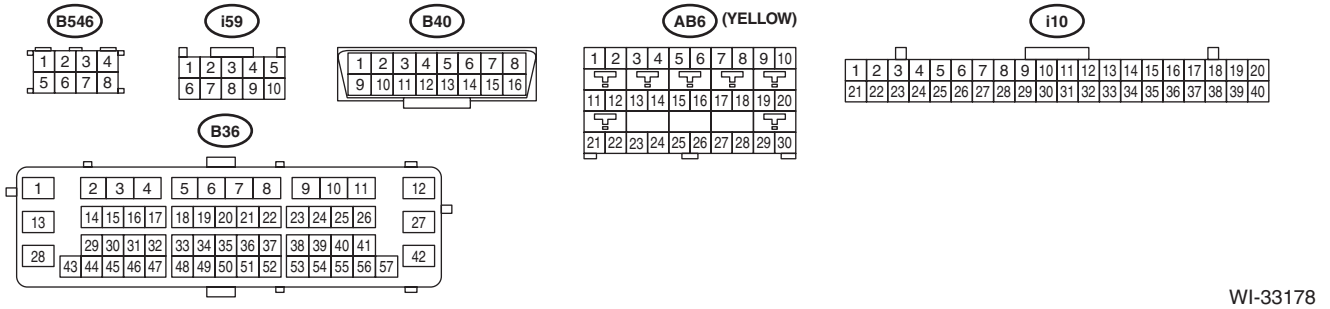

WI-33178

A/B-02

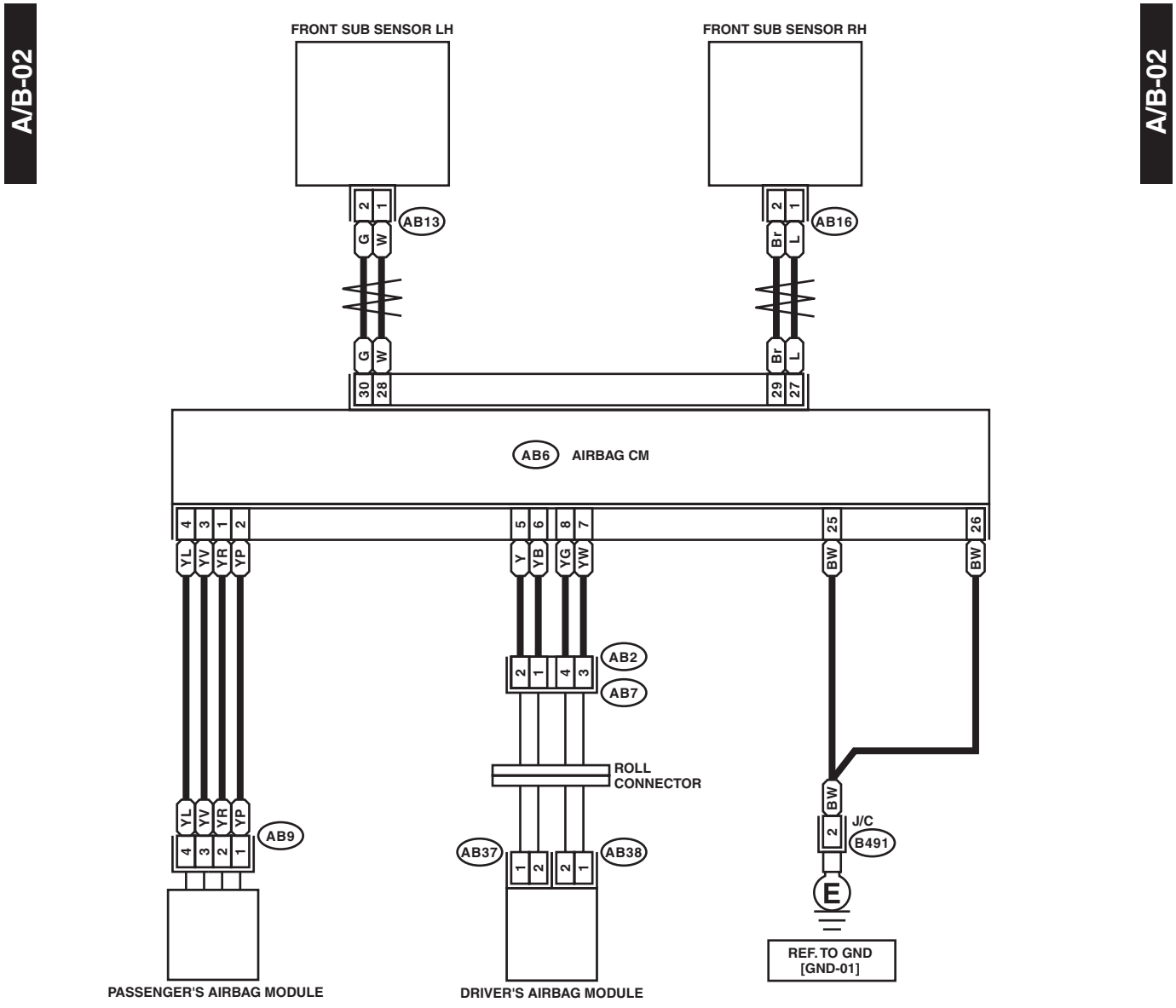

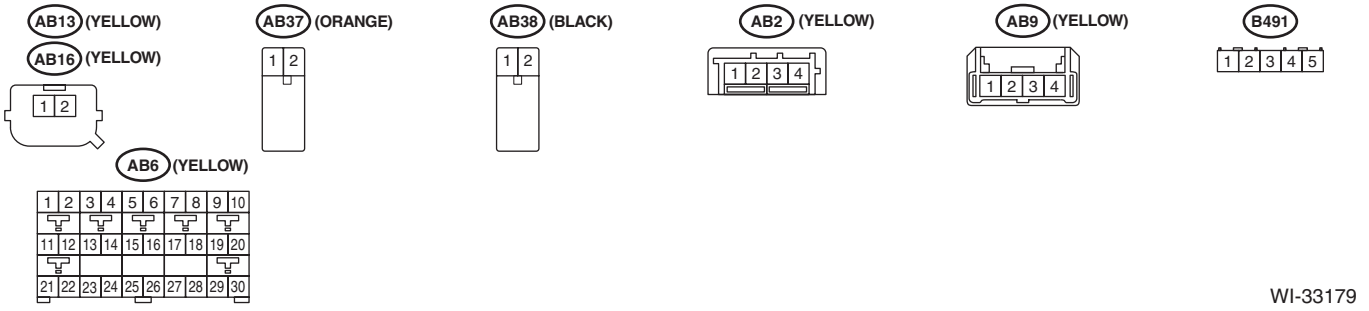

WI-33179

A/B-03

A/B-03

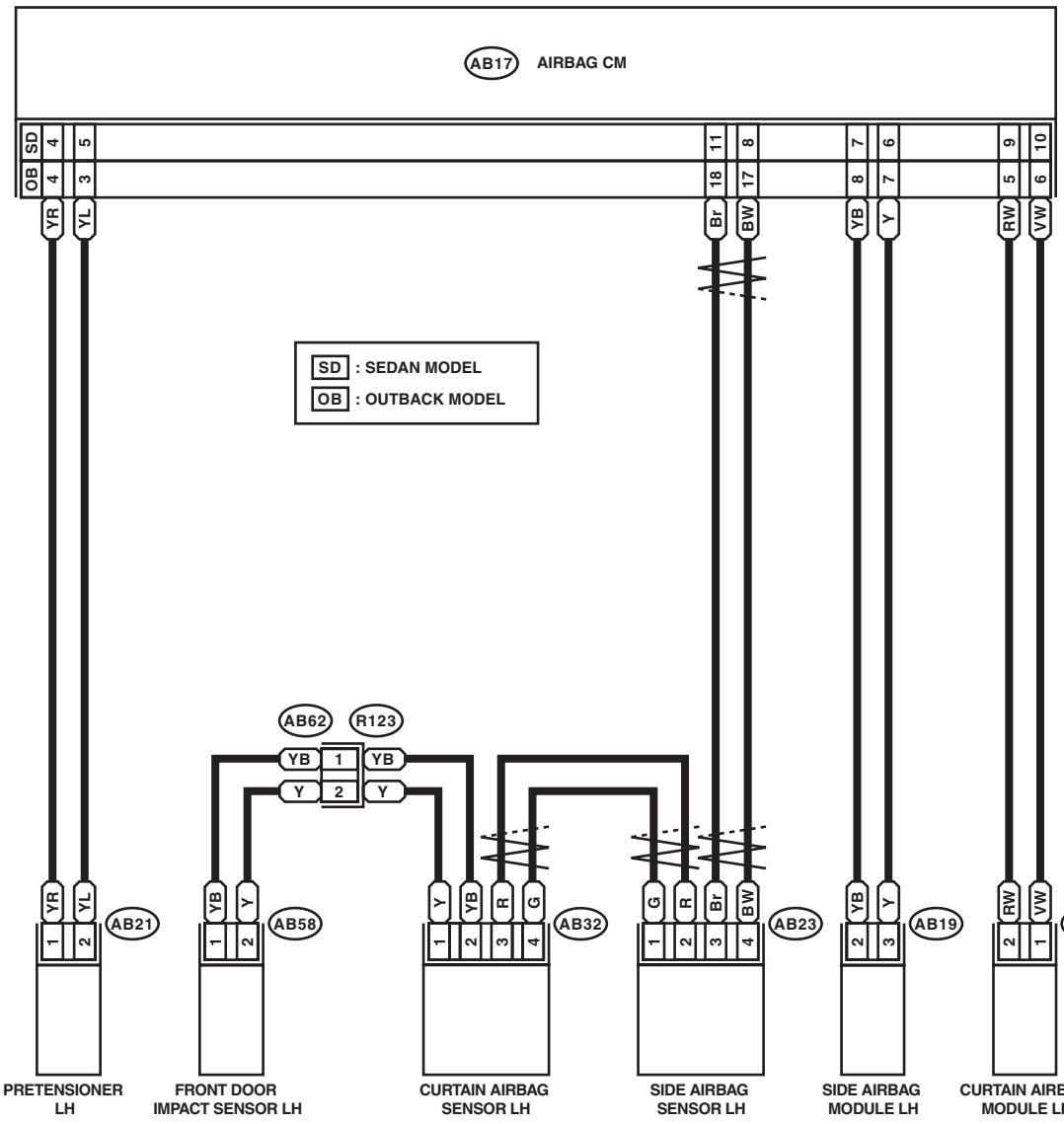

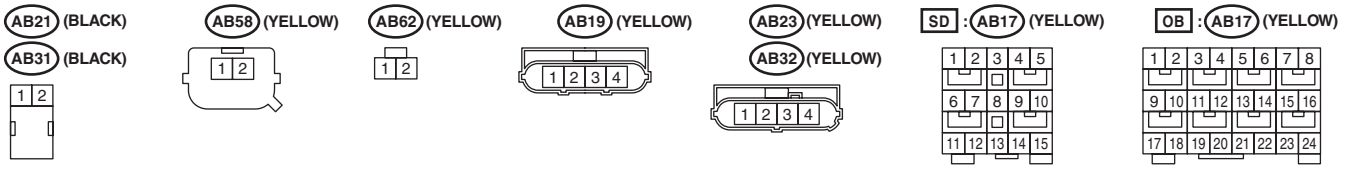

WI-33180

A/B-04

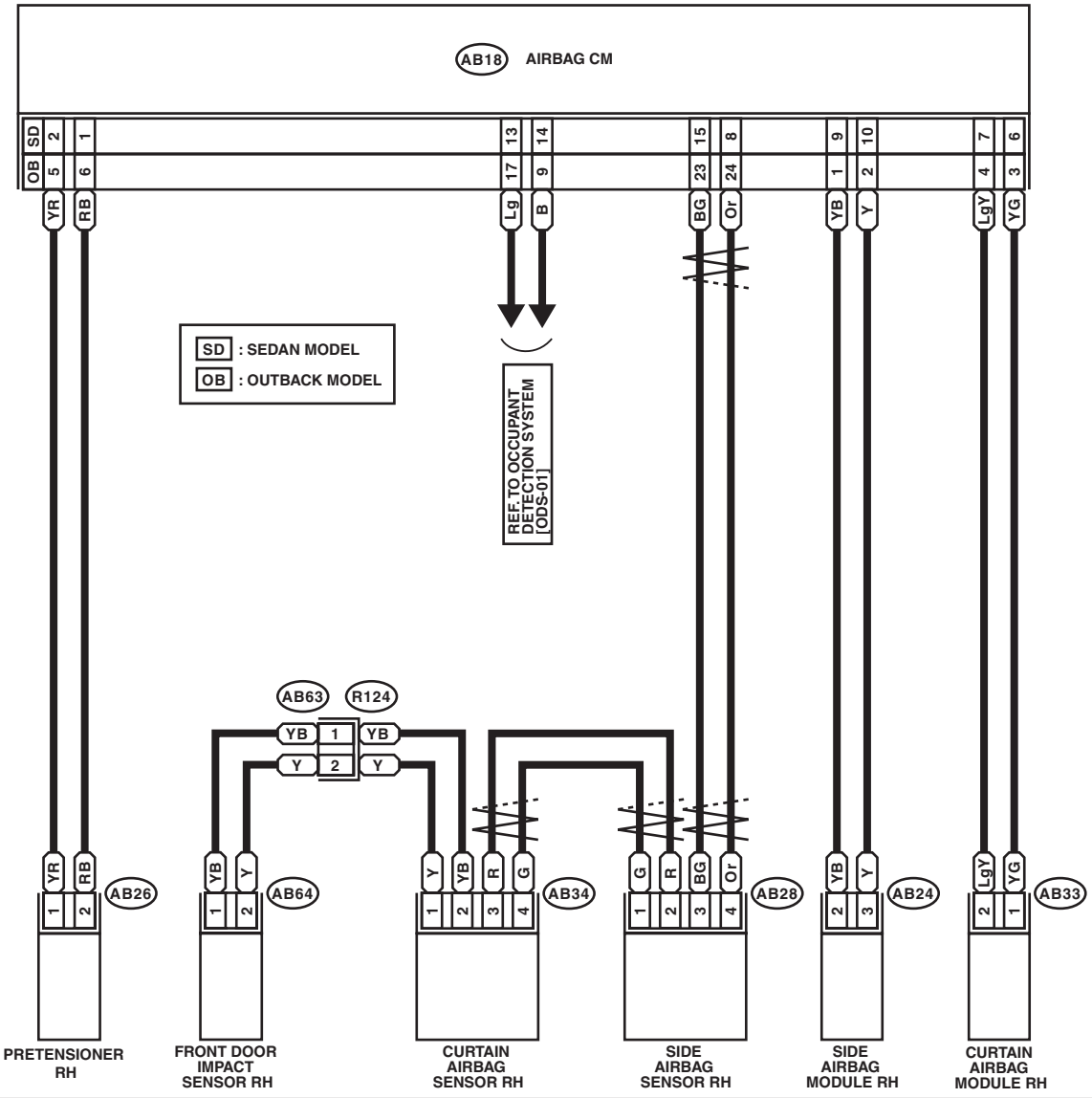

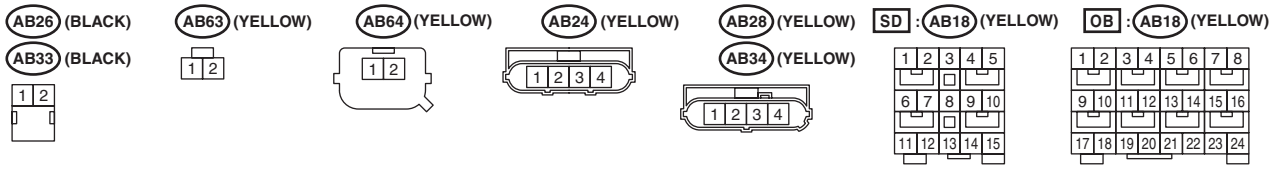

WI-29316

6. Air Conditioning System

A: WIRING DIAGRAM

1. MANUAL A/C

M-A/C-01

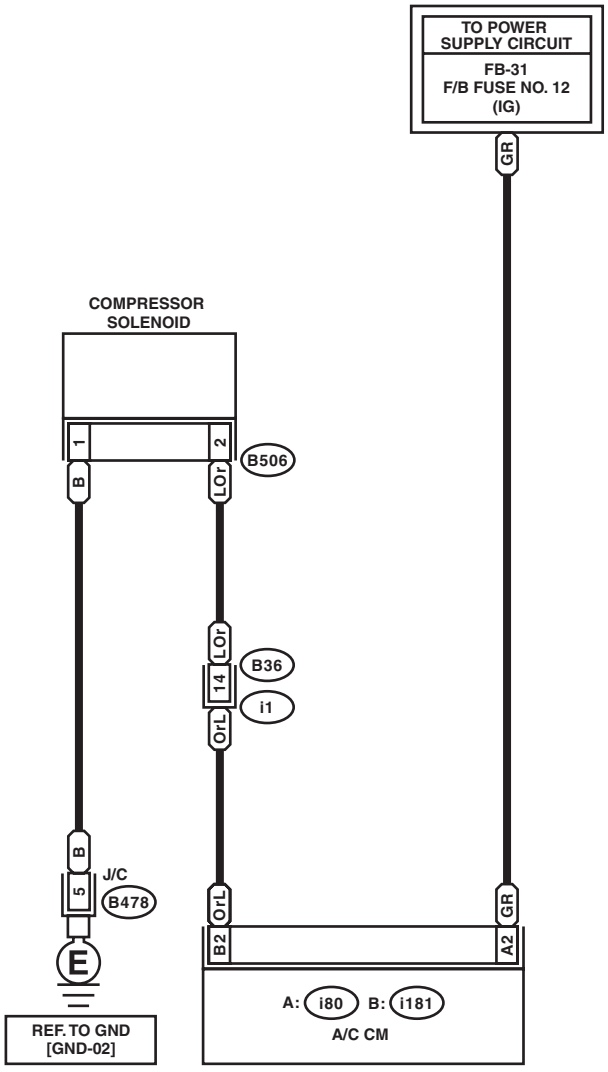

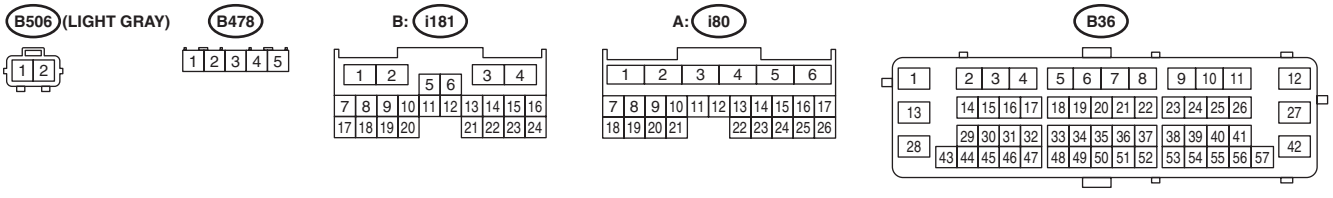

WI-25416

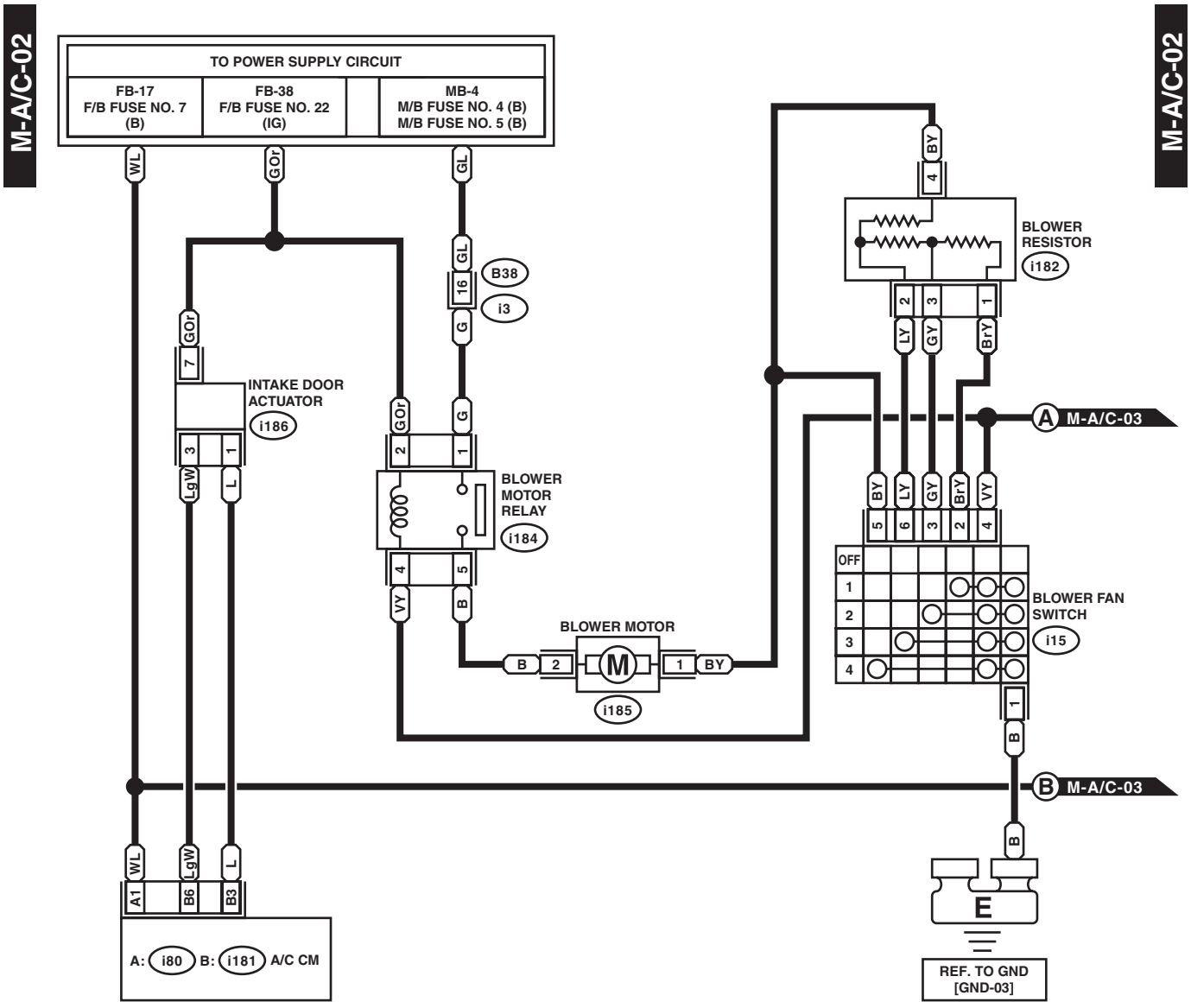
M-A/C-02
M-A/C-02
TO POWER SUPPLY CIRCUIT
FB-17
F/B FUSE NO. 7
(B)
FB-38
F/B FUSE NO. 22
(IG)
MB-4
M/B FUSE NO. 4 (B)
M/B FUSE NO. 5 (B)
WL
GOr
GL
B38
i3
INTAKE DOOR
ACTUATOR
i186
LgW
L
BLOWER
MOTOR
RELAY
i184
VY
B
BLOWER MOTOR
i185
BLOWER
RESISTOR
i182
BY
LY
GY
BrY
A M-A/C-03
VY
OFF
BLOWER FAN
SWITCH
i15
B M-A/C-03
A1
B6
B3
A: i80 B: i181 A/C CM
E
REF. TO GND
[GND-03]
i185
i182
i15
i184
i186 (GREEN)
B38
B: i181
A: i80

WI-33852

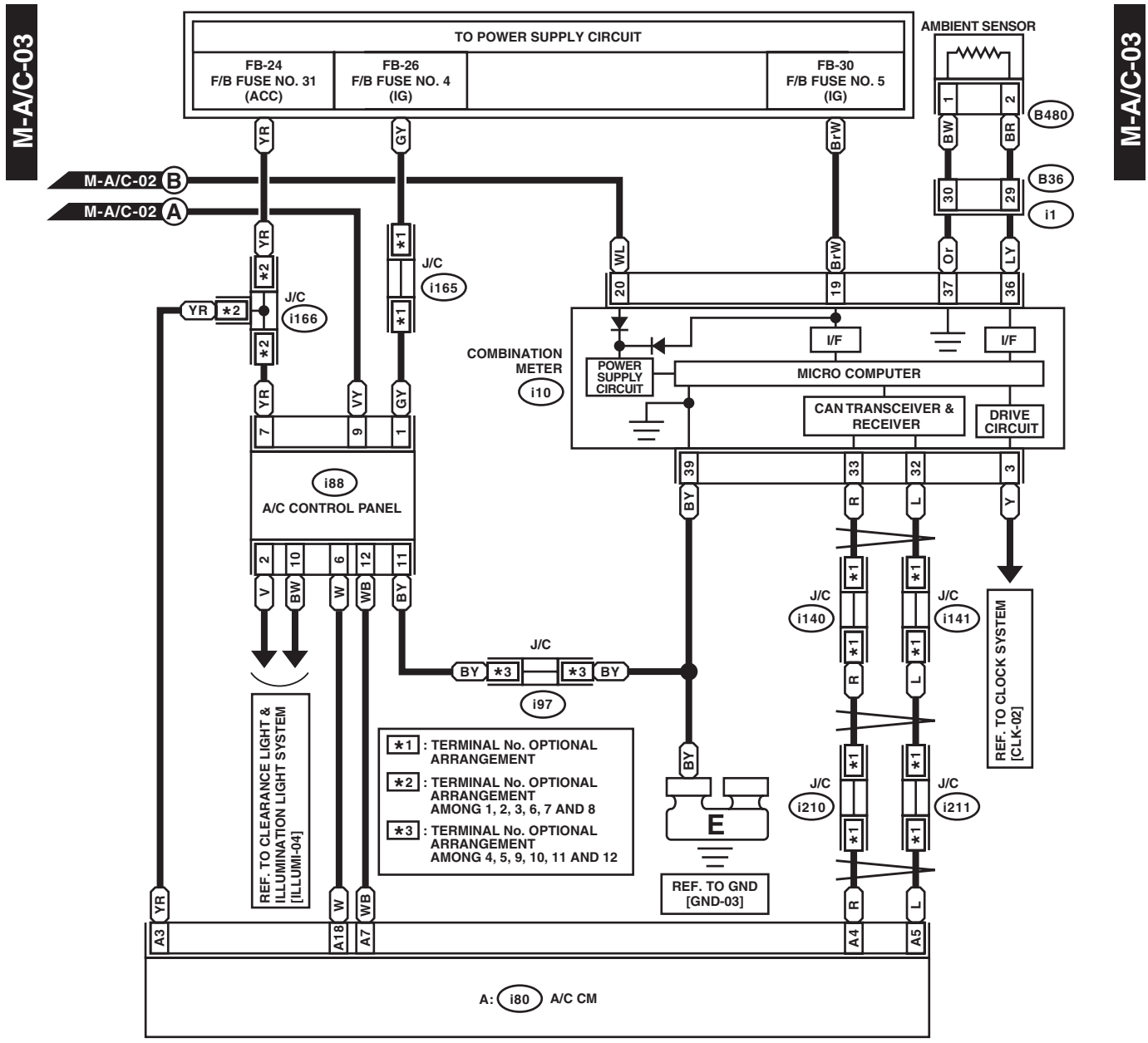
M-A/C-03
TO POWER SUPPLY CIRCUIT
FB-24
F/B FUSE NO. 31
(ACC)
FB-26
F/B FUSE NO. 4
(IG)
FB-30
F/B FUSE NO. 5
(IG)
AMBIENT SENSOR
B480
B36
i1
M-A/C-02 B
M-A/C-02 A
J/C
i165
i166
COMBINATION METER
i10
POWER SUPPLY CIRCUIT
MICRO COMPUTER
I/F
CAN TRANSCEIVER & RECEIVER
DRIVE CIRCUIT
i88
A/C CONTROL PANEL
J/C
i140
i141
i210
i211
i97
REF. TO CLEARANCE LIGHT & ILLUMINATION LIGHT SYSTEM [ILLUMI-04]
REF. TO CLOCK SYSTEM [CLK-02]
REF. TO GND [GND-03]
*1 : TERMINAL No. OPTIONAL ARRANGEMENT
*2 : TERMINAL No. OPTIONAL ARRANGEMENT AMONG 1, 2, 3, 6, 7 AND 8
*3 : TERMINAL No. OPTIONAL ARRANGEMENT AMONG 4, 5, 9, 10, 11 AND 12
A: i80 A/C CM

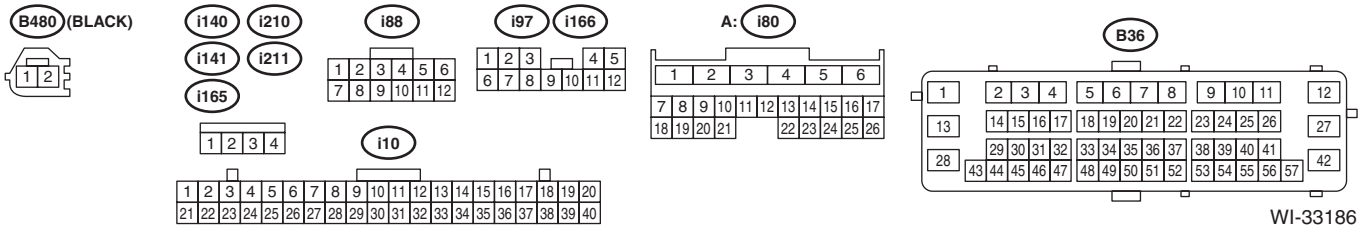
B480 (BLACK)
i140
i210
i141
i211
i165
i88
i97
i166
A: i80
i10
B36

WI-33186

M-A/C-04

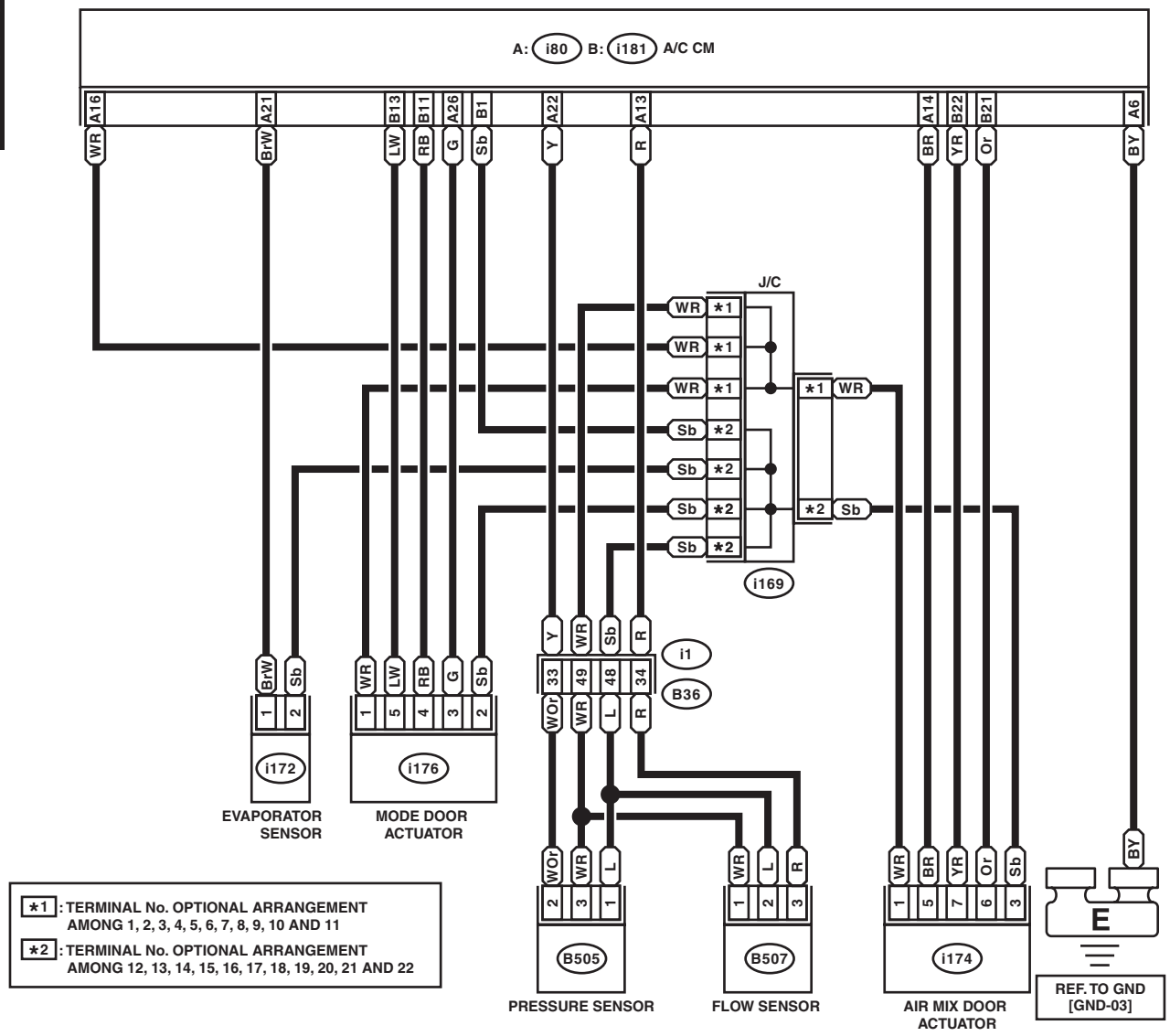

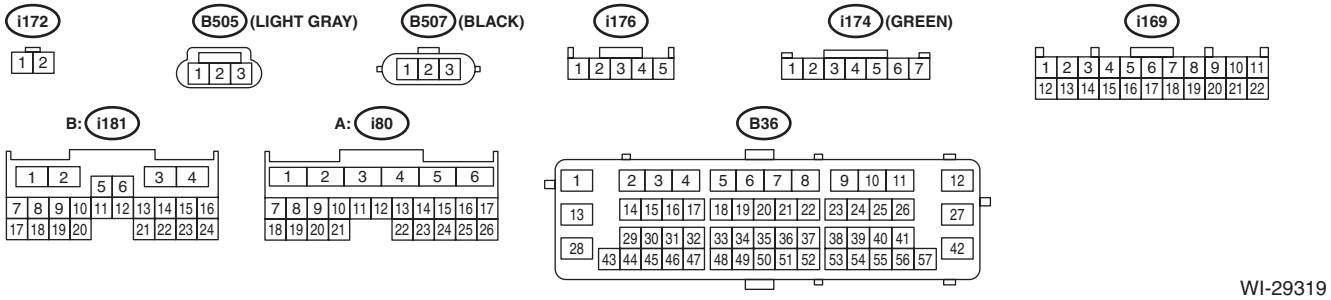

WI-29319

2. AUTO A/C

A-A/C-01

A-A/C-01

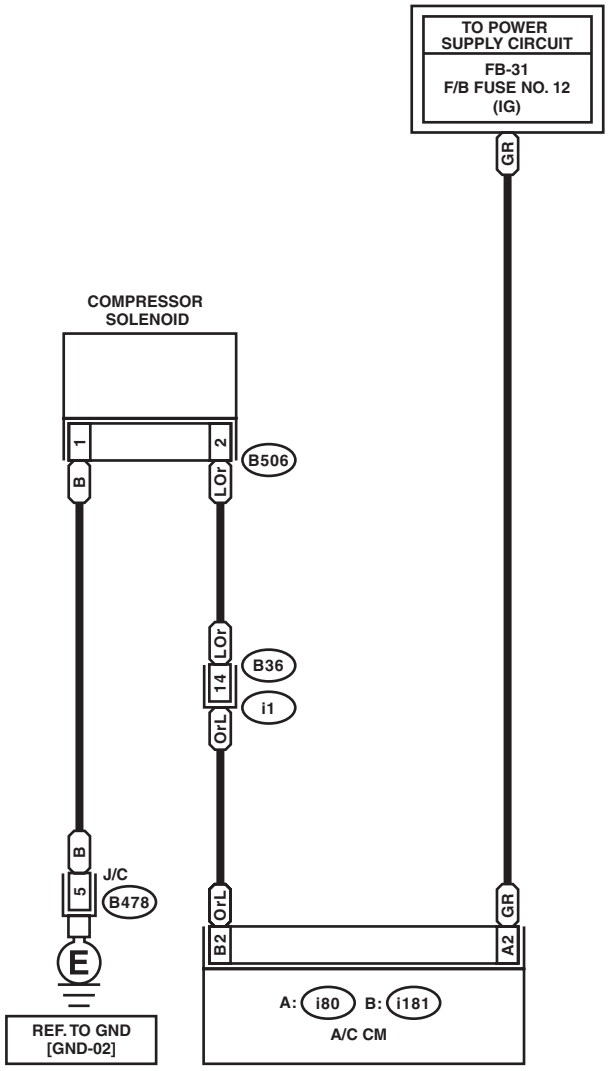

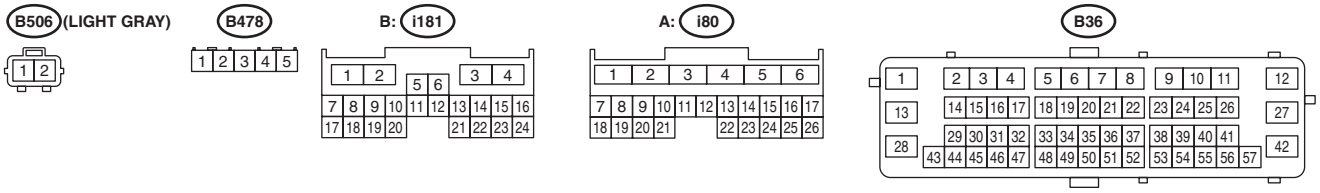

WI-25421

A-A/C-02

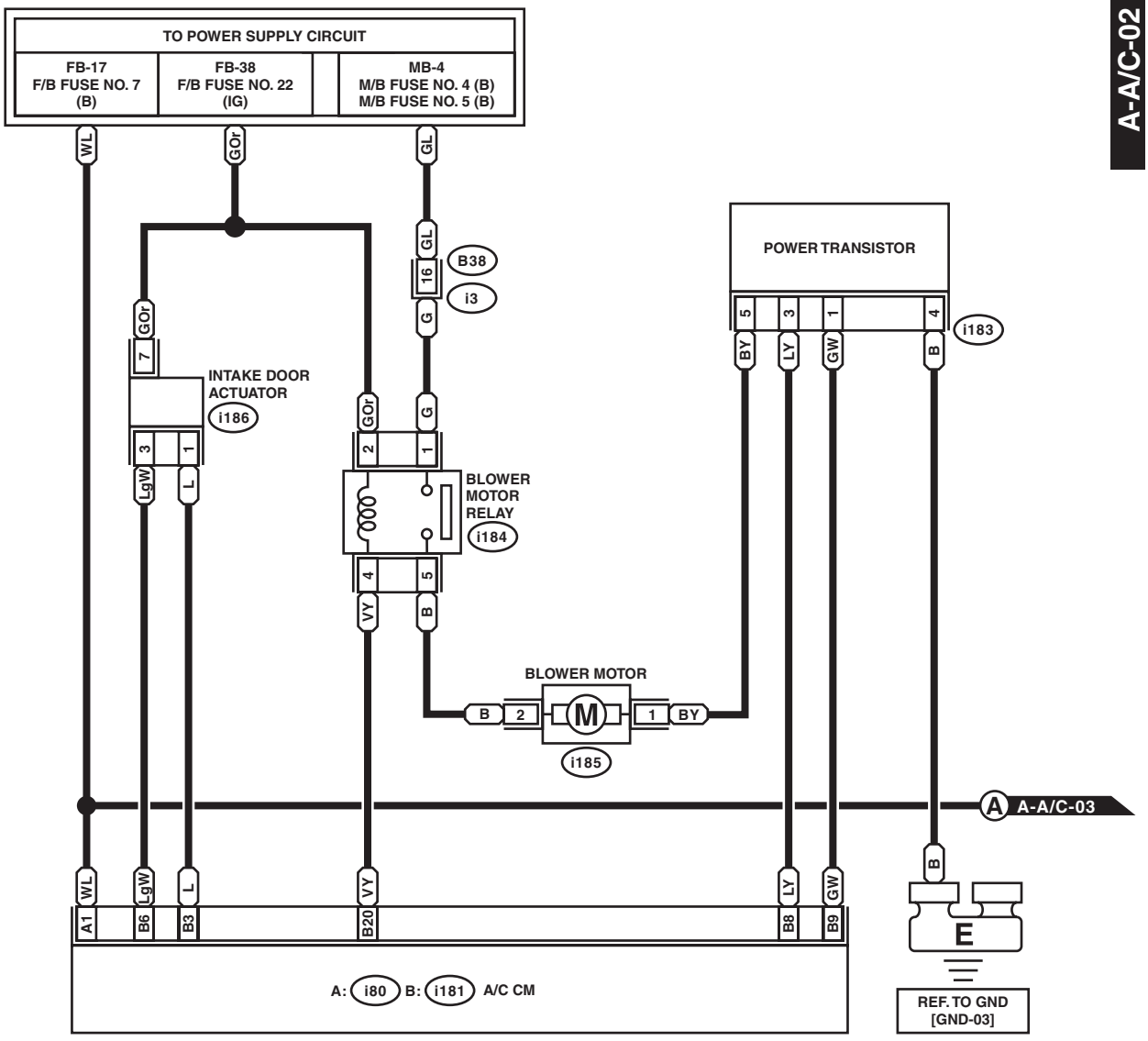

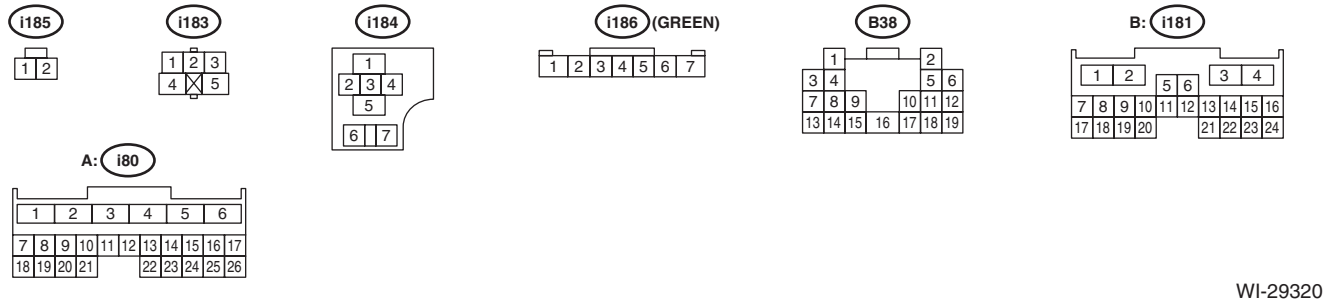

WI-29320

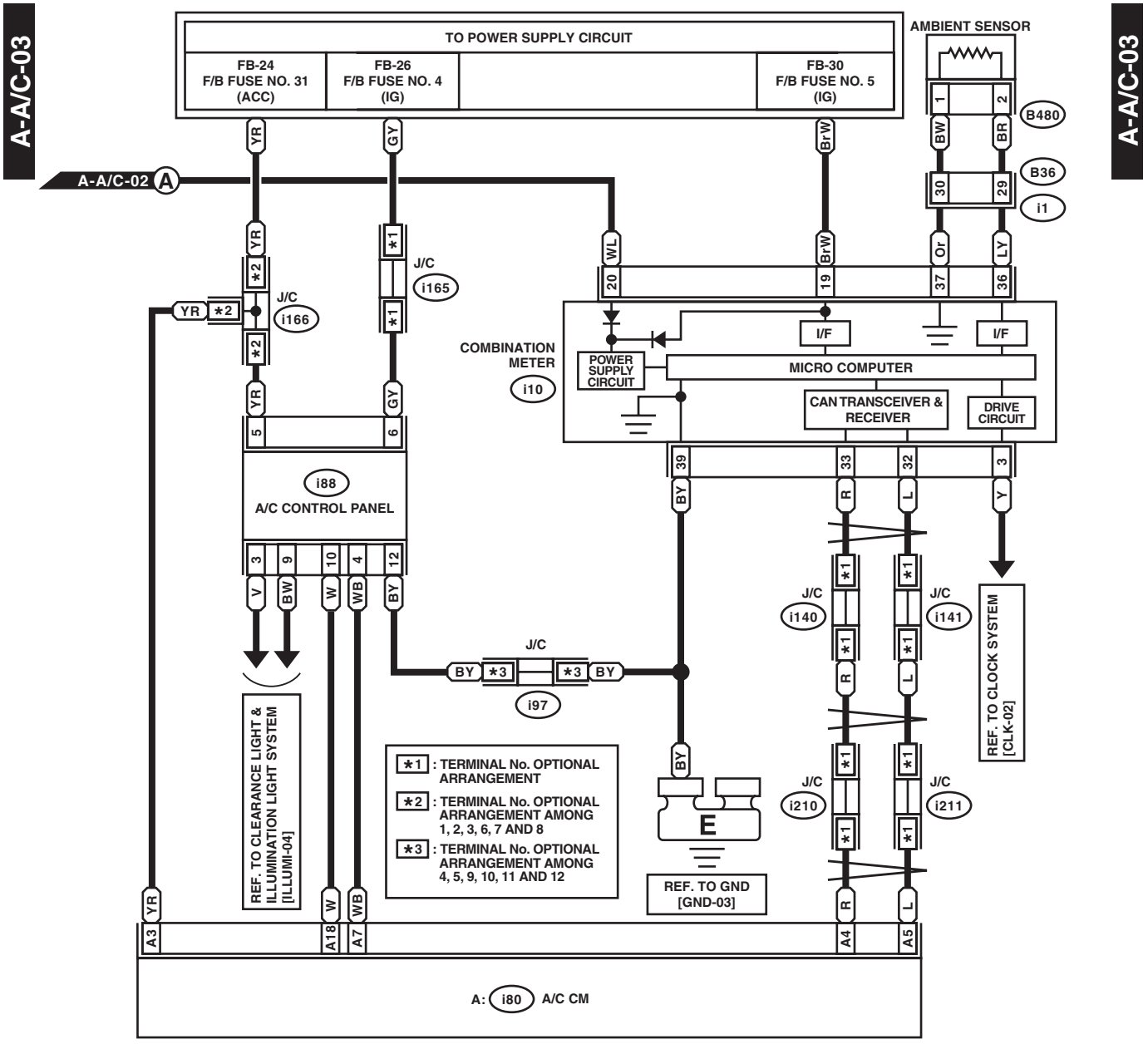
A-A/C-03
A-A/C-03
TO POWER SUPPLY CIRCUIT
FB-24
F/B FUSE NO. 31
(ACC)
FB-26
F/B FUSE NO. 4
(IG)
FB-30
F/B FUSE NO. 5
(IG)
AMBIENT SENSOR
B480
B36
i1
A-A/C-02 A
J/C
i165
J/C
i166
COMBINATION METER
i10
POWER SUPPLY CIRCUIT
MICRO COMPUTER
I/F
I/F
CAN TRANSCEIVER & RECEIVER
DRIVE CIRCUIT
i88
A/C CONTROL PANEL
J/C
i140
J/C
i141
J/C
i97
J/C
i210
J/C
i211
REF. TO CLOCK SYSTEM [CLK-02]
REF. TO CLEARANCE LIGHT & ILLUMINATION LIGHT SYSTEM [ILLUMI-04]
*1 : TERMINAL No. OPTIONAL ARRANGEMENT
*2 : TERMINAL No. OPTIONAL ARRANGEMENT AMONG 1, 2, 3, 6, 7 AND 8
*3 : TERMINAL No. OPTIONAL ARRANGEMENT AMONG 4, 5, 9, 10, 11 AND 12
REF. TO GND [GND-03]
A: i80 A/C CM

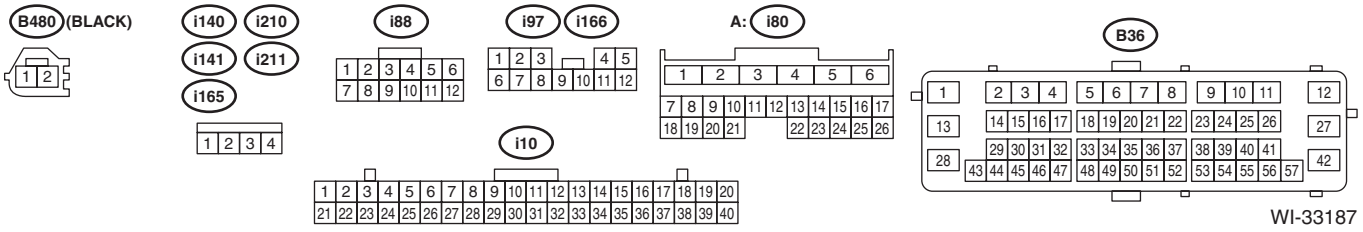
B480 (BLACK)
i140
i210
i141
i211
i165
i88
i97
i166
A: i80
B36
i10
WI-33187

A-A/C-04

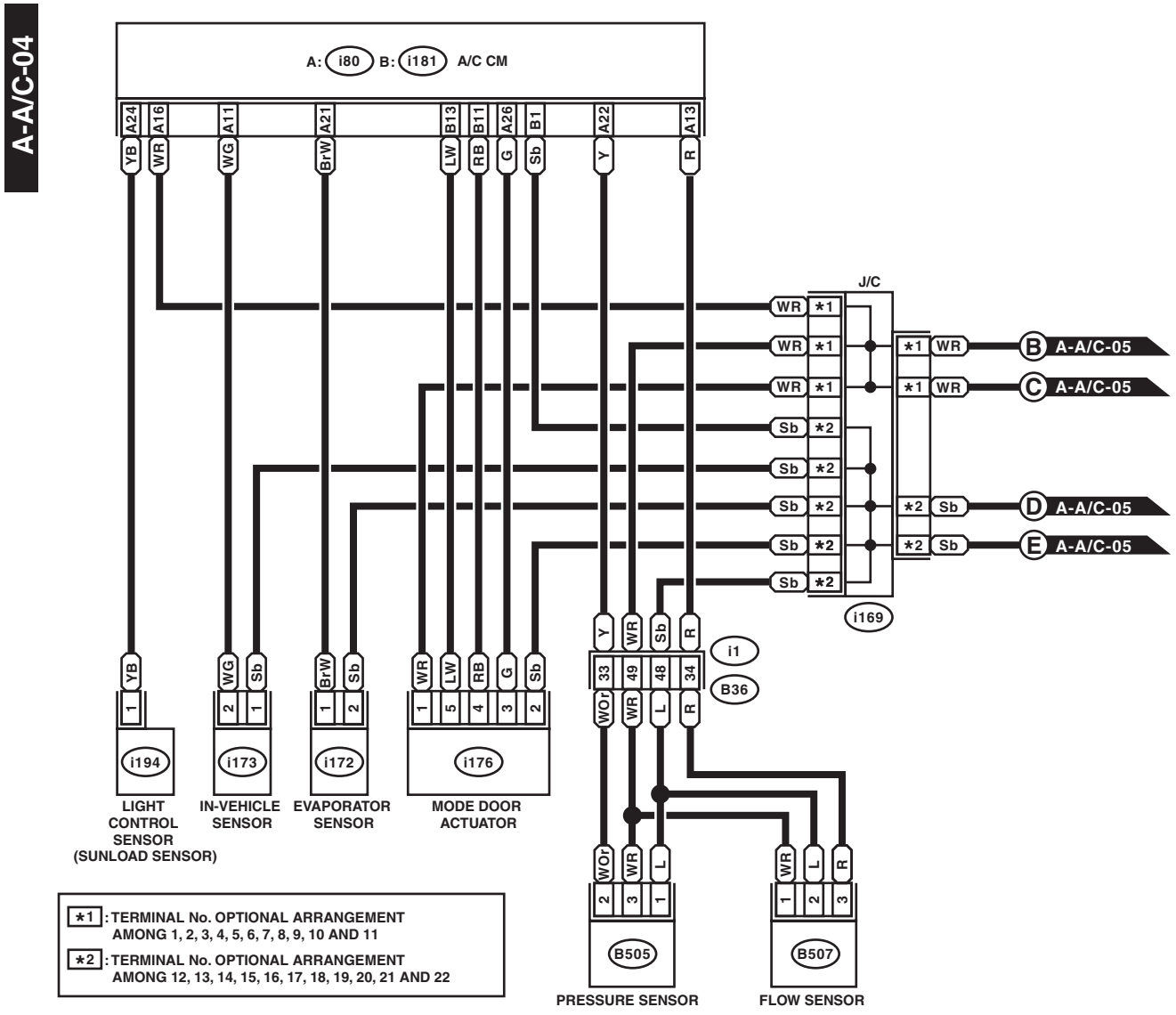

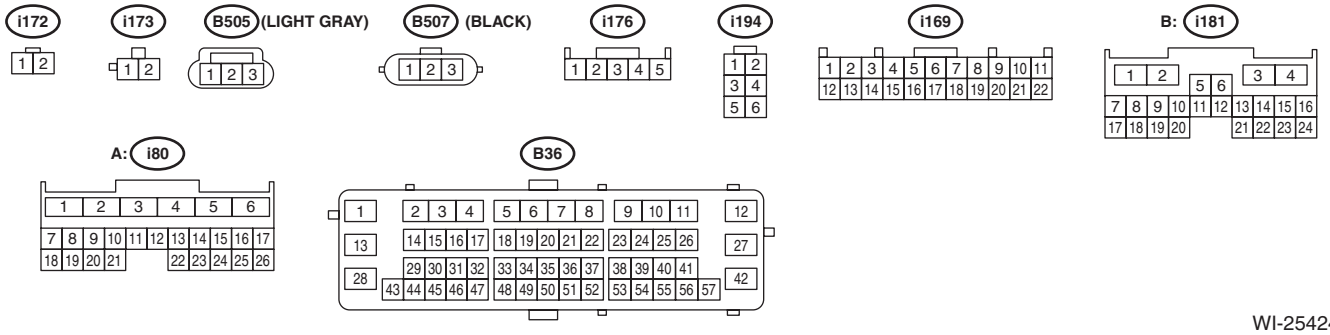

WI-25424

A-A/C-05

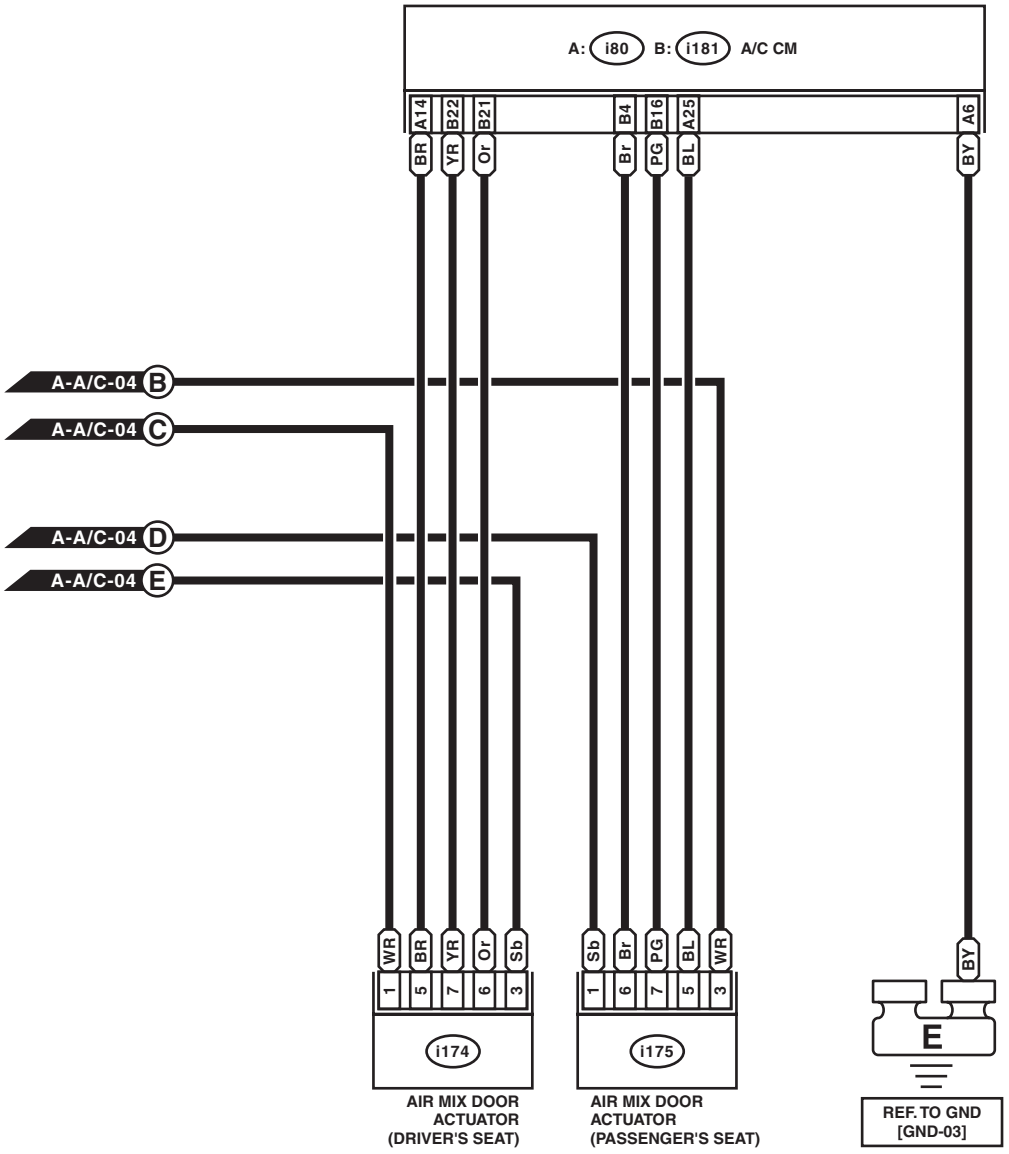

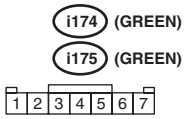

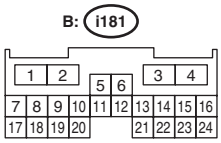

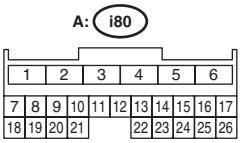

WI-29322

7. AT Control System

A: WIRING DIAGRAM

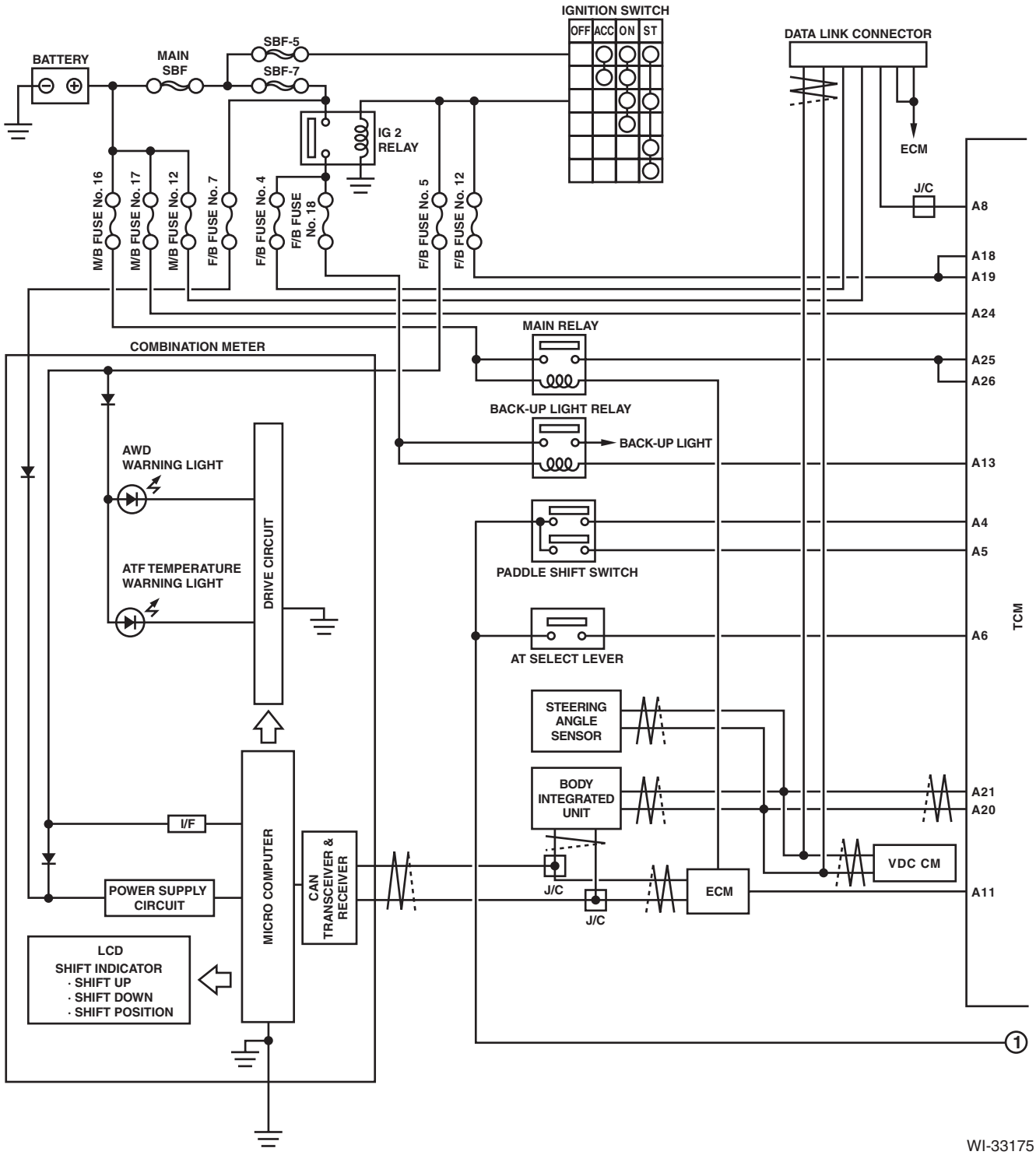

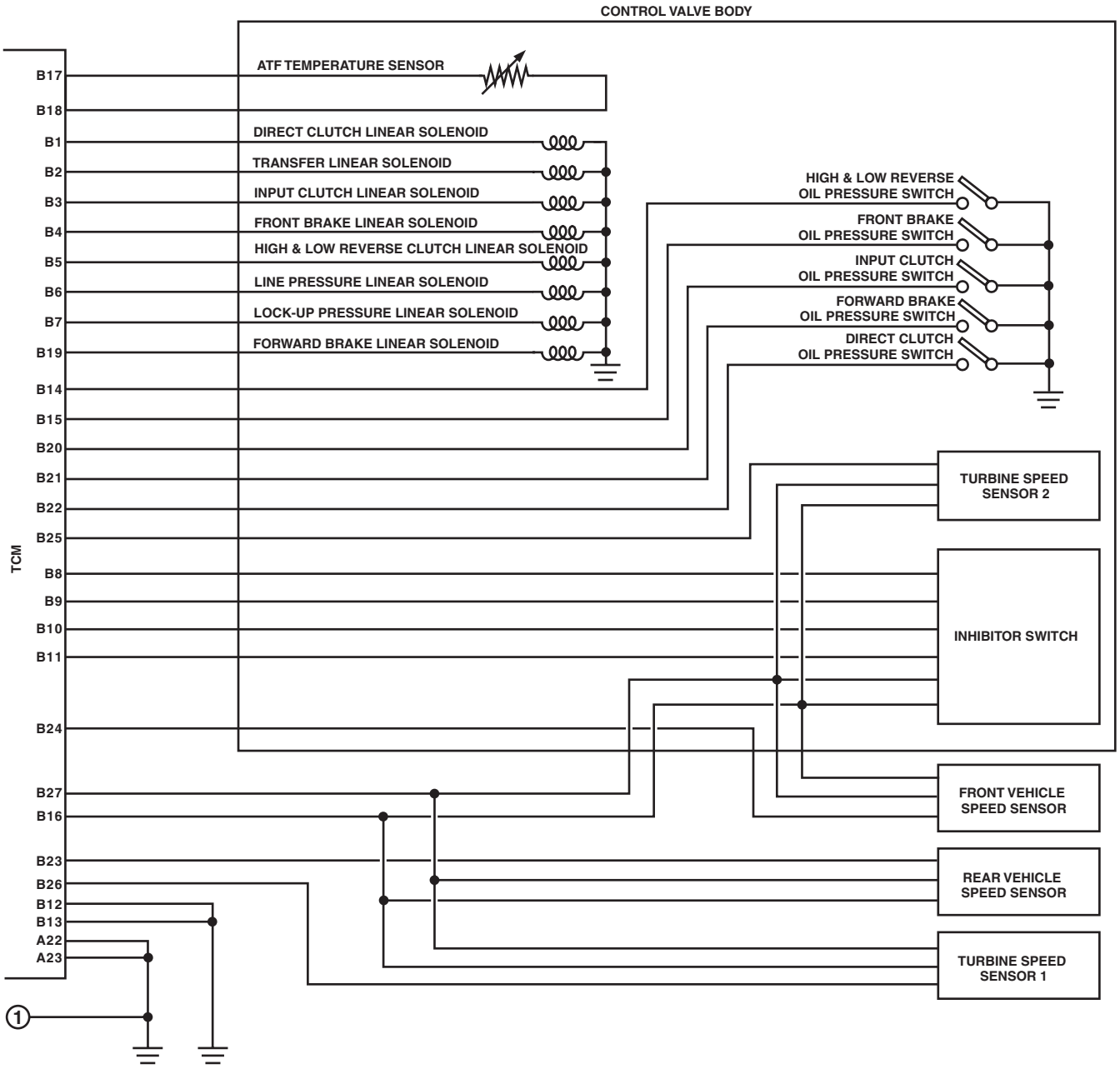
CONTROL VALVE BODY
ATF TEMPERATURE SENSOR
DIRECT CLUTCH LINEAR SOLENOID
TRANSFER LINEAR SOLENOID
INPUT CLUTCH LINEAR SOLENOID
FRONT BRAKE LINEAR SOLENOID
HIGH & LOW REVERSE CLUTCH LINEAR SOLENOID
LINE PRESSURE LINEAR SOLENOID
LOCK-UP PRESSURE LINEAR SOLENOID
FORWARD BRAKE LINEAR SOLENOID
HIGH & LOW REVERSE OIL PRESSURE SWITCH
FRONT BRAKE OIL PRESSURE SWITCH
INPUT CLUTCH OIL PRESSURE SWITCH
FORWARD BRAKE OIL PRESSURE SWITCH
DIRECT CLUTCH OIL PRESSURE SWITCH
TCM
B17
B18
B1
B2
B3
B4
B5
B6
B7
B19
B14
B15
B20
B21
B22
B25
B8
B9
B10
B11
B24
B27
B16
B23
B26
B12
B13
A22
A23
①
TURBINE SPEED SENSOR 2
INHIBITOR SWITCH
FRONT VEHICLE SPEED SENSOR
REAR VEHICLE SPEED SENSOR
TURBINE SPEED SENSOR 1

WI-25427

5AT-01

5AT-01

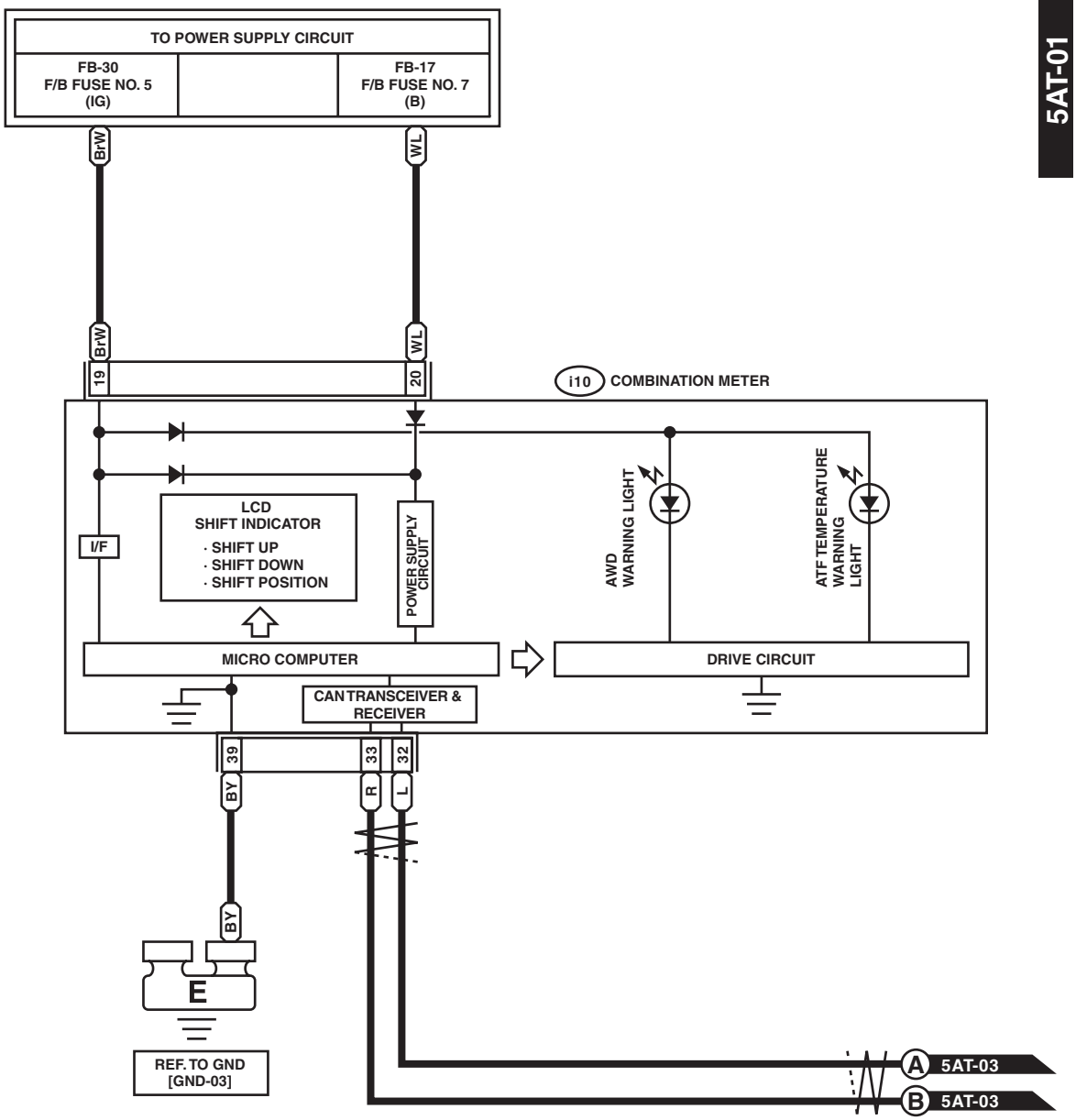

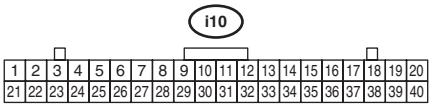

WI-29324

5AT-02

5AT-02

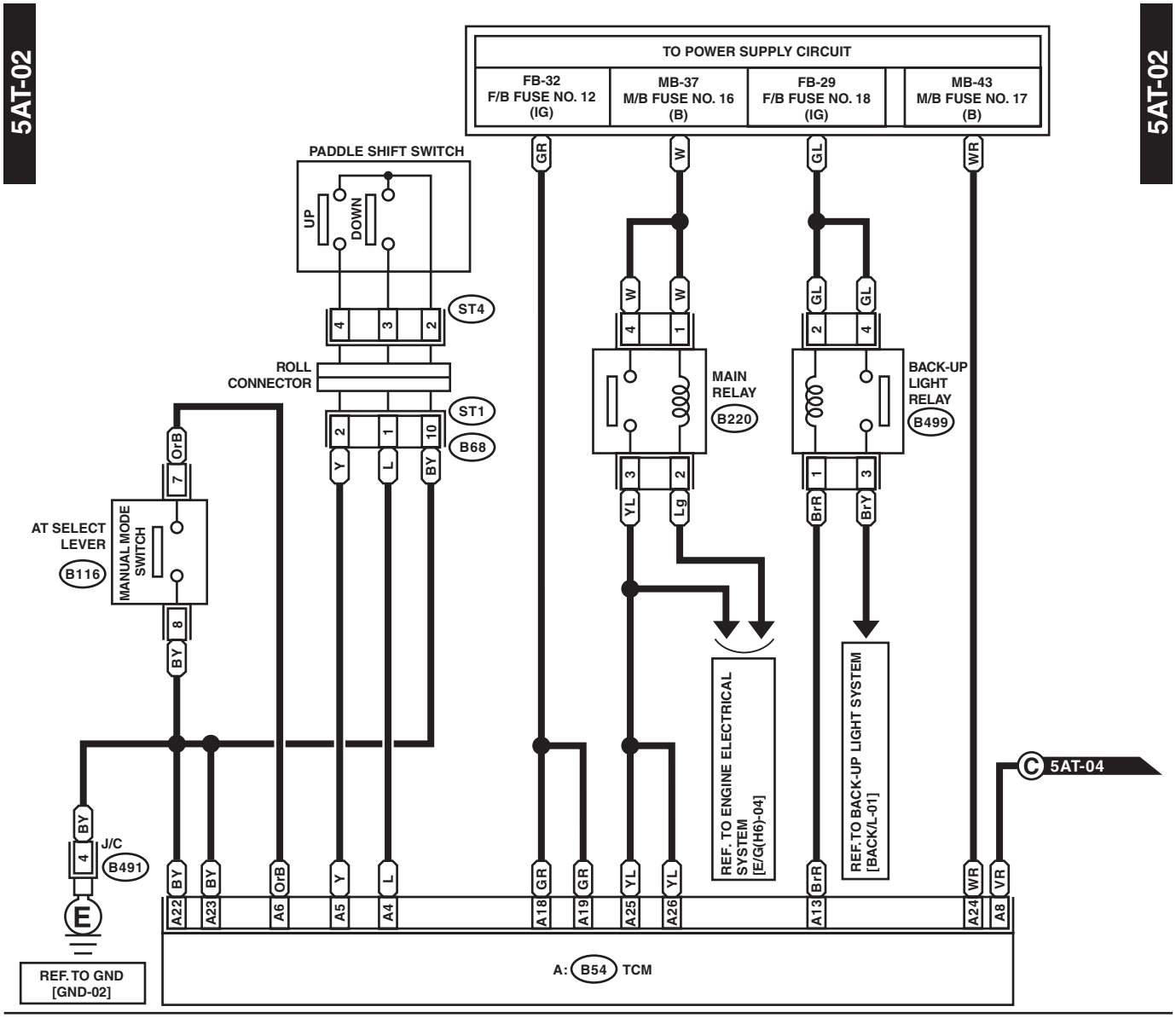

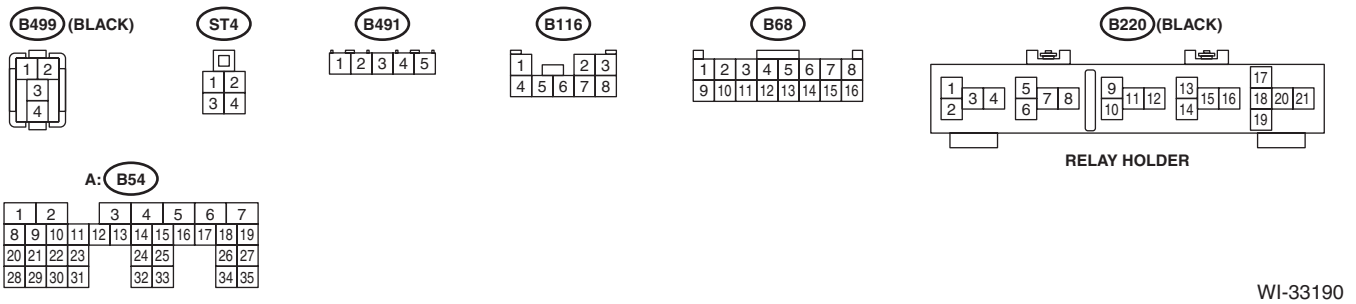

WI-33190

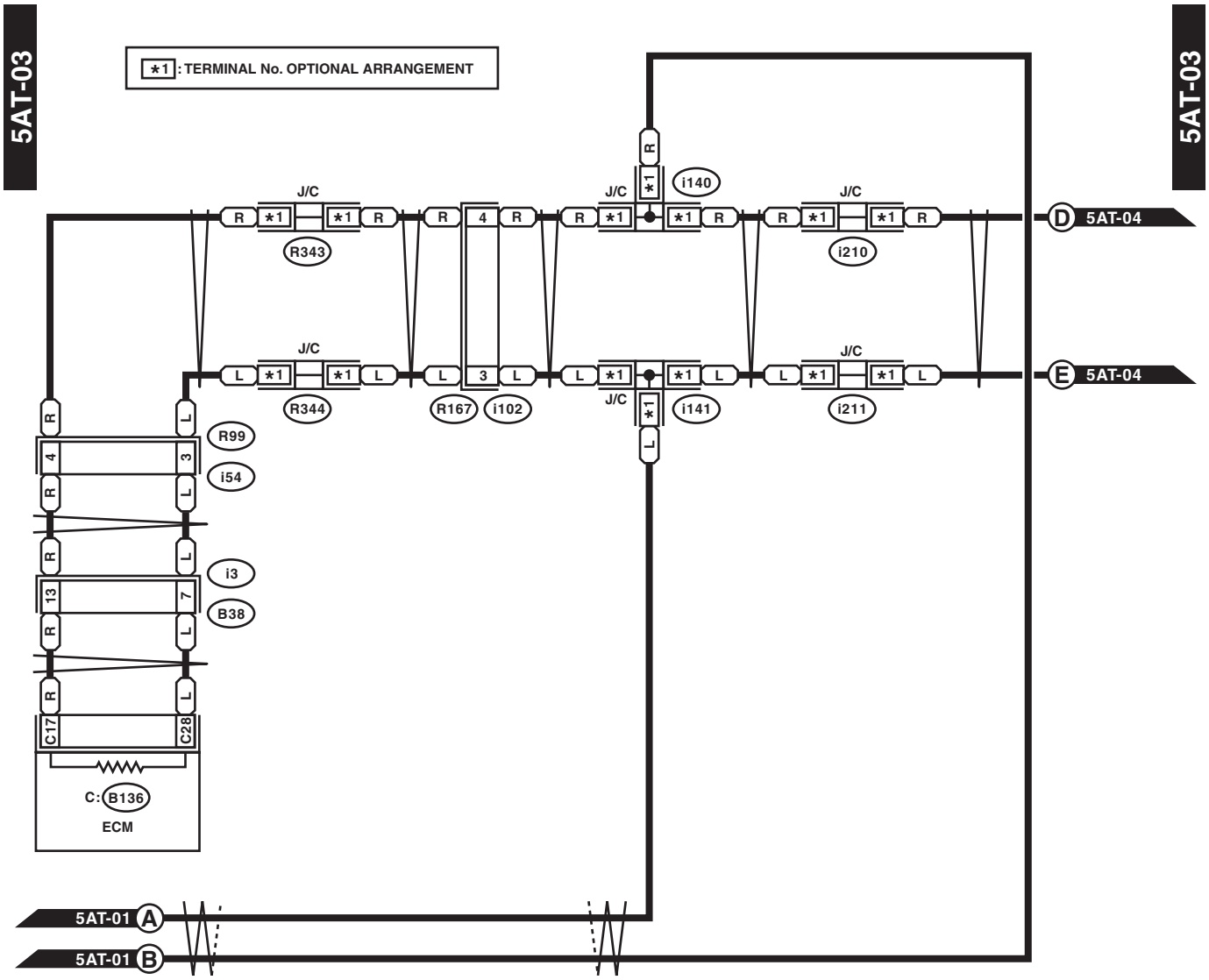
5AT-03
5AT-03
*1 : TERMINAL No. OPTIONAL ARRANGEMENT
J/C
R343
i140
i210
R344
R167
i102
i141
i211
R99
i54
i3
B38
C17
C28
C: B136
ECM
D 5AT-04
E 5AT-04
5AT-01 A
5AT-01 B

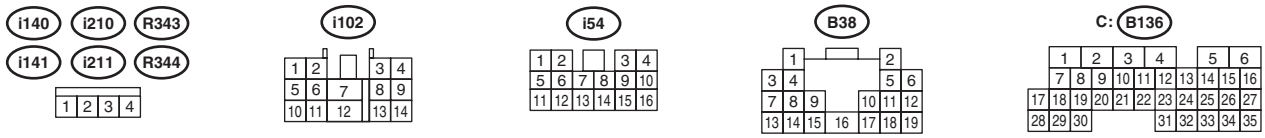
i140
i210
R343
i141
i211
R344
i102
i54
B38
C: B136

WI-33191

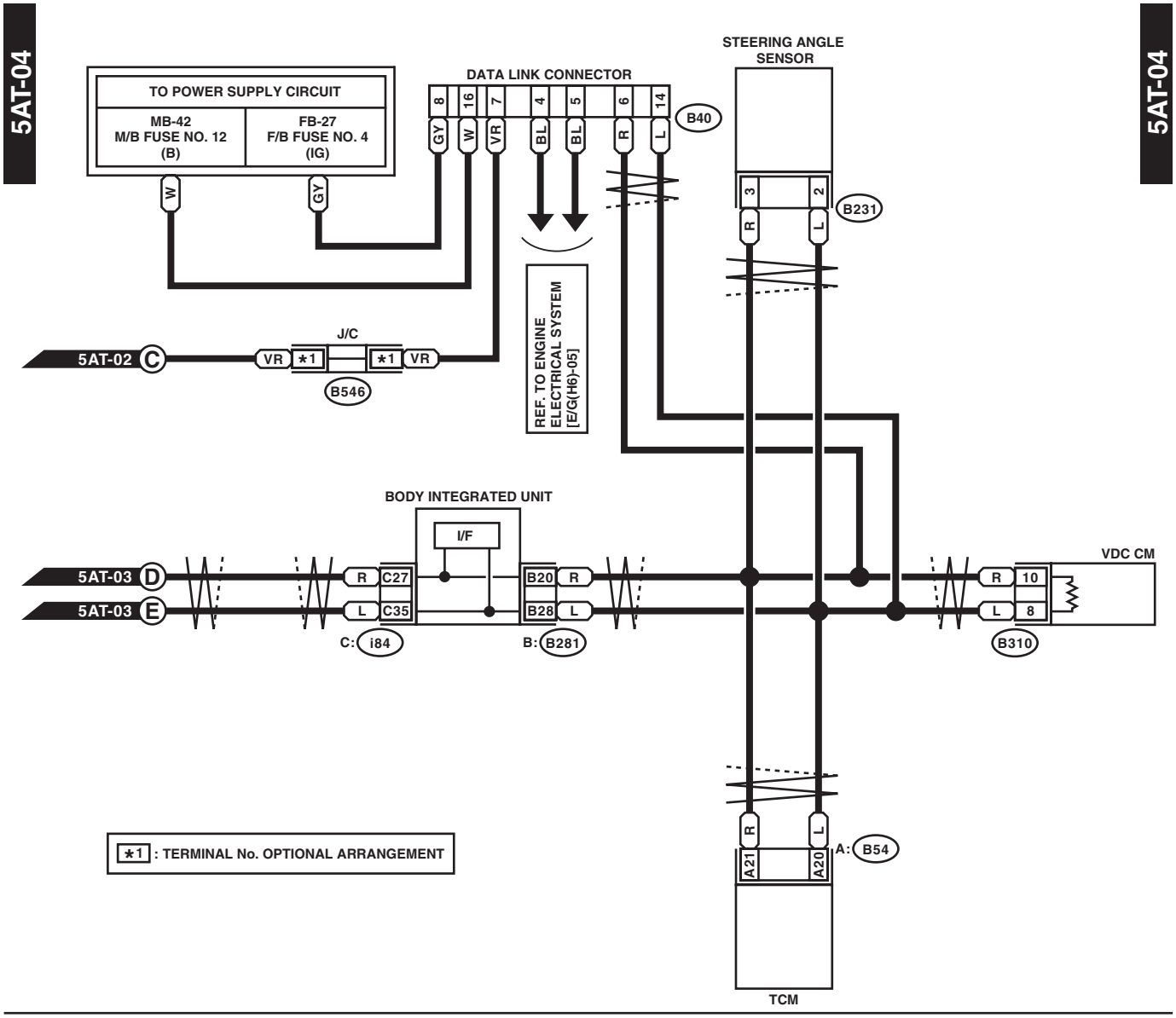
TO POWER SUPPLY CIRCUIT
MB-42
M/B FUSE NO. 12
(B)
FB-27
F/B FUSE NO. 4
(IG)
DATA LINK CONNECTOR
B40
STEERING ANGLE SENSOR
B231
J/C
B546
5AT-02 C
REF. TO ENGINE ELECTRICAL SYSTEM [E/G(H6)-05]
BODY INTEGRATED UNIT
I/F
5AT-03 D
5AT-03 E
C: i84
B: B281
VDC CM
B310
TCM
A: B54
*1 : TERMINAL No. OPTIONAL ARRANGEMENT

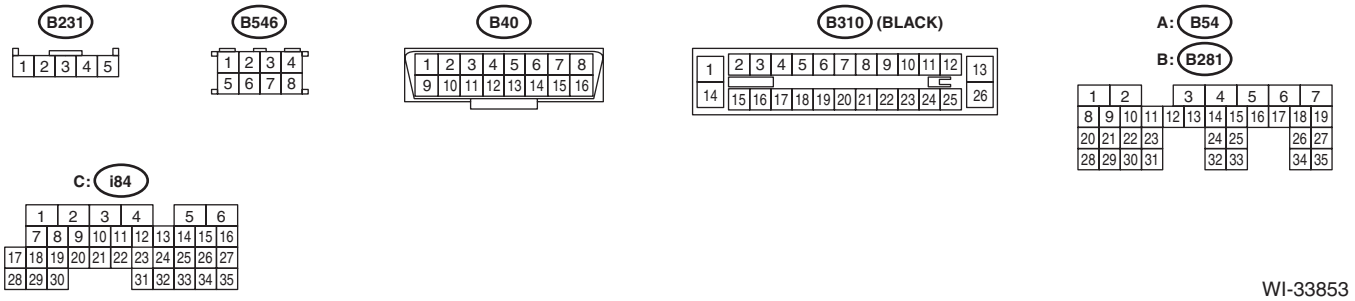
B231
B546
B40
B310 (BLACK)
A: B54
B: B281
C: i84

WI-33853

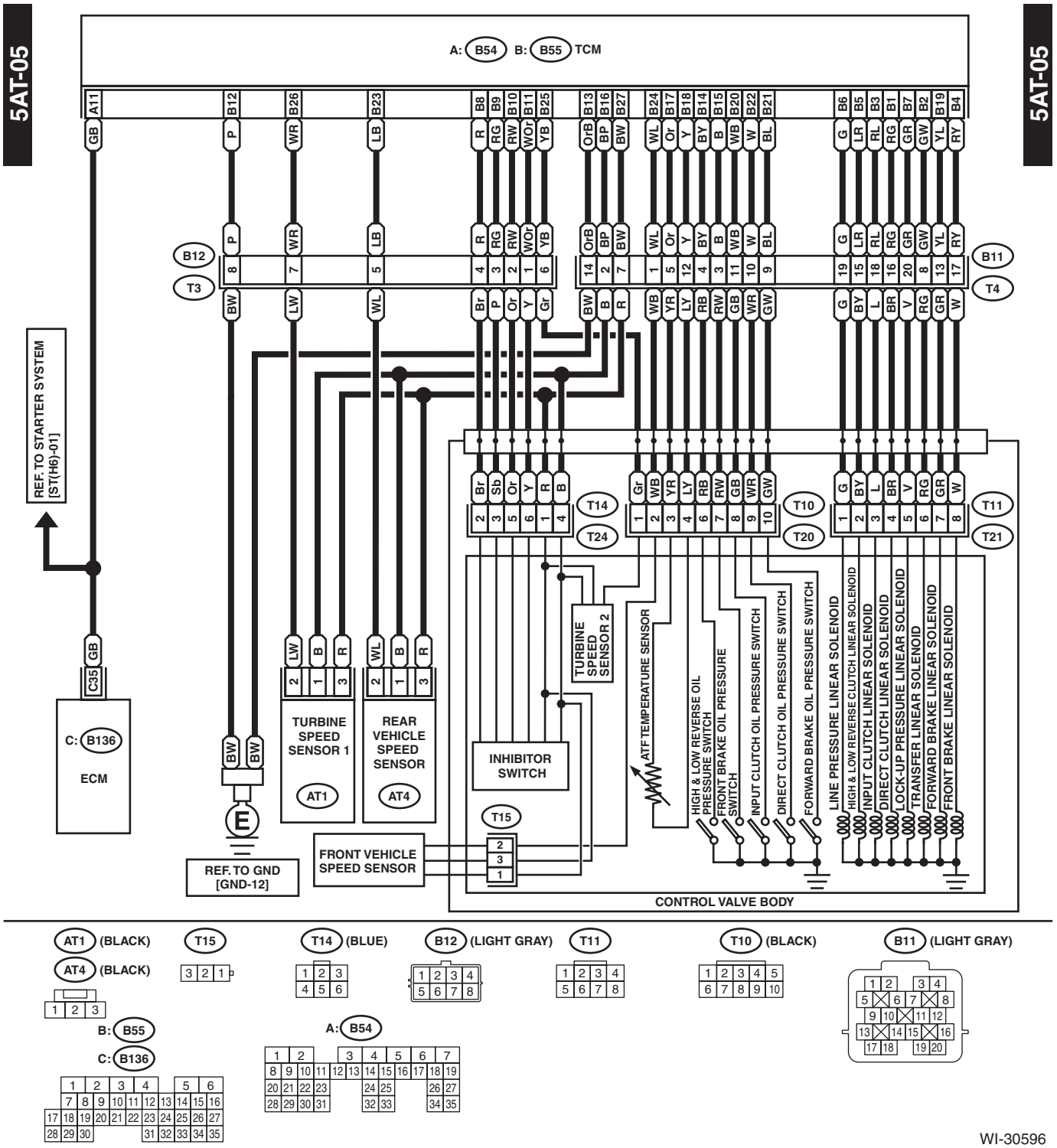
5AT-05
5AT-05
A: B54 B: B55 TCM
A11 B12 B26 B23 B8 B9 B10 B11 B25 B13 B16 B27 B24 B17 B18 B14 B15 B20 B22 B21 B6 B5 B3 B1 B7 B2 B19 B4
GB P WR LB R RG RW WOr YB OrB BP BW WL Or Y BY B WB W BL G LR RL RG GR GW YL RY
B12 T3
B11 T4
BW LW WL Br P Or Y Gr BW B R WB YR LY RB RW GB WR GW G BY L BR V RG GR W
REF. TO STARTER SYSTEM [ST(H6)-01]
C35 GB
C: B136 ECM
TURBINE SPEED SENSOR 1
REAR VEHICLE SPEED SENSOR
AT1
AT4
T14 T24
T10 T20
T11 T21
TURBINE SPEED SENSOR 2
ATF TEMPERATURE SENSOR
HIGH & LOW REVERSE OIL PRESSURE SWITCH
FRONT BRAKE OIL PRESSURE SWITCH
INPUT CLUTCH OIL PRESSURE SWITCH
DIRECT CLUTCH OIL PRESSURE SWITCH
FORWARD BRAKE OIL PRESSURE SWITCH
INHIBITOR SWITCH
T15
FRONT VEHICLE SPEED SENSOR
REF. TO GND [GND-12]
LINE PRESSURE LINEAR SOLENOID
HIGH & LOW REVERSE CLUTCH LINEAR SOLENOID
INPUT CLUTCH LINEAR SOLENOID
DIRECT CLUTCH LINEAR SOLENOID
LOCK-UP PRESSURE LINEAR SOLENOID
TRANSFER LINEAR SOLENOID
FORWARD BRAKE LINEAR SOLENOID
FRONT BRAKE LINEAR SOLENOID
CONTROL VALVE BODY
AT1 (BLACK)
AT4 (BLACK)
B: B55
C: B136
T15
T14 (BLUE)
A: B54
B12 (LIGHT GRAY)
T11
T10 (BLACK)
B11 (LIGHT GRAY)

WI-30596

8. Audio System

A: WIRING DIAGRAM

1. WITHOUT AUDIO

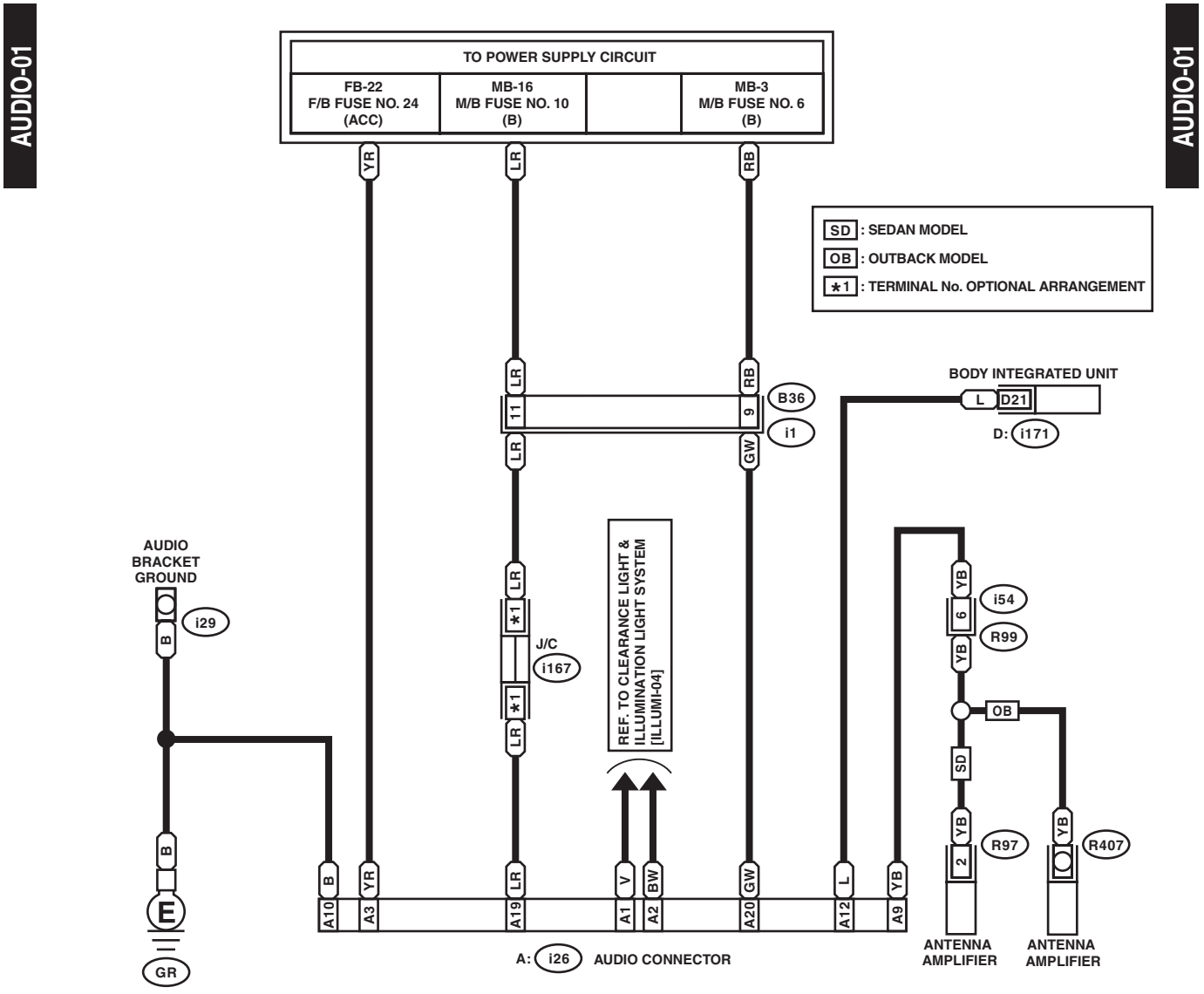

WI-33181

AUDIO-02

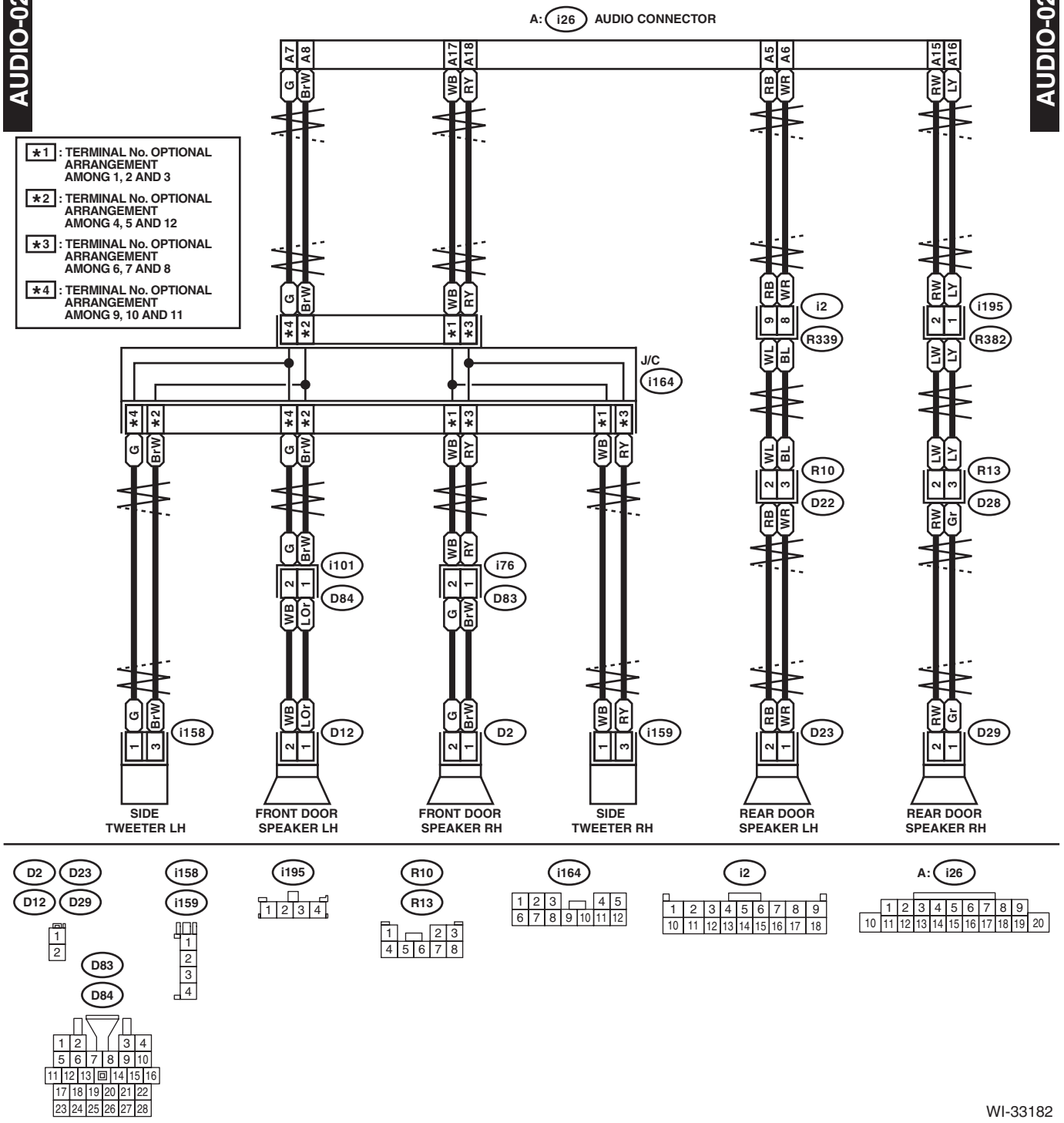

WI-33182

2. NORMAL AUDIO

- **Without handsfree microphone**

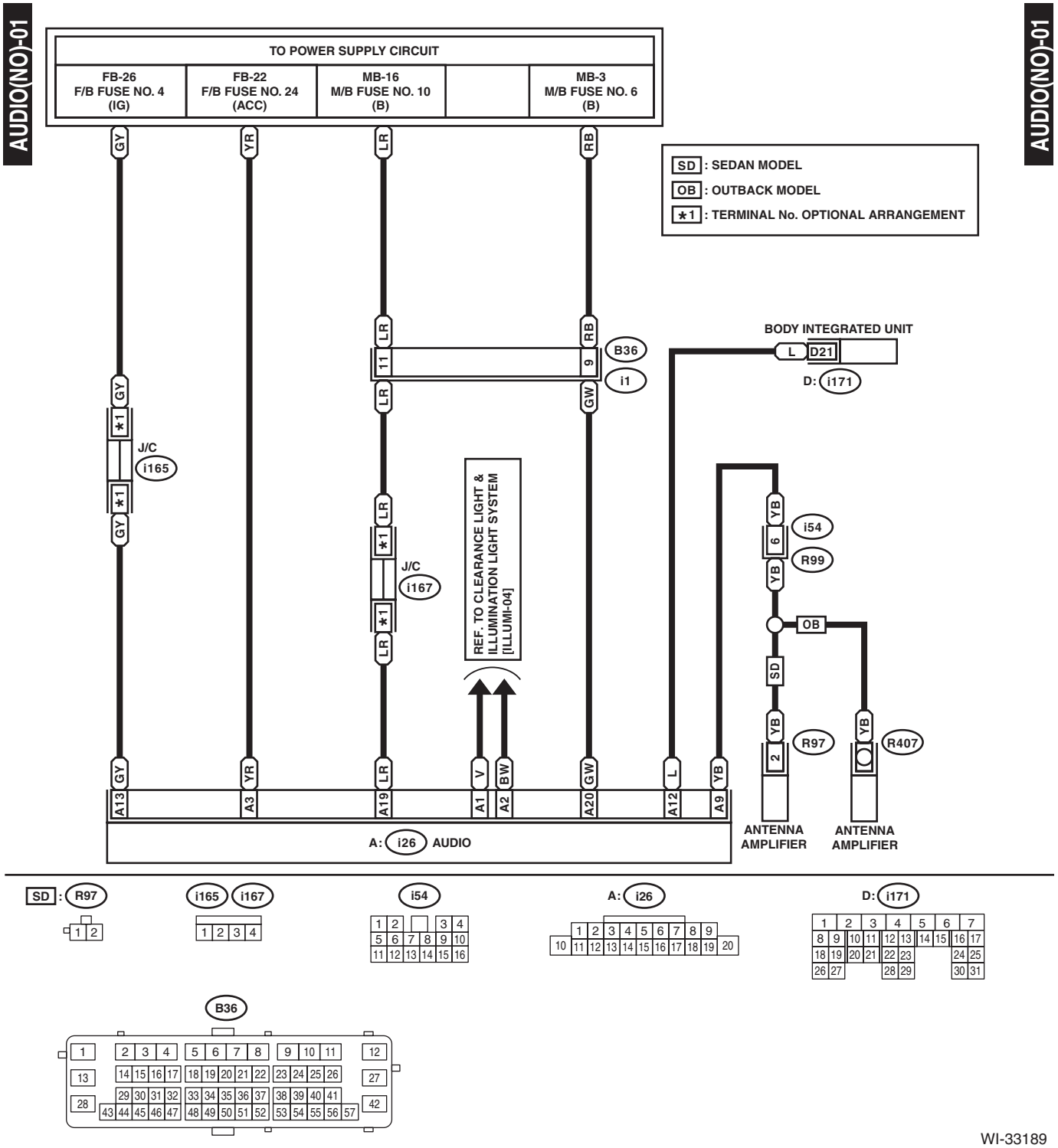

WI-33189

WIRING SYSTEM

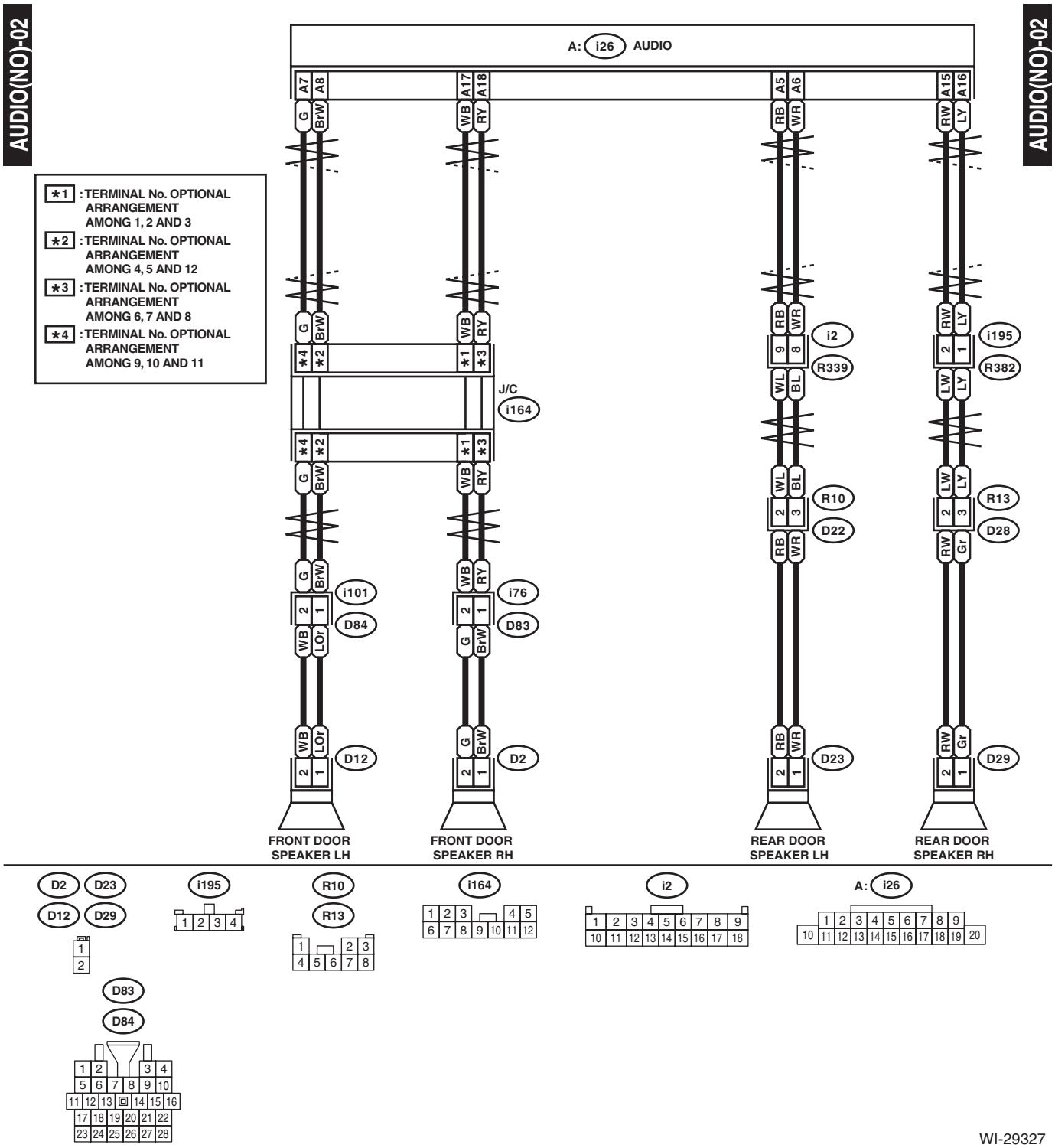

AUDIO(NO)-03

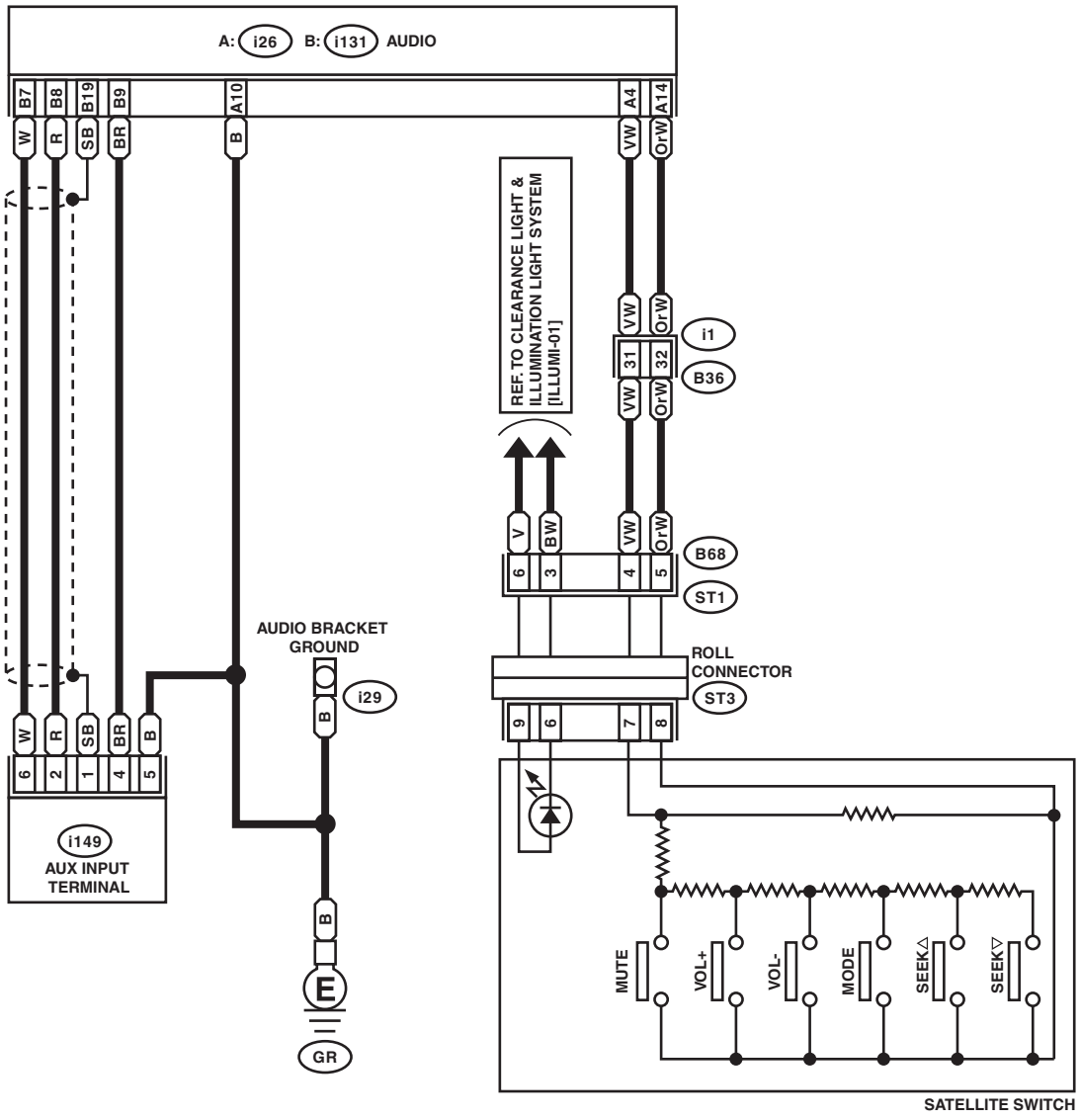

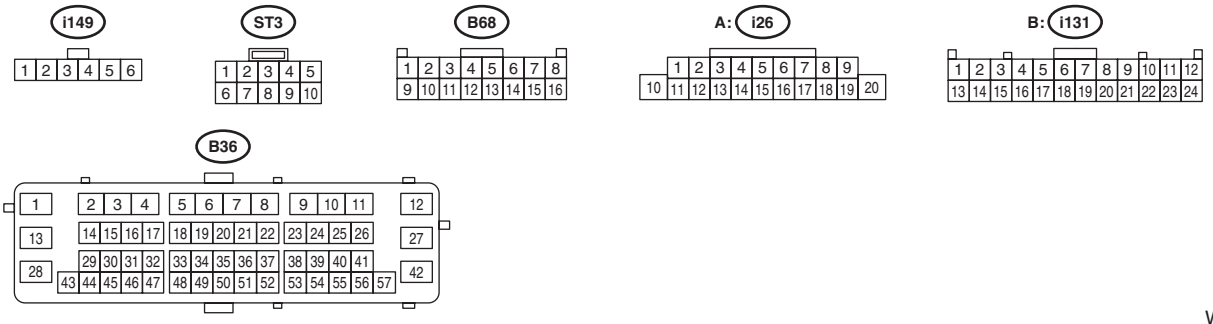

WI-25436

WIRING SYSTEM

- **With handsfree microphone**

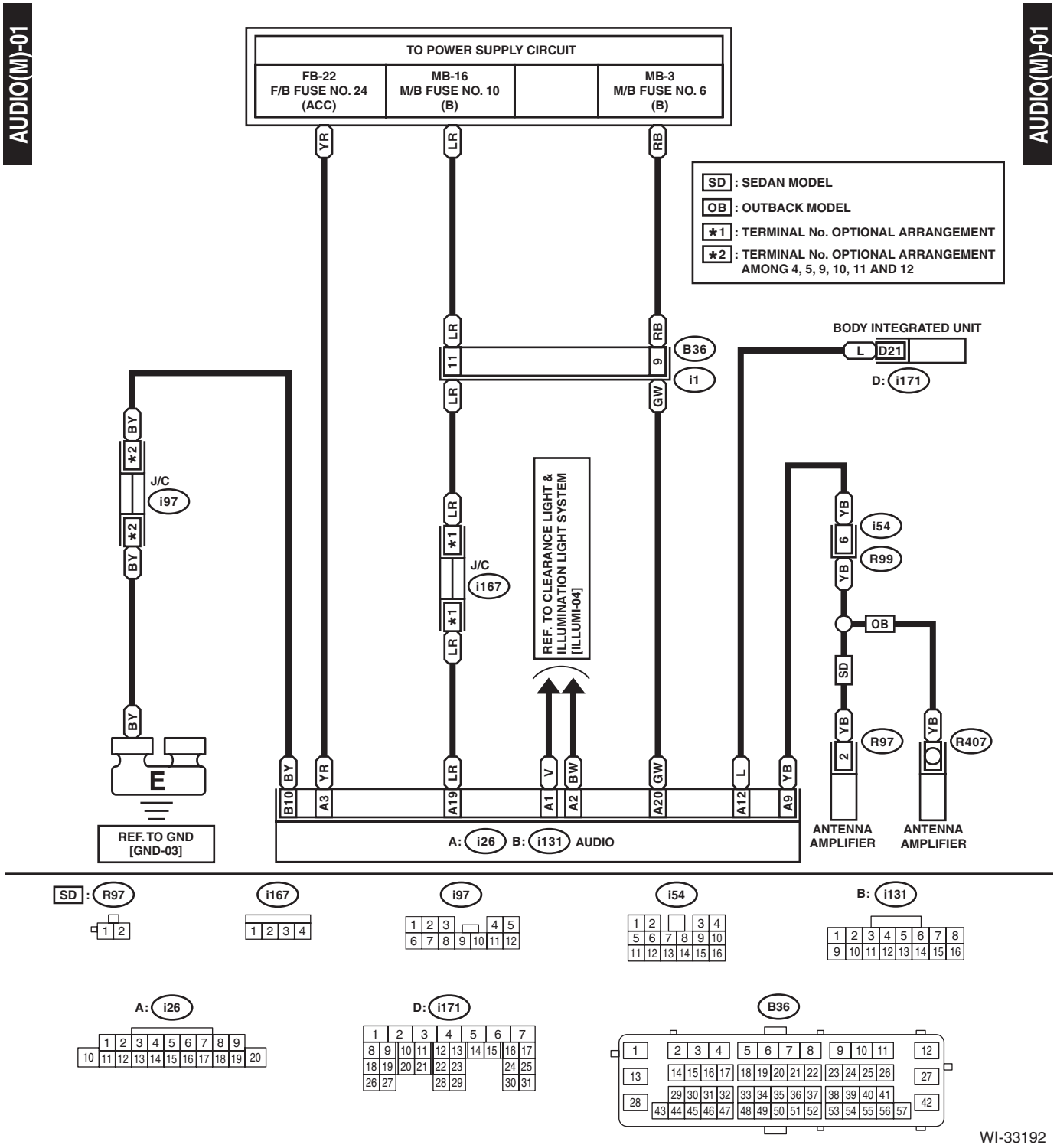

WI-33192

AUDIO(M)-02

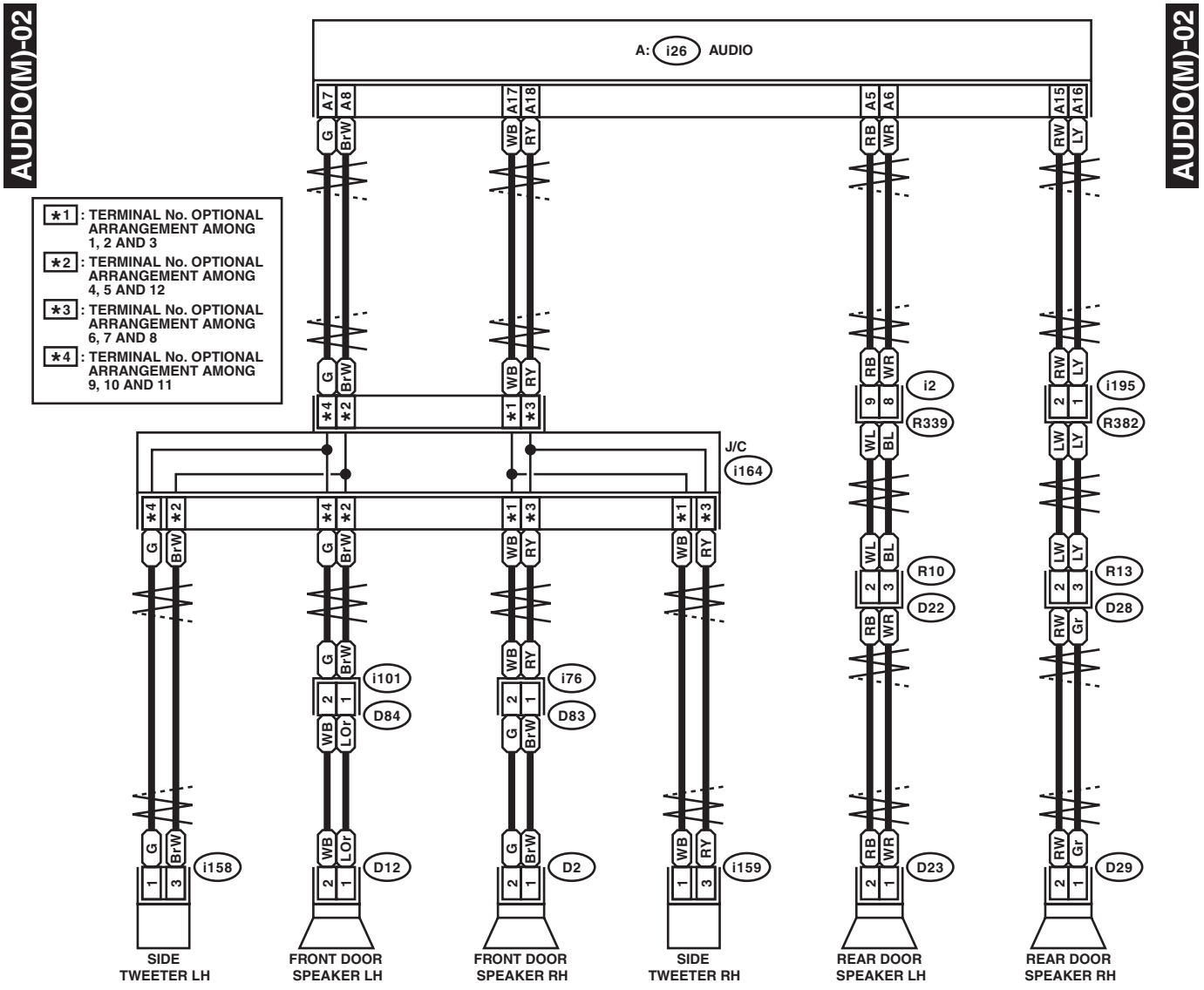

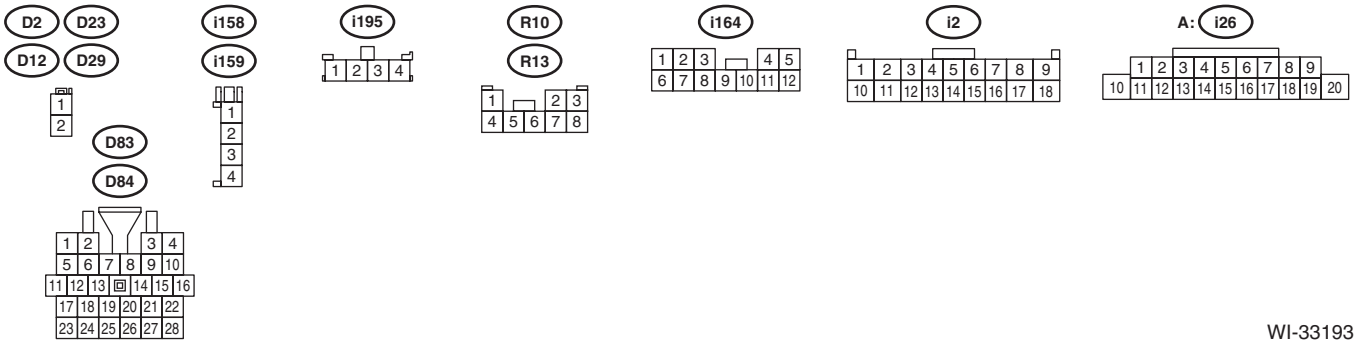

WI-33193

AUDIO(M)-02

WIRING SYSTEM

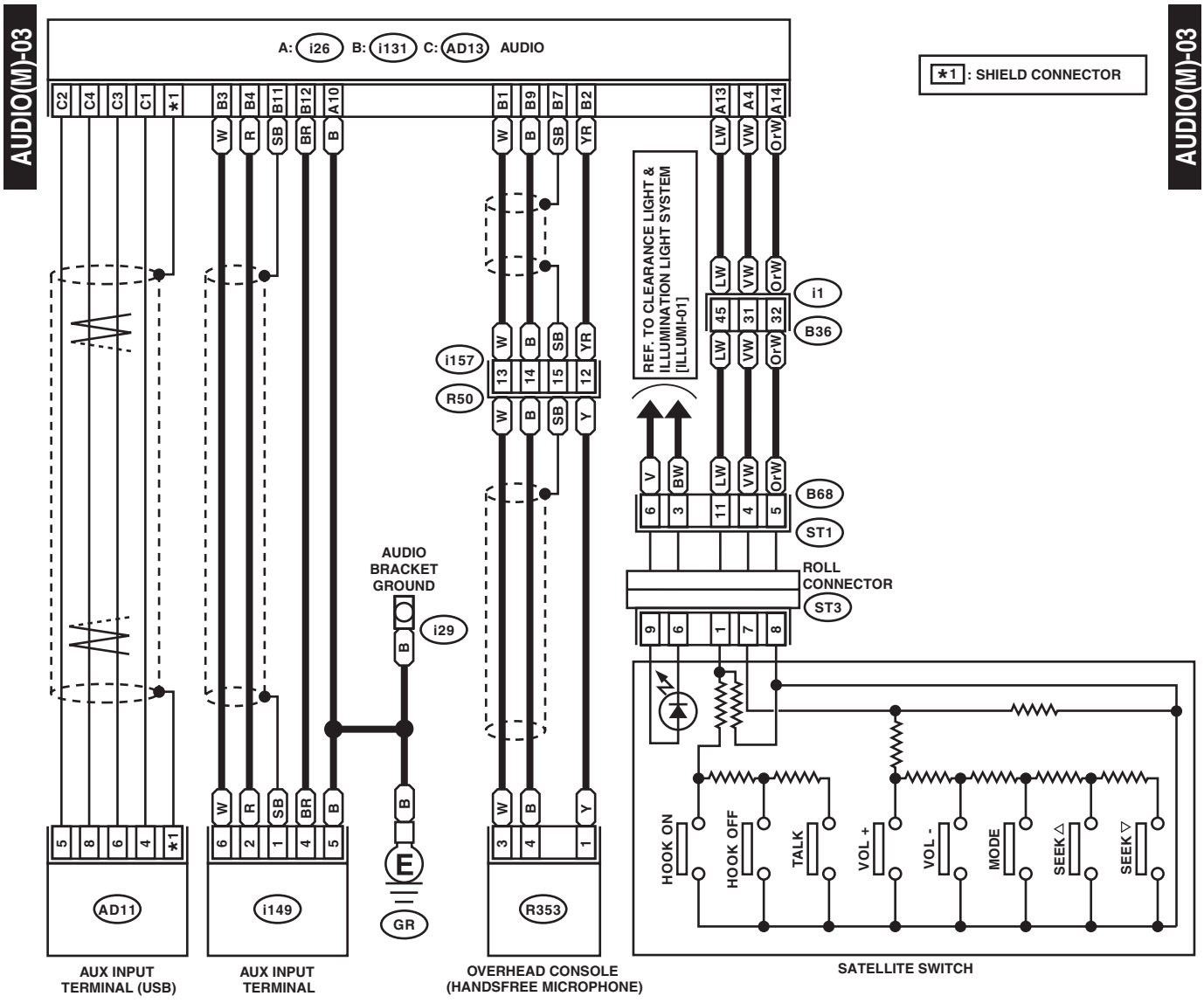

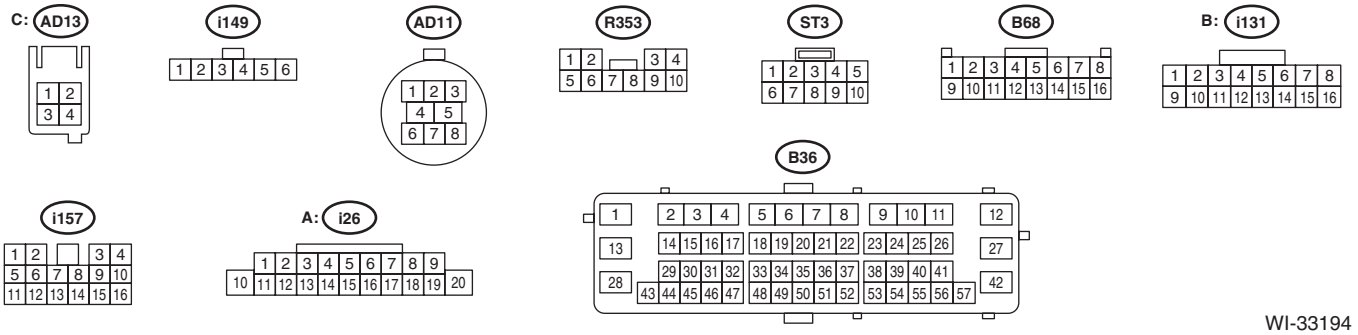

WI-33194

3. PREMIUM AUDIO

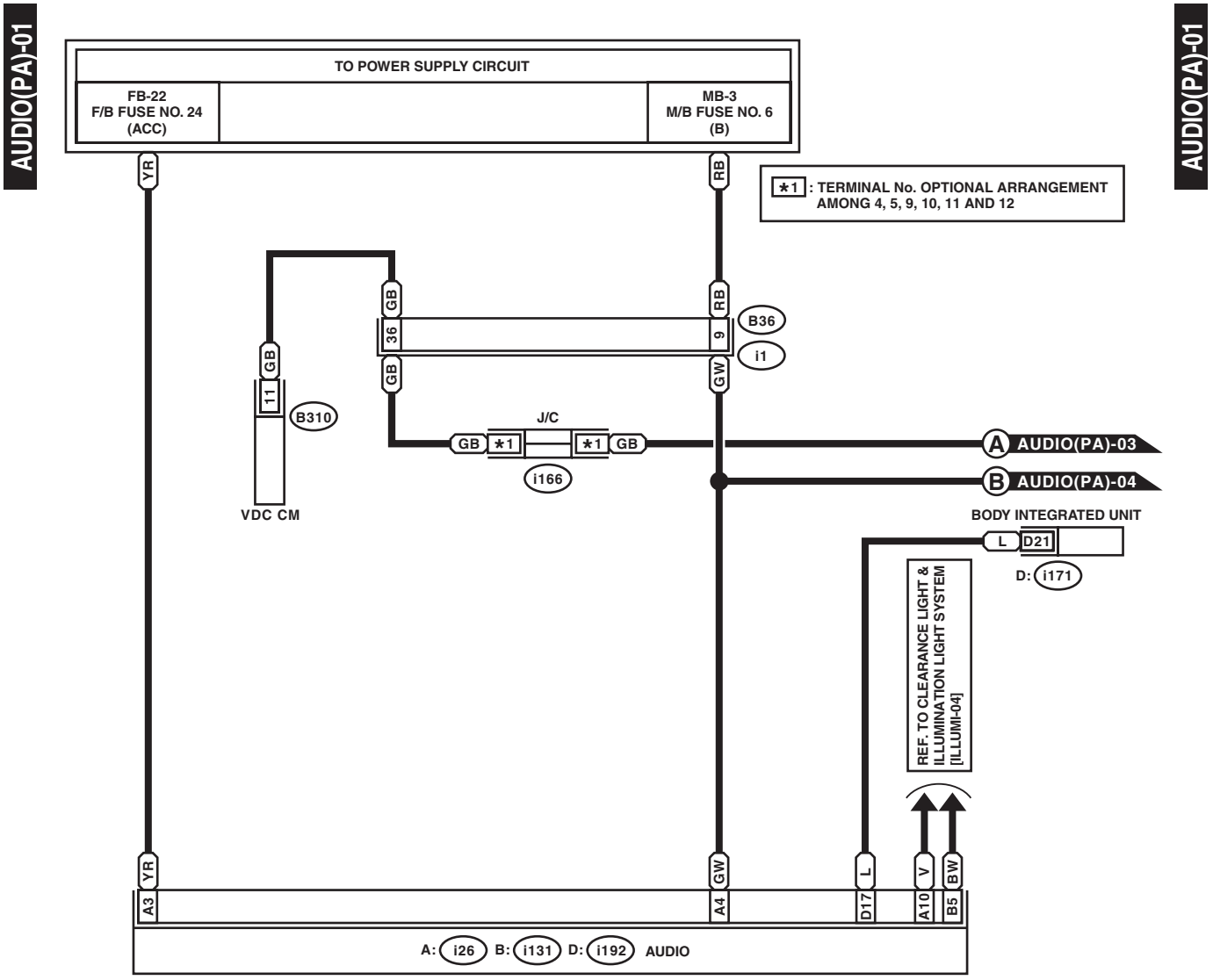

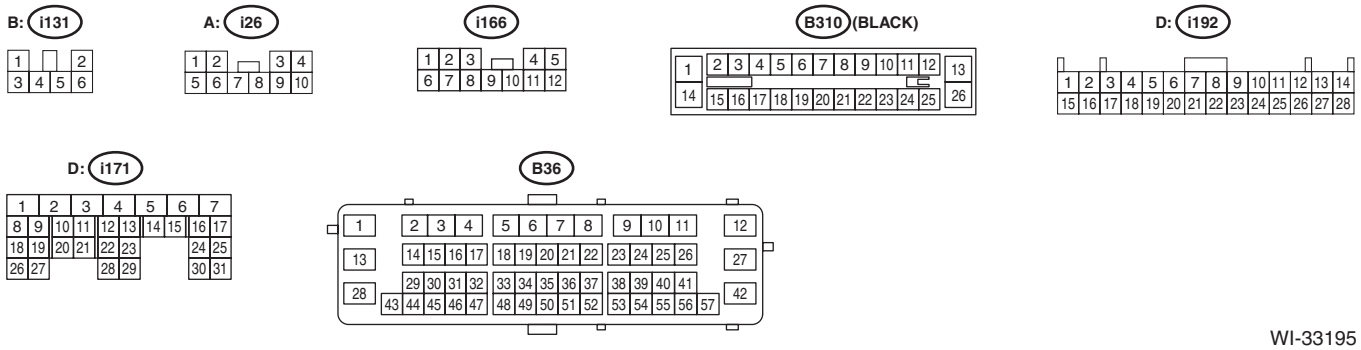

WI-33195

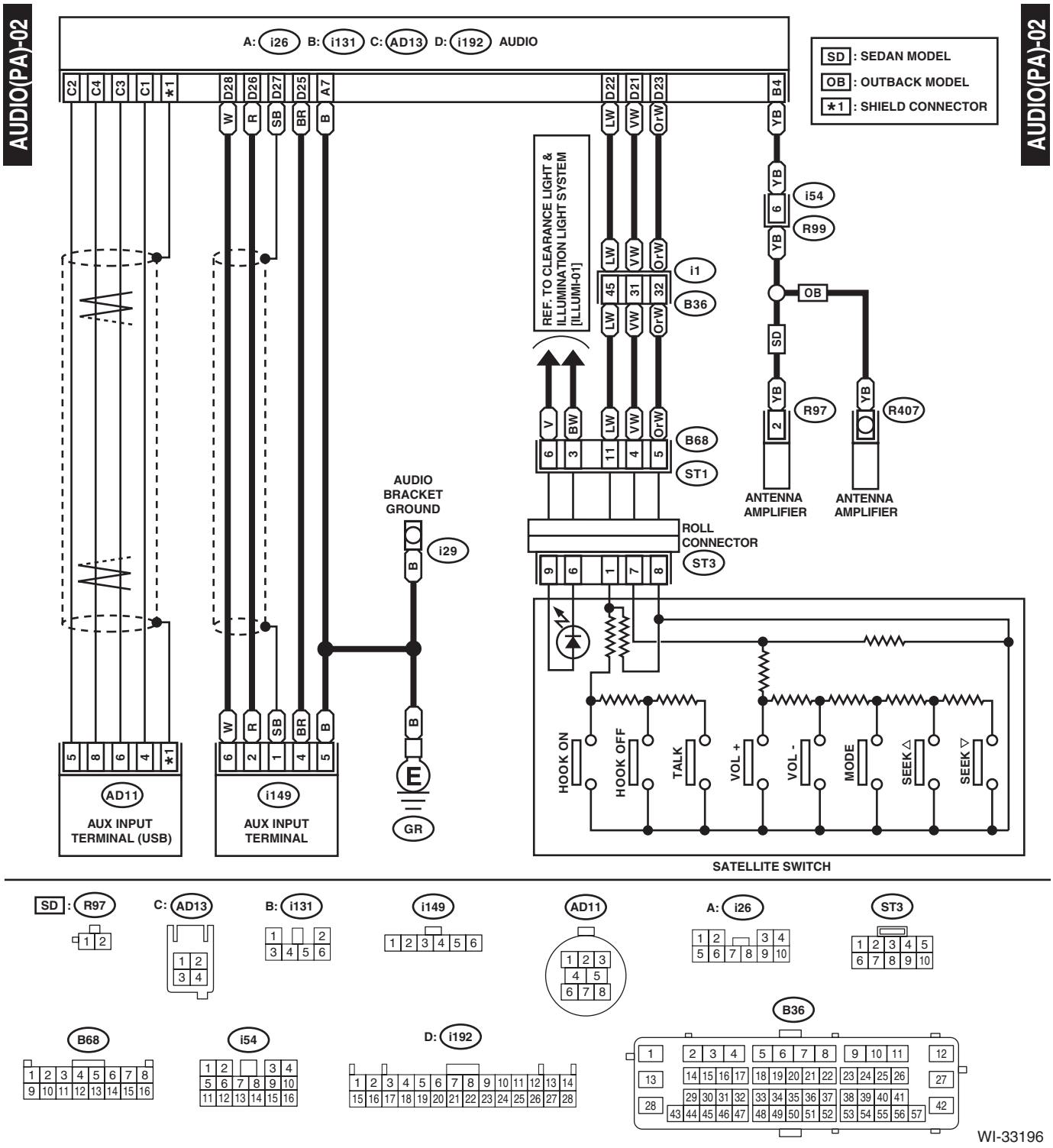
AUDIO(PA)-02
A: i26 B: i131 C: AD13 D: i192 AUDIO
SD : SEDAN MODEL
OB : OUTBACK MODEL
*1 : SHIELD CONNECTOR
REF. TO CLEARANCE LIGHT & ILLUMINATION LIGHT SYSTEM [ILLUMI-01]
i1
B36
i54
R99
B68
ST1
R97
R407
ANTENNA AMPLIFIER
ANTENNA AMPLIFIER
AUDIO BRACKET GROUND
i29
ROLL CONNECTOR
ST3
HOOK ON
HOOK OFF
TALK
VOL +
VOL -
MODE
SEEK △
SEEK ▽
SATELLITE SWITCH
AD11
AUX INPUT TERMINAL (USB)
i149
AUX INPUT TERMINAL
GR

SD : R97
C: AD13
B: i131
i149
AD11
A: i26
ST3
B68
i54
D: i192
B36

WI-33196

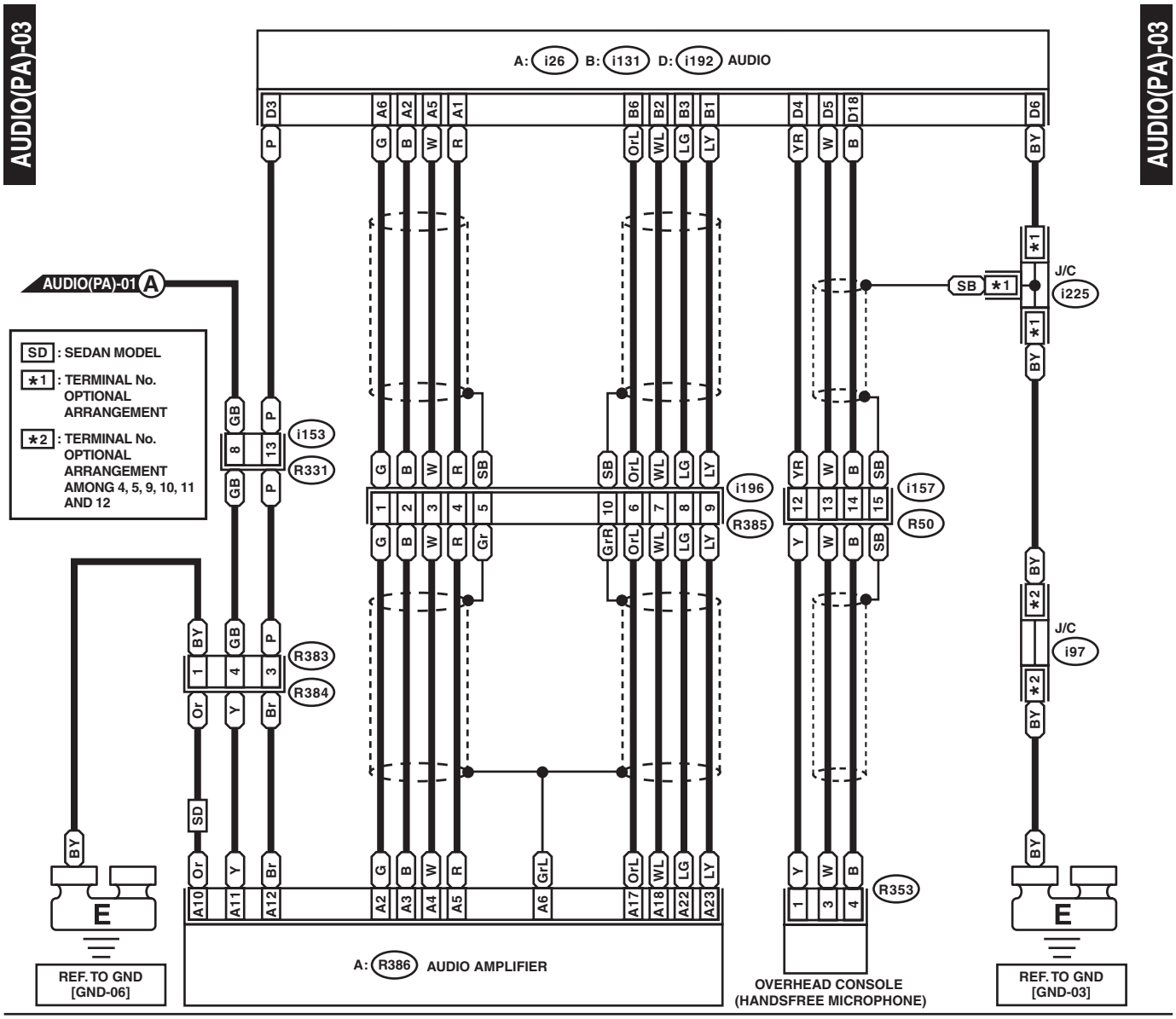
AUDIO(PA)-03
AUDIO(PA)-03
A: i26 B: i131 D: i192 AUDIO
AUDIO(PA)-01 A
SD : SEDAN MODEL
*1 : TERMINAL No. OPTIONAL ARRANGEMENT
*2 : TERMINAL No. OPTIONAL ARRANGEMENT AMONG 4, 5, 9, 10, 11 AND 12
i153
R331
i196
R385
i157
R50
R383
R384
SD
J/C i225
J/C i97
R353
A: R386 AUDIO AMPLIFIER
OVERHEAD CONSOLE (HANDSFREE MICROPHONE)
REF. TO GND [GND-06]
REF. TO GND [GND-03]

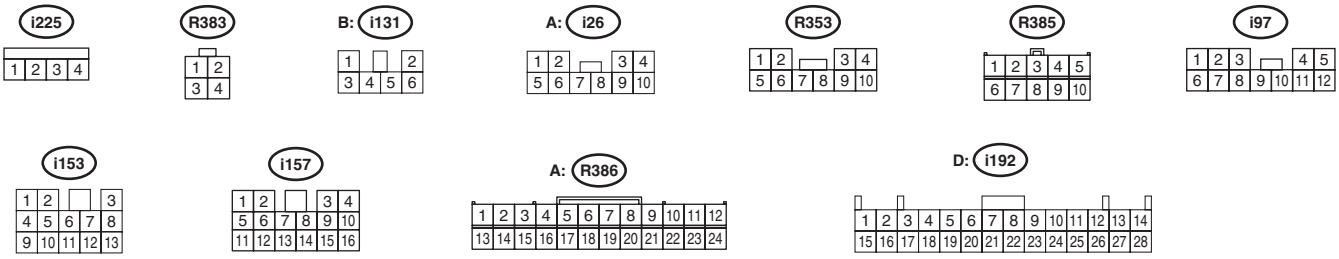
i225
R383
B: i131
A: i26
R353
R385
i97
i153
i157
A: R386
D: i192

WI-33197

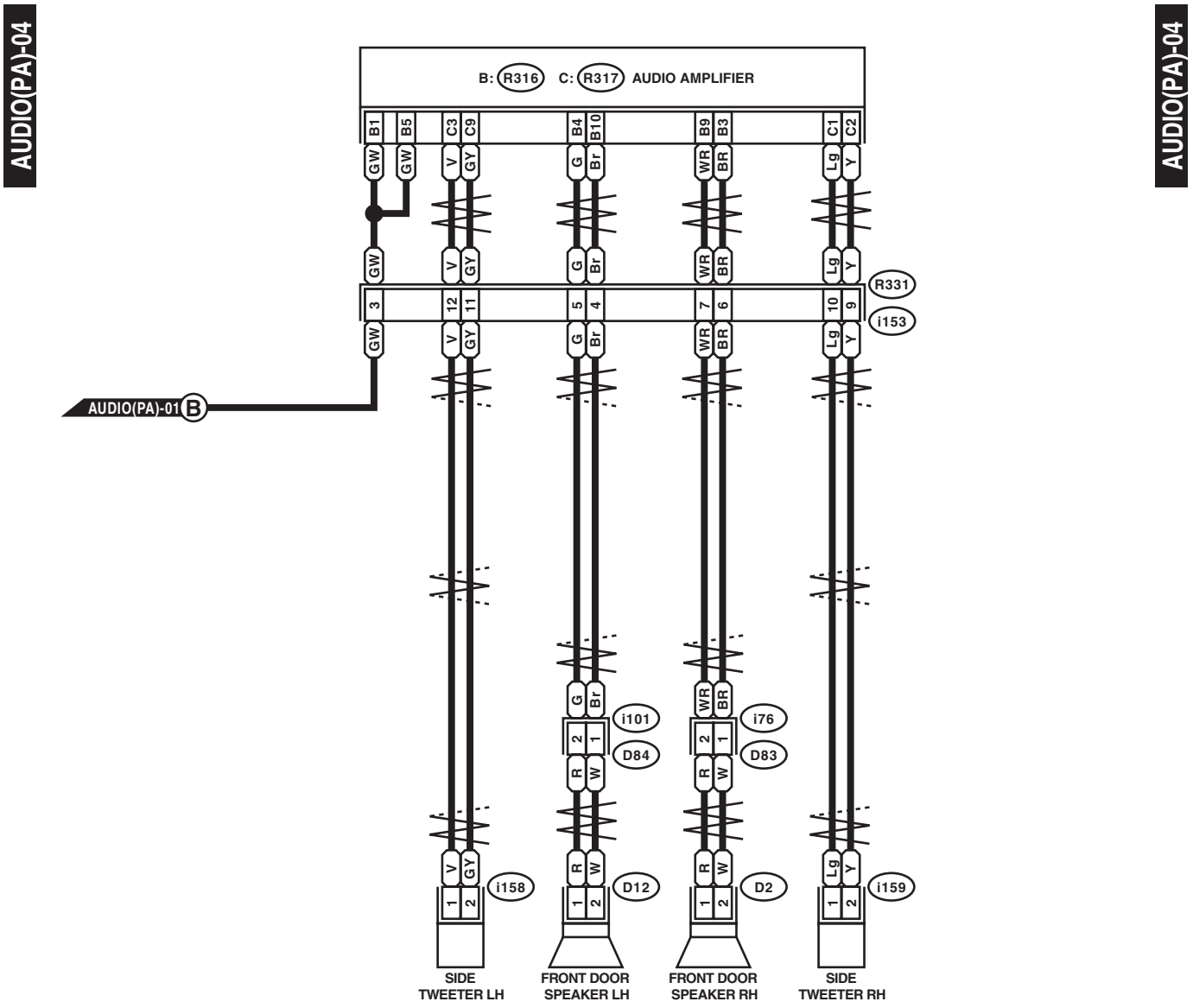
AUDIO(PA)-04
AUDIO(PA)-04
B: R316 C: R317 AUDIO AMPLIFIER
B1 B5 C3 C9 B4 B10 B9 B3 C1 C2
GW GW V GY G Br WR BR Lg Y
3 12 11 5 4 7 6 10 9
R331
i153
AUDIO(PA)-01 B
i101
D84
i76
D83
i158
D12
D2
i159
SIDE TWEETER LH
FRONT DOOR SPEAKER LH
FRONT DOOR SPEAKER RH
SIDE TWEETER RH

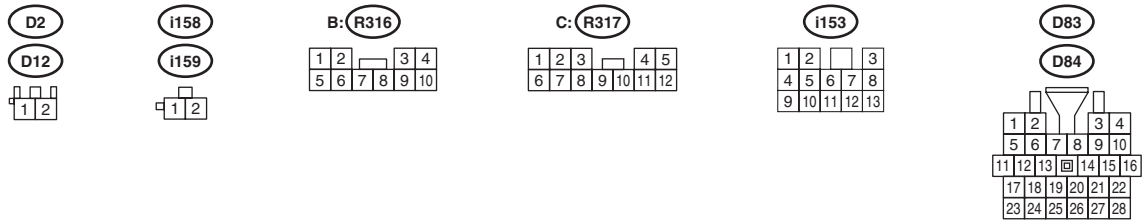
D2
D12
i158
i159
B: R316
C: R317
i153
D83
D84

WI-33198

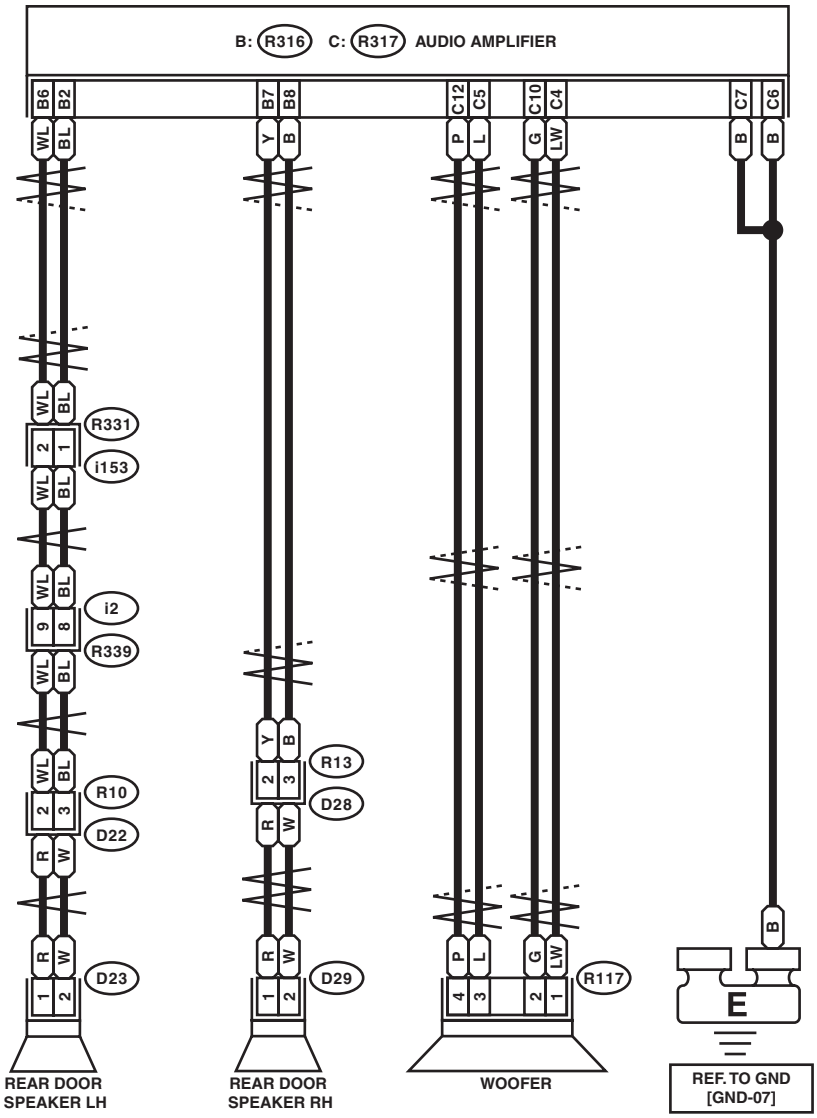
B: R316
C: R317
AUDIO AMPLIFIER
B6
B2
B7
B8
C12
C5
C10
C4
C7
C6
WL
BL
Y
B
P
L
G
LW
B
R331
i153
i2
R339
R10
D22
R13
D28
D23
D29
R117
E
REF. TO GND
[GND-07]
REAR DOOR
SPEAKER LH
REAR DOOR
SPEAKER RH
WOOFER

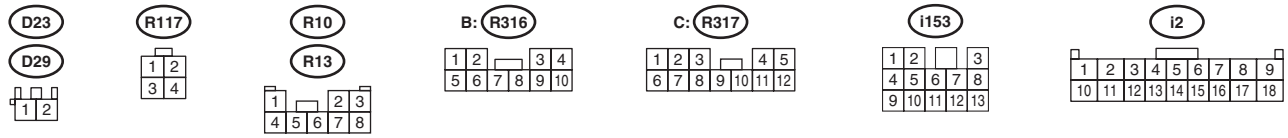
D23
D29
R117
R10
R13
B: R316
C: R317
i153
i2

WI-33199

9. Back-up Light System

A: WIRING DIAGRAM

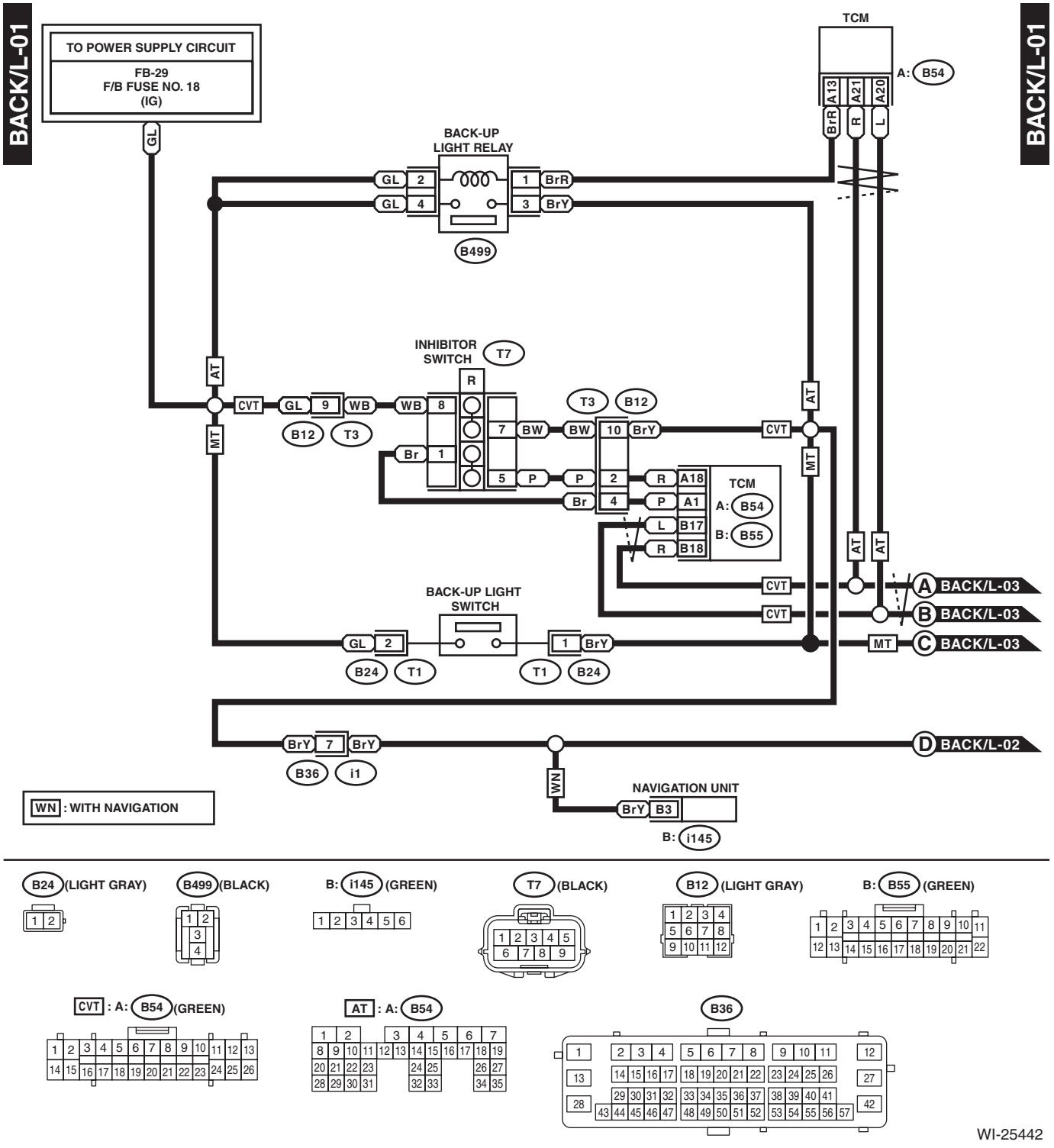

BACK/L-02

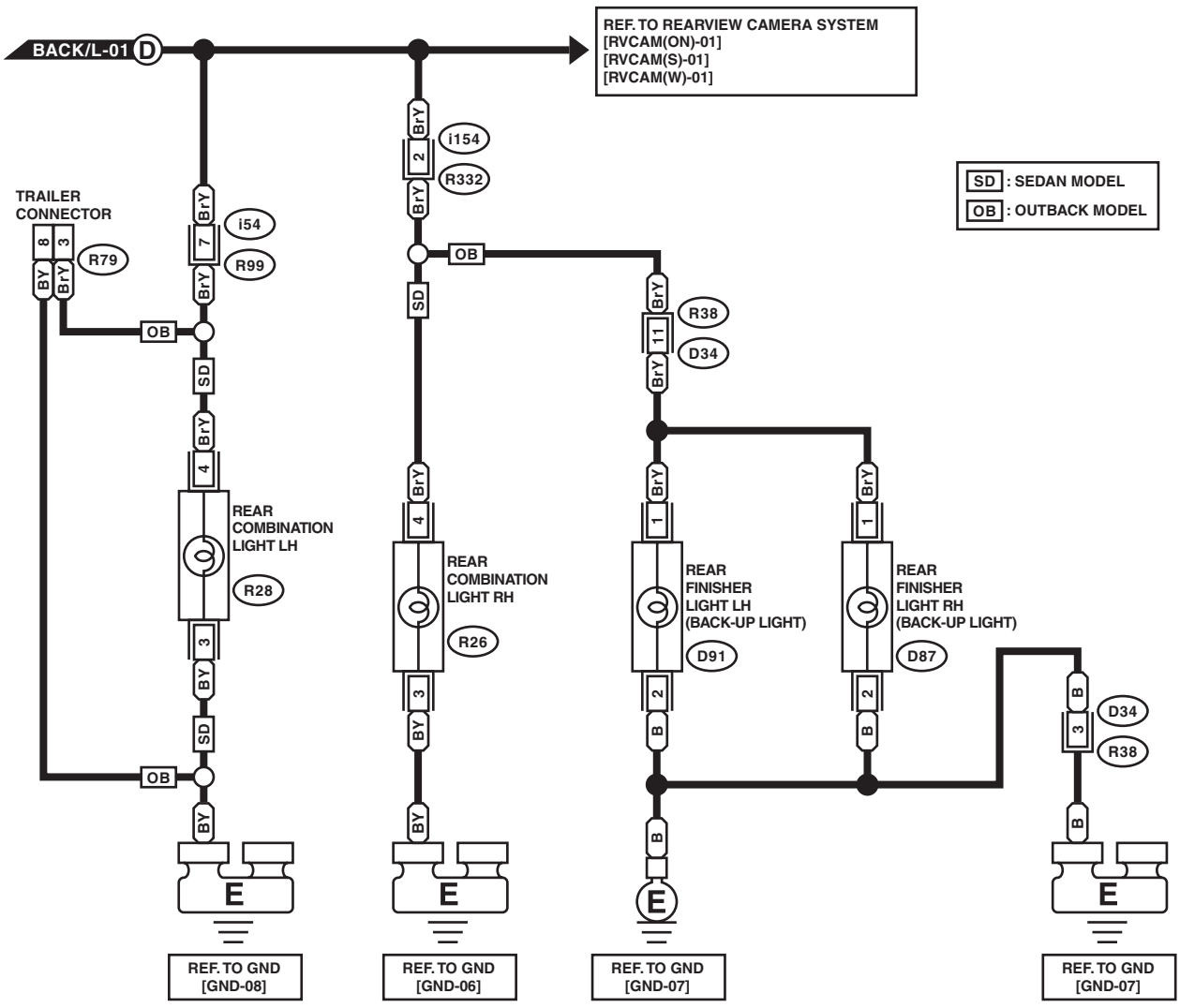

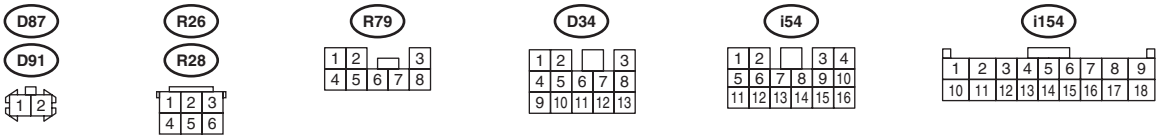

WI-33201

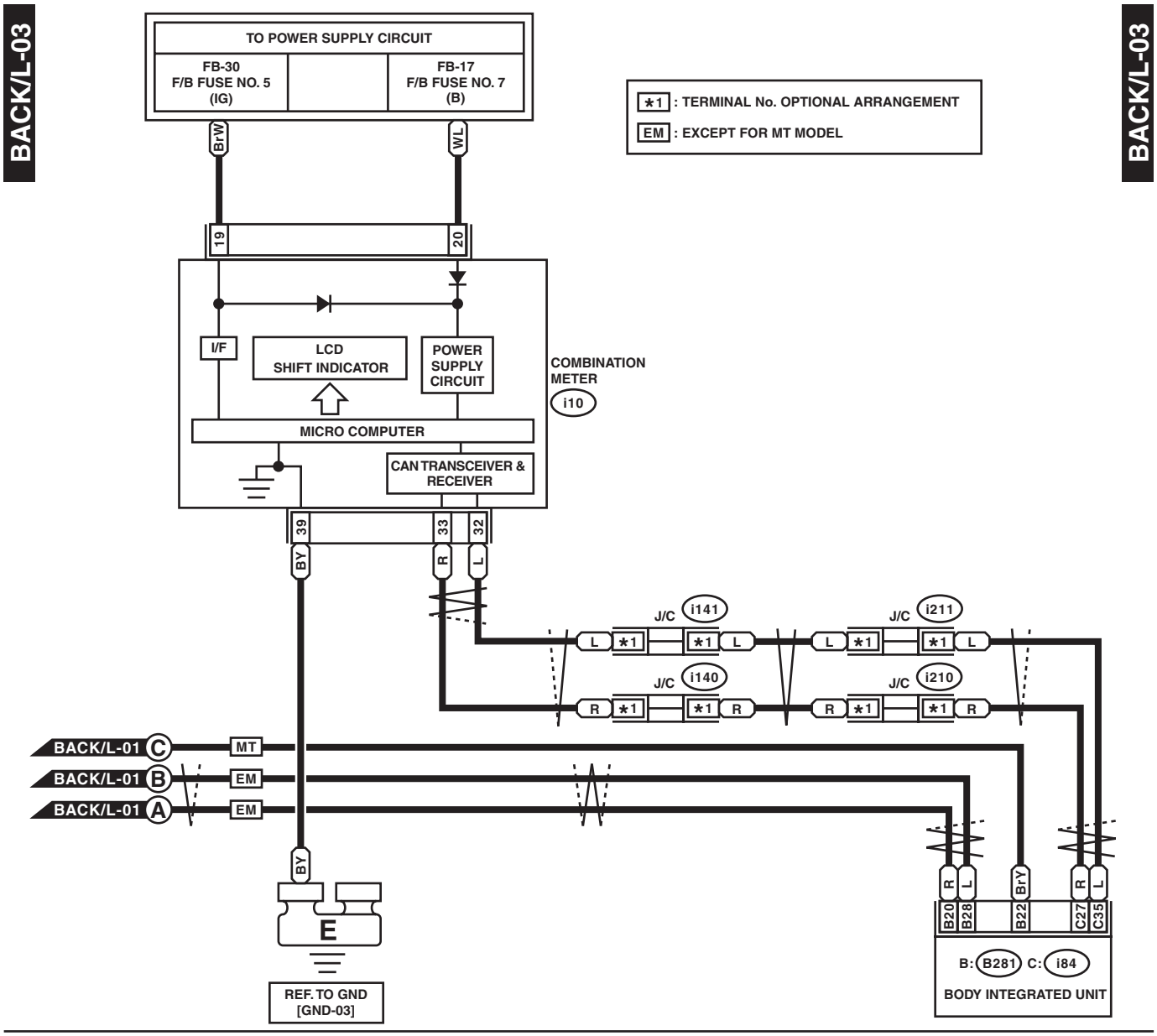
BACK/L-03
BACK/L-03
TO POWER SUPPLY CIRCUIT
FB-30
F/B FUSE NO. 5
(IG)
FB-17
F/B FUSE NO. 7
(B)
*1 : TERMINAL No. OPTIONAL ARRANGEMENT
EM : EXCEPT FOR MT MODEL
BrW
WL
19
20
I/F
LCD
SHIFT INDICATOR
POWER
SUPPLY
CIRCUIT
COMBINATION
METER
i10
MICRO COMPUTER
CAN TRANSCEIVER &
RECEIVER
39
33
32
BY
R
L
J/C i141
J/C i211
J/C i140
J/C i210
BACK/L-01 C
BACK/L-01 B
BACK/L-01 A
MT
EM
EM
E
REF. TO GND
[GND-03]
B20
B28
B22
C27
C35
B: B281 C: i84
BODY INTEGRATED UNIT
i140
i210
i141
i211
B: B281
C: i84
i10

WI-33202

10.CAN Communication System

A: WIRING DIAGRAM

CAN-01

CAN-01

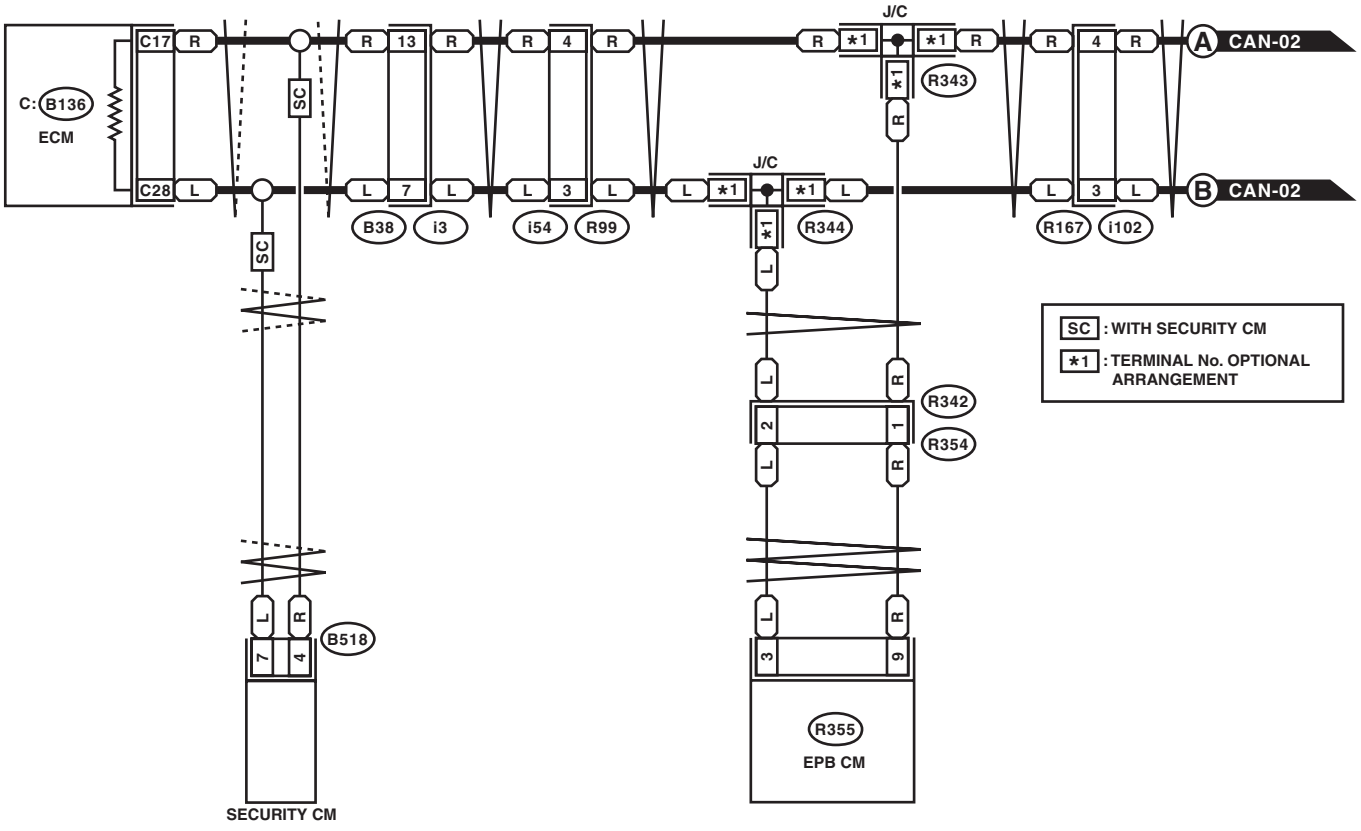

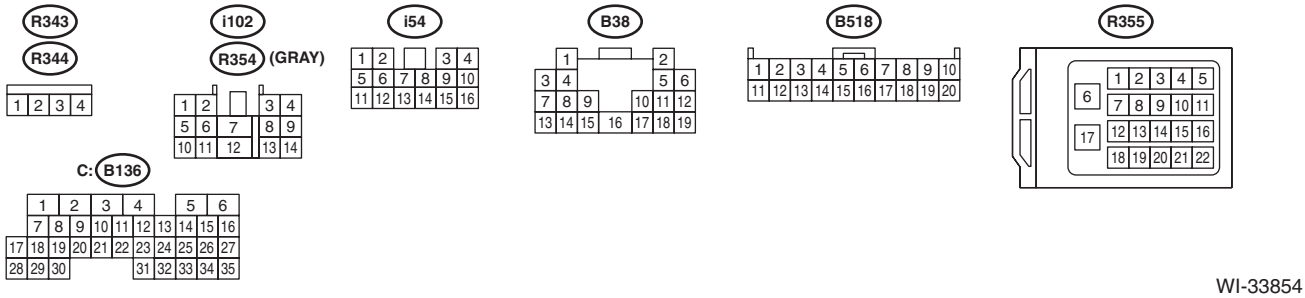

WI-33854

CAN-02

CAN-02

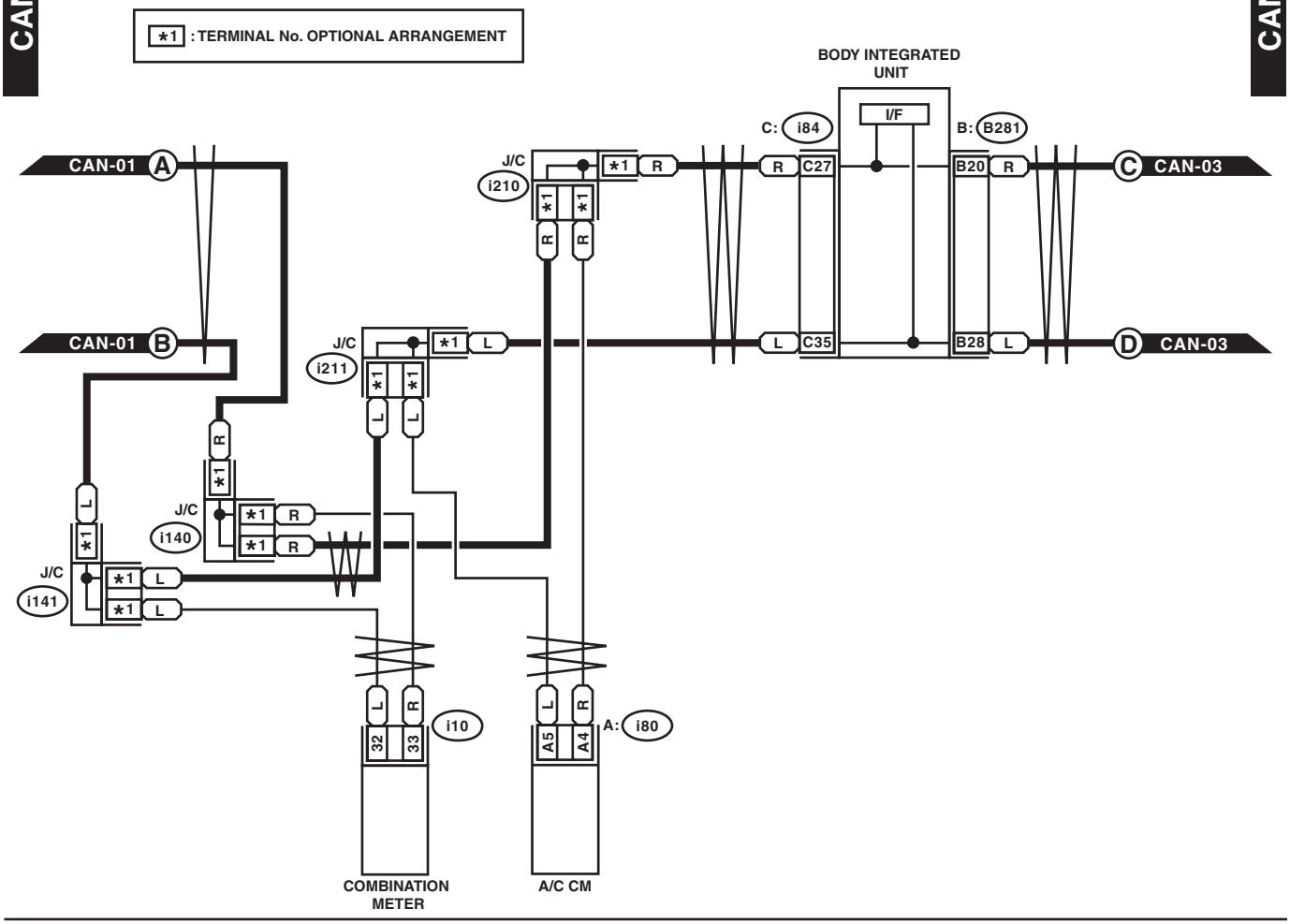

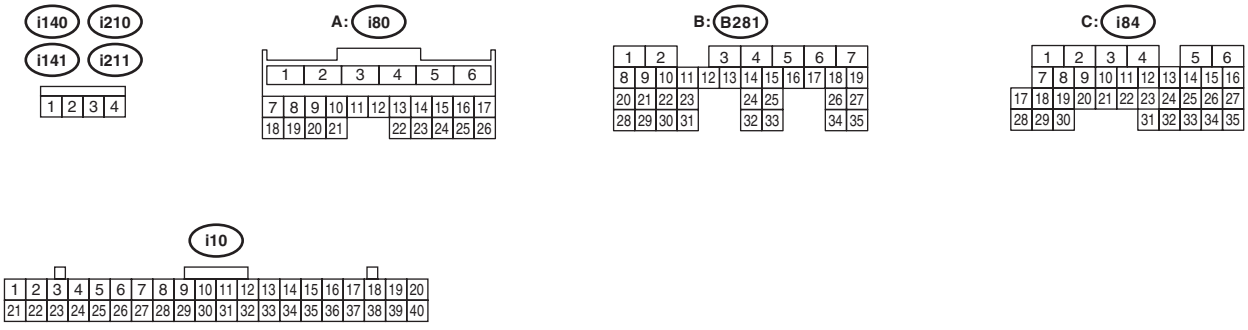

WI-33203

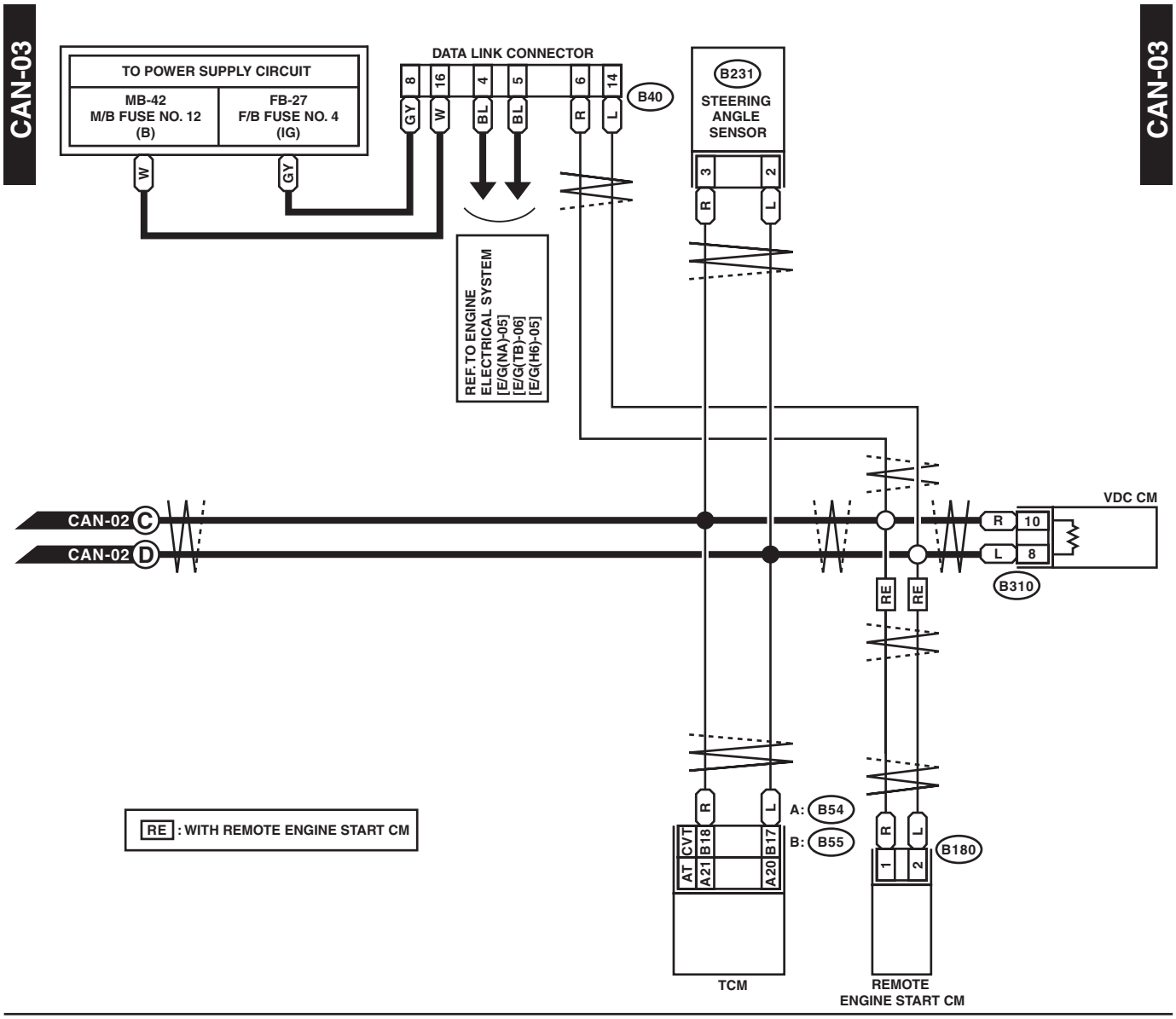
CAN-03
CAN-03
TO POWER SUPPLY CIRCUIT
MB-42
M/B FUSE NO. 12
(B)
FB-27
F/B FUSE NO. 4
(IG)
W
GY
DATA LINK CONNECTOR
8
16
4
5
6
14
GY
W
BL
BL
R
L
B40
B231
STEERING ANGLE SENSOR
3
2
R
L
REF. TO ENGINE ELECTRICAL SYSTEM
[E/G(NA)-05]
[E/G(TB)-06]
[E/G(H6)-05]
CAN-02 C
CAN-02 D
VDC CM
R
10
L
8
B310
RE
RE
RE : WITH REMOTE ENGINE START CM
R
L
A: B54
B: B55
CVT
B18
B17
AT
A21
A20
R
L
1
2
B180
TCM
REMOTE ENGINE START CM

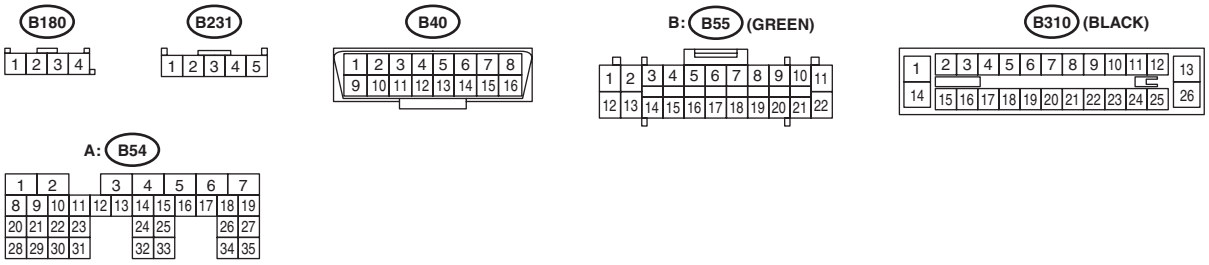
B180
1 2 3 4
B231
1 2 3 4 5
B40
1 2 3 4 5 6 7 8
9 10 11 12 13 14 15 16
B: B55 (GREEN)
1 2 3 4 5 6 7 8 9 10 11
12 13 14 15 16 17 18 19 20 21 22
B310 (BLACK)
1 2 3 4 5 6 7 8 9 10 11 12 13
14 15 16 17 18 19 20 21 22 23 24 25 26
A: B54
1 2 3 4 5 6 7
8 9 10 11 12 13 14 15 16 17 18 19
20 21 22 23 24 25 26 27
28 29 30 31 32 33 34 35

WI-33855

11.Charging System

A: WIRING DIAGRAM

CHG-01

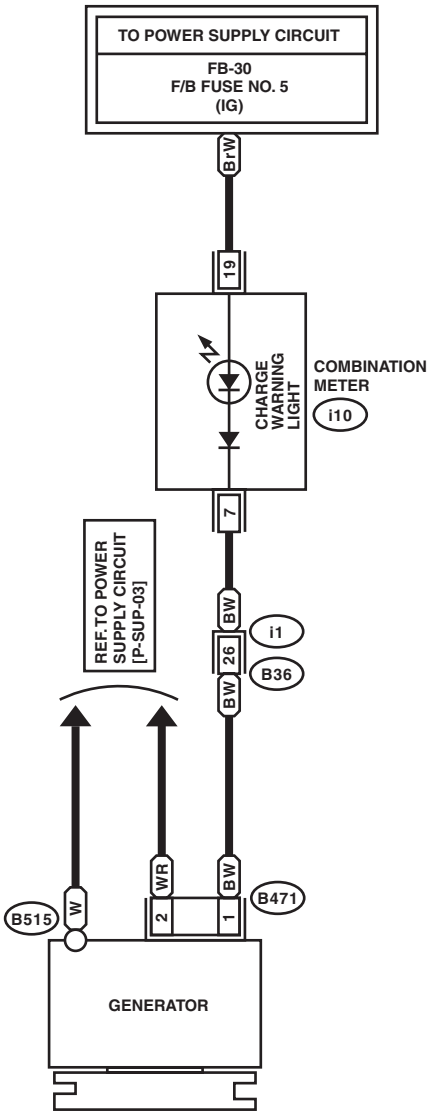

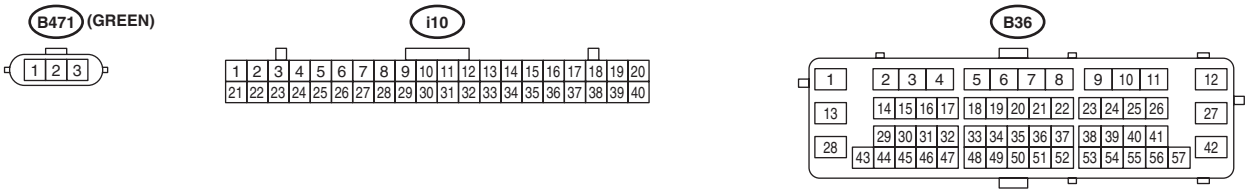

WI-33204

12.Clearance Light and Illumination Light System

A: WIRING DIAGRAM

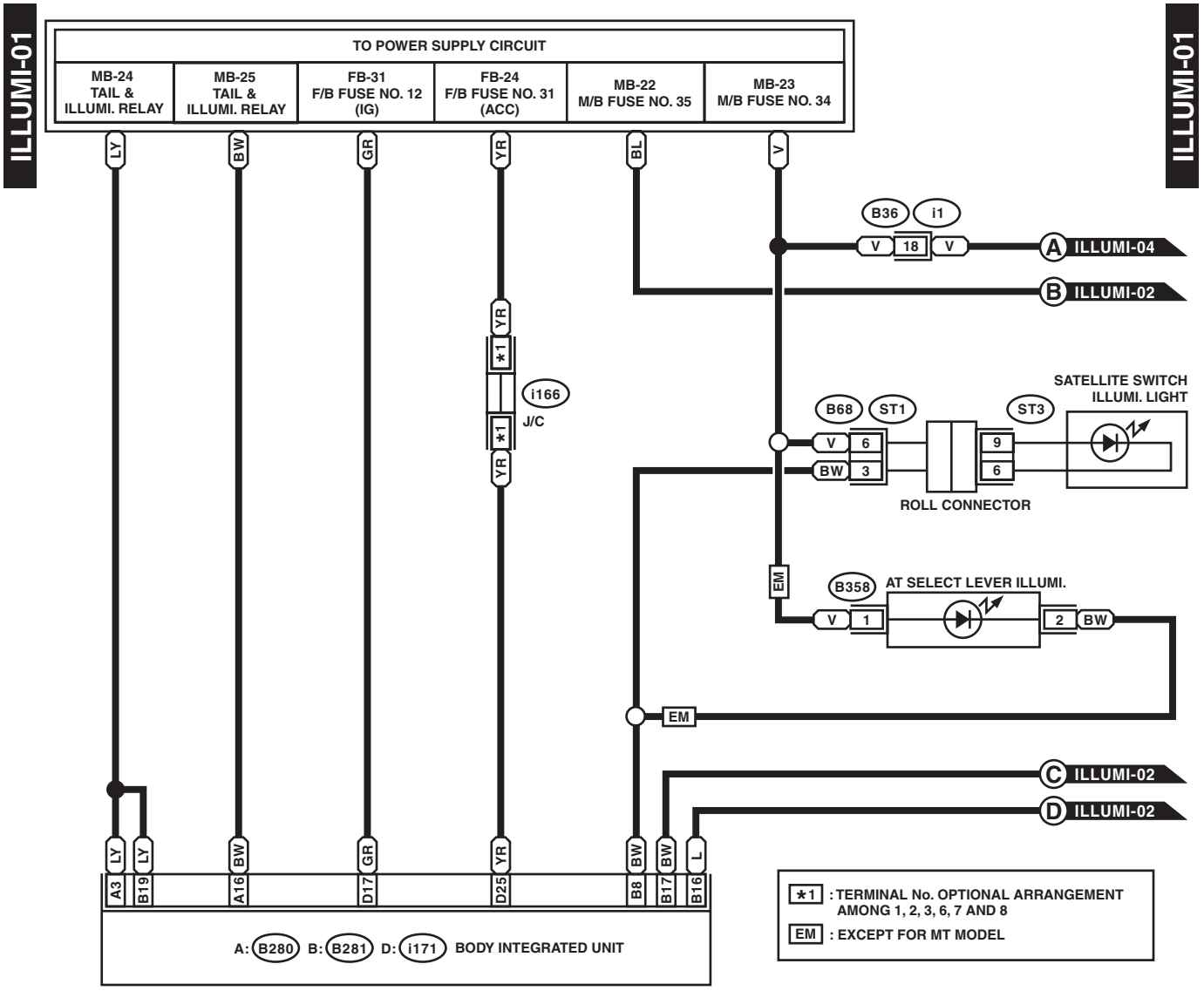

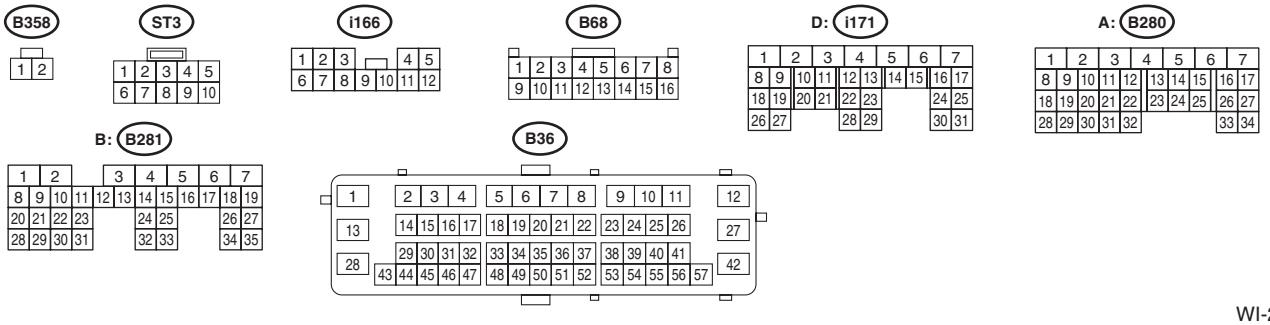

WI-29335

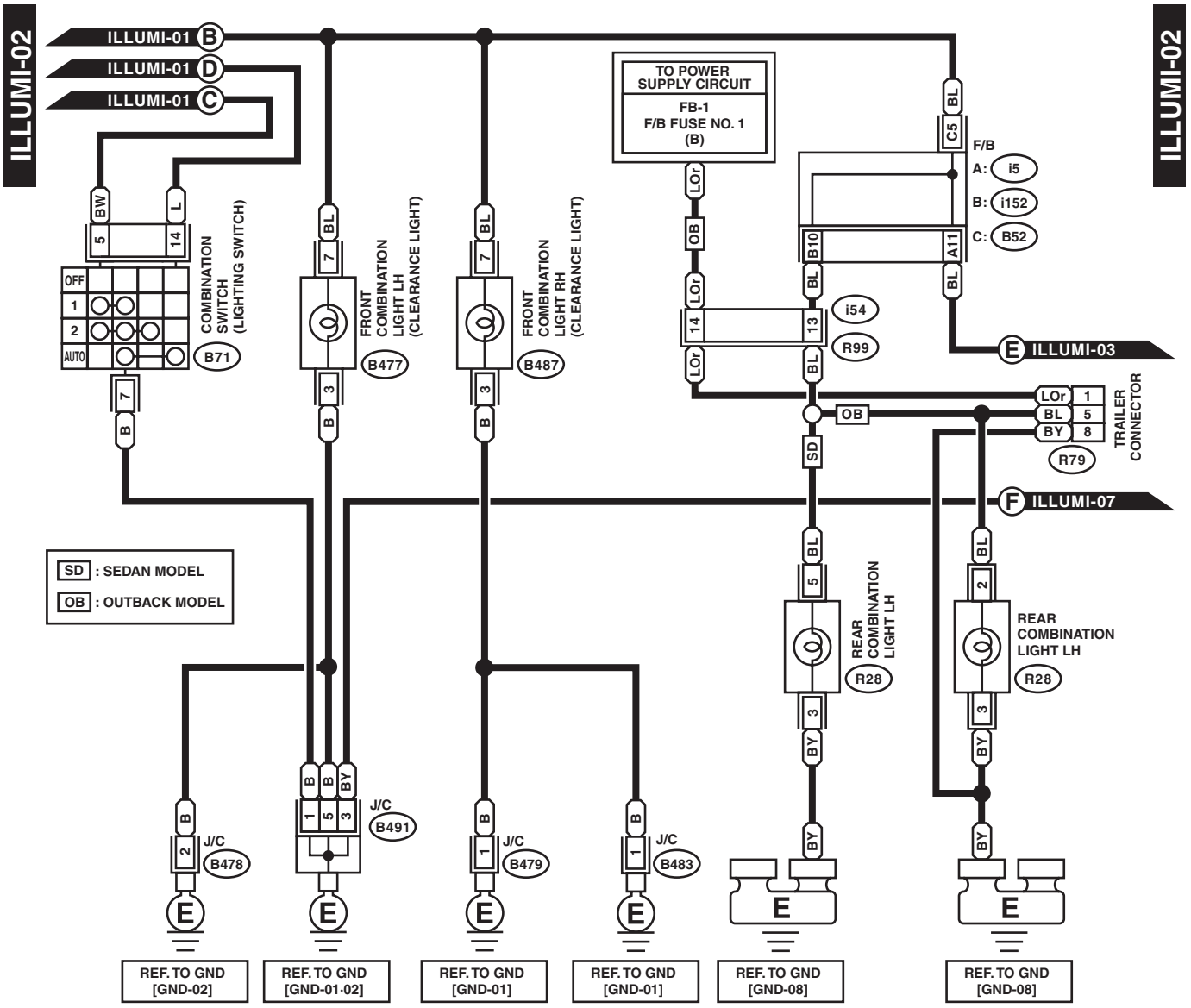
ILLUMI-02
ILLUMI-01 B
ILLUMI-01 D
ILLUMI-01 C
TO POWER SUPPLY CIRCUIT
FB-1
F/B FUSE NO. 1
(B)
F/B
A: i5
B: i152
C: B52
COMBINATION SWITCH (LIGHTING SWITCH)
B71
FRONT COMBINATION LIGHT LH (CLEARANCE LIGHT)
B477
FRONT COMBINATION LIGHT RH (CLEARANCE LIGHT)
B487
i54
R99
E ILLUMI-03
TRAILER CONNECTOR
R79
F ILLUMI-07
SD : SEDAN MODEL
OB : OUTBACK MODEL
REAR COMBINATION LIGHT LH
R28
J/C B478
J/C B491
J/C B479
J/C B483
REF. TO GND [GND-02]
REF. TO GND [GND-01·02]
REF. TO GND [GND-01]
REF. TO GND [GND-01]
REF. TO GND [GND-08]
REF. TO GND [GND-08]

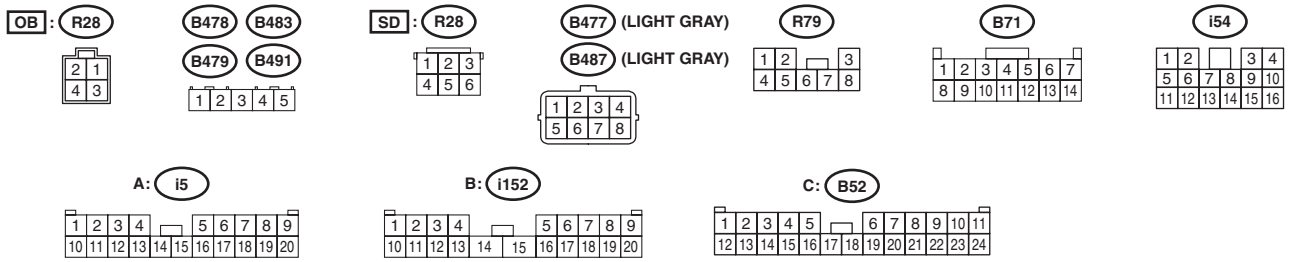
OB : R28
B478 B483
B479 B491
SD : R28
B477 (LIGHT GRAY)
B487 (LIGHT GRAY)
R79
B71
i54
A: i5
B: i152
C: B52

WI-29336

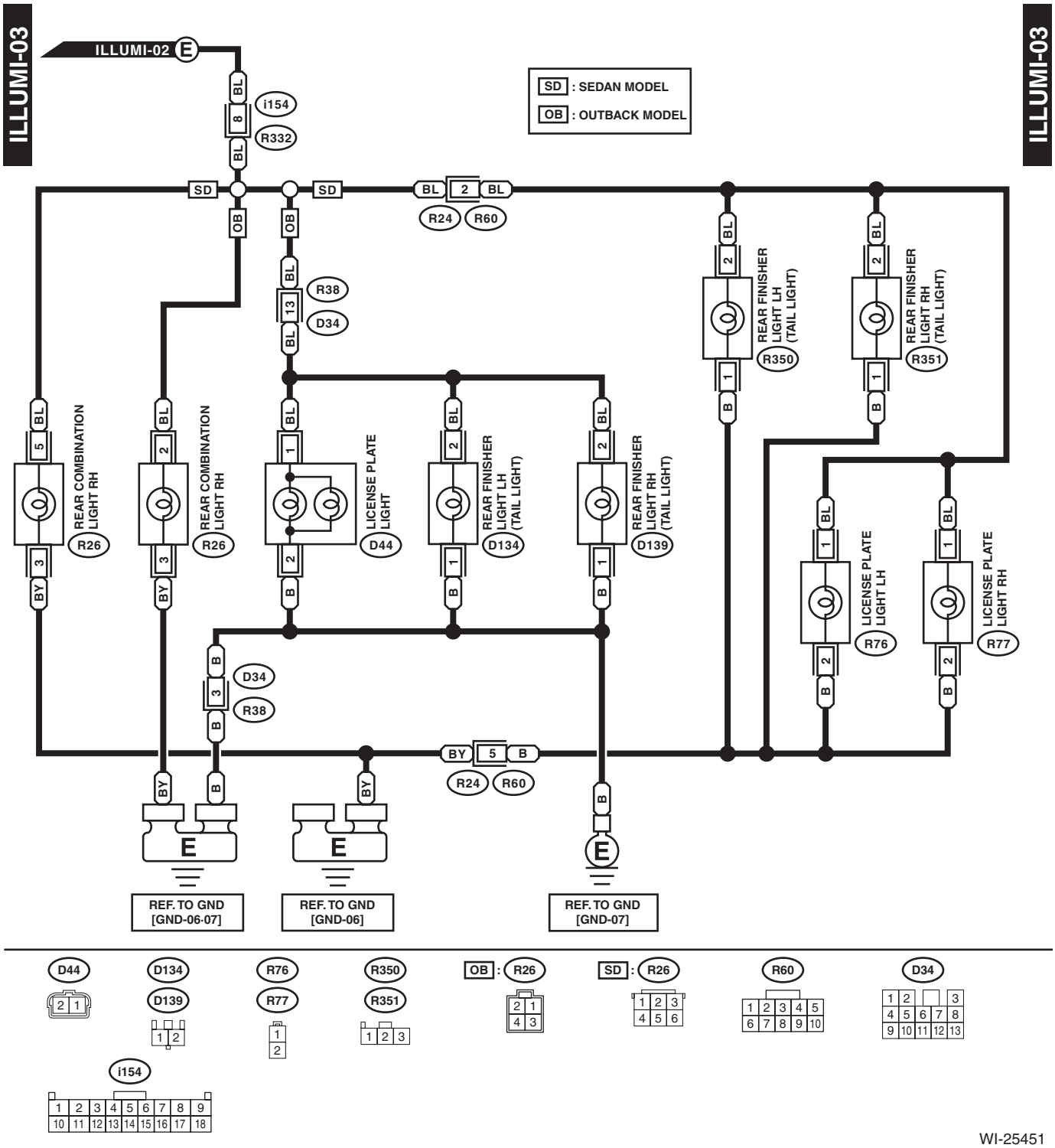
ILLUMI-03
ILLUMI-02
SD : SEDAN MODEL
OB : OUTBACK MODEL
i154
R332
BL
SD
OB
R24
R60
R38
D34
REAR COMBINATION LIGHT RH
R26
LICENSE PLATE LIGHT
D44
REAR FINISHER LIGHT LH (TAIL LIGHT)
D134
REAR FINISHER LIGHT RH (TAIL LIGHT)
D139
R350
R351
LICENSE PLATE LIGHT LH
R76
LICENSE PLATE LIGHT RH
R77
BY
B
REF. TO GND [GND-06·07]
REF. TO GND [GND-06]
REF. TO GND [GND-07]

D44
D134
D139
R76
R77
R350
R351
OB : R26
SD : R26
R60
D34
i154

WI-25451

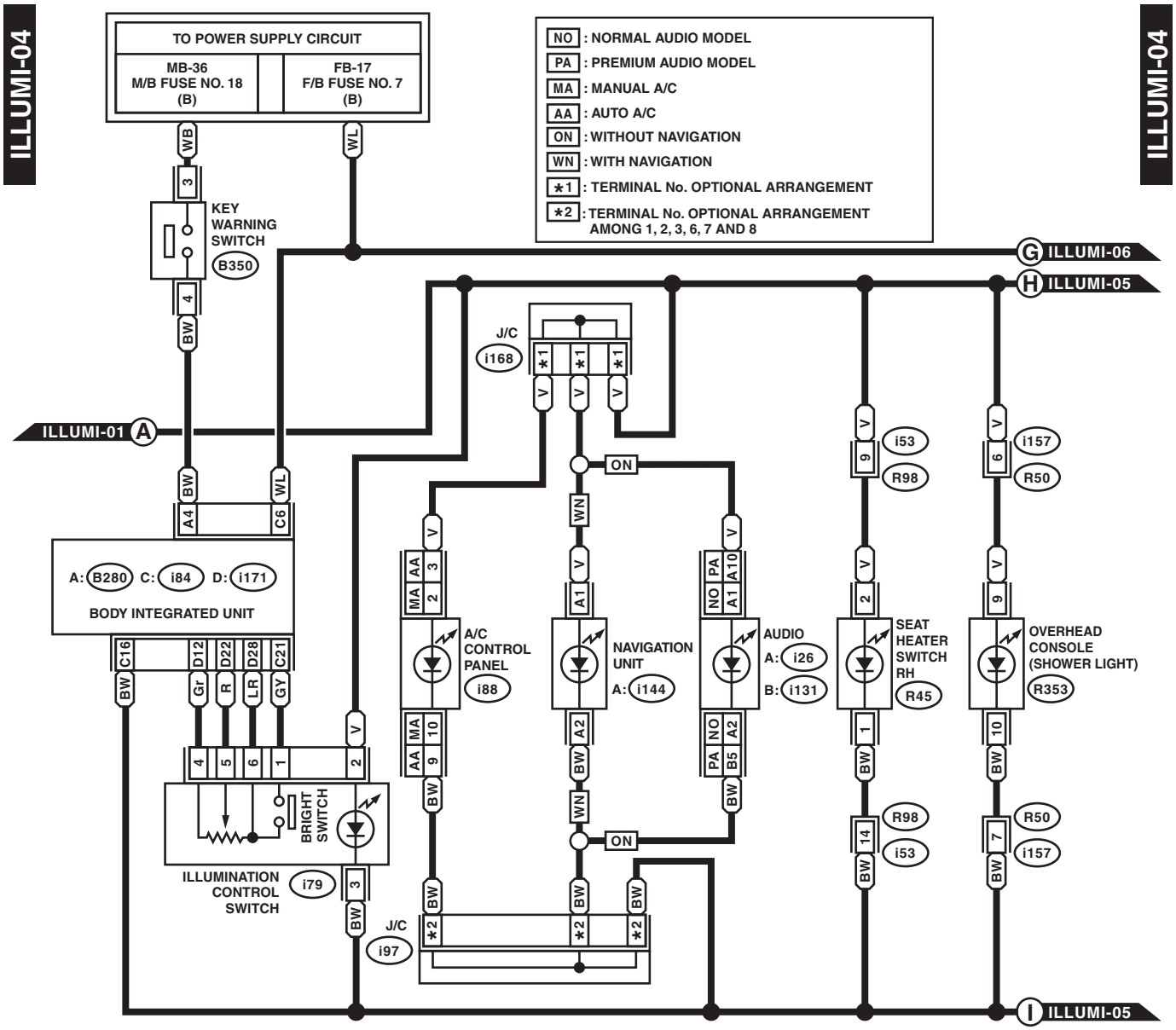
ILLUMI-04
ILLUMI-04
TO POWER SUPPLY CIRCUIT
MB-36
M/B FUSE NO. 18
(B)
FB-17
F/B FUSE NO. 7
(B)
NO : NORMAL AUDIO MODEL
PA : PREMIUM AUDIO MODEL
MA : MANUAL A/C
AA : AUTO A/C
ON : WITHOUT NAVIGATION
WN : WITH NAVIGATION
*1 : TERMINAL No. OPTIONAL ARRANGEMENT
*2 : TERMINAL No. OPTIONAL ARRANGEMENT AMONG 1, 2, 3, 6, 7 AND 8
KEY WARNING SWITCH
B350
G ILLUMI-06
H ILLUMI-05
J/C
i168
ILLUMI-01 A
BODY INTEGRATED UNIT
A: B280 C: i84 D: i171
A/C CONTROL PANEL
i88
NAVIGATION UNIT
A: i144
AUDIO
A: i26
B: i131
SEAT HEATER SWITCH RH
R45
OVERHEAD CONSOLE (SHOWER LIGHT)
R353
i53
R98
i157
R50
BRIGHT SWITCH
ILLUMINATION CONTROL SWITCH
i79
J/C
i97
I ILLUMI-05

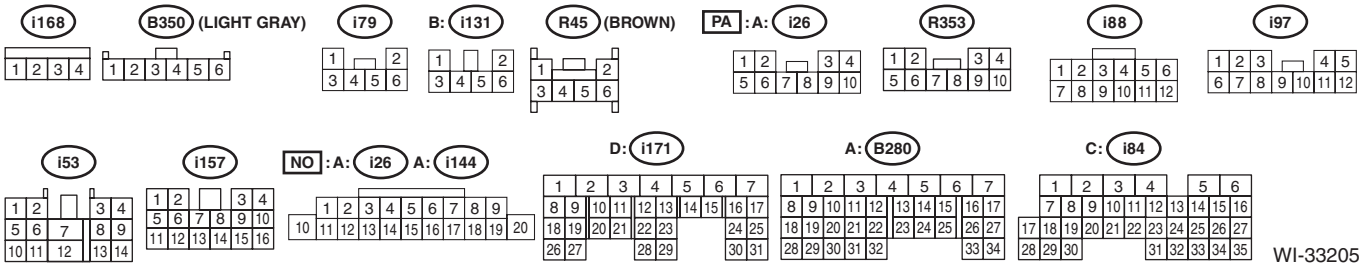
i168
B350 (LIGHT GRAY)
i79
B: i131
R45 (BROWN)
PA : A: i26
R353
i88
i97
i53
i157
NO : A: i26 A: i144
D: i171
A: B280
C: i84

WI-33205

ILLUMI-05

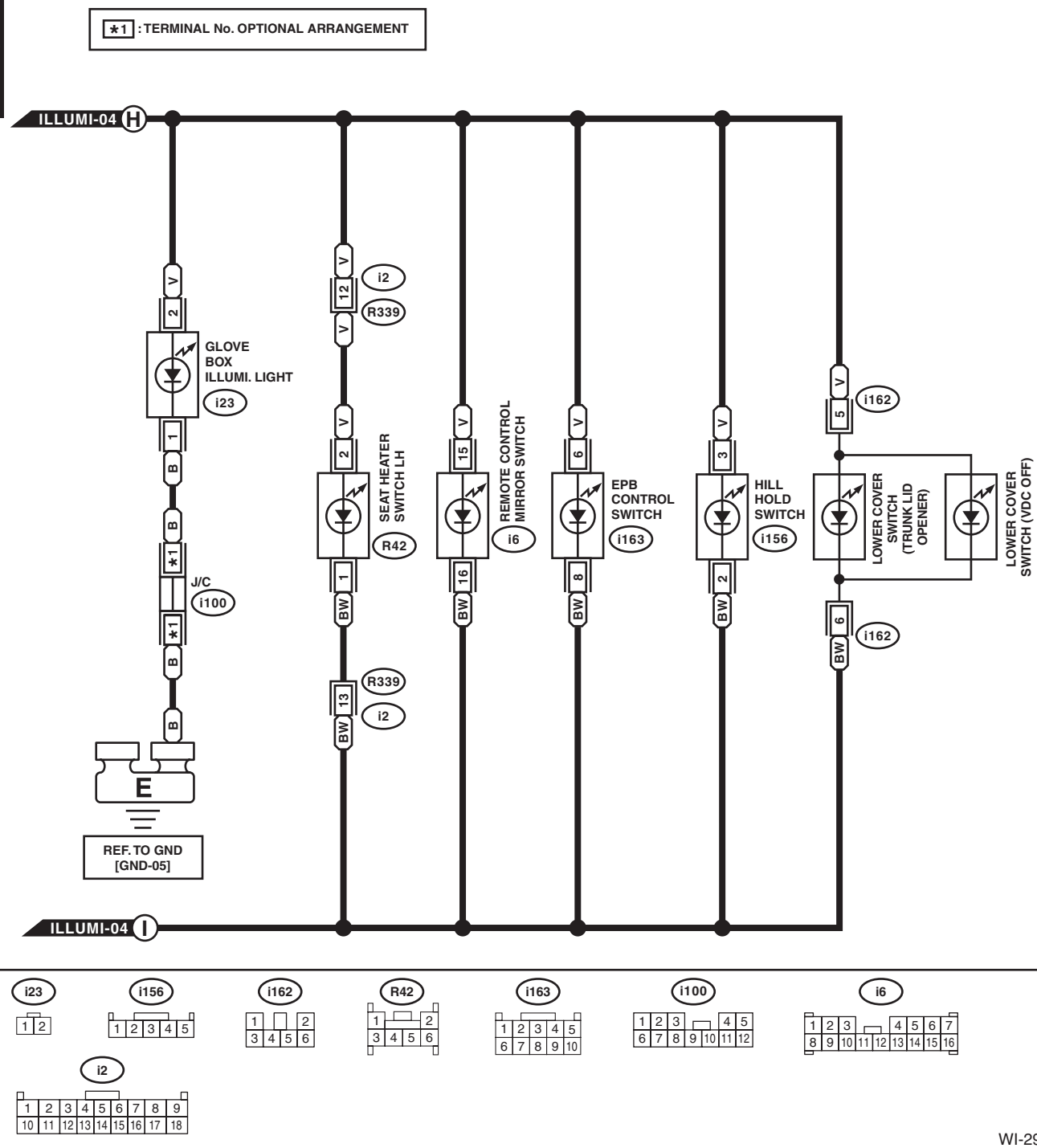

WI-29338

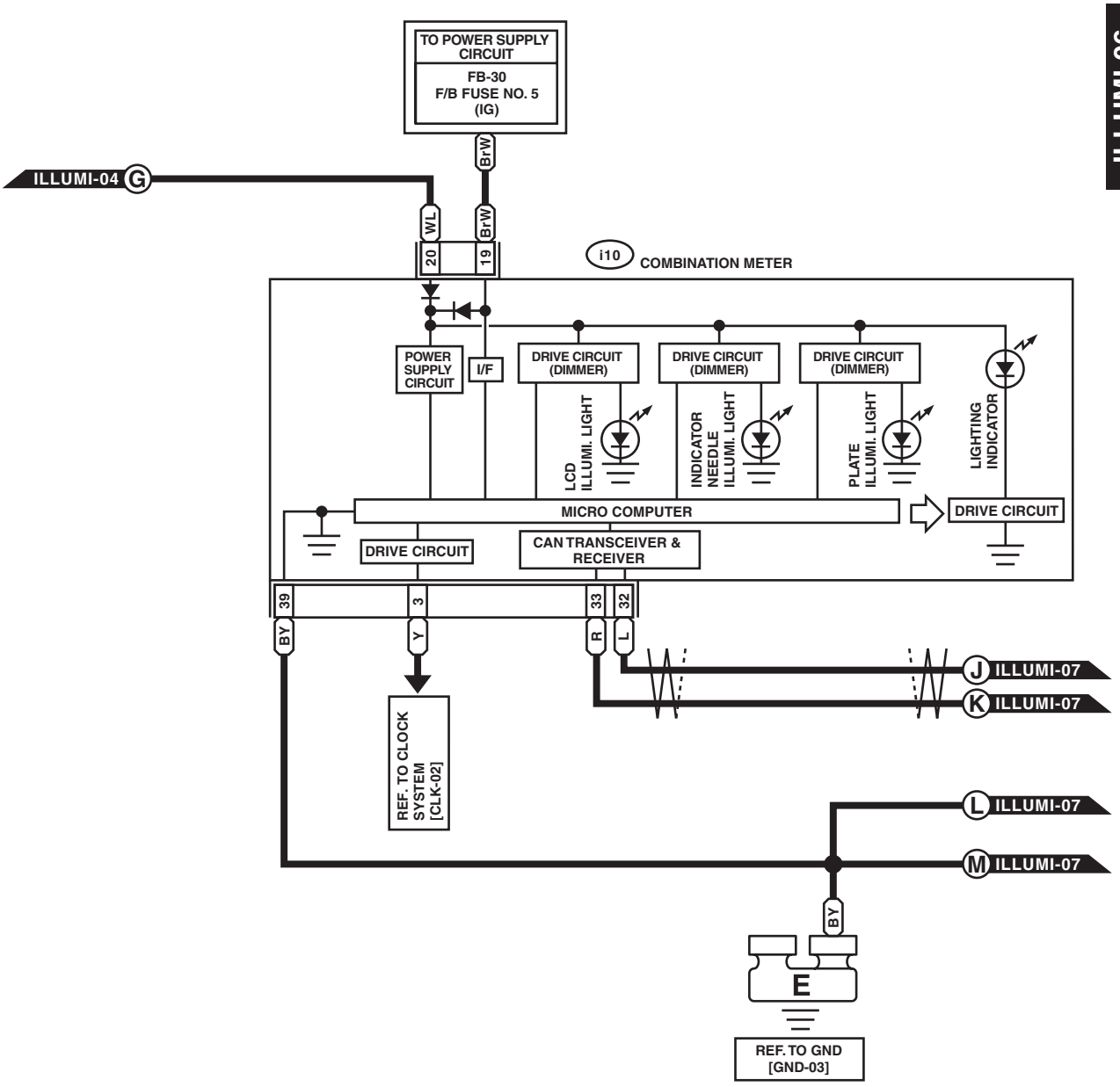
TO POWER SUPPLY CIRCUIT
FB-30
F/B FUSE NO. 5
(IG)
BrW
ILLUMI-04 G
WL
BrW
20
19
i10
COMBINATION METER
POWER SUPPLY CIRCUIT
I/F
DRIVE CIRCUIT (DIMMER)
DRIVE CIRCUIT (DIMMER)
DRIVE CIRCUIT (DIMMER)
LCD ILLUMI. LIGHT
INDICATOR NEEDLE ILLUMI. LIGHT
PLATE ILLUMI. LIGHT
LIGHTING INDICATOR
MICRO COMPUTER
DRIVE CIRCUIT
DRIVE CIRCUIT
CAN TRANSCEIVER & RECEIVER
39
3
33
32
BY
Y
R
L
J ILLUMI-07
K ILLUMI-07
REF. TO CLOCK SYSTEM [CLK-02]
L ILLUMI-07
M ILLUMI-07
BY
E
REF. TO GND [GND-03]

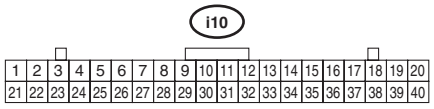
i10
1 2 3 4 5 6 7 8 9 10 11 12 13 14 15 16 17 18 19 20
21 22 23 24 25 26 27 28 29 30 31 32 33 34 35 36 37 38 39 40

WI-33324

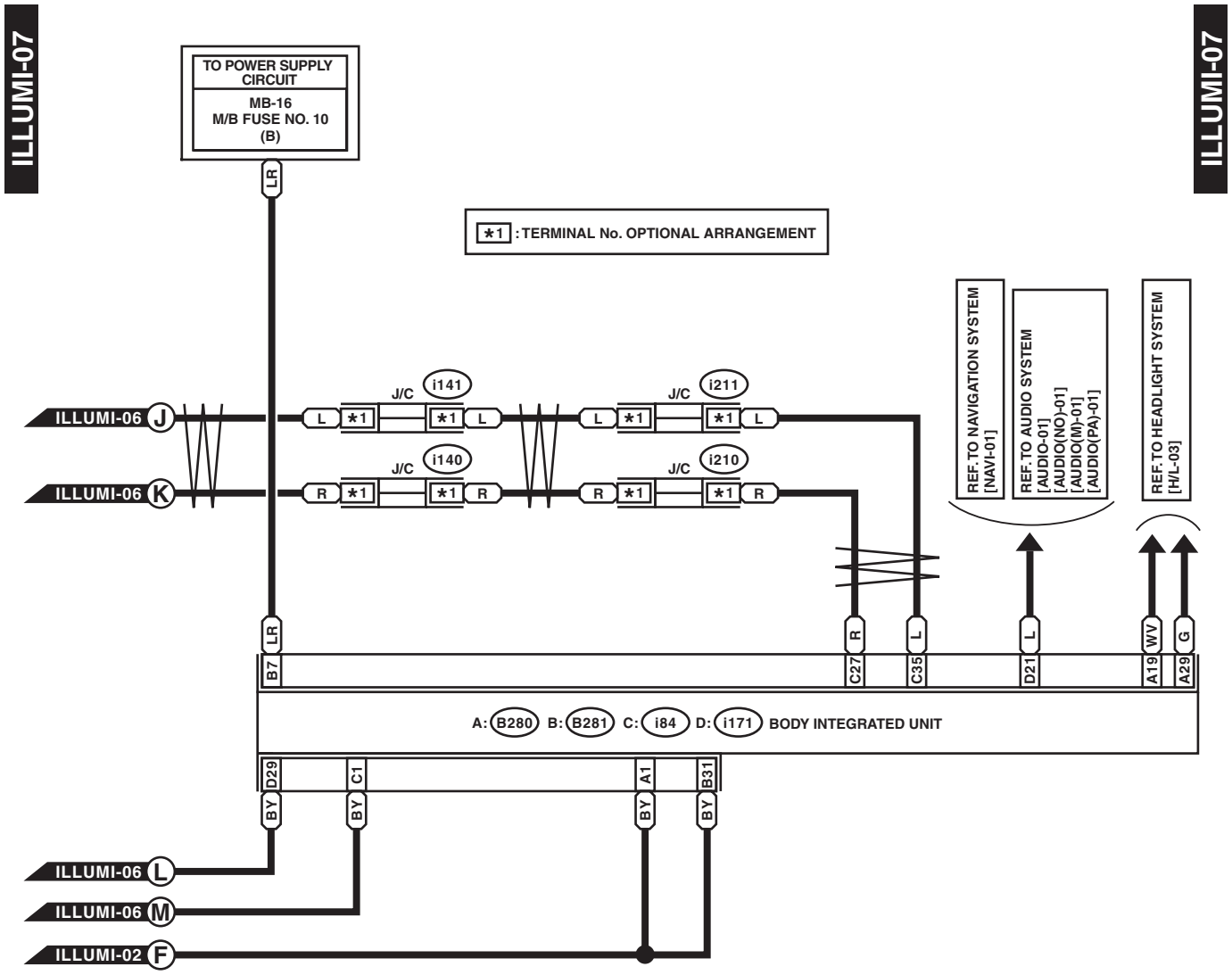
ILLUMI-07
ILLUMI-07
TO POWER SUPPLY CIRCUIT
MB-16
M/B FUSE NO. 10
(B)
LR
*1 : TERMINAL No. OPTIONAL ARRANGEMENT
REF.TO NAVIGATION SYSTEM [NAVI-01]
REF.TO AUDIO SYSTEM [AUDIO-01] [AUDIO(NO)-01] [AUDIO(M)-01] [AUDIO(PA)-01]
REF.TO HEADLIGHT SYSTEM [H/L-03]
J/C i141
J/C i211
J/C i140
J/C i210
ILLUMI-06 J
ILLUMI-06 K
ILLUMI-06 L
ILLUMI-06 M
ILLUMI-02 F
L
R
*1
B7
C27
C35
D21
A19
A29
WV
G
D29
C1
A1
B31
BY
A: B280 B: B281 C: i84 D: i171 BODY INTEGRATED UNIT

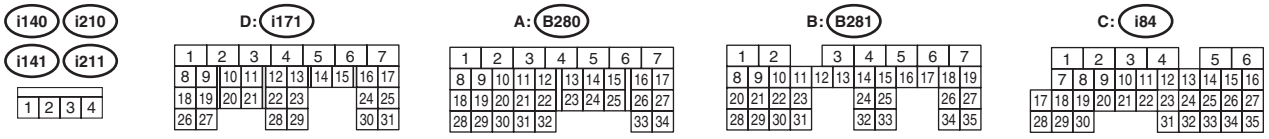
i140
i210
i141
i211
D: i171
A: B280
B: B281
C: i84

WI-33206

13.Clock System

A: WIRING DIAGRAM

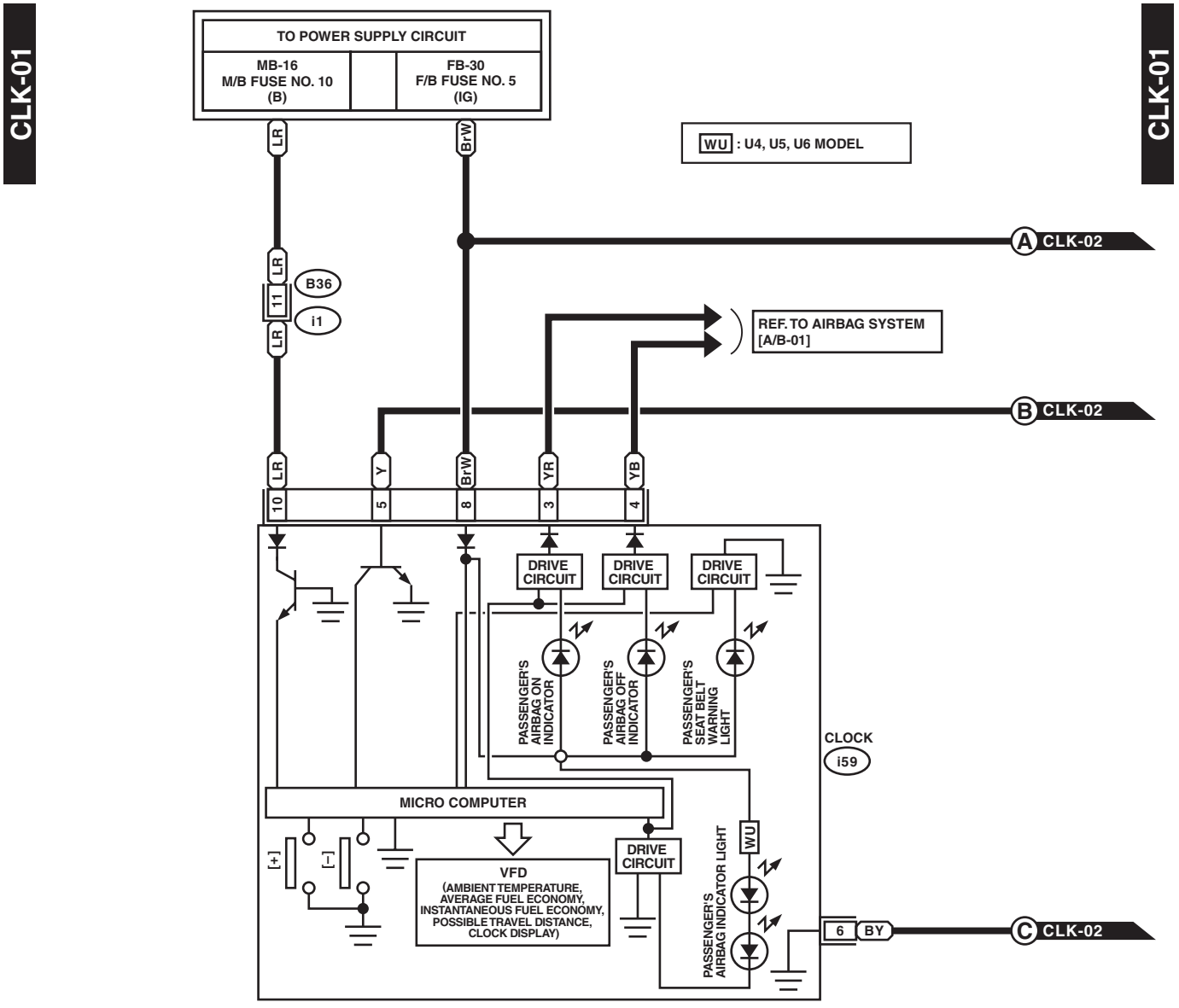

WI-33207

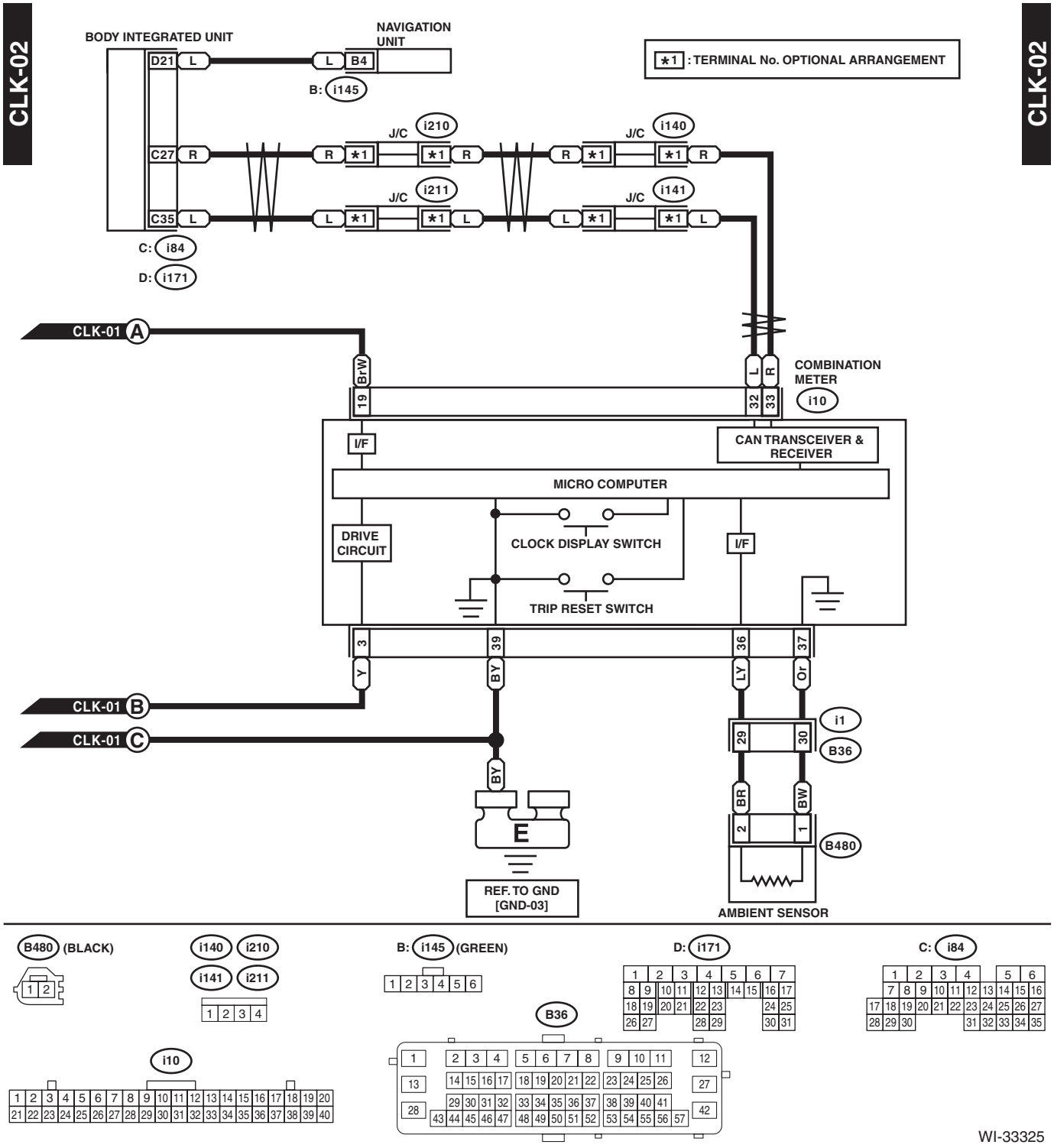
CLK-02
CLK-02
BODY INTEGRATED UNIT
NAVIGATION UNIT
*1 : TERMINAL No. OPTIONAL ARRANGEMENT
D21
L
L
B4
B: i145
J/C
i210
J/C
i140
C27
R
R
*1
*1
R
R
*1
*1
R
J/C
i211
J/C
i141
C35
L
L
*1
*1
L
L
*1
*1
L
C: i84
D: i171
CLK-01 A
BrW
19
L
R
32
33
COMBINATION METER
i10
I/F
CAN TRANSCEIVER & RECEIVER
MICRO COMPUTER
DRIVE CIRCUIT
CLOCK DISPLAY SWITCH
I/F
TRIP RESET SWITCH
3
39
36
37
Y
BY
LY
Or
CLK-01 B
CLK-01 C
i1
29
30
B36
BY
BR
BW
2
1
B480
E
REF. TO GND [GND-03]
AMBIENT SENSOR

B480 (BLACK)
1 2
i140 i210
i141 i211
1 2 3 4
B: i145 (GREEN)
1 2 3 4 5 6
D: i171
1 2 3 4 5 6 7
8 9 10 11 12 13 14 15 16 17
18 19 20 21 22 23 24 25
26 27 28 29 30 31
C: i84
1 2 3 4 5 6
7 8 9 10 11 12 13 14 15 16
17 18 19 20 21 22 23 24 25 26 27
28 29 30 31 32 33 34 35
i10
1 2 3 4 5 6 7 8 9 10 11 12 13 14 15 16 17 18 19 20
21 22 23 24 25 26 27 28 29 30 31 32 33 34 35 36 37 38 39 40
B36
1 2 3 4 5 6 7 8 9 10 11 12
13 14 15 16 17 18 19 20 21 22 23 24 25 26 27
28 29 30 31 32 33 34 35 36 37 38 39 40 41 42
43 44 45 46 47 48 49 50 51 52 53 54 55 56 57

WI-33325

14.Combination Meter System

A: WIRING DIAGRAM

C/M-01

C/M-01

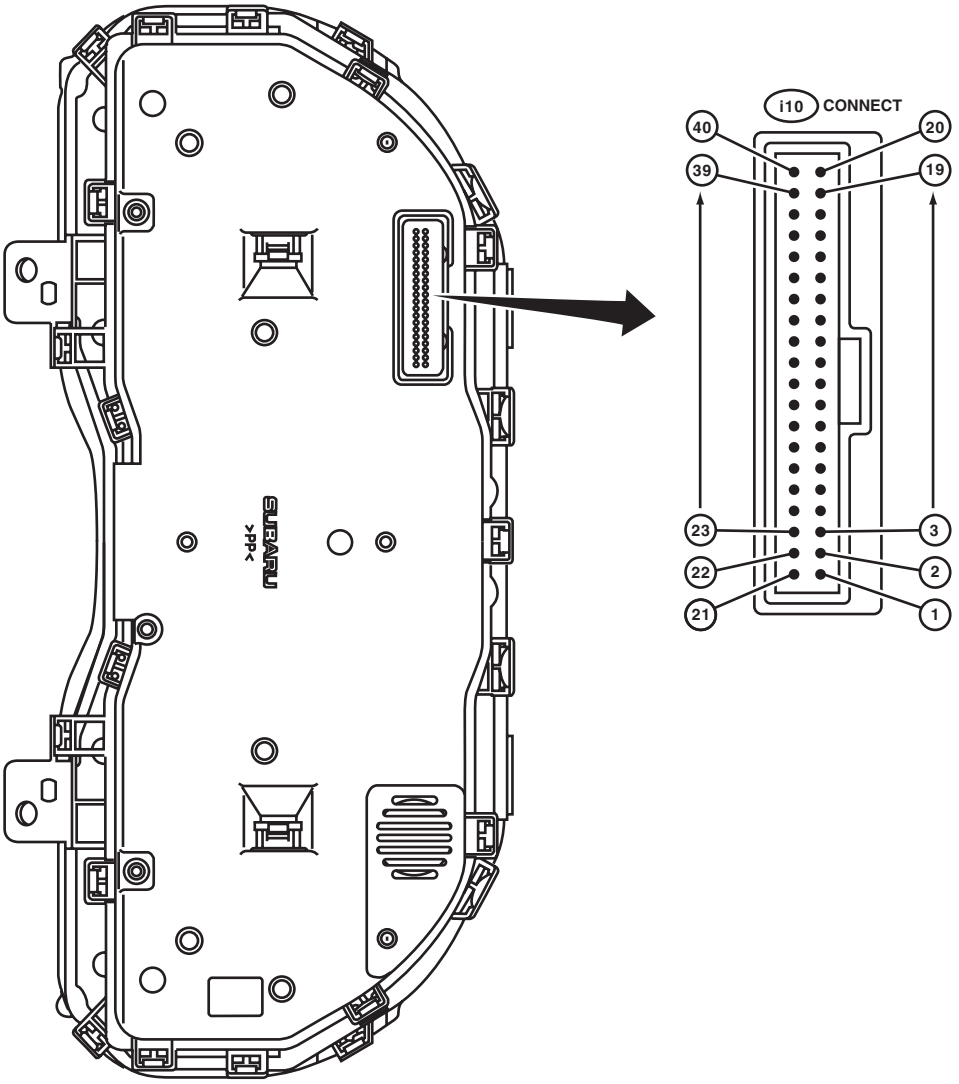

WI-25457

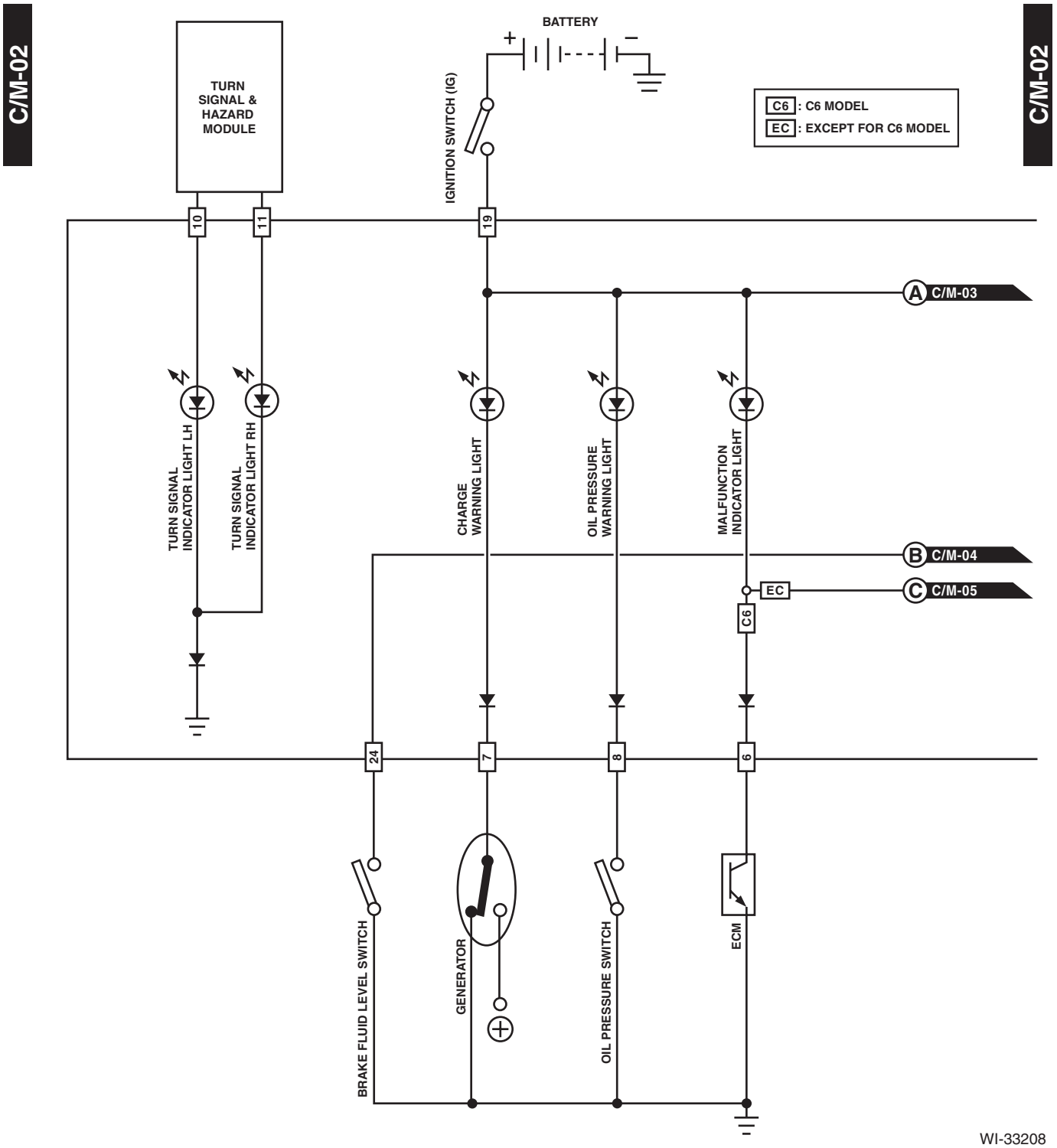
C/M-02
C/M-02
BATTERY
TURN SIGNAL & HAZARD MODULE
IGNITION SWITCH (IG)
C6 : C6 MODEL
EC : EXCEPT FOR C6 MODEL
10
11
19
A C/M-03
TURN SIGNAL INDICATOR LIGHT LH
TURN SIGNAL INDICATOR LIGHT RH
CHARGE WARNING LIGHT
OIL PRESSURE WARNING LIGHT
MALFUNCTION INDICATOR LIGHT
B C/M-04
EC
C C/M-05
C6
24
7
8
6
BRAKE FLUID LEVEL SWITCH
GENERATOR
OIL PRESSURE SWITCH
ECM
WI-33208

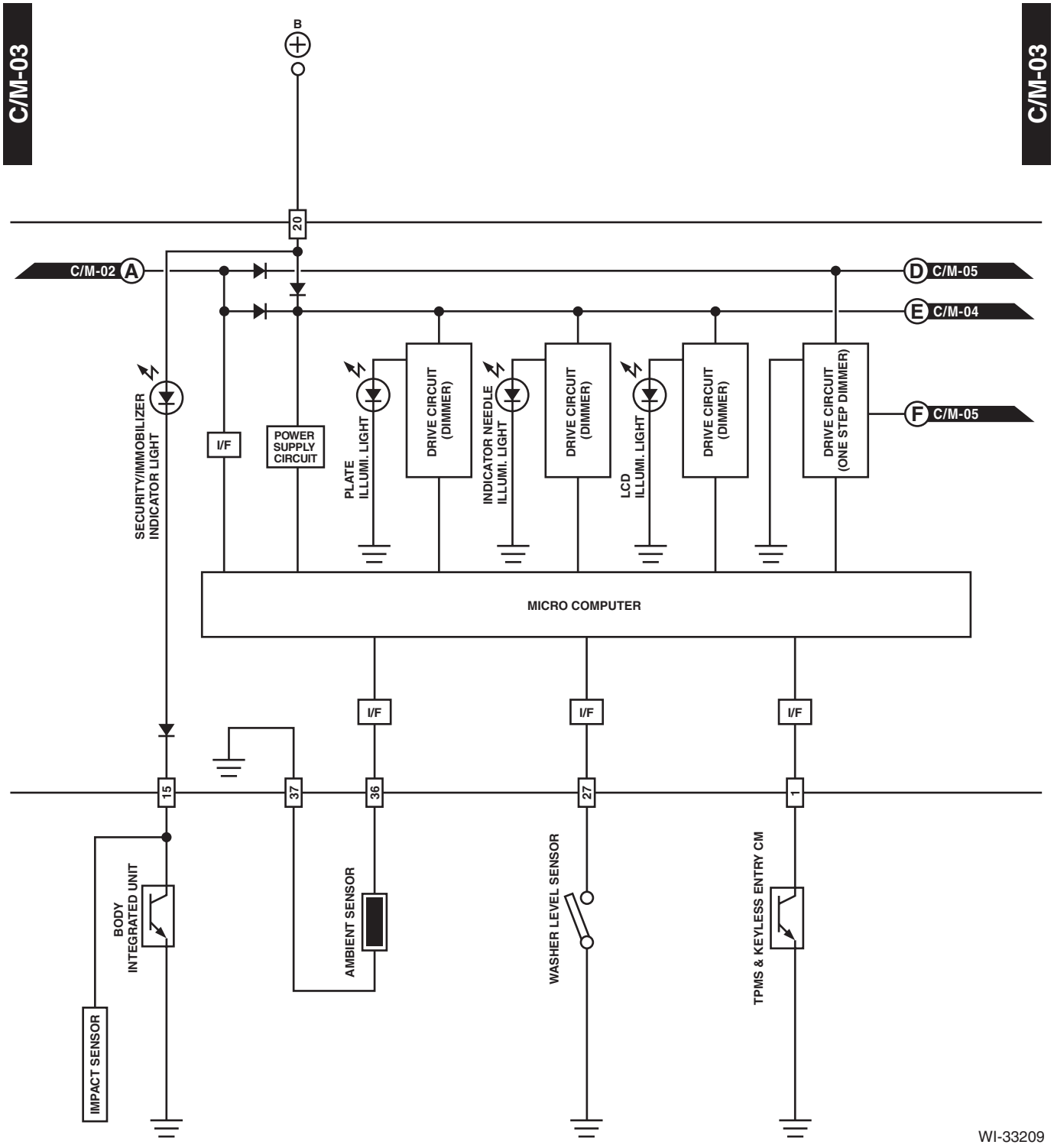
C/M-03
C/M-03
B
20
C/M-02 A
D C/M-05
E C/M-04
F C/M-05
SECURITY/IMMOBILIZER INDICATOR LIGHT
I/F
POWER SUPPLY CIRCUIT
PLATE ILLUMI. LIGHT
DRIVE CIRCUIT (DIMMER)
INDICATOR NEEDLE ILLUMI. LIGHT
DRIVE CIRCUIT (DIMMER)
LCD ILLUMI. LIGHT
DRIVE CIRCUIT (DIMMER)
DRIVE CIRCUIT (ONE STEP DIMMER)
MICRO COMPUTER
I/F
I/F
I/F
15
37
36
27
1
BODY INTEGRATED UNIT
AMBIENT SENSOR
WASHER LEVEL SENSOR
TPMS & KEYLESS ENTRY CM
IMPACT SENSOR
WI-33209

C/M-04

*1 : MANUAL SHIFT
HIGH ENGINE OIL TEMPERATURE
CUSTOMIZED
SEAT BELT
EPB
KEY WARNING
HEADLIGHT ON WARNING

SC : WITH SECURITY CM
OA : EXCEPT FOR NORMAL AUDIO MODEL
WN : WITH NAVIGATION
WS : WITH SUNROOF
EM : EXCEPT FOR MT MODEL

C/M-04

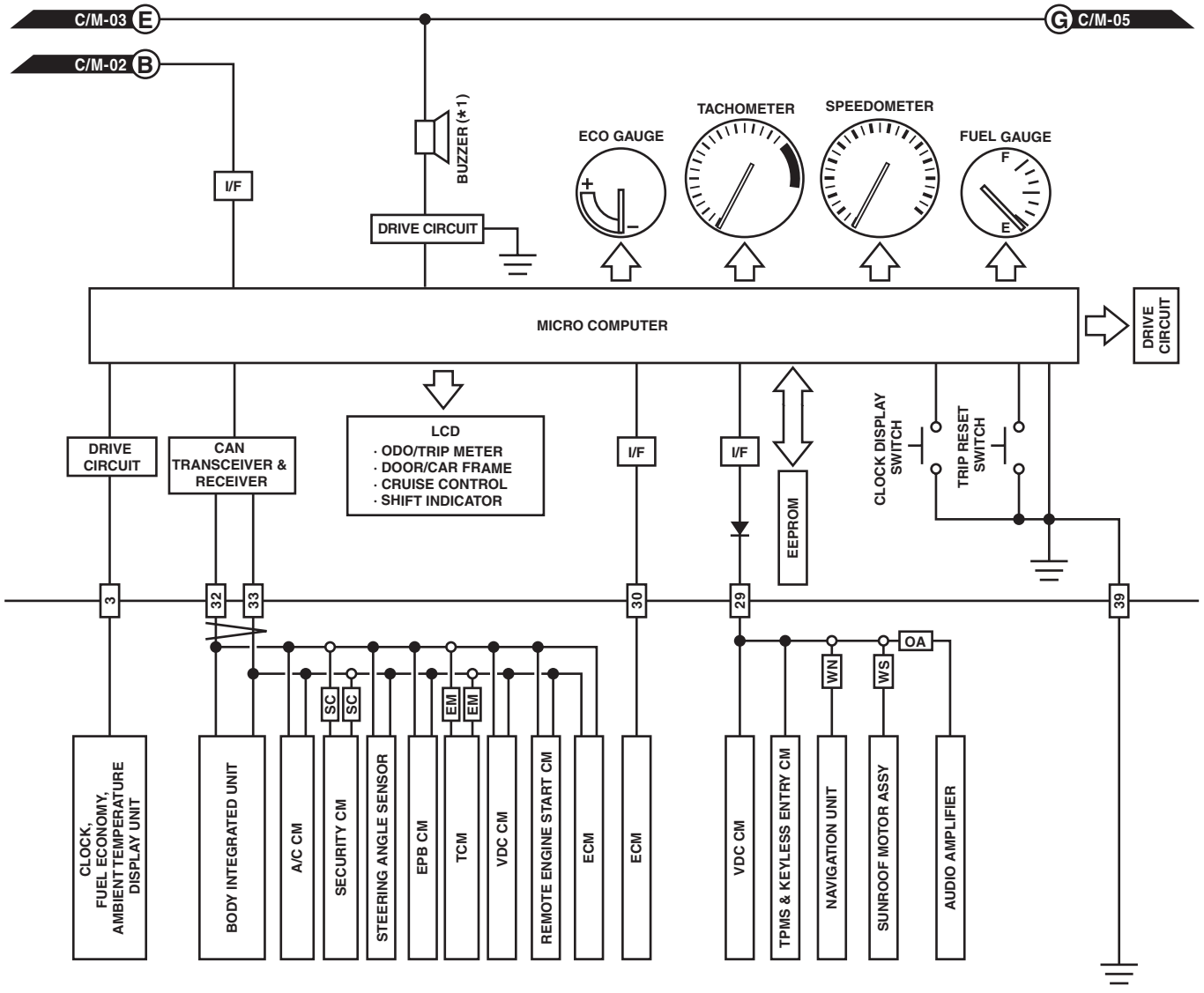

WI-33210

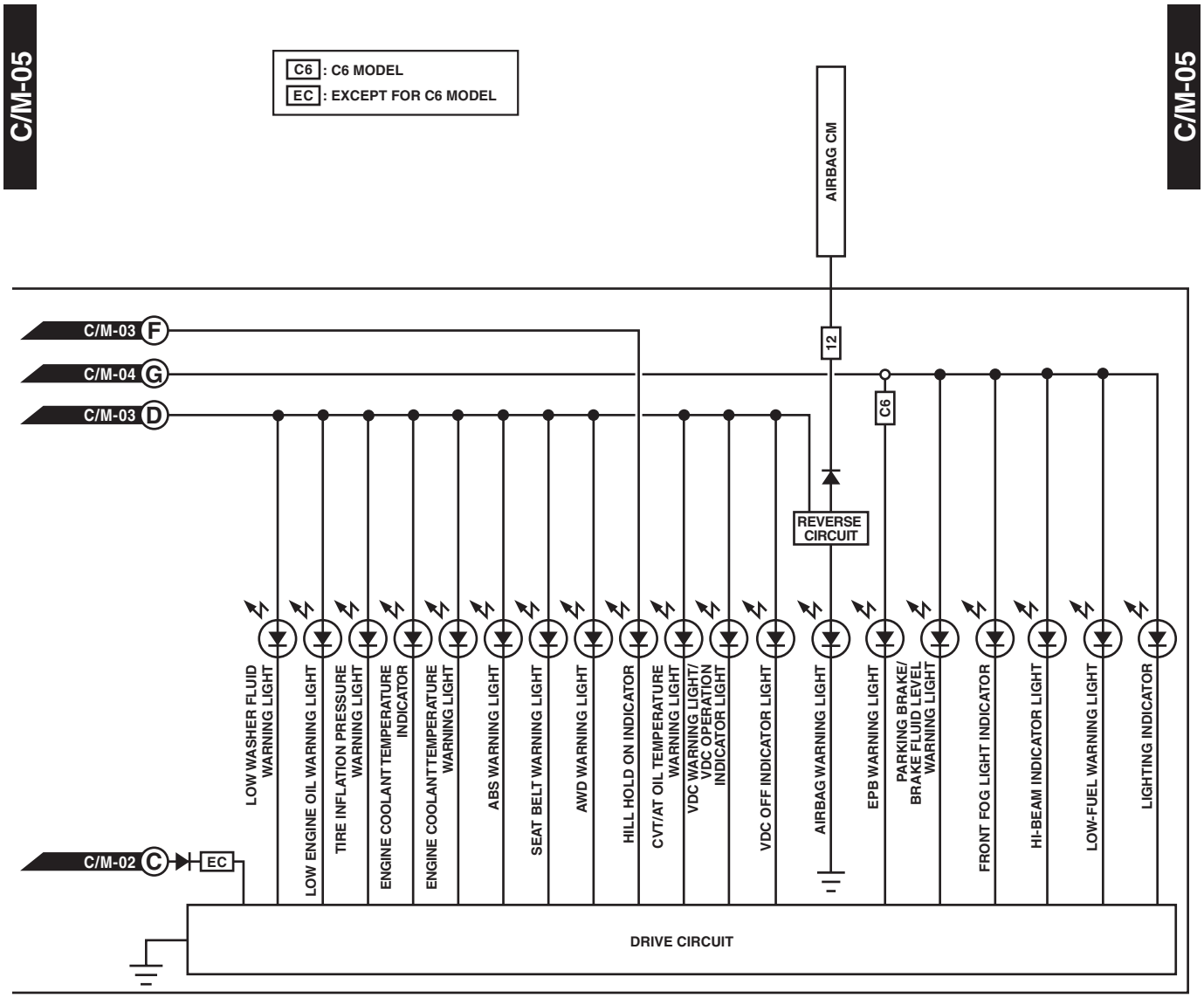
C/M-05
C/M-05
C6 : C6 MODEL
EC : EXCEPT FOR C6 MODEL
AIRBAG CM
12
C6
C/M-03 F
C/M-04 G
C/M-03 D
C/M-02 C
EC
REVERSE CIRCUIT
LOW WASHER FLUID WARNING LIGHT
LOW ENGINE OIL WARNING LIGHT
TIRE INFLATION PRESSURE WARNING LIGHT
ENGINE COOLANT TEMPERATURE INDICATOR
ENGINE COOLANT TEMPERATURE WARNING LIGHT
ABS WARNING LIGHT
SEAT BELT WARNING LIGHT
AWD WARNING LIGHT
HILL HOLD ON INDICATOR
CVT/AT OIL TEMPERATURE WARNING LIGHT
VDC WARNING LIGHT/ VDC OPERATION INDICATOR LIGHT
VDC OFF INDICATOR LIGHT
AIRBAG WARNING LIGHT
EPB WARNING LIGHT
PARKING BRAKE/ BRAKE FLUID LEVEL WARNING LIGHT
FRONT FOG LIGHT INDICATOR
HI-BEAM INDICATOR LIGHT
LOW-FUEL WARNING LIGHT
LIGHTING INDICATOR
DRIVE CIRCUIT

WI-33211

15.Coolant Temperature System

A: WIRING DIAGRAM

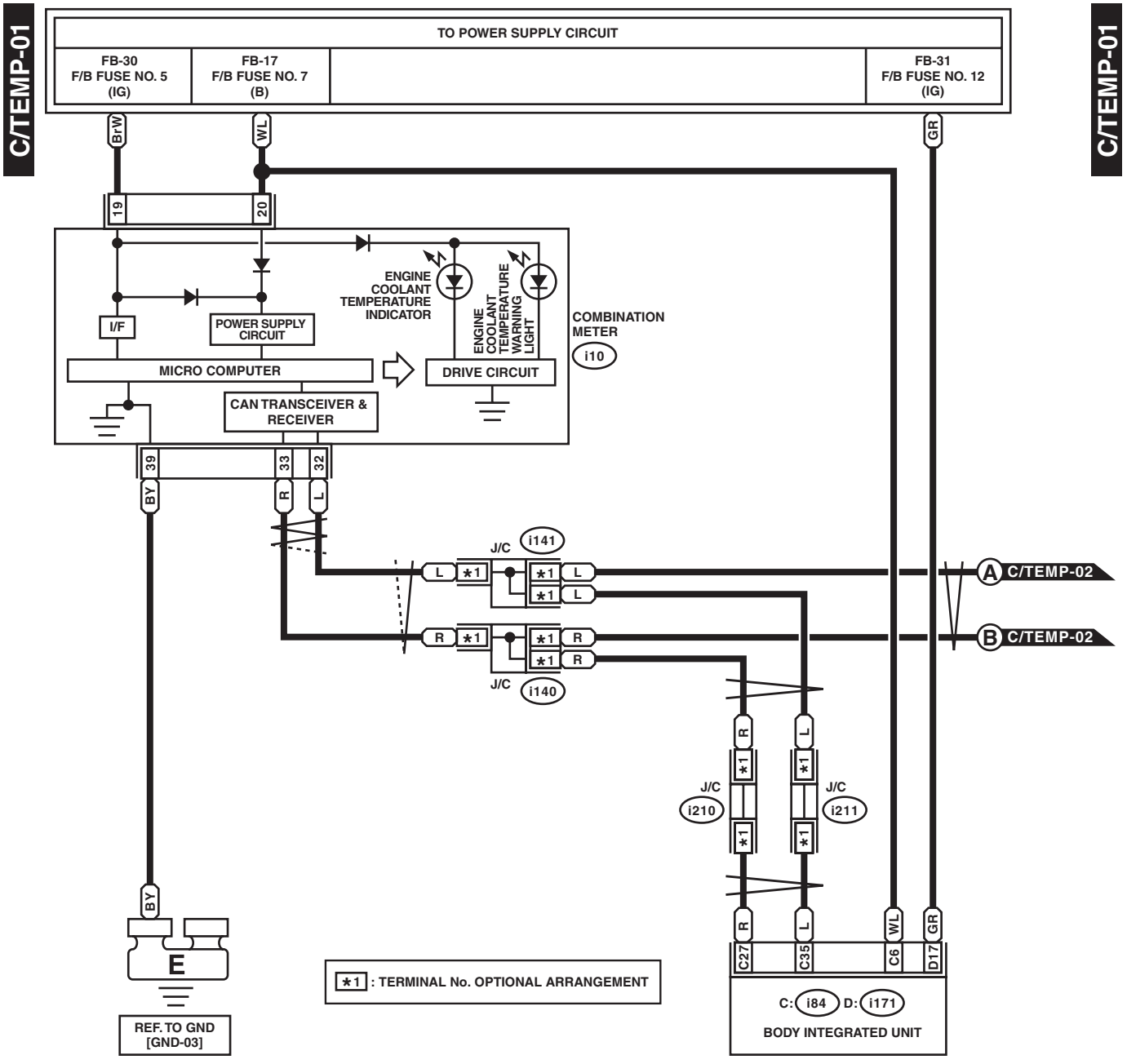

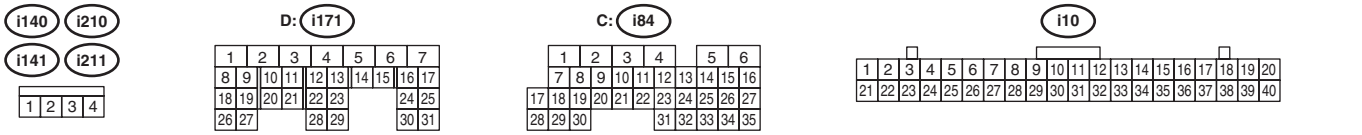

WI-33212

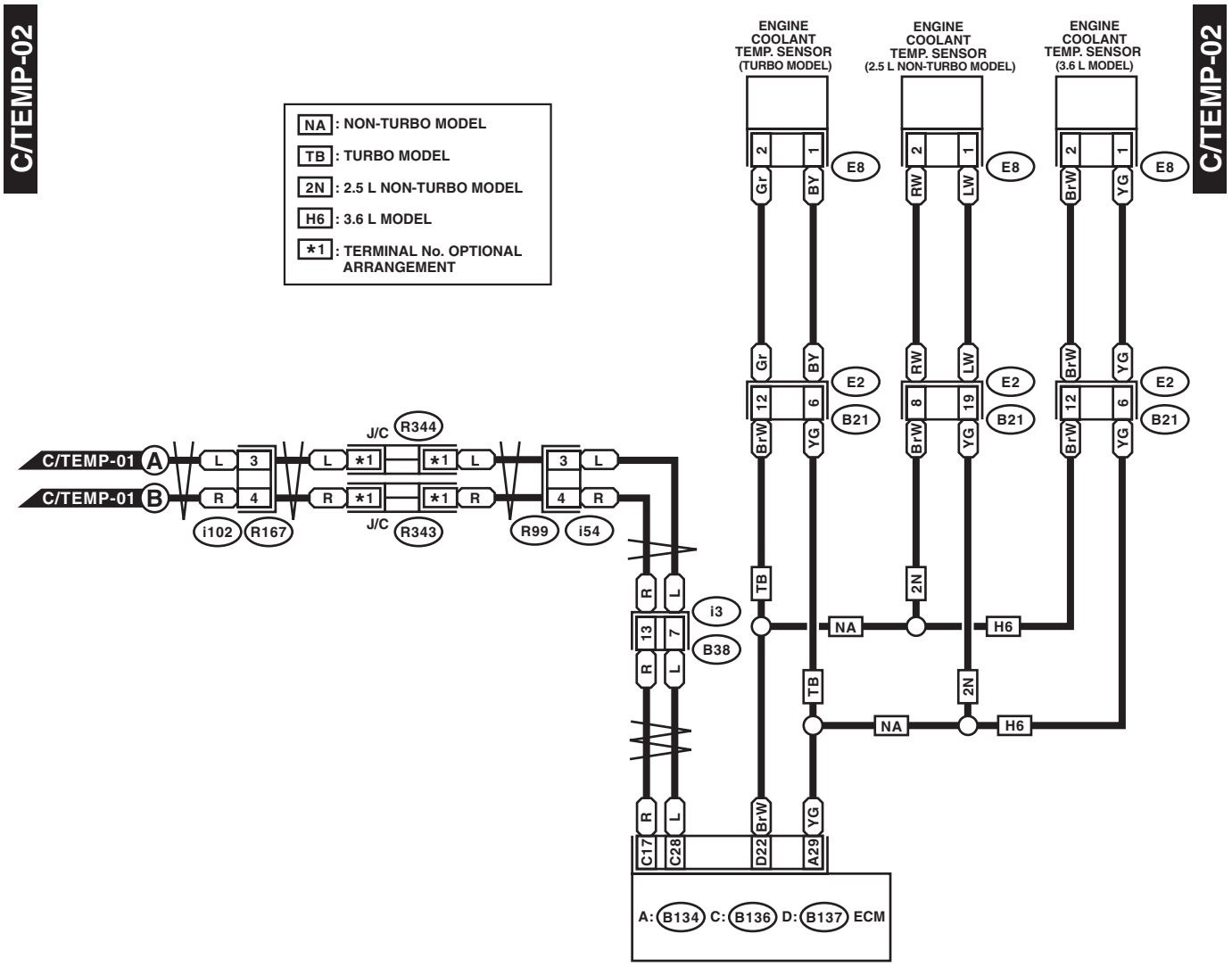
C/TEMP-02
C/TEMP-02
NA : NON-TURBO MODEL
TB : TURBO MODEL
2N : 2.5 L NON-TURBO MODEL
H6 : 3.6 L MODEL
*1 : TERMINAL No. OPTIONAL ARRANGEMENT
ENGINE COOLANT TEMP. SENSOR (TURBO MODEL)
ENGINE COOLANT TEMP. SENSOR (2.5 L NON-TURBO MODEL)
ENGINE COOLANT TEMP. SENSOR (3.6 L MODEL)
E8
E2
B21
C/TEMP-01 A
C/TEMP-01 B
J/C R344
J/C R343
i102
R167
R99
i54
i3
B38
TB
2N
NA
H6
C17
C28
D22
A29
A: B134 C: B136 D: B137 ECM

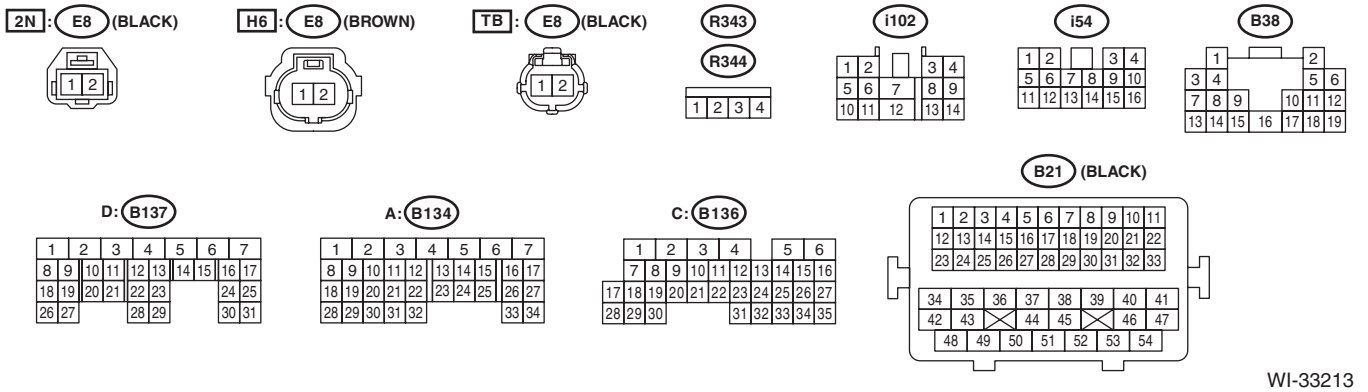
2N : E8 (BLACK)
H6 : E8 (BROWN)
TB : E8 (BLACK)
R343
R344
i102
i54
B38
D: B137
A: B134
C: B136
B21 (BLACK)

WI-33213

16.Cruise Control System

A: WIRING DIAGRAM

1. 2.5 L NON-TURBO MODEL

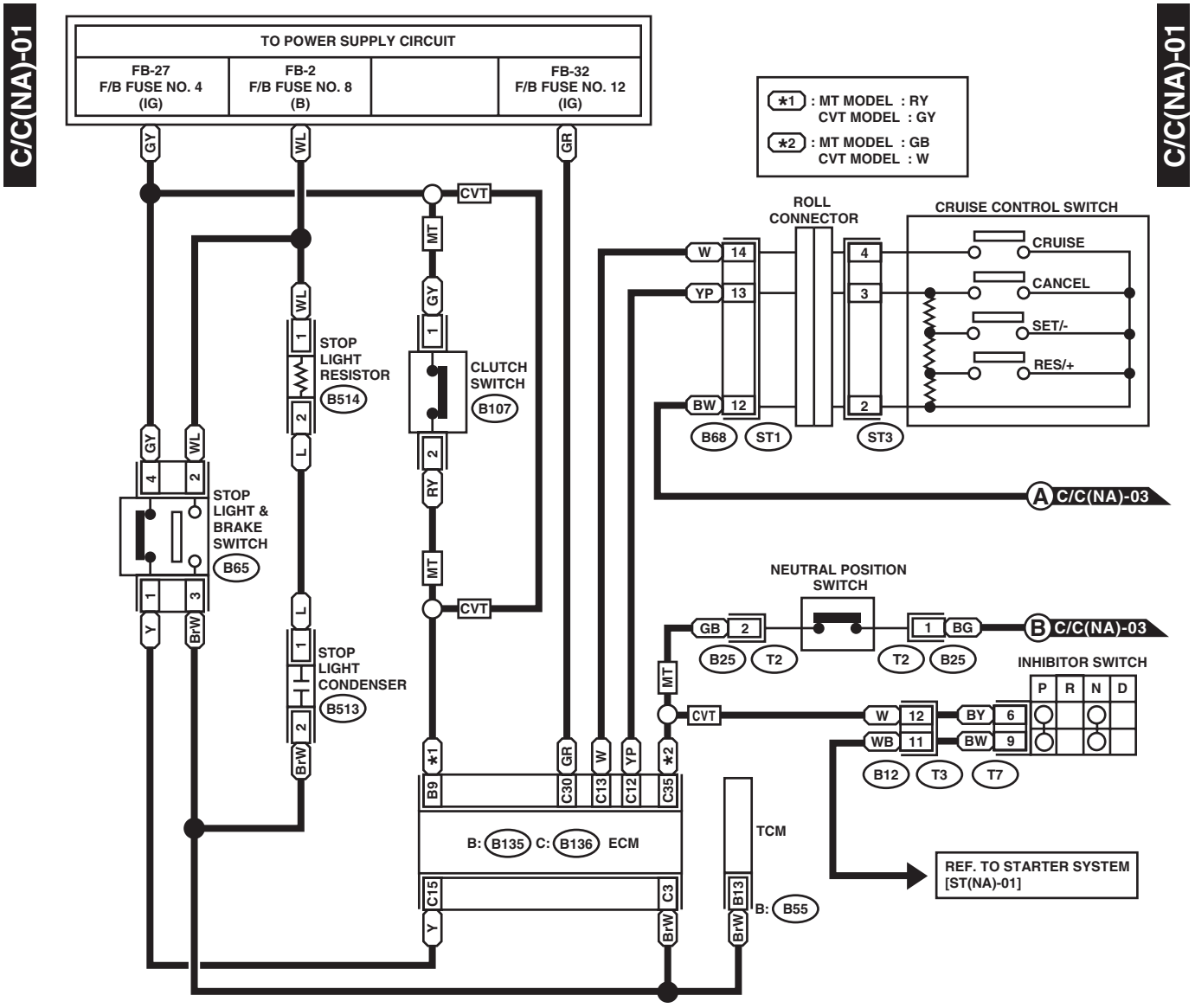

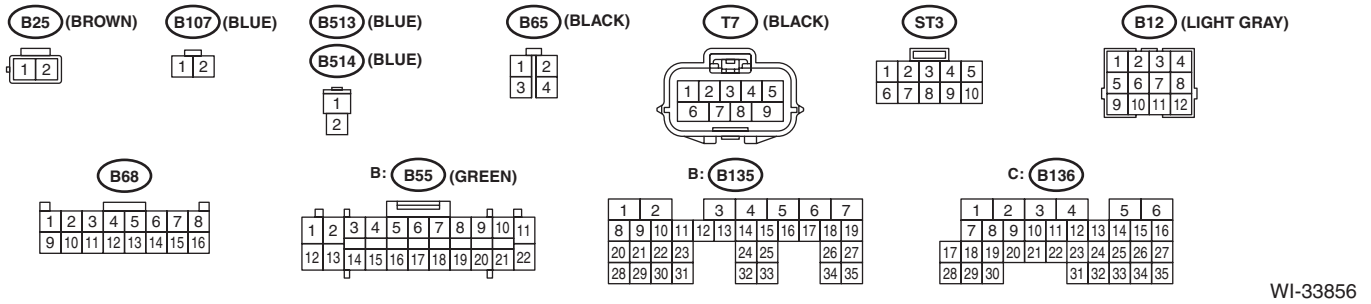

WI-33856

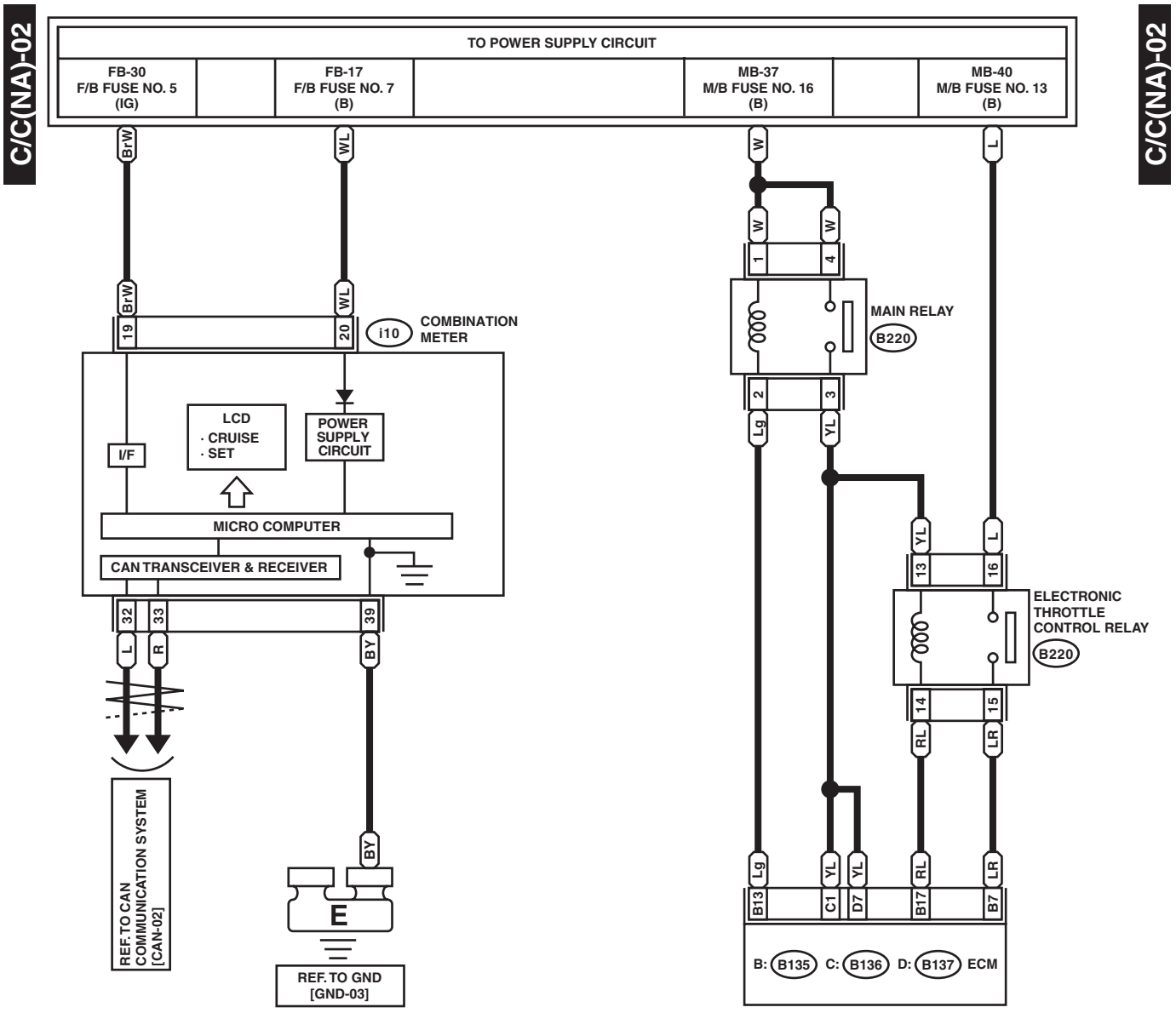
C/C(NA)-02
C/C(NA)-02
TO POWER SUPPLY CIRCUIT
FB-30
F/B FUSE NO. 5
(IG)
FB-17
F/B FUSE NO. 7
(B)
MB-37
M/B FUSE NO. 16
(B)
MB-40
M/B FUSE NO. 13
(B)
BrW
WL
W
L
i10
COMBINATION METER
LCD
· CRUISE
· SET
I/F
POWER SUPPLY CIRCUIT
MICRO COMPUTER
CAN TRANSCEIVER & RECEIVER
MAIN RELAY
B220
ELECTRONIC THROTTLE CONTROL RELAY
B220
REF. TO CAN COMMUNICATION SYSTEM [CAN-02]
REF. TO GND [GND-03]
B: B135 C: B136 D: B137 ECM

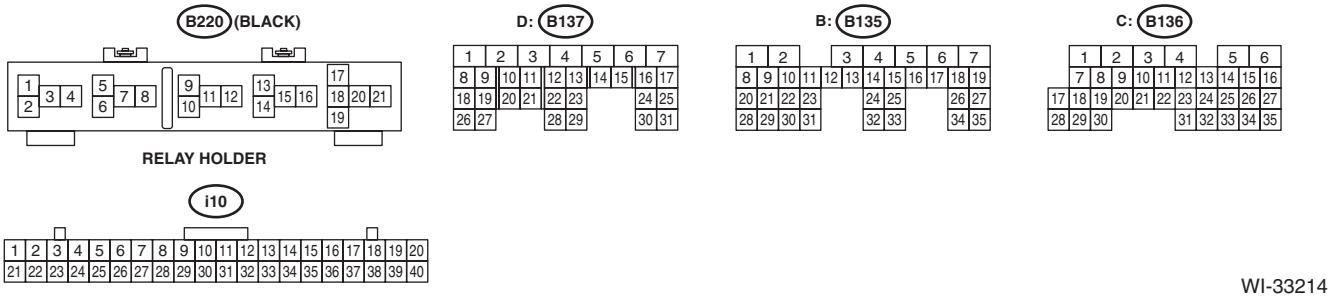
B220 (BLACK)
RELAY HOLDER
D: B137
B: B135
C: B136
i10

WI-33214

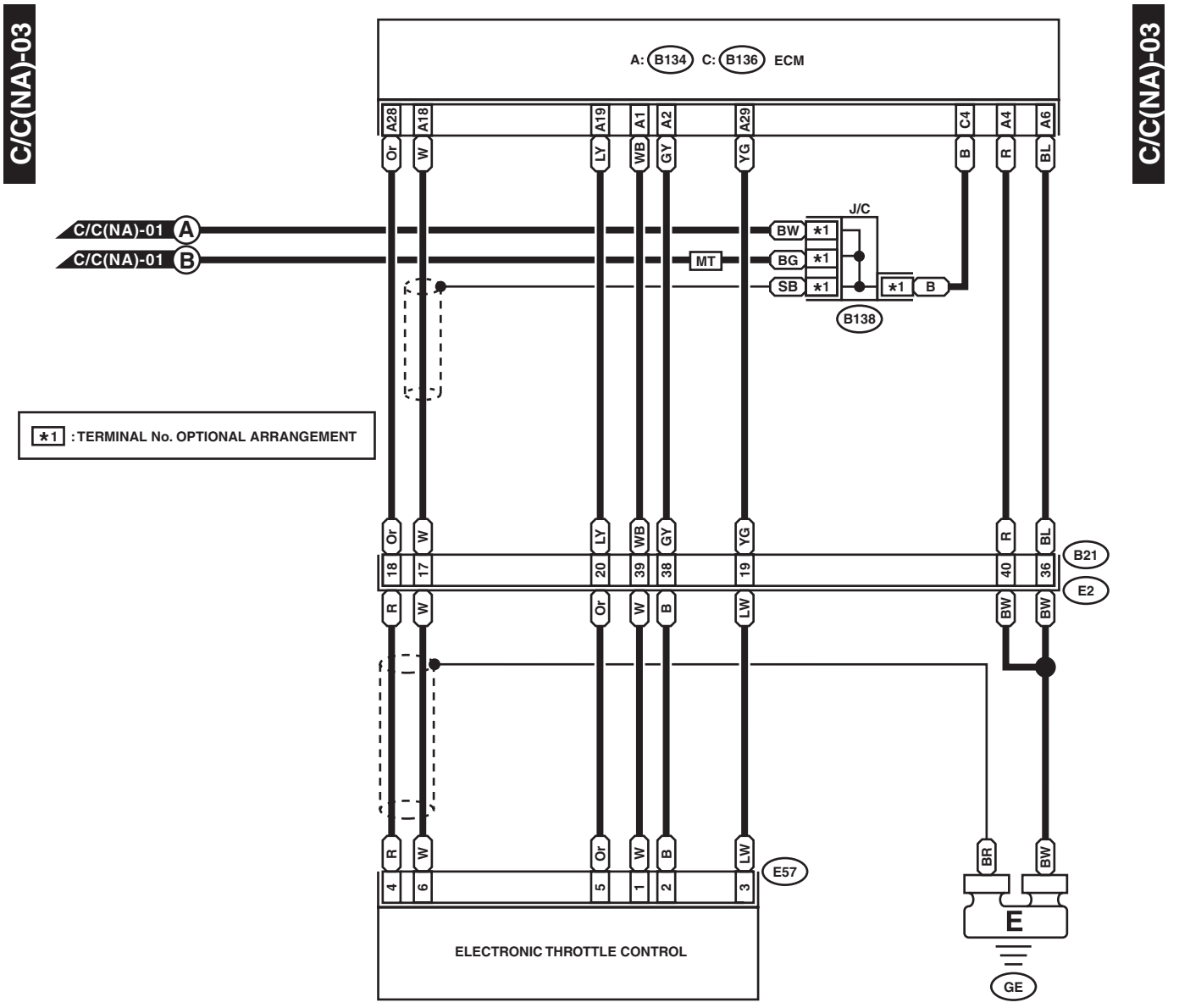
C/C(NA)-03
C/C(NA)-03
A: B134 C: B136 ECM
A28 A18 A19 A1 A2 A29 C4 A4 A6
Or W LY WB GY YG B R BL
C/C(NA)-01 A
C/C(NA)-01 B
MT
J/C
BW *1
BG *1
SB *1
*1 B
B138
*1 : TERMINAL No. OPTIONAL ARRANGEMENT
Or W LY WB GY YG R BL
18 17 20 39 38 19 40 36
B21
E2
R W Or W B LW BW BW
R W Or W B LW
4 6 5 1 2 3
E57
BR BW
E
GE
ELECTRONIC THROTTLE CONTROL

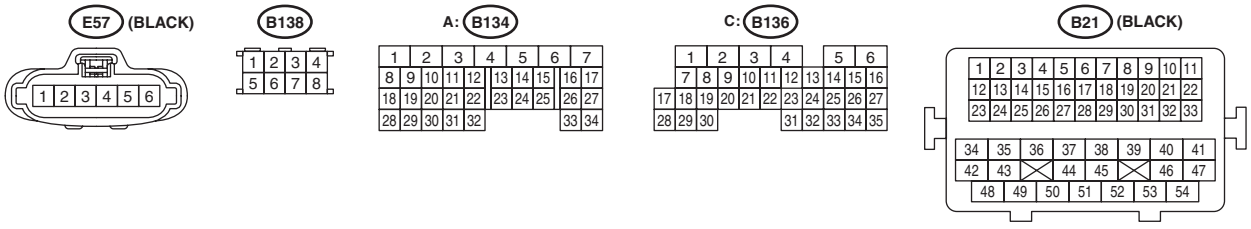
E57 (BLACK)
1 2 3 4 5 6
B138
1 2 3 4
5 6 7 8
A: B134
1 2 3 4 5 6 7
8 9 10 11 12 13 14 15 16 17
18 19 20 21 22 23 24 25 26 27
28 29 30 31 32 33 34
C: B136
1 2 3 4 5 6
7 8 9 10 11 12 13 14 15 16
17 18 19 20 21 22 23 24 25 26 27
28 29 30 31 32 33 34 35
B21 (BLACK)
1 2 3 4 5 6 7 8 9 10 11
12 13 14 15 16 17 18 19 20 21 22
23 24 25 26 27 28 29 30 31 32 33
34 35 36 37 38 39 40 41
42 43 44 45 46 47
48 49 50 51 52 53 54

WI-30598

2. EXCEPT FOR 2.5 L NON-TURBO MODEL

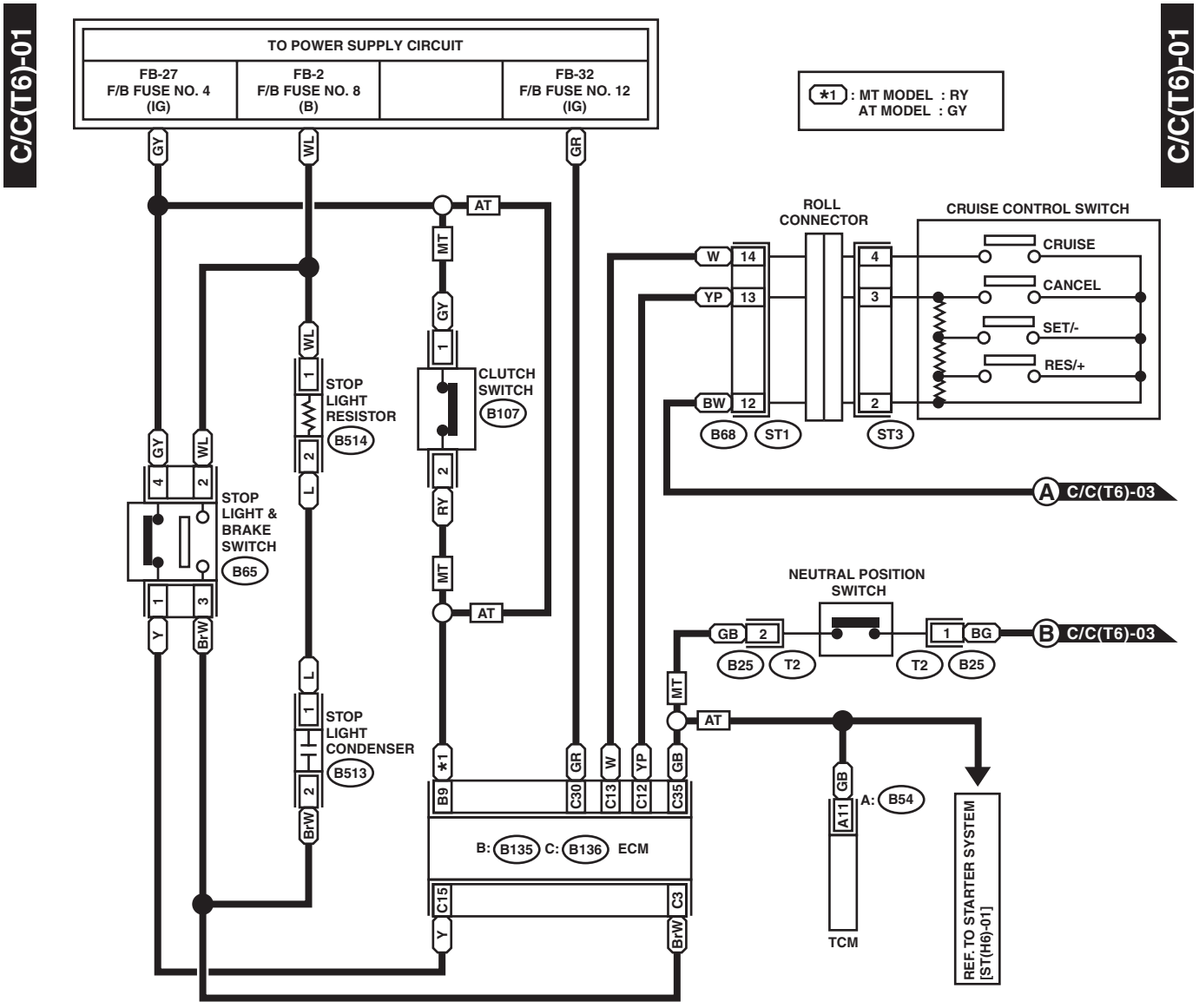

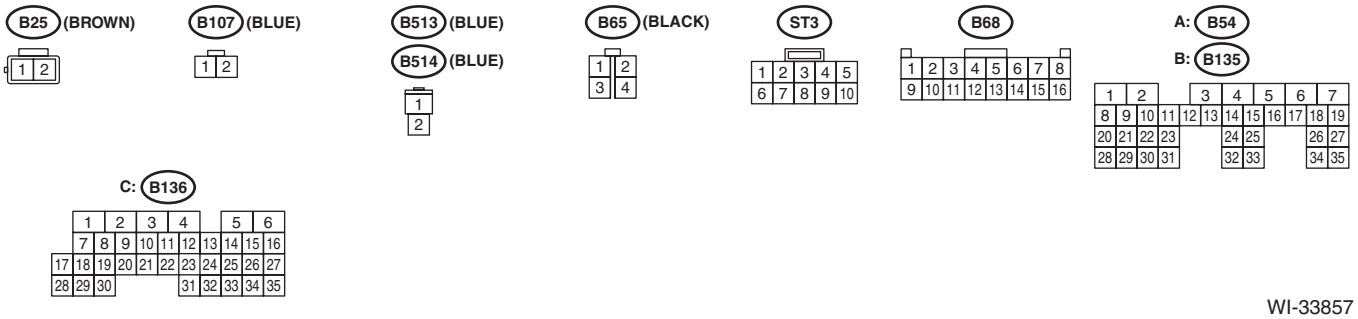

WI-33857

C/C(T6)-02

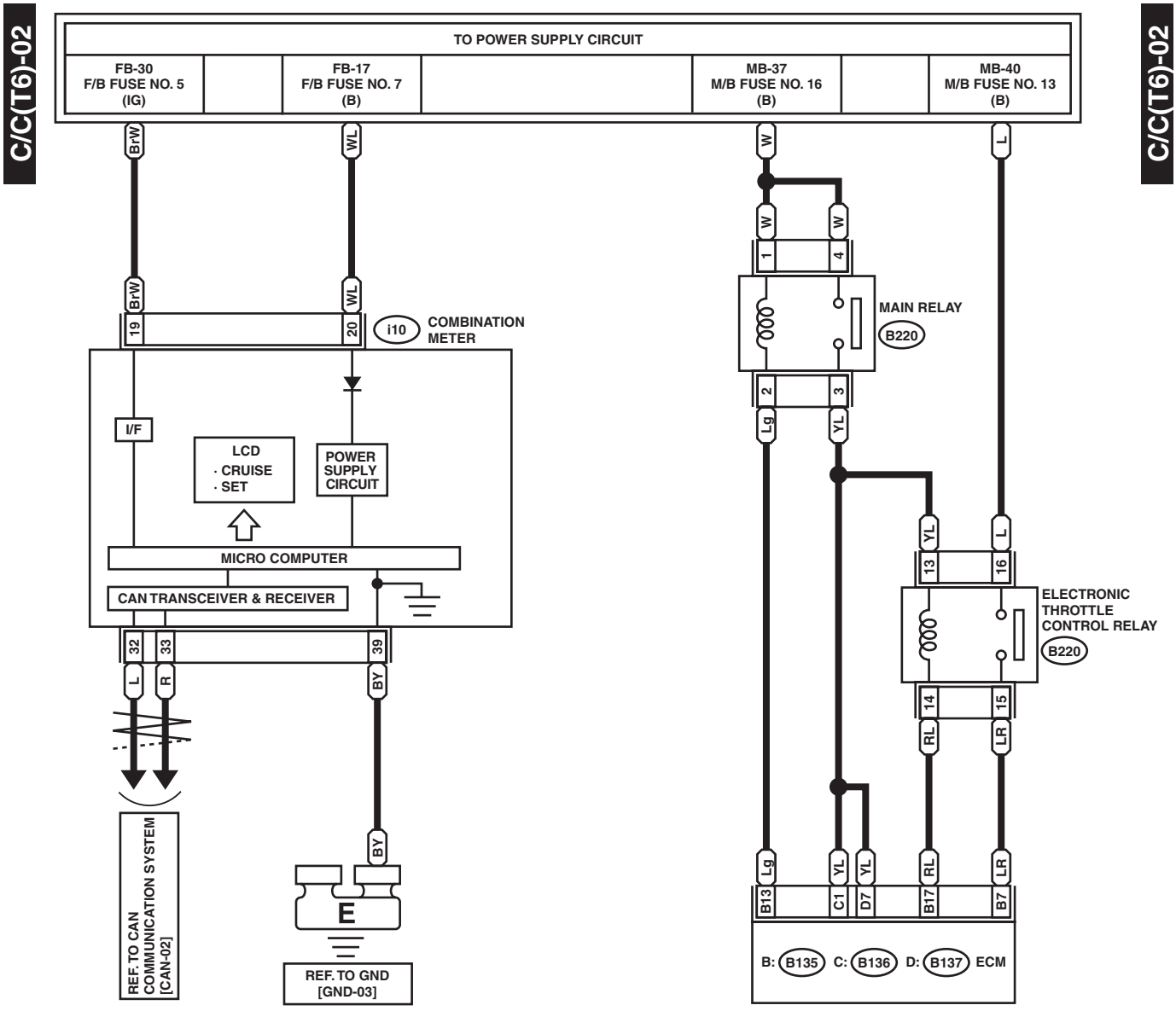

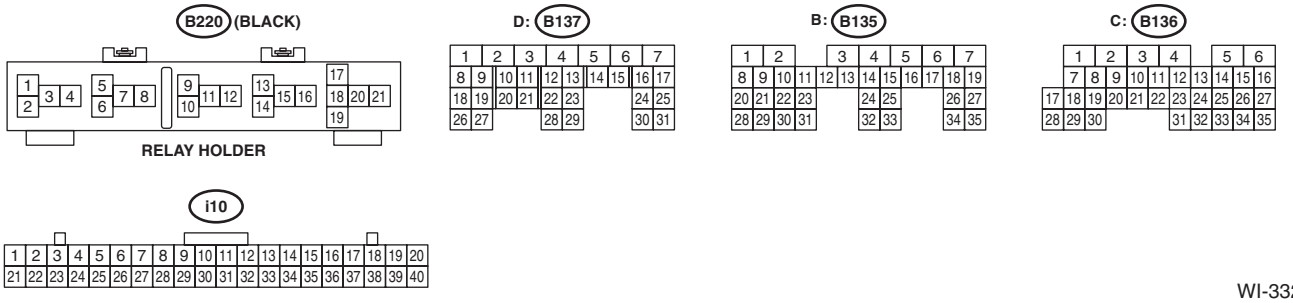

WI-33215

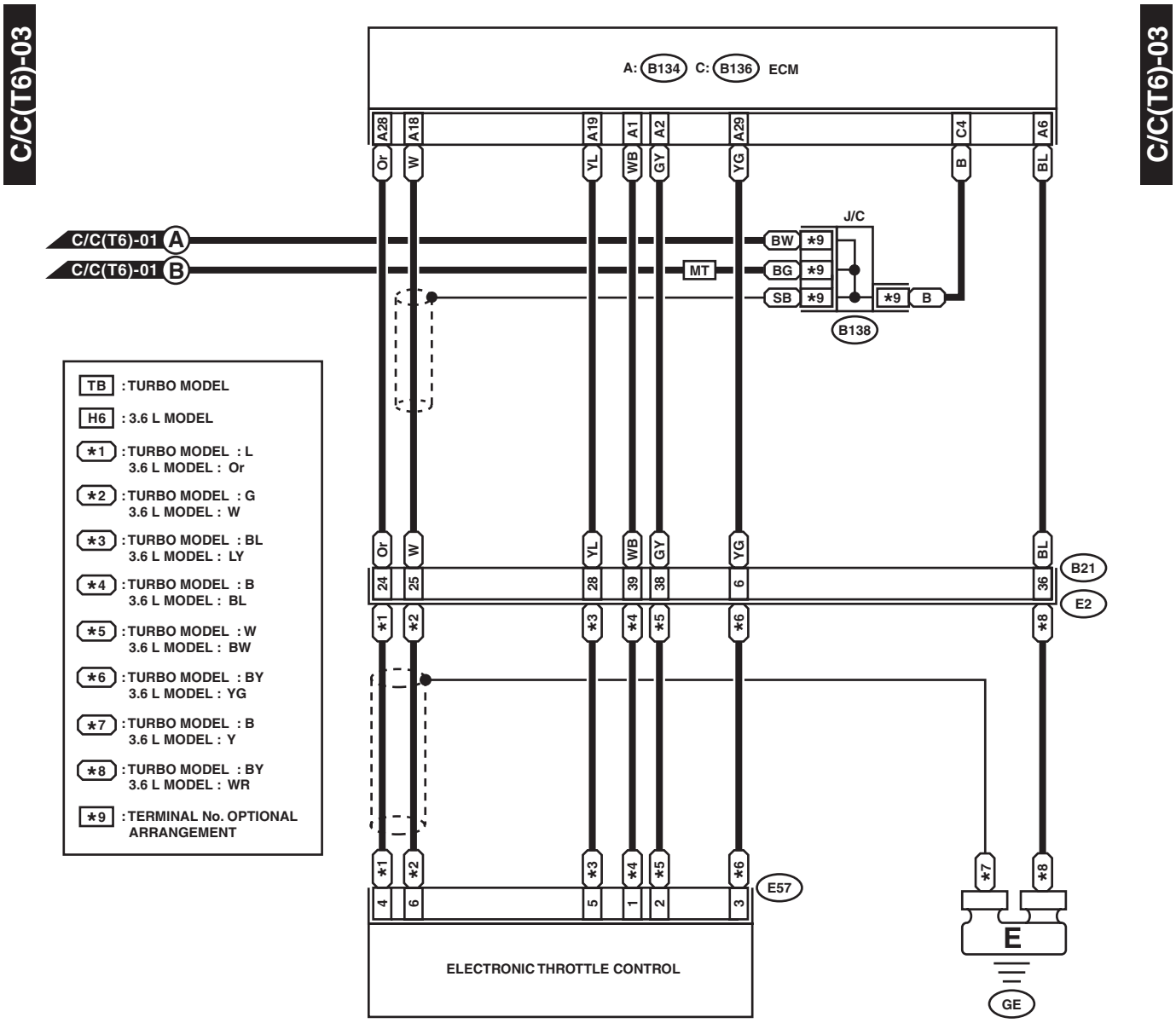
C/C(T6)-03
C/C(T6)-03
A: B134 C: B136 ECM
A28 A18 A19 A1 A2 A29 C4 A6
Or W YL WB GY YG B BL
C/C(T6)-01 A
C/C(T6)-01 B
J/C
BW *9
BG *9
SB *9
MT
*9 B
B138
TB : TURBO MODEL
H6 : 3.6 L MODEL
*1 : TURBO MODEL : L
3.6 L MODEL : Or
*2 : TURBO MODEL : G
3.6 L MODEL : W
*3 : TURBO MODEL : BL
3.6 L MODEL : LY
*4 : TURBO MODEL : B
3.6 L MODEL : BL
*5 : TURBO MODEL : W
3.6 L MODEL : BW
*6 : TURBO MODEL : BY
3.6 L MODEL : YG
*7 : TURBO MODEL : B
3.6 L MODEL : Y
*8 : TURBO MODEL : BY
3.6 L MODEL : WR
*9 : TERMINAL No. OPTIONAL ARRANGEMENT
Or W YL WB GY YG BL
24 25 28 39 38 6 36
B21
E2
*1 *2 *3 *4 *5 *6 *8
4 6 5 1 2 3
E57
*7 *8
E
GE
ELECTRONIC THROTTLE CONTROL

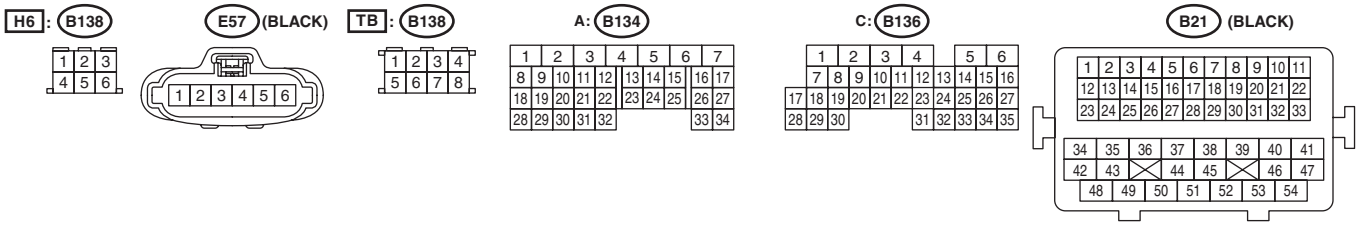
H6 : B138
E57 (BLACK)
TB : B138
A: B134
C: B136
B21 (BLACK)

WI-30599

17.CVT Control System

A: WIRING DIAGRAM

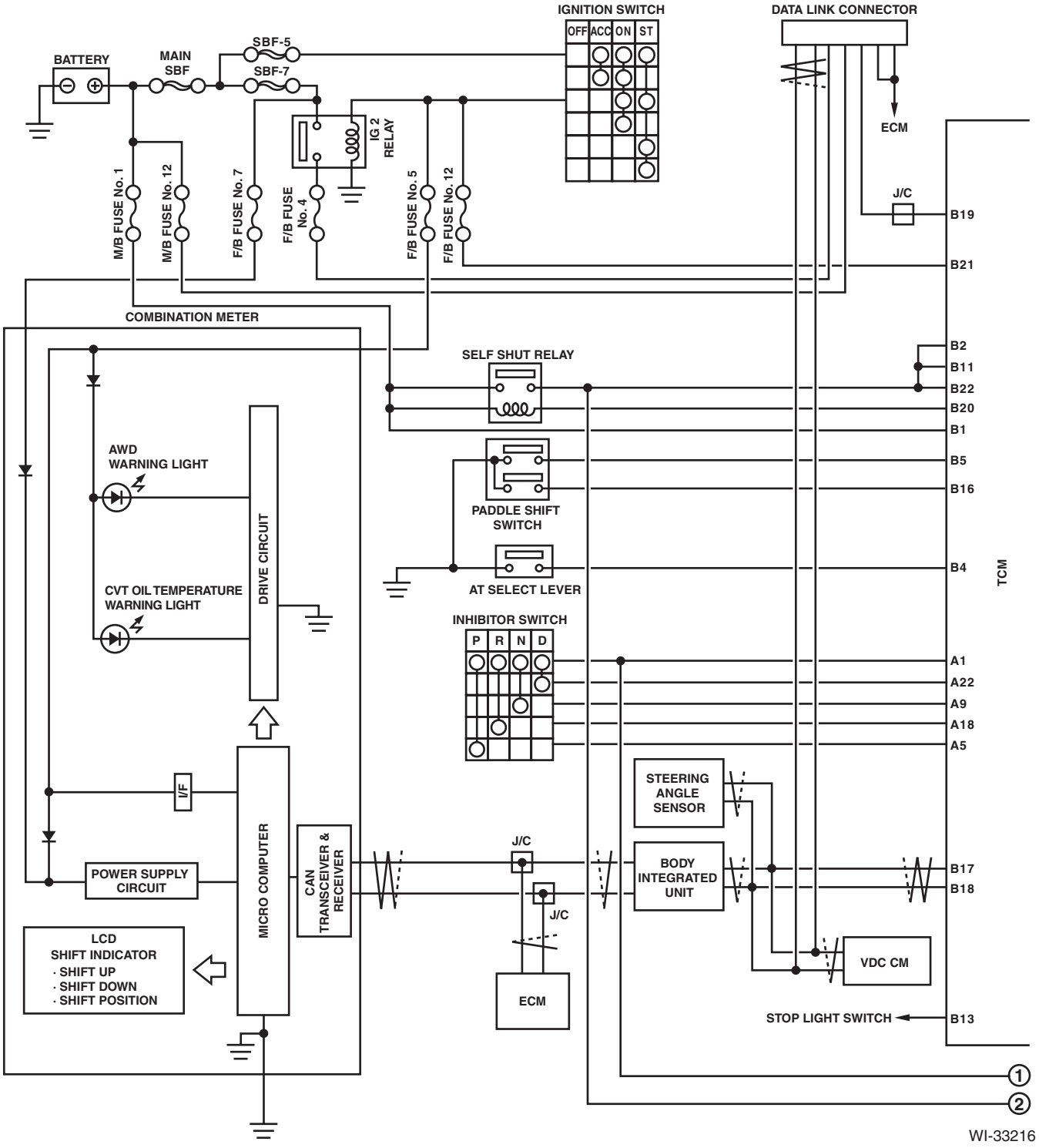

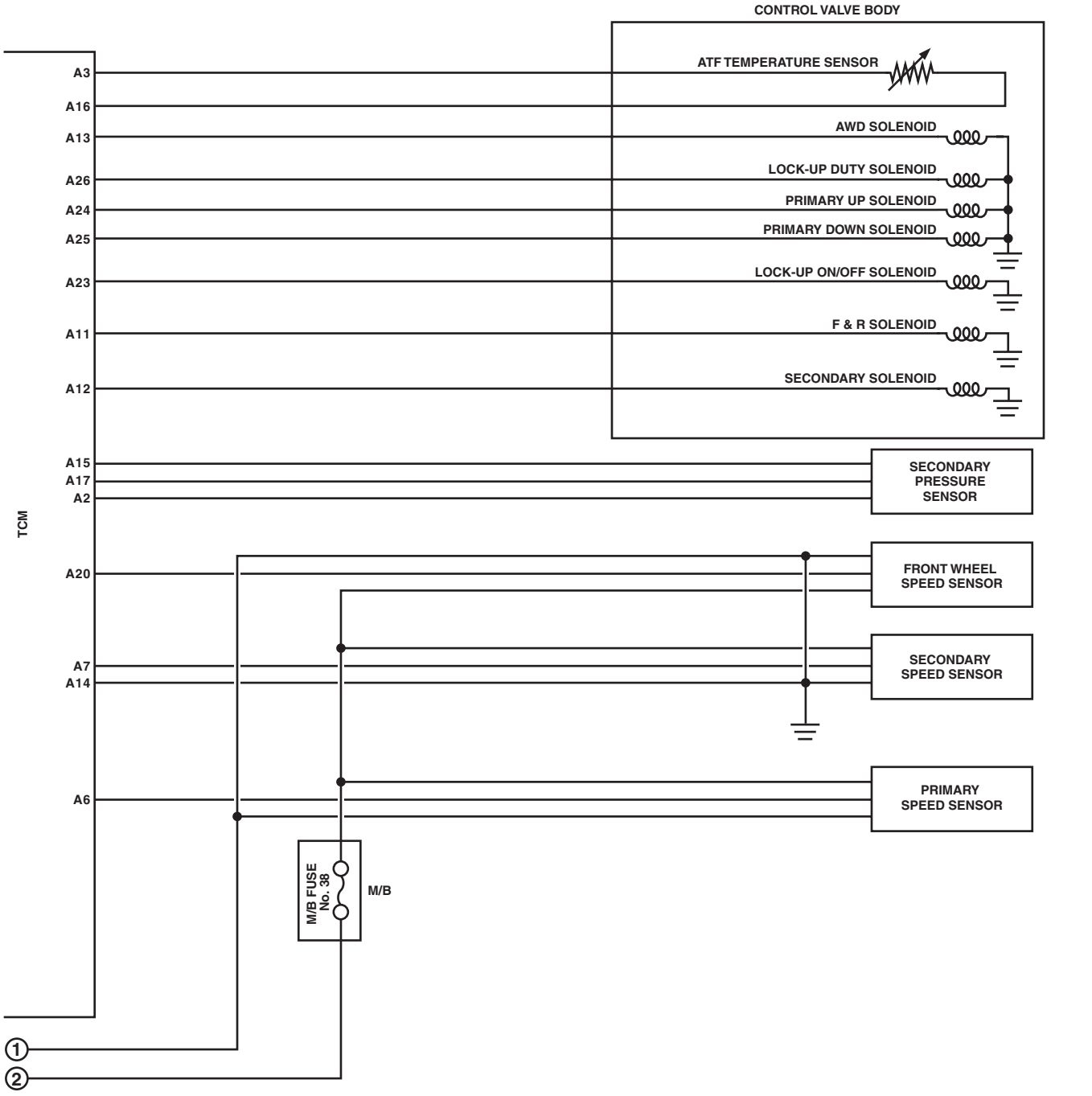
CONTROL VALVE BODY
ATF TEMPERATURE SENSOR
AWD SOLENOID
LOCK-UP DUTY SOLENOID
PRIMARY UP SOLENOID
PRIMARY DOWN SOLENOID
LOCK-UP ON/OFF SOLENOID
F & R SOLENOID
SECONDARY SOLENOID
A3
A16
A13
A26
A24
A25
A23
A11
A12
TCM
A15
A17
A2
A20
A7
A14
A6
SECONDARY PRESSURE SENSOR
FRONT WHEEL SPEED SENSOR
SECONDARY SPEED SENSOR
PRIMARY SPEED SENSOR
M/B FUSE No. 38
M/B
1
2

WI-29349

CVT-01

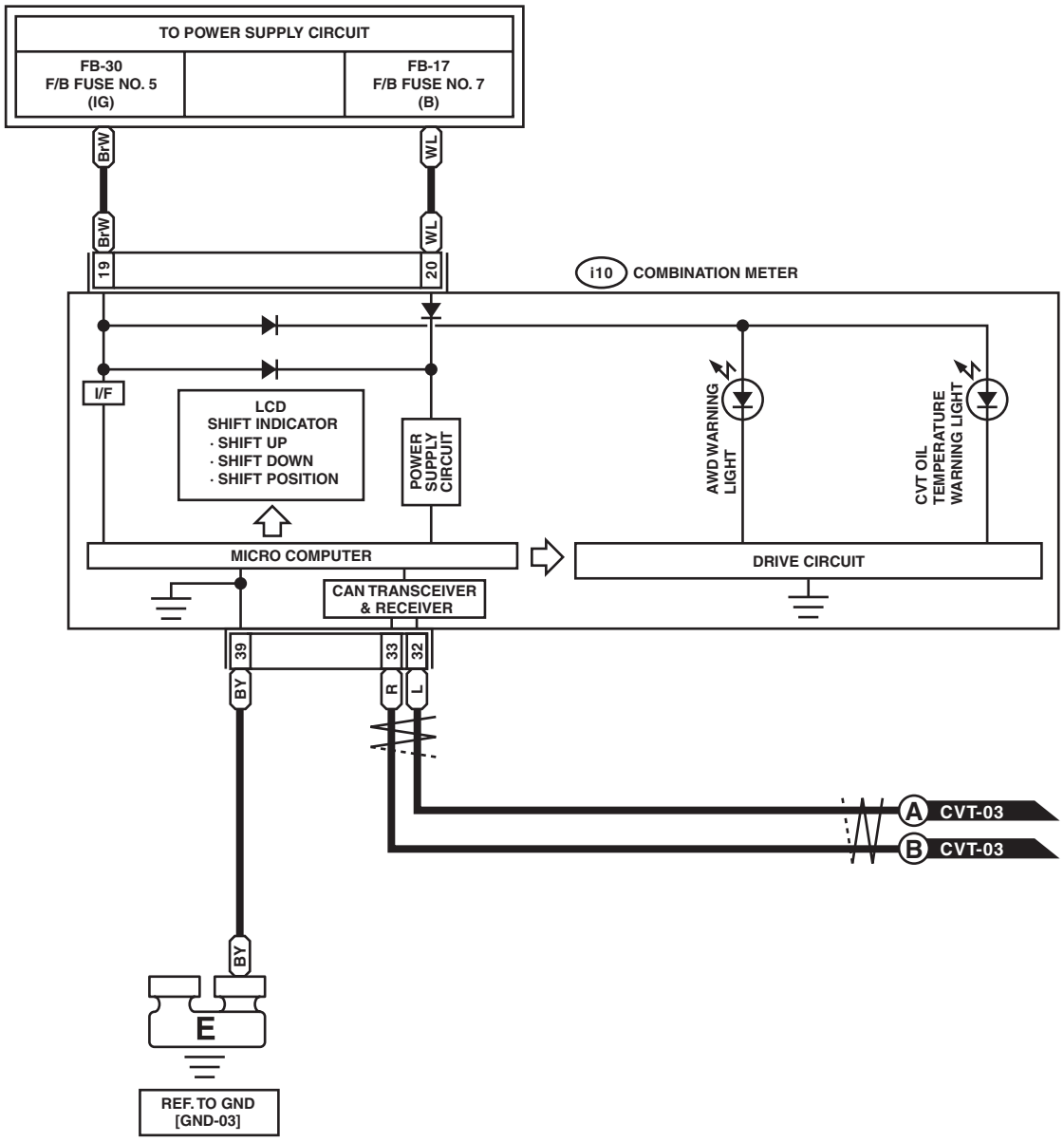

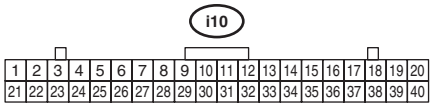

WI-29350

CVT-02

CVT-02

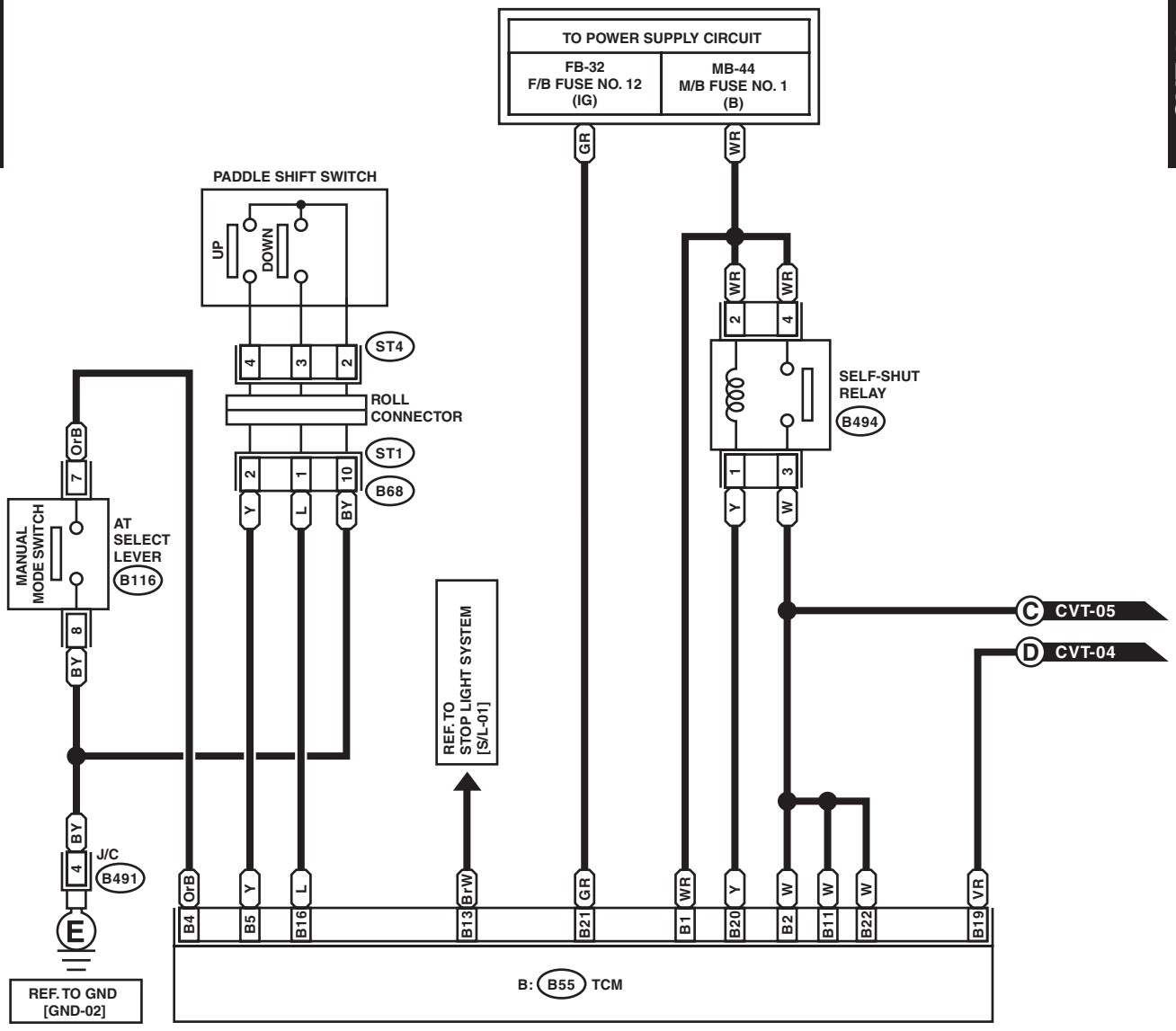

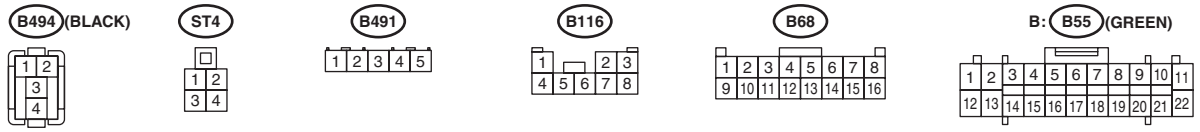

WI-25473

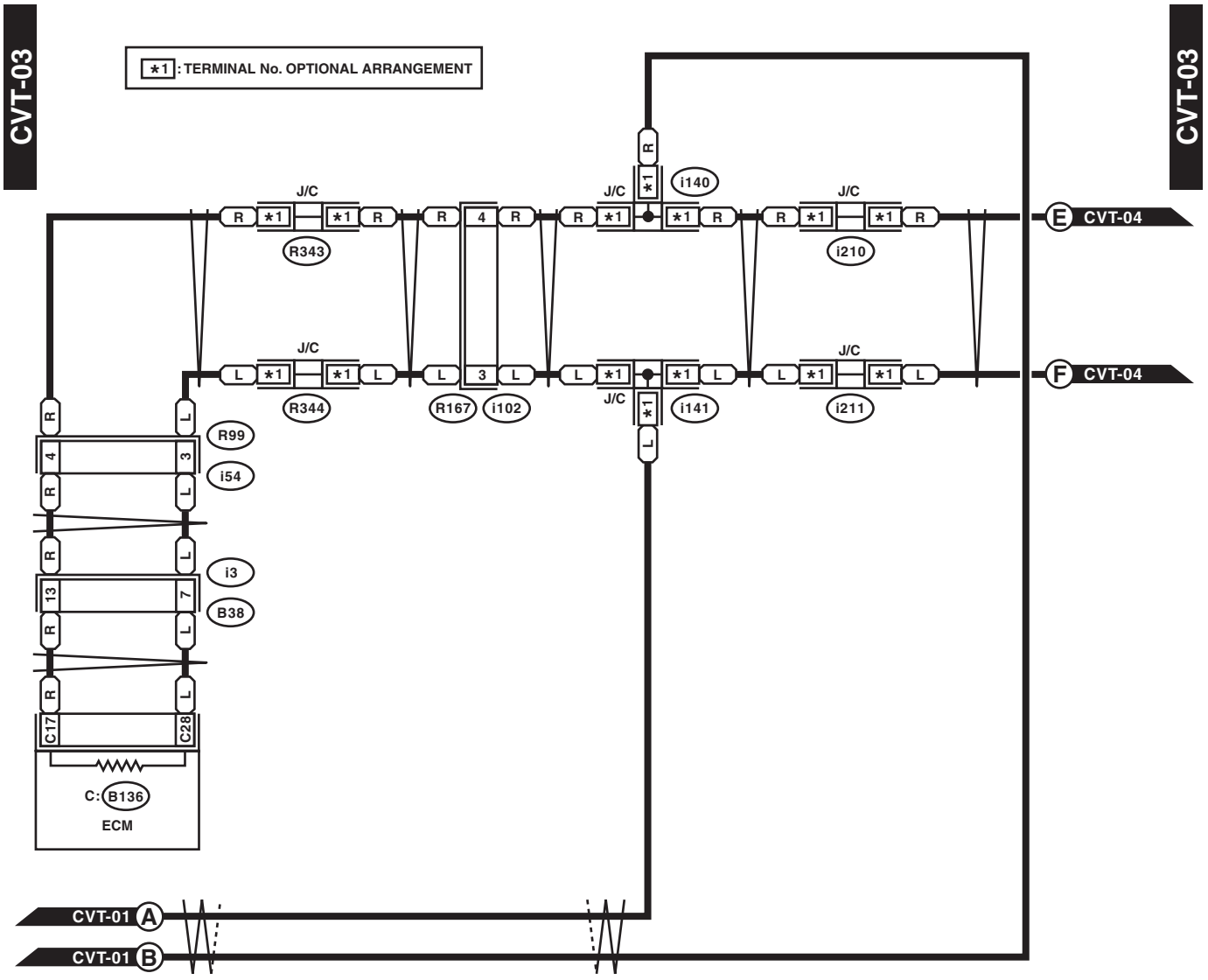
CVT-03
CVT-03
*1 : TERMINAL No. OPTIONAL ARRANGEMENT
J/C
R343
J/C
i140
J/C
i210
E CVT-04
J/C
R344
R167
i102
J/C
i141
J/C
i211
F CVT-04
R99
i54
i3
B38
C17
C28
C: B136
ECM
CVT-01 A
CVT-01 B

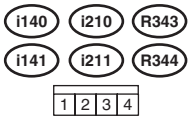
i140
i210
R343
i141
i211
R344

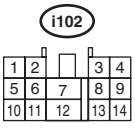
i102

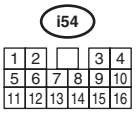
i54

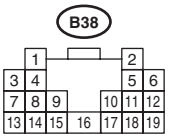
B38

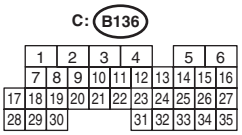
C: B136

WI-33217

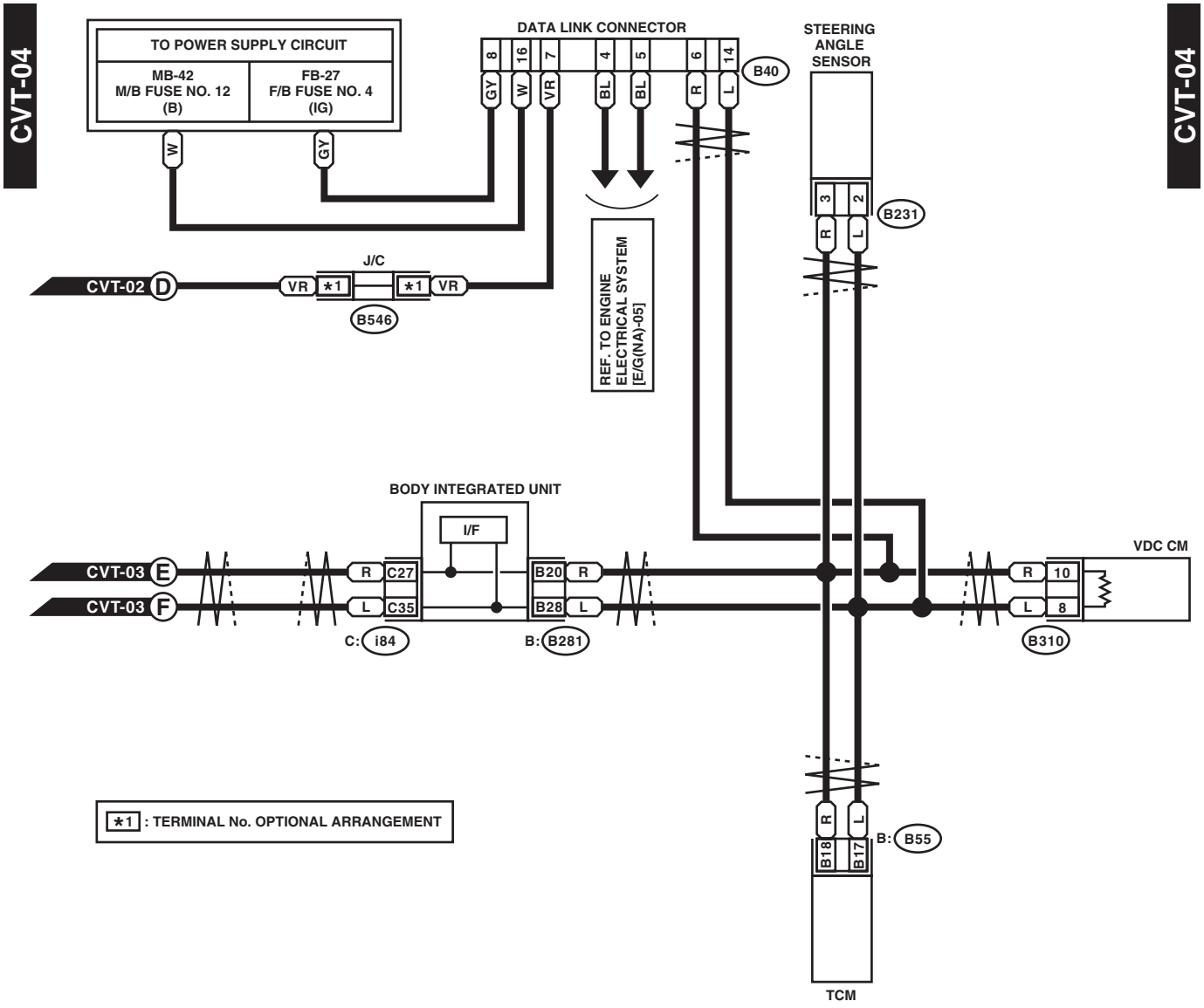
CVT-04
CVT-04
TO POWER SUPPLY CIRCUIT
MB-42
M/B FUSE NO. 12
(B)
FB-27
F/B FUSE NO. 4
(IG)
W
GY
DATA LINK CONNECTOR
8
16
7
4
5
6
14
B40
GY
W
VR
BL
BL
R
L
STEERING ANGLE SENSOR
3
2
B231
R
L
J/C
CVT-02 D
VR
*1
*1
VR
B546
REF. TO ENGINE ELECTRICAL SYSTEM [E/G(NA)-05]
BODY INTEGRATED UNIT
I/F
CVT-03 E
CVT-03 F
R
L
C27
C35
C: i84
B20
B28
B: B281
R
L
VDC CM
R
L
10
8
B310
*1 : TERMINAL No. OPTIONAL ARRANGEMENT
R
L
B18
B17
B: B55
TCM

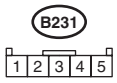
B231
1 2 3 4 5

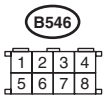
B546
1 2 3 4
5 6 7 8

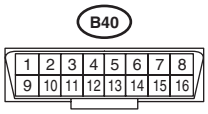
B40
1 2 3 4 5 6 7 8
9 10 11 12 13 14 15 16

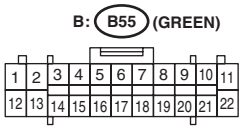
B: B55 (GREEN)
1 2 3 4 5 6 7 8 9 10 11
12 13 14 15 16 17 18 19 20 21 22

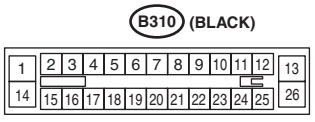
B310 (BLACK)
1 2 3 4 5 6 7 8 9 10 11 12 13
14 15 16 17 18 19 20 21 22 23 24 25 26

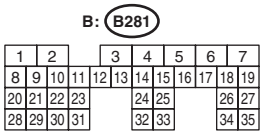
B: B281
1 2 3 4 5 6 7
8 9 10 11 12 13 14 15 16 17 18 19
20 21 22 23 24 25 26 27
28 29 30 31 32 33 34 35

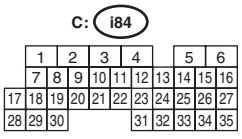
C: i84
1 2 3 4 5 6
7 8 9 10 11 12 13 14 15 16
17 18 19 20 21 22 23 24 25 26 27
28 29 30 31 32 33 34 35

WI-33218

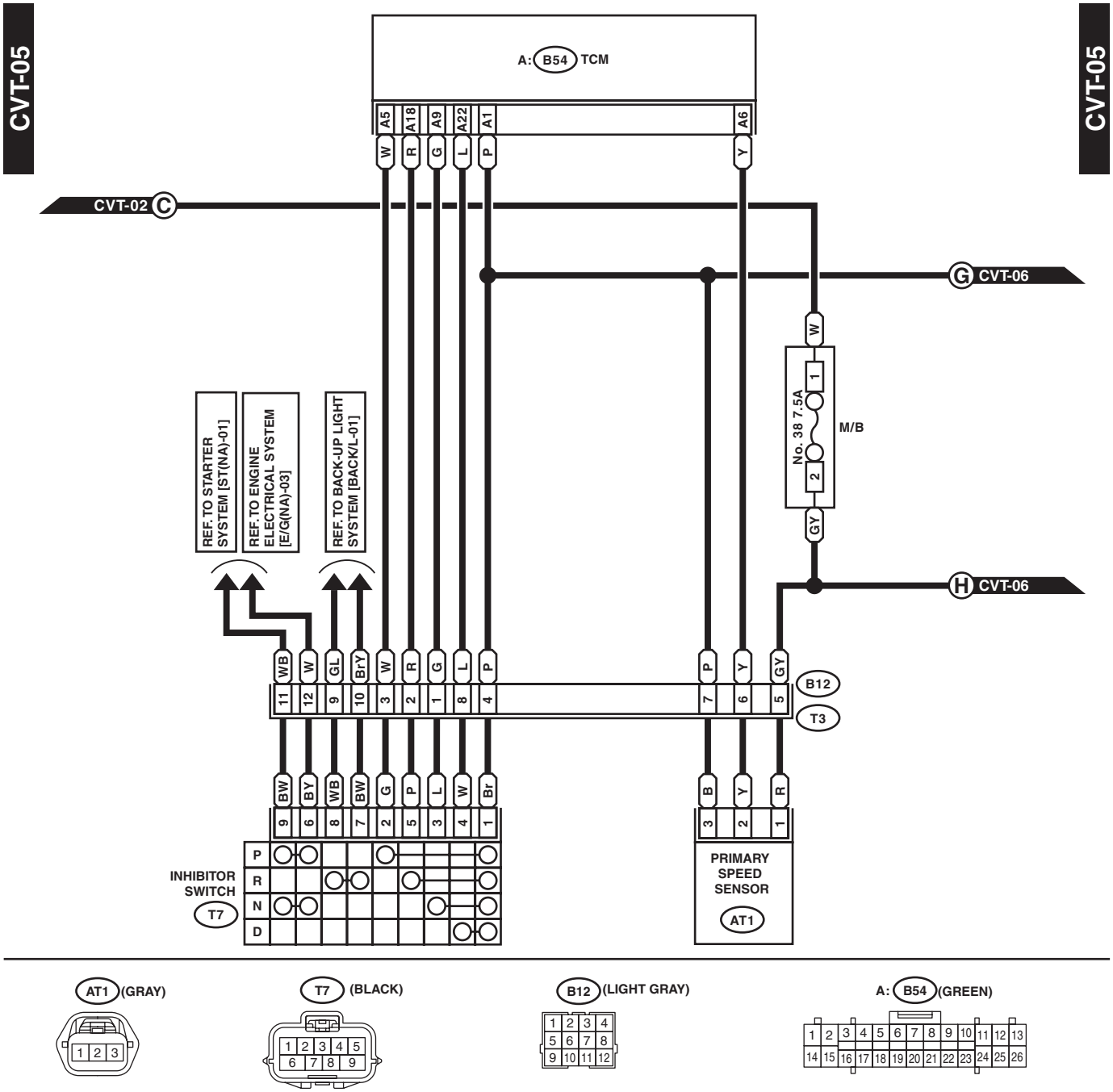
CVT-05
CVT-05
A: B54 TCM
A5
A18
A9
A22
A1
A6
W
R
G
L
P
Y
CVT-02 C
G CVT-06
H CVT-06
W
No. 38 7.5A
1
2
M/B
GY
REF. TO STARTER SYSTEM [ST(NA)-01]
REF. TO ENGINE ELECTRICAL SYSTEM [E/G(NA)-03]
REF. TO BACK-UP LIGHT SYSTEM [BACK/L-01]
WB
W
GL
BrY
W
R
G
L
P
P
Y
GY
11
12
9
10
3
2
1
8
4
7
6
5
B12
T3
BW
BY
WB
BW
G
P
L
W
Br
B
Y
R
9
6
8
7
2
5
3
4
1
3
2
1
P
R
N
D
INHIBITOR SWITCH
T7
PRIMARY SPEED SENSOR
AT1

AT1 (GRAY)
1 2 3
T7 (BLACK)
1 2 3 4 5
6 7 8 9
B12 (LIGHT GRAY)
1 2 3 4
5 6 7 8
9 10 11 12
A: B54 (GREEN)
1 2 3 4 5 6 7 8 9 10 11 12 13
14 15 16 17 18 19 20 21 22 23 24 25 26

WI-25476

CVT-06

CVT-06

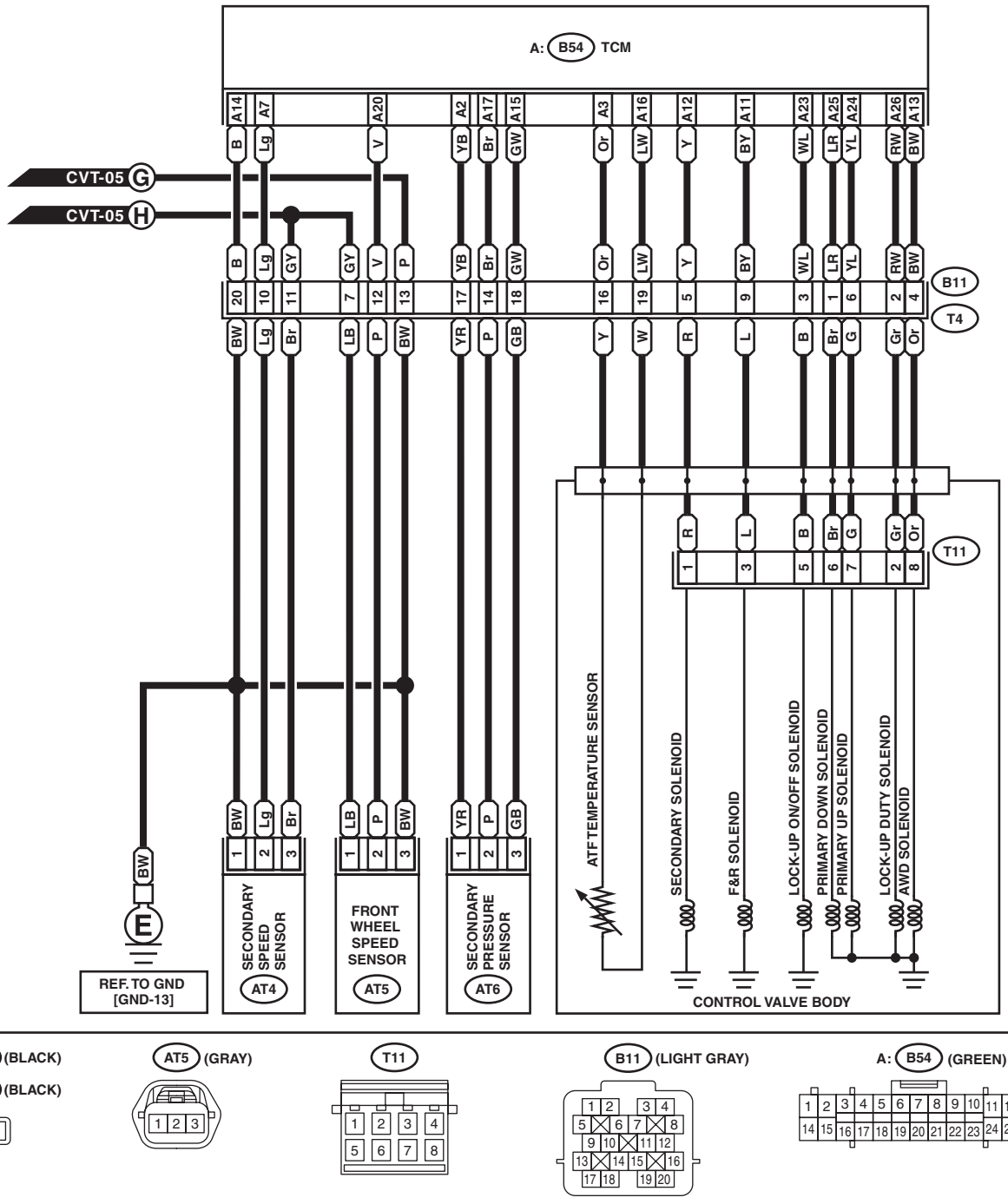

WI-25477

18.Engine Electrical System

A: WIRING DIAGRAM

1. 2.5 L NON-TURBO MODEL

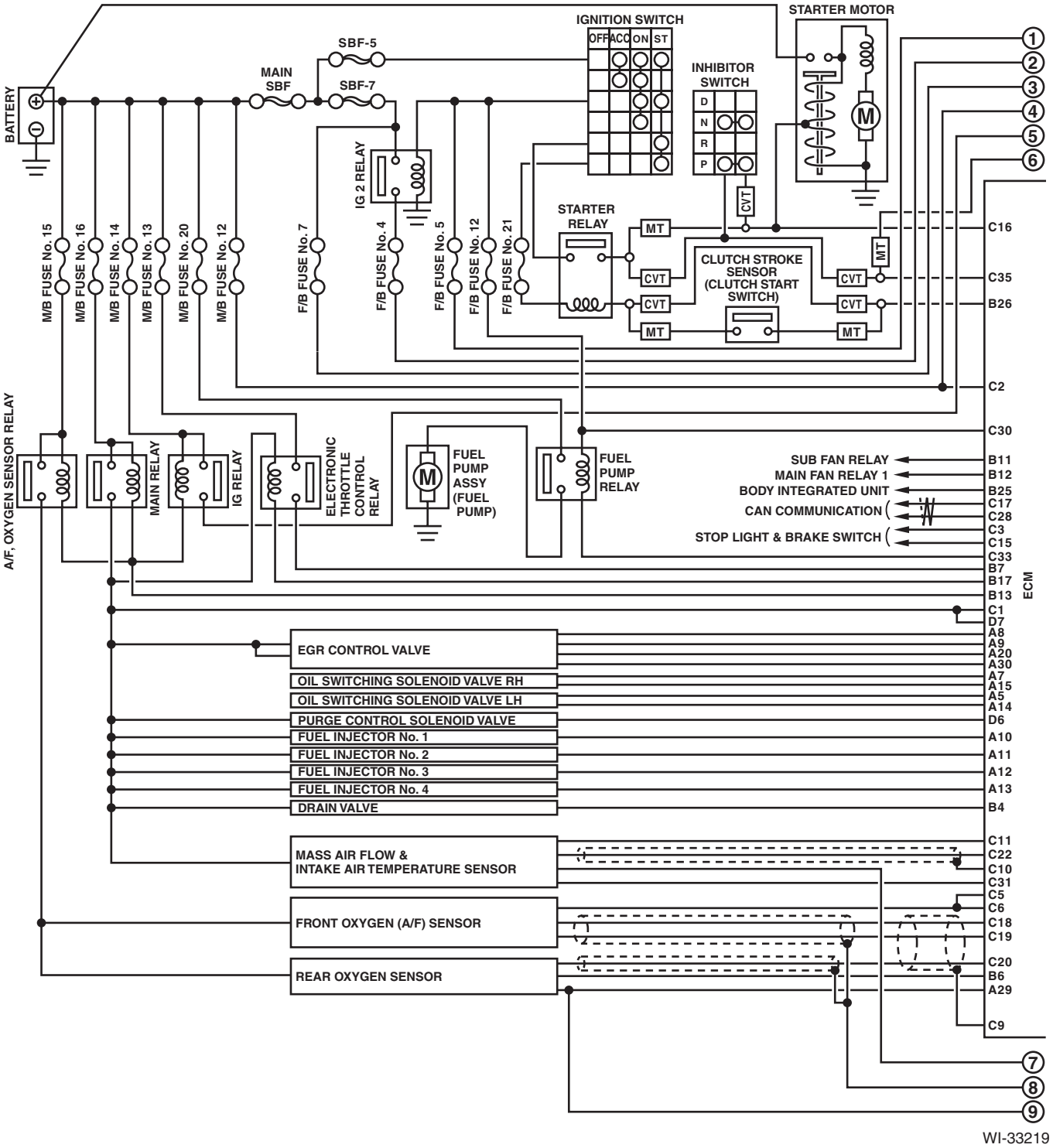

WI-33219

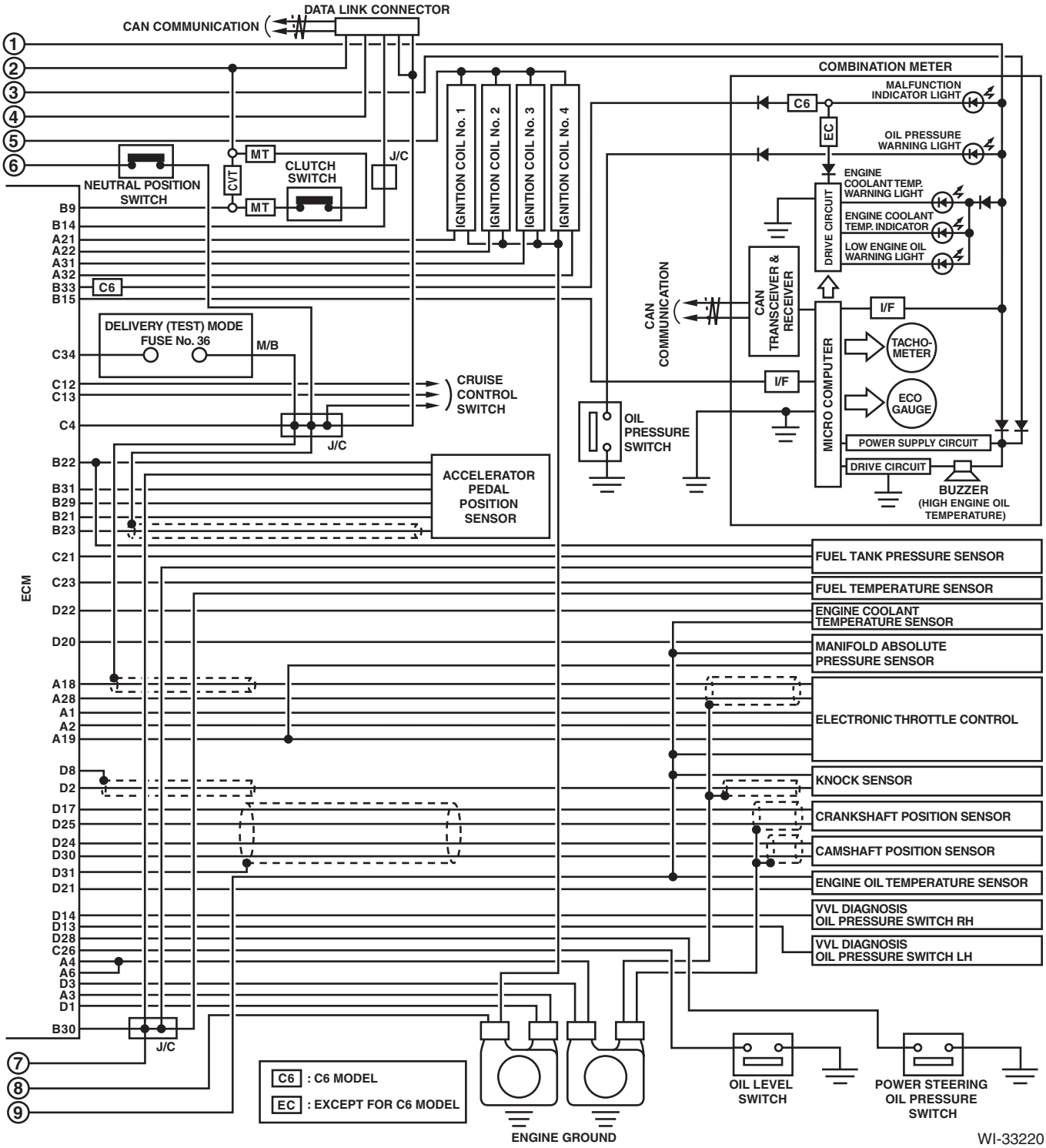
DATA LINK CONNECTOR
CAN COMMUNICATION
COMBINATION METER
MALFUNCTION INDICATOR LIGHT
OIL PRESSURE WARNING LIGHT
ENGINE COOLANT TEMP. WARNING LIGHT
ENGINE COOLANT TEMP. INDICATOR
LOW ENGINE OIL WARNING LIGHT
DRIVE CIRCUIT
EC
C6
IGNITION COIL No. 1
IGNITION COIL No. 2
IGNITION COIL No. 3
IGNITION COIL No. 4
NEUTRAL POSITION SWITCH
CLUTCH SWITCH
MT
CVT
J/C
DELIVERY (TEST) MODE FUSE No. 36
M/B
CRUISE CONTROL SWITCH
ACCELERATOR PEDAL POSITION SENSOR
OIL PRESSURE SWITCH
CAN TRANSCEIVER & RECEIVER
MICRO COMPUTER
I/F
TACHO-METER
ECO GAUGE
POWER SUPPLY CIRCUIT
DRIVE CIRCUIT
BUZZER
(HIGH ENGINE OIL TEMPERATURE)
ECM
FUEL TANK PRESSURE SENSOR
FUEL TEMPERATURE SENSOR
ENGINE COOLANT TEMPERATURE SENSOR
MANIFOLD ABSOLUTE PRESSURE SENSOR
ELECTRONIC THROTTLE CONTROL
KNOCK SENSOR
CRANKSHAFT POSITION SENSOR
CAMSHAFT POSITION SENSOR
ENGINE OIL TEMPERATURE SENSOR
VVL DIAGNOSIS OIL PRESSURE SWITCH RH
VVL DIAGNOSIS OIL PRESSURE SWITCH LH
OIL LEVEL SWITCH
POWER STEERING OIL PRESSURE SWITCH
ENGINE GROUND
C6 : C6 MODEL
EC : EXCEPT FOR C6 MODEL
WI-33220

E/G(NA)-01

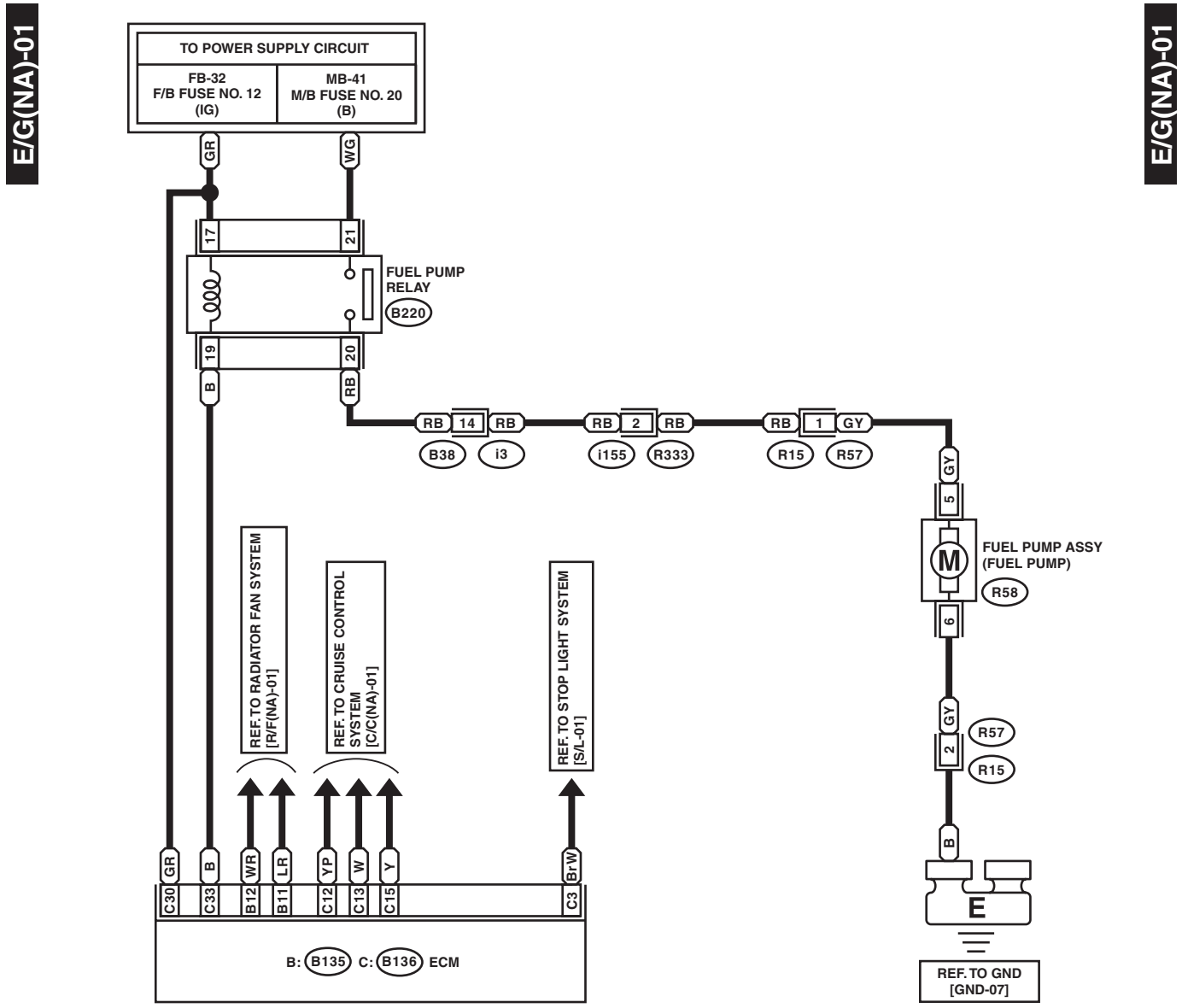

WI-33221

E/G(NA)-02

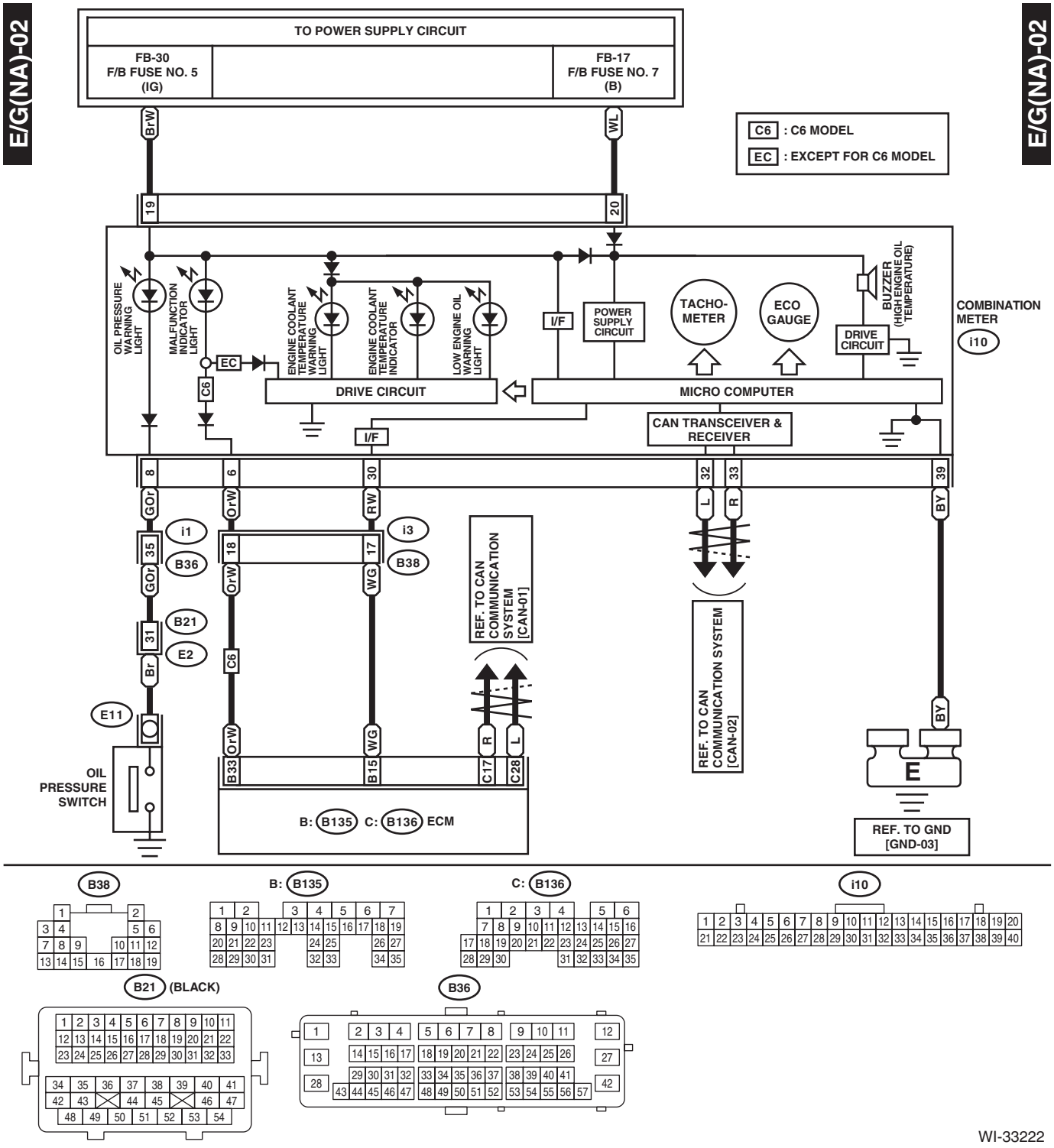

E/G(NA)-02

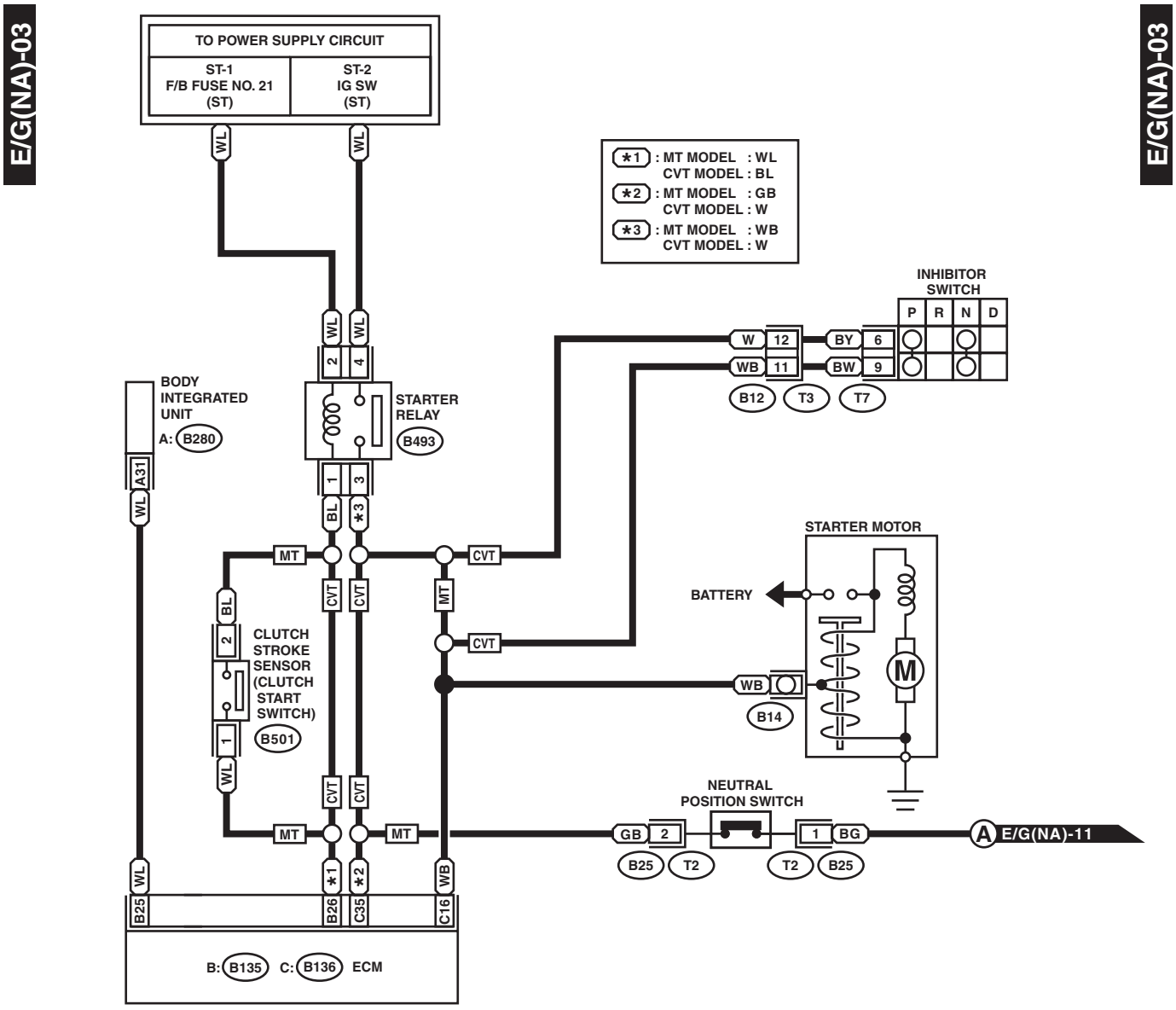
E/G(NA)-03
E/G(NA)-03
TO POWER SUPPLY CIRCUIT
ST-1
F/B FUSE NO. 21
(ST)
ST-2
IG SW
(ST)
*1 : MT MODEL : WL
CVT MODEL : BL
*2 : MT MODEL : GB
CVT MODEL : W
*3 : MT MODEL : WB
CVT MODEL : W
INHIBITOR SWITCH
P R N D
BODY INTEGRATED UNIT
A: B280
STARTER RELAY
B493
STARTER MOTOR
BATTERY
CLUTCH STROKE SENSOR (CLUTCH START SWITCH)
B501
NEUTRAL POSITION SWITCH
B14
B12 T3 T7
B25 T2
T2 B25
A E/G(NA)-11
B: B135 C: B136 ECM

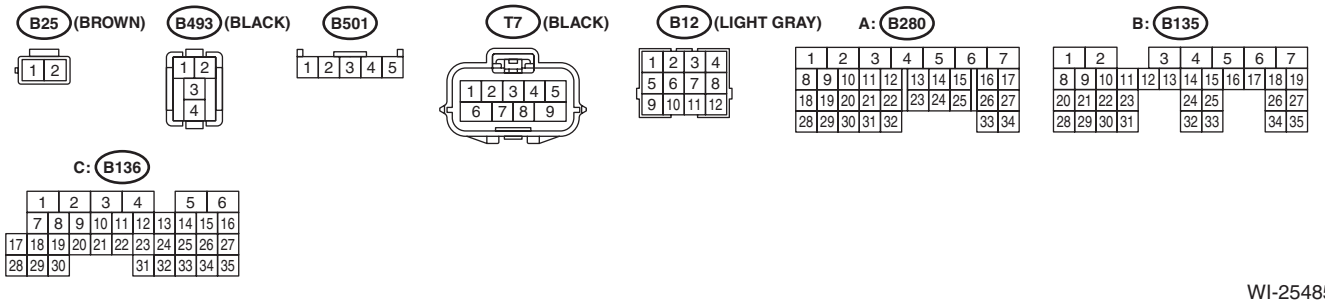
B25 (BROWN)
B493 (BLACK)
B501
T7 (BLACK)
B12 (LIGHT GRAY)
A: B280
B: B135
C: B136

WI-25485

E/G(NA)-04

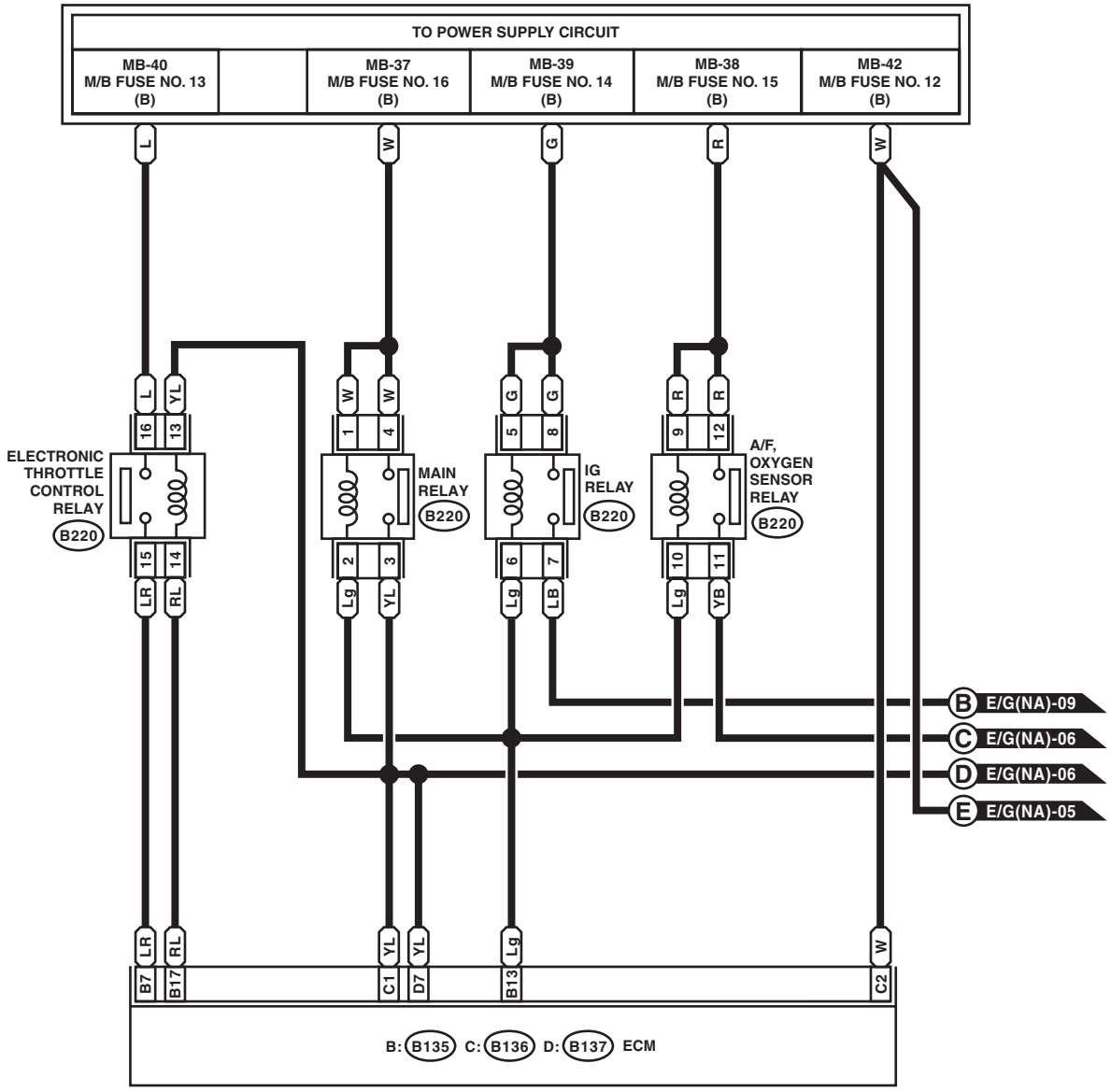

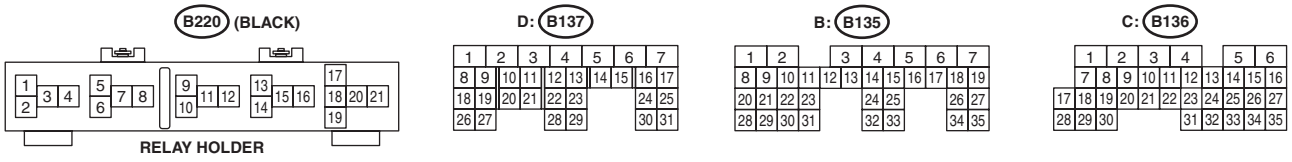

WI-33223

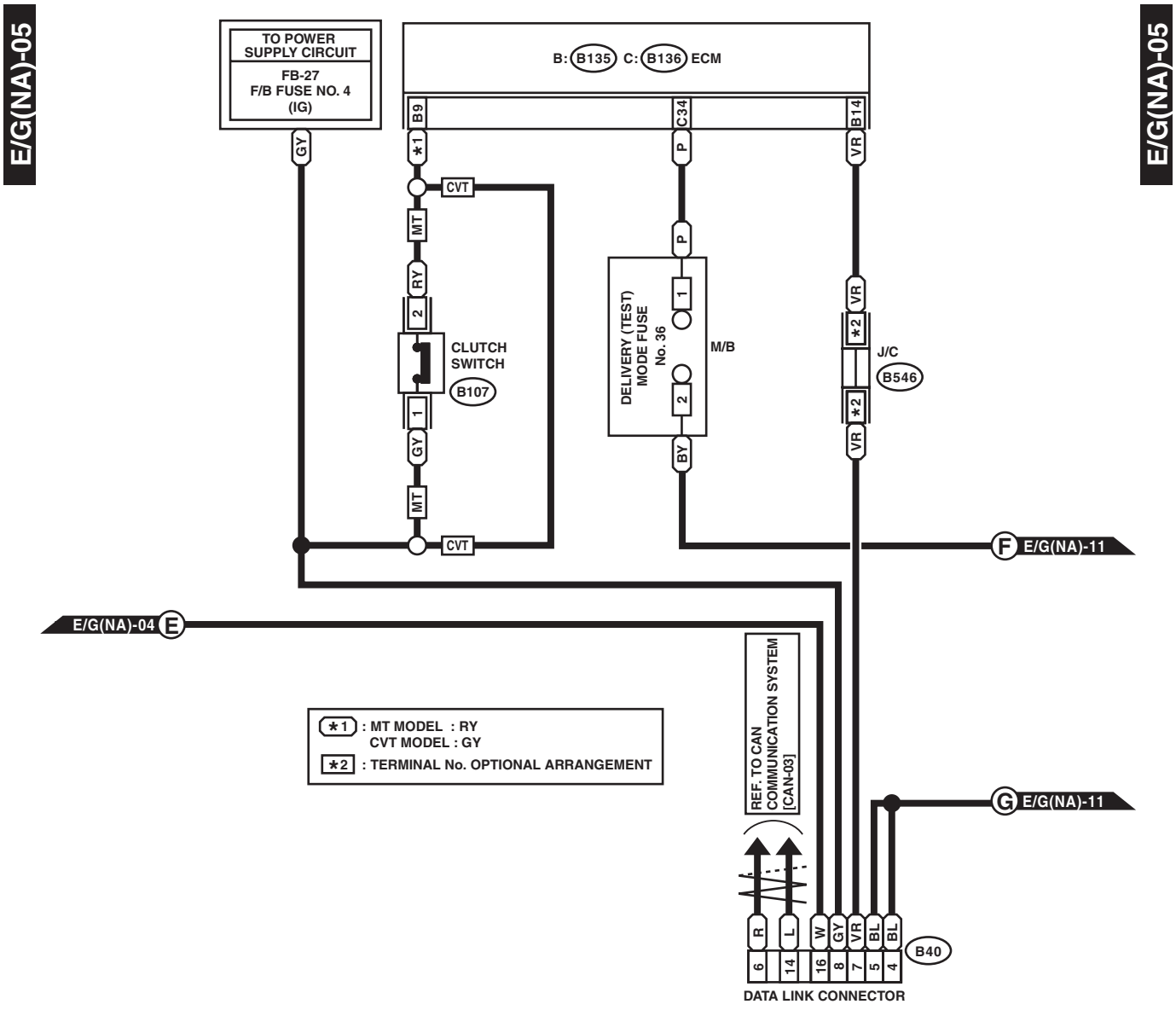
E/G(NA)-05
E/G(NA)-05
TO POWER SUPPLY CIRCUIT
FB-27
F/B FUSE NO. 4
(IG)
B: B135 C: B136 ECM
B9
C34
B14
GY
*1
P
VR
CVT
MT
RY
2
CLUTCH SWITCH
B107
1
GY
MT
CVT
P
DELIVERY (TEST) MODE FUSE No. 36
1
2
M/B
BY
VR
*2
J/C
B546
F E/G(NA)-11
E/G(NA)-04 E
*1 : MT MODEL : RY
CVT MODEL : GY
*2 : TERMINAL No. OPTIONAL ARRANGEMENT
REF. TO CAN COMMUNICATION SYSTEM [CAN-03]
G E/G(NA)-11
R
L
W
GY
VR
BL
BL
6
14
16
8
7
5
4
B40
DATA LINK CONNECTOR

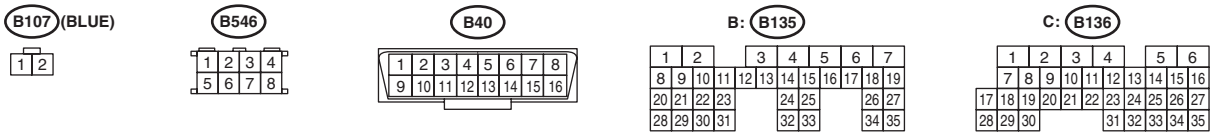
B107 (BLUE)
B546
B40
B: B135
C: B136

WI-33224

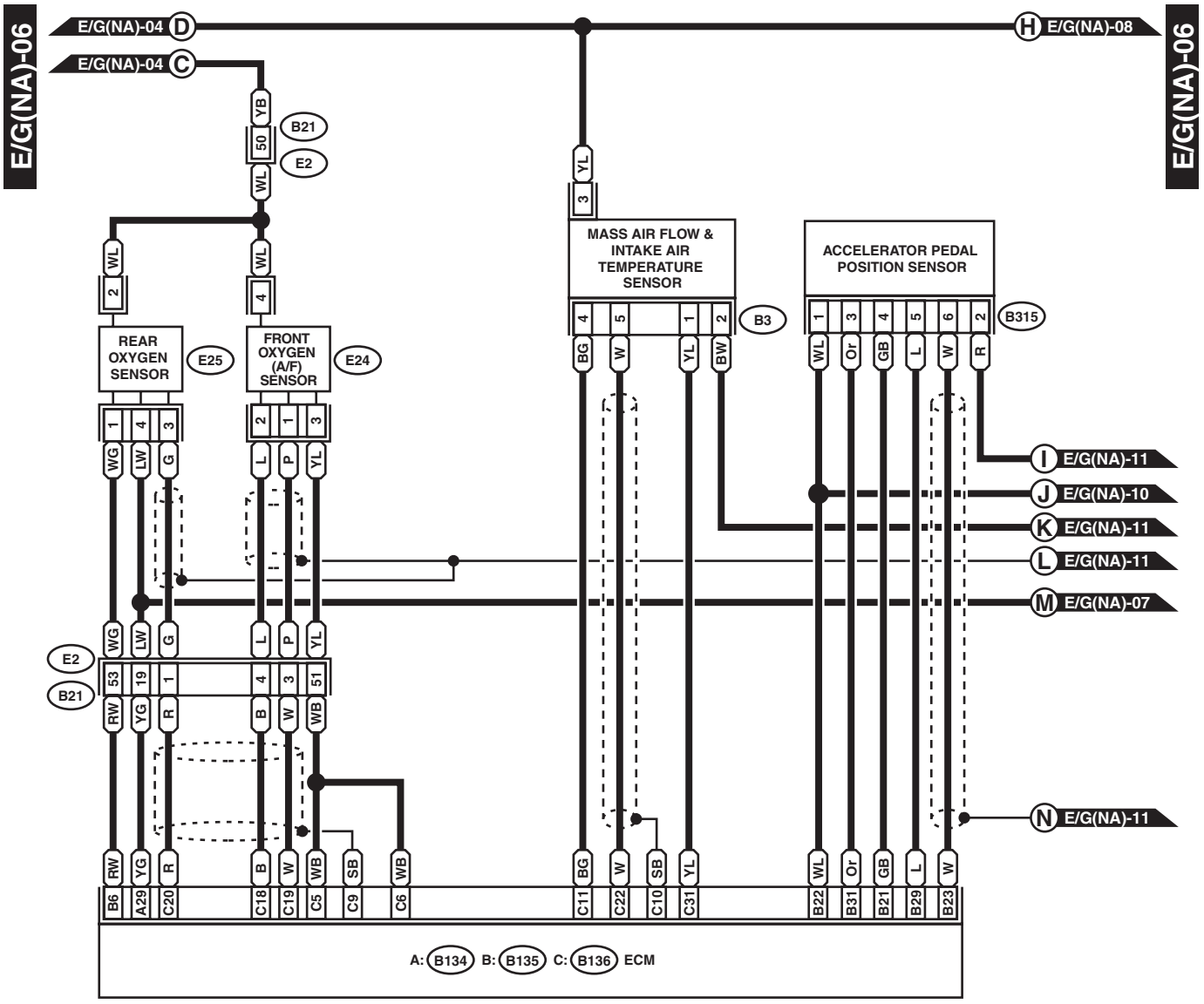
E/G(NA)-06
E/G(NA)-04 D
E/G(NA)-04 C
H E/G(NA)-08
E/G(NA)-06
B21
E2
MASS AIR FLOW & INTAKE AIR TEMPERATURE SENSOR
B3
ACCELERATOR PEDAL POSITION SENSOR
B315
REAR OXYGEN SENSOR
E25
FRONT OXYGEN (A/F) SENSOR
E24
I E/G(NA)-11
J E/G(NA)-10
K E/G(NA)-11
L E/G(NA)-11
M E/G(NA)-07
N E/G(NA)-11
A: B134 B: B135 C: B136 ECM

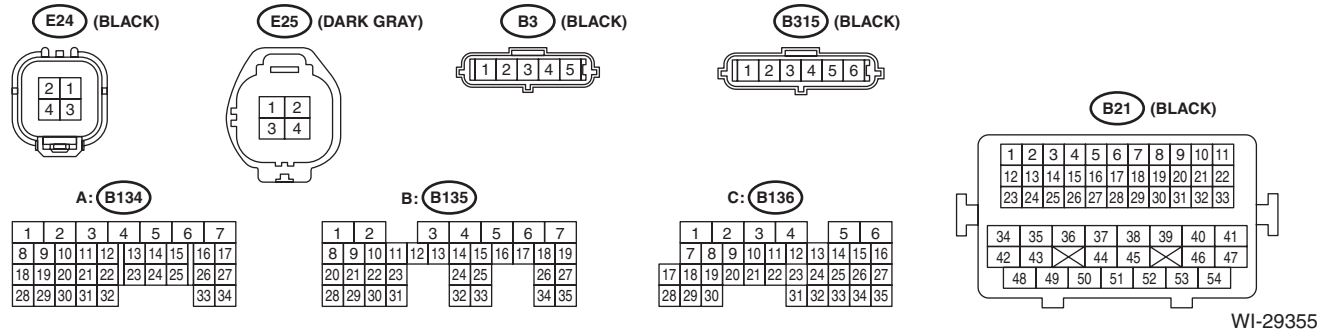
E24 (BLACK)
E25 (DARK GRAY)
B3 (BLACK)
B315 (BLACK)
B21 (BLACK)
A: B134
B: B135
C: B136

WI-29355

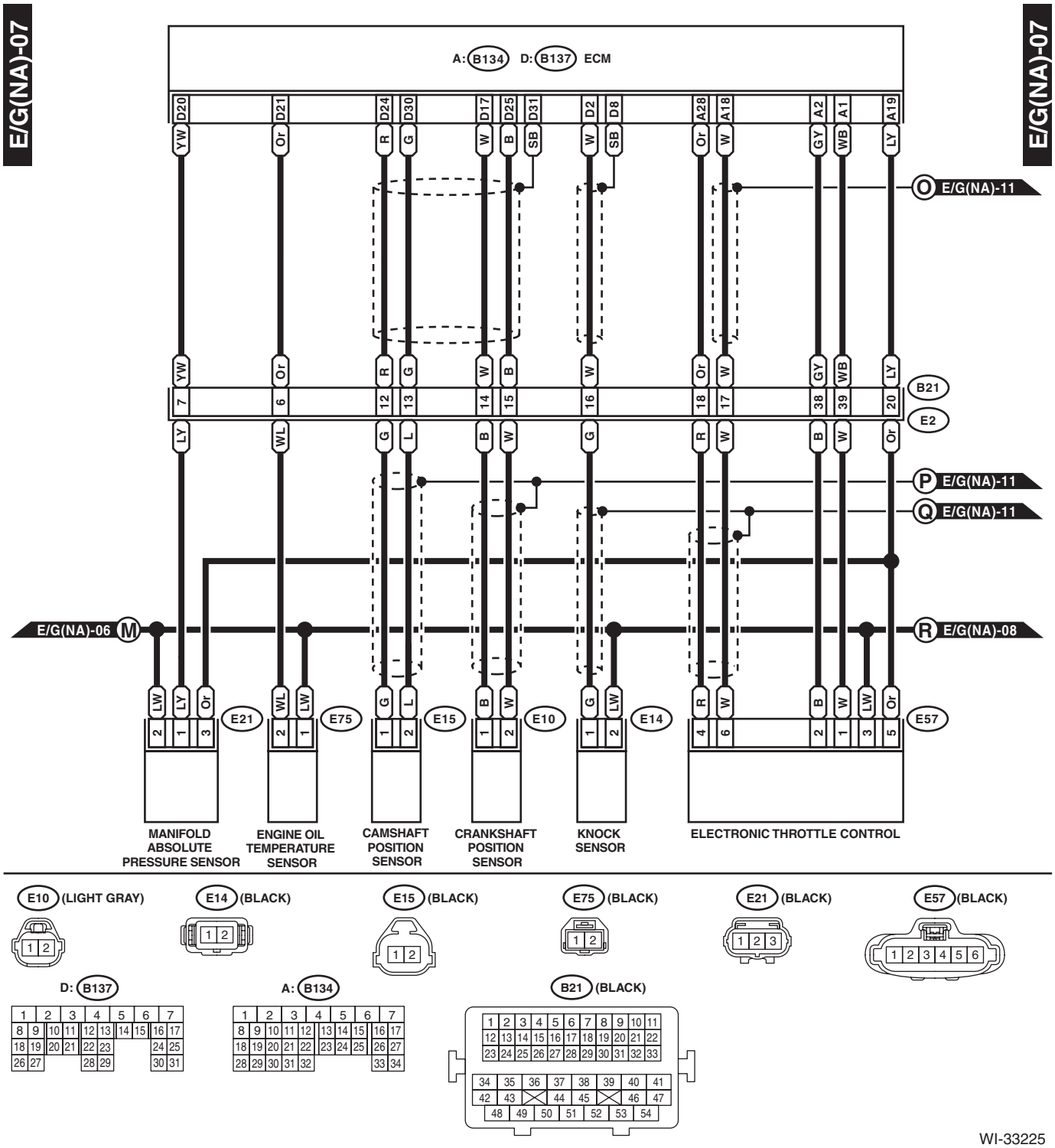
E/G(NA)-07
E/G(NA)-07
A: B134 D: B137 ECM
D20 D21 D24 D30 D17 D25 D31 D2 D8 A28 A18 A2 A1 A19
YW Or R G W B SB W SB Or W GY WB LY
O E/G(NA)-11
7 6 12 13 14 15 16 18 17 38 39 20
B21
E2
LY WL G L B W G R W B W Or
P E/G(NA)-11
Q E/G(NA)-11
E/G(NA)-06 M
R E/G(NA)-08
LW LY Or E21 WL LW E75 G L E15 B W E10 G LW E14 R W B W LW Or E57
2 1 3 2 1 1 2 1 2 1 2 4 6 2 1 3 5
MANIFOLD ABSOLUTE PRESSURE SENSOR
ENGINE OIL TEMPERATURE SENSOR
CAMSHAFT POSITION SENSOR
CRANKSHAFT POSITION SENSOR
KNOCK SENSOR
ELECTRONIC THROTTLE CONTROL
E10 (LIGHT GRAY)
E14 (BLACK)
E15 (BLACK)
E75 (BLACK)
E21 (BLACK)
E57 (BLACK)
D: B137
A: B134
B21 (BLACK)

WI-33225

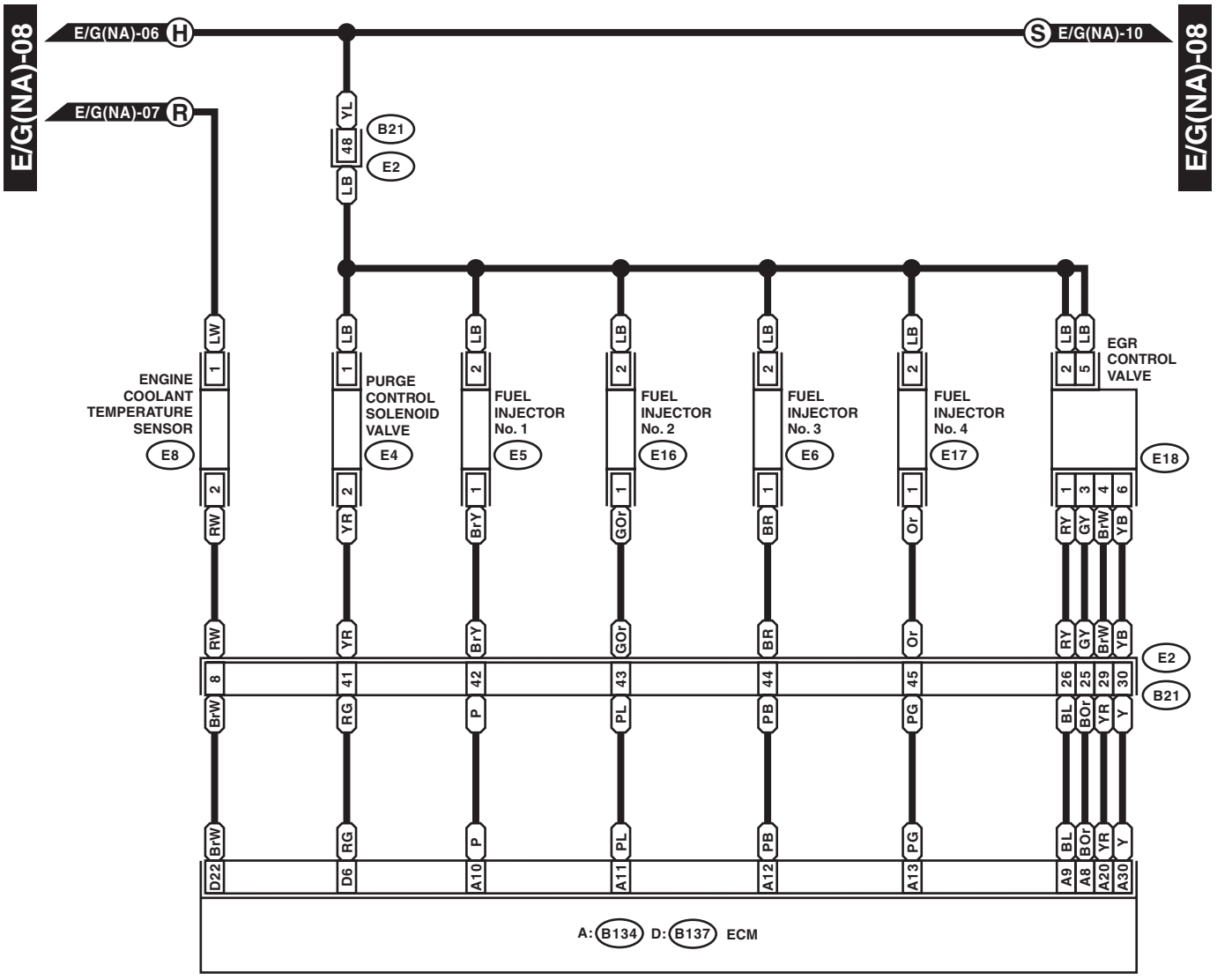
E/G(NA)-08
E/G(NA)-06 H
E/G(NA)-07 R
S E/G(NA)-10
E/G(NA)-08
B21
E2
ENGINE COOLANT TEMPERATURE SENSOR
E8
PURGE CONTROL SOLENOID VALVE
E4
FUEL INJECTOR No. 1
E5
FUEL INJECTOR No. 2
E16
FUEL INJECTOR No. 3
E6
FUEL INJECTOR No. 4
E17
EGR CONTROL VALVE
E18
A: B134 D: B137 ECM

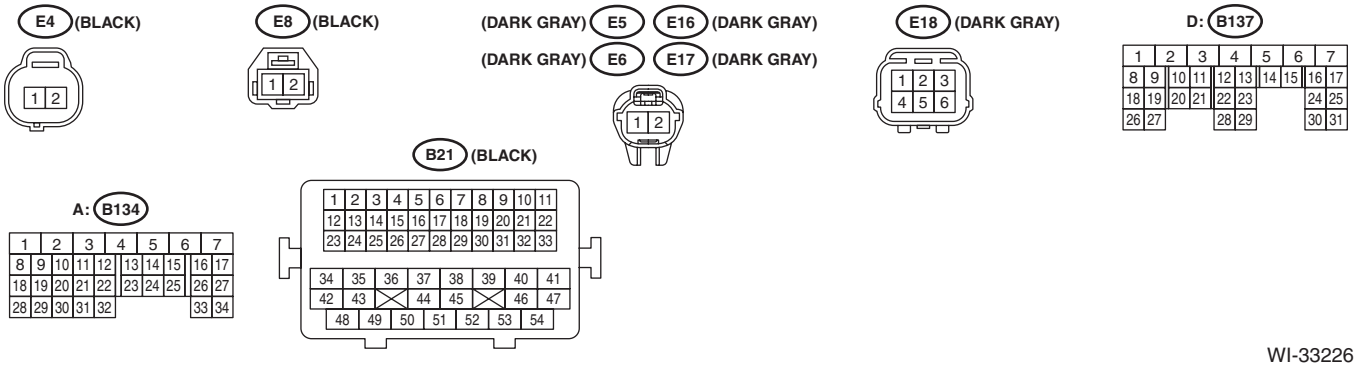
E4 (BLACK)
E8 (BLACK)
(DARK GRAY) E5 E16 (DARK GRAY)
(DARK GRAY) E6 E17 (DARK GRAY)
E18 (DARK GRAY)
D: B137
B21 (BLACK)
A: B134

WI-33226

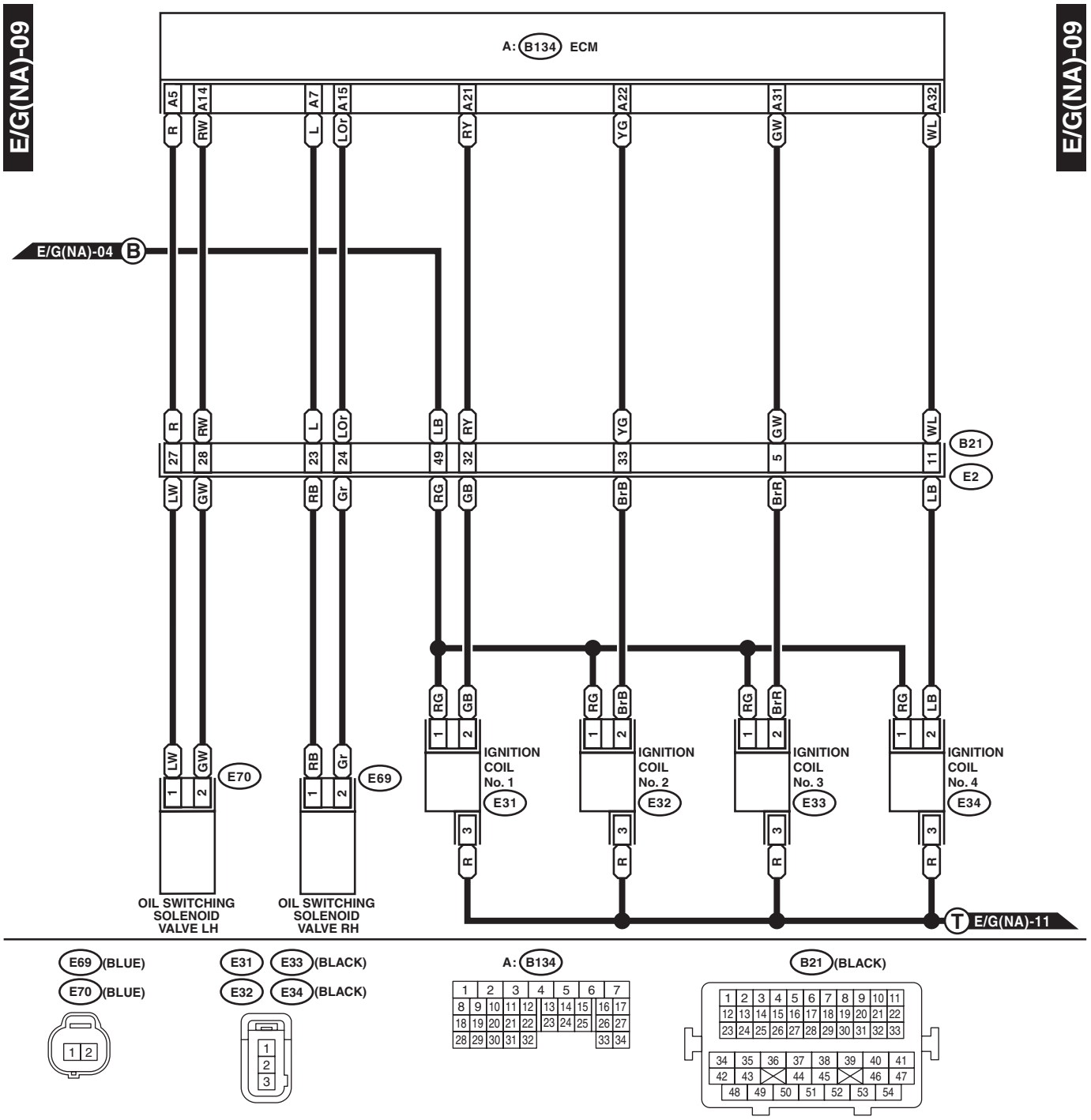
E/G(NA)-09
E/G(NA)-09
A: B134 ECM
A5
A14
A7
A15
A21
A22
A31
A32
R
RW
L
LOr
RY
YG
GW
WL
E/G(NA)-04 B
R
RW
L
LOr
LB
RY
YG
GW
WL
B21
27
28
23
24
49
32
33
5
11
E2
LW
GW
RB
Gr
RG
GB
BrB
BrR
LB
RG
GB
RG
BrB
RG
BrR
RG
LB
1
2
IGNITION COIL No. 1
E31
IGNITION COIL No. 2
E32
IGNITION COIL No. 3
E33
IGNITION COIL No. 4
E34
3
R
LW
GW
E70
RB
Gr
E69
OIL SWITCHING SOLENOID VALVE LH
OIL SWITCHING SOLENOID VALVE RH
T E/G(NA)-11
E69 (BLUE)
E70 (BLUE)
E31
E33 (BLACK)
E32
E34 (BLACK)
A: B134
B21 (BLACK)

WI-25491

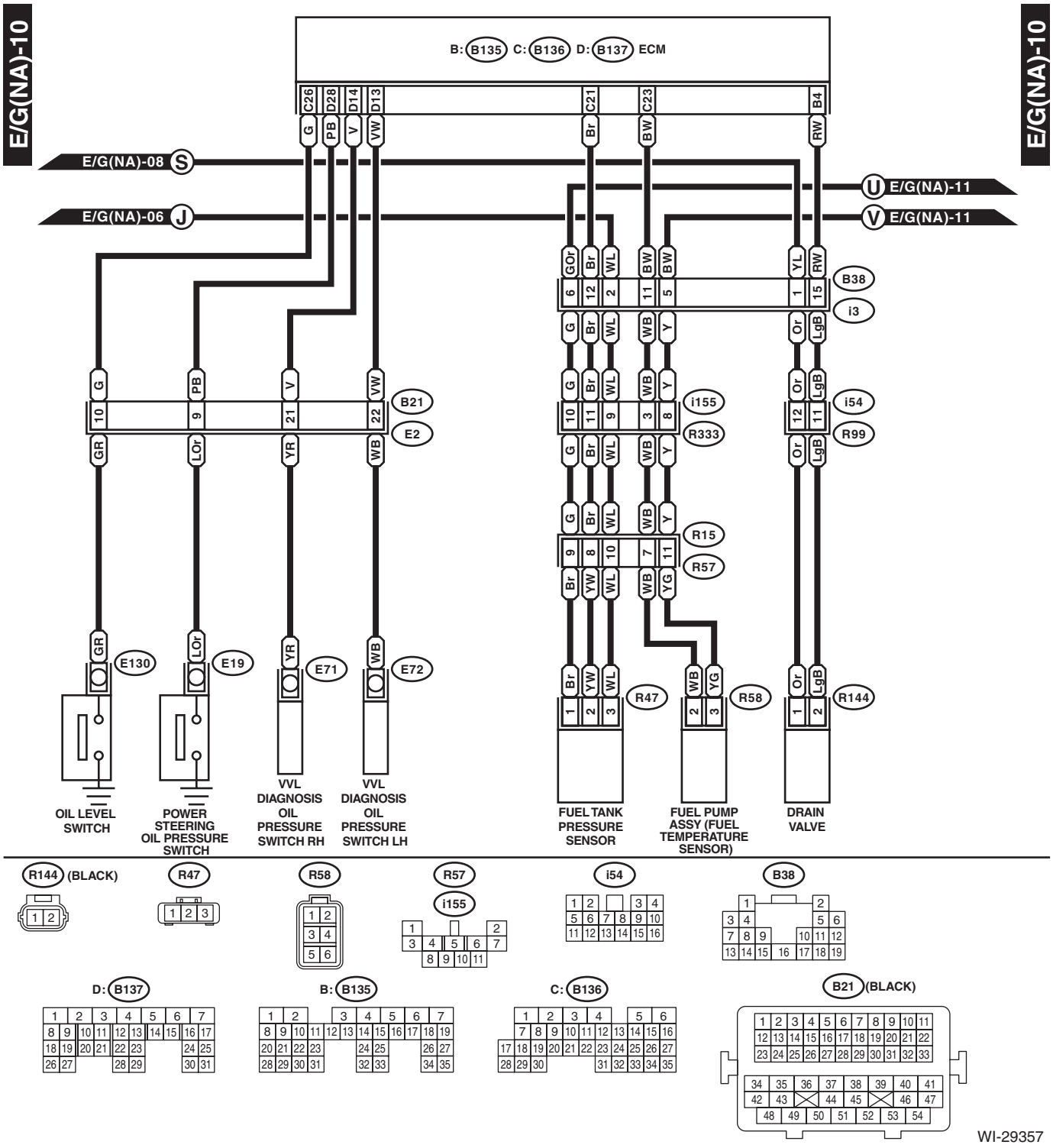
E/G(NA)-10
E/G(NA)-10
B: B135 C: B136 D: B137 ECM
C26 D28 D14 D13 C21 C23 B4
G PB V VW Br BW RW
E/G(NA)-08 S
E/G(NA)-06 J
U E/G(NA)-11
V E/G(NA)-11
B38
i3
B21
E2
i155
R333
i54
R99
R15
R57
R47
R58
R144
E130
E19
E71
E72
OIL LEVEL SWITCH
POWER STEERING OIL PRESSURE SWITCH
VVL DIAGNOSIS OIL PRESSURE SWITCH RH
VVL DIAGNOSIS OIL PRESSURE SWITCH LH
FUEL TANK PRESSURE SENSOR
FUEL PUMP ASSY (FUEL TEMPERATURE SENSOR)
DRAIN VALVE
R144 (BLACK)
R47
R58
R57
i155
i54
B38
D: B137
B: B135
C: B136
B21 (BLACK)

WI-29357

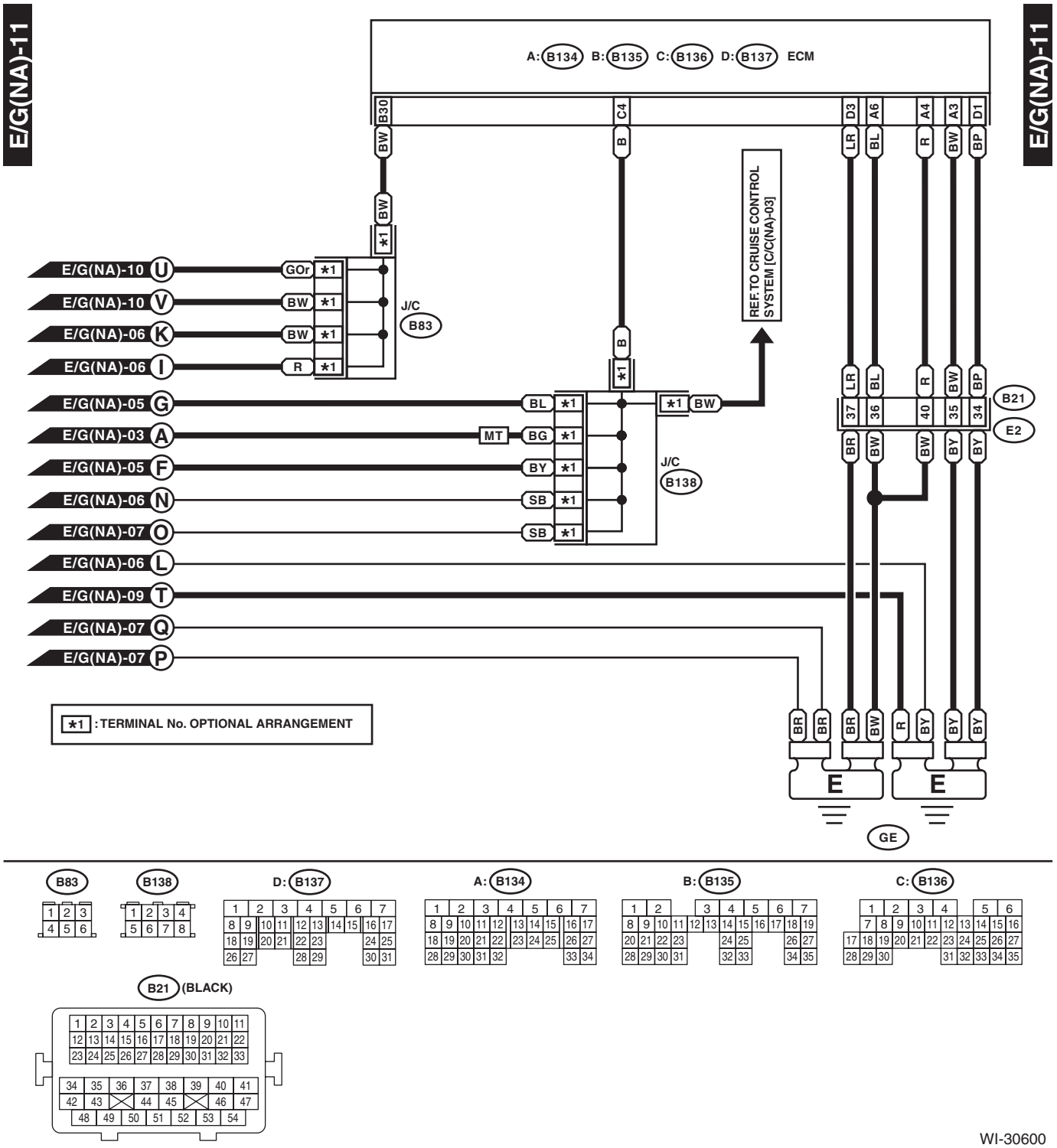
E/G(NA)-11
E/G(NA)-11
A: B134 B: B135 C: B136 D: B137 ECM
B30
C4
D3
A6
A4
A3
D1
BW
B
LR
BL
R
BW
BP
*1
REF. TO CRUISE CONTROL SYSTEM [C/C(NA)-03]
E/G(NA)-10 U
E/G(NA)-10 V
E/G(NA)-06 K
E/G(NA)-06 I
GOr
J/C B83
E/G(NA)-05 G
E/G(NA)-03 A
E/G(NA)-05 F
E/G(NA)-06 N
E/G(NA)-07 O
E/G(NA)-06 L
E/G(NA)-09 T
E/G(NA)-07 Q
E/G(NA)-07 P
BL
MT
BG
BY
SB
J/C B138
37
36
40
35
34
B21
E2
BR
BW
BY
*1 : TERMINAL No. OPTIONAL ARRANGEMENT
E
GE
B83
B138
D: B137
A: B134
B: B135
C: B136
B21 (BLACK)

WI-30600

2. 2.5 L TURBO MODEL

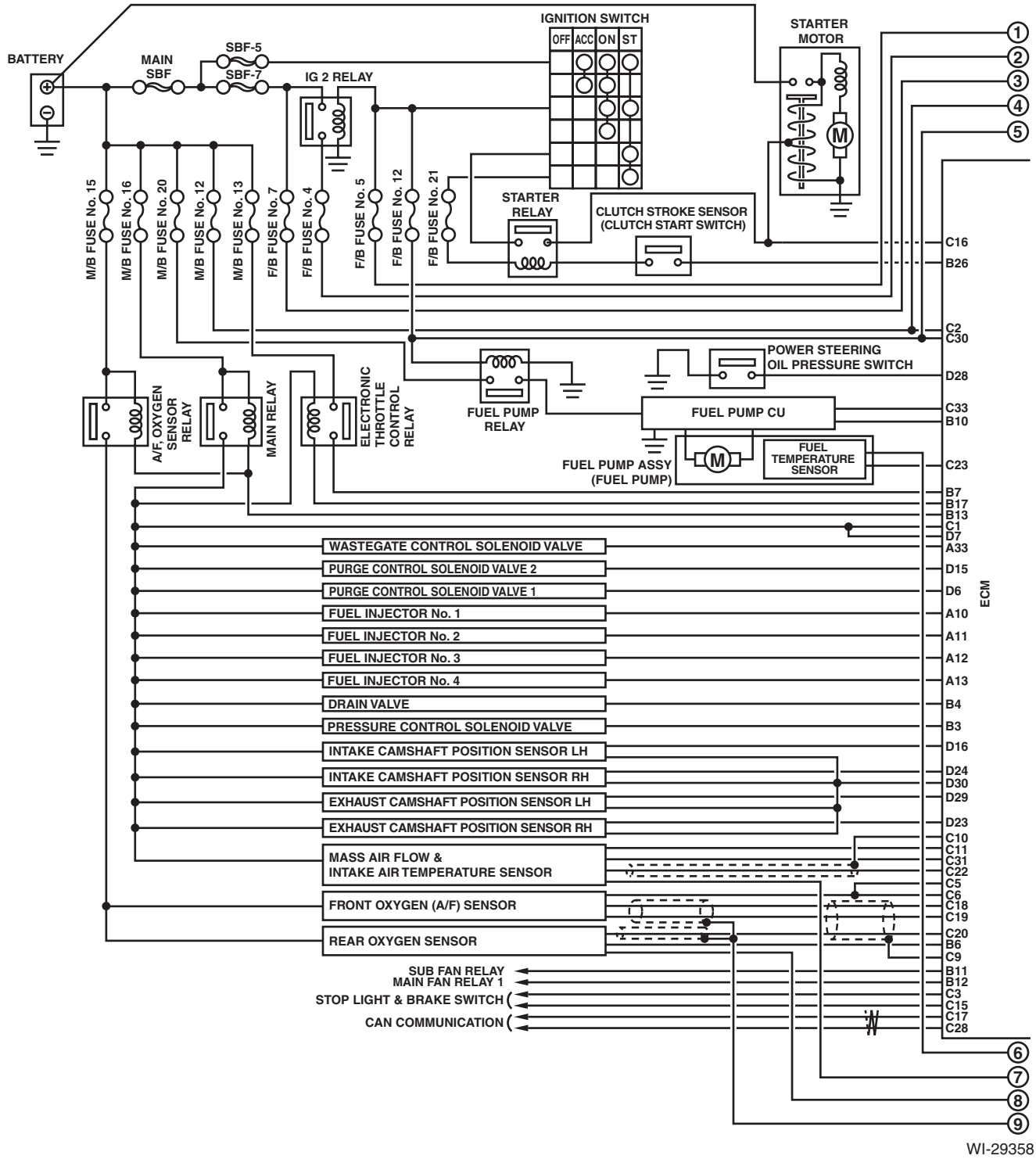

WI-29358

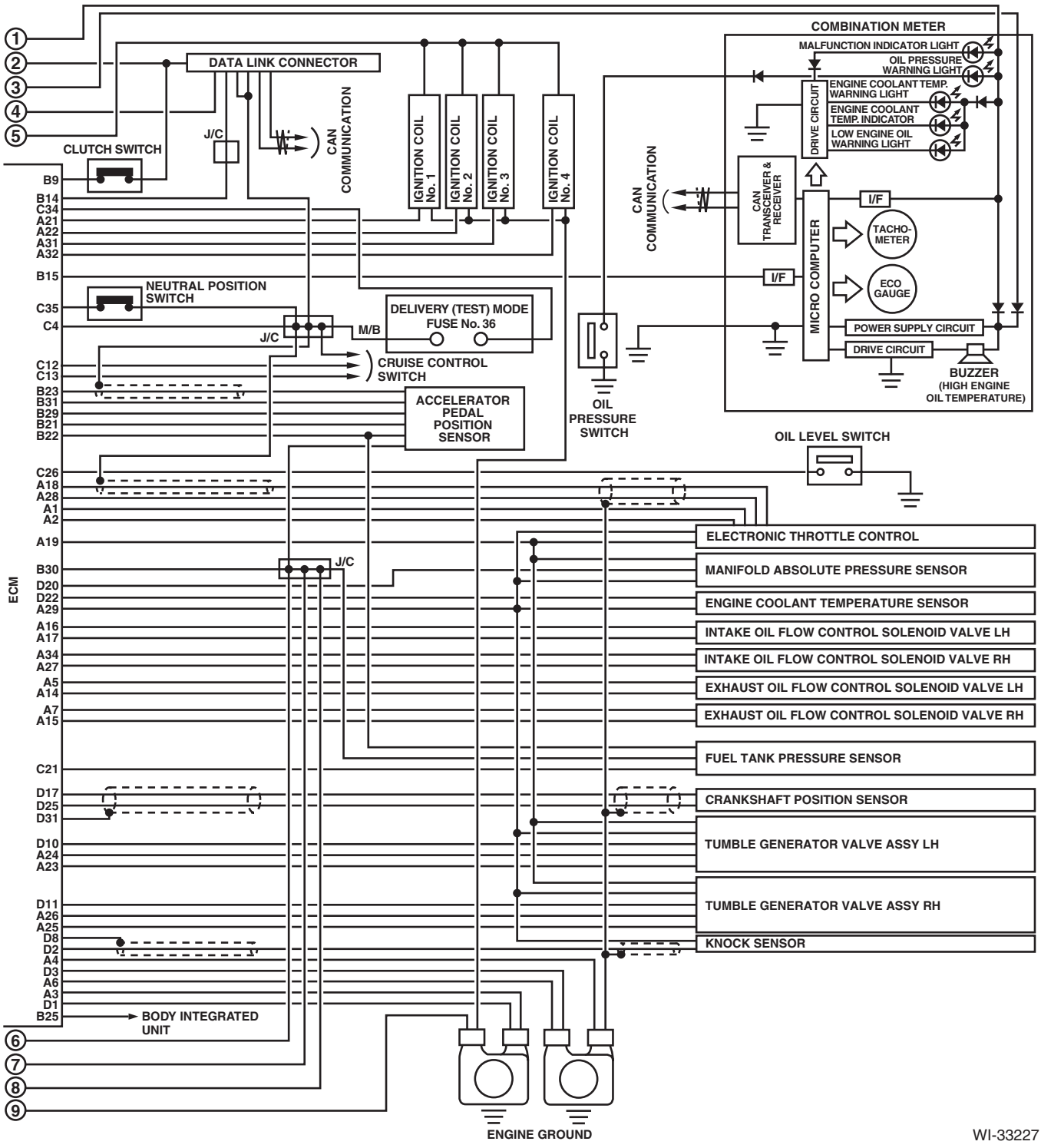
COMBINATION METER
MALFUNCTION INDICATOR LIGHT
OIL PRESSURE WARNING LIGHT
ENGINE COOLANT TEMP. WARNING LIGHT
ENGINE COOLANT TEMP. INDICATOR
LOW ENGINE OIL WARNING LIGHT
DRIVE CIRCUIT
DATA LINK CONNECTOR
CAN COMMUNICATION
IGNITION COIL No. 1
IGNITION COIL No. 2
IGNITION COIL No. 3
IGNITION COIL No. 4
CAN TRANSCEIVER & RECEIVER
MICRO COMPUTER
I/F
TACHO-METER
ECO GAUGE
POWER SUPPLY CIRCUIT
DRIVE CIRCUIT
BUZZER
(HIGH ENGINE OIL TEMPERATURE)
CLUTCH SWITCH
NEUTRAL POSITION SWITCH
DELIVERY (TEST) MODE FUSE No. 36
J/C
M/B
CRUISE CONTROL SWITCH
ACCELERATOR PEDAL POSITION SENSOR
OIL PRESSURE SWITCH
OIL LEVEL SWITCH
ECM
B9
B14
C34
A21
A22
A31
A32
B15
C35
C4
C12
C13
B23
B31
B29
B21
B22
C26
A18
A28
A1
A2
A19
B30
D20
D22
A29
A16
A17
A34
A27
A5
A14
A7
A15
C21
D17
D25
D31
D10
A24
A23
D11
A26
A25
D8
D2
A4
D3
A6
A3
D1
B25
BODY INTEGRATED UNIT
ELECTRONIC THROTTLE CONTROL
MANIFOLD ABSOLUTE PRESSURE SENSOR
ENGINE COOLANT TEMPERATURE SENSOR
INTAKE OIL FLOW CONTROL SOLENOID VALVE LH
INTAKE OIL FLOW CONTROL SOLENOID VALVE RH
EXHAUST OIL FLOW CONTROL SOLENOID VALVE LH
EXHAUST OIL FLOW CONTROL SOLENOID VALVE RH
FUEL TANK PRESSURE SENSOR
CRANKSHAFT POSITION SENSOR
TUMBLE GENERATOR VALVE ASSY LH
TUMBLE GENERATOR VALVE ASSY RH
KNOCK SENSOR
ENGINE GROUND
1
2
3
4
5
6
7
8
9

WI-33227

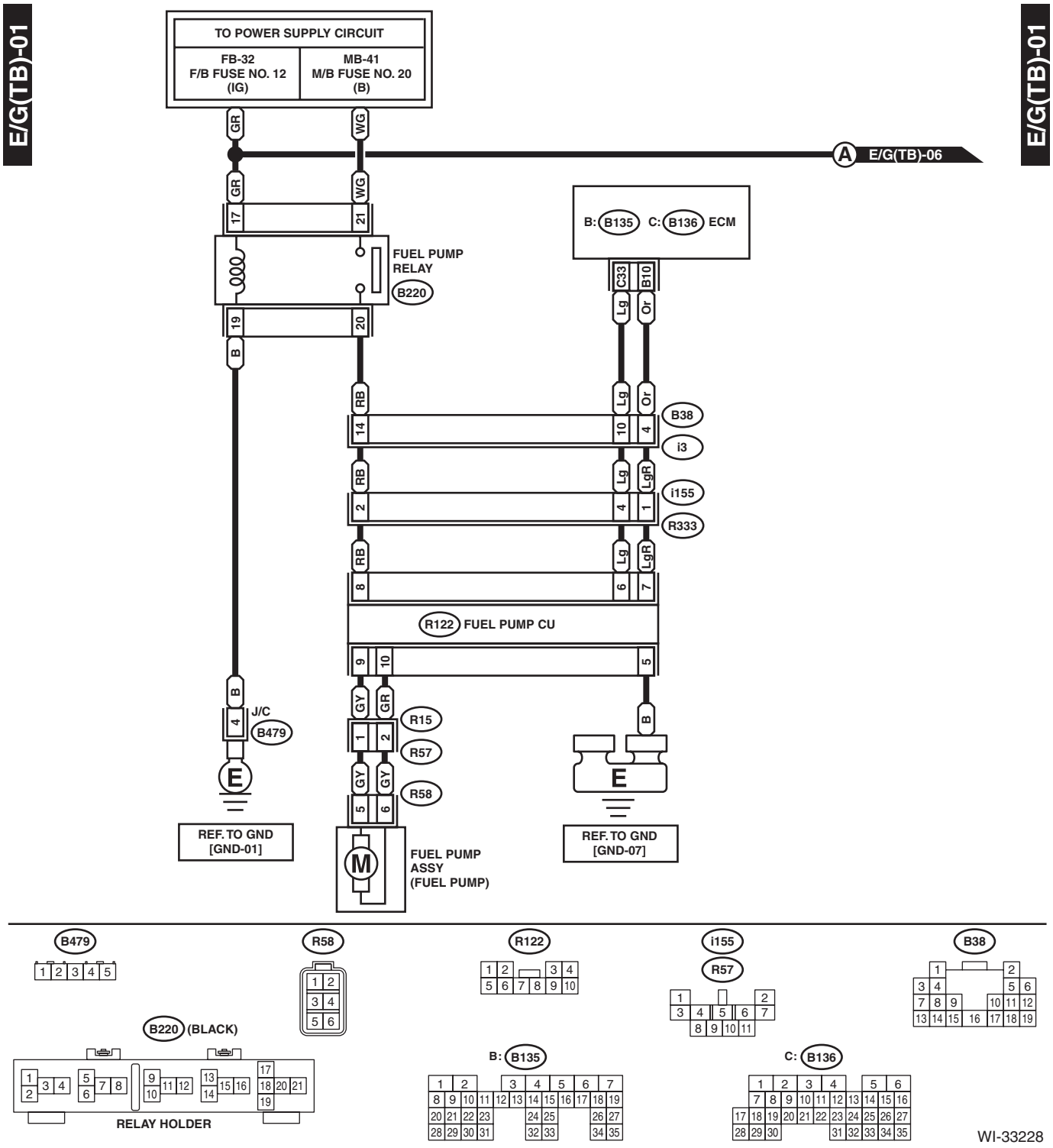
E/G(TB)-01
E/G(TB)-01
TO POWER SUPPLY CIRCUIT
FB-32
F/B FUSE NO. 12
(IG)
MB-41
M/B FUSE NO. 20
(B)
A E/G(TB)-06
B: B135 C: C136 ECM
FUEL PUMP
RELAY
B220
B38
i3
i155
R333
R122 FUEL PUMP CU
J/C
B479
R15
R57
R58
REF. TO GND
[GND-01]
REF. TO GND
[GND-07]
FUEL PUMP
ASSY
(FUEL PUMP)
B479
R58
R122
i155
R57
B38
B220 (BLACK)
RELAY HOLDER
B: B135
C: B136
WI-33228

E/G(TB)-02

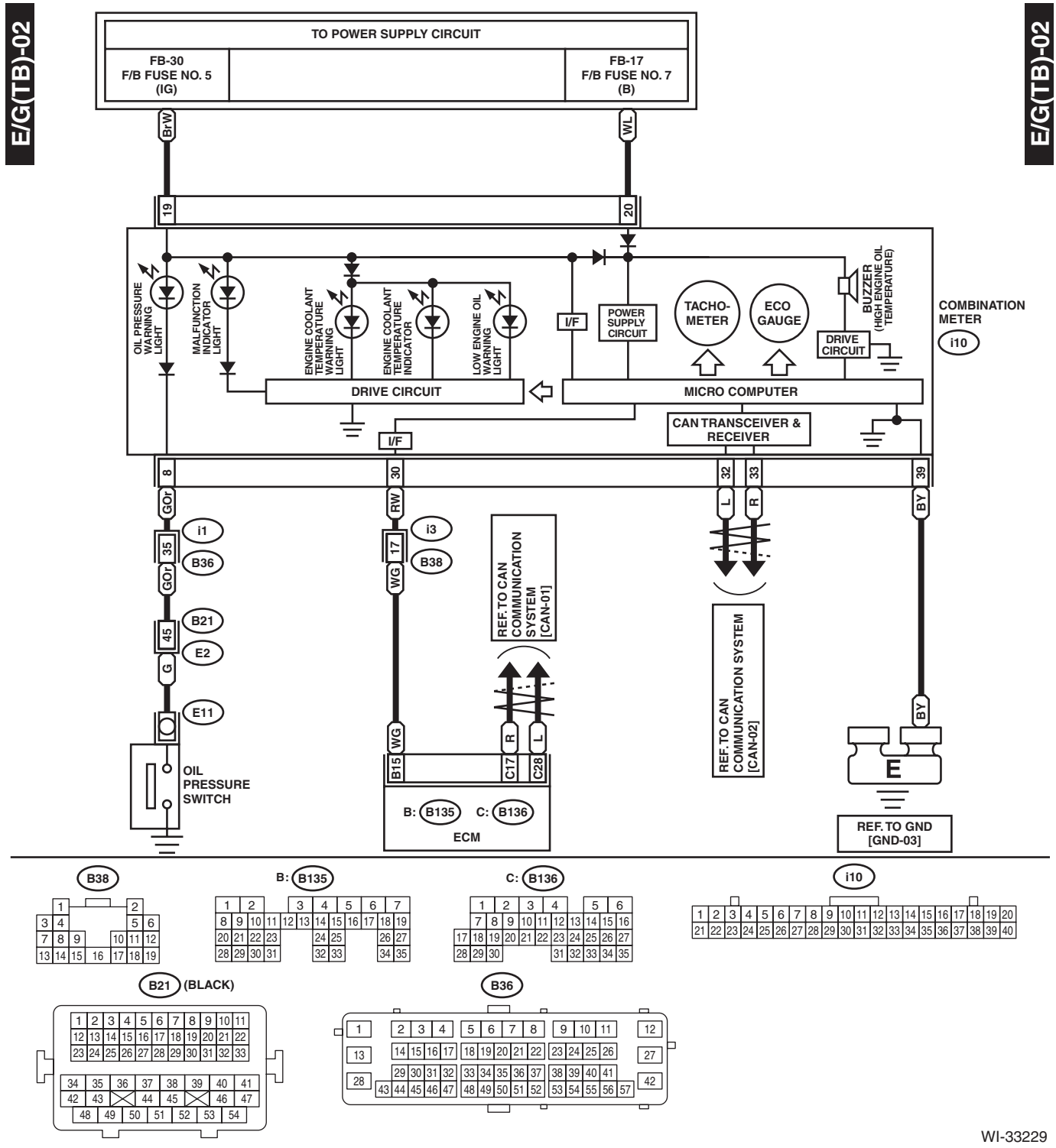
TO POWER SUPPLY CIRCUIT
FB-30
F/B FUSE NO. 5
(IG)
FB-17
F/B FUSE NO. 7
(B)
Br-W
W-L
19
20
OIL PRESSURE WARNING LIGHT
MALFUNCTION INDICATOR LIGHT
ENGINE COOLANT TEMPERATURE WARNING LIGHT
ENGINE COOLANT TEMPERATURE INDICATOR
LOW ENGINE OIL WARNING LIGHT
I/F
POWER SUPPLY CIRCUIT
TACHO-METER
ECO GAUGE
BUZZER (HIGH ENGINE OIL TEMPERATURE)
DRIVE CIRCUIT
COMBINATION METER
i10
DRIVE CIRCUIT
MICRO COMPUTER
CAN TRANSCEIVER & RECEIVER
I/F
8
30
32
33
39
G-Or
R-W
L
R
BY
i1
B36
35
i3
B38
17
W-G
REF. TO CAN COMMUNICATION SYSTEM [CAN-01]
REF. TO CAN COMMUNICATION SYSTEM [CAN-02]
B21
E2
45
G
E11
OIL PRESSURE SWITCH
B15
C17
C28
B: B135
C: B136
ECM
E
REF. TO GND [GND-03]
B38
B: B135
C: B136
i10
B21 (BLACK)
B36
WI-33229

E/G(TB)-03

E/G(TB)-03

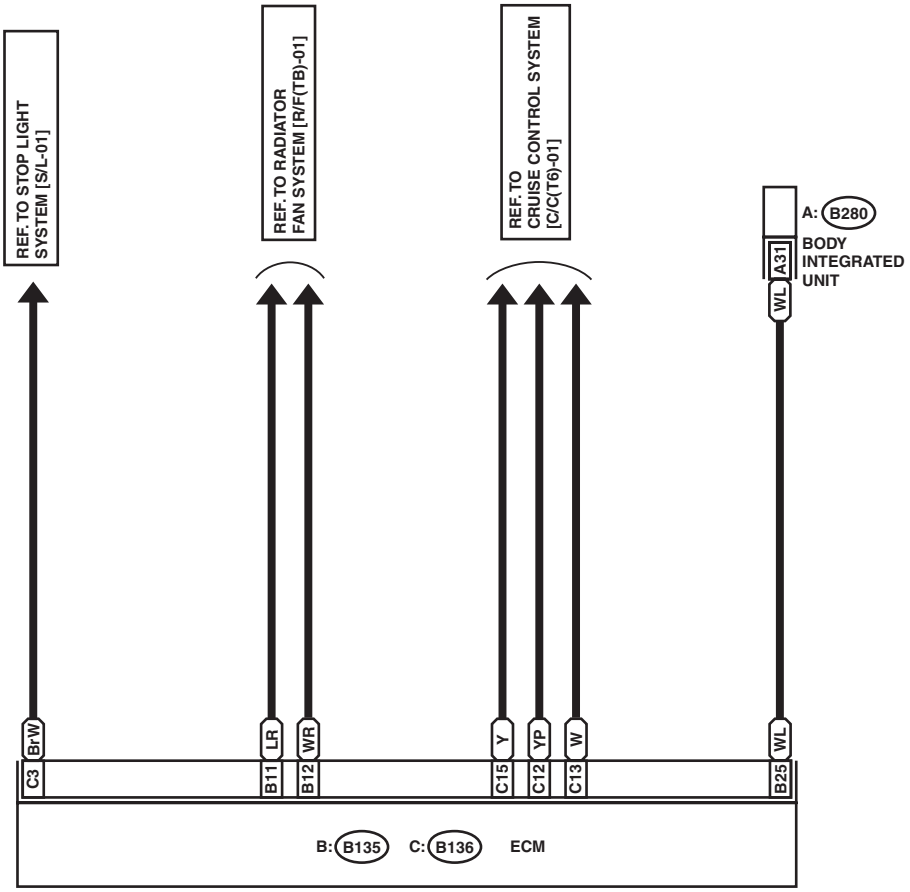

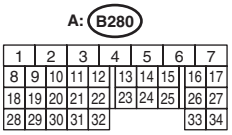

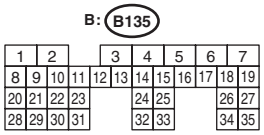

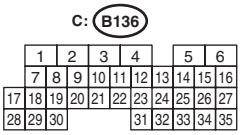

WI-25498

E/G(TB)-04

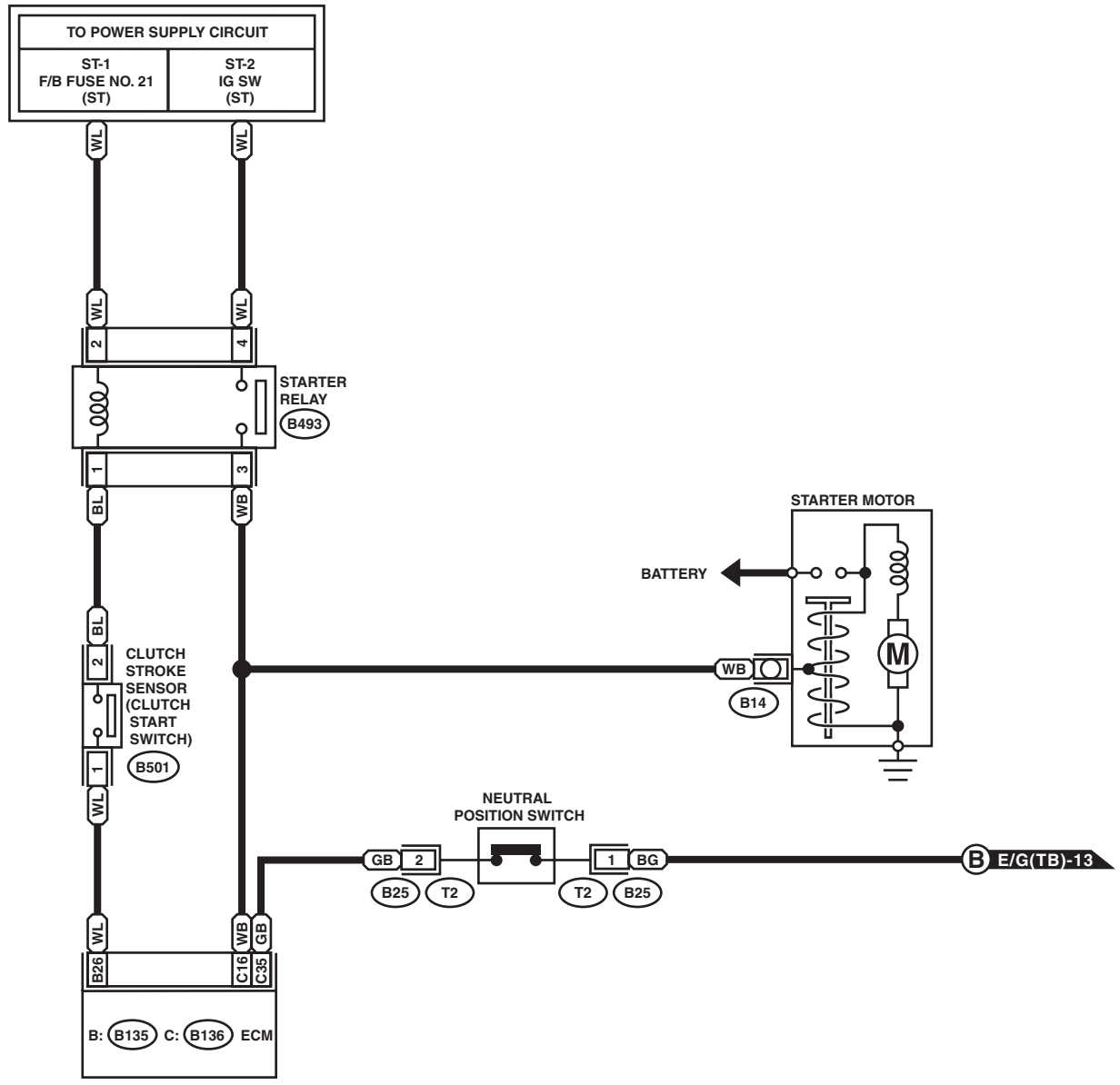

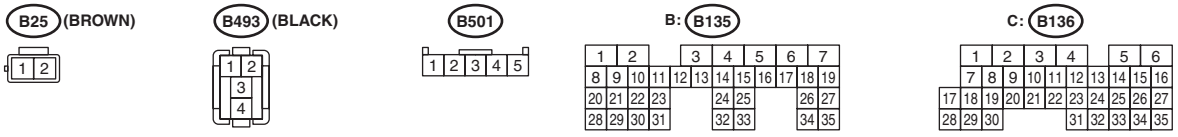

WI-25499

E/G(TB)-05

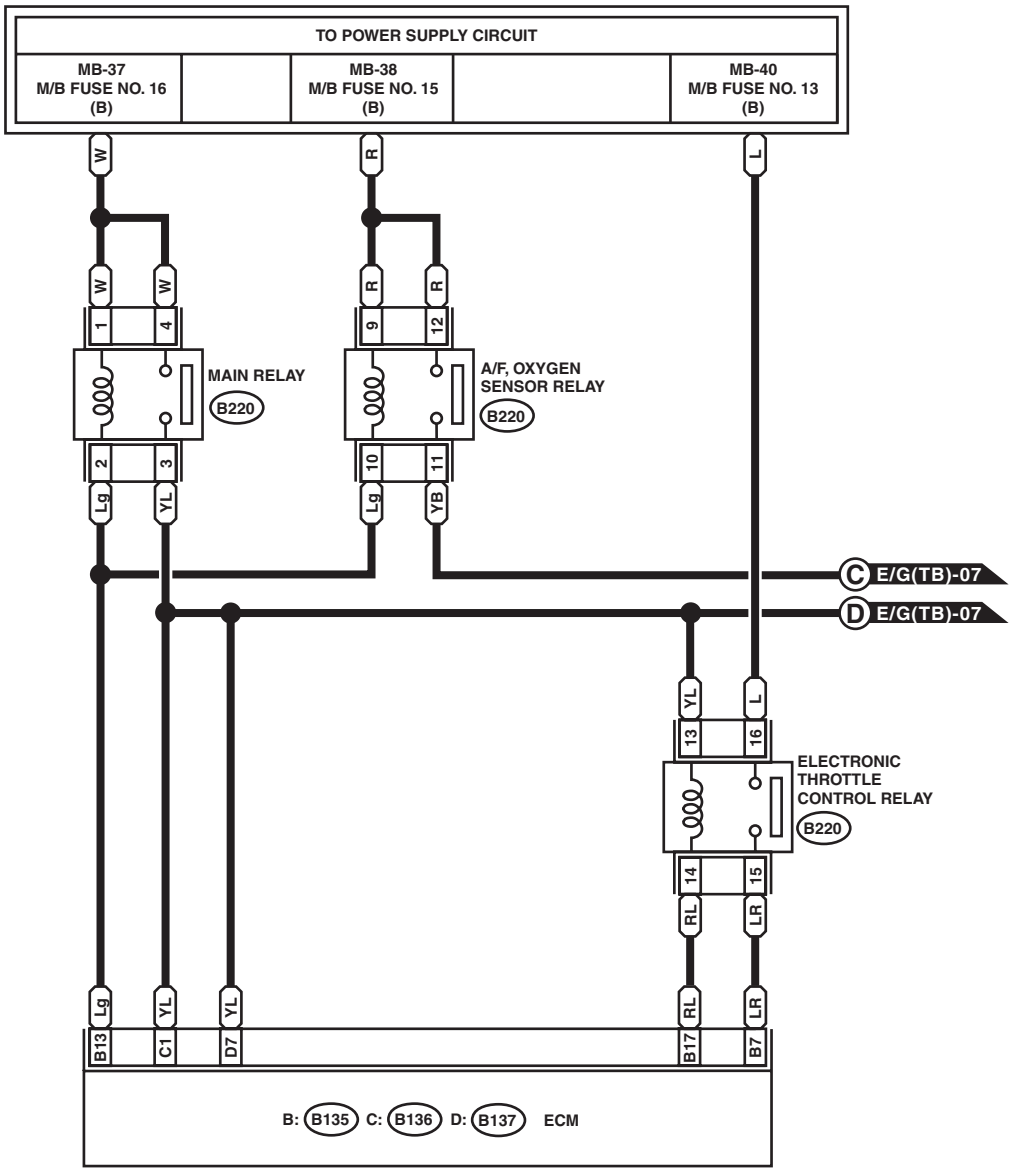

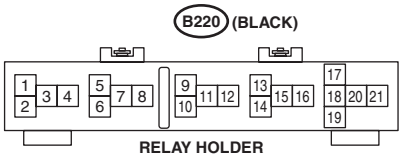

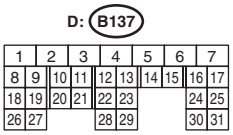

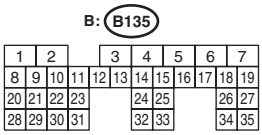

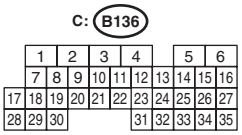

WI-33230

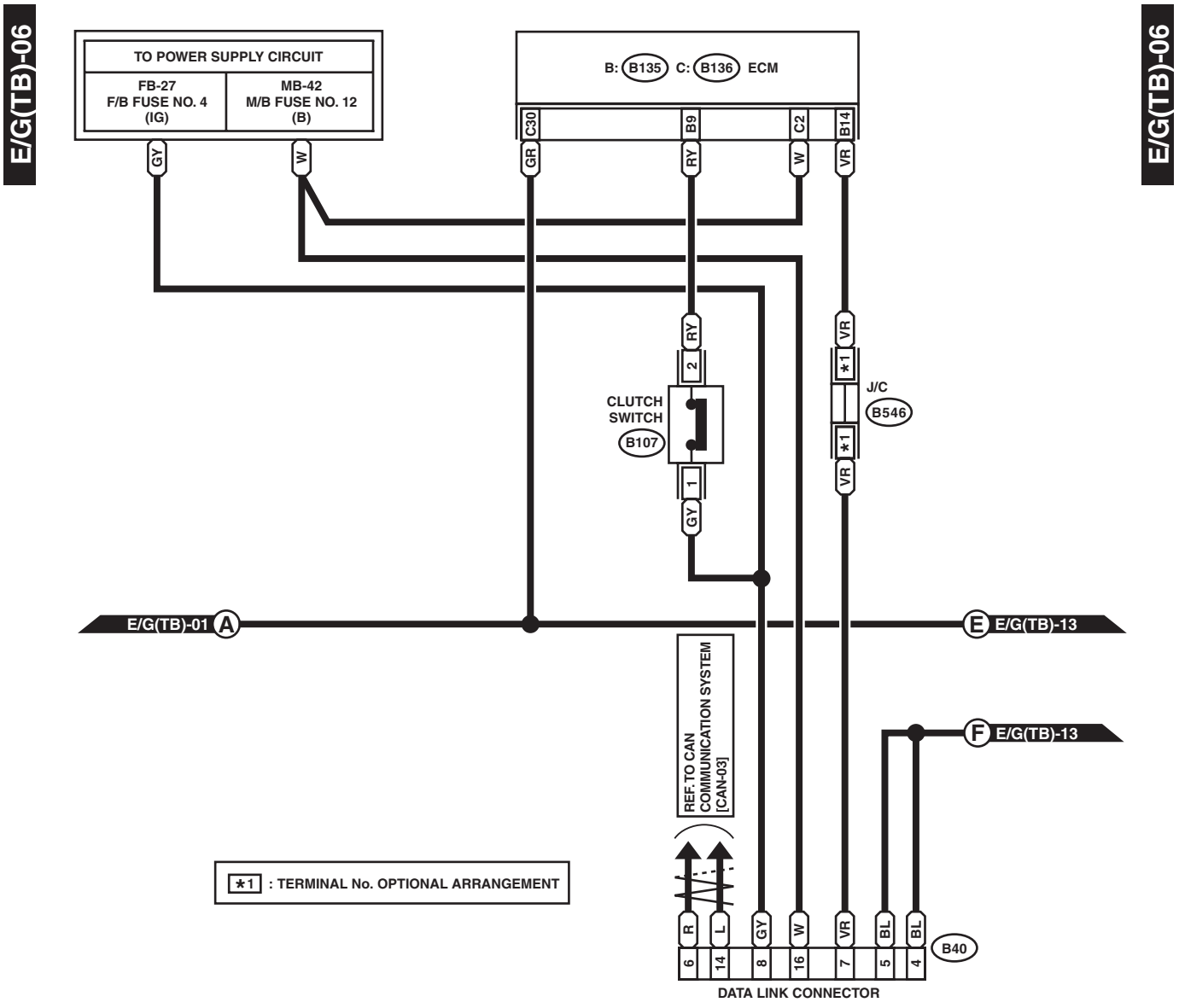
E/G(TB)-06
E/G(TB)-06
TO POWER SUPPLY CIRCUIT
FB-27
F/B FUSE NO. 4
(IG)
MB-42
M/B FUSE NO. 12
(B)
B: B135 C: B136 ECM
C30
B9
C2
B14
GY
W
GR
RY
W
VR
RY
2
CLUTCH
SWITCH
B107
1
GY
VR
*1
J/C
B546
*1
VR
E/G(TB)-01 A
E E/G(TB)-13
REF. TO CAN
COMMUNICATION SYSTEM
[CAN-03]
F E/G(TB)-13
*1 : TERMINAL No. OPTIONAL ARRANGEMENT
R
L
GY
W
VR
BL
BL
B40
6
14
8
16
7
5
4
DATA LINK CONNECTOR

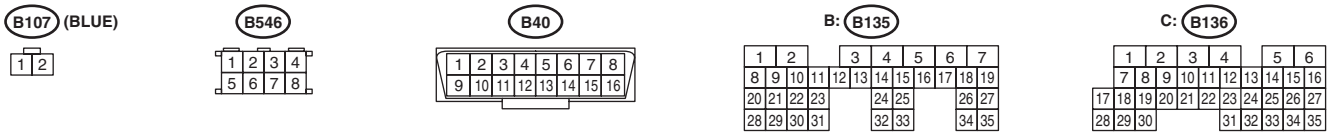
B107 (BLUE)
1 2
B546
1 2 3 4
5 6 7 8
B40
1 2 3 4 5 6 7 8
9 10 11 12 13 14 15 16
B: B135
1 2 3 4 5 6 7
8 9 10 11 12 13 14 15 16 17 18 19
20 21 22 23 24 25 26 27
28 29 30 31 32 33 34 35
C: B136
1 2 3 4 5 6
7 8 9 10 11 12 13 14 15 16
17 18 19 20 21 22 23 24 25 26 27
28 29 30 31 32 33 34 35

WI-33231

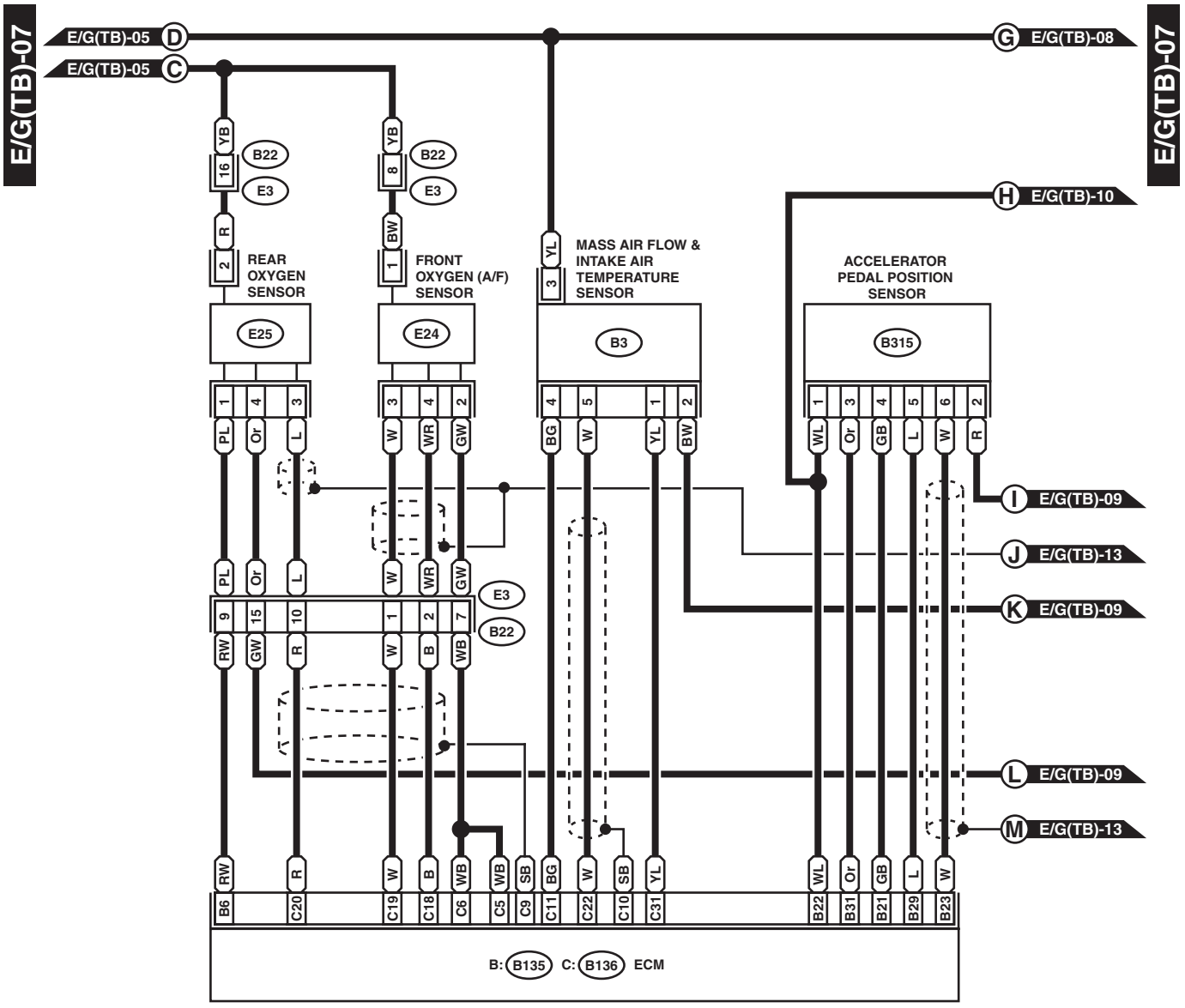
E/G(TB)-07
E/G(TB)-05 D
E/G(TB)-05 C
G E/G(TB)-08
H E/G(TB)-10
I E/G(TB)-09
J E/G(TB)-13
K E/G(TB)-09
L E/G(TB)-09
M E/G(TB)-13
REAR OXYGEN SENSOR
FRONT OXYGEN (A/F) SENSOR
MASS AIR FLOW & INTAKE AIR TEMPERATURE SENSOR
ACCELERATOR PEDAL POSITION SENSOR
E25
E24
B3
B315
B22
E3
B: B135 C: B136 ECM

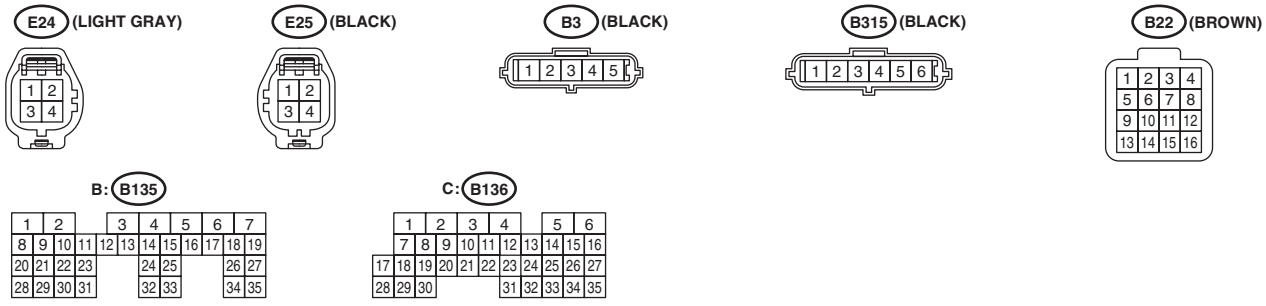
E24 (LIGHT GRAY)
E25 (BLACK)
B3 (BLACK)
B315 (BLACK)
B22 (BROWN)
B: B135
C: B136

WI-33232

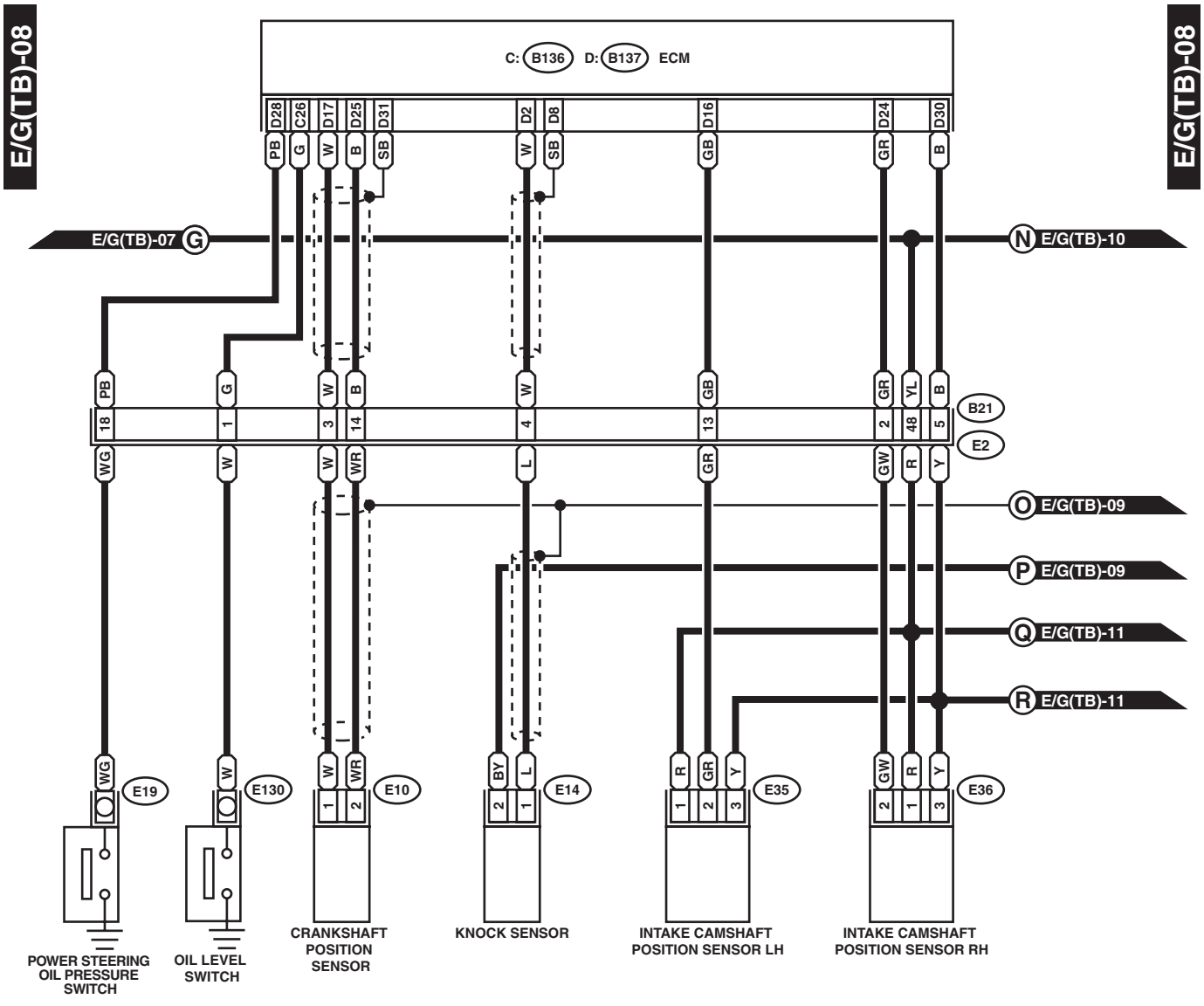
E/G(TB)-08
E/G(TB)-08
C: B136 D: B137 ECM
D28 C26 D17 D25 D31 D2 D8 D16 D24 D30
PB G W B SB W SB GB GR B
E/G(TB)-07 G
N E/G(TB)-10
PB G W B W GB GR YL B
18 1 3 14 4 13 2 48 5
B21
E2
WG W W WR L GR GW R Y
O E/G(TB)-09
P E/G(TB)-09
Q E/G(TB)-11
R E/G(TB)-11
WG W W WR BY L R GR Y GW R Y
E19 E130 E10 E14 E35 E36
1 2 1 2 2 1 1 2 3 2 1 3
POWER STEERING OIL PRESSURE SWITCH
OIL LEVEL SWITCH
CRANKSHAFT POSITION SENSOR
KNOCK SENSOR
INTAKE CAMSHAFT POSITION SENSOR LH
INTAKE CAMSHAFT POSITION SENSOR RH

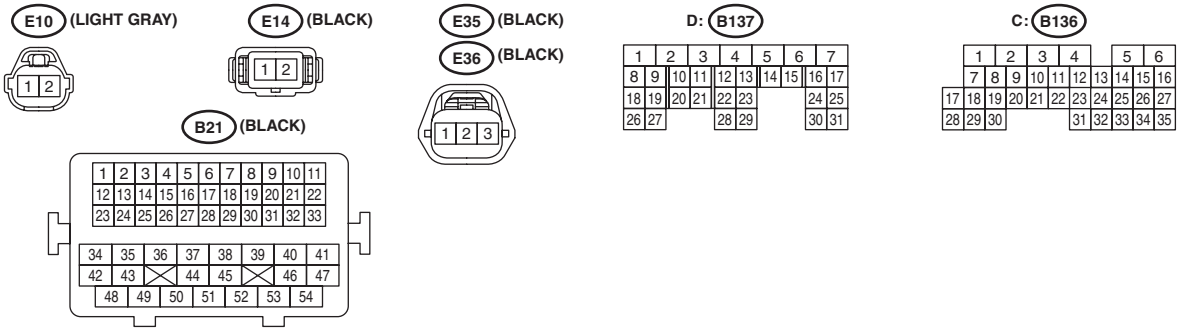
E10 (LIGHT GRAY)
E14 (BLACK)
E35 (BLACK)
E36 (BLACK)
B21 (BLACK)
D: B137
C: B136

WI-29362

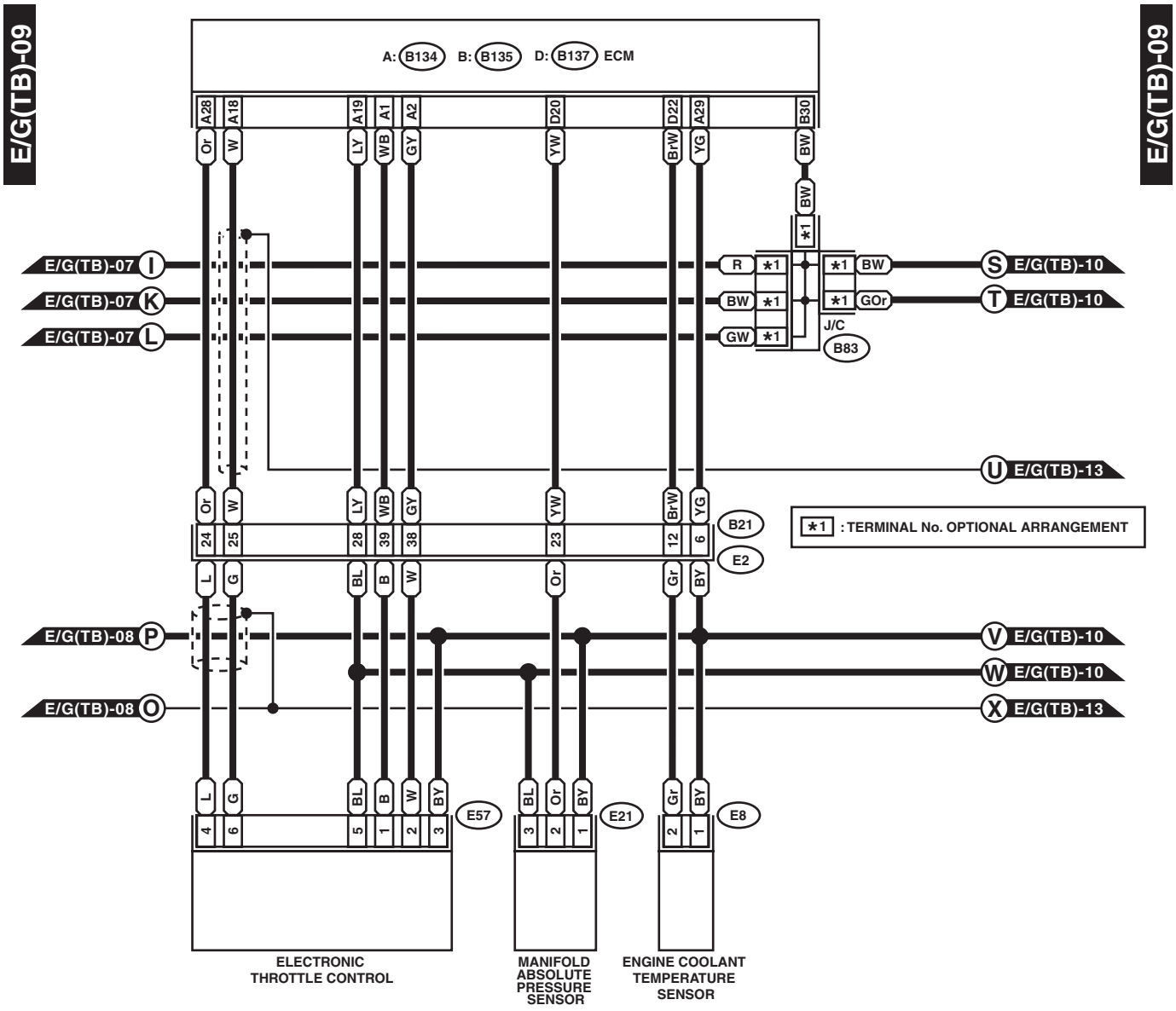
E/G(TB)-09
E/G(TB)-09
A: B134 B: B135 D: B137 ECM
A28 A18 A19 A1 A2 D20 D22 A29 B30
Or W LY WB GY YW BrW YG BW
BW
*1
E/G(TB)-07 I
E/G(TB)-07 K
E/G(TB)-07 L
R *1
BW *1
GW *1
*1 BW
*1 GOr
J/C
B83
S E/G(TB)-10
T E/G(TB)-10
U E/G(TB)-13
Or W LY WB GY YW BrW YG
24 25 28 39 38 23 12 6
B21
E2
*1 : TERMINAL No. OPTIONAL ARRANGEMENT
L G BL B W Or Gr BY
E/G(TB)-08 P
E/G(TB)-08 O
V E/G(TB)-10
W E/G(TB)-10
X E/G(TB)-13
L G BL B W BY BL Or BY Gr BY
4 6 5 1 2 3 3 2 1 2 1
E57
E21
E8
ELECTRONIC THROTTLE CONTROL
MANIFOLD ABSOLUTE PRESSURE SENSOR
ENGINE COOLANT TEMPERATURE SENSOR

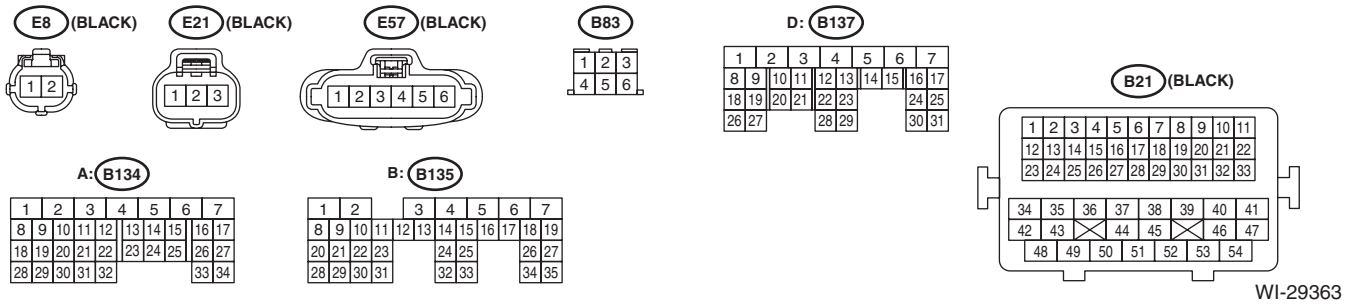
E8 (BLACK)
E21 (BLACK)
E57 (BLACK)
B83
D: B137
B21 (BLACK)
A: B134
B: B135

WI-29363

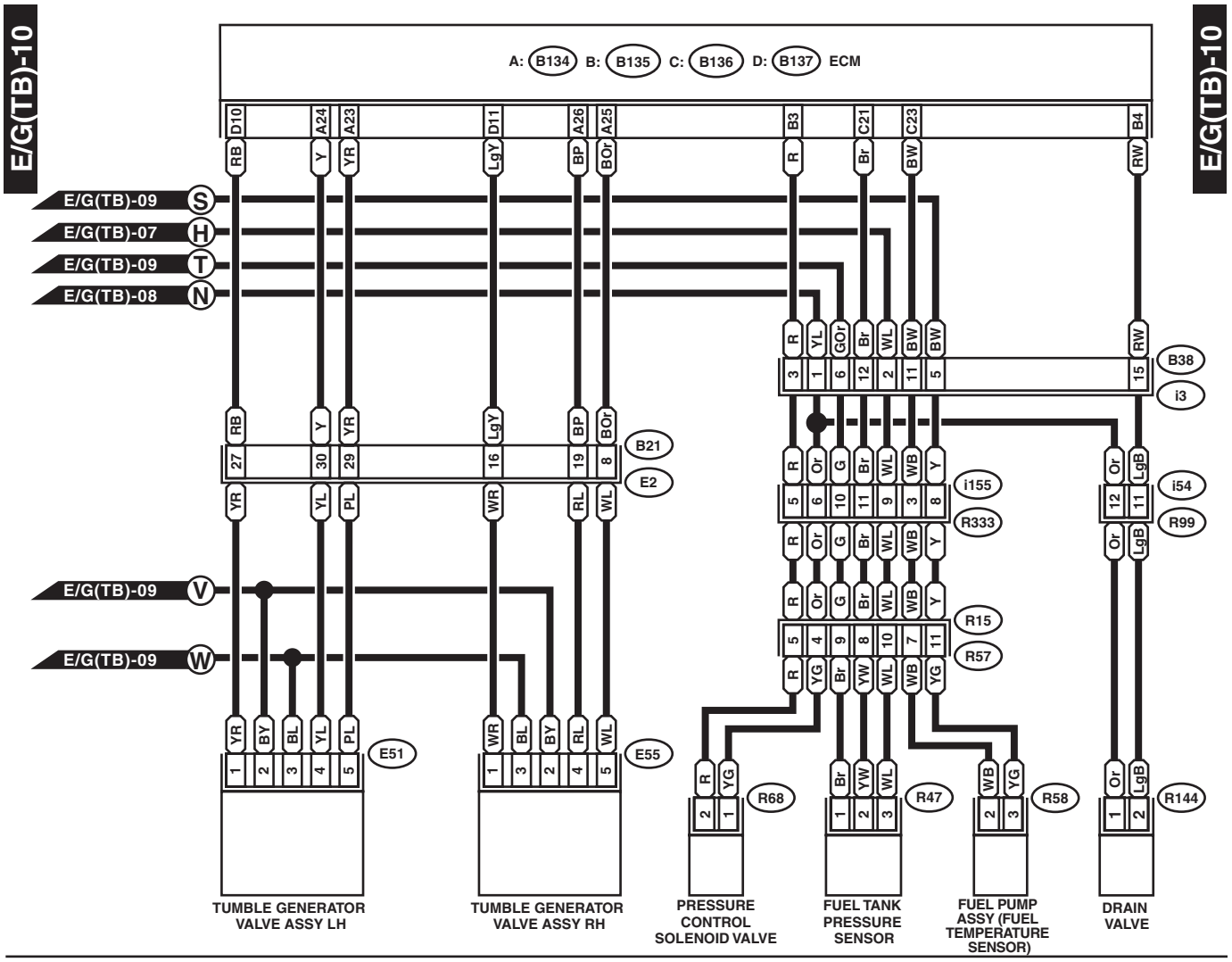
E/G(TB)-10
E/G(TB)-10
A: B134 B: B135 C: B136 D: B137 ECM
D10 A24 A23 D11 A26 A25 B3 C21 C23 B4
RB Y YR LgY BP BOr R Br BW RW
E/G(TB)-09 S
E/G(TB)-07 H
E/G(TB)-09 T
E/G(TB)-08 N
B38
i3
B21
E2
i155
R333
i54
R99
R15
R57
E/G(TB)-09 V
E/G(TB)-09 W
E51
E55
R68
R47
R58
R144
TUMBLE GENERATOR VALVE ASSY LH
TUMBLE GENERATOR VALVE ASSY RH
PRESSURE CONTROL SOLENOID VALVE
FUEL TANK PRESSURE SENSOR
FUEL PUMP ASSY (FUEL TEMPERATURE SENSOR)
DRAIN VALVE

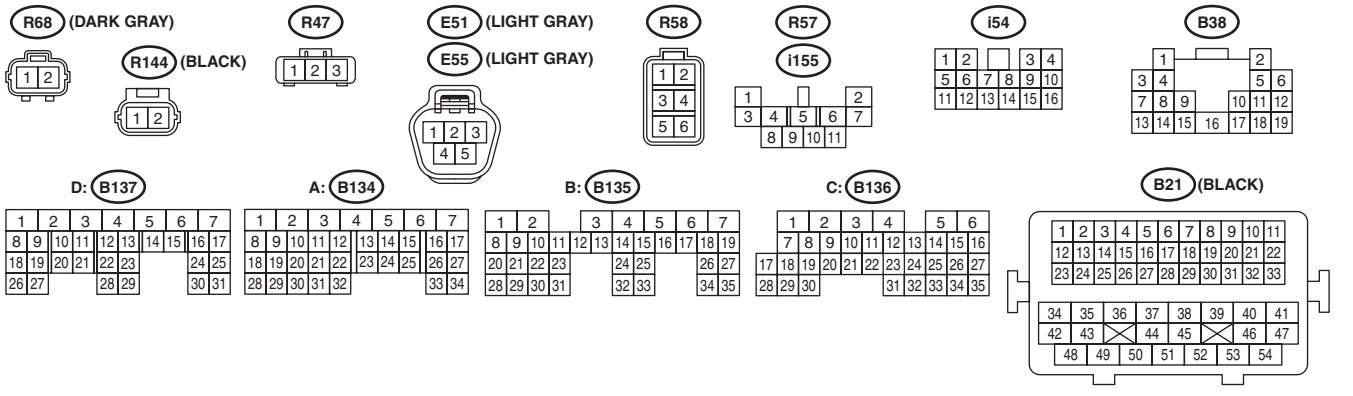
R68 (DARK GRAY)
R144 (BLACK)
R47
E51 (LIGHT GRAY)
E55 (LIGHT GRAY)
R58
R57
i155
i54
B38
D: B137
A: B134
B: B135
C: B136
B21 (BLACK)

WI-29364

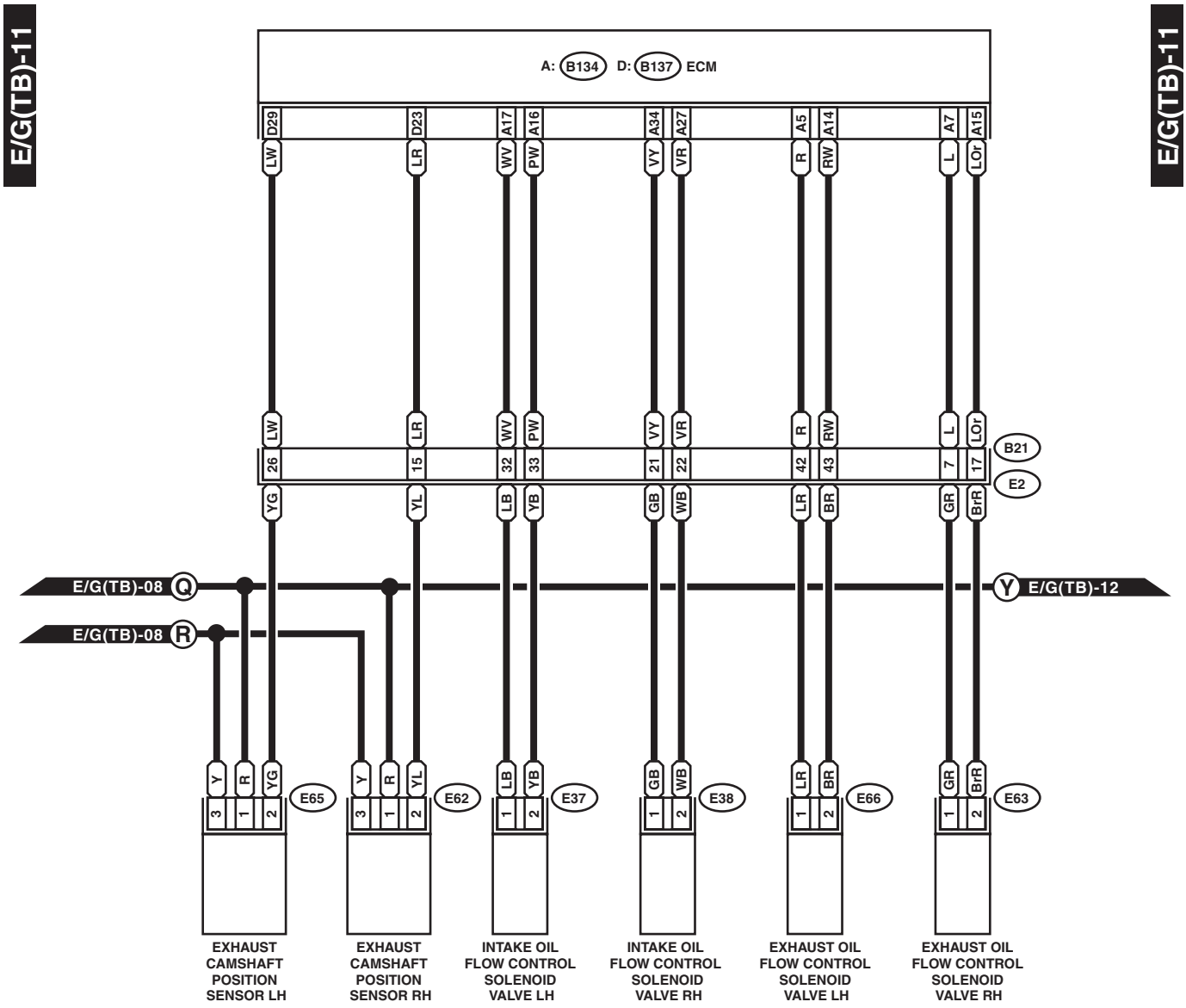
E/G(TB)-11
E/G(TB)-11
A: B134 D: B137 ECM
D29 D23 A17 A16 A34 A27 A5 A14 A7 A15
LW LR WV PW VY VR R RW L LOr
26 15 32 33 21 22 42 43 7 17
B21
E2
YG YL LB YB GB WB LR BR GR BrR
E/G(TB)-08 Q
E/G(TB)-08 R
Y E/G(TB)-12
Y R YG E65
Y R YL E62
LB YB E37
GB WB E38
LR BR E66
GR BrR E63
EXHAUST CAMSHAFT POSITION SENSOR LH
EXHAUST CAMSHAFT POSITION SENSOR RH
INTAKE OIL FLOW CONTROL SOLENOID VALVE LH
INTAKE OIL FLOW CONTROL SOLENOID VALVE RH
EXHAUST OIL FLOW CONTROL SOLENOID VALVE LH
EXHAUST OIL FLOW CONTROL SOLENOID VALVE RH

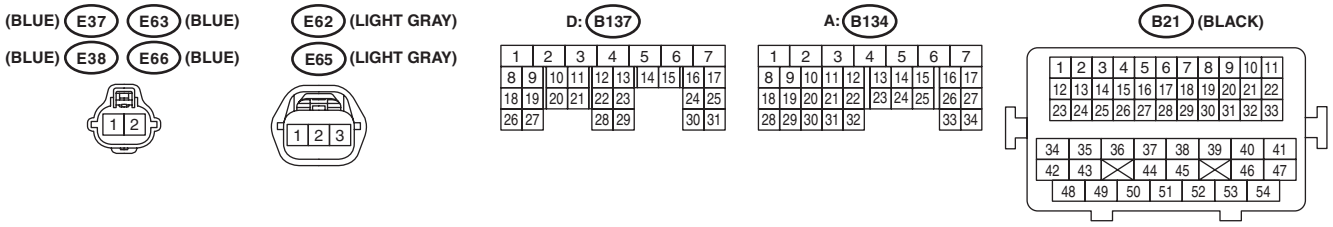
(BLUE) E37 E63 (BLUE)
(BLUE) E38 E66 (BLUE)
E62 (LIGHT GRAY)
E65 (LIGHT GRAY)
D: B137
A: B134
B21 (BLACK)

WI-29365

E/G(TB)-12

E/G(TB)-12

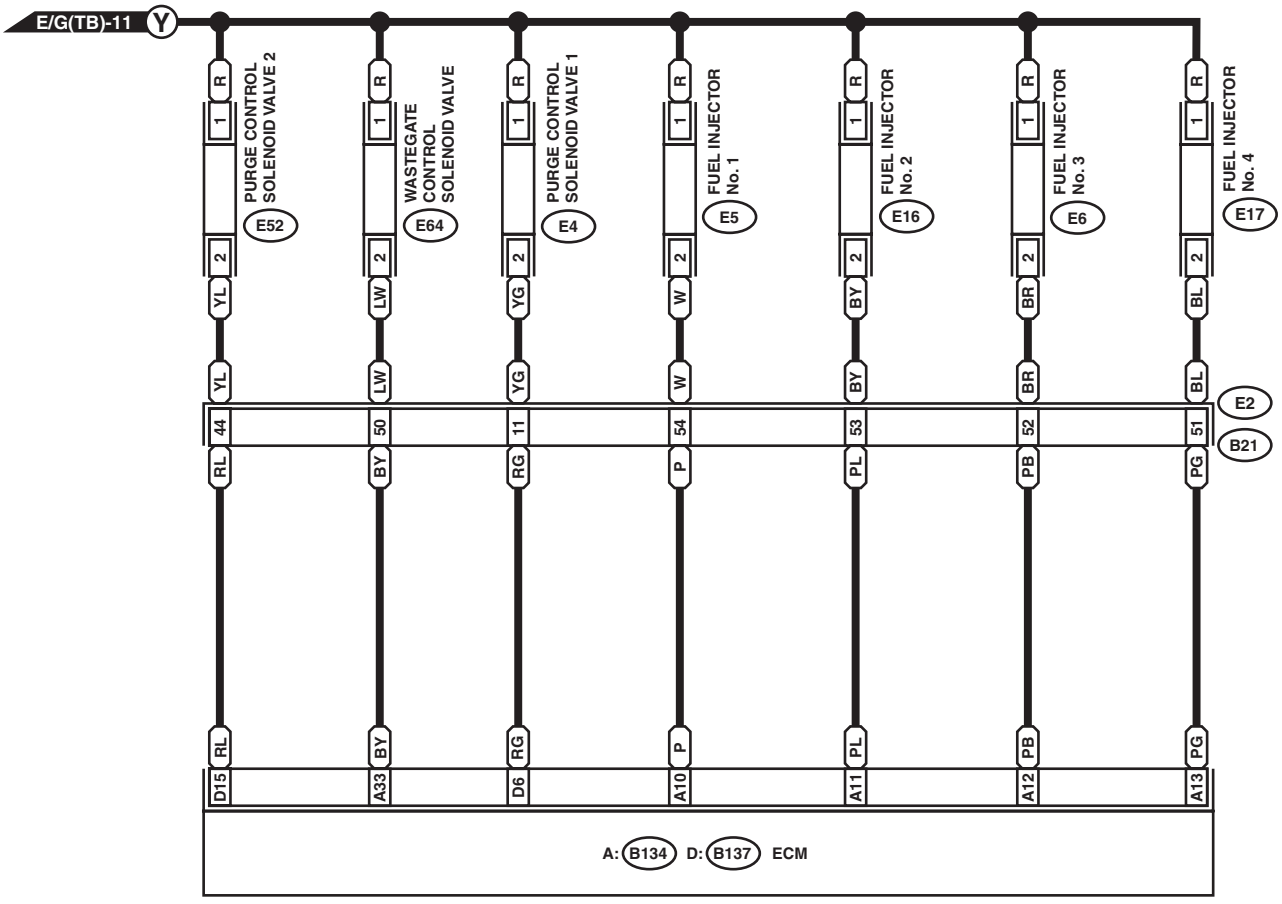

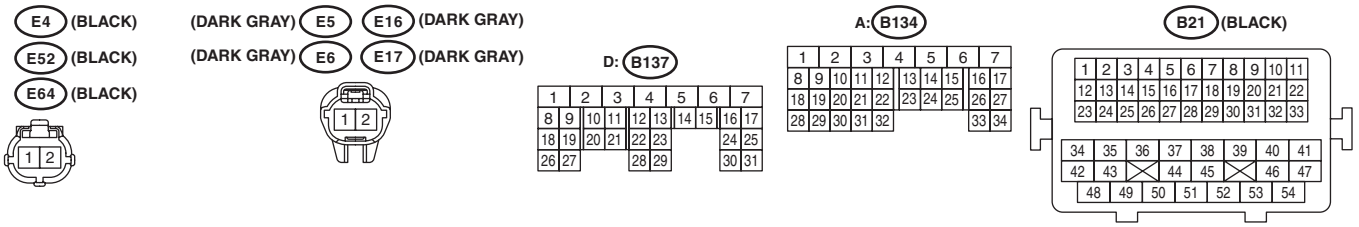

WI-29366

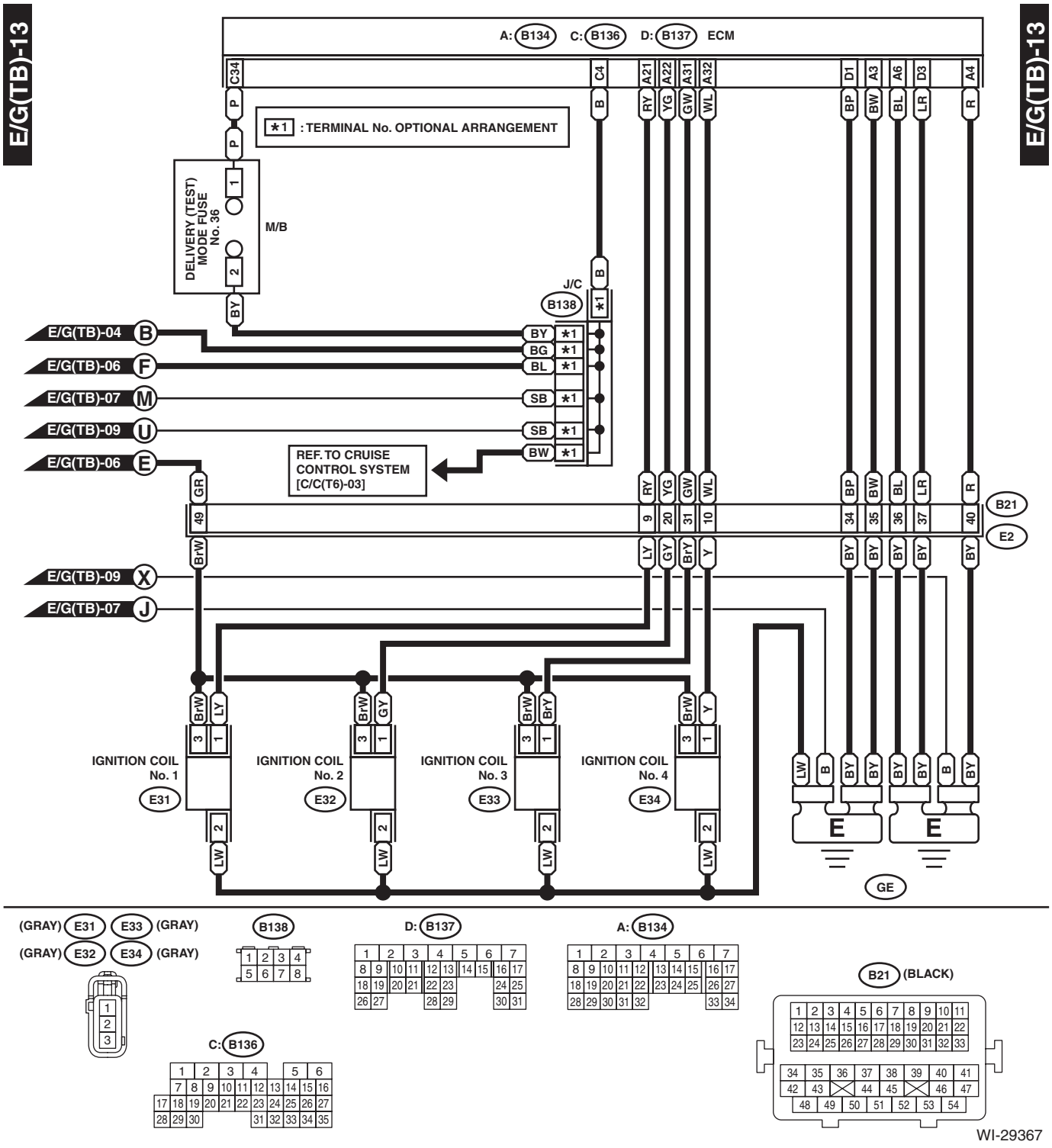
E/G(TB)-13
E/G(TB)-13
A: B134 C: B136 D: B137 ECM
*1 : TERMINAL No. OPTIONAL ARRANGEMENT
DELIVERY (TEST) MODE FUSE No. 36
M/B
J/C B138
E/G(TB)-04 B
E/G(TB)-06 F
E/G(TB)-07 M
E/G(TB)-09 U
E/G(TB)-06 E
REF. TO CRUISE CONTROL SYSTEM [C/C(T6)-03]
B21
E2
E/G(TB)-09 X
E/G(TB)-07 J
IGNITION COIL No. 1 E31
IGNITION COIL No. 2 E32
IGNITION COIL No. 3 E33
IGNITION COIL No. 4 E34
GE
(GRAY) E31 E33 (GRAY)
(GRAY) E32 E34 (GRAY)
B138
D: B137
A: B134
B21 (BLACK)
C: B136
WI-29367

3. 3.6 L MODEL

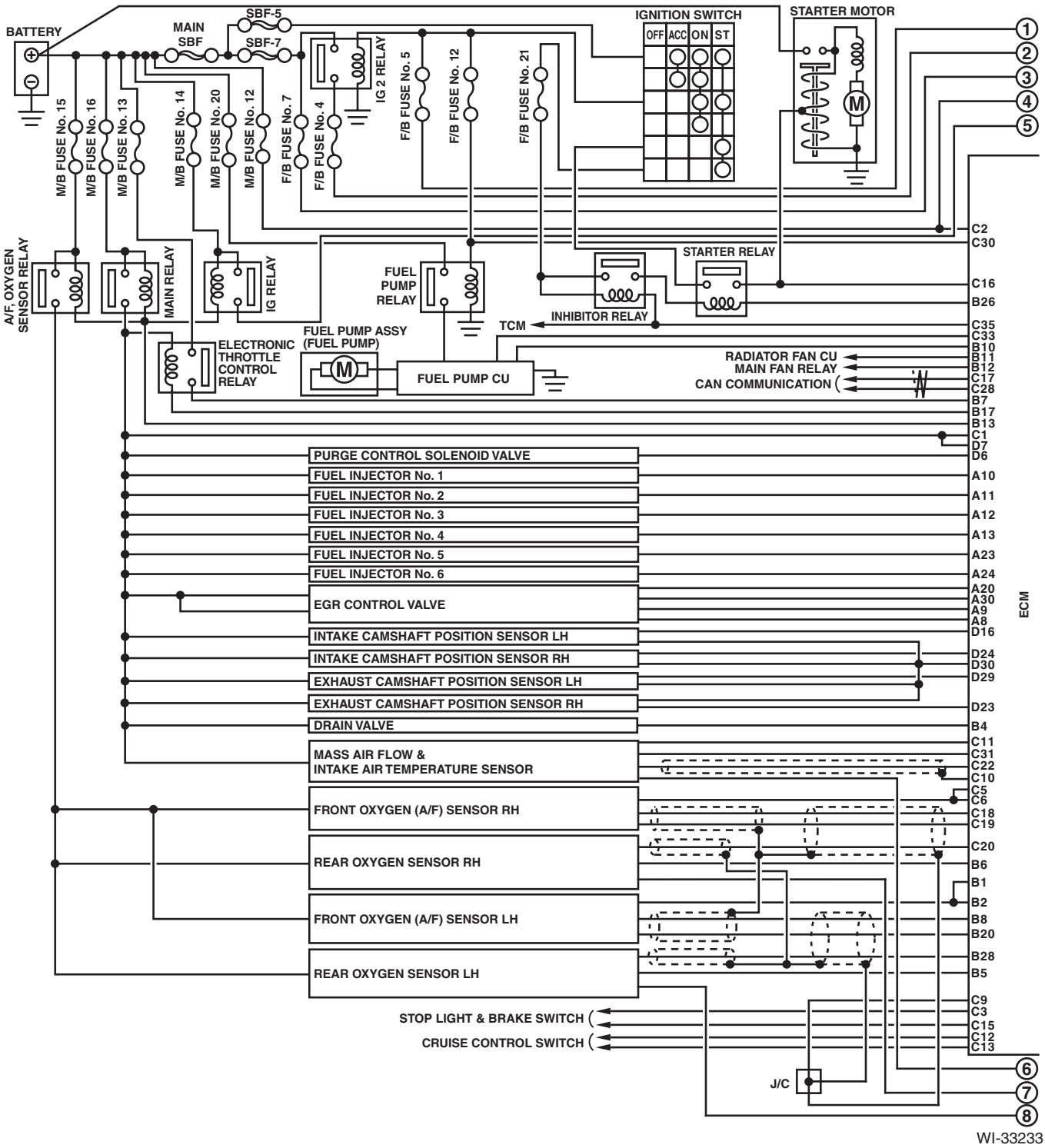
BATTERY
MAIN SBF
SBF-5
SBF-7
IGNITION SWITCH
OFF ACC ON ST
STARTER MOTOR
M/B FUSE No. 15
M/B FUSE No. 16
M/B FUSE No. 13
M/B FUSE No. 14
M/B FUSE No. 20
M/B FUSE No. 12
F/B FUSE No. 7
F/B FUSE No. 4
IG 2 RELAY
F/B FUSE No. 5
F/B FUSE No. 12
F/B FUSE No. 21
A/F, OXYGEN SENSOR RELAY
MAIN RELAY
IG RELAY
FUEL PUMP RELAY
STARTER RELAY
INHIBITOR RELAY
TCM
ELECTRONIC THROTTLE CONTROL RELAY
FUEL PUMP ASSY (FUEL PUMP)
FUEL PUMP CU
RADIATOR FAN CU
MAIN FAN RELAY
CAN COMMUNICATION
PURGE CONTROL SOLENOID VALVE
FUEL INJECTOR No. 1
FUEL INJECTOR No. 2
FUEL INJECTOR No. 3
FUEL INJECTOR No. 4
FUEL INJECTOR No. 5
FUEL INJECTOR No. 6
EGR CONTROL VALVE
INTAKE CAMSHAFT POSITION SENSOR LH
INTAKE CAMSHAFT POSITION SENSOR RH
EXHAUST CAMSHAFT POSITION SENSOR LH
EXHAUST CAMSHAFT POSITION SENSOR RH
DRAIN VALVE
MASS AIR FLOW & INTAKE AIR TEMPERATURE SENSOR
FRONT OXYGEN (A/F) SENSOR RH
REAR OXYGEN SENSOR RH
FRONT OXYGEN (A/F) SENSOR LH
REAR OXYGEN SENSOR LH
STOP LIGHT & BRAKE SWITCH
CRUISE CONTROL SWITCH
J/C
ECM
C2
C30
C16
B26
C35
C33
B10
B11
B12
C17
C28
B7
B17
B13
C1
D7
D6
A10
A11
A12
A13
A23
A24
A20
A30
A9
A8
D16
D24
D30
D29
D23
B4
C11
C31
C22
C10
C5
C6
C18
C19
C20
B6
B1
B2
B8
B20
B28
B5
C9
C3
C15
C12
C13
1
2
3
4
5
6
7
8
WI-33233

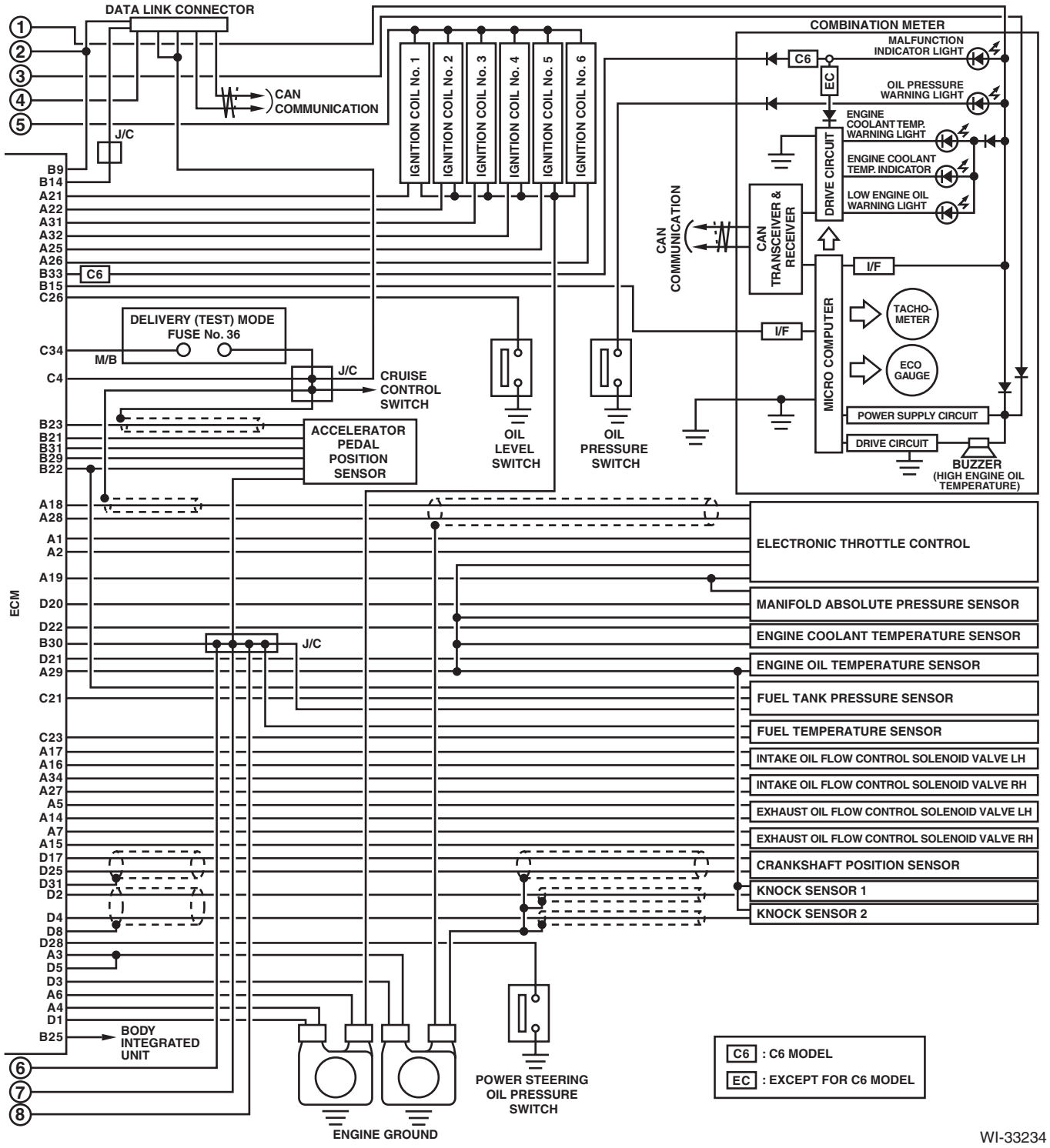
DATA LINK CONNECTOR
CAN COMMUNICATION
J/C
IGNITION COIL No. 1
IGNITION COIL No. 2
IGNITION COIL No. 3
IGNITION COIL No. 4
IGNITION COIL No. 5
IGNITION COIL No. 6
COMBINATION METER
MALFUNCTION INDICATOR LIGHT
OIL PRESSURE WARNING LIGHT
ENGINE COOLANT TEMP. WARNING LIGHT
ENGINE COOLANT TEMP. INDICATOR
LOW ENGINE OIL WARNING LIGHT
DRIVE CIRCUIT
CAN TRANSCEIVER & RECEIVER
I/F
MICRO COMPUTER
TACHO-METER
ECO GAUGE
POWER SUPPLY CIRCUIT
BUZZER
(HIGH ENGINE OIL TEMPERATURE)
DELIVERY (TEST) MODE FUSE No. 36
M/B
CRUISE CONTROL SWITCH
ACCELERATOR PEDAL POSITION SENSOR
OIL LEVEL SWITCH
OIL PRESSURE SWITCH
ECM
ELECTRONIC THROTTLE CONTROL
MANIFOLD ABSOLUTE PRESSURE SENSOR
ENGINE COOLANT TEMPERATURE SENSOR
ENGINE OIL TEMPERATURE SENSOR
FUEL TANK PRESSURE SENSOR
FUEL TEMPERATURE SENSOR
INTAKE OIL FLOW CONTROL SOLENOID VALVE LH
INTAKE OIL FLOW CONTROL SOLENOID VALVE RH
EXHAUST OIL FLOW CONTROL SOLENOID VALVE LH
EXHAUST OIL FLOW CONTROL SOLENOID VALVE RH
CRANKSHAFT POSITION SENSOR
KNOCK SENSOR 1
KNOCK SENSOR 2
BODY INTEGRATED UNIT
POWER STEERING OIL PRESSURE SWITCH
ENGINE GROUND
C6 : C6 MODEL
EC : EXCEPT FOR C6 MODEL
WI-33234

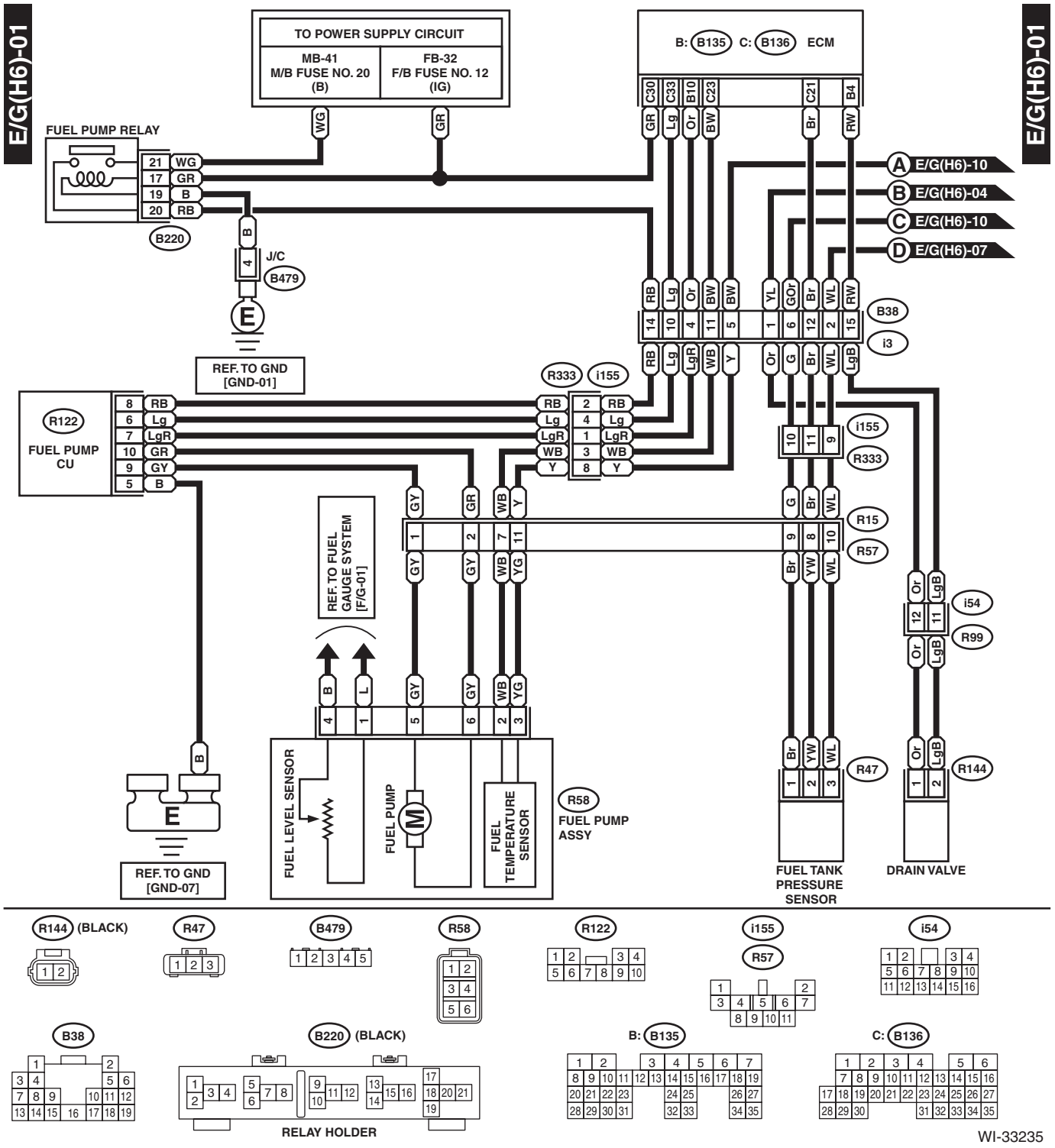
E/G(H6)-01
E/G(H6)-01
TO POWER SUPPLY CIRCUIT
MB-41
M/B FUSE NO. 20
(B)
FB-32
F/B FUSE NO. 12
(IG)
B: B135 C: B136 ECM
FUEL PUMP RELAY
B220
J/C
B479
REF. TO GND
[GND-01]
R122
FUEL PUMP
CU
R333
i155
i3
B38
A E/G(H6)-10
B E/G(H6)-04
C E/G(H6)-10
D E/G(H6)-07
REF. TO FUEL
GAUGE SYSTEM
[F/G-01]
R15
R57
i54
R99
R47
R144
R58
FUEL PUMP
ASSY
FUEL LEVEL SENSOR
FUEL PUMP
FUEL
TEMPERATURE
SENSOR
REF. TO GND
[GND-07]
FUEL TANK
PRESSURE
SENSOR
DRAIN VALVE
R144 (BLACK)
R47
B479
R58
R122
i155
R57
i54
B38
B220 (BLACK)
RELAY HOLDER
B: B135
C: B136

WI-33235

E/G(H6)-02

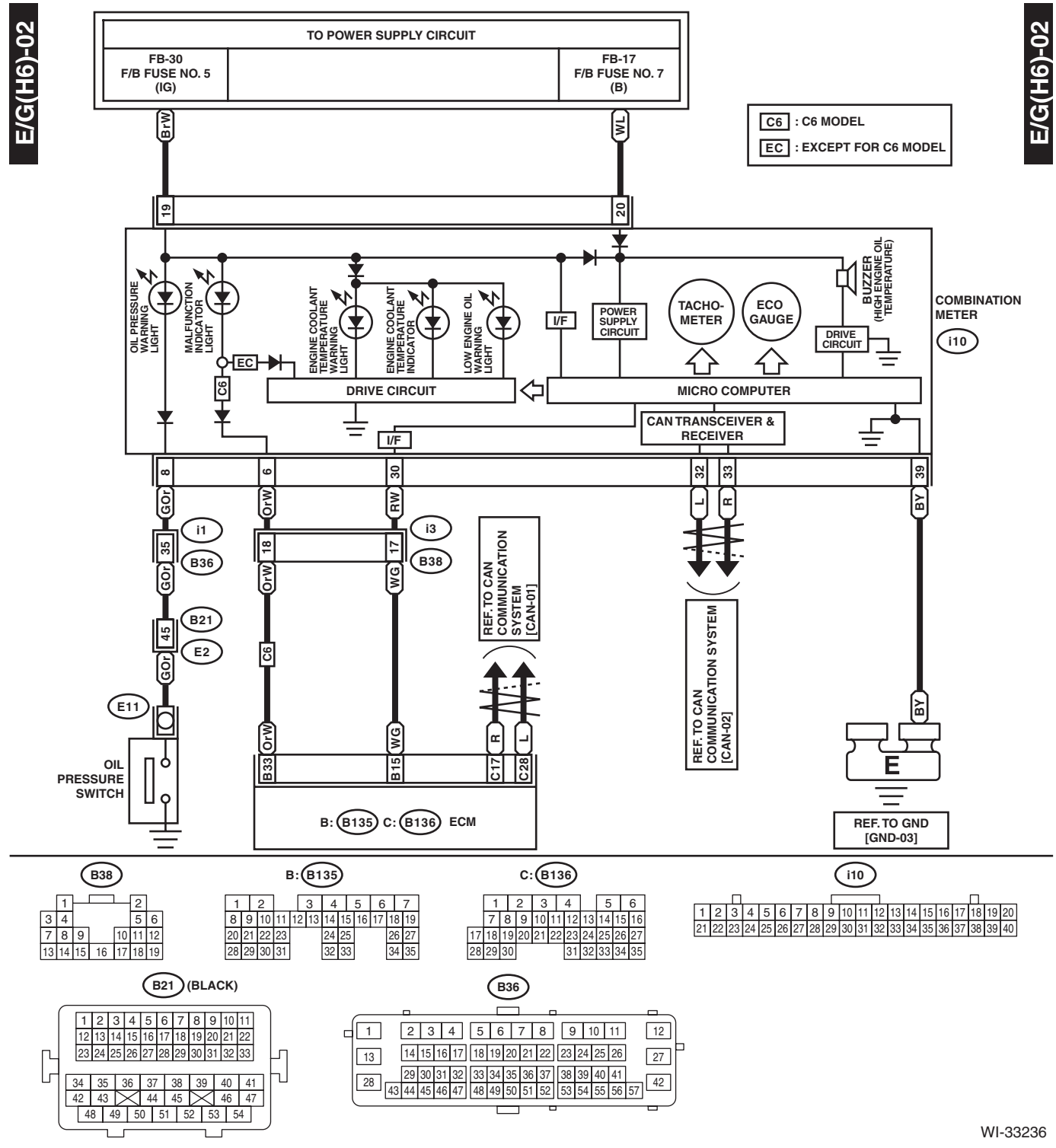

WI-33236

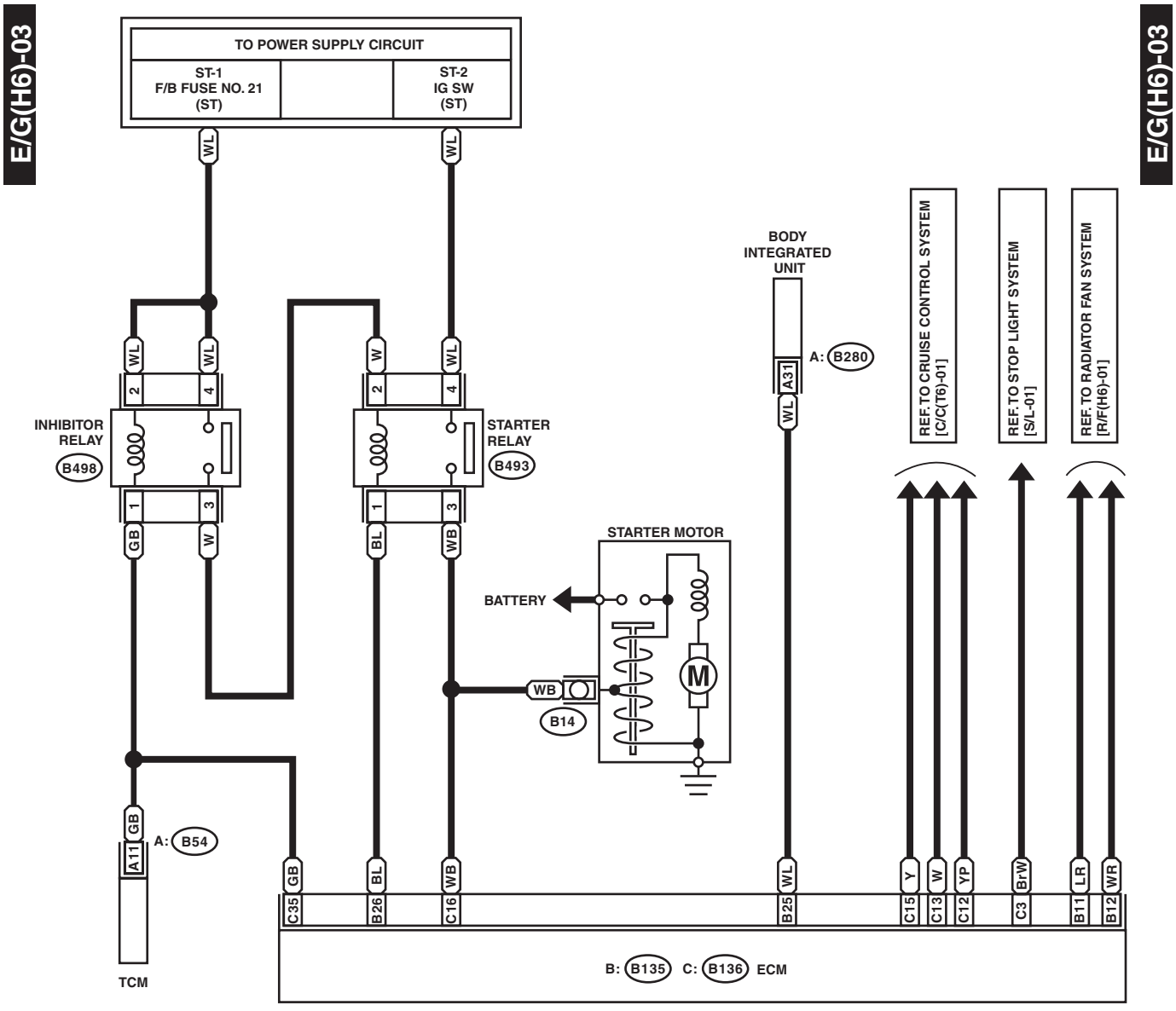

B493 (BLACK)

B498 (BLACK)

A: B280

1	2	3	4	5	6	7				
8	9	10	11	12	13	14	15	16	17	
18	19	20	21	22	23	24	25	26	27	
28	29	30	31	32				33	34	

A: B54

B: B135

1	2		3	4	5	6	7					
8	9	10	11	12	13	14	15	16	17	18	19	
20	21	22	23			24	25			26	27	
28	29	30	31			32	33			34	35	

C: B136

		1	2	3	4			5	6					
	7	8	9	10	11	12	13	14	15	16				
17	18	19	20	21	22	23	24	25	26	27				
28	29	30				31	32	33	34	35				

WI-25513

E/G(H6)-04

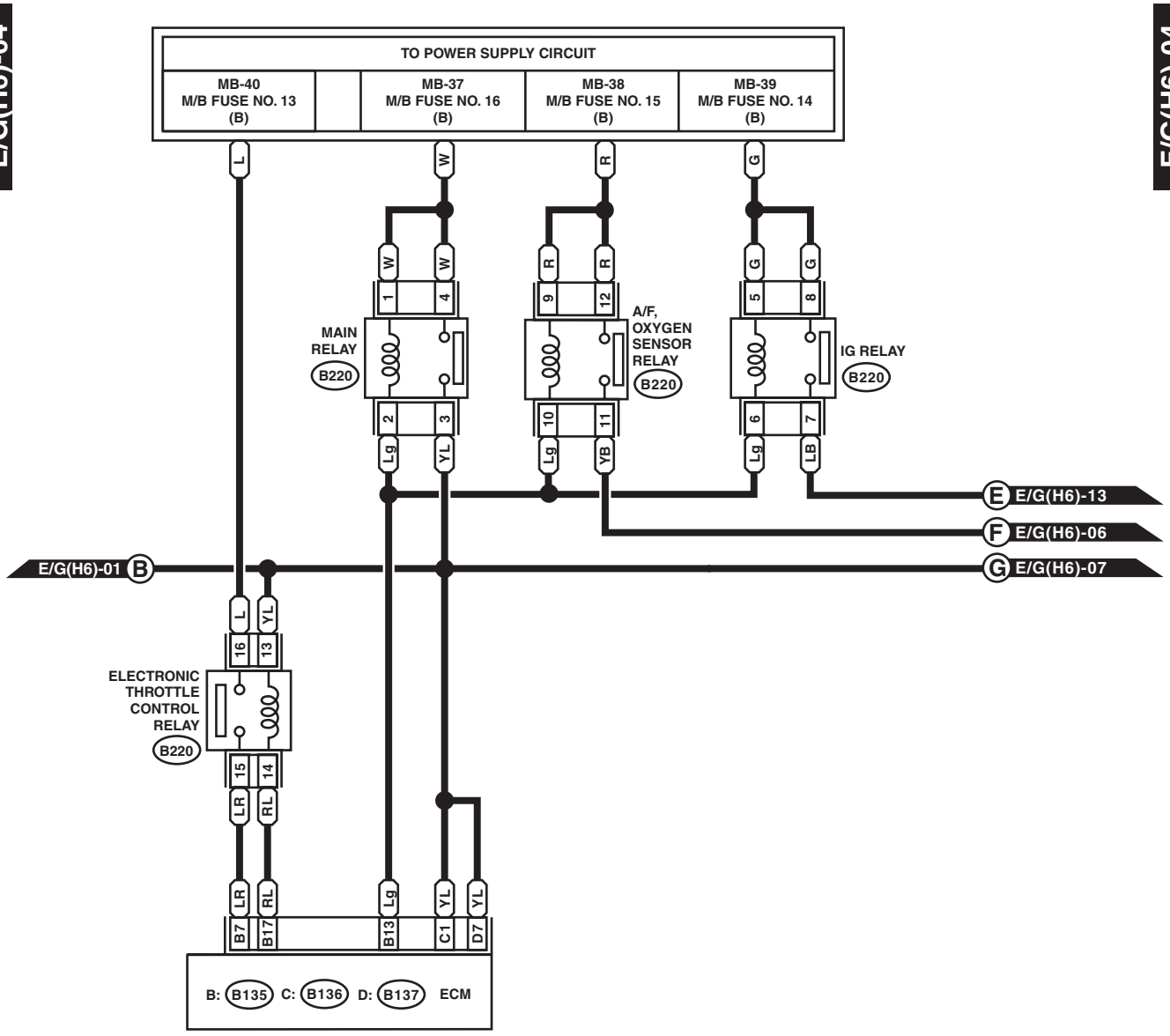

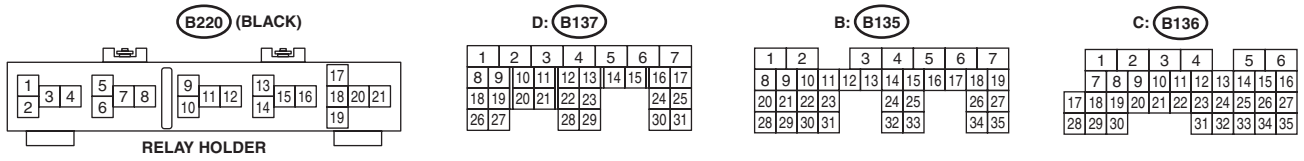

WI-33237

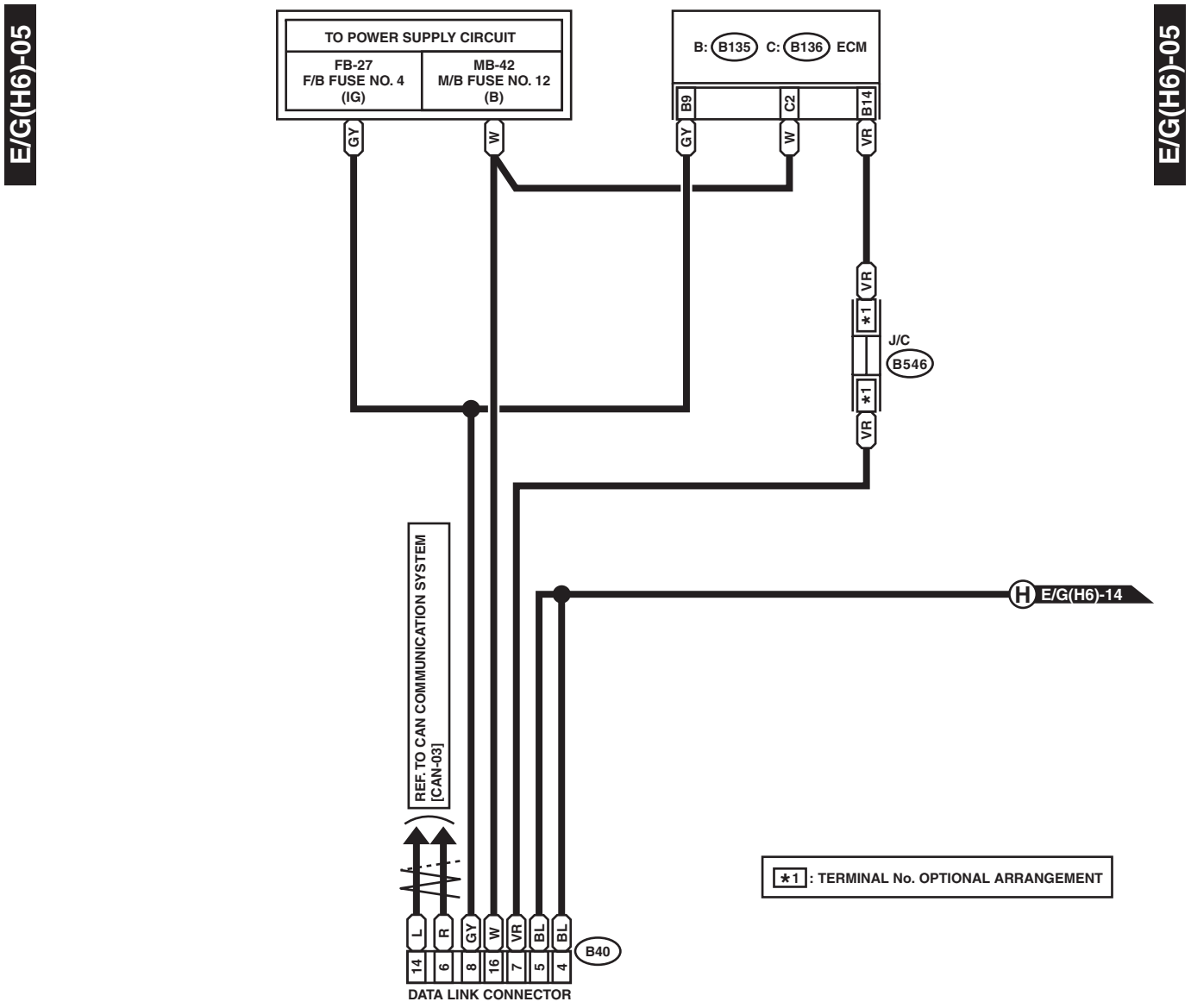
E/G(H6)-05
E/G(H6)-05
TO POWER SUPPLY CIRCUIT
FB-27
F/B FUSE NO. 4
(IG)
MB-42
M/B FUSE NO. 12
(B)
B: B135 C: B136 ECM
B9
C2
B14
GY
W
GY
W
VR
VR
*1
J/C
B546
*1
VR
REF. TO CAN COMMUNICATION SYSTEM
[CAN-03]
H E/G(H6)-14
*1: TERMINAL No. OPTIONAL ARRANGEMENT
L
R
GY
W
VR
BL
BL
14
6
8
16
7
5
4
B40
DATA LINK CONNECTOR

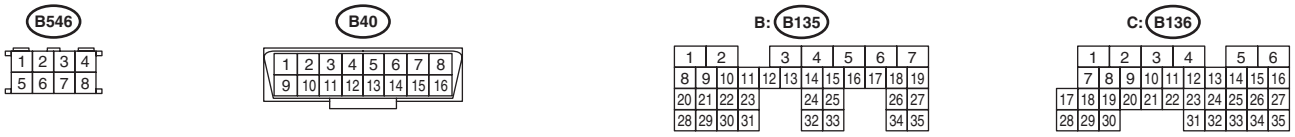
B546
1 2 3 4
5 6 7 8
B40
1 2 3 4 5 6 7 8
9 10 11 12 13 14 15 16
B: B135
1 2 3 4 5 6 7
8 9 10 11 12 13 14 15 16 17 18 19
20 21 22 23 24 25 26 27
28 29 30 31 32 33 34 35
C: B136
1 2 3 4 5 6
7 8 9 10 11 12 13 14 15 16
17 18 19 20 21 22 23 24 25 26 27
28 29 30 31 32 33 34 35

WI-33238

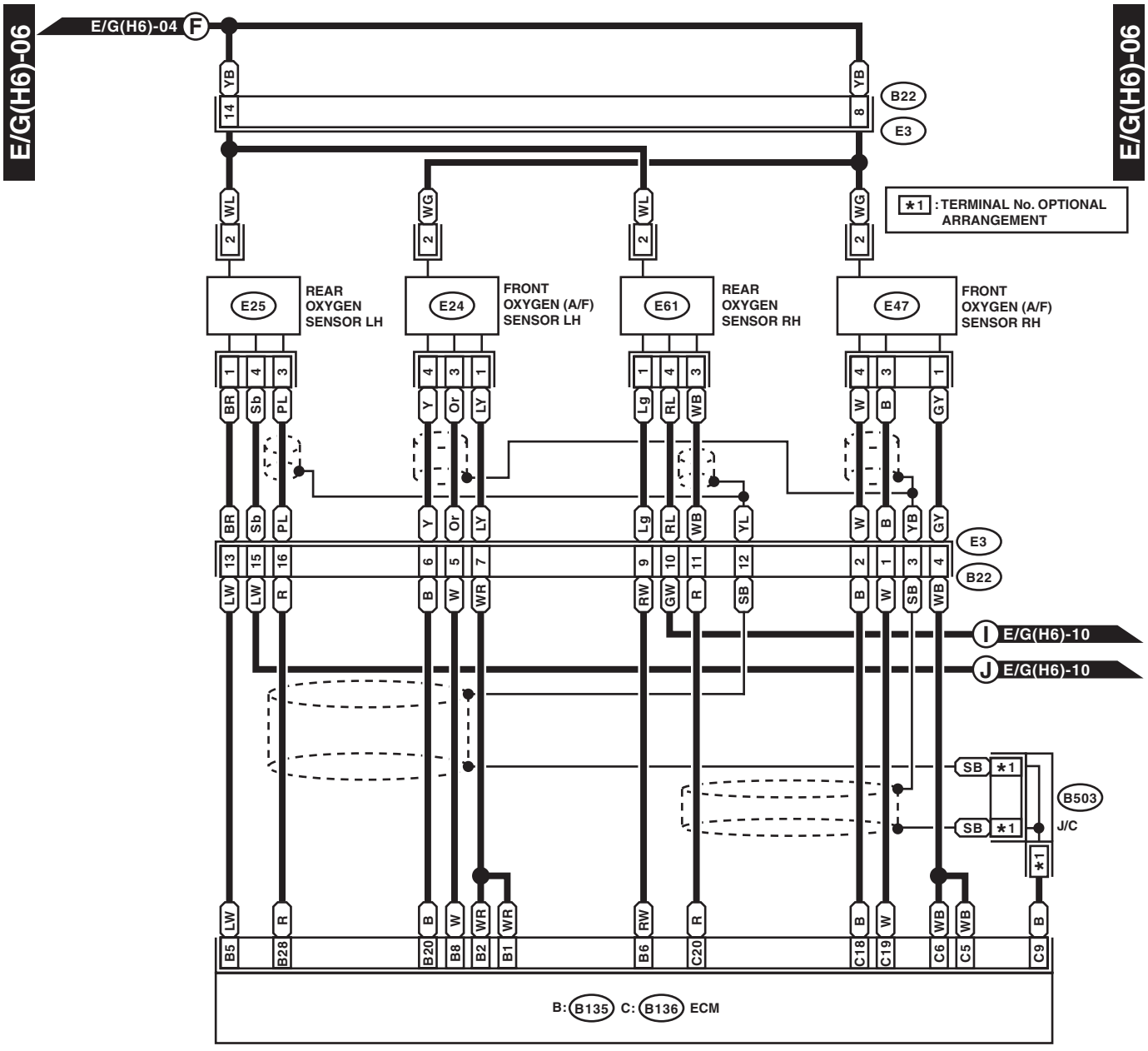

E24 (LIGHT GRAY) E25 (DARK GRAY) B503 B22 (BROWN) B: B135 C: B136

E47 (LIGHT GRAY) E61 (DARK GRAY)

WI-33239

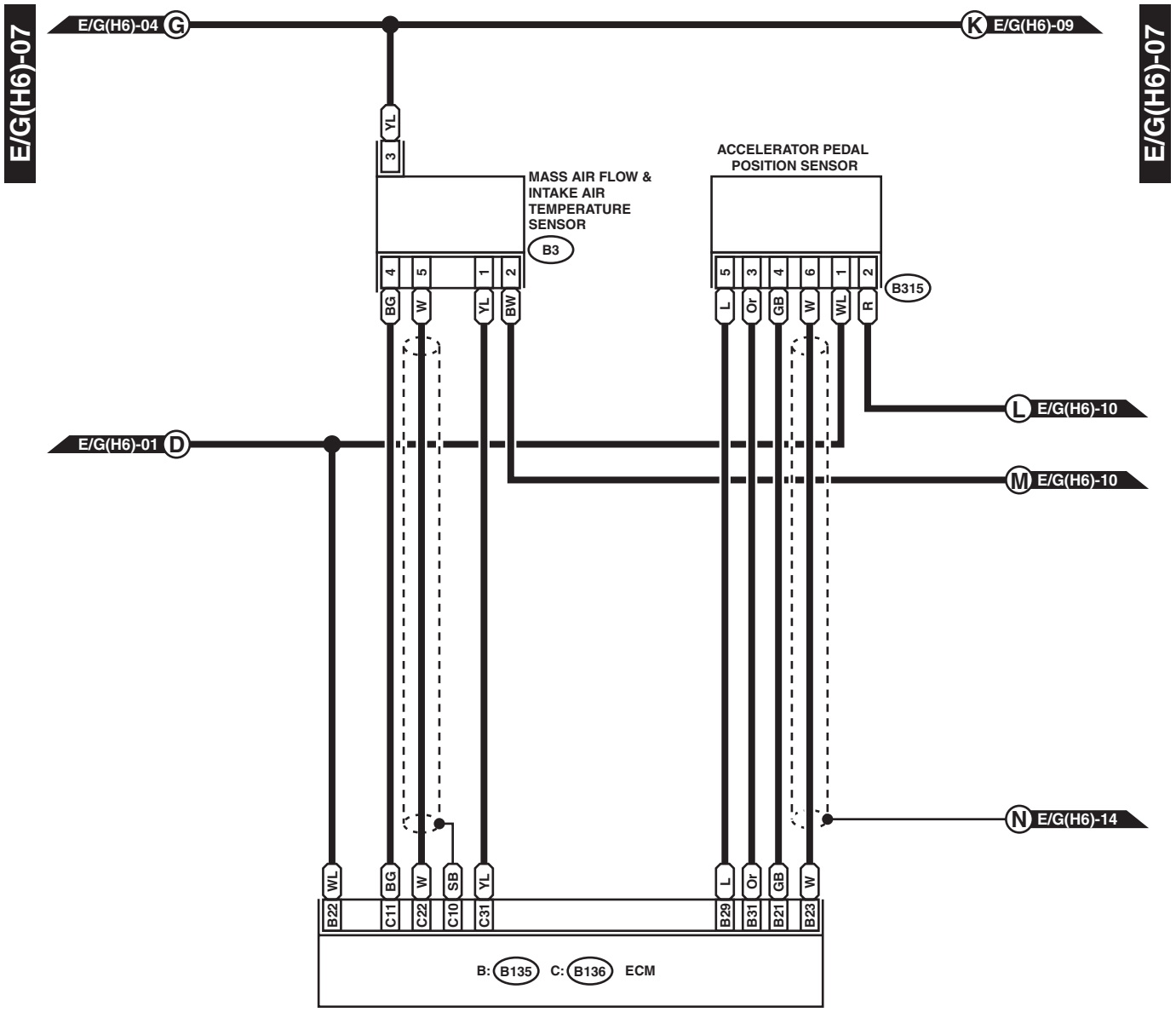
E/G(H6)-07
E/G(H6)-04 G
K E/G(H6)-09
E/G(H6)-07
YL
3
MASS AIR FLOW & INTAKE AIR TEMPERATURE SENSOR
B3
4 5 1 2
BG W YL BW
ACCELERATOR PEDAL POSITION SENSOR
5 3 4 6 1 2
B315
L Or GB W WL R
L E/G(H6)-10
E/G(H6)-01 D
M E/G(H6)-10
N E/G(H6)-14
WL BG W SB YL
B22 C11 C22 C10 C31
L Or GB W
B29 B31 B21 B23
B: B135 C: B136 ECM

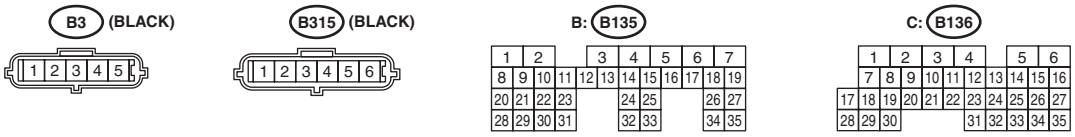
B3 (BLACK)
1 2 3 4 5
B315 (BLACK)
1 2 3 4 5 6
B: B135
1 2 3 4 5 6 7
8 9 10 11 12 13 14 15 16 17 18 19
20 21 22 23 24 25 26 27
28 29 30 31 32 33 34 35
C: B136
1 2 3 4 5 6
7 8 9 10 11 12 13 14 15 16
17 18 19 20 21 22 23 24 25 26 27
28 29 30 31 32 33 34 35

WI-25517

E/G(H6)-08

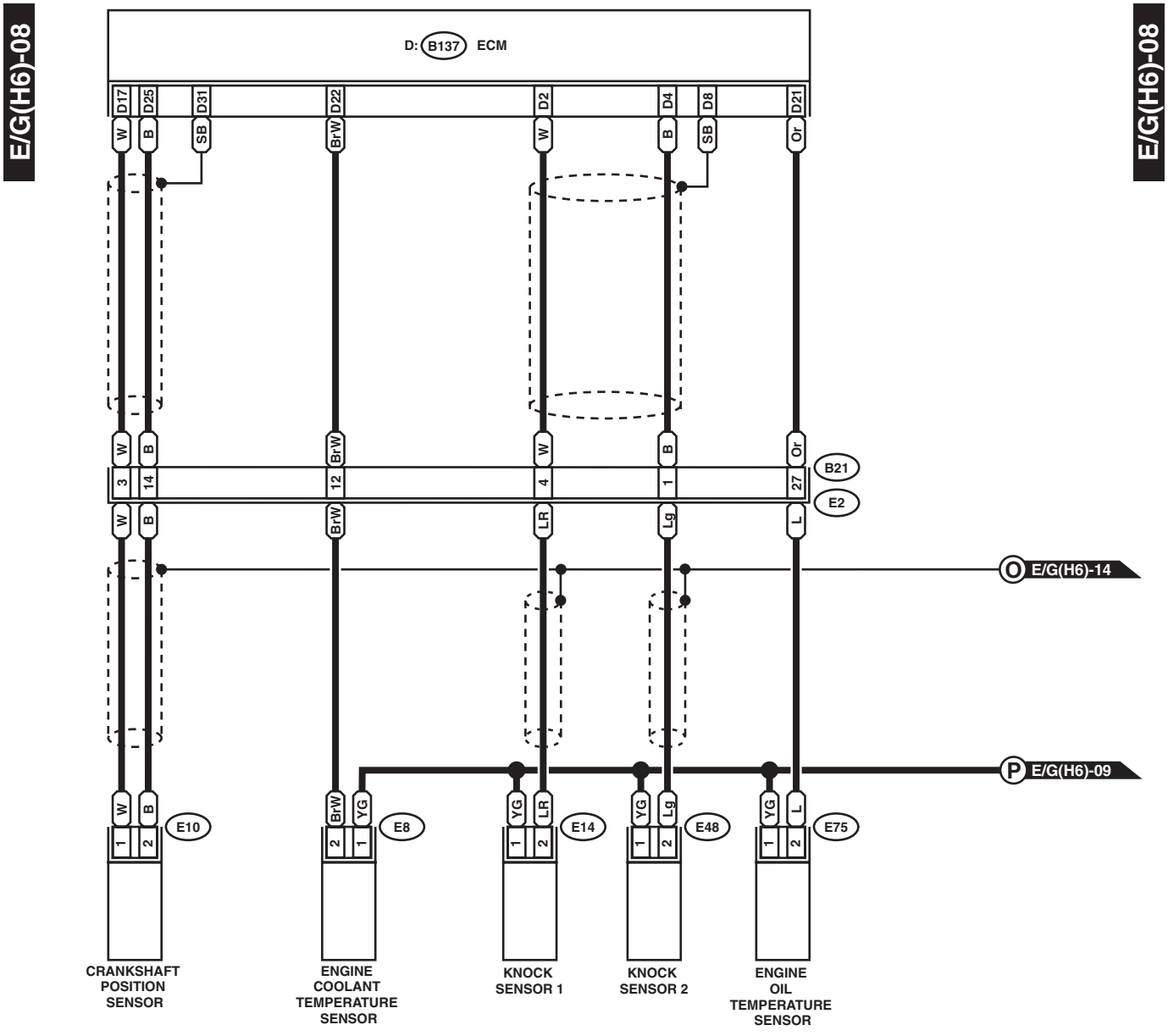

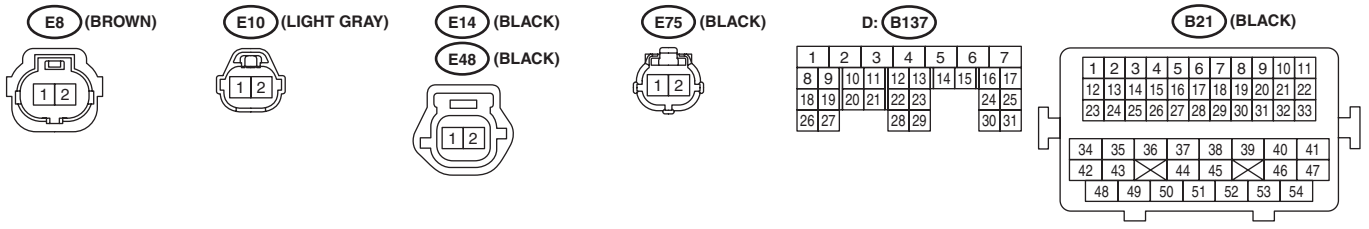

WI-33240

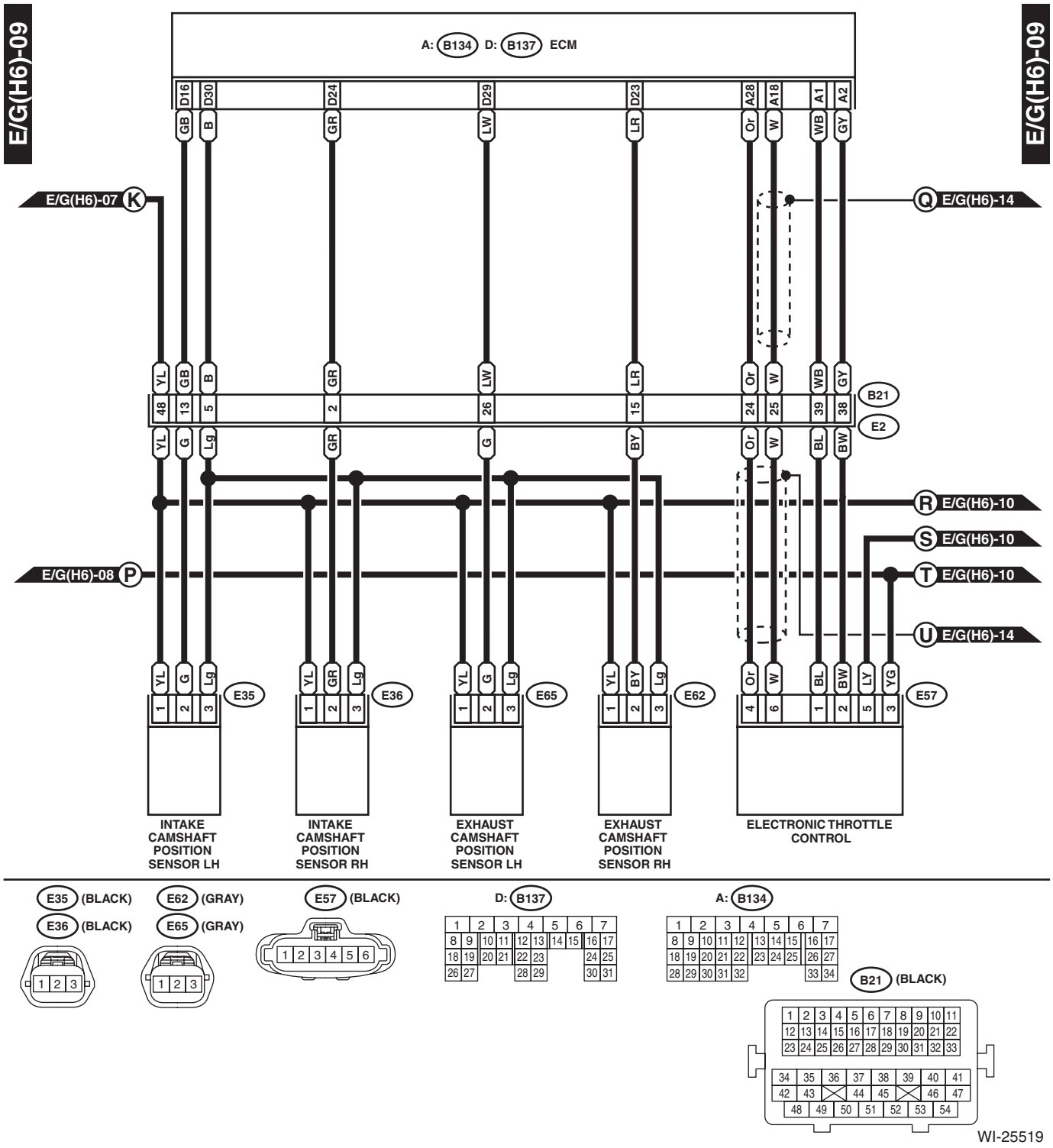
E/G(H6)-09
E/G(H6)-09
A: B134 D: B137 ECM
D16 D30 D24 D29 D23 A28 A18 A1 A2
GB B GR LW LR Or W WB GY
E/G(H6)-07 K
Q E/G(H6)-14
YL GB B GR LW LR Or W WB GY
48 13 5 2 26 15 24 25 39 38
B21
E2
YL G Lg GR G BY Or W BL BW
R E/G(H6)-10
S E/G(H6)-10
E/G(H6)-08 P
T E/G(H6)-10
U E/G(H6)-14
YL G Lg E35
YL GR Lg E36
YL G Lg E65
YL BY Lg E62
Or W BL BW LY YG E57
1 2 3
4 6 1 2 5 3
INTAKE CAMSHAFT POSITION SENSOR LH
INTAKE CAMSHAFT POSITION SENSOR RH
EXHAUST CAMSHAFT POSITION SENSOR LH
EXHAUST CAMSHAFT POSITION SENSOR RH
ELECTRONIC THROTTLE CONTROL
E35 (BLACK)
E36 (BLACK)
E62 (GRAY)
E65 (GRAY)
E57 (BLACK)
D: B137
A: B134
B21 (BLACK)
WI-25519

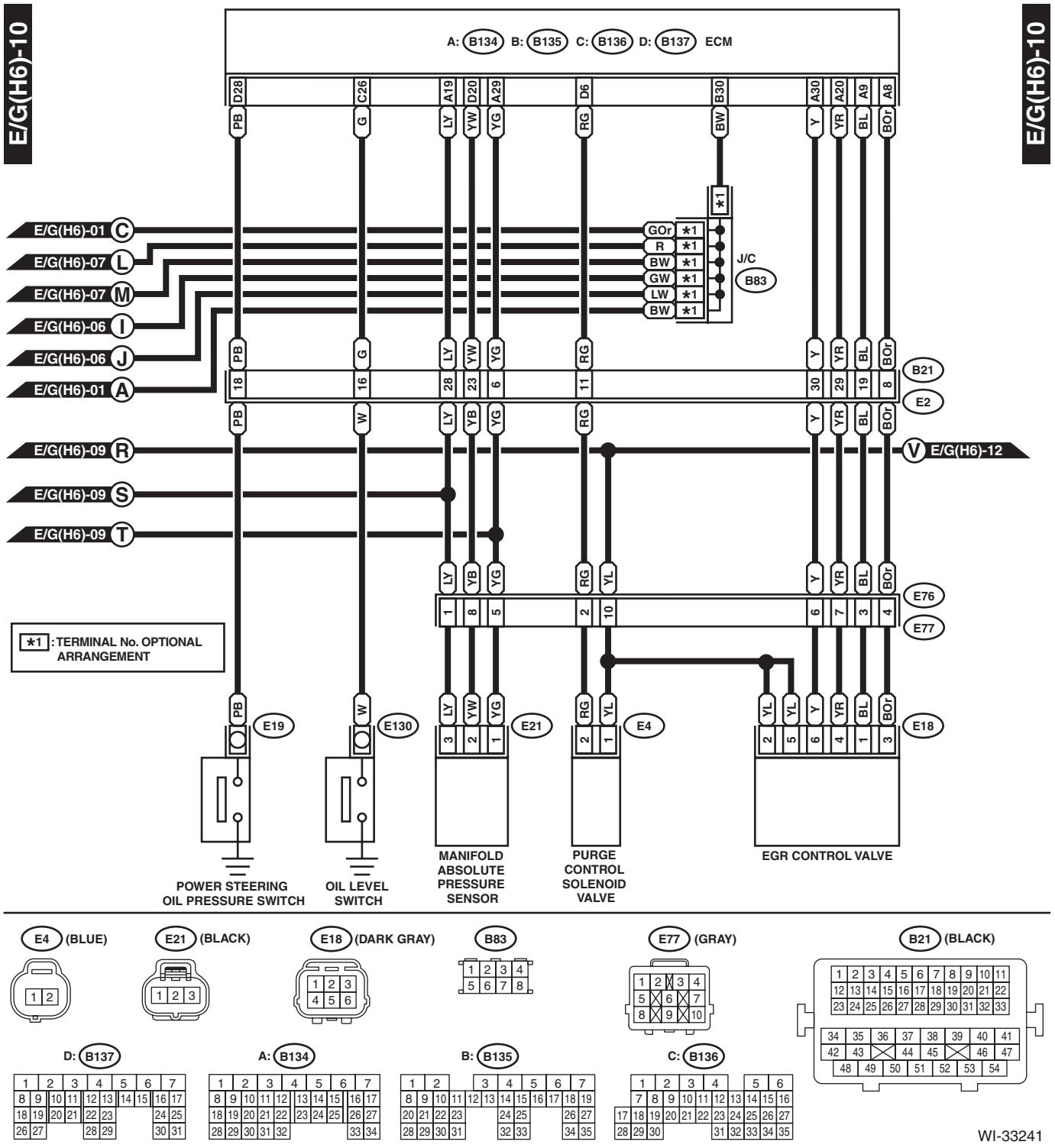
E/G(H6)-10
E/G(H6)-10
A: B134 B: B135 C: B136 D: B137 ECM
D28 C26 A19 D20 A29 D6 B30 A30 A20 A9 A8
PB G LY YW YG RG BW Y YR BL BOr
*1
GOr R BW GW LW BW
J/C
B83
E/G(H6)-01 C
E/G(H6)-07 L
E/G(H6)-07 M
E/G(H6)-06 I
E/G(H6)-06 J
E/G(H6)-01 A
18 16 28 23 6 11 30 29 19 8
B21
E2
W YB
E/G(H6)-09 R
E/G(H6)-09 S
E/G(H6)-09 T
V E/G(H6)-12
YL
1 8 5 2 10 6 7 3 4
E76
E77
*1 : TERMINAL No. OPTIONAL ARRANGEMENT
E19 E130 E21 E4 E18
3 2 1
POWER STEERING OIL PRESSURE SWITCH
OIL LEVEL SWITCH
MANIFOLD ABSOLUTE PRESSURE SENSOR
PURGE CONTROL SOLENOID VALVE
EGR CONTROL VALVE

E4 (BLUE)
E21 (BLACK)
E18 (DARK GRAY)
B83
E77 (GRAY)
B21 (BLACK)
D: B137
A: B134
B: B135
C: B136

WI-33241

E/G(H6)-11

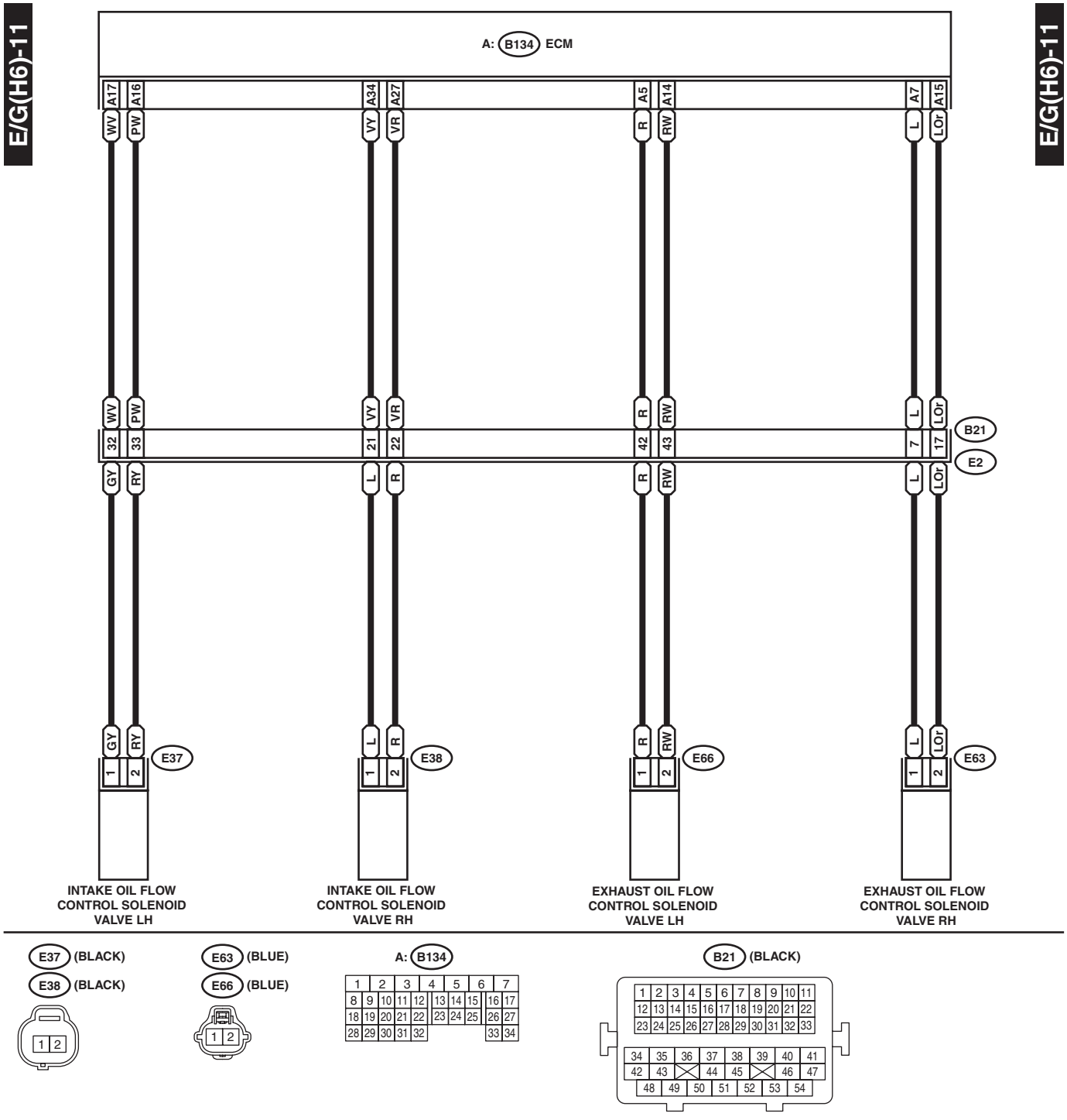

WI-25521

E/G(H6)-12

E/G(H6)-12

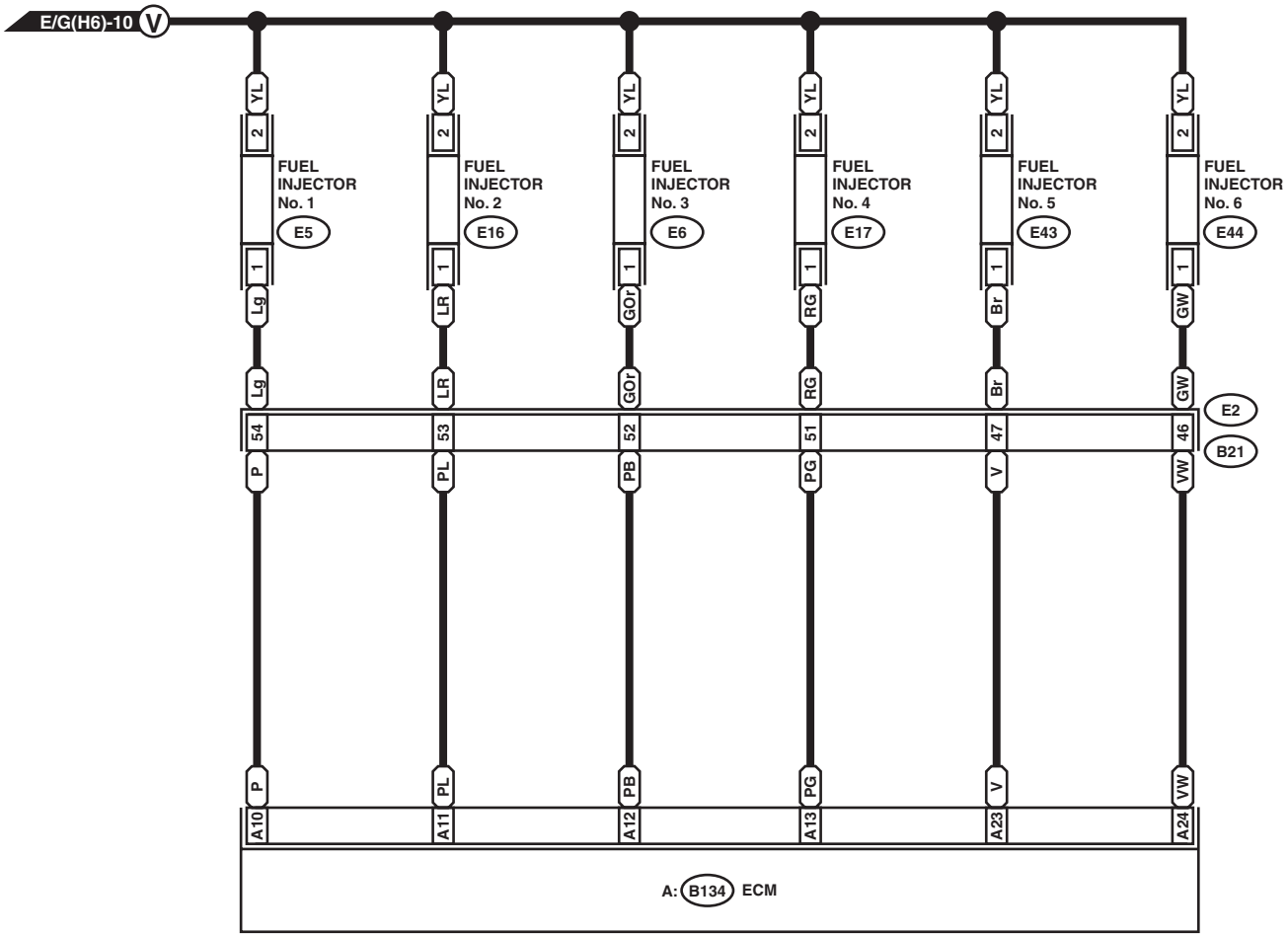

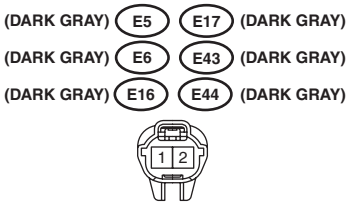

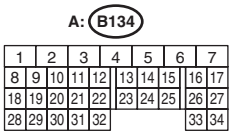

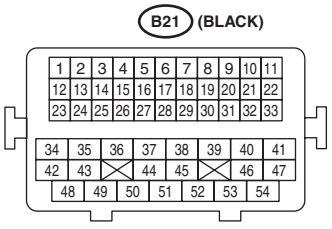

WI-25522

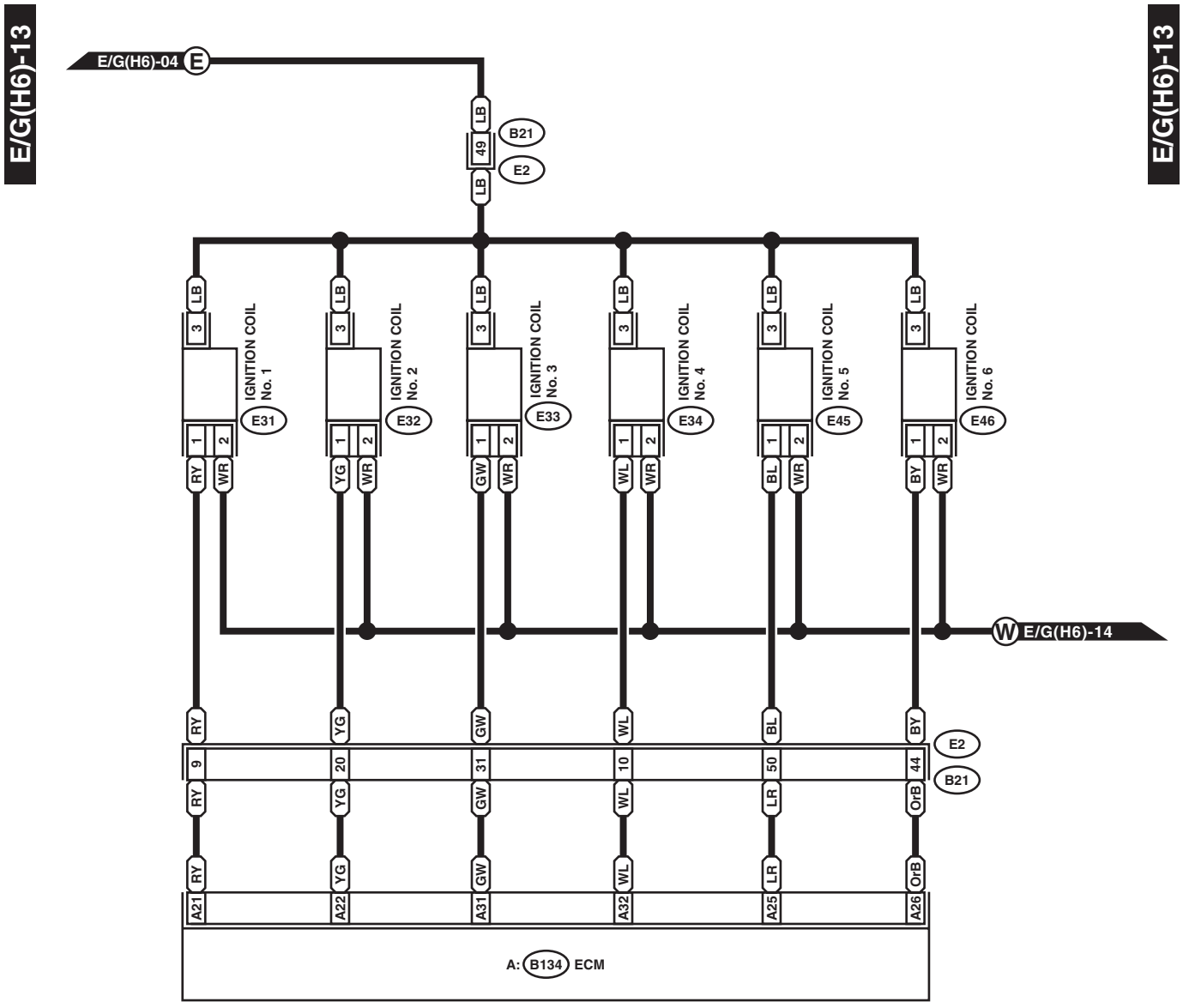
E/G(H6)-13
E/G(H6)-13
E/G(H6)-04 E
B21
E2
LB
49
IGNITION COIL No. 1
IGNITION COIL No. 2
IGNITION COIL No. 3
IGNITION COIL No. 4
IGNITION COIL No. 5
IGNITION COIL No. 6
E31
E32
E33
E34
E45
E46
RY
YG
GW
WL
BL
BY
WR
W E/G(H6)-14
9
20
31
10
50
44
OrB
LR
A21
A22
A31
A32
A25
A26
A: B134 ECM

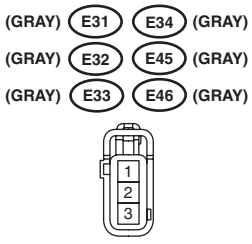
(GRAY) E31
E34 (GRAY)
(GRAY) E32
E45 (GRAY)
(GRAY) E33
E46 (GRAY)
1
2
3

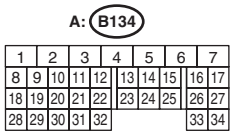
A: B134

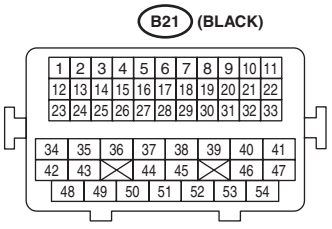
B21 (BLACK)

WI-25523

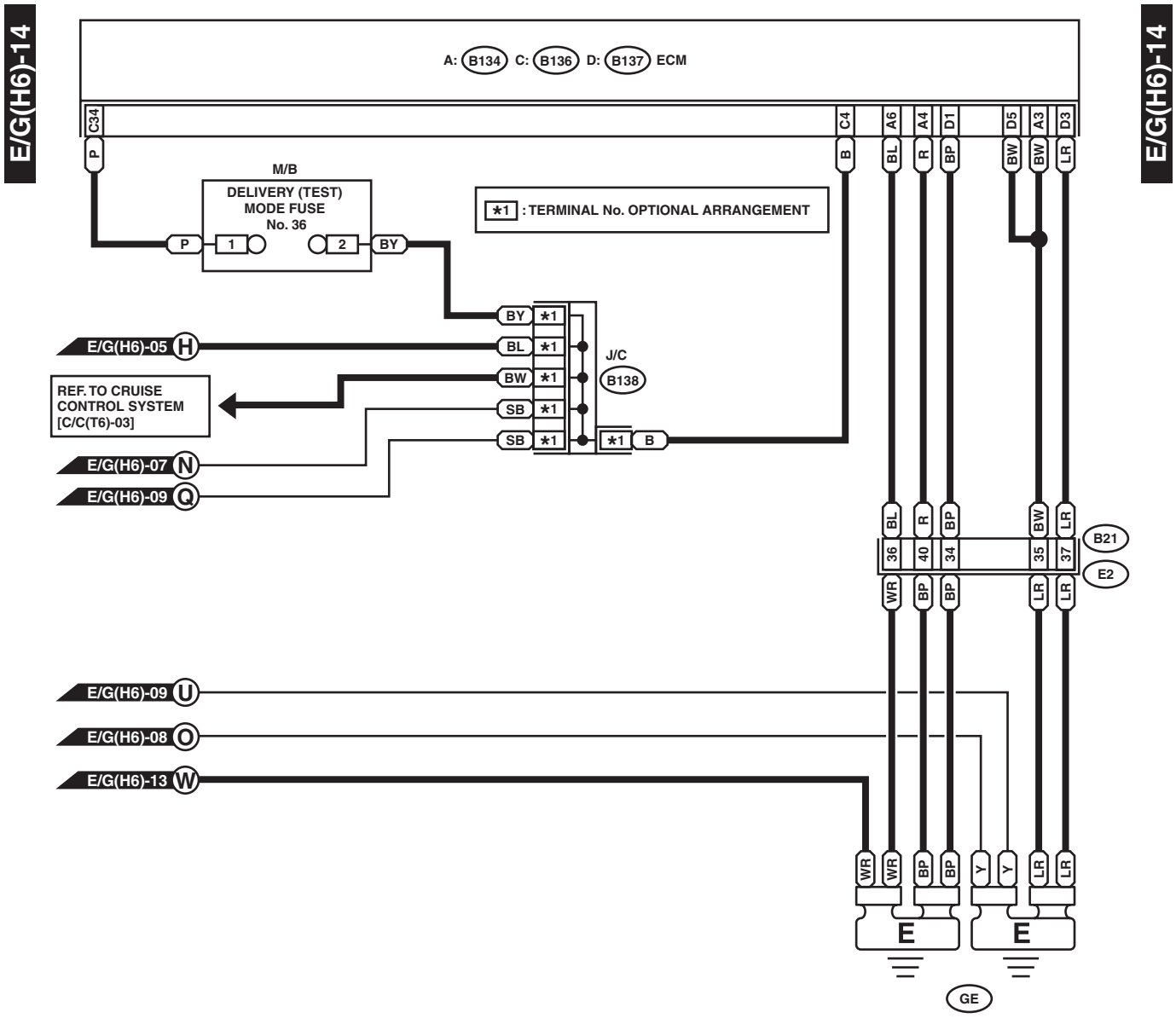
E/G(H6)-14
E/G(H6)-14
A: B134 C: B136 D: B137 ECM
C34
C4
A6
A4
D1
D5
A3
D3
P
B
BL
R
BP
BW
BW
LR
M/B
DELIVERY (TEST) MODE FUSE No. 36
P
1
2
BY
*1 : TERMINAL No. OPTIONAL ARRANGEMENT
BY *1
E/G(H6)-05 H
BL *1
J/C
B138
REF. TO CRUISE CONTROL SYSTEM [C/C(T6)-03]
BW *1
SB *1
SB *1
*1 B
E/G(H6)-07 N
E/G(H6)-09 Q
BL
R
BP
BW
LR
36
40
34
35
37
B21
E2
WR
BP
BP
LR
LR
E/G(H6)-09 U
E/G(H6)-08 O
E/G(H6)-13 W
WR
WR
BP
BP
Y
Y
LR
LR
E
E
GE

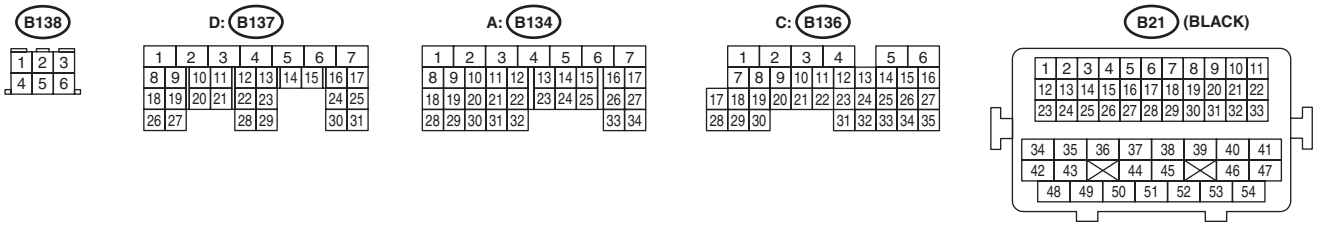
B138
D: B137
A: B134
C: B136
B21 (BLACK)

WI-30601

19.Front Accessory Power Supply Socket System

A: WIRING DIAGRAM

FAPS-01

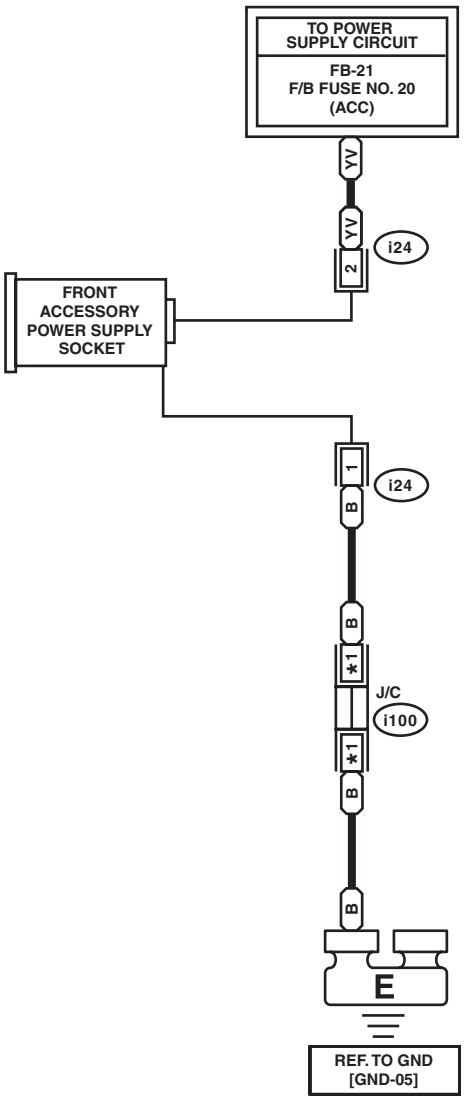

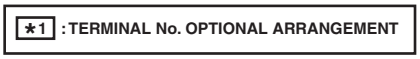

FAPS-01

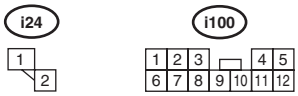

WI-29373

20.Front Fog Light System

A: WIRING DIAGRAM

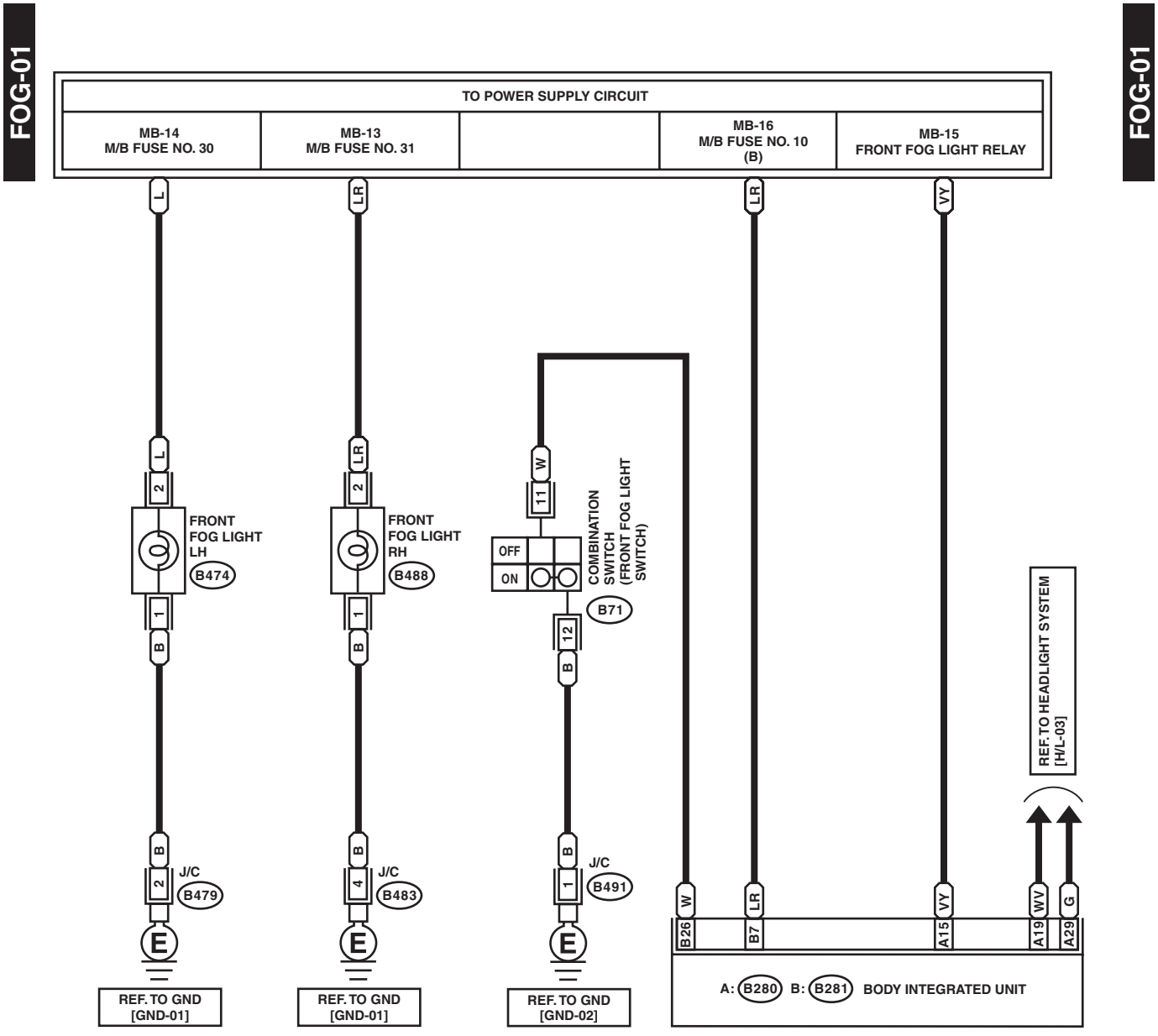
FOG-01
FOG-01
TO POWER SUPPLY CIRCUIT
MB-14
M/B FUSE NO. 30
MB-13
M/B FUSE NO. 31
MB-16
M/B FUSE NO. 10
(B)
MB-15
FRONT FOG LIGHT RELAY
FRONT
FOG LIGHT
LH
B474
FRONT
FOG LIGHT
RH
B488
COMBINATION
SWITCH
(FRONT FOG LIGHT
SWITCH)
OFF
ON
B71
J/C
B479
J/C
B483
J/C
B491
REF. TO GND
[GND-01]
REF. TO GND
[GND-01]
REF. TO GND
[GND-02]
REF. TO HEADLIGHT SYSTEM
[H/L-03]
A: B280 B: B281 BODY INTEGRATED UNIT
B26
B7
A15
A19
A29
L
LR
LR
VY
W
LR
VY
WV
G
B
B
B

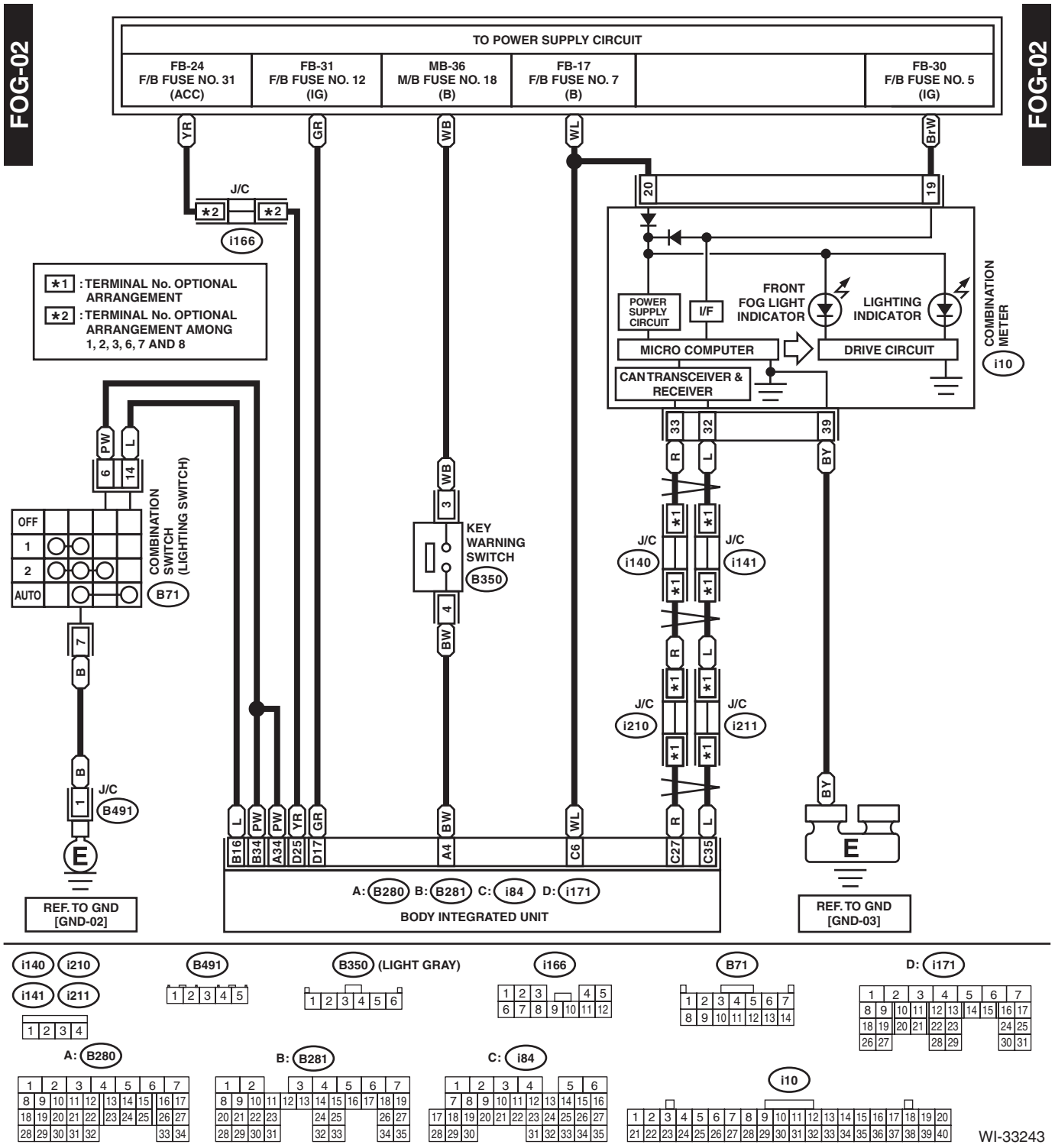
FOG-02
FOG-02
TO POWER SUPPLY CIRCUIT
FB-24 F/B FUSE NO. 31 (ACC)
FB-31 F/B FUSE NO. 12 (IG)
MB-36 M/B FUSE NO. 18 (B)
FB-17 F/B FUSE NO. 7 (B)
FB-30 F/B FUSE NO. 5 (IG)
YR
GR
WB
WL
BrW
J/C
*2
i166
*1 : TERMINAL No. OPTIONAL ARRANGEMENT
*2 : TERMINAL No. OPTIONAL ARRANGEMENT AMONG 1, 2, 3, 6, 7 AND 8
20
19
POWER SUPPLY CIRCUIT
I/F
FRONT FOG LIGHT INDICATOR
LIGHTING INDICATOR
COMBINATION METER
i10
MICRO COMPUTER
DRIVE CIRCUIT
CAN TRANSCEIVER & RECEIVER
33
32
39
R
L
BY
PW
L
6
14
COMBINATION SWITCH (LIGHTING SWITCH)
OFF
1
2
AUTO
B71
WB
3
KEY WARNING SWITCH
B350
4
BW
J/C
i140
i141
i210
i211
*1
7
B
1
B491
E
REF. TO GND [GND-02]
L
PW
PW
YR
GR
BW
WL
R
L
B16
B34
A34
D25
D17
A4
C6
C27
C35
A: B280 B: B281 C: i84 D: i171
BODY INTEGRATED UNIT
BY
E
REF. TO GND [GND-03]

i140
i210
i141
i211
B491
B350 (LIGHT GRAY)
i166
B71
D: i171
A: B280
B: B281
C: i84
i10

WI-33243

21.Front Wiper and Washer System

A: WIRING DIAGRAM

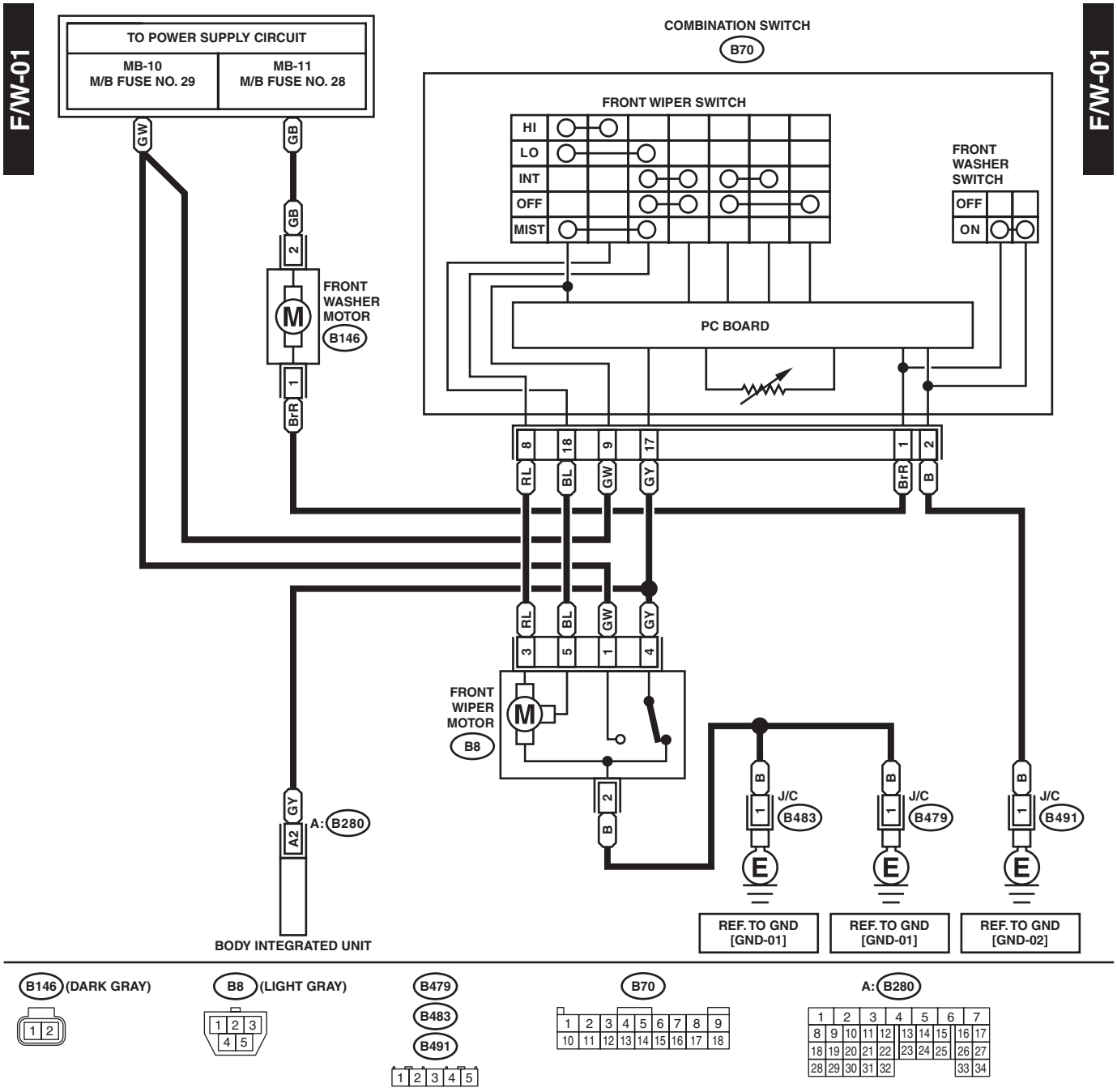

WI-33244

F/W-02

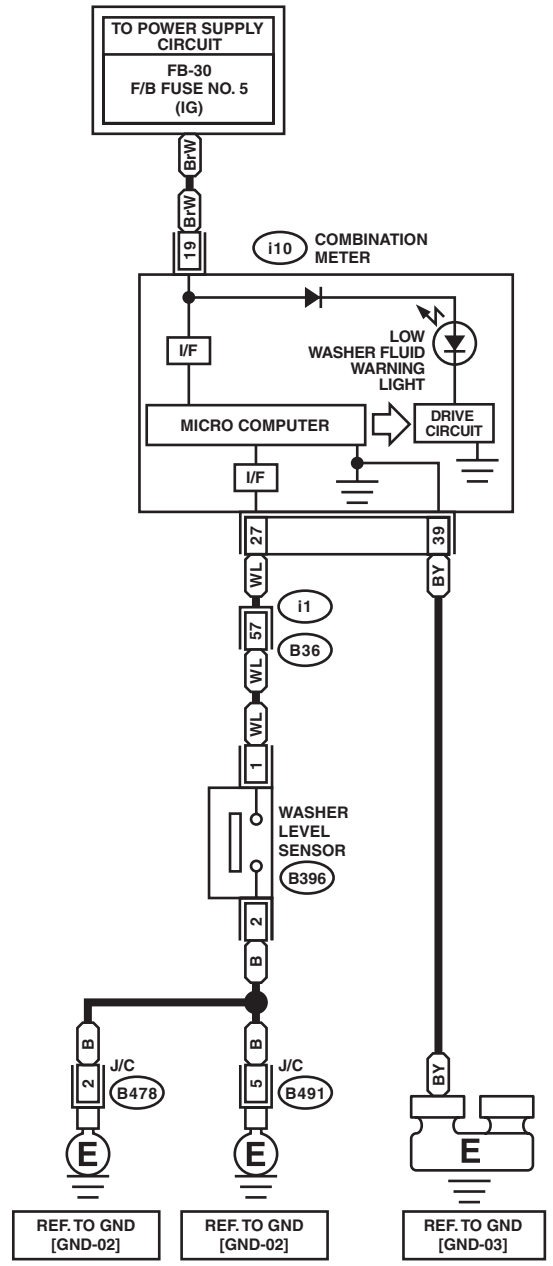

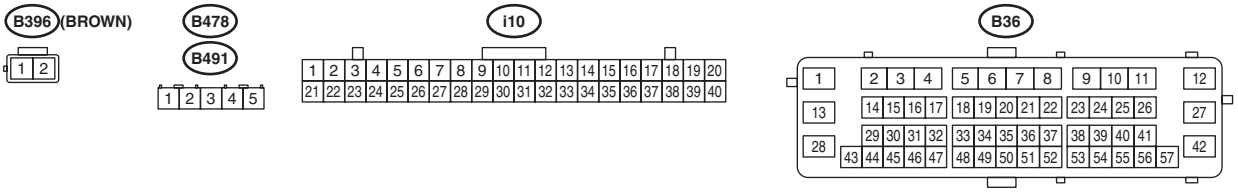

WI-29376

22.Fuel Gauge System

A: WIRING DIAGRAM

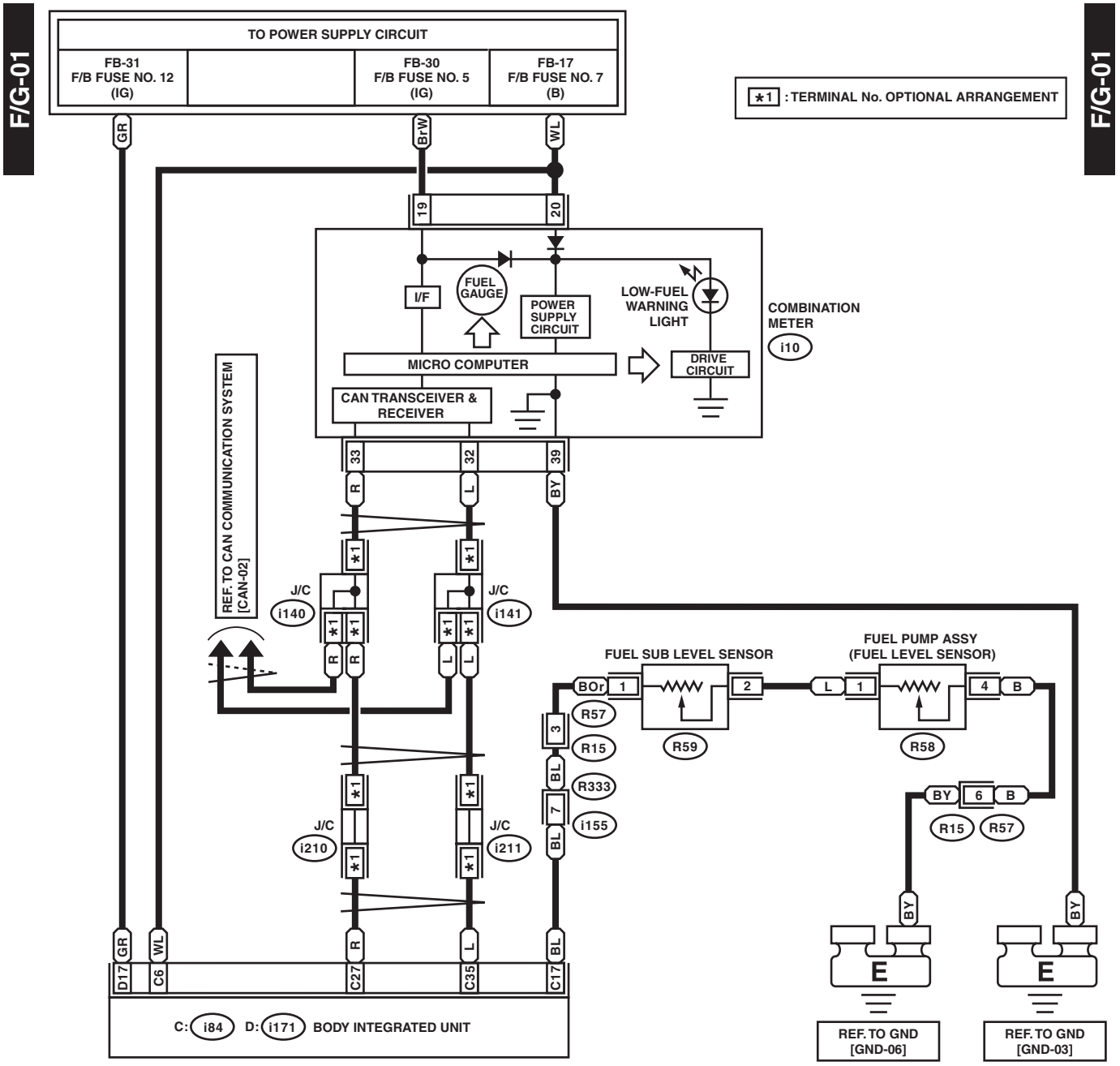

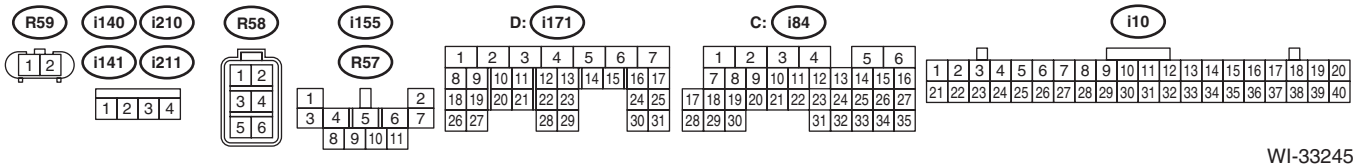

WI-33245

23.Headlight System

A: WIRING DIAGRAM

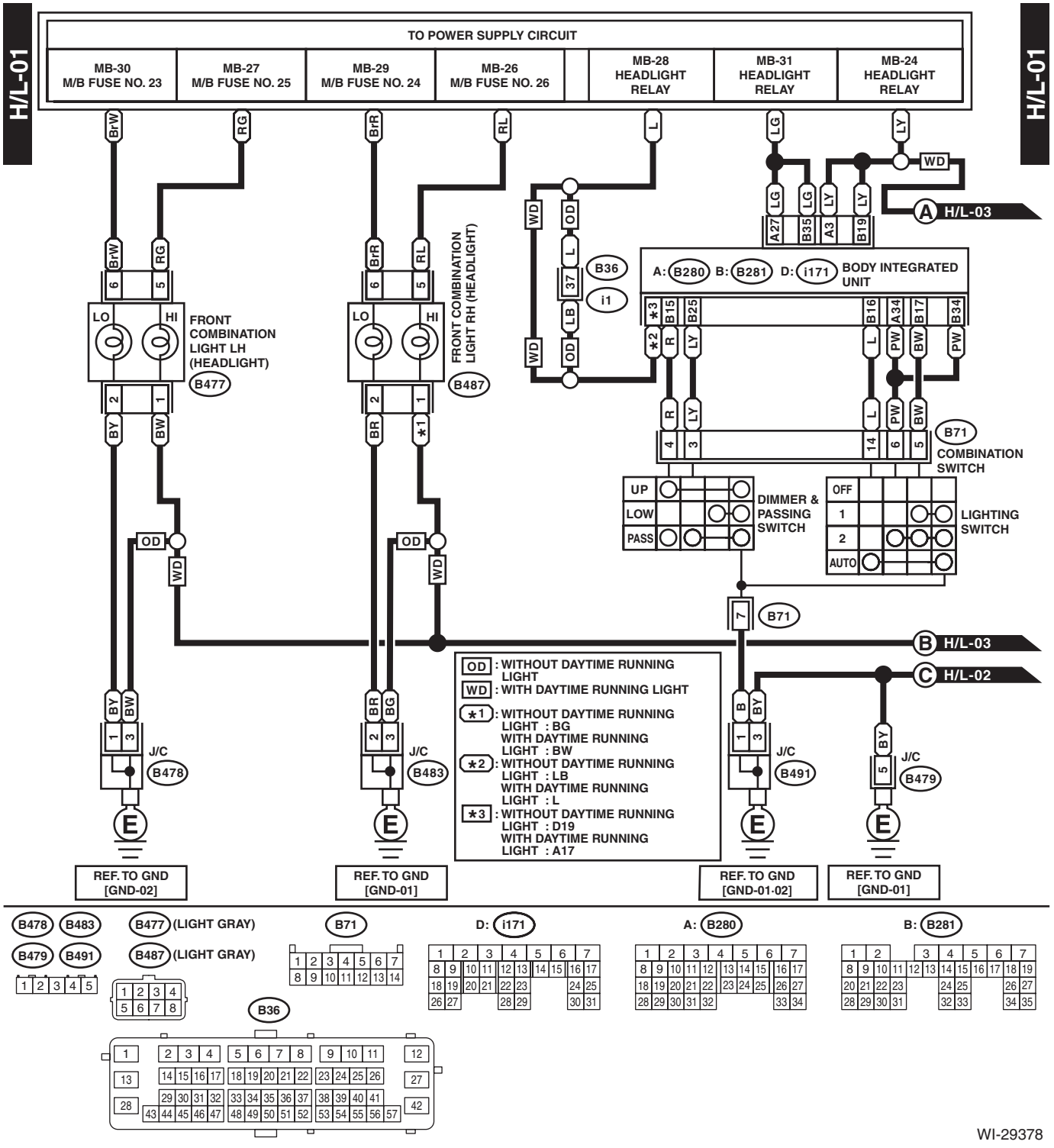

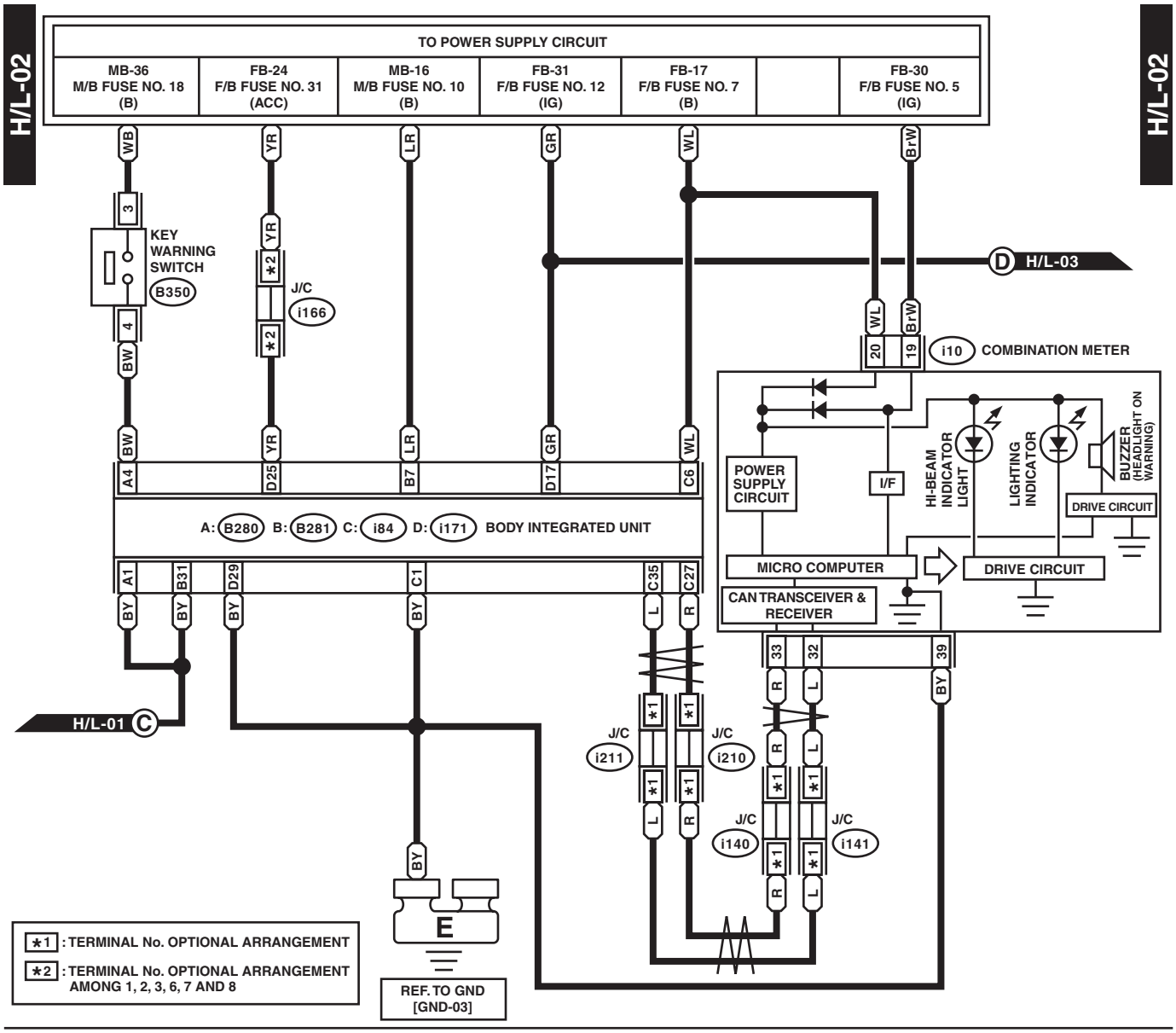
H/L-02
H/L-02
TO POWER SUPPLY CIRCUIT
MB-36 M/B FUSE NO. 18 (B)
FB-24 F/B FUSE NO. 31 (ACC)
MB-16 M/B FUSE NO. 10 (B)
FB-31 F/B FUSE NO. 12 (IG)
FB-17 F/B FUSE NO. 7 (B)
FB-30 F/B FUSE NO. 5 (IG)
KEY WARNING SWITCH
B350
J/C
i166
D H/L-03
i10 COMBINATION METER
POWER SUPPLY CIRCUIT
I/F
HI-BEAM INDICATOR LIGHT
LIGHTING INDICATOR
BUZZER (HEADLIGHT ON WARNING)
DRIVE CIRCUIT
MICRO COMPUTER
DRIVE CIRCUIT
CAN TRANSCEIVER & RECEIVER
A: B280 B: B281 C: i84 D: i171 BODY INTEGRATED UNIT
H/L-01 C
J/C i211
J/C i210
J/C i140
J/C i141
E
REF. TO GND [GND-03]
*1 : TERMINAL No. OPTIONAL ARRANGEMENT
*2 : TERMINAL No. OPTIONAL ARRANGEMENT AMONG 1, 2, 3, 6, 7 AND 8

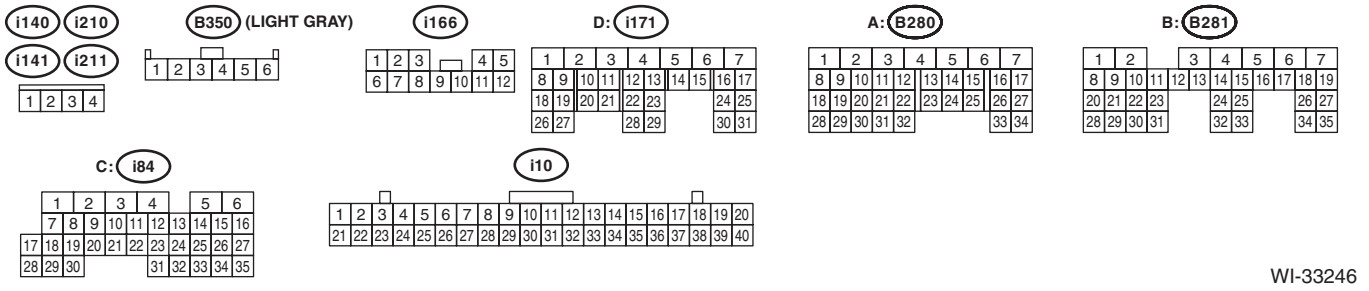
i140 i210 i141 i211
B350 (LIGHT GRAY)
i166
D: i171
A: B280
B: B281
C: i84
i10

WI-33246

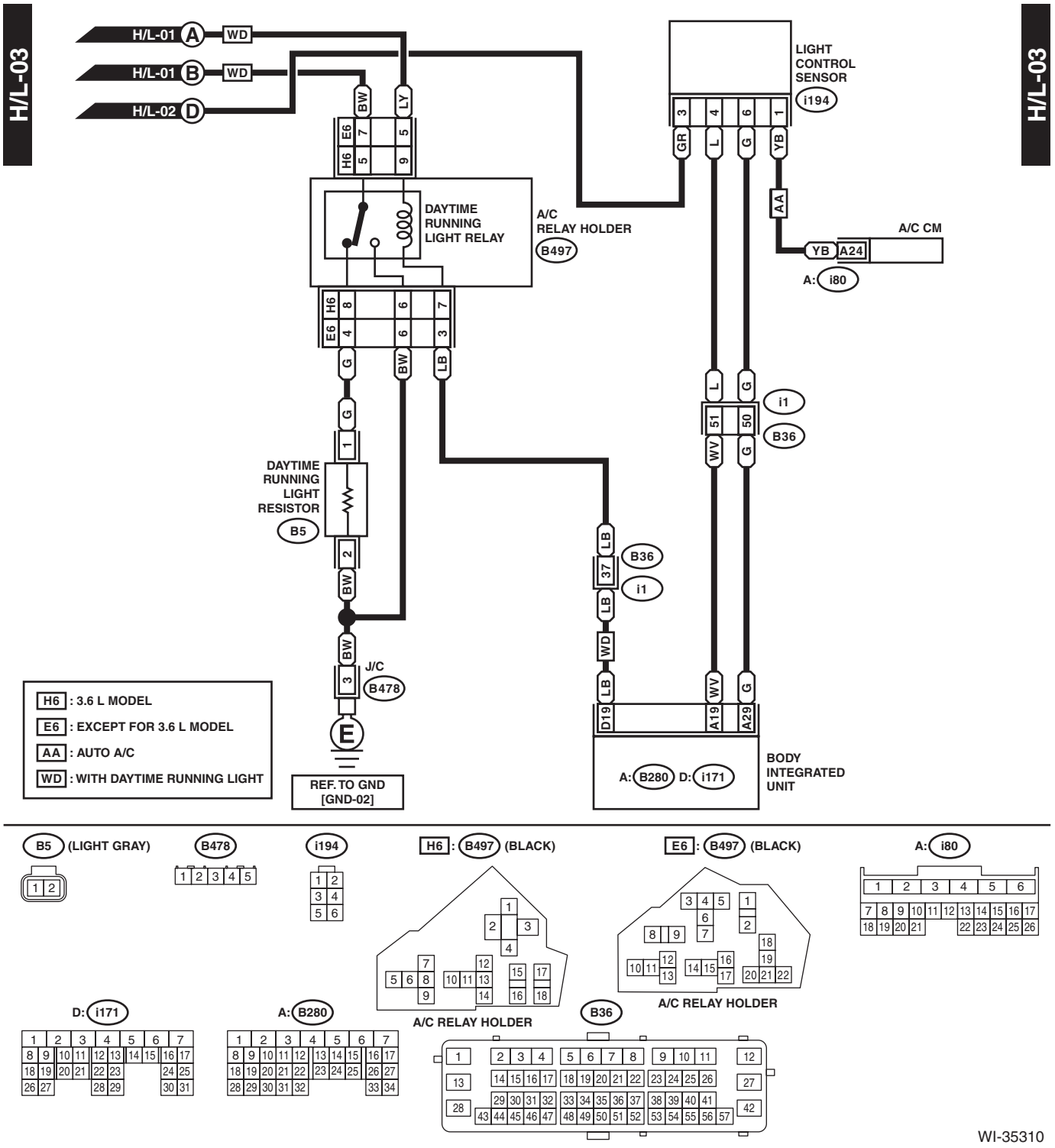
H/L-03
H/L-01 A WD
H/L-01 B WD
H/L-02 D
LIGHT CONTROL SENSOR
i194
DAYTIME RUNNING LIGHT RELAY
A/C RELAY HOLDER
B497
A/C CM
A24
A: i80
DAYTIME RUNNING LIGHT RESISTOR
B5
J/C
B478
i1
B36
BODY INTEGRATED UNIT
A: B280 D: i171
REF. TO GND [GND-02]
H6 : 3.6 L MODEL
E6 : EXCEPT FOR 3.6 L MODEL
AA : AUTO A/C
WD : WITH DAYTIME RUNNING LIGHT
B5 (LIGHT GRAY)
B478
i194
H6 : B497 (BLACK)
E6 : B497 (BLACK)
A: i80
A/C RELAY HOLDER
D: i171
A: B280
B36

WI-35310

24.Horn System

A: WIRING DIAGRAM

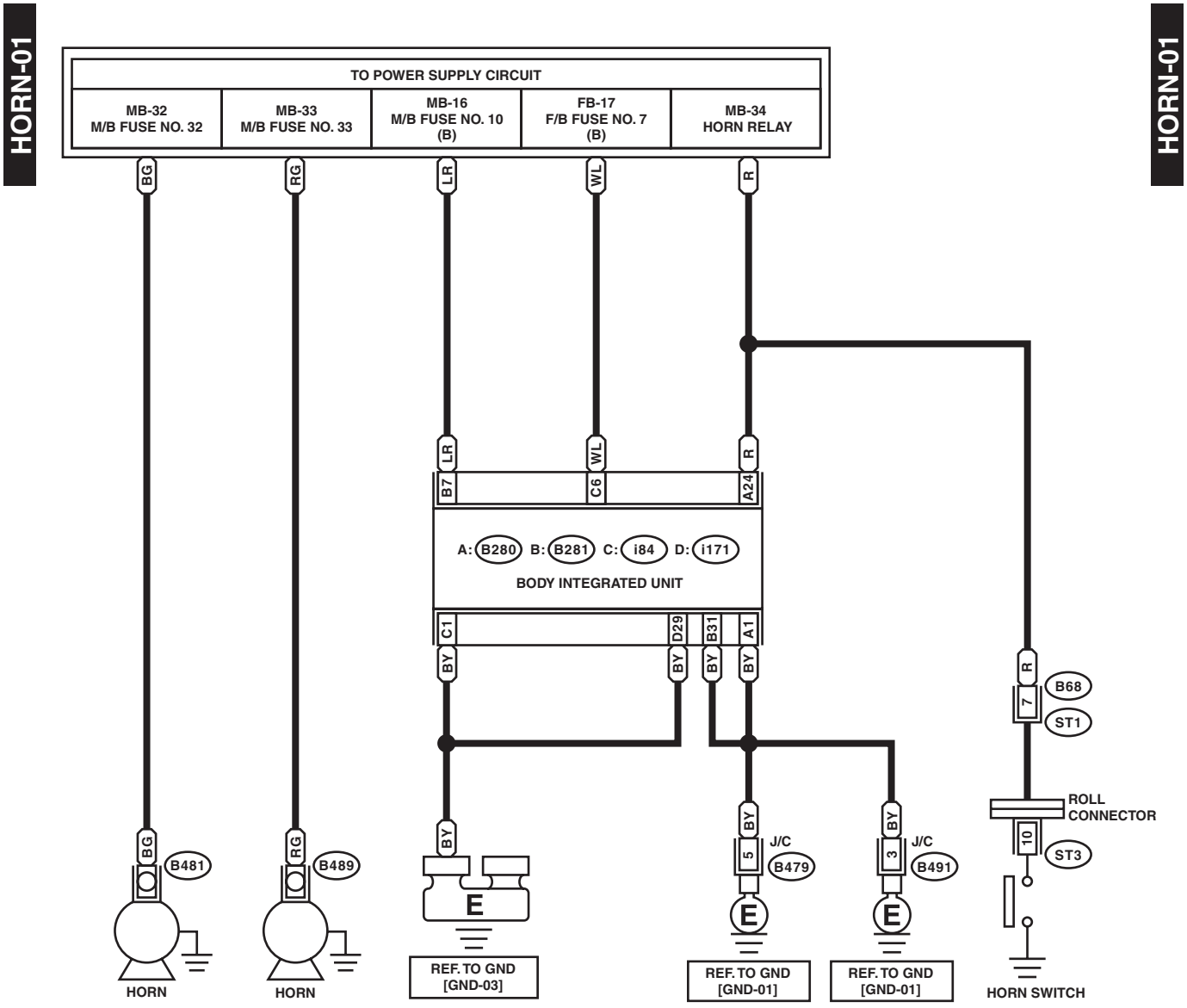

WI-29381

25.Immobilizer System

A: WIRING DIAGRAM

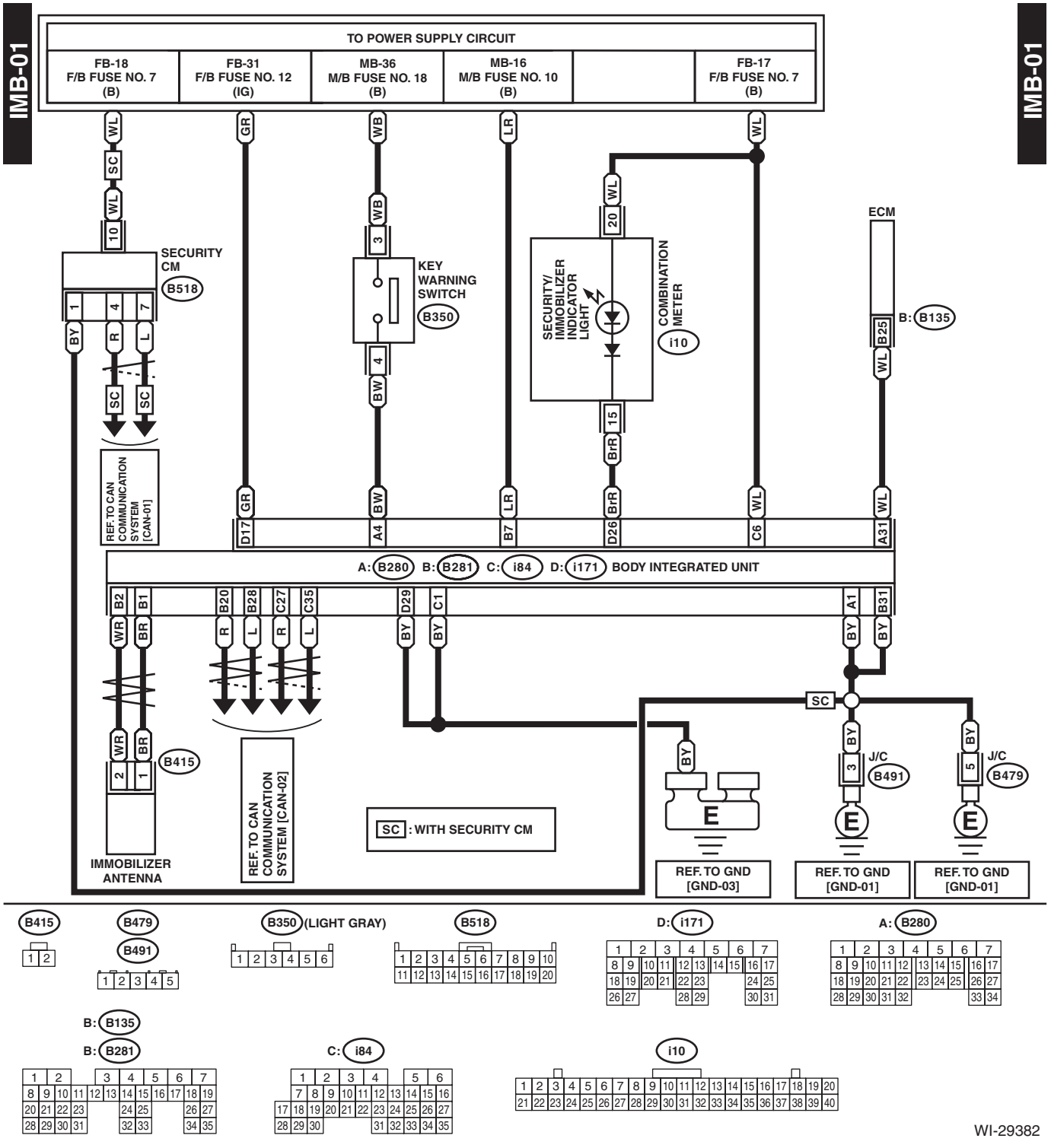

WI-29382

26.Interior Light System

A: WIRING DIAGRAM

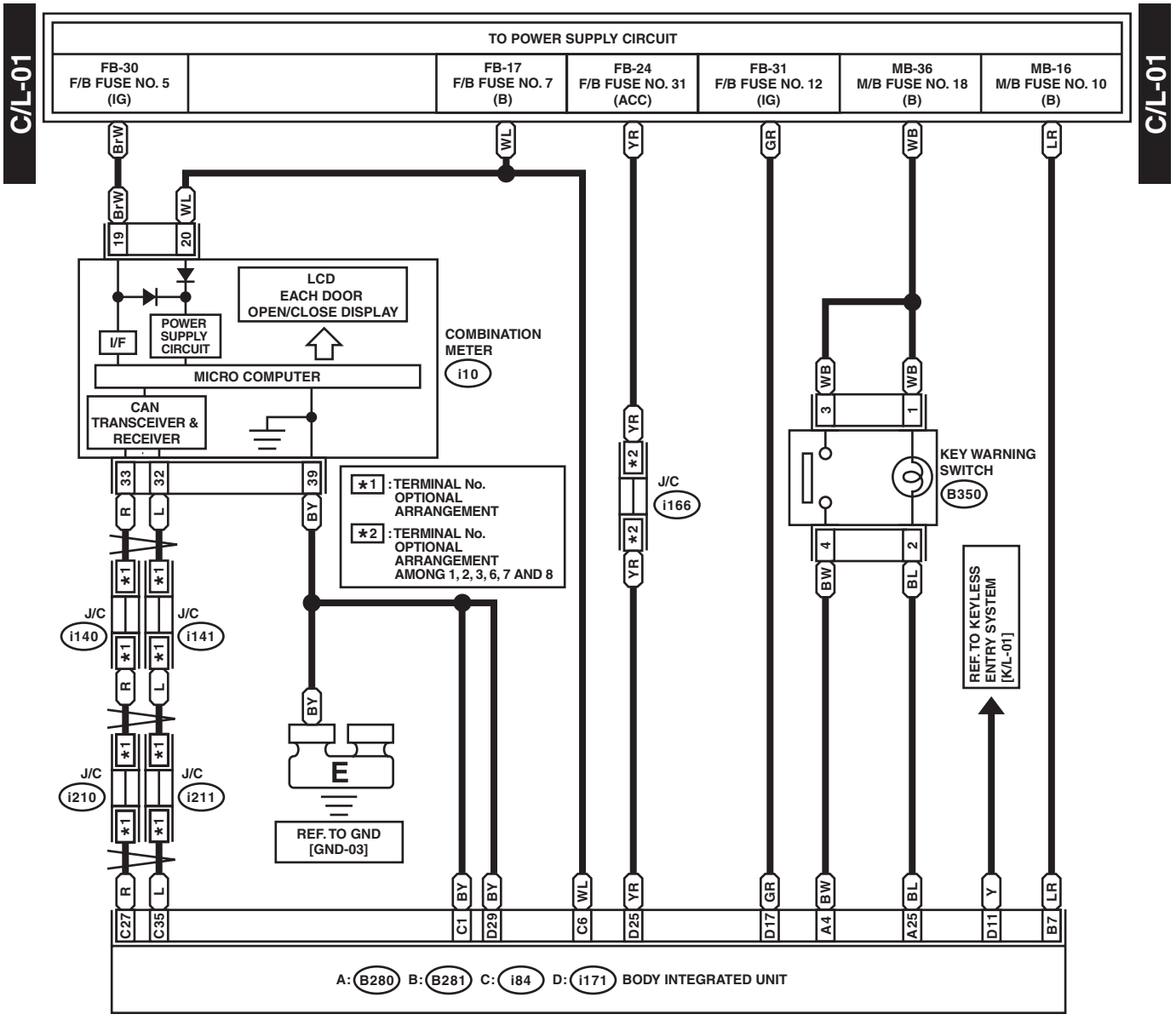

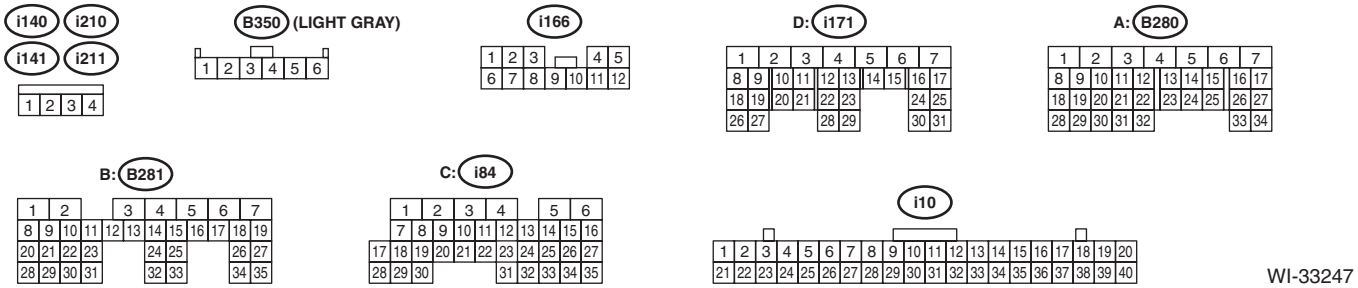

WI-33247

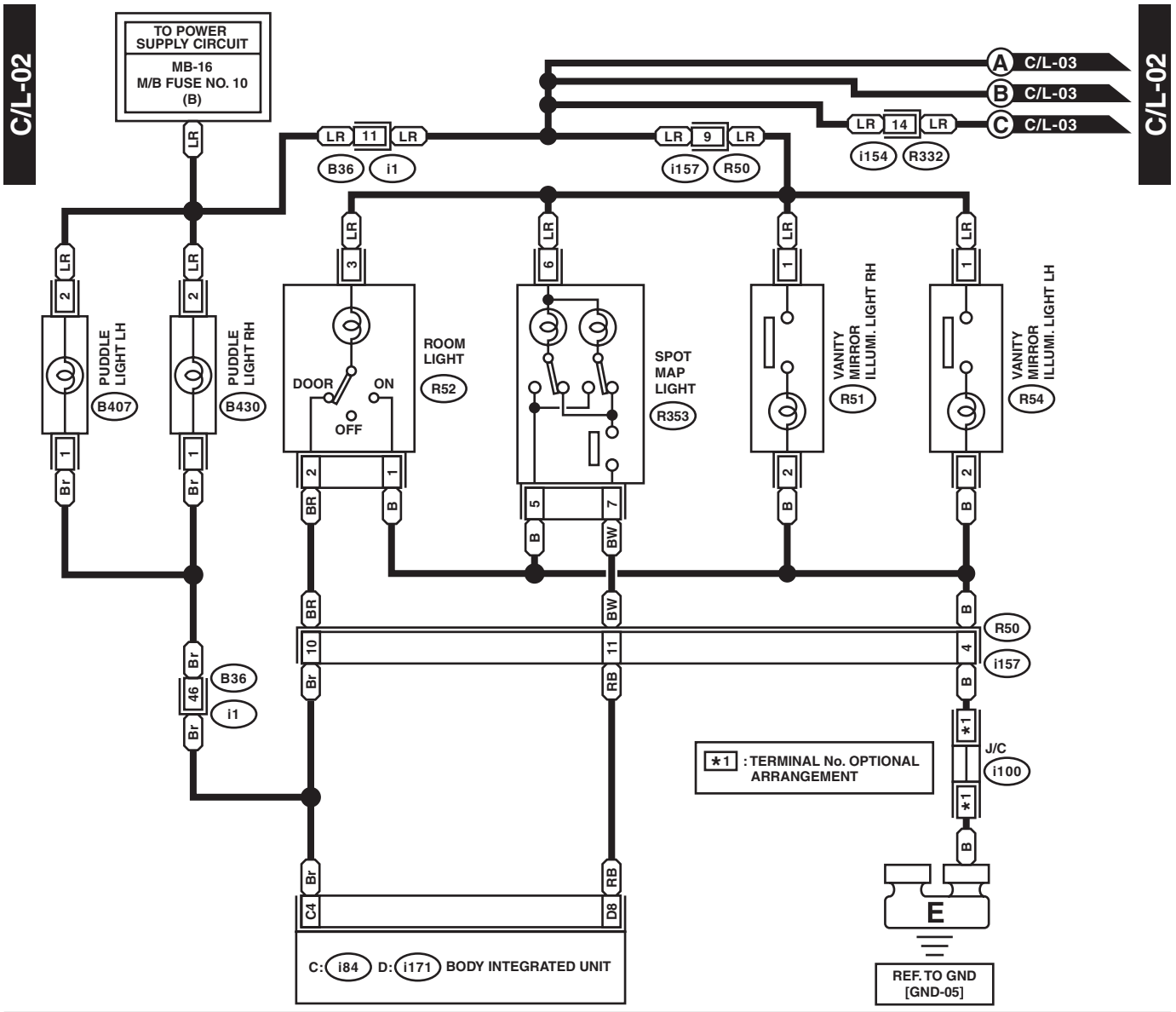
C/L-02
C/L-02
TO POWER SUPPLY CIRCUIT
MB-16
M/B FUSE NO. 10
(B)
A C/L-03
B C/L-03
C C/L-03
LR 11 LR
B36 i1
LR 9 LR
i157 R50
LR 14 LR
i154 R332
PUDDLE LIGHT LH
B407
PUDDLE LIGHT RH
B430
ROOM LIGHT
R52
DOOR
ON
OFF
SPOT MAP LIGHT
R353
VANITY MIRROR ILLUMI. LIGHT RH
R51
VANITY MIRROR ILLUMI. LIGHT LH
R54
B36
i1
R50
i157
*1 : TERMINAL No. OPTIONAL ARRANGEMENT
J/C
i100
E
REF. TO GND [GND-05]
C: i84 D: i171 BODY INTEGRATED UNIT

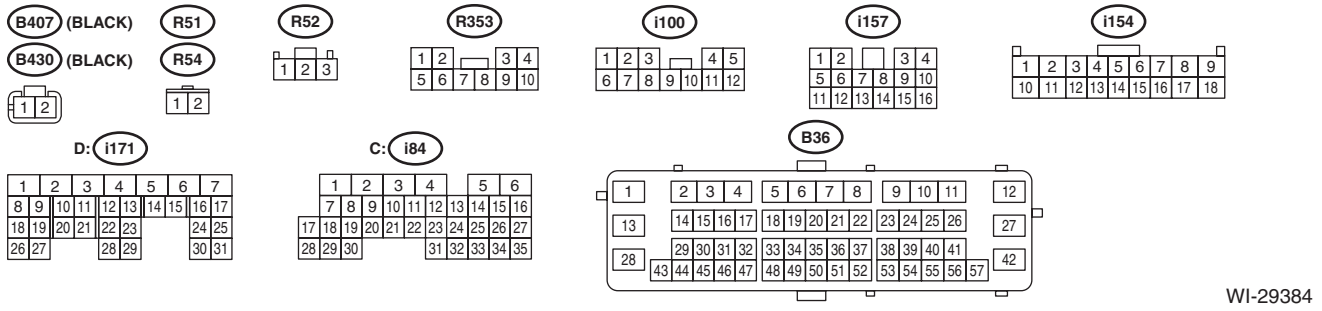
B407 (BLACK)
B430 (BLACK)
R51
R54
R52
R353
i100
i157
i154
D: i171
C: i84
B36

WI-29384

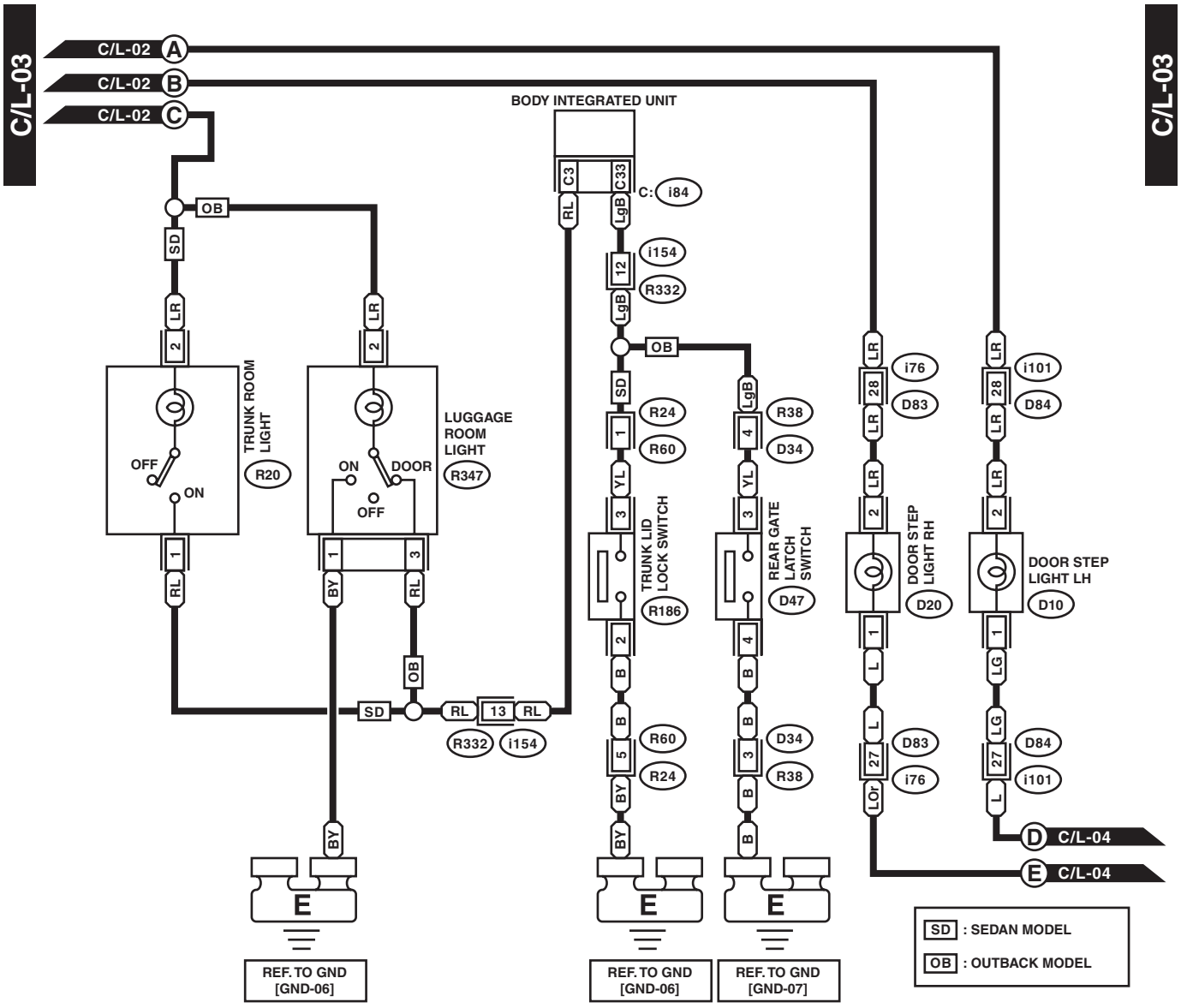
C/L-03
C/L-02 A
C/L-02 B
C/L-02 C
BODY INTEGRATED UNIT
C3
C33
C: i84
RL
LgB
i154
12
R332
OB
SD
LR
2
TRUNK ROOM LIGHT
OFF
ON
R20
LUGGAGE ROOM LIGHT
ON
DOOR
OFF
R347
1
3
BY
RL
R24
R60
YL
TRUNK LID LOCK SWITCH
R186
B
5
BY
R38
D34
REAR GATE LATCH SWITCH
D47
4
i76
D83
28
27
LOr
L
DOOR STEP LIGHT RH
D20
i101
D84
DOOR STEP LIGHT LH
D10
LG
D C/L-04
E C/L-04
13
R332
i154
E
REF. TO GND [GND-06]
REF. TO GND [GND-06]
REF. TO GND [GND-07]
SD : SEDAN MODEL
OB : OUTBACK MODEL

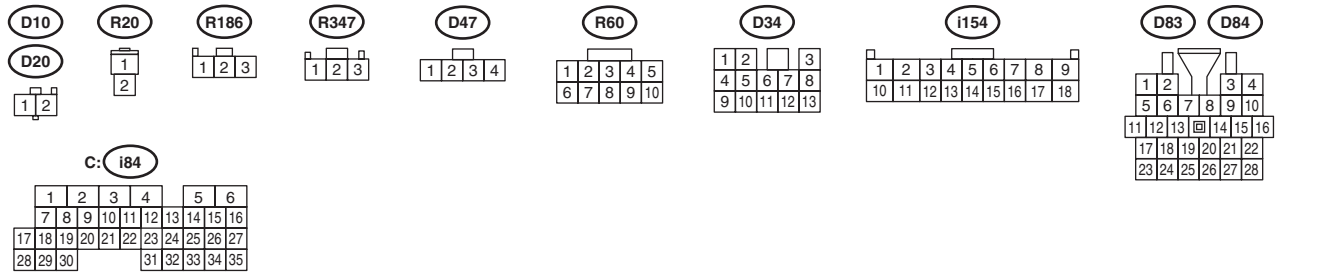
D10
D20
R20
R186
R347
D47
R60
D34
i154
D83
D84
C: i84

WI-29385

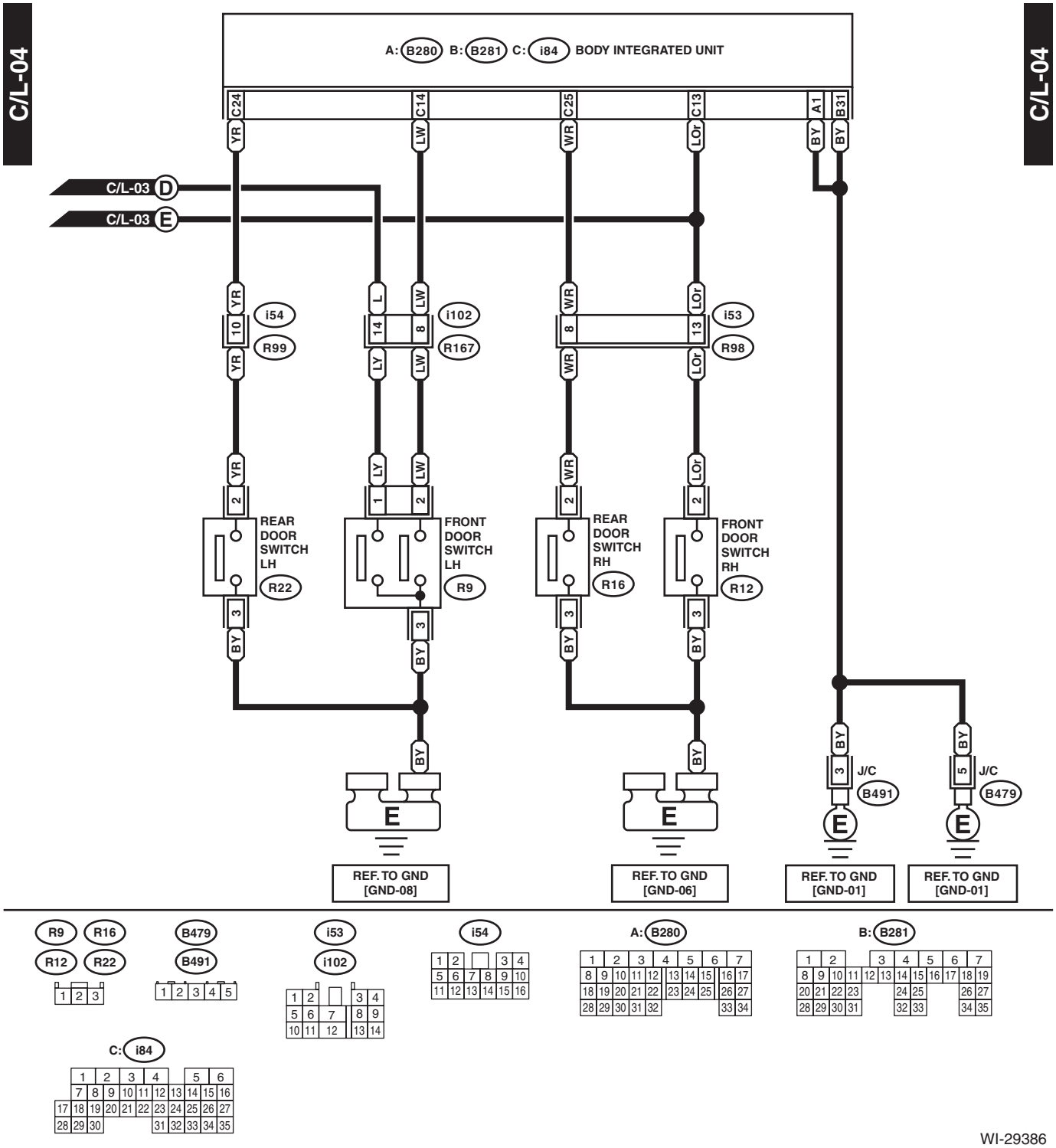
C/L-04
C/L-04
A: B280 B: B281 C: i84 BODY INTEGRATED UNIT
C24
C14
C25
C13
A1
B31
YR
LW
WR
LOr
BY
BY
C/L-03 D
C/L-03 E
YR
10
i54
R99
YR
L
14
LW
8
i102
R167
LY
LW
WR
8
LOr
13
i53
R98
WR
LOr
YR
2
REAR DOOR SWITCH LH
R22
3
BY
LY
1
LW
2
FRONT DOOR SWITCH LH
R9
3
BY
WR
2
REAR DOOR SWITCH RH
R16
3
BY
LOr
2
FRONT DOOR SWITCH RH
R12
3
BY
BY
3
J/C
B491
BY
5
J/C
B479
E
E
E
E
REF. TO GND [GND-08]
REF. TO GND [GND-06]
REF. TO GND [GND-01]
REF. TO GND [GND-01]
R9
R16
R12
R22
B479
B491
i53
i102
i54
A: B280
B: B281
C: i84

WI-29386

27.Keyless Entry System

A: WIRING DIAGRAM

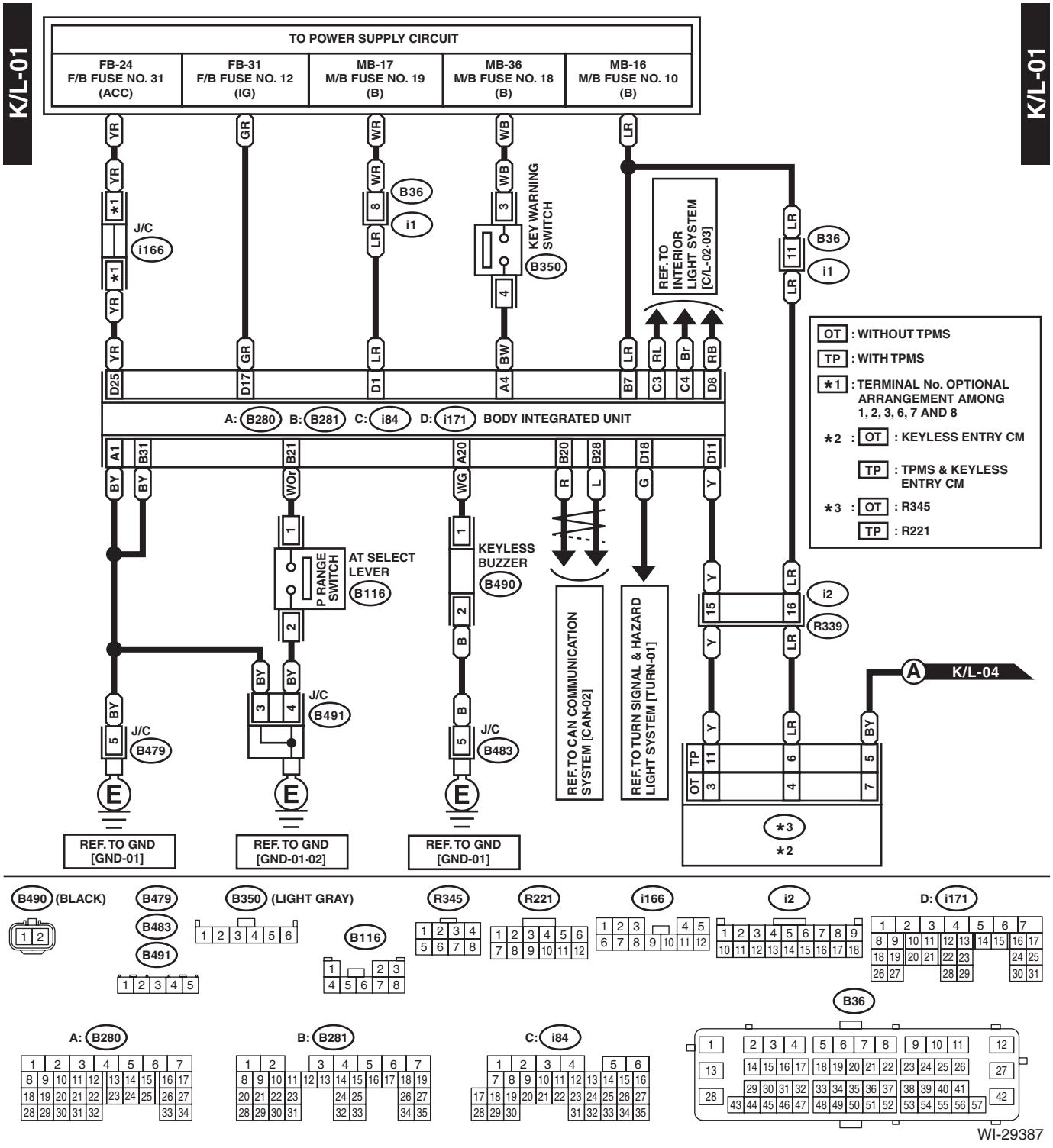

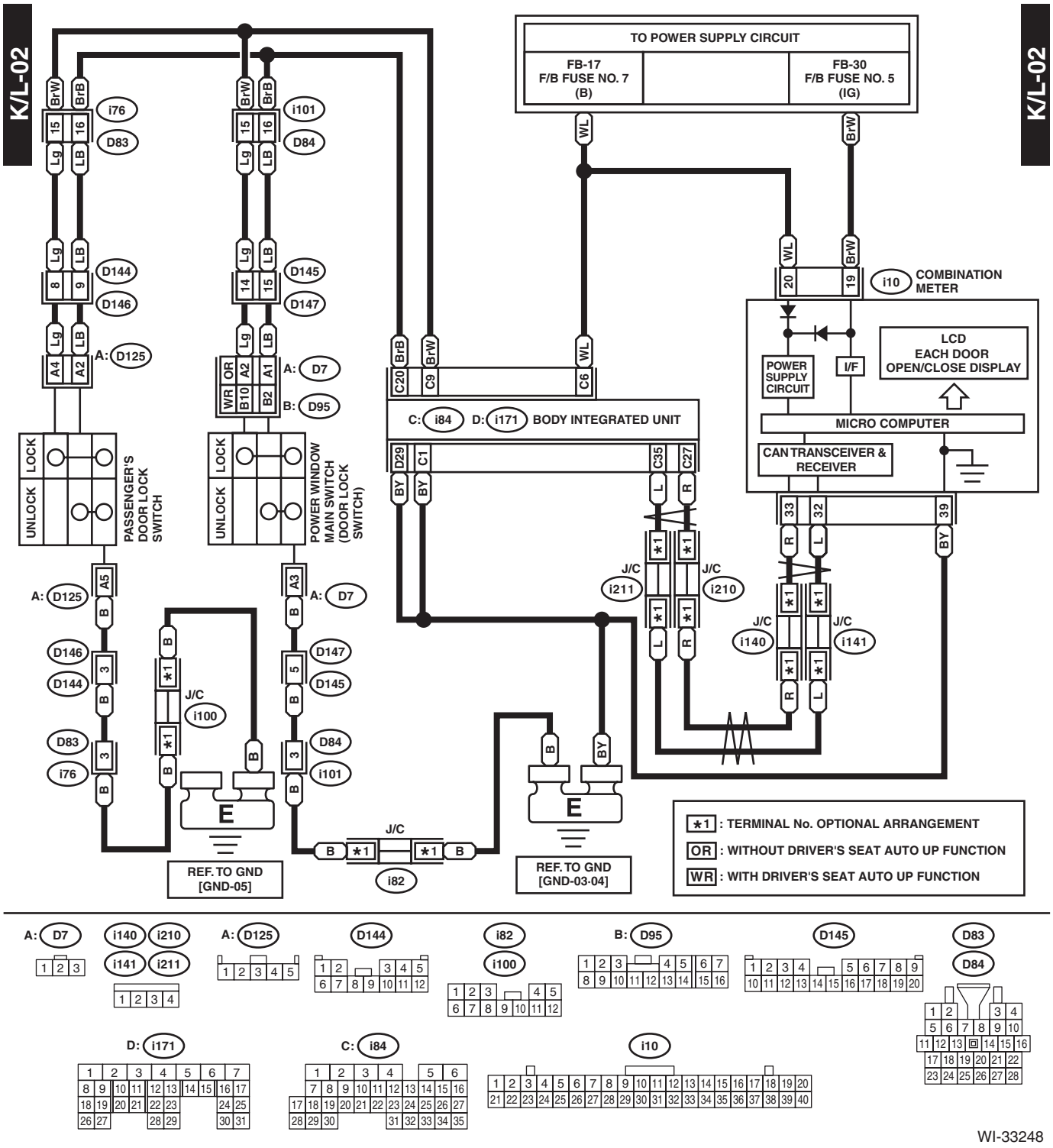
K/L-02
K/L-02
TO POWER SUPPLY CIRCUIT
FB-17
F/B FUSE NO. 7
(B)
FB-30
F/B FUSE NO. 5
(IG)
i76
D83
i101
D84
D144
D146
D145
D147
A: D125
A: D7
B: D95
i10
COMBINATION METER
LCD
EACH DOOR
OPEN/CLOSE DISPLAY
POWER SUPPLY CIRCUIT
I/F
MICRO COMPUTER
CAN TRANSCEIVER & RECEIVER
C: i84 D: i171 BODY INTEGRATED UNIT
LOCK
UNLOCK
PASSENGER'S DOOR LOCK SWITCH
POWER WINDOW MAIN SWITCH (DOOR LOCK SWITCH)
J/C
i100
i211
i210
i140
i141
i82
E
REF. TO GND
[GND-05]
REF. TO GND
[GND-03·04]
*1 : TERMINAL No. OPTIONAL ARRANGEMENT
OR : WITHOUT DRIVER'S SEAT AUTO UP FUNCTION
WR : WITH DRIVER'S SEAT AUTO UP FUNCTION

A: D7
i140
i210
i141
i211
A: D125
D144
i82
i100
B: D95
D145
D83
D84
D: i171
C: i84
i10

WI-33248

K/L-03

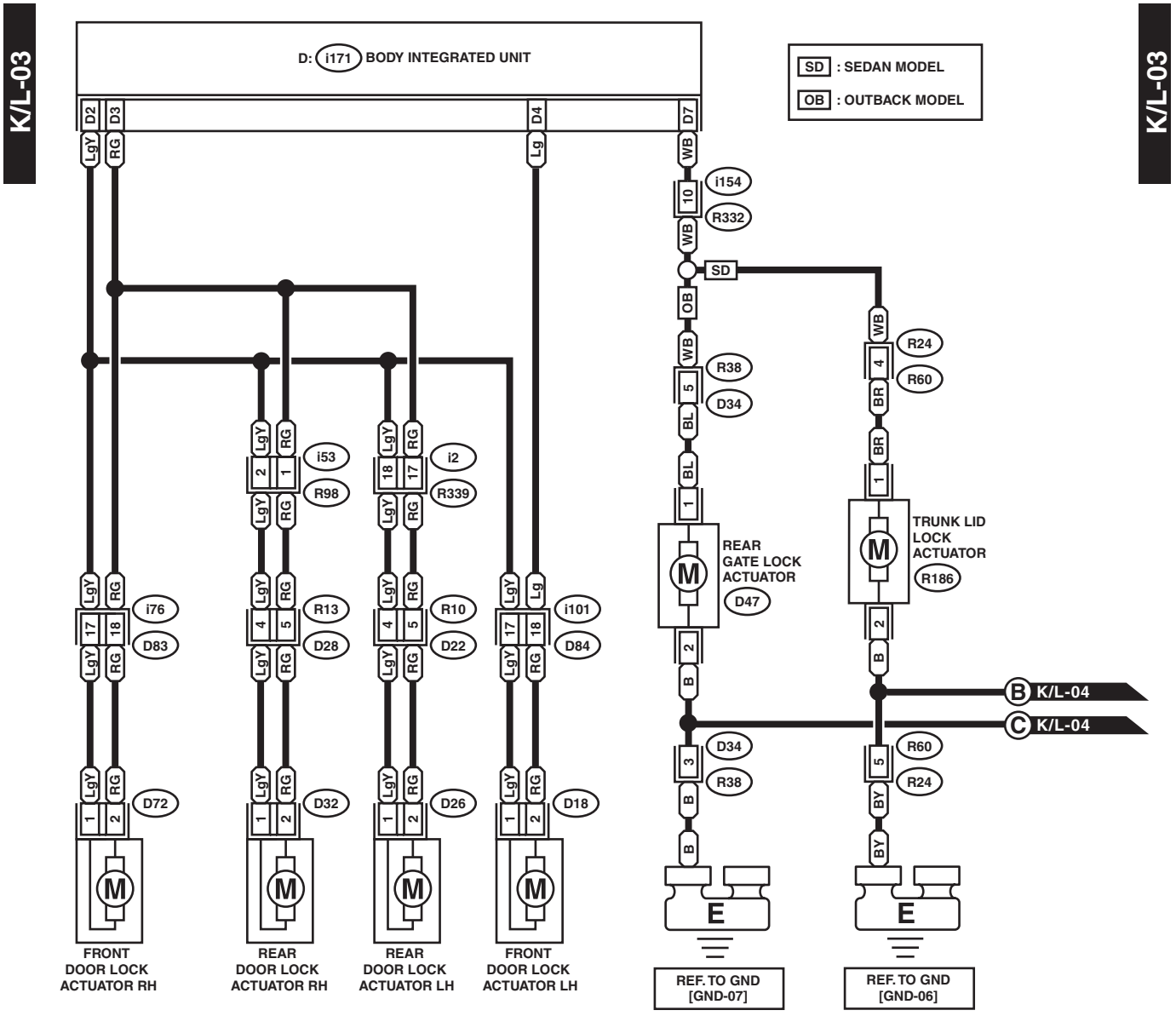

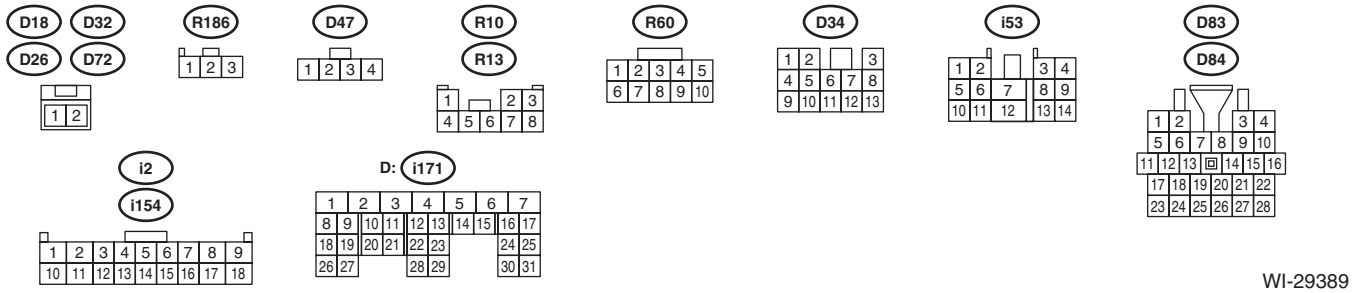

WI-29389

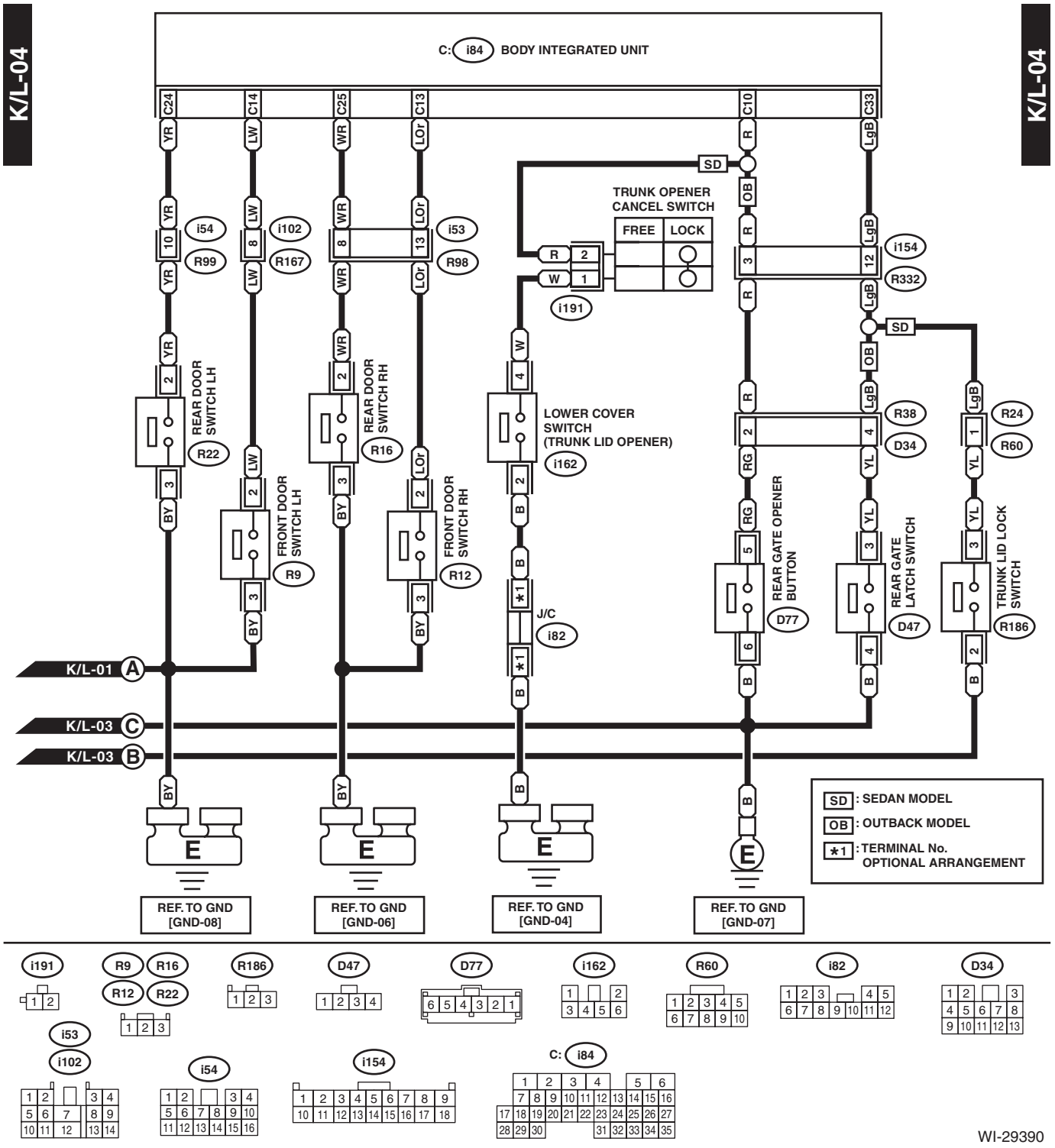
K/L-04
K/L-04
C: i84 BODY INTEGRATED UNIT
C24
C14
C25
C13
C10
C33
YR
LW
WR
LOr
R
LgB
SD
OB
TRUNK OPENER CANCEL SWITCH
FREE
LOCK
i54
i102
i53
i154
i191
R99
R167
R98
R332
REAR DOOR SWITCH LH
REAR DOOR SWITCH RH
LOWER COVER SWITCH (TRUNK LID OPENER)
i162
R22
R16
R38
R24
D34
R60
FRONT DOOR SWITCH LH
FRONT DOOR SWITCH RH
REAR GATE OPENER BUTTON
REAR GATE LATCH SWITCH
TRUNK LID LOCK SWITCH
R9
R12
D77
D47
R186
J/C
i82
K/L-01 A
K/L-03 C
K/L-03 B
E
REF. TO GND [GND-08]
REF. TO GND [GND-06]
REF. TO GND [GND-04]
REF. TO GND [GND-07]
SD : SEDAN MODEL
OB : OUTBACK MODEL
*1 : TERMINAL No. OPTIONAL ARRANGEMENT
i191
R9
R16
R12
R22
R186
D47
D77
i162
R60
i82
D34
i53
i102
i54
i154
C: i84
WI-29390

28.Navigation System

A: WIRING DIAGRAM

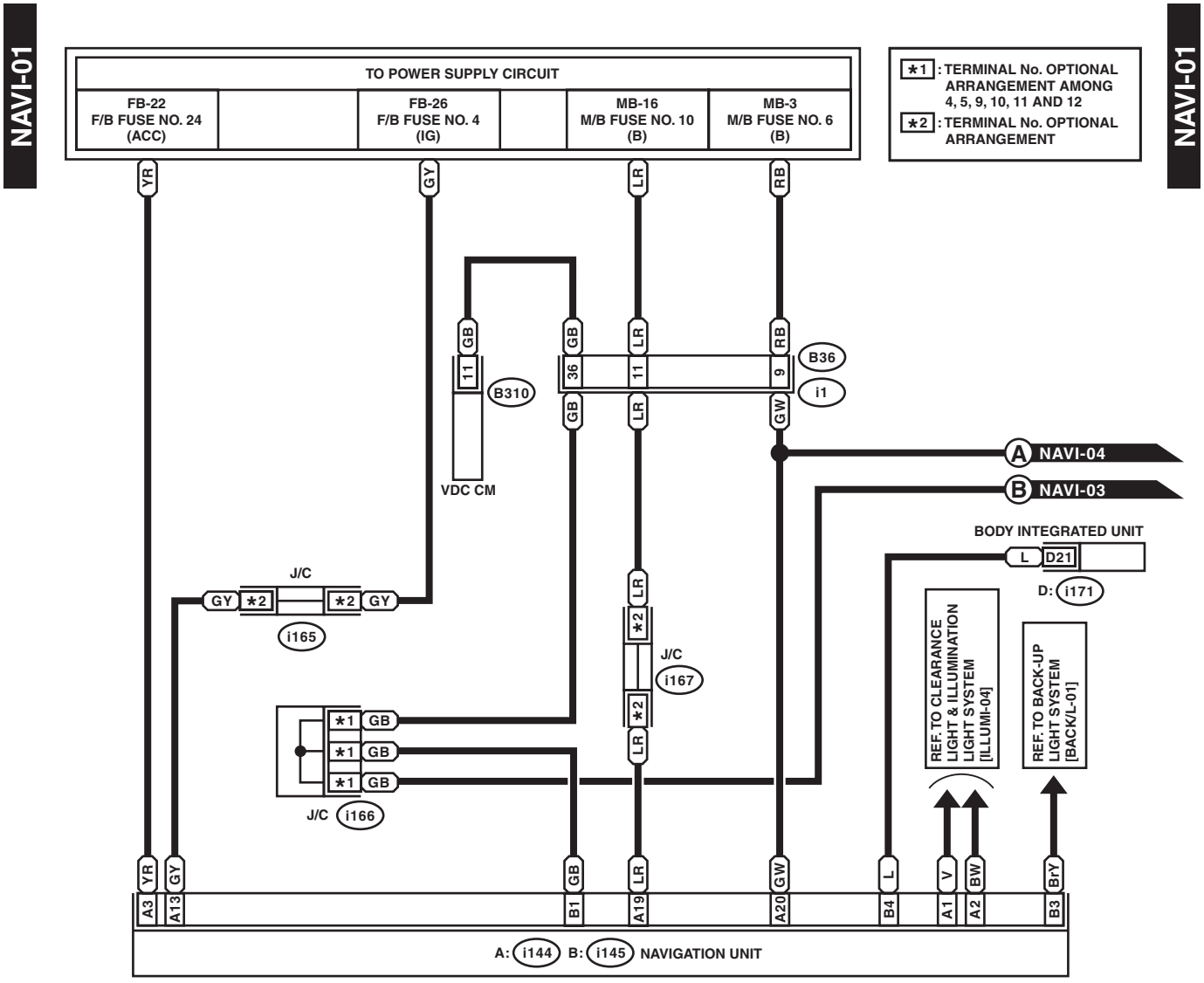

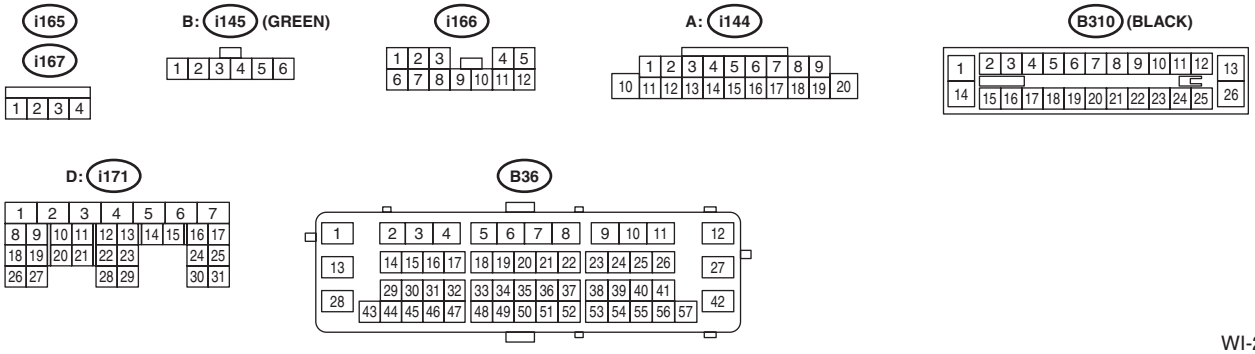

WI-29391

NAVI-02

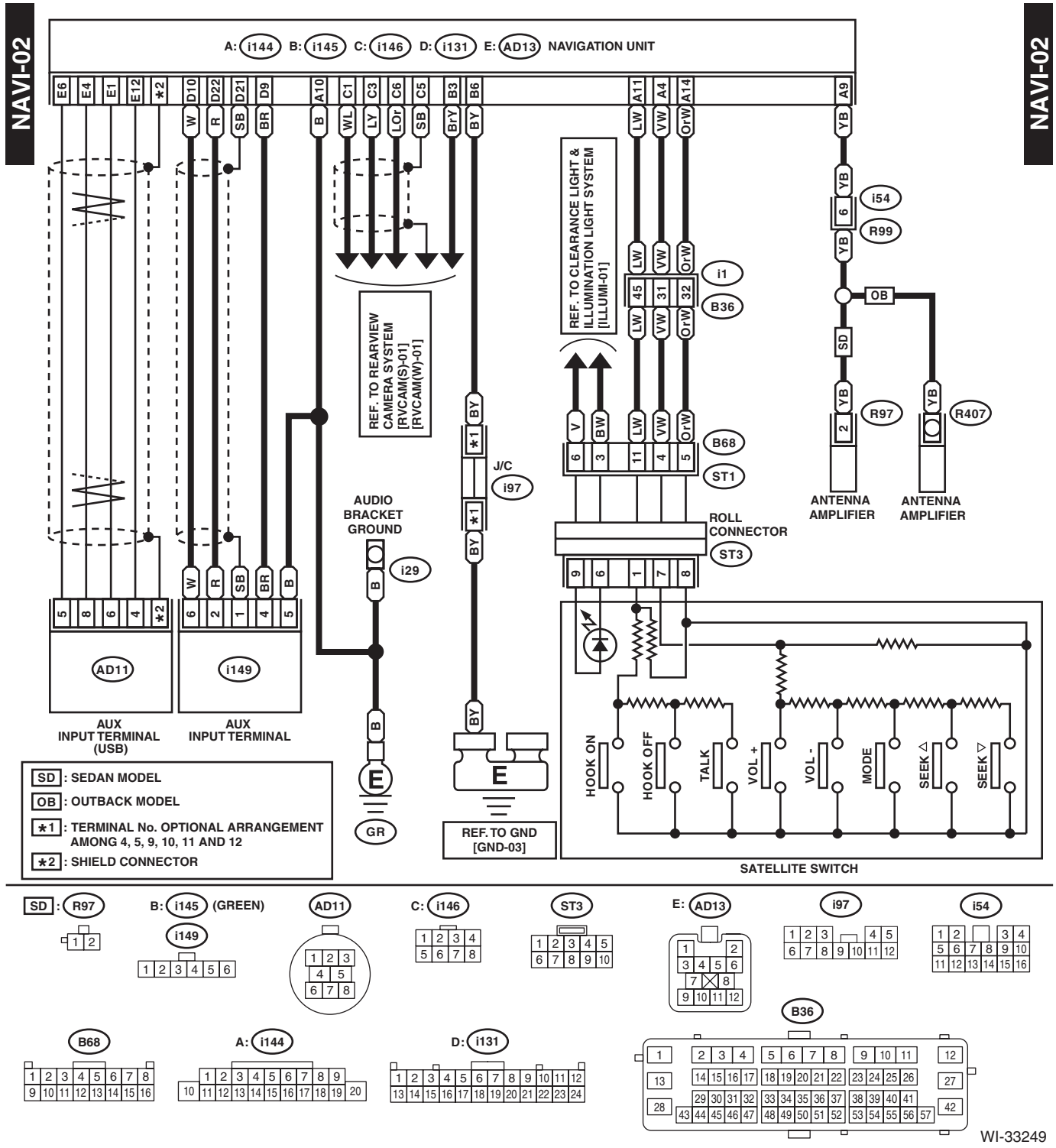
A: i144 B: i145 C: i146 D: i131 E: AD13 NAVIGATION UNIT
E6 E4 E1 E12 *2 D10 D22 D21 D9 A10 C1 C3 C6 C5 B3 B6 A11 A4 A14 A9
W R SB BR B WL LY LOr SB BrY BY LW VW OrW YB
REF. TO REARVIEW CAMERA SYSTEM [RVCAM(S)-01] [RVCAM(W)-01]
REF. TO CLEARANCE LIGHT & ILLUMINATION LIGHT SYSTEM [ILLUMI-01]
i54
R99
OB
SD
R97
R407
ANTENNA AMPLIFIER
ANTENNA AMPLIFIER
i1
B36
B68
ST1
ROLL CONNECTOR
ST3
J/C
i97
AUDIO BRACKET GROUND
i29
AD11
i149
AUX INPUT TERMINAL (USB)
AUX INPUT TERMINAL
GR
REF. TO GND [GND-03]
HOOK ON
HOOK OFF
TALK
VOL +
VOL -
MODE
SEEK △
SEEK ▽
SATELLITE SWITCH
SD : SEDAN MODEL
OB : OUTBACK MODEL
*1 : TERMINAL No. OPTIONAL ARRANGEMENT AMONG 4, 5, 9, 10, 11 AND 12
*2 : SHIELD CONNECTOR
SD : R97
B: i145 (GREEN)
i149
AD11
C: i146
ST3
E: AD13
i97
i54
B68
A: i144
D: i131
B36
WI-33249

NAVI-03

NAVI-03

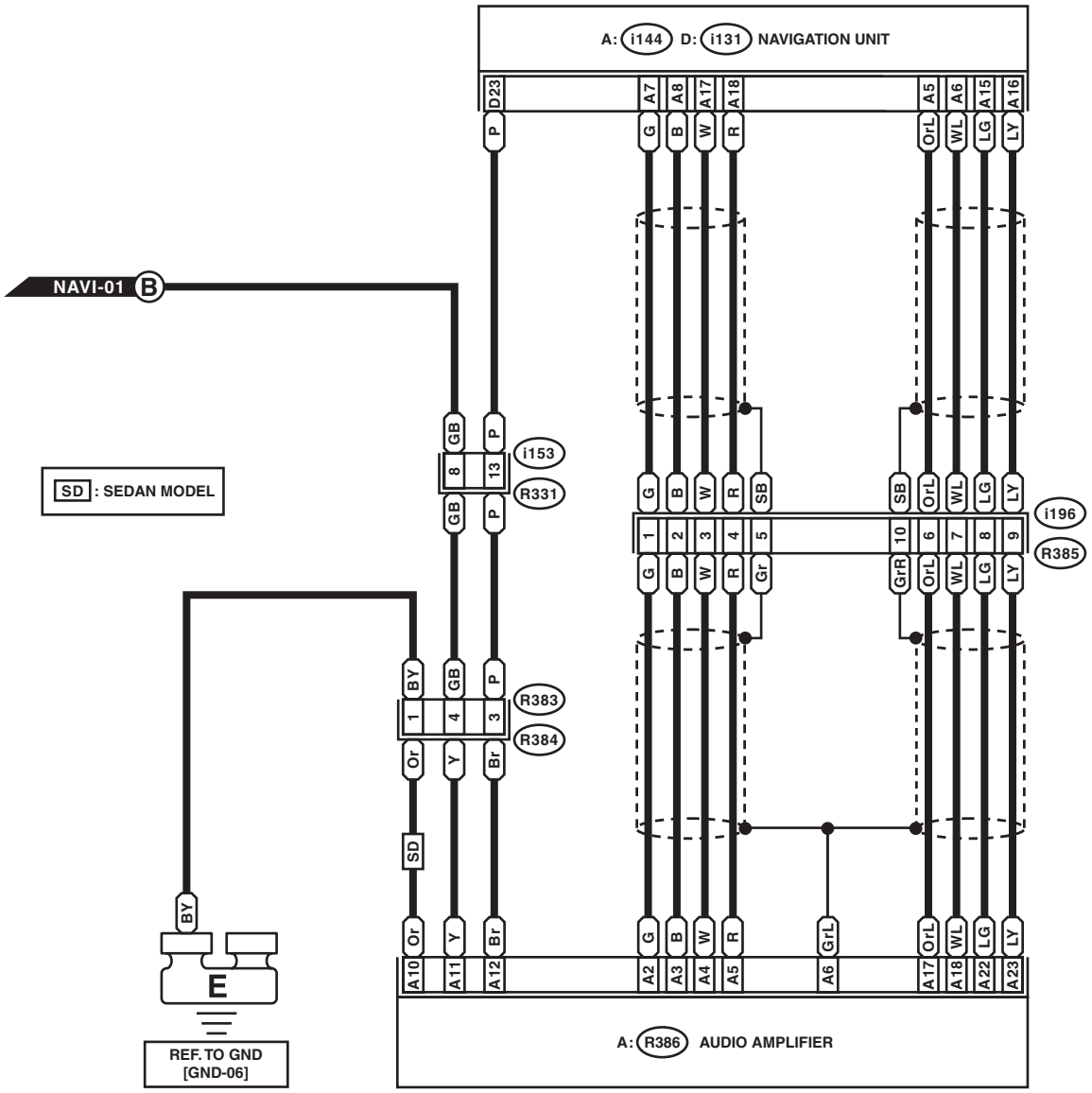

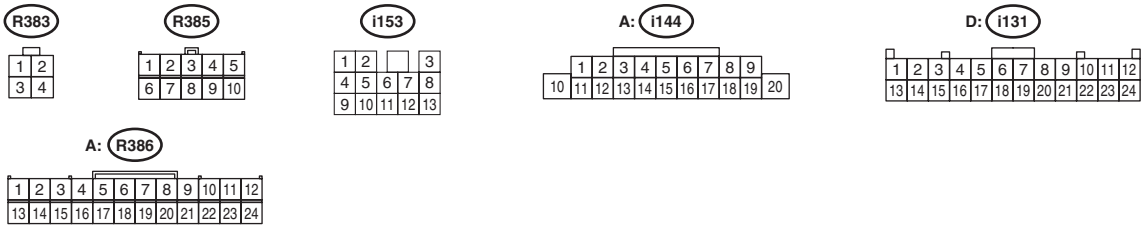

WI-33250

NAVI-04

NAVI-04

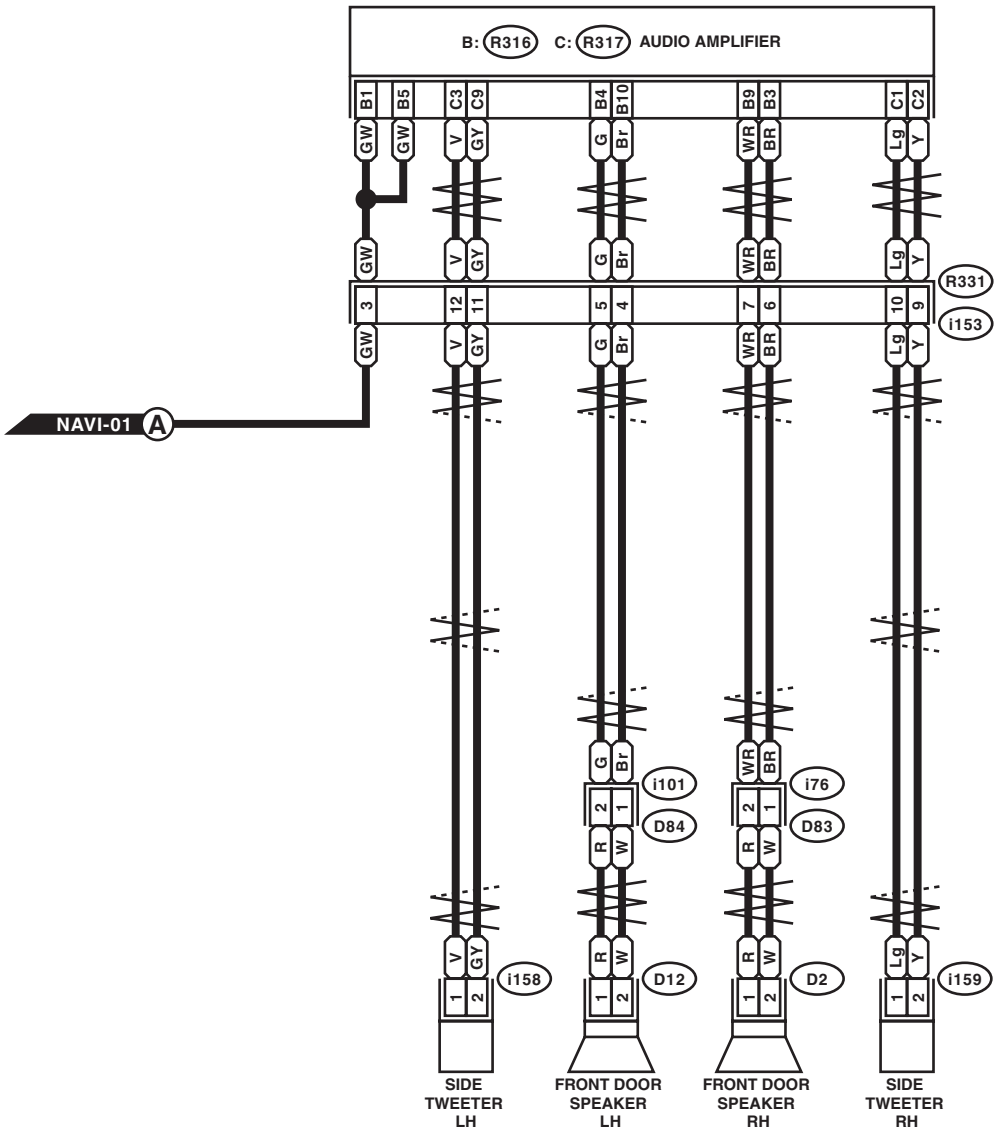

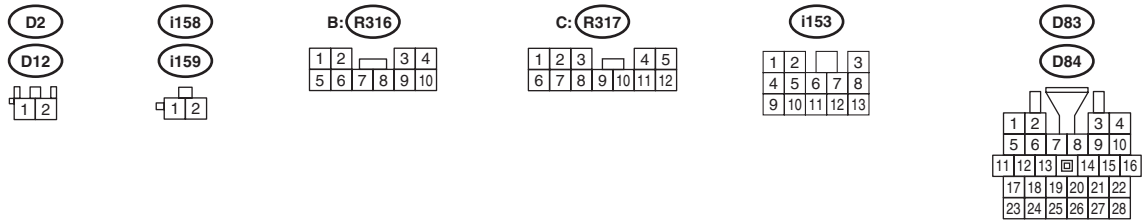

WI-33251

NAVI-05

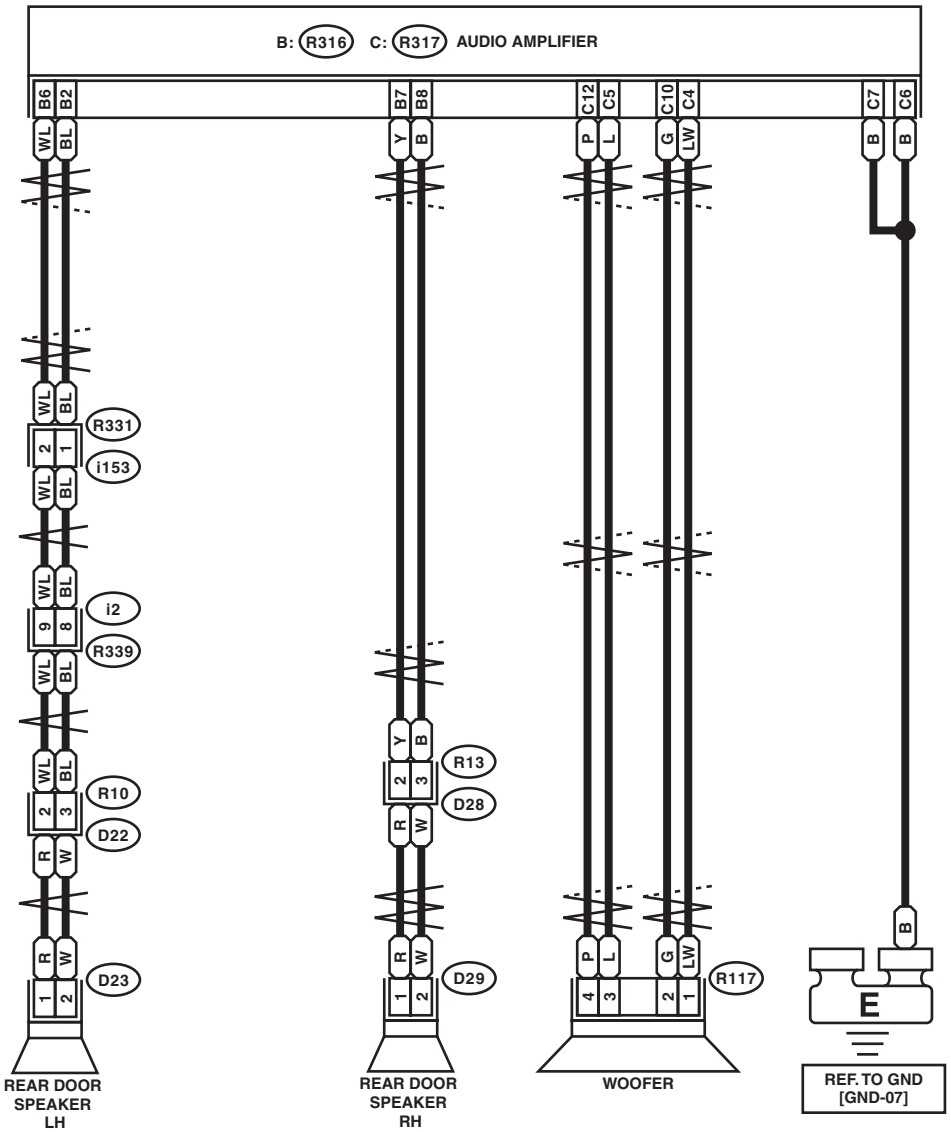

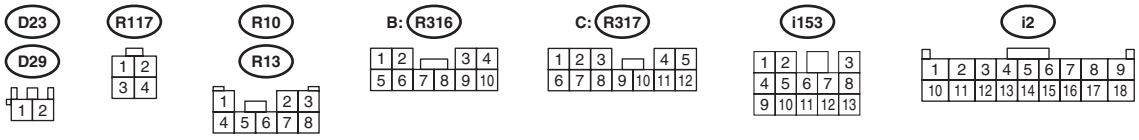

WI-33252

- **With XM radio tuner**

NAVI-06

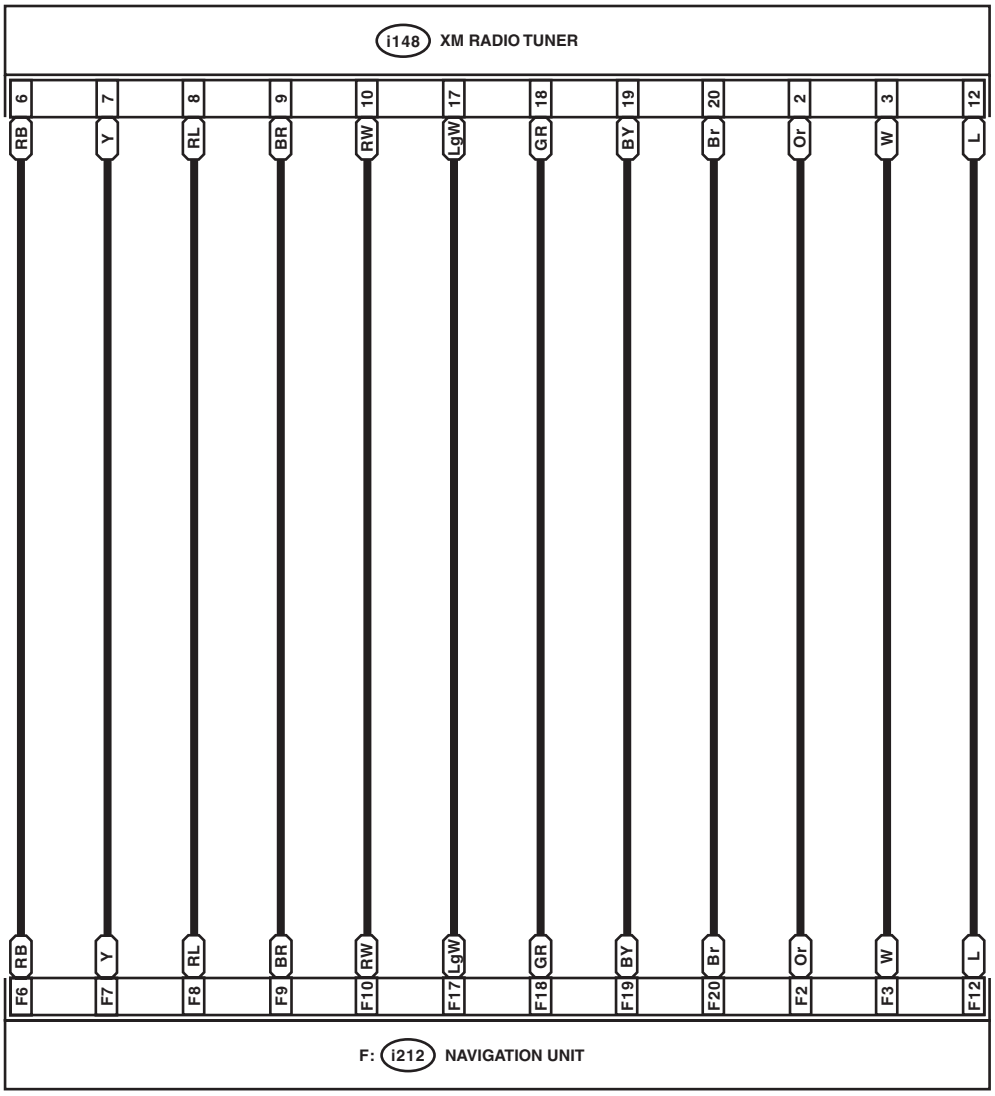

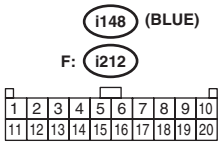

WI-29394

29.Occupant Detection System

A: WIRING DIAGRAM

1. VEHICLE IDENTIFICATION NUMBER: SEDAN MODEL 002017 OR LATER OUTBACK MODEL 200013 OR LATER

ODS-01

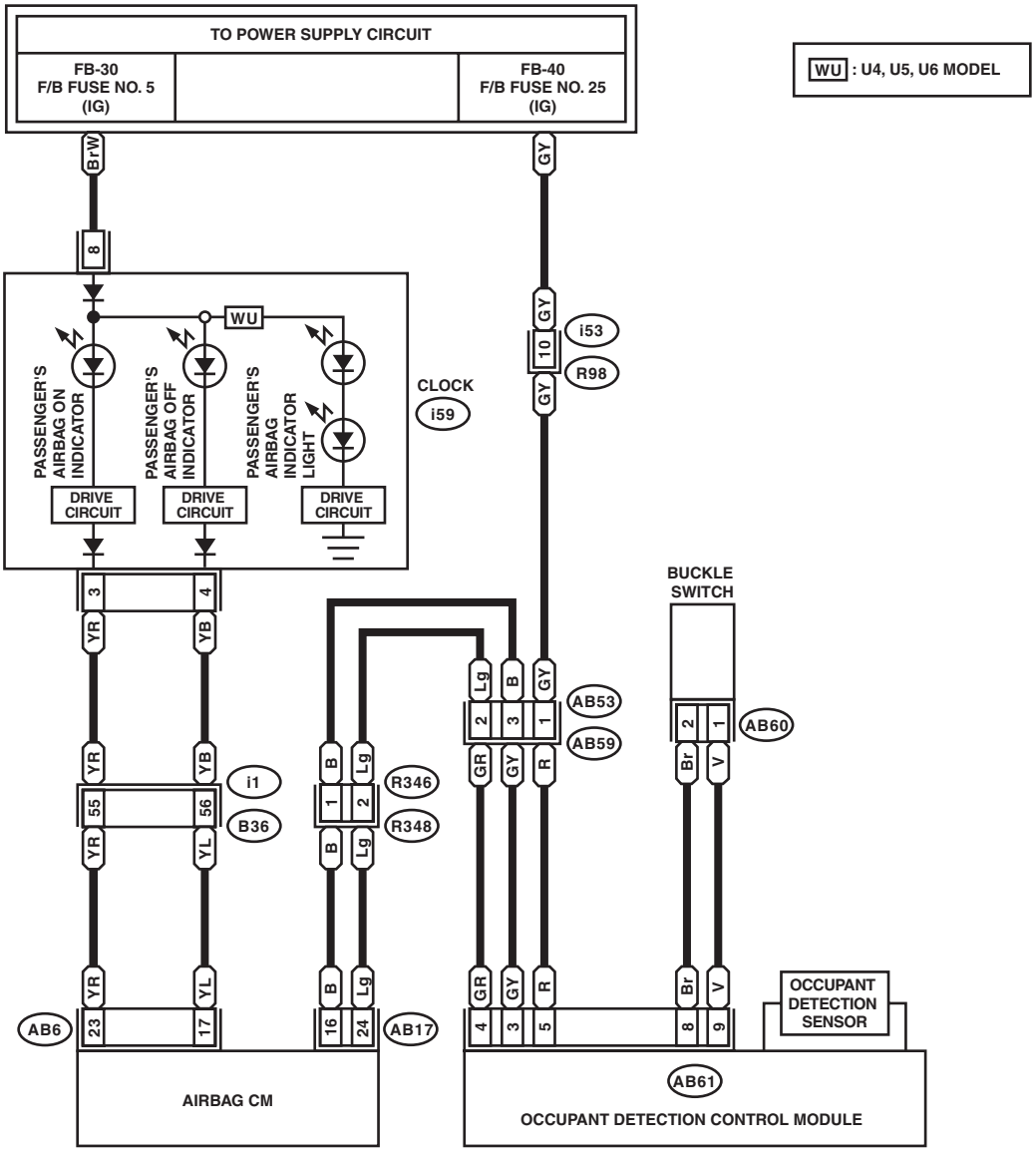

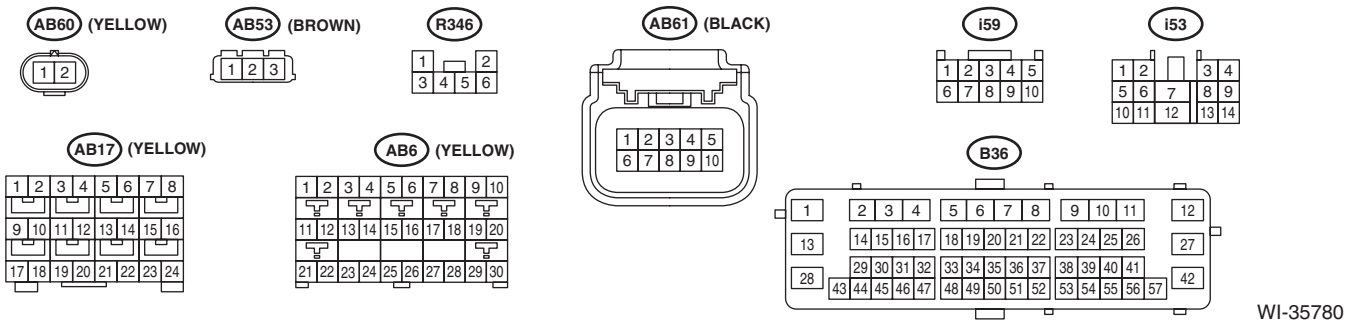

WI-35780

2. VEHICLE IDENTIFICATION NUMBER: SEDAN MODEL 002016 OR OLDER OUTBACK MODEL 200012 OR OLDER

ODS-01

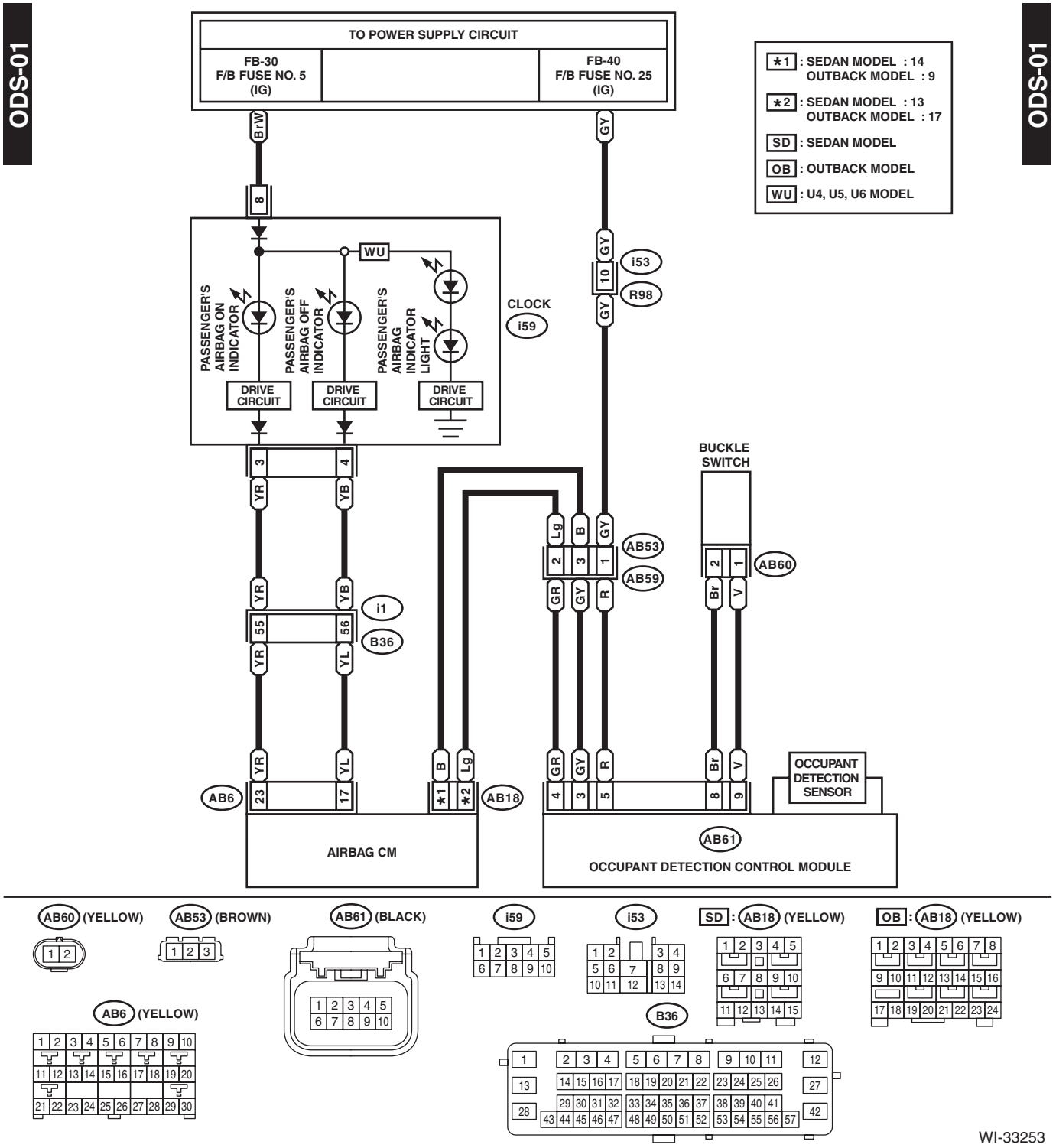

WI-33253

30.Oil Pressure Warning Light System

A: WIRING DIAGRAM

OIL/P-01

OIL/P-01

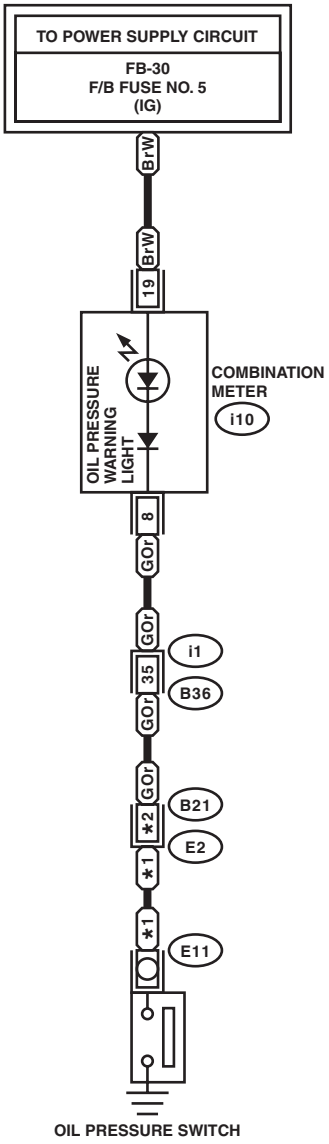

*1	2.5 L NON-TURBO MODEL	Br
	TURBO MODEL	G
	3.6 L MODEL	GOr
*2	2.5 L NON-TURBO MODEL	31
	TURBO MODEL	45
	3.6 L MODEL	45

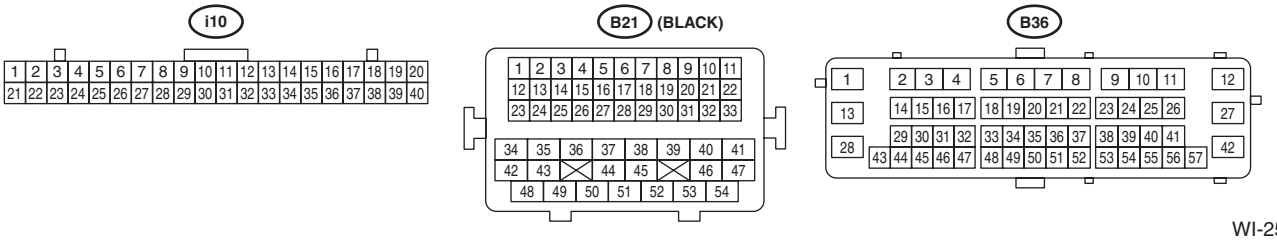

WI-25551

31.Parking Brake / Brake Fluid Level Warning Light System

A: WIRING DIAGRAM

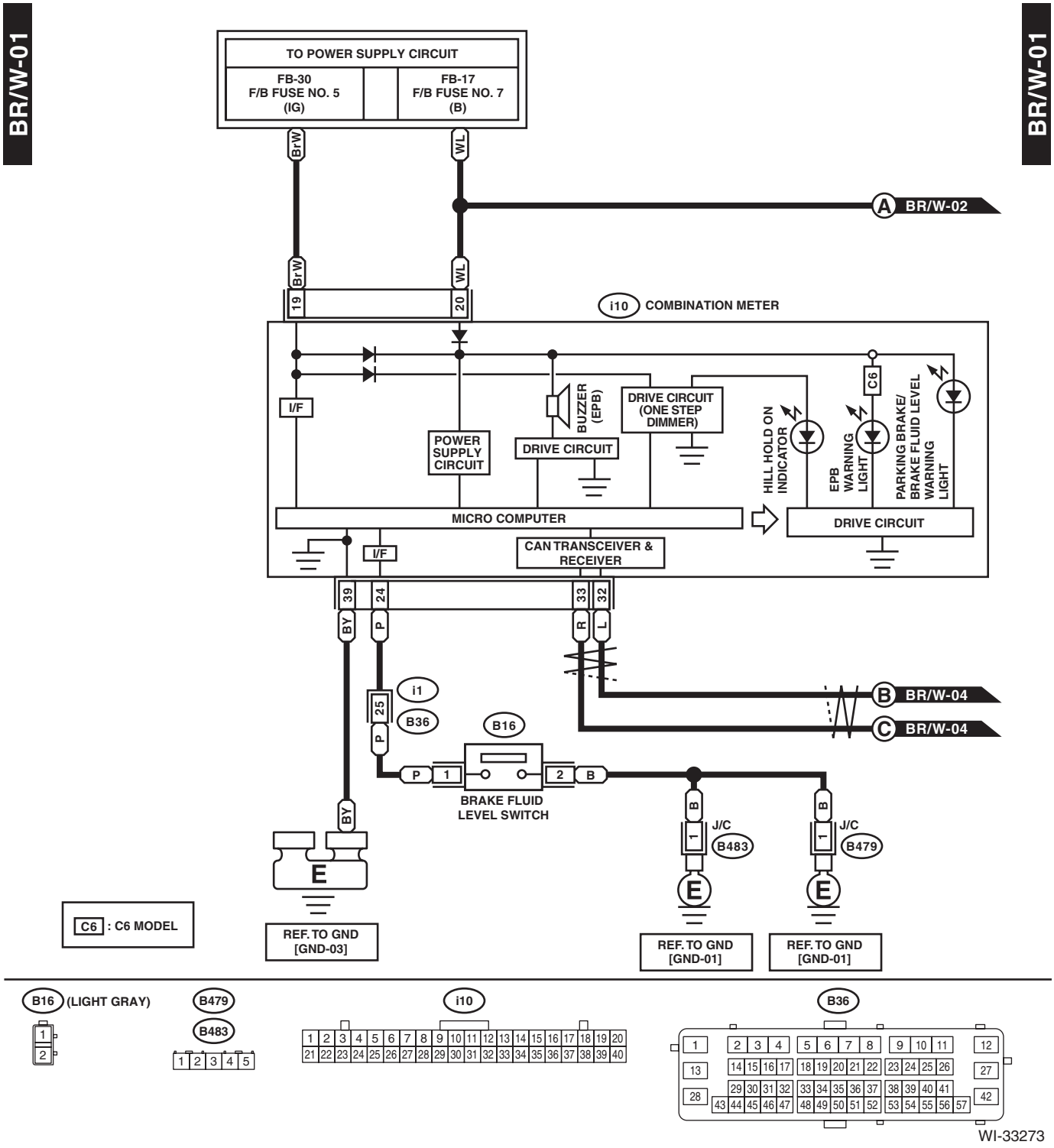

WI-33273

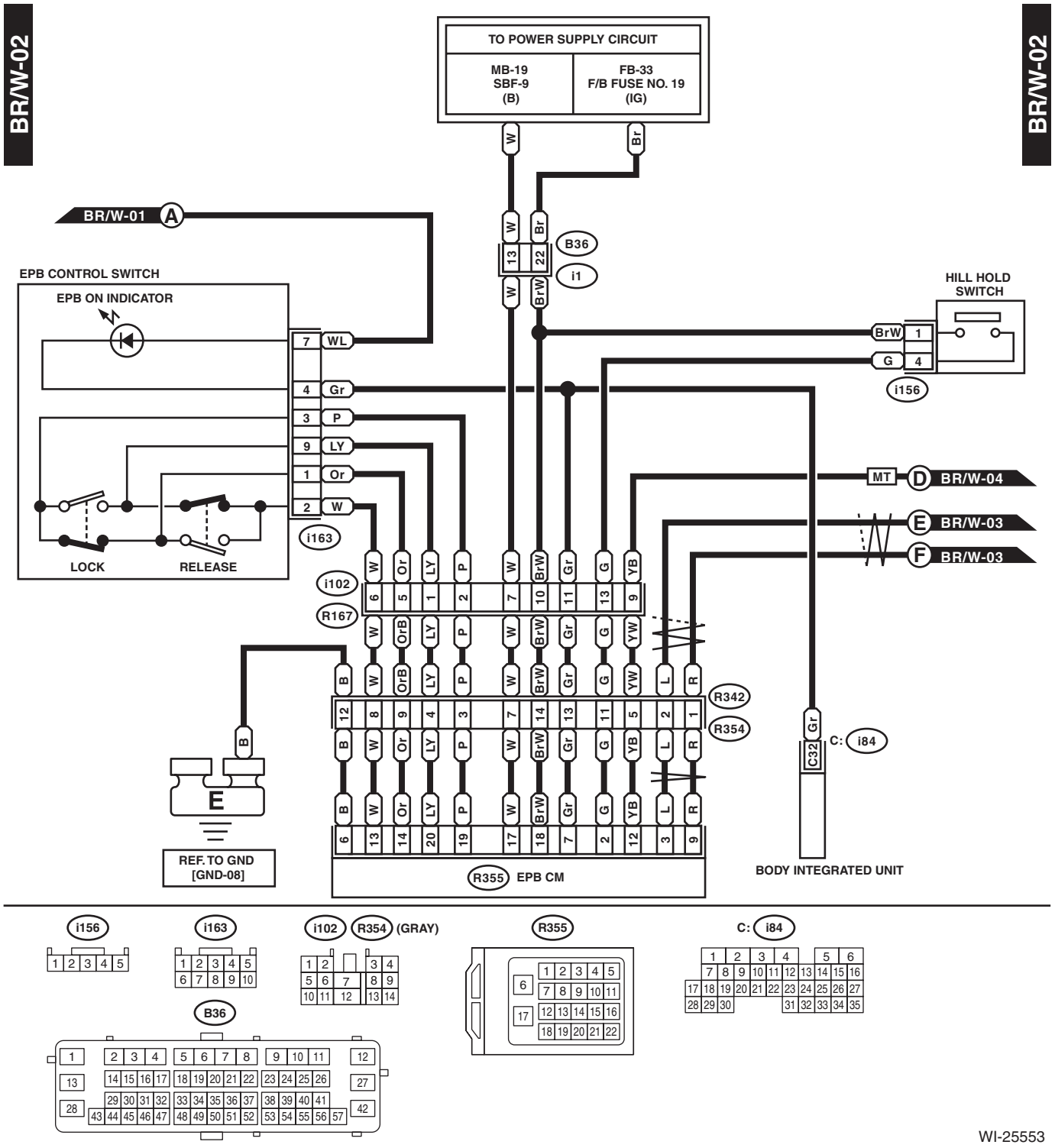
BR/W-02
BR/W-02
TO POWER SUPPLY CIRCUIT
MB-19
SBF-9
(B)
FB-33
F/B FUSE NO. 19
(IG)
W
Br
BR/W-01
A
B36
i1
EPB CONTROL SWITCH
EPB ON INDICATOR
7 WL
4 Gr
3 P
9 LY
1 Or
2 W
i163
LOCK
RELEASE
HILL HOLD SWITCH
BrW 1
G 4
i156
MT
D BR/W-04
E BR/W-03
F BR/W-03
i102
R167
R342
R354
C: i84
C32 Gr
E
REF. TO GND
[GND-08]
R355 EPB CM
BODY INTEGRATED UNIT

i156
i163
i102
R354
(GRAY)
R355
C: i84
B36

WI-25553

BR/W-03

BR/W-03

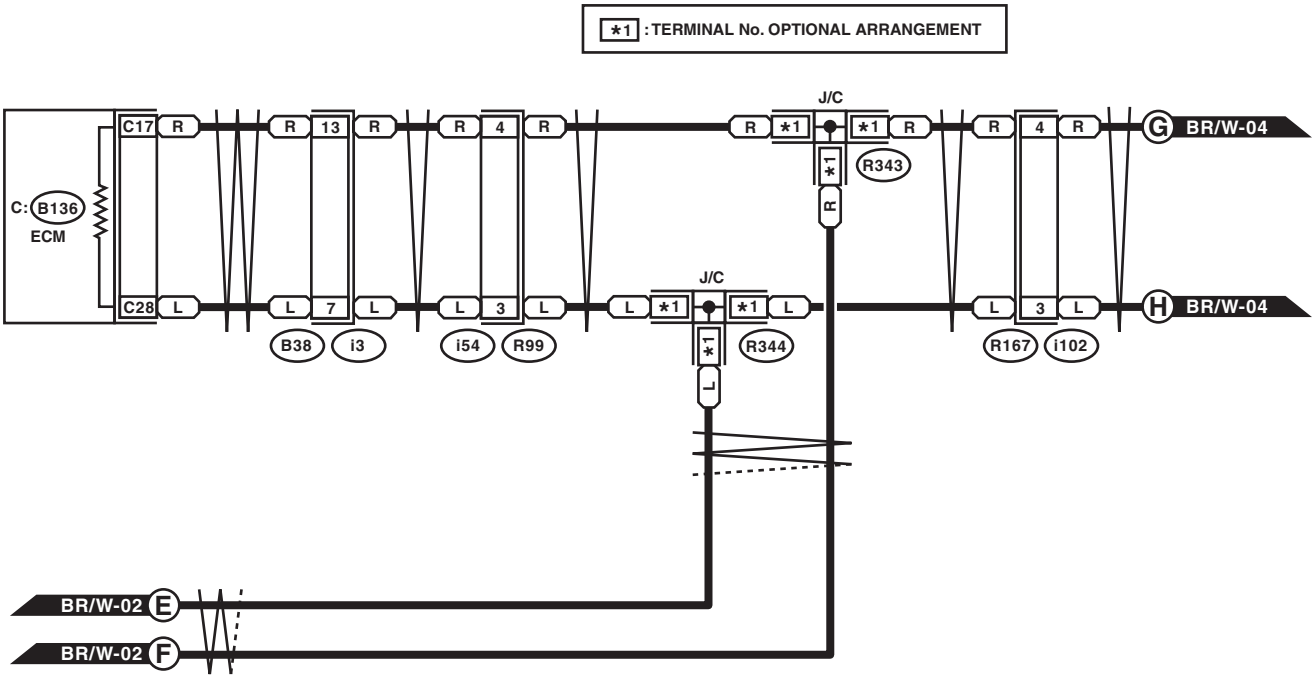

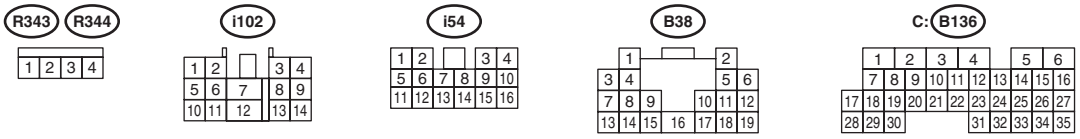

WI-29396

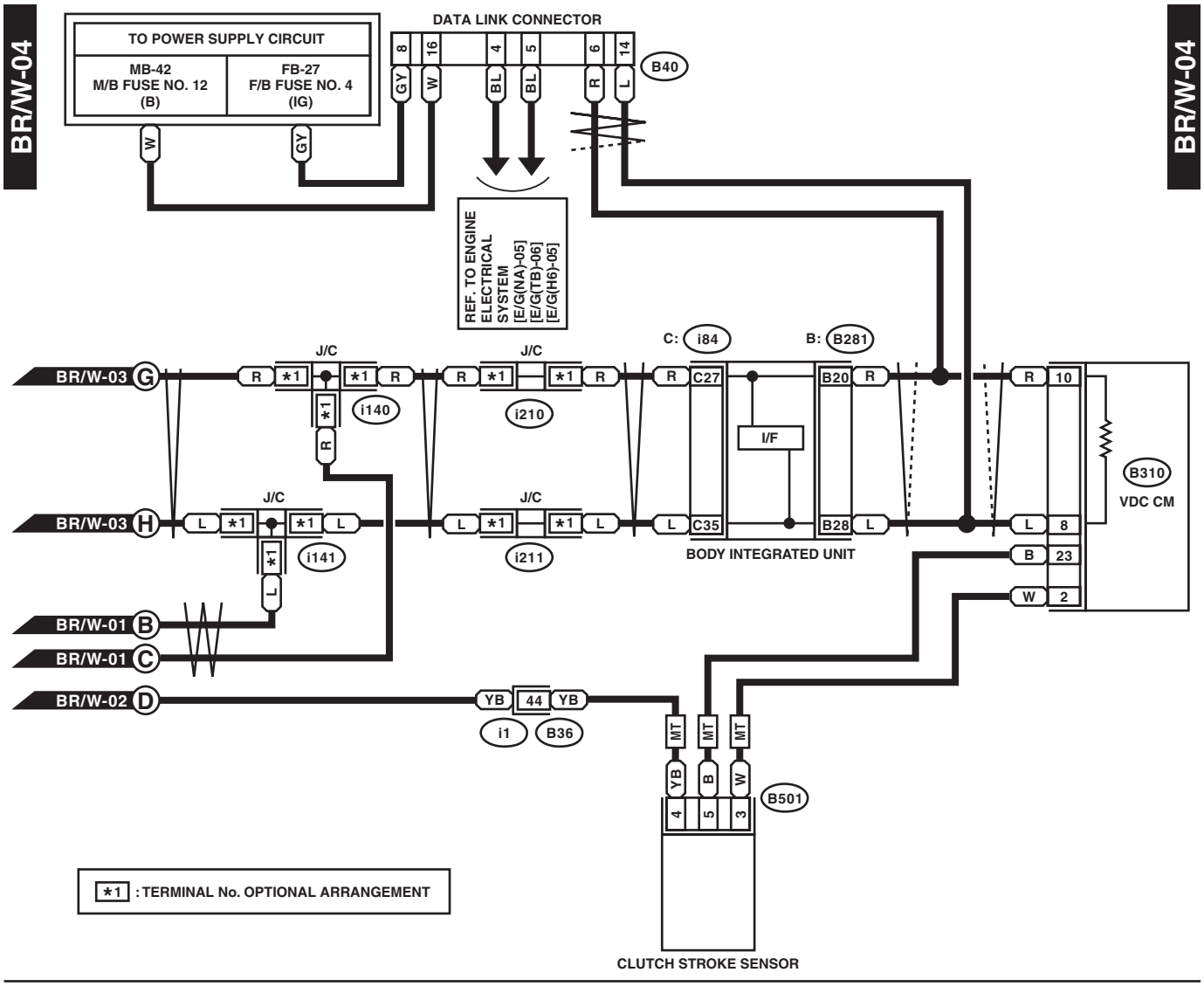
BR/W-04
BR/W-04
TO POWER SUPPLY CIRCUIT
MB-42
M/B FUSE NO. 12
(B)
FB-27
F/B FUSE NO. 4
(IG)
DATA LINK CONNECTOR
B40
REF. TO ENGINE ELECTRICAL SYSTEM [E/G(NA)-05] [E/G(TB)-06] [E/G(H6)-05]
C: i84
B: B281
J/C
i140
i210
i141
i211
BR/W-03 G
BR/W-03 H
BR/W-01 B
BR/W-01 C
BR/W-02 D
C27
C35
B20
B28
I/F
BODY INTEGRATED UNIT
B310
VDC CM
i1
B36
B501
CLUTCH STROKE SENSOR
*1 : TERMINAL No. OPTIONAL ARRANGEMENT

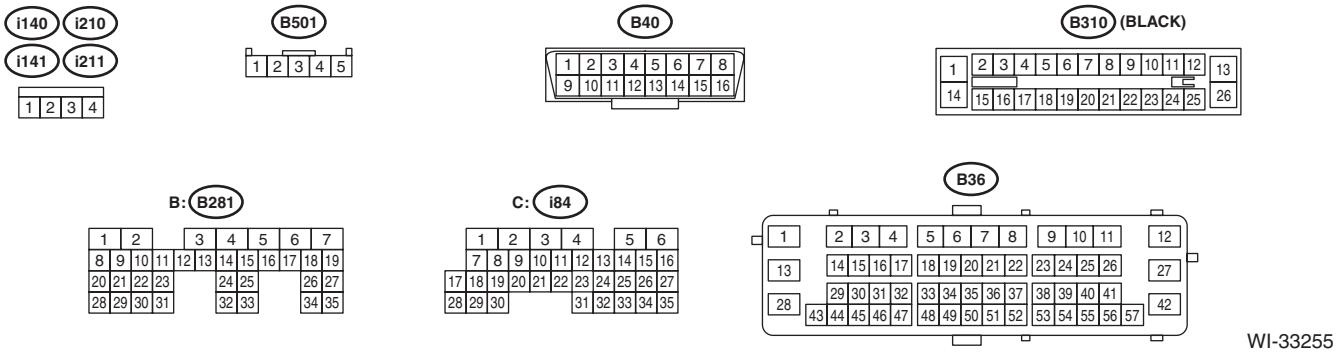
i140 i210 i141 i211
B501
B40
B310 (BLACK)
B: B281
C: i84
B36

WI-33255

32.Power Seat System

A: WIRING DIAGRAM

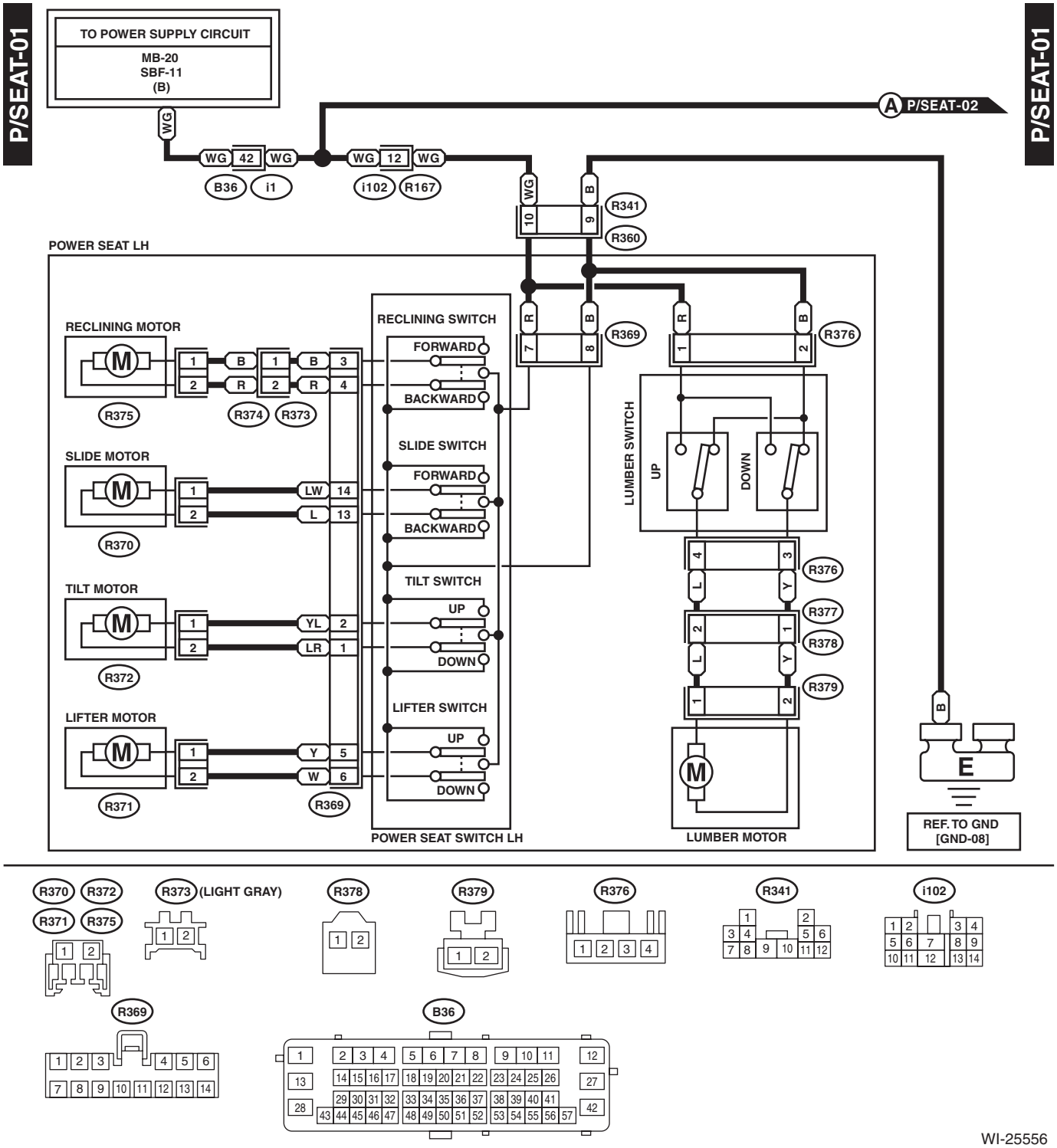

WI-25556

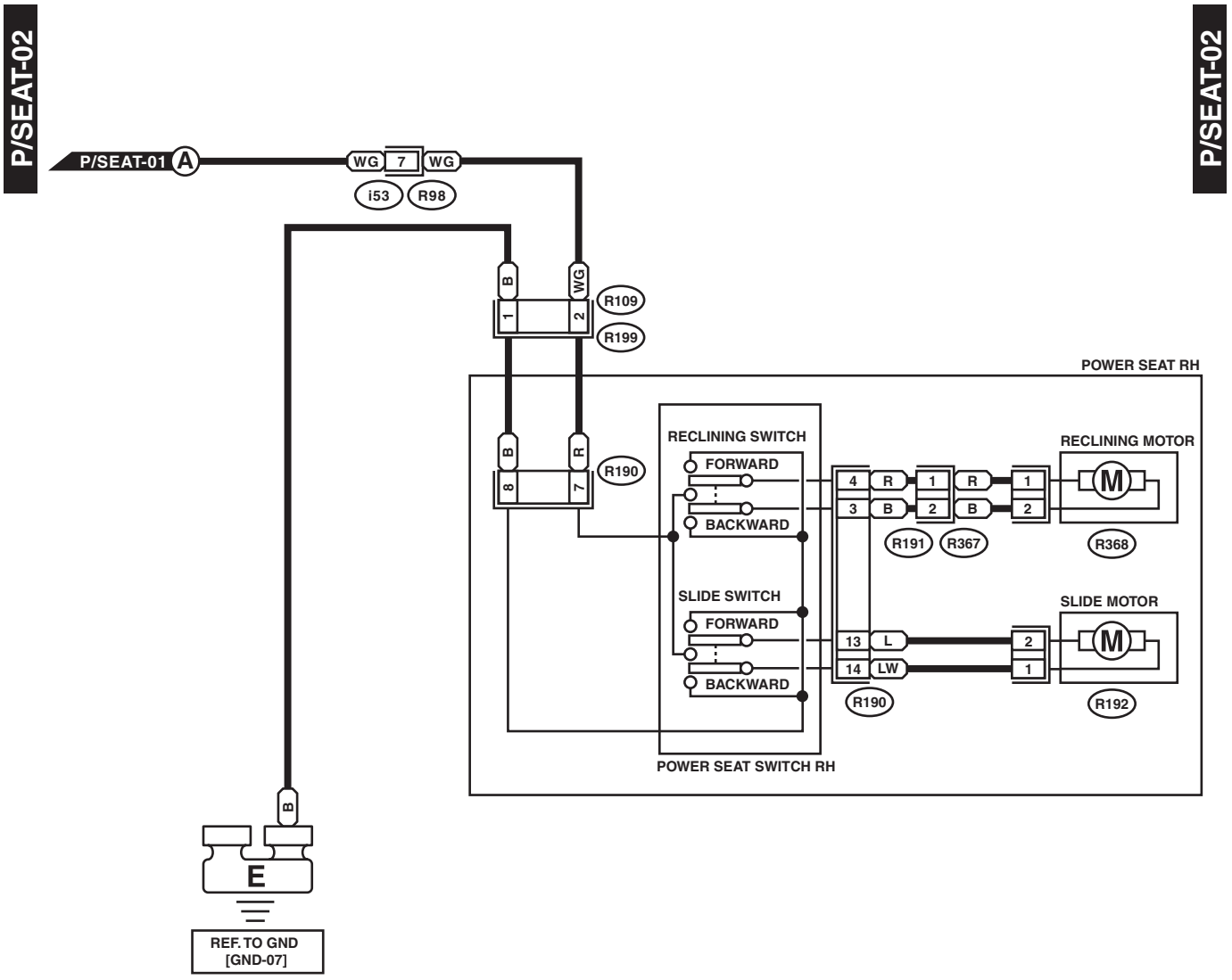
P/SEAT-02
P/SEAT-02
P/SEAT-01 A
WG 7 WG
i53 R98
B WG
1 2
R109
R199
POWER SEAT RH
B R
8 7
R190
RECLINING SWITCH
FORWARD
BACKWARD
RECLINING MOTOR
4 R 1 R 1
3 B 2 B 2
R191 R367
M
R368
SLIDE SWITCH
FORWARD
BACKWARD
SLIDE MOTOR
13 L 2
14 LW 1
R190
M
R192
POWER SEAT SWITCH RH
B
E
REF. TO GND
[GND-07]

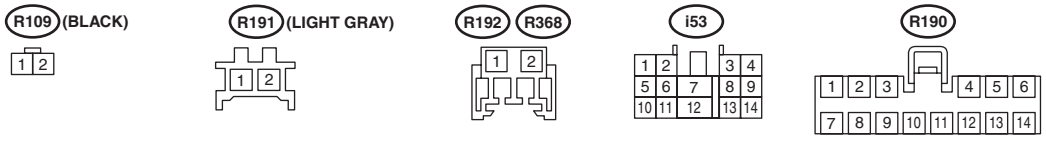
R109 (BLACK)
1 2
R191 (LIGHT GRAY)
1 2
R192 R368
1 2
i53
1 2 3 4
5 6 7 8 9
10 11 12 13 14
R190
1 2 3 4 5 6
7 8 9 10 11 12 13 14

WI-25557

33.Power Window System

A: WIRING DIAGRAM

1. WITHOUT DRIVER'S SEAT AUTO UP FUNCTION

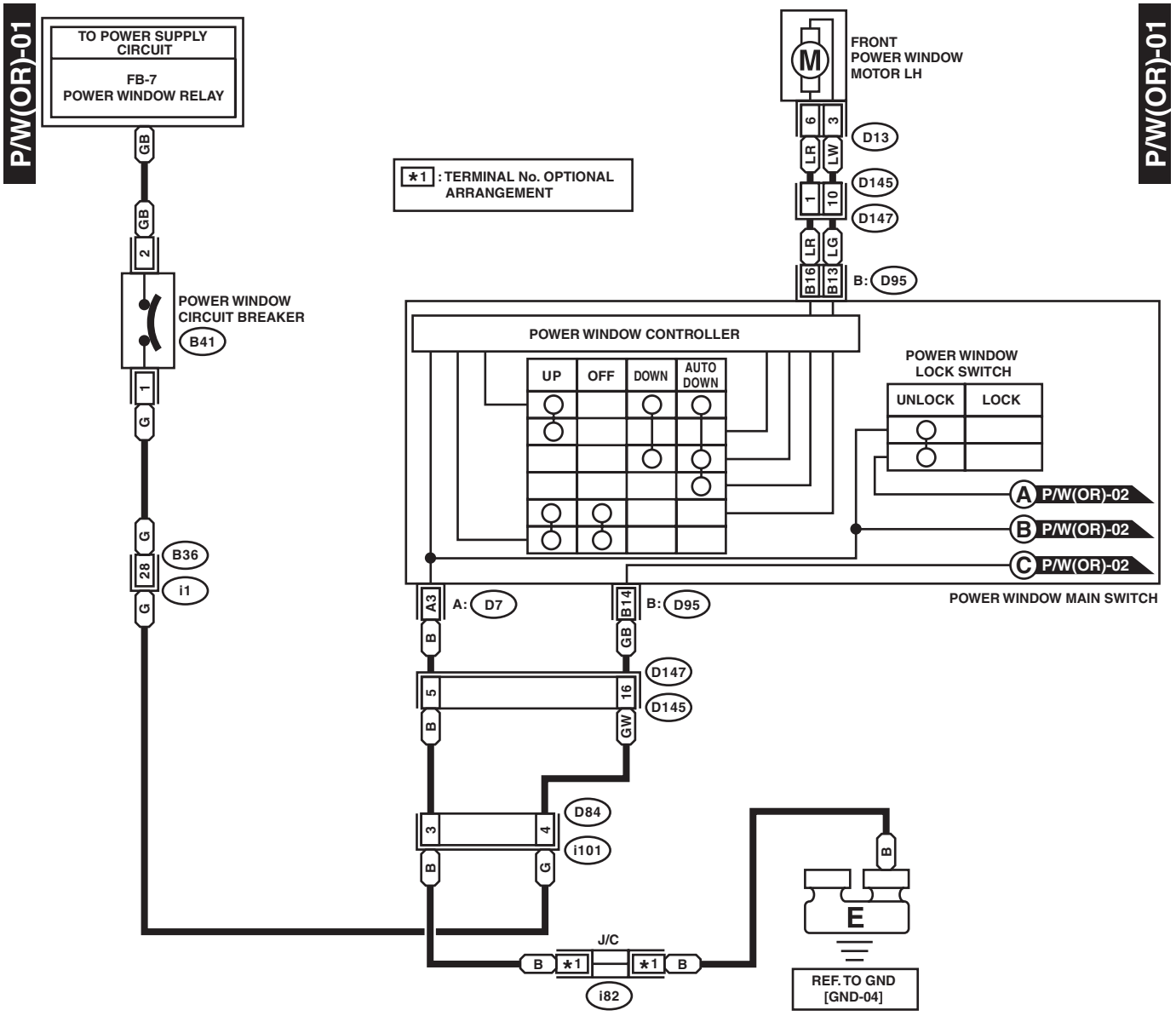

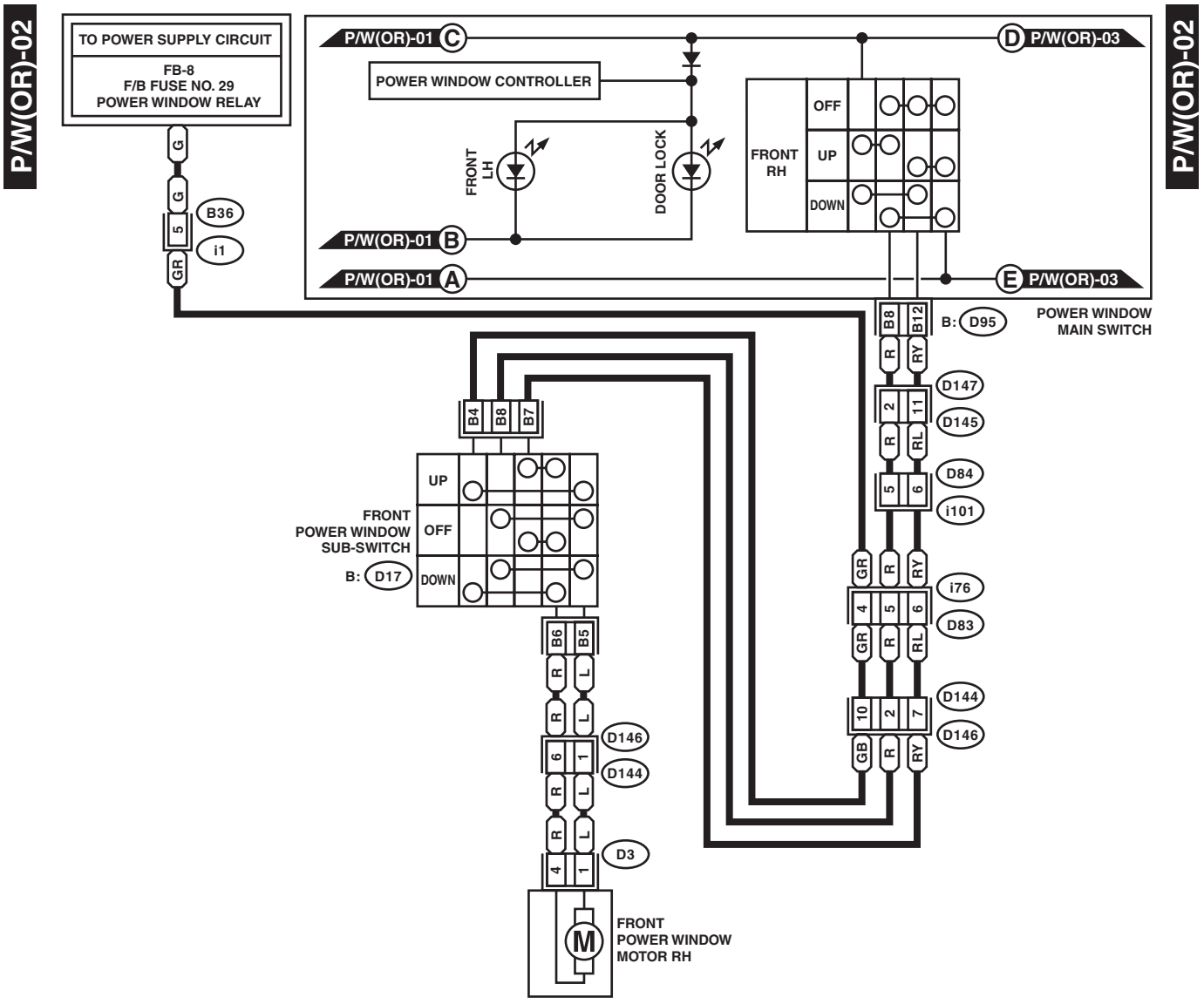
P/W(OR)-02
TO POWER SUPPLY CIRCUIT
FB-8
F/B FUSE NO. 29
POWER WINDOW RELAY
G
G
5
GR
B36
i1
P/W(OR)-01 C
P/W(OR)-01 B
P/W(OR)-01 A
D P/W(OR)-03
E P/W(OR)-03
POWER WINDOW CONTROLLER
FRONT LH
DOOR LOCK
FRONT RH
OFF
UP
DOWN
B: D95
POWER WINDOW MAIN SWITCH
B8
B12
R
RY
D147
2
11
D145
R
RL
D84
5
6
i101
GR
R
RY
i76
4
5
6
D83
GR
R
RL
D144
10
2
7
D146
GB
R
RY
B4
B8
B7
UP
OFF
DOWN
FRONT POWER WINDOW SUB-SWITCH
B: D17
B6
B5
R
L
R
L
D146
6
1
D144
R
L
R
L
D3
4
1
M
FRONT POWER WINDOW MOTOR RH

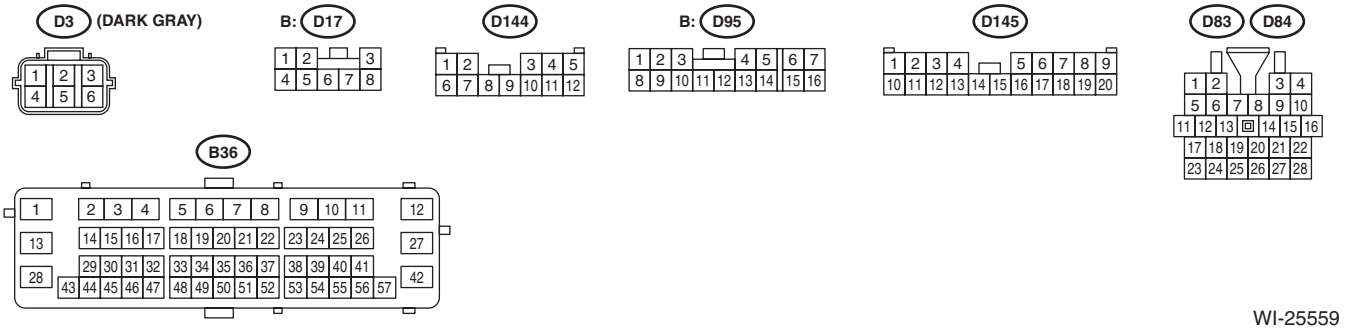
D3 (DARK GRAY)
B: D17
D144
B: D95
D145
D83 D84
B36

WI-25559

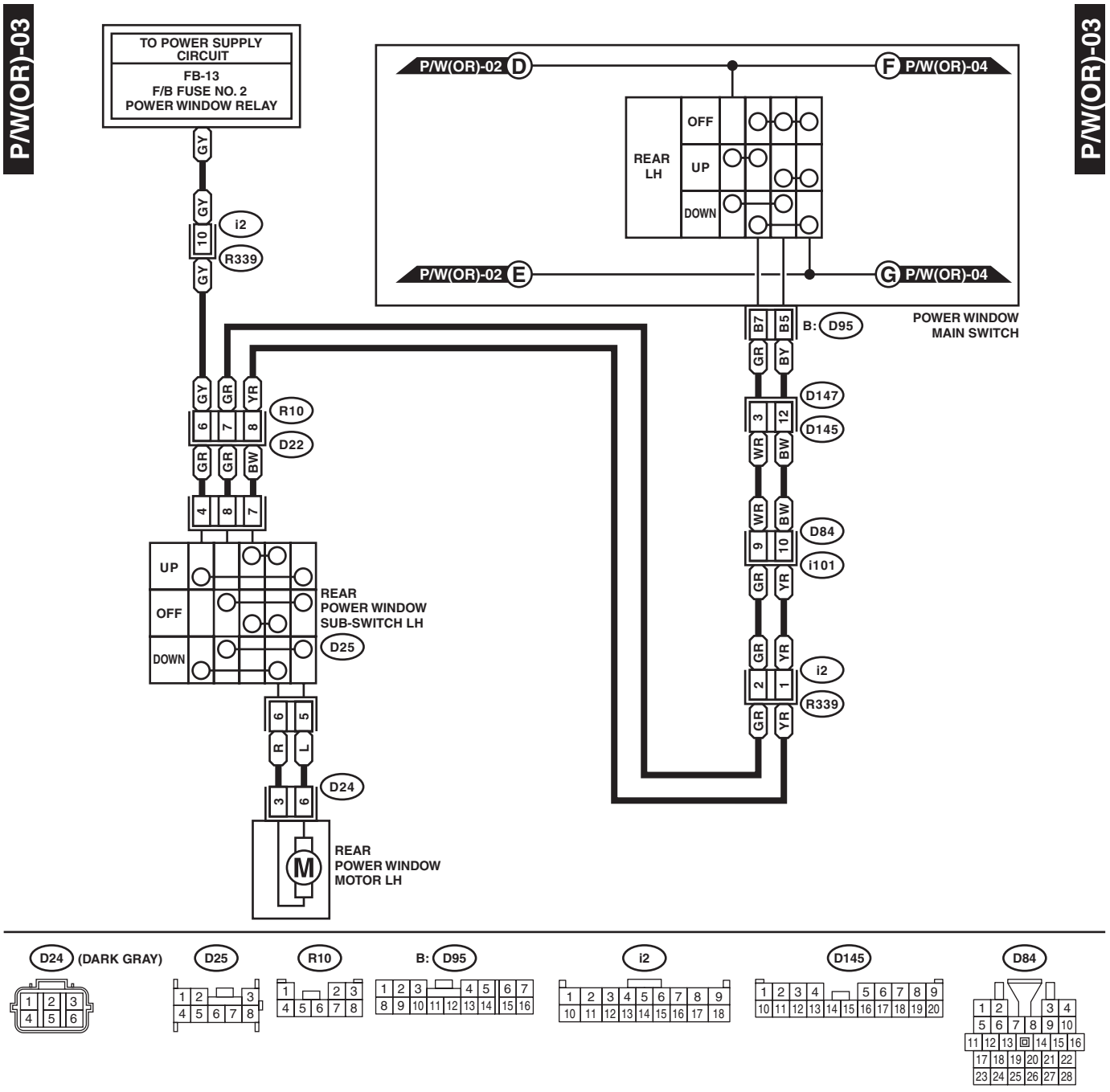
P/W(OR)-03
P/W(OR)-03
TO POWER SUPPLY CIRCUIT
FB-13
F/B FUSE NO. 2
POWER WINDOW RELAY
P/W(OR)-02 D
F P/W(OR)-04
REAR LH
OFF
UP
DOWN
P/W(OR)-02 E
G P/W(OR)-04
POWER WINDOW MAIN SWITCH
B: D95
GY
i2
R339
R10
D22
REAR POWER WINDOW SUB-SWITCH LH
D25
D24
REAR POWER WINDOW MOTOR LH
D147
D145
D84
i101
(DARK GRAY)
B: D95

WI-29398

P/W(OR)-04

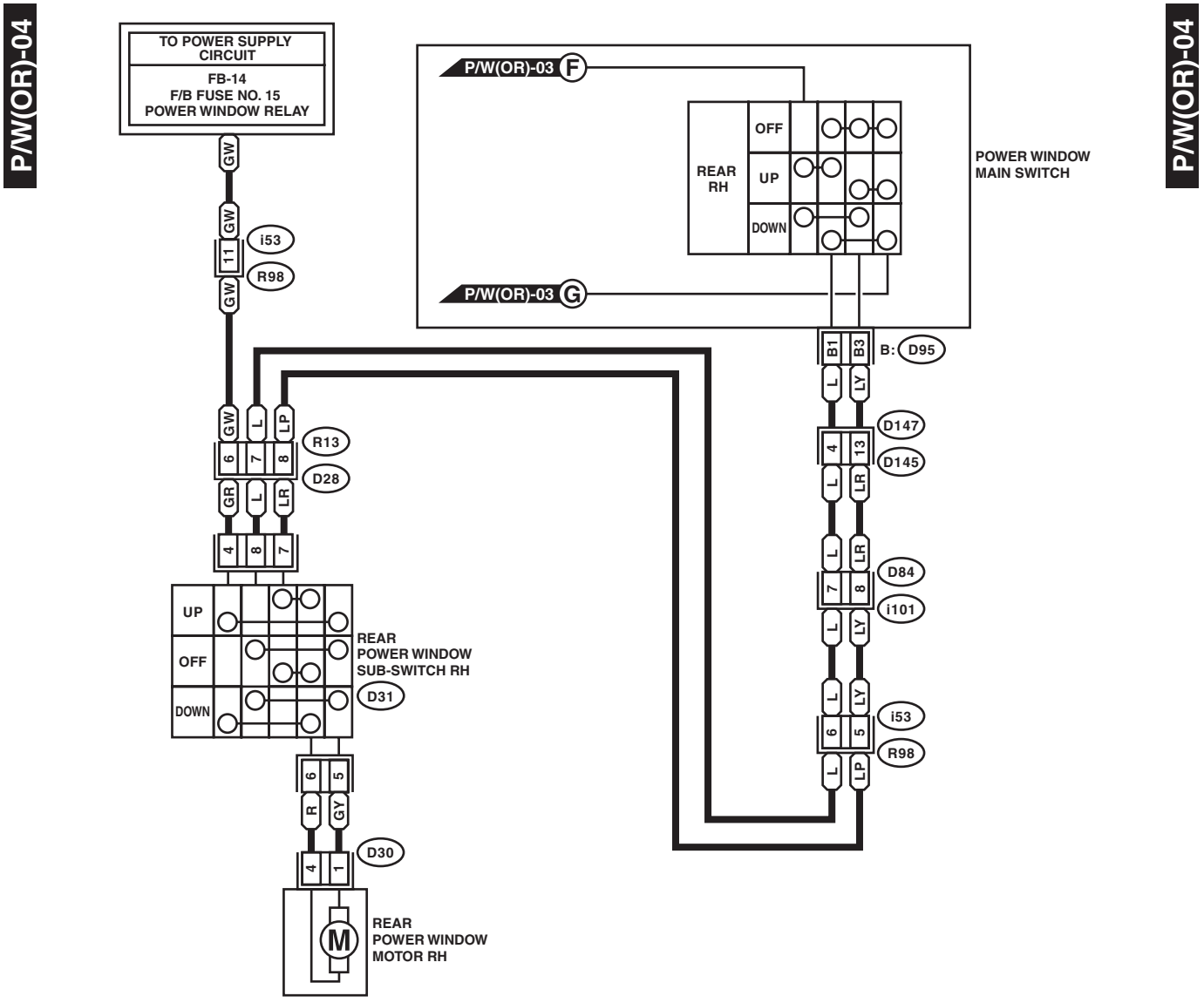

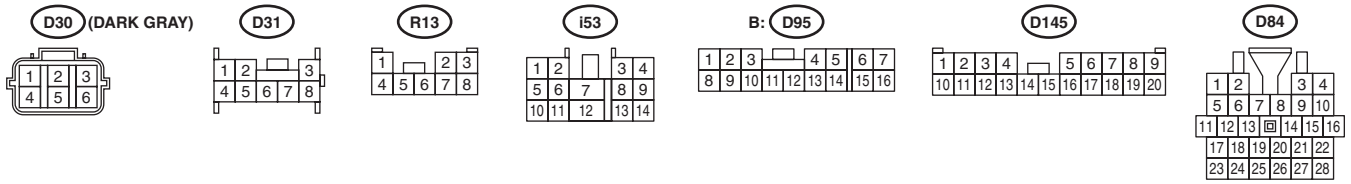

WI-29399

2. WITH DRIVER'S SEAT AUTO UP FUNCTION

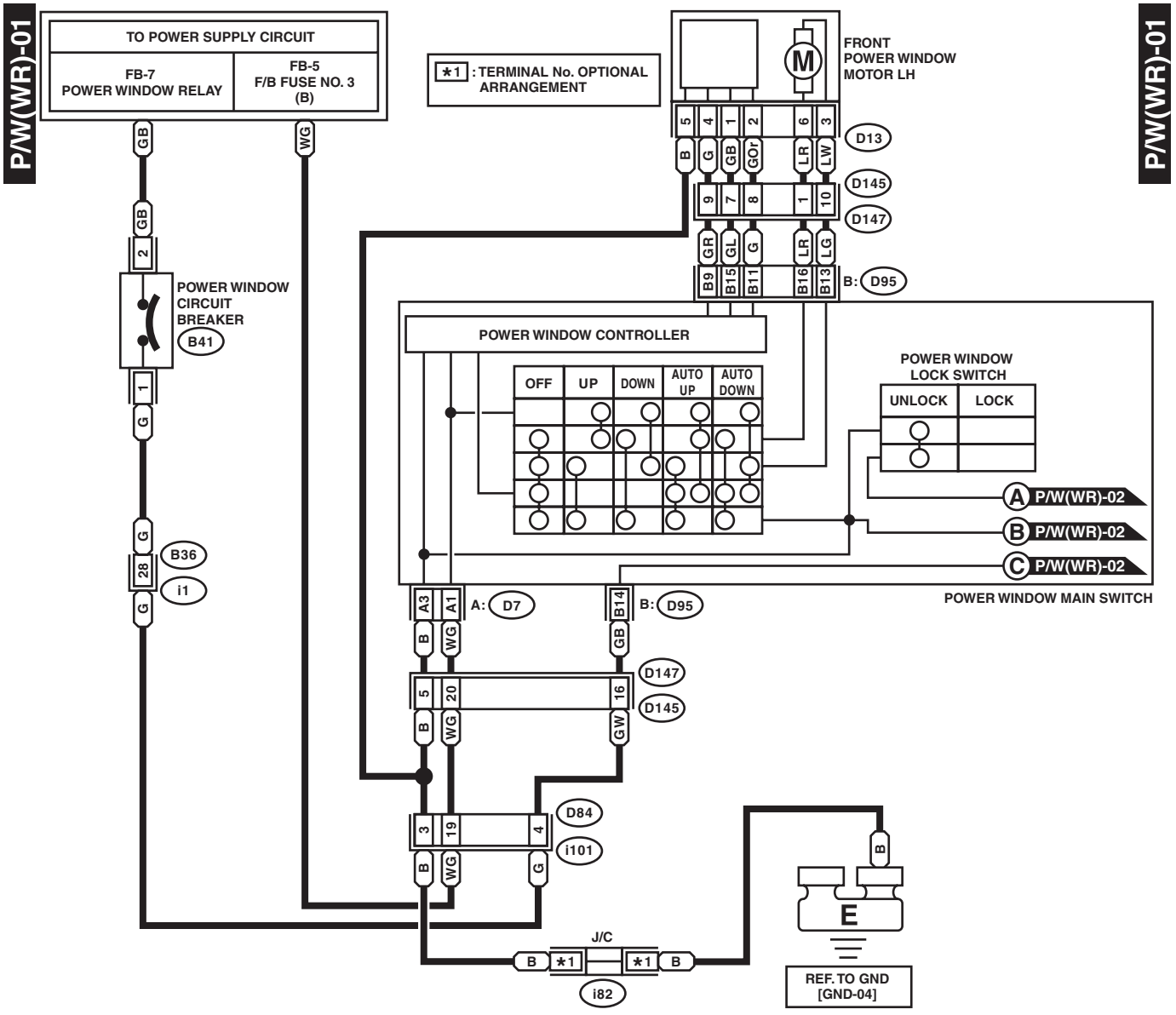

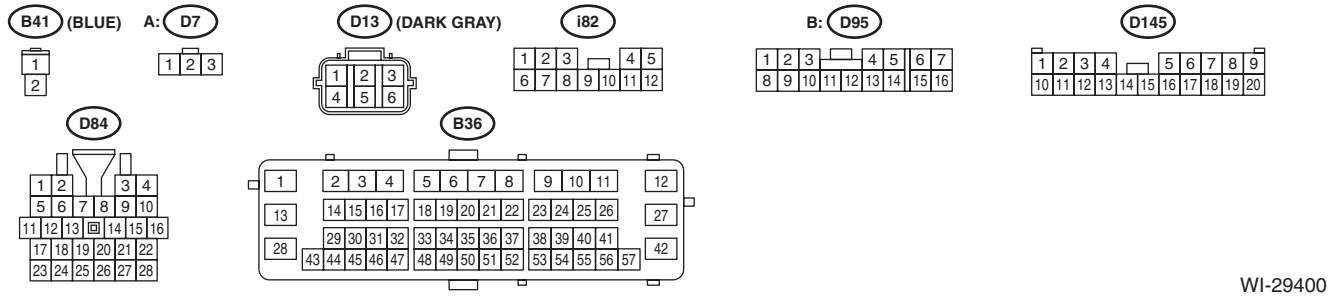

WI-29400

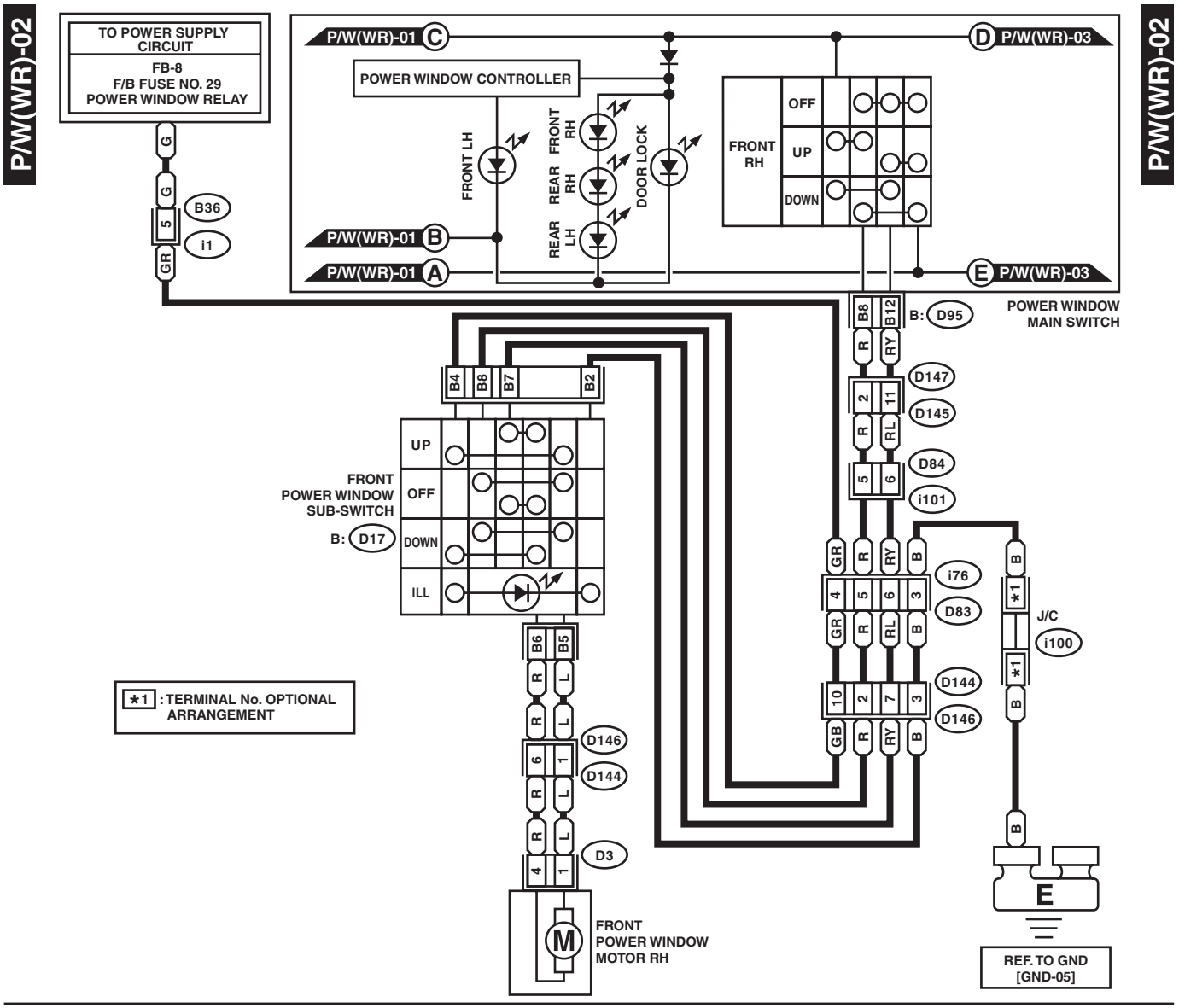
P/W(WR)-02
TO POWER SUPPLY CIRCUIT
FB-8
F/B FUSE NO. 29
POWER WINDOW RELAY
G
G
5
GR
B36
i1
P/W(WR)-01 C
P/W(WR)-01 B
P/W(WR)-01 A
D P/W(WR)-03
E P/W(WR)-03
POWER WINDOW CONTROLLER
FRONT LH
FRONT RH
REAR RH
REAR LH
DOOR LOCK
FRONT RH
OFF
UP
DOWN
POWER WINDOW MAIN SWITCH
B: D95
B8
B12
R
RY
D147
D145
D84
i101
2
11
R
RL
5
6
B4
B8
B7
B2
FRONT POWER WINDOW SUB-SWITCH
B: D17
UP
OFF
DOWN
ILL
GR
R
RY
B
i76
D83
4
5
6
3
GR
R
RL
B
10
2
7
3
GB
R
RY
B
D144
D146
B6
B5
R
L
R
L
D146
D144
6
1
R
L
R
L
D3
4
1
M
FRONT POWER WINDOW MOTOR RH
B
*1
J/C
i100
*1
B
B
E
REF. TO GND [GND-05]
*1 : TERMINAL No. OPTIONAL ARRANGEMENT

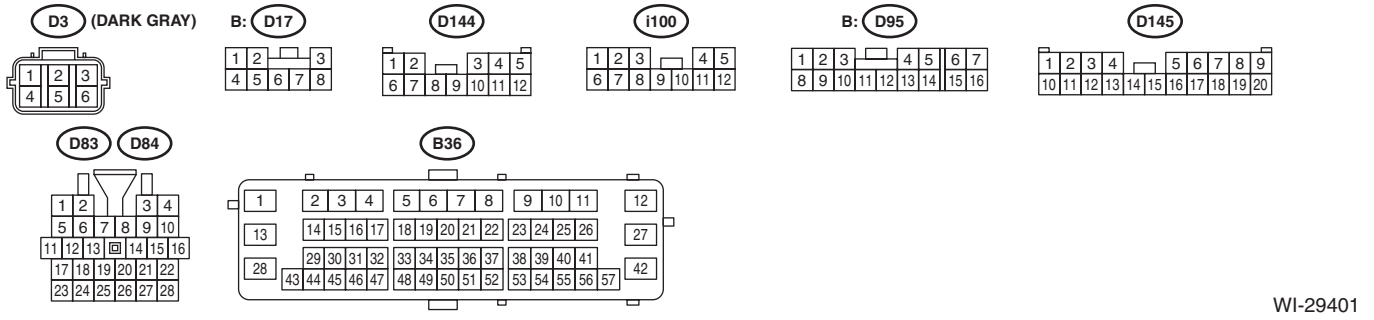
D3 (DARK GRAY)
B: D17
D144
i100
B: D95
D145
D83
D84
B36

WI-29401

P/W(WR)-03

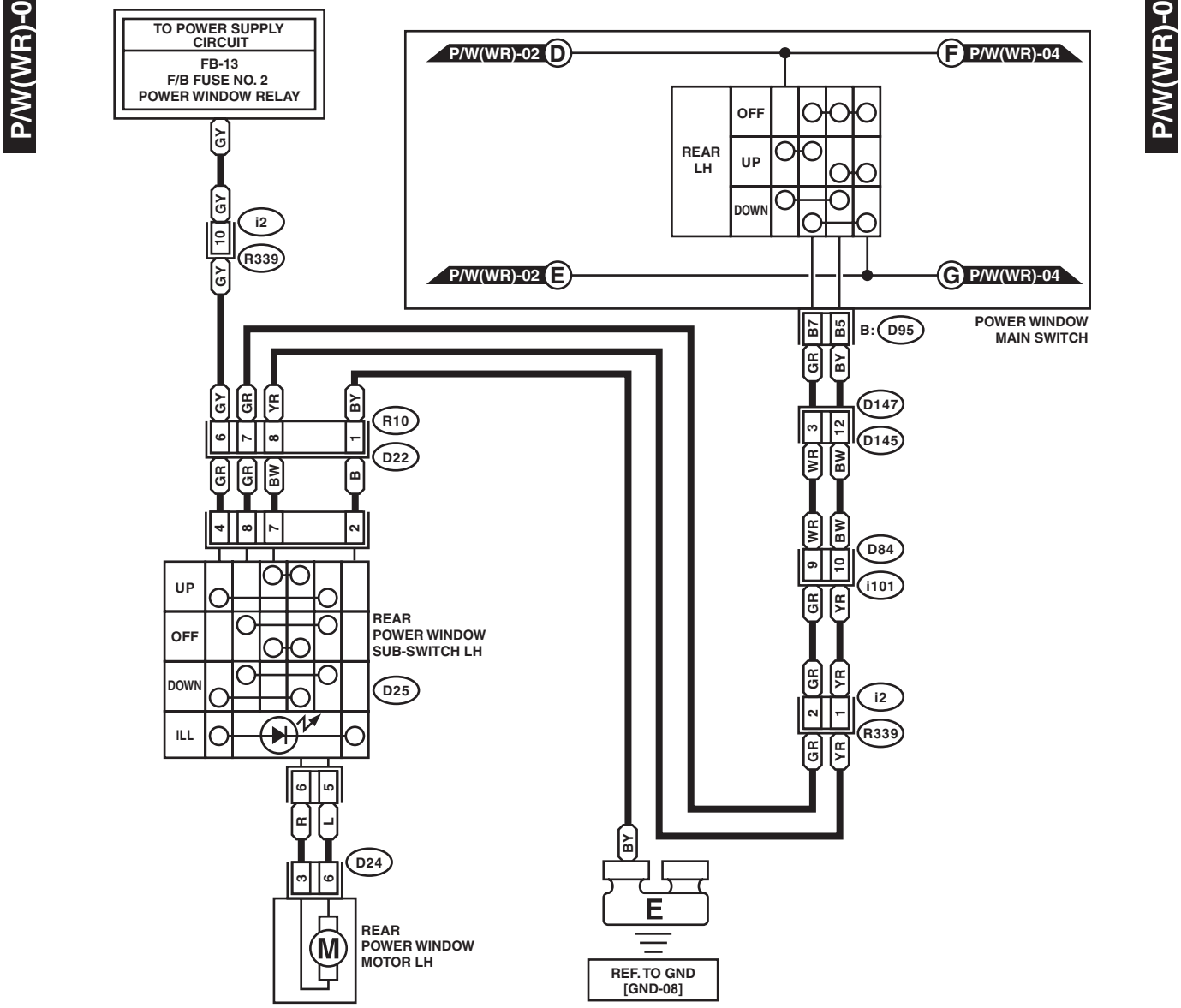

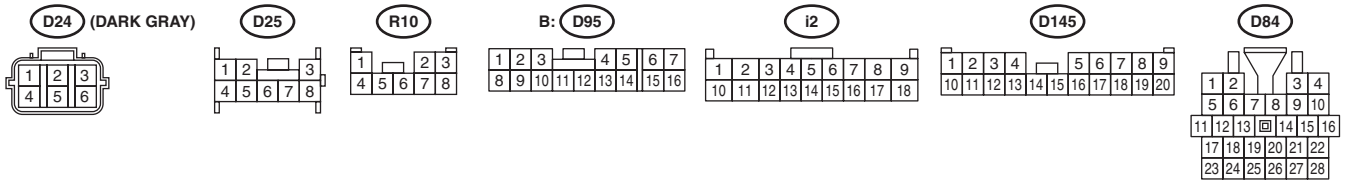

WI-29402

P/W(WR)-04

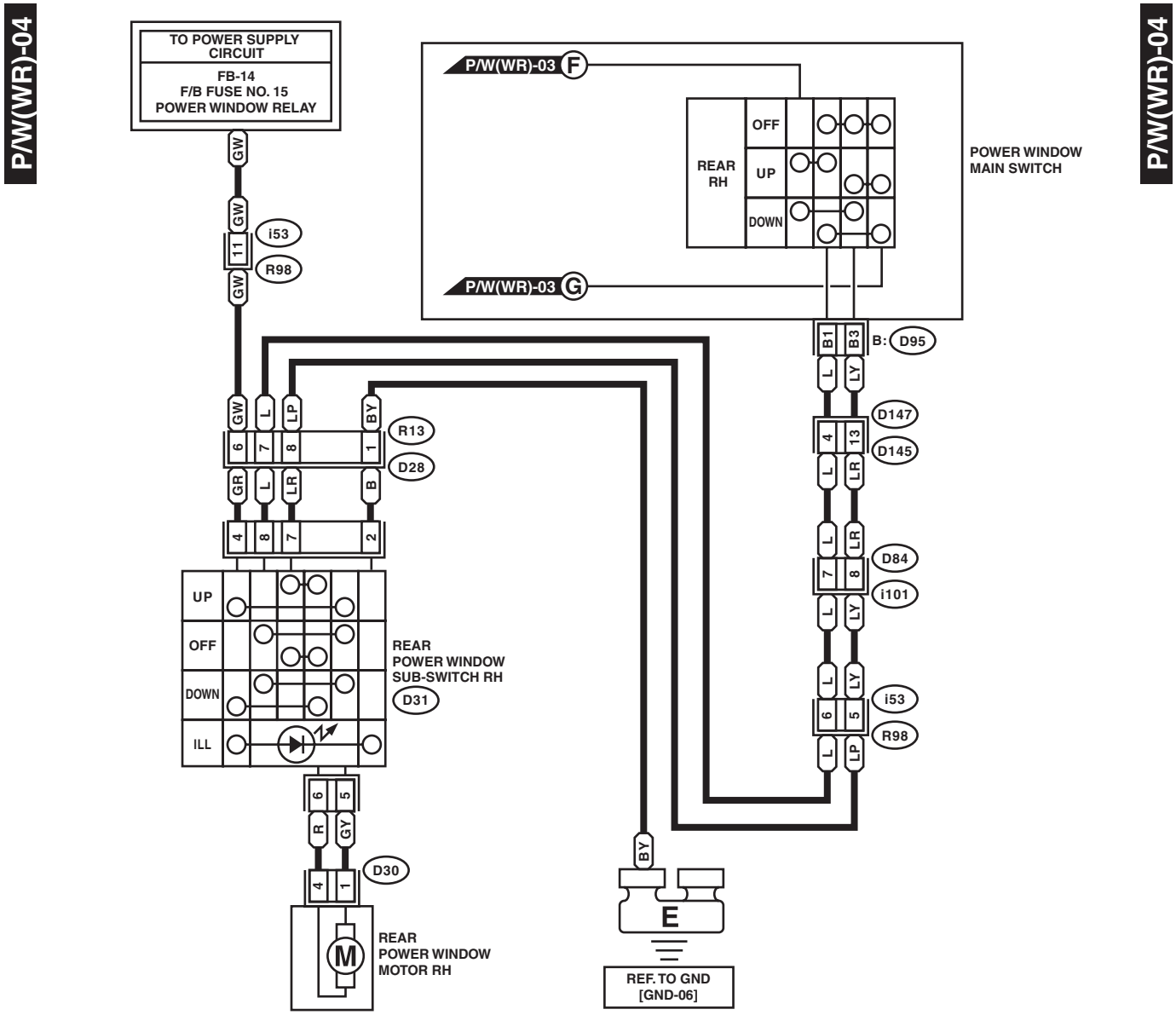

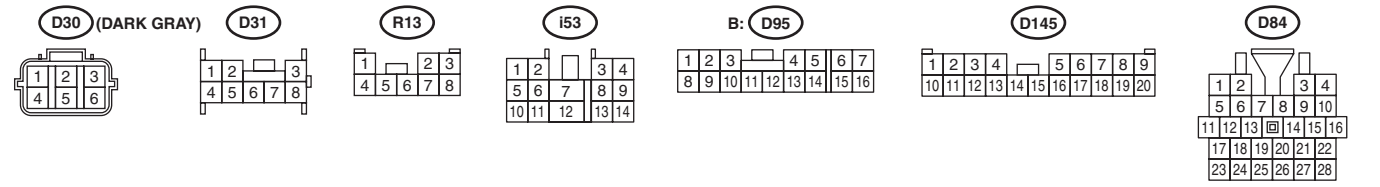

WI-29403

34.Radiator Fan System

A: WIRING DIAGRAM

1. 2.5 L NON-TURBO MODEL

R/F(NA)-01

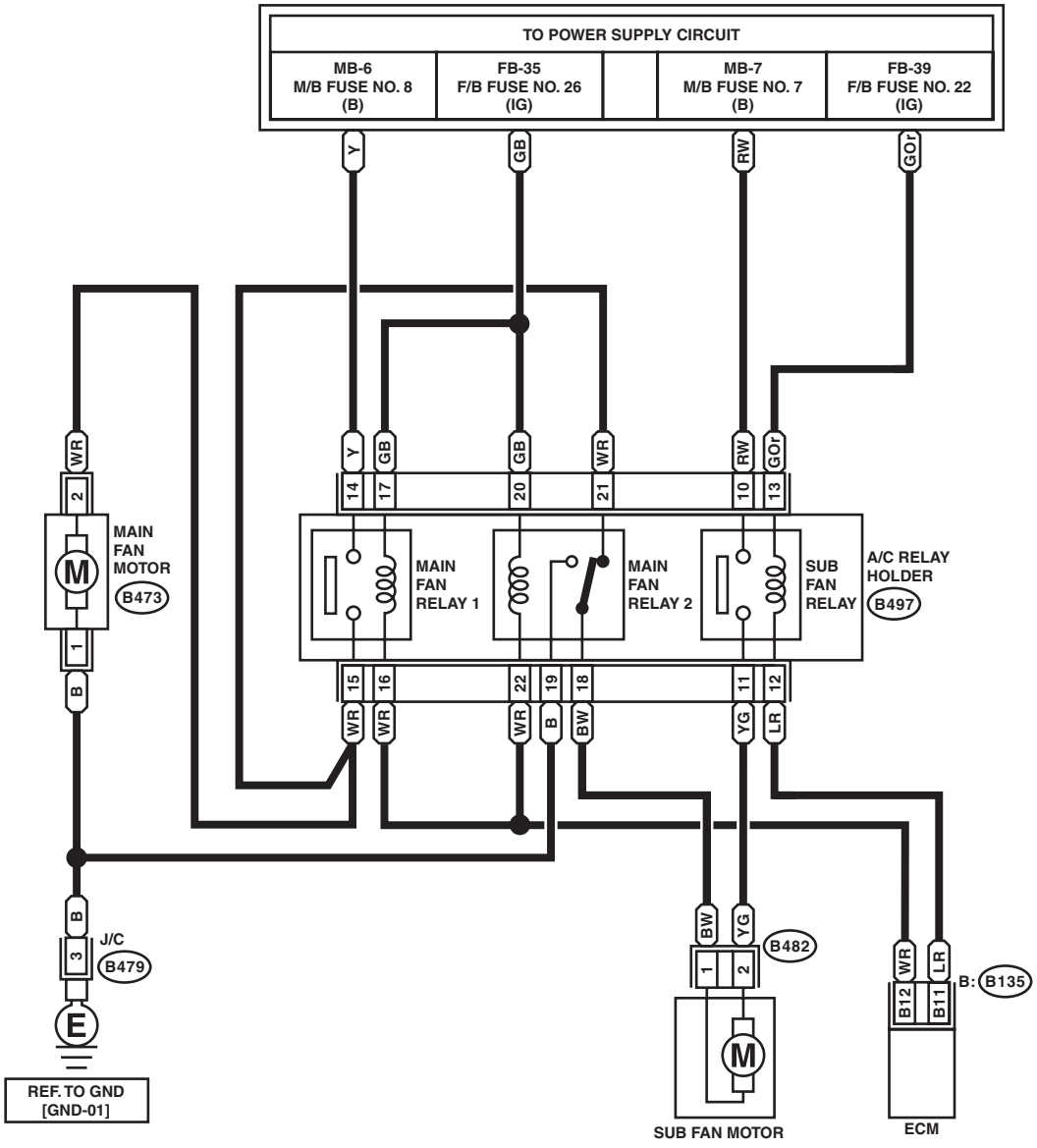

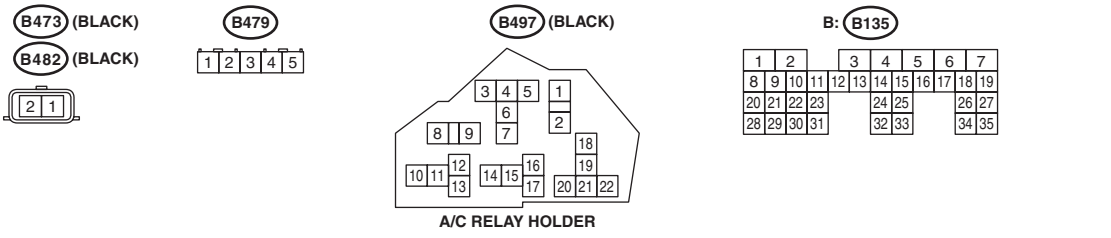

WI-33256

2. 2.5 L TURBO MODEL

R/F(TB)-01

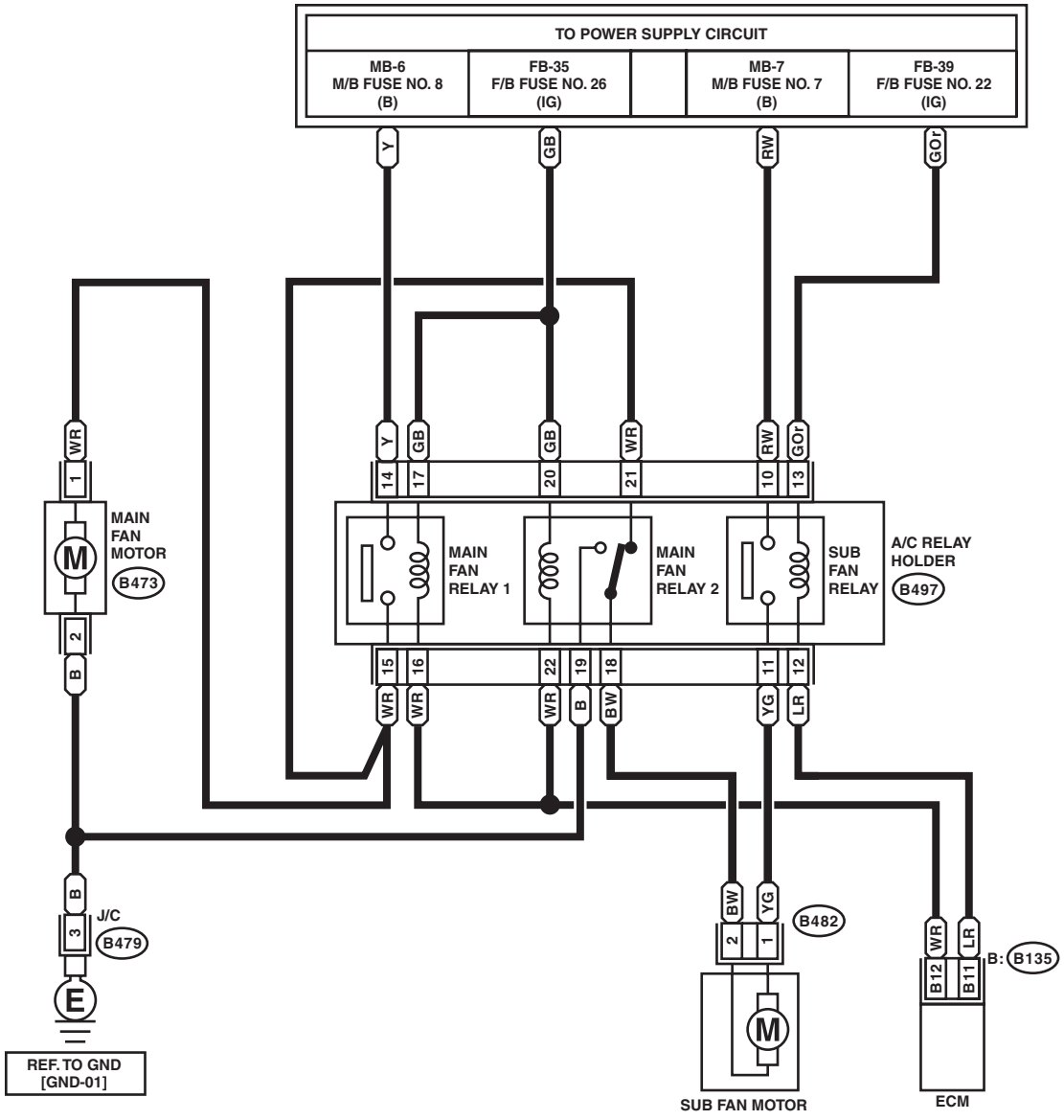

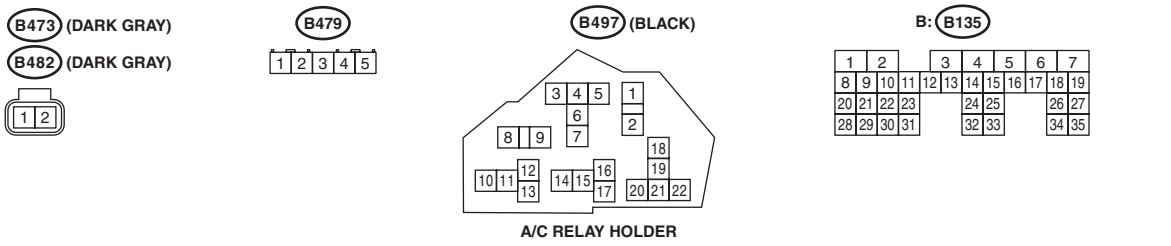

WI-33257

3. 3.6 L MODEL

R/F(H6)-01

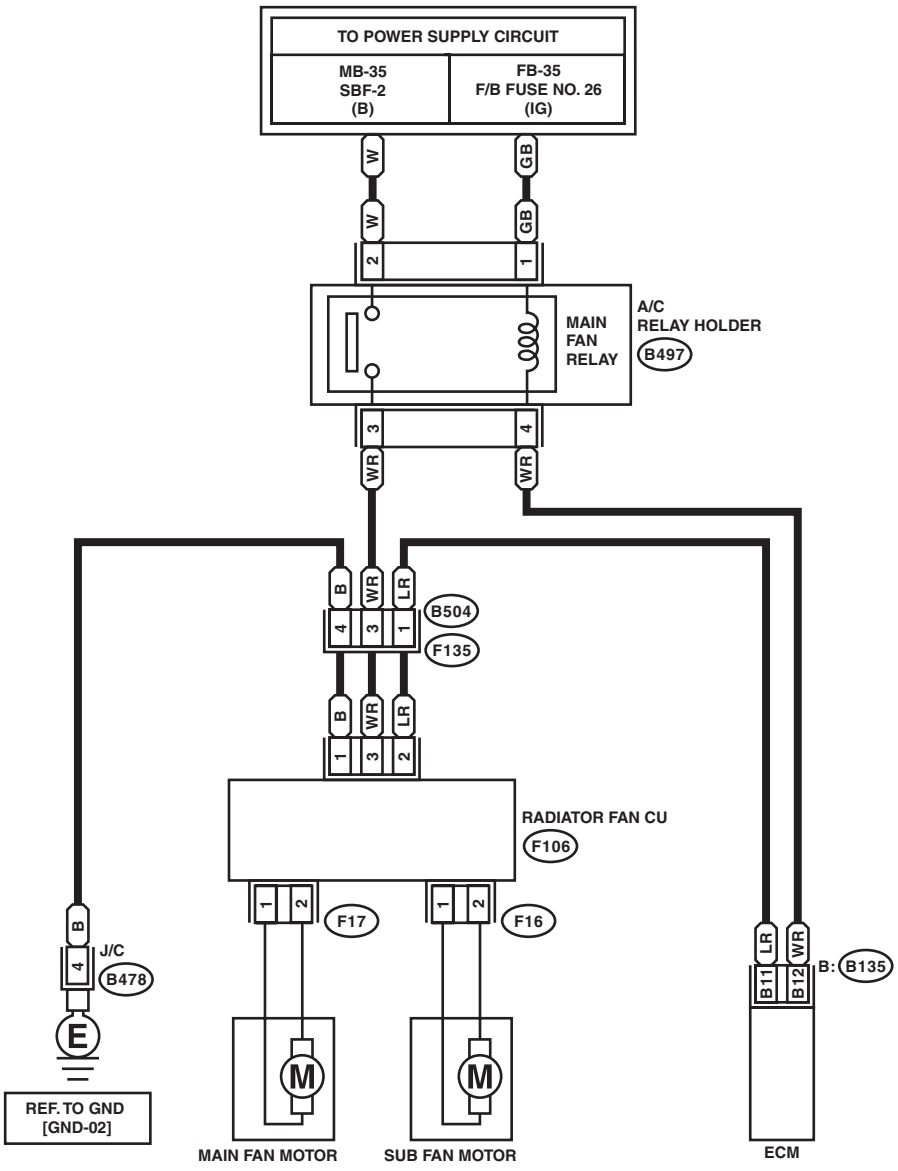

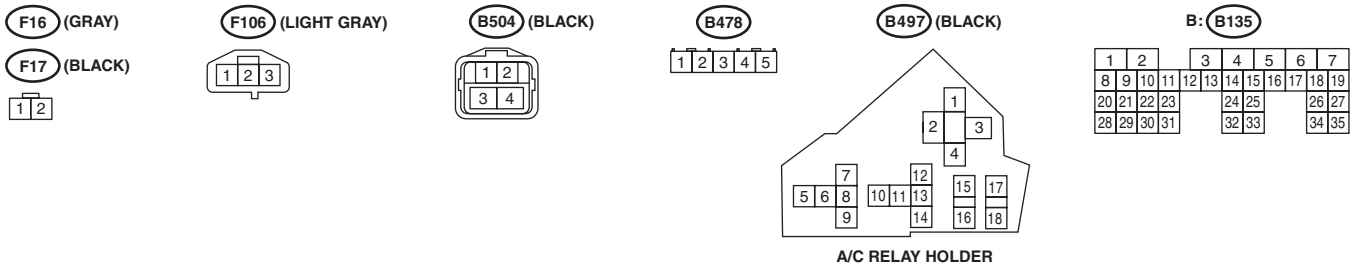

WI-25568

R/F(H6)-01

35.Rear Accessory Power Supply Socket System

A: WIRING DIAGRAM

RAPS-01

RAPS-01

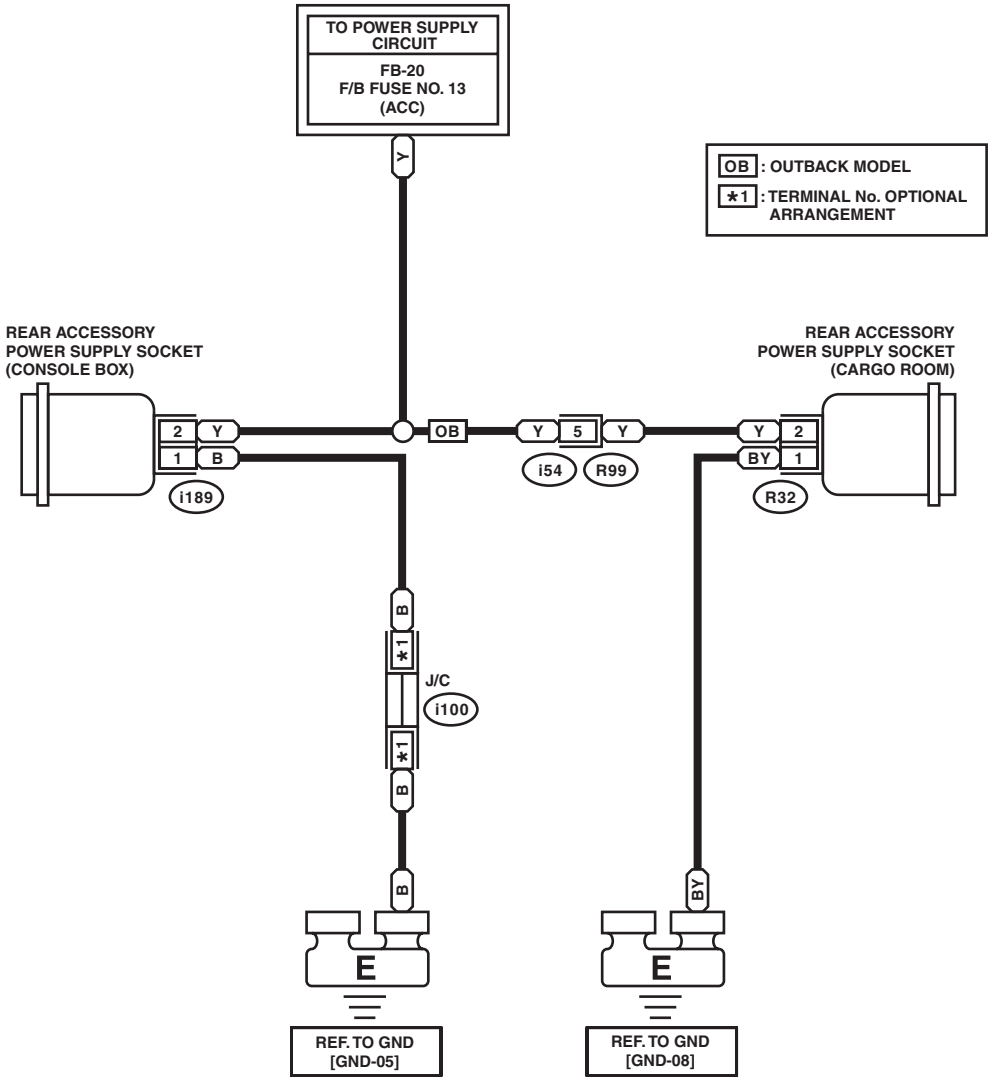

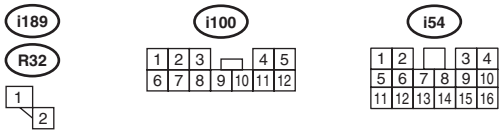

WI-29404

36.Rear Defogger System

A: WIRING DIAGRAM

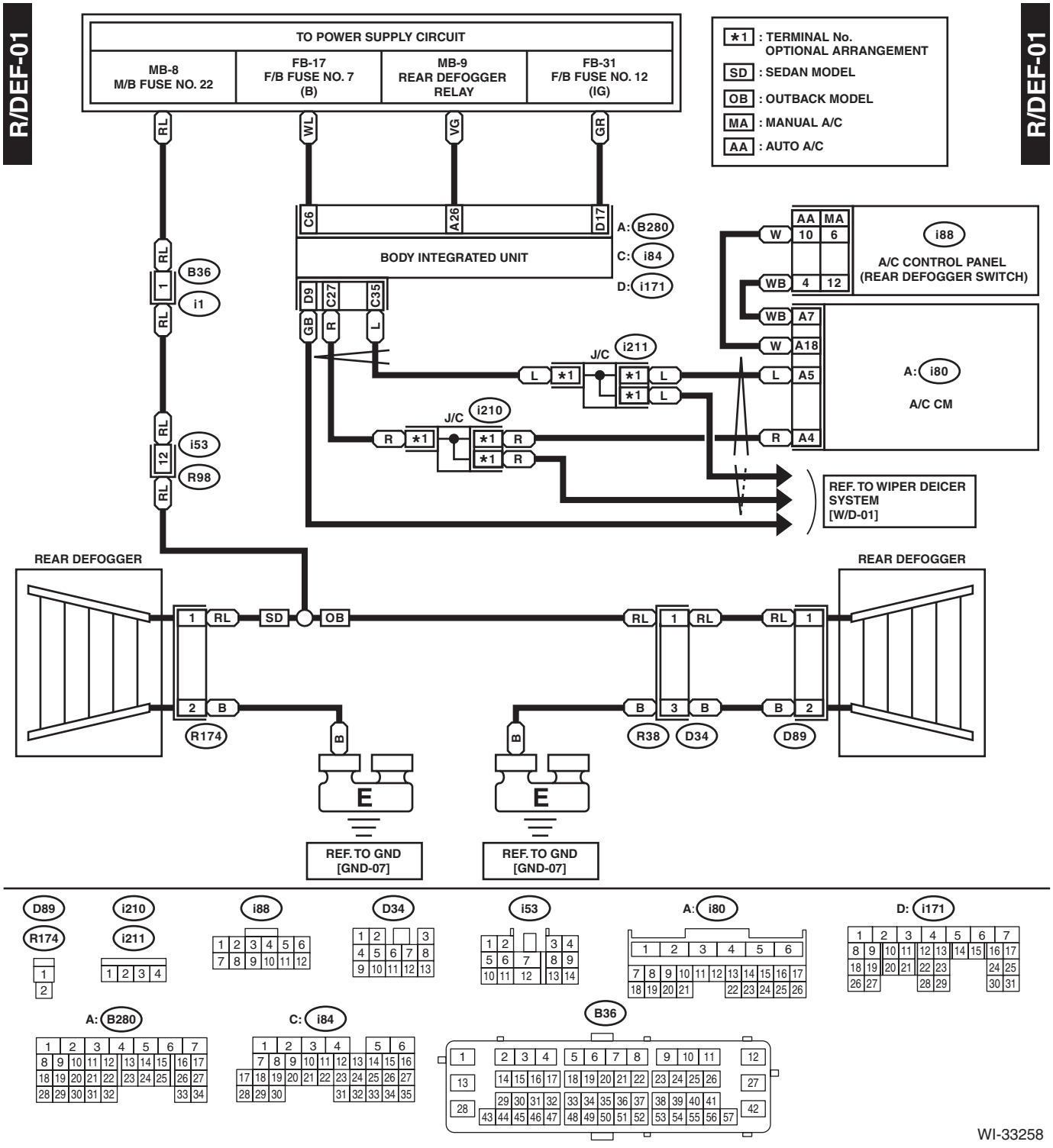

37.Rearview Camera System

A: WIRING DIAGRAM

1. MODELS WITHOUT NAVIGATION SYSTEM

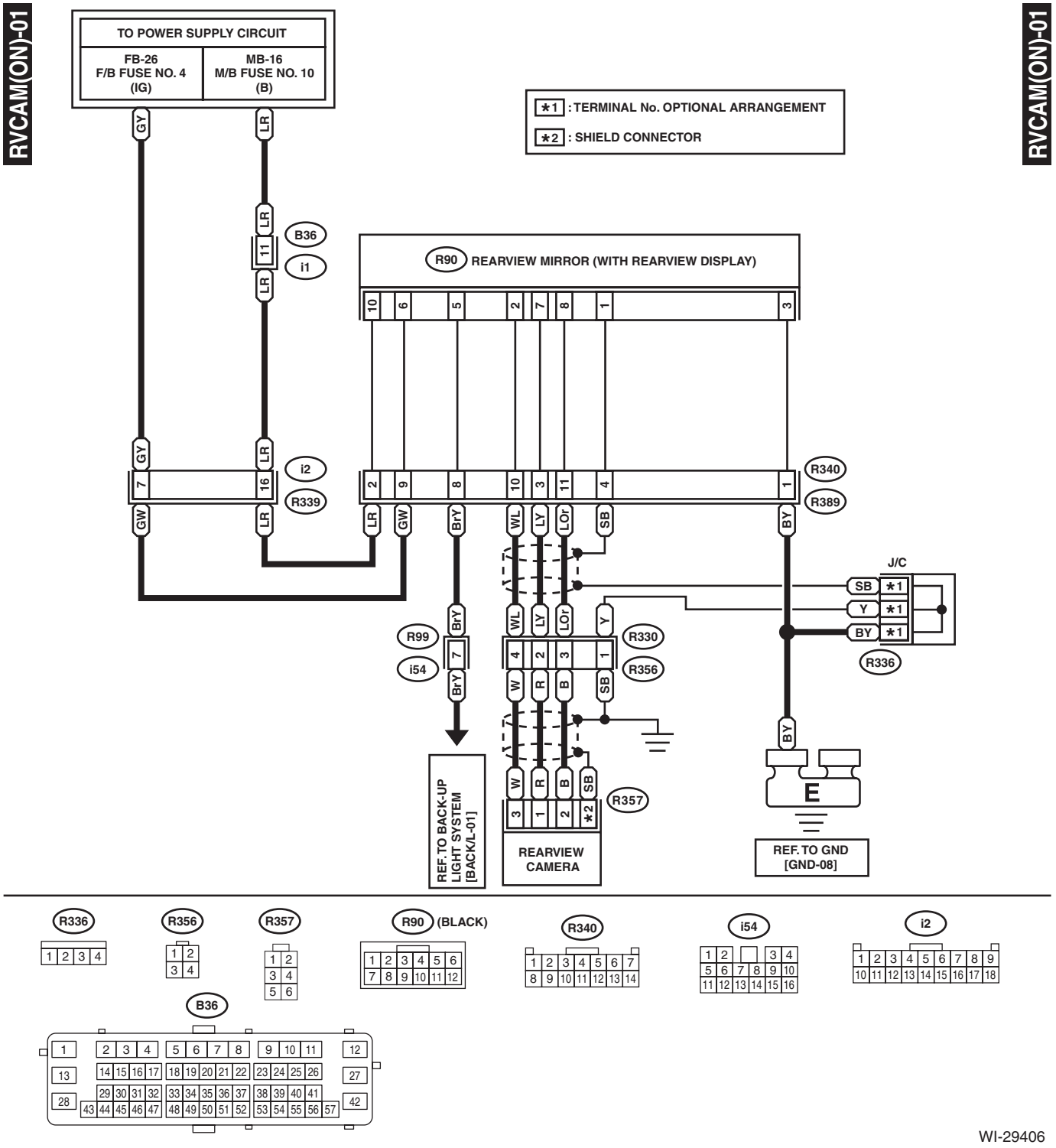

WI-29406

2. WITH NAVIGATION (SEDAN MODEL)

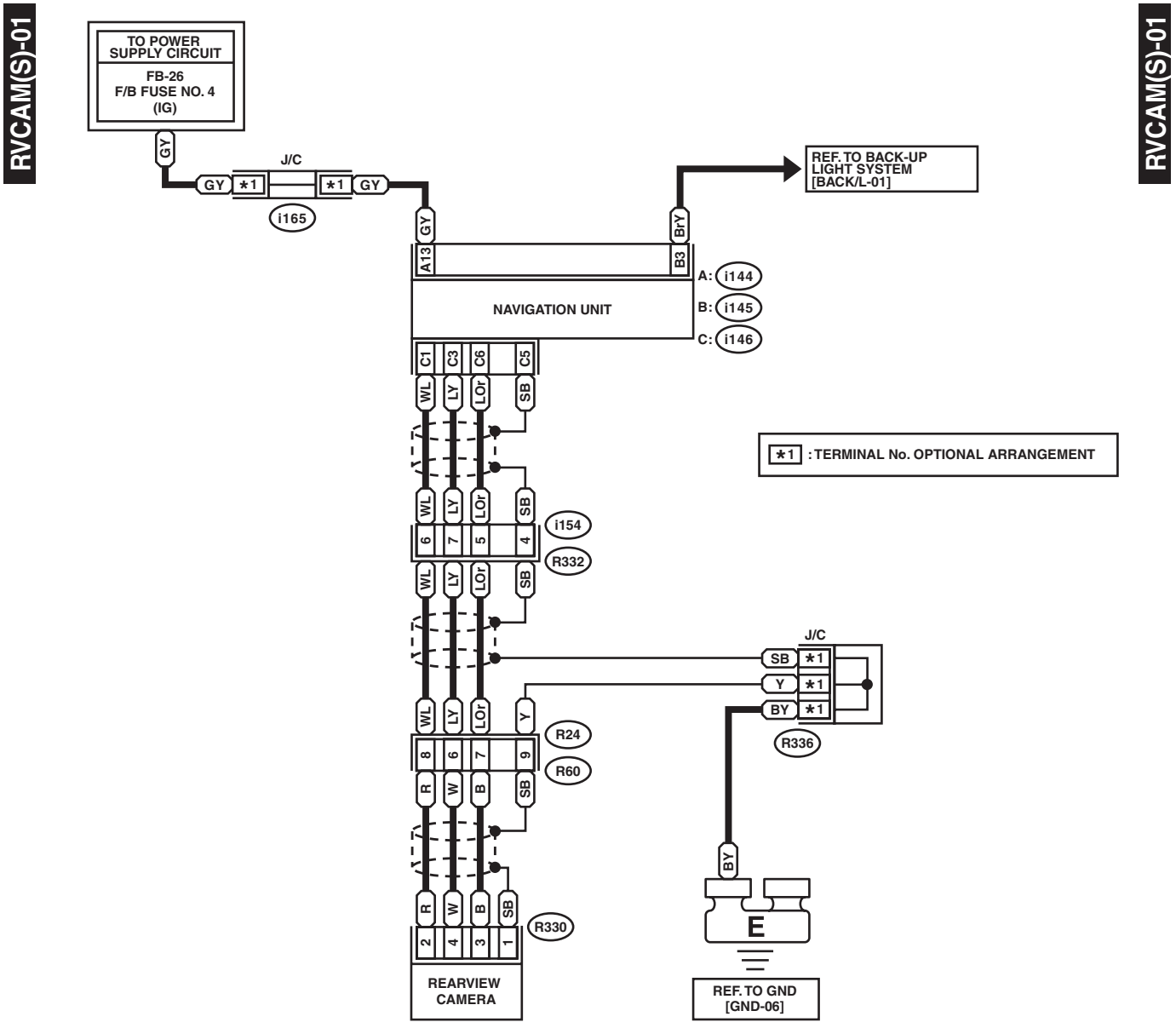

WI-29407

3. WITH NAVIGATION (OUTBACK MODEL)

- **Vehicle identification number: OUTBACK model 200013 or later**

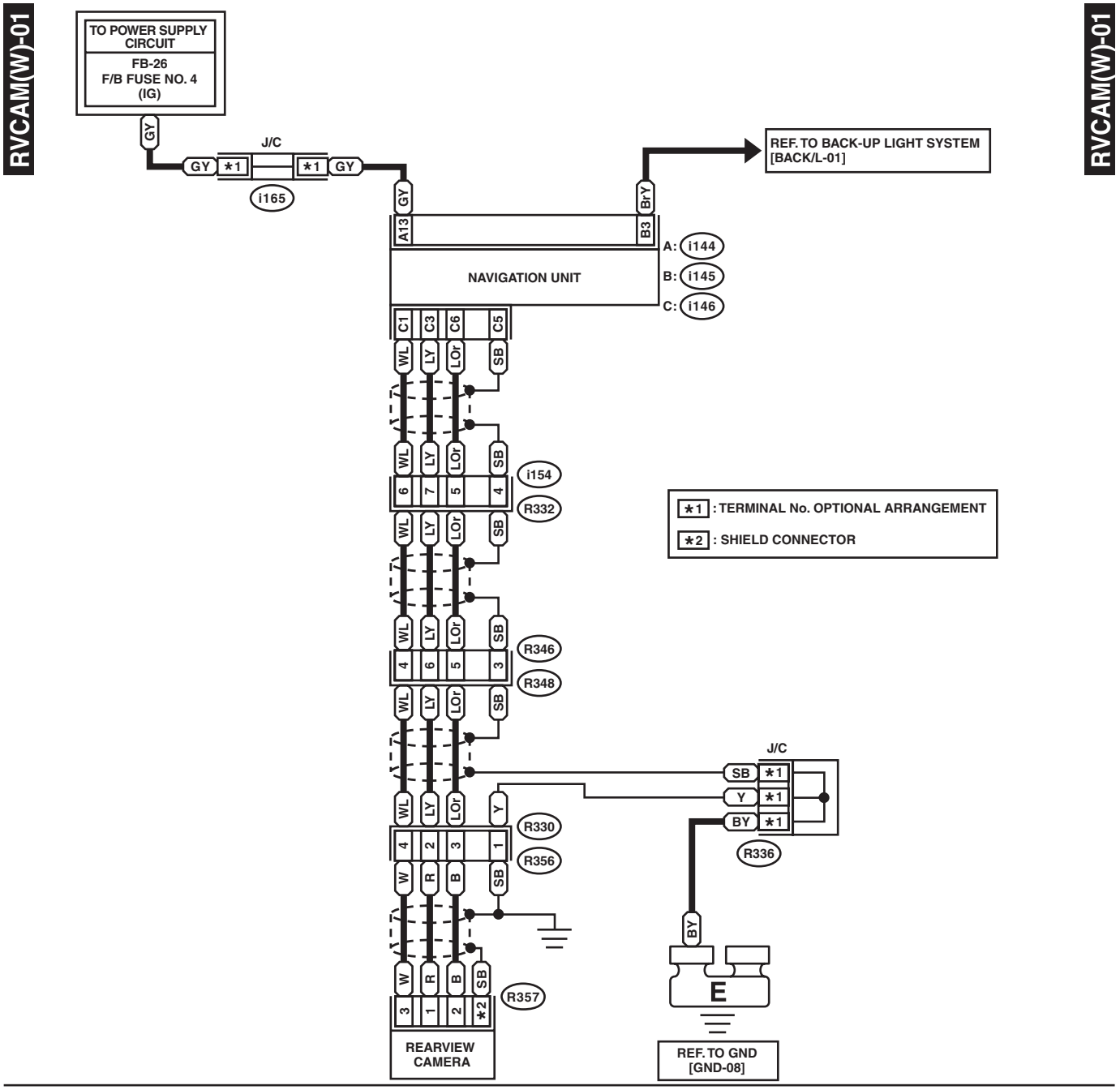

WI-35781

- **Vehicle identification number: OUTBACK model 200012 or older**

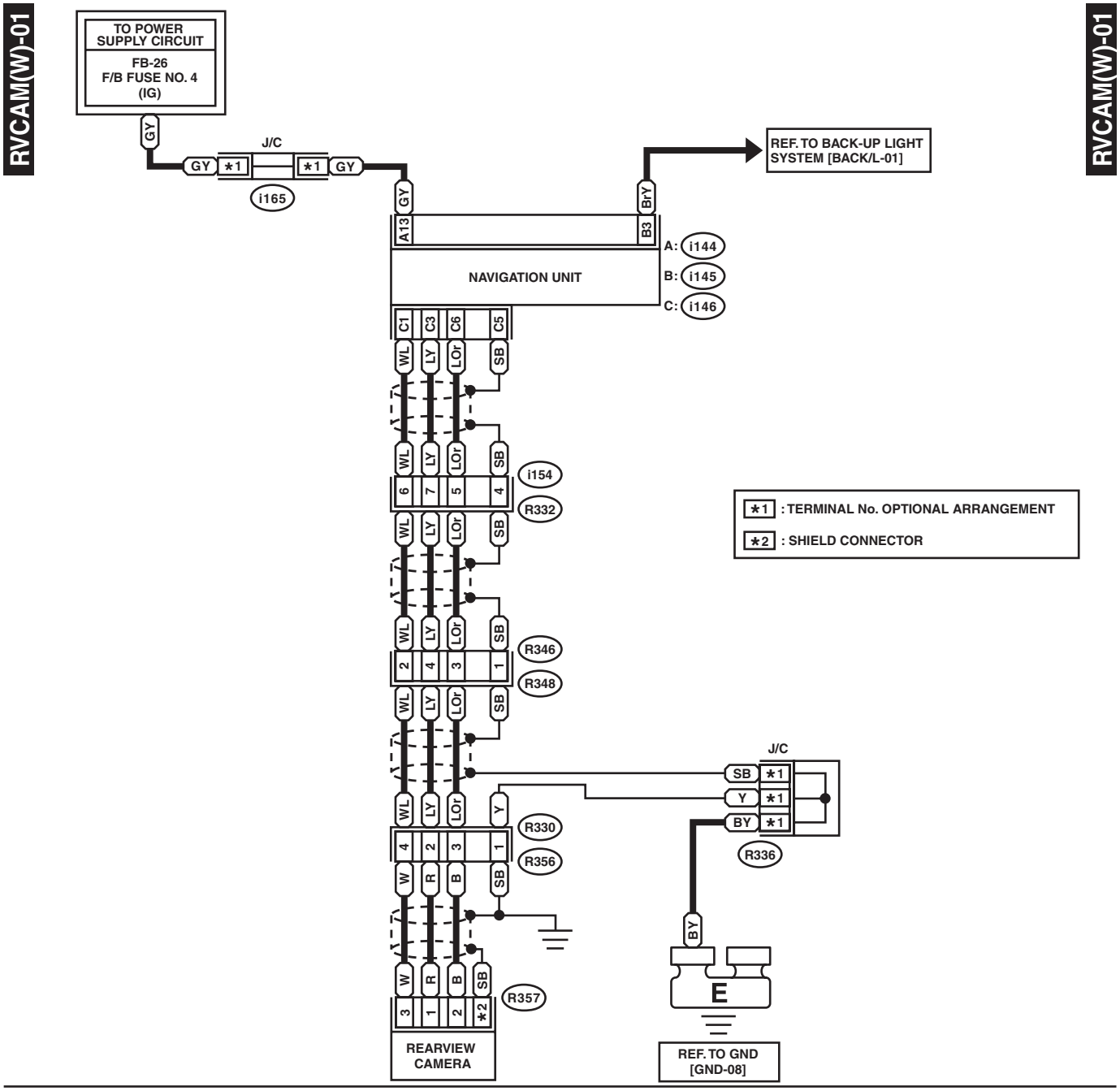

WI-29408

38.Rearview Mirror System

A: WIRING DIAGRAM

1. WITHOUT REARVIEW DISPLAY

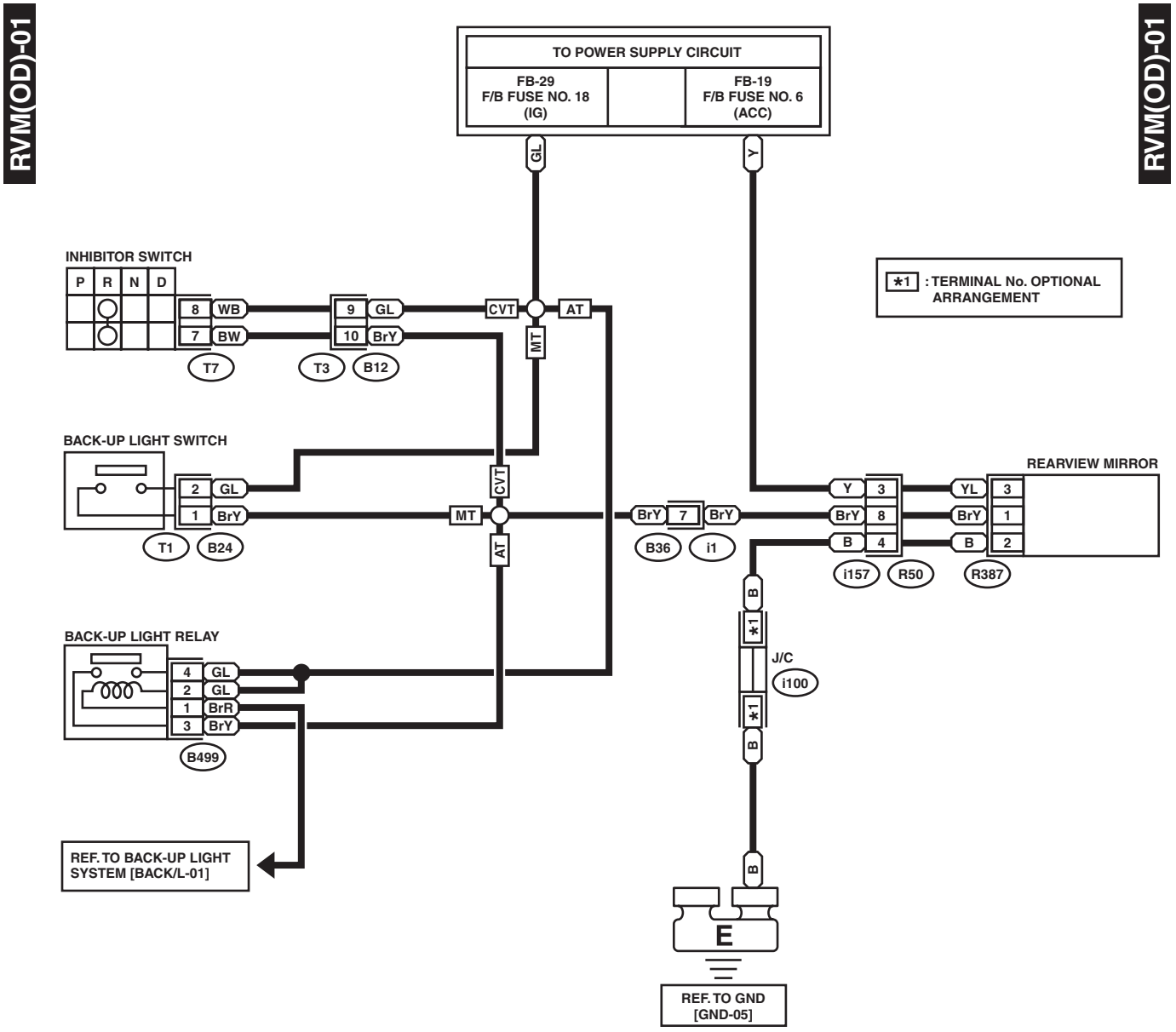

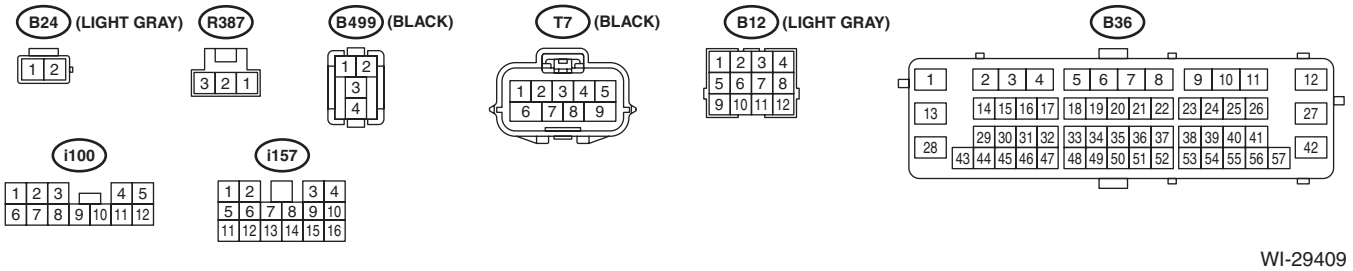

WI-29409

2. WITH REARVIEW DISPLAY

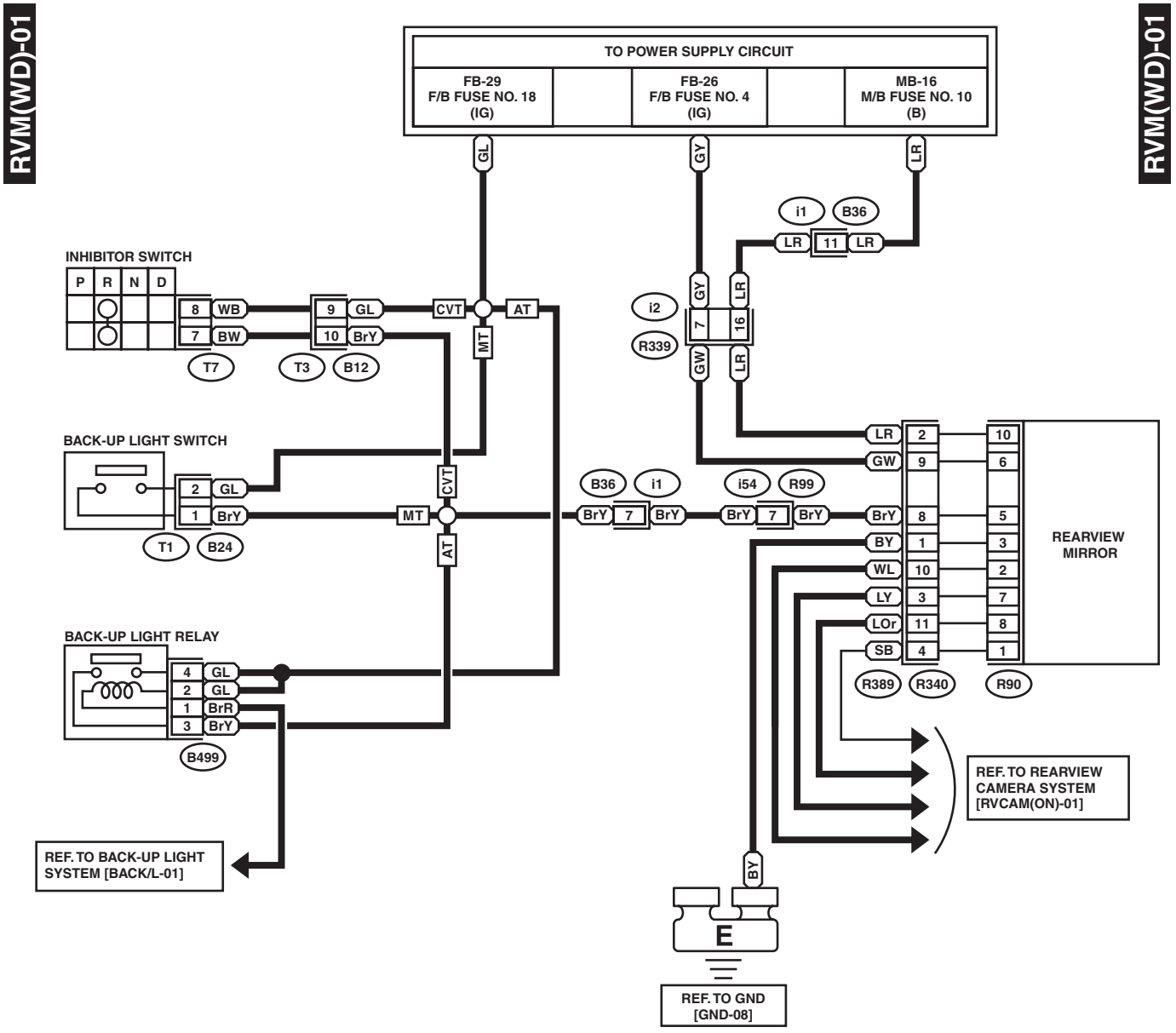

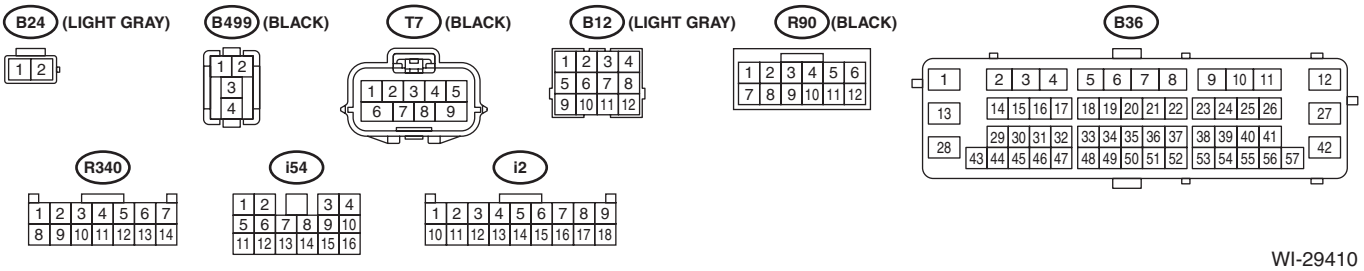

WI-29410

39.Rear Wiper and Washer System

A: WIRING DIAGRAM

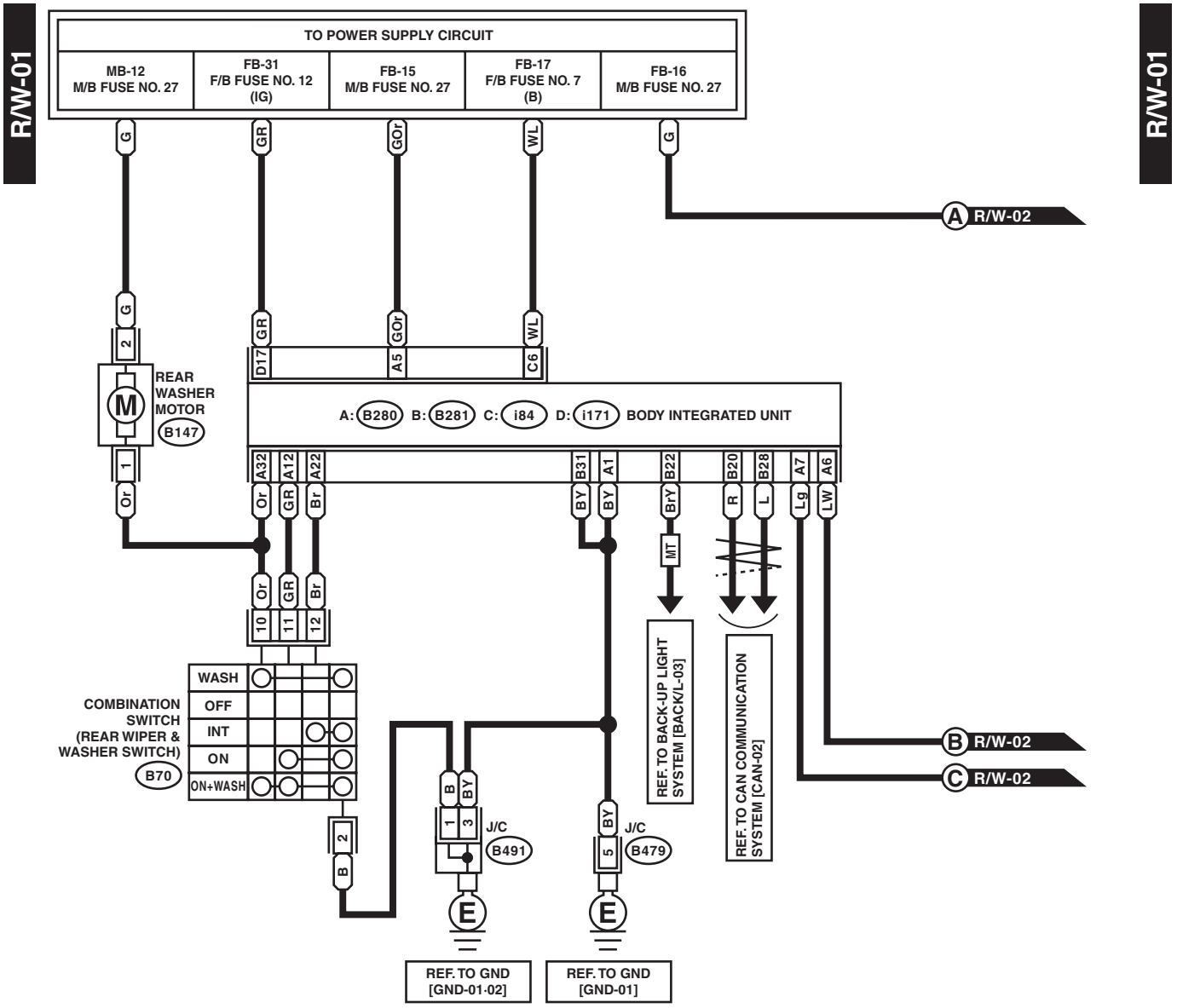

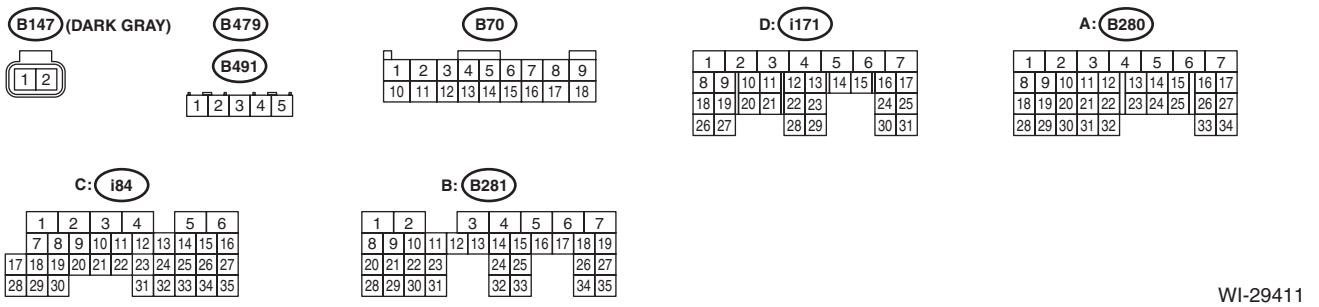

WI-29411

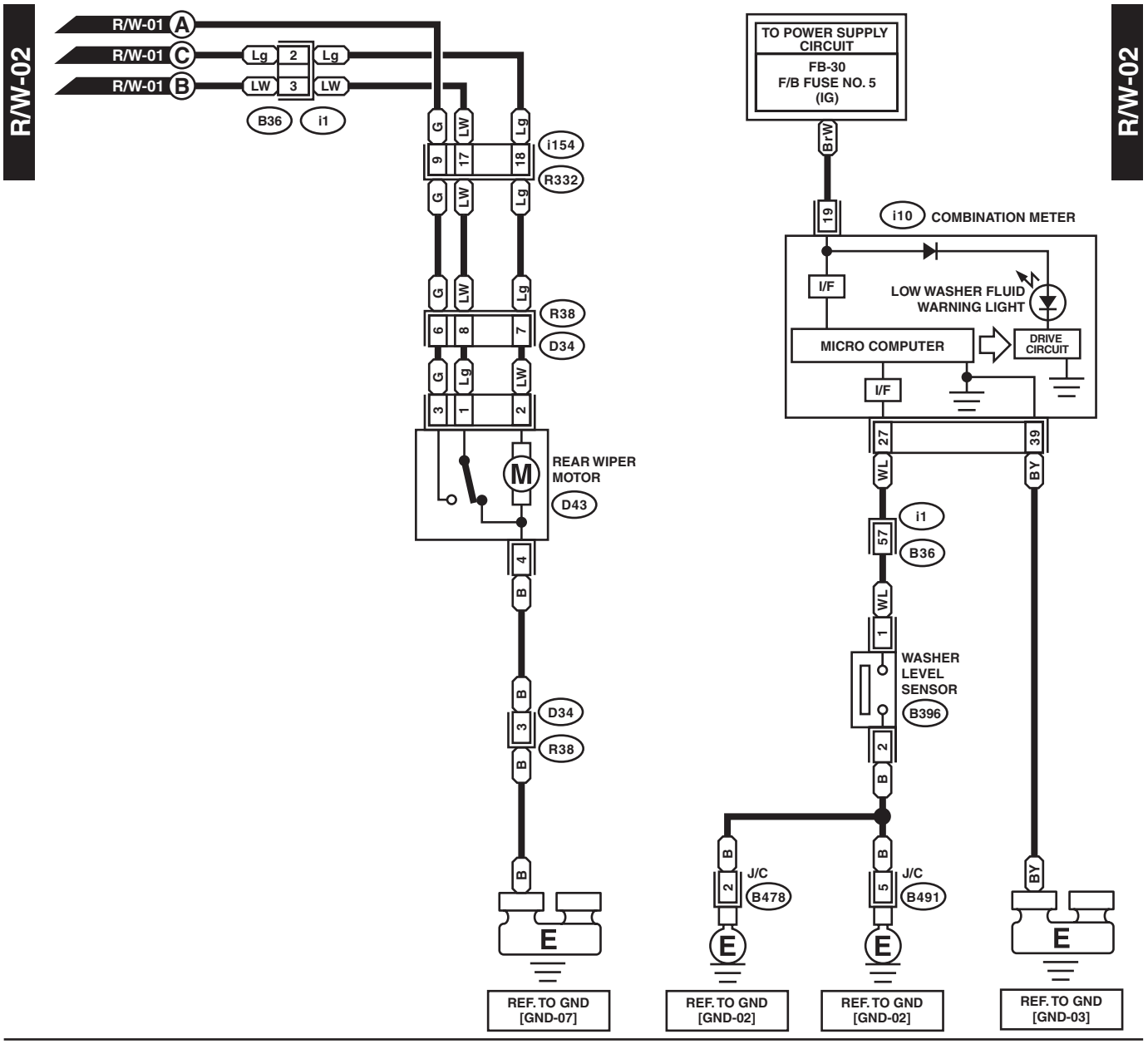
R/W-02
R/W-01 A
R/W-01 C
R/W-01 B
Lg
LW
2
3
B36
i1
i154
R332
R38
D34
D43
REAR WIPER MOTOR
M
E
REF. TO GND [GND-07]
TO POWER SUPPLY CIRCUIT
FB-30
F/B FUSE NO. 5
(IG)
BrW
i10 COMBINATION METER
I/F
LOW WASHER FLUID WARNING LIGHT
MICRO COMPUTER
DRIVE CIRCUIT
WL
BY
WASHER LEVEL SENSOR
B396
J/C
B478
B491
REF. TO GND [GND-02]
REF. TO GND [GND-03]

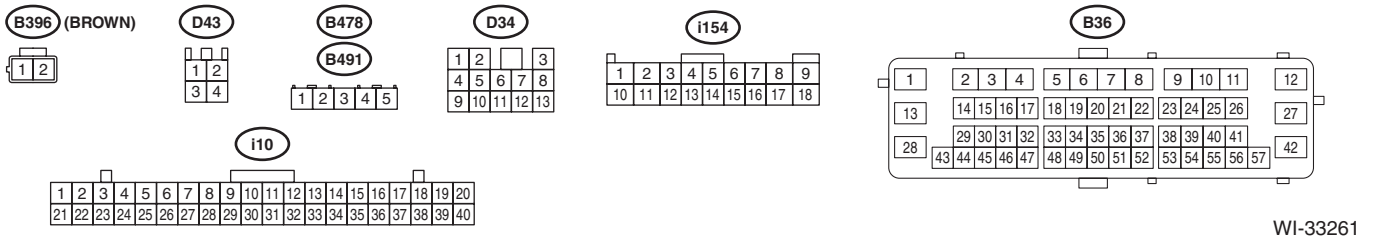
B396 (BROWN)
D43
B478
B491
D34
i154
B36
i10

WI-33261

40.Remote Control Mirror System

A: WIRING DIAGRAM

1. WITHOUT ELECTRIC RETRACTION SYSTEM

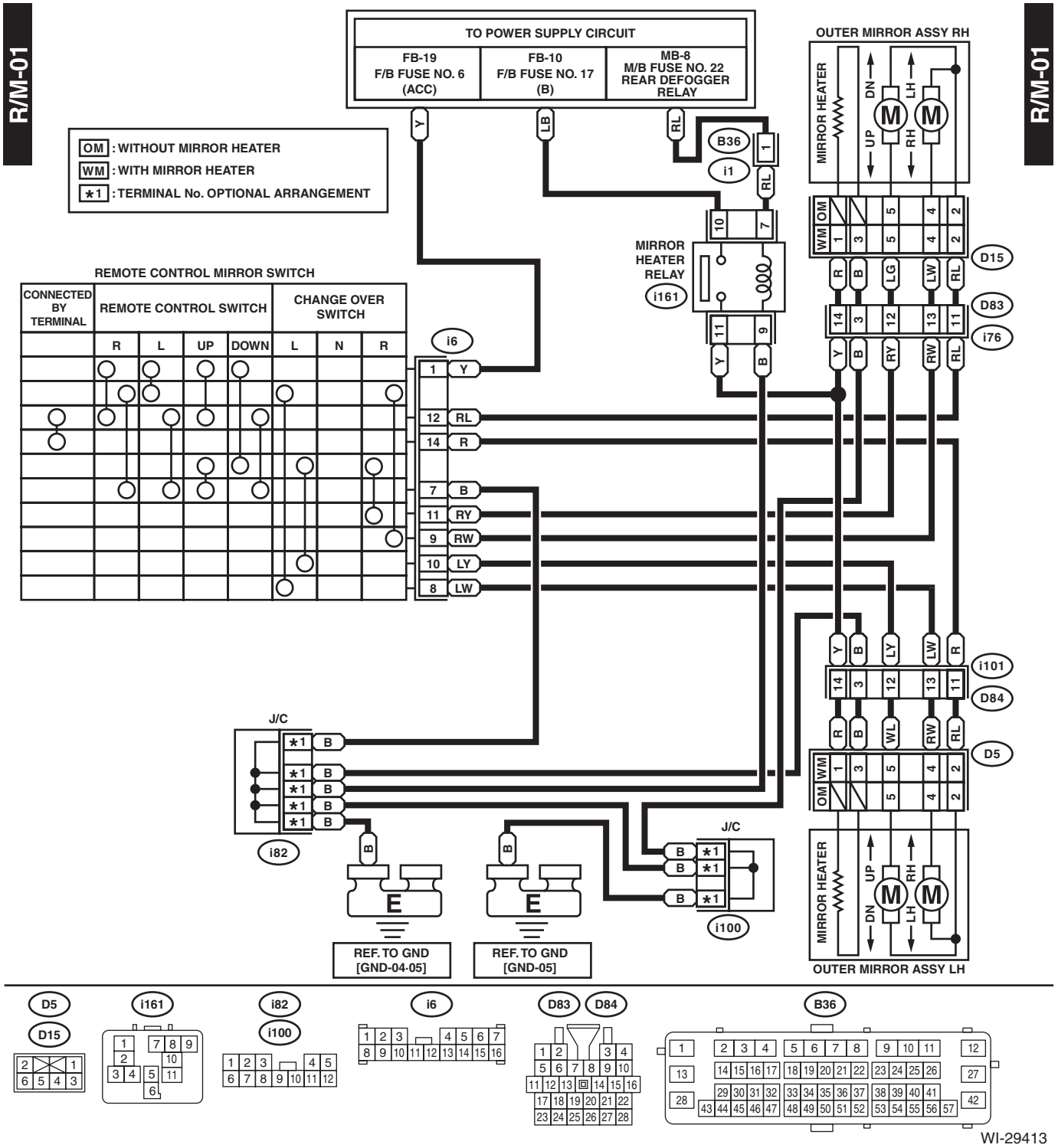

WI-29413

2. WITH ELECTRIC RETRACTION SYSTEM

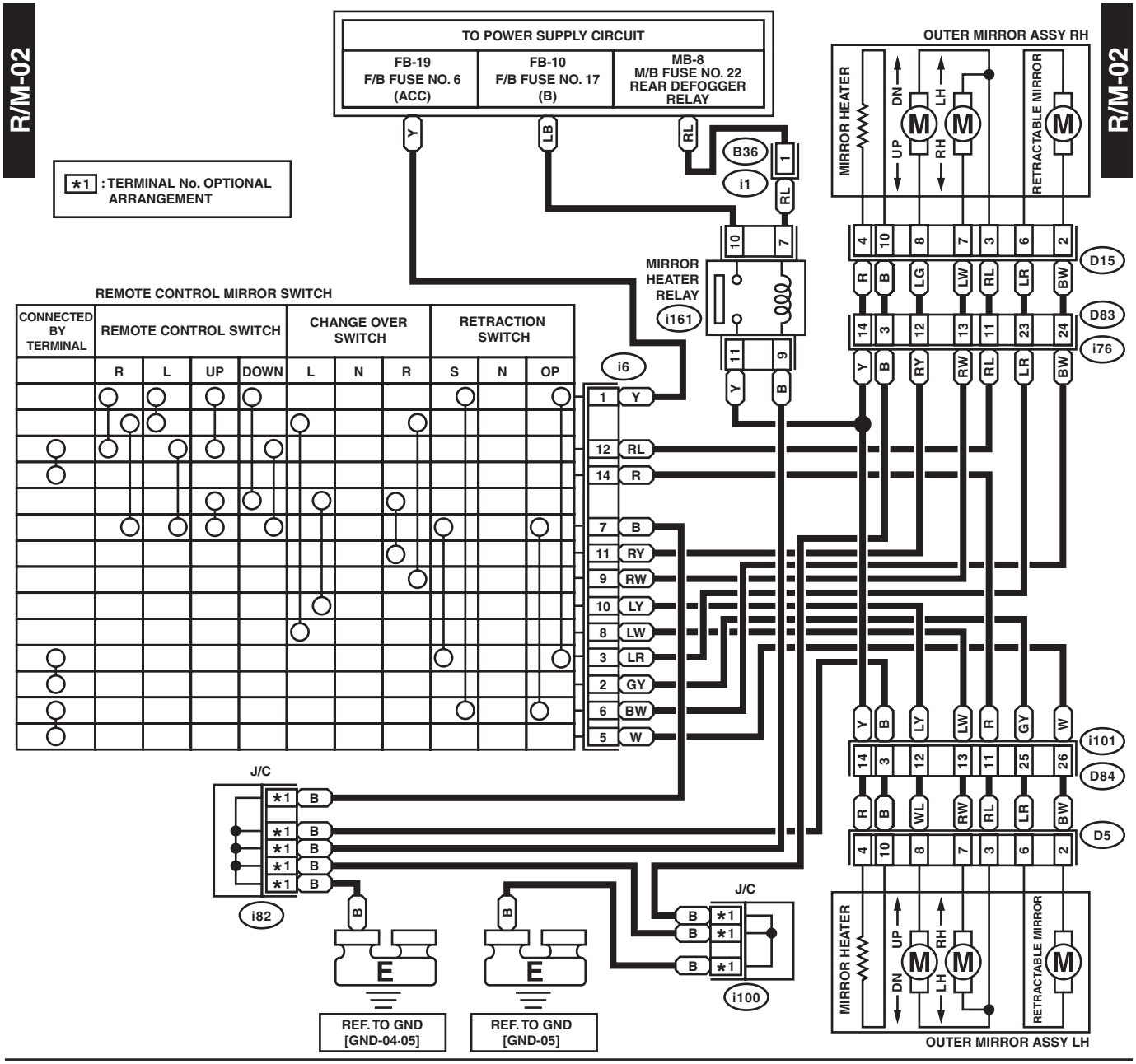

41.Remote Engine Start System

A: WIRING DIAGRAM

RE/GS-01

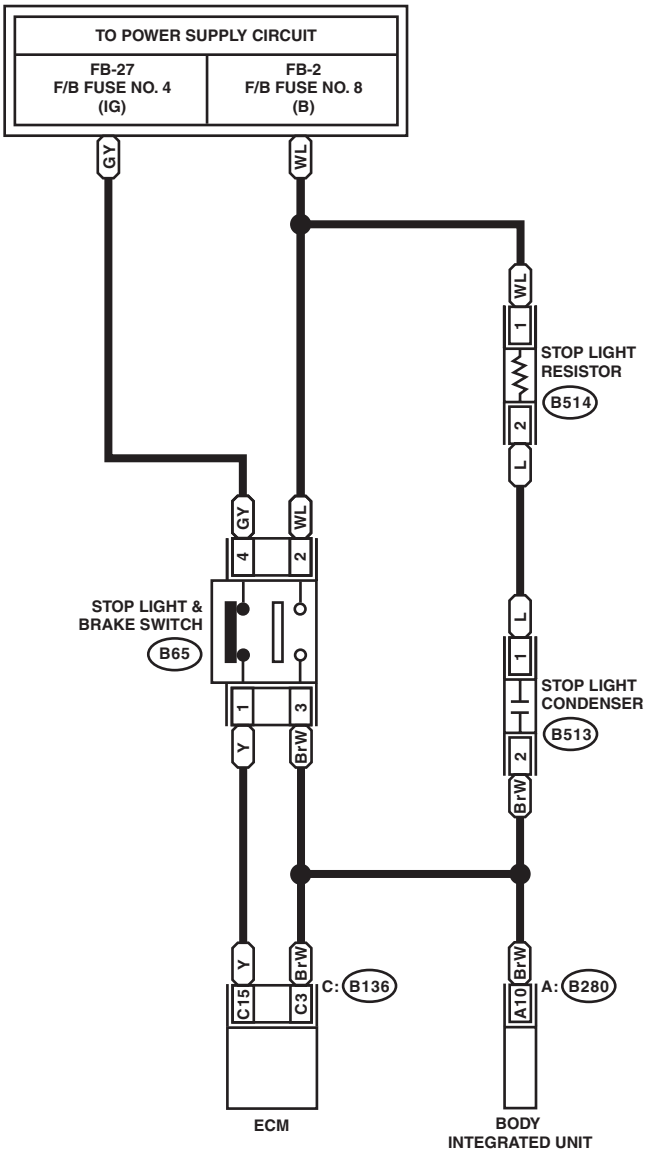

B513 (BLUE)

B514 (BLUE)

B65 (BLACK)

A: B280

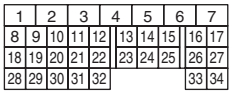

C: B136

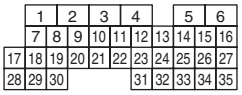

WI-33858

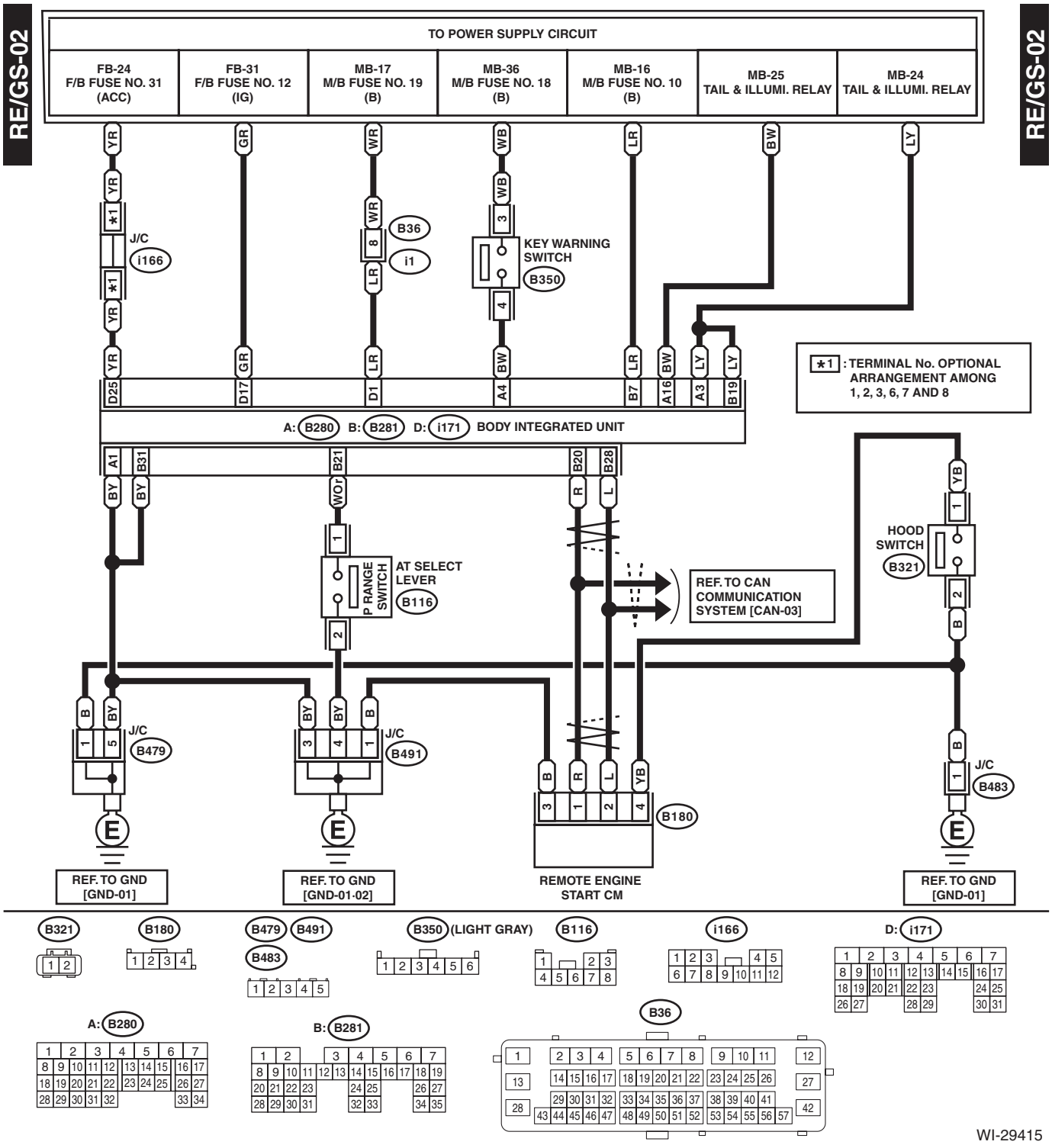
RE/GS-02
RE/GS-02
TO POWER SUPPLY CIRCUIT
FB-24 F/B FUSE NO. 31 (ACC)
FB-31 F/B FUSE NO. 12 (IG)
MB-17 M/B FUSE NO. 19 (B)
MB-36 M/B FUSE NO. 18 (B)
MB-16 M/B FUSE NO. 10 (B)
MB-25 TAIL & ILLUMI. RELAY
MB-24 TAIL & ILLUMI. RELAY
J/C i166
B36 i1
KEY WARNING SWITCH B350
*1 : TERMINAL No. OPTIONAL ARRANGEMENT AMONG 1, 2, 3, 6, 7 AND 8
A: B280 B: B281 D: i171 BODY INTEGRATED UNIT
AT SELECT LEVER P RANGE SWITCH B116
REF. TO CAN COMMUNICATION SYSTEM [CAN-03]
HOOD SWITCH B321
J/C B479
J/C B491
J/C B483
B180
REF. TO GND [GND-01]
REF. TO GND [GND-01·02]
REMOTE ENGINE START CM
REF. TO GND [GND-01]
B321
B180
B479 B491 B483
B350 (LIGHT GRAY)
B116
i166
D: i171
A: B280
B: B281
B36
WI-29415

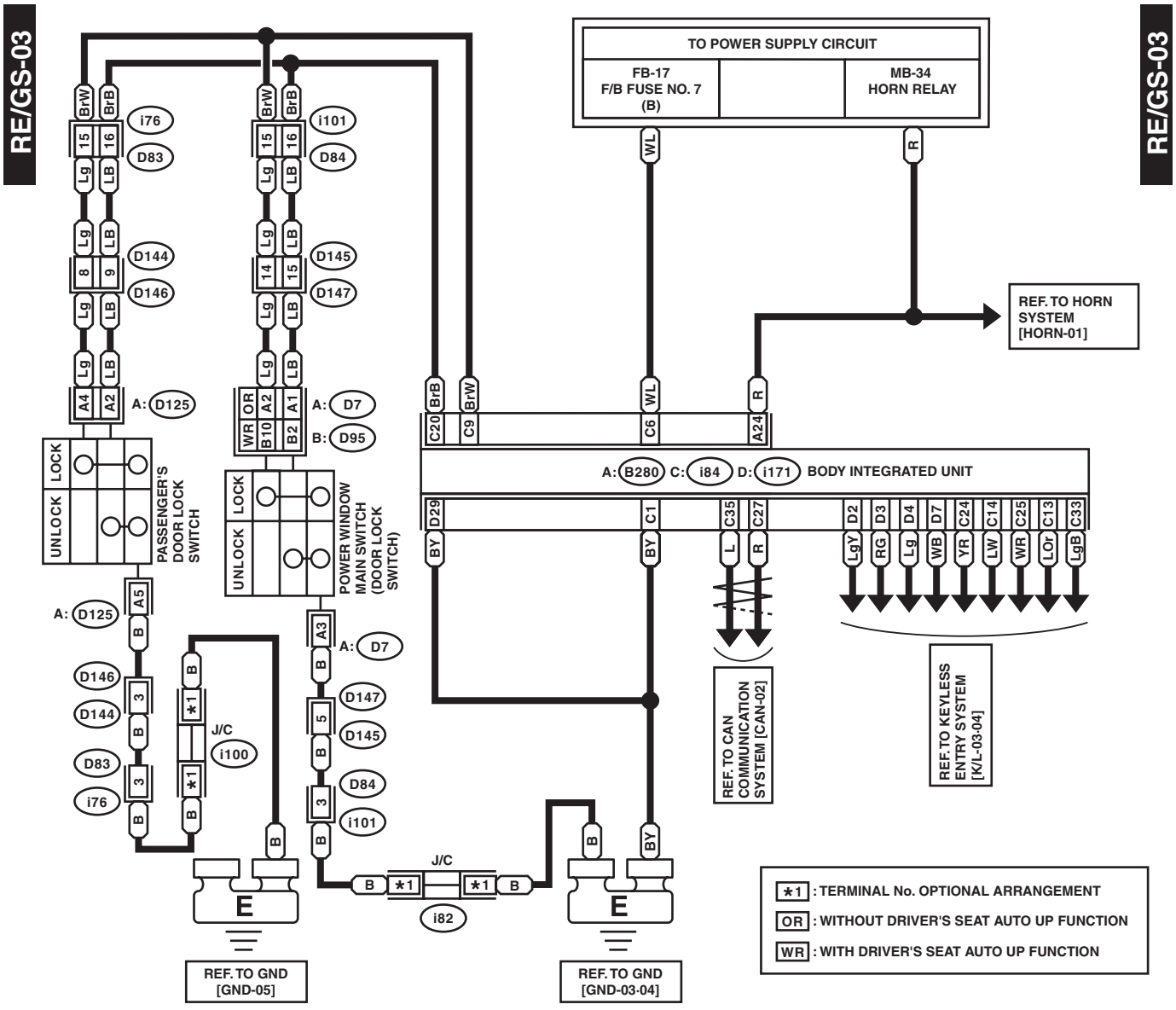
RE/GS-03
RE/GS-03
TO POWER SUPPLY CIRCUIT
FB-17
F/B FUSE NO. 7
(B)
MB-34
HORN RELAY
REF. TO HORN SYSTEM [HORN-01]
A: B280 C: i84 D: i171 BODY INTEGRATED UNIT
PASSENGER'S DOOR LOCK SWITCH
POWER WINDOW MAIN SWITCH (DOOR LOCK SWITCH)
J/C
i100
J/C
i82
REF. TO CAN COMMUNICATION SYSTEM [CAN-02]
REF. TO KEYLESS ENTRY SYSTEM [K/L-03-04]
REF. TO GND [GND-05]
REF. TO GND [GND-03-04]
*1 : TERMINAL No. OPTIONAL ARRANGEMENT
OR : WITHOUT DRIVER'S SEAT AUTO UP FUNCTION
WR : WITH DRIVER'S SEAT AUTO UP FUNCTION

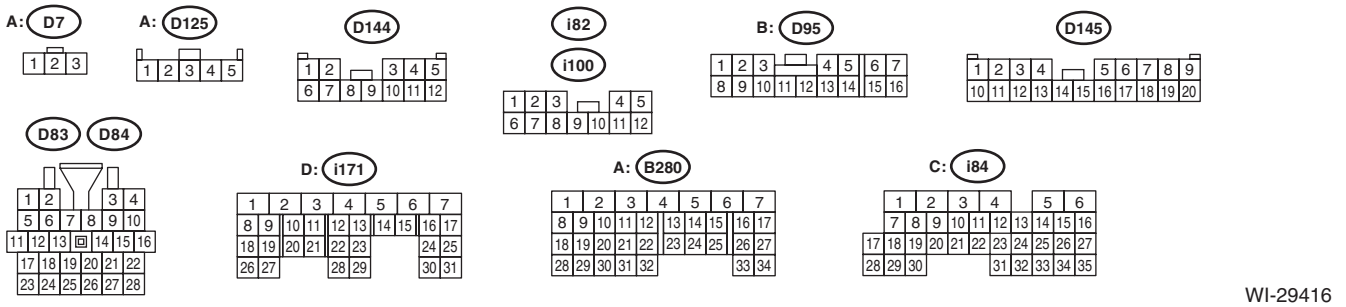
A: D7
A: D125
D144
i82
i100
B: D95
D145
D83
D84
D: i171
A: B280
C: i84

WI-29416

42.Seat Belt Warning System

A: WIRING DIAGRAM

1. MANUAL SEAT MODEL

- **Vehicle identification number: Sedan model 002017 or later OUTBACK model 200013 or later**

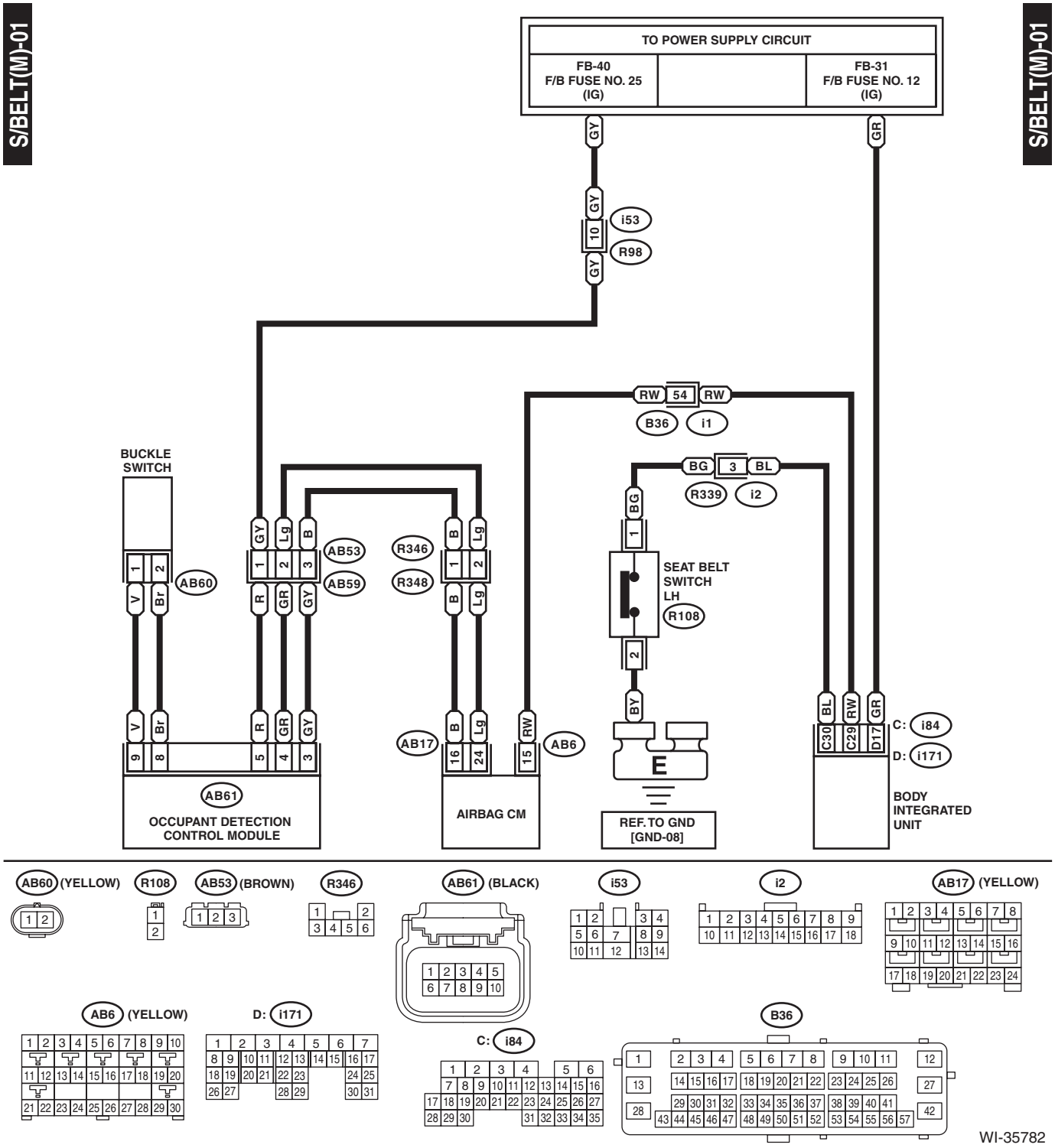

S/BELT(M)-02

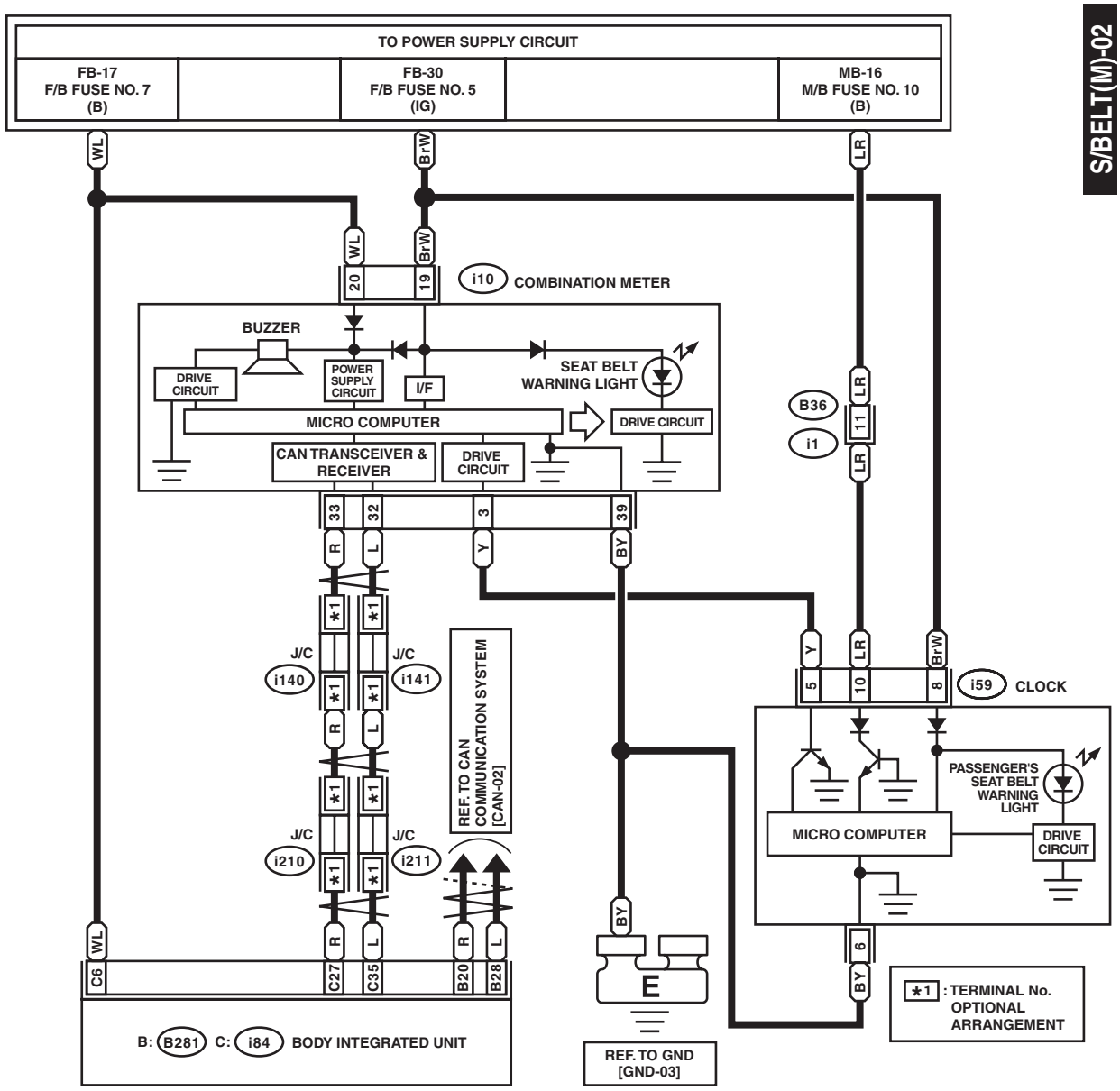

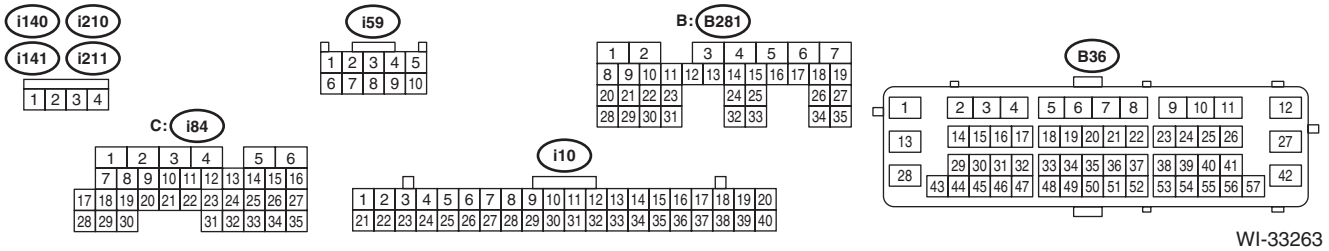

WI-33263

- **Vehicle identification number: Sedan model 002016 or older OUTBACK model 200012 or older**

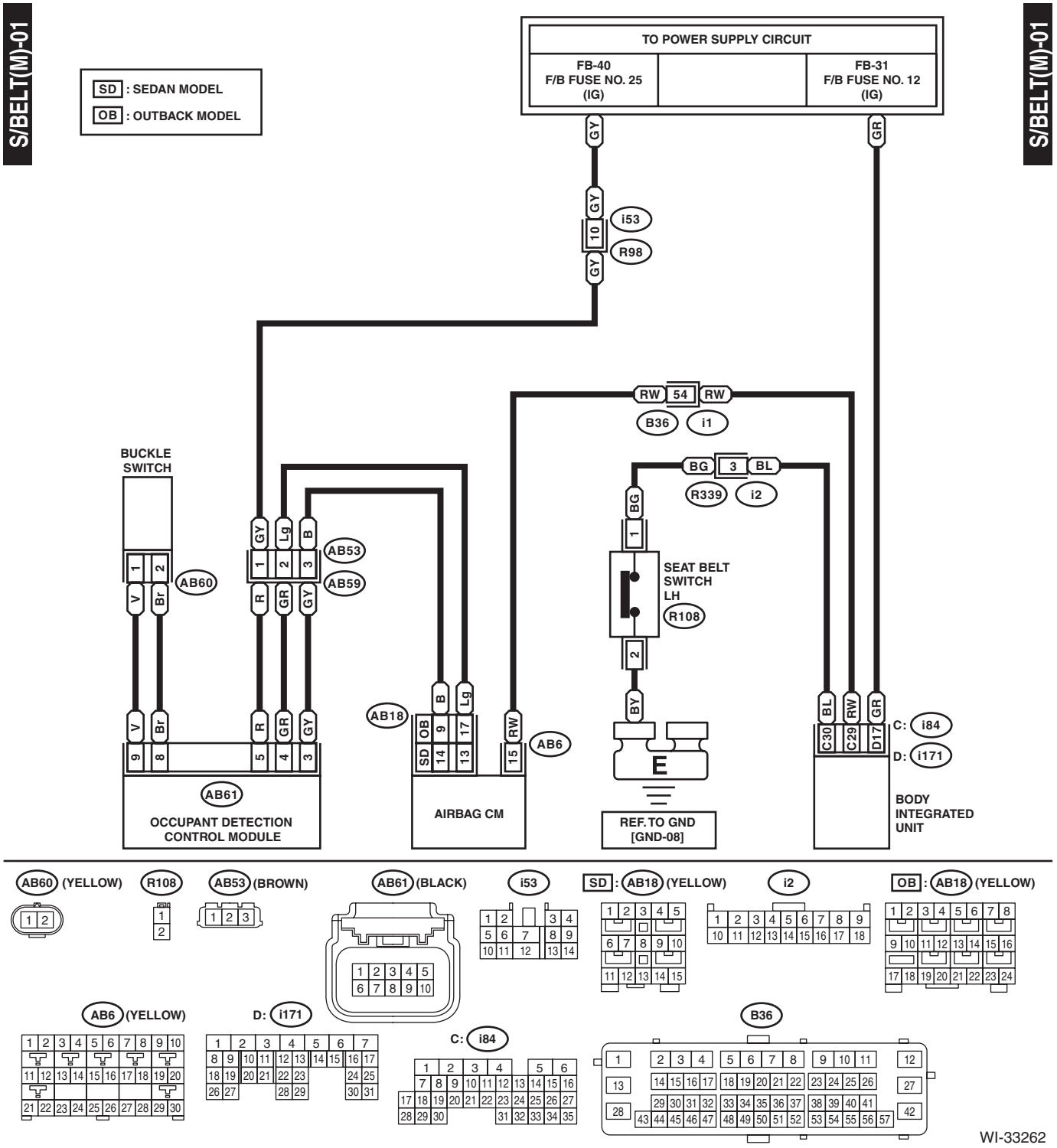

S/BELT(M)-02

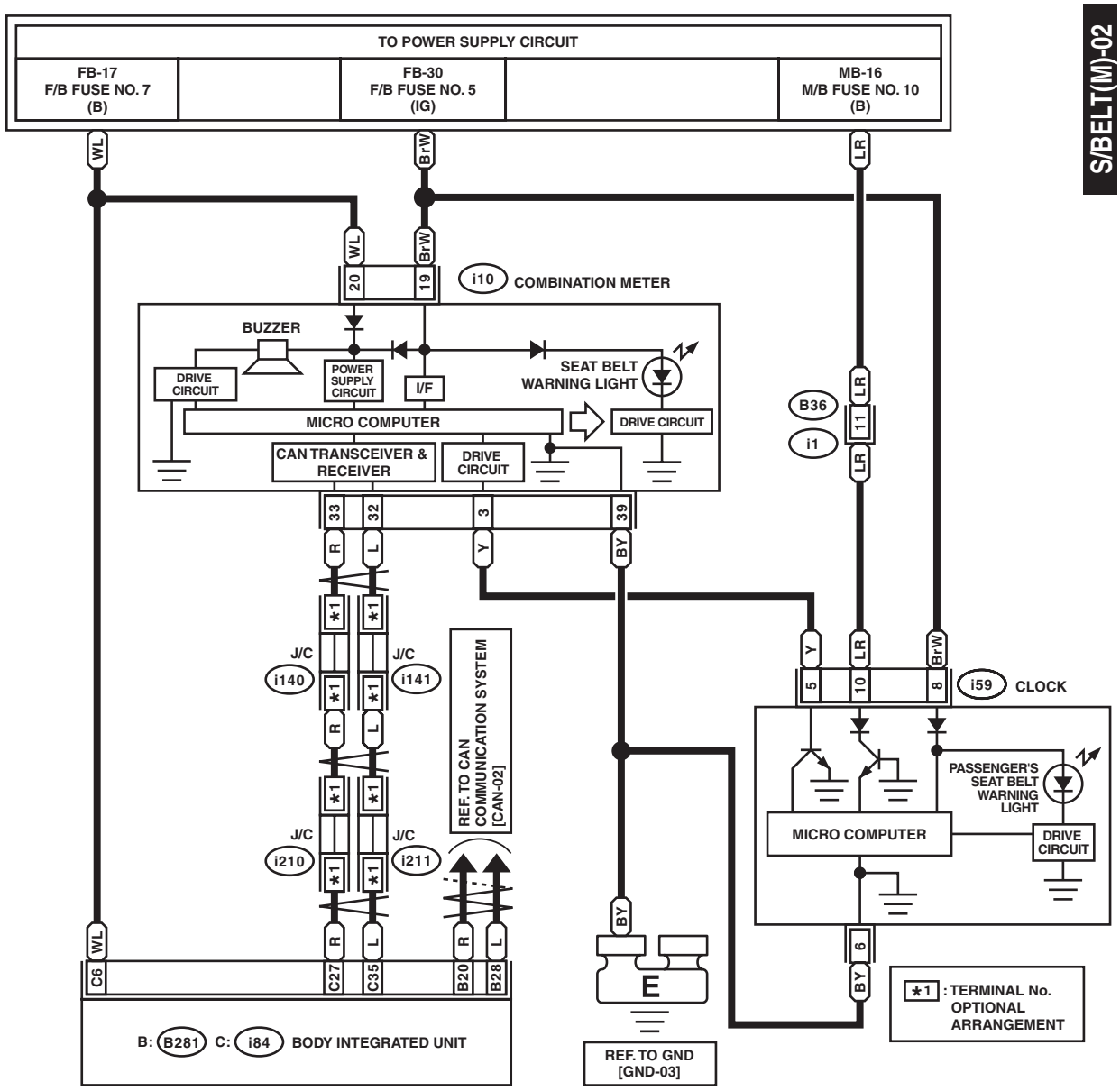

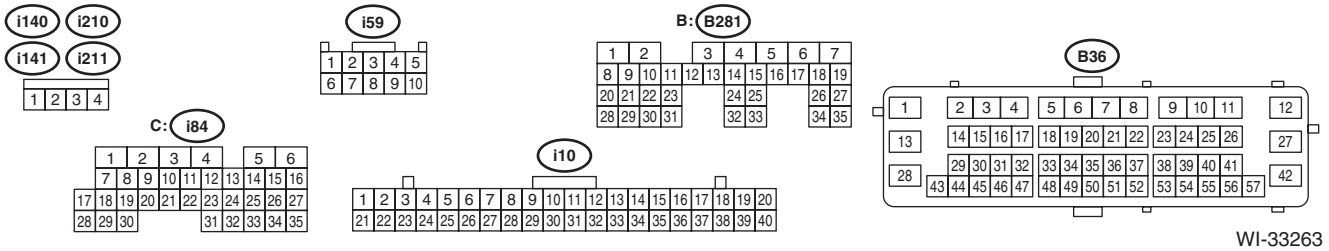

WI-33263

2. MODEL WITH POWER SEATS

- **Vehicle identification number: Sedan model 002017 or later OUTBACK model 200013 or later**

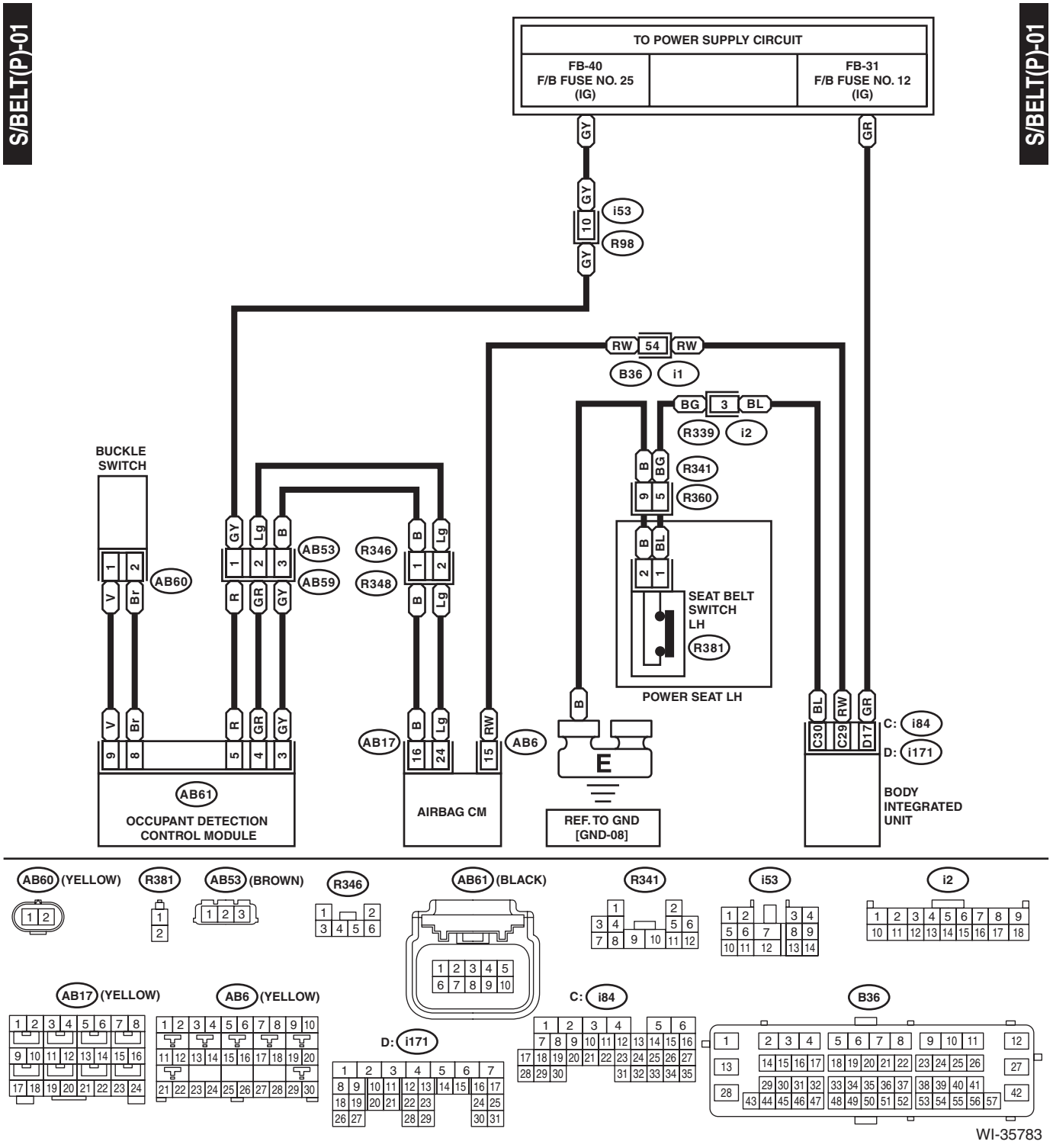

S/BELT(P)-02

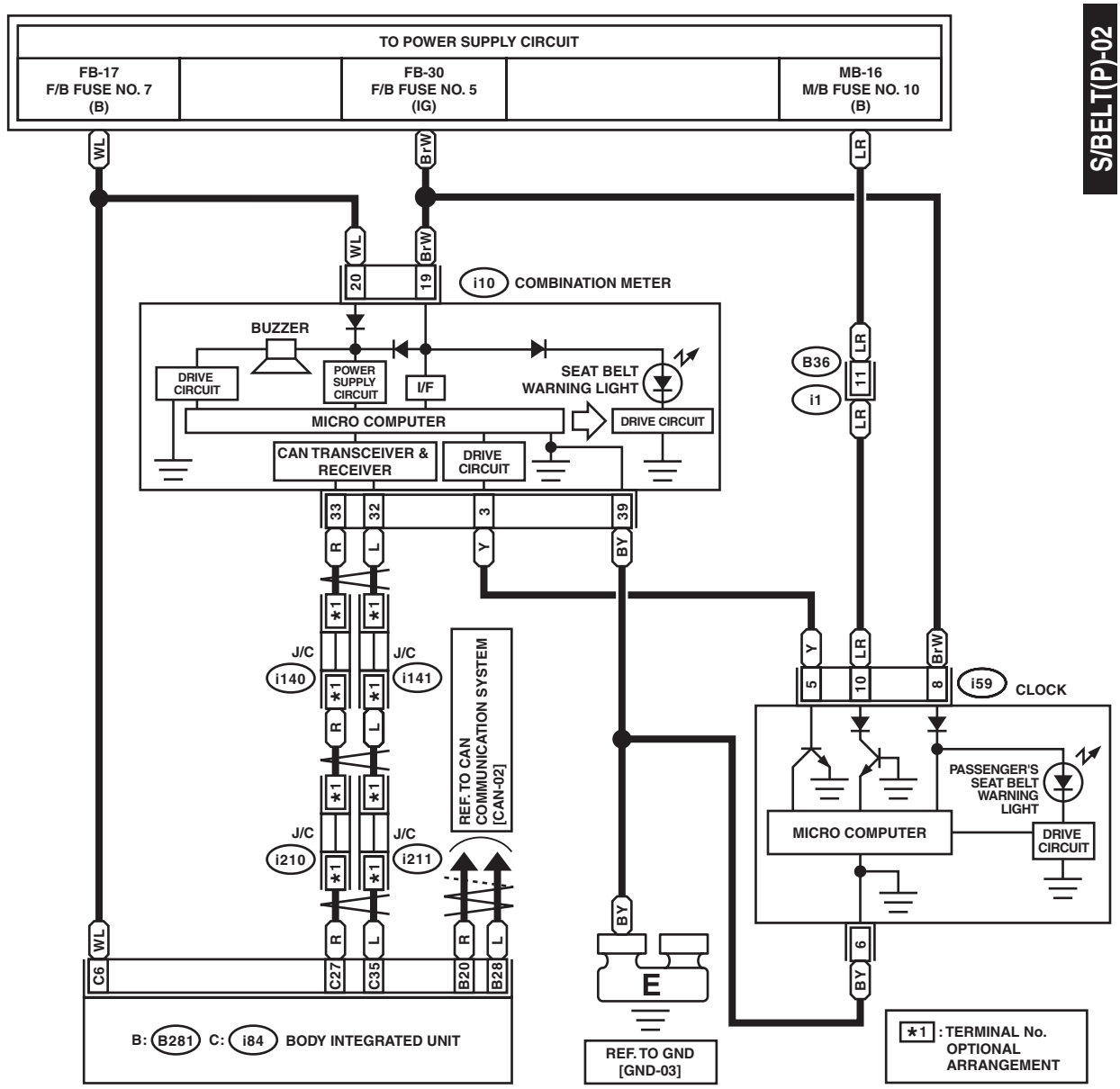

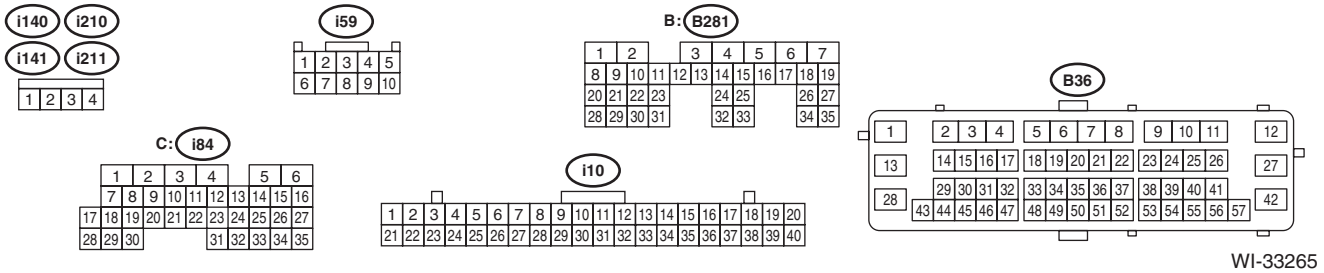

WI-33265

S/BELT(P)-02

- **Vehicle identification number: Sedan model 002016 or older OUTBACK model 200012 or older**

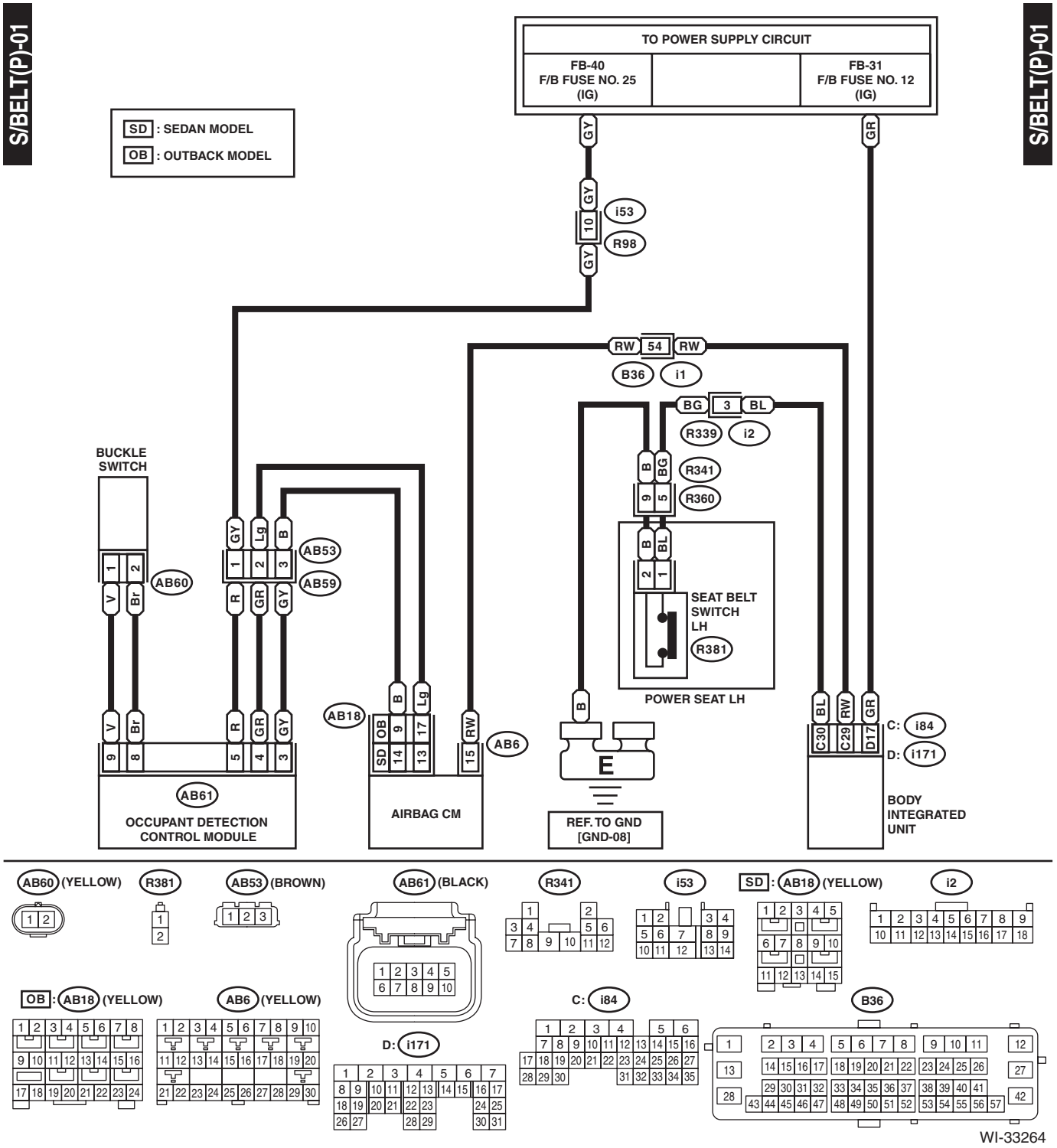

S/BELT(P)-02

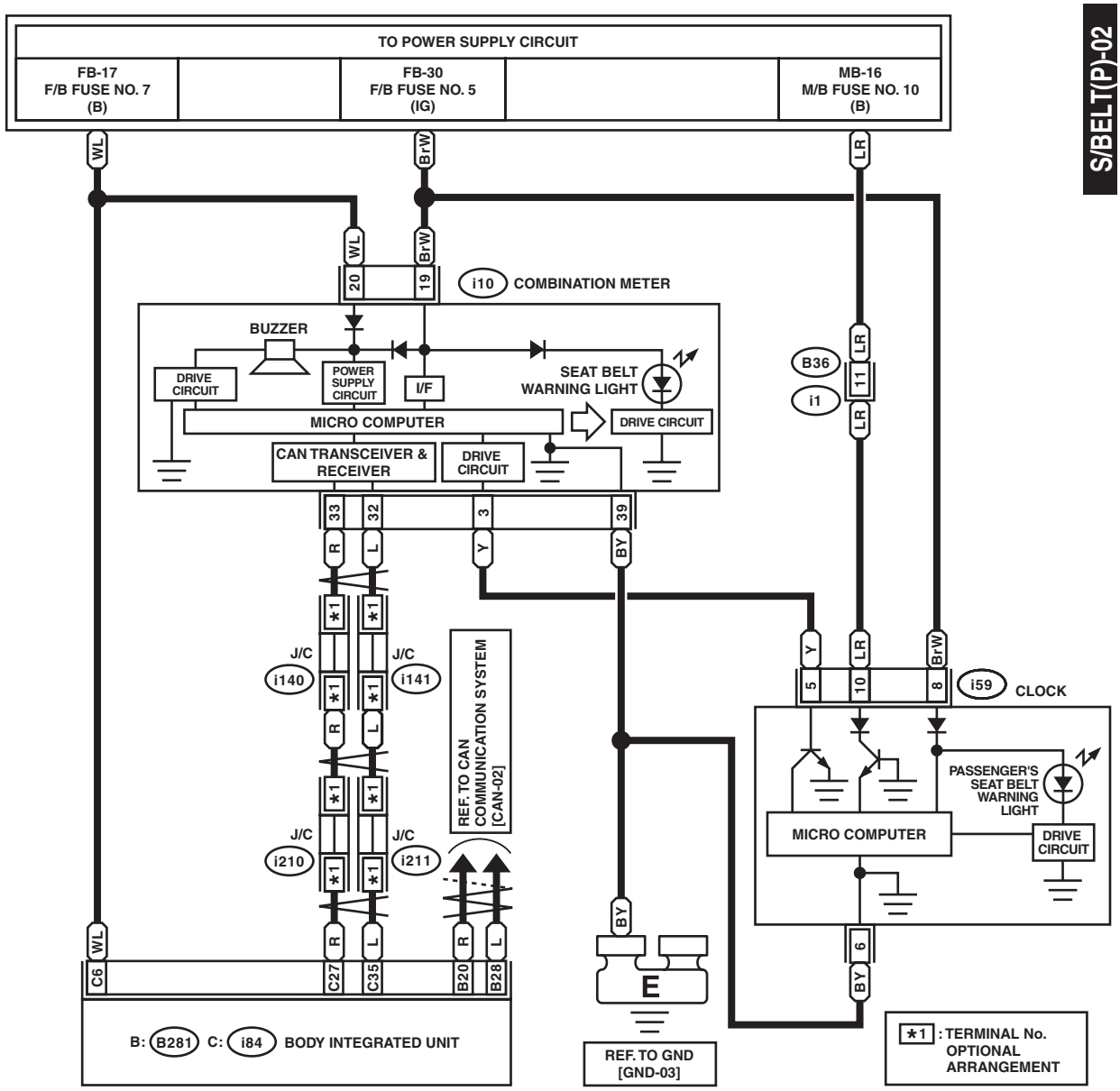

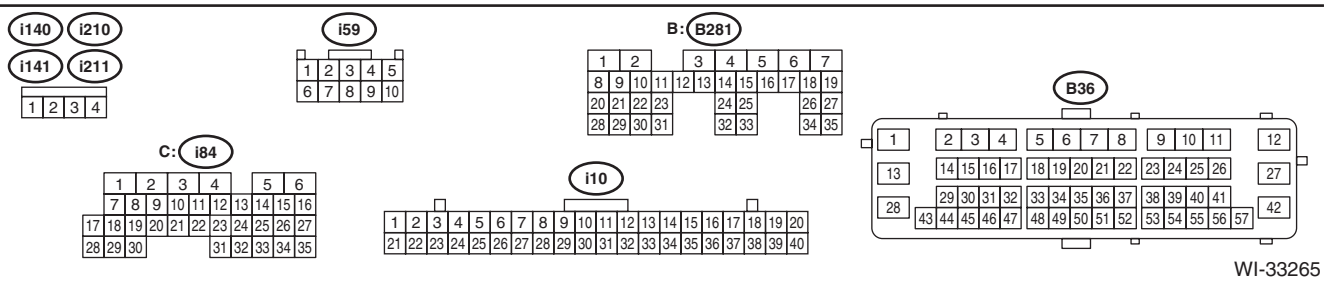

WI-33265

S/BELT(P)-02

43.Seat Heater System

A: WIRING DIAGRAM

1. MANUAL SEAT MODEL

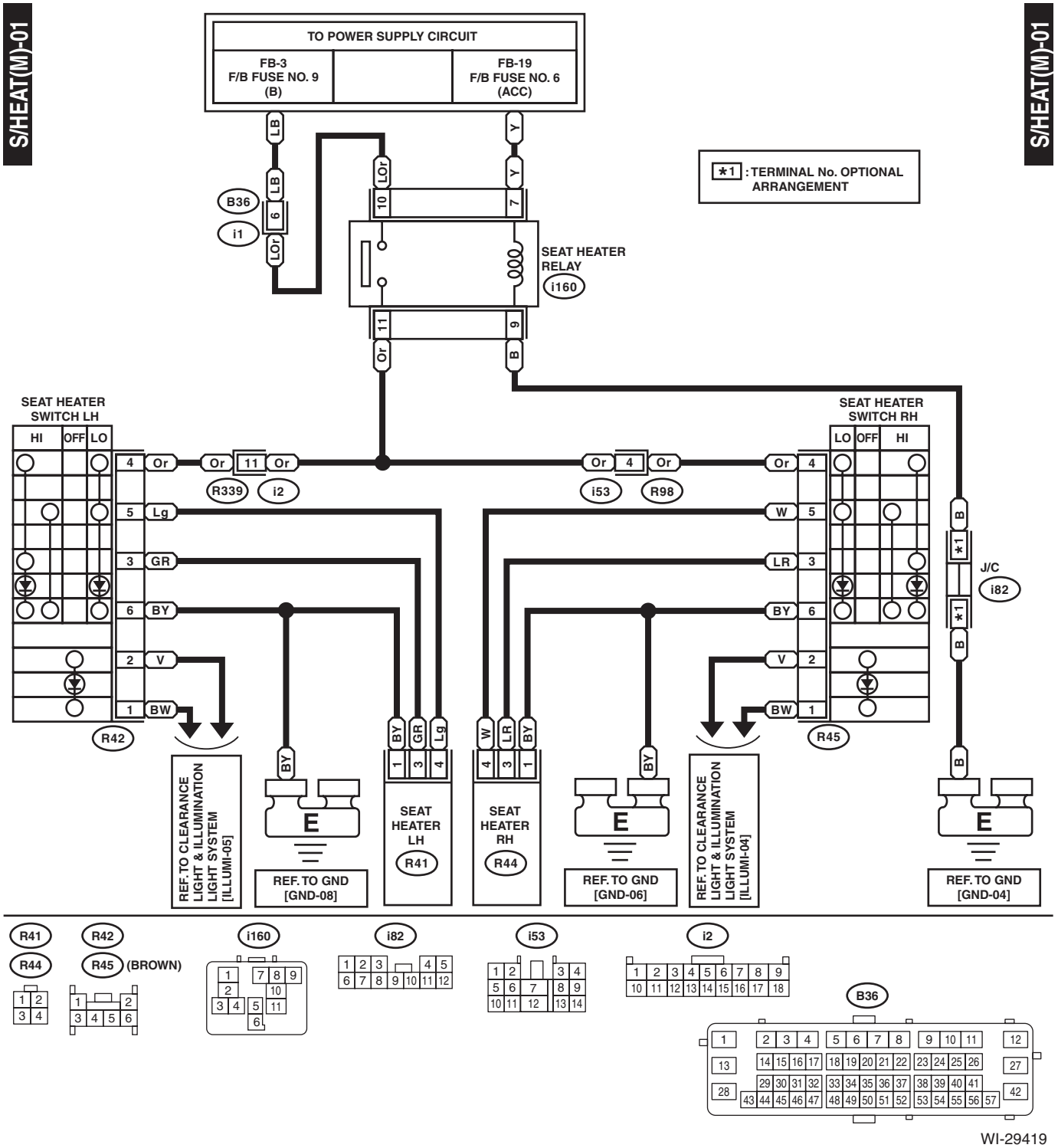

WI-29419

2. MODEL WITH POWER SEATS

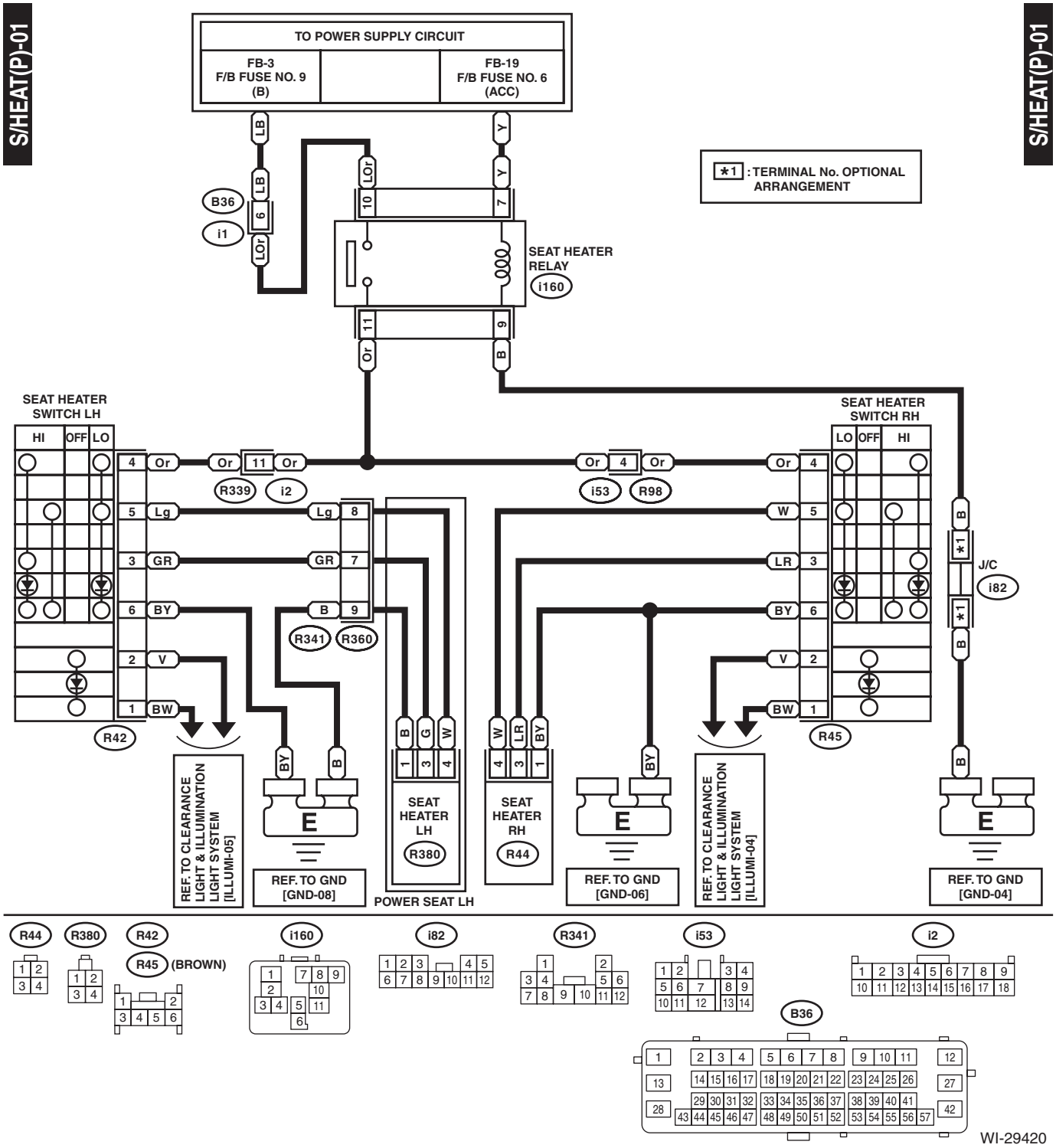

44.Security System

A: WIRING DIAGRAM

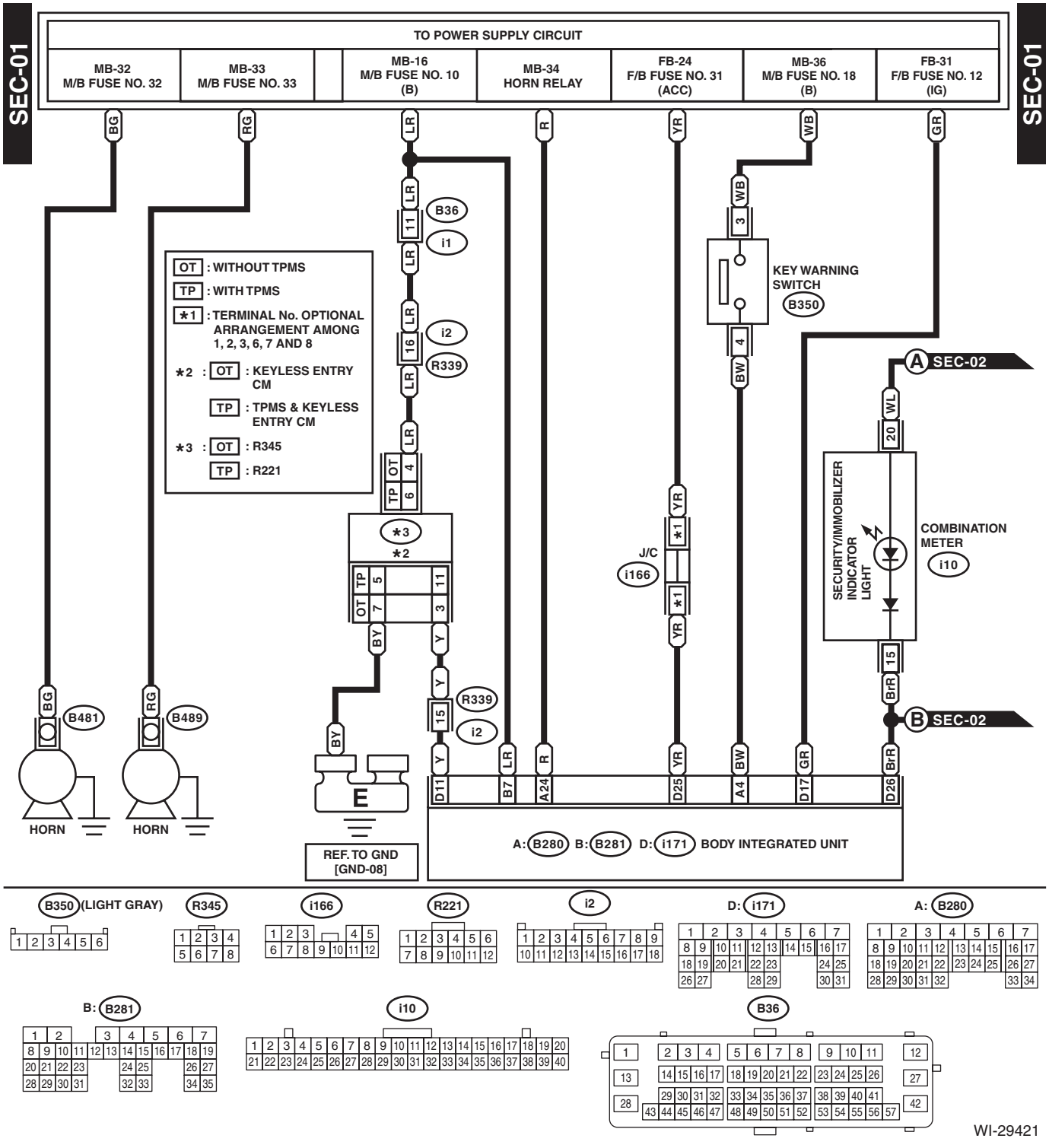

WI-29421

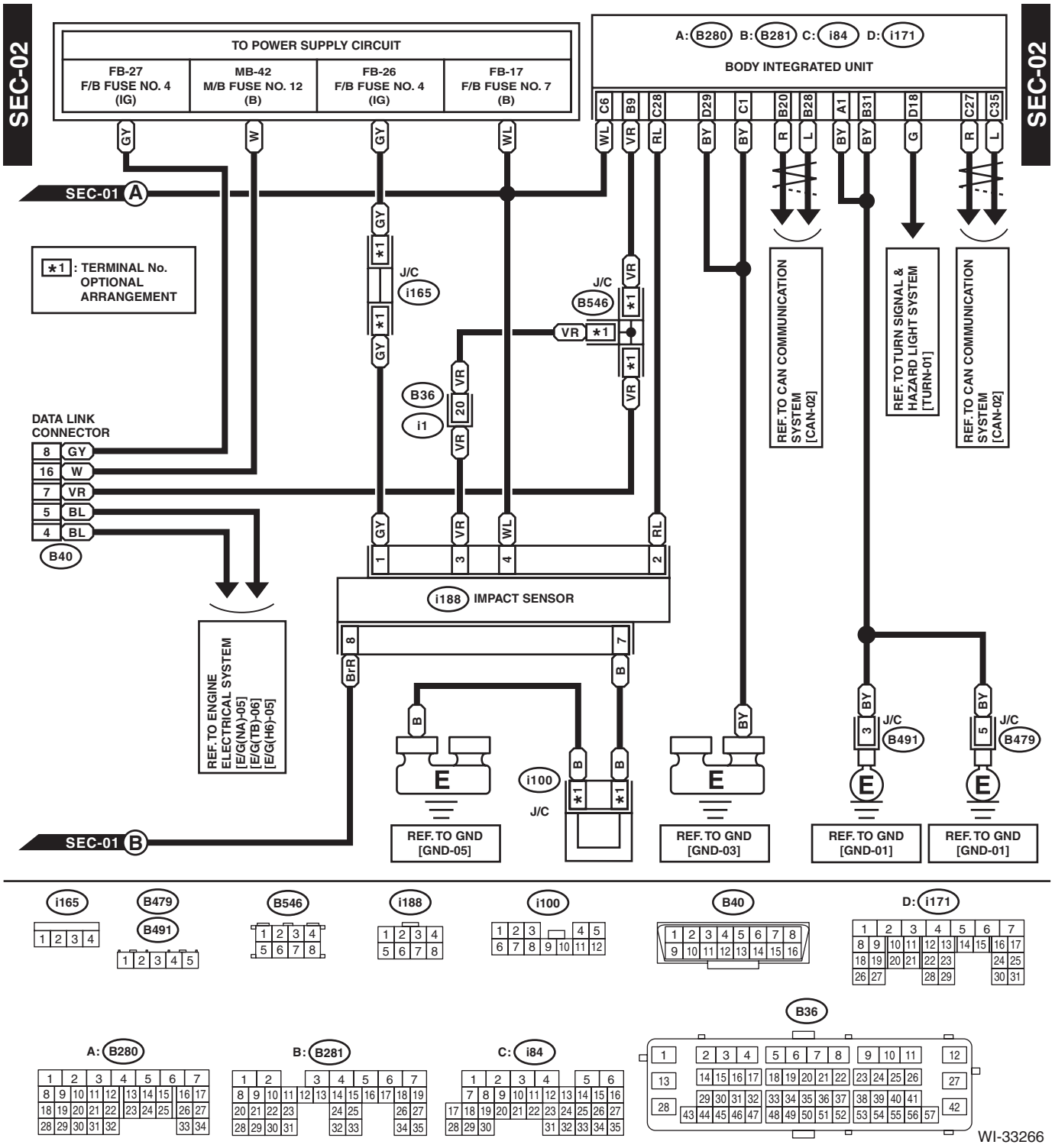
SEC-02
TO POWER SUPPLY CIRCUIT
FB-27 F/B FUSE NO. 4 (IG)
MB-42 M/B FUSE NO. 12 (B)
FB-26 F/B FUSE NO. 4 (IG)
FB-17 F/B FUSE NO. 7 (B)
A: B280 B: B281 C: i84 D: i171
BODY INTEGRATED UNIT
SEC-01 A
*1: TERMINAL No. OPTIONAL ARRANGEMENT
J/C i165
J/C B546
B36 i1
DATA LINK CONNECTOR
8 GY
16 W
7 VR
5 BL
4 BL
B40
i188 IMPACT SENSOR
REF. TO ENGINE ELECTRICAL SYSTEM [E/G(NA)-05] [E/G(TB)-06] [E/G(H6)-05]
REF. TO CAN COMMUNICATION SYSTEM [CAN-02]
REF. TO TURN SIGNAL & HAZARD LIGHT SYSTEM [TURN-01]
REF. TO CAN COMMUNICATION SYSTEM [CAN-02]
J/C B491
J/C B479
i100 J/C
REF. TO GND [GND-05]
REF. TO GND [GND-03]
REF. TO GND [GND-01]
REF. TO GND [GND-01]
SEC-01 B
i165
B479
B491
B546
i188
i100
B40
D: i171
A: B280
B: B281
C: i84
B36

WI-33266

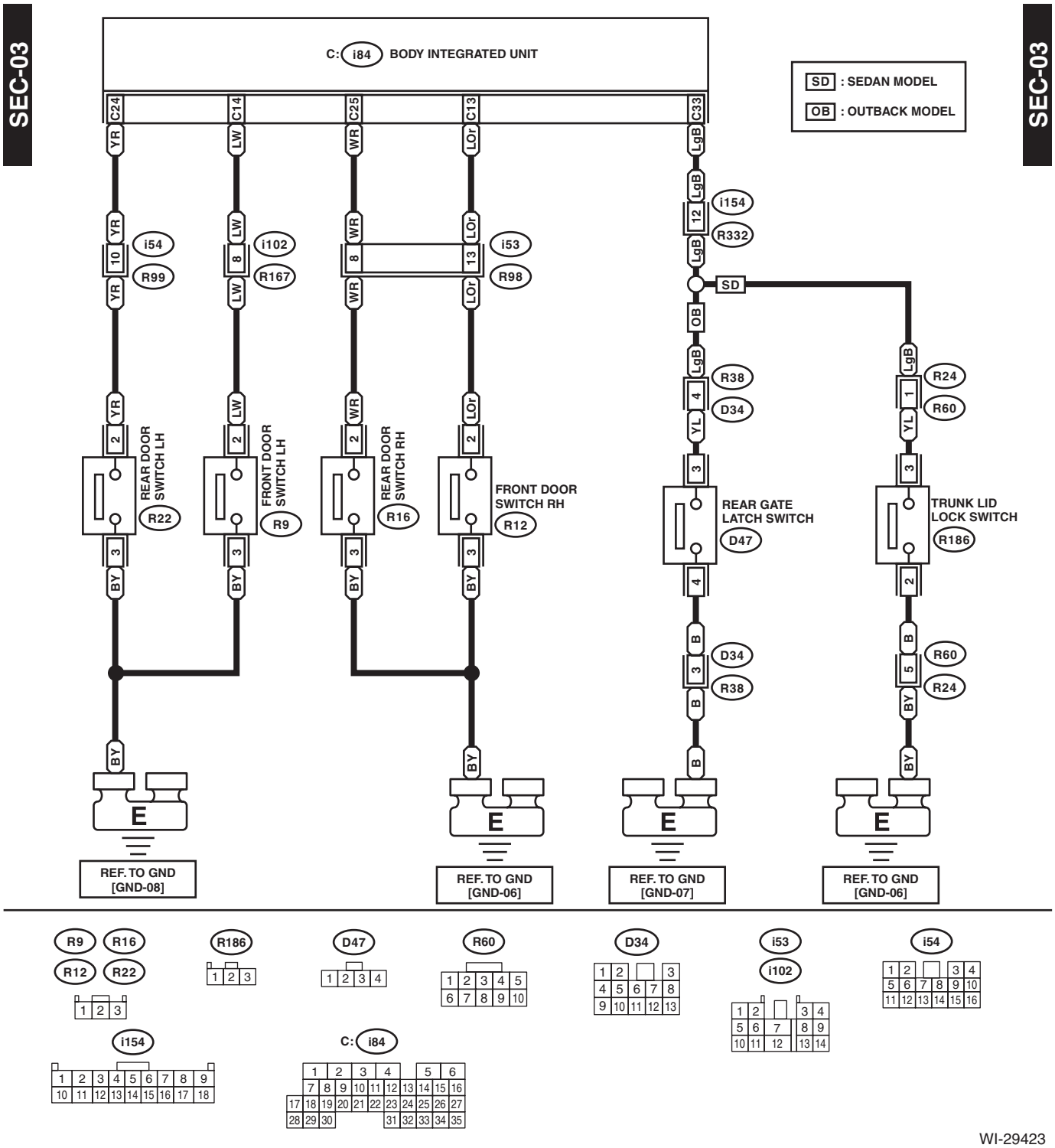
SEC-03
SEC-03
C: i84 BODY INTEGRATED UNIT
SD : SEDAN MODEL
OB : OUTBACK MODEL
C24
C14
C25
C13
C33
YR
LW
WR
LOr
LgB
i54
R99
i102
R167
i53
R98
i154
R332
R38
D34
R24
R60
REAR DOOR SWITCH LH
R22
FRONT DOOR SWITCH LH
R9
REAR DOOR SWITCH RH
R16
FRONT DOOR SWITCH RH
R12
REAR GATE LATCH SWITCH
D47
TRUNK LID LOCK SWITCH
R186
BY
B
YL
E
REF. TO GND [GND-08]
REF. TO GND [GND-06]
REF. TO GND [GND-07]
REF. TO GND [GND-06]
R9
R16
R12
R22
R186
D47
R60
D34
i53
i102
i54
i154
C: i84

WI-29423

45.Shift Lock Control System

A: WIRING DIAGRAM

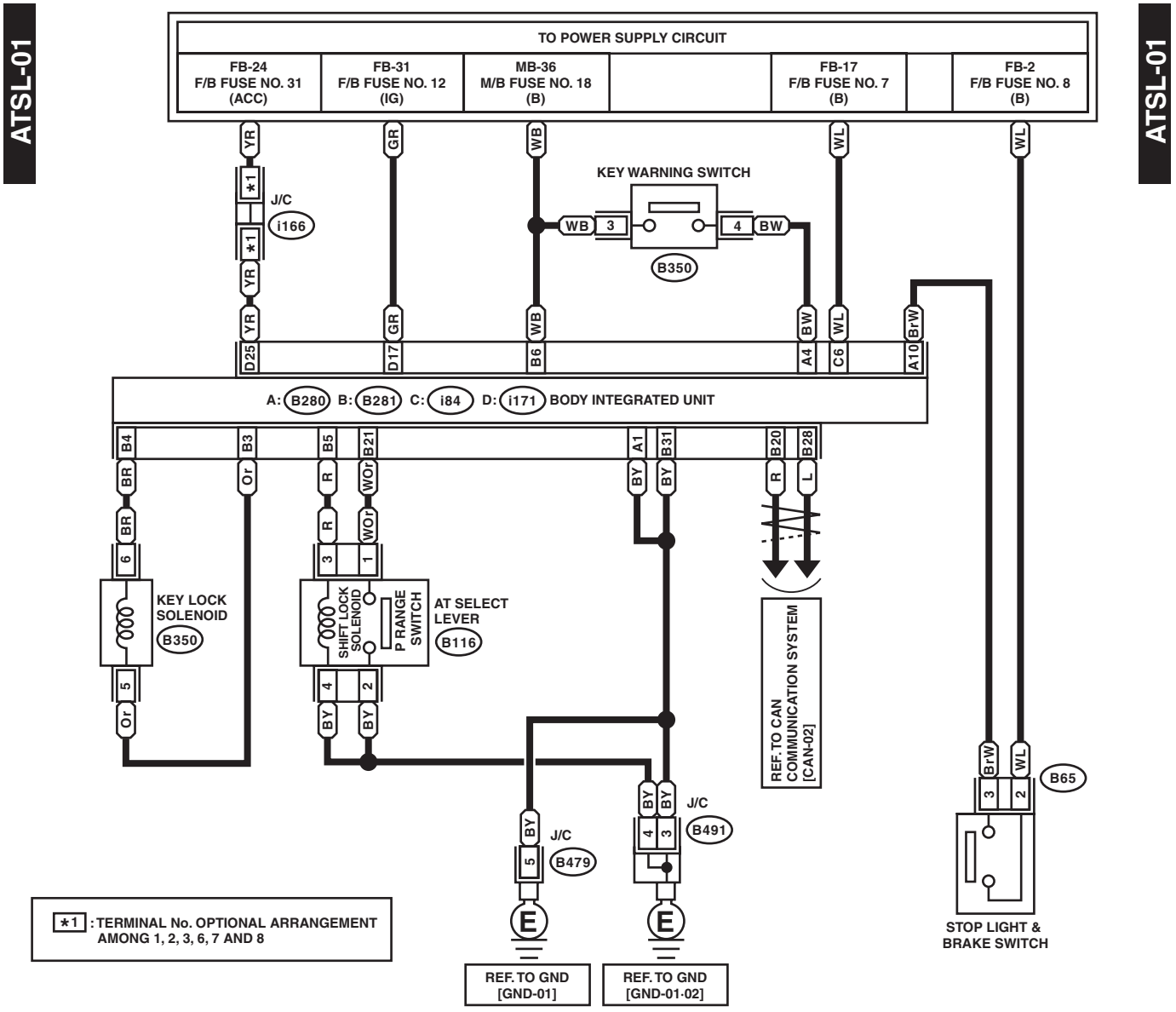

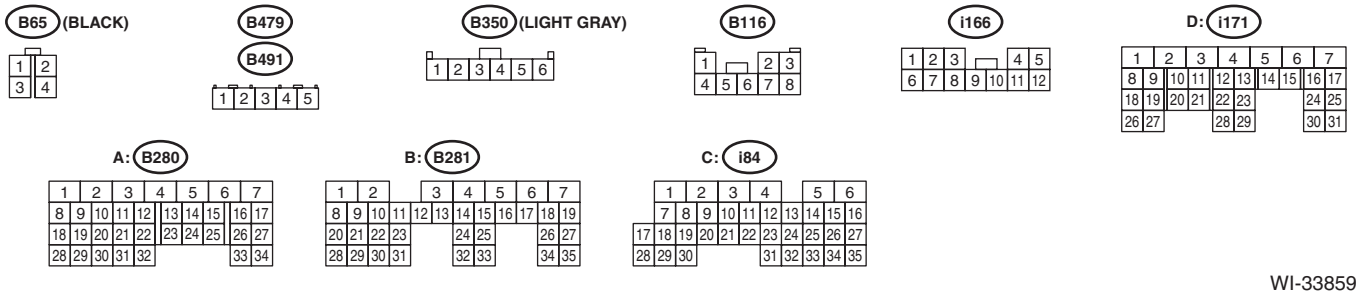

WI-33859

46.Speedometer System

A: WIRING DIAGRAM

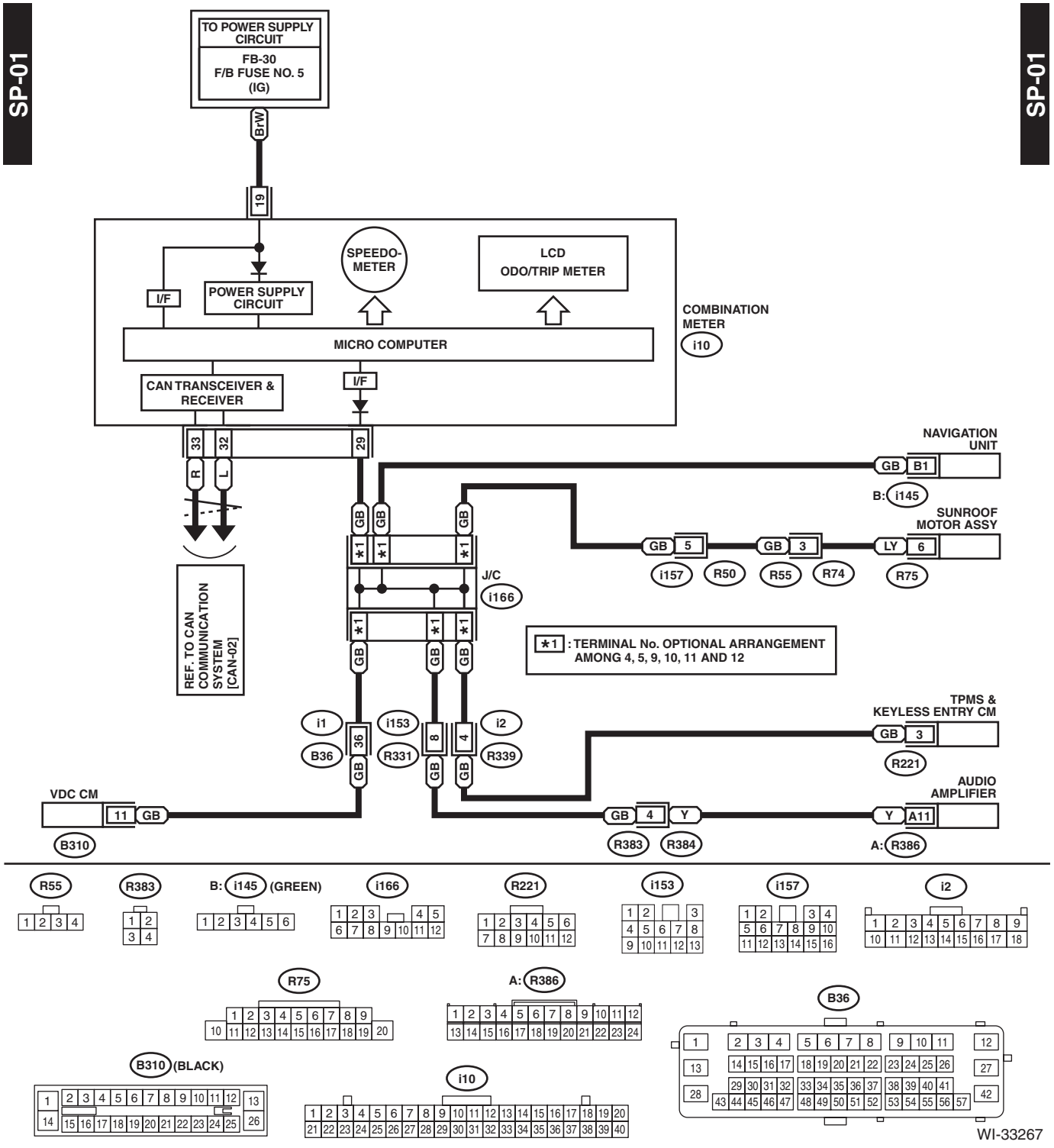

WI-33267

47.Starter System

A: WIRING DIAGRAM

1. 2.5 L NON-TURBO MODEL

ST(NA)-01

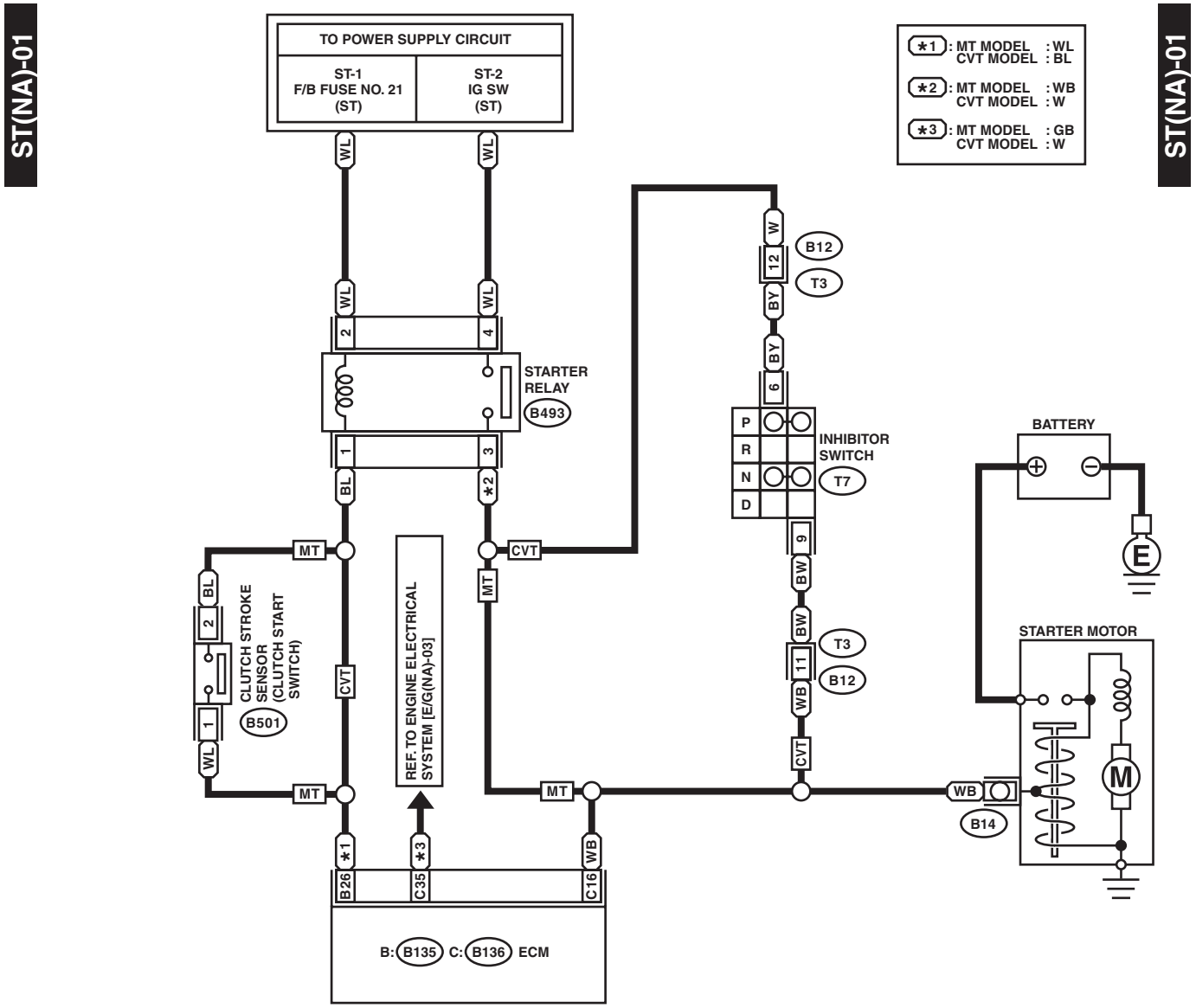

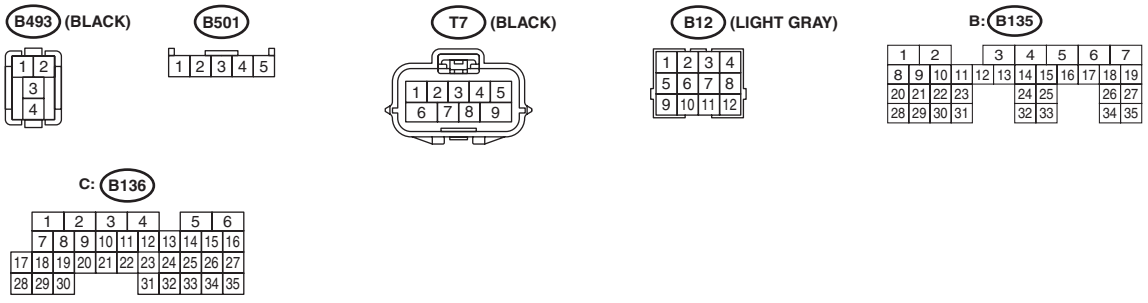

WI-25592

ST(NA)-01

2. 2.5 L TURBO MODEL

ST(TB)-01

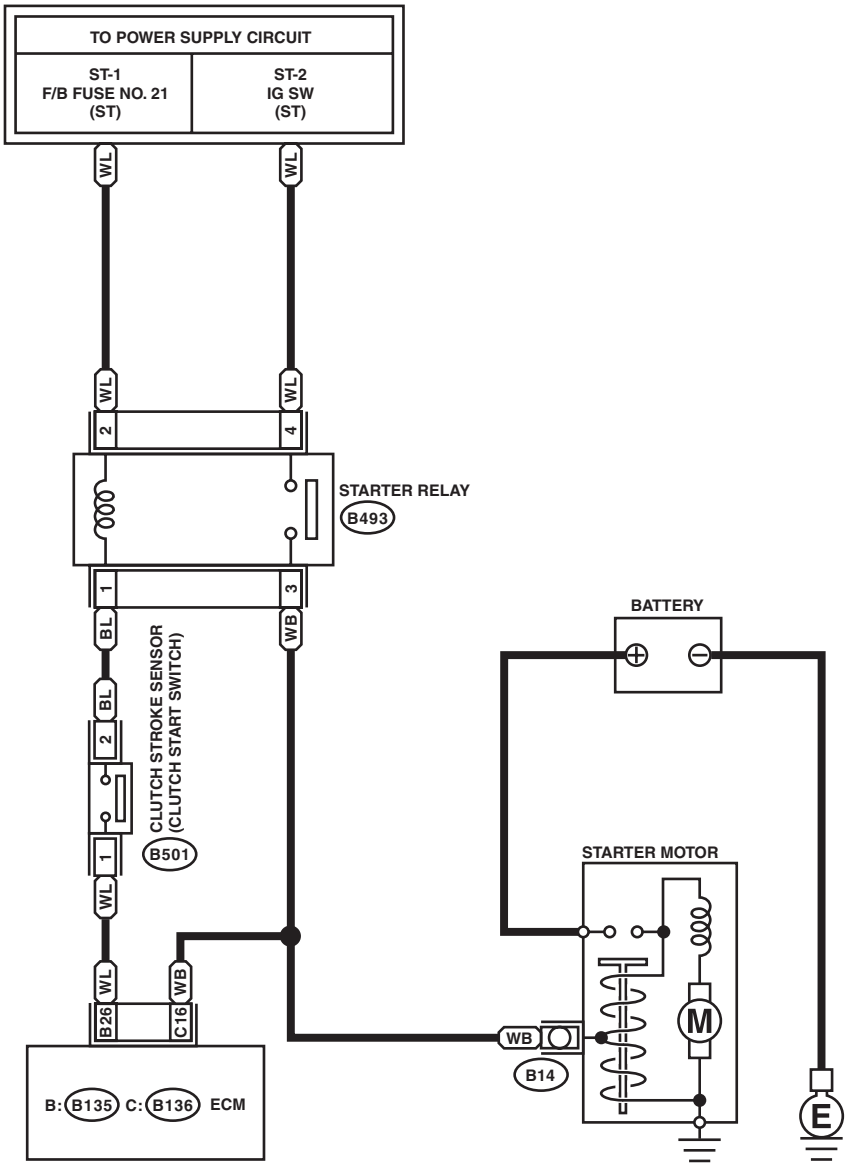

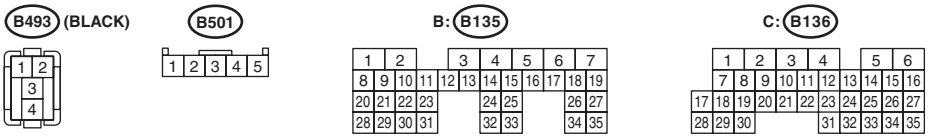

WI-25593

3. 3.6 L MODEL

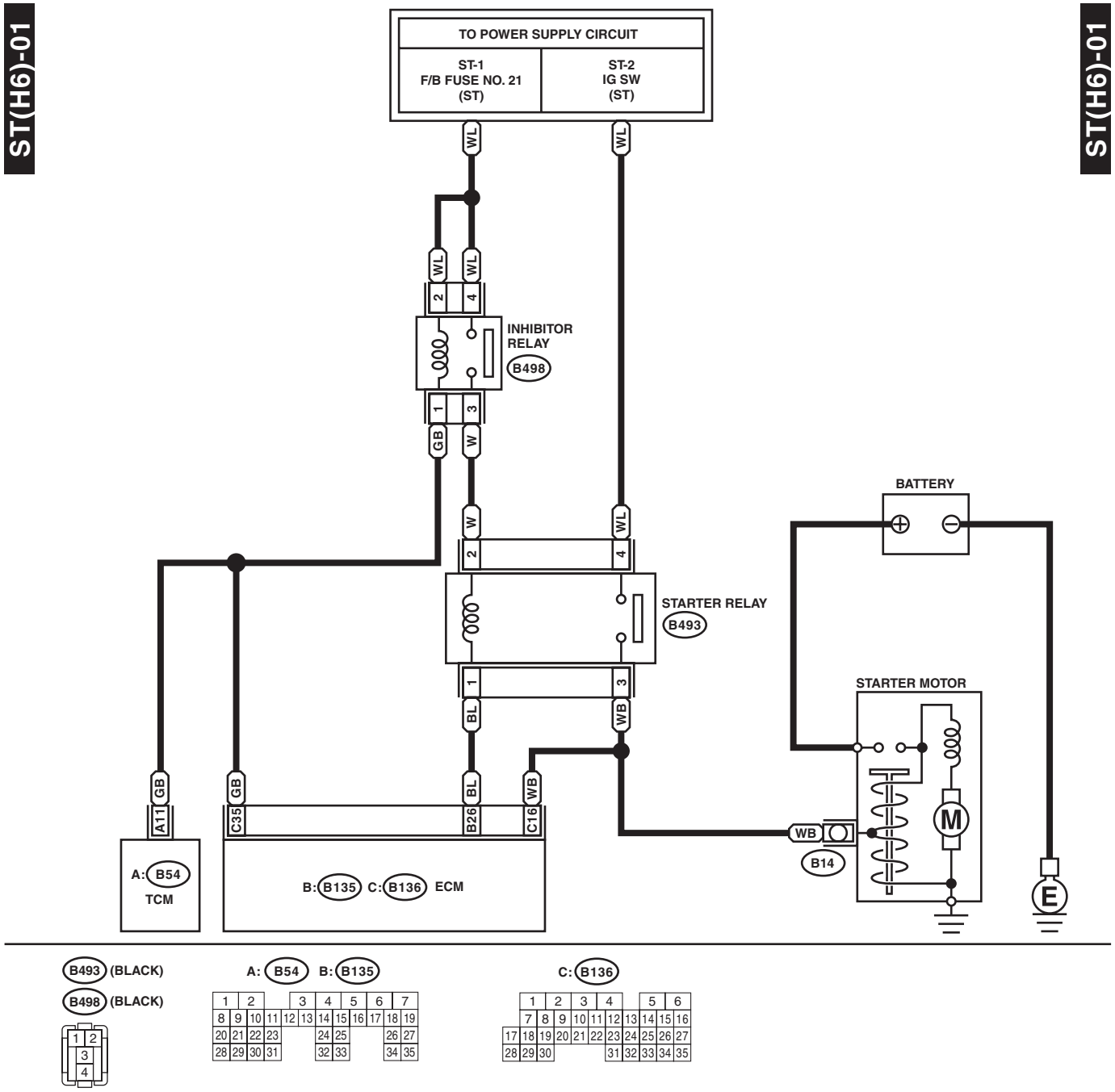

WI-25594

48.Stop Light System

A: WIRING DIAGRAM

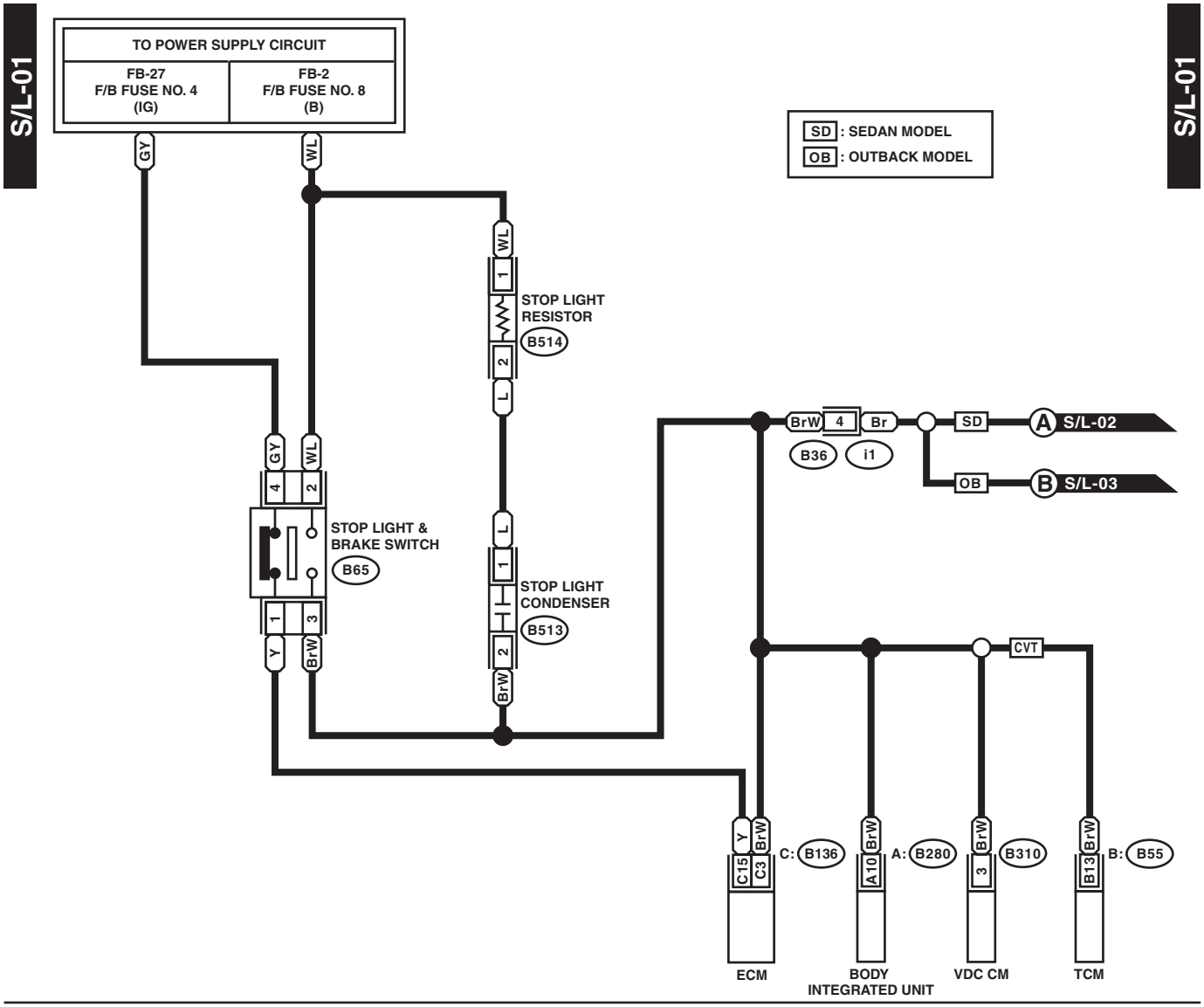

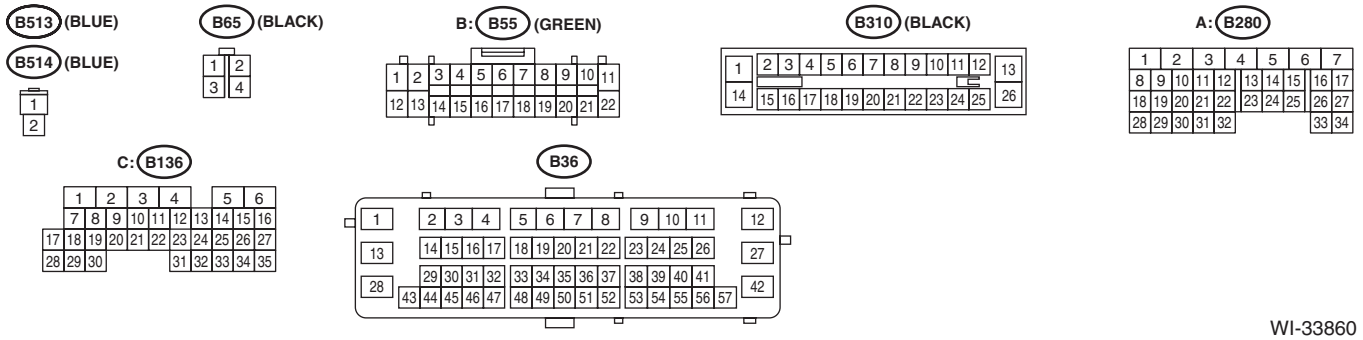

WI-33860

S/L-02

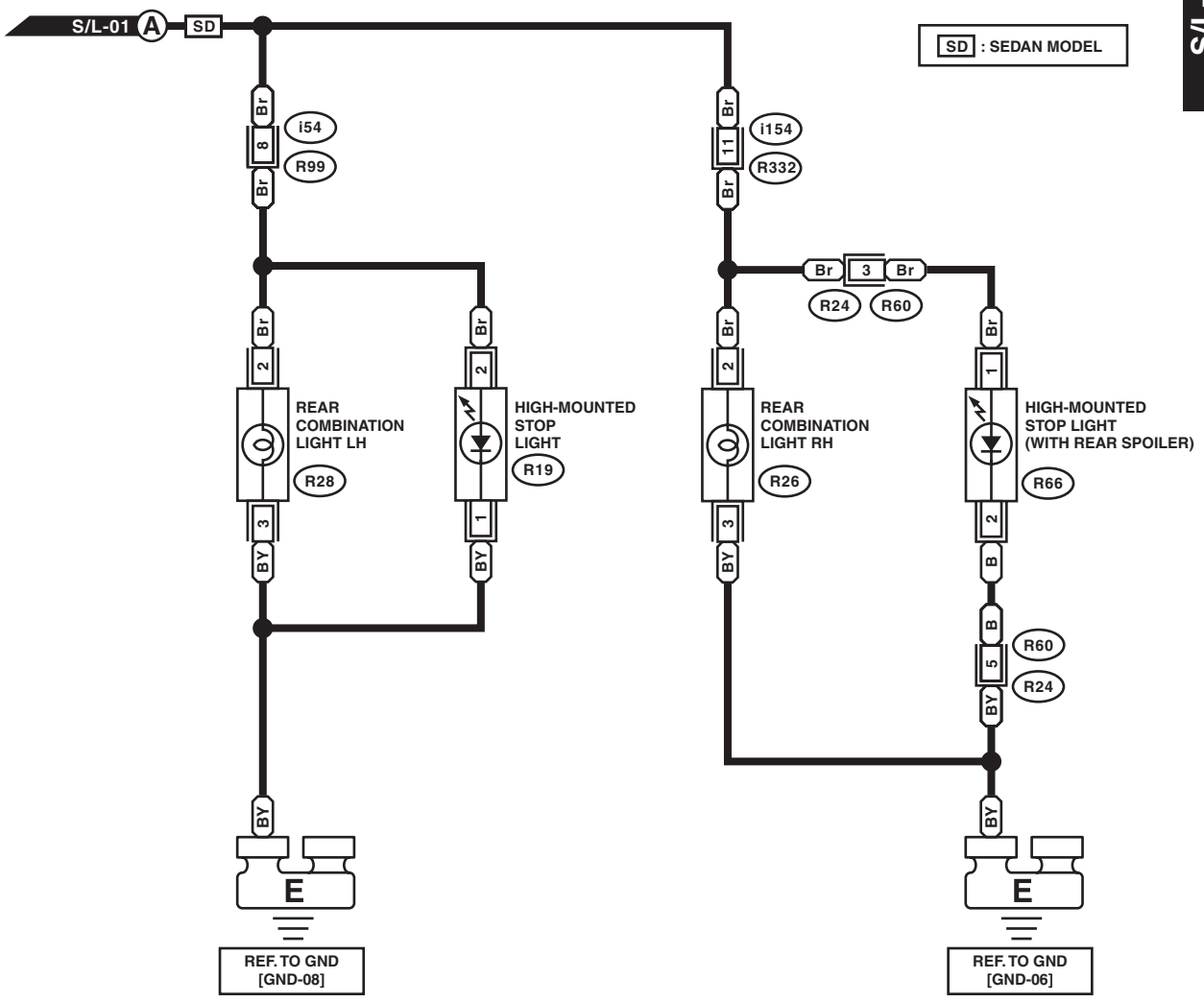

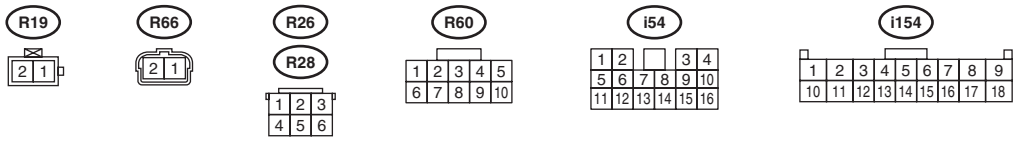

WI-29426

S/L-03

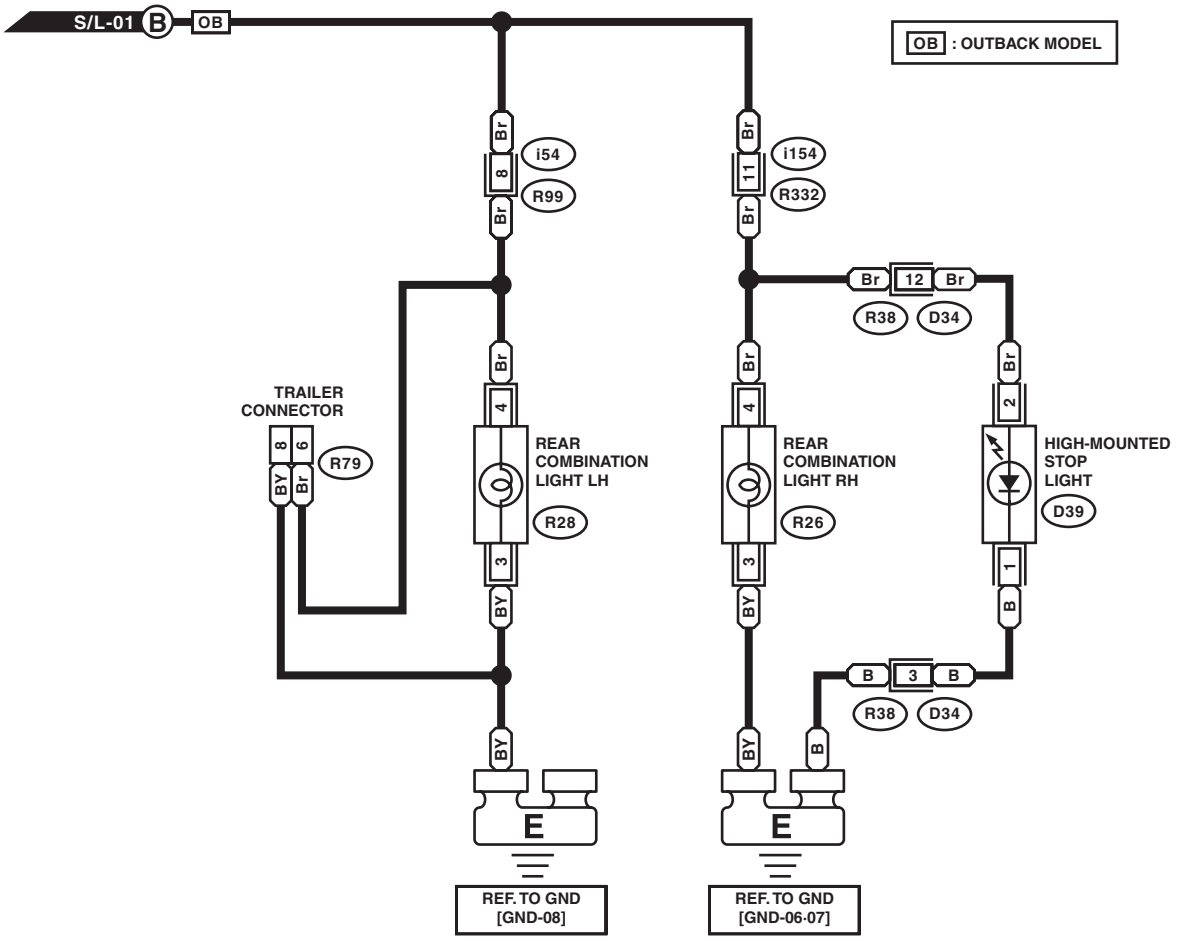

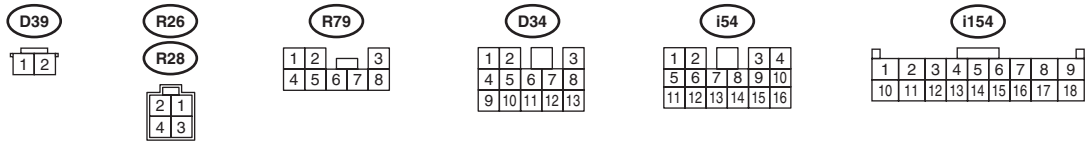

WI-29427

49.Sunroof Control System

A: WIRING DIAGRAM

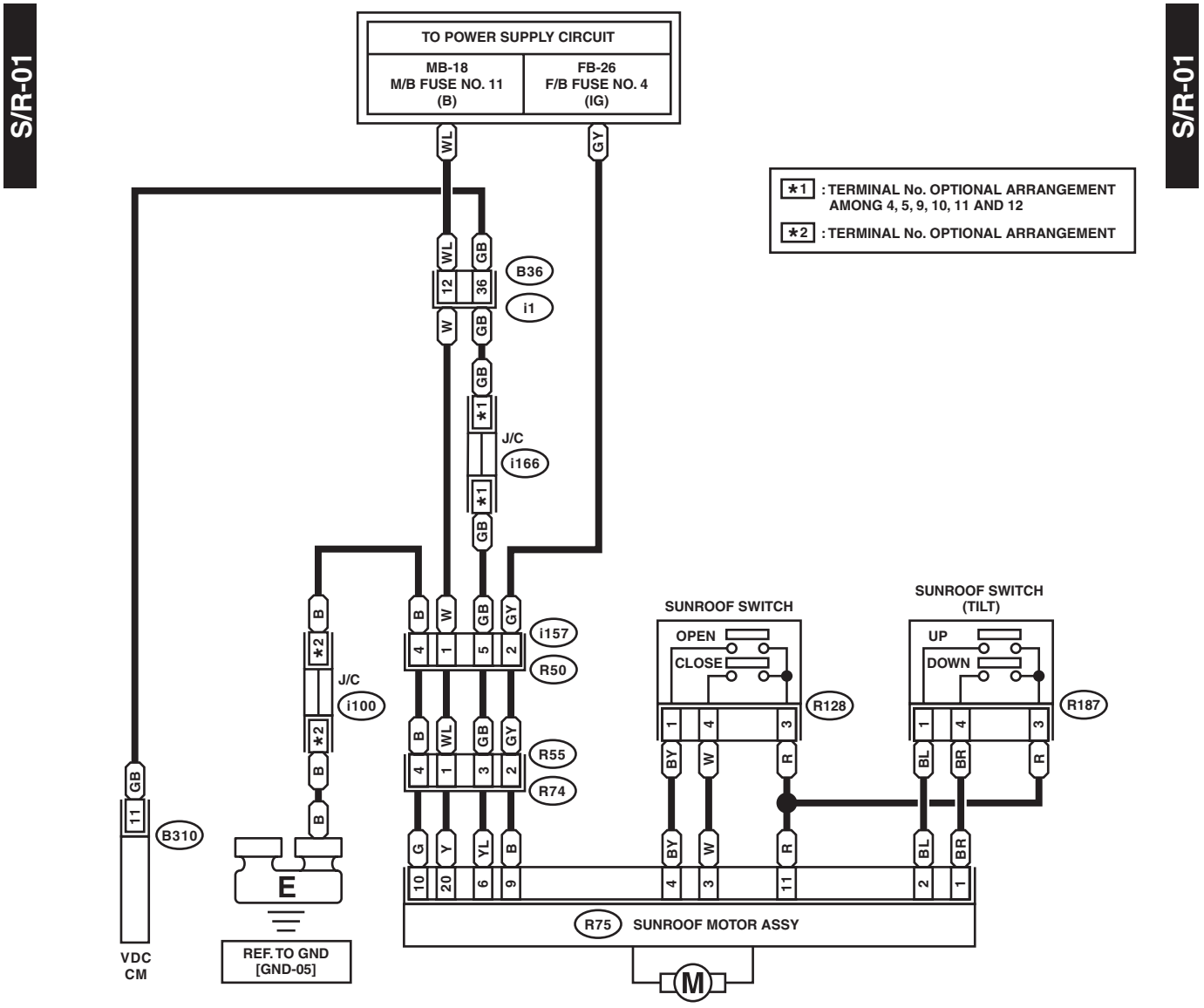

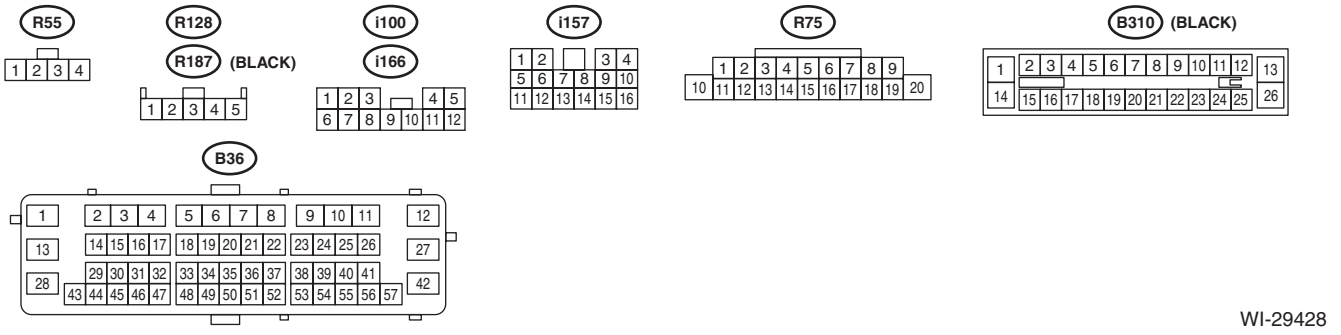

WI-29428

50.Tire Pressure Monitoring System

A: WIRING DIAGRAM

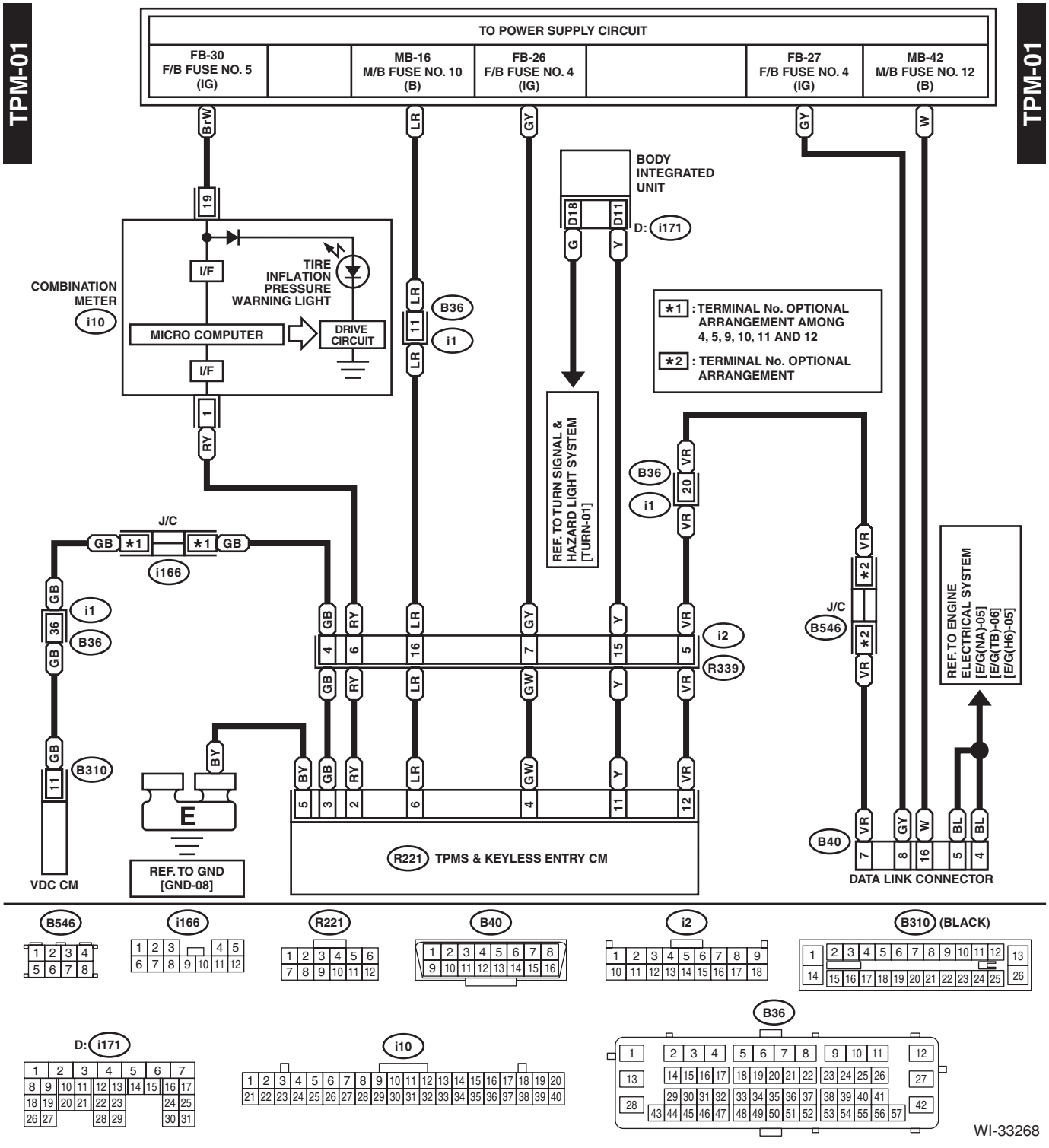

51.Turn Signal Light and Hazard Light System

A: WIRING DIAGRAM

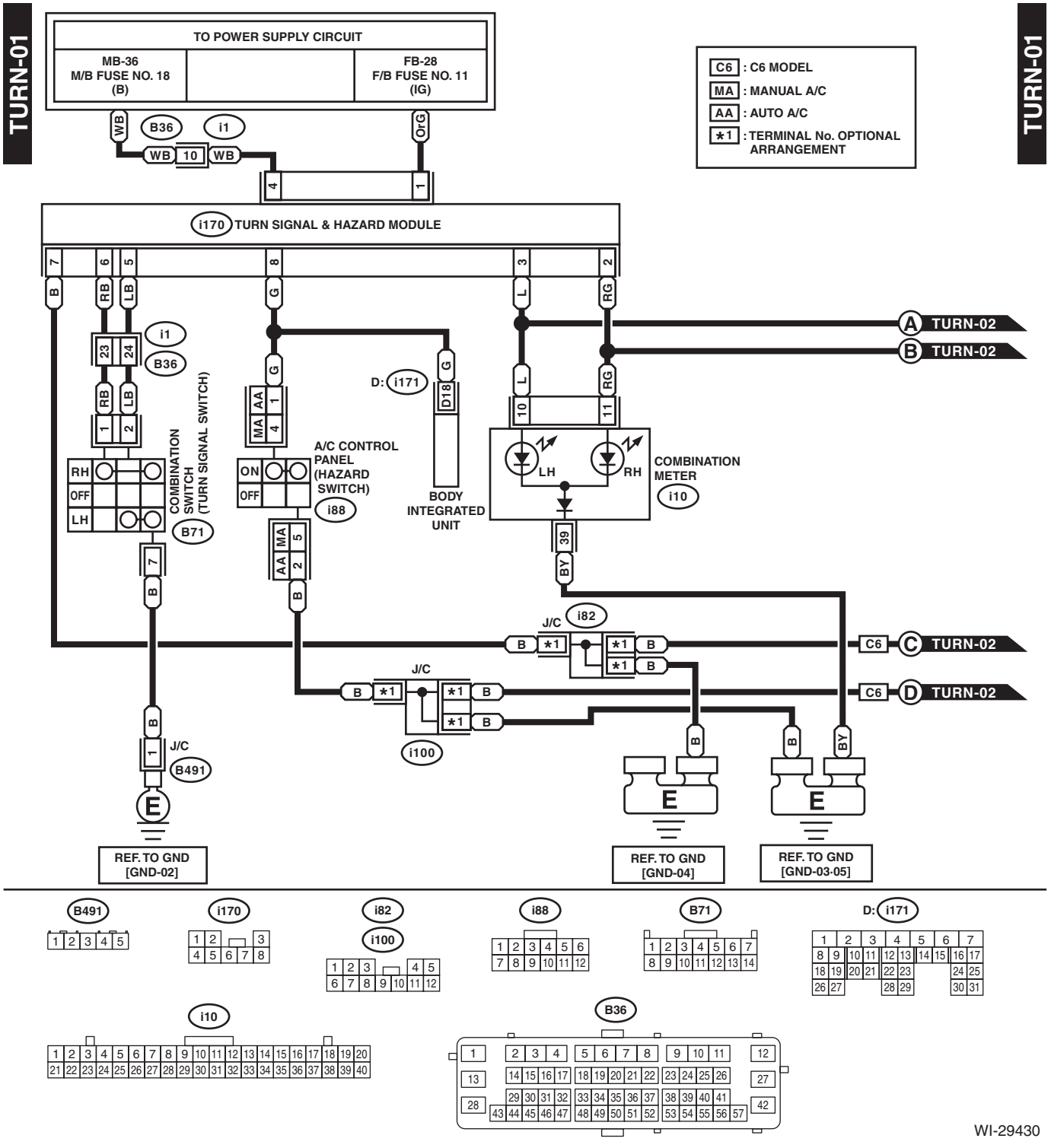

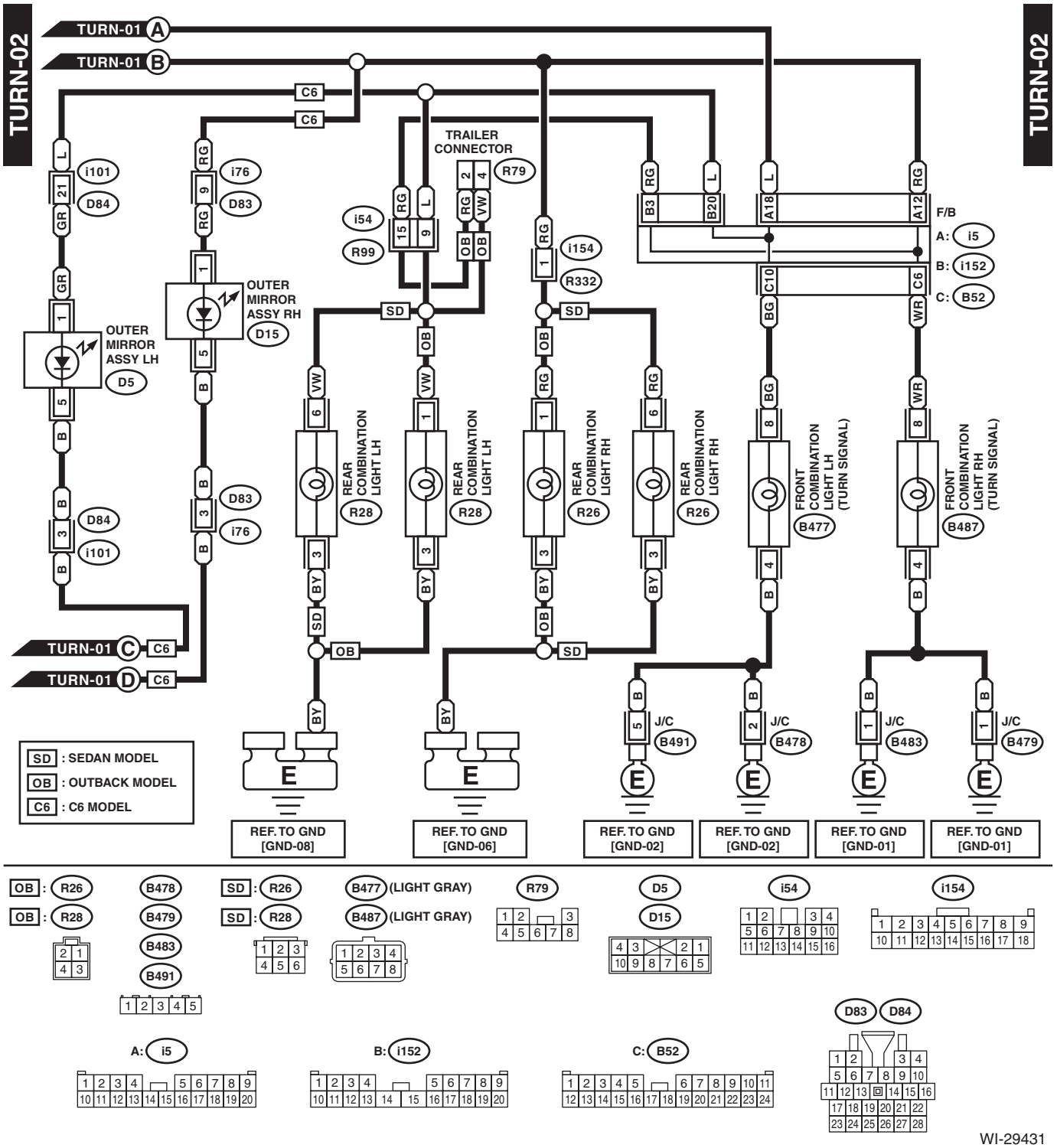
TURN-02
TURN-01 A
TURN-01 B
TURN-01 C
TURN-01 D
C6
TRAILER CONNECTOR
R79
i101
D84
i76
D83
i54
R99
i154
R332
OUTER MIRROR ASSY LH
D5
OUTER MIRROR ASSY RH
D15
REAR COMBINATION LIGHT LH
R28
REAR COMBINATION LIGHT RH
R26
FRONT COMBINATION LIGHT LH (TURN SIGNAL)
B477
FRONT COMBINATION LIGHT RH (TURN SIGNAL)
B487
F/B
A: i5
B: i152
C: B52
J/C
B491
B478
B483
B479
SD : SEDAN MODEL
OB : OUTBACK MODEL
C6 : C6 MODEL
REF. TO GND [GND-08]
REF. TO GND [GND-06]
REF. TO GND [GND-02]
REF. TO GND [GND-02]
REF. TO GND [GND-01]
REF. TO GND [GND-01]
OB : R26
OB : R28
SD : R26
SD : R28
B478
B479
B483
B491
B477 (LIGHT GRAY)
B487 (LIGHT GRAY)
R79
D5
D15
i54
i154
A: i5
B: i152
C: B52
D83
D84

WI-29431

52.Vehicle Dynamics Control System

A: WIRING DIAGRAM

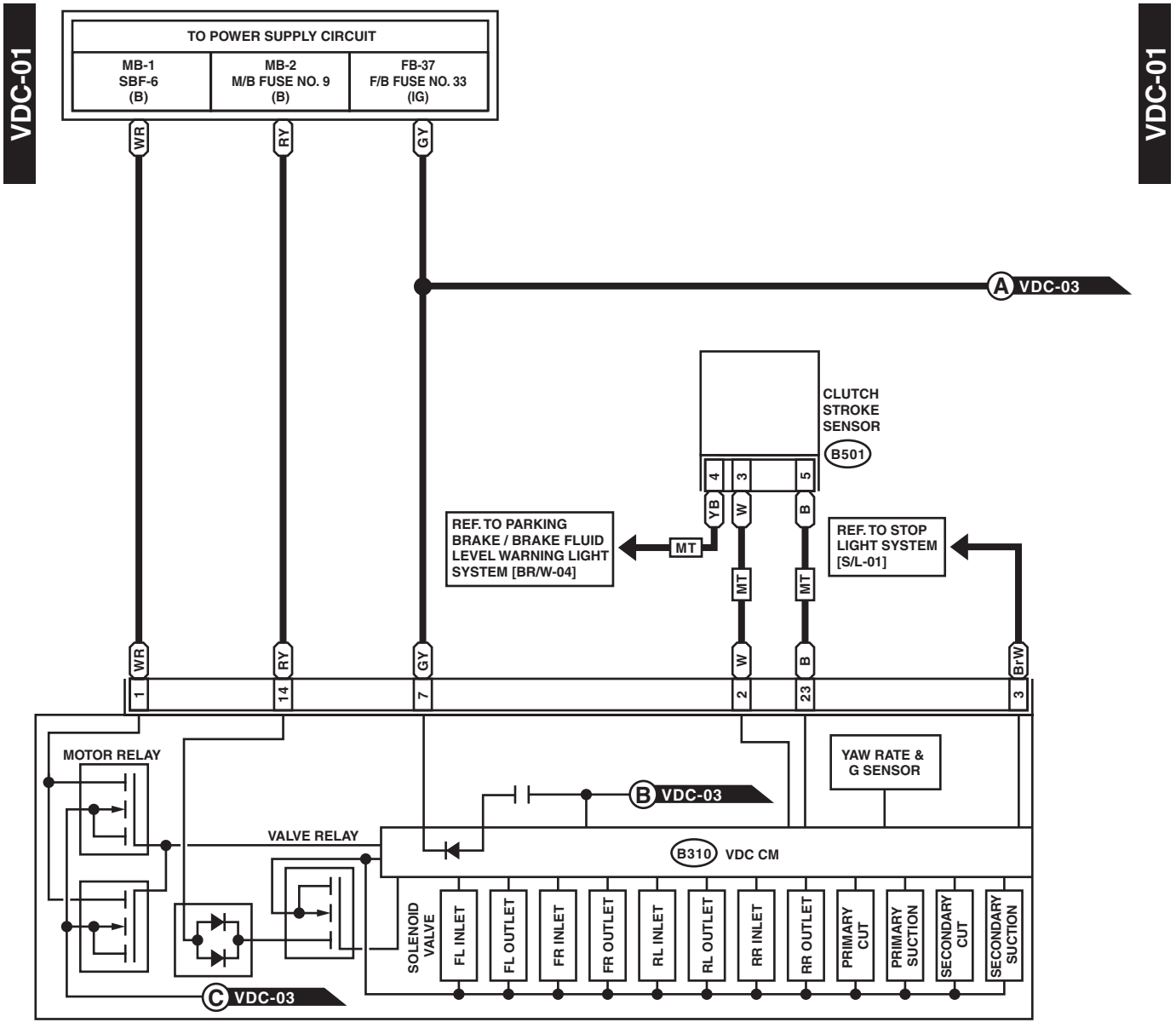

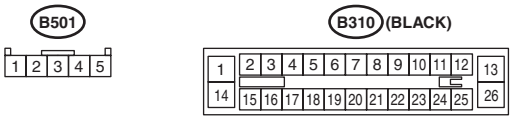

WI-25602

VDC-02

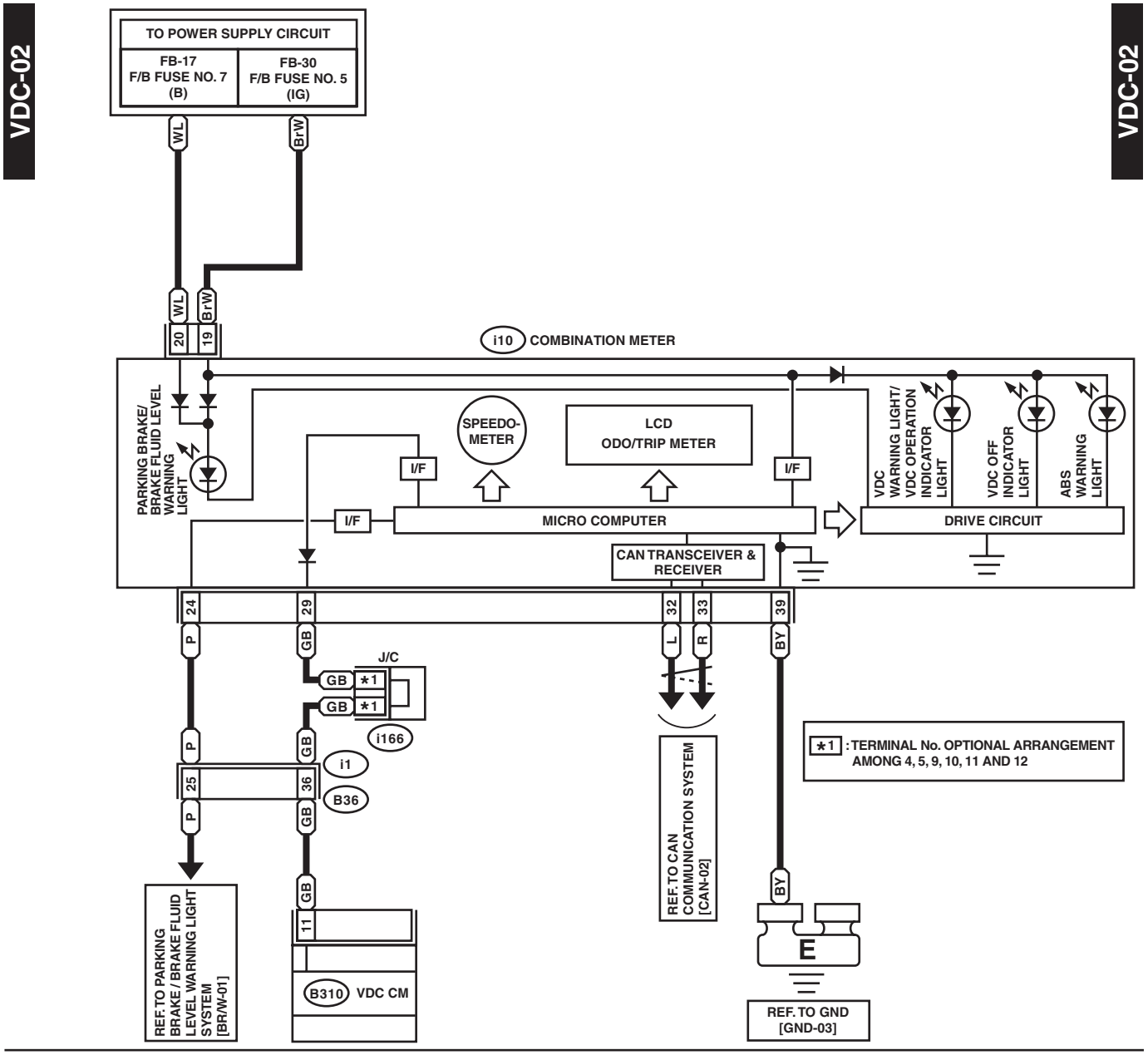

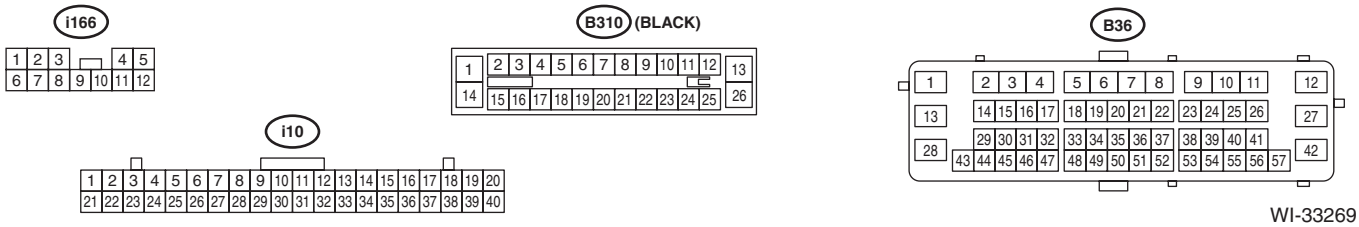

WI-33269

VDC-02

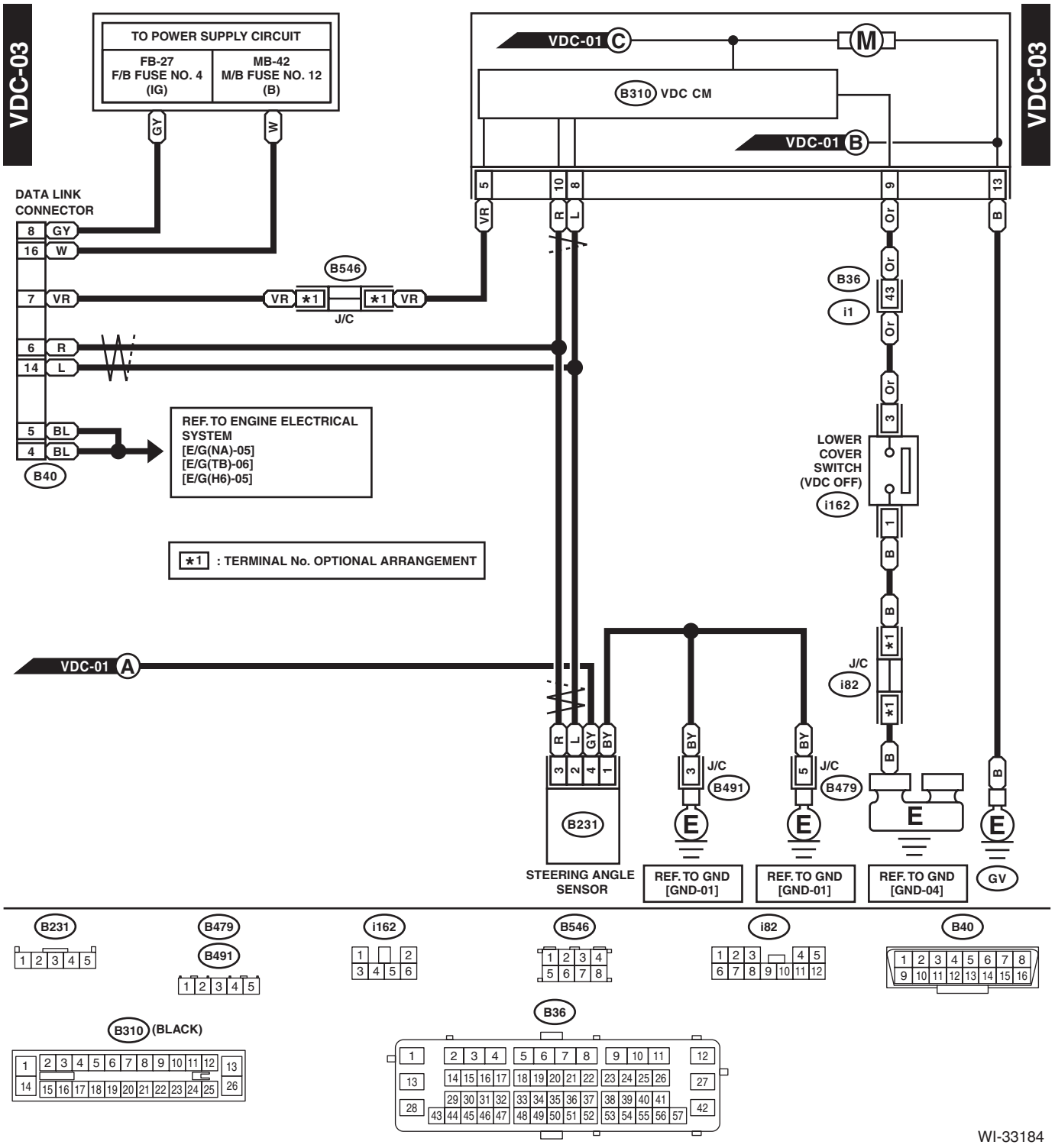
VDC-03
TO POWER SUPPLY CIRCUIT
FB-27
F/B FUSE NO. 4
(IG)
MB-42
M/B FUSE NO. 12
(B)
GY
W
VDC-01 C
M
B310 VDC CM
VDC-01 B
VDC-03
DATA LINK
CONNECTOR
8 GY
16 W
7 VR
6 R
14 L
5 BL
4 BL
B40
B546
VR *1 *1 VR
J/C
REF. TO ENGINE ELECTRICAL
SYSTEM
[E/G(NA)-05]
[E/G(TB)-06]
[E/G(H6)-05]
*1 : TERMINAL No. OPTIONAL ARRANGEMENT
VDC-01 A
5 10 8 9 13
VR R L Or B
B36
i1
43
Or
Or
3
LOWER
COVER
SWITCH
(VDC OFF)
i162
1
B
B
*1
J/C
i82
*1
B
R L GY BY
3 2 4 1
B231
STEERING ANGLE
SENSOR
BY
3
J/C
B491
BY
5
J/C
B479
E
E
E
E
REF. TO GND
[GND-01]
REF. TO GND
[GND-01]
REF. TO GND
[GND-04]
GV
B231
1 2 3 4 5
B479
B491
1 2 3 4 5
i162
1 2
3 4 5 6
B546
1 2 3 4
5 6 7 8
i82
1 2 3 4 5
6 7 8 9 10 11 12
B40
1 2 3 4 5 6 7 8
9 10 11 12 13 14 15 16
B310 (BLACK)
1 2 3 4 5 6 7 8 9 10 11 12 13
14 15 16 17 18 19 20 21 22 23 24 25 26
B36
1 2 3 4 5 6 7 8 9 10 11 12
13 14 15 16 17 18 19 20 21 22 23 24 25 26 27
28 29 30 31 32 33 34 35 36 37 38 39 40 41 42
43 44 45 46 47 48 49 50 51 52 53 54 55 56 57

WI-33184

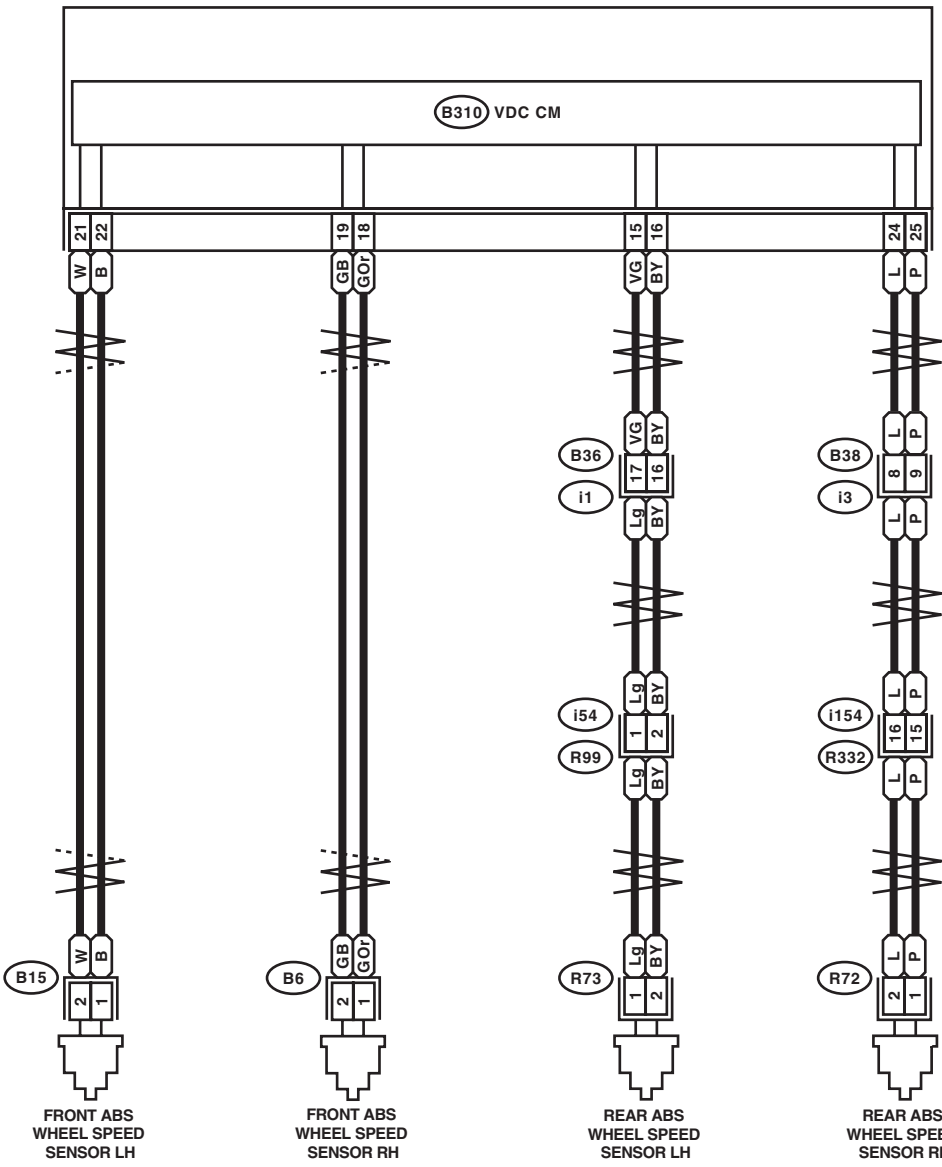
B310 VDC CM
21 22 19 18 15 16 24 25
W B GB GOr VG BY L P
B36
i1
B38
i3
i54
R99
i154
R332
B15
B6
R73
R72
FRONT ABS WHEEL SPEED SENSOR LH
FRONT ABS WHEEL SPEED SENSOR RH
REAR ABS WHEEL SPEED SENSOR LH
REAR ABS WHEEL SPEED SENSOR RH

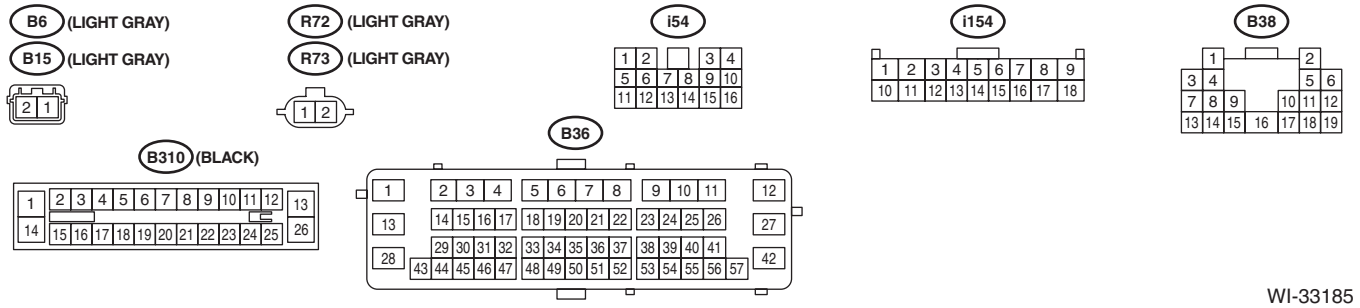
B6 (LIGHT GRAY)
B15 (LIGHT GRAY)
R72 (LIGHT GRAY)
R73 (LIGHT GRAY)
i54
i154
B38
B310 (BLACK)
B36

WI-33185

53.Wiper Deicer System

A: WIRING DIAGRAM

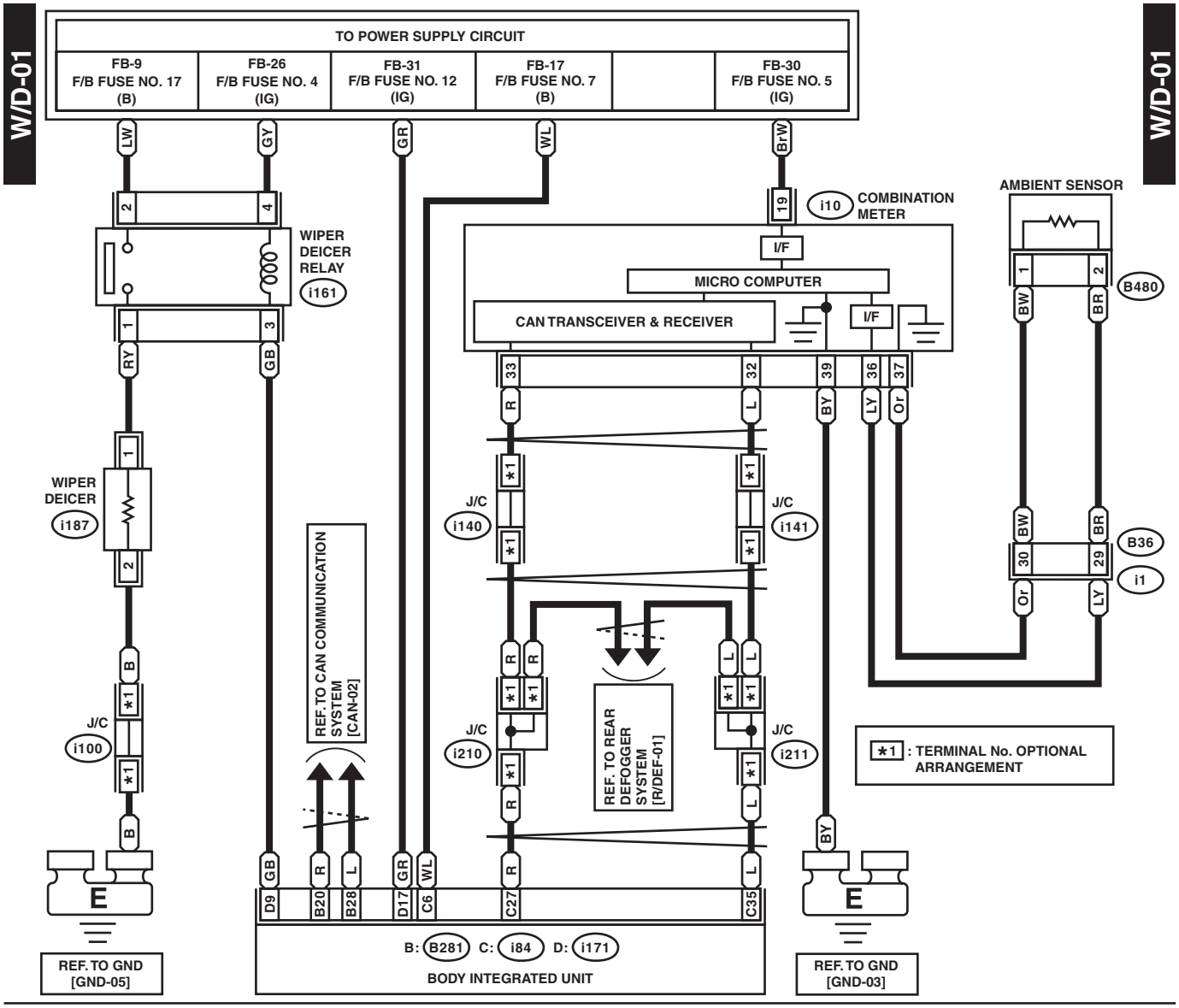

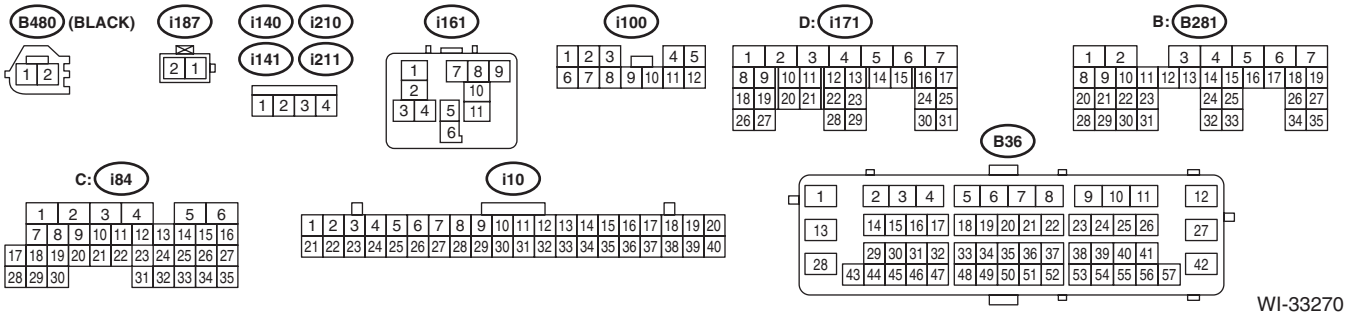

WI-33270

54.Harness Components Location

A: LOCATION

1. SEDAN MODEL

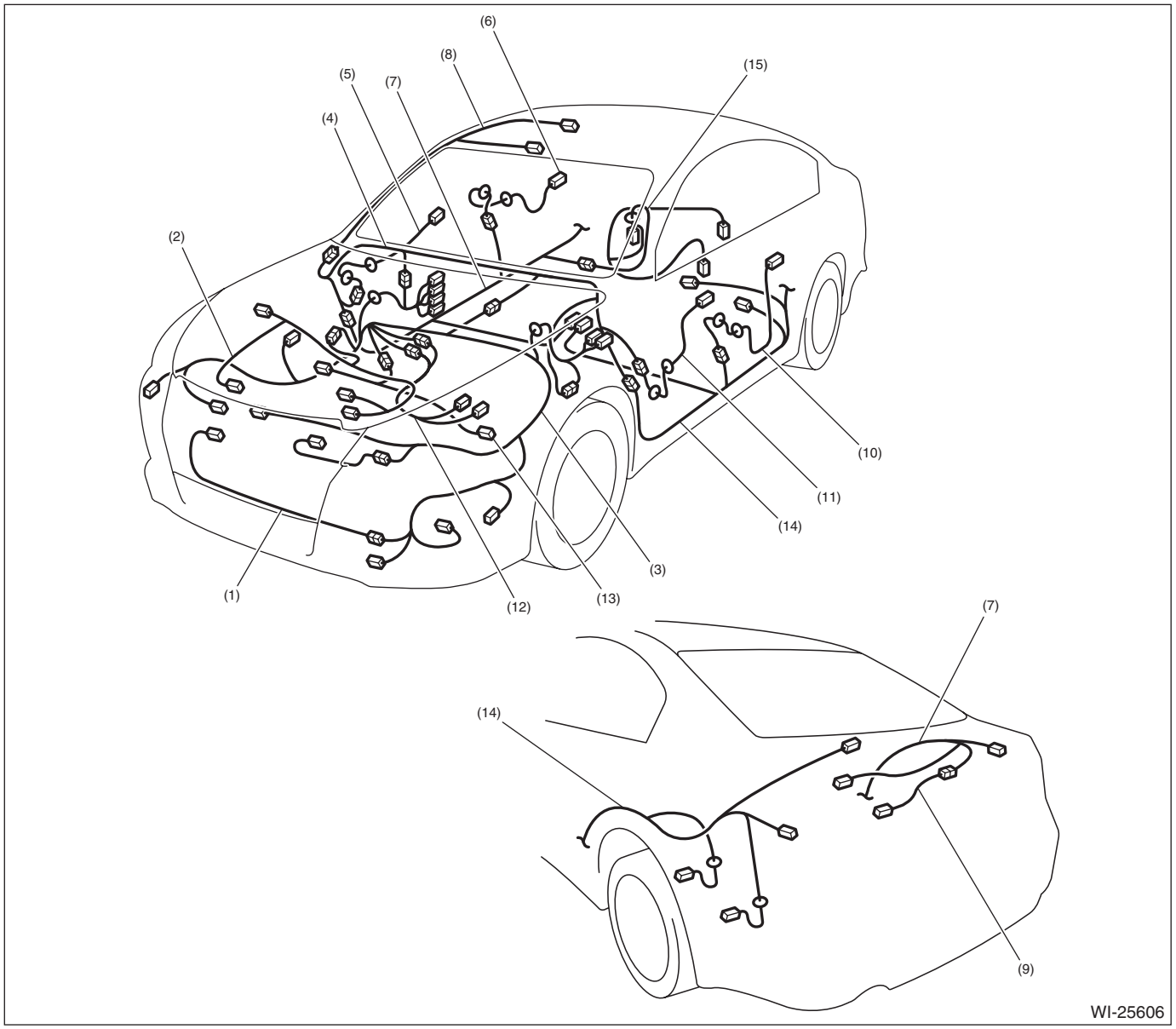

(1) Front wiring harness
(2) Engine wiring harness
(3) Bulkhead wiring harness
(4) Instrument panel wiring harness
(5) Front door cord RH
(6) Rear door cord RH
(7) Rear wiring harness RH
(8) Roof cord
(9) Trunk lid cord
(10) Rear door cord LH
(11) Front door cord LH
(12) Transmission cord
(13) Oxygen sensor cord
(14) Rear wiring harness LH
(15) Fuel cord

2. OUTBACK MODEL

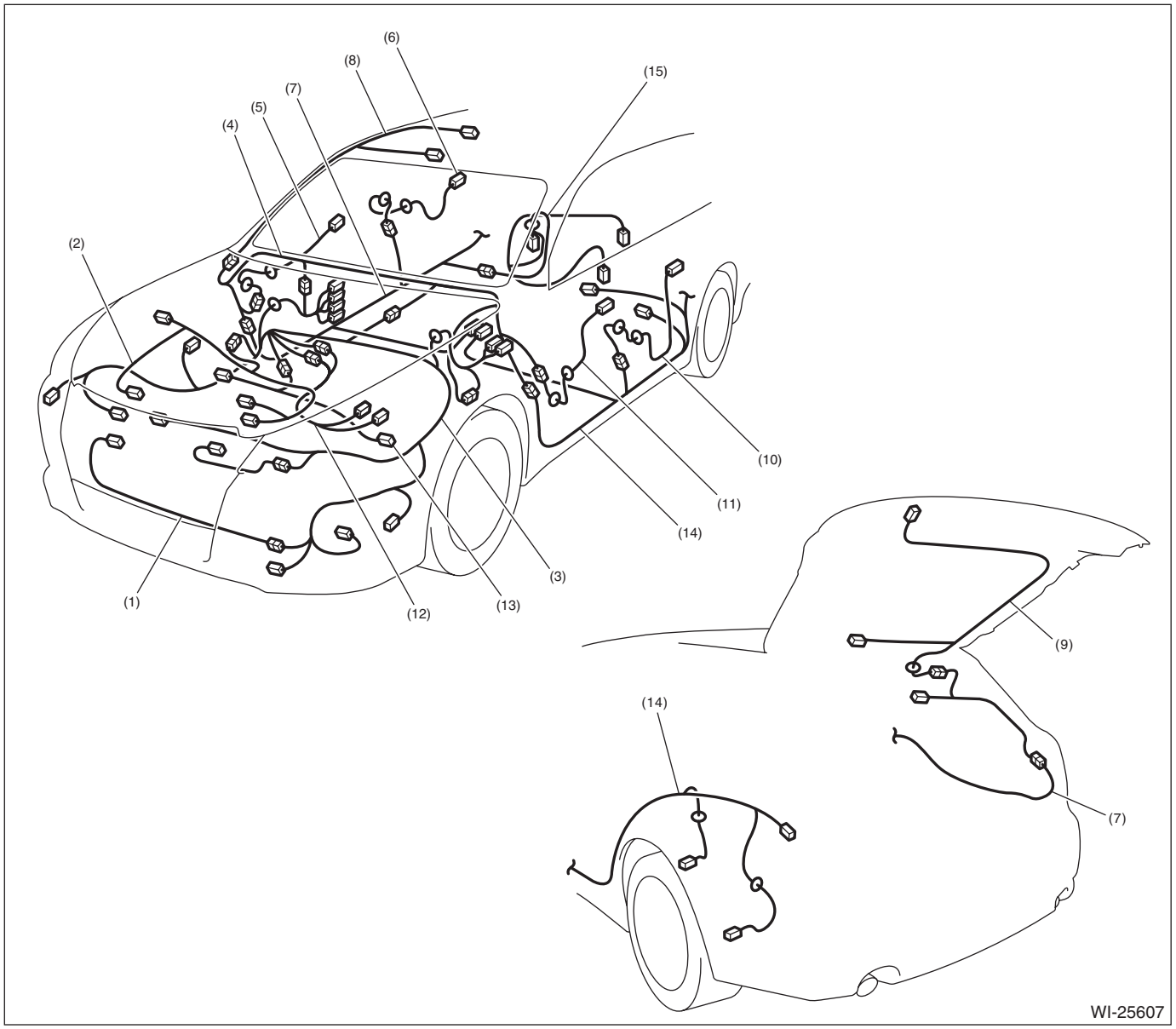

(1)	Front wiring harness	(6)	Rear door cord RH	(11)	Front door cord LH
(2)	Engine wiring harness	(7)	Rear wiring harness RH	(12)	Transmission cord
(3)	Bulkhead wiring harness	(8)	Roof cord	(13)	Oxygen sensor cord
(4)	Instrument panel wiring harness	(9)	Rear gate cord	(14)	Rear wiring harness LH
(5)	Front door cord RH	(10)	Rear door cord LH	(15)	Fuel cord

55.Front Wiring Harness

A: LOCATION

Connector				Connecting to	
No.	Pole	Color	Area	No.	Description
F106	3	Light gray	C-1		Radiator fan CM (3.6 L model)
F135	4	Black	D-3	B504	Bulkhead wiring harness (3.6 L model)

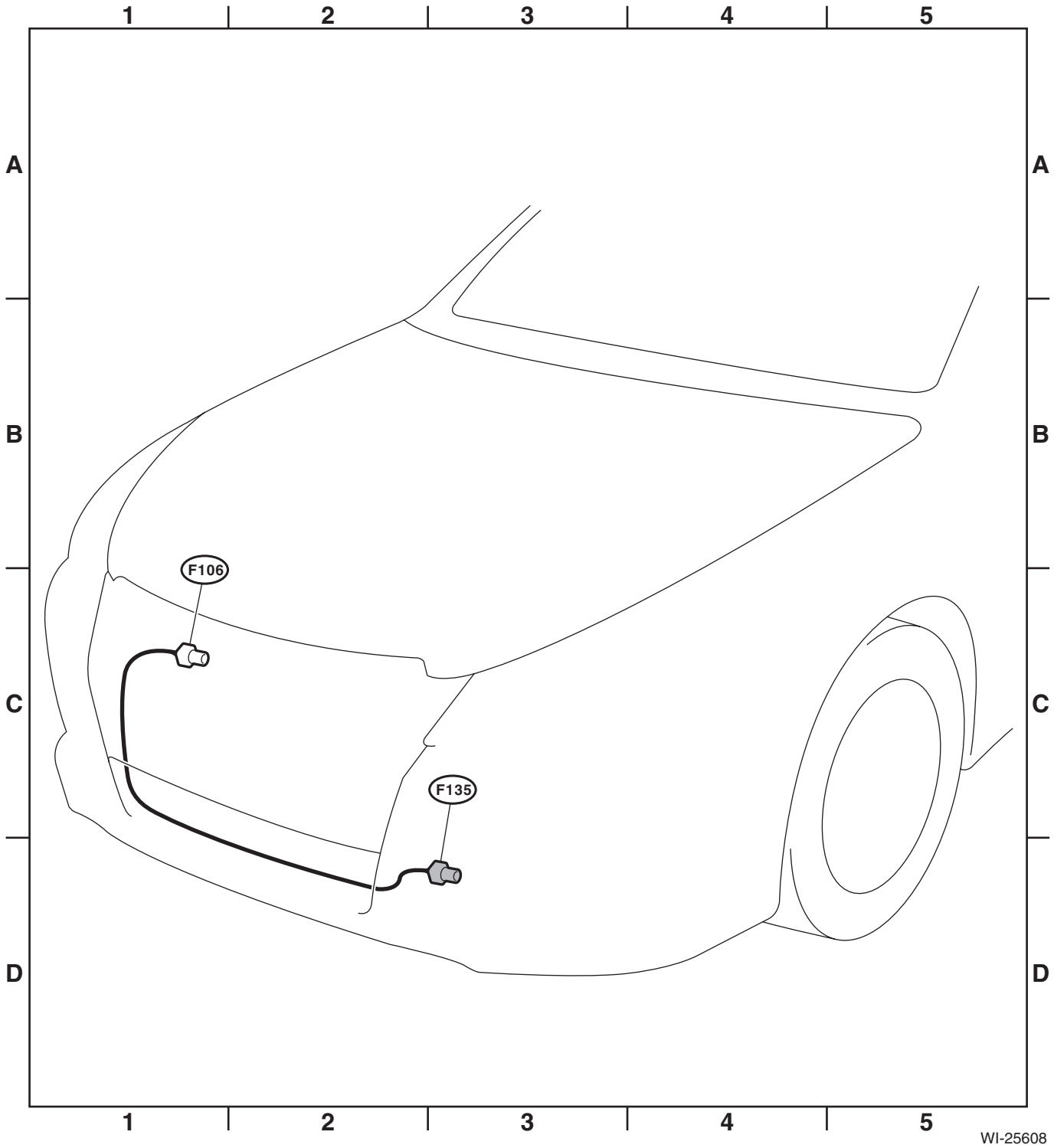

56.Bulkhead Wiring Harness (In Engine Compartment)

A: LOCATION

1. 2.5 L NON-TURBO MODEL

Connector				Connecting to	
No.	Pole	Color	Area	No.	Description
B3	5	Black	B-2		Mass air flow and intake air temperature sensor
B5	2	Light gray	C-5		Daytime running light resistor
B6	2	Light gray	B-2		Front ABS wheel speed sensor RH
B8	5	Light gray	B-5		Front wiper motor
B11	20	Light gray	B-3	T4	Transmission cord (CVT model)
B12	12	Light gray	B-3	T3	
B14	1	Black	B-3		Starter motor
B15	2	Light gray	B-4		Front ABS wheel speed sensor LH
B16	2	Light gray	B-4		Brake fluid level switch
B21	54	Black	B-3	E2	Engine wiring harness
B24	2	Light gray	B-3	T1	Transmission cord (MT model)
B25	2	Brown	B-3	T2	
B146	2	Dark gray	C-4		Front washer motor
B147	2	Dark gray	C-4		Rear washer motor
B310	26	Black	B-2		VDC CM
B321	2	★	A-2		Hood switch
B396	2	Brown	C-4		Washer fluid level sensor
B407	2	Black	C-4		Puddle light LH
B430	2	Black	B-2		Puddle light RH
B471	3	Green	B-2		Generator
B473	2	Black	C-3		Main fan motor
B474	2	Brown	C-4		Front fog light LH
B477	8	Light gray	C-4		Front combination light LH
B478	5	★	C-4		J/C
B479	5	★	C-4		
B480	2	Black	C-2		Ambient sensor
B481	1	★	C-2		Horn
B482	2	Black	C-1		Sub fan motor
B483	5	★	B-2		J/C
B487	8	Light gray	B-1		Front combination light RH
B488	2	Brown	B-1		Front fog light RH
B489	1	Black	B-1		Horn
B490	2	Black	B-1		Keyless buzzer
B497	22	Black	B-5		A/C relay holder
B505	3	Light gray	B-3		Pressure sensor
B506	2	Light gray	B-3		Compressor solenoid
B507	3	Black	C-3		Flow sensor
B515	1	★	B-2		Generator terminal B
★: White or natural color					

Connector				Connecting to	
No.	Pole	Color	Area	No.	Description
AB13	2	Yellow	C-3		Front sub sensor LH
AB16	2	Yellow	B-1		Front sub sensor RH

Bulkhead Wiring Harness (In Engine Compartment)

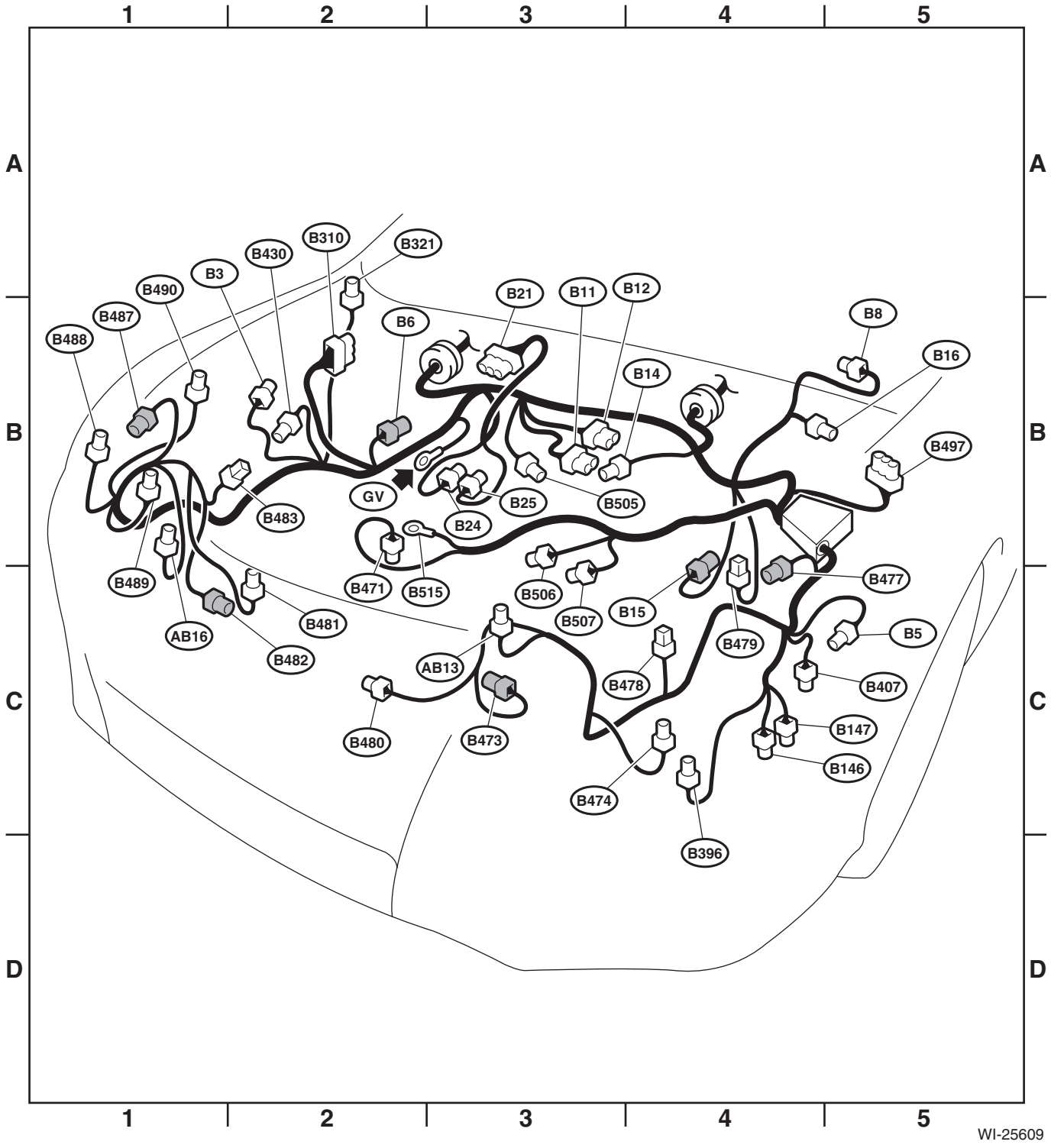

2. 2.5 L TURBO MODEL

Connector				Connecting to	
No.	Pole	Color	Area	No.	Description
B3	5	Black	B-2		Mass air flow and intake air temperature sensor
B5	2	Light gray	C-5		Daytime running light resistor
B6	2	Light gray	B-2		Front ABS wheel speed sensor RH
B8	5	Light gray	B-5		Front wiper motor
B14	1	Black	B-3		Starter motor
B15	2	Light gray	B-4		Front ABS wheel speed sensor LH
B16	2	Light gray	B-4		Brake fluid level switch
B21	54	Black	B-3	E2	Engine wiring harness
B22	16	Brown	B-3	E3	
B24	2	Light gray	B-3	T1	Transmission cord
B25	2	Brown	B-3	T2	
B146	2	Dark gray	C-4		Front washer motor
B147	2	Dark gray	C-4		Rear washer motor
B310	26	Black	B-2		VDC CM
B396	2	Brown	C-4		Washer fluid level sensor
B407	2	Black	C-4		Puddle light LH
B430	2	Black	B-2		Puddle light RH
B471	3	Green	B-2		Generator
B473	2	Dark gray	C-3		Main fan motor
B474	2	Brown	C-4		Front fog light LH
B477	8	Light gray	C-4		Front combination light LH
B478	5	★	C-4		J/C
B479	5	★	C-4		
B480	2	Black	C-2		Ambient sensor
B481	1	★	C-2		Horn
B482	2	Dark gray	C-1		Sub fan motor
B483	5	★	B-2		J/C
B487	8	Light gray	B-1		Front combination light RH
B488	2	Brown	B-1		Front fog light RH
B489	1	Black	B-1		Horn
B490	2	Black	B-1		Keyless buzzer
B497	22	Black	B-5		A/C relay holder
B505	3	Light gray	B-3		Pressure sensor
B506	2	Light gray	B-3		Compressor solenoid
B507	3	Black	C-3		Flow sensor
B515	1	★	B-2		Generator terminal B
★: White or natural color					

Connector				Connecting to	
No.	Pole	Color	Area	No.	Description
AB13	2	Yellow	C-3		Front sub sensor LH
AB16	2	Yellow	B-1		Front sub sensor RH

Bulkhead Wiring Harness (In Engine Compartment)

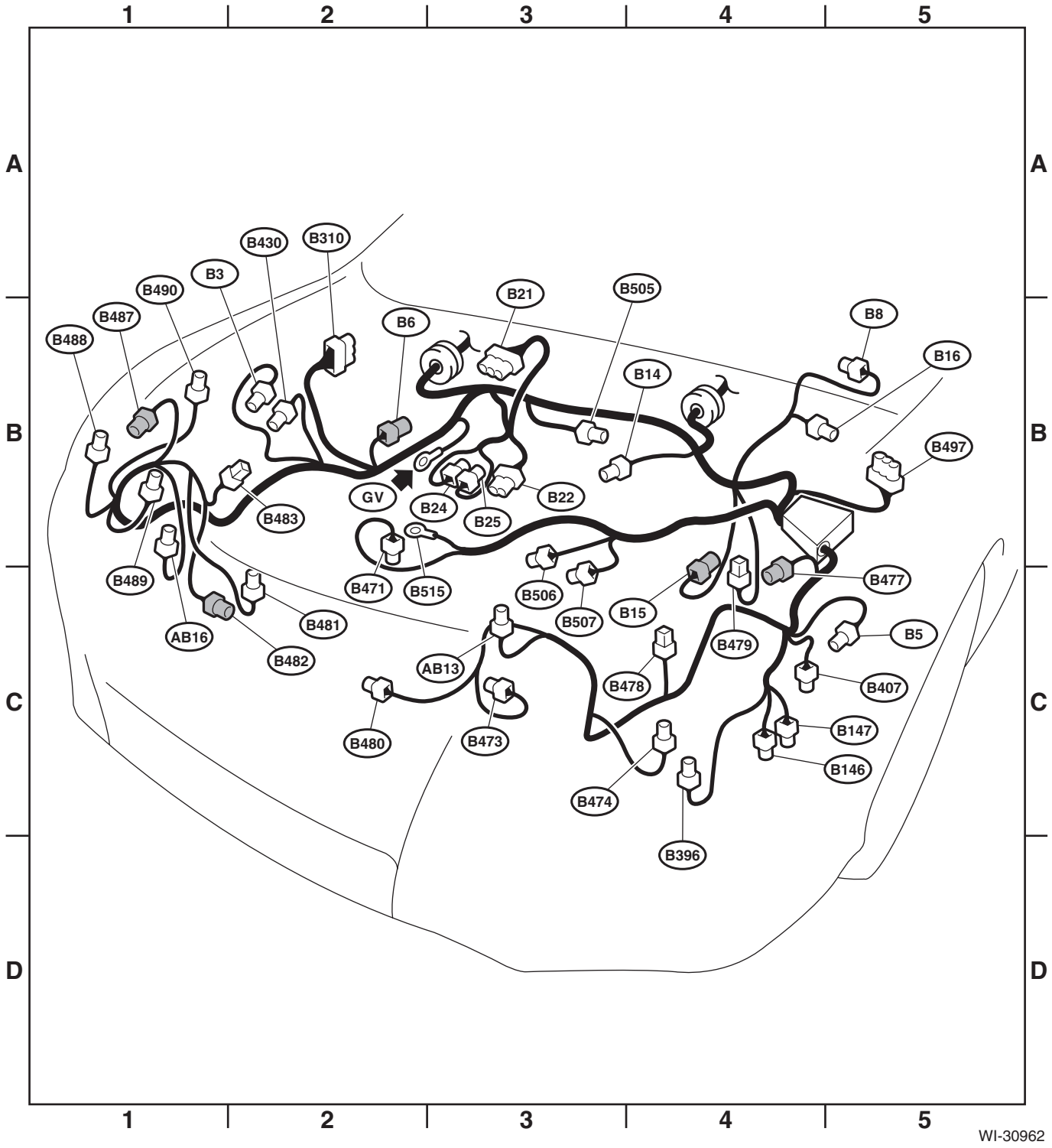

3. 3.6 L MODEL

Connector				Connecting to	
No.	Pole	Color	Area	No.	Description
B3	5	Black	B-2		Mass air flow and intake air temperature sensor
B5	2	Light gray	C-5		Daytime running light resistor
B6	2	Light gray	B-2		Front ABS wheel speed sensor RH
B8	5	Light gray	B-5		Front wiper motor
B11	20	Light gray	B-3	T4	Transmission cord
B12	8	Light gray	B-3	T3	
B14	1	Black	B-3		Starter motor
B15	2	Light gray	B-4		Front ABS wheel speed sensor LH
B16	2	Light gray	B-4		Brake fluid level switch
B21	54	Black	B-3	E2	Engine wiring harness
B22	16	Brown	B-3	E3	
B146	2	Dark gray	C-4		Front washer motor
B147	2	Dark gray	C-4		Rear washer motor
B310	26	Black	B-2		VDC CM
B321	2	★	B-2		Hood switch
B396	2	Brown	C-4		Washer fluid level sensor
B407	2	Black	C-4		Puddle light LH
B430	2	Black	B-2		Puddle light RH
B471	3	Green	B-2		Generator
B474	2	Brown	C-4		Front fog light LH
B477	8	Light gray	C-4		Front combination light LH
B478	5	★	C-4		J/C
B479	5	★	C-4		
B480	2	Black	C-2		Ambient sensor
B481	1	★	C-2		Horn
B483	5	★	B-2		J/C
B487	8	Light gray	B-1		Front combination light RH
B488	2	Brown	B-1		Front fog light RH
B489	1	Black	B-1		Horn
B490	2	Black	B-1		Keyless buzzer
B497	18	Black	B-5		A/C relay holder
B504	4	Black	C-3	F135	Front wiring harness
B505	3	Light gray	B-3		Pressure sensor
B506	2	Light gray	B-3		Compressor solenoid
B507	3	Black	C-3		Flow sensor
B515	1	★	B-2		Generator terminal B
★: White or natural color					

Connector				Connecting to	
No.	Pole	Color	Area	No.	Description
AB13	2	Yellow	C-3		Front sub sensor LH
AB16	2	Yellow	B-1		Front sub sensor RH

Bulkhead Wiring Harness (In Engine Compartment)

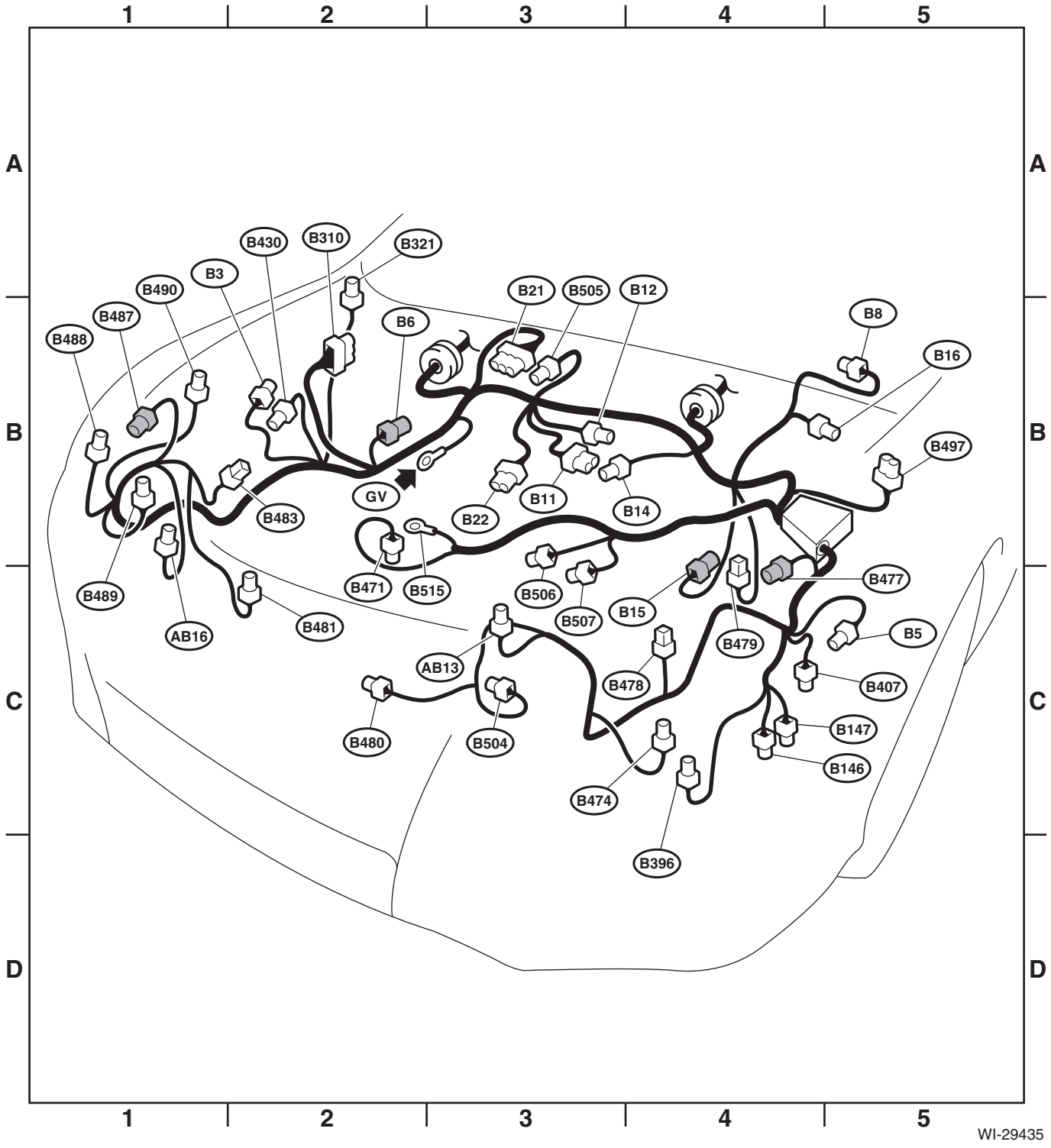

57.Bulkhead Wiring Harness (In Compartment)

A: LOCATION

1. 2.5 L NON-TURBO MODEL

Connector				Connecting to	
No.	Pole	Color	Area	No.	Description
B36	57	★	B-1	i1	Instrument panel wiring harness
B38	19	★	B-5	i3	
B40	16	★	B-1		Data link connector
B41	2	Blue	B-1		Power window circuit breaker
B52	24	★	C-1		F/B
B54	26	Green	B-2		TCM
B55	22	Green	C-2		
B65	4	Black	B-2		Stop light and brake switch
B68	16	★	C-2		Roll connector
B70	18	★	C-2		Combination switch
B71	14	★	C-2		
B72	6	★	B-2		Ignition switch
B83	6	★	B-5		J/C
B107	2	Blue	B-2		Clutch switch (model with cruise control)
B116	8	★	C-3		AT select lever
B134	34	★	B-4		ECM
B135	35	★	B-4		
B136	35	★	B-4		
B137	31	★	C-4		
B138	8	★	B-5		J/C
B152	10	Gray	C-1		F/B
B158	8	★	C-2		
B159	9	Brown	C-2		
B180	4	★	C-1		Remote engine start CM
B220	21	Black	B-5		IG relay
					Fuel pump relay
					Main relay
					A/F, oxygen sensor relay
					Electronic throttle control relay
B231	5	★	C-2		Steering angle sensor
B280	34	★	B-2		Body integrated unit
B281	35	★	B-2		
B315	6	Black	B-3		Accelerator pedal position sensor
B350	6	Light gray	C-3		Key warning switch & key lock solenoid
B358	2	★	C-3		AT select lever illumination
B415	2	★	C-3		Immobilizer antenna
B491	5	★	B-1		J/C
B493	4	Black	C-2		Starter relay
B494	4	Black	C-1		Self shut relay
B501	5	★	B-2		Clutch stroke sensor (MT model)
B513	2	Blue	B-3		Stop light condenser
B514	2	Blue	B-3		Stop light register
B516	2	★	B-1	B517	Bulkhead wiring harness
B517	2	★	B-1	B516	

Connector				Connecting to	
No.	Pole	Color	Area	No.	Description
B518	20	★	B-4		Security CM
B546	8	★	B-2		J/C
★: White or natural color					

Connector				Connecting to	
No.	Pole	Color	Area	No.	Description
AB2	4	Yellow	C-2	AB7	Driver's airbag module
AB6	30	Yellow	D-4		Airbag CM
AB9	4	Yellow	C-4		Passenger's airbag module
AB35	2	★	C-1		F/B
★: White or natural color					

Bulkhead Wiring Harness (In Compartment)

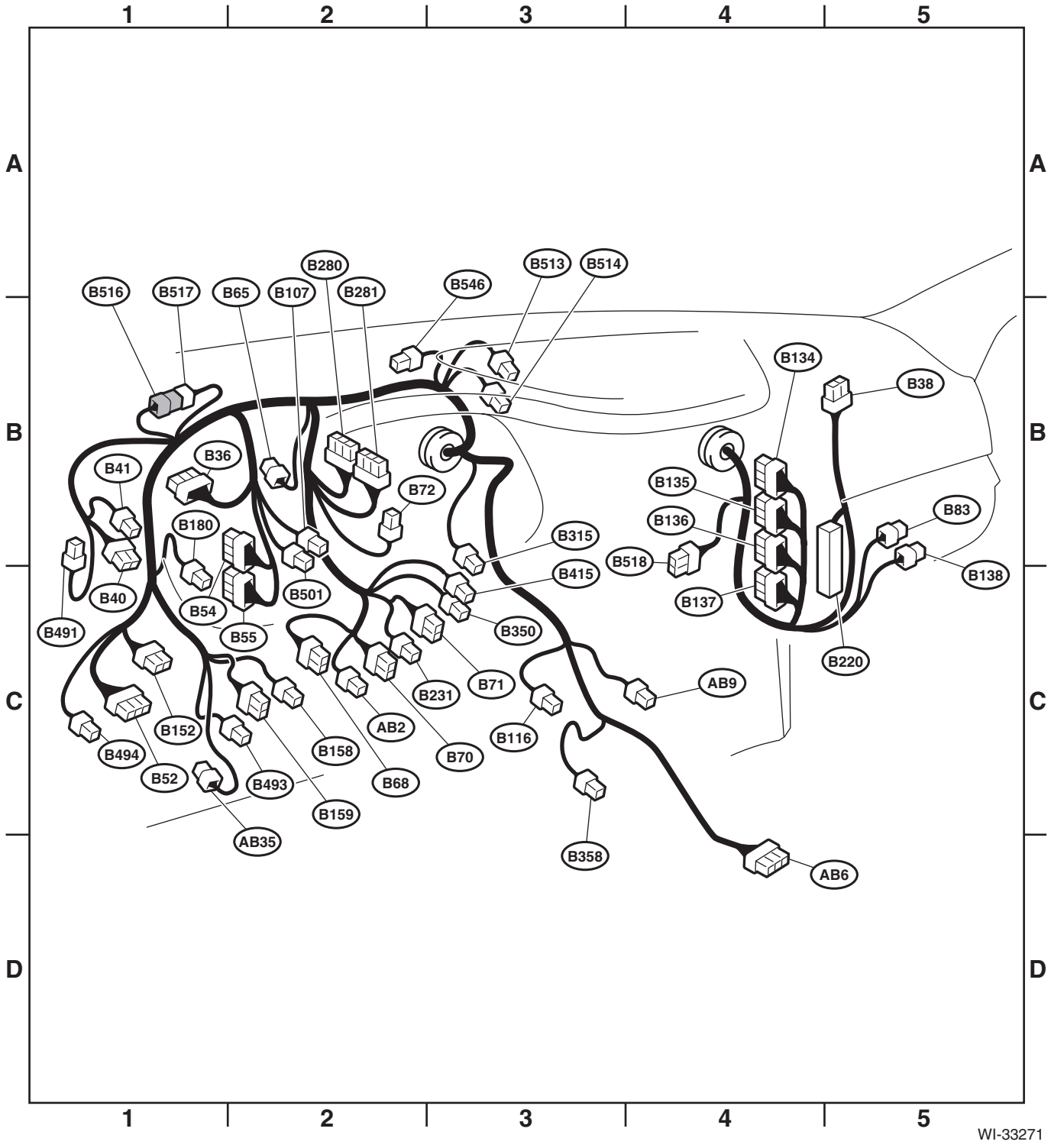

2. 2.5 L TURBO MODEL

Connector				Connecting to	
No.	Pole	Color	Area	No.	Description
B36	57	★	B-1	i1	Instrument panel wiring harness
B38	19	★	B-5	i3	
B40	16	★	B-1		Data link connector
B41	2	Blue	B-1		Power window circuit breaker
B52	24	★	C-1		F/B
B65	4	Black	B-2		Stop light and brake switch
B68	16	★	C-2		Roll connector
B70	18	★	C-2		Combination switch
B71	14	★	C-2		
B72	6	★	B-2		Ignition switch
B83	6	★	B-5		J/C
B107	2	Blue	C-2		Clutch switch (model with cruise control)
B134	34	★	B-4		ECM
B135	35	★	B-4		
B136	35	★	B-4		
B137	31	★	C-4		
B138	8	★	B-5		J/C
B152	10	Gray	C-1		F/B
B158	8	★	C-2		
B159	9	Brown	C-2		
B220	21	Black	B-5		Fuel pump relay
					Main relay
					A/F, oxygen sensor relay
					Electronic throttle control relay
B231	5	★	C-2		Steering angle sensor
B280	34	★	B-2		Body integrated unit
B281	35	★	B-2		
B315	6	Black	B-3		Accelerator pedal position sensor
B350	6	Light gray	C-3		Key warning switch & key lock solenoid
B415	2	★	C-3		Immobilizer antenna
B491	5	★	B-1		J/C
B493	4	Black	C-2		Starter relay
B501	5	★	B-2		Clutch stroke sensor
B513	2	Blue	B-3		Stop light condenser
B514	2	Blue	B-3		Stop light register
B518	20	★	B-4		Security CM
B546	8	★	B-2		J/C
★: White or natural color					

Connector				Connecting to	
No.	Pole	Color	Area	No.	Description
AB2	4	Yellow	C-2	AB7	Driver's airbag module
AB6	30	Yellow	D-4		Airbag CM
AB9	4	Yellow	C-4		Passenger's airbag module
AB35	2	★	C-1		F/B
★: White or natural color					

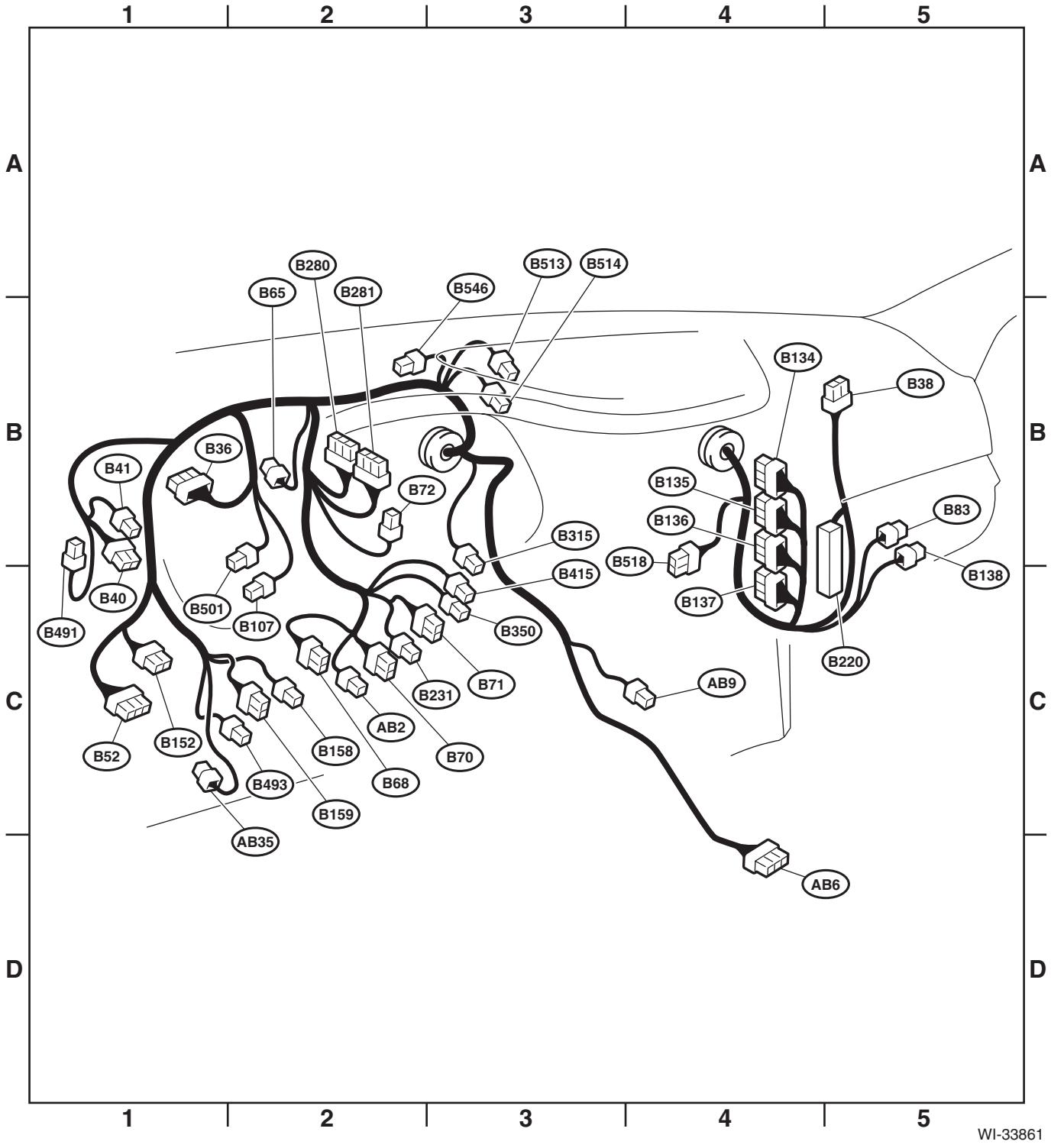
1
2
3
4
5
A
B
C
D
B280
B65
B281
B546
B513
B514
B134
B38
B36
B41
B72
B135
B136
B83
B315
B518
B415
B138
B40
B501
B107
B137
B491
B350
B220
B71
AB9
B231
AB2
B52
B152
B158
B70
B493
B68
B159
AB35
AB6
WI-33861

3. 3.6 L MODEL

Connector				Connecting to	
No.	Pole	Color	Area	No.	Description
B36	57	★	B-1	i1	Instrument panel wiring harness
B38	19	★	B-5	i3	
B40	16	★	B-1		Data link connector
B41	2	Blue	B-1		Power window circuit breaker
B52	24	★	C-1		F/B
B54	35	★	B-2		TCM
B55	35	★	C-2		
B65	4	Black	B-2		Stop light and brake switch
B68	16	★	C-2		Roll connector
B70	18	★	C-2		Combination switch
B71	14	★	C-2		
B72	6	★	B-2		Ignition switch
B83	8	★	B-5		J/C
B116	8	★	C-3		AT select lever
B134	34	★	B-4		ECM
B135	35	★	B-4		
B136	35	★	B-4		
B137	31	★	C-4		
B138	6	★	B-5		J/C
B152	10	Gray	C-1		F/B
B158	8	★	C-2		
B159	9	Brown	C-2		
B180	4	★	C-1		Remote engine start CM
B220	21	Black	B-5		IG relay
					Fuel pump relay
					Main relay
					A/F, oxygen sensor relay
					Electronic throttle control relay
B231	5	★	C-2		Steering angle sensor
B280	34	★	B-2		Body integrated unit
B281	35	★	B-2		
B315	6	Black	B-3		Accelerator pedal position sensor
B350	6	Light gray	C-3		Key warning switch & key lock solenoid
B358	2	★	C-3		AT select lever illumination
B415	2	★	C-3		Immobilizer antenna
B491	5	★	B-1		J/C
B493	4	Black	C-2		Starter relay
B498	4	Black	C-1		Inhibitor relay
B499	4	Black	C-1		Back-up light relay
B503	6	★	C-5		J/C
B513	2	Blue	B-3		Stop light condenser
B514	2	Blue	B-3		Stop light register
B516	2	★	B-1	B517	Bulkhead wiring harness
B517	2	★	B-1	B516	
B518	20	★	B-4		Security CM
B546	8	★	B-2		J/C

★: White or natural color

Bulkhead Wiring Harness (In Compartment)

Connector				Connecting to	
No.	Pole	Color	Area	No.	Description
AB2	4	Yellow	C-2	AB7	Driver's airbag module
AB6	30	Yellow	D-4		Airbag CM
AB9	4	Yellow	C-4		Passenger's airbag module
AB35	2	★	C-1		F/B
★: White or natural color					

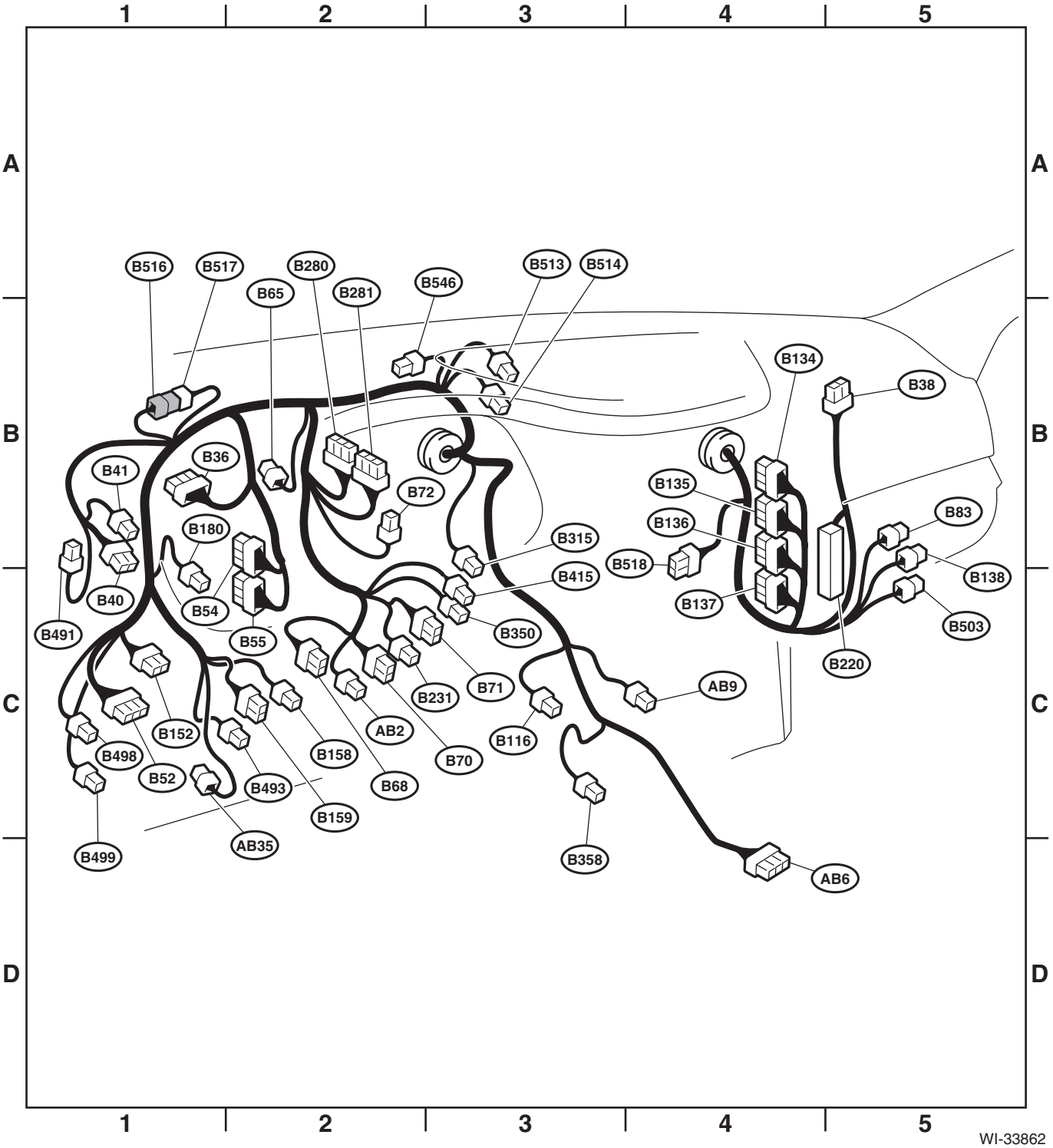

58.Engine Wiring Harness and Transmission Cord

A: LOCATION

1. 2.5 L NON-TURBO MODEL

Connector				Connecting to	
No.	Pole	Color	Area	No.	Description
E2	54	Black	A-2	B21	Bulkhead wiring harness
E4	2	Black	B-3		Purge control solenoid valve
E5	2	Dark gray	B-1		Fuel injector No. 1
E6	2	Dark gray	A-2		Fuel injector No. 3
E8	2	Black	B-2		Engine coolant temperature sensor
E10	2	Light gray	B-3		Crankshaft position sensor
E11	1	Light gray	B-2		Oil pressure switch
E14	2	Black	A-4		Knock sensor
E15	2	Black	B-4		Camshaft position sensor
E16	2	Dark gray	B-4		Fuel injector No. 2
E17	2	Dark gray	B-4		Fuel injector No. 4
E18	6	Dark gray	A-4		EGR control valve
E19	1	★	B-2		Power steering oil pressure switch
E21	3	Black	A-3		Manifold absolute pressure sensor
E24	4	Black	B-1		Front oxygen (A/F) sensor
E25	4	Dark gray	B-1		Rear oxygen sensor
E31	3	★	B-1		Ignition coil No. 1
E32	3	★	B-4		Ignition coil No. 2
E33	3	Black	A-2		Ignition coil No. 3
E34	3	Black	B-5		Ignition coil No. 4
E57	6	Black	A-3		Electronic throttle control
E69	2	Blue	A-2		Oil switching solenoid valve RH
E70	2	Blue	B-4		Oil switching solenoid valve LH
E71	1	★	A-2		Variable valve lift diagnosis oil pressure switch RH
E72	1	★	B-4		Variable valve lift diagnosis oil pressure switch LH
E75	2	Black	A-2		Engine oil temperature sensor
E130	1	★	B-5		Oil level switch
★: White or natural color					

- **MT model**

Connector				Connecting to	
No.	Pole	Color	Area	No.	Description
T1	2	★	C-1	B24	Bulkhead wiring harness
T2	2	Brown	C-1	B25	
★: White or natural color					

- **CVT model**

Connector				Connecting to	
No.	Pole	Color	Area	No.	Description
T3	12	Black	D-4	B12	Bulkhead wiring harness
T4	20	Gray	D-4	B11	
T7	9	Black	D-4		Inhibitor switch
AT1	3	Gray	D-4		Primary speed sensor
AT4	3	Black	D-5		Secondary speed sensor
AT5	3	Gray	D-5		Front wheel speed sensor
AT6	3	Black	D-4		Secondary pressure sensor

Engine Wiring Harness and Transmission Cord

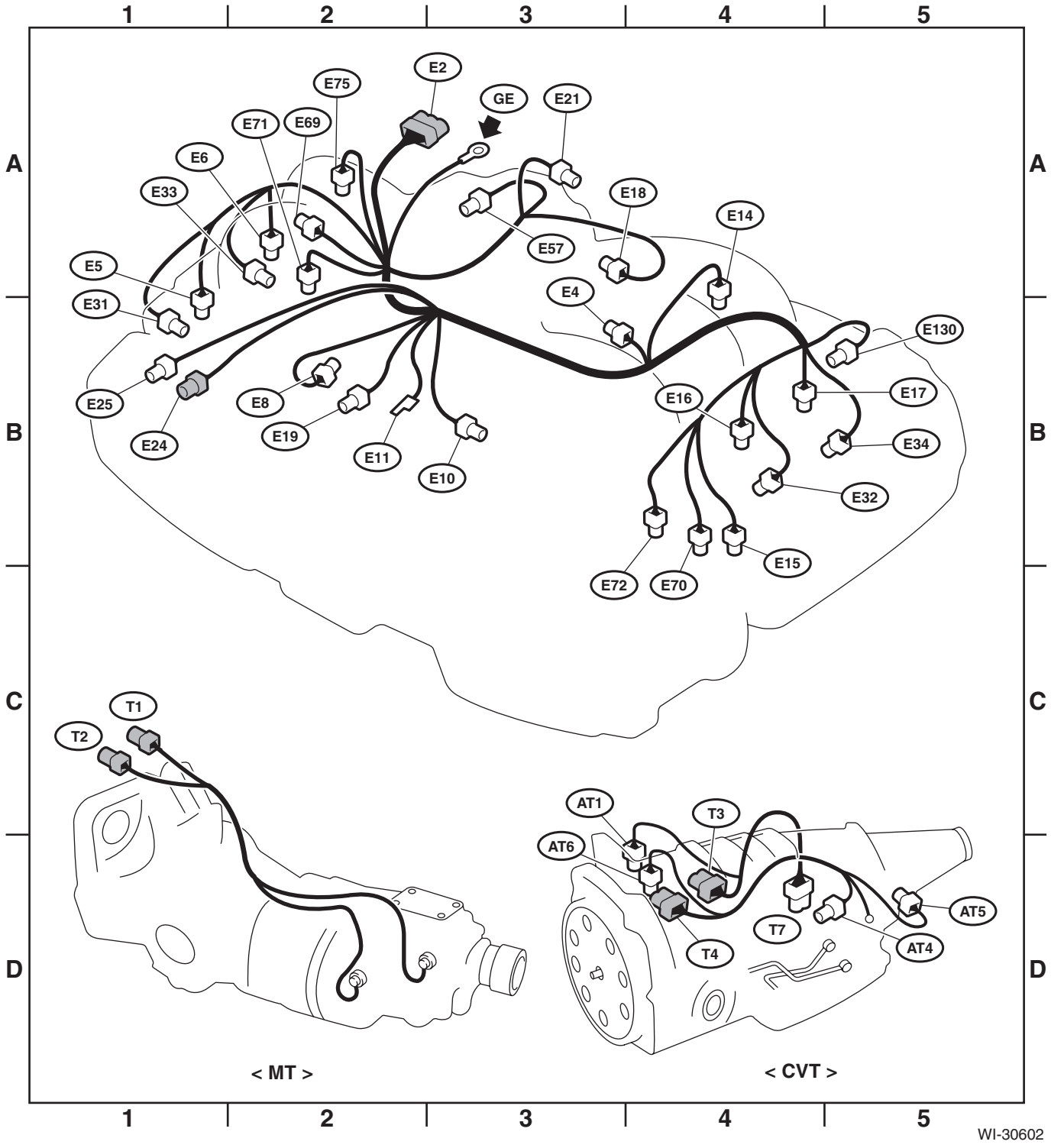

2. 2.5 L TURBO MODEL

Connector				Connecting to	
No.	Pole	Color	Area	No.	Description
E2	54	Black	A-3	B21	Bulkhead wiring harness
E3	16	Brown	A-3	B22	
E4	2	Black	B-3		Purge control solenoid valve 1
E5	2	Dark gray	A-1		Fuel injector No. 1
E6	2	Dark gray	A-2		Fuel injector No. 3
E8	2	Black	B-3		Engine coolant temperature sensor
E10	2	Light gray	B-2		Crankshaft position sensor
E11	1	★	B-3		Oil pressure switch
E14	2	Black	B-4		Knock sensor
E16	2	Dark gray	B-4		Fuel injector No. 2
E17	2	Dark gray	B-4		Fuel injector No. 4
E19	1	★	B-2		Power steering oil pressure switch
E21	3	Black	B-2		Manifold absolute pressure sensor
E24	4	Light gray	B-4		Front oxygen (A/F) sensor
E25	4	Black	B-4		Rear oxygen sensor
E31	3	Gray	B-1		Ignition coil No. 1
E32	3	Gray	B-4		Ignition coil No. 2
E33	3	Gray	B-2		Ignition coil No. 3
E34	3	Gray	B-4		Ignition coil No. 4
E35	3	Black	B-4		Intake camshaft position sensor LH
E36	3	Black	A-2		Intake camshaft position sensor RH
E37	2	Blue	B-4		Intake oil flow control solenoid valve LH
E38	2	Blue	A-2		Intake oil flow control solenoid valve RH
E51	5	Light gray	B-5		Tumble generator valve assembly LH
E52	2	Black	A-3		Purge control solenoid valve 2
E55	5	Light gray	B-1		Tumble generator valve assembly RH
E57	6	Black	A-4		Electronic throttle control
E62	3	Light gray	B-1		Exhaust camshaft position sensor RH
E63	2	Blue	B-1		Exhaust oil flow control solenoid valve RH
E64	2	Black	B-1		Wastegate control solenoid valve
E65	3	Light gray	C-4		Exhaust camshaft position sensor LH
E66	2	Blue	C-4		Exhaust oil flow control solenoid valve LH
E130	1	★	B-5		Oil level switch
★: White or natural color					

Connector				Connecting to	
No.	Pole	Color	Area	No.	Description
T1	2	★	C-2	B24	Bulkhead wiring harness
T2	2	Brown	C-2	B25	
★: White or natural color					

Engine Wiring Harness and Transmission Cord

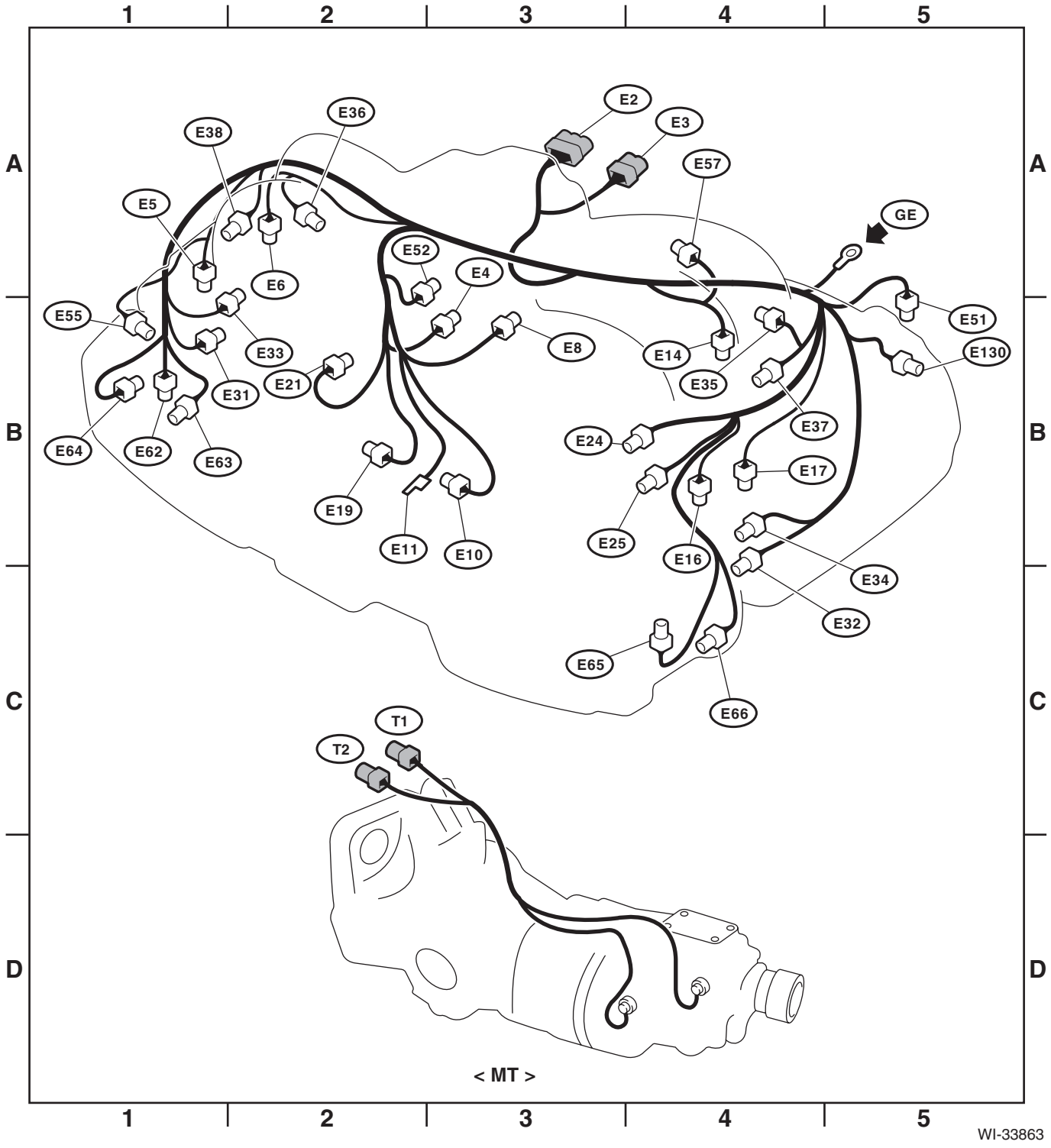

WI-33863

3. 3.6 L MODEL

Connector				Connecting to	
No.	Pole	Color	Area	No.	Description
E2	54	Black	A-3	B21	Bulkhead wiring harness
E3	16	Brown	D-2	B22	
E4	2	Blue	A-2		Purge control solenoid valve
E5	2	Dark gray	A-2		Fuel injector No. 1
E6	2	Dark gray	A-2		Fuel injector No. 3
E8	2	Brown	B-4		Engine coolant temperature sensor
E10	2	Light gray	B-4		Crankshaft position sensor
E11	1	★	B-1		Oil pressure switch
E14	2	Black	B-2		Knock sensor 1
E16	2	Dark gray	B-4		Fuel injector No. 2
E17	2	Dark gray	B-4		Fuel injector No. 4
E18	6	Dark gray	B-3		EGR control valve
E19	1	★	B-2		Power steering oil pressure switch
E21	3	Black	A-3		Manifold absolute pressure sensor
E24	4	Light gray	D-3		Front oxygen (A/F) sensor LH
E25	4	Dark gray	D-3		Rear oxygen sensor LH
E31	3	Gray	B-1		Ignition coil No. 1
E32	3	Gray	C-4		Ignition coil No. 2
E33	3	Gray	B-2		Ignition coil No. 3
E34	3	Gray	B-4		Ignition coil No. 4
E35	3	Black	B-5		Intake camshaft position sensor LH
E36	3	Black	A-2		Intake camshaft position sensor RH
E37	2	Black	B-4		Intake oil flow control solenoid valve LH
E38	2	Black	B-1		Intake oil flow control solenoid valve RH
E43	2	Dark gray	A-2		Fuel injector No. 5
E44	2	Dark gray	B-5		Fuel injector No. 6
E45	3	Gray	B-2		Ignition coil No. 5
E46	3	Gray	B-5		Ignition coil No. 6
E47	4	Light gray	C-2		Front oxygen (A/F) sensor RH
E48	2	Black	A-4		Knock sensor 2
E57	6	Black	A-3		Electronic throttle control
E61	4	Dark gray	C-2		Rear oxygen sensor RH
E62	3	Gray	B-1		Exhaust camshaft position sensor RH
E63	2	Blue	B-1		Exhaust oil flow control solenoid valve RH
E65	3	Gray	C-4		Exhaust camshaft position sensor LH
E66	2	Blue	C-4		Exhaust oil flow control solenoid valve LH
E75	2	Black	B-4		Engine oil temperature sensor
E76	10	Dark gray	A-3	E77	Engine wiring harness
E77	10	Gray	A-3	E76	
E130	1	★	C-4		Oil level switch
★: White or natural color					

- **AT model**

Connector				Connecting to	
No.	Pole	Color	Area	No.	Description
T3	8	Light gray	D-2	B12	Bulkhead wiring harness
T4	20	Light gray	D-2	B11	
AT1	3	Black	D-3		Turbine speed sensor 1
AT4	3	Black	C-4		Rear vehicle speed sensor

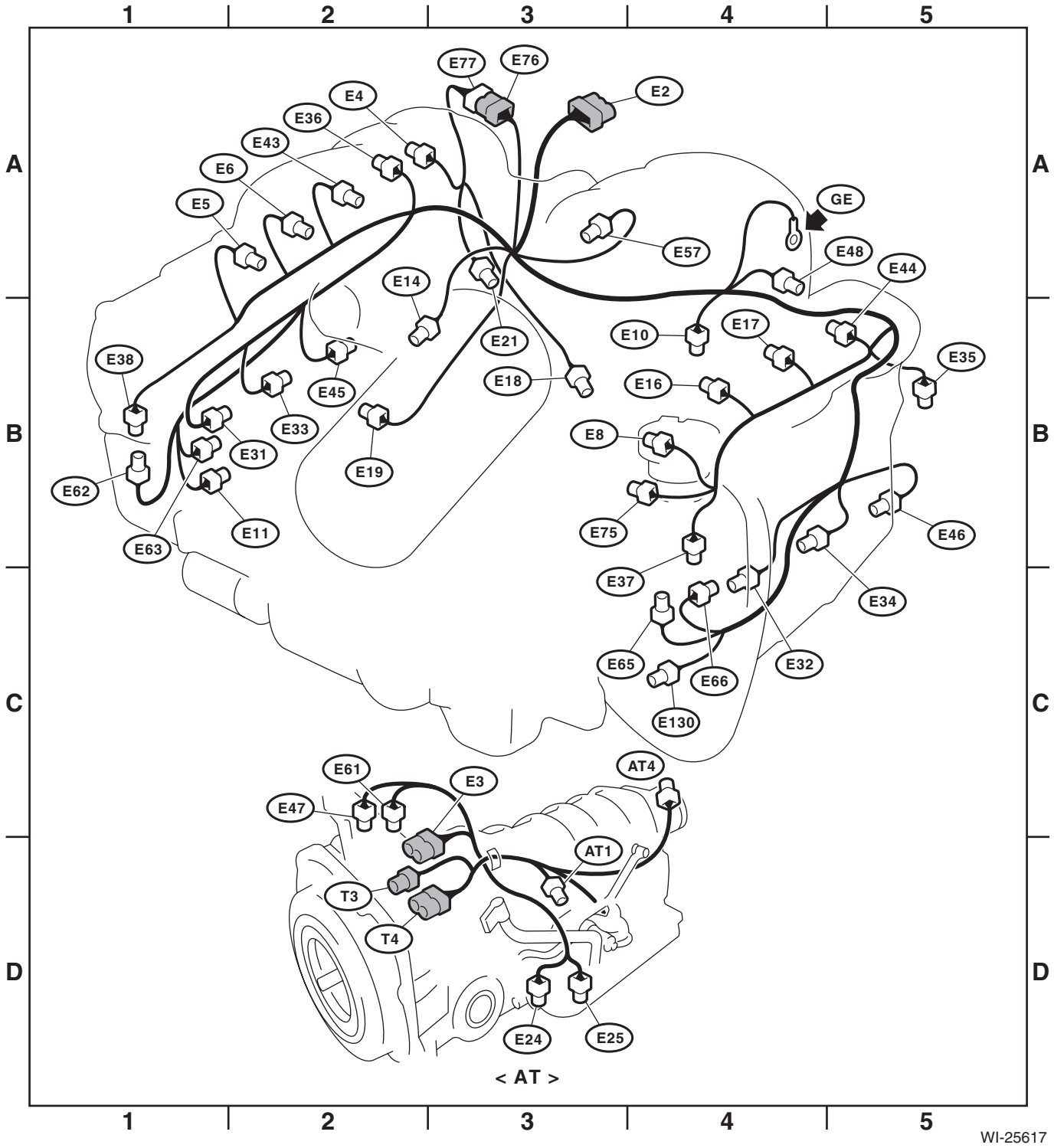
1
2
3
4
5
A
B
C
D
E77
E76
E4
E2
E36
E43
E6
E5
GE
E57
E48
E44
E14
E21
E10
E17
E38
E45
E18
E16
E35
E33
E8
E31
E19
E62
E75
E46
E11
E63
E37
E34
E65
E66
E32
E130
E61
E3
AT4
E47
AT1
T3
T4
E24
E25
< AT >
WI-25617

59.Instrument Panel Wiring Harness

A: LOCATION

Connector				Connecting to	
No.	Pole	Color	Area	No.	Description
i1	57	★	B-1	B36	Bulkhead wiring harness
i2	18	★	C-1	R339	Rear wiring harness LH
i3	19	★	B-4	B38	Bulkhead wiring harness
i5	20	★	C-1		F/B
i6	16	★	C-2		Remote control mirror switch
i10	40	★	B-2		Combination meter
i15	6	★	C-3		Blower fan switch
i23	2	★	B-4		Glove box light
i24	2	★	B-3		Front accessory power supply socket
i26	20	★	B-3		Audio connector
					Audio (normal)
	10	★	B-3		Audio (premium)
i29	1	★	B-3		Audio bracket ground (with navigation system)
	1	★	B-2		Audio bracket ground (without navigation system)
i53	14	★	C-5	R98	Rear wiring harness RH
i54	16	★	C-1	R99	Rear wiring harness LH
i59	10	★	B-3		Clock
i76	28	★	C-5	D83	Front door cord RH
i79	6	★	B-2		Illumination control switch
i80	26	★	C-4		A/C CM
i82	12	★	B-1		J/C
i84	35	★	C-2		Body integrated unit
i88	12	★	C-4		A/C control panel
i97	12	★	B-4		J/C
i100	12	★	B-4		
i101	28	★	C-1	D84	Front door cord LH
i102	14	★	C-1	R167	Rear wiring harness LH
i131	24	★	B-3		Navigation unit
	24	★	B-3		Audio (normal, without handsfree microphone)
	16	★	B-3		Audio connector
					Audio (normal, with handsfree microphone)
	6		A-3		Audio (premium)
i140	4	★	B-3		J/C
i141	4	★	B-3		
i144	20	★	B-3		Navigation unit
i145	6	Green	B-3		
i146	8	★	B-3		
i148	20	Blue	B-3		XM radio tuner
i149	6	★	C-3		AUX input terminal
i152	20	★	C-1		F/B
i153	13	★	C-5	R331	Rear wiring harness RH
i154	18	★	C-5	R332	
i155	11	★	C-5	R333	
i156	5	★	C-2		Hill hold switch
i157	16	★	A-5	R50	Roof cord

Connector				Connecting to	
No.	Pole	Color	Area	No.	Description
i158	4	★	B-1		Side tweeter LH (normal audio)
	2	★	B-1		Side tweeter LH (premium audio)
i159	4	★	B-5		Side tweeter RH (normal audio)
	2	★	B-5		Side tweeter RH (premium audio)
i160	11	★	B-1		Relay block
i161	11	★	B-2		
i162	6	★	C-1		Lower cover switch
i163	10	★	C-2		EPB control switch
i164	12	★	B-2		J/C
i165	4	★	B-1		
i166	12	★	B-1		
i167	4	★	B-2		
i168	4	★	B-2		
i169	22	★	B-5		
i170	8	★	B-2		Turn signal and hazard unit
i171	31	★	C-2		Body integrated unit
i172	2	★	B-2		Evaporator sensor
i173	2	★	C-3		In-vehicle sensor
i174	7	Green	B-3		Air mix door actuator (manual A/C)
	7	Green	B-3		Air mix door actuator (driver's seat) (auto A/C)
i175	7	Green	B-4		Air mix door actuator (passenger's seat) (auto A/C)
i176	5	★	B-3		Mode door actuator
i181	24	★	C-4		A/C CM
i182	4	★	B-4		Blower resistor
i183	5	★	B-4		Power transistor (auto A/C)
i184	7	★	B-4		Blower motor relay
i185	2	★	C-5		Blower motor
i186	7	Green	B-4		Intake door actuator
i187	2	★	A-5		Wiper deicer
i188	8	★	B-5		Impact sensor
i189	2	★	C-4		Rear accessory power supply socket (console box)
i191	2	★	B-4		Trunk opener cancel button
i192	28	★	A-3		Audio (premium)
i193	2	Black	C-1		F/B
i194	6	★	B-5		Light control sensor
i195	4	★	C-5	R382	Rear wiring harness RH
i196	10	★	C-3	R385	Adapter cord (audio amplifier)
i210	4	★	B-5		J/C
i211	4	★	A-5		
i212	20	★	B-3		Navigation unit (with XM radio tuner)
i225	4	★	B-2		J/C
★: White or natural color					

Instrument Panel Wiring Harness

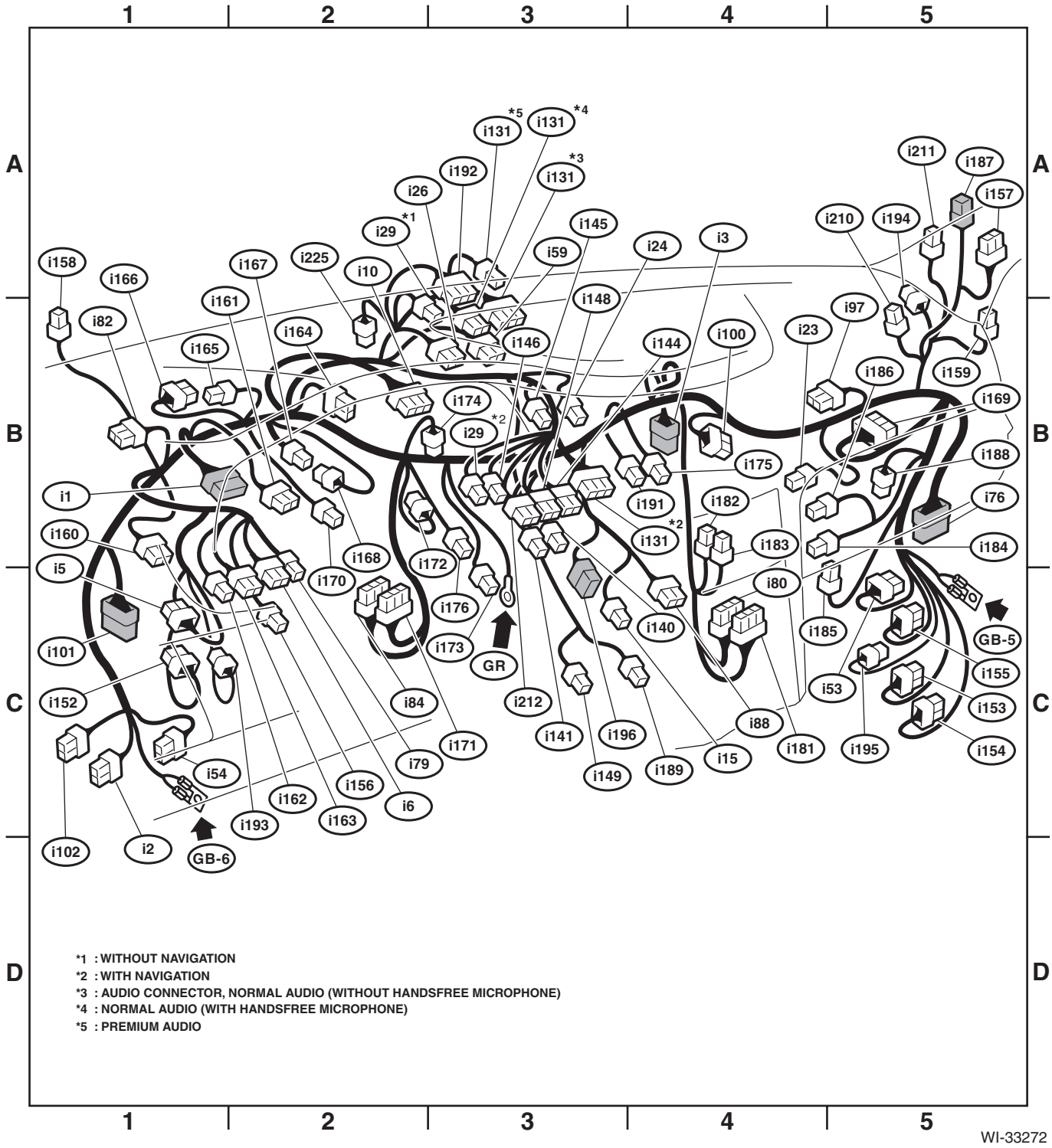

WI-33272

60.Rear Wiring Harness

A: LOCATION

1. SEDAN MODEL

- **Vehicle identification number: Sedan model 002017 or later**

Connector				Connecting to	
No.	Pole	Color	Area	No.	Description
R9	3	★	C-4		Front door switch LH
R10	8	★	C-4	D22	Rear door cord LH
R12	3	★	B-2		Front door switch RH
R13	8	★	B-2	D28	Rear door cord RH
R15	11	★	B-3	R57	Fuel cord
R41	4	★	C-3		Seat heater LH
R42	6	★	C-3		Seat heater switch LH
R44	4	★	B-2		Seat heater RH
R45	6	Brown	C-2		Seat heater switch RH
R47	3	★	A-4		Fuel tank pressure sensor
R50	16	★	B-2	i157	Instrument panel wiring harness
R51	2	★	A-2		Vanity mirror light RH
R52	3	★	A-3		Room light
R54	2	★	B-3		Vanity mirror light LH
R55	4	★	A-3	R74	Sunroof cord
R57	11	★	B-3	R15	Rear wiring harness
R58	6	★	B-4		Fuel pump assembly
R59	2	★	B-4		Fuel sub level sensor
R68	2	Dark gray	B-4		Pressure control solenoid valve (turbo model)
R74	4	★	A-3	R55	Roof cord
R75	20	★	B-3		Sunroof motor assembly
R98	14	Gray	B-1	i53	Instrument panel wiring harness
R99	16	★	C-3	i54	
R108	2	★	C-3		Seat belt switch LH
R109	2	Black	B-2		Power seat RH
R123	2	Yellow	C-3	AB62	Front door cord LH
R124	2	Yellow	B-1	AB63	Front door cord RH
R128	5	★	A-3		Sunroof switch
R167	14	Gray	C-3	i102	Instrument panel wiring harness
R187	5	Black	A-3		Sunroof switch (tilt)
R316	10	★	B-2		Audio amplifier
R317	12	★	B-2		
R331	13	★	B-1	i153	Instrument panel wiring harness
R332	18	★	B-1	i154	
R333	11	★	B-1	i155	
R339	18	★	C-3	i2	Instrument panel wiring harness
R341	12	★	B-3		Power seat LH
R342	14	Gray	B-3	R354	EPB adapter cord
R343	4	★	B-4		J/C
R344	4	★	B-4		
R346	6	★	C-3	R348	Rear wiring harness
R348	6	★	C-3	R346	
R353	10	★	B-3		Overhead console

Connector				Connecting to	
No.	Pole	Color	Area	No.	Description
R354	14	Gray	B-3	R342	Rear wiring harness
R355	22	★	B-3		EPB CM
R382	4	★	B-1	i195	Instrument panel wiring harness
R383	4	★	B-2	R384	Adapter cord (audio amplifier)
R384	4	★	B-2	R383	Rear wiring harness
R385	10	★	B-1		Instrument panel wiring harness
R386	24	★	B-1		Audio amplifier
R387	3	★	B-3		Rear view mirror
★: White or natural color					

Connector				Connecting to	
No.	Pole	Color	Area	No.	Description
AB17	24	Yellow	B-3		Airbag CM
AB18	24	Yellow	B-3		
AB19	4	Yellow	C-3		Side airbag module LH
AB21	2	Black	C-4		Pretensioner LH
AB23	4	Yellow	C-4		Side airbag sensor LH
AB24	4	Yellow	B-2		Side airbag module RH
AB26	2	Black	B-3		Pretensioner RH
AB28	4	Yellow	B-3		Side airbag sensor RH
AB53	3	Brown	C-2	AB59	Occupant sensor harness
AB59	3	Brown	C-2	AB53	Rear wiring harness
AB60	2	Yellow	C-2		Buckle switch
AB61	10	Black	C-2		Occupant detection control module

Rear Wiring Harness

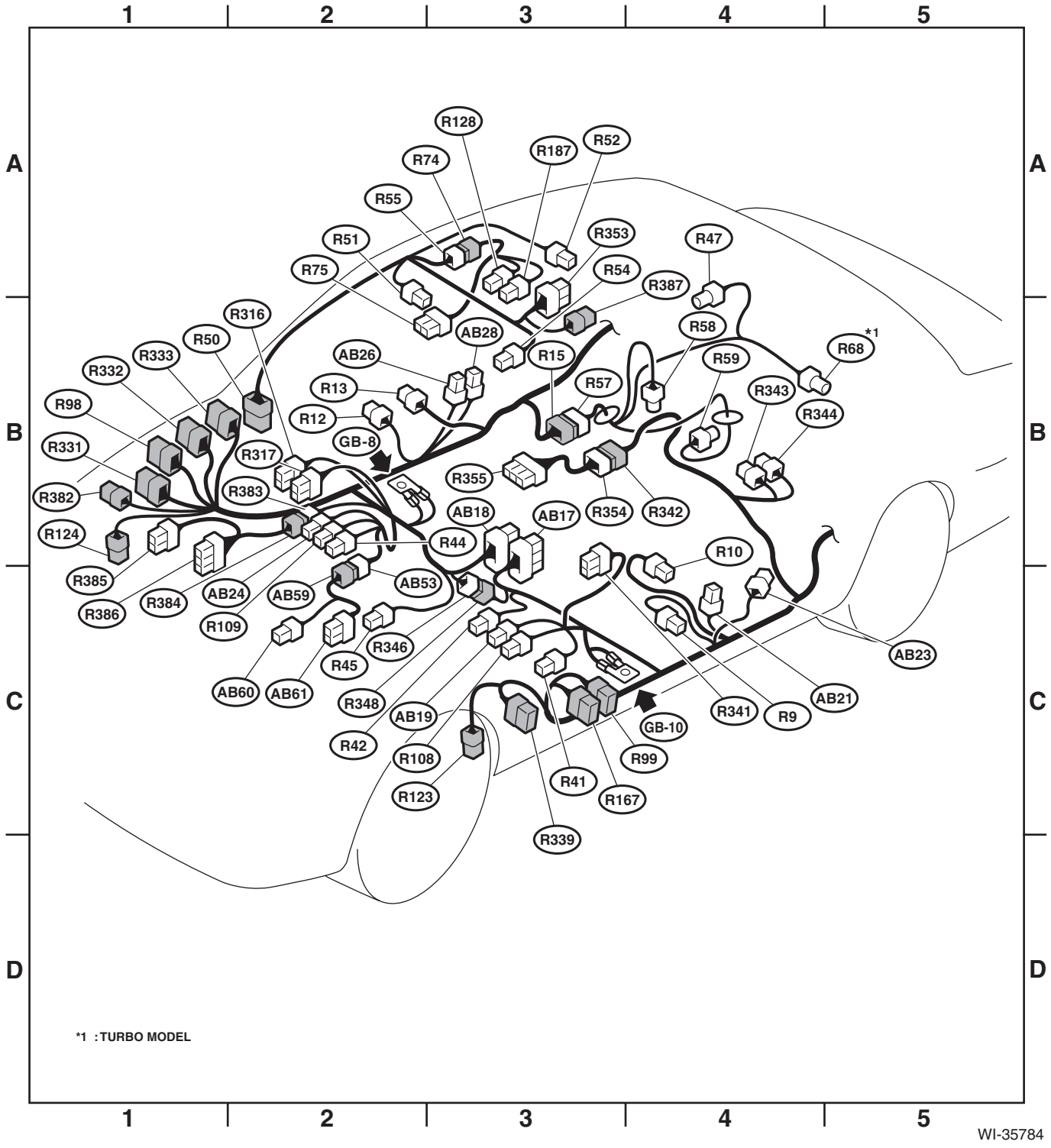

- **Vehicle identification number: Sedan model 002016 or older**

Connector				Connecting to	
No.	Pole	Color	Area	No.	Description
R9	3	★	C-4		Front door switch LH
R10	8	★	C-4	D22	Rear door cord LH
R12	3	★	B-2		Front door switch RH
R13	8	★	B-2	D28	Rear door cord RH
R15	11	★	B-3	R57	Fuel cord
R41	4	★	C-3		Seat heater LH
R42	6	★	C-3		Seat heater switch LH
R44	4	★	B-2		Seat heater RH
R45	6	Brown	C-2		Seat heater switch RH
R47	3	★	A-4		Fuel tank pressure sensor
R50	16	★	B-2	i157	Instrument panel wiring harness
R51	2	★	A-2		Vanity mirror light RH
R52	3	★	A-3		Room light
R54	2	★	B-3		Vanity mirror light LH
R55	4	★	A-3	R74	Sunroof cord
R57	11	★	B-3	R15	Rear wiring harness
R58	6	★	B-4		Fuel pump assembly
R59	2	★	B-4		Fuel sub level sensor
R68	2	Dark gray	B-4		Pressure control solenoid valve (turbo model)
R74	4	★	A-3	R55	Roof cord
R75	20	★	B-3		Sunroof motor assembly
R98	14	Gray	B-1	i53	Instrument panel wiring harness
R99	16	★	C-3	i54	
R108	2	★	C-3		Seat belt switch LH
R109	2	Black	B-2		Power seat RH
R123	2	Yellow	C-3	AB62	Front door cord LH
R124	2	Yellow	B-1	AB63	Front door cord RH
R128	5	★	A-3		Sunroof switch
R167	14	Gray	C-3	i102	Instrument panel wiring harness
R187	5	Black	A-3		Sunroof switch (tilt)
R316	10	★	B-2		Audio amplifier
R317	12	★	B-2		
R331	13	★	B-1	i153	Instrument panel wiring harness
R332	18	★	B-1	i154	
R333	11	★	B-1	i155	
R339	18	★	C-3	i2	Instrument panel wiring harness
R341	12	★	B-3		Power seat LH
R342	14	Gray	B-3	R354	EPB adapter cord
R343	4	★	B-4		J/C
R344	4	★	B-4		
R353	10	★	B-3		Overhead console
R354	14	Gray	B-3	R342	Rear wiring harness
R355	22	★	B-3		EPB CM
R382	4	★	B-1	i195	Instrument panel wiring harness
R383	4	★	B-2	R384	Adapter cord (audio amplifier)
R384	4	★	B-2	R383	Rear wiring harness
R385	10	★	B-1		Instrument panel wiring harness
R386	24	★	B-1		Audio amplifier

Connector				Connecting to	
No.	Pole	Color	Area	No.	Description
R387	3	★	B-3		Rear view mirror
★: White or natural color					

Connector				Connecting to	
No.	Pole	Color	Area	No.	Description
AB17	15	Yellow	B-3		Airbag CM
AB18	15	Yellow	B-3		
AB19	4	Yellow	C-3		Side airbag module LH
AB21	2	Black	C-4		Pretensioner LH
AB23	4	Yellow	C-4		Side airbag sensor LH
AB24	4	Yellow	B-2		Side airbag module RH
AB26	2	Black	B-3		Pretensioner RH
AB28	4	Yellow	B-3		Side airbag sensor RH
AB53	3	Brown	C-2	AB59	Occupant sensor harness
AB59	3	Brown	C-2	AB53	Rear wiring harness
AB60	2	Yellow	C-2		Buckle switch
AB61	10	Black	C-2		Occupant detection control module

Rear Wiring Harness

2. OUTBACK MODEL

- **Vehicle identification number: OUTBACK model 200013 or later**

Connector				Connecting to	
No.	Pole	Color	Area	No.	Description
R9	3	★	C-4		Front door switch LH
R10	8	★	C-4	D22	Rear door cord LH
R12	3	★	B-2		Front door switch RH
R13	8	★	B-3	D28	Rear door cord RH
R15	11	★	B-3	R57	Fuel cord
R41	4	★	C-3		Seat heater LH
R42	6	★	C-3		Seat heater switch LH
R44	4	★	B-2		Seat heater RH
R45	6	Brown	C-2		Seat heater switch RH
R47	3	★	A-4		Fuel tank pressure sensor
R50	16	★	B-2	i157	Instrument panel wiring harness
R51	2	★	A-3		Vanity mirror light RH
R52	3	★	A-3		Room light
R54	2	★	B-3		Vanity mirror light LH
R55	4	★	A-3	R74	Sunroof cord
R57	11	★	B-3	R15	Rear wiring harness
R58	6	★	B-4		Fuel pump assembly
R59	2	★	B-4		Fuel sub level sensor
R74	4	★	A-3	R55	Roof cord
R75	20	★	B-3		Sunroof motor assembly
R90	12	Black	B-3		Rearview mirror (with rearview display)
R98	14	Gray	B-1	i53	Instrument panel wiring harness
R99	16	★	C-3	i54	
R108	2	★	C-3		Seat belt switch LH
R109	2	Black	B-2		Power seat RH
R123	2	Yellow	C-3	AB62	Front door cord LH
R124	2	Yellow	B-1	AB63	Front door cord RH
R128	5	★	B-3		Sunroof switch
R167	14	Gray	C-3	i102	Instrument panel wiring harness
R187	5	Black	B-3		Sunroof switch (tilt)
R316	10	★	B-2		Audio amplifier
R317	12	★	B-2		
R331	13	★	B-1	i153	Instrument panel wiring harness
R332	18	★	B-1	i154	
R333	11	★	B-1	i155	
R339	18	★	C-3	i2	Instrument panel wiring harness
R340	14	★	C-3	R389	Rear wiring harness LH
R341	12	★	C-3		Seat cord LH
R342	14	Gray	B-4	R354	EPB adapter cord
R343	4	★	B-4		J/C
R344	4	★	B-4		
R346	6	★	C-3	R348	Rear wiring harness
R348	6	★	C-3	R346	
R353	10	★	A-3		Overhead console
R354	14	Gray	B-3	R342	Rear wiring harness
R355	22	★	B-3		EPB CM

Connector				Connecting to	
No.	Pole	Color	Area	No.	Description
R382	4	★	B-1	i195	Instrument panel wiring harness
R383	4	★	B-2	R384	Adapter cord (audio amplifier)
R384	4	★	B-2	R383	Rear wiring harness
R385	10	★	B-1		Instrument panel wiring harness
R386	24	★	B-2		Audio amplifier
R387	3	★	A-4		Rearview mirror (without rearview display)
R389	14	★	C-3	R340	Feeder cord
★: White or natural color					

Connector				Connecting to	
No.	Pole	Color	Area	No.	Description
AB17	24	Yellow	B-3		Airbag CM
AB18	24	Yellow	B-3		
AB19	4	Yellow	C-3		Side airbag module LH
AB21	2	Black	C-4		Pretensioner LH
AB23	4	Yellow	C-4		Side airbag sensor LH
AB24	4	Yellow	B-2		Side airbag module RH
AB26	2	Black	B-3		Pretensioner RH
AB28	4	Yellow	B-3		Side airbag sensor RH
AB53	3	Brown	C-2	AB59	Occupant sensor harness
AB59	3	Brown	C-2	AB53	Rear wiring harness
AB60	2	Yellow	C-2		Buckle switch
AB61	10	Black	C-2		Occupant detection control module

Rear Wiring Harness

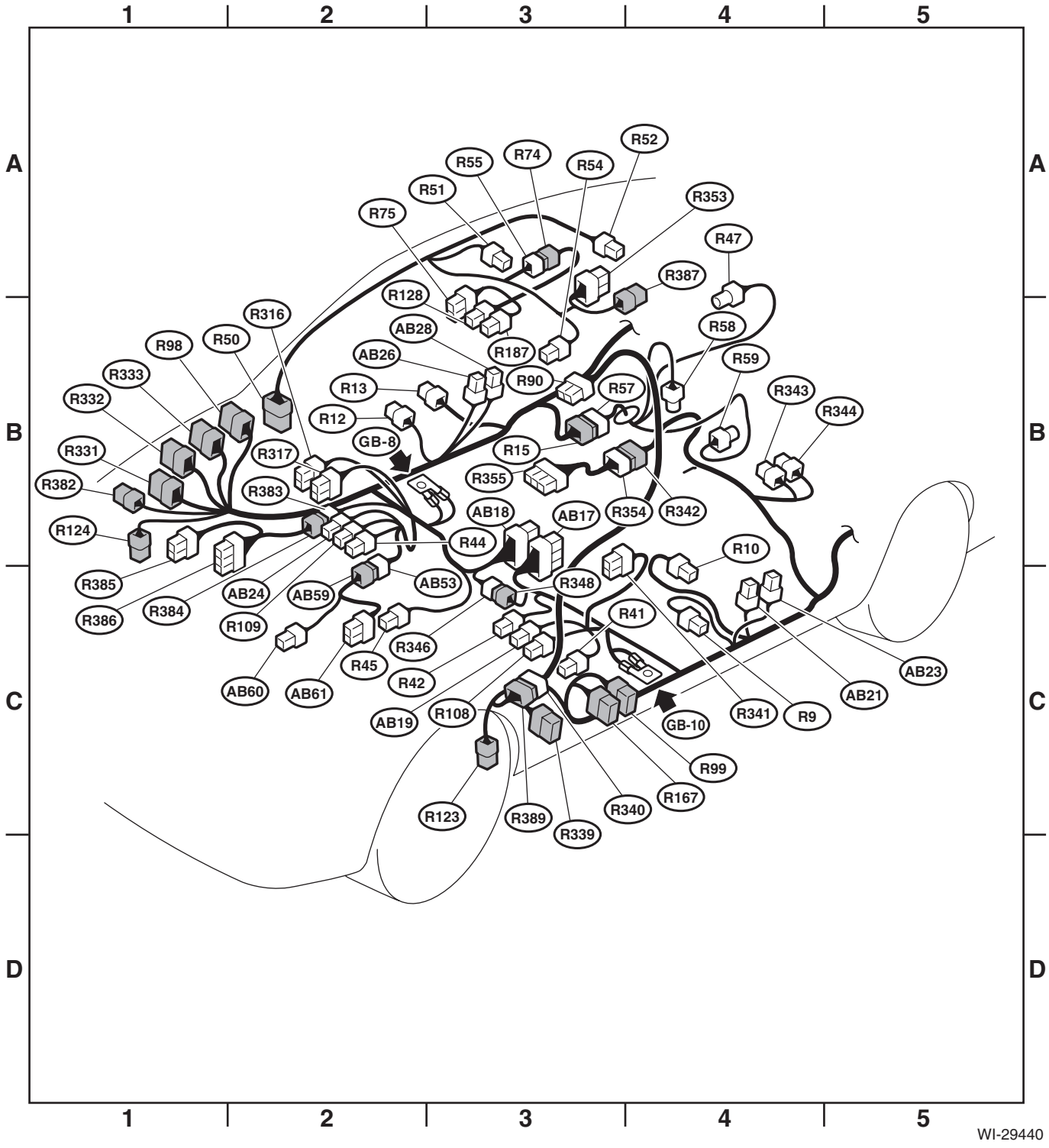

- **Vehicle identification number: OUTBACK model 200012 or older**

Connector				Connecting to	
No.	Pole	Color	Area	No.	Description
R9	3	★	C-4		Front door switch LH
R10	8	★	C-4	D22	Rear door cord LH
R12	3	★	B-2		Front door switch RH
R13	8	★	B-3	D28	Rear door cord RH
R15	11	★	B-3	R57	Fuel cord
R41	4	★	C-3		Seat heater LH
R42	6	★	C-3		Seat heater switch LH
R44	4	★	B-2		Seat heater RH
R45	6	Brown	C-2		Seat heater switch RH
R47	3	★	A-4		Fuel tank pressure sensor
R50	16	★	B-2	i157	Instrument panel wiring harness
R51	2	★	A-3		Vanity mirror light RH
R52	3	★	A-3		Room light
R54	2	★	B-3		Vanity mirror light LH
R55	4	★	A-3	R74	Sunroof cord
R57	11	★	B-3	R15	Rear wiring harness
R58	6	★	B-4		Fuel pump assembly
R59	2	★	B-4		Fuel sub level sensor
R74	4	★	A-3	R55	Roof cord
R75	20	★	B-3		Sunroof motor assembly
R90	12	Black	B-3		Rearview mirror (with rearview display)
R98	14	Gray	B-1	i53	Instrument panel wiring harness
R99	16	★	C-3	i54	
R108	2	★	C-3		Seat belt switch LH
R109	2	Black	B-2		Power seat RH
R123	2	Yellow	C-3	AB62	Front door cord LH
R124	2	Yellow	B-1	AB63	Front door cord RH
R128	5	★	B-3		Sunroof switch
R167	14	Gray	C-3	i102	Instrument panel wiring harness
R187	5	Black	B-3		Sunroof switch (tilt)
R316	10	★	B-2		Audio amplifier
R317	12	★	B-2		
R331	13	★	B-1	i153	Instrument panel wiring harness
R332	18	★	B-1	i154	
R333	11	★	B-1	i155	
R339	18	★	C-3	i2	Instrument panel wiring harness
R340	14	★	C-3	R389	Rear wiring harness LH
R341	12	★	C-3		Seat cord LH
R342	14	Gray	B-4	R354	EPB adapter cord
R343	4	★	B-4		J/C
R344	4	★	B-4		
R346	4	★	C-3	R348	Rear wiring harness
R348	4	★	C-3	R346	
R353	10	★	A-3		Overhead console
R354	14	Gray	B-3	R342	Rear wiring harness
R355	22	★	B-3		EPB CM
R382	4	★	B-1	i195	Instrument panel wiring harness
R383	4	★	B-2	R384	Adapter cord (audio amplifier)

Connector				Connecting to	
No.	Pole	Color	Area	No.	Description
R384	4	★	B-2	R383	Rear wiring harness
R385	10	★	B-1		Instrument panel wiring harness
R386	24	★	B-2		Audio amplifier
R387	3	★	A-4		Rearview mirror (without rearview display)
R389	14	★	C-3	R340	Feeder cord
★: White or natural color					

Connector				Connecting to	
No.	Pole	Color	Area	No.	Description
AB17	24	Yellow	B-3		Airbag CM
AB18	24	Yellow	B-3		
AB19	4	Yellow	C-3		Side airbag module LH
AB21	2	Black	C-4		Pretensioner LH
AB23	4	Yellow	C-4		Side airbag sensor LH
AB24	4	Yellow	B-2		Side airbag module RH
AB26	2	Black	B-3		Pretensioner RH
AB28	4	Yellow	B-3		Side airbag sensor RH
AB53	3	Brown	C-2	AB59	Occupant sensor harness
AB59	3	Brown	C-2	AB53	Rear wiring harness
AB60	2	Yellow	C-2		Buckle switch
AB61	10	Black	C-2		Occupant detection control module

Rear Wiring Harness

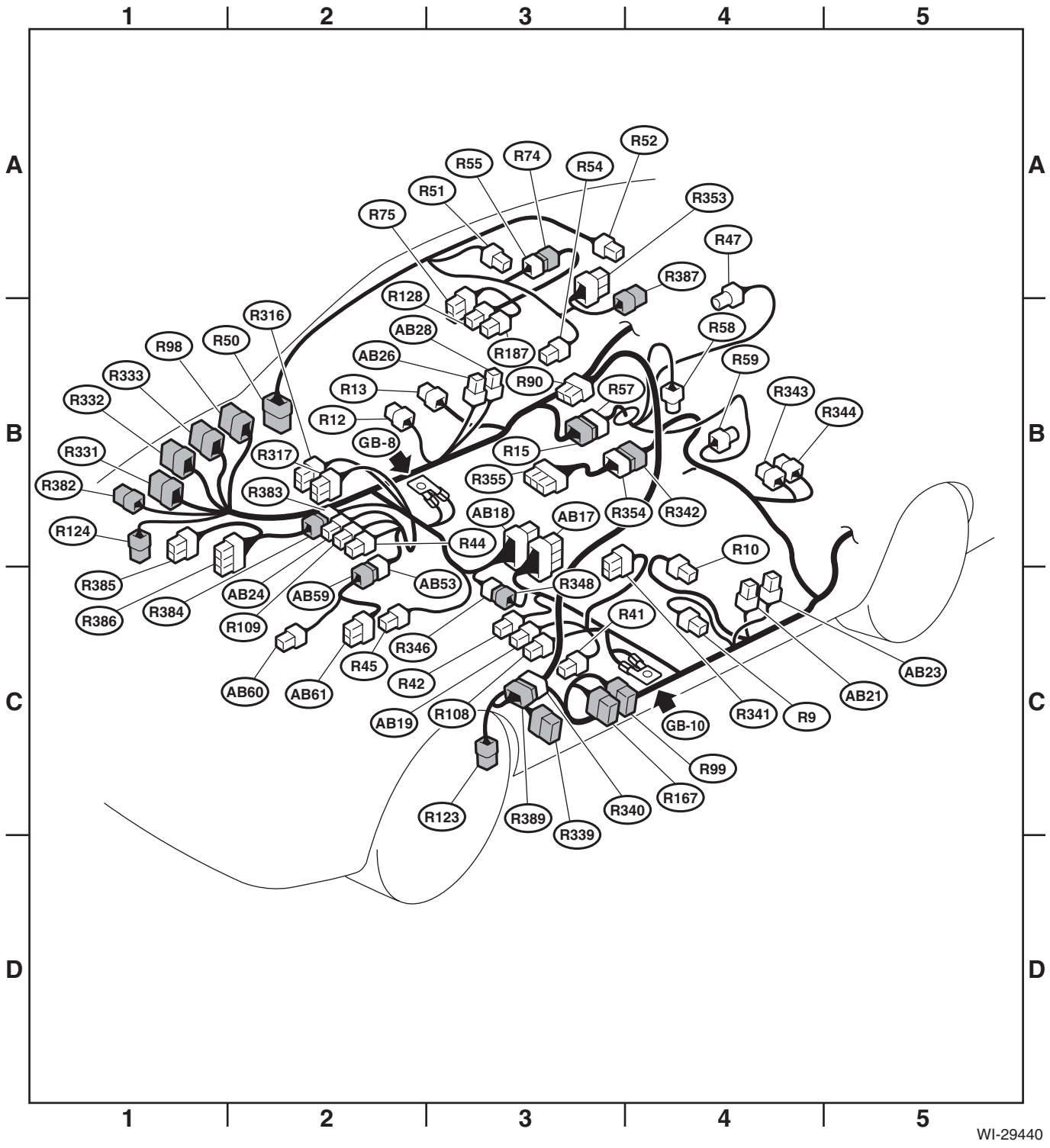

61.Door Cord

A: LOCATION

Connector				Connecting to	
No.	Pole	Color	Area	No.	Description
D2	2	★	C-2		Front door speaker RH
D3	6	Dark gray	B-2		Front power window motor RH
D5	6	★	C-3		Outer mirror assembly LH (except for C6 model)
	10	★	C-4		Outer mirror assembly LH (C6 model)
D7	3	★	C-3		Power window main switch
D10	2	★	C-4		Door step light LH
D12	2	★	C-4		Front door speaker LH
D13	6	Dark gray	C-4		Front power window motor LH
D15	6	★	B-2		Outer mirror assembly RH (except for C6 model)
	10	★	B-2		Outer mirror assembly RH (C6 model)
D17	8	★	B-2		Front power window sub-switch
D18	2	★	C-4		Front door lock actuator LH
D20	2	★	B-3		Door step light RH
D22	8	★	C-4	R10	Rear wiring harness LH
D23	2	★	C-4		Rear door speaker LH
D24	6	Dark gray	B-4		Rear power window motor LH
D25	8	★	B-4		Rear power window sub-switch LH
D26	2	★	B-5		Rear door lock actuator LH
D28	8	★	B-3	R13	Rear wiring harness RH
D29	2	★	B-3		Rear door speaker RH
D30	6	Dark gray	B-3		Rear power window motor RH
D31	8	★	B-3		Rear power window sub-switch RH
D32	2	★	B-3		Rear door lock actuator RH
D72	2	★	B-3		Front door lock actuator RH
D83	28	★	B-2	i76	Instrument panel wiring harness
D84	28	★	C-3	i101	
D95	16	★	C-3		Power window main switch
D125	5	★	B-2		Passenger's seat door lock switch
D144	12	★	C-2	D146	Adapter cord (power window sub-switch)
D145	20	★	C-3	D147	Adapter cord (power window main switch)
D146	12	★	C-2	D144	Front door cord RH
D147	20	★	C-3	D145	Front door cord LH
★: White or natural color					

Connector				Connecting to	
No.	Pole	Color	Area	No.	Description
AB58	2	Yellow	C-4		Front door impact sensor LH
AB62	2	Yellow	C-3	R123	Rear wiring harness LH
AB63	2	Yellow	C-1	R124	Rear wiring harness RH
AB64	2	Yellow	B-3		Front door impact sensor RH

Door Cord

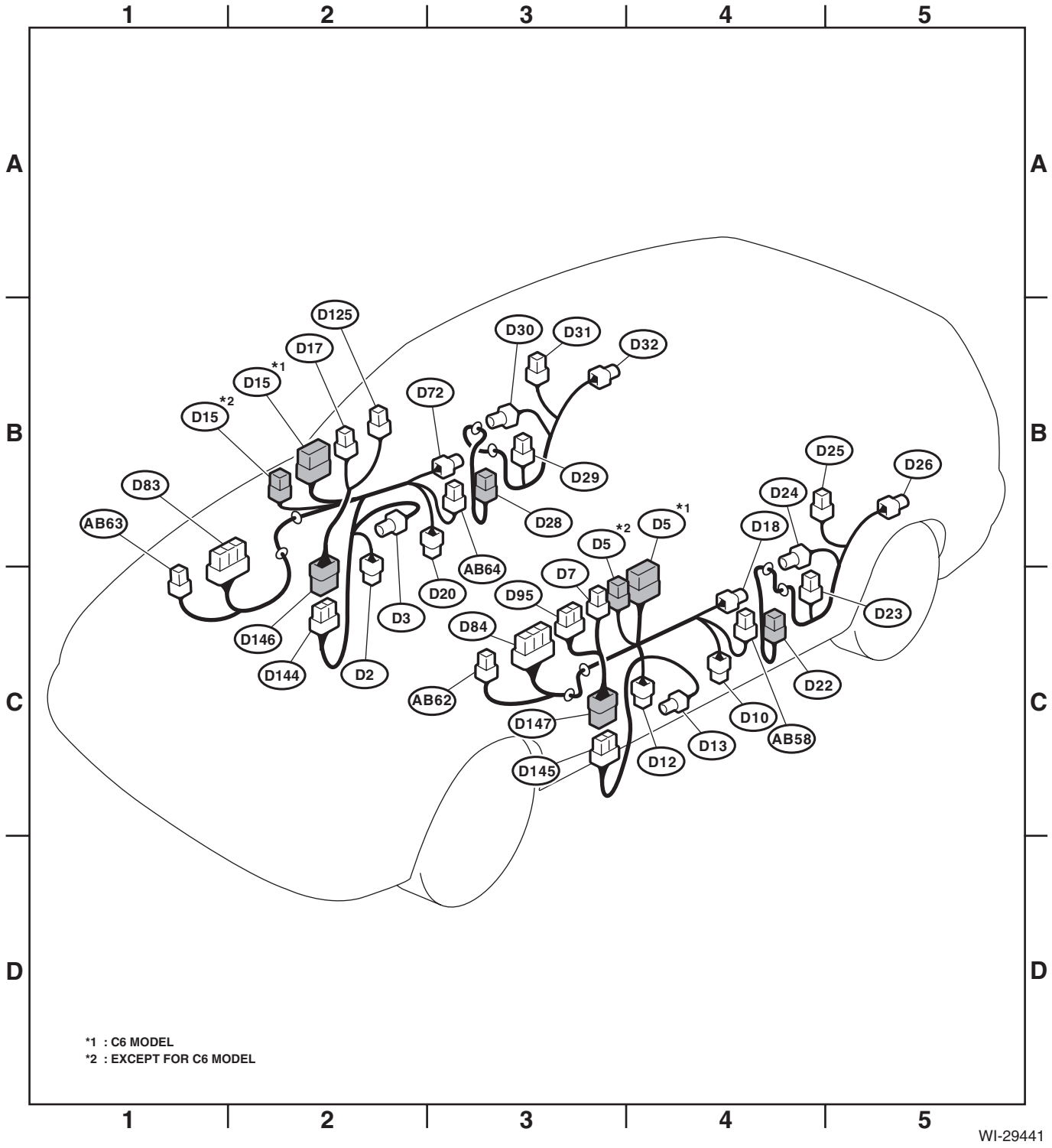
1
2
3
4
5
A
B
C
D
D125
D17
D15 *1
D15 *2
D72
D30
D31
D32
D29
D83
AB63
D28
D5 *2
D5 *1
D25
D26
D24
D18
AB64
D7
D20
D95
D3
D84
D23
D146
D144
D2
AB62
D147
D145
D12
D13
D10
AB58
D22
*1 : C6 MODEL
*2 : EXCEPT FOR C6 MODEL
WI-29441

62.Rear Wiring Harness and Trunk Lid Cord

A: LOCATION

Connector				Connecting to	
No.	Pole	Color	Area	No.	Description
R16	3	★	B-3		Rear door switch RH
R19	2	★	B-2		High-mounted stop light
R20	2	★	B-5		Trunk room light
R22	3	★	B-1		Rear door switch LH
R24	10	★	B-4	R60	Trunk lid cord
R26	6	★	B-5		Rear combination light RH
R28	6	★	C-3		Rear combination light LH
R60	10	★	B-5	R24	Rear wiring harness
R66	2	★	B-4		High-mounted stop light (with rear spoiler)
R72	2	Light gray	C-3		Rear ABS wheel speed sensor RH
R73	2	Light gray	C-2		Rear ABS wheel speed sensor LH
R76	2	★	C-4		License plate light LH
R77	2	★	C-4		License plate light RH
R97	2	★	B-2		Antenna amplifier
R117	4	★	B-4		Woofer
R122	10	★	B-5		Fuel pump CM
R144	2	Black	C-2		Drain valve
R174	2	★	B-4		Rear defogger
R186	3	★	C-4		Trunk lid lock actuator & switch
R221	12	★	B-3		TPMS & keyless entry CM (with TPMS)
R330	4	★	C-4		Rearview camera
R336	4	★	B-4		J/C
R345	8	★	B-3		Keyless entry CM (without TPMS)
R350	3	★	C-4		Rear finisher light LH (tail light)
R351	3	★	C-5		Rear finisher light RH (tail light)
★: White or natural color					

Connector				Connecting to	
No.	Pole	Color	Area	No.	Description
AB31	2	Black	B-2		Curtain airbag module LH
AB32	4	Yellow	C-1		Curtain airbag sensor LH
AB33	2	Black	B-4		Curtain airbag module RH
AB34	4	Yellow	B-3		Curtain airbag sensor RH

Rear Wiring Harness and Trunk Lid Cord

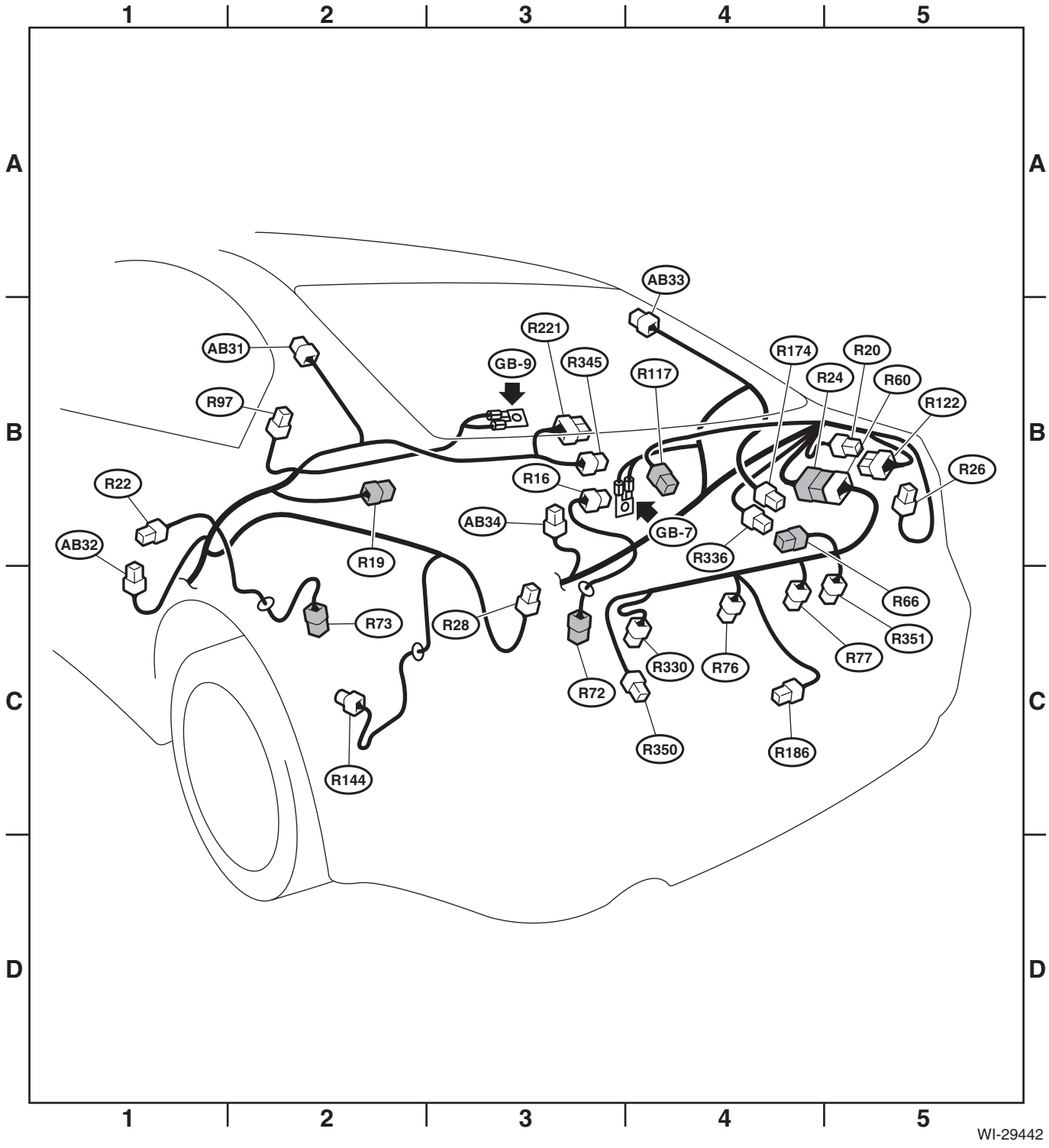

63.Rear Wiring Harness and Rear Gate Cord

A: LOCATION

Connector				Connecting to	
No.	Pole	Color	Area	No.	Description
R16	3	★	B-3		Rear door switch RH
R22	3	★	C-1		Rear door switch LH
R26	4	★	C-5		Rear combination light RH
R28	4	★	C-2		Rear combination light LH
R32	2	★	C-3		Rear accessory power supply socket (cargo room)
R38	13	★	B-3	D34	Rear gate cord
R72	2	Light gray	C-3		Rear ABS wheel speed sensor RH
R73	2	Light gray	C-2		Rear ABS wheel speed sensor LH
R79	8	★	C-2		Trailer connector
R117	4	★	C-4		Woofer
R122	10	★	C-4		Fuel pump CM
R144	2	Black	D-2		Drain valve
R221	12	★	C-2		TPMS & keyless entry CM (with TPMS)
R330	4	★	B-2	R356	Rear gate cord (rearview camera)
R336	4	★	C-2		J/C
R345	8	★	C-2		Keyless entry CM (without TPMS)
R347	3	★	B-3		Luggage room light
R356	4	★	B-2	R330	Rear wiring harness
R357	6	★	A-3		Rearview camera
R407	1	★	B-2		Antenna amplifier
★: White or natural color					

Connector				Connecting to	
No.	Pole	Color	Area	No.	Description
D34	13	★	B-3	R38	Rear wiring harness
D39	2	★	B-3		High-mounted stop light
D43	4	★	A-4		Rear wiper motor
D44	2	★	A-4		License plate light
D47	4	★	A-4		Rear gate lock actuator & latch switch
D77	6	★	A-4		Rear gate opener button
D87	2	★	A-5		Rear finisher light RH (back-up light)
D89	2	★	A-4		Rear defogger
D91	2	★	A-3		Rear finisher light LH (back-up light)
D134	2	★	A-3		Rear finisher light LH (tail light)
D139	2	★	B-5		Rear finisher light RH (tail light)
★: White or natural color					

Connector				Connecting to	
No.	Pole	Color	Area	No.	Description
AB31	2	Black	C-2		Curtain airbag module LH
AB32	4	Yellow	C-1		Curtain airbag sensor LH
AB33	2	Black	B-4		Curtain airbag module RH
AB34	4	Yellow	C-3		Curtain airbag sensor RH
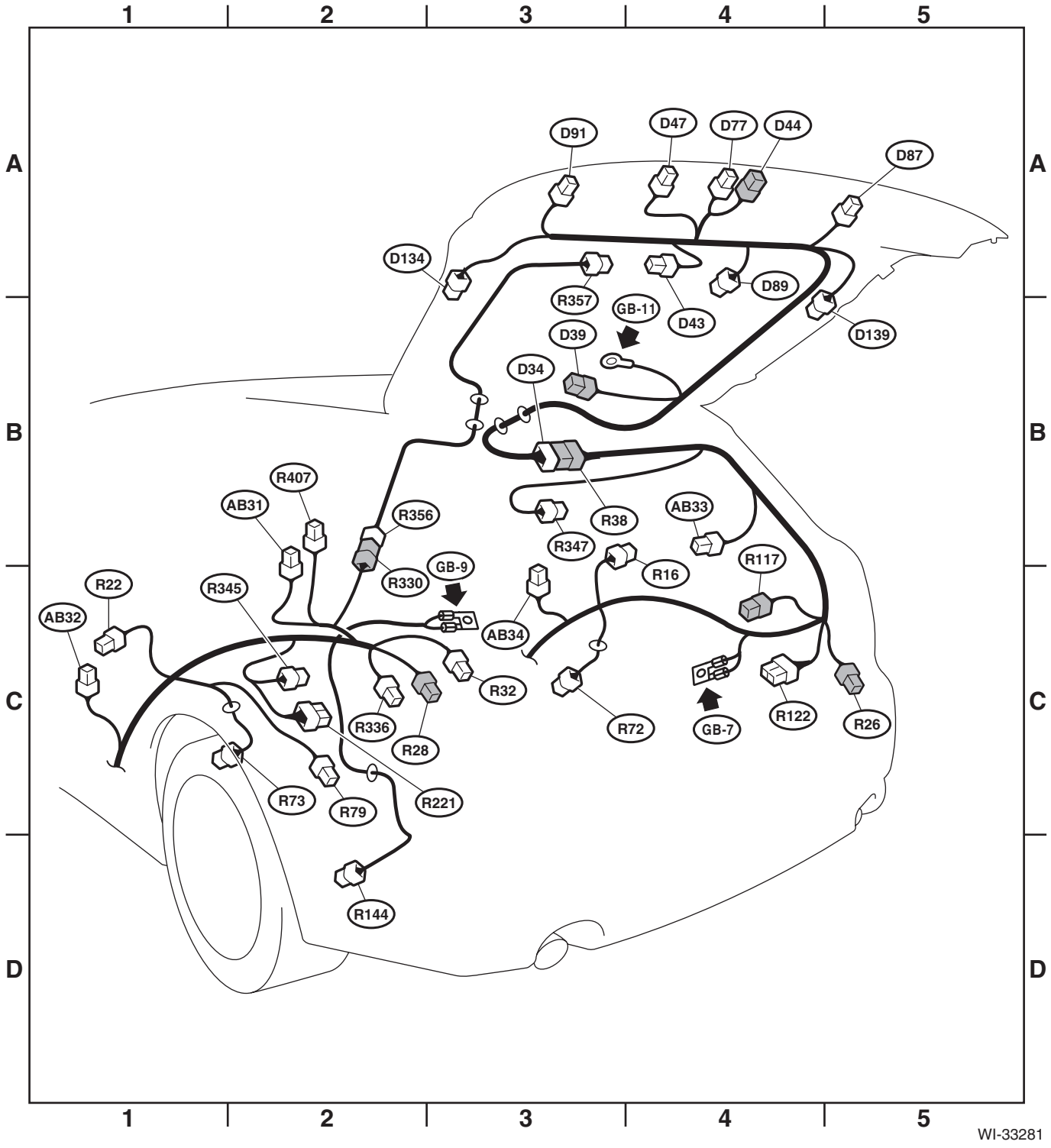
Rear Wiring Harness and Rear Gate Cord