IGNITION SYSTEM

PARTS LOCATION

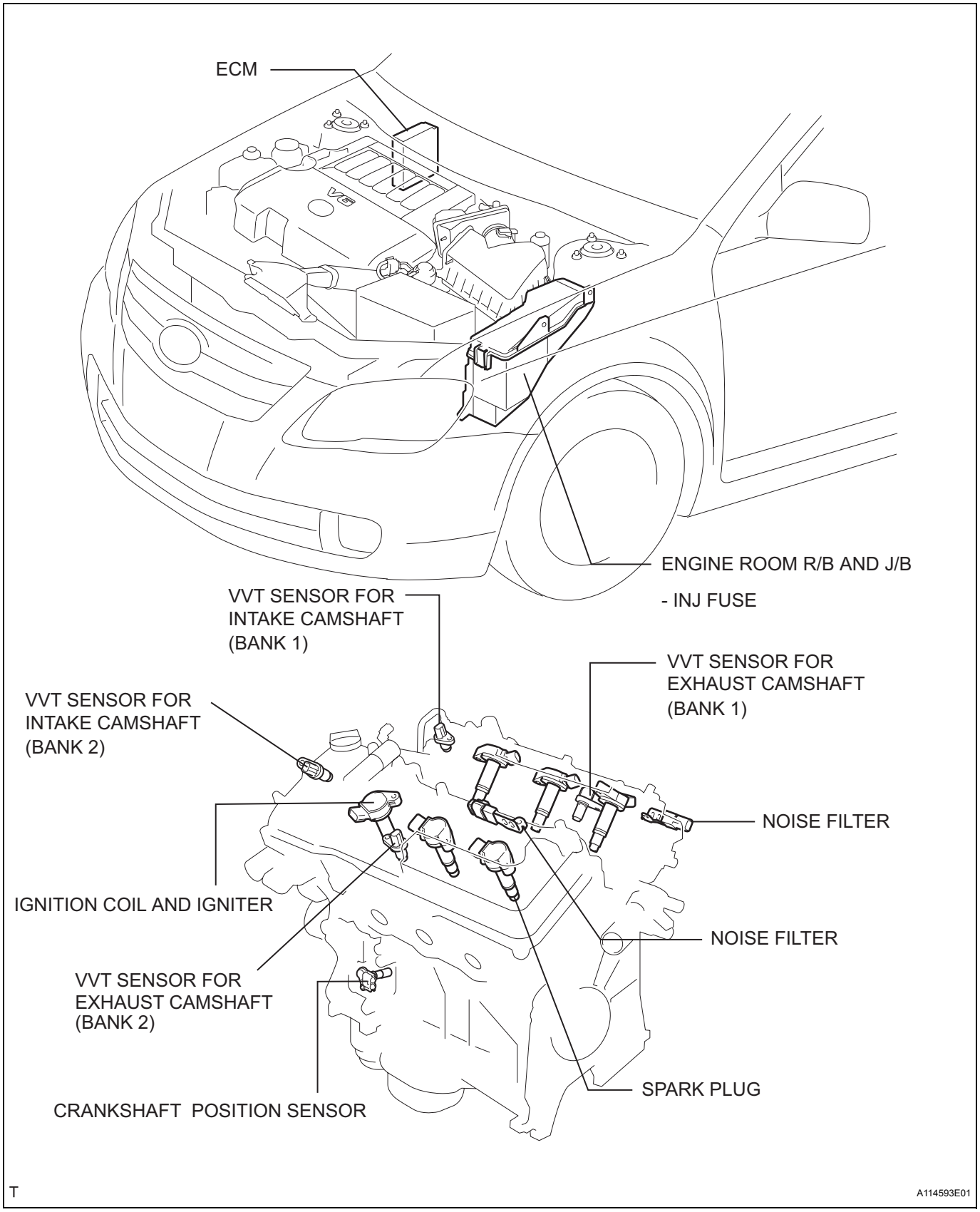

SYSTEM DIAGRAM

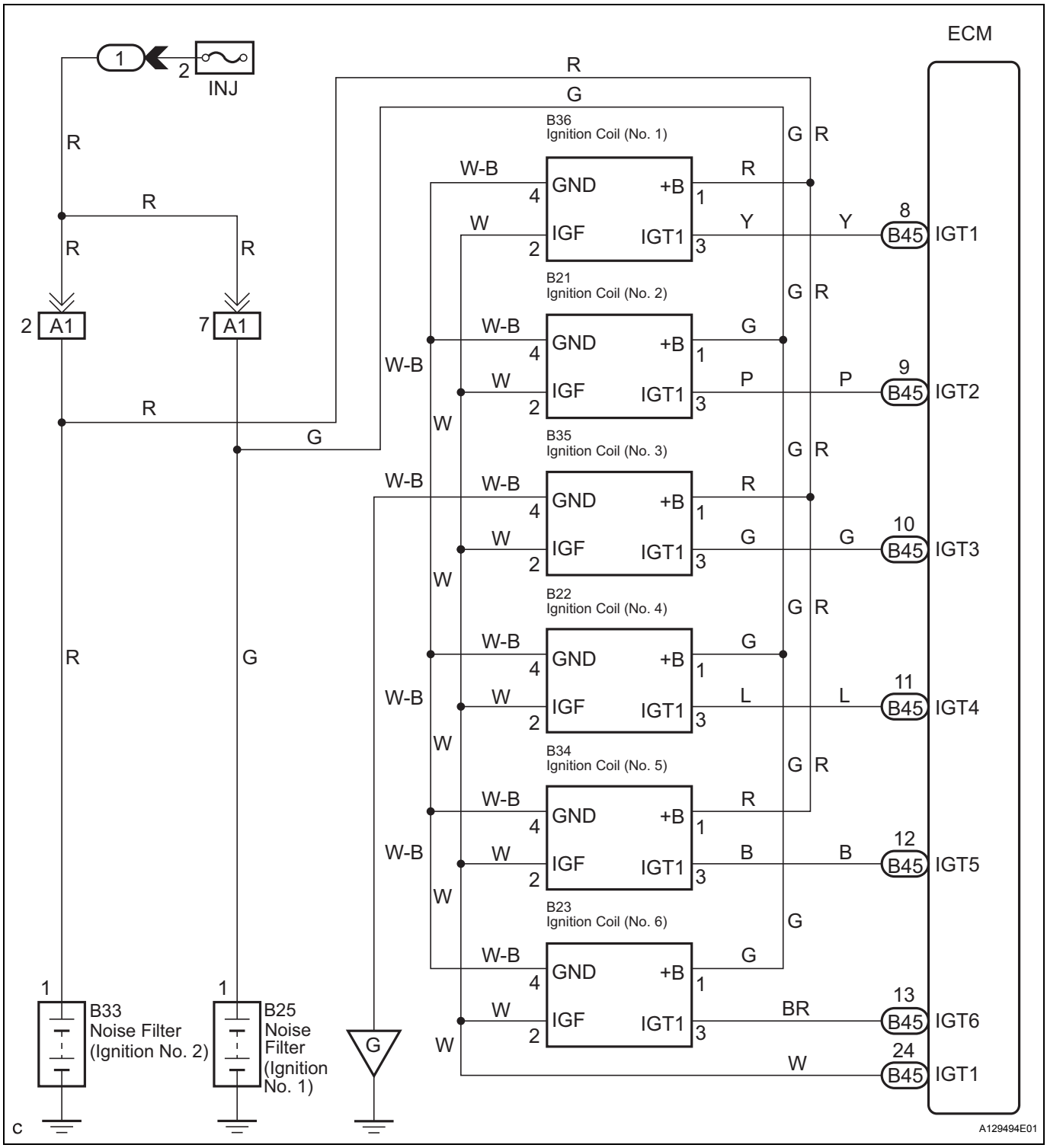

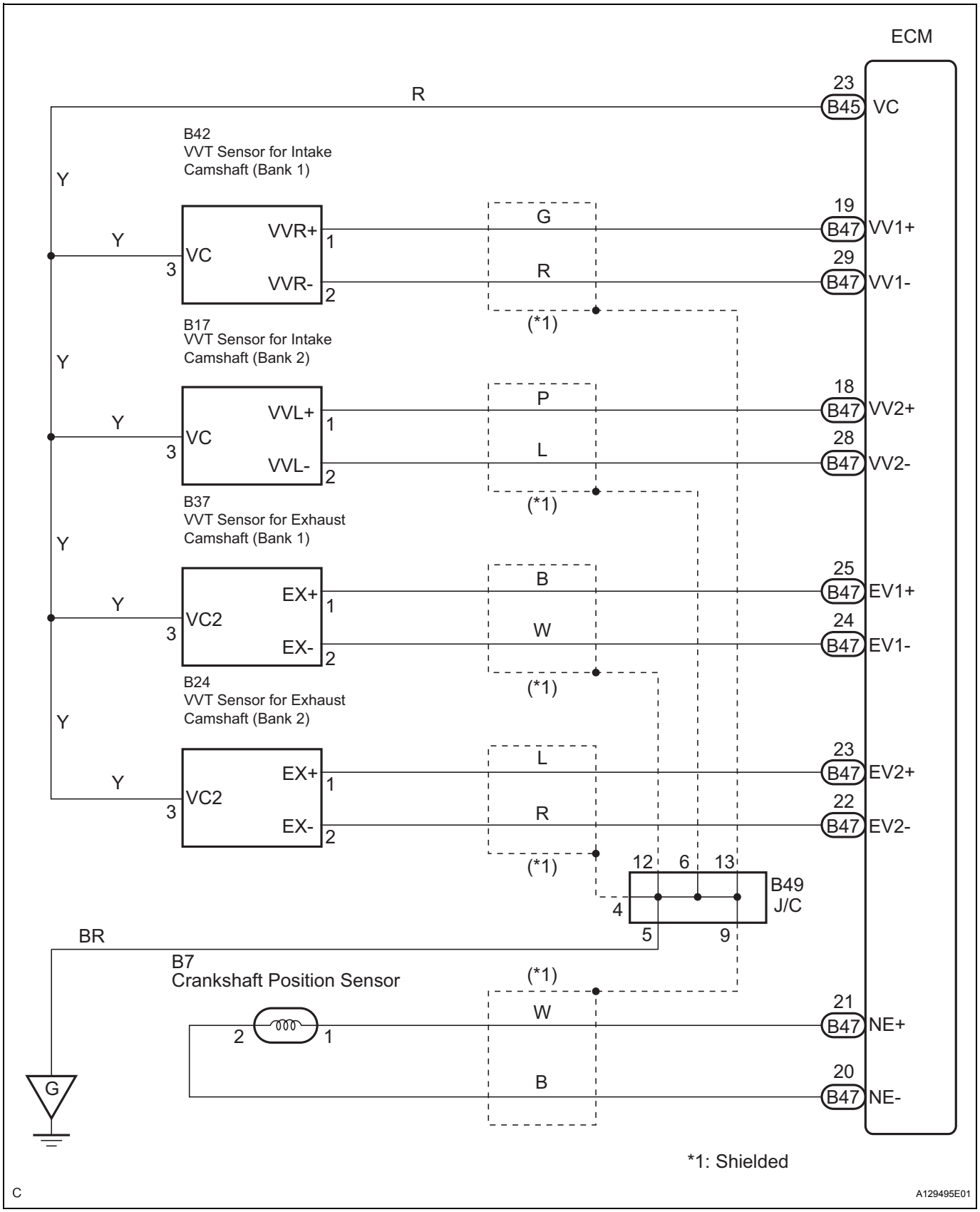
ECM
R
23
B45
VC
B42
VVT Sensor for Intake
Camshaft (Bank 1)
Y
VVR+
VC
VVR-
1
2
3
G
R
19
B47
VV1+
29
B47
VV1-
(*1)
B17
VVT Sensor for Intake
Camshaft (Bank 2)
VVL+
VC
VVL-
P
L
18
B47
VV2+
28
B47
VV2-
B37
VVT Sensor for Exhaust
Camshaft (Bank 1)
EX+
VC2
EX-
B
W
25
B47
EV1+
24
B47
EV1-
B24
VVT Sensor for Exhaust
Camshaft (Bank 2)
L
R
23
B47
EV2+
22
B47
EV2-
12
6
13
4
5
9
B49
J/C
BR
B7
Crankshaft Position Sensor
W
B
21
B47
NE+
20
B47
NE-
G
*1: Shielded
C
A129495E01

IG

ON-VEHICLE INSPECTION

NOTICE:
In this section, the terms "cold" and "hot" refer to the temperature of the coils. "Cold" means approximately -10°C (14°F) to 50°C (122°F). "HOT" means approximately 50°C (122°F) to 100°C (212°F).

1. INSPECT IGNITION COIL ASSEMBLY

(a) Check for DTCs.
NOTICE:
If any DTC is present, perform troubleshooting in accordance with the procedures for that DTC.

(b) Check that spark occurs.
(1) Remove the V-bank cover (See page EM-28).
(2) Remove the intake air surge tank (See page FU-12).
(3) Remove the ignition coils.
(4) Using a 16 mm (0.63 in.) plug wrench, remove the spark plugs.
(5) Install the spark plugs to each ignition coil, and connect the ignition coil connectors.
(6) Disconnect the 6 injector connectors.
(7) Ground the spark plugs.
(8) Check if a spark occurs at each spark plug while engine is being cranked.
NOTICE:
- **Be sure to ground the spark plugs when checking.**
- **Replace the ignition coil if it receives an impact.**
- **Do not crank the engine for more than 2 seconds.**

(c) Perform the spark test according to the flowchart below.
(1) Check that the wire harness side connector of the ignition coil with igniter is securely connected.
Result

Result	Proceed to
NG	Connect securely
OK	Go to next step

(2) Perform a speak test on each ignition coil with igniter.
1. Replace the ignition coil with igniter with a normal one.
2. Perform the spark test again.
Result

Result	Proceed to
OK	Replace ignition coil with igniter
NG	Go to next step

(3) Check the power supply to the ignition coil with igniter.
1. Turn the engine switch on (IG).
2. Check that there is battery voltage at the ignition coil positive (+) terminal.

Result

Result	Proceed to
NG	Check wiring between engine switch and ignition coil with igniter
OK	Go to next step

(4) Check the VVT sensor output voltage.

Result

Result	Proceed to
NG	Check that there is resistance between ECM and VVT sensor. If there is no resistance, replace VVT sensor. If there is resistance, repair wiring between VVT sensor and ECM
OK	Go to next step

(5) Check the resistance of the crankshaft position sensor.

Standard resistance

Temperature	Specified Condition
Cold	1,630 to 2,740 Ω
Hot	2,065 to 3,225 Ω

Result

Result	Proceed to
NG	Replace crankshaft position sensor
OK	Go to next step

(6) Check the IGT signal from the ECM.

Result

Result	Proceed to
NG	Check ECM
OK	Repair wiring between ignition coil and ECM

(d) Using a 16 mm (0.63 in.) plug wrench, install the spark plugs.
Torque: 18 N*m (184 kgf*cm, 13 ft.*lbf)

(e) Install the ignition coils.
Torque: 7.5 N*m (76 kgf*cm, 66 in.*lbf)

(f) Install the intake air surge tank (See page FU-17).

(g) Install the V-bank cover (See page EM-47).

2. CHECK VVT SENSOR OUTPUT VOLTAGE

(a) Turn the ignition switch on (IG).

(b) Check that the voltage between terminal VC1 and ground is 5 V.
HINT:
For the terminal arrangement of the engine ECU (See page ES-33).

(c) While turning the crankshaft pulley by hand, measure the voltage between each terminal. Check that the voltage changes between the Hi range and Lo range as shown in the table below.
HINT:
For the terminal arrangement of the engine ECU (See page ES-33).

Sensor position	Terminal No.	Voltage (Hi)	Voltage (Lo)
Intake camshaft (Bank 1)	VV1+ - VV1-	3.375 to 4.950	0.450 to 1.375
Intake camshaft (Bank 2)	VV2+ -VV2-	3.375 to 4.950	0.450 to 1.375
Exhaust camshaft (Bank 1)	EV1 + - EV1-	3.375 to 4.950	0.450 to 1.375
Exhaust camshaft (Bank 2)	EV2+ - EV2-	3.375 to 4.950	0.450 to 1.375

INSPECTION

NOTICE:
In this section, the terms "cold" and "hot" refer to the temperature of the coils. "Cold" means approximately -10°C(14°F) to 50°C(122°F). "Hot" means approximately 50°C(122°F) to 100°C(212°F).

1. INSPECT SPARK PLUG

NOTICE:
- **Do not use a wire brush for cleaning.**
- **Do not attempt to adjust the electrode gap of a used spark plug.**

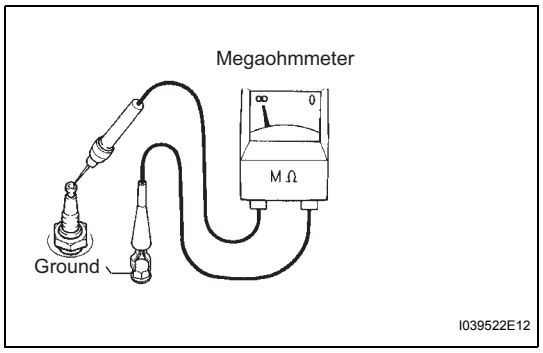

(a) Check the electrode.
(1) Using a megaohmmeter, measure the insulation resistance.
Correct insulation resistance:
10 MΩ or higher
If the resistance is less than the specified value, proceed to procedure "C".
HINT:
If a megaohmmeter is not available, perform the following simple inspection instead.

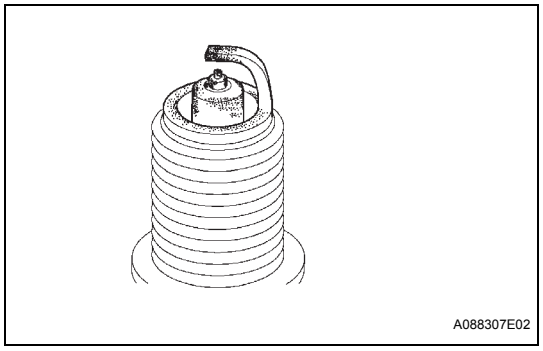

(b) Alternative inspection method:
(1) Quickly accelerate the engine to 4,000 rpm 5 times.
(2) Remove the spark plugs.
(3) Visually check the spark plugs.
- If the electrode is dry, the spark plug is functioning. Reinstall the spark plug.
- If the electrode is damp, proceed to procedure "A", "B" and "C".

(c) Check the spark plug for any damage to its thread and insulator (Procedure "A").
If there is damage, replace the spark plug. If not, reinstall the spark plug.
Require spark plug:

DENSO made	FK20HR11

CAUTION:
Please use long-reach plug.

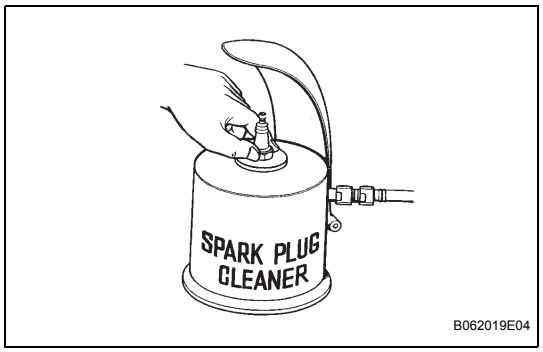

(d) Clean the spark plugs (Procedure "B").
If the electrode has traces of wet carbon, clean the electrode with a spark plug cleaner and then dry it.
Air pressure:
588 kPa (6 kgf*cm^2, 85 psi)
Duration:
20 seconds or less
HINT:
Only use the spark plug cleaner when the electrode is free of oil. If the electrode has traces of oil, use gasoline to clean off the oil before using the spark plug cleaner.

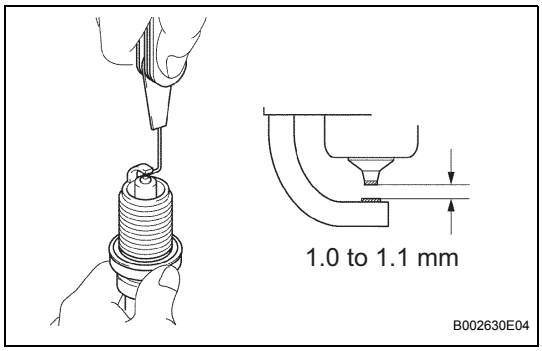

(e) Check the spark plug electrode gap (Procedure "C").

Electrode gap:
1.0 to 1.1 mm (0.039 to 0.043 in.)
Maximum electrode gap:
1.4 mm (0.055 in.)
If the gap is greater than the maximum, replace the spark plug.

VVT SENSOR

COMPONENTS

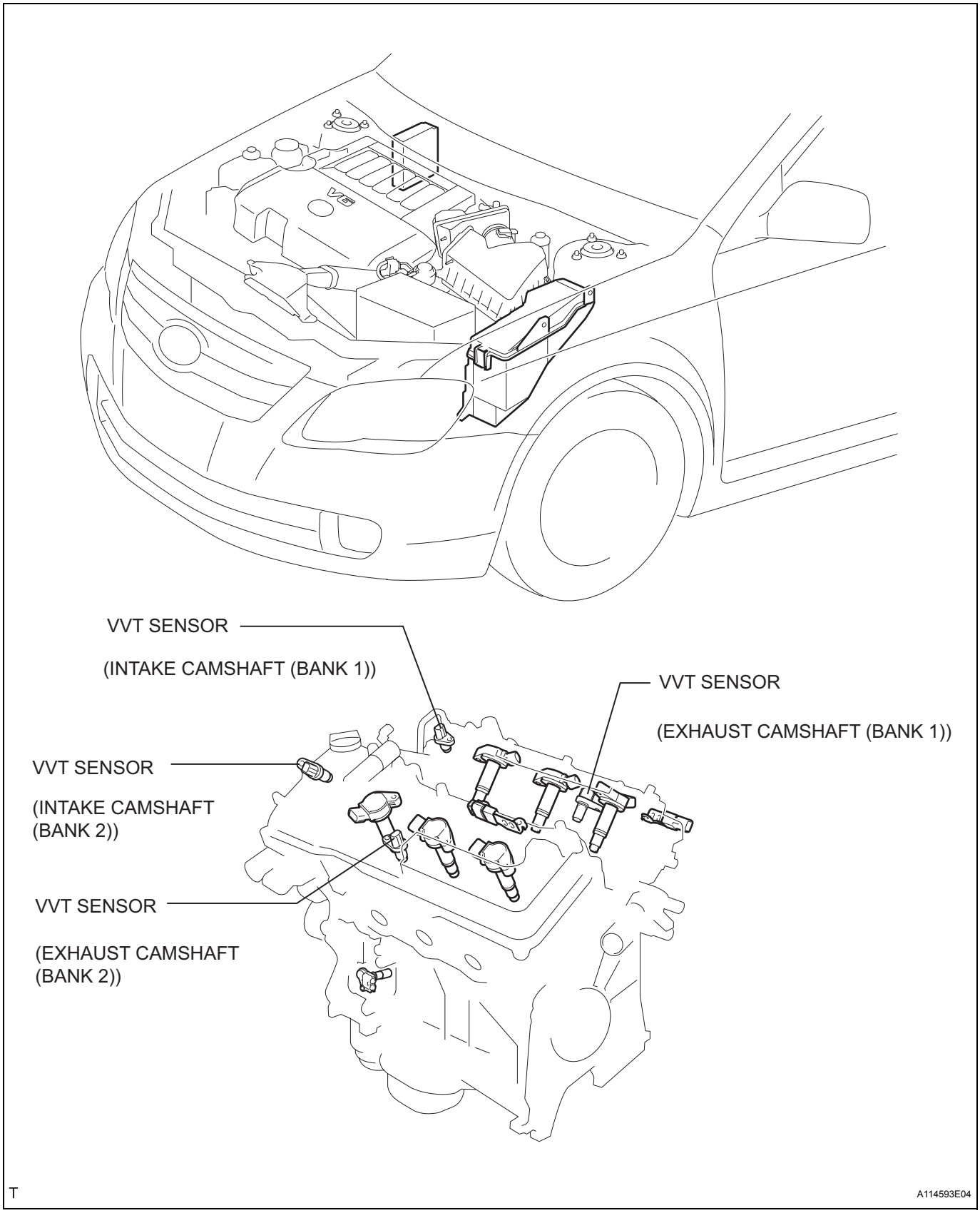

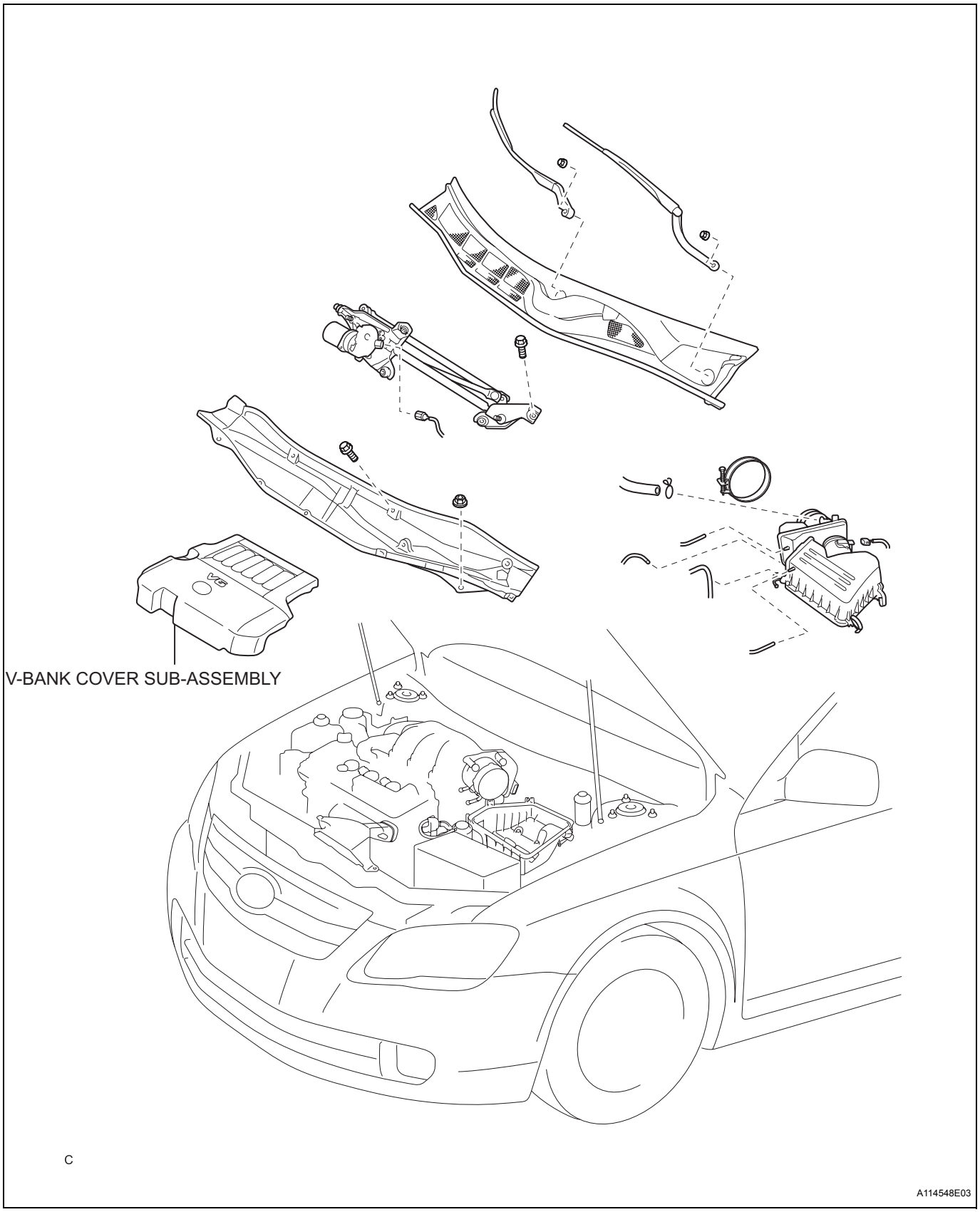
V-BANK COVER SUB-ASSEMBLY
C
A114548E03

REMOVAL

1. REMOVE V-BANK COVER SUB-ASSEMBLY (See page EM-28)

2. REMOVE VVT SENSOR

(a) Intake camshaft (Bank 1).
(1) Disconnect the VVT sensor connector.
(2) Remove the bolt and the VVT sensor.

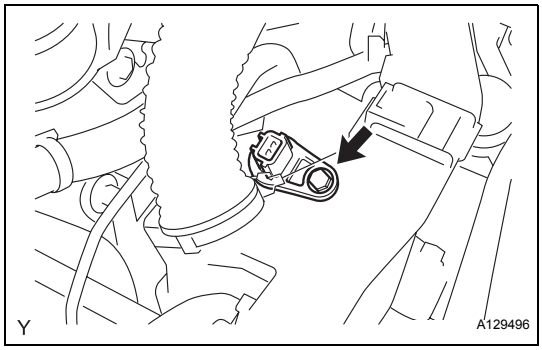

(b) Exhaust camshaft (Bank 1).
(1) Remove the windshield wiper link assembly (See page WW-38).
(2) Remove the cowl top outside panel front (See page BR-8).
(3) Disconnect the VVT sensor connector.
(4) Remove the bolt and the VVT sensor.

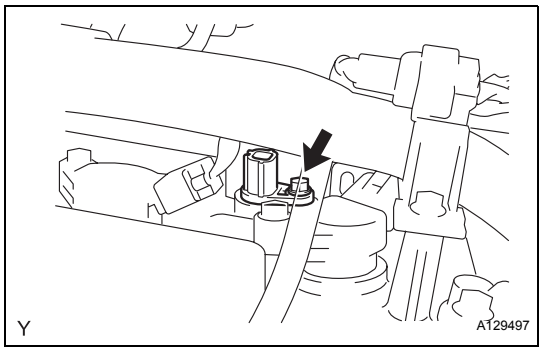

(c) Exhaust camshaft (Bank 2).
(1) Disconnect the VVT sensor connector.
(2) Remove the bolt and the VVT sensor.

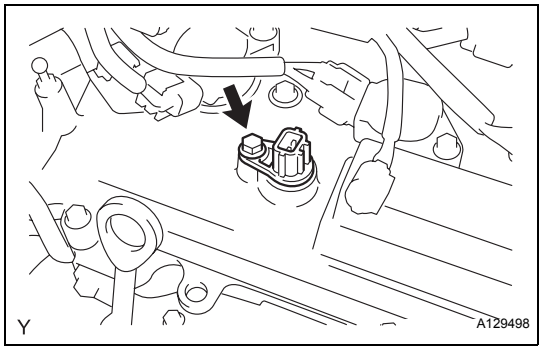

(d) Intake camshaft (Bank 2).
(1) Disconnect the VVT sensor connector.
(2) Remove the bolt and the VVT sensor.