SLIDING ROOF SYSTEM

PARTS LOCATION

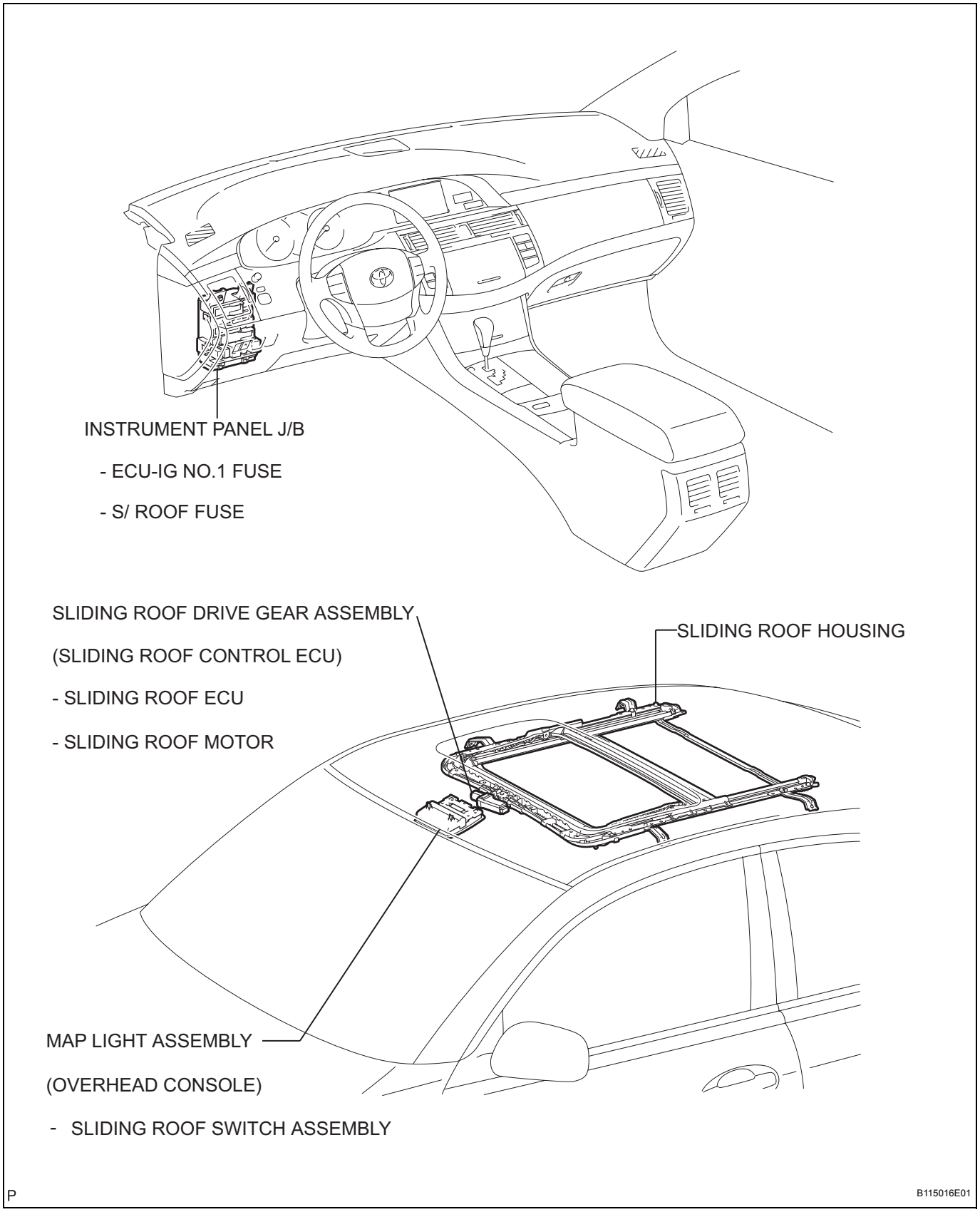

SYSTEM DIAGRAM

1. SYSTEM DIAGRAM

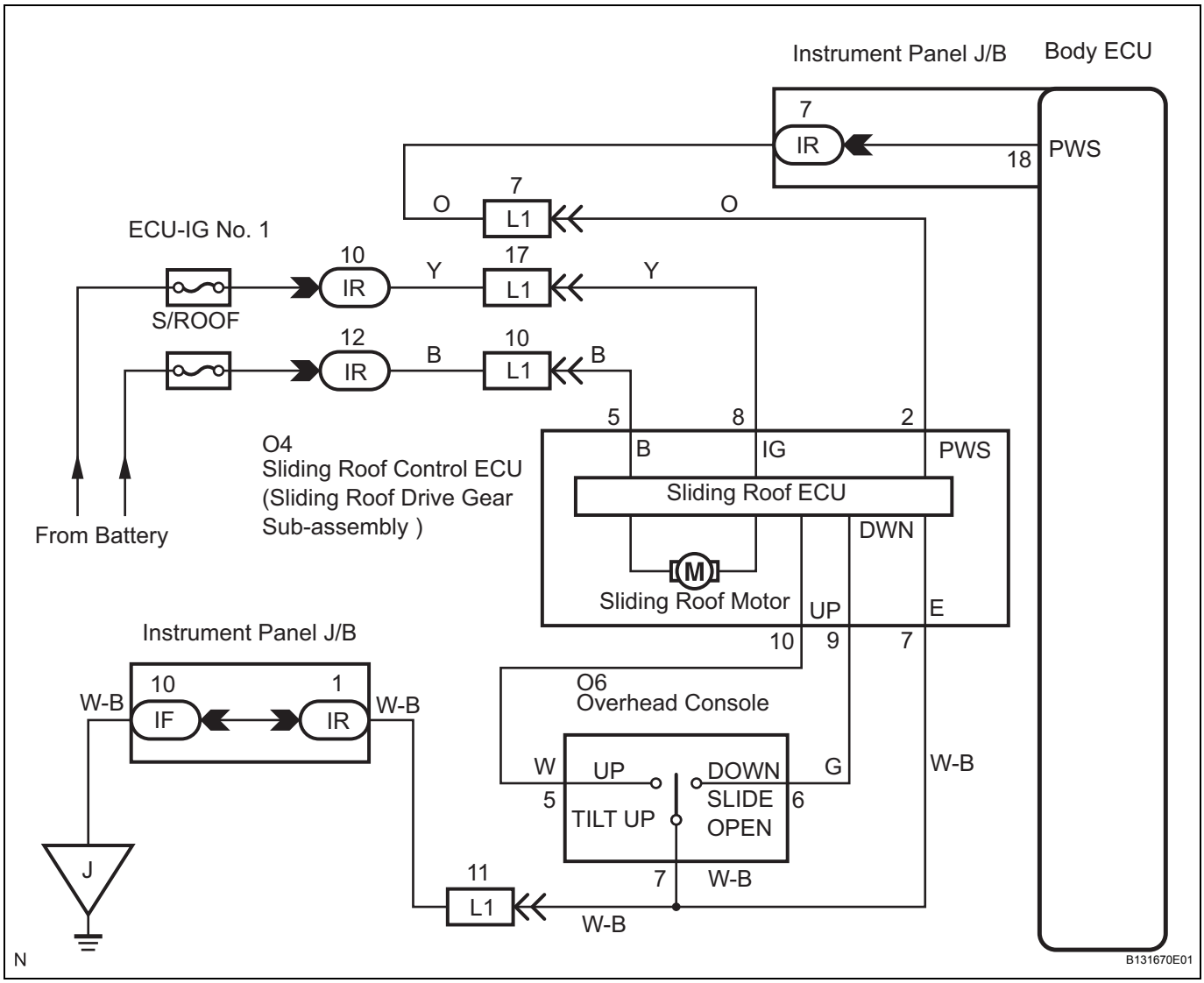

RF

2. SYSTEM OUTLINE

In the system, the sliding roof control ECU detects changes in the motor rotation to allow opening/closing and tilting up/down of the sliding roof using one touch operation. Additionally, jam protection mechanism is provided.

Voltage is always applied from the S/ROOF fuse to TERMINAL 5 of the sliding roof control ECU. When the ignition switch is turned on (IG), voltage is applied from the ECU-IG No.1 fuse to TERMINAL 8 of the sliding roof control ECU.

(a) SLIDING OPEN OPERATION

(1) When the sliding roof control switch is pressed to the OPEN position, a signal is input from TERMINAL 6 of the sliding roof control switch to TERMINAL 9 of the sliding roof control ECU. This activates the sliding roof control ECU, which rotates the motor to open the sliding roof. The sliding roof control ECU determines that the sliding roof is opened (30 mm (1.18 in.) from the fully opened position), and stops the motor rotation. When the sliding roof control switch is pressed to the OPEN position again, it fully opens the sliding roof.

If order operation or open switches are operated while the sliding roof is being opened, the sliding roof control ECU activates to stop the sliding roof operation. While the sliding roof is tilted up, the slide open operation does not function.

(b) SLIDE CLOSE OPERATION

(1) When the sliding roof control switch is pressed to the CLOSE position, a signal is input from TERMINAL 5 of the sliding roof control switch to TERMINAL 10 of the sliding roof control ECU. This activates the sliding roof control ECU and rotates the motor which automatically closes the sliding roof. The sliding roof control ECU determines that the sliding roof is fully closed, and stops the motor rotation.

If other operation or close switches are operated while the sliding roof is being closed, the sliding roof control ECU activates to stop the sliding roof operation.

(c) TILT UP OPERATION

(1) When the sliding roof control switch is pressed to the TILT UP position, a signal is input from TERMINAL 5 of the sliding roof control switch to TERMINAL 10 of the sliding roof control ECU. This activates the sliding roof control ECU and rotates the motor, which automatically tilts up the sliding roof. The sliding roof control ECU determines that the sliding roof is fully tilted up and the motor has stopped, and stops the current flowing into the motor.
If other operation or tilt up switches are operated while the sliding roof is being tilted up, the sliding roof control ECU activates to stop the sliding roof operation. While the sliding roof is open, the tilt up operation does not function.

(d) TILT DOWN OPERATION

(1) When the sliding roof control switch is pressed to the TILT DOWN position, the signal is input from TERMINAL 6 of the sliding roof control switch to TERMINAL 9 of the sliding roof control ECU. This activates the sliding roof control ECU and rotates the motor, which automatically tilts down the sliding roof. The sliding roof control ECU determines that the sliding roof is fully closed and the motor has stopped, and stops the current flowing into the motor.
If other operation or tilt down switches are operated while the sliding roof is being tilted down, the sliding roof control ECU activates to stop the sliding roof operation.

(e) JAM PROTECTION FUNCTION

(1) If the sliding roof control ECU detects a caught object from changes in the motor rotation during slide close or tilt down operation, the operation is stopped and then the motor is rotated in the reverse direction.
Slide close operation:
The sliding roof is moved approximately 200 mm (7.78 in.) in the reverse direction (slide open) after a caught object has been detected. However, if the full open position is detected before moving approximately 200 mm (7.78 in.), the reverse movement is stopped.
Tilt down operation:
If a caught object is detected during tilt down operation, the sliding roof is fully tilted up.

(f) KEY OFF SLIDING ROOF OPERATION

(1) The sliding roof can also be operated for approximately 43 seconds after the ignition switch is turned from on (IG) to off with all doors closed. However, if the driver side door is opened during the operation, the operation is canceled.

(g) FAIL SAFE FUNCTION

(1) If the sliding roof is operated continuously in the same operating direction, the current flowing into the motor is cut off when the time shown below has elapsed after the motor operation is started.
Slide open/close operation with the sliding roof control switch: Approximately 20 seconds.
Tilt up/down operation with the sliding roof control switch: Approximately 3.5 seconds.
Slide open operation for reverse movement when activating the jam protection function: Approximately 20 seconds.
Tilt open operation for reverse movement when activating the jam protection function: Approximately 3.5 seconds.

INITIALIZATION

1. INITIALIZATION OF SLIDING ROOF MOTOR

(a) The sliding roof AUTO operation and the jam protection function may not operate normally if the battery is disconnected/reconnected, replaced or recharged. Initialize the sliding roof system using the method below.

(1) Turn the ignition switch on (IG).

(2) Initialize the sliding roof by pressing and holding the TILT UP switch until the roof glass tilts upward fully (the roof glass automatically tilts downward slightly after fully tilting upward).

(3) Release the switch.

HINT:

If the battery terminal is disconnected, the sliding roof control ECU may not detect the position of the roof glass. If the sliding roof AUTO operation is still disabled even after the sliding roof drive gear has been initialized, the hall IC may be malfunctioning. The hall IC is built into the sliding roof drive gear and detects the roof glass position.

If the result is not as specified, replace the drive gear assembly (sliding roof control ECU).

PROBLEM SYMPTOMS TABLE

SLIDING ROOF SYSTEM

Symptom	Suspected area	See page
Sliding roof does not operate	1. Faulty sliding of sliding roof	RF-5
	2. ECU-IG No.1 fuse	-
	3. S/ROOF fuse	-
	4. Slide roof motor switch	RF-20
	5. Sliding roof drive gear sub-assembly	RF-6
	6. Wire harness	-
Sliding roof operation is abnormal	1. Slide roof motor switch	RF-20
	2. Sliding roof drive gear sub-assembly	RF-6
	3. Wire harness	-
Sliding roof system stops operation halfway even when no foreign object is in the motor	1. Resetting sliding roof drive gear	RF-5
	2. Slide roof motor switch	RF-20
	3. Sliding roof drive gear sub-assembly	RF-6
	4. Wire harness	-
Sliding roof does not operate after turning the ignition switch off	1. Instrument panel J/B (Multiplex network body ECU)	MP-10
	2. Wire harness	-
AUTO function is inoperative	1. Resetting sliding roof drive gear	RF-5
Jam protection function is inoperative	1. Resetting sliding roof drive gear	RF-5

ON-VEHICLE INSPECTION

1. CHECK THE AUTO SLIDE-OPEN / CLOSE OPERATION

NOTICE:

If the sliding roof system has not been initialized, AUTO slide open/close operation will not function.

HINT:

Initialize the sliding roof system after any of the following:

- The battery is disconnected.
- The S/ROOF fuse is replaced.
- The sliding roof control ECU (sliding roof drive gear sub-assembly) is replaced.
- The sliding roof is removed and then reinstalled or replaced.

(a) Initialize the sliding roof system.
  (1) Turn the ignition switch on (IG).
  (2) Using the tilt up switch, tilt the roof fully upward, and then using the slide open switch, tilt the roof fully downward.
  (3) Using the slide open switch, fully open the roof, and then using the tilt up switch, fully close it.

(b) Check the AUTO slide-open operation.
  (1) Turn the ignition switch on (IG).
  (2) If the roof glass is not fully closed, slide or tilt it so that it is fully closed.
  (3) Press the sliding roof OPEN switch for 0.3 seconds or more. The roof glass should automatically slide open and stop slightly before the fully open position.

(c) Check the AUTO slide-close operation.
  (1) Turn the ignition switch on (IG).
  (2) Press the sliding roof CLOSE (tilt up) switch for 0.3 seconds or more. The roof glass should automatically close.
  (3) If the TILT UP or SLIDE OPEN switch is pressed while the roof glass is in motion, the roof glass will stop moving.
  (4) If the roof glass cannot be fully closed using the AUTO operation (due to the jam protection function):
    - Visually check if there is any foreign object between the sliding roof rail and the sliding roof glass.
    - Check if the alignment of the sliding roof glass is within the specified range (See page RF-5).

    If no problems are found with the above checks, then perform the following operation to fully close the roof glass forcedly and check if the AUTO operation returns to normal. (Forced operation)

Perform forced operation.*

Caution:

The jam protection function does not operate during forced operation.

Be careful not to get any part of your body caught between the vehicle body and the roof glass.

*: Pressing and holding the tilt up switch prevents the jam protection function approx. 10 sec. after starting the reverse operation.

If the switch is pressed continuously, the sliding roof starts the close operation and stops when the fully closed position is detected.

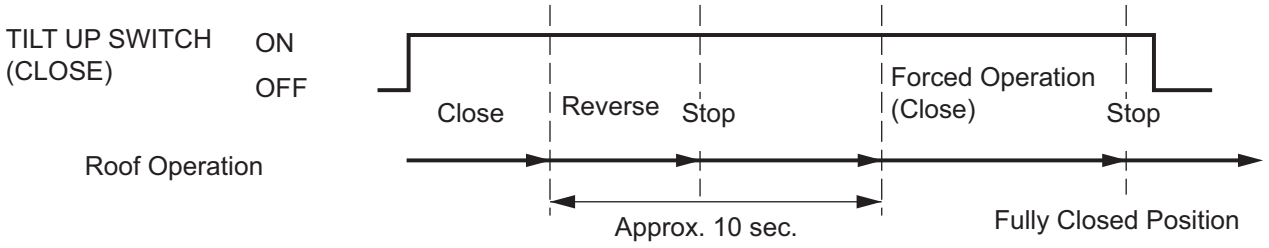

C B115071E01

If the roof glass does not operate normally even after performing the above procedures, then replace the sliding roof control ECU (Sliding roof drive gear sub-assembly).

2. CHECK THE AUTO TILT-UP / DOWN OPERATION

NOTICE:

If the sliding roof system has not been initialized, then AUTO slide tilt up/down operation will not function.

HINT:

Initialize the sliding roof system after any of the following:

- The battery is disconnected.
- The S/ROOF fuse is replaced.
- The sliding roof control ECU (sliding roof drive gear sub-assembly) is replaced.
- The sliding roof is removed and then reinstalled or replaced.

(a) Initialize the sliding roof system.
  (1) Turn the ignition switch on (IG).
  (2) Using the tilt up switch, tilt the roof fully upward, and then using the slide open switch, tilt the roof fully downward.
  (3) Using the slide open switch, fully open the roof, and then using the tilt up switch, fully close it.

(b) Check AUTO tilt-up operation.
  (1) Turn the ignition switch on (IG).

(2) If the roof glass is not fully closed, slide or tilt it so that it is fully closed.
(3) Press the sliding roof UP switch for 0.3 seconds or more. The roof glass should automatically tilt upward until it is fully open.

(c) Check the AUTO tilt-down operation.
(1) Turn the ignition switch on (IG).
(2) When the roof glass is fully tilted upward, press the sliding roof DOWN switch for 0.3 seconds or more. The roof glass should automatically tilt downward until it is fully closed.
(3) If the TILT UP or SLIDE OPEN switch is pressed while the roof glass is in motion, the roof glass will stop moving.
(4) If the roof glass cannot be fully tilted down using the AUTO operation (due to the jam protection function):
- Visually check if there is any foreign object between the sliding roof rail and the sliding roof glass.
- Check if the alignment of the sliding roof glass is within the specified range (See page RF-5).

If no problems are found with the above checks, then perform the following operation to fully tilt down the roof glass forcedly and check if the AUTO operation returns to normal. (Forced operation)

Perform forced operation.*

Caution:

The jam protection function does not operate during forced operation.

Be careful not to get any part of your body caught between the vehicle body and the roof glass.

*: Pressing and holding the slide open switch prevents the jam protection function approx. 10 sec. after starting the reverse operation.

If the switch is pressed continuously, the sliding roof starts the down operation and stops when the fully down position is detected.

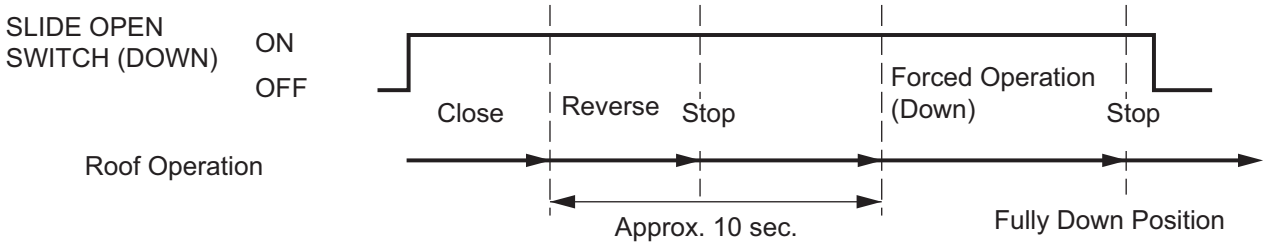

C B115071E03

If the roof glass does not operate normally even after performing the above procedures, then replace the sliding roof control assembly.

3. CHECK KEY-OFF SLIDING ROOF OPERATION

HINT:

The sliding roof can be operated for approximately 43 seconds after the ignition switch is turned from on (IG) to off with all doors closed. However, if the driver side door is opened during the operation, the operation will be canceled.

(a) Check the sliding roof operation function after the ignition switch is turned form on (IG) to off.

(1) After turning the ignition switch from on (IG) to off, the sliding roof AUTO operation will be possible. However, opening the driver side door should disable AUTO operation.

(2) After turning the ignition switch from on (IG) to off, wait approximately 43 seconds and check that the AUTO operation will be prohibited.

(3) Turn the ignition switch from on (IG) to off with the driver side door open. AUTO operation will immediately stop functioning.

If operation is not as specified, the inspect each part following the problem symptoms table (See page RF-5).

4. CHECK JAM PROTECTION FUNCTION

HINT:

When sliding roof AUTO operation is being used, the jam protection function prevents objects from being caught between the vehicle body and the roof glass.

(a) Operative condition:
  (1) AUTO CLOSE with ignition switch on (IG).
  (2) AUTO CLOSE during sliding operation after the ignition switch is turned off.
  (3) AUTO TILT-DOWN with ignition switch on (IG).
  (4) AUTO TILT-DOWN during sliding operation after the ignition switch is turned off.

  CAUTION:
  - **Do not use any part of your body such as your hand, or any object to check the jam protection function. Do not allow anything to become caught in the sliding roof by accident during this procedure.**
  - **The jam protection function may not work against an object less than 5 mm (0.20 in.) in width.**

(b) When the sliding roof AUTO operation is being used and an object is caught between the vehicle body and the roof glass, the roof glass should open a distance of 200 mm (7.87 in.) from the point of contact with the object, or open fully if 200 mm (7.87 in.) of opening distance is not available.

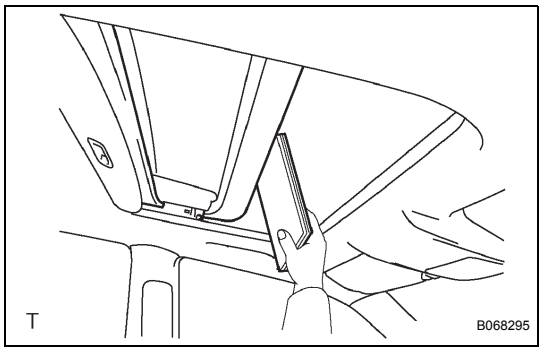

5. CHECK FAIL-SAFE FUNCTION

(a) If the sliding roof's jam protection function is triggered and, afterward, the sliding roof cannot be fully closed due to a malfunctioning sliding roof or a malfunctioning actuator, press and hold the TILT UP switch for at least 10 seconds. This will disable the jam protection function and the sliding roof can then be closed.

  CAUTION:
  Be careful with the closing sliding roof glass. The jam protection function does not operate this time.

  HINT:
  - Before checking the fail-safe function, make sure that there is nothing that triggers the jam protection function.
  - Pressing the TILT UP switch for 10 seconds will clear the memory of the sliding roof's fully closed position from the moon roof control ECU, which disables the jam protection function.

6. CHECK SLIDING ROOF DRIVE GEAR SUB-ASSEMBLY

(a) Disconnect the sliding roof drive gear sub-assembly wire harness connector.

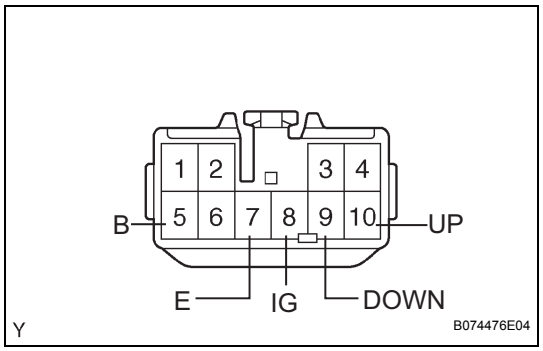

(b) Measure the resistance of the wire harness side connector.

Resistance

Symbols (Terminal No.)	Wiring color	Condition	Specified condition
E(7) ←→ Body ground	W-B ←→ Body ground	Always	Below 1 Ω
DOWN (9) ←→ E (7)	G ←→ W-B	Sliding roof switch UP → DOWN	Below 100 Ω
UP (10) ←→ E (7)	W ←→ W-B	Sliding roof switch DOWN → UP	Below 100 Ω

(c) Measure the voltage of the wire harness side connector.

Voltage

Symbols (Terminal No.)	Wiring color	Condition	Specified condition
B (5) ←→ E (7)	B ←→ W-B	Always	10 to 14 V
IG (8) ←→ E (7)	Y ←→ W-B	Ignition switch OFF → on (IG)	Below 1 V → 10 to 14 V
PWS (2) ←→ E (7)	O ←→ W-B	Ignition switch on (IG)	6 V or higher
PWS (2) ←→ E (7)	O ←→ W-B	Ignition switch LOCK or ACC	Below 2 V*

HINT:
*: Exceptions: During 43 second period after ignition switch on (IG) → off (ACC) or until driver or front passenger door in opened after ignition switch on (IG) → off (ACC).
If the value is not as specified, there way be a malfunction in the wire harness side.

(d) Reconnect the sliding roof drive gear sub-assembly wire harness connector.

(e) Initialize the sliding roof position (See page RF-5).

(f) Check the voltage of the terminals of the wire harness side connector.

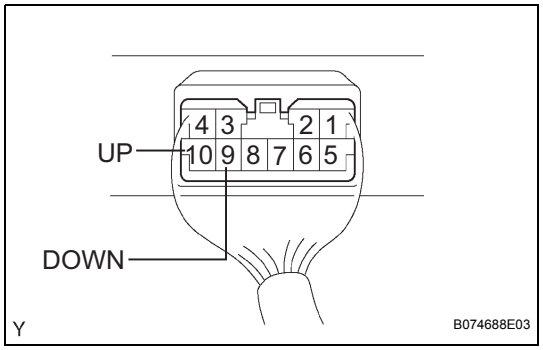

Voltage

Symbols (Terminal No.)	Wiring color	Condition	Specified condition
DOWN (9) ←→ E (7)	G ←→ W-B	Ignition switch: on (IG) Sliding roof switch: UP → DOWN	Approx. 5 V → Below 1 V
UP (10) ←→ E (7)	W ←→ W-B	Ignition switch: on (IG) Sliding roof switch: DOWN → UP	Approx. 5 V → Below 1 V

RF

If the result is not as specified, replace the sliding roof drive gear sub-assembly (sliding roof control ECU).

SLIDING ROOF HOUSING

COMPONENTS

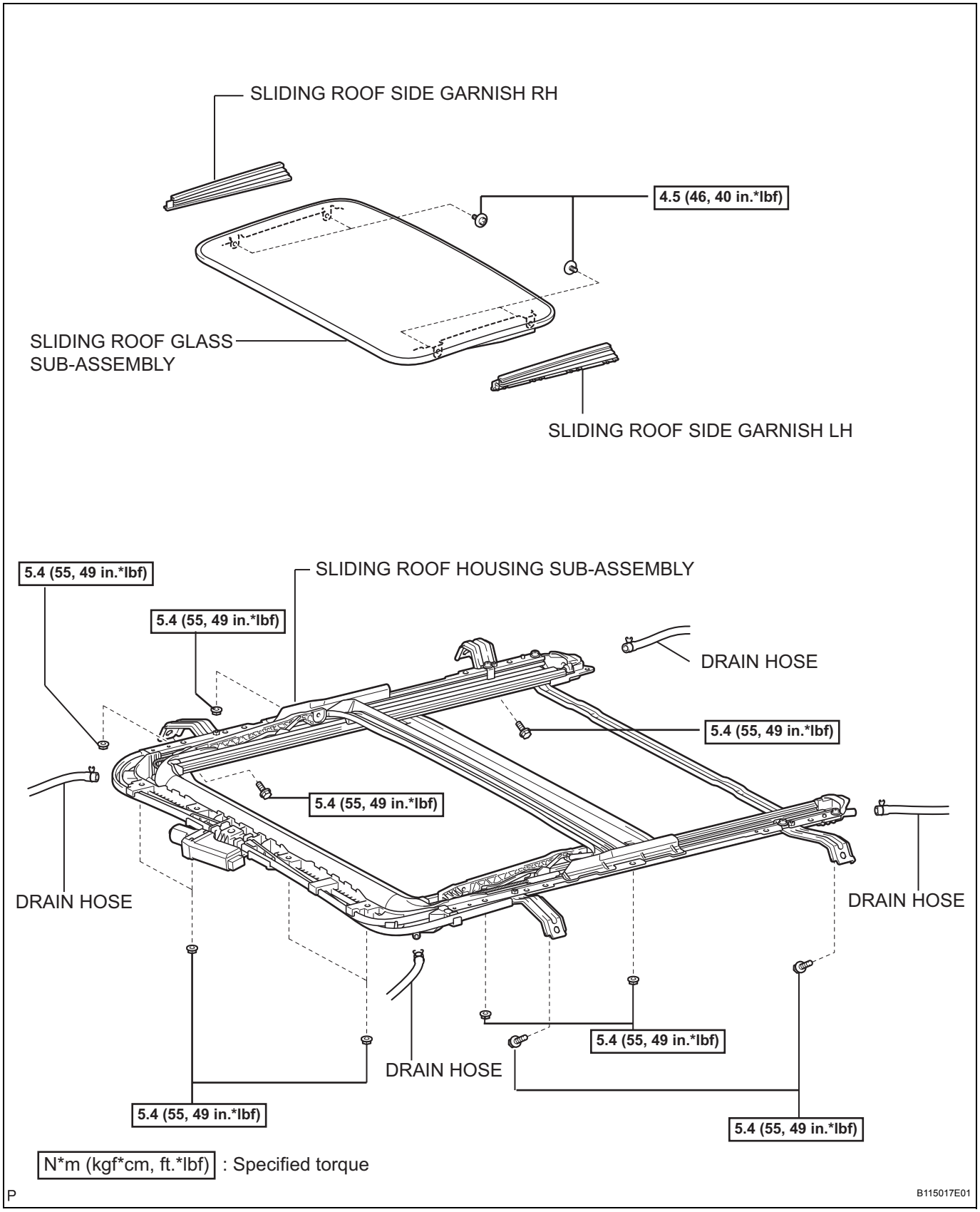

RF

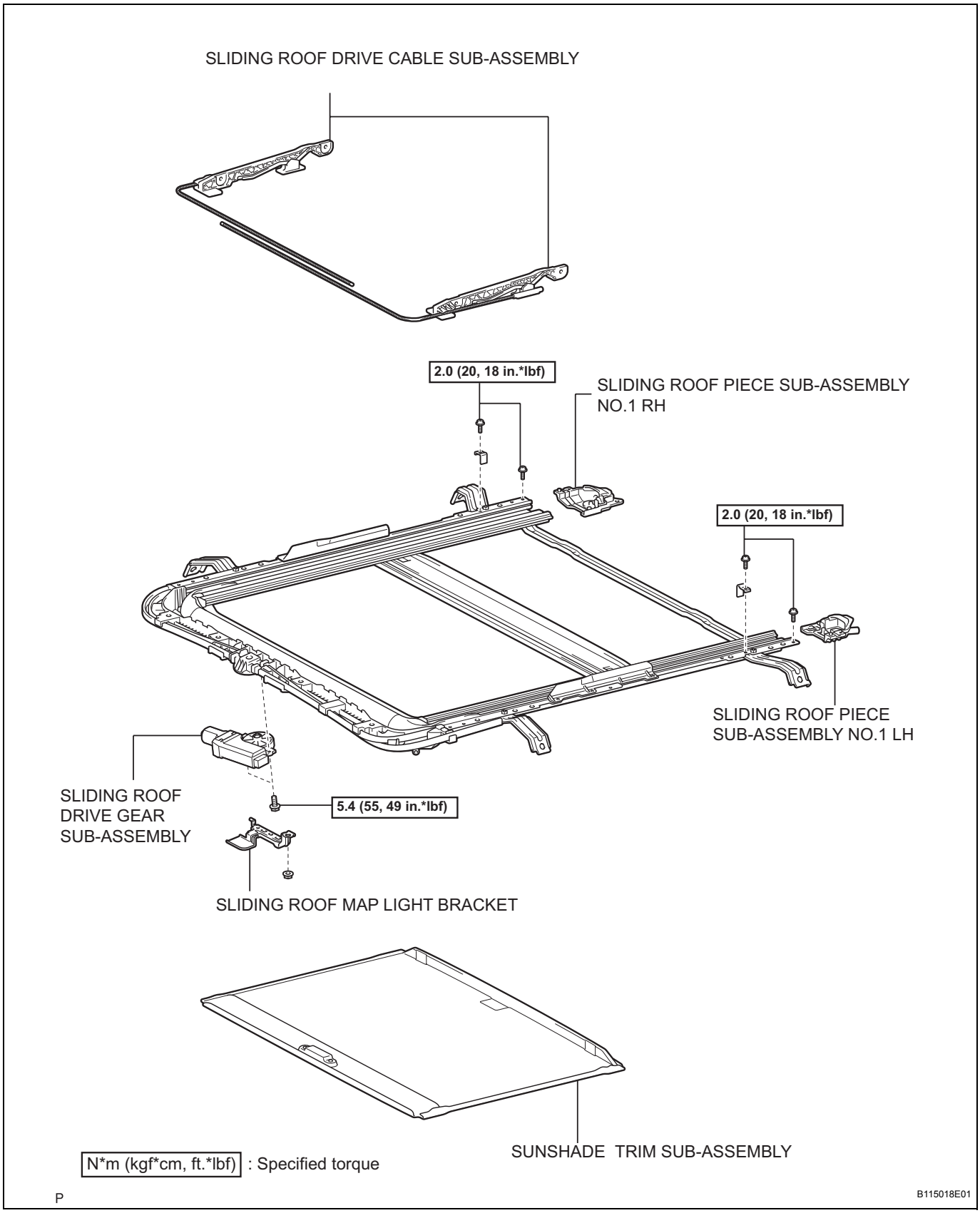
SLIDING ROOF DRIVE CABLE SUB-ASSEMBLY
2.0 (20, 18 in.*lbf)
SLIDING ROOF PIECE SUB-ASSEMBLY NO.1 RH
2.0 (20, 18 in.*lbf)
SLIDING ROOF PIECE SUB-ASSEMBLY NO.1 LH
SLIDING ROOF DRIVE GEAR SUB-ASSEMBLY
5.4 (55, 49 in.*lbf)
SLIDING ROOF MAP LIGHT BRACKET
SUNSHADE TRIM SUB-ASSEMBLY
N*m (kgf*cm, ft.*lbf) : Specified torque
P
B115018E01

REMOVAL

1. REMOVE ROOF HEADLINING ASSEMBLY

(a) Remove the roof headlining assembly (See page IR-11).
HINT:
Refer to the procedures up to "REMOVE ROOF HEADLINING ASSEMBLY".

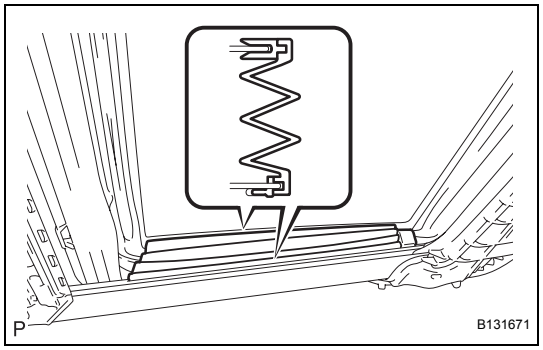

2. REMOVE SLIDING ROOF SIDE GARNISH LH

(a) Remove the sliding roof side garnish LH.

3. REMOVE SLIDING ROOF SIDE GARNISH RH

HINT:
Removal of the sliding roof side garnish RH is the same as the sliding roof side garnish LH.

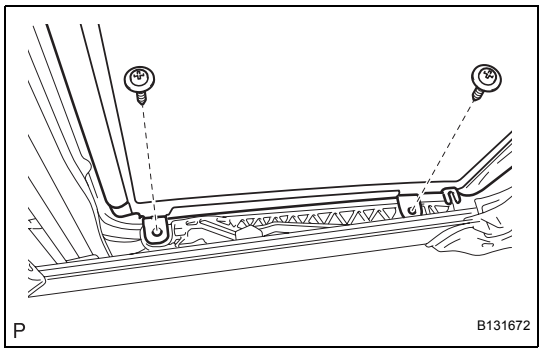

4. REMOVE SLIDING ROOF GLASS SUB-ASSEMBLY

(a) Using a torx driver (T25), remove the 4 torx screws and sliding roof glass sub-assembly.

5. REMOVE SLIDING ROOF HOUSING SUB-ASSEMBLY

(a) Protect the curtain shield airbag.
NOTICE:
Cover the curtain shield airbag with the protection cover as soon as the front pillar garnish is removed.

(b) Disconnect the 4 drain hoses.

(c) Remove the 4 bolts, 8 nuts and the sliding roof housing sub-assembly.

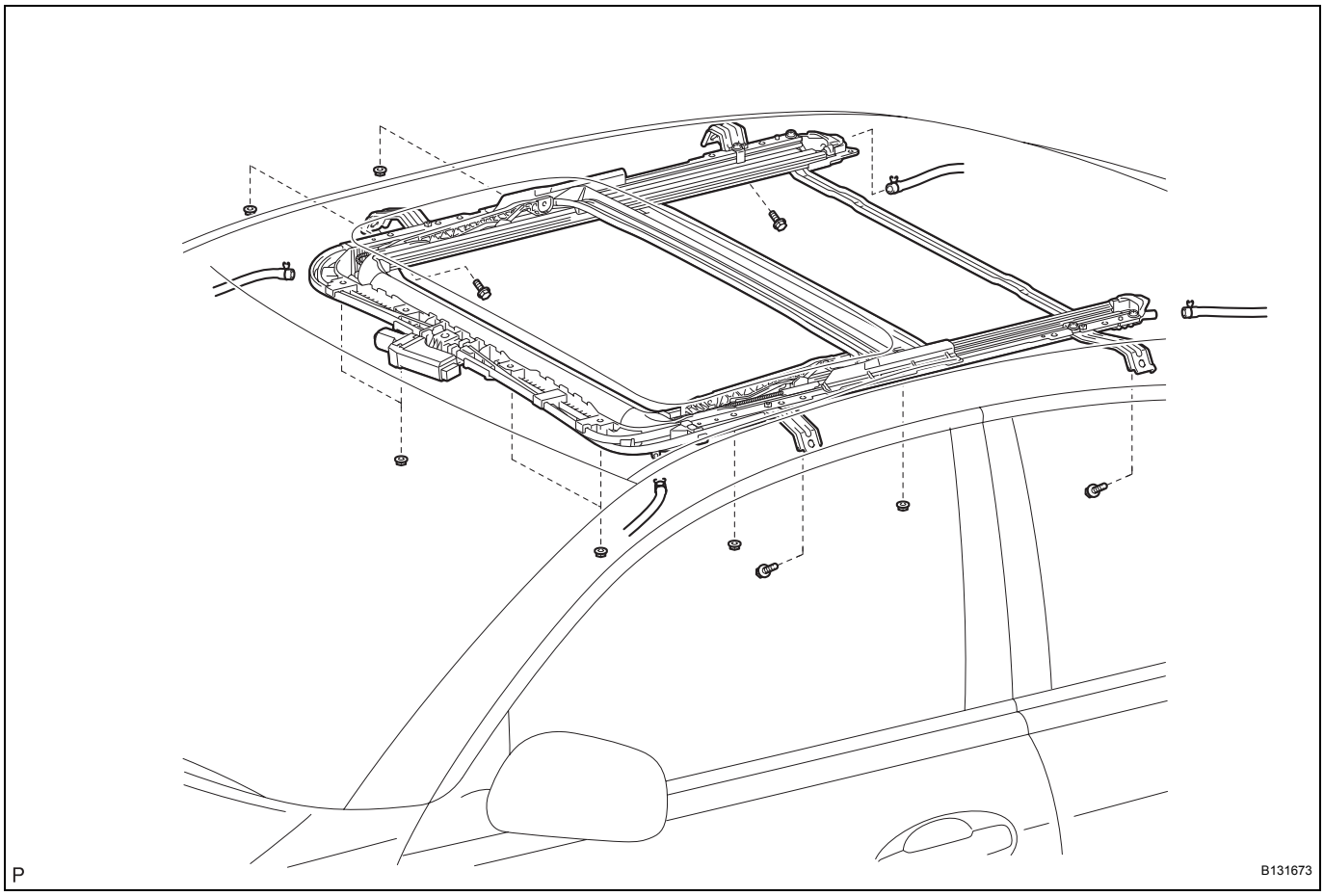

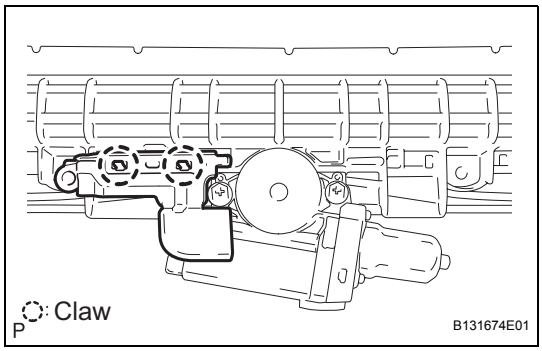

6. REMOVE SLIDING ROOF DRIVE GEAR SUB-ASSEMBLY

(a) Disengage the 2 claws and remove the sliding roof map light bracket.

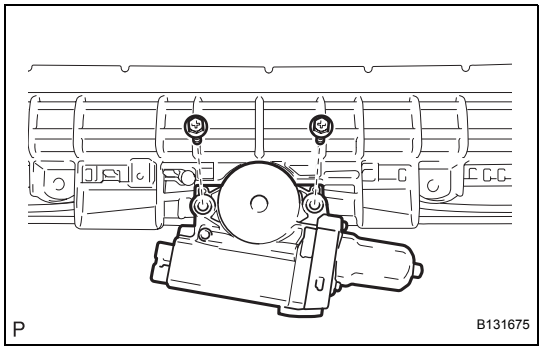

(b) Remove the 2 bolts and the sliding roof drive gear sub-assembly.

7. REMOVE SUNSHADE TRIM SUB-ASSEMBLY

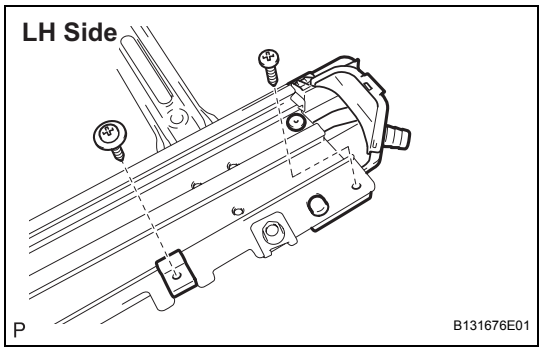

8. REMOVE SLIDING ROOF DRIVE CABLE SUB-ASSEMBLY

(a) Remove the 2 screws and the sliding roof piece sub-assembly No.1 LH.
HINT:
Use the same procedures for the RH side.

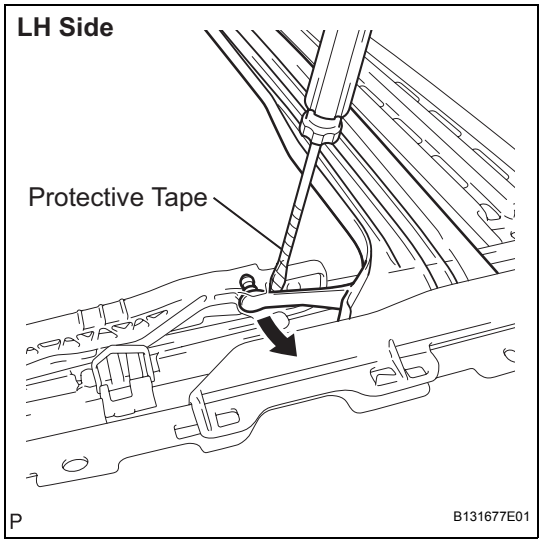

(b) Using a screwdriver, disengage the claw.
HINT:
- Tape the screwdriver tip before use.
- Use the same procedures for the RH side.

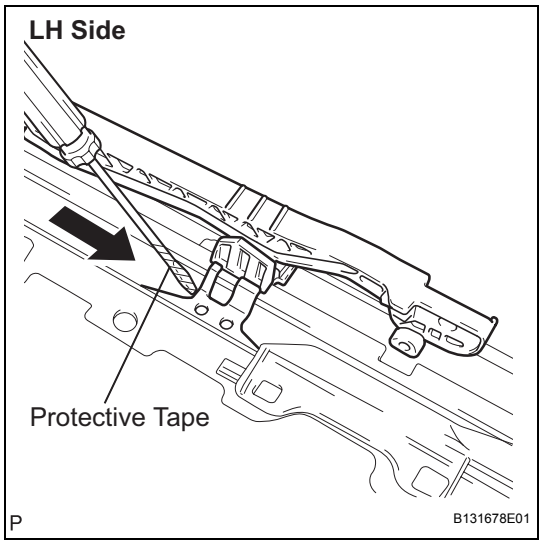

(c) Slide the sliding roof drive cable sub-assembly backward and remove it.
HINT:
- Tape the screwdriver tip before use.
- Use the same procedures for the RH side.

INSTALLATION

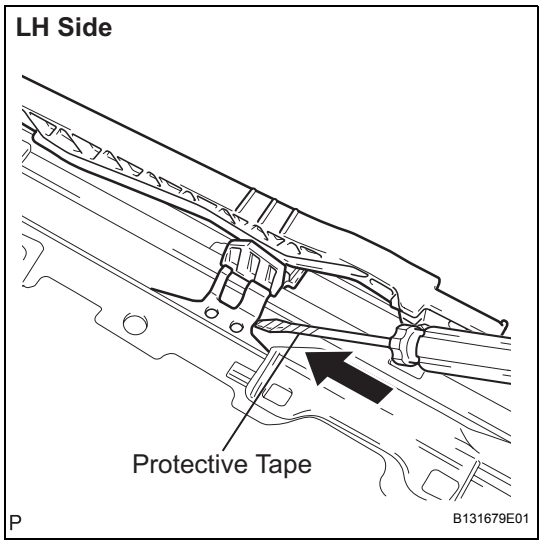

1. INSTALL SLIDING ROOF DRIVE CABLE SUB-ASSEMBLY

(a) Slide the sliding roof drive cable sub-assembly frontward and install it.
HINT:
- Tape the screwdriver tip before use.
- Use the same procedures for the RH side.

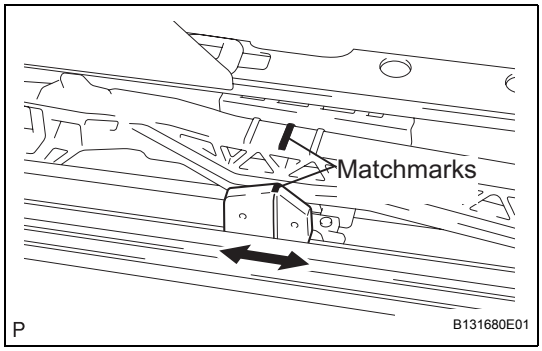

2. ADJUST FULLY CLOSED POSITION

(a) Using a screwdriver, slide the sliding roof drive cable sub-assembly to align the matchmarks.
HINT:
Tape the screwdriver tip before use.

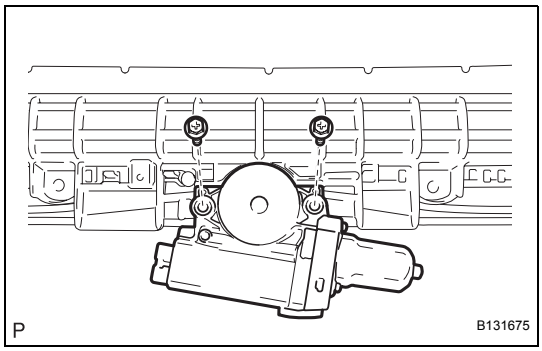

3. INSTALL SLIDING ROOF DRIVE GEAR SUB-ASSEMBLY

(a) Install the sliding roof drive gear sub-assembly with the 2 bolts.
Torque: 5.4 N*m (55 kgf*cm, 49 in.*lbf)

(b) Engage the 2 claws to install the sliding roof map light bracket.

4. INSTALL SLIDING ROOF HOUSING SUB-ASSEMBLY

(a) Install the sliding roof housing sub-assembly with the 8 nuts and 4 bolts.
Torque: Bolt
5.4 N*m (55 kgf*cm, 49 in.*lbf)
Nut
.5.4 N*m (55 kgf*cm, 49 in.*lbf)

(b) Install the 4 drain hoses to the housing.

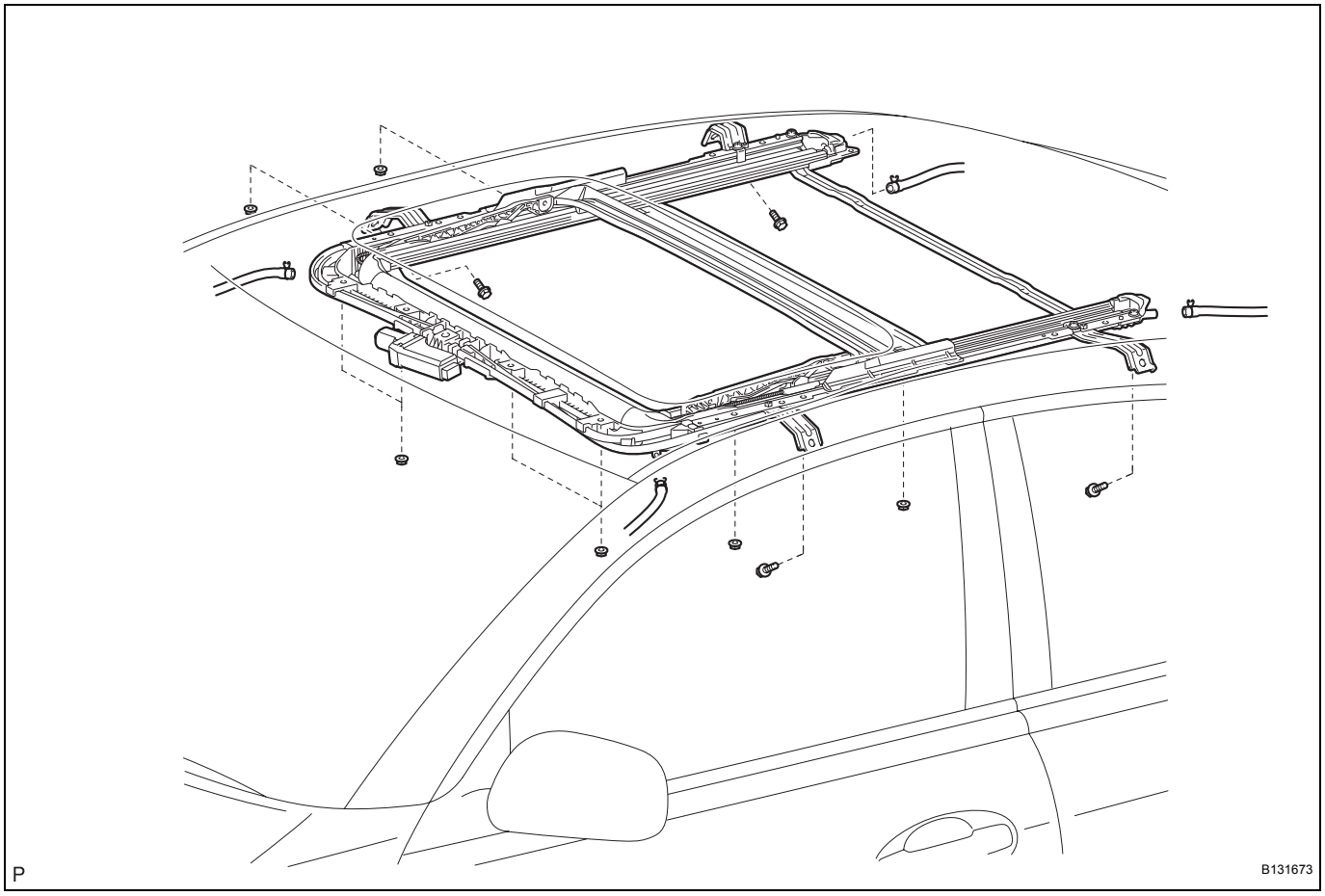

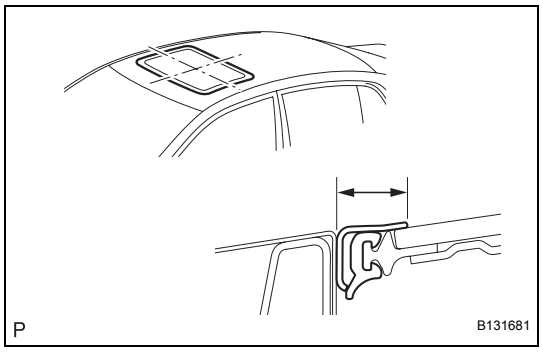

5. ADJUST SLIDING ROOF GLASS SUB-ASSEMBLY

(a) Check for clearance between the roof glass and roof panel. Using a torx wrench (T25), loosen the 4 torx screws and adjust the sliding roof panel position.
Difference:
0 +- 1.4 mm (0 +- 0.055 in.)
NOTICE:
The difference should be even all around.

6. INSTALL SLIDING ROOF GLASS SUB-ASSEMBLY

(a) Using a torx wrench (T25), tighten 4 torx screws.
Torque: 4.5 N*m (46 kgf*cm, 40 in.*lbf)

7. CHECK FOR WATER LEAKS

(a) No water should leak after adjusting the sliding roof.
(b) If a leak is found, readjust the sliding roof.

8. INITIALIZATION OF SLIDING ROOF MOTOR

(a) Initialization of sliding roof motor (See page RF-5).

SLIDING ROOF SWITCH ASSEMBLY

INSPECTION

1. INSPECT SLIDE ROOF MOTOR SWITCH

(a) Remove the slide roof motor switch.

(b) Measure the resistance of the switch when operating the switch.

Resistance

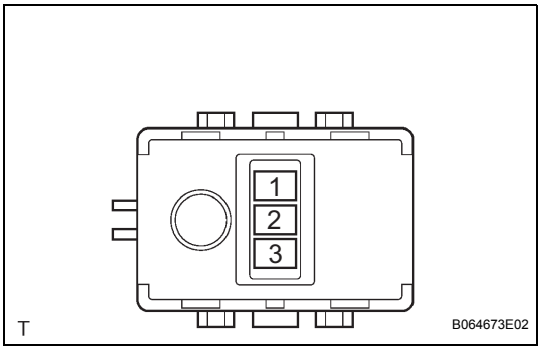

Tester Connection	Switch Condition	Specified Condition
1 - 3	TILT UP is pressed	Below 100 Ω
2 - 3	SLIDE OPEN is pressed	Below 100 Ω
1 - 3	OFF	1 MΩ or higher
2 - 3	OFF	1 MΩ or higher

If the result is not as specified, replace the switch.