AUTOMOTIVE

# DIAGNOSTIC FAULT CODES MANUAL

Havnes

3472

**Engine management and fuel injection system fault codes for all popular petrol cars and light commercial vehicles**



- Extracting, interpreting and clearing of fault codes
- Fault code tables and step-by-step instructions
- The guide that shows you how and saves you money

TECHBOOK

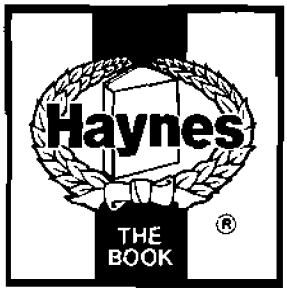


# Automotive Diagnostic Fault Codes Techbook

Charles White

(3472 - 256)

***Systems covered***

Bosch KE-Jetronic
Bosch KE-Motronic
Bosch LH-Jetronic
Bosch Mono-Jetronic
Bosch Mono-Motronic
Bosch Motronic
Daihatsu MPi
Bosch EZ-K and EZ-L Ignition
Fenix
Ford EEC IV and EEC V
GM/Delco SPi
GM Multec
Isuzu I-Tec
Lucas 11CU and 14CUX
Lucas LH
Magneti-Marelli G5 and G6
Magneti-Marelli 8F and 8P
Mazda EGi
Mercedes HFM and PMS
Mitsubishi ECI-Multi
Nissan ECCS
Proton ECI-Multi and ECI-SEFi
Renix
Rover MEMS
Rover PGM-Fi
Saab Trionic
Siemens Bendix MPi
Siemens MS4.0
Simos
Simtec
Subaru MPFi
Suzuki EPi
Toyota TCCS
VAG MPi and MPFi
VW Digifant
Weber-Marelli IAW

© Haynes Publishing 1998

ABCDE
FGHIJ
KLMNO
PQ

Printed in the USA

A book in the **Haynes Techbook Series**

**All rights reserved. No part of this book may be reproduced or transmitted in any form or by any means, electronic or mechanical, including photocopying, recording or by any information storage or retrieval system, without permission in writing from the copyright holder.**

ISBN 1 85960 472 2

**British Library Cataloguing in Publication Data**
A catalogue record for this book is available from the British Library.

**Haynes Publishing**
Sparkford, Nr Yeovil, Somerset BA22 7JJ, England

**Haynes North America, Inc**
861 Lawrence Drive, Newbury Park, California 91320, USA

**Editions Haynes S.A.**
Tour Aurore - La Défense 2, 18 Place des Reflets 92975 PARIS LA DEFENSE Cedex

**Haynes Publishing Nordiska AB**
Box 1504, 751 45 UPPSALA, Sverige

# Contents

## GENERAL INFORMATION


| | | |
|---|---|---|
| Introduction | | Page **0•4** |
| Safety first! | | Page **0•5** |
| **Index of vehicles covered** | | **Page 0•6** |
| Chapter 1 | Introduction to Self-Diagnosis | Page **1•1** |
| Chapter 2 | Test equipment, training and technical data | Page **2•1** |
| Chapter 3 | General test procedures | Page **3•1** |
| Chapter 4 | Component test procedures | Page **4•1** |


## SYSTEM SPECIFICS (BY MANUFACTURER)


| | | |
|---|---|---|
| Chapter 5 | Alfa Romeo | Page **5•1** |
| Chapter 6 | Audi | Page **6•1** |
| Chapter 7 | BMW | Page **7•1** |
| Chapter 8 | Citroën | Page **8•1** |
| Chapter 9 | Daewoo | Page **9•1** |
| Chapter 10 | Daihatsu | Page **10•1** |
| Chapter 11 | Fiat | Page **11•1** |
| Chapter 12 | Ford | Page **12•1** |
| Chapter 13 | Honda | Page **13•1** |
| Chapter 14 | Hyundai | Page **14•1** |
| Chapter 15 | Isuzu | Page **15•1** |
| Chapter 16 | Jaguar | Page **16•1** |
| Chapter 17 | Kia | Page **17•1** |

# Contents


| | | |
|---|---|---|
| Chapter 18 | Lancia | Page **18•1** |
| Chapter 19 | Land Rover | Page **19•1** |
| Chapter 20 | Lexus | Page **20•1** |
| Chapter 21 | Mazda | Page **21•1** |
| Chapter 22 | Mercedes | Page **22•1** |
| Chapter 23 | Mitsubishi | Page **23•1** |
| Chapter 24 | Nissan | Page **24•1** |
| Chapter 25 | Peugeot | Page **25•1** |
| Chapter 26 | Proton | Page **26•1** |
| Chapter 27 | Renault | Page **27•1** |
| Chapter 28 | Rover | Page **28•1** |
| Chapter 29 | Saab | Page **29•1** |
| Chapter 30 | Seat | Page **30•1** |
| Chapter 31 | Skoda | Page **31•1** |
| Chapter 32 | Subaru | Page **32•1** |
| Chapter 33 | Suzuki | Page **33•1** |
| Chapter 34 | Toyota | Page **34•1** |
| Chapter 35 | Vauxhall/Opel | Page **35•1** |
| Chapter 36 | Volkswagen | Page **36•1** |
| Chapter 37 | Volvo | Page **37•1** |


## REFERENCE


Abbreviations, Warnings and Glossary of technical terms Page **REF•1**

This book is devoted to the gathering of fault codes, and to the understanding and testing of the self-diagnosis element of the modern engine management system. This Automotive Diagnostic Fault Code Techbook is a companion volume to the Haynes Engine Management and Fuel Injection Systems Manual, and for a complete understanding of the modern engine management system, the content of both books should be examined.

The book first gives a technical overview of self-diagnosis. Other Chapters describe test equipment and general test routines for individual components which may be indicated to be defective by the presence of a stored fault code. Finally, each vehicle manufacturer is given a specific Chapter with a comprehensive list of fault codes, details of how to obtain codes, and other relevant information. Even if the reader has no intention of actually attempting to investigate faults on his or her own vehicle, the book still provides valuable insight into self-diagnosis.

On the other hand, if you relish the task of electronic fault diagnosis, this book will provide you with much of the background knowledge necessary to test the components and circuits on your engine. Generally, we describe how to diagnose faults using simple tools and equipment, which will be available from most good automotive parts retailers. We also mention where the use of more specialised equipment is necessary, and describe some of the common routines used by the professional garage trade.

The vehicle manufacturers may not in fact specifically endorse a number of our tests and routines. In the main, this will be because the manufacturer's test routines are becoming more focused on their own dedicated test equipment which is not generally available outside of a main dealer network. In almost all instances, our own tests follow well-defined testing methods taught in independent training schools, and used by many modern vehicle technical specialists. We mainly describe simple testing methods that are possible with the aid of the ubiquitous digital multi-meter (DMM).

Refer to the companion volume (Haynes Engine Management Techbook) for a description of the operation and test procedures of the modern engine management system. Our test procedures are necessarily generic. However, in many cases, following our procedures in conjunction with a good wiring diagram will reveal the reason for most faults.

The routine and test methods which we describe are perfectly safe to carry out on electronic systems, so long as certain simple rules are observed. These rules are actually no more than the observation of good electrical practice. Be aware that damage to highly-expensive electronic control modules can result from not following these rules. Refer to the Warnings section in the Reference section at the back of this book - these warnings will be repeated/referred to where necessary in the various procedures.

Throughout Europe, the USA and the Far East, the various manufacturers tend to use their own particular terms to describe a particular component. Of course, all these terms tend to be different, and the problem is exacerbated by translation into different languages. This often leads to confusion when several terms are used to describe essentially the same component. There have been several attempts to bring all the manufacturers into line, with a common naming standard for all. One such does now exist (J1930), but it seems unlikely that all manufacturers will adopt this particular standard, and we are not sure that the terms used are that meaningful anyway. Thus, the terms used in this book will follow those which are commonly used in the UK. To reduce confusion, we will apply these terms for the whole range of manufacturers covered in this book, and any commonly-used alternatives will be listed in the Reference section at the end.

### Acknowledgements

We would like to thank all those at Sparkford and elsewhere who have helped in the production of this book. In particular, we would like to thank Equiptech for permission to use illustrations from the "CAPS" fuel injection fault diagnosis database, and for providing much of the technical information used. We also thank Kate Eyres, who compiled the lists and tables, John Merritt for his work on many of the Chapters, and Simon Ashby of RA Engineering for additional technical information.

**We take great pride in the accuracy of information given in this book, but vehicle manufacturers make alterations and design changes during the production run of a particular vehicle of which they do not inform us. No liability can be accepted by the authors or publishers for loss, damage or injury caused by any errors in, or omissions from, the information given.**

Working on your car can be dangerous. This page shows just some of the potential risks and hazards, with the aim of creating a safety-conscious attitude.

# General hazards

## Scalding

• Don't remove the radiator or expansion tank cap while the engine is hot.
• Engine oil, automatic transmission fluid or power steering fluid may also be dangerously hot if the engine has recently been running.

## Burning

• Beware of burns from the exhaust system and from any part of the engine. Brake discs and drums can also be extremely hot immediately after use.

## Crushing

• When working under or near a raised vehicle, always supplement the jack with axle stands, or use drive-on ramps. ***Never venture under a car which is only supported by a jack.***

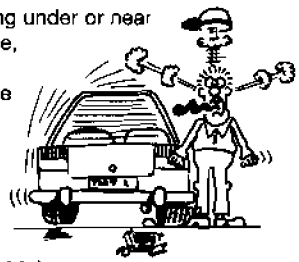

• Take care if loosening or tightening high-torque nuts when the vehicle is on stands. Initial loosening and final tightening should be done with the wheels on the ground.

## Fire

• Fuel is highly flammable; fuel vapour is explosive.
• Don't let fuel spill onto a hot engine.
• Do not smoke or allow naked lights (including pilot lights) anywhere near a vehicle being worked on. Also beware of creating sparks (electrically or by use of tools).
• Fuel vapour is heavier than air, so don't work on the fuel system with the vehicle over an inspection pit.
• Another cause of fire is an electrical overload or short-circuit. Take care when repairing or modifying the vehicle wiring.
• Keep a fire extinguisher handy, of a type suitable for use on fuel and electrical fires.

## Electric shock

• Ignition HT voltage can be dangerous, especially to people with heart problems or a pacemaker. Don't work on or near the ignition system with the engine running or the ignition switched on.

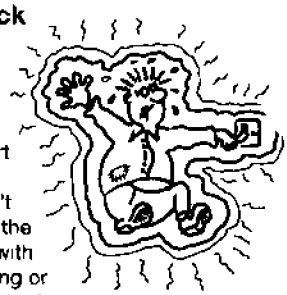

• Mains voltage is also dangerous. Make sure that any mains-operated equipment is correctly earthed. Mains power points should be protected by a residual current device (RCD) circuit breaker.

## Fume or gas intoxication

• Exhaust fumes are poisonous; they often contain carbon monoxide, which is rapidly fatal if inhaled. Never run the engine in a confined space such as a garage with the doors shut.

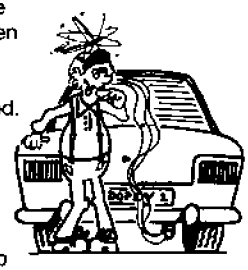

• Fuel vapour is also poisonous, as are the vapours from some cleaning solvents and paint thinners.

## Poisonous or irritant substances

• Avoid skin contact with battery acid and with any fuel, fluid or lubricant, especially antifreeze, brake hydraulic fluid and Diesel fuel. Don't syphon them by mouth. If such a substance is swallowed or gets into the eyes, seek medical advice.
• Prolonged contact with used engine oil can cause skin cancer. Wear gloves or use a barrier cream if necessary. Change out of oil-soaked clothes and do not keep oily rags in your pocket.
• Air conditioning refrigerant forms a poisonous gas if exposed to a naked flame (including a cigarette). It can also cause skin burns on contact.

## Asbestos

• Asbestos dust can cause cancer if inhaled or swallowed. Asbestos may be found in gaskets and in brake and clutch linings. When dealing with such components it is safest to assume that they contain asbestos.

# Special hazards

## Hydrofluoric acid

• This extremely corrosive acid is formed when certain types of synthetic rubber, found in some O-rings, oil seals, fuel hoses etc, are exposed to temperatures above 400°C. The rubber changes into a charred or sticky substance containing the acid. *Once formed, the acid remains dangerous for years. If it gets onto the skin, it may be necessary to amputate the limb concerned.*
• When dealing with a vehicle which has suffered a fire, or with components salvaged from such a vehicle, wear protective gloves and discard them after use.

## The battery

• Batteries contain sulphuric acid, which attacks clothing, eyes and skin. Take care when topping-up or carrying the battery.
• The hydrogen gas given off by the battery is highly explosive. Never cause a spark or allow a naked light nearby. Be careful when connecting and disconnecting battery chargers or jump leads.

## Air bags

• Air bags can cause injury if they go off accidentally. Take care when removing the steering wheel and/or facia. Special storage instructions may apply.

## Diesel injection equipment

• Diesel injection pumps supply fuel at very high pressure. Take care when working on the fuel injectors and fuel pipes.

***Warning: Never expose the hands, face or any other part of the body to injector spray; the fuel can penetrate the skin with potentially fatal results.***

# Remember...

## DO

• Do use eye protection when using power tools, and when working under the vehicle.
• Do wear gloves or use barrier cream to protect your hands when necessary.
• Do get someone to check periodically that all is well when working alone on the vehicle.
• Do keep loose clothing and long hair well out of the way of moving mechanical parts.
• Do remove rings, wristwatch etc, before working on the vehicle – especially the electrical system.
• Do ensure that any lifting or jacking equipment has a safe working load rating adequate for the job.

## DON'T

• Don't attempt to lift a heavy component which may be beyond your capability – get assistance.
• Don't rush to finish a job, or take unverified short cuts.
• Don't use ill-fitting tools which may slip and cause injury.
• Don't leave tools or parts lying around where someone can trip over them. Mop up oil and fuel spills at once.
• Don't allow children or pets to play in or near a vehicle being worked on.

# Index of vehicles covered

| Model | Engine code | Year | System |
|---|---|---|---|
| ***ALFA ROMEO*** | | | |
| 33, 1.7ie, Sportwagon, 4x4 cat | 307.37 | 1993 to 1995 | Bosch Motronic MP3.1 |
| 33, Boxer 16V, 4x4 and cat | 307.46 | 1990 to 1995 | Bosch Motronic ML4.1 |
| 75 3 0i V6 cat | 061.20 | 1987 to 1993 | Bosch Motronic ML4.1 |
| 145 1.3ie SOHC | AR33501 | 1994 to 1997 | Weber IAW 8F.6B |
| 145 1.6ie SOHC | AR33201 | 1994 to 1996 | Bosch Motronic MP3.1 |
| 145 1.6ie SOHC | AR33201 | 1994 to 1997 | GM Multec XM |
| 145 1.7 16V DOHC | AR33401 | 1994 to 1997 | Bosch Motronic M2.10.3 |
| 145 2.0 16V DOHC | AR67204 | 1996 to 1997 | Bosch Motronic M2 10.3 |
| 146 1 3ie SOHC | AR33501 | 1994 to 1997 | Weber IAW 8F.6B |
| 146 1.6ie SOHC | AR33201 | 1994 to 1996 | GM Multec XM |
| 146 1.7 16V DOHC | AR33401 | 1994 to 1997 | Bosch Motronic M2.10.3 |
| 146 2.0 16V DOHC | AR67204 | 1996 to 1997 | Bosch Motronic M2.10.3 |
| 155 T-Spark DOHC cat | AR671.03 | 1992 to 1992 | Bosch Motronic 1.7 |
| 155 1.8 T-Spark DOHC cat | AR671.02 | 1992 to 1996 | Bosch Motronic 1.7 |
| 155 2.0 T-Spark DOHC cat | AR671.02 | 1992 to 1996 | Bosch Motronic 1 7 |
| 155 2.5 V6 SOHC cat | AR673.01/03 | 1992 to 1996 | Bosch Motronic 1 7 |
| 155 2.0 16V DOHC T-Spark | AR67204 | 1996 to 1997 | Bosch Motronic M2.10 3 |
| 164 2.0 T-Spark DOHC | 064.20 | 1990 to 1993 | Bosch Motronic ML4.1 |
| 164 2.0 T-Spark DOHC cat | 064.16 | 1990 to 1993 | Bosch Motronic ML4.1 |
| 164 2.0 T-Spark DOHC 16V | AR64.103 | 1993 to 1996 | Bosch Motronic 1.7 |
| 164 V6 | 064.10 | 1988 to 1993 | Bosch Motronic ML4 1 |
| 164 V6 and cat | 064.12 | 1988 to 1993 | Bosch Motronic ML4.1 |
| 164 V6 Cloverleaf cat SOHC | 064.301 | 1990 to 1993 | Bosch Motronic ML4.1 |
| 164 V6 24V | 066.301 | 1993 to 1995 | Bosch Motronic 1.7 |
| 164 V6 24V | AR66.302 | 1995 to 1997 | Bosch Motronic 1.7 |
| 164 V6 24V Cloverleaf | 064.304 | 1994 to 1997 | Bosch Motronic 1.7 |
| 164 V6 24V Cloverleaf | AR64.308 | 1995 to 1997 | Bosch Motronic 1.7 |
| GTV 2.0 16V DOHC | AR162.01 | 1996 to 1997 | Bosch Motronic M2.10.3 |
| Spider DOHC cat | 015.88 | 1990 to 1994 | Bosch Motronic ML4.1 |
| Spider 2.0 16V DOHC | AR162.01 | 1996 to 1997 | Bosch Motronic M2.10 3 |
| ***AUDI*** | | | |
| Audi A3 1.6 | AEH | 1996 to 1997 | Simos |
| Audi A3 1.8 | AGN | 1996 to 1997 | Bosch Motronic 3.2 |
| Audi A3 1.8i | AGN | 1997 on | Bosch Motronic 3.8.2 |
| Audi A3 1.8 Turbo | AGU | 1996 to 1997 | Bosch Motronic 3.2 |
| Audi A4 1.6 | ADP | 1995 to 1997 | Bosch Motronic 3 2 |
| Audi A4 1.8 | ADR | 1995 to 1997 | Bosch Motronic 3.2 |
| Audi A4 1.8 Turbo | AEB | 1995 to 1997 | Bosch Motronic 3.2 |
| Audi A4 2.6 | ABC | 1995 to 1997 | VAG MPFi |
| Audi A4 2.8 | AAH | 1995 to 1996 | VAG MPi |
| Audi A4 2.8 | ACK | 1996 to 1997 | Bosch Motronic MPi |
| Audi A6 2 0i | ABK | 1993 to 1996 | VAG Digifant |
| Audi A6 2.8 30V | ACK | 1995 to 1997 | Bosch Motronic |
| Audi A6 S6 2.2 cat | AAN | 1991 to 1997 | Bosch Motronic M2 3.2 |
| Audi A6 2.6 | ABC | 1992 to 1997 | VAG MPFi |
| Audi A6 2.8 | AAH | 1991 to 1997 | VAG MPi |
| Audi A6 S6 4 2 | AHK | 1996 to 1997 | Bosch Motronic |
| Audi A6 S6 4.2 | AEC | 1994 to 1997 | Bosch Motronic |
| Audi A8 2.8i V6 | AAH | 1994 to 1997 | VAG MPFi |
| Audi A8 2.8 | ACK | 1996 to 1997 | Bosch Motronic |
| Audi A8 3.7 | AEW | 1995 to 1997 | Bosch Motronic |
| Audi A8 4.2 | ABZ | 1994 to 1997 | Bosch Motronic M2.4 |
| Audi V8 3.6 cat | PT | 1989 to 1994 | Bosch Motronic M2.4 |
| Audi V8 4.2 cat | ABH | 1992 to 1994 | Bosch Motronic M2 4 |
| Audi 80 1.6 cat | ABM | 1992 to 1995 | Bosch Mono-Motronic MA1.2 |
| Audi 80 1.6 cat | ADA | 1993 to 1995 | VAG MPi |
| Audi 80 1.8i and 4x4 cat | JN | 1986 to 1991 | Bosch KE-Jetronic |
| Audi 80 1.8i and 4x4 cat | PM | 1988 to 1989 | Bosch Mono-Jetronic A2 2 |
| Audi 80 1.8 and 4x4 cat | PM | 1990 to 1991 | Bosch Mono-Motronic |
| Audi 80 2.0i Quattro cat | ABT | 1992 to 1995 | Bosch Mono-Motronic |
| Audi 80 Coupe 16V 2.0 cat | 6A | 1990 to 1995 | Bosch KE1.2 Motronic |
| Audi 80 Coupe 2.0 and 4x4 cat | 3A | 1988 to 1990 | Bosch KE1 1 Motronic |
| Audi 80 Coupe and 4x4 2.0 cat | AAD | 1990 to 1992 | Bosch KE1.2 Motronic |

| Model | Engine code | Year | System |
|---|---|---|---|
| Audi 80 2.0 cat | ABK | 1992 to 1995 | VAG Digifant |
| Audi 80, 90 Coupe and Cabrio 2.3 | NG | 1987 to 1995 | Bosch KE3-Jetronic |
| Audi 80 2.3 cat | NG | 1992 to 1994 | Bosch KE3-Jetronic |
| Audi 80 2.6 cat | ABC | 1992 to 1995 | VAG MPFi |
| Audi 80, 90 2.0 cat | PS | 1987 to 1991 | Bosch KE Jetronic |
| Audi 80, 90 2.8 cat | AAH | 1992 to 1994 | VAG MPi |
| Audi 80 S2 | ABY | 1993 to 1995 | Bosch Motronic + Turbo |
| Audi 90 Coupe 2.0 20V cat | NM | 1988 to 1991 | VAG MPi |
| Audi 90 Coupe and 4x4 2.3 cat | 7A | 1988 to 1991 | VAG MPi |
| Audi 100 1.8i cat | 4B | 1988 to 1991 | Bosch Mono-Jetronic |
| Audi 100 1.8i cat | PH | 1985 to 1991 | Bosch KE-Jetronic |
| Audi 100 2.0 cat | AAE | 1991 to 1994 | Bosch Mono-Motronic MA1.2 |
| Audi 100 2.0i | ABK | 1993 to 1996 | VAG Digifant |
| Audi 100 2.0 cat | AAD | 1991 to 1994 | Bosch KE-Motronic |
| Audi 100 4x4 2.0 16V cat | ACE | 1992 to 1994 | Bosch KE-Motronic |
| Audi 100 S4 2.2 cat | AAN | 1991 to 1997 | Bosch Motronic 2.3.2 |
| Audi 100 2.3E cat | NF | 1986 to 1991 | Bosch KE3-Jetronic |
| Audi 100 2.3 cat | AAR | 1991 to 1994 | Bosch KE3-Jetronic |
| Audi 100 2.6 | ABC | 1992 to 1997 | VAG MPFi |
| Audi 100 2.8 | AAH | 1991 to 1997 | VAG MPi |
| Audi 100 S4 4.2 | ABH | 1993 to 1994 | Bosch Motronic |
| Audi 200 4x4 Turbo cat | 3B | 1989 to 1991 | Bosch Motronic + Turbo |
| Audi Coupe S2 | 3B | 1990 to 1993 | Bosch Motronic + Turbo |
| Audi Coupe and Cabrio 2.0 cat | ABK | 1992 to 1997 | VAG Digifant |
| Audi Coupe and Cabrio 2.6 cat | ABC | 1993 to 1997 | VAG MPFi |
| Audi Coupe and Cabrio 2.8 | AAH | 1991 to 1997 | VAG MPi |
| Audi Coupe S2 | ABY | 1993 to 1996 | Bosch Motronic + Turbo |
| Audi Quattro 20V cat | RR | 1989 to 1991 | Bosch Motronic + Turbo |
| Audi RS2 Avant | ADU | 1994 to 1996 | Bosch Motronic + Turbo |
| ***BMW*** | | | |
| 316i (E30) and cat | M40/B16 164E1 | 1988 to 1993 | Bosch Motronic 1.3 |
| 316i (E36) cat | M40/B16 164E1 | 1990 to 1993 | Bosch Motronic 1.7 |
| 316i (E36) cat and Compact | M43/B16 | 1993 to 1997 | Bosch Motronic 1.7 |
| 318i (E30) Touring and cat | M40/B18 184E11 | 1988 to 1993 | Bosch Motronic 1.3 |
| 318i (E30) and Touring | M40/B18 | 1989 to 1992 | Bosch Motronic 1.7 |
| 318i (E36) and cat | M40/B18 184E2 | 1991 to 1993 | Bosch Motronic 1.7 |
| 318i (E36) | M43/B18 | 1993 to 1997 | Bosch Motronic 1.7 |
| 318iS (E30) 16V Touring and cat | M42/B18 184S1 | 1990 to 1991 | Bosch Motronic 1.7 |
| 318iS (E36) and Compact | M42/B18 184S1 | 1992 to 1996 | Bosch Motronic 1.7 |
| 320i (E30) | M20/B20 206EE | 1986 to 1988 | Bosch Motronic 1.1 |
| 320i (E30) and Touring and cat | M20/B20 206EE | 1988 to 1993 | Bosch Motronic 1.3 |
| 320i (E36) 24V cat | M50/B20 206S1 | 1991 to 1993 | Bosch Motronic 3.1 |
| 320i (E36) 24V cat | M50 2.0 Vanos | 1993 to 1996 | Bosch Motronic 3.1 |
| 320i (E36) 24V cat | M50/B20 | 1993 to 1996 | Siemens MS4.0 |
| 325i (E30) and 4x4 | M20/B25 6K1 | 1985 to 1987 | Bosch Motronic 1.1 |
| 325i and Touring (E30) | M20/B25 6K1 | 1988 to 1993 | Bosch Motronic 1.3 |
| 325iX (E30-4) | M20/B25 6E2 | 1985 to 1987 | Bosch Motronic 1.1 |
| 325ix and Touring | M20/B25 6E2 | 1988 to 1993 | Bosch Motronic 1.3 |
| 325i (E36) 24V cat | M50/B25 256S1 | 1991 to 1993 | Bosch Motronic 3.1 |
| 325i (E36) 24V | M50 2.5 Vanos | 1993 to 1996 | Bosch Motronic 3.1 |
| 325e (E30) and cat | M20/B27 | 1986 to 1991 | Bosch Motronic 1.1 |
| 518i (E34) | M40/B18 | 1988 to 1993 | Bosch Motronic 1.3 |
| 518i (E34) cat | M43/B18 | 1993 to 1996 | Bosch Motronic 1.7 |
| 520i (E34) and cat | M20/B20M 206KA | 1988 to 1991 | Bosch Motronic 1.3 |
| 520i (E34) 24V and Touring cat | M50/B20 206S1 | 1990 to 1993 | Bosch Motronic 3.1 |
| 520i (E34) 24V and Touring cat | M50 2.0 Vanos | 1993 to 1996 | Bosch Motronic 3.1 |
| 520i (E34) 24V cat | M50/B20 | 1993 to 1996 | Siemens MS4.0 |
| 525i (E34) and cat | M20/B25M 256K1 | 1988 to 1991 | Bosch Motronic 1.3 |
| 525i (E34) 24V cat | M50/B25 256S1 | 1990 to 1993 | Bosch Motronic 3.1 |
| 525i (E34) 24V | M50 2.5 Vanos | 1993 to 1996 | Bosch Motronic 3.1 |
| 530i (E34) and cat | M30/B30M 306KA | 1988 to 1992 | Bosch Motronic 1.3 |
| 540i (E34) V8 4.0 32V DOHC cat | M60 | 1993 to 1996 | Bosch Motronic 3.3 |
| 535i (E34) and cat | M30/B35M 346KB | 1988 to 1993 | Bosch Motronic 1.3 |
| 635 CSi (E24) | M30/B34 | 1986 to 1987 | Bosch Motronic 1.1 |

| Model | Engine code | Year | System |
|---|---|---|---|
| ***BMW (Continued)*** | | | |
| 635 CSi (E24) and cat | M30/B35M 346EC | 1988 to 1990 | Bosch Motronic 1.3 |
| M635 CSi (E24) | M88/3 | 1987 to 1989 | Bosch Motronic 1.3 |
| 730i (E32) and cat | M30/B30M2 306KA | 1986 to 1987 | Bosch Motronic 1.1 |
| 730i (E32) and cat | M30/B30M2 306KA | 1988 to 1994 | Bosch Motronic 1.3 |
| 730i (E32) V8 3.0 cat | M60B330 | 1992 to 1994 | Bosch Motronic 3 3 |
| 735i (E32) and cat | M30/B35M2 | 1986 to 1987 | Bosch Motronic 1.1 |
| 735i (E32) and cat | M30/B35M2 346EC | 1987 to 1992 | Bosch Motronic 1 3 |
| 740iL (E32) V8 cat | M60/B40 | 1992 to 1994 | Bosch Motronic 3.3 |
| 740i (E38) V8 4.0 32V DOHC cat | M60 | 1994 to 1997 | Bosch Motronic 3.3 |
| 750i and cat | M70/B50 5012A | 1992 to 1994 | Bosch Motronic 1.7 |
| 750iL | M70/B50 5012A | 1992 to 1994 | Bosch Motronic 1.7 |
| 750i | M70/B54 | 1994 to 1997 | Bosch Motronic 1.2 |
| 840i V8 4.0 32V DOHC cat | M60 | 1993 to 1997 | Bosch Motronic 3.3 |
| 850i | M70/B50 5012A | 1989 to 1994 | Bosch Motronic 1.7 |
| M3 (E36) | S50/B30 | 1993 to 1997 | Bosch Motronic 3.3 |
| M5 (E34) | S38/B38 386S1 | 1992 to 1996 | Bosch Motronic 3.3 |
| Z1 | M20/B25 | 1988 to 1992 | Bosch Motronic 1.3 |
| ***CITROËN*** | | | |
| AX 1.0i cat | TU9M/L.Z (CDY) | 1992 to 1997 | Bosch Mono-Motronic MA3 0 |
| AX 1.0i cat | TU9M/L.Z (CDZ) | 1992 to 1996 | Bosch Mono-Motronic MA3.0 |
| AX 1.1i cat | TU1M (HDZ) | 1989 to 1992 | Bosch Mono-Jetronic A2.2 |
| AX 1 1i cat | TU1M/L.Z (HDY) | 1992 to 1997 | Magneti-Marelli G6-11 |
| AX 1 1i cat | TU1M/L Z (HDZ) | 1992 to 1997 | Magneti-Marelli G6-11 |
| AX GT 1 4 cat | TU3M (KDZ) | 1988 to 1990 | Bosch Mono-Jetronic A2.2 |
| AX GT and 1.4i cat | TU3FMC/L.Z (KDY) | 1990 to 1992 | Bosch Mono-Jetronic A2 |
| AX 1.4i cat | TU3FM/L.Z (KDX) | 1992 to 1996 | Bosch Mono-Motronic MA3.0 |
| AX 1.4 GTi | TU3J2/K (K6B) | 1991 to 1992 | Bosch Motronic MP3.1 |
| AX 1.4 GTi cat | TU3J2/L.Z (KFZ) | 1991 to 1996 | Bosch Motronic MP3.1 |
| Berlingo 1 1 | TU1M (HDZ) | 1996 to 1997 | Bosch Motronic MA3.1 |
| Berlingo 1 4 | TU3JP (KFX) | 1996 to 1997 | Magneti-Marelli |
| BX 14i cat | TU3M (KDY) | 1991 to 1994 | Bosch Mono-Jetronic A2 2 |
| BX 16i cat | XU5M (BDZ) | 1990 to 1992 | Bosch Mono-Jetronic or MM G5/6 |
| BX 16i cat | XU5M3Z (BDY) | 1991 to 1994 | Magneti-Marelli G6-10 |
| BX19 GTi and 4X4 | XU9J2 (D6D) | 1990 to 1992 | Bosch Motronic MP3 1 |
| BX19 GTi 16V | XU9J4 (D6C) | 1987 to 1991 | Bosch Motronic ML4.1 |
| BX19 TZi 8V cat | XU9JAZ (DKZ) | 1990 to 1993 | Bosch Motronic 1.3 |
| BX19 16V DOHC cat | XU9J4Z (DFW) | 1990 to 1992 | Bosch Motronic 1 3 |
| BX19 16V DOHC | XU9J4K (D6C) | 1991 to 1992 | Bosch Motronic 1.3 |
| BX19i 4X4 cat | DDZ(XU9M) | 1990 to 1993 | Fenix 1B |
| C15E 1.1i Van cat | TU1M (HDZ) | 1990 to 1997 | Bosch Mono-Jetronic A2.2 |
| C15E 1.4i Van cat | TU3F M/Z (KDY) | 1990 to 1995 | Bosch Mono-Jetronic A2 2 |
| C15E 1.4i Van cat | TU3F.M/W2 (KDY2) | 1993 to 1995 | Bosch Mono-Jetronic A2.2 |
| Evasion 2.0i cat | XU10J2CZ/L (RFU) | 1994 to 1997 | Magneti-Marelli 8P22 |
| Evasion 2.0i turbo cat | XU10J2CTEZ/L(RGX) | 1994 to 1997 | Bosch Motronic MP3.2 |
| Jumper 2 0i cat | XU10J2U (RFW) | 1994 to 1997 | Magneti-Marelli DCM8P-11 |
| Jumpy 1.6i | 220 A2.000 | 1995 to 1997 | Bosch Mono-Motronic MA1.7 |
| Relay 2.0i cat | XU10J2U (RFW) | 1994 to 1997 | Magneti-Marelli DCM8P-11 |
| Saxo 1.0 | TU9M/L3/L | 1996 to 1997 | Bosch Mono-Motronic MA3 1 |
| Saxo 1.1 | TU1M/L3/L | 1996 to 1997 | Bosch Mono-Motronic MA3.1 |
| Saxo 1.4 | TU3JP/L3 | 1996 to 1997 | Magneti-Marelli |
| Saxo 1.6 | TU5JP/L3 (NFZ) | 1996 to 1997 | Bosch Motronic MA5.1 |
| Synergie 2.0i cat | XU10J2CZ/L (RFU) | 1994 to 1997 | Magneti-Marelli 8P22 |
| Synergie 2.0i turbo cat | XU10J2CTEZ/L(RGX) | 1994 to 1997 | Bosch Motronic MP3.2 |
| Xantia 1 6i cat | XU5JP/Z (BFX) | 1993 to 1997 | Magneti-Marelli DCM8P13 |
| Xantia 1.8i 16V | XU7JP4/L3 (LFY) | 1995 to 1997 | Bosch Motronic MP5.1.1 |
| Xantia 1.8i and Break | XU7JP/Z (LFZ) | 1993 to 1997 | Bosch Motronic MP5.1 |
| Xantia 2.0i and Break | XU10J2C/Z (RFX) | 1993 to 1997 | Magneti-Marelli DCM8P20 |
| Xantia 2.0i 16V cat | XU10J4D/Z (RFY) | 1993 to 1995 | Bosch Motronic MP3 2 |
| Xantia 2.0i 16V and Break | XU10J4R/Z/L3(RFV) | 1995 to 1997 | Bosch Motronic MP5.1.1 |
| Xantia Activa 2.0i | XU10J4D/Z (RFT) | 1994 to 1996 | Bosch Motronic MP3.2 |
| Xantia Turbo 2.0i CT | XU10J2CTE/L3(RGX) | 1995 to 1996 | Bosch Motronic MP3.2 |
| XM 2.0i MPi | XU10J2 (R6A) | 1990 to 1992 | Magneti-Marelli BA G5 |
| XM 2.0i cat | XU10J2/Z (RFZ) | 1990 to 1992 | Bosch Motronic MP3.1 |

| Model | Engine code | Year | System |
|---|---|---|---|
| XM 2.0i cat | XU10J2/Z (RFZ) | 1992 to 1994 | Bosch Motronic MP5 1 |
| XM 2.0i 16V cat | XU10J4R/L/Z (RFV) | 1994 to 1997 | Bosch Motronic MP5.1.1 |
| XM 2.0i turbo cat | XU10J2TE/Z (RGY) | 1993 to 1994 | Bosch Motronic MP3.2 |
| XM 2 0i CT turbo cat | XU10J2TE/L/Z(RGX) | 1994 to 1996 | Bosch Motronic MP3.2 |
| XM 3.0 V6 LHD | ZPJ (S6A) | 1989 to 1993 | Fenix 3B |
| XM 3.0 V6 cat | ZPJ (SFZ) | 1989 to 1994 | Fenix 3B |
| XM 3.0 V6 cat | ZPJ (UFZ) | 1994 to 1997 | Fenix 3B |
| XM 3.0 V6 Estate | ZPJ/Z (UFY) | 1995 to 1996 | Fenix 3B |
| XM 3.0 V6 24V cat | ZPJ4/Y3 (SKZ) | 1990 to 1994 | Fenix 4 |
| XM 3 0 V6 24V | ZPJ4/Y3 (UKZ) | 1994 to 1997 | Fenix 4B |
| ZX 1.1i cat | TU1M/Z (HDY) | 1991 to 1994 | Bosch Mono-Jetronic A2.2 |
| ZX 1.1i cat | TU1M/Z (HDZ) | 1991 to 1994 | Bosch Mono-Jetronic A2.2 |
| ZX 1.1i cat | TU1M/Z (HDY) | 1994 to 1997 | Bosch Mono-Motronic MA3.0 |
| ZX 1.1i cat | TU1M/Z (HDZ) | 1994 to 1997 | Bosch Mono-Motronic MA3 0 |
| ZX 1.4i cat | TU3M/Z (KDY) | 1991 to 1992 | Bosch Mono-Jetronic A2 2 |
| ZX 1.4i and Break cat | TU3M (KDX) | 1992 to 1997 | Bosch Mono-Motronic MA3.0 |
| ZX 1 4i and Break cat | TU3M (KDX) | 1994 to 1996 | Magneti-Marelli G6-14 |
| ZX 1 6i | XU5M.2K (B4A) | 1991 to 1992 | Magneti-Marelli G5 S2 |
| ZX 1.6i | XU5M.3K (B4A) | 1991 to 1993 | Magneti-Marelli G6.12 |
| ZX 1.6i cat | XU5M.3Z (BDY) | 1992 to 1993 | Magneti-Marelli G6.10 |
| ZX 1.6i and Break cat | XU5JPL/Z (BFZ) | 1994 to 1997 | Magneti-Marelli 8P-13 |
| ZX 1.6i and Break cat | XU5JPL/Z (BFZ) | 1995 to 1996 | Sagem/Lucas 4GJ |
| ZX 1 8i and Break cat | XU7JPL/Z (LFZ) | 1992 to 1997 | Bosch Motronic MP5.1 |
| ZX 1 8i and Break cat | XU7JPL/Z (LFZ) | 1995 to 1996 | Magneti-Marelli 8P-10 |
| ZX 1 9 8V | XU9JAZ (DKZ) | 1992 to 1994 | Bosch Motronic 1 3 |
| ZX 1.9i | XU9JA/K (D6E) | 1991 to 1992 | Bosch Motronic MP3.1 |
| ZX 2.0i cat | XUJ10J2/C/L/Z(RFX) | 1992 to 1996 | Magneti-Marelli 8P-20 |
| ZX 2.0i 16V cat | XUJ10J4/D/L/Z(RFY) | 1992 to 1995 | Bosch Motronic MP3.2 |
| ZX 2.0i 16V | XUJ10J4/D/L/Z(RFT) | 1994 to 1997 | Bosch Motronic MP3.2 |
| ***DAEWOO*** | | | |
| Nexia 1.5 8V SOHC | - | 1995 to 1997 | GM-Multec |
| Nexia 1.5 16V DOHC | - | 1995 to 1997 | GM-Multec |
| Espero 1 5 16V DOHC | - | 1995 to 1997 | GM-Multec |
| Espero 1 8 8V SOHC | - | 1995 to 1997 | GM-Multec |
| Espero 2.0 8V SOHC | - | 1995 to 1997 | GM-Multec |
| ***DAIHATSU*** | | | |
| Applause | HD-E | 1989 to 1996 | Daihatsu EFi |
| Charade 1.3i cat SOHC 16V | HC-E | 1991 to 1993 | Daihatsu EFi |
| Charade 1.3 SOHC 16V | HC-E | 1993 to 1997 | Daihatsu MPi |
| Charade 1.5i SOHC 16V | HE-E | 1996 to 1997 | Daihatsu MPi |
| Charade 1.6i SOHC 16V | HD-E | 1993 to 1996 | Daihatsu MPi |
| Hi-Jet | CB42 | 1995 to 1997 | Daihatsu MPi |
| Sportrak cat SOHC 16V | HD-E | 1990 to 1997 | Daihatsu EFi |
| ***FIAT*** | | | |
| Brava 1.4 12V | 182 AA.1AA | 1996 to 1997 | Bosch Mono-Motronic SPi |
| Brava 1 6 16V | 182 A4.000 | 1996 to 1997 | Weber Marelli IAW |
| Bravo 2.0 | 182 A1.000 | 1996 to 1997 | Bosch Motronic M2.10.4 |
| Cinquecento 899 OHV DIS cat | 1170 A1.046 | 1993 to 1997 | Weber-Marelli IAW SPi |
| Cinquecento 900 OHV DIS cat | 170 A1.046 | 1992 to 1994 | Weber-Marelli IAW SPi |
| Cinquecento Sporting | 176 B2000 | 1995 to 1997 | Weber-Marelli IAW SPi |
| Coupe 16V | 836 A3.000 | 1994 to 1997 | Weber-Marelli IAW MPi |
| Coupe 16V Turbo | 175 A1.000 | 1994 to 1996 | Weber-Marelli IAW MPi |
| Coupe 2.0 20V | - | 1997 | Bosch Motronic M2 10.4 |
| Croma 2000ie | 834 B.000 | 1986 to 1989 | Weber-Marelli IAW MPi |
| Croma 2000ie DOHC 8V | 154 C.000 | 1989 to 1991 | Weber-Marelli IAW MPi |
| Croma 2 0ie DOHC | 154 C3.000 | 1990 to 1992 | Weber-Marelli IAW MPi |
| Croma 2.0ie DOHC DIS cat | 154 C3.046 | 1991 to 1994 | Weber-Marelli IAW MPi |
| Croma 2.0ie 16V cat | 154 E1.000 | 1993 to 1995 | Bosch Motronic M1.7 |
| Fiorino 1500 SOHC cat | 149 C1 000 | 1991 to 1995 | Bosch Mono-Jetronic A2 4 |
| Panda 1.0ie OHC and 4x4 cat | 156 A2.246 | 1991 to 1996 | Bosch Mono-Jetronic A2 4 |
| Panda 1.1ie OHC cat | 156 C.046 | 1991 to 1997 | Bosch Mono-Jetronic A2.4 |

| Model | Engine code | Year | System |
|---|---|---|---|
| ***FIAT (Continued)*** | | | |
| Panda 899 | 1170A1.046 | 1992 to 1997 | Weber-Marelli IAW SPi |
| Punto 55 | 176 A6.000 | 1994 to 1997 | Weber-Marelli IAW SPi |
| Punto 60 | 176 A7.000 | 1994 to 1997 | Weber-Marelli IAW SPi |
| Punto 75 | 176 A8.000 | 1994 to 1997 | Weber-Marelli IAW MPi |
| Punto GT | 176 A4.000 | 1994 to 1997 | Bosch Motronic M2.7 MPi |
| Regata 100 Sie & Weekend 1.6 DOHC | 149 C3.000 | 1986 to 1988 | GM/Delco SPi |
| Regata 100 Sie & Weekend 1.6 DOHC | 1149 C3.000 | 1988 to 1990 | Weber MIW Centrajet SPi |
| Tempra 1.4ie SOHC DIS cat | 160 A1.046 | 1992 to 1994 | Bosch Mono-Jetronic A2.4 |
| Tempra 1.6ie SOHC DIS cat | 159 A3.046 | 1991 to 1992 | Bosch Mono-Jetronic A2.4 |
| Tempra 1.6ie SOHC cat | 159 A3.046 | 1993 to 1994 | Bosch Mono-Motronic MA1.7 |
| Tempra 1.8ie DOHC 8V | 159 A4.000 | 1990 to 1992 | Weber-Marelli IAW MPi |
| Tempra 1.8ie DOHC 8V cat | 159 A4.046 | 1992 to 1994 | Weber-Marelli IAW MPi |
| Tempra 1.8 DOHC | 835 C2.000 | 1993 to 1996 | Weber-Marelli IAW MPi |
| Tempra 2.0ie and 4x4 DOHC 8V | 159 A6.046 | 1991 to 1997 | Weber-Marelli IAW MPi |
| Tipo 1.4ie cat | 160 A1.046 | 1991 to 1996 | Bosch Mono-Jetronic A2.4 |
| Tipo 1 6ie SOHC DIS cat | 159 A3.046 | 1990 to 1992 | Bosch Mono-Jetronic A2.4 |
| Tipo 1.6ie SOHC | 835 C1.000 | 1994 to 1996 | Bosch Mono-Motronic MA1.7 |
| Tipo 1.6ie SOHC cat | 159 A3.046 | 1993 to 1995 | Bosch Mono-Motronic MA1.7 |
| Tipo 1.8ie DOHC 8V | 159 A4.000 | 1990 to 1992 | Weber-Marelli IAW MPi |
| Tipo 1.8ie DOHC 8V | 159 A4.000 | 1992 to 1995 | Weber-Marelli IAW MPi |
| Tipo 1.8i DOHC 16V | 160 A5.000 | 1990 to 1991 | Weber-Marelli IAW MPi |
| Tipo 1.8ie DOHC 8V cat | 159 A4.046 | 1992 to 1994 | Weber-Marelli 8F |
| Tipo 2.0ie DOHC 8V cat | 159 A5.046 | 1990 to 1992 | Weber-Marelli IAW MPi |
| Tipo 2.0ie DOHC 8V cat | 159 A6.046 | 1992 to 1995 | Weber-Marelli IAW MPi |
| Tipo 2.0ie DOHC 16V cat | 160 A8.046 | 1991 to 1995 | Weber-Marelli IAW MPi |
| Ulysse 2.0 SOHC 89kW | ZFA220000 | 1995 to 1997 | Weber-Marelli IAW MPi |
| Ulysse 2.0 Turbo | ZFA220000 | 1995 to 1997 | Bosch Motronic 3.2 |
| Uno 1.0ie SOHC and Van cat | 156 A2.246 | 1992 to 1995 | Bosch Mono-Jetronic |
| Uno 1.1ie SOHC | 156 C.046 | 1989 to 1995 | Bosch Mono-Jetronic |
| Uno 70 1.4 SOHC | 146 C1.000 | 1990 to 1992 | Bosch Mono-Jetronic |
| Uno 1.4 SOHC cat | 160 A1.046 | 1990 to 1995 | Bosch Mono-Jetronic |
| Uno 1.5ie SOHC DIS cat | 149 C1.000 | 1993 to 1994 | Bosch Mono-Jetronic |
| Uno 994 | 146 C7.000 | 1994 to 1996 | Weber-Marelli IAW SPi |
| ***FORD*** | | | |
| Escort 1.3 cat | HCS | 1991 to 1992 | Ford EEC IV |
| Escort 1.3 cat | J6A | 1991 to 1995 | Ford EEC IV |
| Escort 1.3i and Van | JJA/J4C | 1995 to 1997 | Ford EEC V |
| Escort 1.4 CFi cat | F6D | 1989 to 1990 | Ford EEC IV |
| Escort 1.4 CFi cat | F6F | 1990 to 1995 | Ford EEC IV |
| Escort 1.4 CFi cat | F6G | 1990 to 1995 | Ford EEC IV |
| Escort 1.4i | PTE F4 | 1994 to 1997 | Ford EEC V |
| Escort 1.6i XR3i | LJA | 1989 to 1992 | Ford EEC IV |
| Escort 1.6i XR3i cat | LJB | 1989 to 1992 | Ford EEC IV |
| Escort 1 6 16V cat | L1E | 1992 to 1997 | Ford EEC IV |
| Escort 1.6i | LJA | 1989 to 1990 | Ford EEC IV |
| Escort 1.6i and cat | LJE | 1990 to 1992 | Ford EEC IV |
| Escort XR3i 1 6 and cat | LJD | 1989 to 1992 | Ford EEC IV |
| Escort RS Cosworth DOHC turbo cat | N5F | 1992 to 1996 | Weber IAW |
| Escort RS2000 and cat | N7A | 1991 to 1995 | Ford EEC IV |
| Escort 1.8i 16V cat | RDA | 1992 to 1995 | Ford EEC IV |
| Escort 1.8i 16V cat | RQB | 1992 to 1995 | Ford EEC IV |
| Escort 2.0i 7 4x4 cat | N7A | 1991 to 1997 | Ford EEC IV |
| Fiesta 1.1 and Van cat | G6A | 1989 to 1997 | Ford EEC IV |
| Fiesta 1 25 | DHA | 1995 to 1997 | Ford EEC V |
| Fiesta 1 3 Van Courier cat | HCS | 1991 to 1994 | Ford EEC IV |
| Fiesta 1.3i and Courier cat | J6B | 1991 to 1996 | Ford EEC IV |
| Fiesta 1.3 and Courier | JJA | 1995 to 1997 | Ford EEC V |
| Fiesta 1 4i and Van cat | F6E | 1989 to 1995 | Ford EEC IV |
| Fiesta 1.4 | FHA | 1995 to 1997 | Ford EEC V |
| Fiesta Classic 1.4 | PTE F4A | 1995 to 1996 | Ford EEC IV |
| Fiesta XR2i 1.6 cat | LJD | 1989 to 1993 | Ford EEC IV |
| Fiesta RS turbo 1.6 | LHA | 1990 to 1992 | Ford EEC IV |
| Fiesta 1.6i and cat | LUC | 1989 to 1992 | Ford EEC IV |

| Model | Engine code | Year | System |
|---|---|---|---|
| Fiesta XR2i 1.6 | LJC | 1989 to 1993 | Ford EEC IV |
| Fiesta 1.6i 16V | L1G | 1994 to 1995 | Ford EEC IV |
| Fiesta XR2i 1.8i 16V cat | RDB | 1992 to 1995 | Ford EEC IV |
| Fiesta 1.8i 16V cat | RQC | 1992 to 1995 | Ford EEC IV |
| Galaxy 2.0i | NSD | 1995 to 1997 | Ford EEC V |
| Galaxy 2.3 | Y5B | 1996 to 1997 | Ford EEC V |
| Galaxy 2.8 and 4x4 | AAA | 1995 to 1997 | Ford EEC V |
| Granada 2.0 EFi | NRA | 1985 to 1989 | Ford EEC IV |
| Granada 2.0i and cat | N9B | 1989 to 1995 | Ford EEC IV |
| Granada 2.0 EFi 4wd cat | N9D | 1989 to 1992 | Ford EEC IV |
| Granada 2.4 V6 | ARC | 1987 to 1993 | Ford EEC IV |
| Granada 2.4 V6 cat | ARD | 1987 to 1991 | Ford EEC IV |
| Granada 2.9 V6 and 4x4 | BRC | 1987 to 1992 | Ford EEC IV |
| Granada 2.9 V6 cat | BRD | 1987 to 1994 | Ford EEC IV |
| Granada 2.9 V6 cat | BRE | 1987 to1992 | Ford EEC IV |
| Granada 2.9 V6 cat | BOA | 1991 to 1995 | Ford EEC IV |
| Ka 1.3 | JJB | 1996 to 1997 | Ford EEC V |
| Maverick 2.4i | KA24F | 1993 to 1997 | Nissan ECCS |
| Mondeo 1.6 DOHC cat | L1F/J | 1993 to 1996 | Ford EEC IV |
| Mondeo 1.6i 16V | L1J | 1996 to 1997 | Ford EEC V |
| Mondeo 1.8i 16V | RKB | 1996 to 1997 | Ford EEC V |
| Mondeo 1.8i and 4x4 cat | RKA/B | 1993 to 1996 | Ford EEC IV |
| Mondeo 2.0i 16V 4x4 cat | NGA | 1993 to 1996 | Ford EEC IV |
| Mondeo 2.0i 16V | NGA | 1996 to 1997 | Ford EEC V |
| Mondeo 2.5 V6 DOHC cat | SEA | 1994 to 1996 | Ford EEC IV |
| Mondeo 2.5i | SEA | 1996 to 1997 | Ford EEC V |
| Orion 1.3 cat | HCS | 1991 to 1995 | Ford EEC IV |
| Orion 1.3 cat | J6A | 1991 to 1995 | Ford EEC IV |
| Orion 1.4 CFi cat | F6D | 1989 to 1990 | Ford EEC IV |
| Orion 1.4 CFi cat | F6F | 1990 to 1995 | Ford EEC IV |
| Orion 1.4 CFi cat | F6G | 1990 to 1995 | Ford EEC IV |
| Orion 1.6i and cat | LJF | 1990 to 1993 | Ford EEC IV |
| Orion 1.6i cat | LJF | 1990 to 1994 | Ford EEC IV |
| Orion 1.6i | LJA | 1989 to 1990 | Ford EEC IV |
| Orion 1.6 DOHC 16V cat | L1E | 1992 to 1997 | Ford EEC IV |
| Orion 1.6i | LJA | 1989 to 1990 | Ford EEC IV |
| Orion 1.8i 16V DOHC cat | RDA | 1992 to 1995 | Ford EEC IV |
| Orion 1.8i 16V DOHC cat | RQB | 1992 to 1995 | Ford EEC IV |
| Probe 2.0i DOHC 16V cat | - | 1991 to 1997 | Mazda EGi |
| Probe 2.5i 24V cat | V6 | 1991 to 1997 | Mazda EGi |
| Sapphire 1.6 CVH cat | L6B | 1990 to 1993 | Ford EEC IV |
| Sapphire 1.8 CVH cat | R6A | 1992 to 1993 | Ford EEC IV |
| Sapphire 2.0 EFi DOHC | N9A | 1989 to 1992 | Ford EEC IV |
| Sapphire 2.0 EFi 8V cat | N9C | 1989 to 1992 | Ford EEC IV |
| Scorpio 2.0i | NSD | 1994 to 1997 | Ford EEC IV |
| Scorpio 2.0 EFi | NRA | 1985 to 1989 | Ford EEC IV |
| Scorpio 2.0i 16V | N3A | 1994 to 1996 | Ford EEC V |
| Scorpio 2.0i and cat | N9B | 1989 to 1995 | Ford EEC IV |
| Scorpio 2.0i | NSD | 1994 to 1997 | Ford EEC V |
| Scorpio 2.5i 16V | Y5A | 1996 to 1997 | Ford EEC V |
| Scorpio 2.8 4x4 | PRE | 1985 to 1987 | Ford EEC IV |
| Scorpio 2.9 V6 and 4x4 | BRC | 1987 to 1992 | Ford EEC IV |
| Scorpio 2.9 V6 cat | BRD | 1987 to 1995 | Ford EEC IV |
| Scorpio 2.9 V6 cat | BRE | 1987 to 1995 | Ford EEC IV |
| Scorpio 2.9 V6 24V cat | BOA | 1991 to 1995 | Ford EEC IV |
| Scorpio 2.9i V6 | BRG | 1994 to 1997 | Ford EEC V |
| Scorpio 2.9i V6 24V | BOB | 1994 to 1997 | Ford EEC V |
| Sierra 1.6 CVH cat | L6B | 1990 to 1993 | Ford EEC IV |
| Sierra 1.8 CVH cat | R6A | 1992 to 1993 | Ford EEC IV |
| Sierra 2.0 EFi DOHC 8V | N9A | 1989 to 1992 | Ford EEC IV |
| Sierra 2.0 EFi 8V cat | N9C | 1989 to 1992 | Ford EEC IV |
| Sierra 2.9 XR 4x4 V6 | B4A | 1989 to 1991 | Ford EEC IV |
| Sierra 2.9 XR 4x4 V6 cat | B4B | 1989 to 1991 | Ford EEC IV |
| Transit Van 2.0 CFi cat | N6T | 1990 to 1991 | Ford EEC IV |
| Transit Van 2.0 CFi cat | - | 1991 to 1994 | Ford EEC IV |
| Transit 2.9 V6 EFi | BRT | 1991 to 1994 | Ford EEC IV |

| Model | Engine code | Year | System |
|---|---|---|---|
| ***FORD (Continued)*** | | | |
| Transit and Tourneo 2.0i DOHC cat | NSG | 1994 to 1997 | Ford EEC V |
| Transit and Tourneo 2.0i | NSF | 1994 to 1997 | Ford EEC V |
| Transit 2.9 EFi | B4T | 1989 to 1991 | Ford EEC IV |
| ***HONDA*** | | | |
| Accord 1.8i | F18A3 | 1995 to 1997 | Honda PGM-Fi |
| Accord EFi A4 SOHC | A2 | 1985 to 1989 | Honda PGM-Fi |
| Accord 2.0i-16 A2 DOHC 16V | B20 | 1987 to 1989 | Honda PGM-Fi |
| Accord 2.0i SOHC 16V & cat | F20A4 | 1989 to 1992 | Honda PGM-Fi |
| Accord 2.0i F20A8 SOHC & cat | F20A5 | 1992 to 1996 | Honda PGM-Fi |
| Accord 2.0i Coupe SOHC cat | F20A7 | 1992 to 1996 | Honda PGM-Fi |
| Accord 2.2i SOHC 16V cat | F22A3/A7/A8 | 1989 to 1996 | Honda PGM-Fi |
| Accord 2.2i | F22Z2 | 1996 to 1997 | Honda PGM-Fi |
| Accord 2.3i DOHC 16V cat | H23A2 | 1993 to 1996 | Honda PGM-Fi |
| Aerodeck EFi A4 SOHC | A20 | 1985 to 1989 | Honda PGM-Fi |
| Aerodeck 2.2i SOHC 16V cat | F22A3/A7/A8 | 1989 to 1996 | Honda PGM-Fi |
| Ballade EXi SOHC 3W | EW3 | 1986 to 1989 | Honda PGM-Fi |
| Civic CRX | EW3 | 1984 to 1987 | Honda PGM-Fi |
| Civic GT | EW3 | 1984 to 1987 | Honda PGM-Fi |
| Civic 1.4i 5-door | D14A2 | 1995 to 1997 | Honda PGM-Fi |
| Civic 1.4i 3-door | D14A4 | 1996 to 1997 | Honda PGM-Fi |
| Civic 1.5 VEi SOHC 16V VTEC cat | D15Z1 | 1991 to 1995 | Honda PGM-Fi |
| Civic 1.5 LSi SOHC 16V | D15B2 | 1991 to 1995 | Honda PGM-Fi |
| Civic Coupe SOHC 16V cat | D15B2 | 1991 to 1995 | Honda PGM-Fi |
| Civic 1.5i VTEC-E SOHC 16V | D15Z3 | 1995 to 1997 | Honda PGM-Fi |
| Civic 1.5i 3- & 4-door | D15Z6 | 1996 to 1997 | Honda PGM-Fi |
| Civic 1.6i-16 DOHC 16V | D16A9 | 1987 to 1992 | Honda PGM-Fi |
| CRX 1.6i-16 DOHC 16V | D16A9 | 1987 to 1992 | Honda PGM-Fi |
| Civic 1.6 VT DOHC 16V VTEC cat | B16A1 | 1990 to 1991 | Honda PGM-Fi |
| CRX 1.6 VT DOHC 16V VTEC cat | B16A1 | 1990 to 1991 | Honda PGM-Fi |
| Civic 1.6 ESi SOHC 16V VTEC cat | D16Z6 | 1991 to 1997 | Honda PGM-Fi |
| CRX 1.6 ESi SOHC 16V VTEC cat | D16Z6 | 1991 to 1996 | Honda PGM-Fi |
| Civic 1.6 VTi DOHC 16V VTEC cat | B16A2 | 1991 to 1995 | Honda PGM-Fi |
| CRX 1.6 VTi DOHC 16V VTEC cat | B16A2 | 1991 to 1995 | Honda PGM-Fi |
| Civic 1.6i SOHC 16V | D16Y3 | 1995 to 1997 | Honda PGM-Fi |
| Civic 1.6i VTEC SOHC 16V | D16Y2 | 1995 to 1997 | Honda PGM-Fi |
| Civic 1.6i Coupe | D16Y7 | 1996 to 1997 | Honda PGM-Fi |
| Civic 1.6i VTEC Coupe | D16Y8 | 1996 to 1997 | Honda PGM-Fi |
| Concerto 1.5i SOHC 16V cat | D15B2 | 1991 to 1995 | Honda PGM-Fi |
| Concerto 1.6 DOHC 16V | D16A9 | 1989 to 1991 | Honda PGM-Fi |
| Concerto 1.6 DOHC 16V auto | D16Z4 | 1989 to 1991 | Honda PGM-Fi |
| Concerto 1.6i SOHC 16V cat | D16Z2 | 1992 to 1995 | Honda PGM-Fi |
| Concerto 1.6i DOHC 16V cat | D16A8 | 1992 to 1995 | Honda PGM-Fi |
| Integra EX 16 A2 DOHC 16V | D16 | 1986 to 1990 | Honda PGM-Fi |
| Legend | C25A2 | 1986 to 1988 | Honda PGM-Fi |
| Legend 2.7 and Coupe SOHC | C27A2 | 1988 to 1991 | Honda PGM-Fi |
| Legend 2.7 SOHC cat | C27A1 | 1990 to 1991 | Honda PGM-Fi |
| Legend 3.2 SOHC 24V cat | C32A2 | 1992 to 1997 | Honda PGM-Fi |
| NSX DOHC 24V VTEC cat | C30A | 1991 to 1997 | Honda PGM-Fi |
| Prelude Fi | B20A1 | 1985 to 1987 | Honda PGM-Fi |
| Prelude 4WS 2.0i-16 DOHC 16V | B20A7 | 1987 to 1992 | Honda PGM-Fi |
| Prelude 4WS 2.0i-16 DOHC cat | B20A9 | 1987 to 1992 | Honda PGM-Fi |
| Prelude 2.0i 16V SOHC cat | F20A4 | 1992 to 1997 | Honda PGM-Fi |
| Prelude 2.2i VTEC DOHC 16V | H22A2 | 1994 to 1997 | Honda PGM-Fi |
| Prelude 2.3i 16V DOHC 16V cat | H23A2 | 1992 to 1997 | Honda PGM-Fi |
| Shuttle 1.6i 4WD SOHC 16V | D16A7 | 1988 to 1990 | Honda PGM-Fi |
| Shuttle 2.2i | F22B8 | 1995 to 1997 | Honda PGM-Fi |
| ***HYUNDAI*** | | | |
| Accent 1.3i SOHC | - | 1995 to 1997 | Hyundai MPi |
| Accent 1.5i SOHC | - | 1995 to 1997 | Hyundai MPi |
| Coupe 1.6 DOHC 16V | G4GR | 1996 to 1997 | Hyundai MPi |
| Coupe 1.8 DOHC 16V | G4GM | 1996 to 1997 | Hyundai MPi |

| Model | Engine code | Year | System |
|---|---|---|---|
| Coupe 2.0 DOHC 16V | G4GF | 1996 to 1997 | Hyundai MPi |
| Lantra 1.5i SOHC cat | 4G15/G4J | 1993 to 1995 | Hyundai MPi |
| Lantra 1.6i DOHC cat | 4G61 | 1991 to 1995 | Hyundai MPi |
| Lantra 1.6 DOHC 16V | G4GR | 1996 to 1997 | Hyundai MPi |
| Lantra 1.8i DOHC cat | 4G67 | 1992 to 1995 | Hyundai MPi |
| Lantra 1.8 DOHC 16V | G4GM | 1996 to 1997 | Hyundai MPi |
| Pony X2 1.5i SOHC cat | 4G15/G4J | 1990 to 1994 | Hyundai MPi |
| S Coupe 1.5i SOHC cat | 4G15/G4J | 1990 to 1992 | Hyundai MPi |
| S Coupe 1.5i SOHC | Alpha | 1992 to 1996 | Bosch Motronic M2.10.1 |
| S Coupe 1.5i turbo SOHC | Alpha | 1992 to 1996 | Bosch Motronic M2.7 |
| Sonata 1.8 SOHC | 4G62 | 1989 to 1992 | Hyundai MPi |
| Sonata 2.0 SOHC | 4G63 | 1989 to 1992 | Hyundai MPi |
| Sonata 2.0 16V DOHC | - | 1992 to 1997 | Hyundai MPi |
| Sonata 2.4 SOHC | 4G64 | 1989 to 1992 | Hyundai MPi |
| Sonata 3.0i SOHC | V6 | 1994 to 1997 | Hyundai MPi |
| ***ISUZU*** | | | |
| Piazza Turbo | 4Z C1T | 1986 to 1990 | Isuzu I-Tec + Turbo |
| Trooper 2.6 | 4ZE1 | 1988 to 1992 | Isuzu I-Tec |
| Trooper 3.2i | 6VD1 | 1993 to 1997 | Isuzu I-Tec |
| ***JAGUAR*** | | | |
| XJ6/Sovereign 3.2 DOHC cat | AJ-6 | 1990 to 1994 | Lucas LH-15CU |
| XJ6/Sovereign 3.6 24V | AJ-6 | 1986 to 1989 | Lucas LH-9CU |
| XJ6/Sovereign 4.0 | AJ-6 | 1991 to 1997 | Lucas LH-15CU |
| XJ-S 4.0 | AJ-6 | 1991 to 1997 | Lucas LH-15CU |
| ***KIA*** | | | |
| Mentor 1.6i SOHC 8V | - | 1995 to 1997 | Kia EGi |
| Sportage 2.0i SOHC 8V | FE | 1995 to 1997 | Bosch Motronic M2.10 1 |
| Sportage 2.0i DOHC 16V | FE | 1995 to 1997 | Bosch Motronic M2.10.1 |
| ***LANCIA*** | | | |
| Y10 LXie and 4wd 1108 SOHC FIRE | 156 C.000 | 1989 to 1993 | Bosch Mono-Jetronic A2.2 |
| Y10 1108ie and 4x4 SOHC cat | 156 C.046 | 1990 to 1992 | Bosch Mono-Jetronic A2.2 |
| Y10 1108ie and 4x4 SOHC cat | 156 C.046 | 1992 to 1994 | Bosch Mono-Motronic MA1.7 |
| Dedra 1.6ie SOHC | 835 A1.000 | 1990 to 1994 | Weber MIW Centrajet 2 |
| Dedra 1600ie SOHC cat | 835 A1.046 | 1990 to 1994 | Bosch Mono-Jetronic A2.2 |
| Dedra 1.8ie DOHC | 835 A2.000 | 1990 to 1993 | Weber-Marelli IAW MPi |
| Dedra 1.8ie DOHC cat | 835 A2.046 | 1990 to 1994 | Weber-Marelli IAW MPi |
| Dedra 2.0ie DOHC | 835 A5.000 | 1990 to 1992 | Weber-Marelli IAW MPi |
| Dedra 2.0ie DOHC cat | 835 A5.045 | 1990 to 1994 | Weber-Marelli IAW MPi |
| Dedra 2.0ie DOHC cat | 835 A5.046 | 1990 to 1994 | Weber-Marelli IAW MPi |
| Dedra 2.0ie DOHC Turbo and cat | 835 A8.000 | 1991 to 1996 | Weber-Marelli IAW MPi |
| Dedra 2.0ie Integrale Turbo and cat | 835 A7.000 | 1991 to 1996 | Weber-Marelli IAW MPi |
| Delta 2.0 16V Turbo | 836.A2.000 | 1993 to 1997 | Weber-Marelli IAW MPi |
| Delta 1600ie DOHC | 831 B7.000 | 1986 to 1989 | Weber-Marelli IAW MPi |
| Delta 1600ie DOHC | 831 B7.000 | 1989 to 1990 | Weber-Marelli IAW MPi |
| Delta 1600ie DOHC static | 831 B7.000 | 1991 to 1992 | Weber-Marelli IAW MPi |
| Delta HF Turbo and Martini 1600 DOHC | 831 B3.000 | 1986 to 1992 | Weber-Marelli IAW MPi |
| Delta HF Turbo DOHC cat | 831 B7.046 | 1991 to 1993 | Weber-Marelli IAW MPi |
| Delta HF Integrale Turbo DOHC | 831 B5.000 | 1988 to 1989 | Weber-Marelli IAW MPi |
| Delta HF Integrale Turbo DOHC | 831 C5.000 | 1988 to 1989 | Weber-Marelli IAW MPi |
| Delta HF Integrale Turbo 16V DOHC | 831 D5.000 | 1989 to 1992 | Weber-Marelli IAW MPi |
| Delta HF Integrale Turbo 16V and cat | 831 E5.000 | 1991 to 1994 | Weber-Marelli IAW MPi |
| Prisma 1600ie DOHC | 831 B7.000 | 1986 to 1989 | Weber-Marelli IAW MPi |
| Prisma 1600ie DOHC | 831 B7.000 | 1989 to 1990 | Weber-Marelli IAW MPi |
| Prisma 1600ie DOHC static | 831 B7.000 | 1991 to 1992 | Weber-Marelli IAW MPi |
| Scudo 1.6i | 220 A2.000 | 1996 to 1997 | Bosch Motronic 1.7 |
| Thema FL 2000ie 16V DOHC cat | 834 F1.000 | 1992 to 1994 | Bosch Motronic M1.7 |
| Thema FL 2000ie Turbo 16V DOHC cat | 834 F2.000 | 1992 to 1994 | Bosch Motronic M2.7 |
| Thema FL 3000 V6 SOHC cat | 834 F.000 | 1992 to 1994 | Bosch Motronic M1.7 |

# Index of vehicles covered

| Model | Engine code | Year | System |
|---|---|---|---|
| ***LAND ROVER*** | | | |
| Discovery MPi 2.0 20HD DOHC 16V | M16i | 1993 to 1995 | Rover MEMS MPi |
| Discovery 2.0 MPi DOHC 16V | 20T4 | 1995 to 1997 | Rover MEMS MPi |
| Discovery 3.5 V8i | V8 | 1990 to 1992 | Lucas 14CUX |
| Discovery 3.5 V8i cat | V8 | 1990 to 1995 | Lucas 14CUX |
| Discovery 3.9i V8 | V8 | 1995 to 1997 | Lucas 14CUX |
| Range Rover 3.9 EFi V8 | 3.9L | 1989 to 1996 | Lucas 14CUX |
| Range Rover 4.0i | 4.0L | 1994 to 1997 | Lucas 14CUX |
| Range Rover 4.2i cat | 4.2L | 1992 to 1994 | Lucas 14CUX |
| ***LEXUS*** | | | |
| Lexus GS300 | 2JZ-GE | 1993 on | Toyota TCCS |
| Lexus LS400 | 1UZ-FE | 1990 to 1993 | Toyota TCCS |
| ***MAZDA*** | | | |
| 121 1.3 SOHC 16V cat | B3 | 1991 to 1995 | Mazda EGi-S SPi |
| 323 1.3i SOHC 16V cat | B3 | 1991 to 1995 | Mazda EGi MPi |
| 323 1.3i SOHC 16V | B3 | 1995 to 1997 | Mazda EGi MPi |
| 323 1.5i DOHC 16V | Z5 | 1994 to 1997 | Mazda EGi MPi |
| 323 1600i | B6 | 1985 to 1987 | Mazda EGi MPi |
| 323 1.6i Turbo 4x4 DOHC | B6 | 1986 to 1989 | Mazda EGi MPi |
| 323 1.6i SOHC 16V cat | B6 | 1991 to 1994 | Mazda EGi MPi |
| 323 1.6i Estate SOHC cat | B6E | 1991 to 1994 | Mazda EGi MPi |
| 323 1.8i DOHC 16V cat | BP | 1991 to 1994 | Mazda EGi MPi |
| 323 2.0i DOHC V6 24V | KF | 1995 to 1997 | Mazda EGi MPi |
| 323 2.0i DOHC V6 24V | KF | 1996 to 1997 | Mazda EGi MPi |
| 626 1.8i cat DOHC 16V | FP | 1992 to 1997 | Mazda EGi MPi |
| 626 2000i fwd | FE | 1985 to 1987 | Mazda EGi MPi |
| 626 2.0i GT DOHC 16V | FE | 1987 to 1990 | Mazda EGi MPi |
| 626 2.0i DOHC 16V | FE | 1990 to 1993 | Mazda EGi MPi |
| 626 2.0i DOHC 16V cat | FE | 1990 to 1995 | Mazda EGi MPi |
| 626 2.0i DOHC 16V cat | FS | 1992 to 1997 | Mazda EGi MPi |
| 626 2.2i 4x4 SOHC cat | F2 | 1990 to 1993 | Mazda EGi MPi |
| 626 2.5i DOHC V6 cat | KL | 1992 to 1997 | Mazda EGi MPi |
| E2000 | FE | 1994 to 1997 | Mazda EGi MPi |
| MX-3 1.6i SOHC 16V | B6 | 1991 to 1997 | Mazda EGi MPi |
| MX-3 1.8i DOHC V6 | KB | 1991 to 1997 | Mazda EGi MPi |
| MX-5 1.8i DOHC 16V | BP | 1995 to 1997 | Mazda EGi MPi |
| MX-6 2.5i V6 DOHC cat | KL | 1992 to 1997 | Mazda EGi MPi |
| Xedos 6 1.6i DOHC 16V | B6 | 1994 to 1997 | Mazda EGi MPi |
| Xedos 6 2.0i DOHC 24V | KF | 1992 to 1997 | Mazda EGi MPi |
| Xedos 9 2.0i DOHC 24V | KF | 1994 to 1995 | Mazda EGi MPi |
| Xedos 9 2.5i DOHC 24V | KL | 1994 to 1997 | Mazda EGi MPi |
| RX7 | RE13B | 1986 to 1990 | Mazda EGi MPi |
| ***MERCEDES*** | | | |
| C180 | 111.920 | 1993 to 1997 | PMS (Siemens) |
| 190E cat | 102.962 | 1988 to 1993 | Bosch KE3.5-Jetronic |
| 190E 2.3 cat | 102.985 | 1989 to 1993 | Bosch KE3.5-Jetronic |
| 190E 2.5-16 & cat | 102.990 | 1988 to 1993 | Bosch KE3.1-Jetronic |
| 190E 2.5-16 Evolution | 102.991 | 1989 to 1992 | Bosch KE3.1-Jetronic |
| 190E 2.6 | 103.942 | 1989 to 1993 | Bosch KE3.5-Jetronic |
| 190E 2.6 cat | 103.942 | 1987 to 1993 | Bosch KE3.5-Jetronic |
| C200 | 111.941 | 1994 to 1997 | PMS (Siemens) |
| E200 | 111.940 | 1992 to 1996 | PMS/Motronic 6.0/6.1 |
| 200E & TE cat | 102.963 | 1988 to 1993 | Bosch KE3.5-Jetronic |
| C220 | 111.961 | 1993 to 1997 | HFM |
| E220 | 111.960 | 1992 to 1997 | HFM |
| C230 & Kompressor | - | 1995 to 1997 | HFM |
| 230E, TE & CE cat | 102.982 | 1988 to 1993 | Bosch KE3.5-Jetronic |
| 230GE | 102.980 | 1989 to 1991 | Bosch KE3.5-Jetronic |
| 260E & cat | 103.940 | 1989 to 1993 | Bosch KE3.5-Jetronic |
| 260E 4-Matic & cat | 103.943 | 1988 to 1992 | Bosch KE3.5-Jetronic |

| Model | Engine code | Year | System |
|---|---|---|---|
| 260SE & cat | 103.941 | 1988 to 1992 | Bosch KE3.5-Jetronic |
| C280 | 104.941 | 1993 to 1997 | HFM |
| E280 cat | 104.942 | 1992 to 1996 | HFM |
| S280 | 104.944 | 1993 to 1997 | HFM |
| SL280 | 104.943 | 1993 to 1997 | HFM |
| E300 | 103.985 | 1992 to 1995 | Bosch KE3.5-Jetronic |
| 300SE, SEL & cat | 103.981 | 1986 to 1992 | Bosch KE3.5-Jetronic |
| 300E, TE, CE & cat | 103.983 | 1987 to 1993 | Bosch KE3.5-Jetronic |
| 300E & cat | 103.985 | 1988 to 1993 | Bosch KE3.5-Jetronic |
| 300E-24, TE-24 & CE-24 cat | 104.980 | 1989 to 1993 | Bosch KE5.2-Jetronic/EZ-L ignition |
| 300TE 4-Matic & cat | 103.985 | 1988 to 1993 | Bosch KE3.5-Jetronic |
| 300SL & cat | 103.984 | 1989 to 1995 | Bosch KE5.2-Jetronic/EZ-L ignition |
| 300SL-24 & cat | 104.981 | 1989 to 1995 | Bosch KE5.2-Jetronic/EZ-L ignition |
| E320 | 104.992 | 1992 to 1997 | HFM |
| S320 | 104.994 | 1993 to 1997 | HFM |
| SL320 | 104.991 | 1993 to 1997 | HFM |
| 400S, SE & SEL | 119.971 | 1991 on | Bosch LH4.1-Jetronic/EZ-L ignition |
| E420 | 119.975 | 1992 to 1995 | Bosch LH4.1-Jetronic/EZ-L ignition |
| S420 | 119.971 | 1993 to 1997 | Bosch LH4.1-Jetronic/EZ-L ignition |
| 500E | 119.974 | 1992 on | Bosch LH4.1-Jetronic/EZ-L ignition |
| 500SL | 119.972 | 1992 on | Bosch LH4.1-Jetronic/EZ-L ignition |
| 500SE & SEL | 119.970 | 1991 on | Bosch LH4.1-Jetronic/EZ-L ignition |
| 500SEC | 119.970 | 1992 on | Bosch LH4.1-Jetronic/EZ-L ignition |
| 500SL cat | 119.960 | 1989 to 1994 | Bosch KE5.2-Jetronic/EZ-L ignition |
| E500 | 119.974 | 1992 to 1995 | Bosch LH4.1-Jetronic/EZ-L ignition |
| S500 | 119.970 | 1993 to 1997 | Bosch LH4.1-Jetronic/EZ-L ignition |
| SL500 | 119.972 | 1993 to 1997 | Bosch LH4.1-Jetronic/EZ-L ignition |
| 600SEL | 120.980 | 1991 to 1996 | Bosch LH-Jetronic/EZ-L ignition |
| S600 cat | 120.980 | 1991 to 1996 | Bosch LH4.1-Jetronic/EZ-L ignition |
| S600 | 120.980 | 1996 to 1997 | Bosch LH4.1-Jetronic/EZ-L ignition |
| SL600 | 120.981 | 1993 to 1997 | Bosch LH4.1-Jetronic/EZ-L ignition |
| ***MITSUBISHI*** | | | |
| 3000 GT 24V | 6G72 | 1992 to 1997 | Mitsubishi ECI-Multi- MPi |
| Carisma 1.6 SOHC 16V | 4G92 | 1996 to 1997 | Mitsubishi ECI-Multi- MPi |
| Carisma 1.8 SOHC 16V | 4G93 | 1996 to 1997 | Mitsubishi ECI-Multi- MPi |
| Carisma 1.8 DOHC 16V | 4G93 | 1996 to 1997 | Mitsubishi ECI-Multi- MPi |
| Colt 1.3i SOHC 12V cat | 4G13 | 1992 to 1996 | Mitsubishi ECI-Multi- MPi |
| Colt 1.3 SOHC 12V | 4G13 | 1996 to 1997 | Mitsubishi ECI-Multi- MPi |
| Colt 1600 GTi DOHC | 4G61 | 1988 to 1990 | Mitsubishi ECI-Multi- MPi |
| Colt 1.6i SOHC 16V | 4G92 | 1992 to 1996 | Mitsubishi ECI-Multi- MPi |
| Colt 1.6i 4x4 SOHC 16V cat | 4G92 | 1992 to 1996 | Mitsubishi ECI-Multi- MPi |
| Colt 1.6 SOHC 16V | 4G92 | 1996 to 1997 | Mitsubishi ECI-Multi- SEFI |
| Colt 1800 GTi-16V DOHC 16V | 4G67 | 1990 to 1993 | Mitsubishi ECI-Multi- MPi |
| Colt 1.8 GTi DOHC 16V cat | 4G93 | 1992 to 1995 | Mitsubishi ECI-Multi- MPi |
| Cordia 1800 Turbo | 4G62T | 1985 to 1989 | Mitsubishi ECI-Multi- MPi |
| Galant 1800 SOHC 16V cat | 4G93 | 1993 to 1997 | Mitsubishi ECI-Multi- MPi |
| Galant Turbo | 4G63T | 1985 to 1988 | Mitsubishi ECI-Multi- Turbo |
| Galant 2000 GLSi SOHC | 4G63 | 1988 to 1993 | Mitsubishi ECI-Multi- MPi |
| Galant 2000 GTi 16V DOHC | 4G63 | 1988 to 1993 | Mitsubishi ECI-Multi- MPi |
| Galant 2000 4WD DOHC | 4G63 | 1989 to 1994 | Mitsubishi ECI-Multi- MPi |
| Galant 2000 4WS cat DOHC | 4G63 | 1989 to 1994 | Mitsubishi ECI-Multi- MPi |
| Galant 2.0i SOHC 16V cat | - | 1993 to 1997 | Mitsubishi ECI-Multi- MPi |
| Galant 2.0i V6 DOHC 24V | 6A12 | 1993 to 1997 | Mitsubishi ECI-Multi- MPi |
| Galant Sapporo 2400 | 4G64 | 1987 to 1989 | Mitsubishi ECI-Multi- MPi |
| Galant 2.5i V6 DOHC 24V | 6G73 | 1993 to 1995 | Mitsubishi ECI-Multi- MPi |
| L300 SOHC 16V | 4G63 | 1994 to 1997 | Mitsubishi ECI-Multi- MPi |
| Lancer 1600 GTi 16V DOHC | 4G61 | 1988 to 1990 | Mitsubishi ECI-Multi- MPi |
| Lancer 1.6i SOHC 16V | 4G92 | 1992 to 1996 | Mitsubishi ECI-Multi- MPi |
| Lancer 1.6i 4x4 SOHC 16V cat | 4G92 | 1992 to 1996 | Mitsubishi ECI-Multi- MPi |
| Lancer 1800 GTi DOHC 16V | 4G67 | 1990 to 1993 | Mitsubishi ECI-Multi- MPi |
| Lancer 1.8 GTi DOHC 16V cat | 4G93 | 1992 to 1995 | Mitsubishi ECI-Multi- MPi |
| Lancer 1800 4WD cat | 4G37-8 | 1989 to 1993 | Mitsubishi ECI-Multi- MPi |
| Shogun 3.5i V6 DOHC 24V | 6G74 | 1994 to 1997 | Mitsubishi ECI-Multi- MPi |
| Sigma Estate 12V | 6G72 | 1993 to 1996 | Mitsubishi ECI-Multi- MPi |

| Model | Engine code | Year | System |
|---|---|---|---|
| ***MITSUBISHI (Continued)*** | | | |
| Sigma Wagon 12V cat | 6G72 | 1993 to 1996 | Mitsubishi ECI-Multi- MPi |
| Sigma 3.0i 24V cat | 6G72 | 1991 to 1996 | Mitsubishi ECI-Multi- MPi |
| Space Wagon 1.8i SOHC 16V | 4G93 | 1991 to '997 | Mitsubishi ECI-Multi- MPi |
| Space Wagon 2.0i DOHC 16V | 4G63 | 1992 to 1997 | Mitsubishi ECI-Multi- MPi |
| Starion Turbo | 4G63T | 1986 to 1989 | Mitsubishi ECI-Multi- + Turbo |
| Starion 2 6 Turbo cat | G54B1 | 1989 to '991 | Mitsubishi ECI-Multi- + Turbo |
| ***NISSAN*** | | | |
| 4x4 Pick-up 2.4i | KA24E | 1992 to 1997 | Nissan ECCS MPi |
| 4WD Pick-up 2.4i cat | Z24i | 1990 to 1994 | Nissan ECCS SPi |
| 4WD Wagon 3.0i cat | VG30E | 1990 to 1994 | Nissan ECCS MPi |
| 100NX 2 0 SOHC 16V cat | SR20DE | 1991 to 1994 | Nissan ECCS MPi |
| 200 SX 16V Turbo cat | CA18DET | 1989 to 1994 | Nissan ECCS MPi |
| 200 SX DOHC 16V Turbo | SR20DET | 1994 to 1997 | Nissan ECCS MPi |
| 300 C | VG30E | 1984 to 1991 | Nissan ECCS MPi |
| 300 ZX | VG30E | 1984 to 1990 | Nissan ECCS MPi |
| 300 ZX Turbo | VG30ET | 1984 to 1990 | Nissan ECCS MPi + Turbo |
| 300 ZX Twin-Turbo cat | VG30DETT | 1990 to 1995 | Nissan ECCS MPi + Turbo |
| Almera 1.4 DOHC 16V | GA14DE | 1996 to 1997 | Nissan ECCS MPi |
| Almera 1 6 DOHC 16V | GA16DE | 1996 to 1997 | Nissan ECCS MPi |
| Almera 2.0 GTi | SR20DE | 1996 to 1997 | Nissan ECCS MPi |
| Bluebird ZX Turbo SOHC | CA18T | 1986 to 1990 | Nissan ECCS MPi + Turbo |
| Bluebird 2 0i SOHC | CA20E | 1988 to 1990 | Nissan ECCS MPi |
| Micra 1 0i DOHC 16V cat | CG10DE | 1993 to 1997 | Nissan ECCS MPi |
| Micra 1 3i DOHC 16V cat | CG13DE | 1993 to 1997 | Nissan ECCS MPi |
| Maxima & cat | VG30E | 1989 to 1994 | Nissan ECCS MPi |
| Patrol 4.2i OHV 128kW | TB42E | 1992 to 1997 | Nissan ECCS MPi |
| Prairie 2.0i SOHC cat | CA20E | 1989 to 1991 | Nissan ECCS MPi |
| Primera 1.6i | GA16DE | 1994 to 1997 | Nissan ECCS SPi |
| Primera 1.6i DOHC 16V | GA16DE | 1996 to 1997 | Nissan ECCS MPi |
| Primera 2.0 DOHC cat | SR20Di | 1990 to 1995 | Nissan ECCS SPi with Hot-wire |
| Primera Estate 2 0 DOHC 16V cat | SR20Di | 1990 to 1996 | Nissan ECCS SPi with Hot-wire |
| Primera 2 0e ZX DOHC 16V | SR20DE | 1991 to 1995 | Nissan ECCS MPi with Hot-wire |
| Primera 2.0e GT | SR20DE | 1991 to 1995 | Nissan ECCS MPi with Hot-wire |
| Primera 2.0e cat | SR20DE | 1991 to 1995 | Nissan ECCS MPi with Hot-wire |
| Primera 2 0i DOHC 16V | SR20DE | 1994 to 1997 | Nissan ECCS SPi |
| Primera 2.0i GT DOHC 16V | SR20DE | 1994 to 1996 | Nissan ECCS SPi |
| Primera 2.0i DOHC 16V | SR20DE | 1996 to 1997 | Nissan ECCS MPi |
| Primera 2.0i GT DOHC 16V | SR20DE | 1996 to 1997 | Nissan ECCS MPi |
| QX 2.0 DOHC 24V V6 | VQ20DE | 1994 to 1997 | Nissan ECCS MPi |
| QX 3.0 DOHC 24V V6 | VQ30DE | 1994 to 1997 | Nissan ECCS MPi |
| Serena 1 6i DOHC 16V | GA16DE | 1993 to 1997 | Nissan ECCS MPi |
| Serena 2.0i DOHC 16V | SR20DE | 1993 to 1997 | Nissan ECCS MPi |
| Silvia Turbo ZX | CA18ET | 1984 to 1990 | Nissan ECCS MPi + Turbo |
| Sunny 1.6i SOHC 12V cat | GA16i | 1989 to 1991 | Nissan ECCS SPi |
| Sunny ZX Coupe DOHC 16V | CA16DE | 1987 to 1989 | Nissan ECCS MPi |
| Sunny 1.8 ZX DOHC 16V cat | CA18DE | 1989 to 1991 | Nissan ECCS MPi |
| Sunny GTi-R DOHC 16V | SR20DET | 1991 to 1994 | Nissan ECCS MPi |
| Sunny 2.0 GTi DOHC 16V cat | SR20DE | 1991 to 1994 | Nissan ECCS MPi |
| Terrano II 2.4 | KA24EBF | 1993 to 1997 | Nissan ECCS MPi |
| Urvan 2 4i cat | Z24i | 1989 to 1994 | Nissan ECCS SPi |
| Vanette 2 4i OHV cat | Z24i | 1987 to 1994 | Nissan ECCS SPi |
| ***PEUGEOT*** | | | |
| 106 1.0 cat | TU9ML/Z (CDY, CDZ) | 1993 to 1996 | Bosch Mono-Motronic MA3 0 |
| 106 1.1 | TU1M/L3/L (HDY, HDZ) | 1996 to 1997 | Bosch Mono-Motronic MA3 1 |
| 106 1.1i cat | TU1ML/Z (HDY, HDZ) | 1991 to 1992 | Bosch Mono-Jetronic A2.2 |
| 106 1.1i cat | TU1ML/Z (HDY, HDZ) | 1993 to 1996 | Magneti-Marelli FDG6 |
| 106 1 4 | TU3JP/L3 | 1996 to 1997 | Magneti-Marelli 1 AP |
| 106 1.4i 8V SOHC Rallye cat | TU2J2L/Z (MFZ) | 1993 to 1996 | Magneti-Marelli 8P |
| 106 1.4i | TU3J2K (K6B) | 1991 to 1992 | Bosch Motronic MP3.1 |
| 106 1.4i cat | TU3J2L/Z (KFZ) | 1991 to 1996 | Bosch Motronic MP3.1 |
| 106 1 4i cat | TU3MCL/Z (KDX) | 1993 to 1996 | Bosch Mono-Motronic MA3.0 |

| Model | Engine code | Year | System |
|---|---|---|---|
| 106 1 6 | TU5JPL/Z (NFZ) | 1994 to 1996 | Bosch Motronic MP5 1 |
| 106 1.6 | TU5JP/L3 | 1996 to 1997 | Bosch Motronic 5 2 |
| 106 1.6 MPi | TU5J2L/Z/K (NFY) | 1994 to 1996 | Magneti-Marelli 8P |
| 205 1.1i cat | TU1ML/Z (HDZ) | 1989 to 1992 | Bosch Mono-Jetronic A2.2 |
| 205 1.1i cat | TU1ML/Z (HDZ) | 1992 to 1996 | Magneti-Marelli FDG6 |
| 205 1 4i LC cat | TU3MZ (KDZ) | 1988 to 1991 | Bosch Mono-Jetronic A2.2 |
| 205 1 4i HC cat | TU3ML/Z (KDY) | 1991 to 1994 | Bosch Mono-Jetronic A2.2 |
| 205 1 4i | TU3FM/L (KDY2) | 1994 to 1996 | Bosch Mono-Motronic MA3 0 |
| 205 1 6i cat | XU5M2L/Z (BDY) | 1990 to 1991 | Magneti-Marelli BAG5 |
| 205 1 6i and AT cat | XU5M3L/Z (BDY) | 1992 to 1997 | Magneti-Marelli FDG6 |
| 205 GTi 1 9 8V cat | XU9JAZ (DKZ) | 1989 to 1993 | Bosch Motronic 1.3 |
| 306 1.1i | TU1ML/Z (HDY, HDZ) | 1993 to 1997 | Magneti-Marelli FDG6 |
| 306 1.1i | TU1ML/Z (HDY, HDZ) | 1993 to 1996 | Bosch Mono-Motronic MA3.0 |
| 306 1.4i cat | TU3MCL/Z (KDX) | 1993 to 1995 | Bosch Mono-Motronic MA3.0 |
| 306 1.4i cat | TU3MCL/Z (KDX) | 1994 to 1997 | Magneti-Marelli FDG6 |
| 306 1.6i cat | TU5JPL/Z (NFZ) | 1993 to 1997 | Bosch Motronic MP5.1 |
| 306 1 8i Cabrio and cat | XU7JPL/Z (LFZ) | 1993 to 1997 | Magneti-Marelli 8P |
| 306 2 0i Cabrio and cat | XU10J2CL/Z (RFX) | 1994 to 1997 | Magneti-Marelli 8P |
| 306 2 0i 16V cat | XU10J4L/Z (RFY) | 1994 to 1996 | Bosch Motronic MP3 2 |
| 306 2 0i GT-6 | XU10J4RS | 1996 to 1997 | Magneti-Marelli AP 10 |
| 309 1 1i cat | TU1ML/Z (HDZ) | 1991 to 1994 | Bosch Mono-Jetronic A2 2 |
| 309 1 4i cat | TU3MZ (KDZ) | 1988 to 1991 | Bosch Mono-Jetronic A2.2 |
| 309 1 4i cat | TU3ML/Z (KDY) | 1991 to 1994 | Bosch Mono-Jetronic A2.2 |
| 309 1.6i cat | XU5MZ (BDZ) | 1989 to 1991 | Magneti-Marelli BAG5 |
| 309 1.6i cat | XU5M2L/Z (BDY) | 1991 to 1992 | Magneti-Marelli G5 |
| 309 1.6i cat | XU5M3L/Z (BDY) | 1992 to 1994 | Magneti-Marelli FDG6 |
| 309 1.9 8V | XU9JA/Z (DKZ) | 1988 to 1992 | Bosch Motronic 1.3 |
| 309 1.9 16V DOHC | XU9J4K (D6C) | 1990 to 1991 | Bosch Motronic 4.1 |
| 309 1 9 16V DOHC | XU9J4K (D6C) | 1991 to 1992 | Bosch Motronic 1 3 |
| 309 1 9 16V cat | XU9J4L/Z (DFW) | 1990 to 1992 | Bosch Motronic 1 3 |
| 309 1.9 SPi cat | XU9M/Z (DDZ) | 1988 to 1993 | Fenix 1B |
| 405 1 4i cat | TU3MCL/Z (KDX) | 1992 to 1994 | Mono Motronic MA3.0 |
| 405 1 6i cat | XU5MZ (BDZ) | 1989 to 1991 | Magneti-Marelli BAG5 |
| 405 1 6i cat | XU5M2L/Z (BDY) | 1989 to 1991 | Magneti-Marelli FDG5 |
| 405 1 6i cat | XU5M3Z (BDY) | 1991 to 1992 | Magneti-Marelli FDG6 |
| 405 1 6i cat | XU5M3L/Z (BDY) | 1992 to 1993 | Magneti-Marelli FDG6 |
| 405 1 6i cat | XU5JPL/Z (BFZ) | 1989 to 1992 | Bosch Motronic 1.3 |
| 405 1 6i cat | XU5JPL/Z (BFZ) | 1993 to 1995 | Magneti-Marelli DCM8P13 |
| 405 1 8i cat | XU7JPL/Z (LFZ) | 1992 to 1997 | Bosch Motronic MP5.1 |
| 405 1.9 8V cat | XU9JA/Z (DKZ) | 1989 to 1992 | Bosch Motronic 1.3 |
| 405 1.9 Mi16 and 4x4 16V | XU9J4K (D6C) | 1988 to 1991 | Bosch Motronic ML4.1 |
| 405 1 9 Mi16 and 4x4 16V | XU9J4K (D6C) | 1990 to 1992 | Bosch Motronic 1.3 |
| 405 1.9 Mi16 cat | XU9J4/Z (DFW) | 1990 to 1992 | Bosch Motronic 1.3 |
| 405 1.9i W/distributor | XU9J2K (D6D) | 1990 to 1991 | Bosch Motronic MP3.1 |
| 405 1.9i DIS | XU9J2K (D6D) | 1991 to 1992 | Bosch Motronic MP3.1 |
| 405 1.9 SPi cat | XU9M/Z (DDZ) | 1989 to 1992 | Fenix 1B |
| 405 2.0i and 4x4 8V cat | XU10J2CL/Z (RFX) | 1992 to 1997 | Magneti-Marelli 8P |
| 405 2.0i 16V cat | XU10J4/Z (RFY) | 1992 to 1995 | Bosch Motronic MP3.2 |
| 405 2.0i 16V turbo cat | XU10J4TEL/Z (RGZ) | 1993 to 1995 | Magneti-Marelli AP MPi |
| 406 1.6i cat | XU5JPL3(BFZ) | 1996 to 1997 | Magneti-Marelli 8P |
| 406 1 8i cat | XU7JPK(L6A) | 1996 to 1997 | Magneti-Marelli 8P |
| 406 1.8 16V | XU7JP4L | 1995 to 1997 | Bosch Motronic MP5 1 1 |
| 406 2.0 16V | XU10J4RL | 1995 to 1997 | Bosch Motronic MP5.1.1 |
| 406 2 0 Turbo | XU10J2TE/L3 | 1996 to 1997 | Bosch Motronic MP5.1 1 |
| 605 2 0i cat | XU10ML/Z (RDZ) | 1989 to 1994 | Magneti-Marelli G5 |
| 605 2.0i cat | XU10J2L/Z (RFZ) | 1990 to 1995 | Bosch Motronic MP3.1 |
| 605 2 0i 16V | XU10J4RL/Z/L3 (RFV) | 1995 to 1997 | Bosch Motronic MP5.1.1 |
| 605 2 0i turbo cat | XU10J2TEL/Z (RGY) | 1993 to 1994 | Bosch Motronic MP3.2 |
| 605 2 0i turbo | XU10J2CTEL/Z (RGX) | 1995 to 1997 | Bosch Motronic MP3.2 |
| 605 3 0i cat | ZPJL/Z (SFZ) | 1990 to 1995 | Fenix 3B |
| 605 3 0i 24V DOHC cat | ZPJ4L/Z (SKZ) | 1990 to 1994 | Fenix 4 |
| 606 3 0i 24V V6 | ZPJ4L/Z (UKZ) | 1995 to 1997 | Fenix 4 |
| 806 2 0 | XU10J2CL/Z (RFU) | 1995 to 1997 | Magneti-Marelli 8P-22 |
| 806 2 0 Turbo | XU10J2CTEL/Z (RGX) | 1995 to 1997 | Bosch Motronic MP3.2 |
| Boxer 2 0 | XU10J2U (RFW) | 1994 to 1997 | Magneti-Marelli 8P11 |

# Index of vehicles covered

| Model | Engine code | Year | System |
|---|---|---|---|
| ***PROTON*** | | | |
| 1.3 MPi 12V SOHC cat | 4G13-2 | 1992 to 1997 | ECI-Multi- MPi |
| 1.5 MPi 12V SOHC cat | 4G15-2 | 1992 to 1997 | ECI-Multi- MPi |
| Persona 1.3 Compact SOHC 12V | 4G13-2 | 1995 to 1997 | ECI-Multi- SEFi |
| Persona 1.5 SOHC 12V | 4G15 | 1993 to 1997 | ECI-Multi- SEFi |
| Persona 1.5 Compact SOHC 12V | 4G15 | 1993 to 1997 | ECI-Multi- SEFi |
| Persona 1.6 SOHC 16V | 4G92 | 1993 to 1997 | ECI-Multi- SEFi |
| Persona 1.6 Compact SOHC 16V | 4G92 | 1993 to 1997 | ECI-Multi- SEFi |
| Persona 1.8 12V SOHC | 4G93 | 1996 to 1997 | ECI-Multi- SEFi |
| Persona 1.8 16V DOHC | 4G93 | 1996 to 1997 | ECI-Multi- SEFi |
| ***RENAULT*** | | | |
| 5 1.4 cat | C3J700 (B/C/F407) | 1986 to 1990 | Renix SPi |
| 5 1.4 cat | C3J760 (B/C/F407) | 1990 to 1997 | Renix SPi |
| 5 1.7i cat | F3NG716 (B/C408) | 1987 to 1991 | Renix SPi |
| 5 1.7i cat | F3NG717 (B/C409) | 1987 to 1991 | Renix SPi |
| 5 1.7 cat | F3N702 (C409) | 1989 to 1992 | Renix MPi |
| 9 1721 cat | F3N718(L42F/BC37F) | 1986 to 1989 | Renix SPi |
| 9 1.7 cat | F3N708(L42E/C37E) | 1986 to 1989 | Renix MPi |
| 11 1721 cat | F3N718(L42F/BC37F) | 1986 to 1989 | Renix SPi |
| 11 1.7 cat | F3N708 L42E/C37E) | 1986 to 1989 | Renix MPi |
| 19 1.4i cat | C3J710 (B/C/L532) | 1990 to 1992 | Renix SPi |
| 19 1.4i cat | C3J700 | 1991 to 1992 | Renix SPi |
| 19 1.4 cat | E7J700 (B/C/L53A) | 1991 to 1995 | Bosch SPi |
| 19 1.7i cat | F3N740 (B/C/L53B | 1990 to 1992 | Renix SPi |
| 19 1.7i cat auto | F3N741 (B/C/L53B) | 1990 to 1992 | Renix SPi |
| 19 1.7 DOHC 16V | F7P700(B/C/L/D53D) | 1991 to 1993 | Renix MPi |
| 19 1.7 DOHC 16V cat | F7P704(B/C/L/D53D) | 1991 to 1995 | Renix MPi |
| 19 1.7 DOHC 16V cat | F7P704 (X53D) | 1991 to 1995 | Renix MPi |
| 19 1.7i cat | F3N746 (B/C/L53F) | 1992 to 1993 | Renix MPi |
| 19 1.7i cat | F3N742(B/C/L/X53C) | 1990 to 1992 | Renix MPi |
| 19 1.7i auto cat | F3N743 (X53C) | 1990 to 1992 | Renix MPi |
| 19 1.8i cat and Cabrio | F3P704 (X53Y) | 1992 to 1996 | Bosch SPi |
| 19 1.8i cat and Cabrio | F3P705 (X53Y) | 1992 to 1995 | Bosch SPi |
| 19 1.8i cat and Cabrio | F3P706 (X53Y) | 1992 to 1995 | Bosch SPi |
| 19 1.8i cat and Cabrio | F3P707 (X53Y) | 1992 to 1995 | Bosch SPi |
| 19 1.8 cat | F3P700 (X538) | 1992 to 1996 | Renix MPi |
| 21 1.7i cat | F3N723 (X48F) | 1991 to 1995 | Renix SPi |
| 21 1.7i cat | F3N722(B/K/L/48E) | 1991 to 1995 | Renix MPi |
| 21 1721 cat | F3N 726(L42F/BC37F) | 1986 to 1989 | Renix SPi |
| 21 2.0 12V and 4x4 cat | J7R740 (B/L/X48R) | 1991 to 1995 | Renix MPi |
| 21 2.0 cat | J7R746 (B/K/L48C) | 1991 to 1995 | Renix MPi |
| 21 2.0 auto cat | J7R747 (B/K/L48C) | 1991 to 1995 | Renix MPi |
| 21 2.0 and 4x4 | J7R750 (B/L/K483) | 1986 to 1993 | Renix MPi |
| 21 2.0 and 4x4 auto | J7R751 (K483) | 1986 to 1993 | Renix MPi |
| 21 2.0 TXi 12V | J7RG754(X48Q/Y/R) | 1989 to 1994 | Renix MPi |
| 21 2.0 turbo and 4x4 cat | J7R756 (L48L) | 1991 to 1994 | Renix MPi |
| 21 2.0 turbo | J7R752 (L485) | 1988 to 1992 | Renix MPi |
| 21 2.0 turbo 4x4 | J7R752 (L485) | 1991 to 1992 | Renix MPi |
| 21 2.2 cat | J7T754 (B/K/L48K) | 1992 to 1995 | Renix MPi |
| 21 2.2 auto cat | J7T755 (B/K/L48K) | 1992 to 1995 | Renix MPi |
| 25 2.0 | J7R722 (B29H) | 1986 to 1992 | Renix MPi |
| 25 2.0 auto | J7R723 (B29H) | 1986 to 1992 | Renix MPi |
| 25 2.0 TXi 12V | J7RG720 (B292) | 1989 to 1992 | Renix MPi |
| 25 2.0 TXi 12V auto | J7RG721 (B292) | 1989 to 1993 | Renix MPi |
| 25 2.0 TXi 12V cat | J7R726 (B294) | 1991 to 1993 | Renix MPi |
| 25 2.2 | J7TE706 (B29E) | 1984 to 1987 | Renix MPi |
| 25 2.2 auto | J7TG707 (B29E) | 1984 to 1987 | Renix MPi |
| 25 2.2 | J7TJ730 (B29E) | 1987 to 1990 | Renix MPi |
| 25 2.2 auto | J7TK731 (B29E) | 1987 to 1990 | Renix MPi |
| 25 2.2 cat | J7T732 (B29B) | 1990 to 1991 | Renix MPi |
| 25 2.2 auto cat | J7T733 (B29B) | 1990 to 1991 | Renix MPi |
| 25 2.5 V6 turbo | Z7UA702 (B295 | 1985 to 1990 | Renix MPi |
| 25 2.5 V6 turbo cat | Z7U700 (B29G) | 1991 to 1993 | Renix MPi |
| 25 V6 2.9i | Z7WA700 (B293) | 1988 to 1993 | Renix MPi |

| Model | Engine code | Year | System |
|---|---|---|---|
| 25 V6 2.9i auto | Z7W701 (B293) | 1989 to 1992 | Renix MPi |
| 25 V6 2.9i auto | Z7W709 (B293) | 1992 to 1993 | Renix MPi |
| 25 V6 2.9i cat | Z7W706 (B29F) | 1991 to 1992 | Renix MPi |
| 25 V6 2.9i cat auto | Z7W707 (B29F) | 1991 to 1992 | Renix MPi |
| Alpine 2.5 GTA V6 turbo | Z7UC730 (D501) | 1986 to 1992 | Renix MPi |
| Alpine 2.5 GTA V6 turbo cat | Z7U734 (D502) | 1990 to 1992 | Renix MPi |
| Alpine 2.5 V6 turbo cat | Z7X744 (D503) | 1992 to 1995 | Renix MPi |
| Chamade 1.4i cat | (B/C/L532)C31710 | 1990 to 1992 | Renix SPi |
| Chamade 1.4i cat | C3J700 | 1991 to 1992 | Renix SPi |
| Chamade 1.4 cat | E7J700( B/C/L53A) | 1991 to 1996 | Bosch SPi |
| Chamade 1.7i cat | F3N742 (X53C) | 1990 to 1992 | Renix MPi |
| Chamade 1.7i auto cat | F3N743 (X53C) | 1990 to 1992 | Renix MPi |
| Chamade 19 1 7i cat | F3N740 | 1990 to 1992 | Renix SPi |
| Chamade 19 1.7i auto cat | F3N741 (B/C/L53B) | 1990 to 1992 | Renix SPi |
| Chamade 1.8 cat | F3P700 | 1992 to 1994 | Renix MPi |
| Clio 1.2 cat | E7F700 (B/C/S57A/R) | 1991 to 1997 | Bosch SPi |
| Clio 1.2 cat | E7F706 (B/C/S57A/R) | 1991 to 1995 | Bosch SPi |
| Clio 1.2i | C3G720 (B/C/S577) | 1995 to 1997 | Magneti-Marelli SPi |
| Clio 1.4 cat | E7J718 (B/C/S57T) | 1991 to 1997 | Bosch SPi |
| Clio 1.4 auto cat | E7J719 (B/C/S57T) | 1991 to 1996 | Bosch SPi |
| Clio 1.4 cat | E7J710 (B/C/S57B/57T) | 1991 to 1995 | Bosch SPi |
| Clio 1.4 auto cat | E7J711(B/C/S57B/57T) | 1991 to 1995 | Bosch SPi |
| Clio 16V/16S | F7P-7-22 (US87) | 1991 to 1997 | Siemens Bendix MPi |
| Clio 1.8 cat | F3P710 (B/C57C) | 1991 to 1997 | Bosch SPi |
| Clio 1.8 cat | F3P714 (B/C57U) | 1991 to 1994 | Bosch SPi |
| Clio 1.8 cat | F3P712 (C579) | 1993 to 1996 | Renix MPi |
| Clio 1.8i auto | F3P755 | 1995 to 1997 | Siemens Bendix MPi |
| Clio 1.8i | F3P758 | 1995 to 1997 | Siemens Bendix MPi |
| Clio 1 8 16V DOHC | F7P720 (C575) | 1991 to 1992 | Renix MPi |
| Clio 1 8 16V DOHC cat | F7P722 (C57D) | 1991 to 1996 | Renix MPi |
| Clio Williams 2.0 cat | F7P | 1993 to 1995 | Renix MPi |
| Espace 2.0i TXE and 4x4 | J7RE760 (J116) | 1988 to 1991 | Renix MPi |
| Espace 2.0i cat | J7R768 (J636) | 1991 to 1996 | Renix MPi |
| Espace 2.2i TXE and 4x4 cat | J7T770 (J117) | 1991 to 1992 | Renix MPi |
| Espace 2.2i and 4x4 cat | J7T772 (J/S637) | 1991 to 1997 | Renix MPi |
| Espace 2.9i V6 and 4X4 cat | Z7W712 (J638) | 1991 to 1997 | Renix MPi |
| Espace 2.9i V6 and 4X4 cat | Z7W713 (J638) | 1991 to 1997 | Renix MPi |
| Extra 1.2 | C3G710 | 1995 to 1997 | Magneti-Marelli SPi |
| Extra 1.4 cat | C3J760 (B/C/F407) | 1990 to 1995 | Renix SPi |
| Extra 1.4 cat | C3J762 (F407) | 1992 to 1995 | Renix SPi |
| Extra 1.4 cat | E7J720 (F40V) | 1992 to 1995 | Bosch SPi |
| Extra 1.4 cat | E7J724 (F40U) | 1992 to 1997 | Bosch SPi |
| Express 1.2 | C3G710 | 1995 to 1997 | Magneti-Marelli SPi |
| Express 1.4 cat | C3J762 (F407) | 1992 to 1995 | Renix SPi |
| Express 1.4 cat | E7J720 (F40V) | 1992 to 1995 | Bosch SPi |
| Express 1 4 cat | E7J724 (F40U) | 1992 to 1997 | Bosch SPi |
| Laguna 1.8i | F3P720 (B56B) | 1994 to 1997 | Bosch SPi |
| Laguna 2.0i | N7Q 700/704 | 1996 to 1997 | Siemens Bendix SEFi |
| Laguna 2.0i | F3R723/722 | 1994 to 1997 | Siemens Bendix MPi |
| Laguna 2.0i | F3R722 | 1994 to 1995 | Renix MPi |
| Laguna 3.0i V6 | Z7X760 (B56E) | 1994 to 1997 | Siemens MPi |
| Master 2 2i cat | J7T782 (RxxA) | 1991 to 1993 | Renix MPi |
| Megane 1.4 | E7J764 (BAOE) | 1996 to 1997 | Fenix 3 |
| Megane 1.6 | K7M 702/720 | 1996 to 1997 | Fenix 5 |
| Megane 1.6 Coupe | K7M 702/720 | 1996 to 1997 | Fenix 5 |
| Megane 2.0 | F3R750 | 1996 to 1997 | Fenix 5 |
| Safrane 2.0i cat | J7R732 (B540) | 1993 to 1997 | Renix MPi |
| Safrane 2.0i auto cat | J7R733 (B540) | 1993 to 1995 | Renix MPi |
| Safrane 2.0i 12V cat | J7R734 (B542) | 1993 to 1994 | Renix MPi |
| Safrane 2.0i 12V cat | J7R735 (B542) | 1993 to 1994 | Renix MPi |
| Safrane 2.2i 12V cat | J7T760 (B543) | 1993 to 1997 | Renix MPi |
| Safrane 2.2i 12V auto cat | J7T761 (B543) | 1993 to 1995 | Renix MPi |
| Safrane 3.0i V6 cat | Z7X722 (B544) | 1993 to 1997 | Renix MPi |
| Safrane 3.0i V6 auto cat | Z7X723 (B544) | 1993 to 1995 | Renix MPi |
| Safrane Quadra 3 0i V6 cat | Z7X722 (B544) | 1992 to 1994 | Renix MPi |
| Savanna 1.7i cat | F3N722 (X48E) | 1991 to 1995 | Renix MPi |

| Model | Engine code | Year | System |
|---|---|---|---|
| ***RENAULT (Continued)*** | | | |
| Savanna 1.7i cat | F3N723 (X48F) | 1991 to 1995 | Renix SPi |
| Savanna 2.0 and 4x4 | J7R750 (K483) | 1986 to 1993 | Renix MPi |
| Savanna 2.0 and 4x4 auto | J7R751 (K483) | 1986 to 1993 | Renix MPi |
| Trafic 2.2i and 4x4 cat | J7T 780 (T/VxxA) | 1991 to 1993 | Renix MPi |
| Twingo 1.3 | C3G (C063) | 1994 to 1997 | Magneti Marelli SPi |
| ***ROVER*** | | | |
| 111 1.1 SOHC | K8 | 1995 to 1997 | Rover MEMS SPi |
| 111 1.4 SOHC | K8 | 1995 to 1997 | Rover MEMS SPi |
| 200 Vi DOHC 16V | 18K16 | 1995 to 1997 | Rover MEMS MPi |
| 214 1.4 DOHC 16V | K16 | 1989 to 1992 | Rover MEMS SPi |
| 214 1.4 DOHC 16V cat | K16 | 1990 to 1993 | Rover MEMS SPi |
| 214 1.4 DOHC 16V cat | K16 | 1992 to 1996 | Rover MEMS MPi |
| 214 SOHC 8V | 14K8 | 1995 to 1997 | Rover MEMS MPi |
| 214 DOHC 16V | 14K16 | 1995 to 1997 | Rover MEMS MPi |
| 216 SOHC 16V | D16A7 | 1989 to 1996 | Honda PGM-Fi |
| 216 SOHC 16V cat | D16A6 | 1989 to 1996 | Honda PGM-Fi |
| 216 SOHC 16V auto cat | D16Z2 | 1989 to 1996 | Honda PGM-Fi |
| 216 DOHC 16V | D16A9 | 1990 to 1994 | Honda PGM-Fi |
| 216 DOHC 16V auto | D16Z4 | 1990 to 1994 | Honda PGM-Fi |
| 216 DOHC 16V cat | D16A8 | 1990 to 1994 | Honda PGM-Fi |
| 216 DOHC 16V | 16K16 | 1995 to 1997 | Rover MEMS MPi |
| 220 2.0 DOHC 16V cat | 20M4 M16 | 1991 to 1994 | Rover MEMS MPi |
| 220 2.0 DOHC 16V turbo cat | 20T4 T16 | 1992 to 1996 | Rover MEMS MPi |
| 220 2.0 DOHC 16V cat | 20T4 T16 | 1992 to 1996 | Rover MEMS MPi |
| 414 1.4 DOHC 16V | K16 | 1990 to 1993 | Rover MEMS SPi |
| 414 1.4 DOHC 16V cat | K16 | 1990 to 1993 | Rover MEMS SPi |
| 414 1.4 DOHC 16V cat | K16 | 1992 to 1997 | Rover MEMS MPi |
| 414 1.4 DOHC 16V | K16 | 1995 to 1997 | Rover MEMS MPi |
| 416 SOHC 16V | D16A7 | 1989 to 1996 | Honda PGM-Fi |
| 416 SOHC 16V cat | D16A6 | 1989 to 1996 | Honda PGM-Fi |

| Model | Engine code | Year | System |
|---|---|---|---|
| Metro 1.4i SOHC | K8 | 1991 to 1992 | Rover MEMS SPi |
| Metro 1.4i SOHC cat | K8 | 1991 to 1994 | Rover MEMS SPi |
| Metro 1.4i GTa DOHC 16V cat | K16 | 1991 to 1992 | Rover MEMS SPi |
| Metro 1.4 GTi DOHC 16V | K16 | 1990 to 1992 | Rover MEMS SPi |
| Metro 1.4 GTi DOHC 16V cat | K16 | 1990 to 1993 | Rover MEMS SPi |
| Metro 1.4 GTi DOHC 16V cat | K16 | 1991 to 1994 | Rover MEMS MPi |
| MGF 1.8 DOHC 16V | K16 | 1995 to 1997 | Rover MEMS 1.9 MPi |
| MGF 1.8 VVC DOHC 16V | K16 | 1995 to 1997 | Rover MEMS 2J SFi |
| MG RV8 OHC 16V | V8 4.0 | 1993 to 1996 | Lucas 14CUX MPi |
| Mini Cooper 1.3i | 12A2DF75 | 1991 to 1996 | Rover MEMS SPi |
| Mini Cooper 1.3i auto | 12A2DF76 | 1991 to 1996 | Rover MEMS SPi |
| Mini Cooper 1.3i Cabriolet | 12A2EF77 | 1993 to 1994 | Rover MEMS SPi |
| Mini 1.3i | 12A2EK71 | 1996 to 1997 | Rover MEMS SPi |
| Mini 1.3 MPi | 12A2LK70 | 1996 to 1997 | Rover MEMS MPi |
| Montego 2.0 EFi cat | 20HF51 | 1990 to 1992 | Lucas MPi 11CU |
| Montego 2.0 EFi auto cat | 20HF52 | 1990 to 1992 | Lucas MPi 11CU |
| Montego 2.0 EFi | 20HE36 | 1989 to 1992 | Rover MEMS MPi |
| Montego 2.0 EFi auto | 20HE37 | 1989 to 1992 | Rover MEMS MPi |
| Sterling V6 SOHC 24V | V6 2.5 | 1986 to 1988 | Honda PGM-Fi |
| ***SAAB*** | | | |
| 900i 16V DOHC | B202i | 1989 to 1990 | Lucas 14CU LH-Jetronic |
| 900 Turbo 16V DOHC | B202 2S | 1988 to 1990 | Lucas 14CU LH-Jetronic |
| 900 2.0 16V DOHC cat | B202 2L | 1989 to 1993 | Lucas 14CU LH1-Jetronic |
| 900i 16V DOHC cat | B202i | 1990 to 1993 | Lucas 14CU LH-Jetronic |
| 900S Turbo cat | B202i | 1990 to 1993 | Lucas 14CU LH-Jetronic |
| 900 2.0i 16V DOHC | B202i | 1993 to 1997 | Bosch Motronic 2.10.2 |
| 900 Turbo 16V DOHC | B202i | 1994 to 1997 | Saab Trionic |
| 900i 16V DOHC | B206i | 1994 to 1997 | Bosch Motronic 2.10.2 |
| 900i 16V DOHC | B204L | 1994 to 1997 | Bosch Motronic 2.10.2 |
| 900 2.3i 16V DOHC | B234i | 1993 to 1997 | Bosch Motronic 2.10.2 |
| 900 2.5i 24V DOHC | B258i | 1993 to 1997 | Bosch Motronic 2.8.1 |
| 9000i 16V cat | B202i | 1988 to 1993 | Bosch LH2.4-Jetronic |
| 9000 and CD16 | B202 | 1991 to 1993 | Bosch LH2.4.2-Jetronic |
| 9000 16V cat | B202 | 1988 to 1993 | Bosch LH2.4-Jetronic |
| 9000 Turbo 16 | B202 | 1991 to 1993 | Bosch LH2.4.2-Jetronic |
| 9000 Turbo 16 cat | B202 | 1989 to 1993 | Bosch LH2.4-Jetronic |
| 9000 2.0i cat | B204i | 1994 to 1997 | Saab Trionic |
| 9000 2.0 Turbo cat | B204S | 1994 to 1997 | Saab Trionic |
| 9000 2.0 Ecopower | B202S | 1992 to 1993 | Bosch LH2.4-Jetronic |
| 9000 2.0 Turbo Intercooler | B204L | 1994 to 1997 | Saab Trionic |
| 9000i 2.3 cat | B234i | 1990 to 1991 | Bosch LH2.4.1-Jetronic |
| 9000i 2.3 cat | B234i | 1991 to 1993 | Bosch LH2.4.2-Jetronic |
| 9000 2.3i cat | B234i | 1994 to 1997 | Saab Trionic |
| 9000 2.3 Turbo cat | B234L | 1994 to 1997 | Saab Trionic |
| 9000 2.3 Turbo cat | B234R | 1994 to 1997 | Saab Trionic |
| 9000 2.3 Turbo cat | B234R | 1993 | Saab Trionic |
| 9000 2.3 Turbo cat | B234L | 1991 to 1993 | Bosch LH2.4-Jetronic/ Saab Direct Ignition |
| 9000 2.3 Ecopower L/P Turbo | B234E | 1994 to 1997 | Saab Trionic |
| 9000 3.0 24V DOHC | B308i | 1995 to 1997 | Bosch Motronic 2.8.1 |
| ***SEAT*** | | | |
| Alhambra 2.0 | ADY | 1996 to 1997 | Simos |
| Cordoba 1.4i SOHC 8V | ABD | 1994 to 1997 | Bosch Mono-Motronic |
| Cordoba 1.6i SOHC 8V | ABU | 1993 to 1997 | Bosch Mono-Motronic |
| Cordoba 1.8i SOHC 8V | ABS | 1993 to 1995 | Bosch Mono-Motronic |
| Cordoba 1.8i 16V | ADL | 1994 to 1997 | VAG Digifant |
| Cordoba 2.0i SOHC 8V | 2E | 1993 to 1997 | VAG Digifant |
| Ibiza 1.05i SOHC 8V | AAU | 1993 to 1997 | Bosch Mono-Motronic |
| Ibiza 1.3i US83 | AAV | 1993 to 1994 | Bosch Mono-Motronic |
| Ibiza 1.4i SOHC 8V | ABD | 1994 to 1997 | Bosch Mono-Motronic |
| Ibiza 1.6i SOHC 8V | ABU | 1993 to 1997 | Bosch Mono-Motronic |
| Ibiza 1.8i SOHC 8V | ABS | 1993 to 1995 | Bosch Mono-Motronic |

| Model | Engine code | Year | System |
|---|---|---|---|
| ***SEAT (Continued)*** | | | |
| Ibiza 1 8i 16V | ADL | 1994 to 1997 | VAG Digifant |
| Ibiza 2 0i SOHC 8V | 2E | 1993 to 1997 | VAG Digifant |
| Inca 1 4i | - | 1995 to 1996 | Bosch Motronic MP 9 0 |
| Inca 1 6i | | 1995 to 1996 | Bosch Mono-Motronic |
| Toledo 1 6i cat SOHC | 1F | 1991 to 1997 | Bosch Mono-Jetronic |
| Toledo 1 6i SOHC | 1F | 1994 to 1997 | Bosch Mono Motronic |
| Toledo 1 8i SOHC | RP | 1991 to 1995 | Bosch Mono-Jetronic |
| Toledo 1 8i cat SOHC | RP | 1991 to 1995 | Bosch Mono-Jetronic |
| Toledo 1 8i cat SOHC | RP | 1991 to 1996 | Bosch Mono Motronic |
| Toledo 1 8i SOHC 8V | ABS | 1994 to 1997 | Bosch Mono-Motronic |
| Toledo 2 0i | 2E | 1991 to 1997 | VAG Digifant |
| ***SKODA*** | | | |
| Favorit 1 3i cat | 135B | 1992 to 1996 | Bosch Mono-Motronic MA1 2 2 |
| Favorit 1 3i cat | 136B | 1994 to 1996 | Bosch Mono Motronic MA1 2 3 |
| Foreman 1 3i cat | 135B | 1992 to 1996 | Bosch Mono Motronic MA1 2 2 |
| Foreman 1 3i cat | 136B | 1994 to 1996 | Bosch Mono Motronic MA1 2 3 |
| Felicia 1 3i | 135B | 1995 to 1997 | Bosch Mono Motronic MA1 2 2 |
| Felicia 1 3i | 136B | 1995 to 1997 | Bosch Mono-Motronic MA1 2 3 |
| Freeway 1 3i | 135B | 1992 to 1997 | Bosch Mono-Motronic MA1 2 2 |
| Freeway 1 3i | 136B | 1995 to 1997 | Bosch Mono-Motronic MA1 2 3 |
| ***SUBARU*** | | | |
| 1 8 Turbo Coupe 4x4 | EA82 | 1986 to 1989 | Subaru MPFi + Turbo |
| Impreza 1 6i SOHC 16V | - | 1993 to 1997 | Subaru MPFi |
| Impreza 1 8i SOHC 16V | - | 1993 to 1997 | Subaru MPFi |
| Impreza 2 0 Turbo DOHC 16V | | 1994 to 1997 | Subaru MPFi |
| Impreza 2 0i 16V | - | 1996 to 1997 | Subaru MPFi |

| Model | Engine code | Year | System |
|---|---|---|---|
| ***TOYOTA*** | | | |
| Camry 2.0i OHC | 3S-FE | 1987 to 1991 | Toyota TCCS |
| Camry 2.0i OHC 4WD | 3S-FE | 1988 to 1989 | Toyota TCCS |
| Camry 2.2i 16V DOHC cat | 5S-FE | 1991 to 1996 | Toyota TCCS |
| Camry 2.2 16V DOHC | 5S-FE | 1997 | Toyota TCCS |
| Camry 2.5i V6 OHC cat | 2VZ-FE | 1989 to 1991 | Toyota TCCS |
| Camry 3.0i V6 24V DOHC cat | 3VZ-FE | 1991 to 1996 | Toyota TCCS |
| Camry 3.0 V6 DOHC | 1MZ-FE | 1997 | Toyota TCCS |
| Carina E 1.6i 16V DOHC | 4A-FE | 1992 to 1997 | Toyota TCCS |
| Carina E 1.6i 16V DOHC cat | 4A-FE | 1992 to 1996 | Toyota TCCS |
| Carina E 1.8 16V DOHC | 7A-FE | 1995 to 1997 | Toyota TCCS |
| Carina II 1.8i OHC | 1S-E | 1986 to 1988 | Toyota TCCS |
| Carina II 2.0i OHC & cat | 3S-FE | 1988 to 1992 | Toyota TCCS |
| Carina E 2.0i DOHC cat | 3S-FE | 1992 to 1997 | Toyota TCCS |
| Carina E 2.0i DOHC cat | 3S-GE | 1992 to 1995 | Toyota TCCS |
| Celica 1.8i 16V DOHC | 7A-FE | 1995 to 1997 | Toyota TCCS |
| Celica 2.0 16V DOHC & cat | 3S-GE | 1990 to 1994 | Toyota TCCS |
| Celica 2.0i 16V DOHC | 3S-GE | 1994 to 1997 | Toyota TCCS |
| Celica 2.0 16V DOHC | 3S-GEL | 1985 to 1990 | Toyota TCCS |
| Celica 2.0 GT-4 turbo 16V cat | 3S-GTE | 1988 to 1990 | Toyota TCCS |
| Celica 2.0 GT-4 turbo 16V cat | 3S-GTE | 1990 to 1993 | Toyota TCCS |
| Celica 2.2i 16V DOHC cat | 5S-FE | 1991 to 1994 | Toyota TCCS |
| Celica Supra 2.8i DOHC cat | 5M-GE | 1984 to 1986 | Toyota TCCS |
| Corolla 1.3i OHC cat | 2E-E | 1990 to 1992 | Toyota TCCS |
| Corolla 1.3i 16V DOHC cat | 4E-FE | 1992 to 1997 | Toyota TCCS |
| Corolla 1.6 GT OHC | 4A-GEL | 1985 to 1987 | Toyota TCCS |
| Corolla 1.6 GT coupe OHC | 4A-GE | 1984 to 1987 | Toyota TCCS |
| Corolla 1.6 GTi OHC & cat | 4A-GE | 1987 to 1989 | Toyota TCCS |
| Corolla 1.6 GTi OHC | 4A-GE | 1989 to 1992 | Toyota TCCS |
| Corolla 1.6 GTi OHC cat | 4A-GE | 1989 to 1992 | Toyota TCCS |
| Corolla 1.6i and 4x4 OHC cat | 4A-FE | 1989 to 1992 | Toyota TCCS |
| Corolla 1.6i 16V DOHC cat | 4A-FE | 1992 to 1997 | Toyota TCCS |
| Corolla 1.8i 16V DOHC cat | 7A-FE | 1993 to 1995 | Toyota TCCS |
| Hi-Ace 2.4i OHC | 2RZ-E | 1989 to 1994 | Toyota TCCS |
| Hi-Ace 2.4i 4x4 OHC | 2RZ-E | 1989 to 1996 | Toyota TCCS |
| Land Cruiser Colorado | 5VZ-FE | 1996 to 1997 | Toyota TCCS |
| Land Cruiser 4.5 | 1FZ-FE | 1995 to 1997 | Toyota TCCS |
| MR2 1.6 OHC | 4A-GEL | 1984 to 1990 | Toyota TCCS |
| MR2 2.0 16V DOHC GT cat | 3S-GE | 1990 to 1997 | Toyota TCCS |
| MR2 2.0 16V DOHC cat | 3S-FE | 1990 to 1994 | Toyota TCCS |
| Paseo 1.5 | 5E-FE | 1996 to 1997 | Toyota TCCS |
| Picnic 2.0 16V DOHC | 3S-FE | 1997 | Toyota TCCS |
| Previa 2.4i 16V DOHC cat | 2TZ-FE | 1990 to 1997 | Toyota TCCS |
| RAV 4 2.0i 16V DOHC | 3S-FE | 1994 to 1997 | Toyota TCCS |
| Starlet 1.3i 12V SOHC | 2E-E | 1993 to 1996 | Toyota TCCS |
| Starlet 1.3 16V DOHC | 4E-FE | 1996 to 1997 | Toyota TCCS |
| Supra 3.0i 24V DOHC | 7M-GE | 1986 to 1993 | Toyota TCCS |
| Supra 3.0i 24V DOHC cat | 7M-GE | 1986 to 1993 | Toyota TCCS |
| Supra 3.0i Turbo DOHC DIS cat | 7M-GTE | 1989 to 1993 | Toyota DIS |
| Supra 3.0i Turbo DOHC DIS cat | 2JZ-GTE | 1993 to 1994 | Toyota DIS |
| Tarago 2.4i 16V DOHC cat | 2TZ-FE | 1990 to 1997 | Toyota TCCS |
| 4-Runner 3.0i 4wd V6 SOHC 12V cat | 3VZ-E | 1991 to 1995 | Toyota TCCS |
| ***VAUXHALL*** | | | |
| Astra-F 1.4i cat | C14NZ | 1990 to 1996 | GM-Multec CFi-he |
| Astra-F 1.4i cat | C14SE | 1991 to 1997 | GM-Multec MPi |
| Astra-F 1.4i cat | C14SE | 1993 to 1994 | GM-Multec MPi-DIS |
| Astra 1.4i cat | C14NZ | 1990 to 1993 | GM-Multec ZE CFi |
| Astra-F 1.4i | X14NZ | 1997 | GM-Multec CFi |
| Astra-F 1.4i 16V | X14XE | 1996 to 1997 | GM-Multec-S MPi |
| Astra-F 1.6 cat | C16NZ | 1990 to 1995 | GM-Multec CFi |
| Astra Van 1.6i cat | C16NZ | 1991 to 1994 | GM-Multec CFi |
| Astra-F 1.6i cat | C16SE | 1992 to 1997 | GM-Multec MPi |
| Astra-F 1.6i | X16SZ | 1993 to 1996 | GM-Multec CFi |
| Astra-F 1.6i cat | C16SE | 1992 to 1994 | GM-Multec MPi |

| Model | Engine code | Year | System |
|---|---|---|---|
| ***VAUXHALL (Continued)*** | | | |
| Astra 1 6 cat | C16NZ | 1987 to 1993 | GM-Multec ZE CFi |
| Astra-F 1 6i cat | C16NZ | 1991 to 1995 | GM-Multec ZE CFi |
| Astra-F 1 6i | X16SZR | 1996 to 1997 | GM-Multec CFi |
| Astra-F 1 6i 16V | X16XEL | 1995 to 1997 | GM-Multec-S |
| Astra F 1 8i cat | C18NZ | 1991 to 1994 | GM-Multec CFi |
| Astra-F 1 8i 16V | C18XE | 1995 on | Simtec 56 1 |
| Astra-F 1 8i 16V | C18XEL | 1995 to 1996 | Simtec 56.1 |
| Astra F 1 8i 16V | C18XE | 1993 to 1995 | Simtec 56 |
| Astra-F 2 0i 16V | X20XEV | 1995 to 1996 | Simtec 56 1 |
| Astra F 2 0i cat | C20NE | 1991 to 1995 | Bosch Motronic 1 5 2 |
| Astra-F 2 0i cat | C20XE | 1991 to 1993 | Bosch Motronic 2 5 |
| Astra-F 2 0i cat | C20XE | 1993 to 1997 | Bosch Motronic 2 8 |
| Astra 1 8i | 18SE | 1987 to 1991 | Bosch EZ61 ignition |
| Astra 1 8i | 18E | 1984 to 1987 | GM-Multec ZE CFi |
| Astra-F 1 8i 16V | X18XE | 1996 to 1997 | Simtec 56 5 |
| Astra GTE 2 0 | 20NE | 1987 to 1990 | Bosch Motronic ML4 1 |
| Astra GTE 2 0 | 20SEH | 1987 to 1990 | Bosch Motronic ML4 1 |
| Astra 2 0i | 20SEH | 1990 to 1993 | Bosch Motronic 1 5 |
| Astra 2 0i cat | C20NE | 1991 to 1995 | Bosch Motronic 1 5 |
| Astra 2 0i 16V DOHC | 20XEJ | 1988 to 1991 | Bosch Motronic 2 5 |
| Astra 2 0i 16V DOHC cat | C20XE | 1990 to 1995 | Bosch Motronic 2 5 |
| Astra-F 2 0i 16V DOHC | | 1993 on | Bosch Motronic 2 5 |
| Belmont 1 4i cat | C14NZ | 1990 to 1993 | GM-Multec CFi |
| Belmont 1 6 cat | C16NZ | 1987 to 1993 | GM-Multec ZE CFi |
| Belmont 1 8i | 18E | 1984 to 1987 | GM-Multec ZE CFi |
| Belmont 1 8i | 18SE | 1987 to 1991 | Bosch EZ61 ignition |
| Belmont 1 8i cat | C18NZ | 1990 to 1992 | GM-Multec CFi |
| Calibra 2 0i 16V | X20XEV | 1995 to 1996 | Simtec 56 1 |
| Calibra 2 0i 16V | X20XEV | 1997 | Simtec 56 5 |
| Calibra 2 0i SOHC and 4x4 cat | C20NE | 1990 to 1996 | Bosch Motronic 1 5 |
| Calibra 2 0i 16V 4 cat DOHC cat | C20XE | 1990 to 1996 | Bosch Motronic 2 5 |

| Model | Engine code | Year | System |
|---|---|---|---|
| Corsa-B and Combo 1.2i | C12NZ | 1993 to 1997 | GM-Multec CFi |
| Corsa-B 1.2i E-Drive | X12SZ | 1993 to 1997 | Multec ZE CFi |
| Corsa 1.4i cat | C14NZ | 1990 to 1993 | GM-Multec CFi |
| Corsa-B 1.4i and Van | C14NZ | 1993 to 1997 | GM-Multec ZE CFi |
| Corsa 1.4i cat | C14SE | 1993 to 1994 | GM-Multec MPi |
| Corsa-B 1.4i and Van | C14NZ | 1993 to 1996 | GM-Multec CFi |
| Corsa-B 1.4i 16V | X14XE | 1995 to 1997 | GM-Multec XS |
| Corsa-B and Combo 1.4i | X14SZ | 1996 to 1997 | GM-Multec CFi |
| Corsa 1.4i cat | C14SE | 1992 to 1993 | GM-Multec MPi |
| Corsa 1.6i cat | C16NZ | 1990 to 1992 | GM-Multec CFi |
| Corsa 1.6i cat | C16SE | 1992 to 1993 | GM-Multec MPi |
| Corsa 1.6i cat | C16SE | 1993 to 1994 | GM-Multec MPi |
| Corsa-A 1.6i SPi cat | C16NZ | 1988 to 1991 | GM-Multec ZE CFi |
| Corsa-B 1.6 GSi | C16XE | 1993 to 1995 | GM-Multec MPi |
| Corsa 1.6 MPi cat | C16SEI | 1990 to 1992 | Bosch Motronic 1.5 |
| Corsa-B 1.6i | X16XE | 1995 to 1997 | GM-Multec XS |
| Frontera 2.0i cat SOHC | C20NE | 1991 to 1995 | Bosch Motronic 1.5 |
| Frontera 2.0i | X20SE | 1995 to 1997 | Bosch Motronic 1.5.4 |
| Frontera 2.2i | X22XE | 1995 to 1997 | Bosch Motronic 1.5.4 |
| Frontera 2.4i cat CIH | C24NE | 1991 to 1995 | Bosch Motronic 1.5 |
| Kadett-E 1.4i cat | C14NZ | 1990 to 1993 | GM-Multec CFi |
| Kadett-E 1.6 cat | C16NZ | 1990 to 1993 | GM-Multec CFi |
| Kadett-E 1.8i cat | C18NZ | 1990 to 1991 | GM-Multec CFi |
| Kadett 2.0i | 20NE | 1987 to 1990 | Bosch Motronic ML4.1 |
| Kadett 2.0i | 20SEH | 1987 to 1990 | Bosch Motronic ML4.1 |
| Kadett GSi 8V 2.0i SOHC | 20SEH | 1990 to 1993 | Bosch Motronic 1.5 |
| Kadett 2.0i cat SOHC | C20NE | 1990 to 1993 | Bosch Motronic 1.5 |
| Kadett 2.0i 16V DOHC | C20XEJ | 1990 to 1991 | Bosch Motronic 2.5 |
| Kadett 2.0i 16V DOHC cat | C20XE | 1990 to 1992 | Bosch Motronic 2.5 |
| Kadett 1.6 cat | C16NZ | 1987 to 1993 | Multec ZE CFi |
| Nova 1.2i cat | C12NZ | 1990 to 1994 | GM-Multec CFi |
| Nova 1.4i cat | C14NZ | 1990 to 1993 | GM-Multec CFi |
| Nova 1.4i cat | C14SE | 1992 to 1993 | GM-Multec MPi |
| Nova 1.6i cat | C16NZ | 1990 to 1992 | GM-Multec CFi |
| Nova 1.6i cat | C16SE | 1992 to 1993 | GM-Multec MPi |
| Nova 1.6i cat | C16SE | 1993 to 1994 | GM-Multec MPi |
| Nova 1.6 MPi cat | C16SEI | 1990 to 1992 | Bosch Motronic 1.5 |
| Omega-B 2.0i | X20SE | 1994 to 1997 | Bosch Motronic 1.5.4 |
| Omega 2.0i | 20SE | 1987 to 1990 | Bosch Motronic ML4.1 |
| Omega 2.0i SOHC | 20SE | 1990 to 1993 | Bosch Motronic 1.5 |
| Omega 2.0i SOHC cat | C20NE | 1990 to 1993 | Bosch Motronic 1.5 |
| Omega 2.0i SOHC cat | C20NEJ | 1990 to 1993 | Bosch Motronic 1.5 |
| Omega-B 2.0i 16V | X20XEV | 1994 to 1996 | Simtec 56.1 |
| Omega-B 2.0i 16V | X20XEV | 1997 | Simtec 56.5 |
| Omega 2.4i CIH cat | C24NE | 1990 to 1993 | Bosch Motronic 1.5 |
| Omega 2.5i | X25XE | 1994 to 1997 | Bosch Motronic 2.8.1 |
| Omega 2.6i CIH cat | C26NE | 1990 to 1993 | Bosch Motronic 1.5 |
| Omega 3.0i | X30XE | 1994 to 1997 | Bosch Motronic 2.8.1 |
| Omega 3.0i CIH cat | C30NE | 1990 to 1994 | Bosch Motronic 1.5 |
| Omega 24V DOHC cat | C30SE | 1989 to 1994 | Bosch Motronic 1.5 |
| Omega 24V DOHC Estate cat | C30SEJ | 1990 to 1994 | Bosch Motronic 1.5 |
| Senator 2.6i CIH cat | C26NE | 1990 to 1993 | Bosch Motronic 1.5 |
| Senator 3.0i CIH cat | C30NE | 1990 to 1994 | Bosch Motronic 1.5 |
| Senator 24V DOHC cat | C30SE | 1989 to 1994 | Bosch Motronic 1.5 |
| Senator 24V DOHC Estate cat | C30SEJ | 1990 to 1992 | Bosch Motronic 1.5 |
| Tigra 1.4i 16V | X14XE | 1994 to 1997 | GM-Multec MPi |
| Tigra 1.6i | X16XE | 1994 to 1997 | GM-Multec MPi |
| Vectra 1.6i cat | C16NZ | 1990 to 1993 | GM-Multec CFi |
| Vectra 1.6i cat | C16NZ2 | 1993 to 1994 | GM-Multec CFi |
| Vectra 1.6i & cat | E16NZ | 1988 to 1995 | GM-Multec ZE CFi |
| Vectra-A 1.6i E-Drive | X16XZ | 1993 to 1995 | GM-Multec ZE CFi |
| Vectra-B 1.6i | X16SZR | 1995 to 1997 | GM-Multec SPi |
| Vectra-B 1.6i 16V | X16XEL | 1995 to 1997 | GM-Multec-S SEFi |
| Vectra 1.8i cat | C18NZ | 1990 to 1994 | GM-Multec CFi |

| Model | Engine code | Year | System |
|---|---|---|---|
| ***VAUXHALL (Continued)*** | | | |
| Vectra-B 1.8i 16V | X18XE | 1995 to 1997 | Simtec 56.5 |
| Vectra-B 2.0i 16V | X20XEV | 1995 to 1997 | Simtec 56.5 |
| Vectra 2.0i | 20SEH | 1987 to 1990 | Bosch Motronic ML4.1 |
| Vectra 2.0i cat | C20NE | 1991 to 1992 | Bosch Motronic 1.5 |
| Vectra 2.0 SOHC | 20NE | 1990 to 1993 | Bosch Motronic 1.5 |
| Vectra 2.0i and 4x4 SOHC | 20SEH | 1990 to 1993 | Bosch Motronic 1.5 |
| Vectra 2.0i SOHC cat | - | 1990 to 1993 | Bosch Motronic 1.5 |
| Vectra GSi 200016V DOHC | - | 1989 to 1991 | Bosch Motronic 2.5 |
| Vectra 2.0 16V 4x4 DOHC cat | C20XE | 1989 to 1992 | Bosch Motronic 2.5 |
| Vectra-A 2.0i 16V | X20XEV | 1995 | Simtec 56.1 |
| Vectra-A Turbo cat | C20LET | 1993 to 1995 | Bosch Motronic 2.7 |
| Vectra-A 2.5i 24V | C25XE | 1993 to 1995 | Bosch Motronic 2.8 |
| Vectra-B 2.5i V6 | X25XE | 1995 to 1997 | Bosch Motronic 2.8.3 |
| ***VOLKSWAGEN*** | | | |
| Caddy Pick-up | AEE | 1997 | Magneti-Marelli 1AV |
| Caravelle 2.0i and cat | AAC | 1991 to 1997 | VAG Digifant |
| Caravelle 2.0i cat | AAC | 1994 to 1995 | VAG Digifant |
| Caravelle 2.5i | ACU | 1994 to 1997 | VAG Digifant |
| Caravelle 2.8 | AES | 1996 to 1997 | Bosch Motronic |
| Corrado 1.8i (G60 supercharger) cat | PG | 1992 to 1993 | VAG |
| Corrado 2.0 16V | 9A | 1992 to 1996 | Bosch KE-Motronic 1.2 |
| Corrado 2.0 8V | ADY | 1994 to 1996 | Simos |
| Corrado VR6 | ABV | 1992 to 1996 | Bosch Motronic 2.9 |
| Corrado 2.0i cat | 2E | 1993 to 1994 | VAG Digifant |
| Golf 1.3i cat | AAV | 1991 to 1992 | Bosch Mono-Motronic 1.2.1 |
| Golf 1.4i cat | ABD | 1991 to 1995 | Bosch Mono-Motronic 1.2.3R |
| Golf 1.4i | AEX | 1995 to 1997 | Bosch Motronic MP9.0 |
| Golf 1.6i cat | ABU | 1993 to 1995 | Bosch Mono-Motronic 1 2.3 |
| Golf 1.6i cat | AEA | 1994 to 1995 | Bosch Mono-Motronic 1.3 |
| Golf 1.6i | AEK | 1994 to 1995 | Bosch Motronic |
| Golf 1.6i 8V | AEE | 1995 to 1997 | Magneti-Marelli 1AV |
| Golf 1.6 8V | AFT | 1996 to 1997 | Simos 4S2 |
| Golf 1.8i | GX | 1984 to 1992 | Bosch KE-Jetronic |
| Golf 1.8i cat | GX | 1984 to 1992 | Bosch KE Jetronic |
| Golf 16V cat | PL | 1986 to 1992 | Bosch KE-Jetronic |
| Golf Syncro 2.9 | ABV | 1994 to 1997 | Bosch Motronic 2.9 MPi |
| Golf 1 8i cat | AAM | 1992 to 1997 | Bosch Mono-Motronic 1.2.3 |
| Golf 1.8i cat | ABS | 1992 to 1994 | Bosch Mono-Motronic 1.2.2 |
| Golf 1.8i and 4x4 | ADZ | 1994 to 1997 | Bosch Mono-Motronic |
| Golf 1.8i cat | RP | 1987 to 1992 | Bosch Mono-Jetronic A2.2 |
| Golf 2.0i cat | 2E | 1991 to 1995 | VAG Digifant |
| Golf 2.0i 16V cat | ABF | 1992 to 1997 | VAG Digifant |
| Golf 2.0i | ADY | 1994 to 1997 | Simos |
| Golf 2.0 | AGG | 1996 to 1997 | Simos 4S MPi |
| Golf VR6 | AAA | 1992 to 1996 | Bosch Motronic 2.7 |
| Jetta 16V cat | PL | 1986 to 1992 | Bosch KE-Jetronic |
| Jetta 1.8i cat | RP | 1987 to 1992 | Bosch Mono-Jetronic A2.2 |
| Jetta 1.8i | GX | 1986 to 1992 | Bosch KE-Jetronic |
| Jetta 1.8i cat | GX | 1986 to 1992 | Bosch KE-Jetronic |
| LT 2.3 | AGL | 1997 | Bosch Motronic |
| Passat 1.6i cat | 1F | 1988 to 1990 | Bosch Mono-Jetronic |
| Passat 16V cat | 9A | 1988 to 1993 | Bosch KE1.2-Motronic |
| Passat 1.6i | AEK | 1994 to 1996 | Bosch M2.9 Motronic |
| Passat 1.8 cat | JN | 1984 to 1988 | Bosch KE-Jetronic |
| Passat 1.8i and cat | RP | 1988 to 1991 | Bosch Mono-Jetronic A2.2 |
| Passat 1 8i | RP | 1990 to 1991 | Bosch Mono-Motronic 1.2.1 |
| Passat 1.8i and cat | RP | 1990 to 1991 | Bosch Mono-Motronic 1.2.1 |
| Passat 1.8i cat | AAM | 1990 to 1992 | Bosch Mono-Motronic 1.2.1 |
| Passat 1.8i cat | AAM | 1992 to 1994 | Bosch Mono-Motronic 1.2.3 |
| Passat 1.8i cat | AAM | 1993 to 1994 | Bosch Mono-Motronic 1.2.3 |
| Passat 1.8i cat | AAM | 1994 to 1995 | Bosch Mono-Motronic 1.3 |
| Passat 1.8i | ABS | 1991 to 1993 | Bosch Mono-Motronic 1.2.1 |
| Passat 1.8i | AAM | 1993 to 1996 | Bosch Mono-Motronic 1.2.1 |

| Model | Engine code | Year | System |
|---|---|---|---|
| Passat 1.8i | ABS | 1991 to 1992 | Bosch Mono-Motronic 1.2.1 |
| Passat 1.8i | ABS | 1992 to 1994 | Bosch Mono-Motronic 1.2.3 |
| Passat 1.8i cat | ABS | 1992 to 1994 | Bosch Mono-Motronic 1.2.3 |
| Passat 1.8i cat | ADZ | 1994 to 1997 | Bosch Mono-Motronic 1.2.3 |
| Passat 2.0 and Syncro | ADY | 1994 to 1996 | Simos |
| Passat 2.0i | AGG | 1995 to 1997 | Simos |
| Passat VR6 | AAA | 1991 to 1993 | Bosch Motronic M2.7/2.9 |
| Passat 2.0i and 4 x 4 cat | 2E | 1992 to 1994 | VAG Digifant |
| Passat 2.0i cat | ABF | 1994 to 1995 | VAG Digifant |
| Passat 2.8 VR6 | AAA | 1993 to 1996 | Bosch Motronic M2.7/2.9 |
| Passat 2.9 Syncro | ABV | 1994 to 1996 | Bosch Motronic M2.9 |
| Polo 1.05i cat | AAK | 1989 to 1990 | Bosch Mono-Jetronic A2.2 |
| Polo 1.0i cat | AEV | 1994 to 1997 | Bosch Mono-Motronic 1.2.3 |
| Polo 1.05i cat | AAU | 1990 to 1993 | Bosch Mono-Motronic 1.2.1 |
| Polo 1.05i cat | AAU | 1993 to 1994 | Bosch Mono-Motronic 1.2.3 |
| Polo 1.3i cat | AAV | 1991 to 1994 | Bosch Mono-Motronic 1.2.3 |
| Polo 1.3i cat | ADX | 1994 to 1995 | Bosch Mono-Motronic 1.3 |
| Polo Classic/Caddy 1.4 | AEX | 1996 to 1997 | Bosch Motronic MP9.0 MPi |
| Polo Classic/Caddy 1.6 | 1F | 1996 to 1997 | Bosch Mono-Motronic |
| Polo 1 4 8V 44kW | AEX | 1995 to 1997 | Bosch Motronic MP9.0 |
| Polo 1 4 16V | AFH | 1996 to 1997 | Magneti-Marelli 1AV |
| Polo 1.6i 8V | AEE | 1995 to 1997 | Magneti-Marelli 1AV |
| Polo Classic 1.6 8V | AFT | 1996 to 1997 | Simos MPi |
| Polo 1.6i cat | AEA | 1994 to 1996 | Bosch Mono-Motronic 1.3 |
| Santana 1.8 cat | JN | 1984 to 1988 | Bosch KE-Jetronic |
| Sharan 2.0 | ADY | 1995 to 1997 | Simos |
| Sharan 2.8 | AAA | 1995 to 1997 | Bosch Motronic 3.8.1 |
| Transporter 2.0i and cat | AAC | 1991 to 1997 | VAG Digifant |
| Transporter 2.5i cat | AAF | 1991 to 1995 | VAG Digifant |
| Transporter 2.5i cat | ACU | 1994 to 1997 | VAG Digifant |
| Transporter 2.8 | AES | 1996 to 1997 | Bosch Motronic |
| Vento 1.4i cat | ABD | 1992 to 1995 | Bosch Mono-Motronic 1.2.3R |
| Vento 1.4i | AEX | 1995 to 1997 | Bosch Motronic MP9.0 |
| Vento 1.6i 8V | AEE | 1995 to 1997 | Magneti-Marelli 1AV |
| Vento 1.6i cat | ABU | 1993 to 1994 | Bosch Mono-Motronic 1.2.3 |
| Vento 1.6i cat | AEA | 1994 to 1995 | Bosch Mono-Motronic 1.3 |
| Vento 1.6i | AEK | 1994 to 1995 | Bosch Motronic |
| Vento 1.8i cat | AAM | 1992 to 1997 | Bosch Mono-Motronic 1.2.3 |
| Vento 1 8i cat | ABS | 1992 to 1994 | Bosch Mono-Motronic 1.2.2 |
| Vento 1.8i and 4x4 | ADZ | 1994 to 1997 | Bosch Mono-Motronic |
| Vento 2.0i | ADY | 1994 to 1997 | Simos |
| Vento VR6 | AAA | 1992 to 1997 | Bosch Motronic 2.7/2.9 |
| Vento 2.0i cat | 2E | 1992 to 1994 | VAG Digifant |
| ***VOLVO*** | | | |
| 240 2.0i cat | B200F | 1991 to 1993 | Bosch LH2.4-Jetronic |
| 240 2.3 cat | B230F | 1984 to 1991 | Bosch LH2.4-Jetronic |
| 240 2.3i cat | B230F | 1989 to 1993 | Bosch LH2.4-Jetronic |
| 240 2.3i cat | B230FD | 1993 to 1994 | Bosch LH2.4-Jetronic |
| 400 1.7i SOHC | B18ED-104 | 1986 to 1990 | Fenix 1 or 3.2 |
| 400 1.7i SOHC cat | B18ES-105 | 1986 to 1990 | Fenix 1 or 3.2 |
| 400 1.7i SOHC 8V | B18EP-115 | 1990 to 1994 | Fenix 3B |
| 400 1.7i SOHC 8V cat | B18FP-115 | 1990 to 1995 | Fenix 3B |
| 400 1.8i SOHC cat | B18U-103 | 1992 to 1997 | Fenix 3BF SPi |
| 400 1.8i SOHC cat | B18U-103 | 1996 to 1997 | Fenix 3BF SPi |
| 400 2.0i SOHC 8V cat | B20F-116/118 | 1993 to 1996 | Fenix 3B MPi |
| 400 2 0i SOHC 8V cat | B20F-208/209 | 1994 to 1997 | Fenix 3B MPi |
| 440 1 6i SOHC 8V | B16F-109 | 1991 to 1997 | Fenix 3B MPi |
| 460 1.6i SOHC 8V | B16F-109 | 1991 to 1997 | Fenix 3B MPi |
| 740 2.0 cat | B200F | 1990 to 1992 | Bosch LH2.4-Jetronic |
| 740 2.3i 16V cat | B234F | 1989 to 1991 | Bosch LH2.4-Jetronic |
| 740 2.3 Turbo cat | B230FT | 1985 to 1989 | Bosch LH2.4-Jetronic |
| 740 2.3 Turbo cat | B230FT | 1990 to 1992 | Bosch LH2.4-Jetronic |
| 760 2.3 Turbo cat | B230FT | 1985 to 1989 | Bosch LH2.4-Jetronic |
| 760 2 3 Turbo cat | B230FT | 1990 to 1991 | Bosch LH2.4-Jetronic |

# Index of vehicles covered

| Model | Engine code | Year | System |
|---|---|---|---|
| ***VOLVO (Continued)*** | | | |
| 850 2.0i 20V | B5204S | 1992 to 1997 | Bosch LH3.2-Jetronic |
| 850 2.5i 20V | B5254S | 1992 to 1997 | Bosch LH3.2-Jetronic |
| 850 2.0 20V Turbo | B5204T | 1994 to 1997 | Bosch Motronic M4.3 SEFI |
| 850 T5 DOHC 20V | B5234T | 1994 to 1997 | Bosch Motronic M4.3 SEFI |
| 850 T-5R | B5234T-5 | 1994 to 1997 | Bosch Motronic M4.3 SEFI |
| 850R | B5234T-5 | 1994 to 1997 | Bosch Motronic M4.3 SEFI |
| 850 2.0i 10V SOHC | B5202S | 1995 to 1997 | Fenix 5.2 SEFI |
| 850 2.5i 10V SOHC | B5252S | 1993 to 1997 | Fenix 5.2 SEFI |
| 900 2.3i LPT Turbo | B230FK | 1995 to 1997 | Bosch LH2.4-Jetronic |
| 940 2.0i cat | B200F | 1990 to 1996 | Bosch LH2.4-Jetronic |
| 940 2.3i | B230F | 1992 to 1994 | Bosch LH2.4-Jetronic |
| 940 2.0i Turbo cat | B200FT | 1990 to 1996 | Bosch LH2.4-Jetronic |

# Chapter 1
# Introduction to Self-Diagnosis

## Contents


Adaptive control function . . . . . 4
Function of the Self-Diagnosis system . . . . . 2
Introduction . . . . . 1
Limited Operating Strategy (LOS) - "limp-home" mode . . . . . 3


## 1 Introduction

The objective of the Self-Diagnosis (SD) function (sometimes termed On-Board Diagnosis or OBD) is to minimise pollutant emissions for motor vehicles. Self-diagnosis is the basis for controlling engine performance in order to provide the most effective conditions for efficient operation.

### *Haynes Engine Management Techbook*

A general knowledge of engine management system (EMS) operation and of the chemical sequences of combustion for internal combustion engines will help explain why and how SD has become such an important part of the modern vehicle. Refer to the companion volume *"Automotive Engine Management and Fuel Injection Systems Manual"* (Book No 3344, available from the publishers of this title) for a description of the operation of the modern EMS.

### *The chemical sequence of combustion*

Fuels for spark ignition and diesel engines consist of various hydrocarbon compounds, which combine with the oxygen of the intake air. Nitrogen and other residual gases also combine during the combustion process. With perfect combustion, no toxic substances would be produced. Under actual operating conditions, non-toxic exhaust gases such as nitrogen ($N_2$), water vapour ($H_2O$) and carbon dioxide ($CO_2$) join the toxic products of incomplete combustion. Toxic substances in exhaust gases include carbon monoxide (CO), partially-unburnt hydrocarbons (HC), nitrogen oxides, sulphur dioxide ($SO_2$), lead compounds and soot **(see illustrations 1.1 and 1.2)**. The high concentration of pollutants resulting from vehicle emissions are known to be causing health problems, notably respiratory illnesses, and also have environmentally-damaging effects.

The idea that toxic emissions should be reduced while maintaining or improving the effective operation of vehicular engines was accepted and argued by the California Air Resources Board (CARB). By 1968 regulations were introduced in California by Californian State Government under the "Clean Air Act" to restrict pollutant emissions for passenger cars.

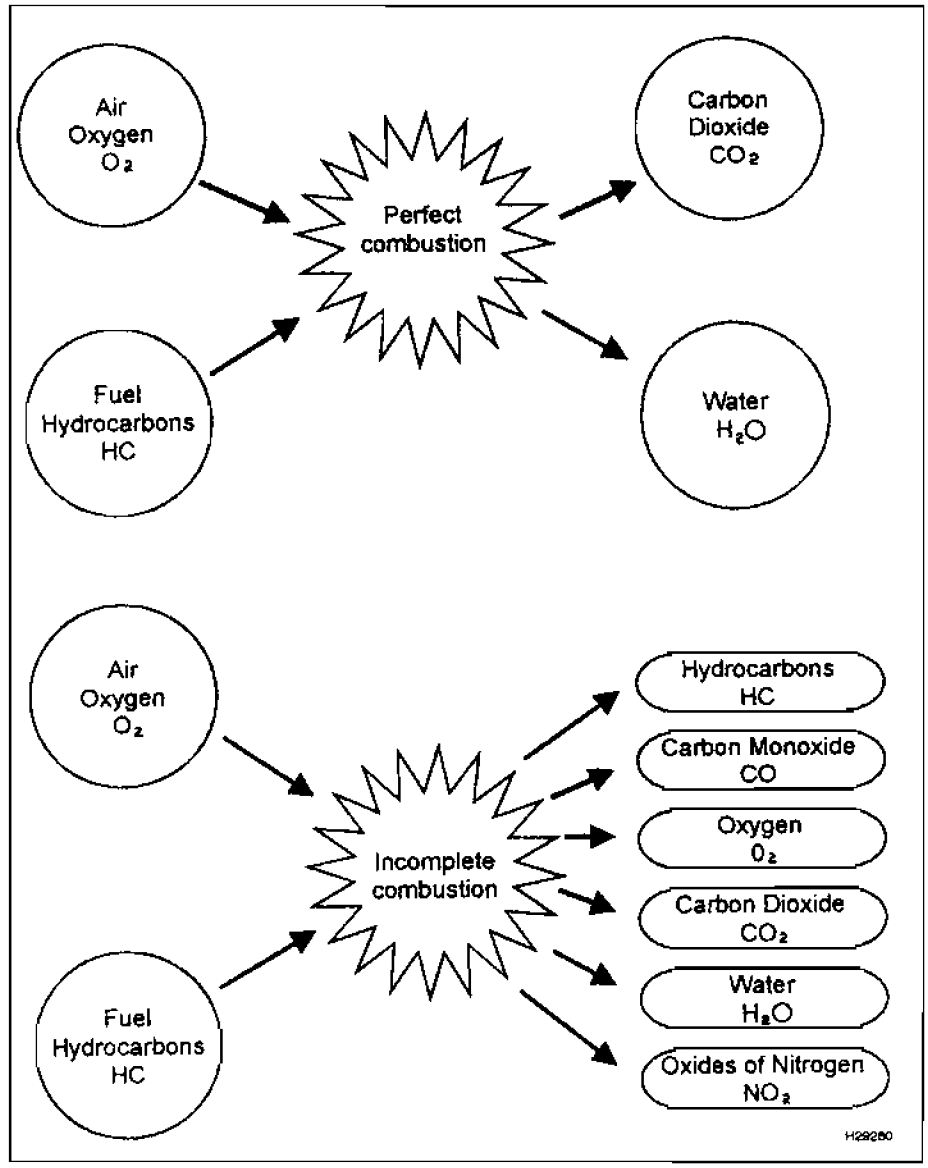


**1.1 Combustion chart**

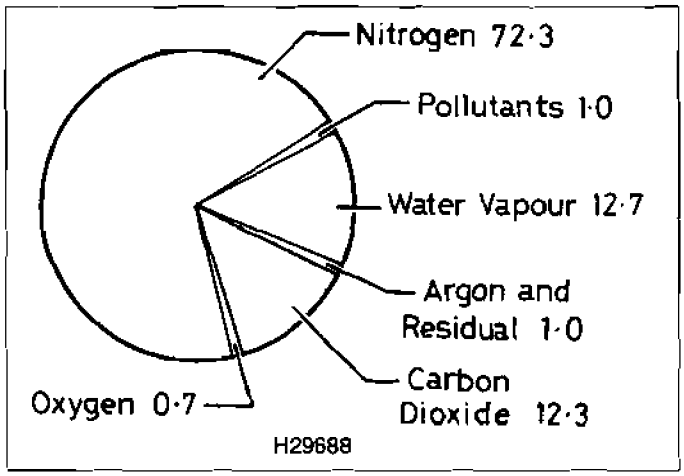


**1.2 Pollutant chart showing the percentage of toxic emissions in 1.0% of exhaust gas**

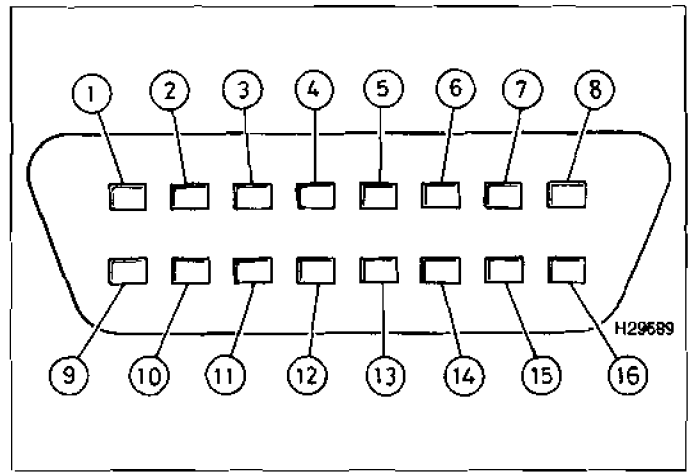


**1.3 16-pin Self-Diagnosis connector**

### *Control functions, monitoring and diagnostic communication*

By 1978 the first Engine Management Systems were developed, first appearing as the Bosch Motronic which was fitted to the BMW 732i. Engine management serves the purpose of enabling the engine components to operate effectively by means of an Electronic Control Module (ECM) which controls, monitors and in some cases adapts to ensure that the most efficient levels of engine operation can be expected.

The EMS soon evolved to include a Self-Diagnosis (SD) function which not only controls and monitors components of the engine system but also enables the driver or technician to identify faults that are otherwise difficult to detect. This was achieved by the invention and application of a data communication system, and the introduction of a computerised memory into the ECM. Faults could then be stored in ECM memory and retrieved at a later time. On some models, a self-diagnostic warning light illuminates to give warning of a fault, or the light can be used to display the stored faults as a series of flashes. A 1981 Cadillac was the first vehicle to which an ECM with self-diagnosis was fitted, and the system was Bendix Digital.

Since the early 1980s, the evolution of the EMS has been relatively quick, and most vehicle manufacturers now equip their vehicles with an EMS that only bears some small resemblance to the early systems. Not only are the most recent Engine Management Systems almost universally fitted with a self-diagnosis capability, but many automatic transmissions, anti-lock braking systems (ABS) and supplementary restraint systems (SRS, typically airbags) controlled by ECMs have self-diagnosis. An adaptive capability has been introduced so that component operation is continually monitored and adjusted for optimum performance.

### *A brief definition of Self-Diagnosis (SD)*

The Self-Diagnosis function checks the signals from the ECM circuits against a set of control parameters. If a signal does not lie within the bounds of the control parameters, an internal fault is stored in ECM memory. The stored faults are represented in the main by codes termed "Fault Codes". When the fault codes are retrieved from the ECM they become an invaluable aid to diagnosis.

### *Standardisation of On-Board Diagnosis (OBD)*

On-board Diagnosis established three essential criteria for manufacturers and vehicle technicians/engineers to ensure that vehicles conform from model year 1988. First, vehicles must be equipped with an electronic SD system. Second, any faults (malfunctions) relevant to exhaust emissions must be displayed by means of an SD warning light installed on the instrument panel. Third, the fault must be recorded in ECM fault memory, and may be retrievable with the aid of a Fault Code Reader (FCR), or via Flash Codes.

From 1988 to 1991 the International Standards Organisation drafted and updated ISO 9141 to ISO9141-2, which attempts to standardise:

*The SD plug connection.*
*The diagnostic equipment and its range of diagnoses.*
*The contents of the protocols.*
*The extent of data to be exchanged.*

These were based on the regulations for America. However, these agreed requirements are now being adopted by European governments and governments of all five continents in consultation with vehicle manufacturers.

More requirements were laid down by a second regulation, OBD II, which was applied from model year 1994. Diesel engines were also subject to the OBD requirements as of model year 1996. The additional requirements are as follows:

*Additional flashing function of the SD warning light.*
*Monitoring of functions and components, not only for defects, but also for ensuring adherence to emission values.*
*In addition to storing faults as a digital code, the operating conditions are also stored in the so-called "Freeze Frame".*
*The contents of the fault memory must be capable of being retrieved by a Fault Code Reader instead of Flash Codes.*
***Note:** Systems designed to OBD II are equipped with a 16-pin SD connector **(see illustration 1.3)**.*

The monitoring function of engine management systems has also been extended and regulated. OBD II calls for the continuous monitoring of the following components and areas.

*Combustion.*
*Catalytic converter.*
*Oxygen sensor.*
*Secondary air system.*
*Fuel evaporation system.*
*Exhaust-gas recirculation (EGR) system.*

Diesel engines are subject to the same regulations and objectives, but obviously different components, such as glow plugs, are monitored to interact with the relevant technology employed on each system.

The ISO, the SAE and a plethora of transport and environmentally-concerned non-governmental organisations have argued for further and consistent regulations. The US "Clean Air Acts" have adopted the CARB standards as a minimum level of protection for public health and well-being; similar legislation has been brought into being by many local and national governments since 1968. The introduction of catalytic converters, fuel injection systems, the increased use of vehicle diesel engines and of unleaded petrol engines during the past 30 years, has made further positive contributions to reducing the problems which arise with pollutant emissions.

### European On-Board Diagnosis (EOBD)

European vehicle manufacturers await the introduction of a European On-Board Diagnosis (EOBD) definition, which will strengthen the ISO 9141-CARB definition, and that is expected to be introduced by the 2000 millennium. A Europe-wide working party is in existence to determine the details of the EOBD standards. EOBD is likely to include many of the OBD II conditions, but additional measures are also being considered.

## 1 Function of the Self-Diagnosis system

### Self-Diagnosis function

The Self-Diagnosis (SD) function (sometimes termed On-Board Diagnosis or OBD) of the modern Engine Management System continually examines the signal values from the various engine sensors and actuators. The signals are then compared with pre-programmed control parameters. The control parameters may vary from system to system, and could include upper and lower measurement values, a specific number of erroneous signals within a pre-determined time period, implausible signals, signals outside of adaptive limits, and other parameters determined by the system designer or vehicle manufacturer. If the signal value is outside of the control parameters (for example a short-circuit or an open-circuit), the ECM determines that a fault is present, and stores a code in ECM fault memory.

Early SD systems were capable of generating and storing no more than a handful of codes. However, 10 years on, many of the more advanced systems can generate 100 or more codes, and this may sharply increase over the next decade as engine management becomes capable of diagnosing many more fault conditions.

For example, in one SD system, a simple code may be generated to cover all possible fault conditions that could affect a particular circuit. In another SD system, several codes may be generated to cover various fault conditions, and this could pinpoint the reason for the fault in that particular sensor. If we use the Coolant Temperature Sensor (CTS) circuit as an example, the first code may be generated as a general CTS fault. Other codes may be generated to indicate an open or short-circuit. In addition, codes that indicate a weak or a rich mixture condition may be generated as a consequence of this particular component failure. Where the ECM practises adaptive control around the ideal mixture ratio, a fault may cause the adaptive limits to be exceeded, and even more codes may be raised. However, on determination of such a fault, the EMS will certainly move into LOS or "limp-home" mode - this will reduce the mixture problems and the probable number of different codes that could be generated.

As the EMS evolves, many more components will be controlled and monitored by the ECM, and the SD function will certainly extend to cover these additional components. This book is mainly concerned with testing areas that relate to the engine, although all codes generated by ancillary systems such as the air conditioning and automatic transmission will be listed in the Fault Code tables appearing in each Chapter.

### Limitations to Self-Diagnosis

There are some limitations to Self-Diagnosis, and some sensor faults may not necessarily cause a code to be stored. Faults in components for which a code is not available or for conditions not covered by the diagnostic software will not be stored. This also means that mechanical problems and secondary ignition circuit (HT) faults are not directly covered by the SD system. However, side-effects from, for example, a vacuum leak or faulty exhaust valve will create mixture and idle problems, which may cause appropriate codes to be stored. The trick then is to relate the fault code to the engine condition - engine checks may be necessary to aid diagnosis in this respect.

In addition, a fault code generally only points to a faulty circuit. For example, a code indicating a CTS fault may be caused by a faulty coolant temperature sensor, a wiring fault or a corroded connector.

Some vehicle systems are capable of storing faults that occur intermittently - others are not. In some instances, a fault code may be lost the moment that the ignition is switched off; care should be taken when retrieving codes or investigating faults in this kind of system.

The smart technician will use the fault code as a starting point, and as such, it can quickly point him in the right direction. On the other hand, absence of a code may not always be indicative of a fault-free system, and care should be exercised during diagnosis.

#### Spurious signal

Faulty HT signals or faulty electrical components can create Radio Frequency Interference (RFI) that may disrupt the EMS or cause spurious (erroneous) codes to be generated. A disrupted EMS may result in erratic ECM operation.

#### Limited range or out-of-range sensors

If the sensor remains within its design parameters, even if the parameters are incorrect for certain operating conditions, a fault code will not be stored. For example, a faulty coolant temperature sensor will cause a fault code to be generated if it is open-circuit or shorted to earth. However, if the sensor resistance does not change during a temperature change, a code may not be generated, although the engine will indeed run badly at some temperatures. The majority of current SD systems would not recognise a fault in this instance because the signal would remain within the control parameters. The next paragraph describes possible methods of overcoming this particular problem.

#### Implausible signals

The software in some newer systems is becoming more sophisticated, and may check for a change in voltage or current over a period of time. If the signal output does not change as expected, a fault will be stored. Also, earlier systems would generate a fault code if a particular circuit was outside of the control parameters without reference to other data or circuits. More modern systems may consider the output from several components, and relate one signal to another. A fault code may be generated based upon the plausibility of the signal when related to a number of other signals. For instance, if the engine speed (RPM) is increasing, the throttle position sensor (TPS) indicates a wide-open throttle, yet the airflow sensor (AFS) does not indicate an increase in airflow, the AFS signal could be considered implausible and a code would be generated.

### SD warning light

Many vehicles are equipped with an SD warning light, usually located in the instrument panel on the facia **(see illustrations 1.4 to 1.6)**. Alternatively, an LED may be set into the casing of the ECM. Once the ignition is turned on, the warning light or LED will illuminate.

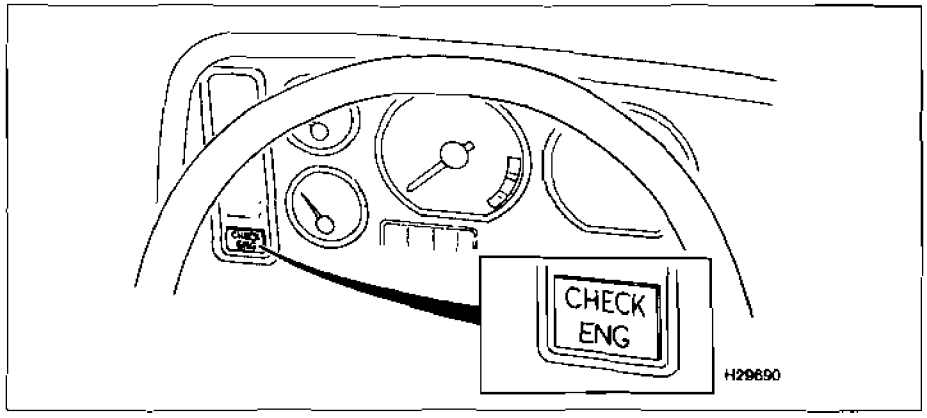


**1.4 A typical SD warning light located in the instrument panel**

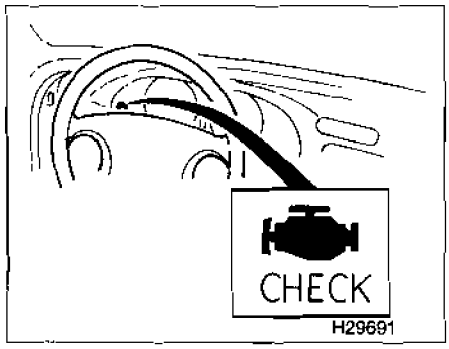


**1.5 A second typical SD warning light located in the instrument panel**

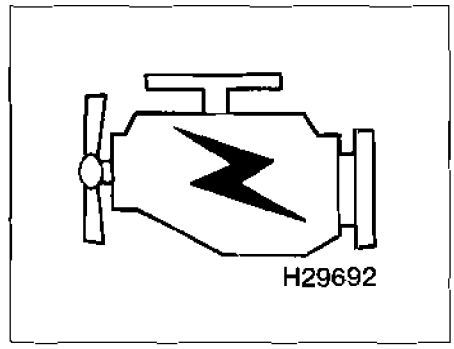


**1.6 Typical appearance for a SD warning light**

This serves as a check that the light circuit is functional. After the engine has started, the light should extinguish and remain off so long as the SD system does not detect a fault. If the ECM determines that a detectable fault is present, the warning light is turned on. The light remains turned on until the detectable fault is no longer present. If the fault clears, the light will usually turn off, although the code itself may remain stored until the ECM fault memory is cleared. A fault in some systems may be classified as a minor fault and although the ECM will log the presence of the fault, the light may not be turned on.

Not all vehicles utilise a warning light; systems without one will require interrogation by a FCR or Flash Code display by manual means to determine whether a fault is stored or not.

### *Fast and slow codes*

Codes transmitted by an ECM may be designated as "slow codes" or "fast codes". Slow codes are fault codes which are emitted slowly enough to be displayed on an LED or on a facia-mounted warning light. Fast codes are digital fault codes that are too fast to be displayed on the LED or on the warning light. A digital FCR instrument is required for capturing fast codes.

### *Other SD functions*

To a large degree, the format and type of data to be output is determined by the vehicle manufacturer (VM). The function of the FCR or manual code extraction routine is to initiate the VM's program and to make the best of what is actually available. In other words, if the VM does not make certain information available, then it is not possible to access such information through the serial port.

In addition to code retrieval and code clearing, a number of other functions are often available through SD, as listed below.

*Code retrieval.*
*Code clearing.*
*Actuator and component testing.*
*Service adjustments.*
*ECM coding*
*Obtaining Datastream.*
*Flight recorder function.*
***Note:** Not all of the above functions are available in all systems, and an FCR will be necessary for many of the more advanced functions.*

### *Fault code retrieval*

Fault codes can be retrieved from the ECM via an SD output terminal (sometimes known as a Serial Port), by connecting a suitable Fault Code Reader or by triggering a manual retrieval routine. Although manual code retrieving (described below) is possible in most early systems, the practice is dying out; most modern systems allow retrieval via an FCR alone.

#### FCR or Scanner ?

The professional tool used for retrieving codes from SD systems on motor vehicles in the UK is termed a Fault Code Reader. However another term sometimes used is "Scanner". The "Scanner" term originated in the USA, and defines a tool that "scans" data, as distinct from a tool whose sole function is to "retrieve" data. Realistically, the terms can be used interchangeably to describe code-retrieving equipment. Generally we will use the term FCR to describe the code-reading equipment covered by this book.

#### Manual fault code retrieval ("Flash Codes")

Some of the early SD systems allowed manual code retrieval. Although quite useful as a "quick-and-dirty" method of accessing codes without sophisticated equipment, manual code retrieval is limited, slow and prone to error. In addition, it is not possible to retrieve codes that are transmitted at the high transfer rates seen in modern systems. Typically, manual code retrieval is initiated by using a jumper lead to bridge certain terminals in the SD connector. The codes are then displayed by the flashing of the instrument panel warning light, or on the LED set into the ECM casing (where these components are fitted). Codes obtained in this fashion are often termed "Flash Codes" **(see illustrations 1.7 to 1.9)**. By counting the flashes or meter sweeps and referring to the Fault Code table in each Chapter, faults can thus be determined. Where an SD light or LED is not fitted, an LED diode or a voltmeter **(see Warning No 5 in the Reference Section at the end of this book)** can be used in some systems.

### *Fault code clearing*

There are a number of methods used by the vehicle manufacturers to clear fault memory over the years. Mid-1980s systems did not retain codes, and were automatically cleared once the ignition was turned off. Soon the ECM fault memory was provided with a permanent battery voltage that allowed codes and other data to be retained after the ignition was turned off. Codes generated by these systems are normally cleared with an FCR (preferred method), although a manual routine is often possible. Removing a battery lead or the ECM multi-plug may also clear the codes from memory. Some of the latest types of systems utilise non-volatile memory. Non-volatile memory retains data even after the battery has been disconnected, and code clearing must be effected with the aid of an FCR **(see illustration 1.10)**.

**Note:** *Codes should always be cleared after component tests or after repairs involving the removal of an EMS component.*

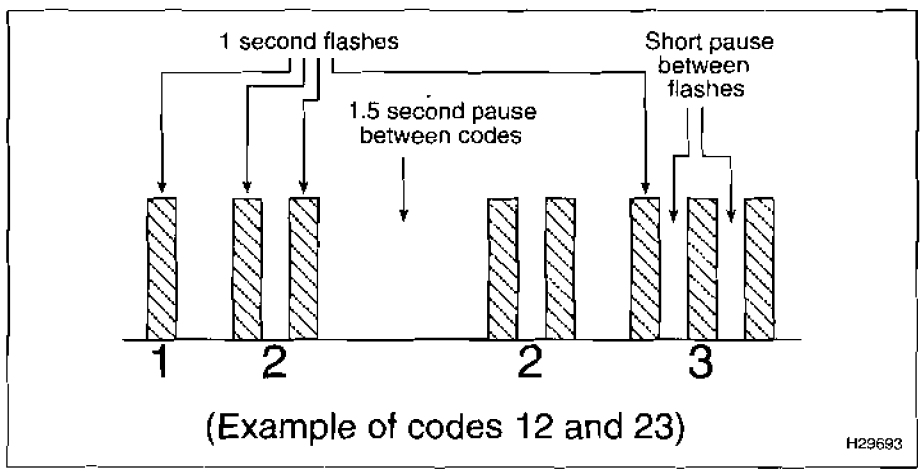


**1.7 Representation of typical 2-digit flash codes as displayed on an SD warning light or LED. The duration of the flashes are the same for units and tens.**

### Clearing codes manually

It is often possible to clear fault codes by initiating a manual routine similar to that used to retrieve flash codes.

## Actuator and component testing

The FCR can be used to test the wiring and components in certain actuator circuits. For example, the idle speed control valve (ISCV) circuit could be energised. If the valve actuates, this proves the integrity of that circuit. Depending on the system (it is not possible to test a particular actuator unless the routine has been designed into the SD system), possible circuits include the fuel injectors, relays, ISCV, and emission actuators amongst others. It may also be possible to test the signals from certain sensors. A common test is to check the signal from the throttle position sensor (TPS) as the throttle is moved from the closed to the fully-open position and then returned to the closed position. A fault will be registered if the potentiometer track is deemed to be defective.

### Manual sensor testing and component actuation

Component actuation is normally the province of the FCR. However, in a very few systems, manual actuation and component testing is possible. Where appropriate, these routines will be described in the relevant Chapter.

## Service adjustments

In most modern engines, any kind of adjustment to the idle mixture or ignition timing is not possible. However, some older systems are denied external adjustment, and an FCR is essential if certain adjustments are to be effected. Examples include some Ford vehicles with EEC IV, the Rover 800 SPi, and more recent Rover vehicles with MEMS. All of these vehicles require an FCR for various adjustments including ignition timing and/or idle mixture adjustment.

## ECM coding

In some systems, an FCR may be used to code the control unit for certain applications. This function is normally reserved for the vehicle manufacturer's main agent, and allows a smaller range of control modules to be built for a large number of different applications. Coding the control unit would match the ECM to a particular vehicle.

## Obtaining Datastream

Datastream information is live data from the various sensors and actuators that can be displayed on the FCR screen. This function is particularly useful for rapid testing of suspect sensors and actuators. Dynamic tests could be performed and the sensor response recorded. Where a component seems faulty, but a code is not generated, Datastream could be viewed over a range of engine speeds and temperatures. For example, the coolant temperature sensor signal could be viewed with the engine cold, and closely monitored as the engine is warmed up. Any irregularities in the signal should be obvious during the course of the time taken to warm the engine.

Although signals from the various components can be viewed by connecting an oscilloscope or digital multi-meter (DMM) to the relevant circuit, it is often quicker and more convenient to view the system data on the screen of the FCR. This function is only available with the aid of a FCR, and manual display of Datastream is not possible. Some FCRs can be connected to a standard personal computer (PC) and the data from all monitored components could be displayed simultaneously upon the screen. This overcomes the problem of displaying data from a small number of components on a small FCR screen. As dynamic tests are initiated, the response from each component could be more easily observed. In addition, with the aid of suitable software, the PC could chart and record each signal as various tests are performed. All of the signals (or a selection) could then be played back and reviewed at some later stage.

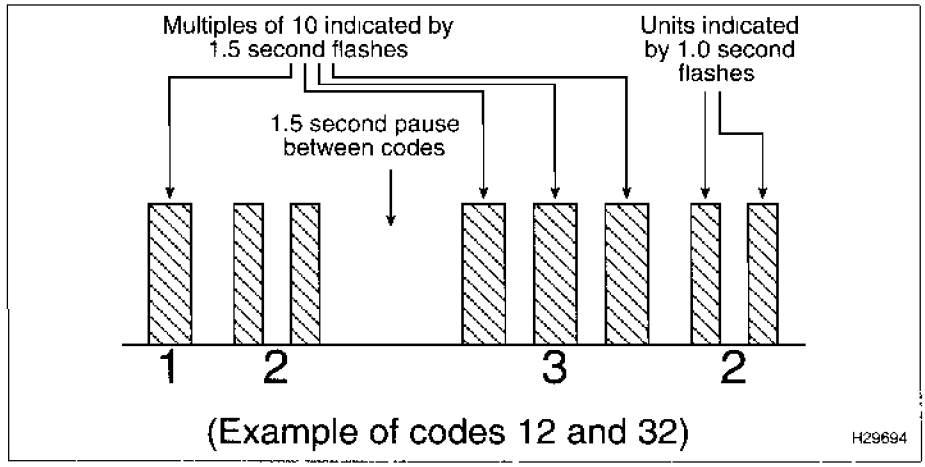


**1.8 Representation of typical 2-digit flash codes as displayed on an SD warning light or LED. The flash duration is longer for the multiples of ten, and shorter for the single units**

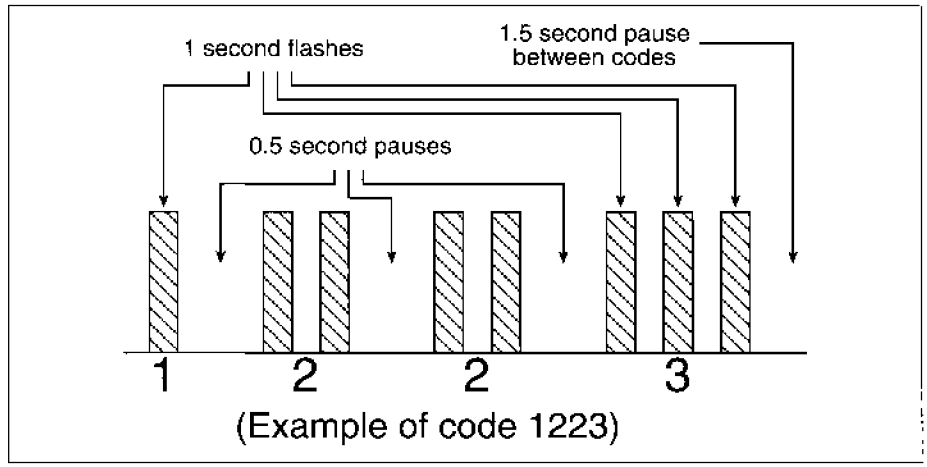


**1.9 Representation of typical 4-digit flash codes as displayed on an SD warning light or LED**

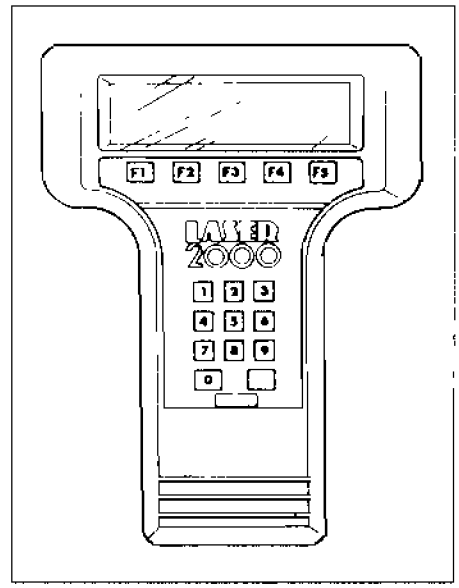


**1.10 A common proprietary Fault Code Reader**

### *Flight recorder function*

A facility that is available in some FCRs and/or SD systems is that of a "flight recorder" mode - more usually called a "snapshot" or "playback" function. Where a fault is intermittent or difficult to diagnose, the condition of the various components can be determined from the signal output at the moment of fault occurrence, and this could lead to a solution.

The FCR must be attached to the SD connector, and the vehicle taken for a road test. The snapshot function is usually initiated at an early stage in the run. Data will be gathered and recorded during the running period. However, since the memory capacity of the ECM or FCR is limited, data will only be retained for a short period. When the fault occurs, it is necessary to hit a button, then a pre-determined number of records before the occurrence and after will be stored. Back in the workshop, the data (usually presented as Datastream) can be played back one sample at a time, and frozen for evaluation where required. Reviewing all of the data from each sensor and actuator may then lead to the solution. However, not all SD systems or even all FCRs are capable of this function.

## 3 Limited Operating Strategy (LOS) - "limp-home" mode

The majority of modern SD systems also have a Limited Operating Strategy (LOS) - otherwise known as "limp-home" mode. This means that in the event of a fault in certain sensor circuits (and usually where a fault code has been generated, although not all codes will initiate LOS), the ECM will automatically enter LOS and refer to a programmed default value rather than the sensor signal. This enables the vehicle to be safely driven to a workshop/ garage for repair or testing. Once the fault has cleared, the ECM will revert to normal operation.

LOS is a safety system, which allows the engine to operate at a reduced efficiency level. Some LOS systems are so smart, the driver may be unaware that a fault has occurred unless the warning light is illuminated (if fitted).

Since the substituted values is often that of a hot or semi-hot engine, cold starting and running during the warm-up period may be less than satisfactory. Also, failure of a major sensor, such as the airflow sensor or the MAP sensor, may cause the ECM to restrict engine performance. For example, if a Ford EEC IV system detects a major fault within the ECM, the engine will run with the timing set to 10° (no timing advance) and the fuel pump will run continuously.

In some systems, failure of a coolant or air temperature sensor (CTS or ATS) will cause the ECM to use the other component as a default. For example, if the CTS failed, the ECM would use the ATS value. In addition, the default value might be used when the engine is cold and then switched to a value that is close to that of a hot engine after the engine has run for 10 minutes. Unless the SD warning light comes on, it would thus be very difficult to recognise that a fault had actually occurred.

## 4 Adaptive control function

In many modern engine management systems, the ECM is adaptive to changing engine operating characteristics. Where the ECM software is adaptive, the data is constantly monitored from various engine functions, and the data is stored in memory so that over a fairly long monitoring period, signal averages can be built.

During normal engine operation, the ECM refers to several three-dimensional maps for timing, fuel injection, idle speed etc. Depending upon the changing signals from the various sensors (ATS, CTS, AFS or MAP, TPS, etc), the ECM constantly corrects the final output signals to the various actuators. By adopting the stored adaptive values as a correction to the basic map, the ECM is able to adapt much more quickly to almost any changed operating circumstances.

As the engine or its components wear or even if certain faults develop, the changed signals are added to the stored adaptive memory, and the signal averages gradually change. The ECM continually reacts to the adaptive memory and soon adapts to the changed conditions. If the adaptive value exceeds the control parameters, a fault code may be generated.

Adaptive control is applied typically to the following areas, and adaptation and correction of the various maps usually occurs during idle or part-load engine operation:

*Idle operation.*
*Mixture adjustment.*
*Knock control.*
*Carbon filter solenoid valve (CFSV) operation.*
*Exhaust gas recirculation (EGR).*

When the adaptive map is used in conjunction with the oxygen sensor (OS) in a catalytic converter system, the ECM is able to respond much more quickly and retain tighter control over the changing gases in the exhaust system. During closed-loop operation, the basic injection value is determined by the values stored in the map for a specific rpm and load. If the basic injection value causes exhaust emissions outside of the Lambda value (0.98 to 1.02 air-fuel ratio) the mixture would be too rich or too lean, and the OS would signal the ECM which in turn will correct the mixture. However, this response takes a little time, and so the ECM learns a correction value and adds this "adaptive" value to the basic map. From now on, under most operating conditions, the emissions will be very close to Lambda and so, after reference to the OS signal and adaptive map, the ECM will only need to make small corrections to keep it that way

At idle speed, the system will settle down to idle at the best speed for each individual application. Operation of the CFSV introduces a combustible mixture to the engine that is compensated for by the fuel evaporation adaptive correction values after detection by the OS.

Adaptive values are learnt by the ECM over a period of time, and tend to be averaged over a great number of samples. This means that if the change in operating conditions is gradual, the adaptation will also be gradual. However, if a sudden and dramatic change occurs, the adaptive function may take some time to readapt to the changed conditions. The change in circumstances can occur when a fault occurs in the system, or even after a system component has been changed

When one or more system components have been renewed, the ECM will need to relearn the new values, and this can sometimes create operating problems until the ECM has completed the process This can create a temporary vehicle driveability fault that could certainly occur after proper repairs have been made to some part of the system. The driveability fault should gradually become less prominent as the EMS adapts

For example, an injector may be leaking and the ECM will adapt to provide a leaner mixture Once the faulty injector has been renewed or cleaned, the adaptation will err towards lean, and the engine may be hesitant until the ECM adapts to the correct mixture In some systems, it is possible to use an FCR to reset the ECM adaptive memory to the original default value after a component has been renewed.

Most adaptive systems will lose their settings if the battery is disconnected Once the battery is reconnected and the engine is restarted, the system will need to go through a relearning curve. This usually occurs fairly quickly, although idle quality may be poor until the adaptive process is completed.

Not all systems are affected by battery disconnection. Rover MEMS is an example of a system that uses non-volatile memory to retain adaptive settings when the battery is disconnected.

### Rogue adaptive function

The danger with an adaptive function is that sometimes an erroneous signal may be adopted as a valid measurement, and this may create an operating problem. If the erroneous signal is not serious enough to generate a fault code, the fault may remain undetected

In some instances the ECM can become confused and the adaptive values could become corrupted. This may cause operational problems, and a system check will reveal "no fault found". Disconnecting the vehicle battery may effect a cure, since the re-calibration will reset the ECM default base values. However, resetting values with an FCR is the preferred method, to avoid the loss of other stored values that will occur after disconnection of the battery.

# Chapter 2
# Test equipment, training and technical data



## Contents

Equipment ..... 2
Introduction ..... 1
Major suppliers of diagnostic equipment ..... 3
Technical information ..... 5
Training courses ..... 4

## 1 Introduction

Testing the modern automobile engine is a serious business. To be good at it, you need to seriously invest in three areas. We can liken the three areas to the good old three-legged stool. In our automotive stool, the legs are equipment, training and information. Kick one leg away, and the others are left a little shaky. Those with serious diagnostic intentions will make appropriate investments in all three areas.

That is not to say that those without the best equipment, or the necessary know-how, or the information, are completely stuck. It will just require a little more time and patience, that's all.

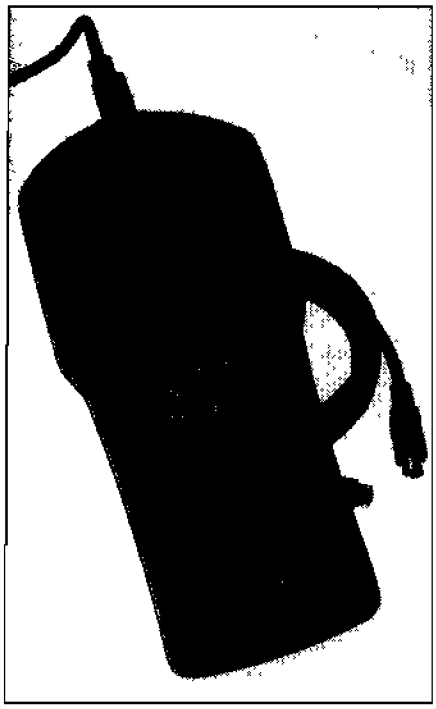

**2.1 The Haynes FCR. A digital code is displayed upon the screen**

Fault diagnosis then, and your method of diagnosis, will largely depend upon the equipment available. and your expertise. There is a definite trade-off in time against cost. The greater the level of investment in equipment and training, the speedier the diagnosis. The less investment, the longer it will take. Obvious, really!

## 2 Equipment

Within the confines of this Chapter, we will look at the Fault Code Reader and other equipment suitable for testing the various components of the Engine Management System. Some of this equipment is inexpensive, and some not.

### *Fault code reader (FCR)*

A number of manufacturers market test equipment for connecting to the EMS serial port **(see illustrations 2.1 and 2.2)**. These general-purpose FCRs allow data to be retrieved on a wide range of vehicles and systems. The FCR could be used to obtain and clear fault codes, display Datastream information on the state of the various sensors and actuators, "fire" the system actuators, alter the coding of the ECM, make adjustments to the timing and/or idle mixture and provide a flight recorder function. However, not all of the FCRs available will fulfil all of these functions and in any case, some functions may not be possible in some systems.

The FCR is very useful for pointing the engineer in the direction of a specific fault. However, the faults detected may be limited by the level of self-diagnosis designed into the vehicle ECM, and other test equipment may be required to pinpoint the actual fault.

FCRs come in many shapes and sizes (and indeed in many price ranges) and could generally be divided into three levels. At the most basic level, the FCR may do little more than interface with the SD connector and read codes as flash codes. A range of cables and connectors along with instructions on how to connect, retrieve and clear codes from the various vehicles and systems covered by the tool should be available. Flash code tables in an accompanying manual should be provided for interpretation purposes. The basic FCR will not be able to read fast fault codes, and will therefore be very limited in the number of vehicles that it can be used upon. Certainly, none of the advanced functions such as adjustment or actuator testing may be available.

FCRs at the second level are usually quite sophisticated, and will contain all of the functions available to the basic tool and a whole lot more. This FCR will probably display the code and a line of text describing the fault. Data for each range of vehicles or systems will usually be supplied on a removable pod or memory card, which makes the tester very upgradeable. Many of the more advanced facilities will be available, and interface with a PC and printer is often possible.

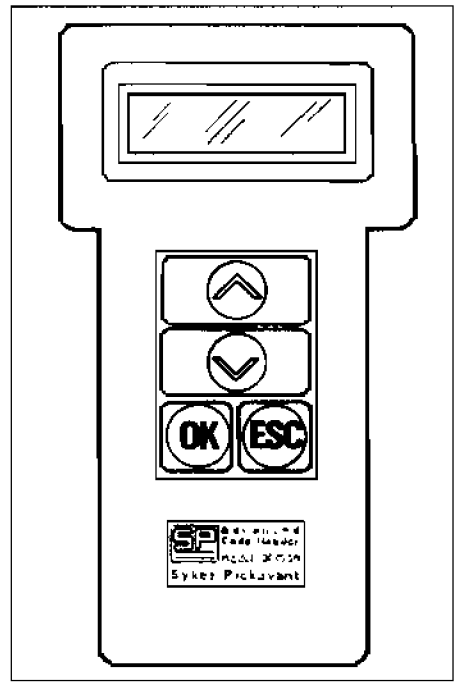


**2.2 A popular proprietary FCR. A selection of system pods are available for testing a wide range of systems and vehicles**

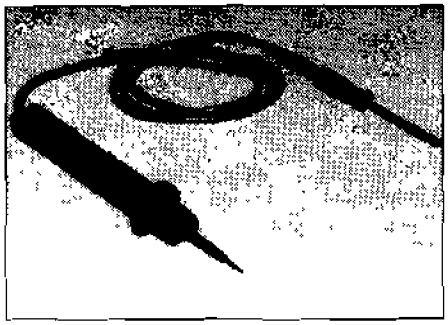

2.3 A typical diode test lamp

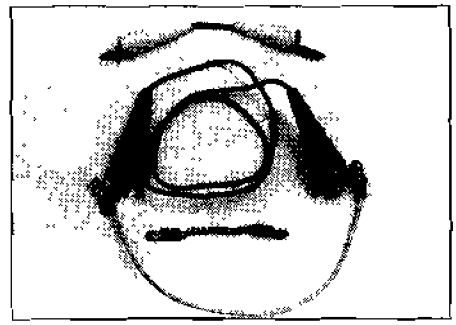

2.4 A selection of temporary jumper wires



2.5 The Rover Testbook - a laptop computer-based piece of test equipment that contains a very sophisticated and interactive test programme

The more expensive FCRs offer more facilities than just a code reading function, and could more accurately be termed Electronic System Testers. These tools will test the widest range of vehicles, and often allow interface with a Break Out Box. Many additional test routines may be provided within the software, and the documentation and system data provided with the tool is likely to be extensive.

Some FCR manufacturers or suppliers may include a technical support hotline, and training courses may also be available.

### Diode test light with LED

The diode test light with LED **(see illustration 2.3)** is particularly useful for obtaining manual flash codes where an SD warning light is not part of the system under test. The light must conform to minimum standards for tools to be connected to electronic circuits **(see Warning No 6 in the Reference Section at the end of this book).**

Additionally, the diode tester may be used for testing of digital signals at the ECM or ignition module.

### Jumper wires

Useful for bridging terminals in the SD connector in order to obtain flash codes, or for checking out circuits, and bridging or "by-passing" the relay **(see illustration 2.4).**

### Franchised vehicle dealer

The franchised dealer will often use dedicated test equipment that relies on programmed test methods. The equipment will interface with the ECM, usually through the serial port, and lead the engineer through a programmed test procedure. Depending on its sophistication, the test equipment may be able to test most circuits, or may refer the engineer to test procedures using additional equipment. This equipment is dedicated to one vehicle manufacturer, and may not be available to other workshops outside of the franchised network **(see illustration 2.5).**

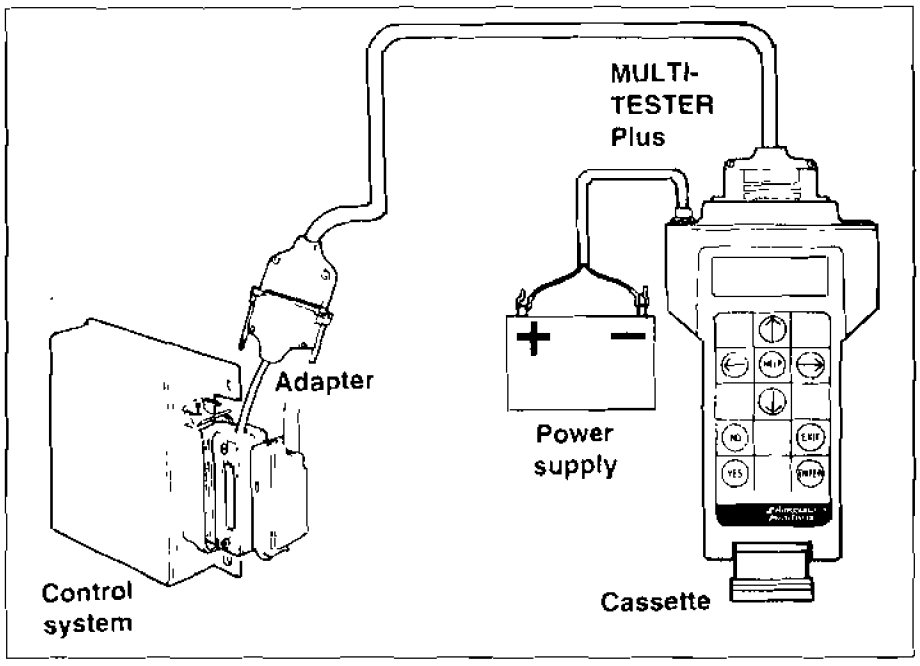


2.6 Programmed test equipment

### Programmed test equipment

This kind of proprietary equipment will interface between the ECM and the ECM multi-plug, and is offered as an alternative to the serial port and FCR approach. This equipment checks the input and output signals moving between the ECM and its sensors and actuators. If one or more of the signals is outside of pre-programmed parameters, the equipment will display the erroneous signal as a fault. Once again, other test equipment may be required to pinpoint the actual fault **(see illustration 2.6)**

### ECM testing equipment

Usually the province of those companies that specialise in the repair of the ECM, and not available for purchase by the garage or workshop. One company (ATP) offer an ECM test via a modem over the telephone network if the ECM is taken to one of their agents. Other ECM testing companies require that the ECM is sent to them by post for evaluation.

### Multi-meter

This is the equipment required for the most basic approach. These days, the meter will probably be digital (DMM), and must be designed for use with electronic circuits. An analogue meter or even a test light can be used, so long as it meets the same requirements as the digital meter. Depending on the sophistication of the meter, the DMM can be used to test for basic voltage (AC and DC), resistance, frequency, rpm, duty cycle

temperature etc. **(see illustrations 2.7 and 2.8)**. A selection of thin probes and banana plugs for connecting to a break-out box (BOB) will also be useful **(refer to illustration 2.13)**.

If the fault is a straightforward electrical fault, the meter will often be adequate. However, the drawback is that a DMM cannot analyse the complex electrical waveforms produced by many electronic sensors and actuators, and test results can sometimes be misleading.

### Oscilloscope (with or without DMM and engine analyser)

An oscilloscope **(see illustration 2.9)** is essentially a graphic voltmeter. Voltage is rarely still, and tends to rise and fall over a period of time. The oscilloscope (or 'scope) measures voltage against time, and displays it in the form of a waveform. Even when the voltage change is very rapid, the scope can usually capture the changes. Circuit faults can often be spotted much faster than when using other types of test instrument. Traditionally, the 'scope has been used for many years to diagnose faults in the primary and secondary ignition systems of conventional non-electronic vehicles. With the advent of electronics, the 'scope has become even more important, and when a labscope function is available, analysis of complex waveforms is possible. This equipment is often used in conjunction with other equipment, for speedy diagnosis of a wide range of problems. The large engine analyser and 'scope is now giving way to a plethora of smaller handheld 'scopes that pack great diagnostic power into portable form.

### Exhaust gas analyser

These days the state-of-the-art gas analyser comes with the ability to measure four of the gases present in the exhaust pipe, and it also calculates the Lambda ratio. The gases are oxygen, carbon dioxide, carbon monoxide and hydrocarbons. Less-expensive gas analysers are available that will measure one, two or three gases. However, the better the gas analyser, the easier it gets. The gas analyser is now a recognised diagnostic tool. Faults in ignition, fuelling and various mechanical engine problems can be diagnosed from the state of the various gases present in the exhaust.



**2.7 Two typical high-impedance DMMs with similar performance but different sets of leads and probes. The left unit is equipped with alligator clips and the right unit with spiked probes. Using the alligator clips frees your hands for other tasks, whilst the probes are useful for backprobing multi-plug connectors**

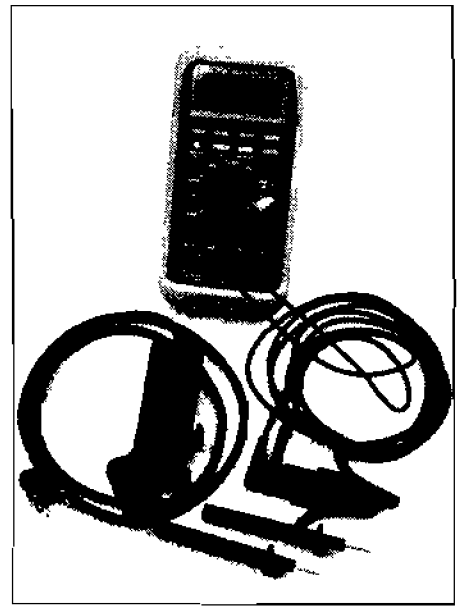

**2.8 Top of the range Fluke DMM with a multitude of features and attachments**

### Fuel pressure test kit

Fuel pressure is vitally important to the well-being of the fuel-injected engine, and a proper test gauge that will measure fuel pressures up to 7.0 bar is essential. The pressure gauge is normally supplied with a kit of adapters to connect it to a wide range of disparate fuel systems **(see illustration 2.10)**.

### Variable potentiometer

Because of the widespread use of the "limp-home" mode or LOS in the modern EMS, disconnecting a sensor such as the coolant temperature sensor (CTS) may have little effect on the running of the engine. The ECM will assume a fault, and place a fixed value as replacement for that sensor. However, it is useful to be able to vary the resistance sent to the ECM and note the effect. One answer is to use a potentiometer with a variable resistance. If this is connected in place of the CTS resistor, then ECM response, injection duration and CO may be checked at the various resistance values that relate to a certain temperature **(see illustration 2.11)**.

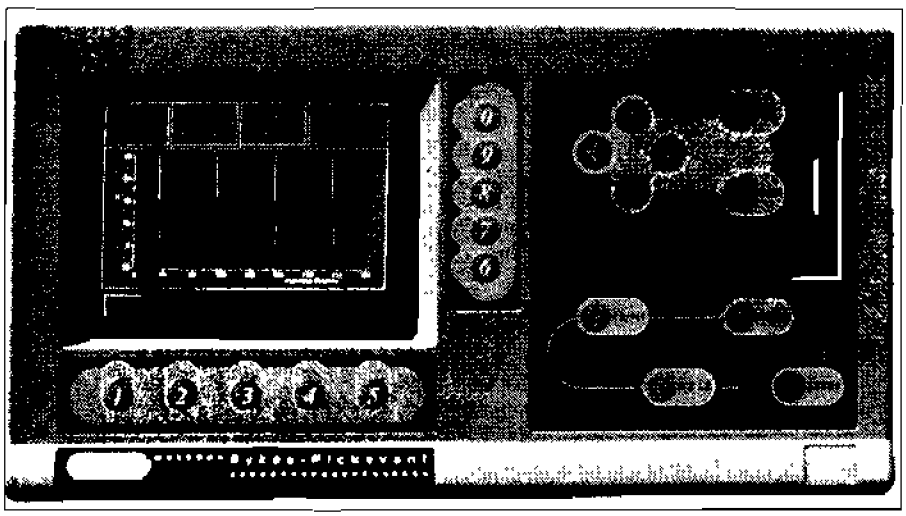

**2.9 Oscilloscope**

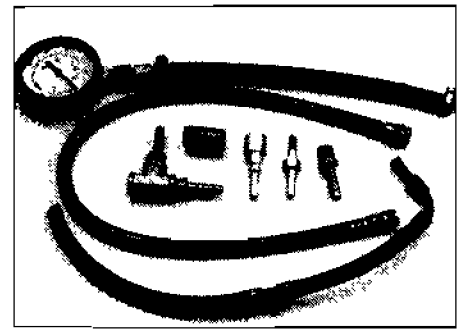

**2.10 Fuel pressure gauge and adapter kit**

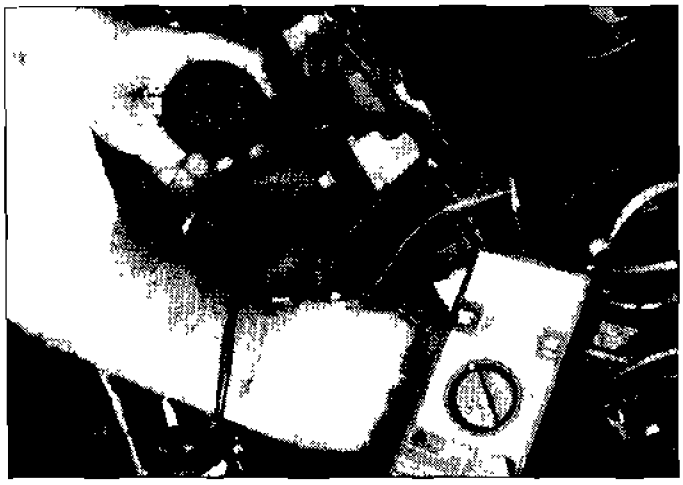

**2.11 Using a variable potentiometer to vary the CTS resistance. Voltage change can be measured and the engine can be fooled into thinking it is cold or hot when the reverse is the case. This means that simulated cold running tests can be accomplished with the engine hot and without waiting for it to cool**

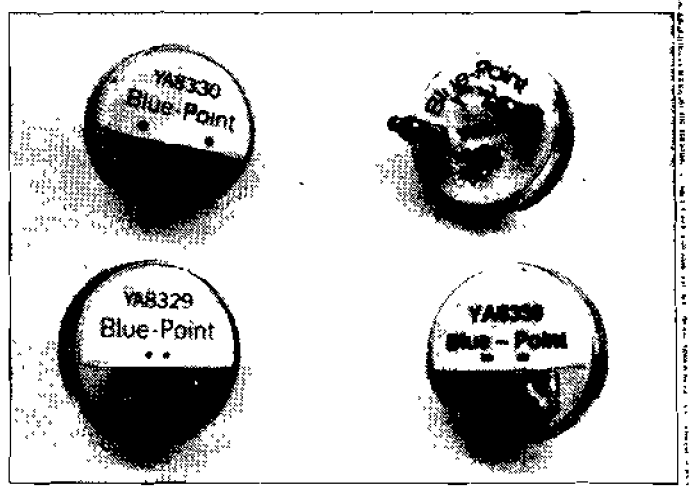


**2.12 Injector noid light**

### Noid light

A noid light is a small inexpensive light for checking the signal to the injector. The injector harness is detached at the injector, and the noid light plugged into the injector harness. If the engine is then cranked, the light will flash if the injector is being pulsed by the ECM **(see illustration 2.12)**.

### Break-out box (BOB)

The BOB **(see illustration 2.13)** is a box containing a number of connectors that allows easy access to the ECM input and output signals, without directly probing the ECM pins. The BOB loom terminates in a universal connector. A multi-plug harness of similar construction to the ECM harness is interfaced between the ECM and its multi-plug, and the other end is connected to the BOB loom. The BOB will now intercept all signals that go to and from the ECM. If a DMM or an oscilloscope or any other suitable kind of test equipment is connected to the relevant BOB connectors, the ECM signals can be easily measured. The main drawback is the number of different ECM multi-plug connectors required for a good coverage of electronic systems. Small BOBs are also available for measuring values at components where it is difficult to connect the test equipment.

There are three main reasons why use of a BOB is desirable in order to access the signals:

1) *Ideally, the connection point for measuring data values from sensors and actuators is at the ECM multi-plug (with the ECM multi-plug connected). The ECM multi-plug is the point through which all incoming and outgoing signals will pass, and dynamically testing at this point is considered to give more accurate results.*

2) *In modern vehicles, the multi-plug is becoming more heavily insulated, and removing the insulation or dismantling the ECM multi-plug so that back-probing is possible, is becoming almost impossible. To a certain extent, the same is true of some components.*

3) *ECM multi-plug terminals (pins) are at best fragile, and frequent probing or backprobing can cause damage. Some pins are gold-plated, and will lose their conductivity if the plating is scraped off. Using a BOB protects the pins from such damage.*

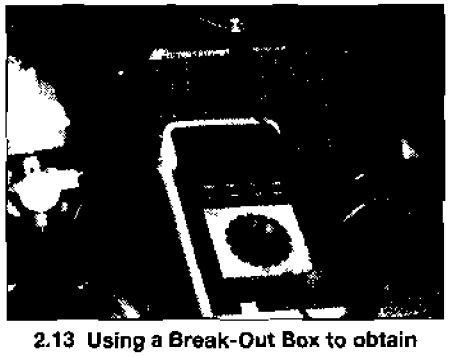

**2.13 Using a Break-Out Box to obtain voltage at the ECM pins**

### Battery saver

Actually, "battery saver" is a misnomer, since the function of this device is to hold power to permanently live circuits whilst the battery is removed or changed. The live circuits may provide power to the radio security and station memory, and to the ECM adaptive memory, etc.

### Jump leads with surge protection

It is possible to destroy an ECM if unprotected jump leads are used to provide emergency power to the battery. Rather than use jump leads, it is far safer to charge the battery before attempting to start the vehicle. A poor engine or chassis earth, flat battery or tired starter motor and unprotected jump leads are a recipe for total disaster.

### Vacuum gauge

As useful as it always was. The vacuum gauge takes the pulse of the engine from a connection to the inlet manifold, and is useful for diagnosing a wide range of timing and mechanical faults, including a blocked exhaust system or vacuum leak **(see illustration 2.14)**.

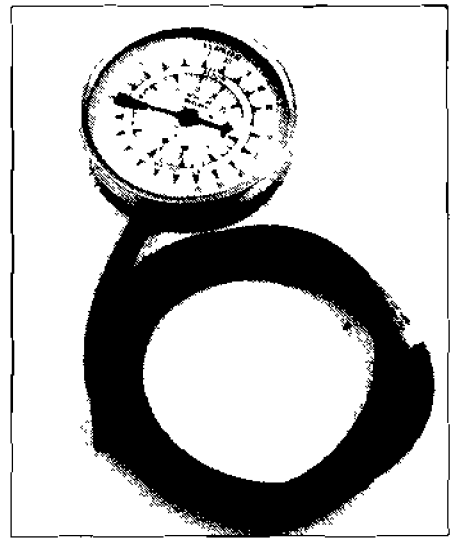

**2.14 Vacuum gauge**

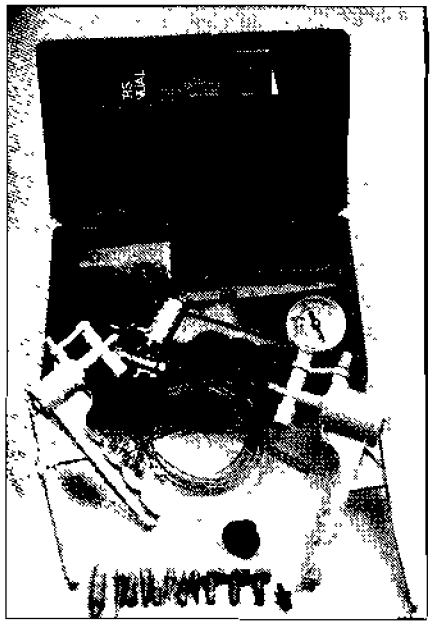

2.15 Vacuum pump kit

### Vacuum pump

The vacuum pump can be used to check the multitude of vacuum-operated devices that are fitted to many modern vehicles **(see illustration 2.15)**. A crude vacuum pump can be constructed from a bicycle pump. Reverse the washer in the pump, and the pump will then "suck" instead of "blow".

### Spark jumper

Useful for attaching to an HT lead to check for a spark. If you hold the lead from a modern high-output ignition system whilst cranking the engine, you may get quite a shock when testing for spark. Apart from curling your hair, the ignition system may also be damaged.

### Feeler gauges

Still useful for measuring the various clearances at the crank angle sensor, throttle switch, spark plug, valve clearances etc.

### Hairdryer or cold spray

Useful for gently heating or cooling components during a test where heat may be contributing to failure.

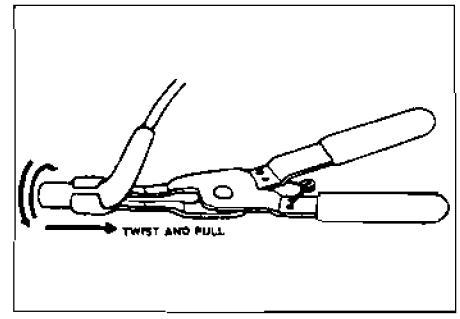


2.16 HT lead puller

### HT lead puller

Ideal for safely breaking the HT lead-to-spark plug seal and then safely disconnecting the lead **(see illustration 2.16)**. How many times have you pulled at a lead to have it disintegrate into your hand?

### Exhaust back-pressure tester

Useful for checking for exhaust back-pressure; screws into the oxygen sensor hole on catalyst vehicles. The presence of back-pressure indicates an exhaust blockage.



## 3 Major suppliers of diagnostic equipment

**Note:** *The details below are correct at the time of writing (Spring 1998).*

Alba Diagnostics Ltd
Bankhead Avenue
Bankhead Industrial Estate
Glenrothes
Fife
Scotland
KY7 6JG Tel: 01333 425000

ASNU (UK) Ltd
27 Bournehall Avenue
Bushey, Herts
WD2 3AU Tel: 0181 420 4494

ATP Electronic Developments Ltd
Victoria St
Hednesford, Staffordshire
WS12 5BU Tel: 01543 879788

AutoDiagnos (UK) Ltd
Preston Technology Centre
Marsh Lane
Preston, Lancashire
PR1 8UD Tel: 01772 887774

Auto Smart tools Ltd
(Electronic tools for German vehicles)
Tudor House
Sycamore Road
Amersham
Bucks.
HP6 6BB Tel: 01494 722738

Crypton Ltd
Bristol Road
Bridgwater, Somerset
TA6 4BX Tel: 01278 436200

Fluke (UK) Ltd
Colonial Way
Watford, Herts
WD2 4WD Tel: 01923 240511

Gunson Ltd
Pudding Mill Lane
London
E15 2PJ Tel: 0181 9848855

Intermotor
Occupation Road
Hucknall, Nottingham
NG15 6DZ Tel: 0115 9528000

Lucas Aftermarket Operations
Stratford Road
Solihull
Birmingham
B90 4AX Tel: 0121 6975000

Omitech Instrumentation Ltd
Hopton Industrial Estate
London Road
Devizes, Wiltshire
SN10 2EU Tel: 01380 729256

Robert Bosch Ltd
PO Box 98
Broadwater Park
Denham, Uxbridge
Middx
UB9 5HJ Tel: 01895 834466

SPX UK Ltd
Churchill Way
High March
Daventry, Northants
NN11 4NF Tel: 01327 704461

Sun Electric (UK) Ltd
Oldmedow Road
Kings Lynn, Norfolk
PE30 4JW Tel: 01553 692422

Sykes-Pickavant Ltd
Kilnhouse Lane
Lytham St. Annes
Lancs.
FY8 3DU Tel: 01253 784800

## 4 Training courses

**Note:** *The details below are correct at the time of writing (Spring 1998).*

There are a number of companies that specialise in training for the motor industry. The same training courses are usually available to the general public. Please contact the various bodies listed below if you wish to learn more about training for the automotive industry.

AA External Training Courses
Widmerpool Hall
Keyworth, Notts
NG12 5QB
Tel: 021 501 7357/7389

Crypton Ltd
Bristol Road
Bridgwater, Somerset
TA6 4BX
Tel. 01278 436210

Fuel Injection Services
Unit 7
Salter Street
Preston
PR1 1NT
Tel: 01772 201597

Lucas Test
International Training Centre
Unit 7, Mica Close
Tamworth, Staffs
B77 4QH
Tel: 0827 63503

MasterTech
Freepost RM1109
Wickford, Essex
SS11 8BR
Tel: 01268 570100

OTC Europe Ltd
VL Churchill Ltd
PO Box 3, London Road
Daventry, Northants
NN11 4NF
Tel: 01327 704461

Sun Electric (UK) Ltd
Oldmedow Road
Kings Lynn, Norfolk
PE30 4JW
Tel: 01553 692422

Sykes-Pickavant Ltd
Kilnhouse Lane
Lytham St. Annes
Lancs.
FY8 3DU
Tel: 01253 784800

## 5 Technical information

**Note:** *The details below are correct at the time of writing (Spring 1998).*

Specific information on the various systems is essential if effective diagnosis and repairs are to be completed. Companies that specialise in automotive technical information are listed below.

Autologic Data Systems Ltd
Arnewood Bridge Road, Sway
Lymington, Hants
SO41 6DA
Tel: 01590 683868

Equiptech
Yawl House
Main Road
Marchwood, Southampton
SO40 4UZ
Tel: 01703 862240

Glass's Information Services Ltd
No. 1 Princes Road
Weybridge, Surrey
KT13 9TU
Tel: 01932 823823

Haynes Publishing
Sparkford, Nr Yeovil
Somerset
BA22 7JJ
Tel: 01963 440635

MasterTech
Freepost RM1109
Wickford, Essex
SS11 8BR
Tel: 01268 570100

# Chapter 3
# General test procedures

## Contents

**Basic inspection**
**Digital multi-meter (DMM) tests**
Duty cycle tests ..... 5
Introduction ..... 2
Resistance tests ..... 4
Variable potentiometer ..... 6
Voltage tests ..... 3
**General fault diagnosis**
Introduction ..... 1

## General fault diagnosis

### 1 Introduction

1 As a general rule, it is usually beneficial to work through the checks listed in "Basic inspection" before connecting the fault code reader. The reason for this is clear - electrical and HT faults may adversely affect electronic control module operation, giving incorrect or spurious results, and causing much confusion. Only after electrical and HT problems have been resolved should the operation of the ECM and its sensors be evaluated.

2 The fault code reader can be used for the following tasks:

*a) Reading fault codes.*
*b) Clearing fault codes.*
*c) Datastream testing (not all systems, for example Ford EEC IV cannot provide Datastream).*
*d) Actuator and component testing.*
*e) Service adjustments.*
*f) ECM coding.*
*g) Snapshot function.*

#### *Limitations of Self-Diagnosis systems*

3 Some may see the fault code reader (FCR) as a panacea for solving all electronic problems in the vehicle, but reading the fault code is only the beginning. To a large degree, the software designed into the vehicle ECM provides the information to be decoded by the FCR. The FCR makes the most of this information, but if certain facilities or data are not designed for output at the serial port, these facilities will not be available to the FCR.

4 In many instances, the FCR can provide the answer to a puzzling fault very quickly. However, it will not provide all the answers, because some faults (including actual ECM faults) may not even generate a fault code.

5 There are a number of distinct limitations to Self-Diagnosis systems:

*a) The vehicle manufacturer lays down the basic data that can be extracted from the engine management system by the FCR, and the Self-Diagnosis system and FCR must work within those limitations.*
*b) A code will not be stored if the ECM is not programmed to recognise that a particular component is faulty.*
*c) Spurious codes can be triggered by electrical or secondary HT faults.*
*d) One or more spurious codes can be triggered by a faulty component that may or may not trigger a code by itself.*
*e) The fault code indicates a faulty circuit, and not necessarily a component. For example, a faulty sensor, wiring fault, or corroded connector may cause a code indicating a coolant temperature sensor (CTS) fault. Always check the wiring and connectors, and apply proper tests to the component before judging it to be faulty.*
*f) Limited range or out of range sensors. If the sensor remains within its design parameters, even if the parameters are incorrect for certain operating conditions a fault code will not be stored. For example, a faulty CTS will generate a fault code if it is open-circuit or shorted to earth. However, if the CTS is stuck at either the hot or cold resistance, a code may not be generated, although the engine will indeed run badly at some temperatures.*
*g) Some vehicle systems are capable of logging faults that occur intermittently and others are not.*
*h) In some instances, a fault code may be lost when the ignition is switched off, and due allowance should be made for this kind of system.*
*i) Older vehicles with basic electronic fuel injection systems do not support Self-Diagnosis.*

#### *Testing Self-Diagnosis systems*

6 Is the engine management system warning light (where fitted) illuminated while the engine is running? If so, this is indicative of a system fault. **Note:** *Be aware that some lights do not illuminate for faults that are designated as minor faults.*

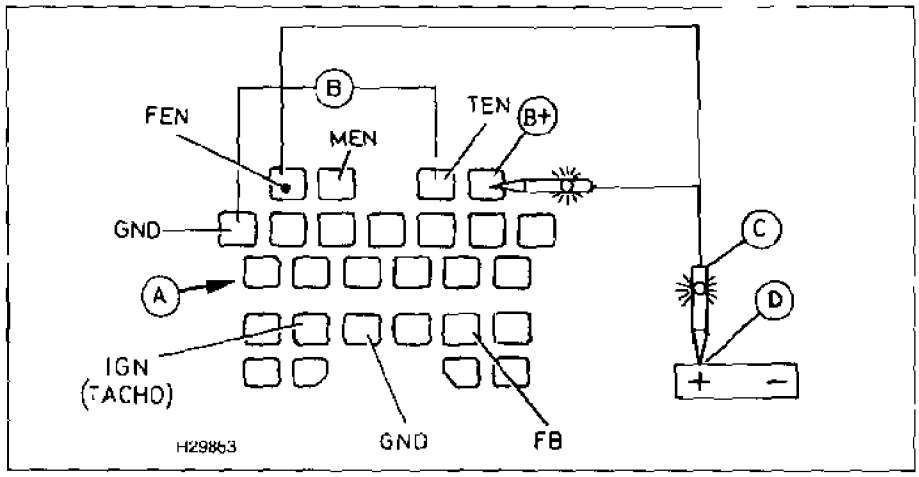


**3.1 Initiating flash codes with the aid of an LED and a jumper lead connected to a typical SD connector**

*A 17-pin SD connector*
*B Jumper lead*
*C LED test light*
*D Battery positive terminal*

**7** Connect an FCR to the SD connector, and interrogate the electronic control module for fault codes. Alternatively, initiate flash codes if this is possible (**see illustration 3.1**). **Note:** *It is particularly important that the FCR instructions are carefully followed in respect of connecting to the system under test and retrieving fault codes. Most operational problems in using FCR equipment are related to a failure to read and follow the instructions.*

**8** Once the fault codes have been retrieved, refer to the fault code tables and identify the fault. Refer to Chapter 4 and follow the appropriate component test procedures to check out the relevant circuits. Some systems may aid diagnosis by generating codes that indicate why the signal is deemed faulty.

**Examples**

*a) Open (high) or short (low) sensor circuit: The typical voltage range for a sensor with a 5.0 volt reference supply may be 4.8 to 0.2 volts. If the ECM detects voltage above 4.8 at the higher end or voltage less than 0.2 at the lower end, a fault code will be generated. Reasons for a high voltage are typically a defective component, an open-circuit, an absent 5.0 volt reference voltage or the reference voltage might be shorted to battery positive. Reasons for a low voltage are typically a defective component or a short to earth.*

*b) If the actuator signal is high, the fault is likely to be an open driver circuit or the ECM is not completing the circuit by "driving" the relevant ECM pin to earth.*

*c) If the actuator signal is low, the signal is shorted to earth or the component voltage supply is absent.*

*d) Implausible codes are created with reference to other circuits, and where the ECM has no direct evidence of a fault. If the engine speed is increasing, the throttle position sensor indicates a wide-open throttle yet the airflow sensor (AFS) does not indicate an increase in airflow - the AFS signal is implausible, and a fault code would be generated.*

*e) Out-of-range faults are stored if the signal voltage or current does not change as expected over a period of time.*

*f) Adaptive faults usually occur due to external influences. For example, a mixture problem will affect the oxygen sensor adaptive control, while a cooling system fault might cause overheating which in turn may affect adaptive knock control.*

**9** If fault codes are not stored, use the FCR to view Datastream (live data on system sensors and actuators, not available for all systems) or follow the symptom-driven fault diagnosis charts listed in the companion title - "Haynes Engine Management Techbook".

**10** Use a fault code reader to interrogate the ECM via the SD connector.

**11** Once the FCR has diagnosed one or more faults, further tests are usually required, and the technician may use the FCR (where possible), or it may be necessary to use a digital multi-meter (DMM) or an oscilloscope to complete the diagnosis. Refer to the component tests in Chapter 4. Test specifications and specific wiring diagrams will be required to carry out those tests correctly.

**12** If more than one code is generated, it is usually best to test and cure each component in the same order in which they are generated.

**13** Once the FCR has found a fault, a Datastream enquiry (some systems only) is a quick method of determining where the fault might lie. This data may take various forms, but is essentially electrical data on voltage, frequency, dwell or pulse duration, temperature etc provided by the various sensors and actuators. Unfortunately, such data is not available in all vehicle systems, and Datastream is not an option if you are working with flash codes. Since the data is in real time, various tests can be made, and the response of the sensor or actuator evaluated.

**14** Driving or actuating the system actuator such as the idle control valve, relays or injectors through the ECM is an excellent method of testing effectiveness of the actuator and associated wiring circuit. If the actuator operates when driven in this fashion you have proved that there is little wrong in the circuit or component.

**15** It may also be possible to test the signal from certain sensors (only where provided by the system software). For example, A check could be made of the throttle position sensor signal as the throttle is moved from the closed to the fully-open position and then returned to the closed position. A fault will be registered if the potentiometer track is deemed to be defective. If this test is made on Volvo vehicles the ECM will generate a code where the test is deemed satisfactory. Lack of a code indicates a fault in the component or circuit.

**16** Use an oscilloscope or DMM to check voltages at the faulty component. Compare with the vehicle specifications in the relevant system Chapter.

**17** Use an ohmmeter to check the faulty circuit for continuity of the wiring and component resistance. Compare with the vehicle specifications in the relevant system Chapter.

**18** A faulty circuit should be tested and any faults that are discovered must be repaired. The FCR should then be used to clear the errors, and the ECM interrogated once again to see if other fault codes are still present.

**19** An important point to bear in mind is that the ECM will only store faults about the electronic circuits. Mechanical faults, ignition secondary faults or fuel problems will still require diagnosis using time-honoured methods.

**20** Road test the vehicle and then recheck the SD system for faults. If faults have returned, or are still present, more tests will be required.

**Important note:** *Test procedures may involve routines that could cause one or more additional fault codes to be stored. This fact should be recognised during tests, and all codes must be cleared once testing is complete.*

## Intermittent faults

**21** Wiggle the component wiring, apply heat from a hairdryer, or freeze with a cold spray.

**22** Intermittent faults can be extremely difficult to find, and on-road testing is often desirable, with fault codes or Datastream information being generated as the fault occurs. Take the vehicle for a road test with the fault code reader or digital multi-meter attached.

**23** If the vehicle ECM and your FCR provide a snapshot (recorder) mode, hook up the FCR and take the vehicle for a road test with an assistant. Ask the assistant to start the snapshot routine to record data when the fault occurs. Return to the workshop and evaluate the data.

# Basic inspection

No matter what is the problem, the following checks are an essential pre-requisite to the use of diagnostic equipment. In many instances, the fault will be revealed during these procedures. Make a careful visual inspection of the following items. Not all checks will be appropriate for all engines. This basic inspection can save a great deal of valuable diagnostic time. Worn but electrically-sound components do not always fail tests.

- ☐ Check the engine oil level and oil condition. Maintenance of the lubrication system is particularly important for good engine operation. In catalyst-equipped vehicles, contaminated oil, a poorly-maintained PCV system or an oil-burning engine will contaminate the catalyst in a very short period of time.
- ☐ Check the crankcase breather (PCV) system condition. Clean all filters (there will be at least one to the air cleaner), clean away accumulated sludge, and ensure that the hoses are clear.
- ☐ Check the coolant level and cooling system condition. Maintenance of the cooling system is particularly important for good engine operation. An engine that is overcooled or running too hot will cause an incorrect coolant temperature sensor signal to be passed to the EMS, which may result in incorrect output signals. This will affect timing and fuelling actuation.
- ☐ Check the automatic transmission fluid level and condition, where applicable.
- ☐ Check the battery condition.
- ☐ Check the battery for security.
- ☐ Check the battery electrolyte level.
- ☐ Check the battery cables and connections.
- ☐ Check the drivebelt(s) condition and tension.
- ☐ Check the operation of the charging system (alternator and associated wiring).
- ☐ Remove the spark plugs and check the condition. Renew if necessary.
- ☐ Check that the spark plug electrode gap is correct.
- ☐ Check that the spark plug type is the correct type for the vehicle.
- ☐ Check the HT leads very carefully. A defective lead may not be immediately apparent to the naked eye - if the age of the leads is not known, or if a mixture of different leads has been fitted, replace the leads as a set.
- ☐ If the HT lead condition is satisfactory, check that the leads are routed sensibly in the engine compartment. It is not desirable to have a significant length of lead in contact with a metal component, or one which will become hot. HT leads should be kinked as little as possible - if the lead is bent back on itself, the lead may be fractured or the insulation may break down.
- ☐ Remove the distributor cap and check the condition, both external and internal. Look for cracks or signs of tracking.
- ☐ Look for oil or water that may have seeped into the cap through a defective seal.
- ☐ Check the rotor arm condition and measure the resistance where appropriate. Take care when trying to remove the rotor arm, as it may be bonded to the distributor shaft.
- ☐ Check the coil tower condition. Look for cracks or signs of tracking.
- ☐ Visually inspect all connections, multi-plugs and terminals. Check for corrosion and loose or displaced terminals.
- ☐ Check for air/vacuum leaks. Check the vacuum hoses, inlet manifold, air trunking, oil dipstick seal and rocker cover seal.
- ☐ Check the air filter condition. Renew if it is even slightly dirty.
- ☐ Check the exhaust system condition.
- ☐ Check the fuel system condition. Check for fuel leaks, and for worn or broken components. If available, the probe from a gas analyser with HC meter can be passed over the fuel and evaporation pipes and hoses. If the HC meter registers a measurement, that component may be leaking fuel or vapour.
- ☐ Check the throttle body for a carbon build-up - usually as a result of fumes from the crankcase breather system. The carbon can cause a sticking or jacked-open throttle, which can cause idle, cruising and other running problems. Carburettor cleaning fluid usually cleans away the carbon nicely.



# Digital multi-meter (DMM) tests

## 2 Introduction

Generally speaking, test results obtained using a voltmeter or oscilloscope (particularly recommended) are more reliable and may reveal more faults than the ohmmeter. Voltage tests are much more dynamic and are obtained with voltage applied to the circuit, which is far more likely to reveal a problem than if the circuit is broken and the component measured for resistance. In some instances, disconnecting a multi-plug may break the actual connection that is at fault, and the circuit test may then reveal "no fault found".

In addition, the oscilloscope may reveal some faults that the voltmeter fails to find. The 'scope is particularly useful for analysing and displaying the complex signals and waveforms from some sensors and actuators. With the proliferation of small, portable handheld oscilloscopes at a cost of less than £2500, the 'scope is not quite in the province of the home mechanic, but every workshop that is serious about fault diagnosis should certainly have one.

For the purposes of this book, we will generally test the majority of components with reference to the voltmeter. Resistance or continuity tests using an ohmmeter will be mentioned where appropriate.

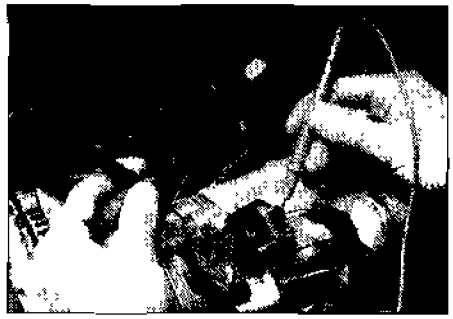

**3.2 The art of backprobing for DC voltage - circuit multi-plugs connected and ignition on. Attach the negative probe to an engine earth and push the positive probe past the insulation boot until it makes contact with the terminal connection**

Ideally, the connection point for measuring data values from sensors and actuators is at the ECM multi-plug (with the ECM multi-plug connected). The ECM multi-plug is the point through which all incoming and outgoing signals will pass, and dynamically testing at this point is considered to give more accurate results. However, for a variety of reasons, it is not always possible to test at the ECM multi-plug - other points of testing will usually give satisfactory results.

## 3 Voltage tests

### *Connecting equipment probes*

**1** Connect the voltmeter negative probe to an engine earth.

**2** Use the positive probe to backprobe for voltage at the actual terminals of the component under test **(see illustrations 3.2 and 3.3). Note:** *This procedure will give acceptable results in most instances, and is one that we would recommend to non-professionals.*

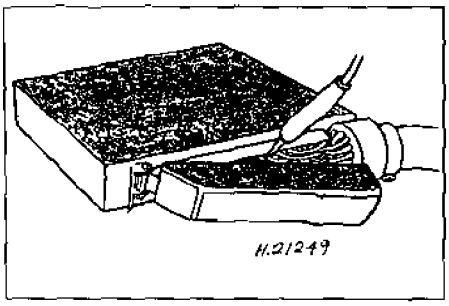

3.3 Backprobing at the ECM terminals

3 Alternatively, if possible, peel back the insulated boot to the ECM multi-plug and backprobe the terminals using the equipment probes.

4 If the ECM terminals are not accessible, then ideally connect a break-out box (BOB) between the ECM and its multi-plug. This is the preferred method and will avoid any possibility of damage to the ECM terminals. Otherwise, the ECM multi-plug could be disconnected and the ECM multi-plug terminals probed for voltages. **Note:** *This procedure is mainly used for checking voltage supplies to the ECM and integrity of the earth connections.*

***Warning: Refer to Warning No 3 (in the Reference Section at the end of this book) before disconnecting the ECM multi-plug.***

5 Unless otherwise stated, attach the voltmeter negative test lead to an earth on the engine, and probe or backprobe the component terminal under test with the voltmeter positive test lead.

***Warning: DO NOT push round tester probes into square or oblong terminal connectors. This leads to terminal deformation and poor connections. A split pin is the correct shape for inserting into square or oblong terminals.***

6 In this book, the multi-plug diagram usually shows the terminals of the harness connector. When back-probing the multi-plug (or viewing the sensor connector terminals), the terminal positions will be reversed.

### Probing for supply or reference voltage

7 With the ignition on, and the component multi-plug connected or disconnected as stated in the appropriate test, probe or backprobe for nominal battery voltage or the reference voltage 5.0 volt supply.

### Probing for signal voltage

8 With the ignition on, and the component multi-plug connected, backprobe for nominal battery voltage or the reference voltage 5.0 volt supply.

### Earth or return

#### Method 1

9 With the ignition on, and the component multi-plug connected, backprobe for 0.25 volts max. The voltage at the earth or return connection to the majority of sensors should be less than 0.15 volts.

#### Method 2

10 This procedure can be carried out with the component multi-plug connected or disconnected. Attach the voltmeter positive test lead to the supply or reference terminal, and the voltmeter negative test lead to the earth or return terminal. The voltmeter should indicate supply voltage if the earth is satisfactory.

## 4 Resistance tests

1 Ensure that the ignition is off and that the circuit or component under test is isolated from a voltage supply.

***Warning: DO NOT push round tester probes into square or oblong terminal connectors. This leads to terminal deformation and poor connections. A split pin is the correct shape for inserting into square or oblong terminals.***

2 Circuits that begin and end at the ECM are best tested for resistance (and continuity) at the ECM multi-plug, after it has been disconnected **(see illustration 3.4)**.

***Warning: Refer to Warning No 3 (in the Reference Section at the end of this book) before disconnecting the ECM multi-plug.***

3 The use of a break-out box (BOB) is also recommended for resistance tests, but the BOB must be connected to the ECM multi-plug, and **not** to the ECM itself.

4 If the resistance test for a sensor circuit is made at the ECM multi-plug pins, and the sensor has a common connection to the ECM (either through a 5.0 volt reference supply and/or a sensor earth return), the multi-plug connectors for the remaining components must be disconnected. If this procedure is not followed, the results may be inaccurate.

5 When checking continuity of a circuit or continuity to earth, the maximum resistance should be less than 1.0 ohm.

6 When checking the resistance of a component against specifications, care should be taken in evaluating the condition of

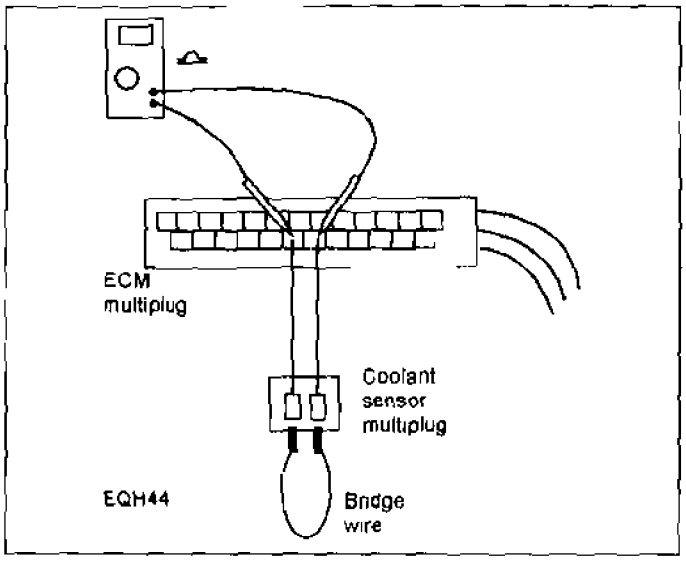


3.4 Check continuity of circuit between the ECM and the component multi-plug

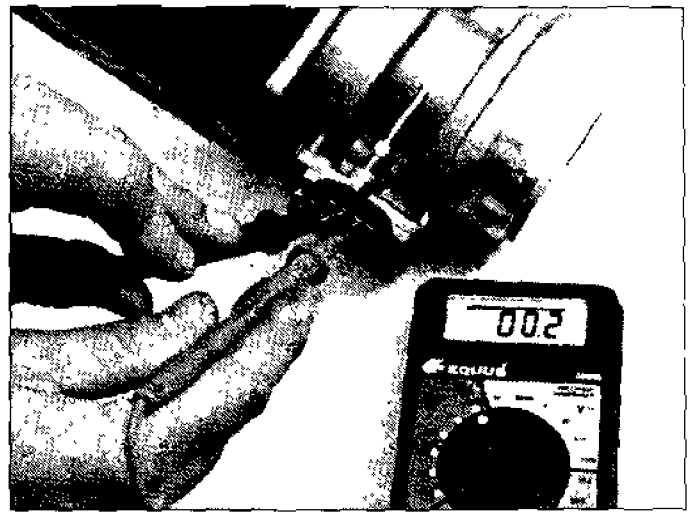


3.5 Measuring resistance: Detach the circuit multi-plug, select the appropriate resistance range and then touch the probes to the two terminals under test

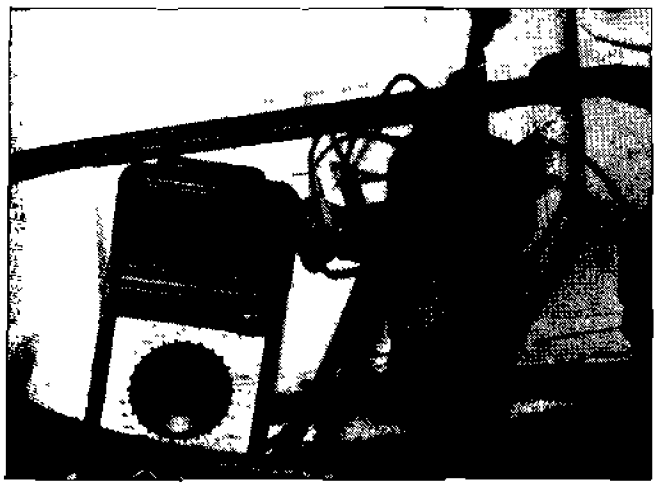

3.6 Connect the dwell meter positive probe to the coil negative terminal 1 and measure the duty cycle at various engine-operating speeds



3.7 Using a variable potentiometer to vary the CTS resistance. Voltage change can be measured and the engine can be fooled into thinking it is cold or hot when the reverse is the case. This means that simulated cold running tests can be accomplished with the engine hot and without waiting for it to cool

that component as the result of a good or bad test result. A component with a resistance outside of its operating parameters may not necessarily be faulty. Conversely, a circuit that measures within its operating parameters may still be faulty. However, an open-circuit or a very high resistance will almost certainly be indicative of a fault. The ohmmeter is more useful for checking circuit continuity than it is for indicating faulty components **(see illustration 3.5)**

### *Checking for continuity of circuit*

**Note:** *These tests can be used to quickly check for continuity of a circuit between most components (sensors and actuators) and the ECM*

7 Disconnect the ECM multi-plug

***Warning: Refer to Warning No 3 (in the Reference Section at the end of this book) before disconnecting the ECM multi-plug.***

8 Disconnect the component multi-plug, and connect a temporary bridge wire between terminals 1 and 2 at the component multi-plug

9 Identify the two ECM pins which are connected to the component under test.

10 Connect an ohmmeter between the two pins at the ECM multi-plug. The meter should display continuity of the circuit.

11 If there is no continuity, check for a break in the wiring or a bad connection between the ECM pin and its corresponding terminal at the multi-plug.

12 Move one of the ohmmeter probes and touch to earth. The ohmmeter should display an open-circuit

13 If the component is connected to the ECM by more than two wires, repeat the test using a combination of two wires at one time.

## 5 Duty cycle tests

### *Connecting equipment probes*

1 Connect the negative dwell meter probe to an engine earth.

2 Use the positive probe to backprobe the signal terminal of the component under test **(see illustration 3.6)**.

3 Make the duty cycle tests at various engine temperatures, with the engine cranking or running and at different engine speeds.

### *Possible dwell meter problems*

#### Use of dwell meter during primary cranking tests

4 Although meaningful readings can generally be obtained with most modern DMMs, it is true that some may not be totally accurate during a cranking test on the primary ignition. This occurs when the meter's own preset trigger level may not be suitable for capturing the true voltage level of the component being tested.

#### Use of dwell meter during injector tests

5 Where the injector is either the current controlled type or the peak and hold kind; very few dwell meters may be capable of registering the rapid pulsing to earth or the current holding that occurs during the second stage of the pulse duration. The meter may only register the switch-on circuit of approximately 1.0 or 2.0%. This means that the injector duty cycle reading will be inaccurate and not representative of the total pulse width seen in the circuit.

## 6 Variable potentiometer

1 It can be very useful to make certain tests on an engine at various operating temperatures. If the engineer has to wait for the engine to cool, reach normal operating temperature or any other important temperature, the task of testing can be irksome and prolonged. Most fuel injection ECMs (and some electronic ignition ECMs) recognise engine temperature by monitoring the voltage signal returned from the coolant temperature sensor (CTS). **Note:** *In a very few instances this signal may be returned from the oil temperature sensor (OTS) in addition or instead of the CTS.*

2 If a variable resistor (potentiometer) is connected between the CTS or OTS terminals **(see illustration 3.7)** the engine temperature may be simulated over the entire engine operating temperature range. Obtain a variable resistor (potentiometer or "pot"), a simple pot can be obtained from an electrical/electronic component store. Although the simple pot type is adequate for most tests, we recommend the use of the best quality pot that you can obtain. A good quality pot will give more "feel" and better control of the engine. The pot range should be from 1 ohm to 100 000 ohms.

### *Testing procedure*

**3** The following procedures should be followed when using the pot with either the OTS or CTS:

*a) Disconnect the CTS multi-plug.*

*b) Connect the pot between the two multi-plug terminal.*

*c) Set the pot to the correct resistance for the temperature that you wish to simulate.*

*d) Vary the resistance and make the test procedures as required.*

*e) On some engines you will set fault codes during test procedures, and these codes must be erased after testing is completed.*

*f) Refer to the fault code section in the relevant Chapter for instructions on how to clear fault codes.*

# Chapter 4
# Component test procedures

## Contents


Introduction ..... 1
**Primary trigger test procedures**
General information ..... 2
Hall-effect sensor (HES) ..... 4
Inductive crank angle sensor (CAS) ..... 3
Optical crank angle sensor (CAS) ..... 5
**Primary ignition test procedures**
Primary ignition ..... 6
**Sensor test procedures**
Air temperature sensor (ATS) - NTC type ..... 8
Air temperature sensor (ATS) - PTC type ..... 9
Airflow sensor (AFS) ..... 7
Atmospheric pressure sensor (APS) ..... 10
CO/mixture potentiometer ("pot") ..... 11
Coolant temperature sensor (CTS) - NTC type ..... 12
Coolant temperature sensor (CTS) - PTC type ..... 13
Cylinder identification - Hall-effect sensor ..... 15
Cylinder identification (CID) - inductive sensor ..... 14
Cylinder identification and primary trigger - phase sensor faults ..... 16
Exhaust gas recirculation system (EGR) ..... 17
Fuel temperature sensor (FTS) - NTC type ..... 18
Fuel temperature switch (FS) - test procedure ..... 19
Knock sensor (KS) ..... 20
Manifold absolute pressure (MAP) sensor - analogue type ..... 21
Manifold absolute pressure (MAP) sensor - digital type ..... 22
Oil temperature sensor (OTS) - NTC type ..... 23
Power steering pressure switch (PSPS) test procedure ..... 24
Throttle potentiometer sensor (TPS or "throttle pot") ..... 26
Throttle switch (TS) ..... 25
Vehicle speed sensor (VSS) ..... 27
**Actuator test procedures**
Carbon filter solenoid valve (CFSV) ..... 28
Idle speed control ..... 29
Multi-point injection system (MPi) fuel injectors ..... 30
Single-point injection system (SPi) fuel injector ..... 31
Throttle body heater and manifold heater ..... 33
Variable induction solenoid (VIS) ..... 32
Variable valve timing control solenoid (VVTCS) ..... 34
Wastegate control solenoid (WCS) - turbocharged engines ..... 35
**ECM and fuel system test procedures**
ECM faults ..... 36
ECM voltage supplies and earths ..... 37
Fuel pump and circuit ..... 41
Inertia switch ..... 40
Mixture control or adaptive faults ..... 42
Oxygen sensor (OS) ..... 39
System relay ..... 38


### 1 Introduction

1 Refer to the Haynes companion volume, *"Automotive Engine Management and Fuel Injection Systems Manual"* (Book No 3344, available from the publishers of this title) for a description of the function of each component.

2 Prior to commencing tests on any of the EMS components, the following checks should always be made.

*a) Inspect the component multi-plug for corrosion and damage.*

*b) Check that the terminal pins in the multi-plug are fully pushed home and making good contact with the component* ***(see illustration 4.1)****.*

**Note:** *The test procedures described here are general in nature, and should be used in conjunction with a wiring diagram and specific measurement values for the system under test.*

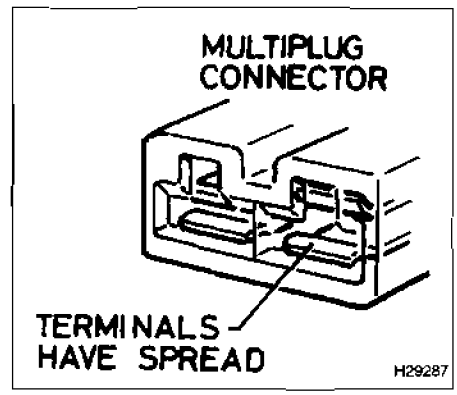


**4.1 Check that the terminal pins in the multi-plug connector are pushed home, and are not damaged, to ensure that a good contact is made with the component under test**

# Primary trigger test procedures

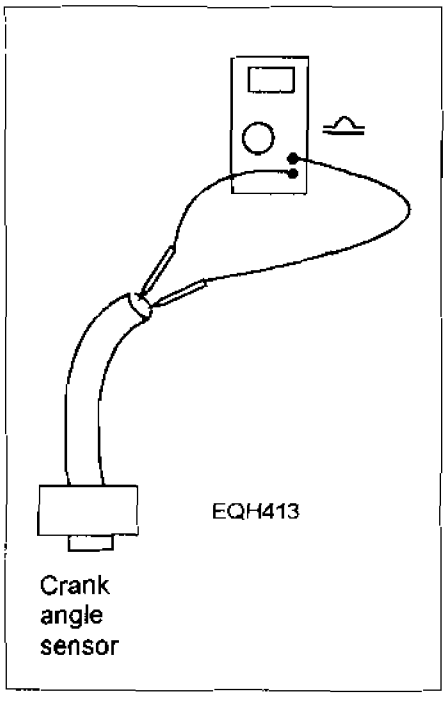


**4.2 Measure the CAS resistance**

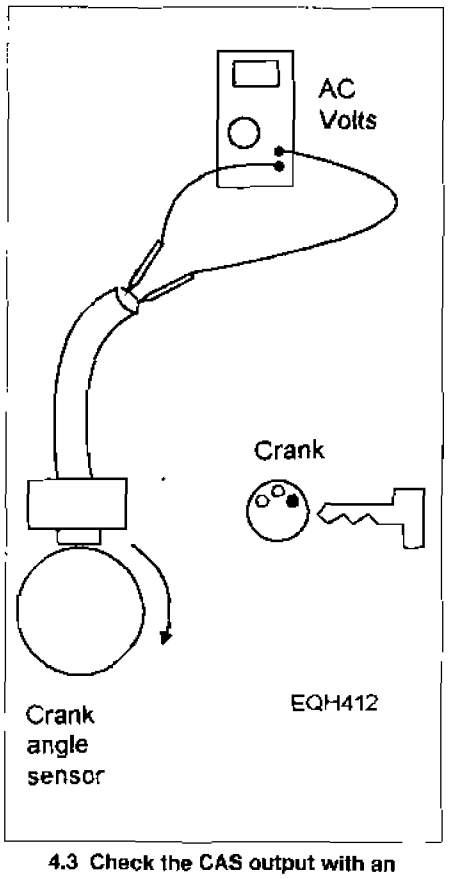


**4.3 Check the CAS output with an AC voltmeter**

## 2 General information

**1** The primary trigger is the most important sensor in the system. Until the ECM senses a signal from the primary trigger, the fuel pump relay, ignition and injection functions will not be actuated. Test procedures for the main types of trigger are detailed below.

**2** Either the engine will fail to start or will misfire if the primary trigger is defective. Both ignition and fuel injection will cease or be disrupted, depending on the severity of the fault. **Note:** *Some later systems may utilise the cylinder identification or camshaft signal if the primary trigger is defective, and the system will engage the limp-home or LOS function.*

**3** Some systems will generate a fault code if the ignition is turned on and the engine is not running (typical examples include Vauxhall and the VW/Audi group). The code is cleared from memory once the engine has successfully started.

## 3 Inductive crank angle sensor (CAS)

**Note:** *These tests are also generally applicable to RPM, TDC sensors and distributor-located inductive triggers.*

**1** Remove the CAS from the engine block, and inspect the end surface for corrosion and damage.

**2** Measure the CAS resistance **(see illustration 4.2)** and compare to the specifications for the vehicle being tested. Typical resistance for the CAS is in the range 200 to 1500 ohms. **Note:** *Even if the resistance is within the quoted specifications, this does not prove that the CAS can generate an acceptable signal.*

**3** Check the CAS signal **(see illustration 4.3)**:

*a) Where possible, an oscilloscope should be used to check for a satisfactory signal. A minimum AC peak-to-peak voltage of about 4.0 to 5.0 volts should be obtained. Check for even peaks. One or more peaks much smaller than the others would indicate a missing or damaged CAS lobe.*

*b) Detach the CAS or ECM multi-plug.*

***Warning: Refer to Warning No 3 (in the Reference Section at the end of this book) before disconnecting the ECM multi-plug.***

*c) Connect an AC voltmeter between the two terminals leading to the CAS. If a third wire is present, it will be a shield wire.*

*d) Crank the engine. A minimum AC RMS voltage of about 0.7 volts should be obtained, although most good sensors will provide an output of more than 1.4 AC RMS voltage.*

**Note:** *The AC voltmeter at least proves that a signal is being generated by the CAS. However, the AC voltage is an average voltage, and does not clearly indicate damage to the CAS lobes or that the sinewave is regular in formation.*

**4** In some systems, the CAS may be shielded. To test the shielding, proceed as follows.

*a) Locate the wiring multi-plug connector or disconnect the ECM multi-plug* **(refer to the warning above)**

*b) Attach an ohmmeter probe to one of the sensor terminals.*

*c) Attach the other ohmmeter probe to the shield wire terminal. A reading of infinity should be obtained.*

*d) Move the ohmmeter probe from the shield wire terminal and connect it to earth. A reading of infinity should also be obtained.*

**Note:** *The shield wire on the CAS in some systems is connected to the CAS earth return wire. In such a case, continuity will be registered on the ohmmeter, and this is normal for that vehicle. Refer to the wiring diagrams for the system under test to determine how the CAS is wired.*

## 4 Hall-effect sensor (HES)

### *Quick HES test (non-runner, no spark)*

**Note:** *In most systems the HES is located in the distributor. However, a flywheel-mounted HES is found in some VW/Audi systems.*

**1** Remove the HT "king" lead from the distributor cap centre tower, and connect it to the cylinder head via a spark jumper.

**2** Detach the HES multi-plug at the distributor **(refer to illustration 4.16)**.

**3** Identify the supply, signal and earth terminals.

**4** Briefly flash a small jumper lead between the (0) and (-) terminals on the HES harness multi-plug **(see illustration 4.4)**.

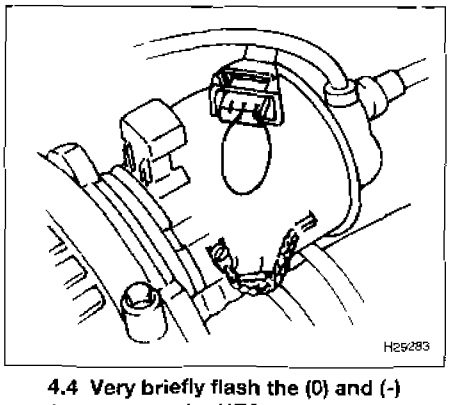


**4.4 Very briefly flash the (0) and (-) terminals at the HES multi-plug to check for a spark**

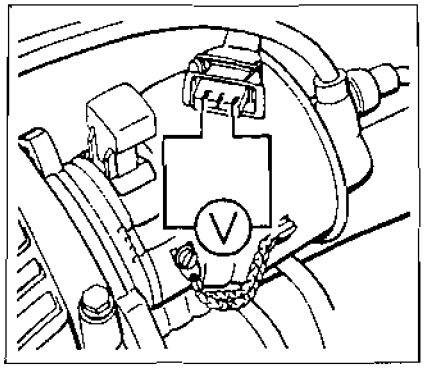

**4.5 Connect a voltmeter between the HES (+) and (-) terminals. As the engine is turned, a voltage of between 10 and 12 volts should be obtained**

5 If a spark jumps across the spark jumper terminals to the cylinder head, the coil and amplifier are capable of producing a spark, and the Hall switch in the distributor is suspect

### *HES test procedures*

6 Roll back the rubber protection boot to the HES multi-plug
7 Connect the voltmeter negative or dwell meter probe to an engine earth.
8 Identify the supply, signal and earth terminals
9 Connect the voltmeter positive or dwell meter probe to the wire attached to the HES signal terminal
10 Allow the engine to idle
11 An average voltage of approximately 7 to 8 volts, or an approximate duty cycle of 35% should be obtained

#### Signal voltage or duty cycle signal not available

12 Stop the engine, and remove the distributor cap.
13 With the HES multi-plug connected, and the ignition on, connect the voltmeter positive probe to the signal terminal **(see illustration 4.5)**.
14 Turn the engine over slowly. As the trigger vane cut-out space moves in and out of the air gap, the voltage should alternate between 10 to 12 volts and zero volts.

#### Signal voltage not available

15 Disconnect the HES multi-plug at the distributor
16 Probe output terminal 2 (O) of the harness multi-plug with the voltmeter positive probe A voltage of between 10 and 12 volts should be obtained
17 If there is no voltage from the ECM to terminal 2, check for continuity of the signal wiring between the HES and the ECM. Recheck for voltage at the ECM terminal. If no voltage is available at the ECM, check all voltage supplies and earth connections to the ECM If the voltage supplies and earth connections are satisfactory, the ECM is suspect.
18 Check the voltage supply (10 to 12 volts) at HES terminal number 1 (+). If the supply is unsatisfactory, check for continuity of the wiring between the HES and the ECM.
19 Check the earth connection at HES terminal number 3 (-).
20 If the voltage supply and earth are satisfactory, the HES in the distributor is suspect.

## 5 Optical crank angle sensor (CAS)

1 Recommended test equipment for measuring the optical CAS signal is an oscilloscope. However, a DMM that can measure volts, duty cycle, RPM (tachometer) and frequency could also be used to test for a rudimentary signal. **Note:** *Nissan and other Far Eastern manufacturers typically utilise the optical distributor as the primary trigger.*
2 Remove the distributor cap and visually inspect the rotor plate for damage and eccentricity. If necessary, remove the distributor from the engine and rotate the shaft. The shaft and rotor plate must rotate without deviation or distortion **(see illustration 4.6)**.

### *RPM signal output tests*

**Note:** *The CAS and ECM multi-plug must remain connected during signal output tests. The following tests are typical, and may need modifying for some applications due to variations in wiring.*
**Note:** *In order to conduct the RPM and TDC tests, it is also possible to remove the distributor from the engine, switch on the ignition and rotate the distributor shaft by hand.*
3 Connect the test equipment between terminals 1 (earth or signal return) and 4 (RPM signal) at the CAS multi-plug or the corresponding multi-plug terminals at the ECM.

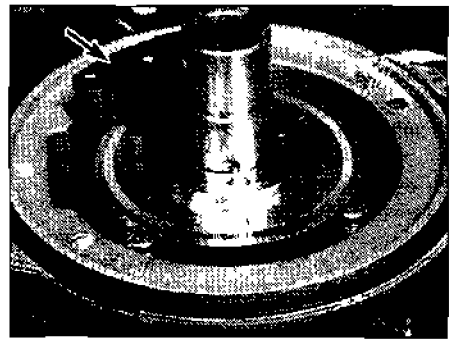

**4.6 Optical crank angle sensor. The arrow points to the optical pick-up. Beneath the pick-up is the rotor disc containing two rows of slits. The large rectangular slit indicates the position of number 1 cylinder**

4 Crank or run the engine.
5 On an oscilloscope, a high-frequency square waveform switching between zero and 5 volts should be obtained. Check for even peaks. One or more peak that is much smaller than the others could indicate a damaged slit.
6 A digital voltmeter should indicate switching between zero and 5 volts. The duty cycle, RPM and frequency meters should indicate a signal output. The frequency of the RPM signal should be greater than that obtained when testing the TDC sensor signal (see below).
7 If the signal is non-existent, very weak or intermittent, check for a voltage supply to CAS terminal 2 and check the CAS earth at terminal 1. Also check the sensor for damage, dirt or oil, the distributor and rotor plate for damage, and for continuity between the CAS signal terminal and the ECM pin.
8 Run the engine at various engine speeds, and check for a consistent signal that meets the same requirements as the cranking test.

### *TDC signal output tests*

**Note:** *The CAS and ECM multi plug must remain connected during signal output tests*
9 Connect the meter between terminals 1 (earth or signal return) and 3 (TDC signal) at the CAS multi-plug or the corresponding multi-plug terminals at the ECM.
10 Crank or run the engine.
11 On an oscilloscope, a high-frequency square waveform switching between zero and 5 volts should be obtained. Check for even peaks. One or more peak that is much smaller than the others could indicate a damaged slit.
12 A digital voltmeter should indicate switching between zero and 5 volts The duty cycle, RPM and frequency meters should indicate a signal output. The frequency of the TDC signal should be less than that obtained when testing the RPM sensor signal (see above).
13 If the signal is non-existent, very weak or intermittent, check for a voltage supply to CAS terminal 2 and check the CAS earth at terminal 1. Also check the sensor for damage, dirt or oil, the distributor and rotor plate for damage, and for continuity between the CAS signal terminal and the ECM pin
14 Run the engine at various engine speeds, and check for a consistent signal that meets the same requirements as the cranking test.

#### CAS shield connection

15 The CAS signal wires are shielded against RFI. Locate the wiring multi-plug connector or disconnect the ECM multi-plug. Attach an ohmmeter probe to the wire attached to sensor signal terminal 3, and attach the other ohmmeter probe to earth. A reading of infinity should be obtained.
16 Move the first ohmmeter probe to the wire attached to sensor signal terminal 4. A reading of infinity should also be obtained



4.7 Check the coil primary resistance. Disconnect the low tension wires and connect the ohmmeter between the positive and negative terminals

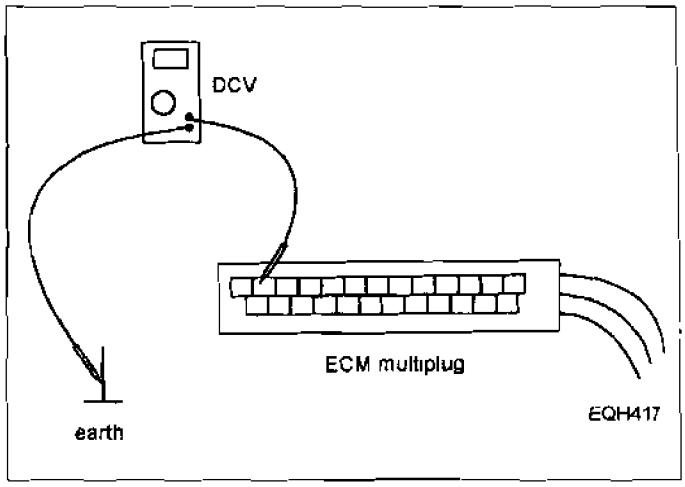


4.8 Detach the ECM multi-plug and check for battery voltage at the ECM primary ignition terminal

# Primary ignition test procedures

## 6 Primary ignition

### General

1 Check the coil terminals for good clean connections, and clean away accumulations of dirt and the residue from a maintenance spray. The residue will attract dirt, and this may lead to bleeding of the HT current to earth

2 Inspect the ignition coil for signs of tracking, particularly around the coil tower area.

**Note:** *Although the following tests are accomplished with the aid of a basic dwell meter, an oscilloscope is a more suitable instrument for analysing the signals generated by the primary ignition.*

### Engine non-runner test procedures

3 Connect the dwell meter negative probe to an engine earth.

4 Connect the dwell meter positive probe to the coil negative (-) terminal (usually marked 1 in Bosch systems).

5 Crank the engine on the starter.

6 A duty cycle reading of approximately 5 to 20% should be obtained. If there is a satisfactory primary signal, the primary ignition (including the primary trigger) are providing an acceptable signal.

### Primary signal not available (amplifier inside the ECM)

7 Check the primary trigger for a good signal (refer to CAS or HES test).

8 Switch on the ignition.

9 Check for a voltage supply to the coil positive (+) terminal (15). If there is no voltage, check the wiring back to the supply (usually the ignition switch, but could be one of the relays)

10 Check for voltage to the coil negative (-) terminal (1). If there is no voltage, remove the wire to the coil (-) terminal and recheck. If there is still no voltage, check the coil primary resistance **(see Illustration 4.7)**.

11 If the voltage is at nominal battery level, check for a short to earth between the coil number 1 terminal and the appropriate ECM pin If there is still no voltage, the coil is suspect

12 Detach the ECM multi-plug and check for battery voltage at the appropriate ECM pin **(see Illustration 4.8)**. If there is no voltage, check for continuity between the coil number 1 terminal and the appropriate ECM pin.

***Warning: Refer to Warning No 3 (in the Reference Section at the end of this book) before disconnecting the ECM multi-plug.***

13 If the wiring is satisfactory, check all ECM voltage supplies and earth connections. If testing reveals no faults, the ECM is suspect. However, a substitute ignition coil should be tried before renewing the ECM.

14 If the ignition system is of distributorless type (DIS), repeat the tests for the second or third coil (where fitted). The ECM connection varies according to system.

### Primary signal not available (separate external amplifier)

15 Check the primary trigger for a good signal (Refer to CAS or HES test).

16 Switch the ignition on.

17 Check for a voltage supply to the coil positive (+) terminal (15). If there is no voltage, check the wiring back to the supply (usually the ignition switch or one of the system relays).

18 Check for voltage to the coil negative (-) terminal (1). If there is no voltage, remove the wire to the coil (-) terminal and recheck. If there is still no voltage, check the coil primary resistance, the coil is suspect **(refer to illustration 4.4)**.

19 If the voltage is equal to battery voltage, check for a short to earth between the coil number 1 terminal and the amplifier. If the wiring is satisfactory, the amplifier is suspect.

20 Disconnect the amplifier multi-plug.

***Warning: Refer to Warning No 3 (in the Reference Section at the end of this book) before disconnecting the multi-plug.***

21 Check for voltage at the amplifier terminal that is connected to the ignition coil terminal 1 **(see Illustration 4.9)**. If there is no voltage, check for continuity of wiring between the amplifier and ignition coil terminal number 1.

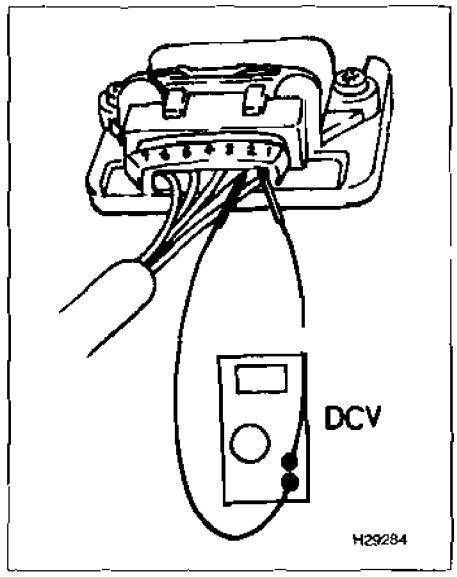


4.9 Checking for voltage at the amplifier terminal (1) that is connected to the ignition coil terminal No. 1. The voltmeter negative probe is connected to the amplifier earth connection (2)

22 Check for voltage to the amplifier from the ignition switch.
23 Check the amplifier earth connection.
24 Crank the engine and check for a control signal from the ECM to the amplifier. **Note:** *Although it is possible to use a dwell meter to check for a duty cycle signal from the ECM to the amplifier, the integrity of the signal may be difficult to establish. Once again, an oscilloscope is more likely to make sense of this signal.*
25 If there is no control signal, check the continuity of the wiring between the amplifier and the ECM terminal.
26 If the control signal is satisfactory, but there is no output from the amplifier, this suggests a faulty amplifier

27 If the wiring is satisfactory, check all ECM voltage supplies and earth connections. If testing reveals no faults, the ECM is suspect. However, a substitute ignition coil and/or amplifier should be tried before renewing the ECM.
28 If the ignition system is of distributorless type (DIS), repeat the tests for the second coil. The ECM connection varies according to system.

### Engine running test procedures

29 Connect the dwell meter negative probe to an engine earth.
30 Connect the dwell meter positive probe to the coil negative (-) terminal (usually marked 1 in Bosch systems).
31 Run the engine at idle and various speeds, and record the duty cycle values. Approximate values are given below:
*Idle speed - 5 to 20%*
*2000 rpm - 15 to 35%*
*3000 rpm - 25 to 45%*
32 It is important that the duty cycle in % increases in value as the engine rpm is raised. If your DMM can measure the duty cycle in ms, the reading should not change much in value as the engine rpm is raised.
33 Check the amplifier earth.
34 Check that devices such as a radio suppresser or anti-theft alarm have not been connected to the coil primary (–) terminal.
35 *All* other tests and any detailed primary analysis requires the aid of an oscilloscope.

# Sensor test procedures

## Airflow sensor (AFS)

### General

1 Inspect the air trunking from the AFS and check for splits, poor fitting or damage. A large vacuum leak at this point will cause the engine to fire but fail to continue running and a small vacuum leak will adversely affect the AFR.
2 The AFS may be one of various types: vane, KE-Jetronic, hot-wire, hot-film or vortex type, depending on system.

### Vane type AFS

3 Connect the voltmeter negative probe to an engine earth.
4 Identify the supply, signal and earth terminals.
5 Connect the voltmeter positive probe to the wire attached to the AFS signal terminal **(see illustration 4.10)**.
6 Remove the air trunking.
7 Remove the air filter box so that the AFS flap can be easily opened and closed.
8 Open and close the AFS flap several times and check for smooth operation. Also check that the flap does not stick.
9 Switch on the ignition (engine stopped). A voltage of approximately 0.20 to 0.30 volts should be obtained.
10 Open and close the flap several times, and check for a smooth voltage increase to a maximum of 4.0 to 4.5 volts **Note:** *If a digital voltmeter is used, then it is useful for it to have a bar graph facility. The smoothness of the voltage increase can then be more easily seen.*
11 Refit the air trunking. Start the engine and allow it to idle. A voltage of approximately 0.5 to 1.5 volts should be obtained.
12 Open the throttle to no more than 3000 rpm. A voltage of approximately 2.0 to 2.5 volts should be obtained

13 Snap open the throttle. A voltage greater than 3.0 volts should be obtained.

#### Erratic signal output

14 An erratic output occurs when the voltage output is stepped, drops to zero or becomes open-circuit.
15 When the AFS signal output is erratic, this usually suggests a faulty signal track or a sticking flap. In this instance, a new or reconditioned AFS may be the only cure.
16 Sometimes the wiper arm becomes disengaged from the signal track at certain points during its traverse. This can also give an erratic output.
17 Remove the top cover from the AFS and check that the wiper arm touches the track during its swing from the open to the closed position. Carefully bending the arm so that it touches the signal track, or careful cleaning of the track, can cure an erratic signal output.

#### Signal voltage not available

18 Check for the 5.0 volt reference voltage supply at the AFS supply terminal.
19 Check the earth return connection at the AFS earth terminal.
20 If the supply and earth are satisfactory, check for continuity of the signal wiring between the AFS and the ECM.
21 If the supply and/or earth are unsatisfactory, check for continuity of the wiring between the AFS and the ECM.
22 If the AFS wiring is satisfactory, check all voltage supplies and earth connections to the ECM. If the voltage supplies and earth connections are satisfactory, the ECM is suspect.

#### Signal or supply voltage at battery voltage level

23 Check for a short to a wire connected to the battery positive (+) terminal or a switched supply voltage.

#### Resistance tests

24 Connect an ohmmeter between the AFS signal terminal and supply terminal or the AFS signal terminal and earth terminal.
25 Open and close the AFS flap several times, and check for a smooth resistance change. As the AFS flap is moved slowly from the closed to the fully-open position, the AFS resistance may increase and decrease in a series of steps. This is normal. If the AFS resistance becomes open or short-circuit, a fault is revealed.
26 We are not providing resistance specifications for the AFS described in this book. It is less important that the resistance of the AFS remains within arbitrary values, than the operation is correct
27 Connect an ohmmeter between the AFS earth terminal and supply terminal. A stable resistance should be obtained.
28 Renew the AFS if the resistance is open-circuit or shorted to earth. Refer to the comments on resistance readings in Chapter 3.

### KE-Jetronic type AFS

29 The AFS in KE-Jetronic systems is attached to the metering unit sensor plate. As the sensor plate moves, the signal varies in a similar fashion to the vane AFS fitted in other systems.
30 The general method of testing, and the resistance and voltage values, are similar to the vane type AFS described above.

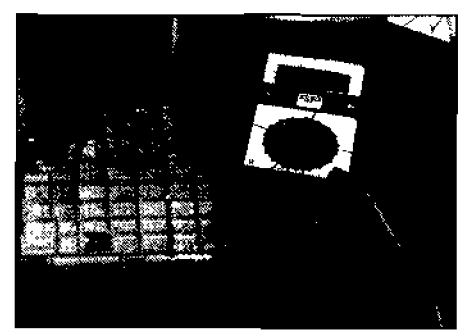

**4.10 Backprobing the AFS for voltage**

### *Hot-wire or Hot-film type AFS*

**Note:** *The voltage measurements are based on the Vauxhall 16-valve engines with Motronic 2.5. The readings from other vehicles should be similar.*

#### Signal wire

**31** Switch on the ignition. A voltage of approximately 1.4 volts should be obtained.
**32** Start the engine and allow it to idle. A voltage of approximately 2.0 volts should be obtained.
**33** Snap open the throttle several times. The voltage will not increase significantly over the idle value during this off-load test. **Note:** *If a digital voltmeter is used, then it is useful for it to have a bar graph facility. The smoothness of the voltage increase can then be more easily seen.*
**34** It is less easy to test the AFS hot-wire signal output because it is impossible to simulate full-load conditions in the workshop without putting the vehicle on a chassis dynamometer (rolling road). However, the following test procedure will usually prove if the signal output is consistent.
**35** Disconnect the air trunking so that the hot-wire is exposed
**36** Switch on the ignition.
**37** Use a length of plastic tubing to blow air over the hot-wire.
**38** It should be possible to plot a voltage curve, although the curve will be much steeper than that obtained with the engine running.

#### Erratic signal output

**39** The signal output is erratic when the voltage does not follow a smooth curve, if the voltage drops to zero, or if it becomes open-circuit.
**40** Check the AFS resistance as follows. Connect an ohmmeter between AFS terminals 2 and 3. A resistance of approximately 2.5 to 3.1 ohms should be obtained.
**41** When the AFS signal output is erratic, and all supply and earth voltages are satisfactory, this suggests a faulty AFS. In this case, a new or reconditioned AFS may be the only cure.

#### Signal voltage not available

**42** Check for the battery voltage supply to AFS terminal number 5.

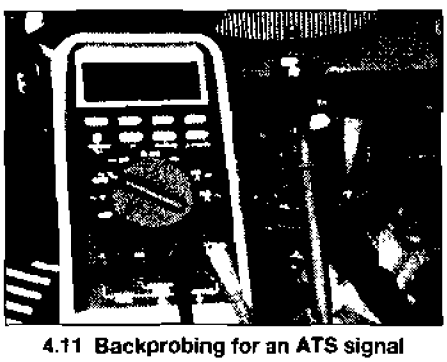

**4.11 Backprobing for an ATS signal (ATS located in the air filter box)**

**43** Check the earth return connection at AFS terminal number 2.
**44** Check the earth connection at AFS terminal number 1.
**45** If the supply and earths are satisfactory, check for continuity of the signal wiring between the AFS and the ECM.
**46** If the supply and/or earths are unsatisfactory, check for continuity of the supply and/or earth wiring between the AFS and the ECM.
**47** If the AFS wiring is satisfactory, check all voltage supplies and earth connections to the ECM. If the voltage supplies and earth connections are satisfactory, the ECM is suspect.

### *Vortex type AFS*

**48** The vortex type AFS relies on the intake manifold design to create a turbulent airflow. A radio signal is passed through the airflow as it flows through the sensor. Variations in the turbulence cause a change in frequency that the sensor returns to the ECM as a measure of airflow into the engine.
**49** Identify the signal terminal. At idle speed, the signal output should be typically 27 to 33 Hz. The frequency will increase as the engine speed is increased
**50** Identify the earth terminals. A voltage of less than 0.2 volts should be obtained.
**51** Identify the supply terminal. Battery voltage should be obtained.
**52** It is probable that the sensor will also house air temperature and air pressure sensors. These sensors should be tested as described under the test for the appropriate sensor.

## 8 Air temperature sensor (ATS) - NTC type

**1** The majority of ATSs used in motor vehicles are of the NTC type. A negative temperature coefficient (NTC) sensor is a thermistor in which the resistance decreases as the temperature rises. A positive temperature coefficient (PTC) sensor is a thermistor in which the resistance rises as the temperature rises.
**2** The ATS may be located in the inlet tract of the airflow sensor or in the inlet manifold. If the ATS is located in the airflow sensor, it shares a common earth return. Both types of ATS are examples of two-wire sensors, and test procedures are similar.
**3** Connect the voltmeter negative probe to an engine earth.
**4** Identify the signal and earth terminals.
**5** Connect the voltmeter positive probe to the wire attached to the ATS signal terminal **(see illustration 4.11)**.
**6** Switch the ignition on (engine stopped).
**7** A voltage of approximately 2 to 3 volts, depending upon air temperature, is likely to be obtained. Refer to the ATS chart for typical voltages at various temperatures.
**8** The signal voltage will vary according to the temperature of the air in the AFS inlet tract or inlet manifold. As the engine compartment or inlet manifold air rises in temperature, the voltage signal passed to the ECM will reduce. When the engine is cold, the air temperature will match the ambient temperature. After the engine has started, the temperature of the air in the engine compartment and the inlet manifold will rise. The temperature of the air in the inlet manifold will rise to approximately 70° or 80°C, which is a much higher temperature than that of the air in the engine compartment.
**9** When undergoing tests at various temperatures, the ATS can be warmed with a hair-dryer or cooled with a product like *"Freezit"*, which is an ice cold aerosol spray, sold in electronic component shops. As the ATS is heated or cooled, the temperature will change and so too will the resistance and voltage.

### *ATS voltage and resistance table (typical NTC type)*

| Temp (°C) | Resistance (ohms) | Volts |
|---|---|---|
| *0* | *4800 to 6600* | *4.00 to 4.50* |
| *10* | *4000* | *3.75 to 4.00* |
| *20* | *2200 to 2800* | *3.00 to 3.50* |
| *30* | *1300* | *3.25* |
| *40* | *1000 to 1200* | *2.50 to 3.00* |
| *50* | *1000* | *2.50* |
| *60* | *800* | *2.00 to 2.50* |
| *80* | *270 to 380* | *1.00 to 1.30* |
| *110* | | *0.50* |
| | *Open-circuit* | *5.0 ± 0.1* |
| | *Short to earth* | *Zero* |

**10** Check that the ATS voltage corresponds to the temperature of the ATS. A temperature gauge is required here.
**11** Start the engine and allow it to warm up to normal operating temperature. As the engine warms up, the voltage should reduce in accordance with the ATS chart.
**12** Proceed with the following tests and checks if the ATS signal voltage is zero (supply is open-circuit or shorted to earth) or at 5.0 volt level (ATS is open-circuit).

#### Zero volts obtained at the ATS signal terminal

**13** Check that the ATS signal terminal is not shorted to earth.
**14** Check for continuity of the signal wiring between the ATS and the ECM.
**15** If the ATS wiring is satisfactory, yet there is no voltage is output from the ECM, check all voltage supplies and earth connections to the ECM. If the voltage supplies and earth connections are satisfactory, the ECM is suspect.

#### 5.0 volts obtained at the ATS signal terminal

**16** This is the open-circuit voltage, and will be obtained in the event of one or more of the following conditions:
*a) The signal terminal in the ATS (or AFS) multi-plug is not making contact with the ATS.*

*b) The ATS is open-circuit*
*c) The ATS earth connection is open circuit*

**Signal or supply voltage at battery voltage level**

17 Check for a short to a wire connected to the battery positive (+) terminal or a switched supply voltage

### *Resistance tests with an ohmmeter*

18 A resistance test may be made at various temperatures, and a comparison made with the temperature/resistance chart Refer to the voltage tests above for a method of heating/cooling the ATS
19 When the ATS resistance is within the stated parameters for a cold engine (20°C) the coolant temperature should also be within ± 5°C of that figure

## 9 Air temperature sensor (ATS) - PTC type

1 The PTC type ATS is fitted to a small number of systems (mainly Renault vehicles) A positive temperature coefficient (PTC) sensor is a thermistor in which the resistance rises as the temperature rises
2 The general method of testing is similar to the NTC type previously described, with reference to the values in the ATS (PTC) resistance and voltage table

2 Connect the negative oscilloscope or voltmeter probe to an engine earth, or to the earth return at terminal 1 of the APS sensor.
3 Connect the positive oscilloscope or voltmeter probe to the wire attached to the APS sensor signal terminal
4 Switch the ignition on
5 The voltage generated by atmospheric pressure at sea level may be typically 3 0 volts. The voltage will change slightly to reflect changes in pressure and also when the vehicle operates at different altitudes The changes in voltage are likely to be relatively small If the voltage does not fall within the expected parameters, continue with the following tests

**Signal voltage not available**

6 Check the reference voltage supply - usually 5 0 volts
7 Check the earth return. Expect a voltage less than 0 25 volts
8 If the supply and earth are satisfactory, check for continuity of the signal wiring between the APS sensor and the ECM.
9 If the supply and/or earth are unsatisfactory, check for continuity of the wiring between the APS sensor and the ECM
10 If the APS sensor wiring is satisfactory, check all voltage supplies and earth connections to the ECM If the voltage supplies and earth connections are satisfactory, the ECM is suspect

**Signal or supply voltage**

9 Record the exact voltage so that the voltage can be reset to the exact value after tests are complete
10 Remove the tamperproof cap from the adjustment screw
11 Turn the adjustment screw one way and then the other The voltage should vary smoothly

**CO pot voltage does not alter during adjustment**

12 Check for the 5 0 volt reference voltage supply to the sensor
13 Check the earth return connection to the sensor
14 If the supply and earth are satisfactory, check for continuity of the signal wiring between the CO pot and the ECM
15 If the supply and/or earth are unsatisfactory check for continuity of the supply and/or earth wiring between the CO pot or AFS (as appropriate) and the ECM
16 If the AFS wiring is satisfactory, check all voltage supplies and earth connections to the ECM If the voltage supplies and earth connections are satisfactory, the ECM is suspect

## 12 Coolant temperature sensor (CTS) - NTC type

1 The majority of CTSs used in motor

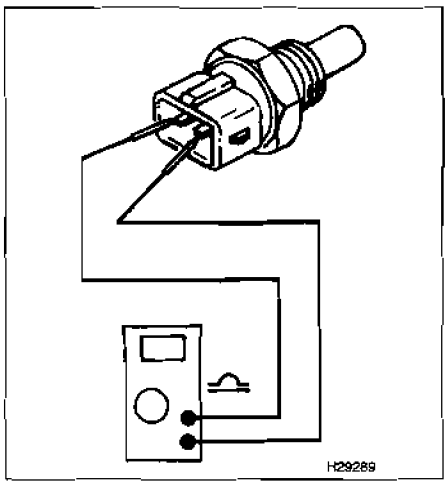


**4.14 Checking the CTS resistance**

**5** Connect the voltmeter positive probe to the wire attached to the CTS signal terminal.
**6** With the engine cold and not running, switch on the ignition.
**7** A voltage of approximately 2 to 3 volts, depending upon temperature, is likely to be obtained. Refer to the CTS chart below for typical voltages at various temperatures.

### *CTS voltage and resistance table (typical)*

| Temp (°C) | Resistance (ohms) | Volts |
|---|---|---|
| *0* | *4800 to 6600* | *4.00 to 4.50* |
| *10* | *4000* | *3.75 to 4.00* |
| *20* | *2200 to 2800* | *3.00 to 3.50* |
| *30* | *1300* | *3.25* |
| *40* | *1000 to 1200* | *2.50 to 3.00* |
| *50* | *1000* | *2.50* |
| *60* | *800* | *2.00 to 2.50* |
| *80* | *270 to 380* | *1.00 to 1.30* |
| *110* | | *0.50* |
| | *Open-circuit* | *5.0 ± 0.1* |
| | *Short to earth* | *zero* |

**8** Check that the CTS voltage corresponds to the temperature of the CTS. A temperature gauge is required here
**9** Start the engine and allow it to warm up to normal operating temperature. As the engine warms up, the voltage should reduce in accordance with the CTS chart.

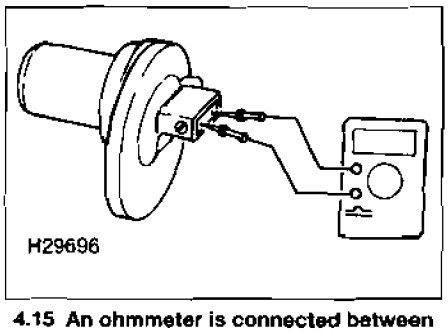


**4.15 An ohmmeter is connected between the two terminals to check the resistance of the inductive phase sensor (CID)**

**10** A common problem may occur where the CTS varies in resistance (and voltage) outside of its normal range. If the CTS voltage measurement is normally 2 volts cold/0.5 volts hot, a faulty CTS may give a voltage of 1.5 volts cold/1.25 volts hot, resulting in the engine being difficult to start when cold and running richer than normal when hot. This will **not** result in the generation of a fault code (unless the ECM is programmed to recognise voltage changes against time) because the CTS is still operating within its design parameters. Renew the CTS if this fault occurs. **Note:** *The above example is typical, and not meant to represent an actual voltage obtained in a particular system under test.*
**11** Proceed with the following tests and checks if the CTS signal voltage is zero (supply is open-circuit or shorted to earth) or at 5.0 volt level (CTS is open-circuit).

#### Zero volts obtained at the CTS signal terminal

**12** Check that the CTS signal terminal is not shorted to earth.
**13** Check for continuity of the signal wiring between the CTS and the ECM.
**14** If the CTS wiring is satisfactory, yet no voltage is output from the ECM, check all voltage supplies and earth connections to the ECM. If the voltage supplies and earth connections are satisfactory, the ECM is suspect.

#### 5.0 volts obtained at the CTS signal terminal

**15** This is the open-circuit voltage, and will be obtained in the event of one or more of the following conditions:

*a) The signal terminal in the CTS multi-plug is not making contact with the CTS.*
*b) The CTS is open-circuit.*
*c) The CTS earth connection is open-circuit.*

#### Signal or supply voltage at battery voltage level

**16** Check for a short to a wire connected to the battery positive (+) terminal or a switched supply voltage.

### *Resistance tests with an ohmmeter*

#### CTS on vehicle

**17** A resistance test may be made at various temperatures and a comparison made with the temperature/resistance chart **(see illustration 4.14)**. When the resistance is within the stated parameters for a cold engine (20°C), the coolant temperature should be within ±5°C of that figure.
**18** An allowance should be made for a temperature obtained by probing the outside of the CTS or coolant passage. This is because the actual temperature of the coolant may be hotter than the surface temperature of the CTS.

#### CTS off vehicle

**19** Place the CTS in a suitable container of water, and measure the temperature of the water.
**20** Measure the resistance of the CTS, and check the resistance against the temperature chart.
**21** Heat the water, periodically measuring the water temperature and the CTS resistance and comparing the resistance with the temperature chart.

## 13 Coolant temperature sensor (CTS) - PTC type

**1** The PTC type coolant temperature sensor is fitted to a small number of systems (mainly Renault vehicles). A positive temperature coefficient (PTC) sensor is a thermistor in which the resistance rises as the temperature rises.
**2** The general method of testing is similar to the NTC type previously described; with reference to the values in the CTS (PTC) resistance and voltage table.

### *CTS resistance and voltage table (typical PTC type)*

| Temp (°C) | Resistance (ohms) | Volts |
|---|---|---|
| *0* | *254 to 266* | |
| *20* | *283 to 297* | *0.6 to 0.8* |
| *80* | *383 to 397* | *1.0 to 1.2* |
| | *Open-circuit* | *5.0 ± 0.1* |
| | *Short to earth* | *zero* |

## 14 Cylinder identification (CID) - inductive sensor

**1** The inductive phase sensor which identifies the cylinders for sequential injection operation may be fitted inside the distributor or mounted upon the camshaft.
**2** Measure the CID resistance **(see illustration 4.15)** and compare to specifications for the vehicle under test. Typical CID resistance is in the range 200 to 900 ohms.
**3** Detach the CID or ECM multi-plug.

***Warning: Refer to Warning No 3 (in the Reference Section at the end of this book) before disconnecting the ECM multi-plug.***

**4** Connect an AC voltmeter between the two terminals at the CID or at the corresponding multi-plug terminals at the ECM. **Note:** *Better results are usually obtained by probing the + terminal, although the signal can often be obtained upon the CID earth return*
**5** Crank the engine. A minimum AC RMS voltage of about 0.40 volts should be obtained.
**6** Reconnect the CID or ECM multi-plug
**7** Backprobe the CID signal and earth terminals.
**8** Start the engine and allow it to idle. A minimum AC RMS voltage of about 0.75 volts should be obtained.

## 15 Cylinder identification - Hall-effect sensor

1 The Hall-effect phase sensor which identifies the cylinders for sequential injection operation may be fitted inside the distributor or mounted upon the camshaft. The following procedures describe how to test the distributor-located sensor. Testing the camshaft-located type will follow similar lines.
2 Connect the voltmeter negative or dwell meter probe to an engine earth.
3 Identify the supply, signal and earth terminals. The terminals may be marked as follows:

*0 Output*
*+ Signal*
*- Earth*

4 Connect the voltmeter positive or dwell meter probe to the wire attached to the HES signal terminal **(see illustration 4.16). Note:** *The multi-plug must be connected.*
5 Allow the engine to idle. An average voltage of approximately 2.5 volts or an approximate duty cycle of 50% should be obtained

### Signal voltage or duty cycle signal not available

6 Stop the engine.
7 Remove the distributor cap.
8 HES multi-plug connected, ignition on.
9 Voltmeter positive probe connected to the signal terminal.
10 Turn the engine over slowly. As the trigger vane cut-out space moves in and out of the air gap, the voltage should alternate between 5.0 volts and zero volts.

### Signal voltage not available

11 Disconnect the HES multi-plug at the distributor.
12 Probe output terminal 2 (O) of the harness multi-plug with the voltmeter positive probe.
13 If there is no voltage from the ECM to terminal 2, check for continuity of the signal wiring between the HES and the ECM.
14 Recheck for voltage at the ECM terminal.
15 If no voltage is available at the ECM, check all voltage supplies and earth connections to the ECM. If the voltage supplies and earth connections are satisfactory, the ECM is suspect.
16 Check the voltage supply (5.0 volts) at HES terminal number 1 (+). If the supply is unsatisfactory, check for continuity of the wiring between the HES and the ECM.
17 Check the earth connection at HES terminal number 3 (–).
18 If the voltage supply and earth are satisfactory, the HES in the distributor is suspect.

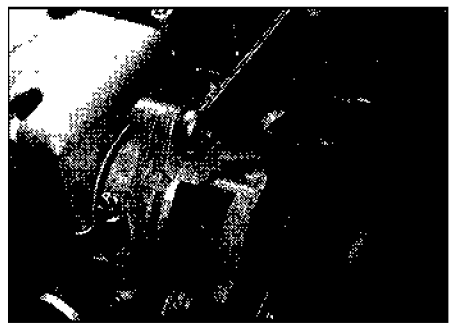

**4.16 Hall-effect phase sensor (CID) - multi-plug disconnected**

## 16 Cylinder identification and primary trigger - phase sensor faults

1 The timing of the phase sensor and the primary trigger is particularly important in sequential fuel injected vehicles. If the phasing is out of synchronisation, at best the engine may sink into LOS mode with loss of power and increased emissions. At worst, the engine may fail to start.
2 Reasons for phasing errors:
*a) Incorrectly adjusted distributor. Only if the distributor is adjustable.*
*b) Slack timing belt (very common fault).*
*c) Misalignment of timing belt.*

## 17 Exhaust gas recirculation system (EGR)

1 The main components in an EGR system are the EGR valve, control solenoid and lift sensor (some systems) and vacuum hoses (where fitted) **(see illustration 4.17)**. The components could be tested as follows.

2 Check the vacuum hoses for condition.
3 Warm the engine to normal operating temperature (this condition must exist for all tests).

### Control solenoid tests

4 Start the engine and allow it to idle.
5 Disconnect the multi-plug from the EGR control solenoid.
6 Attach a temporary jumper wire from the battery positive terminal to the supply terminal on the solenoid valve.
7 Attach a temporary jumper wire from the solenoid valve earth terminal to an earth on the engine.
8 The EGR valve should actuate and the idle quality deteriorate. If not, the EGR valve or solenoid are suspect.
9 Check for voltage to the control solenoid supply terminal.
10 Check continuity of the control solenoid and compare to the vehicle specifications.

### EGR sensor tests

11 Backprobe the EGR sensor multi-plug (where possible), or connect a break-out box (BOB) between the ECM multi-plug and the ECM.
12 Connect the voltmeter negative probe to an engine earth, or to the earth return of the EGR sensor.
13 Connect the voltmeter positive probe to the wire attached to the EGR sensor signal terminal.
14 Start the engine and allow it to idle; the EGR signal voltage will be typically 1.2 volts.
15 Disconnect the multi-plug from the EGR control solenoid and attach jumper leads to the control solenoid as described above.
16 The EGR solenoid valve should fully actuate, and the sensor signal voltage should increase to over 4.0 volts. **Note:** *It is very difficult to open the EGR valve so that a*

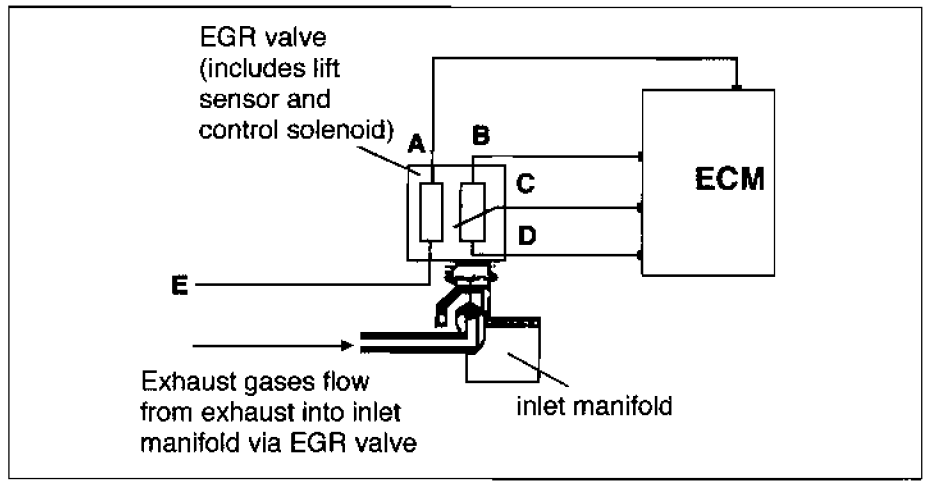


**4.17 EGR valve including lift sensor**

*A Control solenoid switched earth*
*B Reference voltage supply to lift sensor*
*C Lift sensor signal*
*D Lift sensor earth return through the ECM*
*E Supply from the relay or ignition*

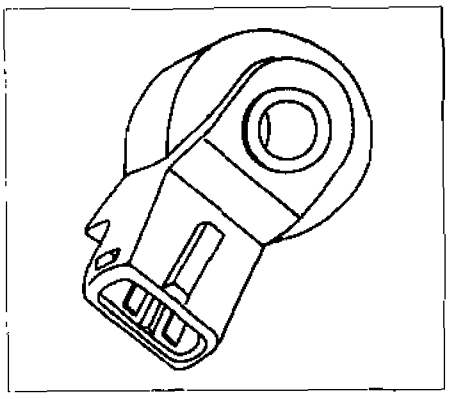

4.18 Typical knock sensor

*smooth output can be obtained from the valve. However, checking the sensor voltage at the fully-closed and fully-open position should allow a judgement on whether the sensor is operating correctly.*

17 Remove the temporary jumper wires from the solenoid, and the sensor signal voltage should decrease

18 If the EGR sensor signal voltage does not behave as described, refer to the relevant fault condition tests below.

### Erratic signal output

19 An erratic output occurs when the voltage output is stepped, or drops to zero or becomes open-circuit and this usually suggests a fault, EGR sensor.

20 Check for a 5.0 volt reference voltage and good earth connection on the other two wires.

### Signal or supply voltage at battery voltage level

21 Check for a short to a wire connected to the battery positive (+) terminal.

## 18 Fuel temperature sensor (FTS) - NTC type

1 The FTS measures the fuel temperature in the fuel rail.

2 The majority of FTSs used in motor vehicles are of the NTC type. A negative temperature coefficient (NTC) sensor is a thermistor in which the resistance decreases (negatively) as the temperature (ie fuel temperature) rises.

3 The general method of testing, and the resistance and voltages, are similar to the NTC type coolant temperature sensor previously described.

## 19 Fuel temperature switch (FS) - test procedure

1 The FS operates when the fuel temperature in the fuel rail rises above a pre-determined value.

2 Supply to the FS is usually 12 volts from a switched battery supply.

3 Battery voltage will be available at the earth side of the switch when the temperature is under the switching temperature.

4 Zero voltage will be obtained at the earth side of the switch when the temperature is above the switching temperature.

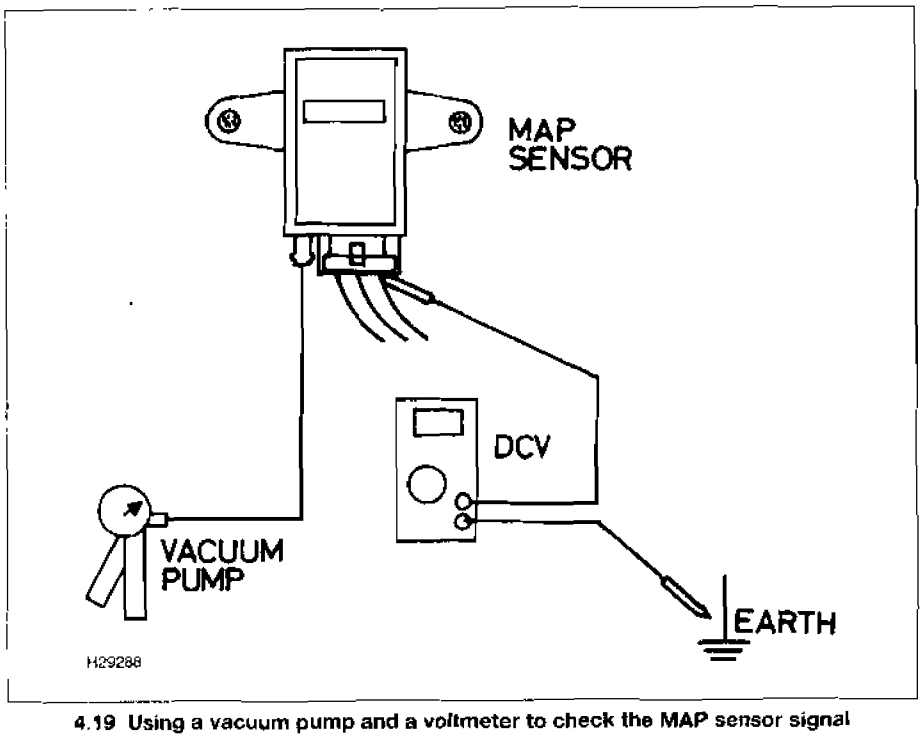


4.19 Using a vacuum pump and a voltmeter to check the MAP sensor signal

## 20 Knock sensor (KS)

1 Attach the probe of an inductive timing light to the HT lead of number 1 cylinder **(see illustration 4.18)**.

2 Connect an AC voltmeter or oscilloscope to the KS terminals

3 Allow the engine to idle.

4 Gently tap the engine block close to number 1 cylinder.

5 The timing should be seen to retard and a small voltage (approximately 1.0 volt) should be displayed upon the voltmeter or oscilloscope.

## 21 Manifold absolute pressure (MAP) sensor - analogue type

**Note:** *Where the MAP sensor is located internally in the ECM, voltage tests are not possible.*

1 Use a T-connector to connect a vacuum gauge between the inlet manifold and the MAP sensor.

2 Allow the engine to idle. If the engine vacuum is low (less than 425 to 525 mm Hg), check for the following faults.

*a) A vacuum leak.*
*b) A damaged or perished vacuum pipe.*
*c) A restricted vacuum connection*
*d) An engine problem, eg. misalignment of the cam belt.*
*e) A leaky MAP diaphragm (inside the ECM if the MAP sensor is internal).*

3 Disconnect the vacuum gauge and connect a vacuum pump in its place

4 Use the pump to apply vacuum to the MAP sensor until approximately 560 mmHg is reached.

5 Stop pumping, and the MAP sensor diaphragm should hold pressure for a minimum of 30 seconds at this vacuum setting.

### *External MAP sensor only*

6 Connect the voltmeter negative probe to an engine earth.

7 Identify the supply, signal and earth terminals

8 Connect the voltmeter positive probe to the wire attached to the MAP sensor signal terminal.

9 Disconnect the vacuum pipe from the MAP sensor.

10 Connect a vacuum pump to the sensor **(see illustration 4.19)**.

11 Switch the ignition on.

12 Compare the ignition on voltage to that specified.

13 Apply vacuum as shown in the table and check for a smooth voltage change.

14 In turbocharged engines, the results will be slightly different to normally aspirated engines.

### Erratic signal output

15 An erratic output occurs when the voltage output is stepped, drops to zero or becomes open-circuit. This usually suggests a faulty MAP sensor. In this instance, a new sensor is the only cure.

### Voltage table (signal terminal)

16 Checking conditions - engine stopped, vacuum applied with pump.

| Vacuum applied | Volts | MAP (bar) |
|---|---|---|
| *Zero* | *4.3 to 4.9* | *1.0 ± 0.1* |
| *200 mbar* | *3.2* | *0.8* |
| *400 mbar* | *2.2* | *0.6* |
| *500 mbar* | *1.2 to 2.0* | *0.5* |
| *600 mbar* | *1.0* | *0.4* |

| Condition | Volts (app.) | MAP (bar) | Vacuum (bar) |
|---|---|---|---|
| *Full-throttle* | *4.35* | *1.0 ± 0.1* | *zero* |
| *Ignition on* | *4.35* | *1.0 ± 0.1* | *zero* |
| *Idle speed* | *1.5* | *0.28 to 0.55* | *0.72 to 0.45* |
| *Deceleration* | *1.0* | *0.20 to 0.25* | *0.80 to 0.75* |

**Turbocharged engines**

| Condition | Volts (app.) | MAP (bar) | Vacuum (bar) |
|---|---|---|---|
| *Full-throttle* | *2.2* | *1.0 ± 0.1* | *zero* |
| *Ignition on* | *2.2* | *1.0 ± 0.1* | *zero* |
| *Idle speed* | *0.2 to 0.6* | *0.28 to 0.55* | *0.72 to 0.45* |

| Pressure applied | Volts |
|---|---|
| *0.9 bar* | *4.75* |

*(a test of turbo boost pressure)*

### Signal voltage not available

17 Check the reference voltage supply (5.0 volts).
18 Check the earth return.
19 If the supply and earth are satisfactory, check for continuity of the signal wiring between the MAP sensor and the ECM.
20 If the supply and/or earth are unsatisfactory, check for continuity of the wiring between the MAP sensor and the ECM.
21 If the MAP sensor wiring is satisfactory, check all voltage supplies and earth connections to the ECM. If the voltage supplies and earth connections are satisfactory, the ECM is suspect.

### Signal or supply voltage at battery voltage level

22 Check for a short to a wire connected to the battery positive (+) terminal or a switched supply voltage.

### Other checks

23 Check for excessive fuel in the vacuum trap or hose.
24 Check for a faulty vacuum hose or a vacuum leak.
25 Check for mechanical, ignition or a fuel fault resulting in low engine vacuum.

## 22 Manifold absolute pressure (MAP) sensor - digital type

1 Set the DMM to the volts scale.
2 Switch on the ignition.
3 Identify the supply, signal and earth terminals.
4 Connect the voltmeter positive probe to the wire attached to the MAP sensor signal terminal. An average voltage of approximately 2.5 volts should be obtained. If not, refer to the *"Signal voltage not available"* tests below.
5 Set the meter to the tachometer 4-cylinder scale (all engines).
6 Disconnect the vacuum hose to the MAP sensor.
7 Connect the positive DMM probe to the signal terminal, and connect the negative probe to the earth terminal.
8 An rpm reading of 4500 to 4900 should be obtained.
9 Attach a vacuum pump to the MAP sensor hose connection. During the following tests, the vacuum should hold steady at all of the pressure settings.

*Apply 200 mbar - the rpm should drop by 525 ± 120 rpm.*
*Apply 400 mbar - the rpm should drop by 1008 ± 120 rpm.*
*Apply 600 mbar - the rpm should drop by 1460 ± 120 rpm.*
*Apply 800 mbar - the rpm should drop by 1880 ± 120 rpm.*

10 Release the pressure, and the measured rpm value should return to the original setting of 4500 to 4900.
11 Renew the MAP sensor if it fails to behave as described.

### Signal voltage not available

12 Check the reference voltage supply (5.0 volts).
13 Check the earth return.
14 If the supply and earth are satisfactory, check for continuity of the signal wiring between the MAP sensor and the ECM.
15 If the supply and/or earth are unsatisfactory, check for continuity of the wiring between the MAP sensor and the ECM.
16 If the MAP sensor wiring is satisfactory, check all voltage supplies and earth connections to the ECM. If the voltage supplies and earth connections are satisfactory, the ECM is suspect.

### Signal or supply voltage at battery voltage level

17 Check for a short to a wire connected to the battery positive (+) terminal or a switched supply voltage.

### Other checks

18 Check for excessive fuel in the vacuum trap or hose.
19 Check for a faulty vacuum hose or a vacuum leak.
20 Check for mechanical, ignition or a fuel fault resulting in low engine vacuum.

## 23 Oil temperature sensor (OTS) - NTC type

4

1 The majority of OTSs used in motor vehicles are of the NTC type. A negative temperature coefficient (NTC) sensor is a thermistor in which the resistance decreases as the temperature rises.
2 The general method of testing, and the resistance and voltage values, are similar to the NTC type coolant temperature sensor previously described.

## 24 Power steering pressure switch (PSPS) test procedure

1 The PSPS operates when the steering is turned **(see illustration 4.20)**. The information from the switch is used to increase the engine idle speed, to compensate for the extra load placed on the engine by the power steering pump.
2 Supply to the PSPS is usually made from a switched battery supply or from the ECM.
3 Battery voltage will be available at both the supply and earth side of the switch when the wheels are in the straight-ahead position.
4 Zero voltage will be obtained at the earth side of the switch when the wheels are turned.
**Note:** *In some systems, zero voltage will be obtained with the wheels straight-ahead, and battery voltage when the wheels are turned.*

## 25 Throttle switch (TS)

**Note:** *The following procedures apply for a typical three-wire throttle switch. However, in some three-wire TS applications, the idle switch alone or the full-load switch alone may be connected. Also in other applications,*

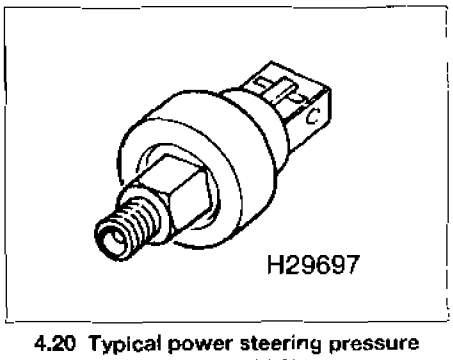


**4.20 Typical power steering pressure switch (PSPS)**

*separate idle and full-load switches may be provided. On some Rover models, the TS is located on the accelerator pedal. Whatever the arrangement, the basic test procedure will be similar for all types.*

### *Voltage tests*

1 The three wires to the TS multi-plug connector are earth, idle signal and full-load signal.
2 Connect the voltmeter negative probe to an engine earth.
3 Identify the idle signal, full-load signal and earth terminals.
4 Switch on the ignition (engine not running).
5 Connect the voltmeter positive probe to the wire attached to the TS idle signal terminal.
6 Zero volts should be obtained. If the meter indicates 5.0 volts, loosen the screws and adjust the TS so that zero volts is obtained. **Note:** *On some vehicles, the throttle switch may not be adjustable.*

#### Zero volts cannot be obtained (throttle closed)

7 Check the throttle valve position.
8 Check the TS earth connection.
9 Carry out the TS resistance tests (below).
10 If the voltage is satisfactory with the throttle closed, crack open the throttle - the switch should "click" and the voltage should rise to 5.0 volts.

#### Voltage low or non-existent (throttle open)

11 Check that the TS idle terminal is not shorted to earth.
12 Disconnect the TS multi-plug and check for 5.0 volts at the multi-plug idle terminal. If there is no voltage, proceed with the following checks



**4.21 Throttle pot output being measured with the aid of a voltmeter. Here a paper clip has been inserted into the rear of the sensor to allow voltmeter connection**

13 Check for continuity of the idle signal wiring between the TS and the ECM.
14 If the TS wiring is satisfactory, check all voltage supplies and earth connections to the ECM. If the voltage supplies and earth connections are satisfactory, the ECM is suspect.

#### Voltage satisfactory (throttle open)

15 Reconnect the voltmeter probe to the wire attached to the TS full-load signal terminal.
16 With the throttle in either the idle or just open positions, the meter should indicate 5.0 volts.

#### Voltage low or non-existent (throttle closed or just open)

17 Check the earth connection.
18 Check that the TS full-load terminal is not shorted to earth.
19 Disconnect the TS multi-plug, and check for 5.0 volts at the full-load multi-plug terminal. If there is no voltage, proceed with the following checks
20 Check for continuity of the full-load signal wiring between the TS and the ECM.
21 If the TS wiring is satisfactory, check all voltage supplies and earth connections to the ECM. If the voltage supplies and earth connections are satisfactory, the ECM is suspect.

#### Voltage satisfactory (throttle closed or just open)

22 Fully open the throttle. As the throttle angle becomes greater than 72°, the voltage should drop to zero volts. If the voltage does not drop, the throttle switch is suspect.

### *Resistance tests*

23 Disconnect the TS multi-plug.
24 Connect an ohmmeter between the TS earth terminal (sometimes marked 18) and terminal 2 (idle contact).
25 With the throttle switch closed, the ohmmeter should indicate very close to zero ohms.
26 Slowly open the throttle. As the TS cracks open, it should "click" - the resistance should become open-circuit and remain so, even as the throttle is opened fully.
27 Reconnect the ohmmeter between the earth terminal (sometimes marked 18) and terminal 3 (full-load contact).
28 With the throttle switch closed, the ohmmeter should indicate an open-circuit.
29 Slowly open the throttle. As the TS cracks open, it should "click" - the resistance should remain open-circuit until the throttle angle becomes greater than 72°, when the resistance should change to continuity of approximately zero ohms.
30 If the TS does not behave as described, and it is not prevented from opening or closing fully by a binding throttle linkage, the TS is suspect.

## 26 Throttle potentiometer sensor (TPS or "throttle pot")

### *Voltage tests*

1 Connect the voltmeter negative probe to an engine earth.
2 Identify the supply, signal and earth terminals. **Note:** *Although the majority of TPSs are usually three-wire types, some sensors may include additional terminals that function as a throttle switch. If so, test the switch using similar routines to those described for the throttle switch above.*
3 Connect the voltmeter positive probe to the wire attached to the TPS signal terminal (**see illustration 4.21**).
4 Switch on the ignition (engine stopped). In most systems, a voltage less than 0.7 volts should be obtained.
5 Open and close the throttle several times, and check for a smooth voltage increase to a maximum of 4.0 to 4.5 volts. **Note:** *If a digital voltmeter is used, then it is useful for it to have a bar graph facility. The smoothness of the voltage increase can then be more easily seen*

#### Erratic signal output

6 An erratic output occurs when the voltage output is stepped, or drops to zero or becomes open-circuit.
7 When the TPS signal output is erratic, this usually suggests a faulty potentiometer. In this instance, a new or reconditioned TPS is the only cure.

#### Signal voltage not available

8 Check for the 5.0 volt reference voltage supply at the TPS supply terminal.
9 Check the earth return connection at the TPS earth terminal.
10 If the supply and earth are satisfactory, check for continuity of the signal wiring between the TPS and the ECM
11 If the supply and/or earth are unsatisfactory, check for continuity of the wiring between the TPS and the ECM
12 If the TPS wiring is satisfactory, check all voltage supplies and earth connections to the ECM. If the voltage supplies and earth connections are satisfactory, the ECM is suspect.

#### Signal or supply voltage at battery voltage level

13 Check for a short to a wire connected to the battery positive (+) terminal or a switched supply voltage.

### *Resistance tests*

14 Connect an ohmmeter between the TPS signal terminal and supply terminal or the TPS signal terminal and earth terminal.
15 Open and close the throttle several times, and check for a smooth resistance change. If the TPS resistance becomes open or short-circuit, a fault is revealed.

16 We have not provided resistance specifications for the throttle pots described in this book. For one thing, many vehicle manufacturers do not publish test values. Also, it is less important that the resistance of the TPS remains within arbitrary values, than the operation is correct (varies consistently with throttle operation).
17 Connect an ohmmeter between the TPS earth terminal and supply terminal. A stable resistance should be obtained.
18 Renew the TPS if the resistance is open-circuit or shorted to earth.

### *Mono-Motronic and Mono-Jetronic*

19 Dual throttle position sensors are usually provided in these systems. By using two signals, the ECM is able to more accurately calculate the engine load and other factors. Specific vehicle data is required to set and test these sensors, although it is possible to check for a smooth output on both signal wires in a similar fashion to other throttle position sensors described above. Typically, the signal from one TPS will range from 0 to 4.0 volts, and the other TPS from 1.0 to 4.5 volts.

## 27 Vehicle speed sensor (VSS)

### *Voltage tests*

**Note:** *These test procedures apply to the most common type of VSS that operates upon the Hall-effect principle.*

1 The VSS may be located on the gearbox, on the speedometer drive behind the instrument panel, or on the rear axle.
2 Connect the voltmeter negative or dwell meter probe to an engine earth.
3 Identify the supply, signal and earth terminals **(see illustrations 4.22 and 4.23)**.
4 Connect a voltmeter positive or dwell meter probe to the wire attached to the VSS signal terminal.
5 The drive wheels must rotate for a signal to be generated. This may be accomplished by using one of the two following methods:
*a) Push the vehicle forward.*
*b) Place the vehicle upon a ramp, or jack up the vehicle so that the drive wheels can freely turn.*
6 Rotate the wheels by hand so that a duty cycle or voltage can be obtained.

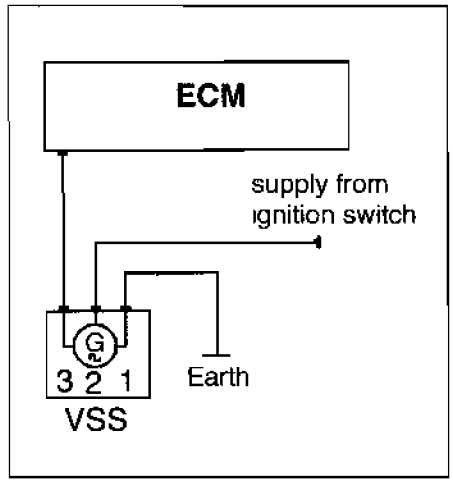


**4.22 Typical vehicle speed sensor wiring**

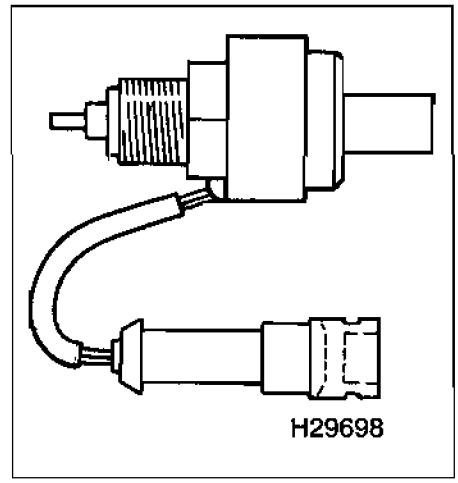


**4.23 Vehicle speed sensor (GM type)**

#### No signal or an erratic duty cycle or voltage

7 With the VSS multi-plug disconnected, and the ignition on.
8 Check the voltage at the signal terminal. A voltage between 8.5 and 10.0 volts should be obtained.
9 Check the voltage supply at the VSS supply terminal. A voltage slightly less than battery voltage should be obtained.
10 Check the VSS earth connection.

#### Supply and earth voltages satisfactory

11 The VSS is suspect, or the VSS is not being rotated by the speedometer drive (ie. broken cable or gearbox fault).

#### No signal voltage

12 Check the voltage at the ECM multi-plug terminal.
13 If voltage is satisfactory at the ECM, check the diode in the wire between the ECM and VSS. Also check the continuity of the signal wiring.
14 If no voltage is available at the ECM, check all voltage supplies and earth connections to the ECM. If the voltage supplies and earth connections are satisfactory, the ECM is suspect.

### *Other types of VSS*

15 Apart from the Hall-effect type of vehicle speed sensor, there is also a reed switch type and an inductive type.

#### Reed switch type

16 The signal output with the drive wheels rotating is essentially that of a square waveform. Switching is from zero to five volts, or from zero to battery voltage. A duty cycle of 40 to 60% may also be obtained.

#### Inductive type

17 The signal output with the drive wheels rotating is essentially that of an AC waveform. The signal output will vary according to speed of rotation, in a similar fashion to the crank angle sensor described earlier.

# Actuator test procedures

## 28 Carbon filter solenoid valve (CFSV)

1 Identify the supply and signal terminals.
2 Switch the ignition on.
3 Check for battery voltage at the CFSV supply terminal. If there is no voltage, trace the wiring back to the battery, ignition switch or relay output as appropriate.
4 Check the CFSV resistance. Remove the multi-plug and measure the resistance of the CFSV between the two terminals. The resistance of the CFSV is typically 40 ohms.
5 Disconnect the ECM multi-plug.

***Warning: Refer to Warning No 3 (in the Reference Section at the end of this book) before disconnecting the ECM multi-plug.***

6 Use a jumper lead to very briefly touch the switching pin in the ECM multi-plug to earth.
7 If the CFSV actuates, check the ECM main voltage supplies and earths. If tests reveal no fault, the ECM is suspect.
8 If the CFSV does not actuate, check for continuity of wiring between the CFSV and the ECM switching pin.
9 On some vehicles, it is possible to obtain a duty cycle reading on the signal terminal. The engine will need to be at normal operating temperature and the engine speed raised above idle speed.

## 29 Idle speed control

### *Operation check*

1 Allow the engine to idle.
2 Check that the idle speed lies within its operating limits.
3 Load the system by switching on the headlights, heated rear window and heater fan. The idle speed should barely change.

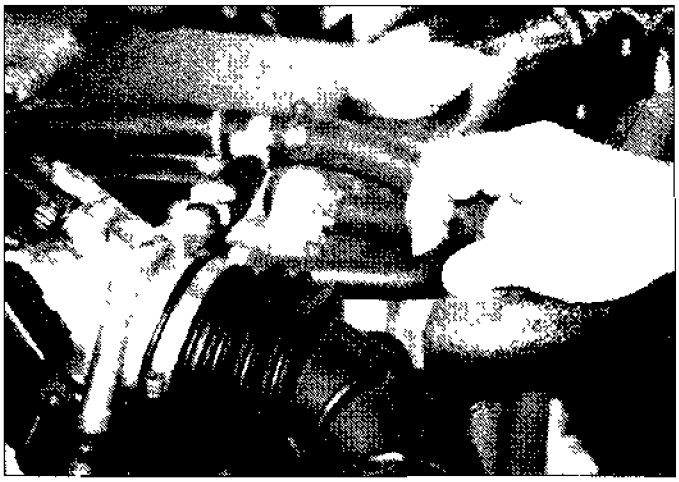

**4.24 Squeeze an idle air hose while the engine is running at idle speed to check idle speed control valve (ISCV) response**

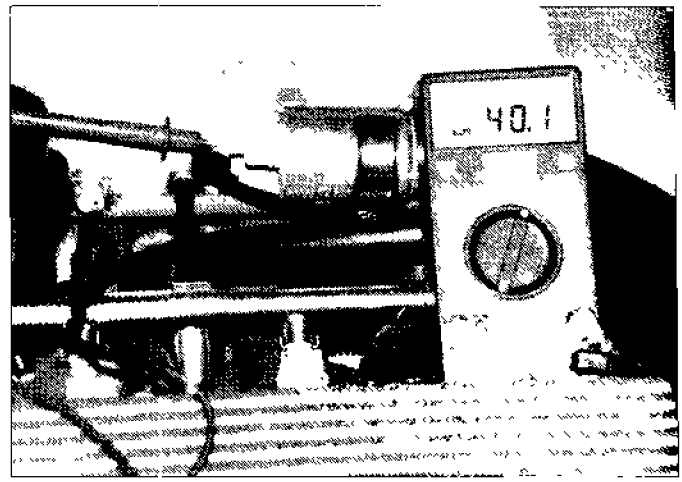

**4.25 Backprobing for a typical dwell at the ISCV, engine at idle speed**

4 If possible squeeze one of the air hoses The idle speed should surge and then return too normal **(see illustration 4.24)**

5 If the idle condition meets the above criteria it is unlikely to be at fault

6 Faults in one or more of the items on the following list will adversely affect idle integrity and could bring about the generation of idle related fault codes These items should be checked before attempting diagnosis of the idle speed control valve (ISCV) or stepper motor

*a) Engine mechanical fault*
*b) Incorrect ignition timing*
*c) An induction vacuum leak*
*d) Incorrect CO level.*
*e) Clogged air filter.*
*f) An incorrectly-adjusted throttle valve*
*g) Carbon-fouled throttle plate*
*h) An incorrectly-adjusted throttle switch or throttle pot*

## ISCV test procedure (two-wire)

7 A voltmeter and/or dwell meter are suitable instruments for testing the two wire ISCV in most systems **Note:** *A dwell meter will not give good results when connected to Ford systems - a voltmeter or oscilloscope is a better choice*

8 Connect the negative probe to an engine earth

9 Connect the voltmeter positive or dwell meter probe to the wire attached to the ISCV signal terminal

10 Start the engine and allow it to idle

11 With the engine hot a varying voltage between 7.0 to 9.0 volts, a duty cycle of 40 to 44%, and a frequency of 110 are likely to be obtained **(see illustration 4.25)**

12 When the engine is cold or placed under load, the voltage will decrease and the duty cycle will increase. Frequency is likely to remain stable for most idle control valves (the frequency will usually alter in Ford valves) **Note:** *The reading on a digital voltmeter will indicate the average voltage*

13 Load the engine by switching on the headlights, heated rear window and heater fan. The average voltage will decrease and the duty cycle will increase The frequency of pulse should remain constant

14 If an air leak or another fault is present resulting in more air bypassing the throttle, the ISCV duty cycle will be lower than normal as the ECM pulses the ISCV less open

15 When more load is placed upon the engine the ECM pulses the ISCV more open (larger duty cycle) to increase the idle speed

16 In addition if the engine is mechanically unsound or the throttle valve is dirty the ECM may pulse the ISCV more open to increase the idle speed This may result in an uneven idle and a larger than normal duty cycle

### ISCV signal not available

17 Check the ISCV resistance Typically, a resistance of 8 to 16 ohms should be obtained

18 With the ignition on check for battery voltage at the supply terminal If there is no voltage, trace the wiring back to the main relay or ignition switch as appropriate

19 Disconnect the ISCV multi plug

20 With the ignition on use a jumper lead to very briefly touch the actuator pin in the ISCV multi-plug to earth

21 If the ISCV actuates check the ECM main voltage supplies and earths If testing reveals no fault, the ECM is suspect

22 If the ISCV does not actuate, check for continuity of wiring between the ISCV multi-plug and the ECM

## ISCV test procedure (Bosch three-wire)

23 A voltmeter and a dwell meter are suitable instruments for testing the Bosch three-wire ISCV

24 Connect the voltmeter negative or dwell meter probe to an engine earth

25 Connect the voltmeter positive or dwell meter probe to the wire attached to one of the two ISCV signal terminals

26 Start the engine and allow it to idle

27 When the engine is hot a voltage of 12 or a duty cycle of either approximately 31 or 69% will be obtained The duty cycle obtained will depend upon which terminal the instrument is connected

28 When the engine is cold or placed under load, the voltage will decrease and the duty cycle will increase **Note:** *The reading on a digital voltmeter will indicate the average voltage*

29 Load the engine by switching on the headlights heated rear window and heater fan The average voltage will decrease and the duty cycle will increase

30 If an air leak or another fault is present resulting in more air bypassing the throttle the ISCV duty cycle will be lower than normal as the ECM pulses the ISCV less open

31 When more load is placed upon the engine the ECM pulses the ISCV more open (larger duty cycle) to increase the idle speed

32 In addition, if the engine is mechanically unsound or the throttle valve is dirty the ECM may pulse the ISCV more open to increase the idle speed This may result in an uneven idle and a larger than normal duty cycle

33 Switch the voltmeter positive or dwell meter probe to the wire attached to the other one of the two ISCV signal terminals

34 With the engine hot, a varying voltage or duty cycle of either approximately 31 or 69% will be obtained The duty cycle obtained will depend upon which terminal the instrument is connected

### ISCV signal not available

35 Check the ISCV resistance (see below)

36 With the ignition on check for battery voltage at the supply terminal

37 If there is no voltage trace the wiring back to the main relay or ignition switch as appropriate

38 Disconnect the ISCV multi plug

39 Switch on the ignition Use a jumper lead to very briefly touch one of the two actuator pins in the ISCV multi plug to earth

40 If the ISCV actuates, check the ECM main voltage supplies and earths. If testing reveals no fault, the ECM is suspect.
41 If the ISCV does not actuate, check for continuity of wiring between the ISCV multi-plug and the ECM
42 Switch the jumper lead to very briefly touch the other ISCV actuator pin in the ISCV multi-plug to earth. Evaluate the results as in paragraphs 40 and 41 above.

### ISCV resistance (three-wire)

43 Remove the ISCV multi-plug.
44 Connect an ohmmeter between the centre terminal and one of the outer terminals. A resistance of 20 ohms should be obtained.
45 Reconnect the ohmmeter between the centre terminal and the other outer ISCV terminal. A resistance of 20 ohms should be obtained.
46 Reconnect the ohmmeter between the two outer ISCV terminals. A resistance of 20 ohms should be obtained.

## *Stepper motors*

47 A number of different types of stepper motor are used in motor vehicles. Specific test procedures for a number of popular types are detailed in the Haynes companion volume *"Automotive Engine Management and Fuel Injection Systems Manual"*.
48 A switch is sometimes incorporated into the stepper motor assembly. Refer to the throttle switch tests for a general description of earth and supply tests. Idle switch operation is particularly important for good idle quality. If the ECM does not recognise the idle condition, idle control cannot be implemented.
49 The typical stepper motor employs two motor windings. The ECM positions the stepper motor by energising the windings in one direction and then the reverse. A voltmeter or oscilloscope could be used to test for a stepper motor signal. However, although a signal can usually be obtained on all of the motor terminals, the signal is fleeting and will only be generated as the motor winding is actuated.
50 Check the resistance of both windings and compare to the vehicle specifications. Values are usually under 100 ohms.

## *VW/Audi idle control motors*

51 The type of control motor fitted to many current VW/Audi vehicles incorporates a reversible stepper motor winding, a Hall sensor that signals the stepper motor position, a TPS, and an idle switch. An 8-terminal multi-plug connects the motor to the wiring loom. The component parts that make up the control motor can be tested by referring to the test procedures described under the headings for individual components.

## 30 Multi-point injection system (MPi) fuel injectors

1 Check for corrosion in the connection plugs between the relay and the injector, and the ECM and the injector. Corrosion in connection plugs is a common reason for poor injector performance.
2 Connect the dwell meter negative probe to an engine earth.
3 Identify the supply and signal terminals.
**Note:** *An injector dwell reading will only be obtained upon the signal terminal which is the wire connecting the injector to the ECM. If you cannot obtain a reading, reconnect the probe to the other terminal and retry.*
4 Connect the dwell meter positive probe to the wire attached to the injector signal terminal.
5 Although the following tests are accomplished with the aid of a basic dwell meter, an oscilloscope is a more suitable instrument for analysing the signals generated by the electronic fuel injector circuits.
6 Initially, the probe can be connected to the signal terminal of any one of the injectors.

### Current-controlled or peak-and-hold injection circuits (dwell meter)

7 When the injector is of the current-controlled kind, very few dwell meters may be capable of registering the second stage of the pulse duration. The meter may only register the switch-on circuit of approximately 1.0 or 2.0%. This means that the injector duty cycle reading will be inaccurate and not representative of the total pulse width seen in the circuit. Only a small number of DMMs can actually measure this circuit satisfactorily.

## *Engine non-runner test procedures*

8 Crank the engine
9 A duty cycle reading (injector duty cycle) of approximately 5 to 10% should be obtained. If the dwell meter can measure the value in milliseconds, this could be even more useful.

### Good injector signal

10 Check for an injector pulse on the other injectors.
11 If the injector signal is satisfactory and if the primary ignition signal is also providing an acceptable signal, the fault is unlikely to be related to the ECM.

### Poor or no injector signal on one or more injectors

**Note:** *In some Motronic systems, the frequency of injection increases for several seconds during initial cranking.*
12 Check the fuel pressure and fuel flow.
13 Check the primary trigger (crank angle sensor or Hall-effect sensor) for a good signal.
14 Check the voltage at the signal terminal of the injector multi-plug. Battery voltage should be obtained.
15 If there is no voltage, check the injector resistance and the injector voltage supply
16 Disconnect the ECM multi-plug.

***Warning: Refer to Warning No 3 (in the Reference Section at the end of this book) before disconnecting the ECM multi-plug.***

17 Switch on the ignition.
18 Use a jumper lead to very briefly touch each one of the injector actuator pins in the ECM multi-plug to earth **(see illustration 4.26)**.
19 If the injector actuates, check the ECM main voltage supplies and earth's. If tests reveal no fault, the ECM is suspect.
20 If the injector does not actuate, check for battery voltage at the ECM pin. If voltage is present, the injector is suspect. If there is no voltage, check for continuity of wiring between the injector multi-plugs and the ECM multi-plug.
21 If the injector circuit is banked or sequential, individually check each connection to the ECM.

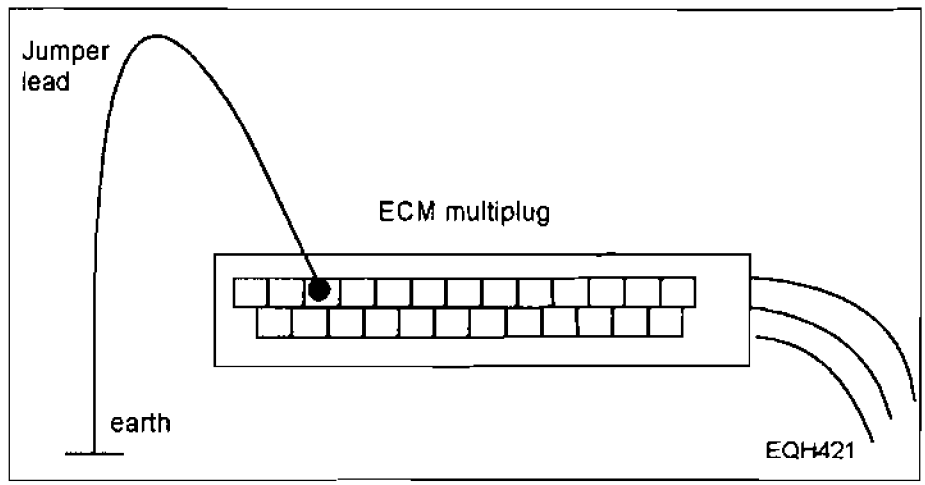


**4.26 Using a jumper lead to very briefly touch an injector actuator pin in the ECM multi-plug to earth**

### Duty cycle too long or too short

**22** Check the coolant temperature sensor, then check the airflow sensor or MAP sensor. **Note:** *If the ECM has entered LOS due to a fault in one of the sensors, the engine may generally behave quite well whilst the engine is hot, but may be difficult to start when cold.*

## Engine running tests

**23** Run the engine at various speeds. Record the duty cycle, and compare to the approximate values in the following table. When the engine is cold, the values will slightly increase.

| Engine speed | Duty cycle |
|---|---|
| *Idle speed* | *3 to 6%* |
| *2000 rpm* | *7 to 14%* |
| *3000 rpm* | *11 to 16%* |
| *Slow throttle increase* | *As above* |
| *Rapid throttle increase* | *20% or more* |
| *Deceleration** | *Zero* |

**Raise the engine speed to approximately 3000 rpm and release the throttle*

**24** Evaluate the results obtained as follows:

*a) The duty cycle in % should increase in value as the engine rpm is raised.*
*b) Under rapid acceleration, the duty cycle should show a great increase in value.*
*c) Under deceleration, when the engine is hot, the duty cycle should drop to zero (digital meter) and reappear as the engine speed sinks below approximately 1200 rpm.*
*d) Where the meter does not drop to zero, check the throttle valve for correct adjustment and the TPS or TS for correct operation.*
*e) Noise from the injectors should also temporarily disappear as the cut-off operates.*
*f) Note that a slow-responding digital meter may not show the drop to zero on deceleration.*

### Duty cycle too long or too short

**25** Check the coolant temperature sensor, then check the airflow sensor or MAP sensor.

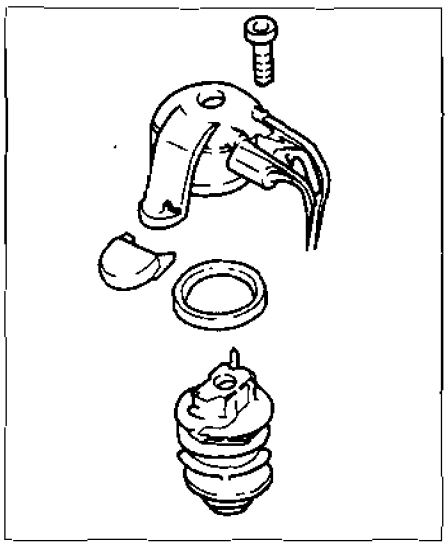

**4.27 Single-point injector**

**Note:** *If the ECM has entered LOS due to a fault in one of the sensors, the engine may generally behave quite well whilst the engine is hot, but may be difficult to start when cold.*

## Injector resistance tests

**26** Remove each injector multi-plug and measure the resistance of the injector between the two terminals. On current-controlled injectors, the resistance will typically be 4 ohms; on most other systems, typically 16 ohms.

**27** When dealing with parallel injector circuits, or banked injectors, one faulty injector can be harder to spot. Assuming that the resistance of one single injector is 16 ohms, the values that are likely to be obtained with various configurations of injector circuit are as follows:

### Four injectors in bank

| Resistance (ohms) | Condition |
|---|---|
| *4 to 5* | *All injectors ok* |
| *5 to 6* | *One injector suspect* |
| *8 to 9* | *Two injectors suspect* |
| *16 to 17* | *Three injectors suspect* |

### Three injectors in bank

| Resistance (ohms) | Condition |
|---|---|
| *5 to 6* | *All injectors ok* |
| *8 to 9* | *One injector suspect* |
| *16 to 17* | *Two injectors suspect* |

### Two injectors in bank

| Resistance (ohms) | Condition |
|---|---|
| *8 to 9* | *Both injectors ok* |
| *16 to 17* | *One injector suspect* |

## 31 Single-point injection system (SPi) fuel injector

**1** Connect the dwell meter negative probe to an engine earth.
**2** Identify the supply and signal terminals.
**3** Connect the dwell meter positive probe to the wire attached to the injector signal terminal. **Note:** *The majority of SPi systems utilise current control, and the average dwell meter will not accurately measure this kind of injection signal. An oscilloscope is therefore recommended for signal tests on the majority of SPi systems.*

## Engine non-runner test procedures

**4** Crank the engine.
**5** A duty cycle reading (injector duty cycle) of some description should be obtained. If the dwell meter can measure the full pulse width value in milliseconds, this could be even more useful. If a signal is obtained, this at least indicates that the ECM is capable of switching the injection circuit. However, it does not prove that the signal is totally satisfactory.

### Good injector signal

**6** If the injector signal is satisfactory and the primary ignition signal is also acceptable, the fault is unlikely to be related to the ECM.

### Poor or no injector signal

**7** Check the fuel pressure and fuel flow.
**8** Check the crank angle sensor, Hall-effect sensor or other primary trigger for a good signal.
**9** Check the voltage at the signal terminal of the injector multi-plug. Battery voltage should be obtained. If there is no voltage:

*a) Check the injector resistance.*
*b) Check the ballast resistor resistance (where fitted).*
*c) Check for continuity of wiring between the injector multi-plug and the ECM multi-plug.*
*d) Check the voltage supply to the injector*

**10** Disconnect the ECM multi-plug.

***Warning: Refer to Warning No 3 (in the Reference Section at the end of this book) before disconnecting the ECM multi-plug.***

**11** Switch on the ignition.
**12** Use a jumper lead to very briefly touch the injector actuator pin in the ECM multi-plug to earth **(refer to illustration 4.26)**.
**13** If the injector actuates, check the ECM main voltage supplies and earths. If testing reveals no fault, the ECM is suspect.
**14** If the injector does not actuate, check for battery voltage at the ECM pin. If voltage is present, the injector is suspect. If there is no voltage, check for continuity of wiring between the injector multi-plugs and the ECM multi-plug.

### Pulse width too long or too short (If an accurate measurement can be made)

**15** Check the coolant temperature sensor and the MAP sensor. **Note:** *If the ECM has entered LOS due to a fault in one of the sensors, the engine may generally behave quite well whilst the engine is hot, but may be difficult to start when cold.*

## Engine running tests

**16** Please refer to the multi-point fuel injection (MPi) section above which describes test procedures applicable to checking both MPi and SPi operation in a running engine.

## Resistance tests

**17** Remove the injector multi-plug **(see illustration 4.27)** and measure the resistance of the injector between the two terminals. The resistance value for most single-point injectors is less than 2 ohms, but the specifications for the vehicle under test should be consulted.
**18** Where a ballast resistor is fitted: Remove the resistor multi-plug and measure the resistance of the ballast resistor between the two terminals. Refer to the particular specifications for the vehicle under test.

## 32 Variable induction solenoid (VIS)

### General information

1 Better response can be obtained from the engine under various operating conditions by utilising a secondary throttle valve to vary the volume of air flowing through the inlet manifold. The ECM actuates the VIS, which in turn actuates the secondary throttle valve **(see illustration 4.28)**.

### Testing

2 Check the vacuum hoses for condition.
3 Disconnect the multi-plug from the VIS.
4 Attach a temporary jumper wire from the battery positive terminal to the supply terminal on the solenoid valve.
5 Attach a temporary jumper wire from the solenoid valve earth terminal to an earth on the engine.
6 The VIS valve and the secondary throttle should actuate. If not, the solenoid and/or throttle mechanism is suspect.
7 Check for supply voltage to the control solenoid multi-plug.
8 Check the continuity of the control solenoid.
9 Check the continuity of wiring from the control solenoid to the ECM.
10 If all wiring and components are satisfactory, the ECM is suspect.

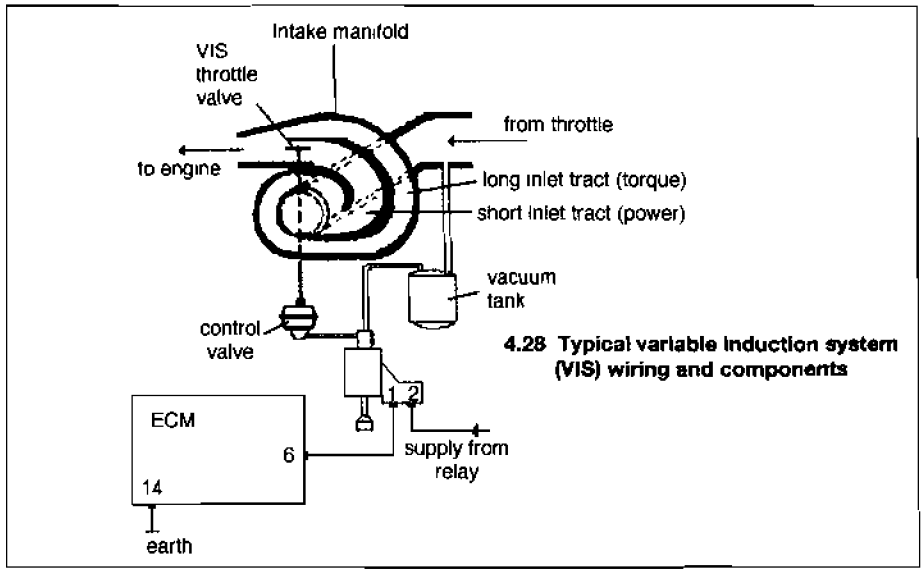


**4.28 Typical variable induction system (VIS) wiring and components**

## 33 Throttle body heater and manifold heater

### Quick check

1 Start the engine from cold and feel the area around the throttle body or inlet manifold (as appropriate). If the heater is working, this area should become very hot quite quickly. Take care not to burn your fingers!

### Throttle body heater and inlet manifold heater tests

2 Allow the engine to idle.

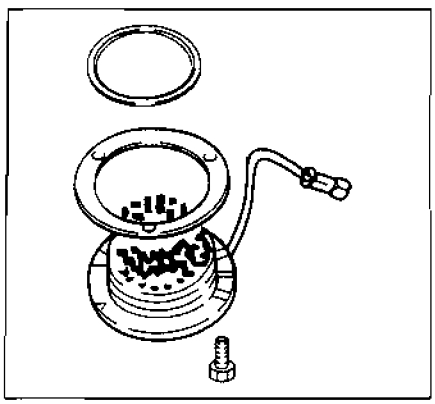

**4.29 Typical inlet manifold heater**

3 Attach the voltmeter negative probe to an earth.
4 Attach the voltmeter positive probe to the heater supply connector **(see illustration 4.29)**; battery voltage should be obtained.
5 If there is no voltage supply, check the throttle body heater supply. Check the continuity of the wiring between the relay and the heater.
6 If there is battery voltage available, but the heater does not operate, check the heater resistance and the heater earth.

## 34 Variable valve timing control solenoid (VVTCS)

### General information

1 Better response can be obtained from the engine under various operating conditions by utilising a control solenoid to vary the valve timing according to engine efficiency. The ECM actuates the VVTCS, which in turn actuates the valve timing. A number of different methods are used to vary the valve timing, but the control method will be similar to the method described.

### Testing

2 Check the vacuum hoses for condition (where used).
3 Disconnect the multi-plug from the VVTCS.
4 Attach a temporary jumper wire from the battery positive terminal to the supply terminal on the solenoid valve.
5 Attach a temporary jumper wire from the solenoid valve earth terminal to an earth on the engine.
6 The solenoid valve should actuate. If not, the solenoid is suspect.
7 Check for supply voltage to the control solenoid multi-plug.
8 Check the continuity of the control solenoid.
9 Check the continuity of wiring from the control solenoid to the ECM.
10 If all wiring and components are satisfactory, the ECM is suspect.

## 35 Wastegate control solenoid (WCS) - turbocharged engines

1 The two wires to the WCS connector are supply and ECM-actuated earth **(see illustration 4.30)**.
2 Backprobe the WCS multi-plug.
3 Connect the voltmeter negative probe to an engine earth.
4 Connect the voltmeter positive probe to the wire attached to WCS supply terminal.
5 Switch the ignition on and check for battery voltage.
6 If no voltage is obtained, check for a supply fault.
7 Use an ohmmeter to check the WCS for continuity.

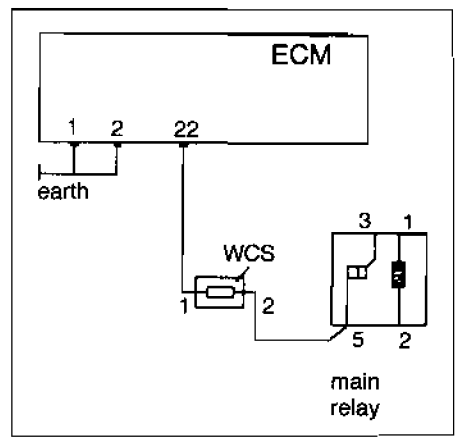


**4.30 Typical wastegate control solenoid (WCS) wiring for turbocharger**

# ECM and fuel system test procedures

## 36 ECM faults

1 When a fault code is generated that suggests an ECM fault, the following procedures should first be followed before the ECM is replaced.
2 Check the ECM earth, voltage supplies and relays as described below.
3 Where possible, try a substitute ECM (known good unit) and check that the fault code does not reappear.

## 37 ECM voltage supplies and earths

⚠ ***Warning: Refer to Warning No 3 (in the Reference Section at the end of this book) before disconnecting the ECM multi-plug.***

1 Inspect the ECM multi-plug for corrosion and damage.
2 Check that the terminals in the ECM multi-plug are fully pushed home and making good contact with the ECM pins. **Note:** *Poor contact and corrosion are common reasons for inaccurate signals from the ECM.*
3 Voltage supplies and earths are best measured at the ECM multi-plug. Use one of these test methods.
*a) Peel back the ECM multi-plug insulation (not always possible) and backprobe the ECM multi-plug pins.*
*b) Attach a break-out box (BOB) between the ECM and its multi-plug, and probe the box for voltages.*
*c) Detach the ECM from its multi-plug, and probe for voltages at the multi-plug pins.*
4 Attach the voltmeter negative probe to an engine earth for the ECM connected tests.
5 Identify the various types of connection and the relevant ECM pins from a wiring diagram for the vehicle in question. **Note:** *Not all of the following connections will be available in any particular system.*

### ECM battery supply pin

6 This pin is directly connected to the battery (+) terminal, and a constant voltage should be available at all times, even with the ignition key off.
7 With the ECM multi-plug connected:
*a) Backprobe the relevant ECM pin - nominal battery voltage should be obtained. If voltage is low or non-existant, check the battery condition and supply circuit.*
*b) Start the engine and raise the engine speed to 2500 rpm. Ensure that the voltage rises to between 13.0 and 15.0 volts (refer to vehicle specifications). Check the alternator if the voltage remains low.*
8 With the ECM multi-plug disconnected:
*a) Attach the voltmeter negative probe to an ECM earth pin.*
*b) Attach the voltmeter positive probe to the relevant ECM pin - nominal battery voltage should be obtained. If voltage is low or non-existent, check the battery condition and supply circuit.*
*c) Start the engine and raise the engine speed to 2500 rpm. Ensure that the voltage rises to between 13.0 and 15.0 volts (refer to vehicle specifications). Check the alternator if the voltage remains low.*

### ECM cranking supply pin

9 This pin is connected to the ignition switch starter terminal, and a battery voltage will only be available during engine cranking.
10 With the ECM multi-plug connected:
*a) Backprobe the relevant ECM pin.*
*b) Crank the engine on the starter - battery voltage should only be obtained during cranking.*
11 With the ECM multi-plug disconnected:
*a) Attach the voltmeter negative probe to an ECM earth pin.*
*b) Attach the voltmeter positive probe to the relevant ECM pin*
*c) Crank the engine on the starter - battery voltage should only be obtained during cranking.*
12 In either case, if there is no voltage or the voltage is low, check the starter motor or the supply back to the ignition switch starter terminal.

### ECM supply from the ignition switch

13 This pin is connected to the ignition switch, and voltage should be available at all times whilst the ignition is switched on or the engine is running.
14 With the ECM multi-plug connected:
*a) Backprobe the relevant ECM pin.*
*b) Switch on the ignition - nominal battery voltage should be obtained. If the voltage is low or non-existent, check the battery condition and supply circuit.*
*c) Start the engine and raise the engine speed to 2500 rpm. Ensure that the voltage rises to between 13.0 and 15.0 volts (refer to vehicle specifications). Check the alternator if the voltage remains low.*
15 With the ECM multi-plug disconnected:
*a) Attach the voltmeter negative probe to an ECM earth pin.*
*b) Attach the voltmeter positive probe to the relevant ECM pin.*
*c) Switch on the ignition - nominal battery voltage should be obtained. If the voltage is low or non-existent, check the battery condition and supply circuit.*
*d) Start the engine and raise the engine speed to 2500 rpm. Ensure that the voltage rises to between 13.0 and 15.0 volts (refer to vehicle specifications). Check the alternator if the voltage remains low.*

### ECM supply from the main system relay

16 This pin is connected to the main relay and voltage should be available at all times whilst the ignition is switched on or the engine is running. This supply may be made to more than one ECM pin.
17 With the ECM multi-plug connected
*a) Backprobe the relevant ECM pin*
*b) Switch on the ignition - nominal battery voltage should be obtained. If the voltage is low or non-existent, check the battery condition and supply circuit back to the main system relay. Also check the relay itself.*
*c) Start the engine and raise the engine speed to 2500 rpm. Ensure that the voltage rises to between 13.0 and 15.0 volts (refer to vehicle specifications). Check the alternator if the voltage remains low.*
18 With the ECM multi-plug disconnected:
*a) Attach the voltmeter negative probe to an ECM earth pin*
*b) Attach the voltmeter positive probe to the relevant ECM pin*
*c) Switch on the ignition - nominal battery voltage should be obtained. If the voltage is low or non-existent, check the battery condition and supply circuit back to the main system relay. Also check the relay itself.*
*d) Start the engine and raise the engine speed to 2500 rpm. Ensure that the voltage rises to between 13.0 and 15.0 volts (refer to vehicle specifications). Check the alternator if the voltage remains low.*

### ECM earth connections

19 With the ECM multi-plug connected
*a) Switch on the ignition.*
*b) Attach the voltmeter negative probe to an engine earth.*
*c) Attach the voltmeter positive probe to the earth terminal under test - the voltmeter should indicate 0.25 volts maximum.*
20 With the ECM multi-plug disconnected (ignition on or off):
*a) Attach the voltmeter negative probe to the earth terminal under test.*
*b) Attach the voltmeter positive probe to the ECM battery supply or directly to the battery positive terminal - the voltmeter should indicate battery voltage if the earth is satisfactory.*

### ECM coding earth pins

**Note:** *The coding pins are used to code the ECM for certain vehicle configurations (some systems only).*
21 With the ECM multi-plug connected
*a) Switch on the ignition.*
*b) Attach the voltmeter negative probe to an engine earth*

*c) Attach the voltmeter positive probe to the coding earth pin under test. The voltmeter should indicate 0.25 volts maximum if the coding earth is connected, or 5.0 volts if the coding earth is not connected*

### ECM relay driver pins

**22** Depending on system, the ECM may drive the main relay, fuel pump relay or OS relay winding to earth.

**23** Unless otherwise stated, the relay(s) and ECM multi-plug should be connected when testing.

#### Main relay driver

**24** Identify the ECM relay driver pins.

**25** With the ignition off, backprobe the ECM main relay driver pin with the voltmeter positive probe - battery voltage should be obtained. If there is no voltage, check the relay and the relay wiring.

**26** Switch the ignition on - the voltage should drop to near zero. If not, switch the ignition off and disconnect the ECM multi-plug (refer to the Warning at the start of this Section).

**27** Connect a temporary jumper lead from the driver pin to earth. If the relay operates, check all voltage supplies and earth connections to the ECM - if the wiring is satisfactory, the ECM is suspect. If the relay does not operate, check the relay and the relay wiring. **Note:** *In some systems, the main relay winding is connected directly to earth.*

#### Pump relay driver

**28** The main relay driver operation (previous test) must be satisfactory before commencing this test, including when the main relay winding is directly connected to earth.

**29** With the ignition switched on, backprobe the pump relay driver with the voltmeter positive probe - battery voltage should be obtained. If there is no voltage, check the relay and the relay wiring.

**30** Crank or run the engine, and the voltage should drop to near zero. If not, switch off the ignition and disconnect the ECM multi-plug (refer to the Warning at the start of this Section).m

**31** Connect a temporary jumper lead from pin 3 to earth. If the relay operates, check all voltage supplies and earth connections to the ECM - if the wiring is satisfactory, the ECM is suspect. If the relay does not operate, check the relay and the relay wiring.

**32** Essentially, the tests for any additional relay drivers are similar to the pump driver tests.

## 38 System relay

### Quick test

**1** If the engine does not run, or a relay-fed component does not function, the following method is a quick way of determining whether the relay is defective.

**2** Check for a supply voltage at the component(s) supplied by the relay.

**3** If voltage is not available, by-pass the relay (see below) and retest the component for voltage, or attempt to run the engine.

**4** If the engine runs or voltage is now available, test the relay (see below) or renew the relay.

**5** If voltage is not available, check for supply, earth and output voltages at the relay terminals. Trace supply faults back to the source **(see illustration 4.31)**. Check for a blown fuse or fusible link in the supply line.

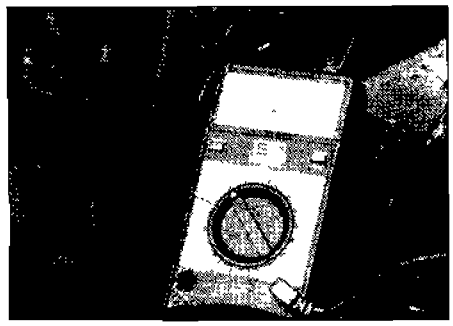

**4.31 Test the relay by probing for voltages**

### Common relay terminal connections (standard relays)

| Terminal no. | Function |
|---|---|
| Main relay no. 30 | Supply from the battery positive terminal. Constant voltage available. |
| Main relay no. 86 | Supply from the battery positive terminal or the ignition switch. Either constant or switched voltage available. |
| Main relay no. 85 | Relay winding, connected to earth or ECM driver terminal. Voltage almost zero when ignition switched on. |
| Main relay no. 87 | Output terminal supplies voltage to ECM, ISCV, injectors etc. Battery voltage available when ignition switched on |
| Pump relay no. 30 | Supply from the battery positive terminal. Constant voltage available. |
| Pump relay no. 86 | Supply from the main relay terminal 87 or the ignition switch. Either constant or switched voltage available. |
| Pump relay no. 85 | Relay winding, ECM driver terminal. Voltage less than 1.25 volts when engine cranking or running. |
| Pump relay no. 87 | Output terminal supplies voltage to fuel pump and sometimes OS heater. Battery voltage available when engine cranking or running |

Terminal 85a and 85b similar to terminal 85 depending on use.

Terminal 87a and 87b similar to terminal 87 depending on use.

Dual relays operate in a similar fashion, but may use different numbers.

Some Citroën, Peugeot, Renault and Far Eastern systems (including Japanese manufacturers) may use a numerical system from 1 to 5 or 6, or even up to 15 depending upon the number of pins

### Citroën, Peugeot and Fiat 15-pin relay (typical)

| Terminal no. | Function |
|---|---|
| 1 | Relay output terminal. Usually connected to fuel pump circuit |
| 2 | Battery supply to relay. Supply from the battery positive terminal. Constant voltage available. |
| 3 | Battery supply to relay. Supply from the battery positive terminal. Constant voltage available. |
| 4 | Relay output terminal Components supplied vary depending on system |
| 5 | Relay output terminal. Components supplied vary depending on system. |
| 6 | Relay output terminal. Components supplied vary depending on system. |
| 7 | Relay earth or driver terminal |
| 8 | Battery supply to relay Supply from the battery positive terminal Constant voltage available. |
| 9 | Relay output terminal. Usually connected to fuel pump circuit. |
| 10 | Relay earth or driver terminal |
| 11 | Battery supply to relay. Supply from the battery positive terminal. Constant voltage available. |
| 12 | Unused. |
| 13 | Relay output terminal. Components supplied vary depending on system |
| 14 | Supply from the ignition switch Switched voltage available. |
| 15 | Battery supply to relay. Supply from the battery positive terminal. Constant voltage available. |

**Note:** *Although the functions of the above terminal numbers are generally as stated, there are wide differences in how the relay is wired in any particular application*

### Bypassing the relay

**6** Remove the relay from the relay multi-plug.
**7** Connect a fused (15 amp) jumper lead between the battery supply terminal (usually terminal 30) and the output terminal (usually terminal 87) on the terminal block, where power to the fuel pump or other fuel injection components is required **(see illustration 4.32)**.
**8** Do not run the fuel pump continually under this condition, and disconnect the bypass whenever a particular test is completed.

### Testing 4-pin relays

**9** Remove the relay from the terminal block, and connect an ohmmeter across terminals 30 and 87.
**10** Attach a wire between terminal 86 and a 12 volt supply.
**11** Attach a wire between terminal 85 and earth.
**12** The ohmmeter should indicate continuity.

## 39 Oxygen sensor (OS)

**1** Connect the voltmeter negative probe to an engine earth.
**2** Identify the terminals. Depending upon system there could be one, three or four terminals:

*OS heater earth.*
*OS heater supply.*
*OS signal.*
*OS return or earth.*

**3** Connect the voltmeter positive probe to the wire attached to the OS signal terminal.
**4** If an MOT-specification four-gas analyser with Lambda is attached to the exhaust system, the following values should be obtained.

*CO: as vehicle specification.*
*HC: less than 50 rpm*
*$CO_2$: greater than 15.0*
*$O_2$: less than 2.0*
*Lambda: 1.0 ± 0.03*

**5** Run the engine to operating temperature.
**6** Raise the engine speed to 3000 rpm for 30 seconds. This will raise the temperature of the OS so that switching should occur.
**7** Hold the engine speed at a steady 2500 rpm. If the engine is allowed to idle for prolonged periods, the OS will become cool and switching may stop.
**8** Check for OS switching. See below for full details and analysis.

### OS heater tests

**9** Check for battery voltage at the OS heater supply terminal. If there is no voltage, trace the supply wiring back to the relay or ignition switch as appropriate. Also check the OS heater earth connection.

### OS signal output

| Condition | Voltage |
|---|---|
| *Engine running (hot at 2500 rpm)* | *200 to 1000 mV* |
| *Throttle fully-open* | *1.0 volt constant* |
| *Fuel cut-off* | *0 volt constant* |
| *Switching frequency* | *1 sec intervals (approximately)* |

### OS switching tests

**10** All closed-loop catalyst vehicles monitor the presence of oxygen in the exhaust system, and adjust the injector output to keep the air-fuel ratio (AFR) within Lambda 1.0 ± 0.03. The switching of the OS is fundamental to the proper operation of the injection system. It is vitally important that OS switching occurs correctly.
**11** Attach a suitable oscilloscope or voltmeter to the OS switching wire.
**12** Increase the engine speed to between 2500 and 3000 rpm for a period of 3 minutes in order to heat the OS and light the catalyst.
**13** Allow the engine to fast idle and check for OS switching.
**14** The OS voltage should switch high and low from approximately 200 mV to 800 mV at a frequency of 8 to 10 times every 10 seconds (1 Hz) **(see illustration 4.33)**. **Note:** *A digital voltmeter will indicate an average voltage of approximately 450 mV. A sluggish OS may appear to be switching correctly, and may not reveal that the voltage is slightly high. An oscilloscope is the more accurate form of test equipment and will reveal most faults. However, if the voltmeter has a max. and min function, the range of average switching will be more easily spotted.*

#### No OS switching

**15** Check the Self-Diagnosis system for fault codes. If the OS has failed, the ECM will either go into open-loop, or use a fixed voltage of approximately 0.45 to establish Lambda = 1.0.
**16** Check the OS heater circuit (heated OS only, 2, 3 or 4-wire types). Refer to the OS tests in the system specific Chapter.
**17** If the OS heater circuit has failed, the OS may never (or only occasionally) reach operating temperature.
**18** Snap accelerate the engine - as the AFR goes rich, the OS should give a high voltage.
**19** If the exhaust is equipped with an CO inspection port before the cat, measure the CO vol % and HC at the port. If the cat is operating efficiently, the following tests may not be so productive when the CO is measured at the exhaust tailpipe.
**20** Increase the engine speed to between 2500 and 3000 rpm for a period of 3 minutes to heat the OS and light the catalyst.
**21** Allow the engine to fast idle.
**22** Place the system in open-loop by disconnecting the multi-plug to the OS.

#### Multi-point injection engines

**23** Remove the vacuum hose from the fuel pressure regulator, and seal the hose end.

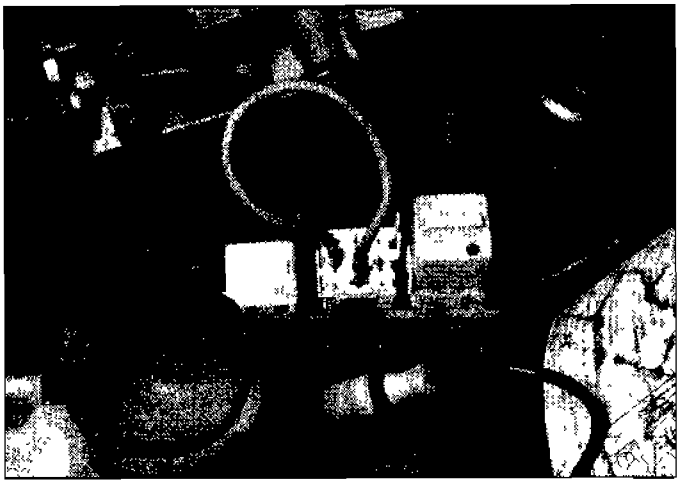

**4.32 Bypass the relay by connecting a jumper lead between terminals 30 and 87, and power will be supplied to the components attached to terminal 87**

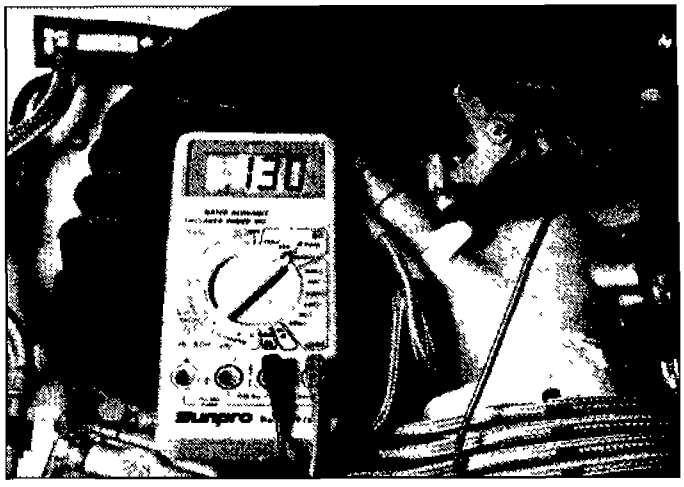

**4.33 Oxygen sensor switching voltage low - 0.130 volts is equivalent to 130 millivolts, and indicates a weak mixture**

### Single-point injection engines

24 Briefly clamp the fuel return line from the pressure regulator back to the fuel tank

### All engines

25 The CO should increase and the OS voltage should switch high
26 Return the system to closed loop operation by reconnecting the multi-plug to the OS.
27 The CO should return to normal as the engine responds to the rich mixture. This proves that the OS and ECM can handle a rich mixture

### Multi-point injection engines

28 Refit the vacuum hose to the pressure regulator

### All engines

29 Place the system in open-loop by disconnecting the multi-plug to the OS
30 Half pull the dipstick or detach a vacuum hose to introduce a vacuum leak
31 The CO should decrease, and the OS voltage should switch low
32 Return the system to closed-loop operation by reconnecting the multi-plug to the OS
33 The CO should return to normal as the engine responds to the lean mixture. This proves that the OS and ECM can handle a weak mixture

## 40 Inertia switch

1 The inertia switch is a safety device designed to isolate the fuel pump or cut the engine electrical system during a crash. Heavy deceleration or a thump close to its location can sometimes affect it

2 Reset the inertia switch by pressing down the reset button
3 If voltage is still not available at the fuel pump or other protected circuits, continue with the tests

### *Checking inertia switch operation*

4 Inspect the inertia switch terminal connections for corrosion and damage
5 Check that the terminal connections are making good contact with the switch.
6 Study a specific wiring diagram to identify the circuit which the inertia switch protects. Typical circuits are
*a) Relay output to the fuel pump*
*b) Relay supply*
*c) Relay driver circuit to the ECM*
7 Check the supply voltage and earth connections to the inertia switch.

## 41 Fuel pump and circuit

### *Fuel pump test procedures*

1 Locate the fuel pump. Typically the fuel pump will either be bolted to the chassis next to the fuel tank, or located inside the fuel tank itself. Access to the in-tank pump is often gained by burrowing under the rear passenger seat or boot floor
2 Connect the voltmeter negative probe to an earth.
3 Identify the supply and earth terminals
4 Connect the voltmeter positive probe to the wire attached to the fuel pump supply terminal
5 Crank the engine or bypass the fuel pump relay - battery voltage should be obtained

### Voltage supply not available

*a) Check the fuel pump fuse (where fitted)*
*b) Check the fuel pump relay*
*c) Check/reset the inertia switch (where fitted)*
*d) Check continuity of the wiring*

6 Attach the voltmeter positive probe to the fuel pump earth terminal
7 Crank the engine or bypass the relay. A voltage of 0.25 volts maximum should be obtained.

## 42 Mixture control or adaptive faults

1 A whole variety of different reasons may be responsible for fault codes that indicate mixture control or adaptive problems. Other codes may also be raised that could narrow the field

### *Rich mixture or out of limit adaptive function*

2 Check for excessive engine blowby, high fuel pressure, coolant temperature sensor, airflow sensor, MAP sensor, evaporative control, EGR system, and for leaking injectors.

### *Weak mixture or out of limit adaptive function*

3 If one cylinder is showing a problem or the engine misfires, check the spark plugs, fuel pressure, idle control, induction system for vacuum leaks, fuel injectors for fouling, exhaust system for leaks, engine compression, valve gear, head gasket and secondary HT system

# Chapter 5
# Alfa Romeo

## Contents

**Index of vehicles**
**Self-Diagnosis**
Actuator testing without a fault code reader (FCR) . . . 5
Clearing fault codes without a fault code reader (FCR) . . . 4
Guide to test procedures . . . 7
Introduction . . . 1
Retrieving fault codes without a fault code reader (FCR) - flash codes . . . 3
Self-Diagnosis connector location . . . 2
Self-Diagnosis with a fault code reader (FCR) . . . 6
**Fault code table**

# Self-Diagnosis

## 1 Introduction

The engine management systems (EMSs) fitted to Alfa Romeo vehicles are mainly of Bosch origin, and include: Bosch Motronic versions ML4.1, 1.7, 2.10.3/4, MP3.1 and also Multec XM and Weber IAW 8F 6B. All Alfa engine management systems control primary ignition, fuelling and idle functions from within the same control module

### *Self-Diagnosis (SD) function*

Each electronic control module (ECM) has a self-test capability that continually examines the signals from certain engine sensors and actuators, and compares each signal to a table of programmed values. If the diagnostic software determines that a fault is present, the ECM stores one or more fault codes Codes will not be stored about components for which a code is not available, or for conditions not covered by the diagnostic software.

#### Bosch Motronic ML4.1 and 1.7

In these systems, the EMS generates 4-digit flash codes for retrieval by manual methods. When a fault code reader (FCR) is used to retrieve fault codes, the code numbers displayed upon the FCR screen may well be different. Refer to the fault code table at the end of this Chapter, and refer to the columns headed "Flash code" or "FCR code" as appropriate.

#### All other systems

Alfa-Romeo software does not generate fault code numbers for systems other than Bosch Motronic ML4.1 and 1.7, and the FCR normally displays faults on the FCR screen without reference to a specific code number. Although actual code numbers are not available, faults in one or more of the circuits and component covered by the diagnostic software will cause a fault to be stored.

### *Limited operating strategy (LOS)*

Alfa Romeo systems featured in this Chapter utilise LOS (a function that is commonly called the "limp-home mode"). Once certain faults have been identified (not all faults will initiate LOS), the ECM will implement LOS, and refer to a programmed default value rather than the sensor signal. This enables the vehicle to be safely driven to a workshop/garage for repair or testing. Once the fault has cleared, the ECM will revert to normal operation.

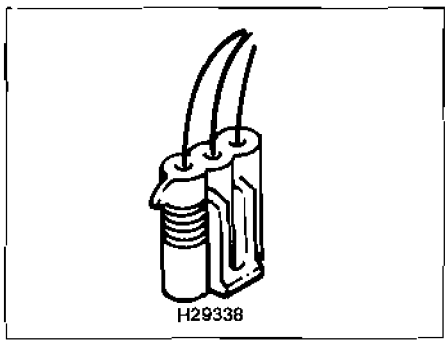


**5.1 Three-pin SD connector for FCR use**

### *Adaptive or learning capability*

Alfa systems also utilise an adaptive function that will modify the basic programmed values for most effective operation during normal running and with due regard to engine wear.

### *Self-Diagnosis warning light*

US models are equipped with a "Check Engine" warning light located within the instrument panel; as demanded by US OBDII regulations. Fault codes indicating failure of emission-related components may be retrieved through the flashing of the light. European models are not equipped with a warning light.

## 2 Self-Diagnosis connector location

### *Bosch Motronic ML4.1*

The two SD connectors are located in the passenger compartment under the facia. The 3-pin multi-plug is provided for dedicated FCR use **(see illustration 5.1)** and the 4-pin multi-plug is provided for retrieving flash codes.

### *Bosch Motronic M1.7*

The 3-pin SD connector is provided for both dedicated FCR use and for retrieving flash codes, and is normally located under the passenger's side facia close to the ECM.

### *Other systems*

The 3-pin SD connector is provided for FCR use alone, and may be located in the engine compartment on the right-hand wing, in the centre console close to the ECM, or under the driver's side or passenger's side facia close to the ECM.

## 3 Retrieving fault codes without a fault code reader (FCR) - flash codes

**Note:** *During the course of certain test procedures, it is possible for additional fault codes to be generated. Care must be taken that any codes generated during test routines do not mislead diagnosis; all codes must be cleared once testing is complete. Flash code numbers retrieved using manual methods may be different to those code numbers displayed with the aid of an FCR. Refer to the fault code table at the end of this Chapter, in the column headed "Flash code".*

### *Bosch Motronic ML4.1*

**1** Attach an LED diode light and an accessory switch to the 4-pin SD connector **(see illustration 5.2)**.

**2** Switch on the ignition - the LED should illuminate.

**3** Close the accessory switch for between 2.5 and 5.0 seconds, and then open the switch. The LED will illuminate for 2.5 seconds and then begin to flash.

**4** The 4-digit fault codes are indicated by the flashing of the LED as follows:

*a) The four digits are indicated by four series of flashes.*

*b) The first series of flashes indicates the first digit, the second series of flashes indicates the second digit, and so on until all four digits have been flashed.*

*c) Each series consists of a number of 1- or 2-second flashes, separated by short pauses. Each integer (whole number) in the range 1 to 9 is represented by a number of 1-second flashes, and each zero is represented by 2-second flashes.*

*d) A 2.5-second pause separates each series of flashes.*

*e) The code number "1213" is indicated by a 1-second flash, a short pause, two 1-second flashes, a short pause, one 1-second flash, a short pause and three 1-second flashes. After a 2.5-second pause, the code will be repeated.*

**5** Count the number of flashes in each series and record the code. Refer to the tables at the end of the Chapter to determine the meaning of the fault code

**6** Each code will be repeated until the accessory switch is once more closed for between 2.5 and 5.0 seconds and then opened. The next code will then be displayed. A maximum of five codes can be stored by ML4.1 at one time.

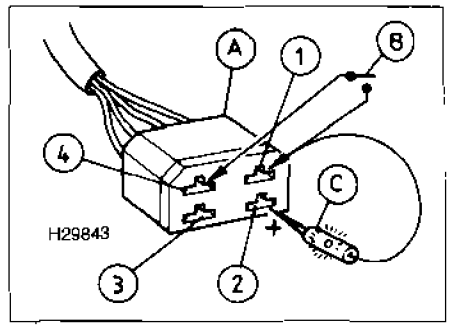


**5.2 Motronic ML4.1 - connect an accessory switch and LED to the 4-pin SD connector in order to retrieve flash codes**

*A SD connector*
*B Accessory switch*
*C LED diode light*

7 Continue retrieving codes until code 0000 is transmitted. Code 0000 signifies that no more codes are stored.
8 If code 4444 is transmitted, no fault codes are stored.
9 Turn off the ignition and remove the diode light and accessory switch to end fault code retrieval.

### Bosch Motronic 1.7

10 Ensure that the throttle potentiometer sensor (TPS) is functional. The following procedures cannot be triggered if the ECM does not receive correct signals from the TPS.
11 Connect a diode test light between the battery (+) supply and ECM pin number 8 as shown **(see illustration 5.3)**. **Note:** *It will be necessary to detach the back of the ECM multi-plug so that the LED negative probe can backprobe the ECM pin number with the multi-plug connected. Care must be taken that the ECM pins are not damaged by this process, and the LED probe must not short two pins together.*
12 Switch on the ignition without starting the engine, and fully depress and release the accelerator pedal five times in succession. This process must be completed with 5.0 seconds of turning on the ignition.
13 The LED will illuminate for 2.5 seconds and then begin to flash.
14 The 4-digit fault codes are indicated by the flashing of the LED as follows:

*a) The four digits are indicated by four series of flashes.*
*b) The first series of flashes indicates the first digit, the second series of flashes indicates the second digit and so on until all four digits have been flashed.*
*c) Each series consists of a number of 1- or 2-second flashes, separated by short pauses. Each integer (whole number) in the range 1 to 9 is represented by a number of 1-second flashes, and each zero is represented by 2-second flashes.*
*d) A 2.5-second pause separates each series of flashes.*
*e) The code number "1213" is indicated by a 1-second flash, a short pause, two 1-second flashes, a short pause, one 1-second flash, a short pause and three 1-second flashes. After a 2.5-second pause, the code will be repeated*

15 Count the number of flashes in each series, and record the code. Refer to the tables at the end of the Chapter to determine the meaning of the fault code.
16 Each code will be repeated until the accelerator pedal is fully depressed and released five times in succession within a period of 5.0 seconds. The next code will then be displayed.
17 Continue retrieving codes until code 0000 or 1000 is transmitted. Code 0000 (or 1000) signifies that no more codes are stored.
18 If code 4444 is transmitted, no fault codes are stored.
19 Turn off the ignition and remove the diode light to end fault code retrieval

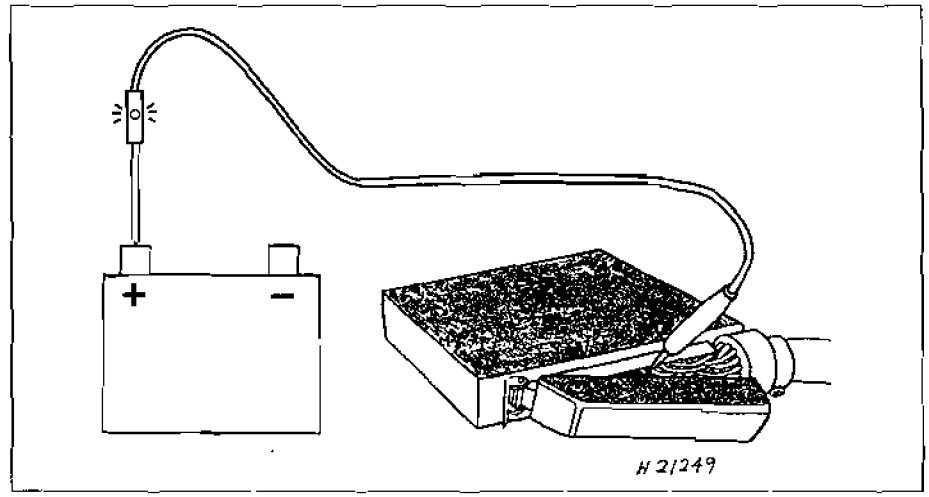


**5.3 Motronic 1.7 - connect a diode test light between the battery (+) supply and ECM pin number 8 in order to retrieve flash codes**

### All other systems

20 Flash codes are not available. A dedicated fault code reader (FCR) must be used to retrieve fault codes.

## 4 Clearing fault codes without a fault code reader (FCR)

### Bosch Motronic ML4.1

1 Follow the procedure described in Section 3 to retrieve fault codes.
2 When code 0000 is transmitted, close the accessory switch for approximately 10 seconds, and then open the switch. All fault codes are now cleared from the ECM memory.
3 Turn off the ignition and remove the accessory switch.

### Bosch Motronic M1.7

4 Follow the procedure described in Section 3 to retrieve fault codes.
5 When code 0000 or 1000 is transmitted, fully depress the accelerator pedal for approximately 10 seconds and then release. All fault codes are now cleared from the ECM memory.
6 Turn off the ignition.

### All systems (alternative method)

7 Turn off the ignition and disconnect the battery negative terminal for a period of approximately 5 minutes.
8 Re-connect the battery negative terminal
**Note:** *The first drawback to this method is that battery disconnection will initialise all ECM adaptive values. Re-learning the appropriate adaptive values requires starting the engine from cold, and driving at various engine speeds for approximately 20 to 30 minutes. The engine should also be allowed to idle for approximately 10 minutes. The second drawback is that the radio security codes, clock setting and other stored values will be initialised, and these must be re-entered once the battery has been reconnected. Where possible, an FCR should be used for code clearing.*

## 5 Actuator testing without a fault code reader (FCR)

### Bosch Motronic ML4.1 only

1 Attach an LED diode light and an accessory switch to the 4-pin SD connector **(refer to illustration 5.2)**.
2 Close the accessory switch and switch on the ignition
3 Wait 2.5 to 5.0 seconds and then open the accessory switch. The LED light will flash code number 1411 and the injector circuit will actuate. Audible operation of the injector solenoids should be heard.

***Warning: The injectors will actuate for as long as the circuit is closed, and there is a real danger of filling the cylinders with petrol. If testing is required for more than 1 second, disconnect the fuel pump supply (or remove the fuel pump fuse) before commencing this test.***

4 Discontinue the injector test by closing the accessory switch once more.
5 Wait 2.5 to 5.0 seconds and then open the accessory switch. The LED will flash code number 1412 and the ISCV circuit will actuate. Audible operation of the idle control solenoid should be heard.
6 Discontinue the ISCV test by closing the accessory switch once more.
7 Wait 2.5 to 5.0 seconds and then open the accessory switch. The LED will flash code number 1414 and the valve timing actuator circuit will actuate (if so equipped). Audible operation of the valve timing control solenoid should be heard

8 Discontinue the valve timing actuator test by closing the accessory switch once more.
9 Wait 2.5 to 5.0 seconds and then open the accessory switch. The LED will flash code number 1414 and the CFSV circuit will actuate (if so equipped). Audible operation of the carbon filter solenoids should be heard
10 Discontinue the CFSV circuit test by closing the accessory switch once more.
11 Wait 2.5 to 5.0 seconds and then open the accessory switch. The LED will flash code number 0000 and the actuator tests are completed
12 Turn off the ignition and remove the diode light and accessory switch to end actuator activation.

### *All other systems*

13 A dedicated fault code reader (FCR) must be used to test the actuators.

## 6 Self-Diagnosis with a fault code reader (FCR)

**Note:** *During the course of certain test procedures, it is possible for additional fault codes to be generated. Care must be taken that codes generated during test routines do not mislead diagnosis*

### *All Alfa Romeo models*

1 Connect an FCR to the SD connector. Use the FCR for the following purposes, in strict compliance with the FCR manufacturer's instructions:
*a) Retrieving fault codes or displaying faults.*
*b) Clearing fault codes or faults*
*c) Testing actuators.*
2 On Bosch Motronic ML4.1 and 1.7 systems, the code numbers displayed upon the FCR screen may be different to the code numbers retrieved during the manual method described in Section 3. Refer to the fault code table at the end of this Chapter, in the column headed "FCR codes".
3 Codes must always be cleared after component testing, or after repairs involving the removal or replacement of an engine management component.

## 7 Guide to test procedures

1 Use an FCR to interrogate the ECM for faults or codes (as applicable), or manually gather codes, as described in Section 3 or 6.

### *Codes stored*

2 If one or more fault codes are gathered, refer to the fault code table at the end of the Chapter to determine their meaning.
3 If several codes are gathered, look for a common factor such as a defective earth return or supply.
4 Refer to the component test procedures in Chapter 4, where you will find a means of testing the majority of components and circuits found in the modern EMS.
5 Once the fault has been repaired, clear the codes and run the engine under various conditions to determine if the problem has cleared.
6 Check the ECM for fault codes once more. Repeat the above procedures where codes are still being stored
7 Refer to Chapter 3 for more information on how to effectively test the engine management system.

### *No codes stored*

8 Where a running problem is experienced, but no codes are stored, the fault is outside of the parameters designed into the SD system. Refer to Chapter 3 for more information on how to effectively test the engine management system.
9 If the problem points to a specific component, refer to the test procedures in Chapter 4, where you will find a means of testing the majority of components and circuits found in the modern EMS

# Fault code table

### *Bosch Motronic ML4.1 and 1.7*

| Flash code | FCR code | Description |
|---|---|---|
| 0000 | - | End of fault code output |
| 1000 | - | End of fault code output |
| 1211 | 037 | Battery |
| 1212 | 052 | Throttle switch (TS), idle switch |
| 1213 | 053 | Throttle switch (TS), full-load switch |
| 1214 | 045 | Coolant temperature sensor (CTS) or CTS circuit |
| 1215 | 043 | CO adjuster or CO circuit |
| 1216 | 012 | Throttle pot sensor (TPS) or TPS circuit |
| 1221 | 007 | Vane airflow sensor (AFS) or AFS circuit |
| 1222 | 004 | Idle speed control valve (ISCV) or ISCV circuit |
| 1223 | 010 | Oxygen sensor (OS) or OS circuit |
| 1224 | 028 | Oxygen sensor (OS) or OS circuit |
| 1225 | 044 | Air temperature sensor (ATS) or ATS circuit |
| 1226 | 100 | Electronic control module (ECM) |
| 1227 | - | Injectors or injector circuit |
| 1228 | - | Injectors or injector circuit |
| 1229 | - | Air conditioning (A/C) heater control or A/C circuit |
| 1231 | 031 | Vehicle speed signal (VSS) - automatic transmission or VSS circuit |
| 1232 | 032 | Injectors (four-cylinder: 1 & 3, six-cylinder: 1, 2 & 4) or injector circuit |
| 1233 | 002 | Injectors (four-cylinder: 2 & 4, six-cylinder: 3, 5 & 6) or injector circuit |
| 1234 | 013 | Automatic transmission (AT) or AT circuit |
| 1235 | 085 | Air conditioning (A/C) or A/C circuit |
| 1236 | 021 | Air conditioning (A/C) compressor control or A/C circuit |
| 1243 | 1003 | Fuel pump relay or circuit |
| 1244 | 034 | Carbon filter solenoid valve (CFSV) or CFSV circuit |
| 1245 | 023 | Variable valve timing actuator (Twin Spark models) or circuit |
| 1251 | 001 | Electronic control module (ECM) |
| 1252 | 009 | Crank angle sensor (CAS) or CAS circuit |
| 1254 | - | Throttle pot sensor (TPS) or TPS circuit |
| 1255 | - | Camshaft position (CMP) sensor or CMP sensor circuit |
| 1265 | 015 | Self-Diagnosis (SD) warning light or SD circuit |
| 2111 | - | Knock sensor (KS) 1 or KS circuit |
| 2112 | - | Knock sensor (KS) 2 or KS circuit |
| 2113 | - | Electronic control module (ECM) |
| 2116 | - | Electronic control module (ECM) |
| 4444 | - | No faults found in the ECM. Proceed with normal diagnostic methods |

### *All systems except Bosch Motronic ML4.1 and 1.7*

Alfa-Romeo software does not usually generate fault codes, and the FCR normally displays faults on the FCR screen without reference to a specific code number. Although actual code numbers are not available, faults in one or more of the circuits and components covered by the diagnostic software will cause a fault to be stored.

# Chapter 6
# Audi



## Contents

**Index of vehicles**
**Self-Diagnosis**
Clearing fault codes without a fault code reader (FCR) . . 4
Guide to test procedures . . . . . 6
Introduction . . . . . 1
Retrieving fault codes without a fault code reader (FCR) flash codes . . . 3
Self Diagnosis connector location . . . 2
Self Diagnosis with a fault code reader (FCR) . . . 5
**Fault code table**

## Index of vehicles

| Model | Engine code | Year | System |
|---|---|---|---|
| Audi A3 1.6 | AEH | 1996 to 1997 | Simos |
| Audi A3 1.8 | AGN | 1996 to 1997 | Bosch Motronic 3.2 |
| Audi A3 1.8i | AGN | 1997 on | Bosch Motronic 3.8.2 |
| Audi A3 1.8 Turbo | AGU | 1996 to 1997 | Bosch Motronic 3.2 |
| Audi A4 1.6 | ADP | 1995 to 1997 | Bosch Motronic 3.2 |
| Audi A4 1.8 | ADR | 1995 to 1997 | Bosch Motronic 3.2 |
| Audi A4 1.8 Turbo | AFB | 1995 to 1997 | Bosch Motronic 3.2 |
| Audi A4 2.6 | ABC | 1995 to 1997 | VAG MPFI |
| Audi A4 2.8 | AAH | 1995 to 1996 | VAG MPFI |
| Audi A4 2.8 | ACK | 1996 to 1997 | Bosch Motronic MPFI |
| Audi A6 2.0i | ABK | 1993 to 1996 | VAG Digifant |
| Audi A6 2.8 30V | ACK | 1995 to 1997 | Bosch Motronic |
| Audi A6 S6 4.2 cat | AAN | 1991 to 1997 | Bosch Motronic M2.3.2 |
| Audi A6 2.6 | ABC | 1992 to 1997 | VAG MPFI |
| Audi A6 2.8 | AAH | 1991 to 1997 | VAG MPFI |
| Audi A6 S6 4.2 | AHK | 1996 to 1997 | Bosch Motronic |
| Audi A6 S6 4.2 | AFC | 1994 to 1997 | Bosch Motronic |
| Audi A8 2.8i V6 | AAH | 1994 to 1997 | VAG MPFI |
| Audi A8 2.8 | ACK | 1996 to 1997 | Bosch Motronic |
| Audi A8 3.7 | AFW | 1995 to 1997 | Bosch Motronic |
| Audi A8 4.2 | ABZ | 1994 to 1996 | Bosch Motronic M2.4 |
| Audi V8 3.6 cat | PT | 1989 to 1994 | Bosch Motronic M2.1 |
| Audi V8 4.2 cat | ABH | 1992 to 1994 | Bosch Motronic M2.4 |
| Audi 90 1.6 cat | ABM | 1992 to 1995 | Bosch Mono-Motronic MA1.2 |
| Audi 80 1.6 cat | ADA | 1993 to 1995 | VAG MPFI |
| Audi 80 1.8i and 4x4 cat | JN | 1986 to 1991 | Bosch KE-Jetronic |
| Audi 80 1.8i and 4x4 cat | PM | 1988 to 1989 | Bosch Motronic-Jetronic A2.2 |
| Audi 80 1.8 and 4x4 cat | PM | 1990 to 1991 | Bosch Mono-Motronic |
| Audi 80 2.0i Quattro cat | ABT | 1992 to 1995 | Bosch Mono Motronic |
| Audi 80 Coupe 16V 2.0 cat | 6A | 1990 to 1995 | Bosch KE1.2 Motronic |
| Audi 80 Coupe 2.0 and 4x4 cat | 9A | 1988 to 1990 | Bosch KL1.1 Motronic |
| Audi 80 Coupe and 4x4 2.0 cat | AAD | 1990 to 1992 | Bosch KE1.2 Motronic |
| Audi 80 2.0 cat | ABK | 1992 to 1995 | VAG Digifant |
| Audi 80, 90 Coupe and Cabrio 2.3 | NG | 1987 to 1995 | Bosch KE3-Jetronic |
| Audi 80 2.3 cat | NG | 1992 to 1994 | Bosch KE3-Jetronic |
| Audi 80 2.6 cat | ABC | 1992 to 1995 | VAG MPFI |
| Audi 80, 90 2.0 cat | PS | 1987 to 1991 | Bosch KL-Jetronic |
| Audi 80, 90 2.8 cat | AAH | 1992 to 1994 | VAG MPFI |
| Audi 80 S2 | ABY | 1993 to 1995 | Bosch Motronic 4 Turbo |

| Model | Engine code | Year | System |
|---|---|---|---|
| Audi 90 Coupe 2.0 20V cat | NM | 1988 to 1991 | VAG MPi |
| Audi 90 Coupe and 4x4 2.3 cat | 7A | 1988 to 1991 | VAG MPi |
| Audi 100 1.8i cat | 4B | 1988 to 1991 | Bosch Mono-Jetronic |
| Audi 100 1.8i cat | PH | 1985 to 1991 | Bosch KE-Jetronic |
| Audi 100 2.0 cat | AAE | 1991 to 1994 | Bosch Mono-Motronic MA1.2 |
| Audi 100 2.0i | ABK | 1993 to 1996 | VAG Digifant |
| Audi 100 2.0 cat | AAD | 1991 to 1994 | Bosch KE-Motronic |
| Audi 100 4x4 2.0 16V cat | ACE | 1992 to 1994 | Bosch KE-Motronic |
| Audi 100 S4 2 2 cat | AAN | 1991 to 1997 | Bosch Motronic 2.3 2 |
| Audi 100 2.3E cat | NF | 1986 to 1991 | Bosch KE3-Jetronic |
| Audi 100 2.3 cat | AAR | 1991 to 1994 | Bosch KE3-Jetronic |
| Audi 100 2.6 | ABC | 1992 to 1997 | VAG MPFi |
| Audi 100 2.8 | AAH | 1991 to 1997 | VAG MPi |
| Audi 100 S4 4 2 | ABH | 1993 to 1994 | Bosch Motronic |
| Audi 200 4x4 Turbo cat | 3B | 1989 to 1991 | Bosch Motronic + Turbo |
| Audi Coupe S2 | 3B | 1990 to 1993 | Bosch Motronic + Turbo |
| Audi Coupe and Cabrio 2 0 cat | ABK | 1992 to 1997 | VAG Digifant |
| Audi Coupe and Cabrio 2.6 cat | ABC | 1993 to 1997 | VAG MPFi |
| Audi Coupe and Cabrio 2.8 | AAH | 1991 to 1997 | VAG MPi |
| Audi Coupe S2 | ABY | 1993 to 1996 | Bosch Motronic + Turbo |
| Audi Quattro 20V cat | RR | 1989 to 1991 | Bosch Motronic + Turbo |
| Audi RS2 Avant | ADU | 1994 to 1996 | Bosch Motronic + Turbo |

# Self-Diagnosis

## 1 Introduction

The engine management and fuel injection systems fitted to Audi vehicles are mainly of Bosch origin. Bosch Motronic versions 2.3.2, 2.4, 3 2, and 3.8.2, Mono-Jetronic, Mono-Motronic 1.1 and 1.2, KE-Motronic 1.1 and 1.2, KE-3 Jetronic, Simos, VAG Digifant, VAG MPi and VAG MPFi may be fitted.

All Audi engine management systems (EMSs) control primary ignition, fuelling and idle functions from within the same control module; the exceptions are Mono-Jetronic and KE-3 Jetronic systems, which control fuelling and idle functions alone.

### *Self-Diagnosis (SD) function*

Each ECM has a self-test capability that continually examines the signals from certain engine sensors and actuators, and compares each signal to a table of programmed values. If the diagnostic software determines that a fault is present, the ECM stores one or more fault codes. Codes will not be stored about components for which a code is not available, or for conditions not covered by the diagnostic software.

Audi systems are capable of generating two kinds of fault codes - 4-digit flash codes and 5-digit fault codes.

Evolution of Audi systems has meant that the codes generated, and their reading procedures, now fall into one of three groups. The changeover point in a particular vehicle range is not always obvious.

*a) Some early systems will only generate 4-digit flash codes which can be retrieved via the warning light (where fitted), an LED light, or a dedicated fault code reader (FCR). These systems include Mono-Jetronic and Mono-Motronic MA1.2.1.*

*b) Later systems can generate both 4-digit flash codes and 5-digit fault codes. The 4-digit flash codes are generated via the warning light (where fitted), or an LED light, whilst a dedicated FCR is required to retrieve the 5-digit codes. These systems include Bosch Motronic versions 2.3, 2.4, and 2.7, KE-3 Jetronic, KE-Motronic and Mono-Motronic (early 45-pin ECM).*

*c) The very latest systems can only generate 5-digit fault codes, and these must be retrieved with the aid of a dedicated FCR. These systems include Bosch Motronic versions 2.9, 3.2 and 3.8.2, Mono-Motronic MA1.2.2 (later 45-pin ECM), Simos, VAG Digifant (68-pin ECM) and VAG MPi and MPFi.*

### *Limited operating strategy (LOS)*

Audi systems featured in this Chapter utilise LOS (a function that is commonly called the "limp-home mode"). Once certain faults have been identified (not all faults will initiate LOS), the ECM will implement LOS and refer to a programmed default value rather than the sensor signal. This enables the vehicle to be safely driven to a workshop/garage for repair or testing. Once the fault has cleared, the ECM will revert to normal operation.

### *Adaptive or learning capability*

Audi systems also utilise an adaptive function that will modify the basic programmed values for most effective operation during normal running, and with due regard to engine wear.

### *Self-Diagnosis (SD) warning light*

Certain models are equipped with a SD warning light located within the instrument panel

## 2 Self-Diagnosis connector location

### *Mono-Jetronic (Audi 80 and 100 1.8i up to July 1988)*

On top of the fuel pump relay **(see illustration 6.1)** for flash code retrieval alone.

### *Mono-Jetronic (Audi 80 and 100 1.8i from August 1988)*

Dual 2-pin SD connectors located in the passenger's side footwell **(see illustration 6.2)** for flash code retrieval and FCR use.

### *Bosch Mono-Motronic*

Dual 2-pin SD connectors located in the passenger's side footwell, under the facia, **(refer to illustration 6.2)** or in the engine compartment left-hand fusebox close to the bulkhead **(see illustration 6.3)** for flash code retrieval and FCR use. The ECM is usually located in the driver's or passenger's side footwell, or in the engine compartment behind the bulkhead.

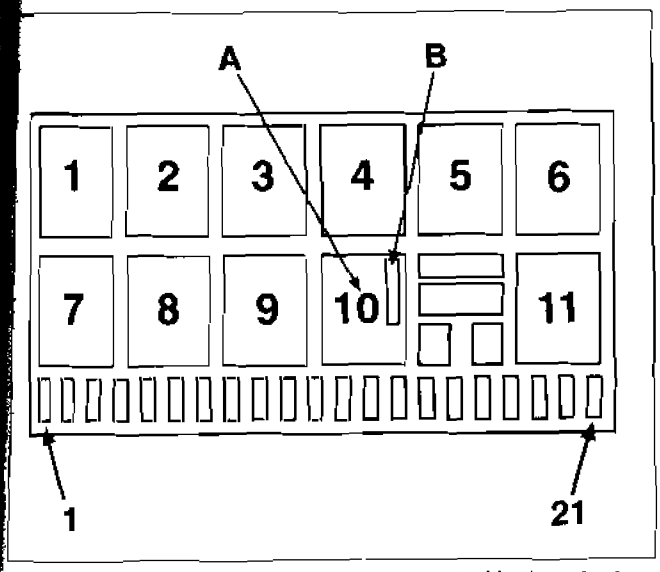


6.1 Use a fuse to bridge the test contacts located in the relay box for Audi 80 and 100 models prior to July 1988

*A Fuel pump relay location B Test contacts*

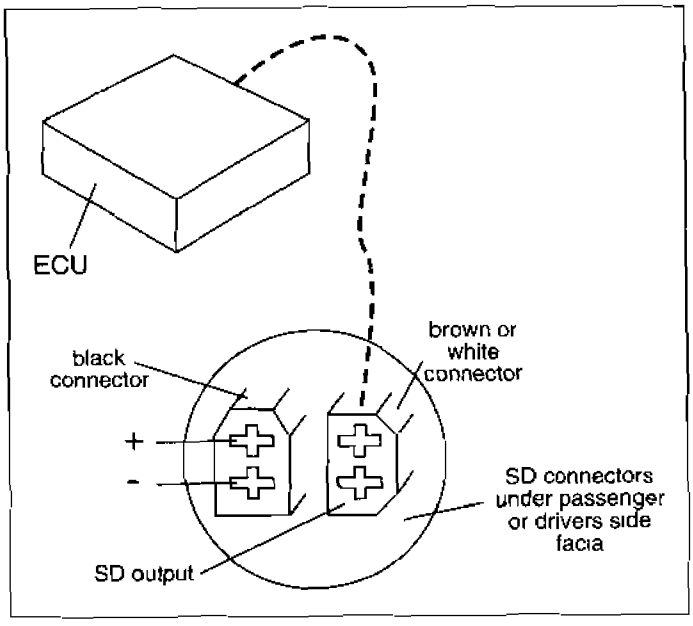


6.2 Location of SD connectors under the facia

6

### Bosch KE3-Jetronic and KE-Motronic 1.1

Dual 2-pin SD connectors located underneath a cover above the foot pedals in the driver's side footwell; for flash code retrieval and FCR use.

### Bosch KE-Motronic 1.2 and Motronic 2.3

Dual 2-pin SD connectors located underneath a cover above the foot pedals in the driver's side footwell, or triple 2-pin connectors located underneath a cover above the foot pedals in the driver's side footwell or in the engine compartment fusebox close to the bulkhead; for flash code retrieval and FCR use.

### Bosch Motronic 2.4

Four 2-pin SD connectors located in the passenger's side footwell, under the facia; for flash code retrieval and FCR use.

### VAG Digifant

Dual 2-pin connectors located in the passenger's side footwell, under the facia, **(refer to illustration 6.2)** or in the left-hand electrical box close to the bulkhead **(refer to illustration 6.3)** for FCR use alone.

### VAG MPi and MPFi

Dual 2-pin SD connectors located above the foot pedals in the driver's side footwell, for FCR use alone.

### 16-pin OBD connector (A3 models including Bosch Motronic 3.2, 3.8.2 and Simos)

Situated under a cover in the front console.

### 16-pin SD connector (other models)

Situated under a cover in the rear passenger console, adjacent to the ashtray **(see illustration 6.4)**

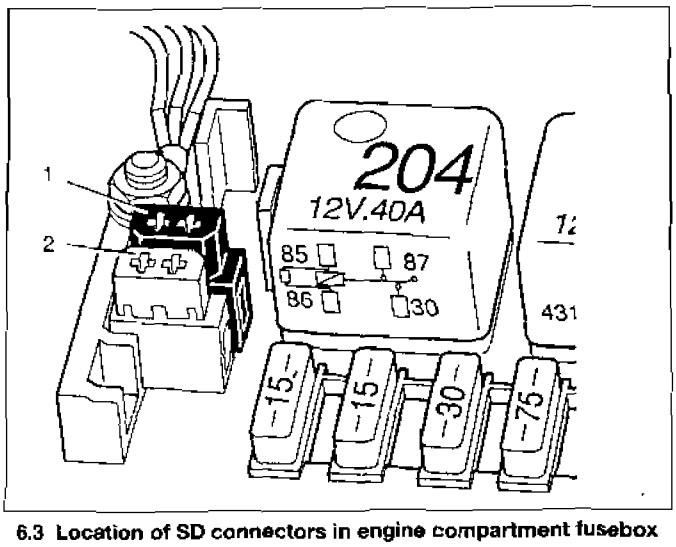


6.3 Location of SD connectors in engine compartment fusebox

*1 Power supply 2 Data transfer*

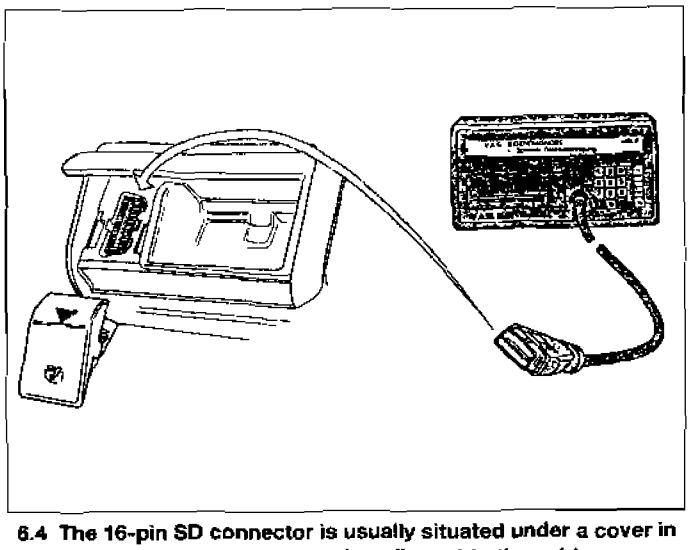

6.4 The 16-pin SD connector is usually situated under a cover in the rear passenger console, adjacent to the ashtray

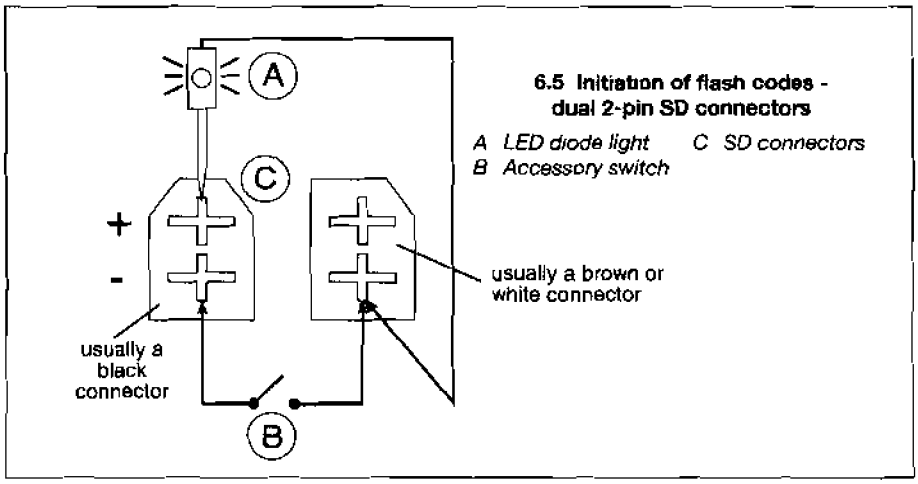


**6.5 Initiation of flash codes - dual 2-pin SD connectors**

*A LED diode light C SD connectors*
*B Accessory switch*

## 3 Retrieving fault codes without a fault code reader (FCR) - flash codes

**Note:** *During the course of certain test procedures, it is possible for additional fault codes to be generated. Care must be taken that any codes generated during test routines do not mislead diagnosis. All codes must be cleared once testing is complete. 4-digit flash codes retrieved manually may be different to those codes displayed with the aid of an FCR. Refer to the fault code table at the end of this Chapter, in the column headed "Flash code"*

### *Mono-Jetronic (prior to July 1988)*

1 Start the engine and allow it to warm up to normal operating temperature. **Note:** *Oxygen sensor (OS) fault codes can only be retrieved after a road test of at least 10 minutes' duration.*

2 Stop the engine and switch on the ignition.

3 If the engine will not start, crank the engine for at least 6.0 seconds and leave the ignition switched on.

4 Use a fuse to short the test contacts on the fuel pump relay for at least 5.0 seconds **(refer to illustration 6.1)**.

5 Remove the fuse, and the SD warning light will flash to indicate the 4-digit fault code as follows:

*a) The four digits are indicated by four series of flashes.*
*b) The first series of flashes indicates the first digit, the second series of flashes indicates the second digit, and so on until all four digits have been flashed.*
*c) Each series consists of a number of 1- or 2-second flashes, separated by short pauses. Each integer (whole number) in the range 1 to 9 is represented by a number of 1-second flashes and each zero is represented by 2-second flashes.*
*d) A 2.5-second pause separates each series of flashes.*
*e) The code number "1231" is indicated by a 1-second flash, a short pause, two 1-second flashes, a short pause, three 1-second flashes, a short pause and a 1-second flash. After a 2.5-second pause, the code will be repeated.*

6 Count the number of flashes in each series, and record the code. Refer to the tables at the end of the Chapter to determine the meaning of the fault code.

7 Each code will be repeated until the fuse is re-inserted. Remove the fuse after 6.0 seconds, and the next code will then be displayed.

8 Continue retrieving codes until code 0000 is transmitted. Code 0000 signifies that no more codes are stored, and is displayed when the light flashes off and on at 2.5 second intervals.

9 If code 4444 is transmitted, no fault codes are stored.

10 Turn off the ignition to end fault code retrieval.

### *Bosch Mono-Jetronic (after July 1988), KE-Jetronic, KE-Motronic 1.1 and 1.2, Motronic 2.3 and 2.4*

11 Attach an accessory switch to the dual 2-pin, 3-pin or 4-pin SD connectors **(see illustrations 6.5 to 6.7)**. If the vehicle is not equipped with a facia-mounted SD warning light, connect a diode LED light between the battery (+) supply and the SD connector as shown.

12 Start the engine and allow it to warm up to normal operating temperature. **Note:** *Oxygen sensor (OS) fault codes can only be retrieved after a road test of at least 10 minutes' duration.*

13 Stop the engine and switch on the ignition.

14 If the engine will not start, crank the engine for at least 6 seconds and leave the ignition switched on.

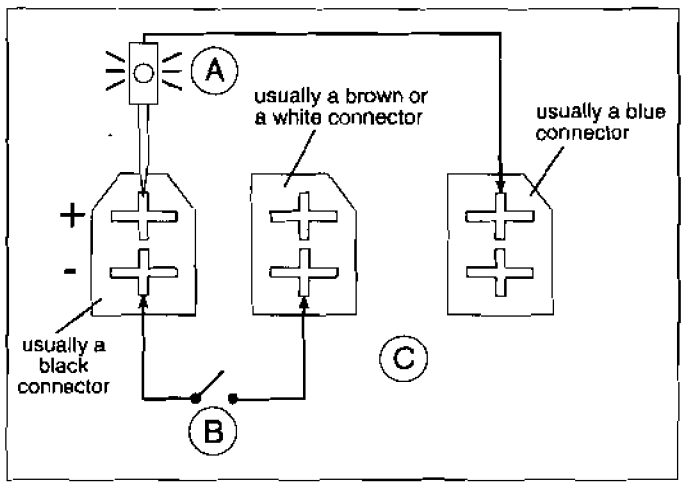


**6.6 Initiation of flash codes - triple 2-pin SD connectors**

*A LED diode light B Accessory switch C SD connectors*

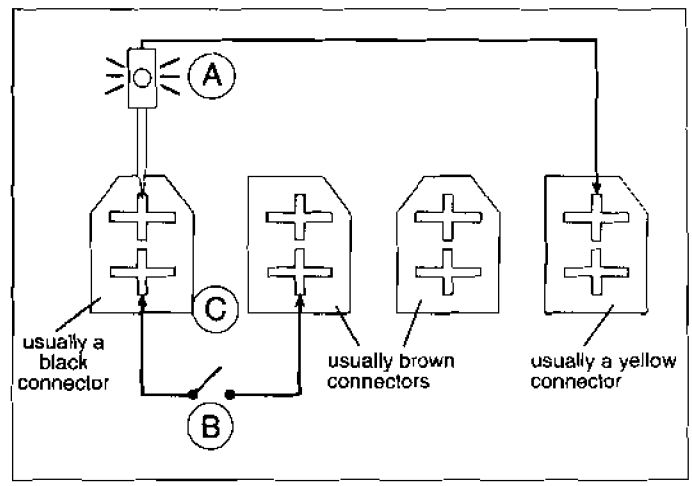


**6.7 Initiation of flash codes - four 2-pin SD connectors**

*A LED diode light B Accessory switch C SD connectors*

15 Close the accessory switch for at least 5 seconds. Open the switch, and the warning light or LED light will flash to indicate the 4-digit fault codes as follows:

*a) The four digits are indicated by four series of flashes.*
*b) The first series of flashes indicates the first digit, the second series of flashes indicates the second digit, and so on until all four digits have been flashed.*
*c) Each series consists of a number of 1- or 2-second flashes, separated by short pauses. Each integer (whole number) in the range 1 to 9 is represented by a number of 1-second flashes, and each zero is represented by 2-second flashes.*
*d) A 2.5-second pause separates each series of flashes.*
*e) The code number "1231" is indicated by a 1-second flash, a short pause, two 1-second flashes, a short pause, three 1-second flashes, a short pause and a 1-second flash. After a 2.5-second pause, the code will be repeated.*

16 Count the number of flashes in each series, and record the code. Refer to the tables at the end of the Chapter to determine the meaning of the fault code.
17 The code will be repeated until the accessory switch is once more closed for at least 5 seconds. Open the switch, and the next code will then be displayed.
18 Continue retrieving codes until code 0000 is transmitted. Code 0000 signifies that no more codes are stored, and is displayed when the light flashes off and on at 2.5-second intervals.
19 If code 4444 is transmitted, no fault codes are stored.
20 Turn off the ignition and remove the accessory switch and diode light to end fault code retrieval.

### Bosch Mono-Motronic (35-pin version 1.2.1 and 45-pin version 1.2.2)

21 Attach an accessory switch to the dual 2-pin SD connectors. If the vehicle is not equipped with a facia-mounted SD warning light, connect a diode LED light between the battery (+) supply and ECM pin number 33 (35-pin) or ECM pin number 4 (45-pin) as shown **(see illustration 6.8)**. **Note:** *It will be necessary to detach the back of the ECM multi-plugs so that the LED negative probe can backprobe the ECM pin number with the multi-plug connected.*
22 Start the engine and allow it to warm up to normal operating temperature. **Note:** *Oxygen sensor (OS) fault codes can only be retrieved after a road test of at least 10 minutes' duration.*
23 Stop the engine and switch on the ignition.
24 If the engine will not start, crank the engine for at least 6 seconds and leave the ignition switched on.
25 Close the accessory switch for at least 5 seconds. Open the switch, and the warning light or LED light will flash to indicate the 4-digit fault codes as follows:

*a) The four digits are indicated by four series of flashes.*
*b) The first series of flashes indicates the first digit, the second series of flashes indicates the second digit, and so on until all four digits have been flashed.*
*c) Each series consists of a number of 1- or 2-second flashes, separated by short pauses. Each integer (whole number) in the range 1 to 9 is represented by a number of 1-second flashes, and each zero is represented by 2-second flashes.*
*d) A 2.5-second pause separates each series of flashes.*
*e) The code number "1231" is indicated by a 1-second flash, a short pause, two 1-second flashes, a short pause, three 1-second flashes, a short pause and a 1-second flash. After a 2.5-second pause, the code will be repeated.*

26 Count the number of flashes in each series, and record the code. Refer to the tables at the end of the Chapter to determine the meaning of the fault code.
27 The code will be repeated until the accessory switch is once more closed for at least 5 seconds. Open the switch, and the next code will then be displayed.
28 Continue retrieving codes until code 0000 is transmitted. Code 0000 signifies that no more codes are stored, and is displayed when the light flashes off and on at 2.5-second intervals.
29 If code 4444 is transmitted, no fault codes are stored.
30 Turn off the ignition and remove the accessory switch and diode light to end fault code retrieval.

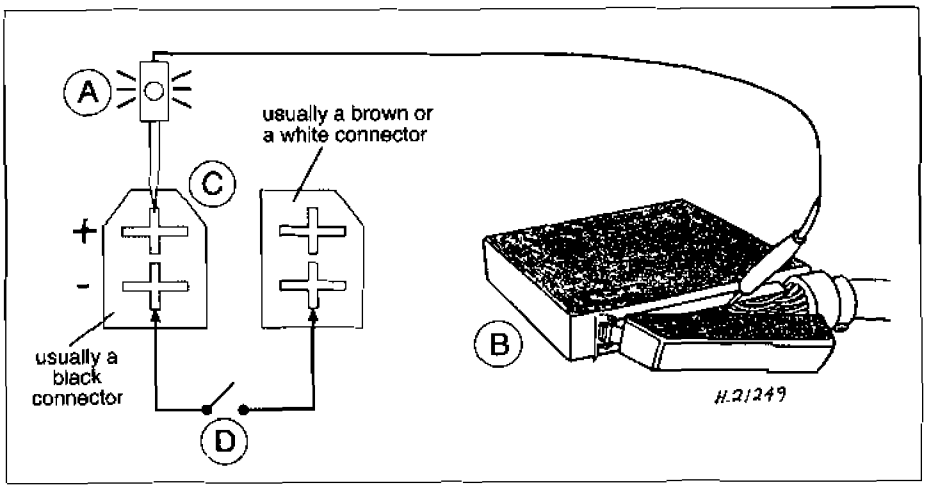


**6.8 Initiation of 35-pin and some 45-pin Mono-Motronic flash codes (see text)**

*A LED diode light B ECM C SD connectors D Accessory switch*

### Systems with 16-pin OBD connector or 68-pin ECM multi-plug

31 Flash codes are not available, and a dedicated fault code reader (FCR) must be used to retrieve fault codes.

## 4 Clearing fault codes without a fault code reader (FCR)

### Bosch Mono-Jetronic, Mono-Motronic, KE-Jetronic and KE-Motronic

1 Carry out the procedure in Section 3 to retrieve the fault codes.
2 Turn off the ignition.
3 Use a fuse to short the test contacts on the fuel pump relay (Mono-Jetronic to July 1988 only) or close the accessory switch (all other systems).
4 Switch on the ignition.
5 Open the accessory switch after a period of 5 seconds, or remove the fuse. All fault codes should now be cleared.
6 Turn off the ignition.

### Cancelling fault codes 2341 or 2343 (OS)

7 Turn off the ignition (take out the key). Remove the ECM multi-plug connector from the ECM for at least 30 seconds. ***Refer to Warning number 3 in the Reference Section at the back of this book.***

### All systems (alternative)

8 Turn off the ignition and disconnect the battery negative terminal for a period of approximately 5 minutes.
9 Re-connect the battery negative terminal.
**Note:** *The first drawback to this method is that battery disconnection will re-initialise all ECM adaptive values (not Mono-Jetronic). Re-learning the appropriate adaptive values*

*requires starting the engine from cold, and driving at various engine speeds for approximately 20 to 30 minutes. The engine should also be allowed to idle for approximately 10 minutes. The second drawback is that the radio security codes, clock setting and other stored values will be initialised, and these must be re-entered once the battery has been reconnected. Where possible, an FCR should be used for code clearing.*

## 5 Self-Diagnosis with a fault code reader (FCR)

**Note:** *During the course of certain test procedures, it is possible for additional fault codes to be generated. Care must be taken that any codes generated during test routines do not mislead diagnosis.*

### All Audi models

**1** Connect an FCR to the SD connector. Use the FCR for the following purposes, in strict compliance with the FCR manufacturer's instructions:

*a) Retrieving fault codes or displaying faults.*
*b) Clearing fault codes.*
*c) Testing actuators.*
*d) Making service adjustments.*
*e) Displaying Datastream.*
*f) Coding the ECM.*

**2** The FCR may be able to display both 4-digit flash codes and/or 5-digit fault codes. Refer to the fault code table at the end of this Chapter.

**3** Codes must always be cleared after component testing, or after repairs involving the removal or replacement of an EMS component.

## 6 Guide to test procedures

**1** Use an FCR to interrogate the ECM for fault codes, or manually gather codes as described in Sections 3 or 5.

### Codes stored

**2** If one or more fault codes are gathered, refer to the fault code table at the end of this Chapter to determine their meaning.

**3** If several codes are gathered, look for a common factor such as a defective earth return or supply.

**4** Refer to the component test procedures in Chapter 4, where you will find a means of testing the majority of components and circuits found in the modern EMS.

**5** Once the fault has been repaired, clear the codes and run the engine under various conditions to determine if the problem has cleared.

**6** Check the ECM for fault codes once more. Repeat the above procedures where codes are still being stored.

**7** Refer to Chapter 3 for more information on how to effectively test the engine management system.

### No codes stored

**8** Where a running problem is experienced, but no codes are stored, the fault is outside of the parameters designed into the SD system. Refer to Chapter 3 for more information on how to effectively test the engine management system.

**9** If the problem points to a specific component, refer to the test procedures in Chapter 4, where you will find a means of testing the majority of components and circuits found in the modern EMS.

# Fault code table

**Note:** *Similar codes are generated by each system, although a small number of codes may suggest alternative meanings depending on which system and what components are fitted. For example, one particular code may indicate an airflow sensor or a MAP sensor, depending on which of those component is fitted. When a code with an alternative meaning is generated, the correct meaning will usually be obvious.*

| Flash code | FCR code | Description |
|---|---|---|
| 4444 | 00000 | No faults found in the ECM. Proceed with normal diagnostic methods |
| 0000 | - | End of fault code output |
| 1111 | 65535 | Internal ECM failure |
| 1231 | 00281 | Vehicle speed sensor (VSS) or VSS circuit |
| 1232 | 00282 | Throttle pot sensor (TPS) or TPS circuit |
| 1232 | 00282 | Idle speed stepper motor (ISSM) or ISSM circuit (alternative code). |
| 2111 | 00513 | Engine speed (RPM) sensor or RPM sensor circuit |
| 2112 | 00514 | Top dead centre (TDC) sensor or TDC circuit |
| 2112 | 00514 | Crank angle sensor (CAS) |
| 2113 | 00515 | Hall-effect sensor (HES) or HES circuit |
| **Note:** *Fault code number 2113 will always be present when the ignition is turned on and the engine is stopped in systems that utilise a Hall sensor as the primary trigger.* | | |
| 2114 | 00535 | Distributor |
| 2121 | 00516 | Idle speed stepper motor (ISSM) idle contacts |
| 2121 | 00516 | Ignition control valve circuit fault (alternative code) |
| 2122 | - | No engine speed signal |
| 2123 | 00517 | Throttle switch (TS), full load switch |
| 2141 | 00535 | Knock control 1 (ECM) |
| 2142 | 00524 | Knock sensor (KS) or KS circuit |
| 2142 | 00545 | AT signal missing (alternative code) |
| 2143 | 00536 | Knock control 2 (ECM) |
| 2144 | 00540 | Knock sensor (KS) 2 or KS circuit |
| 2212 | 00518 | Throttle pot sensor (TPS) fault or TPS circuit |
| 2214 | 00543 | Maximum engine speed exceeded |
| 2222 | 00519 | Manifold absolute pressure (MAP) sensor or MAP sensor circuit |
| 2223 | 00528 | Atmospheric pressure sensor (APS) or APS circuit |
| 2224 | 00544 | Turbocharger maximum boost pressure exceeded |
| 2231 | 00533 | Idle control |
| 2232 | 00520 | Vane airflow sensor (AFS) or AFS circuit |
| 2232 | 00520 | Mass airflow (MAF) sensor or MAF sensor circuit (alternative code) |
| 2233 | 00531 | Vane airflow sensor (AFS) or AFS circuit |
| 2233 | 00531 | Mass airflow (MAF) sensor or MAF circuit (alternative code) |
| 2234 | 00532 | Supply voltage incorrect |
| 2242 | 00521 | CO pot or CO pot circuit |
| 2312 | 00522 | Coolant temperature sensor (CTS) or CTS circuit |
| 2314 | 00545 | Engine/gearbox electrical connection |
| 2322 | 00523 | Air temperature sensor (ATS) or ATS circuit |
| 2323 | 00522 | Vane airflow sensor (AFS) |
| 2323 | 00522 | Mass airflow (MAF) sensor (alternative code) |
| 2324 | 00553 | Vane airflow sensor (AFS) |
| 2324 | 00553 | Mass airflow (MAF) sensor (alternative code) |
| 2341 | 00537 | Oxygen sensor (OS) control inoperative |
| 2342 | 00525 | Oxygen sensor (OS) or OS circuit |
| 2343 | 00558 | Mixture control adjustment, weak |
| 2344 | 00559 | Mixture control adjustment, rich |
| 2413 | 00561 | Mixture control limits |
| 4332 | | |
| 4343 | | |
| 4411 | | |
| 4412 | | |
| 4413 | | |
| 4414 | | |
| 4421 | | |
| 4431 | | |
| 4442 | | |

| Flash code | FCR code | Description |
|---|---|---|
| 4332 | 00750 | Electronic control module (ECM) |
| 4343 | 01243 | Carbon filter solenoid valve (CFSV) or CFSV circuit |
| 4411 | 01244 | Injector No. 1 or injector circuit |
| 4412 | 01247 | Injector No. 2 or injector circuit |
| 4413 | 01249 | Injector No. 3 or injector circuit |
| 4414 | 01250 | Injector No. 4 or injector circuit |
| 4421 | 01251 | Injector No. 5 or injector circuit |
| 4431 | 01253 | Idle speed control valve (ISCV) or ISCV circuit |
| 4442 | 01254 | Turbocharger boost pressure solenoid valve (BPSV) or BPSV circuit |
| - | 00527 | Intake manifold temperature |
| - | 00530 | Throttle pot sensor (TPS) or TPS circuit |
| - | 00532 | Supply voltage incorrect |
| - | 00543 | Maximum engine speed exceeded |
| - | 00549 | Consumption signal |
| - | 00545 | Engine gearbox electrical connection |
| - | 00554 | Oxygen sensor (OS) control 2 |
| - | 00555 | Oxygen sensor (OS) or OS circuit |
| - | 00560 | Exhaust gas recirculation (EGR) valve or EGR circuit |
| - | 00561 | Mixture control 1 |
| - | 00575 | Manifold absolute pressure (MAP) sensor or MAP sensor circuit |
| - | 00577 | Knock control cylinder 1 or circuit |
| - | 00578 | Knock control cylinder 2 or circuit |
| - | 00579 | Knock control cylinder 3 or circuit |
| - | 00580 | Knock control cylinder 4 or circuit |
| - | 00581 | Knock control cylinder 5 or circuit |
| - | 00582 | Knock control cylinder 6 or circuit |
| | 00585 | Exhaust gas recirculation (EGR) temperature sensor or EGR circuit |
| - | 00586 | Exhaust gas recirculation (EGR) valve or EGR circuit |
| - | 00609 | Amplifier 1 or amplifier circuit |
| - | 00610 | Amplifier 2 or amplifier circuit |
| - | 00611 | Amplifier 3 or amplifier circuit |
| - | 00624 | Air conditioning (A/C) |
| - | 00625 | Vehicle speed sensor (VSS) or VSS circuit |
| - | 00635 | Oxygen sensor (OS) heater or OS circuit |
| - | 00640 | Oxygen sensor (OS) or OS circuit |
| - | 00670 | Idle speed stepper motor (ISSM) pot or ISSM circuit |
| - | 00689 | Excessive air in inlet manifold |
| - | 00750 | Self-Diagnosis warning light |
| - | 01025 | Self-Diagnosis warning light |
| - | 01087 | Basic setting not completed |
| - | 01088 | Mixture control 2 |
| - | 01119 | Gear recognition signal |
| - | 01120 | Camshaft timing control |
| - | 01165 | Throttle pot sensor (TPS) or TPS circuit |
| - | 01182 | Altitude adaptation |
| - | 01235 | Secondary air valve |
| - | 01242 | Electronic control module (ECM) or ECM circuit |
| - | 01247 | Carbon filter solenoid valve (CFSV) or CFSV circuit |
| - | 01252 | Injector valve No. 4 or injector valve circuit |
| - | 01257 | Idle speed control valve (ISCV) or ISCV circuit |
| - | 01259 | Fuel pump relay or circuit |
| - | 01262 | Turbocharger boost pressure solenoid valve (BPSV) or BPSV circuit |
| - | 01264 | Secondary air pump |
| - | 01265 | Exhaust gas recirculation (EGR) valve or EGR circuit |
| - | 16486 | Mass airflow (MAF) sensor or MAF circuit, signal low |
| - | 16487 | Mass airflow (MAF) sensor or MAF circuit, signal high |
| - | 16496 | Air temperature sensor (ATS) or ATS circuit, signal low |
| - | 16497 | Air temperature sensor (ATS) or ATS circuit, signal high |
| - | 16500 | Coolant temperature sensor (CTS) or CTS circuit |
| - | 16501 | Coolant temperature sensor (CTS) or CTS circuit, signal low |
| - | 16502 | Coolant temperature sensor (CTS) or CTS circuit, signal high |
| - | 16504 | Throttle pot sensor (TPS) or TPS circuit |
| - | 16505 | Throttle pot sensor (TPS) or TPS circuit, signal implausible |
| - | 16506 | Throttle pot sensor (TPS) or TPS circuit, signal low |
| - | 16507 | Throttle pot sensor (TPS) or TPS circuit, signal high |
| - | 16514 | Oxygen sensor (OS) or OS circuit |
| - | 16515 | Oxygen sensor (OS) or OS circuit |
| - | 16516 | Oxygen sensor (OS) or OS circuit, signal high |
| - | 16518 | Oxygen sensor (OS) or OS circuit |
| - | 16519 | Oxygen sensor (OS) or OS circuit |
| - | 16534 | Oxygen sensor (OS) or OS circuit |
| - | 16535 | Oxygen sensor (OS) or OS circuit |
| - | 16536 | Oxygen sensor (OS) or OS circuit, signal high |
| - | 16538 | Oxygen sensor (OS) or OS circuit |
| - | 16554 | Injector bank 1 |
| - | 16555 | Injector bank 1, fuel system too lean |
| - | 16556 | Injector bank 1, fuel system too rich |
| - | 16557 | Injector bank 2 |
| - | 16558 | Injector bank 2, fuel system too lean |
| - | 16559 | Injector bank 2, fuel system too rich |
| - | 16684 | Engine misfire |
| - | 16685 | Cylinder No. 1 misfire |
| - | 16686 | Cylinder No. 2 misfire |
| - | 16687 | Cylinder No. 3 misfire |
| - | 16688 | Cylinder No. 4 misfire |
| - | 16689 | Cylinder No. 5 misfire |
| - | 16690 | Cylinder No. 6 misfire |
| - | 16691 | Cylinder No. 7 misfire |
| - | 16692 | Cylinder No. 8 misfire |
| - | 16705 | RPM sensor or circuit |
| - | 16706 | RPM sensor or circuit |
| - | 16711 | Knock sensor (KS) 1 signal or KS circuit, signal low |
| - | 16716 | Knock sensor (KS) 2 signal or KS circuit, signal low |
| - | 16721 | Crank angle sensor (CAS) or CAS circuit |
| - | 16785 | Exhaust gas |
| - | 16786 | Exhaust gas |
| - | 16885 | Vehicle speed sensor (VSS) or VSS circuit |
| - | 16989 | Electronic control module (ECM) |
| - | 17509 | Oxygen sensor (OS) or OS circuit |
| - | 17514 | Oxygen sensor (OS) or OS circuit |
| - | 17540 | Oxygen sensor (OS) or OS circuit |
| - | 17541 | Oxygen sensor (OS) or OS circuit |
| - | 17609 | Injector valve No. 1 or injector circuit |
| - | 17610 | Injector valve No. 4 or injector circuit |
| - | 17611 | Injector valve No. 3 or injector circuit |
| - | 17612 | Injector valve No. 4 or injector circuit |
| - | 17613 | Injector valve No. 5 or injector circuit |
| - | 17614 | Injector valve No. 6 or injector circuit |
| - | 17615 | Injector valve No. 7 or injector circuit |
| - | 17616 | Injector valve No. 8 or injector circuit |
| - | 17621 | Injector valve No. 1 or injector circuit |

| Flash code | FCR code | Description |
|---|---|---|
| - | 17622 | Injector valve No. 2 or injector circuit |
| - | 17623 | Injector valve No. 3 or injector circuit |
| - | 17624 | Injector valve No. 4 or injector circuit |
| - | 17625 | Injector valve No. 5 or injector circuit |
| - | 17626 | Injector valve No. 6 or injector circuit |
| - | 17627 | Cylinder No 7 misfire |
| - | 17628 | Cylinder No. 8 misfire |
| - | 17733 | Knock sensor (KS) control No. 1 cylinder or KS circuit |
| - | 17734 | Knock sensor (KS) control No. 2 cylinder or KS circuit |
| - | 17735 | Knock sensor (KS) control No. 3 cylinder or KS circuit |
| - | 17736 | Knock sensor (KS) control No. 4 cylinder or KS circuit |
| - | 17737 | Knock sensor (KS) control No. 5 cylinder or KS circuit |
| | 17738 | Knock sensor (KS) control No 6 cylinder or KS circuit |
| - | 17739 | Knock sensor (KS) control No. 7 cylinder or KS circuit |
| - | 17740 | Knock sensor (KS) control No. 8 cylinder or KS circuit |
| - | 17747 | Crank angle sensor (CAS) and vehicle speed sensor (VSS) signal transposed |
| - | 17749 | Ignition output 1, short-circuit to earth |
| - | 17751 | Ignition output 2, short-circuit to earth |
| - | 17753 | Ignition output 3, short-circuit to earth |
| - | 17799 | Camshaft sensor (CMP) or CMP circuit |
| - | 17800 | Camshaft sensor (CMP) or CMP circuit |
| - | 17801 | Ignition output 1 |
| - | 17802 | Ignition output 2 |
| - | 17803 | Ignition output 3 |
| - | 17808 | Exhaust gas recirculation (EGR) valve or EGR circuit |
| - | 17810 | Exhaust gas recirculation (EGR) valve or EGR circuit |
| - | 17815 | Exhaust gas recirculation (EGR) valve or EGR circuit, signal too small |
| | 17816 | Exhaust gas recirculation (EGR) valve or EGR circuit, signal too large |
| - | 17817 | Carbon filter solenoid valve (CFSV) or CFSV circuit |
| | 17818 | Carbon filter solenoid valve (CFSV) or CFSV circuit |
| - | 17908 | Fuel pump relay or fuel pump circuit |
| - | 17910 | Fuel pump relay or fuel pump circuit |
| - | 17912 | Intake system |
| - | 17913 | Idling switch, throttle switch (TS) or TS circuit |
| - | 17914 | Idling switch, throttle switch (TS) or TS circuit |
| - | 17915 | Idle speed control valve (ISCV) or ISCV circuit |
| - | 17916 | Idle speed control valve (ISCV) or ISCV circuit |
| - | 17917 | Idle speed control valve (ISCV) or ISCV circuit |
| - | 17918 | Idle speed control valve (ISCV) or ISCV circuit |
| - | 17919 | Inlet manifold changeover valve (IMCV) or IMCV circuit |
| - | 17920 | Inlet manifold changeover valve (IMCV) or IMCV circuit |
| - | 17966 | Throttle drive |
| - | 17978 | Electronic immobiliser |
| - | 18008 | Voltage supply |
| - | 18010 | Battery |
| - | 18020 | Electronic control module (ECM) incorrectly coded |

# Chapter 7
# BMW

## Contents

**Index of vehicles**
**Self-Diagnosis**
Clearing fault codes without a fault code reader (FCR) ..... 4
Guide to test procedures ..... 6
Introduction ..... 1
Retrieving fault codes without a fault code reader (FCR) - flash codes ..... 3
Self-Diagnosis connector location ..... 2
Self-Diagnosis with a fault code reader (FCR) ..... 5
**Fault code tables** 7

## Index of vehicles

| Model | Engine code | Year | System |
|---|---|---|---|
| 316i (E30) and cat | M40/B16 164E1 | 1988 to 1993 | Bosch Motronic 1.3 |
| 316i (E36) cat | M40/B16 164E1 | 1990 to 1993 | Bosch Motronic 1.7 |
| 316i (E36) cat and Compact | M43/B16 | 1993 to 1997 | Bosch Motronic 1.7 |
| 318i (E30) Touring and cat | M40/B18 184E11 | 1988 to 1993 | Bosch Motronic 1.3 |
| 318i (E30) and Touring | M40/B18 | 1989 to 1992 | Bosch Motronic 1.7 |
| 318i (E36) and cat | M40/B18 184E2 | 1991 to 1993 | Bosch Motronic 1.7 |
| 318i (E36) | M43/B18 | 1993 to 1997 | Bosch Motronic 1.7 |
| 318iS (E30) 16V Touring and cat | M42/B18 184S1 | 1990 to 1991 | Bosch Motronic 1.7 |
| 318iS (E36) and Compact | M42/B18 184S1 | 1992 to 1996 | Bosch Motronic 1.7 |
| 320i (E30) | M20/B20 206EE | 1986 to 1988 | Bosch Motronic 1.1 |
| 320i (E30) and Touring and cat | M20/B20 206EE | 1988 to 1993 | Bosch Motronic 1.3 |
| 320i (E36) 24V cat | M50/B20 206S1 | 1991 to 1993 | Bosch Motronic 3.1 |
| 320i (E36) 24V cat | M50 2.0 Vanos | 1993 to 1996 | Bosch Motronic 3.1 |
| 320i (E36) 24V cat | M50/B20 | 1993 to 1996 | Siemens MS4.0 |
| 325i (E30) and 4x4 | M20/B25 6K1 | 1985 to 1987 | Bosch Motronic 1.1 |
| 325i and Touring (E30) | M20/B25 6K1 | 1988 to 1993 | Bosch Motronic 1.3 |
| 325iX (E30-4) | M20/B25 6E2 | 1985 to 1987 | Bosch Motronic 1.1 |
| 325ix and Touring | M20/B25 6E2 | 1988 to 1993 | Bosch Motronic 1.3 |
| 325i (E36) 24V cat | M50/B25 256S1 | 1991 to 1993 | Bosch Motronic 3.1 |
| 325i (E36) 24V | M50 2 5 Vanos | 1993 to 1996 | Bosch Motronic 3.1 |
| 325e (E30) and cat | M20/B27 | 1986 to 1991 | Bosch Motronic 1.1 |
| 518i (E34) | M40/B18 | 1988 to 1993 | Bosch Motronic 1.3 |
| 518i (E34) cat | M43/B18 | 1993 to 1996 | Bosch Motronic 1.7 |
| 520i (E34) and cat | M20/B20M 206KA | 1988 to 1991 | Bosch Motronic 1.3 |
| 520i (E34) 24V and Touring cat | M50/B20 206S1 | 1990 to 1993 | Bosch Motronic 3 1 |
| 520i (E34) 24V and Touring cat | M50 2.0 Vanos | 1993 to 1996 | Bosch Motronic 3.1 |
| 520i (E34) 24V cat | M50/B20 | 1993 to 1996 | Siemens MS4.0 |
| 525i (E34) and cat | M20/B25M 256K1 | 1988 to 1991 | Bosch Motronic 1.3 |
| 525i (E34) 24V cat | M50/B25 256S1 | 1990 to 1993 | Bosch Motronic 3.1 |
| 525i (E34) 24V | M50 2.5 Vanos | 1993 to 1996 | Bosch Motronic 3.1 |
| 530i (E34) and cat | M30/B30M 306KA | 1988 to 1992 | Bosch Motronic 1.3 |
| 540i (E34) V8 4 0 32V DOHC cat | M60 | 1993 to 1996 | Bosch Motronic 3.3 |
| 535i (E34) and cat | M30/B35M 346KB | 1988 to 1993 | Bosch Motronic 1.3 |
| 635 CSi (E24) | M30/B34 | 1986 to 1987 | Bosch Motronic 1.1 |
| 635 CSi (E24) and cat | M30/B35M 346EC | 1988 to 1990 | Bosch Motronic 1.3 |
| M635 CSi (E24) | M88/3 | 1987 to 1989 | Bosch Motronic 1.3 |
| 730i (E32) and cat | M30/B30M2 306KA | 1986 to 1987 | Bosch Motronic 1.1 |
| 730i (E32) and cat | M30/B30M2 306KA | 1988 to 1994 | Bosch Motronic 1.3 |
| 730i (E32) V8 3 0 cat | M60B330 | 1992 to 1994 | Bosch Motronic 3.3 |
| 735i (E32) and cat | M30/B35M2 | 1986 to 1987 | Bosch Motronic 1 1 |
| 735i (E32) and cat | M30/B35M2 346EC | 1987 to 1992 | Bosch Motronic 1.3 |
| 740iL (E32) V8 cat | M60/B40 | 1992 to 1994 | Bosch Motronic 3.3 |
| 740i (E38) V8 4.0 32V DOHC cat | M60 | 1994 to 1997 | Bosch Motronic 3.3 |
| 750i and cat | M70/B50 5012A | 1992 to 1994 | Bosch Motronic 1.7 |
| 750iL | M70/B50 5012A | 1992 to 1994 | Bosch Motronic 1 7 |
| 750i | M70/B54 | 1994 to 1997 | Bosch Motronic 1.2 |
| 840i (E31) V8 4 0 32V DOHC cat | M60 | 1993 to 1997 | Bosch Motronic 3.3 |
| 850i | M70/B50 5012A | 1989 to 1994 | Bosch Motronic 1.7 |
| M3 (E36) | S50/B30 | 1993 to 1997 | Bosch Motronic 3.3 |
| M5 (E34) | S38/B38 386S1 | 1992 to 1996 | Bosch Motronic 3.3 |
| Z1 | M20/B25 | 1988 to 1992 | Bosch Motronic 1.3 |

# Self-Diagnosis

## 1 Introduction

The engine management systems (EMSs) fitted to BMW models are mainly of Bosch origin, and include Bosch Motronic versions 1.1/1.3, 1.2, 1.7, 3.1, 3.3 and Siemens MS4.0. All BMW engine management systems control primary ignition, fuelling and idle functions from within the same ECM.

### *Self-Diagnosis (SD) function*

Each ECM has a self-test capability that continually examines the signals from certain engine sensors and actuators, and compares each signal to a table of programmed values. If the diagnostic software determines that a fault is present, the ECM stores one or more fault codes. Codes will not be stored about components for which a code is not available, or for conditions not covered by the diagnostic software. Depending upon system, BMW control modules will generate either 2-digit or 3-digit fault codes, and a dedicated FCR must be used for retrieval. Flash codes that can be retrieved without an FCR are only available in US market models.

#### Bosch Motronic 1.2

Early BMW V12 engines are equipped with Bosch Motronic M1.2, which has two electronic control modules. Each module is allocated to a bank of 6 cylinders (ECM 1 for the right-hand bank, and ECM 2 for the left-hand bank) and gathers data from its own sensors. Each ECM stores its own fault codes, and should be treated independently.

### *Limited operating strategy (LOS)*

BMW systems featured in this Chapter utilise LOS (a function that is commonly called the "limp-home mode"). Once certain faults have been identified (not all faults will initiate LOS), the ECM will implement LOS and refer to a programmed default value rather than the sensor signal. This enables the vehicle to be safely driven to a workshop/garage for repair or testing. Once the fault has cleared, the ECM will revert to normal operation.

### *Adaptive or learning capability*

BMW systems also utilise an adaptive function that will modify the basic programmed values for most effective operation during normal running, and with due regard to engine wear.

### *Self-Diagnosis (SD) warning light*

BMW models for the US market are equipped with a facia-mounted "Check Engine" warning light as demanded by US OBDII regulations. Fault codes indicating failure of emission-related components may be retrieved through the flashing of the light. European market models are not equipped with a warning light.

## 2 Self-Diagnosis connector location

The SD connector is for FCR use alone, and is located in the engine compartment along the left or right-hand wing, either close to the bulkhead or suspension turret **(see illustration 7.1)**.

## 3 Retrieving fault codes without a fault code reader (FCR) - flash codes

### *Bosch Motronic 1.1, 1.2 and 1.3 (US models only)*

A limited number of emissions-related flash codes are available via the flashing of the facia-mounted "Check Engine" warning light. Refer to the flash code table at the end of this Chapter to determine the meaning of the flash code.

## 4 Clearing fault codes without a fault code reader (FCR)

**1** Turn off the ignition and disconnect the battery negative terminal for a period of approximately 2 minutes.
**2** Re-connect the battery negative terminal.
**Note:** *The first drawback to this method is that battery disconnection will re-initialise all ECM adaptive values. Re-learning the appropriate adaptive values requires starting the engine from cold, and driving at various engine speeds for approximately 20 to 30 minutes. The engine should also be allowed to idle for approximately 10 minutes. The second drawback is that the radio security codes, clock setting and other stored values will be initialised, and these must be re-entered once the battery has been reconnected. Where possible, an FCR should be used for code clearing.*

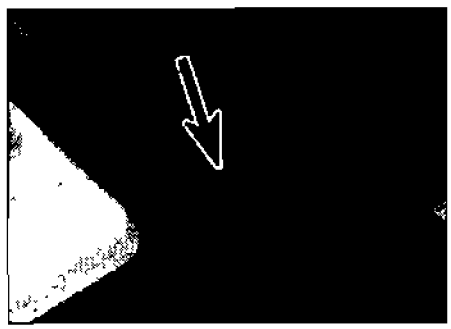

**7.1 BMW 20-pin SD connector. Unscrew the cap and attach the FCR to the exposed connector**

## 5 Self-Diagnosis with a fault code reader (FCR)

**Note:** *During the course of certain test procedures, it is possible for additional fault codes to be generated. Care must be taken that any codes generated during test routines do not mislead diagnosis*

### *All BMW models*

**1** Connect an FCR to the SD connector. Use the FCR for the following purposes, in strict compliance with the FCR manufacturer's instructions:
*a) Retrieving fault codes.*
*b) Clearing fault codes.*
*c) Testing actuators.*
*d) Displaying Datastream.*
**2** Codes must always be cleared after component testing, or after repairs involving the removal or replacement of an EMS component
**Note:** *Many of the fault code numbers correspond to the ECM pin number - eg. fault code 04 corresponds to ECM pin number 4.*

## 6 Guide to test procedures

**1** Use an FCR to interrogate the ECM for fault codes, or (where possible) manually gather codes as described in Sections 3 or 5.

### *Codes stored*

**2** If one or more fault codes are gathered, refer to the fault code tables at the end of this Chapter to determine their meaning.
**3** If several codes are gathered, look for a common factor such as a defective earth return or supply.
**4** Refer to the component test procedures in Chapter 4, where you will find a means of testing the majority of components and circuits found in the modern EMS.
**5** Once the fault has been repaired, clear the codes and run the engine under various conditions to determine if the problem has cleared.
**6** Check the ECM for fault codes once more Repeat the above procedures where codes are still being stored.
**7** Refer to Chapter 3 for more information on how to effectively test the EMS.

### *No codes stored*

**8** Where a running problem is experienced, but no codes are stored, the fault is outside of the parameters designed into the SD system Refer to Chapter 3 for more information on how to effectively test the EMS.
**9** If the problem points to a specific component, refer to the test procedures in Chapter 4, where you will find a means of testing the majority of components and circuits found in the modern EMS

# Fault code tables

## *Bosch Motronic 1.1, 1.2, 1.3 (flash codes)*

| Flash code | Description |
|---|---|
| 01 | Vane airflow sensor (AFS) or AFS circuit |
| 02 | Oxygen sensor (OS) or OS circuit |
| 03 | Coolant temperature sensor (CTS) or CTS circuit |
| 04 | Throttle switch (TS), full-load switch |

## *Bosch Motronic 1.1, 1.2, 1.3*

| FCR code | Description |
|---|---|
| 01 | Electronic control module (ECM) or ECM circuit |
| 03 | Fuel pump relay or fuel pump relay circuit |
| 04 | Idle speed control valve (ISCV) or ISCV circuit |
| 05 | Carbon filter solenoid valve (CFSV) or CFSV circuit |
| 07 | Airflow sensor (AFS) or AFS circuit |
| 10 | Oxygen sensor (OS) or OS circuit, exhaust emissions too rich or too lean |
| 15 | Warning light (US only) or circuit |
| 16 | Injectors (cylinders 1+3) or injector circuit |
| 17 | Injectors (cylinders 2+4) or injector circuit |
| 23 | Oxygen sensor (OS), heater relay or OS circuit |
| 28 | Oxygen sensor (OS) or OS circuit |
| 29 | Vehicle speed sensor (VSS) or VSS circuit |
| 33 | Solenoid valve kickdown prevent or circuit |
| 37 | Electronic control module (ECM), supply exceeds 16 volts |
| 43 | CO pot (non-cat models) or CO pot circuit |
| 44 | Air temperature sensor (ATS) or ATS circuit |
| 45 | Coolant temperature sensor (CTS) or CTS circuit |
| 51 | Ignition timing intervention (models with EGS only) |
| 52 | Throttle switch (TS) or TS circuit |
| 53 | Throttle switch (TS) or TS circuit |
| 54 | Torque converter clutch (models with EGS only) or circuit |
| 100 | Output stage (Bosch Motronic 1.3 only) |
| 101 | Engine operation not possible |

## *Bosch Motronic 1.7 and 3.1*

| FCR code | Description |
|---|---|
| 000 | No faults found in the ECM. Proceed with normal diagnostic methods |
| 001 | Fuel pump relay or fuel pump relay circuit |
| 001 | Crank angle sensor (CAS) or CAS circuit (alternative code) |
| 002 | Idle speed control valve (ISCV) or ISCV circuit |
| 003 | Injector number 1 or injector Group one circuit |
| 004 | Injector number 3 or circuit |
| 005 | Injector number 2 or circuit |
| 006 | Injectors or injector circuit |
| 012 | Throttle position switch (TPS) or TPS circuit |
| 016 | Crank angle sensor (CAS) or CAS circuit |
| 018 | Amplifier to electronic control module (ECM) terminal 18 or amplifier circuit |
| 019 | Electronic control module (ECM) |
| 023 | Ignition amplifier number 2 cylinder or circuit |
| 024 | Ignition amplifier number 3 cylinder or circuit |
| 025 | Ignition amplifier number 1 cylinder or circuit |
| 026 | Electronic control module (ECM) supply |
| 029 | Idle speed control valve (ISCV) or ISCV circuit |
| 031 | Injector number 5 or injector circuit |
| 032 | Injector number 6 or injector Group two circuit |
| 033 | Injector number 4 or injector circuit |
| 036 | Carbon filter solenoid valve (CFSV) or CFSV circuit |
| 037 | Oxygen sensor (OS) or OS circuit |
| 041 | Mass airflow (MAF) sensor or MAF circuit |
| 046 | Electronic control module (ECM) |
| 048 | Air conditioning (AC) compressor or AC circuit |
| 050 | Ignition amplifier cylinder number 4 or circuit |
| 051 | Ignition amplifier cylinder number 6 or circuit |
| 054 | Electronic control module (ECM) |
| 055 | Ignition amplifier or circuit |
| 062 | Electronic throttle control or circuit |
| 064 | Ignition timing (electronic AT) |
| 067 | Vehicle speed sensor (VSS) or VSS circuit |
| 067 | Crank angle sensor (CAS) or CAS circuit |
| 070 | Oxygen sensor (OS) or OS circuit |
| 073 | Vehicle speed sensor (VSS) or VSS circuit |
| 076 | CO potentiometer (non-cat) |
| 077 | Intake air temperature sensor (ATS) or ATS circuit |
| 078 | Engine coolant temperature sensor (CTS) or CTS circuit |
| 081 | Alarm system or circuit |
| 082 | Traction control or circuit |
| 083 | Suspension control or circuit |
| 085 | Air conditioning (AC) compressor or circuit |
| 100 | Electronic control module (ECM) |
| 200 | Electronic control module (ECM) |
| 201 | Oxygen sensor (OS) control or OS circuit |
| 202 | Electronic control module (ECM) |
| 203 | Ignition primary or circuit |
| 204 | Electronic throttle control signal or circuit |
| 300 | Engine |

# Chapter 8
# Citroën

## Contents


**Index of vehicles**
**Self-Diagnosis**
Actuator testing without a fault code reader (FCR) . . . . . 5
Clearing fault codes without a fault code reader (FCR) 4
Guide to test procedures . . . . . 7
Introduction . . . . . 1
Retrieving fault codes without a fault code reader (FCR) - flash codes . . . . . 3
Self-Diagnosis connector location . . . 2
Self-Diagnosis with a fault code diagnosis (FCR) . 6
**Fault code tables**


8

## Index of vehicles

| Model | Engine code | Year | System |
|---|---|---|---|
| AX 1.0i cat | TU9M/L.Z (CDY) | 1992 to 1997 | Bosch Mono-Motronic MA3.0 |
| AX 1.0i cat | TU9M/L.Z (CDZ) | 1992 to 1996 | Bosch Mono-Motronic MA3.0 |
| AX 1.1i cat | TU1M (HDZ) | 1989 to 1992 | Bosch Mono-Jetronic A2.2 |
| AX 1.1i cat | TU1M/L.Z (HDY) | 1992 to 1997 | Magneti-Marelli G6-11 |
| AX 1.1i cat | TU1M/L.Z (HDZ) | 1992 to 1997 | Magneti-Marelli G6-11 |
| AX GT 1.4 cat | TU3M (KDZ) | 1988 to 1990 | Bosch Mono-Jetronic A2.2 |
| AX GT and 1.4i cat | TU3FMC/L.Z (KDY) | 1990 to 1992 | Bosch Mono-Jetronic A2 |
| AX [illegible] cat | TU3FM/L.Z (KDX) | 1992 to 1996 | Bosch Mono-Motronic MA3.0 |
| AX 1.4GTi | TU3J2/K (K6B) | 1991 to 1992 | Bosch Motronic MP3.1 |
| AX 1.4 GTi cat | TU3J2/L.Z (KFZ) | 1991 to 1996 | Bosch Motronic MP3.1 |
| Berlingo 1.1 | TU1M (HDZ) | 1996 to 1997 | Bosch Motronic MA3.1 |
| Berlingo 1.1 | TU3JP (KFX) | 1996 to 1997 | Magneti-Marelli |
| BX 14i cat | TU3M (KDY) | 1991 to 1994 | Bosch Mono-Jetronic A2.2 |
| BX 16i cat | XU5M (BDZ) | 1990 to 1992 | Bosch Mono-Jetronic or MM G5/6 |
| BX 16i cat | XU5M3Z (BDY) | 1991 to 1994 | Magneti-Marelli G6-10 |
| BX19 GTi and 4X4 | XU9J2 (D6D) | 1990 to 1992 | Bosch Motronic MP3.1 |
| BX19 GTi 16V | XU9J4 (D6C) | 1987 to 1991 | Bosch Motronic ML4.1 |
| BX19 1Zi 8V cat | XU9JAZ (DKZ) | 1990 to 1993 | Bosch Motronic 1.3 |
| BX19 16V DOHC cat | XU9J4Z (DFW) | 1990 to 1992 | Bosch Motronic 1.3 |
| BX19 16V DOHC | XU9J4K (D6C) | 1991 to 1992 | Bosch Motronic 1.3 |
| BX19i 4X4 cat | DDZ(XU9M) | 1990 to 1993 | Fenix 1B |
| C15E 1.1i Van cat | TU1M (HDZ) | 1990 to 1997 | Bosch Mono-Jetronic A2.2 |
| C15E 1.4i Van cat | TU3F M/Z (KDY) | 1990 to 1995 | Bosch Mono-Jetronic A2.2 |
| C15E 1.4i Van cat | TU3F M/W2 (KDY2) | 1993 to 1995 | Bosch Mono-Jetronic A2.2 |
| Evasion 2.0i cat | XU10J2CZ/L (RFU) | 1994 to 1997 | Magneti Marelli 8P22 |
| Evasion 2.0i turbo cat | XU10J2CTEZ/L(RGX) | 1994 to 1997 | Bosch Motronic MP3.2 |
| Jumpy 2.0i cat | XU10J2U (RFW) | 1994 to 1997 | Magneti-Marelli DCM8P.11 |
| Jumpy 1.6i | 220 A2.000 | 1995 to 1997 | Bosch Mono-Motronic MA1.7 |
| Relay 2.0i cat | XU10J2U (RFW) | 1994 to 1997 | Magneti-Marelli DCM8P-11 |
| Saxo 1.0 | TU9M/L3/L | 1996 to 1997 | Bosch Mono-Motronic MA3.1 |
| Saxo 1.1 | TU1M L3/L | 1996 to 1997 | Bosch Mono-Motronic MA3.1 |
| Saxo 1.4 | TU3JP/L3 | 1996 to 1997 | Magneti-Marelli |
| Saxo 1.6 | TU5JP L3 (NFZ) | 1996 to 1997 | Bosch Motronic MA5.1 |
| Synergie 2.0i cat | XU10J2CZ/L (RFU) | 1994 to 1997 | Magneti Marelli 8P22 |
| Synergie 2.0i turbo cat | XU10J2CTEZ/L(RGX) | 1994 to 1997 | Bosch Motronic MP3.2 |
| Xantia 1.6i cat | XU5JP/Z (BFX) | 1993 to 1997 | Magneti-Marelli DCM8P13 |
| Xantia 1.8i 16V | XU7JP4/L3 (LFY) | 1995 to 1997 | Bosch Motronic MP5.1.1 |
| Xantia 1.8i and Break | XU7JP/Z (LFZ) | 1993 to 1997 | Bosch Motronic MP5.1 |
| Xantia 2.0i and Break | XU10J2C.Z (RFX) | 1993 to 1997 | Magneti-Marelli DCM8P20 |
| Xantia 2.0i 16V cat | XU10J4D.Z (RFY) | 1993 to 1995 | Bosch Motronic MP3.2 |
| Xantia 2.0i 16V and Break | XU10J4R/Z/L3(RFV) | 1995 to 1997 | Bosch Motronic MP5.1.1 |
| Xantia Activa 2.0i | XU10J4D/Z (RFT) | 1994 to 1996 | Bosch Motronic MP3.2 |
| Xantia Turbo 2.0i LT | XU10J2CTE/L3(RGX) | 1995 to 1996 | Bosch Motronic MP3.2 |

| Model | Engine code | Year | System |
|---|---|---|---|
| XM 2.0i MPi | XU10J2 (R6A) | 1990 to 1992 | Magneti-Marelli BA G5 |
| XM 2.0i cat | XU10J2/Z (RFZ) | 1990 to 1992 | Bosch Motronic MP3.1 |
| XM 2.0i cat | XU10J2/Z (RFZ) | 1992 to 1994 | Bosch Motronic MP5.1 |
| XM 2.0i 16V cat | XU10J4R/L/Z (RFV) | 1994 to 1997 | Bosch Motronic MP5.1.1 |
| XM 2.0i turbo cat | XU10J2TE/Z (RGY) | 1993 to 1994 | Bosch Motronic MP3.2 |
| XM 2.0i CT turbo cat | XU10J2TE/L/Z(RGX) | 1994 to 1996 | Bosch Motronic MP3.2 |
| XM 3.0 V6 LHD | ZPJ (S6A) | 1989 to 1993 | Fenix 3B |
| XM 3.0 V6 cat | ZPJ (SFZ) | 1989 to 1994 | Fenix 3B |
| XM 3.0 V6 cat | ZPJ (UFZ) | 1994 to 1997 | Fenix 3B |
| XM 3.0 V6 Estate | ZPJ/Z (UFY) | 1995 to 1996 | Fenix 3B |
| XM 3.0 V6 24V cat | ZPJ4/Y3 (SKZ) | 1990 to 1994 | Fenix 4 |
| XM 3.0 V6 24V | ZPJ4/Y3 (UKZ) | 1994 to 1997 | Fenix 4B |
| ZX 1.1i cat | TU1M/Z (HDY) | 1991 to 1994 | Bosch Mono Jetronic A2.2 |
| ZX 1.1i cat | TU1M/Z (HDZ) | 1991 to 1994 | Bosch Mono-Jetronic A2.2 |
| ZX 1.1i cat | TU1M/Z (HDY) | 1994 to 1997 | Bosch Mono-Motronic MA3.0 |
| ZX 1.1i cat | TU1M/Z (HDZ) | 1994 to 1997 | Bosch Mono-Motronic MA3.0 |
| ZX 1.4i cat | TU3M/Z (KDY) | 1991 to 1992 | Bosch Mono-Jetronic A2.2 |
| ZX 1.4i and Break cat | TU3M (KDX) | 1992 to 1997 | Bosch Mono-Motronic MA3.0 |
| ZX 1.4i and Break cat | TU3M (KDX) | 1994 to 1996 | Magneti Marelli G6-14 |
| ZX 1.6i | XU5M 2K (B4A) | 1991 to 1992 | Magneti-Marelli G5 S2 |
| ZX 1.6i | XU5M 3K (B4A) | 1991 to 1993 | Magneti-Marelli G6.12 |
| ZX 1.6i cat | XU5M/3Z (BDY) | 1992 to 1993 | Magneti-Marelli G6.10 |
| ZX 1.6i and Break cat | XU5JPL/Z (BFZ) | 1994 to 1997 | Magneti-Marelli 8P.13 |
| ZX 1.6i and Break cat | XU5JPL/Z (BFZ) | 1995 to 1996 | Sagem/Lucas 4GJ |
| ZX 1.8i and Break cat | XU7JPL/Z (LFZ) | 1992 to 1997 | Bosch Motronic MP5.1 |
| ZX 1.8i and Break cat | XU7JPL/Z (LFZ) | 1995 to 1996 | Magneti-Marelli 8P.10 |
| ZX 1.9 8V | XU9JAZ (DKZ) | 1990 to 1994 | Bosch Motronic 1.3 |
| ZX 1.9i | XU9JA/K (D6L) | 1991 to 1992 | Bosch Motronic MP3.1 |
| ZX 2.0i cat | XUJ10J2/C/L/Z(RFX) | 1992 to 1996 | Magneti-Marelli 8P-20 |
| ZX 2.0i 16V cat | XUJ10J4/D/L/Z(RFY) | 1992 to 1995 | Bosch Motronic MP3.2 |
| ZX 2.0i 16V | XUJ10J4/D/L/Z(RFT) | 1994 to 1997 | Bosch Motronic MP5.1 |

# Self-Diagnosis

## 1 Introduction

The engine management systems (EMSs) fitted to Citroen vehicles are mainly of Bosch origin and include Bosch Motronic versions 1.3, 3.1, 3.2, 4.1, 5.1. Other systems include Bosch Mono-Jetronic A2.2 and Mono-Motronic MA3.0. Fenix 1B, 3B, 4 and 4B, Magneti-Marelli G5, G6 and 8P.

The majority of Citroen EMSs control primary ignition, fuelling and idle functions from within the same control module. Early versions of Bosch Motronic 4.1 and 1.3 utilised an auxiliary air valve (AAV) that was not ECM-controlled. The Mono-Jetronic system controls fuelling and idle functions alone.

### *Self-Diagnosis (SD) function*

Each electronic control module (ECM) has a self test capability that continually examines the signals from certain engine sensors and actuators, and compares each signal to a table of programmed values. If the diagnostic software determines that a fault is present, the ECM stores one or more fault codes. Codes will not be stored about components for which a code is not available, or for conditions not covered by the diagnostic software. In Citroen systems, the control module generates 2-digit fault codes for retrieval either by manual means or by fault code reader (FCR).

### *Limited operating strategy (LOS)*

Citroen systems featured in this Chapter utilise LOS (a function that is commonly called the "limp-home mode"). Once certain faults have been identified (not all faults will initiate LOS), the ECM will implement LOS and refer to a programmed default value rather than the sensor signal. This enables the vehicle to be safely driven to a workshop/garage for repair or testing. Once the fault has cleared, the ECM will revert to normal operation.

### *Adaptive or learning capability*

Citroen systems also utilise an adaptive capability that will modify the basic programmed values for most effective operation during normal running and with due regard to engine wear.

### *Self-Diagnosis (SD) warning light*

The majority of Citroen models are equipped with a SD warning light located within the instrument panel. When the ignition is switched on, the light will illuminate. Once the engine has started, the light will extinguish if the diagnostic software determines that a major fault is not present. If the light illuminates at any time during a period of engine running, the ECM has diagnosed presence of a major fault. Please note that failure of certain components designated as 'minor' faults will not cause the light to illuminate. The warning light can be triggered to transmit flash codes.

## 2 Self-Diagnosis connector location

The 2-pin SD connector is coloured green and is located in the engine compartment. It is commonly mounted along the left- or right-hand wing, either close to the ECM, the battery, or the cooling system expansion bottle. In some vehicles, the SD connector is located inside the relay box on either the left- or right-hand wing. The SD connector is provided for both manual retrieving of flash codes and for dedicated FCR use.

The 30-pin SD connector fitted to many later models is located in the passenger compartment, either under the facia or behind a cover on the facia **(see illustration 8.1)**. The 30-pin SD connector is provided for FCR use alone.

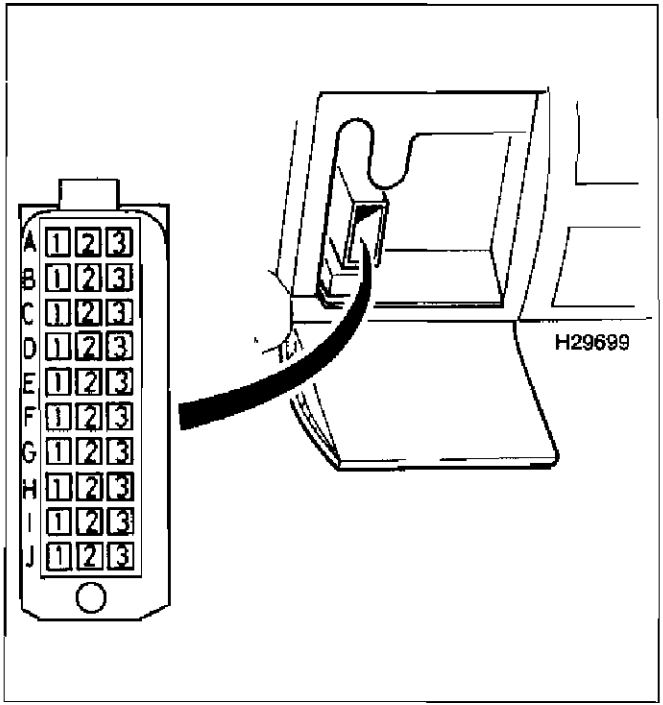


**8.1 30-pin SD connector and common location**

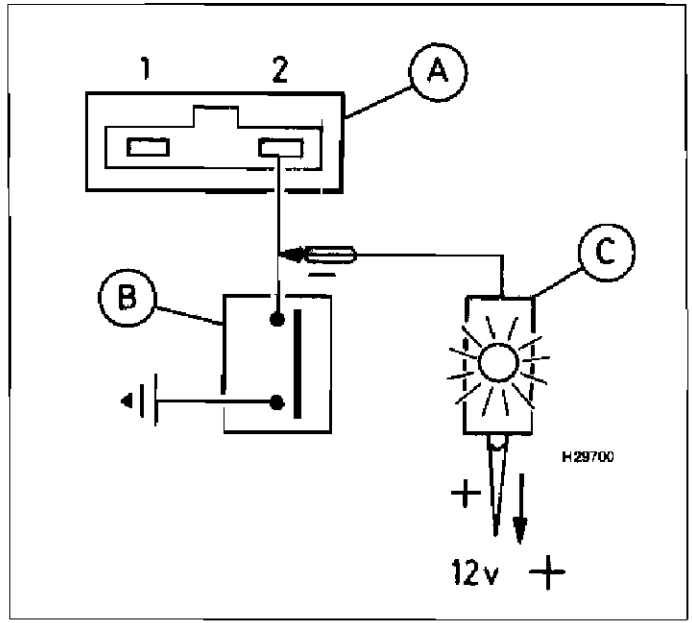


**8.2 Retrieve flash codes by connecting an accessory switch and LED (when warning light not fitted) to terminal 2 in the 2-pin SD connector**

*A SD connector* *B Accessory switch* *C LED*

**5** Count the number of flashes in each series,

**18** Switch on the ignition. The warning light

**28** Continue retrieving codes until code 11 is transmitted. Code 11 signifies that no more codes are stored.
**29** If the engine is a non-starter, crank the engine on the starter motor for 5 seconds and return the ignition key to the "on" position. Do not switch off the ignition.
**30** If code 11 is the first code transmitted after code 12, no faults are stored by the ECM.
**31** After code 11 is transmitted, the complete test may be repeated from the start.
**32** Turn off the ignition to end fault code retrieval.

### *All other systems with 30-pin SD connector*

**33** AN FCR is required for those systems equipped with the 30-pin SD connector.

## 4 Clearing fault codes without a fault code reader (FCR)

### *All systems with 2-pin SD connector*

**1** Repair all circuits indicated by the fault codes
**2** Switch on the ignition.
**3** Perform the above routines to retrieve code 11 - no fault codes
**4** Close the accessory switch for more than 10 seconds, and then open the switch.
**5** All fault codes should have been cleared.

### *All systems (alternative)*

**6** Turn off the ignition and disconnect the battery negative terminal for a period of approximately 2 minutes.
**7** Reconnect the battery negative terminal.
**Note:** *The first drawback to this method is that battery disconnection will re-initialise all ECM adaptive values. Re-learning the appropriate adaptive values requires starting the engine from cold, and driving at various engine speeds for approximately 20 to 30 minutes. The engine should also be allowed to idle for approximately 10 minutes. The second drawback is that the radio security codes, clock setting and other stored values will be initialised, and these must be re-entered once the battery has been reconnected. Where possible, an FCR should be used for code clearing*

## 5 Actuator testing without a fault code reader (FCR)

### *Bosch Motronic ML4.1*

**1** Attach an on/off accessory switch to the green 2-pin SD connector **(refer to illustration 8.1)**.
**2** Close the accessory switch.
**3** Switch on the ignition.
**4** Wait 3 seconds and then open the accessory switch. The warning light will flash the appropriate code (see actuator selection code table) and the injector circuit will actuate. Audible operation of the injector solenoids should be heard.



***Warning: The injectors will actuate for as long as the circuit is closed, and there is a real danger of filling the cylinders with petrol. If testing is required for more than 1 second, disconnect the fuel pump supply (or remove the fuel pump fuse) before commencing this test.***

**5** Discontinue the injector test and continue with the next test by closing the accessory switch once more.
**6** Wait 3 seconds and then open the accessory switch. The warning light will flash the appropriate code (see actuator selection code table) and the next actuator circuit will function.
**7** Repeat the procedure to test each one of the other actuators in turn.
**8** Turn off the ignition to end the test.

### *Systems with 30-pin connector*

**9** A dedicated FCR must be used to test the actuators for these systems.

## 6 Self-Diagnosis with a fault code diagnosis (FCR)

**Note:** *During the course of certain test procedures, it is possible for additional fault codes to be generated. Care must be taken that any codes generated during test routines do not mislead diagnosis.*

### *All Citroën models*

**1** Connect an FCR to the SD connector. Use the FCR for the following purposes, in strict compliance with the FCR manufacturer's instructions:
*a) Retrieving fault codes.*
*b) Clearing fault codes.*
*c) Testing actuators.*
*d) Displaying Datastream.*
*e) Making adjustments to the ignition timing or mixture (some Magneti-Marelli systems)*
**2** Codes must always be cleared after component testing, or after repairs involving the removal or replacement of an EMS component.

## 7 Guide to test procedures

**1** Use an FCR to interrogate the ECM for fault codes, or manually gather codes as described in Sections 3 or 6.

### *Codes stored*

**2** If one or more fault codes are gathered, refer to the fault code tables at the end of this Chapter to determine their meaning
**3** If several codes are gathered, look for a common factor such as a defective earth return or supply.
**4** Refer to the component test procedures in Chapter 4, where you will find a means of testing the majority of components and circuits found in the modern EMS.
**5** Once the fault has been repaired, clear the codes and run the engine under various conditions to determine if the problem has cleared.
**6** Check the ECM for fault codes once more. Repeat the above procedures where codes are still being stored.
**7** Refer to Chapter 3 for more information on how to effectively test the EMS.

### *No codes stored*

**8** Where a running problem is experienced, but no codes are stored, the fault is outside of the parameters designed into the SD system. Refer to Chapter 3 for more information on how to effectively test the EMS.
**9** If the problem points to a specific component, refer to the test procedures in Chapter 4, where you will find a means of testing the majority of components and circuits found in the modern EMS.

Fa

FCR code
11
12
13x
14x
15
18
21x
21x
22
23
25x
26x
27x
31x
31x
32
33x
33x
33x
34
35
36
41
42
43
44
45
46
47
51
5?
5?
5
5.
5?

# Fault code tables

| FCR code | Description |
|---|---|
| 11 | End of diagnosis |
| 12 | Initiation of diagnosis |
| 13x | Air temperature sensor (ATS) or ATS circuit |
| 14x | Coolant temperature sensor (CTS) or CTS circuit |
| 15 | Fuel pump relay, supply fault or fuel pump control circuit |
| 18 | Turbo coolant pump control |
| 21x | Throttle pot sensor (TPS) or TPS circuit |
| 21x | Throttle switch (TS), idle contact or TS circuit |
| 22 | Idle speed control valve (ISCV), supply fault |
| 23 | Idle speed control valve (ISCV) or ISCV circuit |
| 25x | Variable induction solenoid valve (VISV) L or circuit |
| 26x | Variable induction solenoid valve (VISV) C or circuit |
| 27x | Vehicle speed sensor (VSS) or VSS circuit |
| 31x | Throttle switch (TS), idle contact or TS circuit |
| 31x | Oxygen sensor (OS), mixture regulation or OS circuit (alternative code) |
| 32 | Mixture regulation, exhaust, inlet leak(s) or fuel pressure |
| 33x | Airflow sensor (AFS) or AFS circuit |
| 33x | Manifold absolute pressure (MAP) sensor or MAP sensor circuit (alternate code) |
| 33x | Throttle pot sensor (TPS) or TPS circuit (alternate code, Mono-Jetronic only) |
| 34 | Carbon filter solenoid valve (CFSV) or CFSV circuit |
| 35 | Throttle switch (TS), full-load contact |
| 36 | Oxygen sensor (OS) heater control or OS circuit |
| 41 | Crank angle sensor (CAS) or CAS circuit |
| 42 | Injectors or injector circuit |
| 43x | Knock sensor (KS), knock regulation |
| 44x | Knock sensor (KS), knock detection |
| 45 | Ignition coil control (coil 1) |
| 46 | Turbo boost pressure solenoid valve (BPSV) or BPSV circuit |
| 47 | Turbo pressure regulation |
| 51x | Oxygen sensor (OS) or OS circuit |
| 52 | Mixture control, supply voltage, air or exhaust leak |
| 53x | Battery voltage, charging or battery fault |
| 54 | Electronic control module (ECM) |
| 55x | CO pot or CO pot circuit |
| 56 | Immobiliser system |

| FCR code | Description |
|---|---|
| 57 | Ignition coil 2 |
| 58 | Ignition coil 3 |
| 59 | Ignition coil 4 |
| 61 | Variable turbo regulation valve or circuit |
| 62x | Knock sensor (KS) 2 or KS circuit |
| 63x | Oxygen sensor (OS) or OS circuit |
| 64 | Mixture control B |
| 65x | Cylinder identification (CID) or CID circuit |
| 71 | Injector No. 1 control or injector circuit |
| 72 | Injector No. 2 control or injector circuit |
| 73 | Injector No. 3 control or injector circuit |
| 74 | Injector No 4 control or injector circuit |
| 75 | Injector No. 5 control or injector circuit |
| 76 | Injector No. 6 control or injector circuit |
| 79x | Manifold absolute pressure (MAP) sensor or MAP sensor circuit |
| x | Faults that typically will cause the ECM to enter LOS and use a default value in place of the sensor. |

Some faults are designated as "major" faults, and will illuminate the warning light. However, "major" faults vary from system to system, and it is best to interrogate the ECM for codes if a fault is suspected. Codes designated as "minor" faults will not illuminate the warning light.

### *Actuator selection code*

| Code | Description |
|---|---|
| 81 | Fuel pump relay |
| 82 | Injector or injector circuit |
| 83 | Idle speed control valve (ISCV) or ISCV circuit |
| 84 | Carbon filter solenoid valve (CFSV) or CFSV circuit |
| 85 | Air conditioning (A/C) compressor supply relay |
| 91 | Fuel pump or fuel pump relay |
| 92 | Injector or injector circuit |
| 93 | Idle speed control valve (ISCV) or ISCV circuit |
| 94 | Carbon filter solenoid valve (CFSV) or CFSV circuit |
| 95 | Air conditioning (A/C) compressor supply relay |

The above codes are displayed during actuator test mode when the relevant circuit has been actuated. Not all components may be present in any one particular system

# Chapter 9
# Daewoo

## Contents

**Index of vehicles**
**Self-Diagnosis**
Clearing fault codes without a fault code reader (FCR) . . . . . 4
Guide to test procedures . . . . . 6
Introduction . . . . . 1
Retrieving fault codes without a fault code reader (FCR) - flash codes . . . . . 3
Self-Diagnosis connector location . . . . . 2
Self-Diagnosis with a fault code reader (FCR) . . . . . 5
**Fault code table**

## Index of vehicles

| Model | Engine code | Year | System |
|---|---|---|---|
| Nexia 1.5 8V SOHC | - | 1995 to 1997 | GM-Multec |
| Nexia 1.5 16V DOHC | - | 1995 to 1997 | GM-Multec |
| Espero 1.5 16V DOHC | - | 1995 to 1997 | GM-Multec |
| Espero 1.8 8V SOHC | - | 1995 to 1997 | GM-Multec |
| Espero 2.0 8V SOHC | - | 1995 to 1997 | GM-Multec |

## Self-Diagnosis

### 1 Introduction

The engine management system (EMS) fitted to Daewoo vehicles is the GM-Multec IEFI-6 and IEFI-S. Daewoo engine management systems control primary ignition, fuelling and idle functions from within the same control module.

#### *Self-Diagnosis (SD) function*

Each ECM has a self-test capability that continually examines the signals from certain engine sensors and actuators, and compares each signal to a table of programmed values. If the diagnostic software determines that a fault is present, the ECM stores one or more fault codes. Codes will not be stored about components for which a code is not available, or for conditions not covered by the diagnostic software. In Daewoo systems, the control module generates 2-digit fault codes for retrieval either by manual means or by fault code reader (FCR).

#### *Limited operating strategy (LOS)*

Daewoo systems featured in this Chapter utilise LOS (a function that is commonly called the "limp-home mode"). Once certain faults have been identified (not all faults will initiate LOS), the ECM will implement LOS and refer to a programmed default value rather than the sensor signal. This enables the vehicle to be safely driven to a workshop/garage for repair or testing. Once the fault has cleared, the ECM will revert to normal operation.

#### *Adaptive or learning capability*

Daewoo systems also utilise an adaptive function that will modify the basic programmed values for most effective operation during normal running, and with due regard to engine wear.

#### *Self-Diagnosis (SD) warning light*

Daewoo models are equipped with an SD warning light located within the instrument panel.

### 2 Self-Diagnosis connector location

#### *All Daewoo models*

The SD connector is located in the driver's footwell, behind the right-hand kick panel close to the ECM **(see illustration 9.1)**. The connector can be used for both manual retrieval of flash codes and for dedicated FCR use.

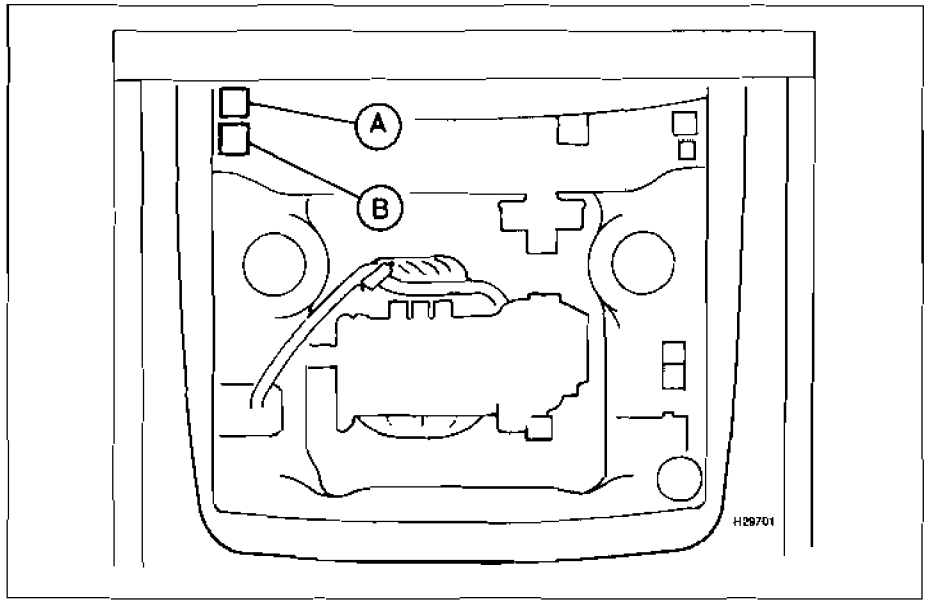


**9.1 Location of SD connector and ECM**

*A ECM* *B SD connector*

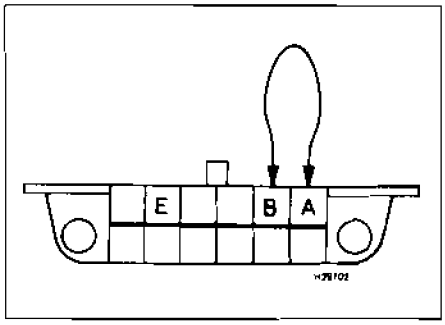


**9.2 Retrieve flash codes by connecting a bridge wire between terminals A and B on the SD connector**

## 3 Retrieving fault codes without a fault code reader (FCR) - flash codes

**Note:** *During the course of certain test procedures, it is possible for additional fault codes to be generated. Care must be taken that any codes generated during test routines do not mislead diagnosis. All codes must be cleared once testing is complete.*

1 Use a jumper lead to bridge terminals A and B in the SD connector **(see illustration 9.2)**.

2 Switch on the ignition, but do not start the engine.

3 The codes are displayed on the SD warning light in the instrument panel. The flashing of the light indicates the 2-digit fault codes as follows:

*a) The two digits are indicated by two series of flashes.*
*b) The first series of flashes indicates the multiples of ten, the second series of flashes indicates the single units.*
*c) A 0.4-second flash followed by a 1.2-second interval indicates fault codes in multiples of ten. A 0.4-second flash followed in quick succession by another flash indicates units*
*d) A 3.2-second pause separates the transmission of each individual code.*
*e) Code number "12" is indicated by one short (0.4-second) flash, followed by a 1.2-second pause then two flashes of 0.4 seconds in quick succession.*

4 Count the number of flashes in each series, and record each code as it is transmitted. Refer to the table at the end of the Chapter to determine the meaning of the fault code.

5 The first code transmitted will be code "12", which signifies code initiation.

6 Each flash code will be repeated three times followed by the next code in sequence.

7 Continue retrieving codes until all stored codes have been retrieved and recorded.

8 Turn off the ignition and remove the jumper lead to end fault code retrieval.

## 4 Clearing fault codes without a fault code reader (FCR)

### All systems

1 Turn off the ignition and disconnect the battery negative terminal for a period of approximately 5 minutes.

2 Reconnect the battery negative terminal.

**Note:** *The first drawback to this method is that battery disconnection will re-initialise all ECM adaptive values. Re-learning the appropriate adaptive values requires starting the engine from cold, and driving at various engine speeds for approximately 20 to 30 minutes. The engine should also be allowed to idle for approximately 10 minutes. The second drawback is that the radio security codes, clock setting and other stored values will be initialised, and these must be re-entered once the battery has been reconnected. Where possible, an FCR should be used for code clearing.*

## 5 Self-Diagnosis with a fault code reader (FCR)

**Note:** *During the course of certain test procedures, it is possible for additional fault codes to be generated. Care must be taken that any codes generated during test routines do not mislead diagnosis.*

### All Daewoo models

1 Connect an FCR to the SD connector. Use the FCR for the following purposes, in strict compliance with the FCR manufacturer's instructions:

*a) Retrieving fault codes.*
*b) Clearing fault codes.*
*c) Displaying Datastream.*

2 Codes must always be cleared after component testing, or after repairs involving the removal or replacement of an EMS component.

## 6 Guide to test procedures

1 Use an FCR to interrogate the ECM for fault codes, or manually gather codes as described in Sections 3 or 5.

### Codes stored

2 If one or more fault codes are gathered, refer to the fault code table at the end of this Chapter to determine their meaning.

3 If several codes are gathered, look for a common factor such as a defective earth return or supply.

4 Refer to the component test procedures in Chapter 4, where you will find a means of testing the majority of components and circuits found in the modern EMS.

5 Once the fault has been repaired, clear the codes and run the engine under various conditions to determine if the problem has cleared.

6 Check the ECM for fault codes once more. Repeat the above procedures where codes are still being stored.

7 Refer to Chapter 3 for more information on how to effectively test the EMS.

### No codes stored

8 Where a running problem is experienced, but no codes are stored, the fault is outside of the parameters designed into the SD system. Refer to Chapter 3 for more information on how to effectively test the EMS.

9 If the problem points to a specific component, refer to the test procedures in Chapter 4, where you will find a means of testing the majority of components and circuits found in the modern EMS.

# Fault code table

| Flash/ FCR code | Description |
|---|---|
| 12 | No faults found in the ECM. Proceed with normal diagnostic methods |
| 13 | Oxygen sensor (OS) or OS circuit |
| 14 | Coolant temperature sensor (CTS) or CTS circuit |
| 21 | Throttle pot sensor (TPS) or TPS circuit |
| 23 | Air temperature sensor (ATS) or ATS circuit |
| 24 | Vehicle speed sensor (VSS) or VSS circuit |
| 32 | Exhaust gas recirculation (EGR) error or EGR circuit |
| 33 | Manifold absolute pressure (MAP) sensor or MAP sensor circuit |
| 42 | Ignition control circuit error |
| 44 | Oxygen sensor (OS) lean or OS circuit |
| 45 | Oxygen sensor (OS) rich or OS circuit |
| 51 | Electronic control module (ECM) error |
| 54 | CO adjust error |

# Chapter 10
# Daihatsu

## Contents

**Index of vehicles**
**Self-Diagnosis**
Clearing fault codes without a fault code reader (FCR) ..... 4
Guide to test procedures ..... 6
Introduction ..... 1
Retrieving fault codes without a fault code reader (FCR) - flash codes ..... 3
Self-Diagnosis connector location ..... 2
Self-Diagnosis with a fault code reader (FCR) ..... 5
**Fault code table**

## Index of vehicles



| Model | Engine code | Year | System |
|---|---|---|---|
| Applause | HD-E | 1989 to 1996 | Daihatsu EFi |
| Charade 1.3i cat SOHC 16V | HC-E | 1991 to 1993 | Daihatsu EFi |
| Charade 1.3 SOHC 16V | HC-E | 1993 to 1997 | Daihatsu MPi |
| Charade 1.5i SOHC 16V | HE-E | 1996 to 1997 | Daihatsu MPi |
| Charade 1.6i SOHC 16V | HD-E | 1993 to 1996 | Daihatsu MPi |
| Hi-Jet | CB42 | 1995 to 1997 | Daihatsu MPi |
| Sportrak cat SOHC 16V | HD-E | 1990 to 1997 | Daihatsu EFi |

## Self-Diagnosis

### 1 Introduction

The engine management system (EMS) fitted to Daihatsu vehicles is the Daihatsu MPi/EFi system, which controls primary ignition, fuel injection, turbocharging pressure (where applicable) and idle functions from within the same ECM.

#### *Self-Diagnosis (SD) function*

Each ECM has a self-test capability that continually examines the signals from certain engine sensors and actuators, and compares each signal to a table of programmed values. If the diagnostic software determines that a fault is present, the ECM stores one or more fault codes. Codes will not be stored about components for which a code is not available, or for conditions not covered by the diagnostic software. In Daihatsu systems, the ECM generates 2-digit fault codes for retrieval as flash codes by manual methods alone.

#### *Limited operating strategy (LOS)*

Daihatsu systems featured in this Chapter utilise LOS (a function that is commonly called the "limp-home mode"). Once certain faults have been identified (not all faults will initiate LOS), the ECM will implement LOS and refer to a programmed default value rather than the sensor signal. This enables the vehicle to be safely driven to a workshop/garage for repair or testing. Once the fault has cleared, the ECM will revert to normal operation.

#### *Adaptive or learning capability*

Daihatsu systems also utilise an adaptive function that will modify the basic programmed values for most effective operation during normal running, and with due regard to engine wear.

#### *Self-Diagnosis (SD) warning light*

Daihatsu models are equipped with an SD warning light located within the instrument panel.

### 2 Self-Diagnosis connector location

#### *Charade GT-Ti*

The SD connector is located near the ignition coil **(see illustration 10.1)**, and is provided for manual retrieval of flash codes alone.

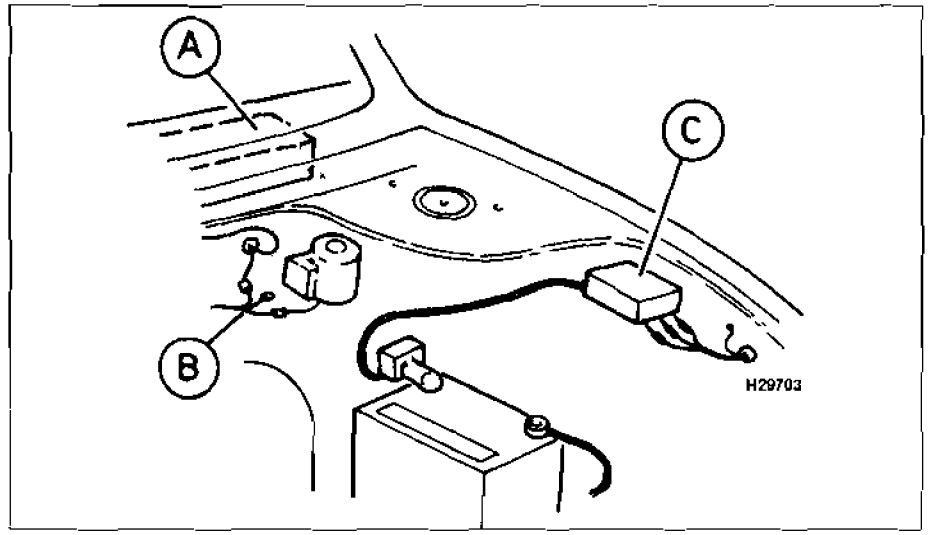


**10.1 Location of SD connector, ECM and fuse and relay box for Charade 1987 to 1993**

*A ECM*
*B Ignition coil and SD connector*
*C Fuse and relay box*

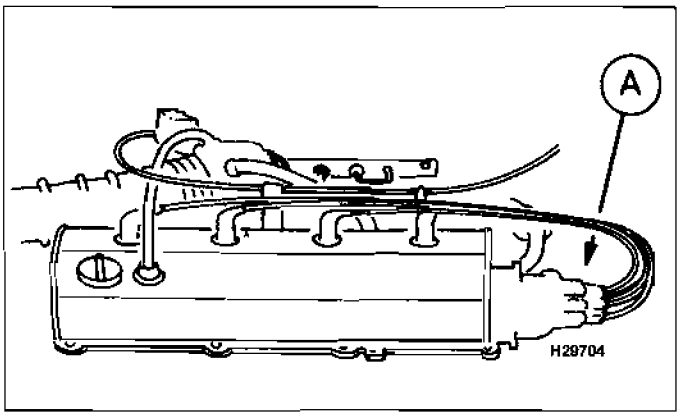


**10.2 Location of SD connector for Applause 1989 to 1995 and Sportrak 1991 to 1996**

*A SD connector located near distributor*

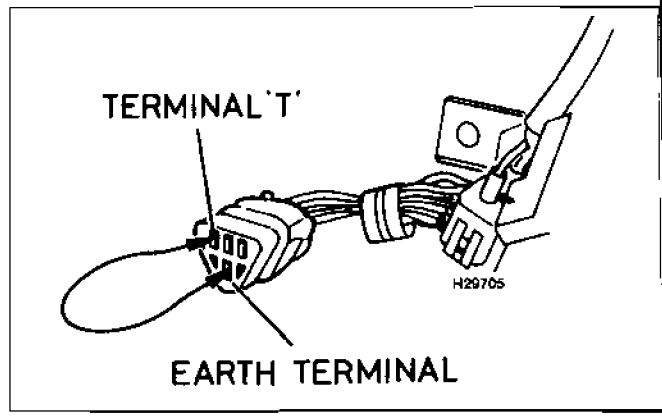


**10.3 SD connector terminals for Charade 1987 to 1993**

### *Applause 1.6i and Sportrak 1.6i*

The SD connectors are located near the distributor **(see illustration 10.2)**, and are provided for manual retrieval of flash codes alone.

## 3 Retrieving fault codes without a fault code reader (FCR) - flash codes

**Note:** *During the course of certain test procedures, it is possible for additional fault codes to be generated. Care must be taken that any codes generated during test routines do not mislead diagnosis. All codes must be cleared once testing is complete.*

### *Charade models*

**1** Use a jumper lead to bridge terminals "T" and earth in the SD connector **(see illustration 10.3)**.

### *Applause and Sportrak models*

**2** Use a jumper lead to bridge terminals 5 and 6 in the SD connector **(see illustration 10.4)**.

### *All models*

**3** Switch on the ignition, but do not start the engine.

**4** The codes are displayed on the SD warning light in the instrument panel. The flashing of the light indicates the 2-digit fault codes as follows:

*a) A 4.5-second pause signals the beginning of the code transmission sequence.*
*b) The two digits are indicated by two series of flashes.*
*c) The first series of flashes indicates the multiples of ten, the second series of flashes indicates the single units.*
*d) Tens are indicated by a 0.5-second flash, while units are indicated by 0.5-second flashes separated by a 1.2-second pause.*
*e) A 2.5-second pause separates the tens from the units.*
*f) A 4.5-second pause separates the transmission of one code from another.*
*g) Code number "12" is indicated by one short (0.5-second) flash, followed by a 2.5-second pause and then two flashes of 0.5 seconds in quick succession.*

**5** Count the number of flashes in each series, and record each code as it is transmitted. Refer to the table at the end of the Chapter to determine the meaning of the fault code.

**6** The fault codes are displayed in sequence, and then repeated after a 4.5-second pause.

**7** Continue retrieving codes until all stored codes have been transmitted and recorded.

**8** If the first transmitted code is "1" (repeated three times), no faults are stored.

**9** Turn off the ignition and remove the jumper lead to end fault code retrieval.

## 4 Clearing fault codes without a fault code reader (FCR)

### *Method 1*

**1** Remove the ECM back-up fuse for a minimum of 10 seconds **(see illustration 10.5)**.

### *Method 2*

**2** Turn off the ignition and disconnect the battery negative terminal for a period of at least 10 seconds.

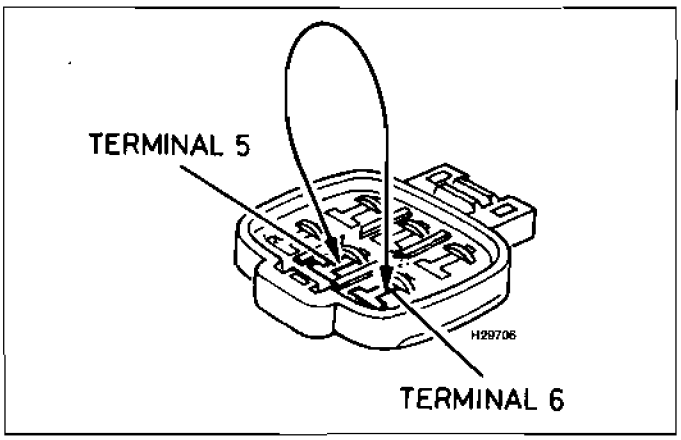


**10.4 SD connector terminals for Applause 1989 to 1995 and Sportrak 1991 to 1996**

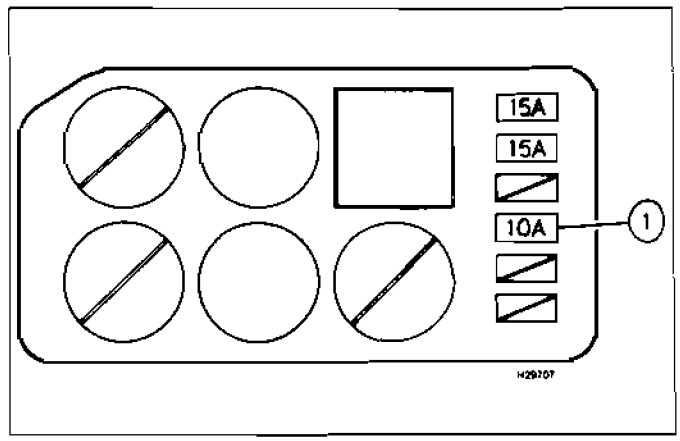


**10.5 Location of ECM back-up fuse (1) in fusebox for Applause 1989 to 1995 and Sportrak 1991 to 1996**

3 Reconnect the battery negative terminal.

**Note:** *The first drawback to this method is that battery disconnection will re-initialise all ECM adaptive values. Re-learning the appropriate adaptive values requires starting the engine from cold, and driving at various engine speeds for approximately 20 to 30 minutes. The engine should also be allowed to idle for approximately 10 minutes. The second drawback is that the radio security codes, clock setting and other stored values will be initialised, and these must be re-entered once the battery has been reconnected.*

## Self-Diagnosis with a fault code reader (FCR)

FCR facilities were not available for the Daihatsu vehicles covered by this book at the time of writing.

## 6 Guide to test procedures

1 Manually gather codes as described in Section 3.

### Codes stored

2 If one or more fault codes are gathered, refer to the fault code table at the end of this Chapter to determine their meaning.

3 If several codes are gathered, look for a common factor such as a defective earth return or supply.

4 Refer to the component test procedures in Chapter 4, where you will find a means of testing the majority of components and circuits found in the modern EMS.

5 Once the fault has been repaired, clear the codes and run the engine under various conditions to determine if the problem has cleared.

6 Check the ECM for fault codes once more. Repeat the above procedures where codes are still being stored.

7 Refer to Chapter 3 for more information on how to effectively test the EMS.

### No codes stored

8 Where a running problem is experienced, but no codes are stored, the fault is outside of the parameters designed into the SD system. Refer to Chapter 3 for more information on how to effectively test the EMS.

9 If the problem points to a specific component, refer to the test procedures in Chapter 4, where you will find a means of testing the majority of components and circuits found in the modern EMS.

10

# Fault code table

### Daihatsu MPi/EFi

| Flash code | Description |
|---|---|
| 01 | No faults found in the ECM. Proceed with normal diagnostic methods |
| 02 | Manifold absolute pressure (MAP) sensor or MAP sensor circuit |
| 03 | Ignition signal |
| 04 | Coolant temperature sensor (CTS) or CTS circuit |
| 05 | CO adjuster (non-catalyst models) |
| 05 | Oxygen sensor (OS) or OS circuit (alternative code) |
| 06 | Engine speed sensor (distributor) |
| 07 | Throttle position sensor (TPS) incorporating idling switch or TPS circuit |
| 08 | Air temperature sensor (ATS) or ATS circuit |
| 09 | Vehicle speed sensor (VSS) or VSS circuit |
| 10 | Starter signal |
| 11 | Switch signal idle, auto or A/C.05 |
| 12 | Exhaust gas regulation (EGR) or EGR circuit |
| 15 | Oxygen sensor (OS) or OS circuit, voltage too low |
| 16 | Oxygen sensor (OS) or OS circuit, voltage too high |

# Chapter 11
# Fiat

## Contents

**Index of vehicles**
**Self-Diagnosis**
Clearing fault codes without a fault code reader (FCR) . . . . . 4
Guide to test procedures . . . . . 6
Introduction . . . . . 1
Retrieving fault codes without a fault code reader (FCR) - flash codes . . . . . 3
Self-Diagnosis connector location . . . . . 2
Self-Diagnosis with a fault code reader (FCR) . . . . . 5
**Fault code tables**

## Index of vehicles

| Model | Engine code | Year | System |
|---|---|---|---|
| Brava 1.4 12V | 182 AA.1AA | 1996 to 1997 | Bosch Mono-Motronic SPi |
| Brava 1.6 16V | 182 A4.000 | 1996 to 1997 | Weber Marelli IAW |
| Bravo 2.0 | 182 A1.000 | 1996 to 1997 | Bosch Motronic M2.10.4 |
| Cinquecento 899 OHV DIS cat | 1170 A1.046 | 1993 to 1997 | Weber-Marelli IAW SPi |
| Cinquecento 900 OHV DIS cat | 170 A1.046 | 1992 to 1994 | Weber-Marelli IAW SPi |
| Cinquecento Sporting | 176 B2000 | 1995 to 1997 | Weber-Marelli IAW SPi |
| Coupe 16V | 836 A3.000 | 1994 to 1997 | Weber-Marelli IAW MPi |
| Coupe 16V Turbo | 175 A1.000 | 1994 to 1996 | Weber-Marelli IAW MPi |
| Coupe 2.0 20V | - | 1997 | Bosch Motronic M2.10.4 |
| Croma 2000ie | 834 B.000 | 1986 to 1989 | Weber-Marelli IAW MPi |
| Croma 2000ie DOHC 8V | 154 C.000 | 1989 to 1991 | Weber-Marelli IAW MPi |
| Croma 2.0ie DOHC | 154 C3.000 | 1990 to 1992 | Weber-Marelli IAW MPi |
| Croma 2.0ie DOHC DIS cat | 154 C3.046 | 1991 to 1994 | Weber-Marelli IAW MPi |
| Croma 2.0ie 16V cat | 154 E1.000 | 1993 to 1995 | Bosch Motronic M1.7 |
| Fiorino 1500 SOHC cat | 149 C1.000 | 1991 to 1995 | Bosch Mono-Jetronic A2.4 |
| Panda 1 0ie OHC and 4x4 cat | 156 A2.246 | 1991 to 1996 | Bosch Mono-Jetronic A2.4 |
| Panda 1 1ie OHC cat | 156 C.046 | 1991 to 1997 | Bosch Mono-Jetronic A2.4 |
| Panda 899 | 1170A1.046 | 1992 to 1997 | Weber-Marelli IAW SPi |
| Punto 55 | 176 A6.000 | 1994 to 1997 | Weber-Marelli IAW SPi |
| Punto 60 | 176 A7.000 | 1994 to 1997 | Weber-Marelli IAW SPi |
| Punto 75 | 176 A8.000 | 1994 to 1997 | Weber-Marelli IAW MPi |
| Punto GT | 176 A4.000 | 1994 to 1997 | Bosch Motronic M2.7 MPi |
| Regata 100 Sie & Weekend 1 6 DOHC | 149 C3.000 | 1986 to 1988 | GM/Delco SPi |
| Regata 100 Sie & Weekend 1.6 DOHC | 1149 C3.000 | 1988 to 1990 | Weber MIW Centrajet SPi |
| Tempra 1.4ie SOHC DIS cat | 160 A1.046 | 1992 to 1994 | Bosch Mono-Jetronic A2 4 |
| Tempra 1.6ie SOHC DIS cat | 159 A3.046 | 1991 to 1992 | Bosch Mono-Jetronic A2.4 |
| Tempra 1 6ie SOHC cat | 159 A3.046 | 1993 to 1994 | Bosch Mono-Motronic MA1.7 |
| Tempra 1.8ie DOHC 8V | 159 A4.000 | 1990 to 1992 | Weber-Marelli IAW MPi |
| Tempra 1.8ie DOHC 8V cat | 159 A4.046 | 1992 to 1994 | Weber-Marelli IAW MPi |
| Tempra 1.8 DOHC | 835 C2.000 | 1993 to 1996 | Weber-Marelli IAW MPi |
| Tempra 2.0ie and 4x4 DOHC 8V | 159 A6.046 | 1991 to 1997 | Weber-Marelli IAW MPi |
| Tipo 1 4ie cat | 160 A1.046 | 1991 to 1996 | Bosch Mono-Jetronic A2.4 |
| Tipo 1 6ie SOHC DIS cat | 159 A3.046 | 1990 to 1992 | Bosch Mono-Jetronic A2.4 |
| Tipo 1 6ie SOHC | 835 C1.000 | 1994 to 1996 | Bosch Mono-Motronic MA1.7 |
| Tipo 1 6ie SOHC cat | 159 A3.046 | 1993 to 1995 | Bosch Mono-Motronic MA1 7 |
| Tipo 1.8ie DOHC 8V | 159 A4.000 | 1990 to 1992 | Weber-Marelli IAW MPi |
| Tipo 1 8ie DOHC 8V | 159 A4.000 | 1992 to 1995 | Weber-Marelli IAW MPi |
| Tipo 1 8i DOHC 16V | 160 A5.000 | 1990 to 1991 | Weber-Marelli IAW MPi |
| Tipo 1 8ie DOHC 8V cat | 159 A4.046 | 1992 to 1994 | Weber-Marelli 8F |
| Tipo 2 0ie DOHC 8V cat | 159 A5.046 | 1990 to 1992 | Weber-Marelli IAW MPi |
| Tipo 2 0ie DOHC 8V cat | 159 A6.046 | 1992 to 1995 | Weber-Marelli IAW MPi |
| Tipo 2.0ie DOHC 16V cat | 160 A8.046 | 1991 to 1995 | Weber-Marelli IAW MPi |
| Ulysse 2.0 SOHC 89kW | ZFA220000 | 1995 to 1997 | Weber-Marelli IAW MPi |
| Ulysse 2.0 Turbo | ZFA220000 | 1995 to 1997 | Bosch Motronic 3.2 |
| Uno 1.0ie SOHC and Van cat | 156 A2.246 | 1992 to 1995 | Bosch Mono-Jetronic |
| Uno 1.1ie SOHC | 156 C.046 | 1989 to 1995 | Bosch Mono-Jetronic |
| Uno 70 1.4 SOHC | 146 C1.000 | 1990 to 1992 | Bosch Mono-Jetronic |
| Uno 1.4 SOHC cat | 160 A1.046 | 1990 to 1995 | Bosch Mono-Jetronic |
| Uno 1.5ie SOHC DIS cat | 149 C1.000 | 1993 to 1994 | Bosch Mono-Jetronic |
| Uno 994 | 146 C7.000 | 1994 to 1996 | Weber-Marelli IAW SPi |

# Self-Diagnosis

## 1 Introduction

The engine management systems (EMSs) fitted to Fiat vehicles are mainly of Bosch or Weber-Marelli origin, and include Bosch Motronic versions 1.7, 2.7 and 2.10.4, and Weber-Marelli IAW. Other systems include Bosch Mono-Jetronic A2.4, Mono-Motronic MA1 7 and GM SPi. Apart from Mono-Jetronic, Fiat engine management systems control the primary ignition, fuelling and idle functions from within the same control module. The Mono-Jetronic system controls fuelling and idle speed alone.

### *Self-Diagnosis (SD) function*

Each ECM has a self-test capability that continually examines the signals from certain engine sensors and actuators, and compares each signal to a table of programmed values. If the diagnostic software determines that a fault is present, the ECM stores a fault. Codes will not be stored about components for which a code is not available, or for conditions not covered by the diagnostic software.

#### GM-Delco SPi

In the GM-Delco SPi system, the EMS generates 2-digit fault codes for retrieval by both manual means and by fault code reader (FCR).

#### All other Fiat systems

Fiat software does not generate fault code numbers for the majority of Fiat systems. A fault code reader (FCR) normally displays faults on the FCR screen without reference to a specific code number. Although actual code numbers are not available, faults in one or more of the circuits and components covered by the diagnostic software will cause a fault to be stored.

### *Limited operating strategy (LOS)*

Fiat systems featured in this Chapter utilise LOS (a function that is commonly called the "limp-home mode") Once certain faults have been identified (not all faults will initiate LOS), the ECM will implement LOS and refer to a programmed default value rather than the sensor signal. This enables the vehicle to be safely driven to a workshop/garage for repair or testing. Once the fault has cleared, the ECM will revert to normal operation.

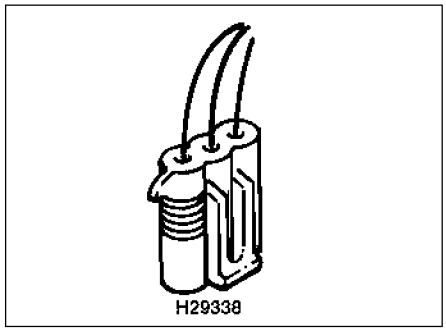


**11.1 3-pin SD connector used for retrieving fault codes from Fiat systems**

### *Adaptive or learning capability*

Fiat systems also utilise an adaptive function that will modify the basic programmed values for most effective operation during normal running, and with due regard to engine wear.

### *Self-Diagnosis (SD) warning light*

Many Fiat models are equipped with an SD warning light located within the instrument panel. When the ignition is switched on, the light will illuminate. Once the engine has started, the light will extinguish if the diagnostic software determines that a fault is not present. If the light remains illuminated at any time whilst the engine is running, the ECM has diagnosed presence of a system fault.

## 2 Self-Diagnosis connector location

### *GM (Delco) SPi*

The 3-pin SD connector **(see illustration 11.1)** is located under the passenger's side glove compartment, close to the ECM. Both manual retrieval of flash codes and dedicated FCR use is possible.

### *Bosch Mono-Jetronic*

The 3-pin SD connector is usually located on the bulkhead in the engine compartment. Alternative locations are close to the ECM under the passenger's side glove compartment, or in the centre console. The SD connector is provided for use by a dedicated FCR alone.

### *Bosch Mono-Motronic MA 1.7*

The 3-pin SD connector is usually located beside the ECM on the right-hand inner wing in the engine compartment. Alternative locations are close to the ECM under the passenger's side glove compartment, or in the centre console. The SD connector is provided for use by a dedicated FCR alone.

### *Bosch Motronic 1.7 MPi*

The 3-pin SD connector is usually located close to the ECM under the passenger's side glove compartment, and is provided for use by a dedicated FCR alone.

### *Bosch Motronic 2.7 MPi*

The 3-pin SD connector is usually located close to the ECM on the bulkhead in the engine compartment, and is provided for use by a dedicated FCR alone.

### *Bosch Motronic 2.10.4*

The 3-pin SD connector is usually located close to the right-hand side suspension turret in the engine compartment, and is provided for use by a dedicated FCR alone.

### *Hitachi*

The 3-pin SD connector is usually located close to the ECM behind the passenger's side footwell trim, and is provided for use by a dedicated FCR alone.

### *Weber-Marelli MPi*

The 3-pin SD connector is usually located in the engine compartment on the right-hand bulkhead, or in the passenger compartment under the facia, close to the ECM. The SD connector is provided for use by a dedicated FCR alone.

### *Weber-Marelli SPi*

The 3-pin SD connector is usually located in the engine compartment beside the ECM on the left-hand wing (Cinquecento) or beside the ECM on the right-hand wing (other vehicles). The SD connector is provided for use by a dedicated FCR alone.

## 3 Retrieving fault codes without a fault code reader (FCR) - flash codes

**Note:** *During the course of certain test procedures, it is possible for additional fault codes to be generated. Care must be taken that any codes generated during test routines do not mislead diagnosis. All codes must be cleared once testing is complete.*

### *Fiat GM (Delco) SPi*

1 Switch on the ignition - the SD warning light should illuminate.
2 Use a jumper lead to bridge terminals A and B in the 3-pin SD connector (light blue/white and black).
3 The stepper motor will operate once so that the plunger will fully extend and then retract.
4 The codes are displayed on the SD warning light in the instrument panel. The flashing of the light indicates the 2-digit fault codes as follows:

*a) The two digits are indicated by two series of flashes.*
*b) The first series of flashes indicates the multiples of ten, while the second series of flashes indicates the single units.*
*c) A single flash indicates fault codes in tens, while a flash followed in quick succession by a second flash indicates units.*
*d) A 3.2-second pause separates the transmission of each individual code.*

*e) Code number "12" is indicated by one single flash, followed by a 1.2-second pause, then two flashes in quick succession.*

5 Count the number of flashes in each series, and record each code as it is transmitted. Refer to the tables at the end of the Chapter to determine the meaning of the fault code.

6 The first code transmitted is code "12", which signifies code initiation. Code 12 is repeated twice more for a total transmission of three times.

7 After transmitting code "12", the warning light will extinguish.

8 After a 3.2-second pause, the warning light will begin transmitting all stored fault codes. Each code is transmitted three times, with a pause for 3.2 seconds between each code.

9 If no fault codes are stored, the warning light will continually flash code "12".

10 Turn off the ignition and remove the jumper lead to end fault code retrieval.

### *All other systems*

11 A fault code reader (FCR) is required to display faults generated in SD systems fitted to other Fiat vehicles.

## Clearing fault codes without a fault code reader (FCR)

### *All systems*

1 Turn off the ignition and disconnect the battery negative terminal for a period of approximately 2 minutes.

2 Reconnect the battery negative terminal.

**Note:** *The first drawback to this method is that battery disconnection will re-initialise all ECM adaptive values. Re-learning the appropriate adaptive values requires starting the engine from cold, and driving at various engine speeds for approximately 20 to 30 minutes. The engine should also be allowed to idle for approximately 10 minutes. The second drawback is that the radio security codes, clock setting and other stored values will be initialised, and these must be re-entered once the battery has been reconnected. Where possible, an FCR should be used for code clearing.*

## 5 Self-Diagnosis with a fault code reader (FCR)

**Note:** *During the course of certain test procedures, it is possible for additional fault codes to be generated. Care must be taken that any codes generated during test routines do not mislead diagnosis.*

### *All Fiat models*

1 Connect an FCR to the SD connector. Use the FCR for the following purposes, in strict compliance with the FCR manufacturer's instructions:

*a) Displaying fault codes (GM).*
*b) Displaying system faults (all other systems).*
*c) Clearing stored fault codes or system faults.*
*d) Testing actuators.*
*e) Displaying Datastream.*
*f) Making adjustments to the ignition timing or mixture (some vehicles).*

2 Codes or stored faults must always be cleared after component testing, or after repairs involving the removal or replacement of an EMS component.

## 6 Guide to test procedures

1 Use an FCR to interrogate the ECM for fault codes, or (where possible) manually gather codes as described in Sections 3 or 5.

### *Codes stored*

2 If one or more fault codes are gathered, refer to the fault code tables at the end of this Chapter to determine their meaning.

3 If several codes are gathered, look for a common factor such as a defective earth return or supply.

4 Refer to the component test procedures in Chapter 4, where you will find a means of testing the majority of components and circuits found in the modern EMS.

5 Once the fault has been repaired, clear the codes and run the engine under various conditions to determine if the problem has cleared.

6 Check the ECM for fault codes once more. Repeat the above procedures where codes are still being stored.

7 Refer to Chapter 3 for more information on how to effectively test the EMS.

### *No codes stored*

8 Where a running problem is experienced, but no codes are stored, the fault is outside of the parameters designed into the SD system. Refer to Chapter 3 for more information on how to effectively test the EMS.

9 If the problem points to a specific component, refer to the test procedures in Chapter 4, where you will find a means of testing the majority of components and circuits found in the modern EMS.



Fault code tables appear overleaf

# Fault code tables

### *GM-Delco SPI*

| Flash/ FCR code | Description |
|---|---|
| 14 | Coolant temperature sensor (CTS) or CTS circuit |
| 15 | Coolant temperature sensor (CTS) or CTS circuit |
| 21 | Throttle position sensor (TPS) or TPS circuit |
| 22 | Throttle position sensor (TPS) or TPS circuit |
| 23 | Air temperature sensor (ATS) or ATS circuit |
| 25 | Air temperature sensor (ATS) or ATS circuit |
| 33 | Manifold absolute pressure (MAP) sensor signal or circuit |
| 34 | Manifold absolute pressure (MAP) sensor signal or circuit |
| 42 | Ignition circuit |
| 51 | Electronic control module (ECM) |
| 52 | Electronic control module (ECM) |
| 55 | Electronic control module (ECM) |

### *All other systems*

Fiat software does not usually generate fault codes. The FCR normally displays faults on the FCR screen without reference to a specific code number. Although actual code numbers are not available, faults in one or more of the following list of circuits and components will cause a fault to be stored.

**List of circuits checked by Fiat SD system**

*Adaptive control limits. When the limits are reached, this suggests a serious engine (mechanical) condition.*
*Air temperature sensor (ATS) or ATS circuit*
*Battery voltage too low or too high*
*Crank angle sensor (CAS) or CAS circuit, loss of signal*
*Carbon filter solenoid valve (CFSV) or CFSV circuit*
*Coolant temperature sensor (CTS) or CTS circuit*
*Electronic control module (ECM)*
*Distributor phase sensor circuit (CID)*
*Ignition coil(s) control or circuit*
*Injector control or injector circuit*
*Knock sensor (KS) or KS circuit*
*Oxygen sensor (OS) or OS circuit*
*Manifold absolute pressure (MAP) sensor or MAP sensor circuit*
*Manifold absolute pressure (MAP) sensor, no correlation between MAP signal and throttle position sensor (TPS) and crank angle sensor (CAS) signals*
*Mismatch between crank angle sensor (CAS) signal and distributor phase sensor signal or circuit*
*Oxygen sensor (OS) or OS circuit*
*Relay control or circuit*
*Self-Diagnosis (SD) warning light or circuit*
*Idle speed stepper motor (ISSM) or ISSM circuit*
*Tachometer*
*Throttle pot sensor (TPS) or TPS circuit*

# Chapter 12
# Ford

## Contents

**Index of vehicles**
**Self-Diagnosis**
Clearing fault codes without a fault code reader (FCR) ..... 6
Ford EEC IV enhanced 2-digit fault code retrieval - general ..... 3
Ford EEC IV enhanced 3-digit fault code retrieval - general ..... 4
Guide to test procedures ..... 8
Introduction ..... 1
Retrieving fault codes without a fault code reader (FCR) - flash codes ..... 5
Self-Diagnosis connector location ..... 2
Self-Diagnosis with a fault code reader (FCR) ..... 7
**Fault code tables**

## Index of vehicles

| Model | Engine code | Year | System |
|---|---|---|---|
| Escort 1.3 cat | HCS | 1991 to 1992 | Ford EEC IV |
| Escort 1.3 cat | J6A | 1991 to 1995 | Ford EEC IV |
| Escort 1.3i and Van | JJA/J4C | 1995 to 1997 | Ford EEC V |
| Escort 1.4 CFi cat | F6D | 1989 to 1990 | Ford EEC IV |
| Escort 1.4 CFi cat | F6F | 1990 to 1995 | Ford EEC IV |
| Escort 1.4 CFi cat | F6G | 1990 to 1995 | Ford EEC IV |
| Escort 1.4i | PTE F4 | 1994 to 1997 | Ford EEC V |
| Escort 1.6i XR3i | LJA | 1989 to 1992 | Ford EEC IV |
| Escort 1.6i XR3i cat | LJB | 1989 to 1992 | Ford EEC IV |
| Escort 1.6 16V cat | L1E | 1992 to 1997 | Ford EEC IV |
| Escort 1.6i | LJA | 1989 to 1990 | Ford EEC IV |
| Escort 1.6i and cat | LJE | 1990 to 1992 | Ford EEC IV |
| Escort XR3i 1.6 and cat | LJD | 1989 to 1992 | Ford EEC IV |
| Escort RS Cosworth DOHC turbo cat | N5F | 1992 to 1996 | Weber IAW |
| Escort RS2000 and cat | N7A | 1991 to 1995 | Ford EEC IV |
| Escort 1.8i 16V cat | RDA | 1992 to 1995 | Ford EEC IV |
| Escort 1.8i 16V cat | RQB | 1992 to 1995 | Ford EEC IV |
| Escort 2.0i 7 4x4 cat | N7A | 1991 to 1997 | Ford EEC IV |
| Fiesta 1.1 and Van cat | G6A | 1989 to 1997 | Ford EEC IV |
| Fiesta 1.25 | DHA | 1995 to 1997 | Ford EEC V |
| Fiesta 1.3 Van Courier cat | HCS | 1991 to 1994 | Ford EEC IV |
| Fiesta 1.3i and Courier cat | J6B | 1991 to 1996 | Ford EEC IV |
| Fiesta 1.3 and Courier | JJA | 1995 to 1997 | Ford EEC V |
| Fiesta 1.4i and Van cat | F6E | 1989 to 1995 | Ford EEC IV |
| Fiesta 1.4 | FHA | 1995 to 1997 | Ford EEC V |
| Fiesta Classic 1.4 | PTE F4A | 1995 to 1996 | Ford EEC IV |
| Fiesta XR2i 1.6 cat | LJD | 1989 to 1993 | Ford EEC IV |
| Fiesta RS turbo 1.6 | LHA | 1990 to 1992 | Ford EEC IV |
| Fiesta 1.6i and cat | LUC | 1989 to 1992 | Ford EEC IV |
| Fiesta XR2i 1.6 | LJC | 1989 to 1993 | Ford EEC IV |
| Fiesta 1.6i 16V | L1G | 1994 to 1995 | Ford EEC IV |
| Fiesta XR2i 1.8i 16V cat | RDB | 1992 to 1995 | Ford EEC IV |
| Fiesta 1.8i 16V cat | RQC | 1992 to 1995 | Ford EEC IV |
| Galaxy 2.0 | NSD | 1995 to 1997 | Ford EEC V |
| Galaxy 2.3 | Y5B | 1996 to 1997 | Ford EEC V |
| Galaxy 2.8 and 4x4 | AAA | 1995 to 1997 | Ford EEC V |
| Granada 2.0 EFi | NRA | 1985 to 1989 | Ford EEC IV |
| Granada 2.0i and cat | N9B | 1989 to 1995 | Ford EEC IV |
| Granada 2.0 EFi 4wd cat | N9D | 1989 to 1992 | Ford EEC IV |
| Granada 2.4 V6 | ARC | 1987 to 1993 | Ford EEC IV |
| Granada 2.4 V6 cat | ARD | 1987 to 1991 | Ford EEC IV |
| Granada 2.9 V6 and 4x4 | BRC | 1987 to 1992 | Ford EEC IV |
| Granada 2.9 V6 cat | BRD | 1987 to 1994 | Ford EEC IV |
| Granada 2.9 V6 cat | BRE | 1987 to1992 | Ford EEC IV |
| Granada 2.9 V6 cat | BOA | 1991 to 1995 | Ford EEC IV |
| Ka 1.3 | JJB | 1996 to 1997 | Ford EEC V |

| Model | Engine code | Year | System |
|---|---|---|---|
| Maverick 2.4i | KA24E | 1993 to 1997 | Nissan ECCS |
| Mondeo 1.6 DOHC cat | L1F/J | 1993 to 1996 | Ford EEC IV |
| Mondeo 1.6i 16V | L1J | 1996 to 1997 | Ford EEC V |
| Mondeo 1.8i 16V | RKB | 1996 to 1997 | Ford EEC V |
| Mondeo 1.8i and 4x4 cat | RKA/B | 1993 to 1996 | Ford EEC IV |
| Mondeo 2.0i 16V 4x4 cat | NGA | 1993 to 1996 | Ford EEC IV |
| Mondeo 2.0i 16V | NGA | 1996 to 1997 | Ford EEC V |
| Mondeo 2.5 V6 DOHC cat | SEA | 1994 to 1996 | Ford EEC IV |
| Mondeo 2.5i | SEA | 1996 to 1997 | Ford EEC V |
| Orion 1.3 cat | HCS | 1991 to 1992 | Ford EEC IV |
| Orion 1.3 cat | J6A | 1991 to 1995 | Ford EEC IV |
| Orion 1.4 CFi cat | F6D | 1989 to 1990 | Ford EEC IV |
| Orion 1.4 CFi cat | F6F | 1990 to 1995 | Ford EEC IV |
| Orion 1.4 CFi cat | F6G | 1990 to 1995 | Ford EEC IV |
| Orion 1.6i and cat | LJE | 1990 to 1993 | Ford EEC IV |
| Orion 1.6i cat | LJF | 1990 to 1994 | Ford EEC IV |
| Orion 1.6i | LJA | 1989 to 1990 | Ford EEC IV |
| Orion 1.6 DOHC 16V cat | L1E | 1992 to 1997 | Ford EEC IV |
| Orion 1.6i | LJA | 1989 to 1990 | Ford EEC IV |
| Orion 1.8i 16V DOHC cat | RDA | 1992 to 1995 | Ford EEC IV |
| Orion 1.8i 16V DOHC cat | RQB | 1992 to 1995 | Ford EEC IV |
| Probe 2.0i DOHC 16V cat | - | 1994 to 1997 | Mazda EGi |
| Probe 2.5i 24V cat | V6 | 1994 to 1997 | Mazda EGi |
| Sapphire 1.6 CVH cat | L6B | 1990 to 1993 | Ford EEC IV |
| Sapphire 1.8 CVH cat | R6A | 1992 to 1993 | Ford EEC IV |
| Sapphire 2.0 EFi DOHC | N9A | 1989 to 1992 | Ford EEC IV |
| Sapphire 2.0 EFi 8V cat | N9C | 1989 to 1992 | Ford EEC IV |
| Scorpio 2.0i | NSD | 1994 to 1997 | Ford EEC IV |
| Scorpio 2.0 EFi | NRA | 1985 to 1989 | Ford EEC IV |
| Scorpio 2.0i 16V | N3A | 1994 to 1996 | Ford EEC V |
| Scorpio 2.0i and cat | N9B | 1989 to 1995 | Ford EEC IV |
| Scorpio 2.0i | NSD | 1994 to 1997 | Ford EEC V |
| Scorpio 2.3i 16V | Y5A | 1996 to 1997 | Ford EEC V |
| Scorpio 2.8 4x4 | PRE | 1985 to 1987 | Ford EEC IV |
| Scorpio 2.9 V6 and 4x4 | BRC | 1987 to 1992 | Ford EEC IV |
| Scorpio 2.9 V6 cat | BRD | 1987 to 1995 | Ford EEC IV |
| Scorpio 2.9 V6 cat | BRE | 1987 to 1995 | Ford EEC IV |
| Scorpio 2.9 V6 24V cat | BOA | 1991 to 1995 | Ford EEC IV |
| Scorpio 2.9i V6 | BRG | 1994 to 1997 | Ford EEC V |
| Scorpio 2.9i V6 24V | BOB | 1994 to 1997 | Ford EEC V |
| Sierra 1.6 CVH cat | L6B | 1990 to 1993 | Ford EEC IV |
| Sierra 1.8 CVH cat | R6A | 1992 to 1993 | Ford EEC IV |
| Sierra 2.0 EFi DOHC 8V | N9A | 1989 to 1992 | Ford EEC IV |
| Sierra 2.0 EFi 8V cat | N9C | 1989 to 1992 | Ford EEC IV |
| Sierra 2.9 XR 4x4 V6 | B4A | 1989 to 1991 | Ford EEC IV |
| Sierra 2.9 XR 4x4 V6 cat | B4B | 1989 to 1993 | Ford EEC IV |
| Transit Van 2.0 CFi cat | N6T | 1990 to 1991 | Ford EEC IV |
| Transit Van 2.0 CFi cat | - | 1991 to 1992 | Ford EEC IV |
| Transit 2.9 V6 EFi | BRT | 1991 to 1994 | Ford EEC IV |
| Transit and Tourneo 2.0i DOHC cat | NSG | 1994 to 1997 | Ford EEC V |
| Transit and Tourneo 2.0i | NSF | 1994 to 1997 | Ford EEC V |
| Transit 2.9 EFi | B4T | 1989 to 1991 | Ford EEC IV |

# Self-Diagnosis

## 1 Introduction

The engine management system (EMS) fitted to the majority of Ford vehicles from 1985 to 1996 was Ford EEC IV. In 1996, EEC V began to replace EEC IV on some models; eventually EEC V will replace all vehicles currently equipped with EEC IV. Other engine management systems fitted to European Ford vehicles include Weber IAW (Ford Cosworth), Mazda EGi (Ford Probe) and Nissan ECCS (Ford Maverick).

The various engine management systems fitted to the Ford vehicle range control the primary ignition, fuelling and idle functions from within the same ECM.

### *Self-Diagnosis (SD) function*

Each engine management system has a self-test capability that continually examines the signals from certain engine sensors and actuators, and compares each signal to a table of programmed values. If the diagnostic software determines that a fault is present, the ECM stores one or more fault codes. Codes will not be stored about components for which a code is not available, or for conditions not covered by the diagnostic software. In particular, the Ford EEC IV system has grown in sophistication over the years. When first utilised in 1985, it generated less than ten 2-digit codes. By 1996 the latest version, which

has now evolved into EEC V, is capable of generating over a hundred 3-digit codes.

**Ford EEC V system**

Ford EEC V software does not generate fault code numbers, and the fault code reader (FCR) normally displays any faults on the FCR screen without reference to a specific code number. Although code numbers are not available, faults in one or more of the circuits or components covered by the diagnostic software will cause a fault to be stored.

### *Limited operating strategy (LOS)*

In 1988, EEC IV was equipped with keep alive memory (KAM) which utilises LOS, otherwise known as the "limp-home mode". Prior to the fitting of KAM, EEC IV systems did not utilise LOS. Once certain codes have been generated (not all codes will initiate LOS), the ECM will implement LOS and refer to a programmed default value rather than the sensor signal. This enables the vehicle to be safely driven to a workshop/garage for repair or testing. Once the fault has cleared, the ECM will revert to normal operation. Other Ford vehicles that utilise LOS include those equipped with Ford EEC V, Ford Probe (Mazda EGi) and Ford Maverick (Nissan ECCS). Ford Cosworth vehicles equipped with Weber IAW do not utilise LOS.

### *Adaptive or learning capability*

All Ford vehicles equipped with EEC IV (with KAM), EEC V, Mazda EGi and Nissan ECCS systems also utilise an adaptive function that will modify the basic programmed values for most effective operation during normal running, and with due regard to engine wear. However, Ford Cosworth (Weber IAW) does not utilise adaptive control.

### *Self-Diagnosis (SD) warning light*

The Ford Maverick alone is equipped with a facia-mounted SD warning light. In addition, an LED is located upon the ECM casing. When the ignition is switched on, the SD warning light and the LED will illuminate. Once the engine has started, the light and LED will extinguish unless the diagnostic software determines that a system fault is present. If the light or LED illuminates at any time during a period of engine running, the ECM has diagnosed presence of a system fault. The warning light and LED can also be triggered to transmit flash codes.

## 2 Self-Diagnosis connector location

### *Ford EEC IV: 2.0 SOHC, 2.0 DOHC, 2.4, 2.8 and 2.9 V6*

The 3-pin or 5-pin SD connector is located in the engine compartment, close to the battery **(see illustration 12.1)**.

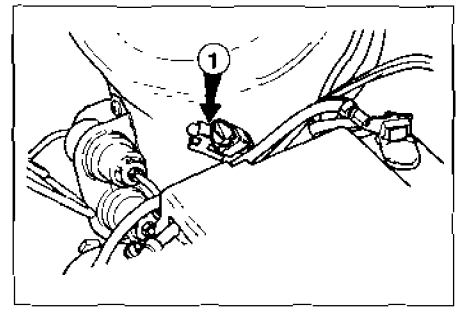


**12.1 The EEC IV (2.0 litre/V6) SD connector is located close to the battery**

### *Ford EEC IV: CFi, EFi and Zetec (Escort and Fiesta)*

The 3-pin SD connector is located in the engine compartment, behind the left-hand headlamp or left-hand wing **(see illustration 12.2)**.

### *Ford EEC IV: Zetec (Mondeo)*

The 3-pin SD connector is located on a plate on the engine compartment bulkhead along with the octane plug and the FDS2000 connector **(see illustration 12.3)**.

### *Ford EEC IV and V (16-pin)*

The 16-pin OBD connector **(see illustration12.4)** is usually located in the engine compartment, under the steering column, in the passenger footwell behind the trim, or behind the ashtray in the centre console (Ford Galaxy)



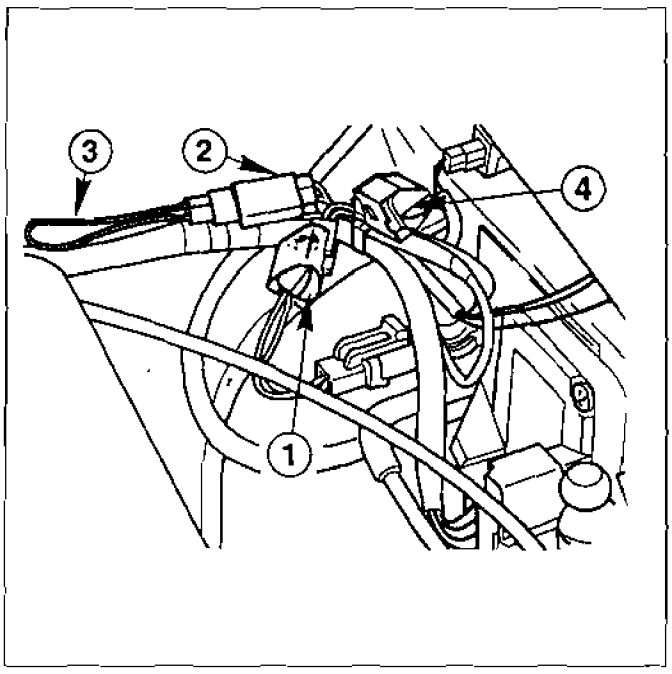


**12.2 The EEC IV (Escort/Fiesta) SD connector is located behind the left-hand headlight or on the left-hand wing**

*1 FDS2000 diagnostic connector*
*2 Octane connector*
*3 Octane loop wire*
*4 SD connector*

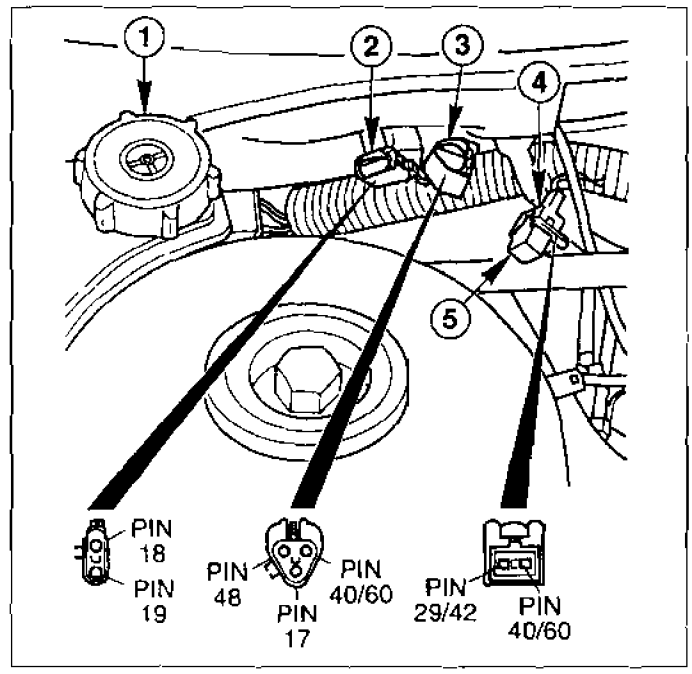


**12.3 The EEC IV (Mondeo) SD connector is located on a plate along with the octane plug and the FDS2000**

*1 Power steering reservoir*
*2 FDS2000 diagnostic connector*
*3 SD connector*
*4 Octane connector*
*5 Octane plug*

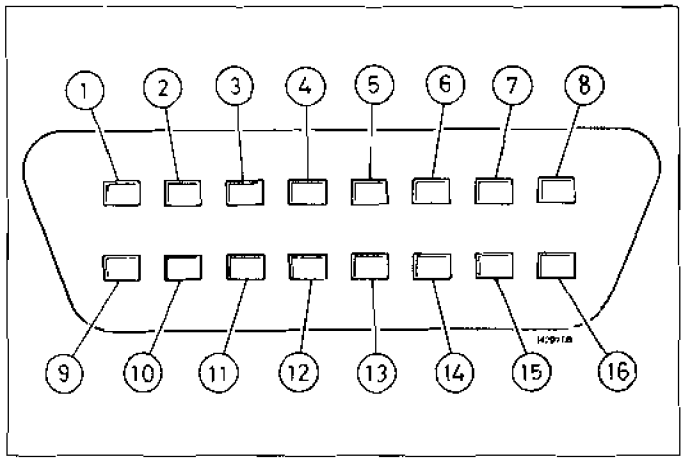


**12.4 The 16-pin OBD connector (Ford EEC IV and V)**

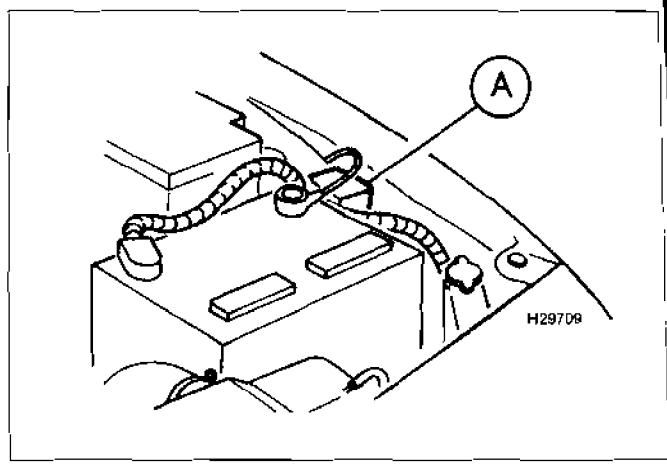


**12.5 The SD connector (A) is located close to the battery (Probe)**

### *Ford Probe (Mazda EGi)*

The SD connector is located in the engine compartment, close to the battery **(see illustration 12.5)**.

### *Ford Cosworth (Weber IAW)*

The SD connector is located behind the glove compartment, next to the ECM **(see illustration 12.6)**.

### *Ford Maverick (Nissan ECCS)*

The SD connector is located in the passenger compartment, underneath the instrument panel in the facia **(see illustration 12.7)**.

## 3 Ford EEC IV enhanced 2-digit fault code retrieval - general

**1** The notes in this section should be read in conjunction with the sections about retrieving codes with and without an FCR.

**2** Models prior to 1988 do not include keep-alive memory (KAM). Where reference is made to KAM in this section and in the test routines, the reference should be ignored for those systems not so equipped.

**3** "Hard" fault codes are codes generated by faults that are present at the exact moment of the test. "Soft" fault codes are codes generated by faults that that have occurred at some point during the past 10 or 40 driving cycles (depending on vehicle) but are not present at the moment of testing. Soft codes are stored in KAM. **Note:** *An engine drive cycle is defined as a period when the vehicle was started with a coolant temperature below 49°C, and continued running until the coolant temperature exceeded 65°C.*

**4** Ford EEC IV enhanced (2-digit) has three modes of fault diagnosis, and a service-set mode. The three fault diagnosis modes are:

***Mode 1:*** *Ignition on, engine stopped: A static test of the engine sensors, and retrieval of hard fault codes and soft (KAM) codes.*

***Mode 2:*** *Continuous running: A test of the engine sensors during normal engine operation, at idle or during a road test.*

***Mode 3:*** *Engine running and service-set mode: A dynamic test of the engine sensors. In the service-set mode, the ignition timing and idle speed can be set. It is not possible to make these adjustments outside of service-set mode.*

**5** Although the tests are independent of one another and may be accomplished individually, the following sequence is recommended for more accurate testing.

**6** Execute the Mode 1 procedure (see Section 5). Record any codes stored in KAM, but do not attempt to repair faults indicated by KAM at this stage. All hard faults must be rectified (in the order of transmission), and this test must conclude with code 11 (no hard faults found) before continuing with the Mode 2 test. Continue to ignore KAM codes for the moment.

**7** Execute the Mode 2 test, which may be performed with the vehicle stationary or

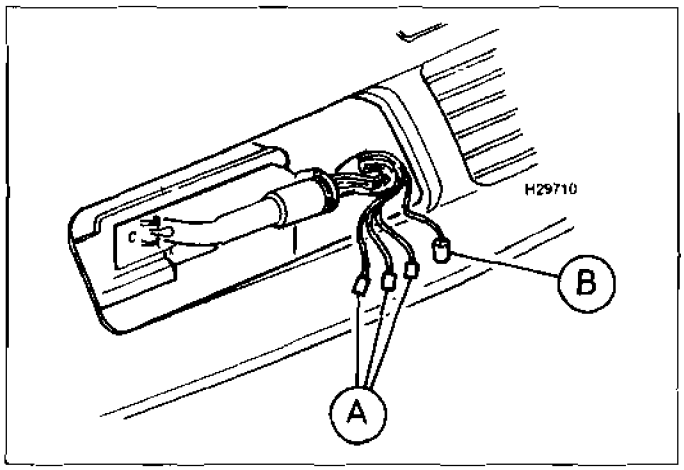


**12.6 The Weber IAW SD connector is located behind the glove compartment, next to the ECM (Cosworth)**

*A Timing adjustment connections* *B SD connector*

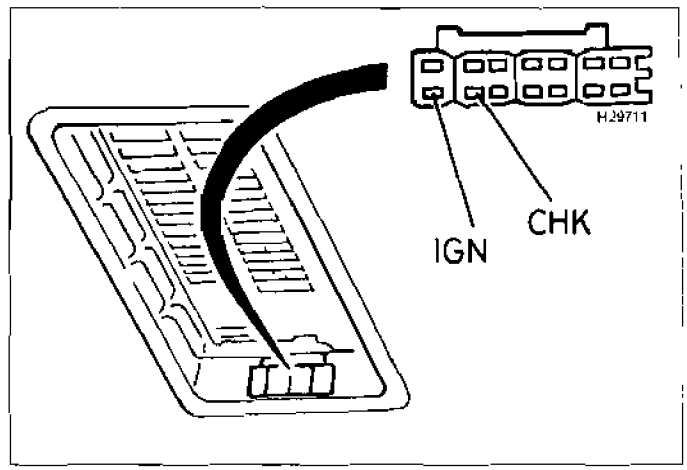


**12.7 The SD connector is located underneath the instrument panel in the facia (Maverick)**

during a road test. Rectify all faults before continuing with the Mode 3 test. **Note:** *The Mode 2 test is provided for European vehicles only (not USA), with the exception of 2.4 and 2.9 V6 catalyst-equipped European vehicles.*

8 Execute the Mode 3 test, rectify any faults indicated, and then make adjustments under the service-set mode (if required). **Note:** *An engine running test for 1988 and later vehicles cannot be performed if a hard code is present before the test begins.*

9 Fault codes that were retrieved from KAM can now be investigated and rectified as necessary. Rectifying the hard faults generated during the three test procedures may solve the reason for the generation of soft codes without further testing.

10 It is good practice to turn the ignition off and wait 10 seconds between each test, to avoid an erroneous self-diagnosis test.

11 Before commencing an SD test, ensure that the following conditions are met:

*a) The engine has attained normal operating temperature.*
*b) Automatic transmission is in neutral or Park.*
*c) The handbrake is firmly applied.*
*d) The air conditioning is switched off.*
*e) Where applicable, the octane and idle adjust (service-set) wires have been disconnected.*

## 4 Ford EEC IV enhanced 3-digit fault code retrieval - general

1 The notes in this section should be read in conjunction with the sections about retrieving codes with an FCR.

2 "Hard" fault codes are codes generated by faults that are present at the exact moment of the test. "Soft" fault codes are codes generated by faults that that have occurred at some point during the past 40 driving cycles (most vehicles) or 80 driving cycles (24-valve V6), but are not present at the moment of testing. Soft codes are stored in keep-alive memory (KAM). **Note:** *An engine drive cycle is defined as a period when the vehicle was started with a coolant temperature below 49°C, and continued running until the coolant temperature exceeded 65°C.*

3 Ford EEC IV enhanced (3-digit) has two modes of fault diagnosis and a service-set mode. The two fault diagnosis modes are:

**Mode 1**

4 Ignition on, engine stopped.

*i) A static test of the engine sensors and retrieval of hard fault codes and soft (KAM) codes.*
*ii) A static "wiggle test" of sensors and connections.*
*iii) A switch monitor test of selected actuators.*

**Mode 2**

5 Engine running and service-set mode:

*i) A dynamic test of the engine sensors.*
*ii) A service-set mode where the idle speed and cylinder balance can be checked.*
*iii) A dynamic "wiggle test" of sensors and connections.*

6 Although the tests are independent of one another and may be accomplished individually, the following sequence is recommended for more accurate testing.

7 Execute the Mode 1 procedure (see Section 6). Record any codes stored in KAM, but do not attempt to repair faults indicated by KAM at this stage. All hard faults must be rectified (in the order of transmission) and this test must conclude with code 111 (no hard faults found) before continuing with the Mode 2 test. Continue to ignore KAM codes for the moment.

8 Execute the Mode 2 test, rectify any faults indicated, and then make adjustments under the service-set mode (if required). **Note:** *An engine running test for 1988 and later vehicles cannot be performed if a hard code is present before the test begins*

9 Fault codes that were retrieved from KAM can now be investigated and rectified as necessary. Rectifying the hard faults generated during the two test procedures may solve the reason for the generation of soft codes without further testing.

10 It is good practice to turn the ignition off and wait 10 seconds between each test, to avoid an erroneous self-diagnosis test.

11 Before commencing an SD test, ensure that the following conditions are met:

*a) The engine has attained normal operating temperature.*
*b) Automatic transmission is in neutral or Park.*
*c) The handbrake is firmly applied.*
*d) The air conditioning is switched off.*
*e) Where applicable, the octane and idle adjust (service-set) wires have been disconnected.*

## 5 Retrieving fault codes without a fault code reader (FCR) - flash codes

**Note:** *During the course of certain test procedures, it is possible for additional fault codes to be generated. Care must be taken that any codes generated during test routines do not mislead diagnosis. All codes must be cleared once testing is complete.*

### *Ford EEC IV (basic)*

1 Ensure that the engine has attained normal operating temperature before commencing tests.

2 Attach an LED diode light between terminal 3 at the SD connector (negative lead) and the battery positive terminal **(see illustration 12.8) Note:** *It is also possible to retrieve flash codes by connecting an analogue voltmeter in a similar fashion, and counting the needle sweeps.*

3 Use a jumper lead to bridge terminals 1 and 2 in the SD connector.

4 Start the engine and allow it to idle. **Note:** *If the engine is a non-starter, crank the engine on the starter motor.* After approximately 45 seconds, the LED test light will begin to flash the 2-digit fault codes as follows:

*a) The two digits are indicated by two series of flashes.*
*b) The first series of flashes indicates the multiples of ten, the second series of flashes indicates the single units.*
*c) Both tens and units are indicated by 1-second flashes separated by 1-second pauses.*
*d) A 4-second pause separates the tens from the units, and a 6-second pause separates the transmission of each individual code.*
*e) Code number "12" is indicated by one flash of 1-second duration, followed by a 4-second pause then two flashes of 1-second duration separated by a 1-second pause.*

5 Count the number of flashes in each series, and record each code as it is transmitted. Refer to the tables at the end of the Chapter to determine the meaning of the fault code. **Note:** *The engine idle speed will fluctuate during code retrieval. If the idle speed does not fluctuate, this suggests a faulty ISCV or ISCV circuit.*

6 Fault codes generated by the basic EEC IV system are only available whilst the fault is present and when the ignition is switched on. If the fault is permanent (present all the time), then an appropriate code will be stored each time the ignition is switched on. However, if the fault is intermittent and the ignition is switched off, the fault code will be lost until the fault recurs.

7 Continue retrieving codes until all stored codes have been retrieved and recorded.

8 If code 11 is transmitted, no fault codes are stored.

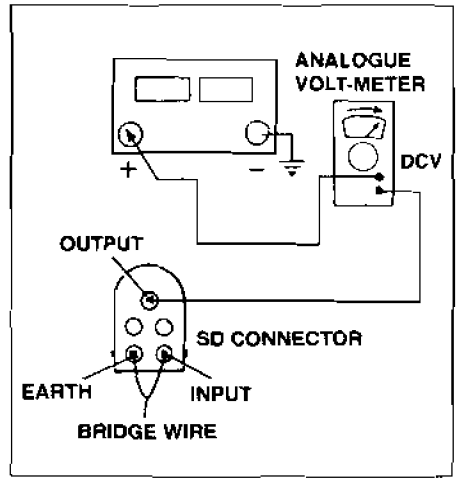


**12.8 Retrieving codes from 5-pin Ford EEC IV and Weber IAW systems**

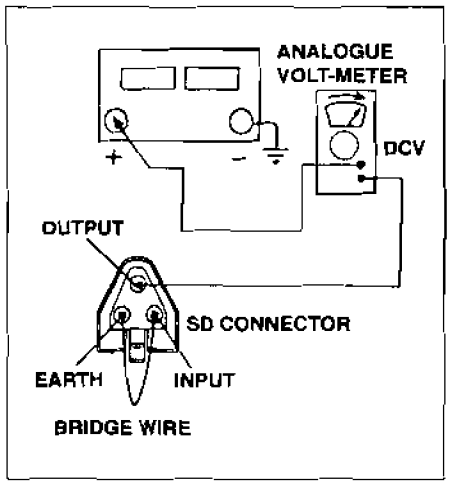


**12.9 Retrieving codes from 3-pin Ford EEC IV and Weber IAW systems**

**9** Switch off the ignition and remove the jumper lead and LED test light to end fault code retrieval.

## *Ford EEC IV enhanced (retrieving 2-digit codes)*

**10** Read the notes in the Section 3 before performing tests in this section. **Note:** *Because of the complexity of retrieving fault codes from Ford vehicles with EEC IV enhanced, and the unreliability of manual methods, the use of an FCR is strongly recommended so that errors may be avoided.*

**11** Attach an LED diode light between terminal 3 at the SD connector (negative lead) and the battery positive terminal **(see illustration 12.9)**.

**12** Use a jumper lead to bridge terminals 1 and 2 in the SD connector.

### Mode 1 test

**13** Switch on the ignition (do not crank the engine if the engine is a non-starter). After approximately 45 seconds, the LED will begin to flash the 2-digit fault codes as follows:

*a) The two digits are indicated by two series of flashes.*

*b) The first series of flashes indicates the multiples of ten, the second series of flashes indicates the single units*

*c) Code digit pulses are 0.5-second on and 0.5-second off.*

*d) A 2-second pause separates the digits of each code, and a 4-second pulse separates the transmission of each individual code. EEC IV with KAM. After all codes have been transmitted, a pause of 6 to 9 seconds is followed by single flash (separator code). A second pause of 6 to 9 seconds is followed by another single flash, and then any intermittent ("soft") fault codes stored in KAM are transmitted.*

*e) Code number "12" is indicated by one flash of 0.5 seconds duration, followed by a 2-second pause then two flashes of 0.5 seconds' duration separated by a 0.5 second pause.*

*f) After the last hard code is transmitted, a pause of 6 to 9 seconds is followed by a single flash (separator code), another 6 to 9 second pause, and then the soft (KAM) codes are transmitted.*

**14** Count the number of flashes in each series and record each code as it is transmitted. Refer to the tables at the end of the Chapter to determine the meaning of the fault code

**15** Command codes will be transmitted at certain points during the procedure. On retrieving a command code, the engineer is required to take certain actions. If these actions are not taken, a fault will be stored and the "ignition on" code retrieval routine must be repeated.

**16** If code 10 appears (some automatic transmission vehicles from 1991), depress fully and release the accelerator pedal and the brake pedal (kickdown must be activated). If the appropriate action is not completed within 10 seconds of code 10 appearing, the ECM will store a fault code. If procedural codes are retrieved, switch off the ignition, wait 10 seconds, and then restart the Mode 1 test

**17** Fault codes generated by the enhanced system (without KAM) are only available whilst the fault is present and when the ignition is switched on. If the fault is permanent (present all the time), then an appropriate code will be stored each time the ignition is switched on. However, if the fault is intermittent and the ignition is switched off, the fault code will be lost until the fault recurs.

**18** All fault codes transmitted during this stage indicate the presence of hard faults.

**19** If code 11 is transmitted, no fault codes are stored.

**20** After all codes have been transmitted, they will be repeated once. The next action will depend upon the vehicle

**21** Models without keep-alive memory (KAM):

*a) Code 10 will be displayed, which indicates that the ECM has commenced "wiggle test" mode.*

*b) Proceed to paragraph 23 and follow the "wiggle test" procedure.*

**22** Models with keep-alive memory (KAM)

*a) A separator code will be displayed (code 10, 2.4/2.9 V6 catalyst, or code 20, all others) and then all KAM codes will be transmitted* **Note:** *If code 11 is transmitted, no fault codes are stored in KAM.*

*b) After any KAM codes have been transmitted, they will be repeated once. The codes in KAM will then be cleared and code 10 will be displayed, which indicates that the ECM has commenced "wiggle test" mode.*

*c) Proceed to paragraph 23 and follow the "wiggle test" procedure.*

### Wiggle test

**23** All suspect components, wires and connections should now be gently tapped or wiggled. If the ECM detects a fault during this process, it will be stored in KAM (where KAM is fitted). Repeat the Mode 1 test to retrieve codes detected during the wiggle test and stored in KAM. Record all codes for vehicles without KAM, because they will not be retained in ECM memory

**24** Rectify all faults in the exact order of transmission. Repeat the Mode 1 test until hard fault codes are no longer generated, and then move on to the Mode 2 test. **Note:** *In order to avoid an erroneous self-diagnosis test, it is good practice to switch off the ignition and wait 10 seconds before initiating another Mode 1 test, or before commencing a Mode 2 test.*

**25** Switch off the ignition and remove the jumper lead and LED test light to end fault code retrieval.

### Mode 2 test

**26** Attach an LED diode light between terminal 3 at the SD connector (negative lead) and the battery positive terminal **(refer to illustrations 12.8 and 12.9)** **Note:** *The Mode 2 test is not available for 2.4 and 2.9 V6 catalyst-equipped European vehicles*

**27** Start the engine. Wait four seconds, then use a jumper lead to bridge terminals 1 and 2 in the SD connector.

**28** After a few seconds, the LED will begin to flash the 2-digit fault codes. Refer to the description in the Mode 1 test for details of what the flashes represent

**29** Count the number of flashes in each series, and record each code as it is transmitted. Refer to the tables at the end of the Chapter to determine the meaning of the fault code.

**30** Fault codes will be continuously displayed while the engine is running. Code 11 indicates "no fault found".

**31** All suspect components, wires and connections should now be gently tapped or wiggled, and/or the vehicle could be road-tested

**32** Rectify all faults in the exact order of transmission. Repeat the Mode 1 and Mode 2 tests until both tests are successfully concluded, with no hard fault codes being generated. Only then move onto the Mode 3 test. **Note:** *In order to avoid an erroneous self-diagnosis test, it is good practice to switch off the ignition and wait 10 seconds before initiating another Mode 1 or Mode 2 test, or before commencing a Mode 3 test.*

**33** Switch off the ignition and remove the jumper lead and LED test light to end fault code retrieval. **Note:** *The jumper lead and LED test light may remain connected if another Mode 1 or Mode 2 test is to follow on.*

### Mode 3 test (and service-set mode)

**Note:** *The EEC IV version fitted to most 1988 and later engines will not perform an engine running test if any hard codes are present before the test begins.*

34 Turn the ignition off.
35 Attach an LED diode light between terminal 3 at the SD connector (negative lead) and the battery positive terminal **(refer to illustrations 12.8 and 12.9)**.
36 Use a jumper lead to bridge terminals 1 and 2 in the SD connector.
37 Switch on the ignition, wait three seconds, start the engine and allow it to idle.
38 Run the engine at 2000 rpm until it has attained normal operating temperature.
39 Once the self-test procedure commences, code 50 (identification of European ECM) will be transmitted. If this code is transmitted alone, or along with one or more coolant temperature sensor (CTS) fault codes, the engine temperature is either too low or the CTS is signalling a too-low temperature. The latter reason could be due to an engine cooling system fault, or an out-of-range sensor that is still within the CTS parameters and will not therefore generate a fault code. The Mode 3 test will not commence until the ECM has verified that operating temperature has been attained.
40 Once the ECM has verified the temperature, the test proper will commence. The engine speed will rise to a fast idle as EEC IV runs through a set of pre-determined tests of sensors and actuators. **Note:** *If the speed does not rise within 60 seconds, check that the engine is at operating temperature and then re-attempt the test. Also, if any one of the service-set connections are connected, an appropriate code will be transmitted and the test aborted*
41 When code 10 is displayed, blip the throttle so that the engine speed momentarily rises above 3000 rpm (4000 rpm on catalyst models). Allow the engine to idle again. The "blip" test loads the airflow sensor or MAP sensor, throttle pot and other dynamic sensors. Fault codes will be stored if signal(s) do not conform to the expected parameters, or if the signal is absent or not executed correctly.
42 Fault codes detected during the Mode 3 test will now be transmitted. If fault codes are present, these must be rectified before it is possible to enter service-set mode.
43 If no faults are detected, code 11 will be transmitted, followed by code 60 which signifies the start of service-set mode. **Note:** *Ford 2.4 and 2.9 V6 engines with catalyst will not transmit code 60. Once code 11 has been transmitted, the system has effectively commenced service-set mode.*

**Service-set mode**

44 When the ECM enters service-set mode, the ignition timing and idle speed are de-regulated, and adjustments can be made to the base ignition timing (models with distributor alone) and the base idle speed (where possible). Where it is not possible to adjust the base ignition timing (DIS models) or base idle speed, the values can still be checked and compared with published specifications. If the measured values are incorrect, this suggests a system or ECM fault.

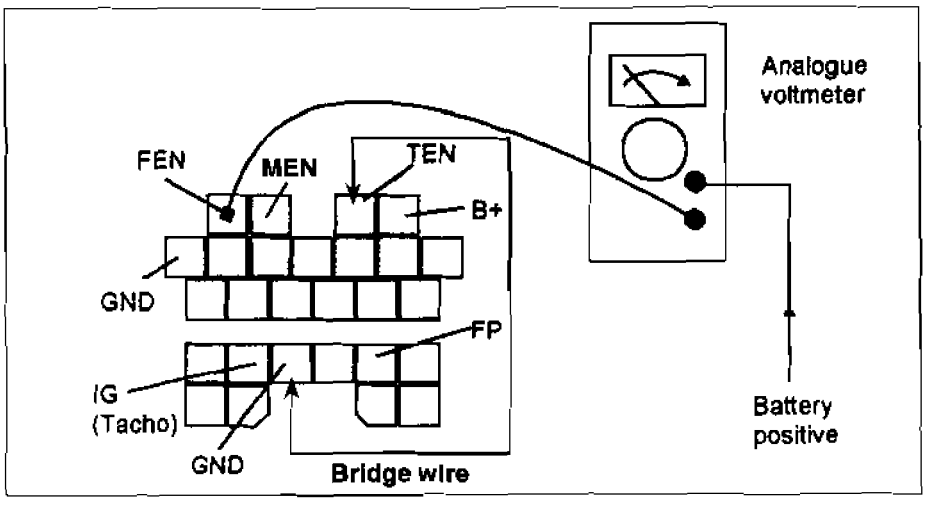


**12.10 Retrieving codes from Ford Probe models**

45 After 2 minutes (catalyst models) or 10 minutes (European non-catalyst models), code 70 will be displayed. This signifies the end of service-set mode, and that the ECM has regained control of the ignition timing and idle speed. If adjustments have not been completed, re-enter code 60 by repeating the Mode 3 and service-set routines.
46 Switch off the ignition and remove the jumper lead and LED test light to end fault code retrieval.
47 Remember to re-connect the octane and idle adjust (service-set) wires, where these were disconnected prior to commencing the self-test procedures.

## Ford EEC IV (3-digit) and EEC V

48 An FCR is required to display fault codes generated by Ford EEC IV (3-digit) and EEC V.

## Weber IAW (Ford Cosworth)

49 Ensure that the engine has attained normal operating temperature before commencing tests.
50 Attach an LED diode test light between terminal 3 at the SD connector (negative lead) and the battery positive terminal **(refer to illustration 12.8)**.
51 Use a jumper lead to bridge terminals 1 and 2 in the SD connector.
52 Switch on the ignition or start the engine and allow it to idle. **Note:** *If the engine is a non-starter, crank the engine on the starter motor.* After approximately 45 seconds, the LED will begin to flash the 2-digit fault codes as follows:

*a) The two digits are indicated by two series of flashes.*
*b) The first series of flashes indicates the multiples of ten, the second series of flashes indicates the single units.*
*c) Both tens and units are indicated by 1-second flashes separated by 1-second pauses.*
*d) A 4-second pause separates the tens from the units, and a 6-second pulse separates the transmission of each individual code.*
*e) Code number "12" is indicated by one flash of 1-second duration, followed by a 4-second pause, then two flashes of 1-second duration separated by a 1-second pause.*

53 Count the number of flashes in each series, and record each code as it is transmitted. Refer to the tables at the end of the Chapter to determine the meaning of the fault code.
54 Fault codes generated by the Weber IAW system are only available whilst the fault is present and the ignition is switched on. If the fault is permanent (present all the time), then an appropriate code will be stored each time the ignition is switched on. However, if the fault is intermittent and the ignition is switched off, the fault code will be lost.
55 Continue retrieving codes until all stored codes have been retrieved and recorded.
56 Switch off the ignition and remove the jumper lead and LED test light to end fault code retrieval.

## Mazda EGi (Ford Probe)

57 Mazda EGi has three modes of fault diagnosis. The three modes are as follows:

*i) Mode 1 - ignition on, engine off: A static test of the engine sensors. All faults must be repaired (in the order of transmission) before continuing with the engine running test.*
*ii) Mode 2 - engine running: A dynamic test of the engine sensors.*
*iii) Mode 3 - switch monitor test: A test of various ECM switched inputs.*

**Note:** *The sequence of testing must observe the above order for accurate diagnosis*

### Mode 1 - retrieving codes

58 Attach an analogue voltmeter between terminal FEN at the SD connector (voltmeter negative lead) and the battery positive terminal (voltmeter positive lead) **(see illustration 12.10)**.

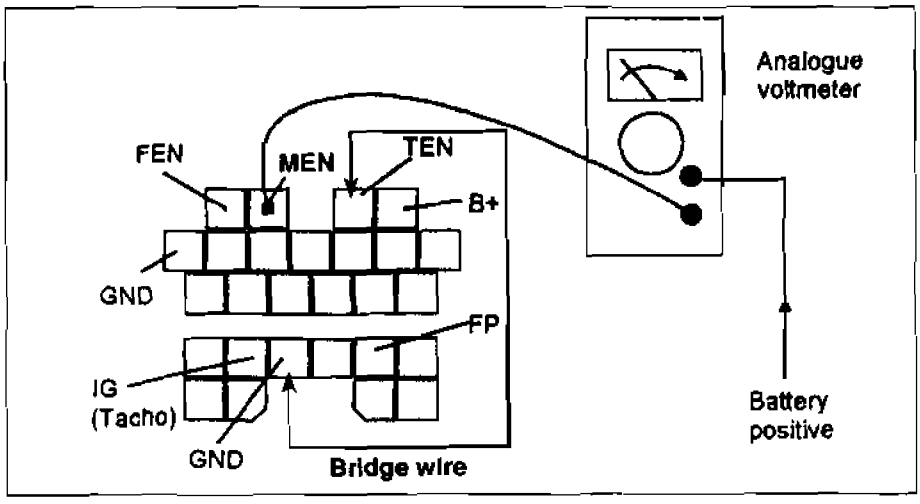


**12.11 Using a voltmeter to monitor switch action in Ford Probe models**

**59** Bridge terminals TEN and GND in the SD connector with the aid of a jumper lead.
**60** Switch on the ignition. If the ECM has stored one or more fault codes, the voltmeter needle will begin to sweep between 12 and 9 volts. If no codes are stored, the needle will remain on 12 volts.

*a) The first series of sweeps indicates the multiples of ten, the second series of sweeps indicates the single units.*
*b) Tens are indicated by sweeps of 1.2 seconds "on" (9 volts) and less than one second "off" (12 volts). A 1.6-second pause (12 volts) separates the digits of each code.*
*c) Single units are indicated by sweeps of 0.4 seconds "on" (9 volts) and less than one second "off" (12 volts).*
*d) A 4-second pause (12 volts) separates the transmission of one code from another.*

**61** Count the number of sweeps in each series and record each code as it is transmitted. Refer to the tables at the end of the Chapter to determine the meaning of the fault code.
**62** Continue retrieving codes until all stored codes have been retrieved and recorded.
**63** Switch off the ignition and remove the jumper lead and analogue voltmeter to end fault code retrieval.

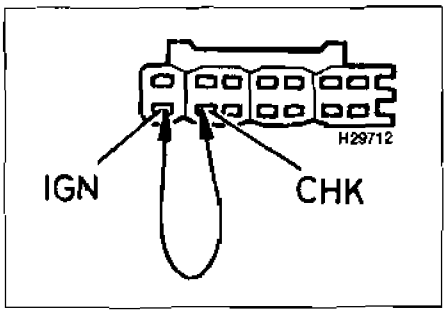


**12.12 Retrieving codes from Ford Maverick models. Use a jumper wire to bridge the IGN and CHK terminals**

### Mode 2 - retrieving codes

**64** Start the engine, run it to normal operating temperature and then stop the engine.
**65** Attach an analogue voltmeter between terminal FEN at the SD connector (voltmeter negative lead) and the battery positive terminal (voltmeter positive lead) **(refer to illustration 12.5)**.
**66** Bridge terminals TEN and GND in the SD connector with the aid of a jumper lead.
**67** Start the engine and allow it to idle. If the ECM has stored one or more fault codes, the voltmeter needle will begin to sweep between 12 and 9 volts. If no codes are stored, the needle will remain on 12 volts:

*a) The first series of sweeps indicates the multiples of ten, the second series of sweeps indicates the single units.*
*b) Tens are indicated by sweeps of 1.2 seconds "on" (9 volts) and less than 1 second "off" (12 volts). A 1.6-second pause (12 volts) separates the digits of each code.*
*c) Single units are indicated by sweeps of 0.4 seconds "on" (9 volts) and less than 1 second "off" (12 volts).*
*d) A 4-second pause (12 volts) separates the transmission of one code from another.*

**68** Count the number of sweeps in each series, and record each code as it is transmitted. Refer to the tables at the end of the Chapter to determine the meaning of the fault code.
**69** Continue retrieving codes until all stored codes have been retrieved and recorded.
**70** Switch off the ignition and remove the jumper lead and analogue voltmeter to end fault code retrieval.

### Mode 3 - switch monitor test

**71** Attach an analogue voltmeter **(see illustration 12.11)** between terminal MEN at the SD connector (voltmeter negative lead) and the battery positive terminal (voltmeter positive lead).
**72** Bridge terminals TEN and GND in the SD connector with the aid of a jumper lead.
**73** The voltmeter needle will remain on 12 volts. When one of the switches on the following list is turned on, the voltmeter needle will fall to 9 volts. If the voltmeter fails to respond as a particular switch is actuated, the switch and its wiring should be tested for faulty operation.

| Switch | Circuit |
|---|---|
| *Turn on the A/C switch* | *Air conditioning (A/C)* |
| *Turn on the A/C blower switch* | *Air conditioning (A/C)* |
| *Turn on the blower switch on to high position* | *Blower motor* |
| *Depress the throttle pedal* | *Idle switch* |
| *Fully depress the throttle pedal* | *Cooling fan relay (high speed)* |
| *Turn on the headlights* | *Headlights* |
| *Select D (automatic transmission)* | *Park/neutral circuit* |
| *Depress the clutch (manual transmission)* | *Clutch pedal switch and circuitry* |
| *Fully depress the brake pedal* | *Brake on/off switch and circuitry* |
| *Turn on the heated rear window* | *Heated rear window* |

## *Nissan ECCS (Ford Maverick)*

**74** There are two modes to retrieving codes and associated information. Output from each mode differs according to whether the ignition is turned on or the engine is running.

*a) Mode 1, ignition on: Check of warning light bulb and red LED set into the ECM*
*b) Mode 1, engine running: Illumination of warning light or LED indicates a system fault.*
*c) Mode 2, ignition on: Output of fault codes.*
*d) Mode 2, engine running: Check of closed loop control system.*

**75** Turning off the ignition or stopping the engine will return the SD system to Mode 1.
**76** Switch on the ignition, but do not start the engine. The warning light should illuminate.
**77** Start the engine and allow it to idle. If a system fault is present, the warning light or LED will illuminate.
**78** Stop the engine. Switch on the ignition, but do not start the engine.
**79** Bridge terminals IGN and CHK in the SD connector with the aid of a jumper lead **(see illustration 12.12)**.
**80** Remove the bridge after two seconds. The SD warning light or LED will begin to flash the 2-digit fault codes as follows:

*a) The two digits are indicated by two series of flashes.*
*b) The first series of flashes indicates the multiples of ten, the second series of flashes indicates the single units.*
*c) Tens are indicated by 0.6-second flashes separated by 0.6-second pauses. Units are indicated by 0.3-second flashes separated by 0.3-second pauses.*

*d) A 0.9-second pause separates the tens from the units, and a 2.1-second pulse separates the transmission of each individual code.*
*e) Code 42 is indicated by four 0.6-second flashes, a 0.9-second pause followed by two 0.3-second flashes.*
*f) Once all fault codes have been transmitted in numerical order of smallest code first and greatest code last, the light will pause for 2.1 seconds and then repeat the sequence. This will continue until the test connector connections are bridged once more.*

If code 55 is transmitted, no fault codes are stored.
Bridge terminals IGN and CHK in the SD connector with the aid of a jumper lead. Remove the bridge after 2 seconds. The ECM will revert to Mode 1.

**Check the closed-loop mixture control (catalyst models only)**

Stop the engine and switch on the ignition.
Bridge terminals IGN and CHK in the SD connector with the aid of a jumper lead. Remove the bridge after 2 seconds. The SD warning light or LED will begin to flash the 2-digit fault codes as described in paragraph 80.
Start the engine and run it to normal operating temperature.
Raise the engine speed to 2000 rpm for a period of 2 minutes.
Observe the warning light or LED display:
*Light or LED switches off and on at a frequency of 5 times in 10 seconds: Engine is in closed-loop control.*
*Light or LED remains off or on: Engine is in open-loop control.*
*When the light or LED is on, the fuelling is lean.*
*When the light or LED is off, the fuelling is rich.*
The light or LED will reflect the current condition of lean or rich by staying on or off immediately before switching to open-loop control.

## 6 Clearing fault codes without a fault code reader (FCR)

### Ford EEC IV (basic and enhanced without KAM), Weber IAW

1 Early variations of EEC IV and Weber IAW do not retain fault codes after the ignition is switched off.

### Ford EEC IV enhanced (with KAM)

2 Fault codes stored in KAM ("soft" codes) are automatically cleared once retrieval is completed and the ECM moves into "wiggle test" mode. "Hard" fault codes are not retained after the ignition is switched off.

### Ford EEC V

3 The only manual method of clearing fault codes generated by Ford EEC V is to disconnect the battery - see paragraphs 9 and 10.

### Mazda EGi (Ford Probe)

4 Ensure that the ignition switch is switched off.
5 Disconnect the battery negative terminal.
6 Fully depress the brake pedal for between 5 and 10 seconds.
7 Reconnect the battery negative terminal Refer to the note after paragraph 10 below.

### Nissan ECCS (Ford Maverick)

8 The codes will remain stored until one of the following actions are performed:
*a) The codes are displayed (Mode 2) and then the SD function is switched back to Mode 1.*
*b) The vehicle battery is disconnected for 24 hours - refer to the note after paragraph 10 below.*
*c) The fault is automatically cleared once the starter motor has been used for a total of 50 times after the fault has been fixed. If the fault recurs before 50 starts have been made, the counter will be reset to zero, and another 50 starts must occur before the fault is automatically cleared. This procedure occurs on an individual fault code basis, and each code will only be cleared after 50 starts have taken place without recurrence of the fault on that particular circuit.*

### Alternative method - Ford EEC IV and EEC V

9 Switch off the ignition and disconnect the battery negative terminal for a period of approximately 2 minutes.
10 Reconnect the battery negative terminal.
**Note**: *The first drawback to disconnecting the battery is that it will re-initialise all ECM adaptive values. Re-learning the appropriate adaptive values requires starting the engine and allowing it to idle for approximately 3 minutes. The engine should then be warmed-up to normal operating temperature and the engine speed raised to 1200 rpm for approximately 2 minutes. Re-learning can be completed by driving at various engine speeds for approximately 20 to 30 minutes in various driving conditions. The second drawback is that the radio security codes, clock settings and other stored values will be initialised, and these must be re-entered once the battery has been reconnected. Where possible, an FCR should be used for code clearing on Ford vehicles.*

## 7 Self-Diagnosis with a fault code reader (FCR)

**Note:** *During the course of certain test procedures, it is possible for additional fault codes to be generated. Care must be taken that any codes generated during test routines do not mislead diagnosis. A failure to retrieve codes satisfactorily from Ford EEC IV is usually caused by incorrect operation of the FCR, or a failure to observe the correct test procedures.*

### Ford EEC IV (basic system) and Weber IAW

1 Connect an FCR to the SD connector, and use the FCR to retrieve fault codes in strict compliance with the FCR manufacturer's instructions.
2 Both EEC IV (basic) and Weber IAW are only capable of generating a small number of fault codes, and do not employ any of the more sophisticated features of later systems.
3 On the EEC IV (basic) system, the idle speed will fluctuate during code retrieval If the idle speed does not fluctuate, this suggests a faulty ISCV or ISCV circuit

### Ford EEC IV (retrieving 2-digit codes)

4 Connect an FCR to the SD connector, and use the FCR for the following purposes in strict compliance with the FCR manufacturer's instructions:
*i) **Mode 1** - ignition on, engine stopped: A static test of the engine sensors, and retrieval of hard fault codes and soft (KAM) codes.*
*ii) **Mode 2** - continuous running: A test of the engine sensors during normal engine operation, at idle or during a road test (not 2.4/2.9 cat).*
*iii) **Mode 3** - engine running and service-set mode: A dynamic test of the engine sensors. In the service-set mode, the ignition timing and idle speed can be set It is not possible to make these adjustments outside of service-set mode.*
5 Read the notes in Section 3 before performing tests in this section.

**Mode 1 test**

6 Turn on the FCR and then switch on the ignition. After approximately 45 seconds, the FCR will display the 2-digit fault codes
7 Record each code as it is transmitted. Refer to the tables at the end of the Chapter to determine the meaning of the fault code.
8 Command codes will be transmitted at certain points during the procedure. On retrieving a command code, the engineer is required to take certain actions. If these actions are not taken, a fault will be stored, and the Mode 1 code retrieval routine must be repeated.

12

**9** If code 10 appears (some automatic transmission vehicles from 1991), depress fully and release the accelerator pedal and the brake pedal (kickdown must be activated). If the appropriate action is not completed within 10 seconds of code 10 appearing, the ECM will store a fault code. If procedural codes are retrieved, switch off the ignition, wait 10 seconds, and then restart the Mode 1 test.

**10** Fault codes generated by the enhanced system (without KAM) are only available whilst the fault is present and when the ignition is switched on. If the fault is permanent (present all the time), then an appropriate code will be stored each time the ignition is switched on. However, if the fault is intermittent and the ignition is switched off, the fault code will be lost until the fault recurs.

**11** All fault codes transmitted during this stage indicate the presence of hard faults. If code 11 is transmitted, no fault codes are stored.

**12** After all codes have been transmitted they will be repeated once. The next action will depend upon the vehicle.

**13** Models without keep-alive memory (KAM).

*a) Code 10 will be displayed, which indicates that the ECM has commenced "wiggle test" mode.*

*b) Proceed to paragraph 15 and follow the "wiggle test" procedure.*

**14** Models with keep-alive memory (KAM).

*a) A separator code will be displayed (code 10, 2.4/2.9 V6 catalyst, or code 20, all others) and then all KAM codes will be transmitted. **Note:** If code 11 is transmitted, no fault codes are stored in KAM.*

*b) After any KAM codes have been transmitted, they will be repeated once. The codes in KAM will then be cleared and code 10 will be displayed, which indicates that the ECM has commenced "wiggle test" mode.*

*c) Proceed to paragraph 15 and follow the "wiggle test" procedure.*

### Wiggle test

**15** All suspect components, wires and connections should now be gently tapped or wiggled. If the ECM detects a fault during this process, it will be stored in keep-alive memory (where KAM is fitted). **Note:** *Some FCRs will beep or an LED will flash to indicate the occurrence of a fault or a bad connection during this procedure.* Repeat the mode 1 test to retrieve codes detected during the wiggle test and stored in KAM. Record all codes for vehicles without KAM, because they will not be retained in ECM memory.

**16** Rectify all faults in the exact order of transmission. Repeat the Mode 1 test until hard fault codes are no longer generated, and then move on to the Mode 2 test. **Note:** *In order to avoid an erroneous self-diagnosis test, it is good practice to switch off the ignition and wait 10 seconds before initiating another Mode 1 test, or before commencing a Mode 2 test.*

**17** Switch off the ignition to end fault code retrieval.

### Mode 2 test

**Note:** *The Mode 2 test is not available for 2.4 and 2.9 V6 catalyst-equipped European vehicles.*

**18** Start the engine. Wait 4 seconds, then turn on the FCR to initiate codes.

**19** After a few seconds, the FCR will begin to display the 2-digit fault codes.

**20** Record each code as it is transmitted. Refer to the tables at the end of the Chapter to determine the meaning of the fault code.

**21** Fault codes will be continuously displayed while the engine is running. Code 11 indicates "no fault found".

**22** All suspect components, wires and connections should now be gently tapped or wiggled, and/or the vehicle could be road-tested.

**23** Rectify all faults in the exact order of transmission. Repeat the Mode 1 and Mode 2 tests until both tests are successfully concluded with no hard fault codes being generated. Only then move onto the Mode 3 test. **Note:** *In order to avoid an erroneous self-diagnosis test, it is good practice to switch off the ignition and wait 10 seconds before initiating another Mode 1 or Mode 2 test, or before commencing a Mode 3 test.*

**24** Switch off the FCR to end fault code retrieval.

### Mode 3 test (and service-set mode)

**Note:** *The EEC IV version fitted to most 1988 and later engines will not perform a Mode 3 test if any hard codes are present before the test begins.*

**25** Turn the ignition off, then turn on the FCR to initiate codes.

**26** Switch on the ignition, wait 3 seconds, then start the engine and allow it to idle.

**27** Run the engine at 2000 rpm until it has attained normal operating temperature.

**28** Once the self-test procedure commences, code 50 (identification of European ECM) will be transmitted. If this code is transmitted alone, or along with one or more coolant temperature sensor (CTS) fault codes, the engine temperature is either too low or the CTS is signalling a too-low temperature. The latter reason could be due to an engine cooling system fault, or an out-of-range sensor that is still within the CTS parameters and will not therefore generate a fault code. The Mode 3 test will not commence until the ECM has verified that operating temperature has been attained.

**29** Once the ECM has verified the temperature, the test proper will commence. The engine speed will rise to a fast idle as EEC IV runs through a set of pre-determined tests of sensors and actuators. **Note:** *If the speed does not rise within 60 seconds, check that the engine is at operating temperature and then re-attempt the test. Also, if any one of the service-set connections are connected, an appropriate code will be transmitted and the test aborted.*

**30** When code 10 is displayed, blip the throttle so that the engine speed momentarily rises above 3000 rpm (4000 rpm on catalyst models). Allow the engine to idle again. The "blip" test loads the airflow sensor or MAP sensor, throttle pot and other dynamic sensors. Fault codes will be stored if signals do not conform to the expected parameters, or if the signal is absent or not executed correctly.

**31** Fault codes detected during the Mode 3 test will now be transmitted. If fault codes are present, these must be rectified before it is possible to enter service-set mode.

**32** If no faults are detected, code 11 will be transmitted, followed by code 60 which signifies the start of service-set mode. **Note:** *Ford 2.4 and 2.9 V6 engines with catalyst will not transmit code 60. Once code 11 has been transmitted, the system has effectively commenced service-set mode.*

**Service-set mode**

**33** When the ECM enters service-set mode, the ignition timing and idle speed are de-regulated, and adjustments can be made to the base ignition timing (models with distributor alone) and the base idle speed (where possible). Where it is not possible to adjust the base ignition timing (DIS models) or base idle speed, the values can still be checked and compared with published measurement values. If the measured values are incorrect, this suggests a system or ECM fault.

**34** On Transit 2.9 models with catalyst, the throttle plate can be checked for correct setting and adjusted and reset as necessary.

**35** After 2 minutes (catalyst models) or 10 minutes (European non-catalyst models), code 70 will be displayed. This signifies the end of service-set mode, and that the ECM has regained control of the ignition timing and idle speed. If adjustments have not been completed, re-enter code 60 by repeating the Mode 3 test and service-set routines.

**36** Switch off the ignition and remove the FCR to end fault code retrieval.

**37** Remember to re-connect the octane and idle adjust (service-set) wires, where these were disconnected prior to commencing the self-test procedures.

## *Ford EEC IV (retrieving 3-digit codes)*

**38** Connect an FCR to the SD connector, and use the FCR for the following purposes, in strict compliance with the FCR manufacturer's instructions.

**39** **Mode 1** - Ignition on, engine stopped.

*i) A static test of the engine sensors and retrieval of hard fault codes and soft (KAM) codes.*

*ii) A static "wiggle test" of sensors and connections.*

*iii) A switch monitor test of selected actuators.*

**Mode 2** - Engine running and service-set mode:
*A dynamic test of the engine sensors.*
*A service-set mode where the idle speed and cylinder balance can be checked.*
*A dynamic "wiggle test" of sensors and connections.*

Read the notes in Section 4 before performing the tests in this section.

### Mode 1 test

Switch on the FCR, and then switch on the ignition. After a few seconds, the FCR will display the 3-digit fault codes.

Record each code as it is transmitted. Refer to the tables at the end of the Chapter to determine the meaning of the fault code.

Command codes will be transmitted at certain points during the procedure. On retrieving a command code, the engineer is required to take certain actions. If these actions are not taken, a fault will be stored, and the Mode 1 code retrieval routine must be repeated.

When code 010 appears, depress fully and release the accelerator pedal (automatic transmission kickdown must be activated). If the appropriate action is not completed within 10 seconds of code 010 appearing, the ECM will store a fault code. If procedural codes are retrieved, switch off the ignition, wait 10 seconds, and then restart the Mode 1 test.

All fault codes transmitted during this stage indicate the presence of hard faults. If code 111 is transmitted, no fault codes are stored.

After all hard codes have been transmitted, they will be repeated once.

A separator code (code 010) will be displayed, and then all the "soft" codes logged by KAM will be transmitted. **Note:** *If code 111 is transmitted, no fault codes are stored in KAM.*

After all KAM codes have been transmitted, they will be repeated once.

**Actuator test mode**

Code 111 will be displayed which indicates that the ECM has commenced actuator test mode. The switching of the circuits to the following list of actuators (where fitted) can now be tested.

*Carbon filter solenoid valve (CFSV).*
*Electronic vacuum regulator (EVR).*
*Idle speed control valve (ISCV)*
*Wide-open throttle (WOT) position (air conditioning cut-off).*
*Torque converter lock-up clutch solenoid.*
*Self-diagnosis (SD) connector.*

Connect a voltmeter in turn to each of the actuator signal terminals (backprobe the circuit, or connect a break-out box between the ECM multi-plug and the ECM). The voltmeter will indicate nominal battery voltage if the supply circuit is satisfactory.

Fully depress and release the accelerator pedal. The ECM will energise all of the actuators, and the voltmeter will indicate near zero volts for the one actuator that is being measured. Some actuators will click as they are actuated.

Fully depress and release the accelerator pedal. The ECM will de-energise all of the actuators and the voltmeter will again indicate nominal battery voltage for the actuator that is being measuring. Some actuators will click as they are switched off.

Each time the accelerator pedal is depressed, all of the actuators will be switched on and off, and a black dot will appear and disappear in sympathy on the FCR display. Move the voltmeter to each of the components in turn, and test the switching of the component by depressing the accelerator pedal.

If the component does not actuate or the voltmeter does not indicate the voltage as indicated, refer to the test procedures appropriate to each component in Chapter 4.

How next to proceed depends on the specific instructions for the FCR being used. However, pressing a button twice on the FCR control panel is the method normally used.

**Wiggle test mode**

The system is now in "wiggle test" mode. All suspect components, wires and connections should now be gently tapped or wiggled. If the ECM detects a fault during this process, it will be stored in keep-alive memory (KAM). **Note:** *Some FCRs will beep or an LED will flash to indicate the occurrence of a fault or a bad connection during this procedure* Repeat the Mode 1 test to retrieve codes detected during the wiggle test and stored in KAM.

Switch off the FCR, and then switch off the ignition to end fault code retrieval.

Codes are cleared by repeating the Mode 1 test up the point of code transmission. Pressing a button on the FCR control panel is the usual method of clearing the codes in KAM.

Rectify all faults in the exact order of transmission. Repeat the Mode 1 test until hard fault codes are no longer generated, and then move onto the Mode 2 test. **Note:** *In order to avoid an erroneous self-diagnosis test, it is good practice to switch off the ignition and wait 10 seconds before initiating another Mode 1 test, or before commencing a Mode 2 test.*

### Mode 2 test

**Note:** *The EEC IV version fitted to most 1988 and later engines will not perform a Mode 2 test if any hard codes are present before the test begins.*

Turn the ignition off, then switch on the FCR to initiate codes.

Switch on the ignition, wait three seconds, start the engine and allow it to idle.

Run the engine at 2000 rpm until it has attained normal operating temperature.

If this code is transmitted alone, or along with one or more coolant temperature sensor (CTS) fault codes, the engine temperature is either too low or the CTS is signalling a too-low temperature. The latter reason could be due to an engine cooling system fault, or an out-of-range sensor that is still within the CTS parameters and will not therefore generate a fault code. The Mode 2 test will not commence until the ECM has verified that operating temperature has been attained.

Once the ECM has verified the temperature, the test proper will commence. The engine speed will rise to a fast idle as EEC IV runs through a set of pre-determined tests of sensors and actuators. **Note:** *If the speed does not rise within 60 seconds, check that the engine is at operating temperature and then re-attempt the test. Also, if the air conditioning is switched on, or an automatic transmission vehicle is in "D", an appropriate code will be transmitted and the test aborted.*

Once the self-test procedure commences, code 020 (command code for Zetec engines) or code 030 (command code for V6 engines) will be transmitted.

The following test functions must be completed within 10 seconds of the command code appearance: **12**

*a) Fully depress and release the brake pedal, otherwise fault code 536 will be stored.*
*b) Fully turn the steering wheel to full lock in one direction and then straighten the wheels. This actuates the power steering pressure switch (PSPS). If the PSPS is faulty, fault code 519 will be stored. If the PSPS is not actuated, fault code 521 will be stored. If the vehicle is not equipped with power steering, the code will still appear, and in this instance it should be ignored.*
*c) Automatic transmission vehicles only Switch on and off the overdrive cancel switch (if fitted), then switch on and off the performance/cancel switch (if fitted).*

After approximately 20 seconds, code 010 will be displayed. The following test function must be completed within 10 seconds of the command code appearance:

*a) Blip the throttle so that the engine speed momentarily rises above 3000 rpm. The "blip" test loads the airflow sensor or MAP sensor, throttle pot and other dynamic sensors. Fault codes will be stored if signal(s) do not conform to the expected parameters, or if the signal is absent or not executed correctly.*

Allow the engine to idle once again. Fault codes detected during the Mode 2 test will now be transmitted. During transmission of the codes, the black dot will flash in synchronisation on the FCR display

Code 998 may be transmitted, followed by a code relating to one of the sensors listed below If this happens, proceed as described in paragraph 71. If not, proceed to paragraph 72.

*a) Airflow sensor.*
*b) Air temperature sensor.*
*c) Coolant temperature sensor.*
*d) Throttle pot.*
*e) Delta pressure feedback electronic system sensor (EGR system).*
*f) Electronic pressure transducer.*

**71** If code 998 is transmitted, followed by a code relating to one of the sensors listed in paragraph 70, proceed as follows:

*a) Exit the Mode 2 test*
*b) Stop the engine.*
*c) Test the component as detailed in the relevant component test procedure (Chapter 4) and rectify all faults*
*d) Restart the Mode 2 test.*

**72** If fault codes are present, these must be rectified before it is possible to enter service-set mode.

**73** If code 536 or code 521 are transmitted, incorrect practices were adopted during the routines. Repeat the Mode 2 test procedure.

**74** Code 111 will be transmitted if no faults are detected. When the black dot ceases flashing, this signifies the start of service-set mode. The last transmitted code will remain displayed on the FCR screen, which should ordinarily be code 111.

**Service-set mode**

**75** When the ECM enters service-set mode, the idle speed is de-regulated and set at the base idle value (usually slightly higher than normal idle). No adjustments are possible, although the idle speed can be checked against specifications. If the measured values are incorrect, this suggests a system or ECM fault.

**76** On engines with sequential injection, fully depressing the accelerator pedal during the 2 minutes service-set mode will set the ECM into cylinder balance test mode. Each injector is switched off in turn for a predetermined moment. The ECU checks for a calibrated fall in rpm, and will set a fault code if there appears to be a problem. After 2 minutes, the engine rpm will rise briefly and then settle at normal idle speed. This signifies the end of the service-set mode.

**Wiggle test mode**

**77** The ECM will now enter "wiggle test" mode.

**78** All suspect components, wires and connections should now be gently tapped or wiggled. If the ECM detects a fault during this process, it will be stored in keep-alive memory (KAM). **Note:** *Some FCRs will beep or an LED will flash to indicate the occurrence of a fault or a bad connection during this procedure.* Repeat the Mode 1 test to retrieve fault codes stored in KAM after being detected during the wiggle test.

**79** Rectify all faults in the exact order of transmission. Repeat the Mode 1 test until hard fault codes are no longer generated. **Note:** *In order to avoid an erroneous self-diagnosis test, it is good practice to switch off the ignition and wait 10 seconds before initiating another Mode 1 test, or before commencing a Mode 2 test.*

**80** Switch off the FCR and switch off the ignition to end fault code retrieval. Remove the FCR from the vehicle SD connector.

### *Ford EEC V*

**81** Connect an FCR to the SD connector, and use the FCR for the following purposes, in strict compliance with the FCR manufacturer's instructions:

*a) Displaying system faults.*
*b) Clearing system faults.*
*c) Testing actuators.*
*d) Displaying Datastream*

**82** Faults must always be cleared after component testing, or after repairs involving the removal or replacement of an EMS component.

### *Ford Probe and Maverick*

**83** Connect an FCR to the SD connector, and use the FCR for the following purposes, in strict compliance with the FCR manufacturer's instructions:

*a) Retrieving fault codes.*
*b) Clearing fault codes.*
*c) Testing switch inputs to ECM.*

**84** Codes must always be cleared after component testing, or after repairs involving the removal or replacement of an EMS component.

## 8 Guide to test procedures

1 Use an FCR to interrogate the ECM for fault codes, or manually gather codes as described in Sections 5 or 7.

### *Codes stored*

**2** If one or more fault codes are gathered refer to the fault code tables at the end of this Chapter to determine their meaning.

**3** If several codes are gathered, look for a common factor such as a defective earth return or supply

**4** Refer to the component test procedures in Chapter 4, where you will find a means of testing the majority of components and circuits found in the modern EMS

**5** Once the fault has been repaired, clear the codes and run the engine under various conditions to determine if the problem has cleared.

**6** Check the ECM for fault codes once more. Repeat the above procedures where codes are still being stored.

**7** Refer to Chapter 3 for more information on how to effectively test the EMS.

### *No codes stored*

**8** Where a running problem is experienced but no codes are stored, the fault is outside of the parameters designed into the SD system. Refer to Chapter 3 for more information on how to effectively test the EMS.

**9** If the problem points to a specific component, refer to the test procedures in Chapter 4, where you will find a means of testing the majority of components and circuits found in the modern EMS.

# Fault code tables

### *EEC IV "basic" (2.0 SOHC and 2.8 V6 engines)*

| Code | Description |
|---|---|
| 11 | No faults found in the ECM. Proceed with normal diagnostic methods |
| 12 | Airflow sensor (AFS) or AFS circuit number one |
| 13 | Coolant temperature sensor (CTS) or CTS circuit |
| 14 | Air temperature sensor (ATS) or ATS circuit (in AFS) |
| 15 | Throttle pot sensor (TPS) or TPS circuit |
| 22 | Airflow sensor (AFS) number two or AFS circuit |
| 23 | Airflow sensor (AFS) or AFS circuit number one and number two |
| 31 | Wiring/module fault |
| 32 | Wiring/module fault |

### *EEC IV "enhanced", two-digit codes (except 2.4/2.9 V6 catalyst and 1.8 CFi)*

| Code | Description |
|---|---|
| 10 | Command code. Operator action required as follows:<br>Ignition on, engine off: wiggle test<br>Engine running: load engine by "blipping" the throttle. The engine speed must exceed 2500rpm |
| 11 | No faults found in the ECM. Proceed with normal diagnostic methods |
| 13 | Coolant temperature sensor (CTS) or CTS circuit |
| 14 | Air temperature sensor (ATS) or ATS circuit |
| 15 | Throttle pot sensor (TPS) or TPS circuit |
| 16 | Airflow sensor (AFS) or AFS circuit number two |
| 17 | Manifold absolute pressure (MAP) sensor or MAP sensor circuit |

Code
18
19
20
21
22
23
24
25
26
27
28
28
29
30
31
32
33
34
35
36
3
3
3
4

| Code | Description |
|---|---|
| 18 | Low battery voltage |
| 19 | Keep-alive memory (KAM) or KAM circuit, end and restart SD test. If code repeats, make ECM circuit tests |
| 20 | Separator code. Separates "soft" (KAM) codes from "hard" codes (codes of a permanent nature) |
| 21 | Ignition irregular signal |
| 22 | Airflow sensor (AFS) or AFS circuit number one, voltage too high |
| 23 | Coolant temperature sensor (CTS) or CTS circuit, voltage too high |
| 24 | Air temperature sensor (ATS) or ATS circuit |
| 25 | Throttle pot sensor (TPS) or TPS circuit, voltage too high |
| 26 | Airflow sensor (AFS) number two, voltage too high |
| 27 | Manifold absolute pressure (MAP) sensor or MAP sensor circuit, value too high |
| 28 | Oxygen sensor (OS) or OS circuit |
| 28 | Oxygen sensor (OS) 1 or OS circuit (2.0 DOHC 16V only), rich mixture or failed sensor |
| 29 | Oxygen sensor (OS) 2 or OS circuit (2.0 DOHC 16V only), rich mixture or failed sensor |
| 30 | Marker code, identifies ECM for 6-cylinder engines |
| 31 | Electronic control module (ECM) or ECM circuit ROM/RAM failure |
| 32 | Airflow sensor (AFS) or AFS circuit number two, voltage too low |
| 33 | Coolant temperature sensor (CTS) or CTS circuit, voltage too low |
| 34 | Air temperature sensor (ATS) or ATS circuit |
| 35 | Throttle pot sensor (TPS) or TPS circuit, voltage too low |
| 36 | Airflow sensor (AFS) or AFS circuit number two, voltage too low |
| 37 | Manifold absolute pressure (MAP) sensor or MAP sensor circuit, value too low |
| 38 | Oxygen sensor (OS) 1 or OS circuit (2.0 DOHC 16V only), lean mixture or failed sensor |
| 39 | Oxygen sensor (OS) 2 (2.0 DOHC 16V only), lean mixture or failed sensor |
| 42 | Manifold absolute pressure (MAP) sensor or MAP sensor circuit |
| 43 | Throttle pot sensor (TPS) or TPS circuit |
| 44 | "Blip" test not performed or late response to message |
| 45 | Vehicle speed sensor (VSS) or VSS circuit |
| 46 | Idle speed control valve (ISCV) or ISCV circuit failure, max rpm not achieved |
| 47 | Idle speed control valve (ISCV) or ISCV circuit failure, min rpm not achieved |
| 48 | Idle speed control valve (ISCV) or ISCV circuit |
| 50 | European electronic control module (ECM) fitted |
| 51 | Air conditioning (AC) "on", turn A/C off and repeat SD test |
| 52 | Automatic transmission: Vehicle in "D" during SD test - select "N" or "P" and repeat SD test |
| 53 | Octane adjust (OA) wire number one earthed. Disconnect service adjust wire and repeat SD test |
| 54 | Octane adjust (OA) wire number two earthed. Disconnect service adjust wires and repeat SD test |
| 55 | Idle speed adjust wire earthed. Disconnect service adjust wire and repeat SD test |
| 57 | Throttle moved during self-diagnosis (SD) test (prior to code 10), repeat SD test |
| 58 | Phasing of profile ignition pick-up. (PIP) and spark advance word (SAW) |
| 59 | CO pot or CO pot circuit, outside test limits |
| 60 | Start of service set mode |
| 61 | Loss of power - cylinder 1 |
| 62 | Loss of power - cylinder 2 |
| 63 | Loss of power - cylinder 3 |
| 64 | Loss of power - cylinder 4 |
| 65 | Brake on/off switch |
| 66 | Kickdown switch or circuit |
| 67 | Fuel temperature switch (FTS) or FTS circuit |
| 68 | Turbo boost pressure solenoid valve (BPSV) or BPSV circuit |
| 69 | Turbo boost pressure solenoid valve (BPSV) or BPSV circuit |
| 70 | End of service-set mode |
| 72 | Wastegate control solenoid (WCS) (1.6 CVH Turbo only) or WCS circuit |
| 73 | Carbon filter solenoid valve (CFSV) or CFSV circuit |
| 74 | 3/4 shift solenoid |
| 75 | Clutch converter lock-up solenoid |
| 76 | Brake "on" indicated |
| 77 | Kickdown indicated |
| 78 | Power steering pressure switch (PSPS), PSPS not activated during SD procedure. Check if PSPS fitted, if so repeat SD procedure |
| 91 | Oxygen sensor (OS) or OS circuit, connections interchanged (2.0 16V DOHC engine) |

### *EEC IV "enhanced", two-digit codes (2.4/2.9 V6 catalyst and 1.8 CFi)*

| Code | Description |
|---|---|
| 10 | Command code/separator code for KAM |
| 10 | Operator action required as follows: Engine running. Load engine by "blipping" the throttle. The engine speed must exceed 2500 rpm |
| 11 | No faults found in the ECM. Proceed with normal diagnostic methods (system pass) |
| 12 | Idle speed control valve (ISCV) or ISCV circuit |
| 12 | Idle speed stepper motor (ISSM) or ISSM circuit, idle contacts (1.8 CFi) |
| 13 | Idle speed control valve (ISCV) or ISCV circuit<br>Idle speed stepper motor (ISSM) or ISSM circuit, idle contacts (1.8 CFi) |
| 14 | Erratic profile ignition pick-up (PIP) signal or circuit |
| 15 | Keep-alive memory (KAM)/read only memory (ROM) (module failure) or KAM/ROM circuit |
| 16 | Engine test speed too low |
| 17 | Idle speed stepper motor (ISSM) or ISSM circuit, idle contacts (1.8 CFi) |
| 18 | Ignition module operation (IDM) or IDM circuit |
| 19 | Voltage supply to module |
| 20 | 4-cylinder identification mode (1.8 CFi) |
| 21 | Coolant temperature sensor (CTS) or CTS circuit |
| 22 | Manifold absolute pressure (MAP) sensor or MAP sensor circuit |
| 23 | Throttle pot sensor (TPS) or TPS circuit |
| 24 | Air temperature sensor (ATS) or ATS circuit |
| 25 | Knock sensor (KS) or KS circuit |
| 27 | Cruise control delayed |
| 28 | Cruise control - speed too advanced |
| 29 | Vehicle speed sensor (VSS) or VSS circuit |
| 30 | Marker code - identifies ECM for 6-cylinder engines |
| 31 | Electronic pressure transducer (EPT) or EPT circuit, voltage too low |
| 32 | Electronic pressure transducer (EPT) or EPT circuit, outside specification |
| 33 | No exhaust gas recirculation (EGR) |
| 34 | Electronic pressure transducer (EPT) or EPT circuit, outside specification |
| 35 | Electronic pressure transducer (EPT) or EPT circuit, voltage too high |
| 36 | No increase in engine test speed |
| 37 | Decrease in engine test speed |
| 38 | Idle speed stepper motor (ISSM) or ISSM circuit, idle contacts (1.8 CFi) |
| 39 | Torque converter lock-up clutch |

| Code | Description |
|---|---|
| 40 | Unused |
| 41 | Heated exhaust gas oxygen (HEGO) sensor 1 (cylinders 1,2,3) or HEGO sensor circuit, lean mixture |
| 42 | Heated exhaust gas oxygen (HEGO) sensor 1 (cylinders 1,2,3) or HEGO sensor circuit, rich mixture |
| 43 | Idle speed stepper motor (ISSM) or ISSM circuit, idle contacts |
| 45 | Idle speed stepper motor (ISSM) or ISSM circuit, idle contacts (1.8 CFi) |
| 46 | Unused |
| 47 | Cruise control switch operation or circuit |
| 48 | Cruise control switch sticking or circuit |
| 49 | Cruise control signal or circuit |
| 50 | Unused |
| 51 | Coolant temperature sensor (CTS) or CTS circuit, voltage too high |
| 52 | Power steering pressure switch (PSPS) or PSPS circuit |
| 53 | Throttle pot sensor (TPS) or TPS circuit, voltage too high |
| 54 | Air temperature sensor (ATS) or ATS circuit |
| 55 | Unused |
| 56 | Unused |
| 57 | Octane adjust (OA)) - service loom connector |
| 58 | Injection delayed through service adjust facility |
| 59 | Idle adjust - service loom connector |
| 60 | Unused |
| 61 | Coolant temperature sensor (CTS) or CTS circuit, voltage too low |
| 62 | Automatic transmission (AT) shift solenoid 4/3, closed |
| 63 | Throttle pot sensor (TPS) or TPS circuit, voltage too low |
| 64 | Air temperature sensor (ATS) or ATS circuit, voltage too low |
| 65 | Unused |
| 66 | Unused |
| 67 | Air conditioning (A/C) switched on, or automatic transmission in "D" |
| 68 | Idle speed stepper motor (ISSM) or ISSM circuit, idle contacts (1.8 CFi) |
| 69 | Shift valve for 3/2 gear open |
| 70 | Unused |
| 71 | Idle speed stepper motor (ISSM) or ISSM circuit, idle contacts (1.8 CFi) |
| 72 | Manifold absolute pressure (MAP) sensor or MAP sensor circuit |
| 73 | Throttle pot sensor (TPS), no reaction to test |
| 74 | Brake light switch circuit open |
| 75 | Brake light switch short-circuit |
| 76 | Unused |
| 77 | Late response to "blip throttle" command code |
| 78 | Unused |
| 79 | Unused |
| 80 | Unused |
| 81 | Manifold absolute pressure (MAP) sensor or MAP sensor circuit (Transit V6) |
| 82 | Secondary air feed valve or circuit (secondary combustion) |
| 83 | Heavy duty fan switch |
| 84 | Electronic vacuum regulator (EVR) system or EVR circuit |
| 84 | Exhaust gas recirculation (EGR) valve or EGR circuit (1.8 CFi) |
| 85 | Carbon filter solenoid valve (CFSV) or CFSV circuit |
| 86 | Unused |
| 87 | Electric fuel pump |
| 88 | Electric fan - if fitted |
| 89 | Solenoid torque converter lock-up clutch |
| 90 | Unused |
| 91 | Heated exhaust gas oxygen (HEGO) sensor 2 (cylinders 4,5,6) or HEGO sensor circuit, lean mixture |
| 92 | Heated exhaust gas oxygen (HEGO) sensor 2 (cylinders 4,5,6) or HEGO sensor, rich mixture |
| 93 | Idle speed stepper motor (ISSM) or ISSM circuit, idle contacts (1.8 CFi) |
| 96 | Throttle pot sensor (TPS) or TPS circuit |
| 98 | Air charge temperature (ACT) sensor or ACT sensor circuit |
| 98 | Engine coolant temperature (ECT) sensor or ECT sensor circuit |
| 98 | Manifold absolute pressure (MAP) sensor or MAP sensor circuit |
| 98 | Throttle pot sensor (TPS) or TPS circuit |
| 99 | Throttle pot sensor (TPS) or TPS circuit |

### *EEC IV "enhanced", three-digit codes*

| Code | Description |
|---|---|
| 010 | Separator/command code. Momentarily press accelerator fully |
| 020 | Command code. Momentarily press brake pedal fully |
| 10 | Cylinder 1 low |
| 20 | Cylinder 2 low |
| 30 | Cylinder 3 low |
| 40 | Cylinder 4 low |
| 50 | Cylinder 5 low |
| 60 | Cylinder 6 low |
| 70 | Cylinder 7 low |
| 80 | Cylinder 8 low |
| 90 | Pass cylinder balance test |
| 111 | All systems ok (system pass) |
| 112 | Air temperature sensor (ATS) or ATS circuit |
| 113 | Air temperature sensor (ATS) or ATS circuit |
| 114 | Air temperature sensor (ATS) or ATS circuit |
| 116 | Coolant temperature sensor (CTS) or CTS circuit, normal operating temperature not reached |
| 117 | Coolant temperature sensor (CTS) or CTS circuit, normal operating temperature not reached |
| 118 | Coolant temperature sensor (CTS) or CTS circuit, normal operating temperature not reached |
| 121 | Throttle pot sensor (TPS) or TPS circuit |
| 122 | Throttle pot sensor (TPS) or TPS circuit |
| 123 | Throttle pot sensor (TPS) or TPS circuit |
| 124 | Throttle pot sensor (TPS) or TPS circuit |
| 125 | Throttle pot sensor (TPS) or TPS circuit |
| 129 | Mass airflow (MAF) sensor or MAF sensor circuit. No change in MAF sensor signal. Repeat SD procedure whilst depressing throttle during SD test |
| 136 | Oxygen sensor (OS) or OS circuit |
| 137 | Oxygen sensor (OS) or OS circuit |
| 139 | Oxygen sensor (OS) or OS circuit |
| 144 | Oxygen sensor (OS) or OS circuit |
| 157 | Mass airflow (MAF) sensor or MAF circuit |
| 158 | Mass airflow (MAF) sensor or MAF circuit |
| 159 | Mass airflow (MAF) sensor or MAF circuit |
| 167 | Throttle pot sensor (TPS) or TPS circuit, no change in TPS whilst depressing throttle during SD test. Repeat SD procedure |
| 171 | Oxygen sensor (OS) or OS circuit |
| 172 | Oxygen sensor (OS) or OS circuit, mixture too lean |
| 173 | Oxygen sensor (OS) or OS circuit, mixture too rich |
| 174 | Oxygen sensor (OS) or OS circuit |
| 175 | Oxygen sensor (OS) or OS circuit |
| 176 | Oxygen sensor (OS) or OS circuit |
| 177 | Oxygen sensor (OS) or OS circuit |
| 178 | Oxygen sensor (OS) or OS circuit |
| 179 | Fuel system or fuel system circuit, mixture too lean |
| 181 | Fuel system or fuel system circuit, mixture too rich |
| 182 | Idle mixture too lean |
| 183 | Idle mixture too rich |
| 184 | Mass airflow (MAF) sensor or MAF sensor circuit |
| 185 | Mass airflow (MAF) sensor or MAF sensor circuit |
| 186 | injector or injector circuit, opening time (pulse width too long) |
| 187 | injector or injector circuit, opening time (pulse width too short) |
| 188 | Oxygen sensor (OS) or OS circuit, voltage too low |
| 189 | Oxygen sensor (OS), voltage too high |
| 191 | Idle mixture too lean |
| 192 | Idle mixture too lean |

| Code | Description |
|---|---|
| 194 | Oxygen sensor (OS) or OS circuit |
| 195 | Oxygen sensor (OS) or OS circuit |
| 211 | Profile ignition pick-up (PIP) signal or circuit |
| 212 | Tachometer circuit |
| 213 | Spark advance word (SAW) signal or SAW circuit |
| 214 | Cylinder identification (CID) sensor or CID sensor circuit |
| 215 | Electronic distributorless ignition system (EDIS) ignition coil or circuit |
| 216 | Electronic distributorless ignition system (EDIS) ignition coil or circuit |
| 217 | Electronic distributorless ignition system (EDIS) ignition coil or circuit |
| 218 | Tachometer circuit |
| 222 | Tachometer circuit |
| 226 | Electronic distributorless ignition system (EDIS) module or circuit |
| 227 | Crank angle sensor (CAS) or CAS circuit |
| 227 | Engine speed sensor or circuit (EEC V) |
| 228 | Electronic distributorless ignition system (EDIS) ignition coil winding 1 or circuit |
| 229 | Electronic distributorless ignition system (EDIS) ignition coil winding 2 or circuit |
| 231 | Electronic distributorless ignition system (EDIS) ignition coil winding 3 or circuit |
| 232 | Primary circuit of ignition coil |
| 233 | Electronic distributorless ignition system (EDIS) module or circuit |
| 234 | Ignition coil or circuit |
| 235 | Ignition coil or circuit |
| 236 | Ignition coil or circuit |
| 237 | Ignition coil or circuit |
| 238 | Electronic distributorless ignition system (EDIS) module or circuit |
| 239 | Profile ignition pick-up (PIP) or PIP circuit, PIP signal present under cranking |
| 241 | Electronic control module (ECM), incorrect SD data, repeat SD procedure |
| 243 | Coil failure |
| 311 | Pulse air system or circuit faulty |
| 312 | Pulse air system or circuit faulty |
| 313 | Pulse air system or circuit faulty |
| 314 | Pulse air system or circuit faulty |
| 315 | Pulse air system or circuit faulty |
| 316 | Pulse air system or circuit faulty |
| 326 | Electronic pressure transducer (EPT) or delta pressure feedback electronic (DPFE) system or circuits |
| 327 | Electronic pressure transducer (EPT) or delta pressure feedback electronic (DPFE) system or circuits |
| 328 | Electronic vacuum regulator (EVR) or EVR circuit |
| 332 | Exhaust gas recirculation (EGR) or EGR circuit |
| 334 | Electronic vacuum regulator (EVR) or EVR circuit |
| 335 | Electronic pressure transducer (EPT) or EPT circuit |
| 335 | Delta pressure feedback electronic (DPFE) system or DPFE circuit (alternative code) |
| 336 | Exhaust pressure to high |
| 337 | Electronic pressure transducer (EPT), delta pressure feedback electronic (DPFE) system, or electronic vacuum regulator (EVR) system or circuits |
| 338 | Coolant temperature sensor (CTS) or CTS circuit |
| 339 | Coolant temperature sensor (CTS) or CTS circuit |
| 341 | Octane adjuster (OA) or OA circuit |
| 411 | Self-diagnosis test. Engine speed during test too low. Check that no induction leaks are present, then repeat SD procedure |
| 412 | Self-diagnosis test. Engine speed during test too high |
| 413 | Idle speed control valve (ISCV) or ISCV circuit |
| 414 | idle speed control valve (ISCV) or ISCV circuit |
| 415 | idle speed control valve (ISCV) or ISCV circuit |
| 416 | idle speed control valve (ISCV) or ISCV circuit |
| 452 | Vehicle speed sensor (VSS) or VSS circuit |
| 511 | Read only memory (ROM) fault or ROM circuit |
| 512 | Keep-alive memory (KAM) fault or KAM circuit |
| 513 | ECM reference voltage |
| 519 | Power steering pressure switch (PSPS) or PSPS circuit. PSPS not activated during SD test. Check if PSPS fitted, if so try SD test again, then test PSPS circuit |
| 521 | Power steering pressure switch (PSPS) or PSPS circuit. PSPS not activated during SD test. Check if PSPS fitted, if so try SD test again, then test PSPS circuit |
| 522 | Drive/neutral switch or circuit |
| 523 | Drive/neutral switch or circuit |
| 528 | Clutch switch error or circuit |
| 536 | Brake on/off switch or circuit, switch not activated during SD test. Repeat SD procedure |
| 538 | Operator error during self-diagnosis test. Repeat SD procedure |
| 539 | Air conditioning (A/C) on during SD test. Repeat SD procedure |
| 542 | Fuel pump or fuel pump circuit |
| 543 | Fuel pump or fuel pump circuit |
| 551 | idle speed control valve (ISCV) or ISCV circuit |
| 552 | Pulse air circuit |
| 556 | Fuel pump or fuel pump circuit |
| 558 | Electronic vacuum regulator (EVR) or EVR circuit |
| 563 | High speed electronic drive fan or circuit |
| 564 | Electronic drive fan relay/circuit |
| 565 | Carbon filter solenoid valve (CFSV) or CFSV circuit |
| 566 | 3rd/4th gear solenoid automatic transmission |
| 573 | Electronic drive fan relay/circuit |
| 574 | High speed electronic drive fan or circuit |
| 575 | Fuel pump or fuel pump circuit, or inertia switch or circuit |
| 576 | Kickdown switch or circuit. Carry out system test |
| 577 | Kickdown switch or circuit not activated during SD test Repeat SD procedure |
| 612 | 4/3 switch failed - automatic transmission |
| 613 | 4/3 switch failed - automatic transmission |
| 614 | 3/2 switch failed - automatic transmission |
| 615 | 3/2 switch failed - automatic transmission |
| 621 | Shift solenoid 1 or circuit failure |
| 622 | Shift solenoid 2 or circuit failure |
| 624 | EPC solenoid or circuit |
| 625 | EPC solenoid or circuit |
| 628 | MLUS (lock-up solenoid, automatic transmission) or circuit |
| 629 | Torque converter lock-up clutch solenoid |
| 634 | Drive/neutral switch or circuit |
| 635 | Transmission temperature switch or circuit |
| 636 | Transmission temperature switch or circuit |
| 637 | Transmission temperature switch or circuit |
| 638 | Transmission temperature switch or circuit |
| 639 | TSS or TSS circuit |
| 645 | 1st gear failure |
| 645 | 2nd gear failure |
| 645 | 3rd gear failure |
| 645 | 4th gear failure |
| 649 | ETV or circuit (automatic transmission) |
| 651 | ETV or circuit (automatic transmission) |
| 652 | MLUS (lock-up solenoid - automatic transmission) |
| 653 | Transmission control switch not activated during SD test. Repeat SD procedure |
| 658 | Automatic transmission performance/economy switch not activated during SD test |
| 998 | Rectify codes following 998 (see Section 7, paragraph 70). Coolant temperature sensor (CTS), Air temperature sensor (ATS), airflow sensor (AFS) or throttle position sensor (TPS). Repeat SD procedure |

### Ford EEC V

Ford EEC V software does not generate fault codes. Any faults in the system are displayed on the FCR screen without reference to a specific code number. Faults in one or more of the system circuits or components will cause a fault to be stored. Broadly speaking, the circuits and components checked by EEC V are very similar to those checked by EEC IV.

### Ford Weber IAW

| Code | Description |
|---|---|
| 11 | TDC sensor or TDC sensor circuit |
| 12 | Distributor phase sensor or circuit |
| 13 | Phasing speed/TDC to distributor sensor or circuit |
| 21 | Air temperature sensor (ATS) or ATS circuit |
| 22 | Air temperature sensor (ATS) or ATS circuit |
| 22 | Knock sensor (KS) or KS circuit (alternative code) |
| 23 | Coolant temperature sensor (CTS) or CTS circuit |
| 31 | Coolant temperature sensor (CTS) or CTS circuit |
| 31 | Heated exhaust gas oxygen (HEGO) sensor or HEGO sensor circuit (alternative code) |
| 32 | Manifold absolute pressure (MAP) sensor or MAP sensor circuit |
| 33 | Manifold absolute pressure (MAP) sensor or MAP sensor circuit |
| 33 | Throttle pot sensor (TPS) or TPS circuit (alternative code) |

### Ford Probe (Mazda EGi)

| Code | Description |
|---|---|
| 02 | Crank angle sensor (CAS) or CAS circuit |
| 03 | Cylinder identification sensor (CID) or CID circuit |
| 04 | Crank angle sensor (CAS) or CAS circuit |
| 05 | Knock sensor (KS) or KS circuit |
| 08 | Airflow sensor (AFS) or AFS circuit |
| 09 | Coolant temperature sensor (CTS) or CTS circuit |
| 10 | Air temperature sensor (ATS) or ATS circuit |
| 12 | Throttle pot sensor (TPS) or TPS circuit |
| 14 | Barometric pressure sensor (BPS) or BPS circuit |
| 15 | Heated exhaust gas oxygen (HEGO) sensor or HEGO sensor circuit |
| 16 | Exhaust gas recirculation (EGR) Valve or EGR circuit |
| 17 | Heated exhaust gas oxygen (HEGO) sensor or HEGO sensor circuit |
| 23 | Heated exhaust gas oxygen (HEGO) sensor or HEGO sensor circuit |
| 24 | Heated exhaust gas oxygen (HEGO) sensor or HEGO sensor circuit |
| 25 | Fuel pressure regulator control (FPRC) solenoid or FPRC circuit |
| 26 | Carbon filter solenoid valve (CFSV) or CFSV circuit |
| 28 | Exhaust gas recirculation (EGR) valve or EGR circuit |
| 29 | Exhaust gas recirculation (EGR) valve or EGR circuit |
| 34 | Idle speed control valve (ISCV) or ISCV circuit |
| 41 | Variable resonance induction system (VRIS) or VRIS circuit |
| 46 | Variable resonance induction system (VRIS) or VRIS circuit |
| 67 | Low cooling fan relay or circuit |

### Ford Maverick (Nissan ECCS)

| Code | Description |
|---|---|
| 11 | RPM sensor |
| 12 | Mass airflow (MAF) sensor circuit |
| 13 | Coolant temperature sensor (CTS) or CTS circuit |
| 21 | Ignition signal or circuit |
| 34 | Knock sensor (KS) or KS circuit |
| 41 | Air temperature sensor (ATS) or ATS circuit |
| 42 | Fuel temperature sensor (FTS) or FTS circuit |
| 43 | Throttle pot sensor (TPS) or TPS circuit |
| 54 | Automatic transmission (AT), signal lost |
| 55 | No faults found |

# Chapter 13
# Honda

## Contents

**Index of vehicles**
**Self-Diagnosis**
Clearing fault codes without a fault code reader (FCR) . . . . . 4
Guide to test procedures . . . . . 6
Introduction . . . . . 1
Retrieving fault codes without a fault code reader (FCR) - flash codes . . . . . 3
Self-Diagnosis connector location . . . . . 2
Self-Diagnosis with a fault code reader (FCR) . . . . . 5
**Fault code table**

## Index of vehicles

| Model | Engine code | Year | System |
|---|---|---|---|
| Accord 1.8i | F18A3 | 1995 to 1997 | Honda PGM-Fi |
| Accord EFi A4 SOHC | A2 | 1985 to 1989 | Honda PGM-Fi |
| Accord 2.0i-16 A2 DOHC 16V | B20 | 1987 to 1989 | Honda PGM-Fi |
| Accord 2.0i SOHC 16V & cat | F20A4 | 1989 to 1992 | Honda PGM-Fi |
| Accord 2.0i F20A8 SOHC & cat | F20A5 | 1992 to 1996 | Honda PGM-Fi |
| Accord 2.0i Coupe SOHC cat | F20A7 | 1992 to 1996 | Honda PGM-Fi |
| Accord 2.2i SOHC 16V cat | F22A3/A7/A8 | 1989 to 1996 | Honda PGM-Fi |
| Accord 2.2i | F22Z2 | 1996 to 1997 | Honda PGM-Fi |
| Accord 2.3i DOHC 16V cat | H23A2 | 1993 to 1996 | Honda PGM-Fi |
| Aerodeck EFi A4 SOHC | A20 | 1985 to 1989 | Honda PGM-Fi |
| Aerodeck 2.2i SOHC 16V cat | F22A3/A7/A8 | 1989 to 1996 | Honda PGM-Fi |
| Ballade EXi SOHC 3W | EW3 | 1986 to 1989 | Honda PGM-Fi |
| Civic CRX | EW3 | 1984 to 1987 | Honda PGM-Fi |
| Civic GT | EW3 | 1984 to 1987 | Honda PGM-Fi |
| Civic 1.4i 5-door | D14A2 | 1995 to 1997 | Honda PGM-Fi |
| Civic 1.4i 3-door | D14A4 | 1996 to 1997 | Honda PGM-Fi |
| Civic 1.5 VEi SOHC 16V VTEC cat | D15Z1 | 1991 to 1995 | Honda PGM-Fi |
| Civic 1.5 LSi SOHC 16V | D15B2 | 1991 to 1995 | Honda PGM-Fi |
| Civic Coupe SOHC 16V cat | D15B2 | 1991 to 1995 | Honda PGM-Fi |
| Civic 1.5i VTEC-E SOHC 16V | D15Z3 | 1995 to 1997 | Honda PGM-Fi |
| Civic 1.5i 3- & 4-door | D15Z6 | 1996 to 1997 | Honda PGM-Fi |
| Civic 1.6i-16 DOHC 16V | D16A9 | 1987 to 1992 | Honda PGM-Fi |
| CRX 1.6i-16 DOHC 16V | D16A9 | 1987 to 1992 | Honda PGM-Fi |
| Civic 1.6 VT DOHC 16V VTEC cat | B16A1 | 1990 to 1991 | Honda PGM-Fi |
| CRX 1.6 VT DOHC 16V VTEC cat | B16A1 | 1990 to 1991 | Honda PGM-Fi |
| Civic 1.6 ESi SOHC 16V VTEC cat | D16Z6 | 1991 to 1997 | Honda PGM-Fi |
| CRX 1.6 ESi SOHC 16V VTEC cat | D16Z6 | 1991 to 1996 | Honda PGM-Fi |
| Civic 1.6 VTi DOHC 16V VTEC cat | B16A2 | 1991 to 1995 | Honda PGM-Fi |
| CRX 1.6 VTi DOHC 16V VTEC cat | B16A2 | 1991 to 1995 | Honda PGM-Fi |
| Civic 1.6i SOHC 16V | D16Y3 | 1995 to 1997 | Honda PGM-Fi |
| Civic 1.6i VTEC SOHC 16V | D16Y2 | 1995 to 1997 | Honda PGM-Fi |
| Civic 1.6i Coupe | D16Y7 | 1996 to 1997 | Honda PGM-Fi |
| Civic 1.6i VTEC Coupe | D16Y8 | 1996 to 1997 | Honda PGM-Fi |
| Concerto 1.5i SOHC 16V cat | D15B2 | 1991 to 1995 | Honda PGM-Fi |
| Concerto 1.6 DOHC 16V | D16A9 | 1989 to 1991 | Honda PGM-Fi |
| Concerto 1.6 DOHC 16V auto | D16Z4 | 1989 to 1991 | Honda PGM-Fi |
| Concerto 1.6i SOHC 16V cat | D16Z2 | 1992 to 1995 | Honda PGM-Fi |
| Concerto 1.6i DOHC 16V cat | D16A8 | 1992 to 1995 | Honda PGM-Fi |
| Integra EX 16 A2 DOHC 16V | D16 | 1986 to 1990 | Honda PGM-Fi |
| Legend | C25A2 | 1986 to 1988 | Honda PGM-Fi |
| Legend 2.7 and Coupe SOHC | C27A2 | 1988 to 1991 | Honda PGM-Fi |
| Legend 2.7 SOHC cat | C27A1 | 1990 to 1991 | Honda PGM-Fi |
| Legend 3.2 SOHC 24V cat | C32A2 | 1992 to 1997 | Honda PGM-Fi |

| Model | Engine code | Year | System |
|---|---|---|---|
| NSX DOHC 24V VTEC cat | C30A | 1991 to 1997 | Honda PGM-Fi |
| Prelude Fi | B20A1 | 1985 to 1987 | Honda PGM-Fi |
| Prelude 4WS 2.0i-16 DOHC 16V | B20A7 | 1987 to 1992 | Honda PGM-Fi |
| Prelude 4WS 2.0i-16 DOHC cat | B20A9 | 1987 to 1992 | Honda PGM-Fi |
| Prelude 2.0i 16V SOHC cat | F20A4 | 1992 to 1997 | Honda PGM-Fi |
| Prelude 2.2i VTEC DOHC 16V | H22A2 | 1994 to 1997 | Honda PGM-Fi |
| Prelude 2.3i 16V DOHC 16V cat | H23A2 | 1992 to 1997 | Honda PGM-Fi |
| Shuttle 1.6i 4WD SOHC 16V | D16A7 | 1988 to 1990 | Honda PGM-Fi |
| Shuttle 2.2i | F22B8 | 1995 to 1997 | Honda PGM-Fi |

# Self-Diagnosis

## 1 Introduction

The engine management system fitted to Honda vehicles is Honda PGM-Fi, which controls the primary ignition, fuel injection and idle functions from within the same control module.

### *Self-Diagnosis (SD) function*

The ECM has a self-test capability that continually examines the signals from certain engine sensors and actuators, and then compares each signal to a table of programmed values. If the diagnostic software determines that a fault is present, the ECM stores one or more fault codes. Codes will not be stored about components for which a code is not available, or for conditions not covered by the diagnostic software. In models manufactured before 1992, the control module generates 2-digit fault codes for display on an LED set into the ECM casing. In models manufactured after 1992, the control module generates 2-digit fault codes for display on an SD warning light on the facia panel. Fault code retrieval by FCR is not possible on vehicles equipped with Honda PGM-Fi.

### *Limited operating strategy (LOS)*

Honda systems featured in this Chapter utilise LOS (a function that is commonly called the "limp-home mode"). Once certain faults have been identified (not all faults will initiate LOS), the ECM will implement LOS and refer to a programmed default value rather than the sensor signal. This enables the vehicle to be safely driven to a workshop/garage for repair or testing. Once the fault has cleared, the ECM will revert to normal operation.

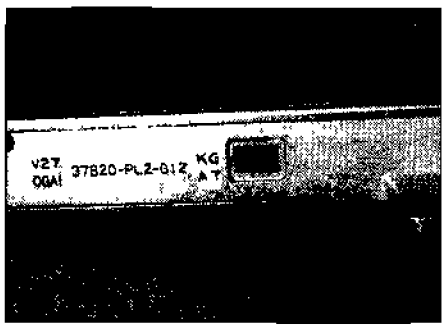

**13.1 Location of LED set into the ECM (either just a red, or a red and a yellow)**

### *Adaptive or learning capability*

Honda systems also utilise an adaptive function that will modify the basic programmed values for most effective operation during normal running, and with due regard to engine wear.

### *Self-Diagnosis (SD) warning light*

Generally, the majority of Honda models before 1992 were equipped with an SD warning light located within the instrument panel and a red LED mounted on the ECM **(see illustration 13.1)**. The Legend 2.5i and 2.7i were fitted with both a red and a yellow LED, the yellow LED being for rpm adjustment only (these models were not fitted with a SD connector). Once the ignition has been switched on, the SD light illuminates as a bulb check, and after a few seconds extinguishes. If the SD warning light comes on at any time when the engine is running, this indicates that a fault in the system has been identified. The LED mounted in the ECM will flash to display a fault code, while the SD warning light will remain illuminated without flashing. When the ignition is switched off, both the SD warning light and LED will extinguish. When the ignition is switched on again, the SD warning light will only illuminate if the fault is still present and the LED will resume flashing the fault code. This code will be stored in memory until cleared by following the procedure described later.

From approximately 1992 onwards, the majority of Honda vehicles are equipped with an SD connector and SD warning light, while the LED(s) mounted on the ECM are no longer fitted. Once the ignition has been turned on, the SD light illuminates as a bulb check, and after a few seconds extinguishes. If the SD warning light comes on at any time when the engine is running, this indicates that a fault in the system has been identified. If a fault is indicated, bridging the terminals in the SD connector triggers the SD procedure as described later.

## 2 Self-Diagnosis connector location

**Note:** *It is not always possible to pinpoint the changeover date from LED to SD connector in the Honda range. However, if the ECM is equipped with an LED and a SD connector is not fitted, the vehicle belongs to the first group. The vehicle belongs to the second group if the vehicle is equipped with a SD connector and an LED is not fitted to the ECM.*

### *Models up to 1992*

The ECM is either located under the driver's seat or fitted to the passenger's side footwell, under the carpet and under a metal cover **(see illustration 13.2)**. Self-diagnosis is conducted by observing the behaviour of an LED, which is mounted in the ECM. An SD connector is not fitted to these vehicles

### *Models after 1992*

The SD connector is located under the facia on the passenger's side **(see illustration 13.3)**. An LED is not fitted to the ECM on these vehicles.

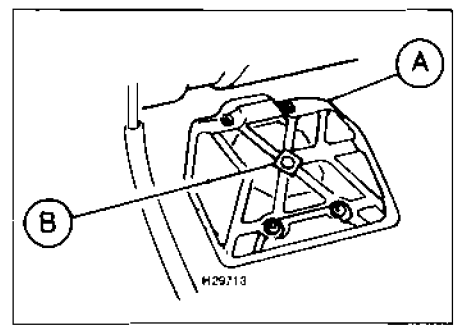


**13.2 ECM located under the passenger's side carpet, under a metal cover**

*A Metal cover* *B Hole to view LED*

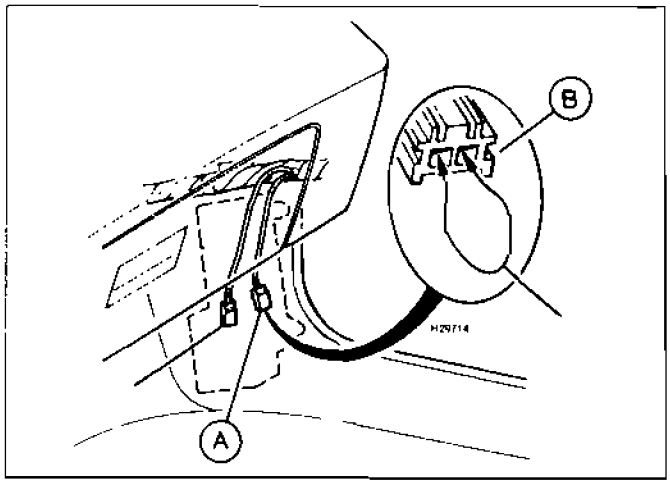


13.3 Honda SD connector (1992 onwards)

*A Location of SD connector*
*B Terminals in SD connector bridged*

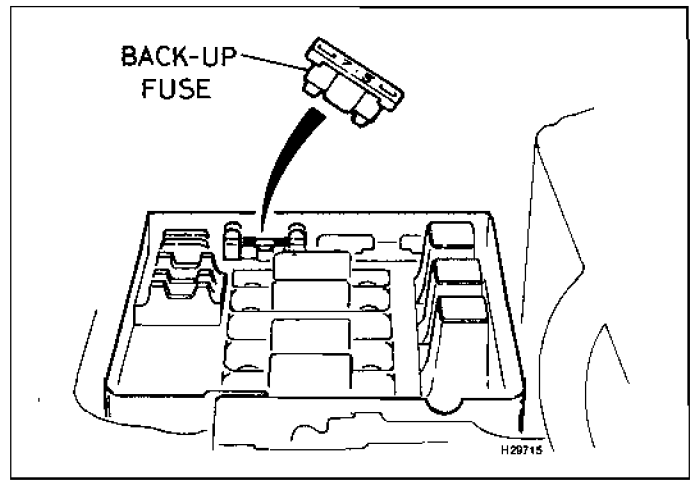


13.4 Fusebox located in the engine compartment

*Location of back-up fuse*

## 3 Retrieving fault codes without a fault code reader (FCR) - flash codes

**Note:** *During the course of certain test procedures, it is possible for additional fault codes to be generated. Care must be taken that any codes generated during test routines do not mislead diagnosis. All codes must be cleared once testing is complete.*

### *Honda models before 1992 (LED on ECM)*

**Note:** *Record the fault codes from the red LED only. The yellow LED, where fitted, is for rpm adjustment checks only.*

1 Switch on the ignition.

2 Observe the red LED mounted in the ECM casing **(refer to illustration 13.1)**:

*a) The flashes are transmitted as a straight count - eg. 15 flashes indicates code 15.*
*b) The LED will pause for two seconds between codes before transmitting the next code.*
*c) When all codes have been transmitted, the LED will pause for two seconds and then repeat the sequence.*

3 Count the number of flashes, and record each code as it is transmitted. Refer to the table at the end of the Chapter to determine the meaning of the fault code.

4 If the number of flashes indicates a number for which there is no code, the ECM is suspect. Recheck several times, and then check the earth and supply voltages to the ECM before fitting a replacement.

5 When the ignition is switched off, the LED will extinguish. However, the LED will resume flashing once the ignition has been switched on again.

6 If the fault(s) have been corrected, the LED will continue to flash until the ECM memory is cleared. The method is detailed below.

### *Honda models after 1992 (SD connector)*

7 Switch on the ignition.

8 Use a jumper lead to bridge the two terminals in the SD connector.

***Warning: A 3-pin "service check" connector is positioned adjacent to the SD connector in some models. This connector must not be bridged in an attempt to retrieve fault codes.***

9 The codes are displayed on the SD warning light in the instrument panel. The flashing of the light indicates the 2-digit fault codes as follows:

*a) The two digits are indicated by two series of flashes.*
*b) The first series of flashes indicates the multiples of ten, the second series of flashes indicates the single units.*
*c) 2-second flashes separated by short intervals indicates fault codes in tens, 1-second flashes separated by short intervals indicates fault codes in units.*
*d) A short pause separates the transmission of each individual code.*
*e) Code number "12" is indicated by one 2-second flash followed by a short pause, then two flashes of 1 second separated by short pauses.*
*f) Code number "8" is indicated by eight 1-second flashes.*

10 Count the number of flashes, and record each code as it is transmitted. Refer to the table at the end of the Chapter to determine the meaning of the fault code.

11 If the number of flashes indicates a number for which there is no code, the ECM is suspect. Recheck the code output several times, and then check the earth and supply voltages before fitting a replacement ECM.

12 After the first code is transmitted, the warning light will pause and then transmit the next code.

13 When all codes have been transmitted, the warning light will pause and then repeat the sequence.

14 Turn off the ignition and remove the jumper lead to end fault code retrieval

## 4 Clearing fault codes without a fault code reader (FCR)

### *Preferred method*

1 Removing a fuse from the fusebox for more than 10 seconds will clear the fault codes. The appropriate fuse is given below.

**Accord 2.0i (1990-on) 2.2i, 2.3i, Prelude 2.0i, 2.2i, 2.3i, Civic and CRX**

2 Remove the (ECM) back-up fuse (7.5 amp) **(see illustration 13.4)**.

**Civic DX, Bali, Ballade, Integra, Concerto, Accord 2.0i (1986-89)**

3 Remove the hazard fuse **(see illustration 13.5)**.

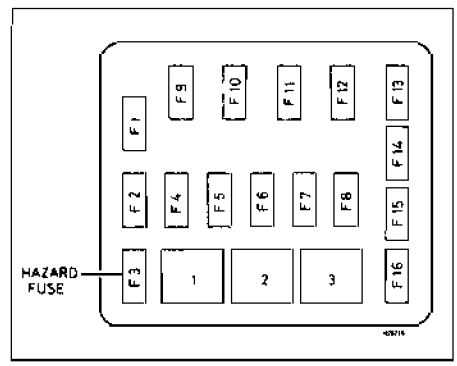


13.5 Fusebox located in the engine compartment

*Location of hazard fuse*

13

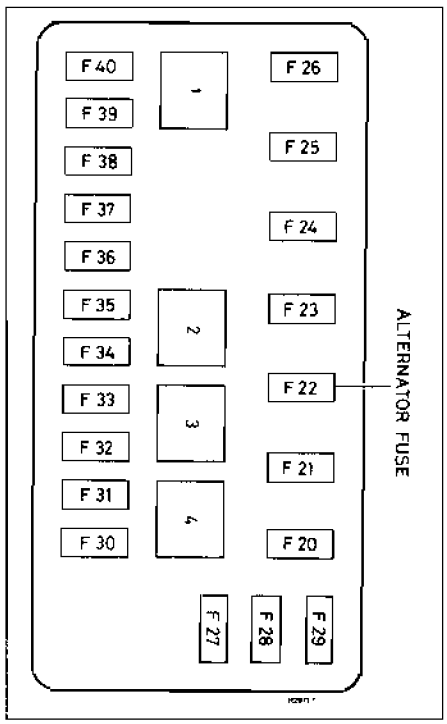


**13.6 Fusebox located in the engine compartment**

*Location of alternator fuse*

### Legend 2.5i and 2.7i

**4** Remove the alternator fuse **(see illustration 13.6)**.

### *Alternative method*

**5** Turn off the ignition and disconnect the battery negative terminal for a period of approximately 2 minutes.

**6** Re-connect the battery negative terminal.

**Note:** *The first drawback to this method is that battery disconnection will re-initialise all ECM adaptive values. Re-learning the appropriate adaptive values requires starting the engine from cold, and driving at various engine speeds for approximately 20 to 30 minutes. The engine should also be allowed to idle for approximately 10 minutes. The second drawback is that the radio security codes, clock setting and other stored values will be initialised, and these must be re-entered once the battery has been reconnected. Where possible, codes should be cleared by removing the correct fuse.*

## 5 Self-Diagnosis with a fault code reader (FCR)

Serial communication facilities are not provided in vehicles equipped with Honda PGM-Fi, and it is therefore not possible to retrieve fault codes with the aid of an FCR.

## 6 Guide to test procedures

**1** Manually gather codes as described in Section 3.

### *Codes stored*

**2** If one or more fault codes are gathered, refer to the fault code table at the end of this Chapter to determine their meaning.

**3** If several codes are gathered, look for a common factor such as a defective earth return or supply.

**4** Refer to the component test procedures in Chapter 4, where you will find a means of testing the majority of components and circuits found in the modern EMS.

**5** Once the fault has been repaired, clear the codes and run the engine under various conditions to determine if the problem has cleared.

**6** Check the ECM for fault codes once more. Repeat the above procedures where codes are still being stored.

**7** Refer to Chapter 3 for more information on how to effectively test the EMS.

### *No codes stored*

**8** Where a running problem is experienced, but no codes are stored, the fault is outside of the parameters designed into the SD system. Refer to Chapter 3 for more information on how to effectively test the engine management system.

**9** If the problem points to a specific component, refer to the test procedures in Chapter 4, where you will find a means of testing the majority of components and circuits found in the modern EMS.

# Fault code table

### *Honda PGM-Fi*

| Code | Description |
|---|---|
| 0 | Electronic control module (ECM) or ECM circuit |
| 1 | Oxygen sensor (OS) or OS circuit (except D16A9 engine) |
| 3 | Manifold absolute pressure (MAP) sensor or MAP sensor circuit |
| 5 | Manifold absolute pressure (MAP) sensor or MAP sensor circuit |
| 4 | Crank angle sensor (CAS) or CAS circuit |
| 6 | Coolant temperature sensor (CTS) or CTS circuit |
| 7 | Throttle pot sensor (TPS) or TPS circuit |
| 8 | Top dead centre (TDC) position sensor or TDC sensor circuit |
| 9 | No. 1 cylinder position (CID sensor) |
| 10 | Air temperature sensor (ATS) or ATS circuit |
| 11 | CO pot or CO pot circuit |
| 12 | Exhaust gas recirculation (EGR) system or EGR circuit |
| 13 | Atmospheric pressure sensor (APS) or APS circuit |
| 14 | Idle speed control valve (ISCV) or ISCV circuit |
| 15 | Ignition output signal |
| 16 | Fuel injector or fuel injector circuit (D15B2 engine) |
| 17 | Vehicle speed sensor (VSS) or VSS circuit |
| 18 | Ignition timing |
| 19 | Automatic transmission lock-up control solenoid valve A/B |
| 20 | Electronic load detector (ELD) or ELD circuit |
| 21 | Spool solenoid valve or spool solenoid circuit |
| 22 | Valve timing oil pressure switch |
| 30 | Automatic transmission fuel injection signal A |
| 31 | Automatic transmission fuel injection signal B |
| 41 | Oxygen sensor (OS) heater or OS circuit (D16Z6, D16Z7, B16A2 engine) |
| 41 | Linear airflow (LAF) sensor heater or LAF sensor circuit (D15Z1 engine) |
| 43 | Fuel supply system or circuit (D16Z6, D16Z7, B16Z2 engine) |
| 48 | Linear airflow (LAF) sensor or LAF sensor circuit (D15Z1 engine |

# Chapter 14
# Hyundai

## Contents

**Index of vehicles**
**Self-Diagnosis**
Clearing fault codes without a fault code reader (FCR) . . . . . 4
Guide to test procedures . . . . . 6
Introduction . . . . . 1
Retrieving codes without a fault code reader (FCR) - flash codes . . . . . 3
Self-Diagnosis connector location . . . . . 2
Self-Diagnosis with a fault code reader (FCR) . . . . . 5
**Fault code tables**

## Index of vehicles

| Model | Engine code | Year | System |
|---|---|---|---|
| Accent 1.3i SOHC | - | 1995 to 1997 | Hyundai MPi |
| Accent 1 5i SOHC | - | 1995 to 1997 | Hyundai MPi |
| Coupe 1.6 DOHC 16V | G4GR | 1996 to 1997 | Hyundai MPi |
| Coupe 1.8 DOHC 16V | G4GM | 1996 to 1997 | Hyundai MPi |
| Coupe 2 0 DOHC 16V | G4GF | 1996 to 1997 | Hyundai MPi |
| Lantra 1.5i SOHC cat | 4G15/G4J | 1993 to 1995 | Hyundai MPi |
| Lantra 1.6i DOHC cat | 4G61 | 1991 to 1995 | Hyundai MPi |
| Lantra 1 6 DOHC 16V | G4GR | 1996 to 1997 | Hyundai MPi |
| Lantra 1.8i DOHC cat | 4G67 | 1992 to 1995 | Hyundai MPi |
| Lantra 1.8 DOHC 16V | G4GM | 1996 to 1997 | Hyundai MPi |
| Pony X2 1 5i SOHC cat | 4G15/G4J | 1990 to 1994 | Hyundai MPi |
| S Coupe 1.5i SOHC cat | 4G15/G4J | 1990 to 1992 | Hyundai MPi |
| S Coupe 1.5i SOHC | Alpha | 1992 to 1996 | Bosch Motronic M2.10 1 |
| S Coupe 1 5i turbo SOHC | Alpha | 1992 to 1996 | Bosch Motronic M2.7 |
| Sonata 1.8 SOHC | 4G62 | 1989 to 1992 | Hyundai MPi |
| Sonata 2.0 SOHC | 4G63 | 1989 to 1992 | Hyundai MPi |
| Sonata 2 0 16V DOHC | - | 1992 to 1997 | Hyundai MPi |
| Sonata 2 4 SOHC | 4G64 | 1989 to 1992 | Hyundai MPi |
| Sonata 3.0i SOHC | V6 | 1994 to 1997 | Hyundai MPi |



## Self-Diagnosis

### 1 Introduction

The engine management systems fitted to Hyundai vehicles include Bosch Motronic versions 2.7, 2.10.1 and Hyundai MPi. All Hyundai engine management systems control primary ignition, fuel injection and idle functions from within the same ECM.

#### *Self-Diagnosis (SD) function*

Each ECM has a self-test capability that continually examines the signals from certain engine sensors and actuators, and compares each signal to a table of programmed values. If the diagnostic software determines that a fault is present, the ECM stores one or more fault codes. Codes will not be stored about components for which a code is not available, or for conditions not covered by the diagnostic software.

In Hyundai MPi, the ECM generates 2-digit fault codes for retrieval both by FCR and by manual means as flash codes. In Bosch Motronic M2.7 and M2.10.1, 4-digit flash codes are generated for retrieval by manual means, and 2 or 3-digit codes are generated for retrieval by an FCR. Refer to the fault code tables at the end of this Chapter.

#### *Limited operating strategy (LOS)*

Hyundai systems featured in this Chapter utilise LOS (a function that is commonly called the "limp-home mode"). Once certain faults have been identified (not all faults will initiate LOS), the ECM will implement LOS and refer to a programmed default value rather than the sensor signal. This enables the vehicle to be safely driven to a workshop/garage for repair or testing. Once the fault has cleared, the ECM will revert to normal operation.

#### *Adaptive or learning capability*

Hyundai systems also utilise an adaptive function that will modify the basic programmed values for most effective operation during normal running, and with due regard to engine wear.

#### *Self-Diagnosis (SD) warning light*

Many Hyundai vehicles are equipped with a facia-mounted SD warning light located within the instrument panel. If the light illuminates at any time during a period of engine running, the ECM has diagnosed presence of a system fault. The warning light can also be triggered (some systems) to transmit flash codes.

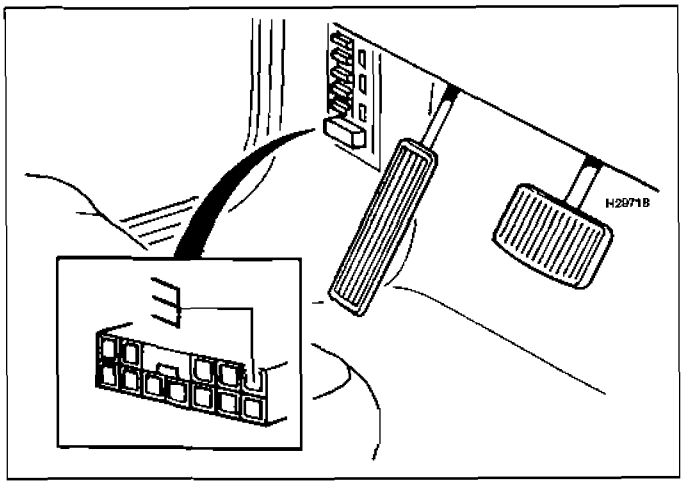


14.1 Location of SD connector in fusebox

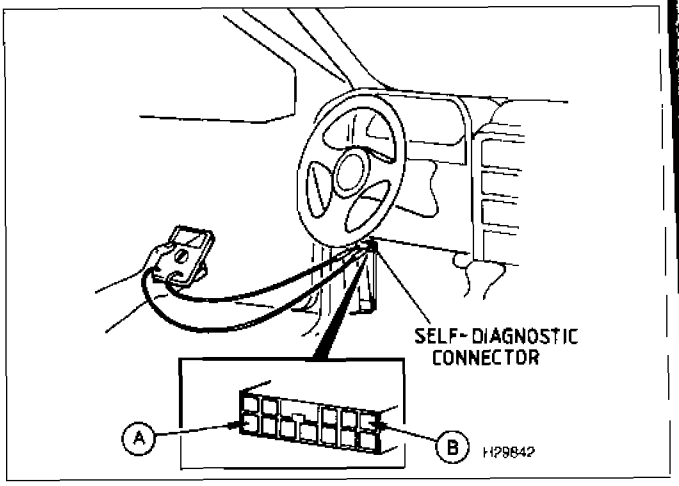


14.2 Analogue voltmeter attached to SD connector terminals A and B

## 2 Self-Diagnosis connector location

### All Hyundai models

The Hyundai SD connector is in the fusebox on the driver's left or right-hand (driver's) side and under the facia **(see illustrations 14.1 and 14.2)**. The SD connector is provided for both flash code and FCR retrieval purposes.

## 3 Retrieving codes without a fault code reader (FCR) - flash codes

**Note:** *During the course of certain test procedures, it is possible for additional fault codes to be generated. Care must be taken that any codes generated during test routines do not mislead diagnosis. All codes must be cleared once testing is complete.*

### Hyundai MPi without SD warning light (voltmeter method)

1 Attach an analogue voltmeter between the A and B terminals in the SD connector **(see illustration 14.2)**.

2 Switch on the ignition.

3 If the ECM has stored one or more fault codes, the voltmeter needle will begin to sweep between a higher and lower level. If no codes are stored, the needle will remain level. The voltmeter sweeps may be interpreted as follows:

*a) The first series of swings indicates the multiples of ten, the second series of swings indicates the single units.*

*b) The voltmeter needle will move for a longer period of deflection when transmitting codes in tens, and a shorter spell of deflection for units. If no faults are found, the meter will indicate regular on/off pulses.*

4 Count the number of sweeps in each series, and record each code as it is transmitted Refer to the tables at the end of the Chapter to determine the meaning of the fault code.

5 Turn off the ignition and remove the voltmeter to end fault code retrieval

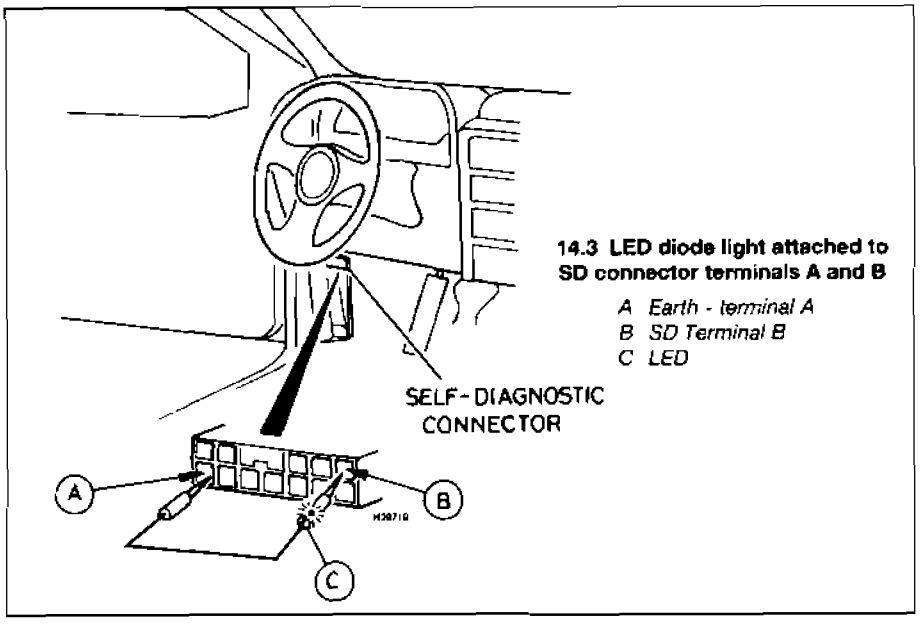


**14.3 LED diode light attached to SD connector terminals A and B**

*A Earth - terminal A*
*B SD Terminal B*
*C LED*

### Hyundai MPi without SD warning light (LED test light method)

6 Attach an LED diode test light between the A and B terminals in the SD connector **(see illustration 14.3)**.

7 Switch on the ignition

8 After approximately 3 seconds, the codes are displayed as 2-digit flash codes on the LED as follows:

*a) The two digits are indicated by two series of flashes.*

*b) The first series of flashes indicates the multiples of ten, the second series of flashes indicates the single units.*

*c) Tens are indicated by 1.5-second flashes separated by 0.5-second pauses. Units are indicated by 0.5-second flashes separated by 0.5-second pauses.*

*d) A 2-second pause separates the tens from the units.*

*e) Code "42" is indicated by four 1.5-second flashes, a 2-second pause, followed by two 0.5-second flashes.*

9 Count the number of flashes in each series, and record each code as it is transmitted. Refer to the tables at the end of the Chapter to determine the meaning of the fault code.

10 The codes will be displayed sequentially, and repeated after a 3-second pause

11 Transmission of eight on/off pulses of 0.5 seconds, repeated after a pause of 3 seconds, indicates that no faults are stored

12 Turn off the ignition and remove the test light to end fault code retrieval.

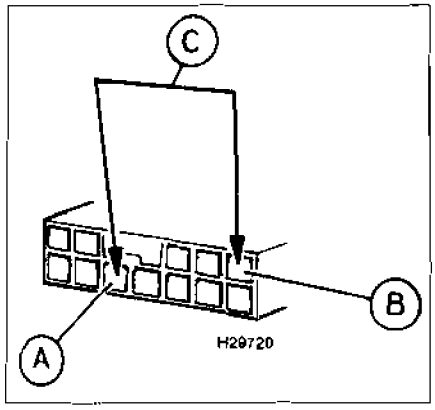


**14.4 Hyundai MPi: Jumper lead attached to SD connector terminals A and B**

*A Earth - terminal A*
*B SD Terminal B*
*C Jumper lead*

### *Hyundai MPi with SD warning light*

**13** Switch on the ignition.
**14** Use a jumper lead to bridge the A and B terminals in the SD connector **(see illustration 14.4)**
**15** After approximately 3 seconds, the codes are displayed as 2-digit flash codes on the SD warning light in the same way as for a separate LED (see paragraphs 8 to 11 above).
**16** Turn off the ignition and remove the jumper lead to end fault code retrieval.

### *Bosch Motronic M2.7 and 2.10.1*

**Note:** *4-digit flash codes retrieved manually may be different to those codes displayed with the aid of an FCR. Refer to the fault code tables at the end of this Chapter, in the column headed "Flash code"*
**17** Switch on the ignition.
**18** Use a jumper lead to bridge the A and B terminals in the SD connector **(see illustration 14.5)**
**19** Remove the jumper lead after approximately 2 to 3 seconds.
**20** The warning light will begin to flash the 4-digit fault codes as follows:

*a) The four digits are indicated by four series of flashes.*
*b) The first series of flashes indicates the first digit, the second series of flashes indicates the second digit, and so on until all 4 digits have been flashed.*
*c) Each series consists of a number of 1- or 2-second flashes, separated by short pauses (0.5 seconds). Each integer (whole number) in the range 1 to 9 is represented by a number of 1.5-second flashes.*
*d) A 2.5-second pause separates each series of flashes.*
*e) The code number "1233" is indicated by a 1.5-second flash, a 0.5-second pause, two 1.5-second flashes, a 0.5-second pause, three 1.5-second flashes, a 0.5-second pause and three 1.5-second flashes. After a 2.5-second pause, the code will be repeated.*

**21** Count the number of flashes in each series, and record the code. Refer to the tables at the end of the Chapter to determine the meaning of the fault code
**22** The code will be constantly repeated until the jumper lead is used to bridge the A and B terminals in the SD connector once more. Remove the jumper lead after approximately 2 to 3 seconds, and the next fault code will be displayed.
**23** Continue this procedure until all stored codes have been displayed. End of code transmission will be indicated on the SD warning light by code "3333".
**24** Turn off the ignition and remove the jumper lead to end fault code retrieval.

## 4 Clearing fault codes without a fault code reader (FCR)

### *Hyundai MPi*

**1** Turn off the ignition and disconnect the battery negative terminal for a period of approximately 15 seconds
**2** Reconnect the battery negative terminal.
**Note:** *The first drawback to this method is that battery disconnection will re-initialise all ECM adaptive values. Re-learning the appropriate adaptive values requires starting the engine from cold, and driving at various engine speeds for approximately 20 to 30 minutes. The engine should also be allowed to idle for approximately 10 minutes. The second drawback is that the radio security codes, clock setting and other stored values will be initialised, and these must be re-entered once the battery has been reconnected. Where possible, an FCR should be used for code clearing.*

### *Bosch Motronic 2.10.1 and M2.7*

**3** Retrieve codes from the ECM by the methods described above until code "3333" is transmitted.
**4** Use the jumper lead to bridge the A and B terminals in the SD connector for 10 seconds, and the codes will be cleared.

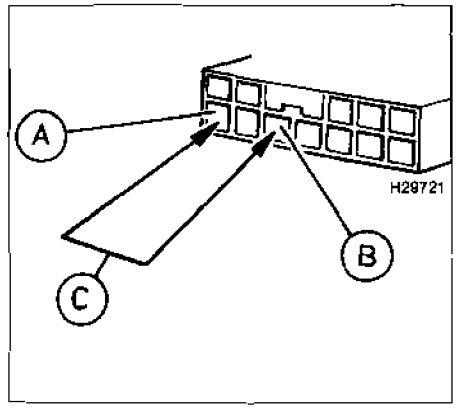


**14.5 Bosch Motronic: Jumper lead attached to SD connector terminals A and B**

*A Earth - terminal A*
*B SD Terminal B*
*C Jumper lead*

## 5 Self-Diagnosis with a fault code reader (FCR)

**Note:** *During the course of certain test procedures, it is possible for additional fault codes to be generated. Care must be taken that any codes generated during test routines do not mislead diagnosis.*

### *All Hyundai models*

**1** Connect an FCR to the SD connector, and use the FCR for the following purposes, in strict compliance with the FCR manufacturer's instructions **(see illustration 14.6)**:

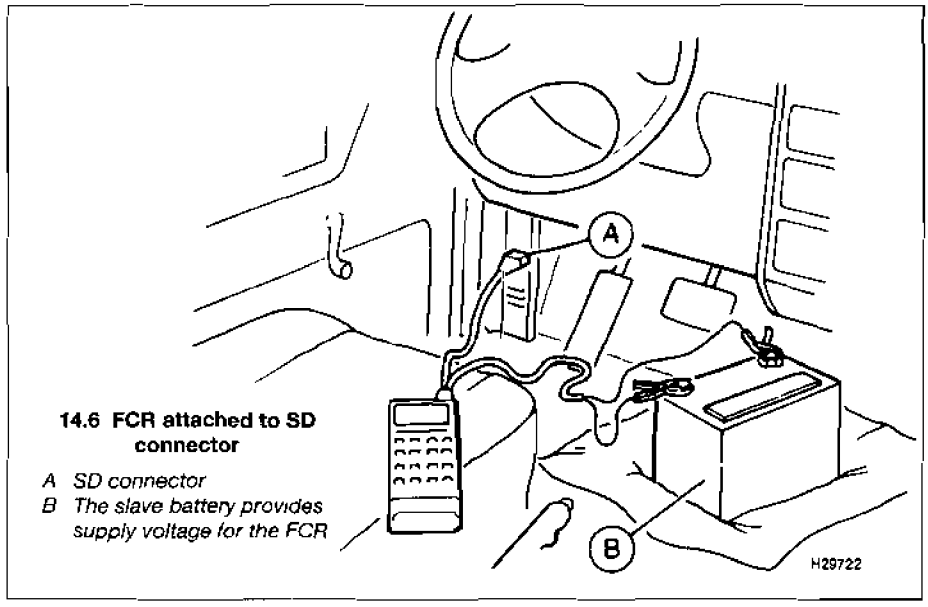


**14.6 FCR attached to SD connector**

*A SD connector*
*B The slave battery provides supply voltage for the FCR*

*a) Retrieving fault codes.*
*b) Clearing fault codes.*

**2** The FCR may be able to display both 4-digit flash codes and/or 2-digit fault codes. Refer to the fault code tables at the end of this Chapter, in the column headed *"Flash code"* or *"FCR code"* as appropriate.

**3** Codes must always be cleared after component testing, or after repairs involving the removal or replacement of an EMS component.

## 6 Guide to test procedures

**1** Use an FCR to interrogate the ECM for fault codes, or manually gather codes as described in Sections 3 or 5.

### Codes stored

**2** If one or more fault codes are gathered, refer to the fault code tables at the end of this Chapter to determine their meaning.

**3** If several codes are gathered, look for a common factor such as a defective earth return or supply.

**4** Refer to the component test procedures in Chapter 4, where you will find a means of testing the majority of components and circuits found in the modern EMS.

**5** Once the fault has been repaired, clear the codes and run the engine under various conditions to determine if the problem has cleared.

**6** Check the ECM for fault codes once more. Repeat the above procedures where codes are still being stored.

**7** Refer to Chapter 3 for more information on how to effectively test the EMS.

### No codes stored

**8** Where a running problem is experienced, but no codes are stored, the fault is outside of the parameters designed into the SD system. Refer to Chapter 3 for more information on how to effectively test the engine management system.

**9** If the problem points to a specific component, refer to the test procedures in Chapter 4, where you will find a means of testing the majority of components and circuits found in the modern EMS.

# Fault code tables

### Hyundai MPi

| Flash/ FCR code | Description |
|---|---|
| 11 | Oxygen sensor (OS) or OS circuit |
| 12 | Airflow sensor (AFS) or circuit |
| 13 | Air temperature sensor (ATS) or ATS circuit |
| 14 | Throttle position sensor (TPS) or circuit |
| 15 | Motor position sensor |
| 21 | Coolant temperature sensor (CTS) or CTS circuit |
| 22 | Crank angle sensor (CAS) or circuit |
| 23 | Cylinder number one top dead centre (TDC) sensor or TDC sensor circuit |
| 24 | Vehicle speed sensor (VSS) or VSS circuit |
| 25 | Atmospheric pressure sensor (APS) or APS circuit |
| 41 | Injector or circuit |
| 42 | Fuel pump or circuit |
| 43 | No faults found in the ECM. Proceed with normal diagnostic methods |
| 44 | Ignition coil |
| 59 | Rear oxygen sensor (OS) or OS circuit |

### Bosch Motronic 2.7 and 2.10.1

| Flash code | FCR code | Description |
|---|---|---|
| 1121 | 36 | Electronic control module (ECM) or ECM circuit (Motronic 2.7) |
| 1122 | - | Electronic control module (ECM) |
| 1233 | - | Electronic control module (ECM), read only memory (ROM) failure |
| 1234 | - | Electronic control module (ECM), random access memory (RAM) failure |
| 2121 | - | Manifold absolute pressure (MAP) sensor or MAP sensor circuit |
| 2121 | 21 | Turbo wastegate solenoid valve or circuit (Motronic 2.7) |
| 2222 | - | Start of fault code output |
| 3112 | 17 | Injector Number 1 or injector circuit |
| 3114 | 04 | Idle speed control valve (ISCV) or ISCV circuit |
| 3116 | 16 | Injector Number 3 or injector circuit |
| 3117 | 07 | Vane airflow sensor (AFS) or AFS circuit |
| 3121 | 49 | Manifold absolute pressure (MAP) sensor or MAP sensor circuit (Motronic 2.7) |
| 3122 | 22 | Idle speed control valve (ISCV) or ISCV circuit |
| 3128 | 28 | Oxygen sensor (OS) or OS circuit |
| 3135 | 05 | Carbon filter solenoid valve (CFSV) or CFSV circuit |
| 3137 | 37 | Battery voltage supply to electronic control module (ECM) or circuit |
| 3145 | 45 | Coolant temperature sensor (CTS) or CTS circuit |
| 3149 | 40 | Air conditioning (A/C) |
| 3152 | 226 | Boost pressure signal or circuit (Motronic 2.7) |
| 3152 | - | Manifold absolute pressure (MAP) sensor or MAP sensor circuit |
| 3153 | 53 | Throttle pot sensor (TPS) or TPS circuit |
| 3159 | 09 | Crank angle sensor (CAS) or CAS circuit |
| 3211 | 11 | Knock sensor (KS) or KS circuit |
| 3222 | 08 | Camshaft position sensor (CMP) or CMP circuit |
| 3224 | 222 | Knock sensor (KS) or KS circuit (Motronic 2.10.1) |
| 3224 | - | Electronic control module (ECM) (Motronic 2.7) |
| 3232 | - | Camshaft position sensor (CMP) or CMP circuit |
| 3232 | 229 | Cylinder identification (CID) sensor or CID sensor circuit |
| 3233 | - | Electronic control module (ECM) (Motronic 2.7) |
| 3233 | - | Knock sensor (KS) or KS circuit |
| 3234 | 34 | Injector Number 2 or injector circuit |
| 3235 | 35 | Injector Number 4 or injector circuit |
| 3241 | 141 | Electronic control module (ECM) or ECM circuit (Motronic 2.10.1) |
| 3242 | 142 | Electronic control module (ECM) or ECM circuit (Motronic 2.10.1) |
| 3243 | 143 | Electronic control module (ECM) or ECM circuit (Motronic 2.10.1) |
| 3333 | - | End of fault code output |
| 4133 | 133 | Fuel pump or fuel pump circuit (Motronic 2.10.1) |
| 4151 | 101 | Oxygen sensor (OS) or OS circuit (Motronic 2.10.1) |
| 4151 | - | Air/fuel control fault (Motronic 2.7) |
| 4152 | 103 | Oxygen sensor (OS) or OS circuit |
| 4153 | 102 | Oxygen sensor (OS) or OS circuit |
| 4154 | 104 | Oxygen sensor (OS) or OS circuit |
| 4155 | - | Electronic control module (ECM) |
| 4156 | - | Manifold absolute pressure (MAP) sensor or MAP sensor circuit |
| 4156 | 227 | Boost pressure signal or circuit (Motronic 2.7) |
| 4444 | - | No faults found in the ECM. Proceed with normal diagnostic methods |

# Chapter 15
# Isuzu

## Contents


**Index of vehicles**
**Self-Diagnosis**
Clearing fault codes without a fault code reader (FCR) . 4
Guide to test procedures . . . . . 6
Introduction . . . . . 1
Retrieving codes without a fault code reader (FCR) - flash codes 3
Self-Diagnosis connector locations . . . 2
Self-Diagnosis with a fault code reader (FCR) . 5
**Fault code table**


## Index of vehicles

| Model | Engine code | Year | System |
|---|---|---|---|
| Piazza Turbo | 4Z C1T | 1986 to 1990 | Isuzu I-Tec + Turbo |
| Trooper 2 6 | 4ZE1 | 1988 to 1992 | Isuzu I-Tec |
| Trooper 3 2i | 6VD1 | 1993 to 1997 | Isuzu I-Tec |

## Self-Diagnosis

### 1 Introduction

Isuzu vehicles are equipped with the Isuzu I-Tec engine management system that controls primary ignition, fuel injection and

***Limited operating strategy (LOS)***

Isuzu systems featured in this Chapter utilise LOS (a function that is commonly called the "limp home mode"). Once certain codes have been generated (not all codes will initiate LOS), the ECM will implement LOS and refer to a programmed default value rather than the

### 3 Retrieving codes without a fault code reader (FCR) - flash codes

**Note:** *During the course of certain test procedures, it is possible for additional fault codes to be generated. Care must be taken*

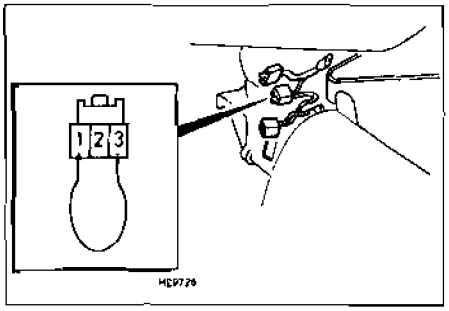


**15.3 Location of SD connector for Trooper models. Initiate the self-test by bridging the terminals**

*b) The first series of flashes indicates the multiples of ten, the second series of flashes indicates the single units.*
*c) Tens and units are indicated by 0.4-second flashes, separated by a short pause.*
*d) A pause of 1.2 seconds separates tens and units.*
*e) A 3.2-second pause separates the transmission of each individual code.*
*f) Code number "12" is indicated by one 0.4-second flash, followed by a 1.2-second pause, then two flashes of 0.4 seconds in quick succession.*

**6** Count the number of flashes in each series, and record each code as it is transmitted. Refer to the table at the end of the Chapter to determine the meaning of the fault code.

**7** Fault codes are displayed in sequence, and repeated three times before the next code is transmitted

**8** On Piazza Turbo models, when code number "12" is transmitted, this indicates the start of the test procedure. If "12" is repeated constantly, no faults are stored.

**9** On Trooper models, when code number "12" is transmitted, this indicates that the engine has not been started and faults have not been stored

**10** Continue processing until all stored codes have been retrieved and recorded.

**11** Turning off the ignition and disconnecting the connectors or jumper lead will end fault code retrieval.

## 4 Clearing fault codes without a fault code reader (FCR)

### *Piazza Turbo models*

**1** Turn off the ignition and remove fuse 4 located in the fuse junction box.

**Note:** *The drawback to this method is that the radio security codes, clock setting and other stored values will be initialised, and these must be re-entered once the fuse is refitted. Where possible, an FCR should be used for code clearing.*

### *Trooper models*

**2** Turn off the ignition and remove fuse 13 from the fusebox. Fuse 4 may be removed instead, but removing fuse 13 obviates the need to reset the radio and clock.

## 5 Self-Diagnosis with a fault code reader (FCR)

**Note:** *During the course of certain test procedures, it is possible for additional fault codes to be generated. Care must be taken that any codes generated during test routines do not mislead diagnosis.*

### *All Isuzu models*

**1** Connect an FCR to the SD connector. Use the FCR for the following purposes, in strict compliance with the FCR manufacturer's instructions:

*a) Retrieving fault codes.*
*b) Clearing fault codes.*

**2** Codes must always be cleared after component testing, or after repairs involving the removal of an EMS component.

## 6 Guide to test procedures

**1** Use and FCR to interrogate the ECM for fault codes, or manually gather codes as described in Sections 3 or 5.

### *Codes stored*

**2** If one or more fault codes are gathered, refer to the fault code table at the end of the Chapter to determine their meaning.

**3** If several codes are gathered, look for a common factor such as a defective earth return or supply.

**4** Refer to the component test procedures in Chapter 4, where you will find a means of testing the majority of components and circuits found in the modern EMS.

**5** Once the fault has been repaired, clear the codes and run the engine under various conditions to determine if the problem has cleared.

**6** Check the ECM for fault codes once more. Repeat the above procedures where codes are still being stored.

**7** Refer to Chapter 3 for more information on how to effectively test the EMS.

### *No codes stored*

**8** Where a running problem is experienced, but no codes are stored, the fault is outside of the parameters designed into the SD system. Refer to Chapter 3 for more information on how to effectively test the engine management system.

**9** If the problem points to a specific component, refer to the test procedures in Chapter 4, where you will find a means of testing the majority of components and circuits found in the modern EMS.

# Fault code table

### *Isuzu I-Tec*

| Flash/ FCR code | Description |
|---|---|
| 12 | Engine is not started (Trooper) |
| 12 | Start of fault code output (Piazza) |
| 13 | Oxygen sensor (OS) or OS circuit |
| 14 | Coolant temperature sensor (CTS) or CTS circuit |
| 15 | Coolant temperature sensor (CTS) or CTS circuit |
| 21 | Throttle switch (TS), idle and full-load contacts both closed |
| 22 | Starter signal circuit |
| 23 | Power transistor for ignition or circuit |
| 25 | Vacuum switching valve system for pressure regulator or circuit |
| 26 | Carbon filter solenoid valve (CFSV) or CFSV circuit, high voltage |
| 27 | Carbon filter solenoid valve (CFSV) or CFSV circuit, low voltage |
| 33 | Fuel injector system or fuel injector circuit |
| 35 | Power transistor for ignition or circuit |
| 41 | Crank angle sensor (CAS) or CAS circuit |
| 43 | Throttle switch (TS), full-load switch |
| 44 | Oxygen sensor (OS) or OS circuit |
| 45 | Oxygen sensor (OS) or OS circuit |
| 51 | Electronic control module (ECM) or ECM circuit |
| 52 | Electronic control module (ECM) or ECM circuit |
| 53 | Vacuum switching valve system for pressure regulator or circuit |
| 54 | Ignition control |
| 61 | Airflow sensor (AFS) or AFS circuit |
| 62 | Airflow sensor (AFS) or AFS circuit |
| 63 | Vehicle speed sensor (VSS) or VSS circuit |
| 64 | Fuel injector system or fuel injector circuit |
| 65 | Throttle switch (TS), full-load switch |
| 66 | Knock sensor |
| 72 | Exhaust gas regulation (EGR) or EGR circuit |
| 73 | Exhaust gas regulation (EGR) or EGR circuit |

# Chapter 16
# Jaguar

## Contents

**Index of vehicles**
**Self-Diagnosis**
Clearing fault codes without a fault code reader (FCR) . . . . . 4
Guide to test procedures . . . . . 6
Introduction . . . . . 1
Retrieving fault codes without a fault code reader (FCR) . . . . . 3
Self-Diagnosis connector location . . . . . 2
Self-Diagnosis with a fault code reader (FCR) . . . . . 5
**Fault code tables**

## Index of vehicles

| Model | Engine code | Year | System |
|---|---|---|---|
| **This Chapter** | | | |
| XJ6/Sovereign 3.2 DOHC cat | AJ-6 | 1990 to 1994 | Lucas LH-15CU |
| XJ6/Sovereign 3.6 24V | AJ-6 | 1986 to 1989 | Lucas LH-9CU |
| XJ6/Sovereign 4.0 | AJ-6 | 1991 to 1997 | Lucas LH-15CU |
| XJ-S 4.0 | AJ-6 | 1991 to 1997 | Lucas LH-15CU |
| **Other Jaguar vehicles/systems not covered by this book** | | | |
| Double 6 6.0 SOHC cat | V12 | 1993 to 1994 | Lucas LH-36CU |
| V12 6.0 SOHC cat | V12 | 1993 to 1994 | Lucas LH-36CU |
| XJ6 3.2 DOHC 24V | AJ16 | 1994 to 1997 | Lucas GEMS |
| XJ6 4.0 Sport | AJ16 | 1994 to 1997 | Lucas GEMS |
| XJR 4 0 Supercharged | AJ16 | 1994 to 1997 | Lucas GEMS |
| XJ-S V12 6.0 | V12 | 1993 to 1996 | Lucas LH-36CU |
| XJ-S V12 6.0 R-cat | V12 | 1993 to 1997 | Lucas LH-36CU |
| XJ12 6.0 V12 SOHC | V12 | 1994 to 1997 | Lucas LH-36CU |
| XJ-S & XJSC V12 OHC | V12 | 1990 to 1993 | Lucas LH-26CU |
| XJ-S & XJSC V12 R-cat | V12 | 1990 to 1993 | Lucas LH-26CU |

## Self-Diagnosis

### 1 Introduction

The engine management systems (EMSs) fitted to Jaguar vehicles are mainly of Lucas origin, and include LH-9CU, LH-15CU, LH-26CU and LH-36CU. All Jaguar engine management systems control primary ignition, fuelling and idle functions from within the same control module. Lucas LH-9CU and LH-15CU alone are covered by this book. Fault code tables and methods of retrieving data for other models were not available at the time of going to press. However, it is certain that a dedicated fault code reader (FCR) is required to retrieve codes and other data from the majority of Jaguar models.

#### *Self-Diagnosis (SD) function*

Each ECM has a self-test capability that continually examines the signals from certain engine sensors and actuators, which then compares each signal to a table of programmed values. If the diagnostic software determines that a fault is present, the ECM stores one or more fault codes. Codes will not be stored about components for which a code is not available, or for conditions not covered by the diagnostic software.

Lucas LH-9CU and LH-15CU systems generate 2-digit fault codes for retrieval and display on the facia-mounted vehicle condition monitor, and for retrieval by a dedicated FCR.

#### *Limited operating strategy (LOS)*

Jaguar systems featured in this Chapter utilise LOS (a function that is commonly called the "limp-home mode"). Once certain codes have been identified (not all codes will initiate LOS), the ECM will implement LOS and refer to a programmed default value rather than the sensor signal. This enables the vehicle to be safely driven to a workshop/garage for repair or testing. Once the fault has cleared, the ECM will revert to normal operation.

#### *Adaptive or learning capability*

Jaguar systems also utilise an adaptive function that will modify the basic programmed values for most effective operation during normal running, and with due regard to engine wear.

#### *Self-Diagnosis (SD) display (vehicle condition monitor)*

Jaguar models are equipped with a facia-mounted SD display panel called the vehicle condition monitor.

### 2 Self-Diagnosis connector location

The SD connector provided for FCR use is located in front of the battery in the engine compartment. The connector is usually coloured brown, round and is of 6-pin design. In addition, the vehicle is equipped with a vehicle condition monitor (VCM) for fault code retrieval. The VCM is mounted below the instrument panel **(see illustration 16.1)**.

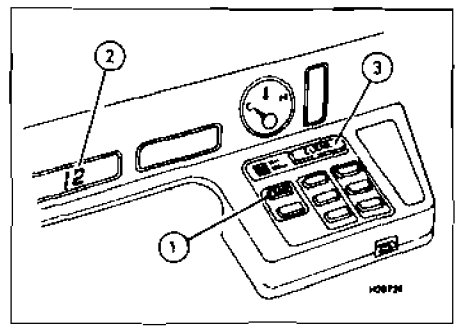


**16.1 Vehicle condition monitor**

*1 Button*
*2 Code display*
*3 VCM display clear button*

## 3 Retrieving fault codes without a fault code reader (FCR)

**Note:** *During the course of certain test procedures, it is possible for additional fault codes to be generated. Care must be taken that any codes generated during test routines do not mislead diagnosis. Codes must be cleared once testing is complete.*

**1** Fault codes can be retrieved from Jaguar vehicles via the vehicle condition monitor (VCM).

**2** If the engine is running, stop the engine by turning off the ignition and wait for a minimum period of 5 seconds before proceeding.

**3** Switch on the ignition.

**4** Press the VCM button on the facia and codes will be displayed. If an asterisk appears on the VCM display, multiple faults have been detected.

**5** Turning off the ignition ends fault code retrieval.

## 4 Clearing fault codes without a fault code reader (FCR)

**1** Turn off the ignition and disconnect the battery negative terminal for a period of at least 30 seconds.

**2** Reconnect the battery negative terminal.

**Note:** *The first drawback to this method is that battery disconnection will re-initialise all ECM adaptive values. Re-learning the appropriate adaptive values requires starting the engine from cold, and driving at various engine speeds for approximately 20 to 30 minutes. The engine should also be allowed to idle for approximately 10 minutes. The second drawback is that the radio security codes, clock setting and other stored values will be initialised, and these must be re-entered once the battery has been reconnected. Where possible, an FCR should be used for code clearing on these vehicles.*

## 5 Self-Diagnosis with a fault code reader (FCR)

**Note 1:** *During the course of certain test procedures, it is possible for additional fault codes to be generated Care must be taken that any codes generated during test routines do not mislead diagnosis.*

**Note 2.** *Fault code tables and methods of retrieving data for systems other than Lucas LH-9CU and LH-15CU were not available at the time of going to press. However, it is certain that a dedicated FCR is required to retrieve codes and other data from the majority of Jaguar models.*

### *All Jaguar models*

**1** Connect an FCR to the SD connector Use the FCR for the following purposes, in strict compliance with the FCR manufacturer's instructions:

*a) Retrieving fault codes.*

*b) Clearing fault codes.*

**2** Codes must always be cleared after component testing, or after repairs involving the removal of an EMS component.

## 6 Guide to test procedures

**1** Use an FCR to interrogate the ECM for fault codes, or display the codes on the VCM, as described in Sections 3 or 5.

### *Codes stored*

**2** If one or more fault codes are gathered, refer to the fault code tables at the end of this Chapter to determine their meaning

**3** If several codes are gathered, look for a common factor such as a defective earth return or supply.

**4** Refer to the component test procedures in Chapter 4, where you will find a means of testing the majority of components and circuits found in the modern EMS.

**5** Once the fault has been repaired, clear the codes and run the engine under various conditions to determine if the problem has cleared.

**6** Check the ECM for fault codes once more Repeat the above procedures where codes are still being stored

**7** Refer to Chapter 3 for more information on how to effectively test the EMS.

### *No codes stored*

**8** Where a running problem is experienced, but no codes are stored, the fault is outside of the parameters designed into the SD system Refer to Chapter 3 for more information on how to effectively test the engine management system

**9** If the problem points to a specific component, refer to the test procedures in Chapter 4, where you will find a means of testing the majority of components and circuits found in the modern EMS

# Fault code tables

### *Lucas LH-9CU*

| Fault code | Description |
|---|---|
| 01 | Throttle pot sensor (TPS) or TPS circuit |
| 02 | Airflow sensor (AFS) or AFS circuit |
| 03 | Coolant temperature sensor (CTS) or CTS circuit |
| 04 | Throttle pot sensor (TPS) or TPS circuit |
| 05 | TPS or circuit/AFS or circuit |
| 06 | TPS or circuit/AFS or circuit |
| 07 | Vehicle speed sensor (VSS) or VSS circuit |

### *Lucas LH-15CU*

| FCR code | Description |
|---|---|
| 11 | Throttle pot sensor (TPS) or TPS circuit |
| 12 | Airflow sensor (AFS) or AFS circuit |
| 14 | Coolant temperature sensor (CTS) or CTS circuit |
| 16 | Air temperature sensor (ATS) or ATS circuit |
| 17 | Throttle pot sensor (TPS) or TPS circuit |
| 18 | Throttle pot sensor (TPS) or TPS circuit, signal resistance low at idle |
| 18 | Airflow sensor (AFS) or AFS circuit, signal resistance low at idle (alternative code) |
| 19 | Throttle pot sensor (TPS) or TPS circuit, signal resistance high at idle |
| 19 | Airflow sensor (AFS) or AFS circuit, signal resistance high at idle (alternative code) |
| 22 | Heated oxygen sensor (OS) or OS circuit |
| 22 | Fuel pump or fuel pump circuit |
| 23 | Fuel supply or circuit, rich exhaust indicated |
| 24 | Ignition amplifier supply or circuit |
| 26 | Oxygen sensor (OS) or OS circuit, lean exhaust/vacuum leak |
| 29 | Electronic control module (ECM), self check |
| 33 | Fuel injector or fuel injector circuit |
| 34 | Fuel injector or fuel injector circuit |
| 37 | Exhaust gas recirculation (EGR) solenoid circuit |
| 39 | Exhaust gas recirculation (EGR) circuit |
| 44 | Oxygen sensor (OS) or OS circuit, rich or lean condition |
| 46 | Idle speed control valve (ISCV) coil 1 or ISCV circuit |
| 47 | Idle speed control valve (ISCV) coil 2 or ISCV circuit |
| 48 | Idle speed control valve (ISCV) or ISCV circuit |
| 68 | Vehicle speed sensor (VSS) or VSS circuit, incorrect signal voltage |
| 69* | Neutral safety switch circuit, engine cranks in drive. |
| 89 | Carbon filter solenoid valve (CFSV) or CFSV circuit |

***Note:** *1990 and 1991 models: Code 69 may be set erroneously if voltage drops sufficiently during cranking. Check battery and then rotary switch adjustment to remedy.*

# Chapter 17
# Kia

## Contents

**Index of vehicles**
**Self-Diagnosis**
Clearing fault codes without a fault code reader (FCR) . . . . . 4
Guide to test procedures . . . . . 6
Introduction . . . . . 1
Retrieving fault codes without a fault code reader (FCR) - flash codes . . . . . 3
Self-Diagnosis connector location . . . . . 2
Self-Diagnosis with a fault code reader (FCR) . . . . . 5
**Fault code tables**

## Index of vehicles

| Model | Engine code | Year | System |
|---|---|---|---|
| Mentor 1.6i SOHC 8V | - | 1995 to 1997 | Kia EGi |
| Sportage 2.0i SOHC 8V | FE | 1995 to 1997 | Bosch Motronic M2.10.1 |
| Sportage 2.0i DOHC 16V | FE | 1995 to 1997 | Bosch Motronic M2.10.1 |

## Self-Diagnosis

### 1 Introduction

Kia vehicles are equipped with the Kia EGi and Bosch Motronic engine management systems that control primary ignition, fuel injection and idle functions from within the same control module

#### *Self-Diagnosis (SD) function*

The electronic control module (ECM) has a self-test capability that continually examines the signals from certain engine sensors and actuators, and then compares each signal to a table of programmed values. If the diagnostic software determines that a fault is present, the ECM stores one or more fault codes in the ECM memory. Codes will not be stored about components for which a code is not available, or for conditions not covered by the diagnostic software. Kia systems generate 2-digit fault codes (Kia EGi) or 3-digit fault codes (Bosch Motronic 2.10.1) for retrieval by manual means or by a dedicated fault code reader (FCR).

#### *Limited operating strategy (LOS)*

Kia systems featured in this Chapter utilise LOS (a function that is commonly called the "limp-home mode"). Once certain faults have been identified (not all faults will initiate LOS), the ECM will implement LOS and refer to a programmed default value rather than the sensor signal. This enables the vehicle to be safely driven to a workshop/garage for repair or testing. Once the fault has cleared, the ECM will revert to normal operation.

#### *Adaptive or learning capability*

Kia systems also utilise an adaptive function that will modify the basic programmed values for most effective operation during normal running, and with due regard to engine wear.

### 2 Self-Diagnosis connector location

**Note:** *The Kia SD connector is provided both for retrieving flash codes and for dedicated FCR use.*

#### *Mentor 1.6i (EGi)*

The SD connector is attached to the engine compartment bulkhead **(see illustration 17.1)**

#### *Sportage 2.0i (Bosch Motronic)*

The SD connector is located behind the airflow sensor, adjacent to the left-hand inner wing **(see illustration 17.2)**.

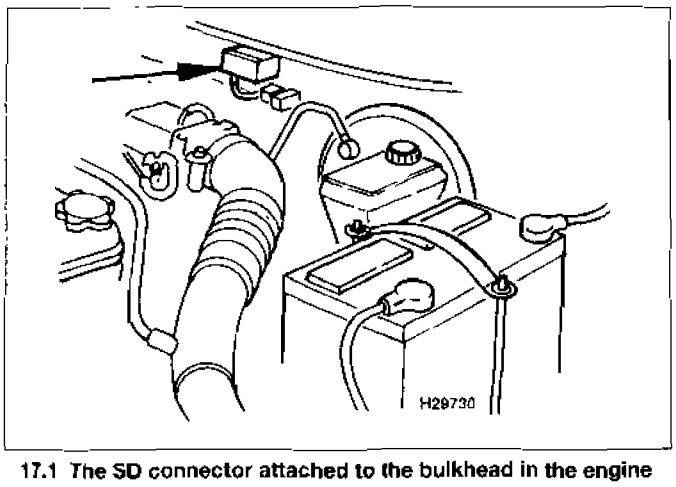


**17.1 The SD connector attached to the bulkhead in the engine compartment (arrowed)**

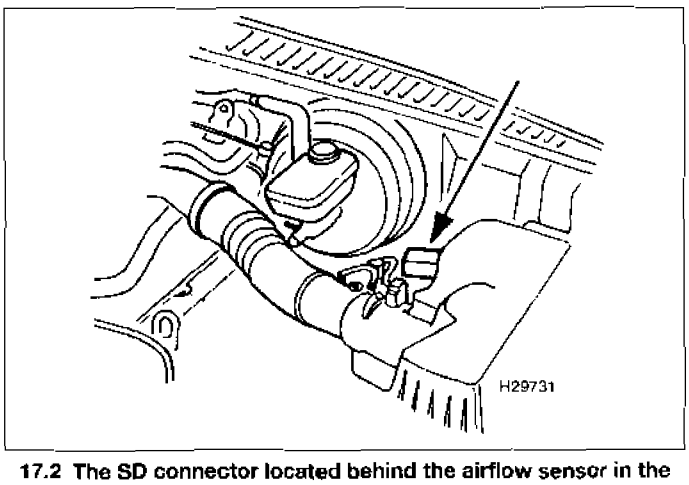


**17.2 The SD connector located behind the airflow sensor in the engine compartment (arrowed)**

## 3 Retrieving fault codes without a fault code reader (FCR) - flash codes

**Note:** *During the course of certain test procedures, it is possible for additional fault codes to be generated. Care must be taken that any codes generated during test routines do not mislead diagnosis. All codes must be cleared once testing is complete.*

**1** Attach an LED positive probe to terminal A and the negative probe to terminal B in the SD connector **(see illustration 17.3) Note:** *If the LED does not behave as described, reverse the connections to the SD connector*

**2** Connect a jumper lead between terminals C and D in the SD connector **(refer to illustration 17.3)**

**3** Switch on the ignition. The light on the LED will illuminate for 3 seconds and then extinguish

**4** If the ECM has stored one or more fault codes, the LED will then flash the 2-digit codes as follows

*a) The two digits are indicated by two series of flashes*

*b) The first series of flashes indicates the multiples of ten, the second series of flashes indicates the single units*

*c) Tens are indicated by a 1 2-second flash*

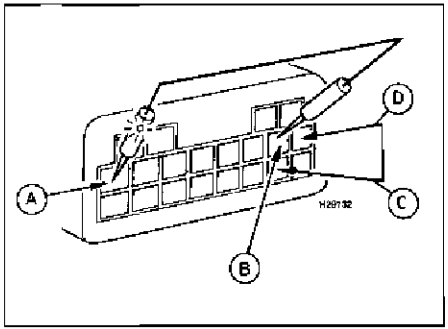


**17.3 SD connector terminals for fault code retrieval**

*A Tester positive terminal*
*B Tester negative terminal*
*C Terminal for jumper lead bridge*
*D Terminal for jumper lead bridge*

## 4 Clearing fault codes without a fault code reader (FCR)

**1** Disconnect the negative battery terminal, and press the brake pedal for at least 5 seconds

**2** Reconnect the battery negative terminal

**Note** *The first drawback to this method is that battery disconnection will re-initialise all ECM adaptive values. Re-learning the appropriate adaptive values requires starting the engine from cold, and driving at various engine*

### *All Kia models*

**1** Connect an FCR to the SD connector. Use the FCR for the following purposes in strict compliance with the FCR manufacturer's instructions:

*a) Retrieving fault codes*

*b) Clearing fault codes*

**2** Codes must always be cleared after component testing, or after repairs involving the removal or replacement of an engine management system component

## 6 Guide to test procedures

**1** Use an FCR to interrogate the ECM for fault codes, or gather codes manually as described in Sections 3 or 5

### *Codes stored*

**2** If one or more fault codes are gathered, refer to the fault code tables at the end of this Chapter to determine their meaning

**3** If several codes are gathered, look for a common factor such as a defective earth return or supply.

**4** Refer to the component test procedures in Chapter 4, where you will find a means of testing the majority of components and circuits found in the modern EMS

**5** Once the fault has been repaired, clear the codes and run the engine under various

Faul

Kia EGi

Flash/ FCR co

02
03
08
09
10
12
14
15
17
25
26
34

Bosc

Flash code

02
03
07
08
09
11

# ault code tables

### a EGI

| sh/ CR code | Description |
|---|---|
| | Engine speed sensor |
| | *Cylinder identification (CID) sensor or CID sensor circuit* |
| | Airflow sensor (AFS) or AFS circuit |
| | Coolant temperature sensor (CTS) or CTS circuit |
| | Air temperature sensor (ATS) or ATS circuit |
| | Throttle pot sensor (TPS) or TPS circuit |
| | Atmospheric pressure sensor (APS) or APS circuit |
| | Oxygen sensor (OS) or OS circuit |
| | Oxygen sensor (OS) or OS circuit |
| | Fuel pressure regulator solenoid valve |
| | Carbon filter solenoid valve (CFSV) or CFSV circuit |
| | Idle speed control valve (ISCV) or ISCV circuit |

### osch Motronic M2.10.1

| lash ode | FCR code | Description |
|---|---|---|
| | 047 | Crank angle sensor (CAS) or CAS circuit |
| | 008 | Cylinder identification (CID) sensor or CID sensor circuit |
| | 229 | Cylinder identification (CID) sensor or CID sensor circuit |
| | 007 | Airflow sensor (AFS) or AFS circuit |
| | 045 | Coolant temperature sensor (CTS) or CTS circuit |
| | 169 | Electronic control module (ECM) |

| Flash code | FCR code | Description |
|---|---|---|
| 12 | 053 | Throttle pot sensor (TPS) or TPS circuit |
| 15 | 028 | Oxygen sensor (OS) or OS circuit |
| 17 | 065 | Oxygen sensor (OS) or OS circuit |
| 18 | 017 | Injector valve No. 1 or Injector valve circuit |
| 19 | 016 | Injector valve No. 2 or Injector valve circuit |
| 20 | 035 | Injector valve No. 3 or Injector valve circuit |
| 21 | 034 | Injector valve No. 4 or Injector valve circuit |
| 24 | 003 | Fuel pump or circuit |
| 26 | 005 | Carbon filter solenoid valve (CFSV) or CFSV circuit |
| 28 | 121 | Exhaust gas recirculation (EGR) valve or EGR circuit |
| 34 | 004 | Idle speed control valve (ISCV) or ISCV circuit |
| 35 | 103 | Oxygen sensor (OS) or OS circuit |
| 36 | 102 | Oxygen sensor (OS) or OS circuit |
| 37 | 104 | Oxygen sensor (OS) or OS circuit |
| 46 | 136 | Air conditioning (A/C) |
| 48 | 141 | Electronic control module (ECM) |
| 48 | 142 | Electronic control module (ECM) |
| 49 | 143 | Electronic control module (ECM) |
| 56 | 22 | Idle speed control valve (ISCV) or ISCV circuit |
| 57 | 040 | Air conditioning (A/C) |
| 73 | 009 | Crank angle sensor (CAS) or CAS circuit |
| 88 | 154 | Electronic control module (ECM) |
| 99 | 153 | Electronic control module (ECM) |
| 99 | 037 | Battery voltage supply to ECM, voltage low |

# Chapter 18
# Lancia

## Contents

**Index of vehicles**
**Self-Diagnosis**
Clearing faults without a fault code reader (FCR) . . . . . 4
Guide to test procedures . . . . . 6
Introduction . . . . . 1
Retrieving faults without a fault code reader (FCR) . . . . . 3
Self-Diagnosis connector location . . . . . 2
Self-Diagnosis with a fault code reader (FCR) . . . . . 5
**Fault table**



## Index of vehicles

| Model | Engine code | Year | System |
|---|---|---|---|
| Y10 LXie and 4wd 1108 SOHC FIRE | 156 C.000 | 1989 to 1993 | Bosch Mono-Jetronic A2.2 |
| Y10 1108ie and 4x4 SOHC cat | 156 C.046 | 1990 to 1992 | Bosch Mono-Jetronic A2.2 |
| Y10 1108ie and 4x4 SOHC cat | 156 C.046 | 1992 to 1994 | Bosch Mono-Motronic MA1.7 |
| Dedra 1.6ie SOHC | 835 A1.000 | 1990 to 1994 | Weber MIW Centrajet 2 |
| Dedra 1600ie SOHC cat | 835 A1.046 | 1990 to 1994 | Bosch Mono-Jetronic A2.2 |
| Dedra 1.8ie DOHC | 835 A2.000 | 1990 to 1993 | Weber-Marelli IAW MPi |
| Dedra 1.8ie DOHC cat | 835 A2.046 | 1990 to 1994 | Weber-Marelli IAW MPi |
| Dedra 2.0ie DOHC | 835 A5.000 | 1990 to 1992 | Weber-Marelli IAW MPi |
| Dedra 2.0ie DOHC cat | 835 A5.045 | 1990 to 1994 | Weber-Marelli IAW MPi |
| Dedra 2.0ie DOHC cat | 835 A5.046 | 1990 to 1994 | Weber-Marelli IAW MPi |
| Dedra 2.0ie DOHC Turbo and cat | 835 A8.000 | 1991 to 1996 | Weber-Marelli IAW MPi |
| Dedra 2.0ie Integrale Turbo and cat | 835 A7.000 | 1991 to 1996 | Weber-Marelli IAW MPi |
| Delta 2.0 16V Turbo | 836.A2.000 | 1993 to 1997 | Weber-Marelli IAW MPi |
| Delta 1600ie DOHC | 831 B7.000 | 1986 to 1989 | Weber-Marelli IAW MPi |
| Delta 1600ie DOHC | 831 B7.000 | 1989 to 1990 | Weber-Marelli IAW MPi |
| Delta 1600ie DOHC static | 831 B7.000 | 1991 to 1992 | Weber-Marelli IAW MPi |
| Delta HF Turbo and Martini 1600 DOHC | 831 B3.000 | 1986 to 1992 | Weber-Marelli IAW MPi |
| Delta HF Turbo DOHC cat | 831 B7.046 | 1991 to 1993 | Weber-Marelli IAW MPi |
| Delta HF Integrale Turbo DOHC | 831 B5.000 | 1988 to 1989 | Weber-Marelli IAW MPi |
| Delta HF Integrale Turbo DOHC | 831 C5.000 | 1988 to 1989 | Weber-Marelli IAW MPi |
| Delta HF Integrale Turbo 16V DOHC | 831 D5.000 | 1989 to 1992 | Weber-Marelli IAW MPi |
| Delta HF Integrale Turbo 16V and cat | 831 E5.000 | 1991 to 1994 | Weber-Marelli IAW MPi |
| Prisma 1600ie DOHC | 831 B7.000 | 1986 to 1989 | Weber-Marelli IAW MPi |
| Prisma 1600ie DOHC | 831 B7.000 | 1989 to 1990 | Weber-Marelli IAW MPi |
| Prisma 1600ie DOHC static | 831 B7.000 | 1991 to 1992 | Weber-Marelli IAW MPi |
| Scudo 1.6i | 220 A2.000 | 1996 to 1997 | Bosch Motronic 1.7 |
| Thema FL 2000ie 16V DOHC cat | 834 F1.000 | 1992 to 1994 | Bosch Motronic M1.7 |
| Thema FL 2000ie Turbo 16V DOHC cat | 834 F2.000 | 1992 to 1994 | Bosch Motronic M2.7 |
| Thema FL 3000 V6 SOHC cat | 834 F.000 | 1992 to 1994 | Bosch Motronic M1.7 |

# Self-Diagnosis

## 1 Introduction

The engine management systems (EMSs) fitted to Lancia vehicles are mainly of Bosch or Weber-Marelli origin, and include Bosch Motronic versions 1.7, 2.7 and Weber-Marelli IAW. Other systems include Bosch Mono-Jetronic A2.2, Bosch Mono-Motronic and Weber Centrajet. Apart from Mono-Jetronic, Lancia engine management systems control the primary ignition, fuelling and idle functions from within the same control module. The Mono-Jetronic system controls fuelling and idle speed alone.

### *Self-Diagnosis (SD) function*

Each ECM has a self-test capability that continually examines the signals from certain engine sensors and actuators, and compares each signal to a table of programmed values. If the diagnostic software determines that a fault is present, the ECM stores a fault. Codes will not be stored about components for which a code is not available, or for conditions not covered by the diagnostic software.

Lancia software does not generate fault code numbers - a fault code reader (FCR) normally displays any faults on the FCR screen without reference to a specific code number. Although actual code numbers are not available, faults in one or more of the circuits and components covered by the diagnostic software will cause a fault to be stored. Flash codes are not available - a dedicated FCR is required for code retrieval.

### *Limited operating strategy (LOS)*

Lancia systems featured in this Chapter utilise LOS (a function that is commonly called the "limp-home mode"). Once certain faults have been identified (not all faults will initiate LOS), the ECM will implement LOS and refer to a programmed default value rather than the sensor signal. This enables the vehicle to be safely driven to a workshop/garage for repair or testing. Once the fault has cleared, the ECM will revert to normal operation.

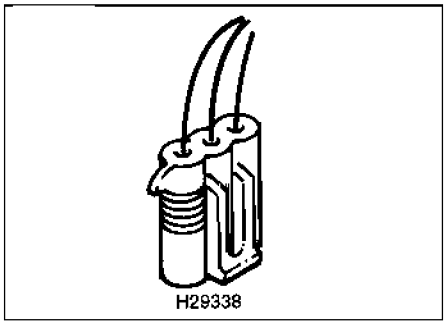


**18.1 3-pin SD connector used for retrieving fault codes from Lancia systems**

### *Adaptive or learning capability*

Lancia systems also utilise an adaptive function that will modify the basic programmed values for most effective operation during normal running, and with due regard to engine wear.

### *Self-Diagnosis (SD) warning light*

Many Lancia models are equipped with an SD warning light located within the instrument panel. When the ignition is switched on, the light will illuminate. Once the engine has started, the light will extinguish if the diagnostic software determines that a system fault is not present. If the light illuminates at any time during a period of engine running, the ECM has diagnosed presence of a system fault.

## 2 Self-Diagnosis connector location

**Note:** *Flash codes are not available in Lancia systems, and the SD connector is provided for connection to a dedicated FCR alone.*

### *Bosch Motronic 1.7*

The 3-pin SD connector **(see illustration 18.1)** is usually located close to the ECM under the passenger's side glove compartment.

### *Bosch Mono-Jetronic A2.2*

The 3-pin SD connector is usually located on the bulkhead, or may be situated close to the ECM under the passenger's side glove compartment, or in the centre console.

### *Bosch Mono-Motronic MA 1.7*

The 3-pin SD connector is usually located beside the ECM on the right-hand wing in the engine compartment. Alternative locations are close to the ECM under the passenger's side glove compartment, or in the centre console.

### *Weber-Marelli MPi*

The 3-pin SD connector is usually located in the engine compartment on the right-hand bulkhead or under the passenger's side facia, close to the ECM.

### *Weber Centrajet*

The 3-pin SD connector is usually located beside the ECM on the front right-hand wing in the engine compartment.

## 3 Retrieving faults without a fault code reader (FCR)

A fault code reader (FCR) is required to display faults generated in SD systems fitted to Lancia vehicles - although an SD warning light is fitted to many Lancia models, it cannot be used to display flash codes

## 4 Clearing faults without a fault code reader (FCR)

### *All systems*

1 Turn off the ignition and disconnect the battery negative terminal for a period of approximately 2 minutes.

2 Reconnect the battery negative terminal

**Note:** *The first drawback to this method is that battery disconnection will re-initialise all ECM adaptive values. Re-learning the appropriate adaptive values requires starting the engine from cold, and driving at various engine speeds for approximately 20 to 30 minutes. The engine should also be allowed to idle for approximately 10 minutes. The second drawback is that the radio security codes, clock setting and other stored values will be initialised, and these must be re-entered once the battery has been reconnected. Where possible, an FCR should be used for code clearing.*

## 5 Self-Diagnosis with a fault code reader (FCR)

**Note:** *During the course of certain test procedures, it is possible for additional fault codes to be generated. Care must be taken that any codes generated during test routines do not mislead diagnosis.*

### *All Lancia models*

1 Connect an FCR to the SD connector. Use the FCR for the following purposes, in strict compliance with the FCR manufacturer's instructions:

*a) Displaying system faults.*
*b) Clearing stored system faults.*
*c) Testing actuators.*
*d) Displaying Datastream.*
*e) Making adjustments to the ignition timing or mixture (some vehicles).*

2 Stored faults must always be cleared after component testing, or after repairs involving the removal of an EMS component.

## 6 Guide to test procedures

1 Use an FCR to interrogate the ECM for faults.

### *Faults stored*

2 If several faults are gathered, look for a common factor such as a defective earth return or supply.

3 Refer to the component test procedures in Chapter 4, where you will find a means of

testing the majority of components and circuits found in the modern EMS.
4 Once the fault has been repaired, clear the faults and run the engine under various conditions to determine if the problem has cleared.
5 Check the ECM for faults once more. Repeat the above procedures where faults are still being stored.
6 Refer to Chapter 3 for more information on how to effectively test the EMS

### *No faults stored*

7 Where a running problem is experienced, but no faults are stored, the fault is outside of the parameters designed into the SD system. Refer to Chapter 3 for more information on how to effectively test the engine management system.
8 If the problem points to a specific component, refer to the test procedures in Chapter 4, where you will find a means of testing the majority of components and circuits found in the modern EMS.

# Fault table

### *All Lancia models*

Lancia software does not usually generate fault codes. The FCR normally displays faults on the FCR screen without reference to a specific code number. Although actual code numbers are not available, faults in one or more of the following list of circuits and components will cause a fault to be stored.

**Circuits checked by Lancia SD system**

*Adaptive control limits. When the limits are reached, this suggests a serious engine (mechanical) condition.*
*Air temperature sensor (ATS) or ATS circuit*
*Battery voltage too low or too high*
*Crank angle sensor (CAS) or CAS circuit loss of signal*
*Carbon filter solenoid valve (CFSV) or CFSV circuit*
*Coolant temperature sensor (CTS) or CTS circuit*
*Electronic control module (ECM)*
*Distributor phase sensor circuit (CID)*
*Ignition coils control*
*Injector control or injector circuit*
*Knock sensor (KS) or KS circuit*
*Oxygen sensor (OS) or OS circuit*
*Manifold absolute pressure (MAP) sensor or MAP sensor circuit*
*Manifold absolute pressure (MAP) sensor - no correlation between MAP signal and throttle position sensor (TPS) and crank angle sensor (CAS) signals*
*Mismatch between crank angle sensor (CAS) signal and distributor phase sensor signal or circuit*
*Oxygen sensor (OS) or OS circuit*
*Relay control or circuit*
*Self-diagnosis (SD) warning light or circuit*
*Idle speed stepper motor (ISSM) or ISSM circuit*
*Tachometer or circuit*
*Throttle pot sensor (TPS) or TPS circuit*

# Chapter 19
# Land Rover

## Contents

**Index of vehicles**
**Self-Diagnosis**
Clearing fault codes without a fault code reader (FCR) . . . . . 4
Guide to test procedures . . . . . 6
Introduction . . . . . 1
Retrieving fault codes without a fault code reader (FCR) . . . . . 3
Self-Diagnosis connector location . . . . . 2
Self-Diagnosis with a fault code reader (FCR) . . . . . 5
**Fault code tables**

## Index of vehicles

| Model | Engine code | Year | System |
|---|---|---|---|
| Discovery MPi 2.0 20HD DOHC 16V | M16i | 1993 to 1995 | Rover MEMS MPi |
| Discovery 2.0 MPi DOHC 16V | 20T4 | 1995 to 1997 | Rover MEMS MPi |
| Discovery 3.5 V8i | V8 | 1990 to 1992 | Lucas 14CUX |
| Discovery 3.5 V8i cat | V8 | 1990 to 1995 | Lucas 14CUX |
| Discovery 3.9i V8 | V8 | 1995 to 1997 | Lucas 14CUX |
| Range Rover 3.9 EFi V8 | 3.9L | 1989 to 1996 | Lucas 14CUX |
| Range Rover 4.0i | 4.0L | 1994 to 1997 | Lucas 14CUX |
| Range Rover 4.2i cat | 4.2L | 1992 to 1994 | Lucas 14CUX |

## Self-Diagnosis

### 1 Introduction

The engine management systems (EMSs) fitted to Land Rover vehicles are of Lucas or Rover origin. Rover MEMS controls primary ignition, fuelling and idle functions from within the same control module. Lucas 14CUX controls fuel injection and idle functions alone.

#### *Self-Diagnosis (SD) function*

Each electronic control module (ECM) has a self-test capability that continually examines the signals from certain engine sensors and actuators, and then compares each signal to a table of programmed values. If the diagnostic software determines that a fault is present, the ECM stores one or more fault codes in the ECM memory. Codes are not stored about components for which a code is not available or for conditions not covered by the diagnostic software.

Lucas 14CUX generates 2-digit fault codes for retrieval by a dedicated fault code reader (FCR).

Rover MEMS software does not generate fault code numbers - a fault code reader normally displays faults on the FCR screen without reference to a specific code number. Although actual code numbers are not available, faults in one or more of the circuits and components covered by the diagnostic software will cause a fault to be stored.

It is not possible to retrieve flash codes from the Lucas 14CUX system or from Rover MEMS.

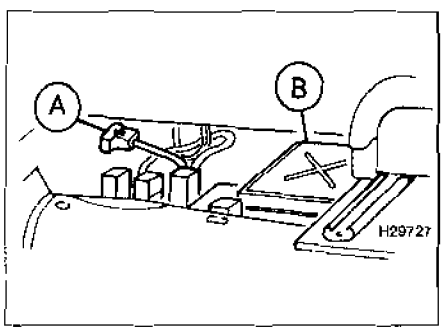


**19.1 Location of SD connector and ECM - Lucas 14CUX, early models**

*A SD connector* *B ECM*

#### *Limited operating strategy (LOS)*

Land Rover systems featured in this Chapter utilise LOS (a function that is commonly called the "limp-home mode"). Once certain faults have been identified (not all faults will initiate LOS), the ECM will implement LOS and refer to a programmed default value rather than the sensor signal. This enables the vehicle to be safely driven to a workshop/garage for repair or testing. Once the fault has cleared, the ECM will revert to normal operation.

#### *Adaptive or learning capability*

Land Rover systems also utilise an adaptive function that will modify the basic programmed values for most effective operation during normal running, and with due regard to engine wear.



### 2 Self-Diagnosis connector location

#### *Lucas 14CUX*

The SD connector is located either under the driver's seat (early models) or behind the driver's footwell kick-panel trim (later models) **(see illustrations 19.1 and 19.2)** and is provided for use by a dedicated FCR alone.

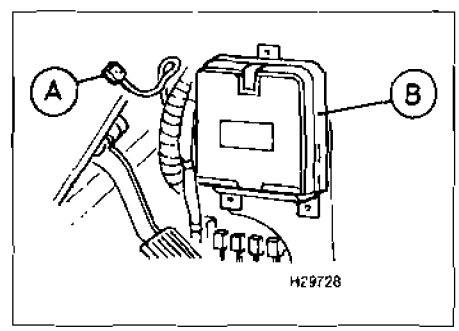


**19.2 Location of SD connector and ECM - Lucas 14CUX, later models**

*A SD connector* *B ECM*

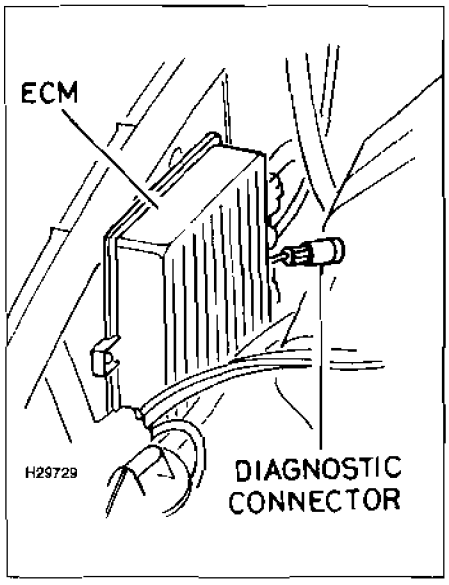


**19.3 Location of SD connector and ECM - Rover MEMS**

### *Rover MEMS*

The SD connector is located in the engine compartment close to the ECM on the right-hand wing. **(see illustration 19.3)**, and is provided for use by a dedicated FCR alone.

## 3 Retrieving fault codes without a fault code reader (FCR)

The only method of retrieving fault codes from Lucas 14CUX and Rover MEMS is by use of a dedicated FCR.

## 4 Clearing fault codes without a fault code reader (FCR)

The only method of clearing fault codes from Lucas 14CUX and Rover MEMS is by use of a dedicated FCR.

Rover MEMS employs non-volatile memory, and codes will remain stored even with the battery disconnected. An FCR must be used to clear codes from MEMS systems

## 5 Self-Diagnosis with a fault code reader (FCR)

**Note:** *During the course of certain test procedures, it is possible for additional fault codes to be generated. Care must be taken that any codes generated during test routines do not mislead diagnosis.*

### *All Land Rover models*

**1** Connect an FCR to the SD connector Use the FCR for the following purposes, in strict compliance with the FCR manufacturer's instructions:

*a) Displaying fault codes and system faults.*
*b) Clearing fault codes and system faults.*
*c) Testing actuators.*
*d) Displaying Datastream.*
*e) Making adjustments to the mixture (some non-cat vehicles)*

**2** Stored faults must always be cleared after component testing, or after repairs involving the removal or replacement of an EMS component.

## 6 Guide to test procedures

**1** Use an FCR to interrogate the ECM for fault codes.

### *Codes stored*

**2** If one or more fault codes are gathered, refer to the fault code tables at the end of this Chapter to determine their meaning.
**3** If several codes are gathered, look for a common factor such as a defective earth return or supply.
**4** Refer to the component test procedures in Chapter 4, where you will find a means of testing the majority of components and circuits found in the modern EMS.
**5** Once the fault has been repaired, clear the codes and run the engine under various conditions to determine if the problem has cleared.
**6** Check the ECM for fault codes once more Repeat the above procedures where codes are still being stored.
**7** Refer to Chapter 3 for more information on how to effectively test the EMS.

### *No codes stored*

**8** Where a running problem is experienced, but no codes are stored, the fault is outside of the parameters designed into the SD system. Refer to Chapter 3 for more information on how to effectively test the engine management system.
**9** If the problem points to a specific component, refer to the test procedures in Chapter 4, where you will find a means of testing the majority of components and circuits found in the modern EMS.

# Fault code tables

### *Lucas 14CUX*

| FCR code | Description |
|---|---|
| 12 | Mass airflow (MAF) sensor or MAF sensor circuit |
| 14 | Coolant temperature sensor (CTS) or CTS circuit |
| 15 | Fuel temperature sensor (FTS) or FTS circuit |
| 17 | Throttle pot sensor (TPS) or TPS circuit |
| 18 | Throttle pot sensor (TPS) or TPS circuit |
| 19 | Throttle pot sensor (TPS) or TPS circuit |
| 21 | Electronic control module (ECM) or ECM circuit |
| 25 | Ignition misfire |
| 28 | Air leak |
| 29 | Electronic control module (ECM) memory check |
| 34 | Injector, bank A or injector circuit |
| 36 | Injector, bank B or injector circuit |
| 40 | Misfire, bank A or circuit |
| 44 | Oxygen sensor (OS) A or OS circuit |
| 45 | Oxygen sensor (OS) B or OS circuit |
| 48 | Idle air control valve (IACV) or IACV circuit |
| 50 | Misfire, bank B or circuit |
| 59 | Group fault - air leak or fuel supply |
| 68 | Vehicle speed sensor (VSS) or VSS circuit |
| 69 | Gear selector switch or circuit |
| 88 | Carbon filter solenoid valve (CFSV) or CFSV circuit |

### *Rover MEMS*

Rover MEMS software does not usually generate fault codes. The FCR normally displays faults on the FCR screen without reference to a specific code number. Although actual code numbers are not available, faults in one or more of the following list of circuits and components will cause a fault to be stored.

**Circuits checked by Rover MEMS system**

*Airflow sensor*
*Carbon filter solenoid valve*
*CO resistor*
*Coolant temperature sensor (CTS) or CTS circuit*
*Fuel pressure regulator*
*Fuel pump relay*
*Fuel temperature sensor*
*Idle speed stepper motor*
*Injector valves*
*Oxygen sensor (OS) or OS circuit*
*Throttle pot sensor (TPS) or TPS circuit*
*Vehicle speed sensor*

# Chapter 20
# Lexus

## Contents


**Index of vehicles**
**Self-Diagnosis**
Clearing fault codes without a fault code reader (FCR) ..... 4
Guide to test procedures ..... 6
Introduction ..... 1
Retrieving fault codes without a fault code reader (FCR) - flash codes ..... 3
Self-Diagnosis connector location ..... 2
Self-Diagnosis with a fault code reader (FCR) ..... 5
**Fault code table**


## Index of vehicles

| Model | Engine code | Year | System |
|---|---|---|---|
| Lexus GS300 | 2JZ-GE | 1993 on | Toyota TCCS |
| Lexus LS400 | 1UZ-FE | 1990 to 1993 | Toyota TCCS |

## Self-Diagnosis

### 1 Introduction

The engine management system (EMS) fitted to Lexus vehicles is the Toyota TCCS which controls the primary ignition, fuel injection and the idle functions from within the same control module.

#### *Self-Diagnosis (SD) function*

The electronic control module (ECM) has a self-test capability that continually examines the signals from certain engine sensors and actuators, and then compares each signal to a table of programmed values. If the diagnostic software determines that a fault is present, the ECM stores one or more fault codes in the ECM memory. Codes will not be stored about components for which a code is not available, or for conditions not covered by the diagnostic software.

#### *Limited operating strategy (LOS)*

Lexus models with Toyota TCCS featured in this Chapter utilise LOS (a function that is commonly called the "limp-home mode"). Once certain faults have been identified (not all faults will initiate LOS), the ECM will implement LOS and refer to a programmed default value rather than the sensor signal. This enables the vehicle to be safely driven to a workshop/garage for repair or testing. Once the fault has cleared, the ECM will revert to normal operation.

#### *Adaptive or learning capability*

Lexus with Toyota TCCS also utilises an adaptive function that will modify the basic programmed values for most effective operation during normal running, and with due regard to engine wear.

#### *Self-Diagnosis (SD) warning light*

Lexus vehicles are equipped with an SD warning light located within the instrument panel.

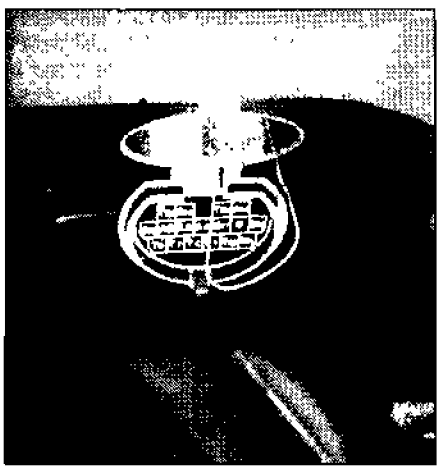

**20.1 The TDCL connector is located under the driver's side facia**

### 2 Self-Diagnosis connector location

The SD connector (Toyota data communication link, or TDCL) is located under the facia, on the driver's side **(see illustration 20.1)**

### 3 Retrieving fault codes without a fault code reader (FCR) - flash codes

**Note:** *During the course of certain test procedures, it is possible for additional fault codes to be generated. Care must be taken that any codes generated during testing do not mislead diagnosis. All codes must be cleared once testing is complete.*

**1** Ensure that the engine is at normal operating temperature, and that all switches and auxiliary equipment are turned off.
**2** The throttle switch must be functioning correctly, and the transmission in neutral before implementing the diagnostic procedure.
**3** Switch on the ignition, but do not start the engine.
**4** Use a jumper lead to bridge the terminals TE1 and E1 in the SD connector **(see illustration 20.2)**.
**5** The codes are output on the SD warning light. The flashing of the light indicates the 2-digit fault codes as follows:

*a) The two digits are indicated by two series of flashes.*
*b) The first series of flashes indicates the multiples of ten, the second series of flashes indicates the single units.*
*c) Both tens and units are indicated by 0.5-second flashes, separated by 0.5-second pauses.*

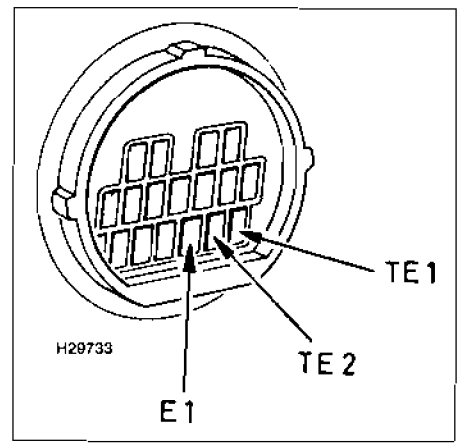


**20.2 Bridge terminals TE1 and E1 in the SD connector. This causes the system to flash the fault codes on the SD warning light**

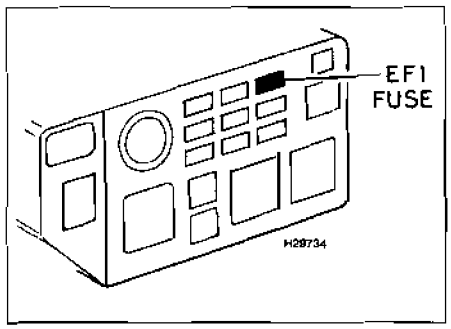


**20.3 Position of the EFi fuse in the fusebox**

*d) A 1.5-second pause separates the tens from the units. A 2.5-second pause separates the transmission of each individual code.*

*e) Code "34" is indicated by three 0.5-second flashes, followed by a 1.5-second pause, followed by four 0.5-second flashes.*

**6** Count the number of flashes in each series, and record each code as it is transmitted. Refer to the table at the end of the Chapter to determine the meaning of the fault code.

**7** Fault codes will be transmitted in sequential order, and repeated after the highest recorded code has been displayed.

**8** When all codes have been transmitted, the warning light will pause and then repeat the sequence.

**9** If no faults have been detected, the warning light will flash on and off every 0.5 seconds for eight flashes. After a 3-second pause, the sequence will be repeated.

**10** Turn off the ignition and remove the jumper lead to end fault code retrieval.

### Models with the 2JZ-GE engine

**Note:** *Ensure that the preparatory conditions, which were set for the fault code retrieval mode, are still applicable (see paragraphs 1 and 2). The jumper lead between terminals TE1 and E1 should be disconnected.*

**11** Use a jumper lead to bridge terminals TE2 and E1 in the SD connector **(refer to illustration 20.2)**.

**12** Switch on the ignition **Note:** *If the jumper lead is connected after the ignition is switched on, the test mode will fail to start.*

**13** The SD warning light will flash regularly to indicate that the system has initiated test mode.

**14** Start the engine and road test the vehicle. Drive at a speed of more than 6 mph (10 km/h), and attempt to reproduce the conditions during which the fault might occur.

**15** Bring the vehicle to a halt with the ignition still on

**16** Remove the jumper lead from terminals TE2 and E1, and place the lead between terminals TE1 and E1.

**17** The codes recorded during the road test will now be output on the SD warning light The flashing of the light indicates the 2-digit fault codes, in the same way as described previously (see paragraphs 5 to 9).

**18** Turn off the ignition and remove the jumper lead to end fault code retrieval.

## 4 Clearing fault codes without a fault code reader (FCR)

### Method 1

**1** Remove the 20-amp EFi fuse from the fusebox for a minimum of 30 seconds **(see illustration 20.3)**.

**2** Replace the EFi fuse, and the fault codes should be cleared from the ECM memory.

### Method 2

**3** Turn off the ignition and disconnect the battery negative terminal for a period of approximately fifteen seconds.

**4** Reconnect the battery negative terminal. **Note:** *The first drawback to this method is that battery disconnection will re-initialise all ECM adaptive values. Re-learning the appropriate adaptive values requires starting the engine from cold, and driving at various engine speeds for approximately 20 minutes. The second drawback is that radio security codes and other programmed values will be re-initialised, and these will require re-entering once the battery has been reconnected. Where possible, use the first method described above (or use an FCR) for code clearing.*

## 5 Self-Diagnosis with a fault code reader (FCR)

**Note:** *During the course of certain test procedures, it is possible for additional fault codes to be generated. Care must be taken that any codes generated during test routines do not mislead diagnosis.*

### All Lexus models

**1** Prior to fault code retrieval, ensure that the engine is at normal operating temperature, and that the throttle switch is functioning correctly (indicating the idle condition).

**2** Connect an FCR to the SD connector. Use the FCR for the following purposes, in strict compliance with the FCR manufacturer's instructions:

*a) Retrieving fault codes.*

*b) Clearing fault codes.*

*c) Making adjustments.*

*d) Displaying Datastream.*

**3** Codes must always be cleared after component testing, or after repairs involving the removal or replacement of an EMS component.

## 6 Guide to test procedures

**1** Use an FCR to interrogate the ECM for fault codes, or gather fault codes manually, as described in Sections 3 or 5.

### Codes stored

**2** If one or more fault codes are gathered, refer to the fault code table at the end of this Chapter to determine their meaning.

**3** If several codes are gathered, look for a common factor such as a defective earth return or supply.

**4** Refer to the component test procedures in Chapter 4, where you will find a means of testing the majority of components and circuits found in the modern EMS.

**5** Once the fault has been repaired, clear the codes and run the engine under various conditions to determine if the problem has cleared.

**6** Check the ECM for fault codes once more Repeat the above procedures where codes are still being stored.

**7** Refer to Chapter 3 for more information on how to effectively test the EMS.

### No codes stored

**8** Where a running problem is experienced, but no codes are stored, the fault is outside of the parameters designed into the SD system Refer to Chapter 3 for more information on how to effectively test the engine management system.

**9** If the problem points to a specific component, refer to the test procedures in Chapter 4, where you will find a means of testing the majority of components and circuits found in the modern EMS.

# Fault code tables

## *All Lexus models - Toyota TCCS*

| Flash/ FCR code | Description |
|---|---|
| 12 | No RPM signal to electronic control module (ECM) while cranking |
| 13 | RPM signal or circuit |
| 14 | Missing ignition No. 1 signal from amplifier |
| 15 | Missing ignition No. 2 signal from amplifier |
| 16 | Transmission control signal or circuit |
| 17 | No. 1 camshaft position sensor (CMP) signal or circuit |
| 18 | No. 2 camshaft position sensor (CMP) signal or circuit |
| 21 | Oxygen sensor (OS) or OS circuit |
| 22 | Coolant temperature sensor (CTS) or CTS circuit |
| 24 | Air temperature sensor (ATS) or ATS circuit |
| 25 | Lean exhaust |
| 26 | Rich exhaust |
| 27 | Oxygen sensor (OS) or OS circuit |
| 28 | Oxygen sensor (OS) or OS circuit |
| 29 | Oxygen sensor (OS) or OS circuit |
| 31 | Mass airflow (MAF) sensor or MAF sensor circuit |
| 35 | Altitude compensation circuit |
| 41 | Throttle pot sensor (TPS) or TPS circuit |
| 43 | Starter signal circuit open |
| 47 | Sub-throttle pot sensor (TPS) or TPS circuit |
| 51 | Neutral switch off (transmission not in neutral) or air conditioning switched on during test |
| 52 | Knock sensor (KS) or KS circuit |
| 53 | Knock control computer problem |
| 55 | No. 2 knock sensor (KS) or KS circuit |
| 71 | Exhaust gas recirculation (EGR) sensor or circuit |
| 99 | Continuous flash, no codes present |

# Chapter 21
# Mazda

## Contents

**Index of vehicles**
**Self-Diagnosis**
Clearing codes without a fault code reader (FCR) . . . . . 4
Guide to test procedures . . . . . 6
Introduction . . . . . 1
Retrieving fault codes without a fault code reader (FCR) - flash codes . . . . . 3
Self-Diagnosis connector location . . . . . 2
Self-Diagnosis with a fault code reader (FCR) . . . . . 5
**Fault code tables**

## Index of vehicles

| Model | Engine code | Year | System |
|---|---|---|---|
| 121 1.3 SOHC 16V cat | B3 | 1991 to 1995 | Mazda EGi-S SPi |
| 323 1.3i SOHC 16V cat | B3 | 1991 to 1995 | Mazda EGi MPi |
| 323 1.3i SOHC 16V | B3 | 1995 to 1997 | Mazda EGi MPi |
| 323 1.5i DOHC 16V | Z5 | 1994 to 1997 | Mazda EGi MPi |
| 323 1600i | B6 | 1985 to 1987 | Mazda EGi MPi |
| 323 1.6i Turbo 4x4 DOHC | B6 | 1986 to 1989 | Mazda EGi MPi |
| 323 1.6i SOHC 16V cat | B6 | 1991 to 1994 | Mazda EGi MPi |
| 323 1.6i Estate SOHC cat | B6E | 1991 to 1994 | Mazda EGi MPi |
| 323 1 8i DOHC 16V cat | BP | 1991 to 1994 | Mazda EGi MPi |
| 323 2.0i DOHC V6 24V | KF | 1995 to 1997 | Mazda EGi MPi |
| 323 2.0i DOHC V6 24V | KF | 1996 to 1997 | Mazda EGi MPi |
| 626 1.8i cat DOHC 16V | FP | 1992 to 1997 | Mazda EGi MPi |
| 626 2000i fwd | FE | 1985 to 1987 | Mazda EGi MPi |
| 626 2.0i GT DOHC 16V | FE | 1987 to 1990 | Mazda EGi MPi |
| 626 2.0i DOHC 16V | FE | 1990 to 1993 | Mazda EGi MPi |
| 626 2.0i DOHC 16V cat | FE | 1990 to 1995 | Mazda EGi MPi |
| 626 2.0i DOHC 16V cat | FS | 1992 to 1997 | Mazda EGi MPi |
| 626 2.2i 4x4 SOHC cat | F2 | 1990 to 1993 | Mazda EGi MPi |
| 626 2.5i DOHC V6 cat | KL | 1992 to 1997 | Mazda EGi MPi |
| E2000 | FE | 1994 to 1997 | Mazda EGi MPi |
| MX-3 1.6i SOHC 16V | B6 | 1991 to 1997 | Mazda EGi MPi |
| MX-3 1.8i DOHC V6 | K8 | 1991 to 1997 | Mazda EGi MPi |
| MX-5 1.8i DOHC 16V | BP | 1995 to 1997 | Mazda EGi MPi |
| MX-6 2.5i V6 DOHC cat | KL | 1992 to 1997 | Mazda EGi MPi |
| Xedos 6 1.6i DOHC 16V | B6 | 1994 to 1997 | Mazda EGi MPi |
| Xedos 6 2.0i DOHC 24V | KF | 1992 to 1997 | Mazda EGi MPi |
| Xedos 9 2.0i DOHC 24V | KF | 1994 to 1995 | Mazda EGi MPi |
| Xedos 9 2.5i DOHC 24V | KL | 1994 to 1997 | Mazda EGi MPi |
| RX7 | RE13B | 1986 to 1990 | Mazda EGi MPi |

## Self-Diagnosis

### 1 Introduction

The engine management system (EMS) fitted to Mazda vehicles is Mazda EGi, which exists in both MPi and SPi forms. Mazda EGi controls the primary ignition, fuel injection and idle functions from within the same control module.

#### *Self-Diagnosis (SD) function*

Each ECM has a self-test capability that continually examines the signals from certain engine sensors and actuators, and compares each signal to a table of programmed values. If the diagnostic software determines that a fault is present, the ECM stores one or more fault codes. Codes will not be stored about components for which a code is not available, or for conditions not covered by the diagnostic software.

Mazda EGi generates fault codes for retrieval by manual means (flash codes) or by a dedicated fault code reader (FCR). Until 1995, the fault code structure was 2-digit. After 1995, in some Mazda models the fault code structure was changed to 4-digit. The code tables at the end of the Chapter indicate the meaning for both 2- and 4 digit codes.

#### *Limited operating strategy (LOS)*

Mazda systems featured in this Chapter utilise LOS (a function that is commonly called the "limp-home mode"). Once certain faults have been identified (not all faults will initiate LOS), the ECM will implement LOS and refer to a programmed default value rather than the sensor signal. This enables the vehicle to be safely driven to a workshop/garage for repair or testing. Once the fault has cleared, the ECM will revert to normal operation.

#### *Adaptive or learning capability*

Mazda systems also utilise an adaptive function that will modify the basic programmed values for most effective operation during normal running, and with due regard to engine wear.

#### *Self-Diagnosis (SD) warning light*

The majority of Mazda models are equipped with a SD warning light located within the instrument panel.

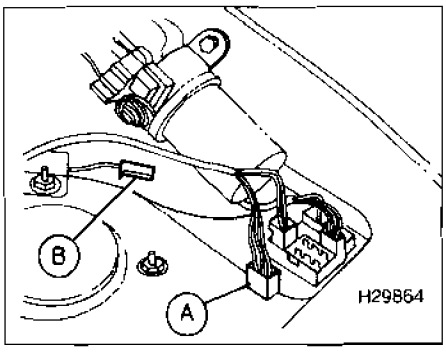


**21.1 Green 6-pin and 1-pin SD connectors located near to the wiper motor**

*A Green six-pin connector*
*B 1-pin connector*

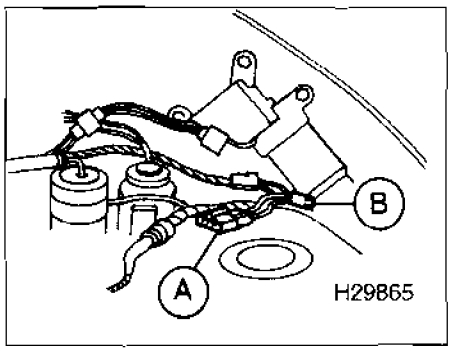


**21.2 Green 6-pin and 1-pin SD connectors close together on the loom**

*A Green six-pin connector*
*B 1-pin connector*

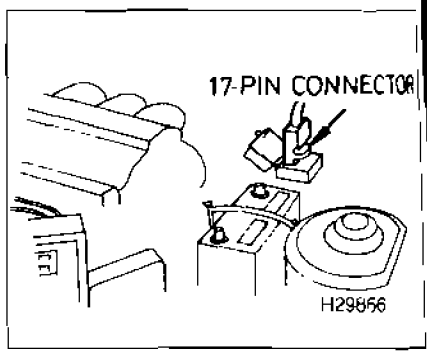


**21.3 17-pin SD connector located next to the battery**

## 2 Self-Diagnosis connector location

In some early 323 models (engine code B6, 1985) and many 626 models from 1987 to 1993 (engine codes FE, F2 and F3), a green 6-pin SD connector in conjunction with a single-pin connector are provided, and these are usually located close together. Mazda 121, 323 from 1987 and all other 626 models utilise a 17-pin SD connector

### *6-pin SD connector*

In the engine compartment, close to the wiper motor, behind the left-hand front strut mounting, or to the rear of the left-side inner wing **(see illustrations 21.1 and 21.2)**. The SD connectors on 1985 323 models are located under the passenger's side facia close to the ECM.

### *17-pin SD connector*

In the engine compartment, next to the battery **(see illustration 21.3)** or close to the airflow sensor.

## 3 Retrieving fault codes without a fault code reader (FCR) - flash codes

**Note:** *During the course of certain test procedures, it is possible for additional fault codes to be generated. Care must be taken that any codes generated during test routines do not mislead diagnosis. All codes must be cleared once testing is complete.*

### *6-pin SD connector*

**1** Locate the green 6-pin connector and then attach an LED diode light between the B+ terminal and the signal terminal in the 6 pin connector **(see illustration 21.4)**.
**2** Locate the green single-pin terminal, and use a jumper wire to connect it to earth.
**3** Switch on the ignition, do not start the engine. The light will remain illuminated for 3 seconds, and then flash to indicate the fault code. If the light extinguishes, no fault codes are stored.
**4** Fault codes are displayed on the LED Light as 2-digit flash codes. Codes 1 to 9 are displayed as a series of short pulses 0.4 seconds in duration, with a 0.4-second pause between each pulse, thus 8 flashes indicates code number 8.
**5** The numbers from 10 to 69 are displayed by two series of flashes:

*a) The first series of flashes indicates the multiples of ten, the second series of flashes indicates the single units.*
*b) Tens are indicated by 1.2-second flashes, separated by a short pause.*
*c) A pause of 1.6 seconds separates tens and units (the light remains extinguished during pauses).*
*d) Units are indicated by 0.4-second flashes, separated by a short pause.*
*e) Four long flashes and one short flash, for example, displays code 41*
*f) A pause of 4 seconds separates the transmission of each individual code.*
*g) The code is repeated with a 4-second pause between each code that is displayed.*

**6** Count the number of flashes in each series, and record each code as it is transmitted. Refer to the tables at the end of the Chapter to determine the meaning of the fault code.
**7** Continue retrieving codes until all stored codes have been retrieved and recorded
**8** Turn off the ignition and remove the diode light to end fault code retrieval.

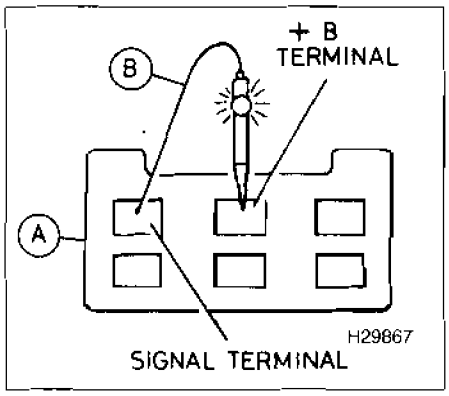


**21.4 Connect an LED test light between pins A and B in order to retrieve flash codes from vehicles with the 6-pin connector**

*A Green 6-pin connector*
*B LED attached between signal terminal and B+ terminal*

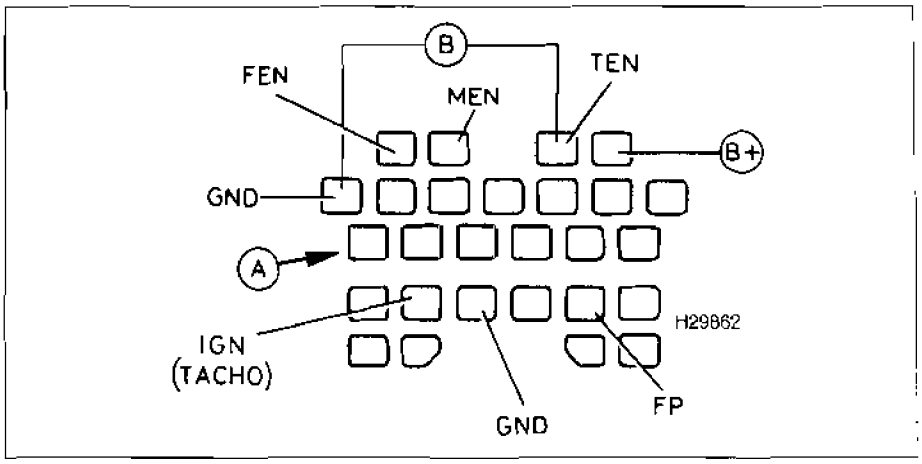


**21.5 Connect a jumper lead between pins TEN and GND in order to retrieve flash codes with the aid of the SD warning light**

*A 17-pin SD connector*
*B Jumper lead*

### 17-pin SD connector

9 Use a jumper lead to bridge terminals TEN and GND in the 17-pin SD connector **(see illustration 21.5)**. On models without a warning light, connect an LED diode light **(see illustration 21.6)** or analogue voltmeter **(see illustration 21.7)** between the FEN and the B+ terminal in the SD connector or the FEN terminal and the battery positive terminal. **Note:** *Up to and including 1987, the fault codes are generated as a straight count. For example, 15 flashes indicates code number 15, or 5 flashes indicate code number 5. Please refer to the correct fault code table for these models*

### Models with SD warning light, or retrieval with the aid of an LED test light

10 Switch on the ignition, but do not start the engine.

11 Fault codes are displayed on the LED light or the SD warning light as 2-digit flash codes. Codes 1 to 9 are displayed as a series of short pulses 0.4 seconds in duration, with a 0.4-second pause between each pulse, thus, 8 flashes indicates code number 8.

12 The numbers from 10 to 69 are displayed by two series of flashes:

*a) The first series of flashes indicates the multiples of ten, the second series of flashes indicates the single units*
*b) Tens are indicated by 1 2-second flashes, separated by a short pause*
*c) A pause of 1.6 seconds separates tens and units (the light remains extinguished during pauses)*
*d) Units are indicated by 0 4-second flashes, separated by short pauses*
*e) Code 41 is displayed by four long flashes and one short flash.*
*f) After a 4-second pause, the code is repeated.*
*g) A pause of 4 seconds separates the transmission of each individual code.*

13 Count the number of flashes in each series, and record each code as it is transmitted. Refer to the tables at the end of the Chapter to determine the meaning of the fault code

14 Continue retrieving codes until all stored codes have been retrieved and recorded.

15 Turn off the ignition and remove the jumper lead and test light (where used) to end fault code retrieval.

### Retrieval with the aid of an analogue voltmeter

16 Switch on the ignition, but do not start the engine

17 Fault codes are displayed on the analogue voltmeter as needle sweeps, the number of needle sweeps indicates the fault code

18 Count the number of sweeps in each series, and record each code as it is transmitted. Refer to the tables at the end of the Chapter to determine the meaning of the fault code.

19 Continue retrieving codes until all stored codes have been retrieved and recorded.

20 Turn off the ignition and remove the jumper lead and voltmeter to end fault code retrieval.

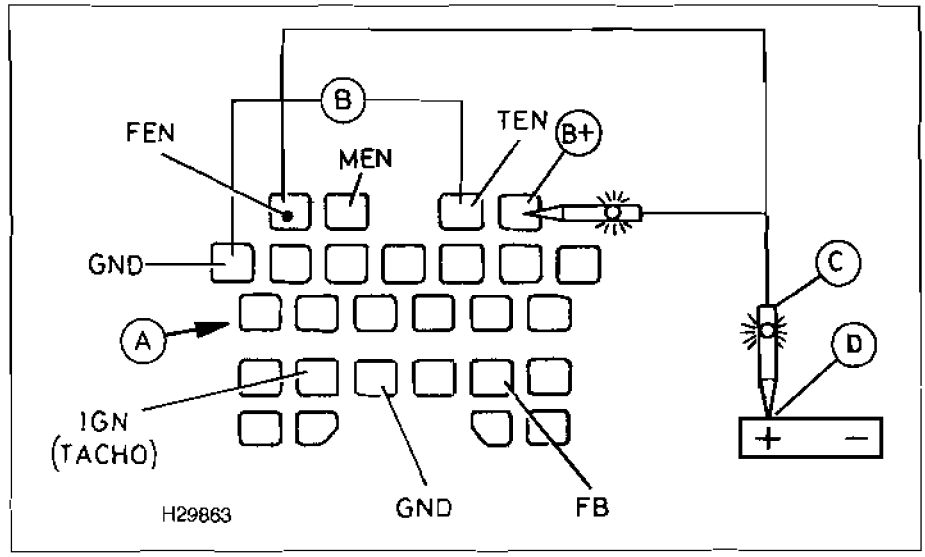


**21.6 Connect an LED test light and a jumper lead to the correct pins in the SD connector in order to retrieve flash codes. The positive probe must be connected either to the B+ terminal in the 17-pin SD connector or the battery positive terminal**

*A 17-pin SD connector*
*B Jumper lead*
*C LED test light*
*D Battery positive terminal*

### 4-digit fault codes

21 Some Mazda models from 1995 onwards have a 4-digit fault code structure. The code tables at the end of the Chapter indicate the meaning for both 2- and 4-digit codes, but at the time of going to press, we do not have information on whether 4-digit codes can be retrieved by manual means.

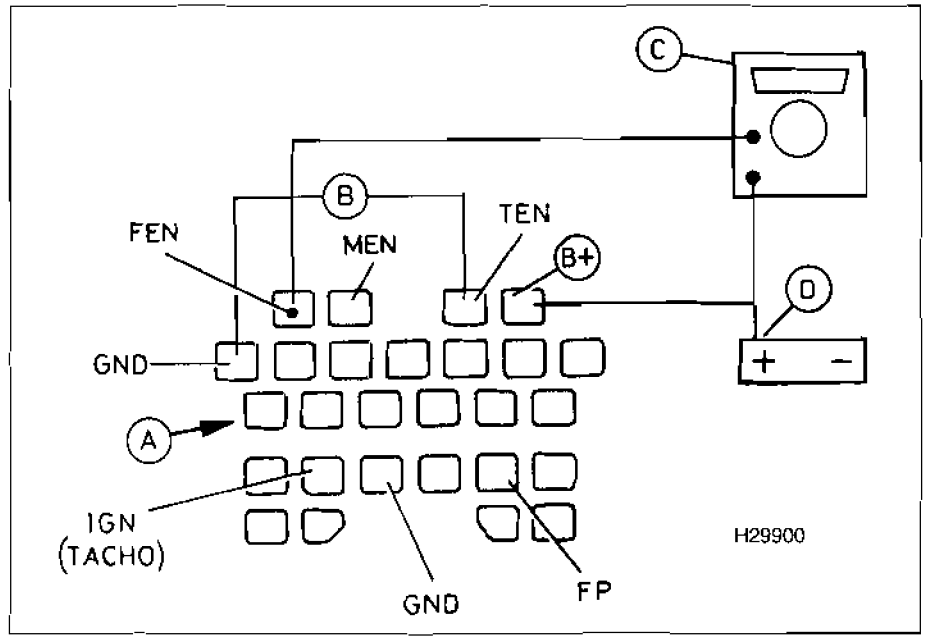


**21.7 Connect an analogue voltmeter and a jumper lead to the correct pins in the SD connector in order to retrieve flash codes. The positive probe must be connected either to the B+ terminal in the 17-pin SD connector or the battery positive terminal**

*A 17-pin SD connector*
*B Jumper lead*
*C Analogue voltmeter*
*D Battery positive terminal*

## 4 Clearing codes without a fault code reader (FCR)

### Preferred method

**1** Turn the ignition key to the "ACC" position.
**2** Remove the 60-amp BTN fuse and the 30-amp EGi fuse. The fusebox is located in the engine compartment.
**3** Wait for 20 seconds and then refit the fuses. All stored fault codes should now be cleared.

### Alternative method

**4** Disconnect the battery negative terminal for at least 20 seconds.
**5** Fully depress the brake pedal for at least 5 seconds and then release it.
**6** Reconnect the battery negative terminal.
**Note**: *The first drawback to this method is that battery disconnection will re-initialise all ECM adaptive values. Re-learning the appropriate adaptive values requires starting the engine from cold, and driving at various engine speeds for approximately 20 minutes. The second drawback is that the radio security codes, clock setting and other stored values will be initialised, and these must be re-entered once the battery has been reconnected. Where possible, use the preferred method described above, or clear the codes using a fault code reader.*

## 5 Self-Diagnosis with a fault code reader (FCR)

**Note:** *During the course of certain test procedures, it is possible for additional fault codes to be generated. Care must be taken that any codes generated during test routines do not mislead diagnosis.*

### All Mazda models

**1** Connect an FCR to the SD connector. Use the FCR for the following purposes, in strict compliance with the FCR manufacturer's instructions:
*a) Retrieving fault codes.*
*b) Clearing fault codes.*
*c) Checking switches.*
*d) Making adjustments to timing and idle speed.*
**2** Codes must always be cleared after component testing, or after repairs involving the removal of an EMS component.

## 6 Guide to test procedures

**1** Use an FCR to interrogate the ECM for fault codes, or (where possible) gather codes manually, as described in Sections 3 or 5.

### Codes stored

**2** If one or more fault codes are gathered, refer to the fault code tables at the end of this Chapter to determine their meaning.
**3** If several codes are gathered, look for a common factor such as a defective earth return or supply.
**4** Refer to the component test procedures in Chapter 4, where you will find a means of testing the majority of components and circuits found in the modern EMS.
**5** Once the fault has been repaired, clear the codes and run the engine under various conditions to determine if the problem has cleared.
**6** Check the ECM for fault codes once more. Repeat the above procedures where codes are still being stored.
**7** Refer to Chapter 3 for more information on how to effectively test the EMS.

### No codes stored

**8** Where a running problem is experienced, but no codes are stored, the fault is outside of the parameters designed into the SD system. Refer to Chapter 3 for more information on how to effectively test the engine management system.
**9** If the problem points to a specific component, refer to the test procedures in Chapter 4, where you will find a means of testing the majority of components and circuits found in the modern EMS.

# Fault code tables

### *Mazda EGi (straight count, models up to and including 1987)*

| Flash/ FCR code | Description |
|---|---|
| 01 | No ignition reference signal |
| 02 | Airflow sensor (AFS) or AFS circuit |
| 03 | Coolant temperature sensor (CTS) or CTS circuit |
| 04 | Air temperature sensor (ATS) or ATS circuit |
| 06 | Throttle pot sensor (TPS) or TPS circuit |
| 09 | Atmospheric pressure sensor (APS) or APS circuit |
| 15 | Air temperature sensor (ATS) or ATS circuit |

### *Mazda EGi (1988-on models)*

| Flash/ FCR code | 4-digit code | Description |
|---|---|---|
| 1 | - | Ignition pulse |
| 2 | 0335 | RPM sensor or circuit, NE signal |
| 3 | 1345 | RPM sensor or circuit, G signal |
| 4 | - | RPM sensor or circuit, NE signal |
| 5 | 0325 | Knock sensor (KS) or KS circuit |
| 6 | - | Vehicle speed sensor (VSS) or VSS circuit |
| 8 | 0100 | Vane or mass airflow sensor (AFS or MAF) or circuit |
| 9 | 0115 | Coolant temperature sensor (CTS) or CTS circuit |
| 10 | 0110 | Air temperature sensor (ATS) or ATS circuit |
| 12 | 0120 | Throttle pot sensor (TPS) or TPS circuit |
| 14 | - | Electronic control module (ECM) or ECM circuit |
| 14 | - | Atmospheric pressure sensor (APS) or APS circuit (alternative code) |
| 15 | 0134 | Oxygen sensor (OS) or OS circuit |
| 16 | 1402 | Exhaust gas recirculation (EGR) Valve or EGR circuit |
| 17 | 1170 | Oxygen sensor (OS) or OS circuit |
| 17 | 1170 | FBC system or circuit (alternative code) |
| 23 | 0154 | Oxygen sensor (OS) or OS circuit |
| 24 | 1173 | Oxygen sensor (OS) or OS circuit |
| 25 | - | Fuel pressure regulator solenoid valve |
| 26 | 0443 | Carbon filter solenoid valve (CFSV) or CFSV circuit |
| 28 | 1485 | Solenoid valve, exhaust gas recirculation (EGR) vacuum, or circuit |
| 29 | 1486 | Solenoid valve, exhaust gas recirculation (EGR) vent, or circuit |
| 31 | - | Idle speed control valve (ISCV) or ISCV circuit |
| 34 | 0505 | Idle speed control valve (ISCV) A or ISCV circuit |
| 35 | - | Idle speed control valve (ISCV) B or ISCV circuit |
| 35 | - | Pressure regulator solenoid valve or circuit (alternative code) |
| 41 | - | Solenoid valve, variable induction system 1 |
| 46 | - | Solenoid valve, variable induction system 2 |
| 55 | 0715 | Vehicle Speed sensor (VSS) or VSS circuit |
| 56 | 0710 | Temperature sensor - automatic transmission (AT) or circuit |
| 60 | 0750 | Solenoid valve - 1-2 shift, automatic transmission (AT) or circuit |
| 61 | 0755 | Solenoid valve - 2-3 shift, automatic transmission (AT) or circuit |
| 62 | 0760 | Solenoid valve - 3-4 shift, automatic transmission (AT) or circuit |
| 63 | 1743 | Solenoid valve - lock-up, automatic transmission (AT) or circuit |
| 64 | 1765 | Solenoid valve - 3-2 shift, automatic transmission (AT) or circuit |
| 64 | 1765 | Cooling fan relay (alternative code) |
| 65 | 1744 | Lock-up solenoid, automatic transmission (AT) |
| 66 | 0745 | Line pressure solenoid, automatic transmission (AT) |
| 67 | - | Cooling fan relay, low temperature |
| 68 | - | Cooling fan relay, high temperature |
| 69 | - | Cooling fan thermistor |
| 71 | 1602 | Immobiliser unit, PCM communication error |
| 72 | 1603 | ID number unregistered (immobiliser) |
| 73 | 1621 | Code words do not match (immobiliser) |
| 74 | 1622 | ID numbers do not match (immobiliser) |
| 75 | 1623 | Code word/ID number writing and reading error (immobiliser) |
| 76 | 1604 | Code word unregistered (immobiliser) |
| | 1605 | Electronic control module (ECM) or ECM circuit |
| | 1606 | Code words do not match (immobiliser) |
| | 1607 | ID numbers do not match (immobiliser) |
| | 1608 | PCM internal circuit malfunction |

# Chapter 22
# Mercedes

## Contents

**Index of vehicles**
**Self-Diagnosis**
Bosch KE3.1-Jetronic duty cycle code retrieval . . . . . 3
Bosch KE3.5-Jetronic duty cycle and flash code retrieval . . . 4
Bosch KE5.2 Jetronic and EZ-L ignition module duty cycle and flash code retrieval (16-pin) . . . . . 5
Bosch LH4.1-Jetronic and EZ-L ignition module duty cycle and flash code retrieval (38-pin) . . . . . 6
Bosch Motronic MP6.0/6.1 and HFM/PMS flash code retrieval . 7
Clearing fault codes without a fault code reader (FCR) . . . . 8
Guide to test procedures . . . . . 10
Introduction . . . . . 1
Self-Diagnosis connector location . . . . . 2
Self-Diagnosis with a fault code reader (FCR) 9
**Fault code tables**

## Index of vehicles

| Model | Engine code | Year | System |
|---|---|---|---|
| C180 | 111.920 | 1993 to 1997 | PMS (Siemens) |
| 190E cat | 102.962 | 1988 to 1993 | Bosch KE3 5-Jetronic |
| 190E 2.3 cat | 102.985 | 1989 to 1993 | Bosch KE3 5-Jetronic |
| 190E 2.5 16 & cat | 102.990 | 1988 to 1993 | Bosch KE3 1-Jetronic |
| 190E 2.5-16 Evolution | 102.991 | 1989 to 1992 | Bosch KE3 1-Jetronic |
| 190E 2.6 | 103.942 | 1989 to 1993 | Bosch KE3.5-Jetronic |
| 190E 2.6 cat | 103.942 | 1987 to 1993 | Bosch KE3 5-Jetronic |
| C200 | 111.941 | 1994 to 1997 | PMS (Siemens) |
| E200 | 111.940 | 1992 to 1996 | PMS/Motronic 6.0/6.1 |
| 200E & TE cat | 102.963 | 1988 to 1993 | Bosch KE3 5-Jetronic |
| C220 | 111.961 | 1993 to 1997 | HFM |
| E220 | 111.960 | 1992 to 1997 | HFM |
| C230 & Kompressor | - | 1995 to 1997 | HFM |
| 230E, TE & CE cat | 102.982 | 1988 to 1993 | Bosch KE3 5-Jetronic |
| 230GE | 102.980 | 1989 to 1991 | Bosch KE3 5-Jetronic |
| 260E & cat | 103.940 | 1989 to 1993 | Bosch KE3 5-Jetronic |
| 260E 4-Matic & cat | 103.943 | 1988 to 1992 | Bosch KE3 5-Jetronic |
| 260SE & cat | 103.941 | 1988 to 1992 | Bosch KE3 5-Jetronic |
| C280 | 104.941 | 1993 to 1997 | HFM |
| E280 cat | 104.942 | 1992 to 1996 | HFM |
| S280 | 104.944 | 1993 to 1997 | HFM |
| SL280 | 104.943 | 1993 to 1997 | HFM |
| E300 | 103.985 | 1992 to 1995 | Bosch KE3.5 Jetronic |
| 300SL, SLL & cat | 103.981 | 1986 to 1992 | Bosch KE3 5-Jetronic |
| 300E, TE, CE & cat | 103.983 | 1987 to 1993 | Bosch KE3.5-Jetronic |
| 300E & cat | 103.985 | 1988 to 1993 | Bosch KE3.5 Jetronic |
| 300E-24, TE-24 & CE-24 cat | 104.980 | 1989 to 1993 | Bosch KE5.2-Jetronic/EZ-L ignition |
| 300TE 4-Matic & cat | 103.985 | 1988 to 1993 | Bosch KE3.5-Jetronic |
| 300SL & cat | 103.984 | 1989 to 1995 | Bosch KE5.2-Jetronic/EZ-L ignition |
| 300SL-24 & cat | 104.981 | 1989 to 1995 | Bosch KE5.2-Jetronic/EZ-L ignition |
| E320 | 104.992 | 1992 to 1997 | HFM |
| S320 | 104.994 | 1993 to 1997 | HFM |
| SL320 | 104.991 | 1993 to 1997 | HFM |
| 400S, SE & SEL | 119.971 | 1991 on | Bosch LH4.1-Jetronic/EZ-L ignition |
| E420 | 119.975 | 1992 to 1995 | Bosch LH4.1-Jetronic/EZ-L ignition |
| S420 | 119.971 | 1993 to 1997 | Bosch LH4.1-Jetronic/EZ-L ignition |
| 500E | 119.974 | 1992 on | Bosch LH4.1-Jetronic/EZ-L ignition |
| 500SL | 119.972 | 1992 on | Bosch LH4.1-Jetronic/EZ-L ignition |
| 500SE & SEL | 119.970 | 1991 on | Bosch LH4.1-Jetronic/EZ-L ignition |
| 500SEC | 119.970 | 1992 on | Bosch LH4.1-Jetronic/EZ-L ignition |
| 500 SL cat | 119.960 | 1989 to 1994 | Bosch KE5.2-Jetronic/EZ-L ignition |
| E500 | 119.974 | 1992 to 1995 | Bosch LH4.1-Jetronic/EZ-L ignition |
| S500 | 119.970 | 1993 to 1997 | Bosch LH4.1-Jetronic/EZ-L ignition |
| SL500 | 119.972 | 1993 to 1997 | Bosch LH4.1-Jetronic/EZ-L ignition |
| 600SEL | 120.980 | 1991 to 1996 | Bosch LH-Jetronic/EZ-L ignition |
| S600 cat | 120.980 | 1991 to 1996 | Bosch LH4.1-Jetronic/EZ-L ignition |
| S600 | 120.980 | 1996 to 1997 | Bosch LH4.1-Jetronic/EZ-L ignition |
| SL600 | 120.981 | 1993 to 1997 | Bosch LH4.1-Jetronic/EZ-L ignition |

# Self-Diagnosis

## 1 Introduction

Some Mercedes vehicles are equipped with an engine management system (EMS) that controls primary ignition, fuelling and idle functions from within the same ECM. Other Mercedes vehicles are equipped with a separate electronic ignition module that controls primary ignition, and an electronic injection module that controls fuelling and idle functions. All of these engine management, ignition and fuel systems are equipped with a self-diagnosis system capable of generating fault codes.

Engine management systems covered by this Chapter include Bosch Motronic versions MP6.0 and MP6.1, and HFM and PMS (Siemens). Electronic fuel injection systems include Bosch LH-Jetronic 4.1 and KE-Jetronic versions 3.1, 3.5, 5.2. The electronic ignition module with self-diagnosis is Bosch EZ-L.

Where the vehicle is equipped with Bosch EZ-L ignition and either the LH-Jetronic or KE-Jetronic fuel system, fault codes will be generated separately by the ignition and fuel systems. In some vehicles, one 16-pin or 38-pin SD connector is provided for both ignition and fuel code retrieval. In other vehicles, ignition and fuel system codes are retrieved via separate SD connectors. Whatever; ignition and fuel codes must be retrieved separately on systems other than Motronic, HFM and PMS.

Mercedes KE and LH-Jetronic systems are capable of generating two very different kinds of fault codes. These are 2-digit fault codes and 2-digit duty cycle codes. Fault codes are similar to those generated by most other systems. Duty cycle codes provide data on the Lambda control system and faults that have occurred very recently (within the last four engine starts).

Bosch EZ-L ignition, Bosch Motronic, HFM and PMS systems generate fault codes only.

Fault codes retrieved in conjunction with an LED light are listed in the code tables at the end of the Chapter as 2-digit flash codes. In addition, when an FCR is used to retrieve codes, the codes displayed on the FCR may be 2-digit or 3-digit; both kinds are indicated where appropriate.

### *Duty cycle % codes*

If a fault occurs on any of the monitored circuits during a period of engine running (only a small number of circuits will generate duty cycle % codes), the ECM will increment a counter, but will not store a fault at this stage. If the fault is present at the next two engine starts, the ECM will again increment the counter each time. If the fault is still present after four consecutive engine starts, the fault is recorded in non-volatile memory. If the fault disappears before four consecutive occurrences, the counter is reset to zero. If the fault recurs, the counter will begin incrementing from the zero point The duty cycle % routine will display this code, along with any faults that are present but have not yet been stored into memory (if the fault has occurred in less than four consecutive engine starts).

### *Self-Diagnosis (SD) function*

Each ECM has a self-test capability that continually examines the signals from certain engine sensors and actuators, and compares each signal to a table of programmed values. If the diagnostic software determines that a fault is present, the ECM stores one or more fault codes. Codes will not be stored about components for which a code is not available, or for conditions not covered by the diagnostic software.

### *Limited operating strategy (LOS)*

Mercedes systems featured in this Chapter utilise LOS (a function that is commonly called the "limp-home mode") Once certain faults have been identified (not all faults will initiate LOS), the ECM will implement LOS and refer to a programmed default value rather than the sensor signal. This enables the vehicle to be safely driven to a workshop/garage for repair or testing. Once the fault has cleared, the ECM will revert to normal operation.

### *Adaptive or learning capability*

Mercedes systems also utilise an adaptive function that will modify the basic programmed values for most effective operation during normal running, and with due regard to engine wear

### *Self-Diagnosis warning light*

Some Mercedes models are equipped with an SD warning light located within the instrument panel, which may be used to display flash codes.

## 2 Self-Diagnosis connector location

**Note:** *All Mercedes SD connectors are provided both for retrieving flash codes and for dedicated FCR use.*

### *Bosch KE3.1-Jetronic*

The 9-pin SD connector is located in the engine compartment on the left-hand inner wing, close to the ignition module **(see illustrations 22.1 and 22.2)**.

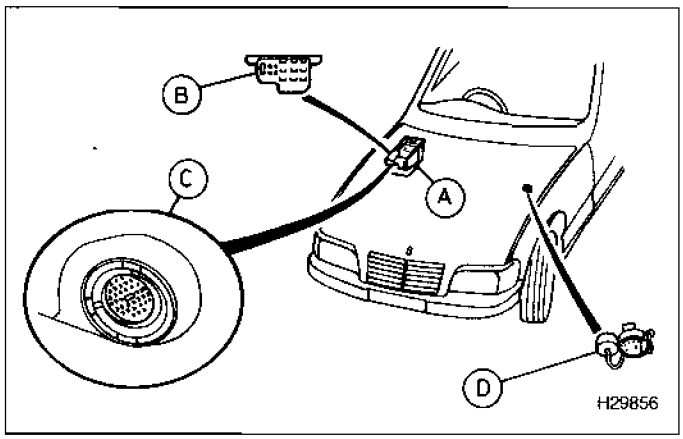


**22.1 SD connector locations in Mercedes models**

*A SD connector location*
*B 16-pin SD connector (when fitted)*
*C 38-pin SD connector (when fitted)*
*D 9-pin SD connector (when fitted)*

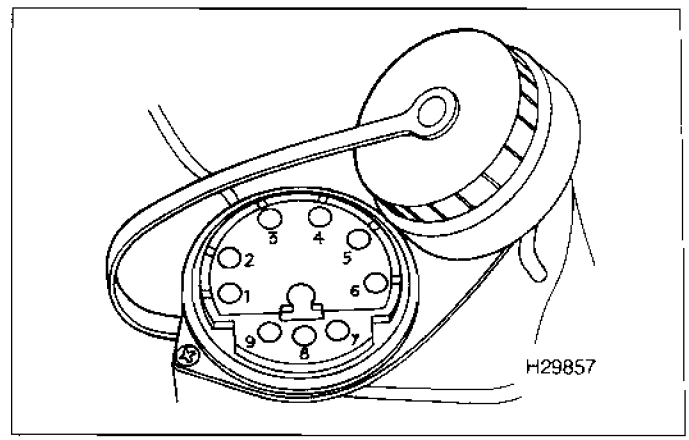


**22.2 9-pin SD connector**

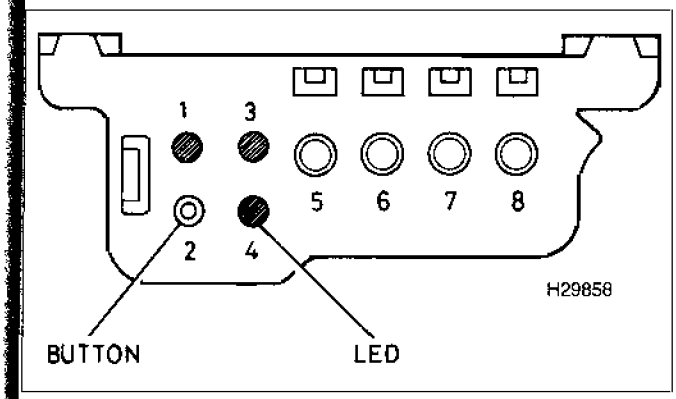


22.3 8-pin SD connector

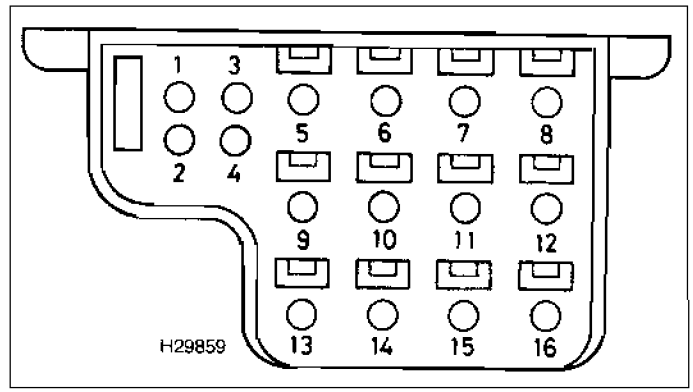


22.4 16-pin SD connector

### Bosch KE3.5-Jetronic

The 8-pin SD connector is located in the engine compartment on the right-hand bulkhead **(see illustration 22.3)**.

### Bosch KE5.2-Jetronic and EZ-L ignition

The 16-pin SD connector (2-digit fuel and ignition code retrieval) is located in the engine compartment on the right-hand bulkhead **(see illustration 22.4)** The 9-pin SD connector (OS percentage code retrieval) is located in the engine compartment on the left-hand inner wing.

### Bosch LH4.1-Jetronic and EZ-L ignition

The 38-pin SD connector (2-digit fuel and ignition code retrieval) is located in the engine compartment's electrical box on the right-hand bulkhead **(see illustration 22.5)**. The 9-pin SD connector (OS percentage code retrieval) is located in the engine compartment on the left-hand inner wing.

### Bosch Motronic MP6.0/6.1, HFM and PMS

The 16-pin or 38-pin SD connector is located in the engine compartment on the right-hand bulkhead.

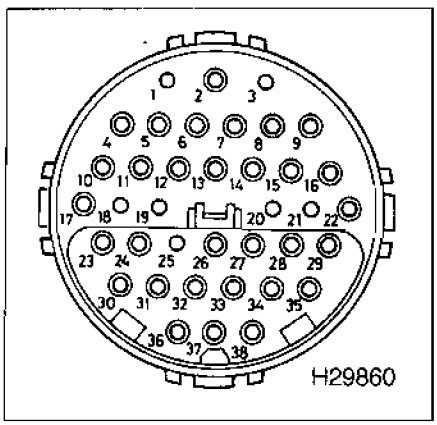


22.5 38-pin SD connector

## 3 Bosch KE3.1-Jetronic duty cycle code retrieval

**Note:** *During the course of certain test procedures, it is possible for additional codes to be generated. Care must be taken that any codes generated during test routines do not mislead diagnosis. All codes must be cleared once testing is complete.*

**1** Duty cycle codes alone can be retrieved from KE3.1-Jetronic.
**2** Attach the positive probe of a digital multi-meter (DMM) to pin number 3 of the 9-pin SD connector. Attach the DMM negative probe to earth, and switch the meter to read duty cycle **(see illustration 22.6)**.
**3** Switch on the ignition.
**4** The meter should display the 2-digit duty cycle codes as a percentage.
**5** Record the duty cycle percentage, and compare the value with the duty cycle % code chart at the end of this Chapter.
**6** Turning off the ignition ends duty cycle code retrieval. Remove the DMM probes from the SD connector.

## 4 Bosch KE3.5-Jetronic duty cycle and flash code retrieval

**Note:** *During the course of certain test procedures, it is possible for additional codes to be generated. Care must be taken that any codes generated during test routines do not mislead diagnosis. All codes must be cleared once testing is complete. If using a fault code reader, proceed to Section 9.*

**1** Duty cycle codes and 2-digit fault codes can be retrieved from KE3.5-Jetronic systems. Duty cycle codes must be retrieved prior to 2-digit fault code retrieval.
**2** Attach the positive probe of a digital multi-meter (DMM) to pin number 3 of the 8-pin SD connector. Attach the DMM negative probe to earth, and switch the meter to read duty cycle **(see illustration 22.7)**.
**3** Start and warm-up the engine so that the coolant temperature is at least 80°C (normal operating temperature).
**4** Stop the engine and switch on the ignition.
**5** The meter should display the 2-digit duty cycle codes as a percentage.
**6** Record the duty cycle and compare the value with the duty cycle % code chart.
**7** Turning off the ignition ends duty cycle code retrieval. Remove the DMM probes from the SD connector.
**8** The method of retrieving 2-digit fault codes differs according to the type of 8-pin SD connector fitted. Some 8-pin SD connectors have an LED and button, others do not.
**9** If the SD connector does not contain an LED and button, attach an accessory switch between pins 3 and 1 in the SD connector. Connect an LED diode test light between the battery (+) supply and SD pin 3 as shown **(refer to illustration 22.7)**.
**10** Switch on the ignition.
**11** Close the accessory switch or depress the button for at least 5 seconds, and then open the switch or release the button. After approximately 2 seconds, the LED will begin to flash.

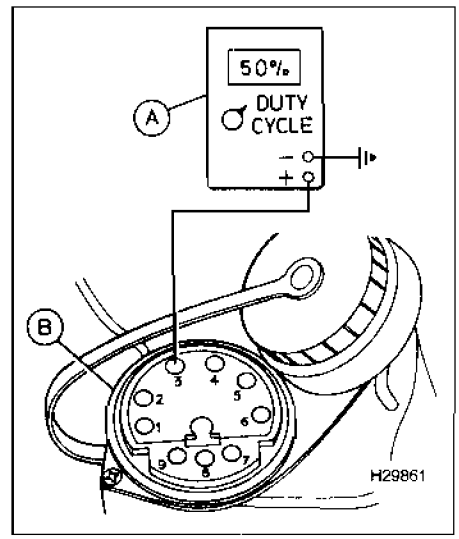


**22.6 Connect a digital multi-meter (A) to the 9-pin SD connector (B) in order to retrieve percentage codes**

**12** The LED displays the 2-digit fault codes as a straight count. One flash is equal to one code number, so five flashes denotes fault code number 5, twenty-two flashes denotes fault code number 22, and so on. Each flash lasts for 0.5 seconds, and there is a 1-second pause between each digit.
**13** Count the number of flashes, and record the code. Refer to the tables at the end of the Chapter to determine the meaning of the flash code.
**14** If code number 1 is transmitted, no faults codes are stored
**15** Retrieve subsequent codes by once more closing the accessory switch or depressing the button for at least 5 seconds. Open the switch or release the button, and after approximately 2 seconds the LED will begin to flash.
**16** Repeat code retrieval by turning off the ignition and repeating the whole procedure from the beginning.
**17** Turning off the ignition ends fault code retrieval. Remove the accessory switch and diode light from the SD connector where these components were used.

## 5 Bosch KE5.2-Jetronic and EZ-L ignition module duty cycle and flash code retrieval (16-pin)

**Note:** *During the course of certain test procedures, it is possible for additional codes to be generated. Care must be taken that any codes generated during test routines do not mislead diagnosis. All codes must be cleared once testing is complete. If using a fault code reader, proceed to Section 9.*

**1** Duty cycle codes and 2-digit fault codes can be retrieved from KE5.2-Jetronic systems. Duty cycle codes are available either with the engine stopped (ignition on) or with the engine running at idle speed, and must be retrieved prior to 2-digit fault code retrieval. In addition, EZ-L ignition codes can be retrieved from the 16-pin SD connector.
**2** Attach the positive probe of a digital multimeter (DMM) to pin number 3 of the 9-pin SD connector. Attach the DMM negative probe to earth, and switch the meter to read duty cycle **(refer to illustration 22.6).**
**3** Start and warm-up the engine so that the coolant temperature is at least 80°C (normal operating temperature).
**4** Stop the engine. Ensure that the air conditioning is turned off, and the automatic transmission selector (where applicable) is in "P". Switch on the ignition.
**5** The meter should display the 2-digit duty cycle codes as a percentage.
**6** Record the duty cycle. The displayed value will be 50% if all sensor inputs are within the pre-determined operating parameters. If the display indicates another value, refer to the duty cycle % code chart at the end of this Chapter to determine the reason.
**7** Start the engine and allow it to idle. The duty cycle should fluctuate if the system is operating correctly. If the duty cycle value remains fixed at one particular figure, refer to the duty cycle % code chart to determine the reason
**8** Turning off the ignition ends duty cycle code retrieval. Remove the DMM probes from the 9-pin SD connector. All of the following fault code retrieval routines must be performed after duty cycle code retrieval.
**9** Attach an accessory switch between pins 3 and 1 in the 16-pin SD connector. Connect an LED diode test light between SD pin 16 (+) and SD pin 3 (–) as shown **(see illustration 22.8).**
**10** Switch on the ignition.
**11** Close the accessory switch for 2 to 4 seconds, and then open the switch. After approximately 2 seconds, the LED light will begin to flash.
**12** The LED light displays the 2-digit fault codes as a straight count One flash is equal to one code number, so five flashes denotes fault code number 5, twenty-two flashes denotes fault code number 22, and so on. Each flash lasts for 0.5 seconds, and there is a 1-second pause between each digit.
**13** Count the number of flashes, and record the code. Refer to the tables at the end of the Chapter to determine the meaning of the flash code.
**14** If code number 1 is transmitted, no faults codes are stored.
**15** Retrieve subsequent codes by closing the accessory switch once more for 2 to 4 seconds. Open the switch, and after approximately 2 seconds the LED light will begin to flash. After all stored codes have been displayed, the codes will be repeated.
**16** Turning off the ignition ends KE5.2 fault code retrieval. Remove the accessory switch and diode light from the SD connector.

### Engine systems control module flash code retrieval (16-pin)

**17** Fault codes from the engine systems control module can be retrieved by following the next set of routines.
**18** Attach an accessory switch between pins 14 and 1 in the 16-pin SD connector Connect an LED diode test light between SD pin 16 (+) and SD pin 14 (–) as shown **(see illustration 22.9).**
**19** Switch on the ignition The method for code retrieval is identical to that described above (paragraphs 11 to 16).
**20** Retrieve ignition fault codes by following the routines described below (Bosch EZ-L).

### Bosch EZ-L ignition module flash code retrieval (16-pin)

**21** Only 2-digit fault codes can be retrieved from Bosch EZ-L ignition.
**22** Attach the wires of an accessory switch between pins 8 and 1 in the 16-pin SD connector. Connect a diode test light between

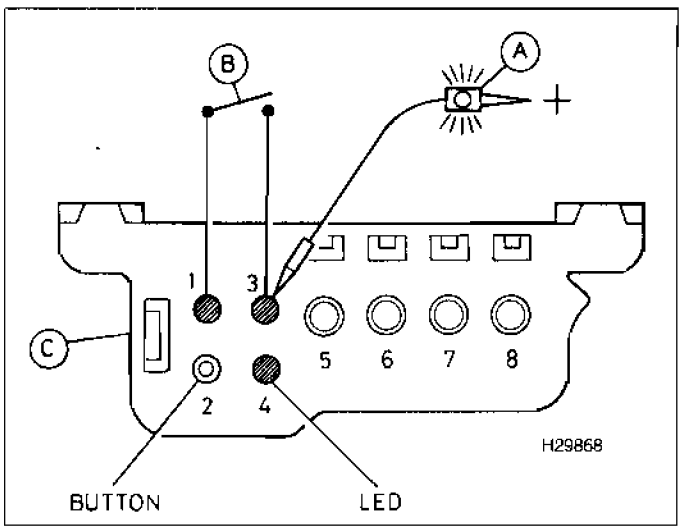


**22.7 Connect a diode light (A) and accessory switch (B) to the 8-pin SD connector (C) in order to retrieve flash codes**

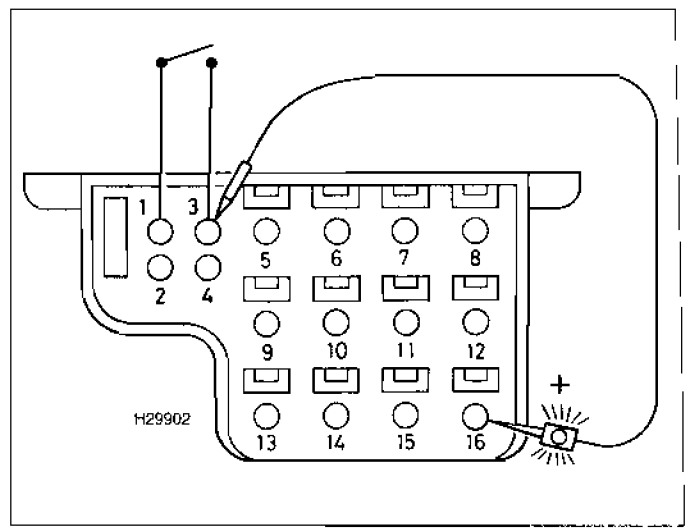


**22.8 Connect a diode light and accessory switch to the 16-pin SD connector in order to retrieve flash codes**

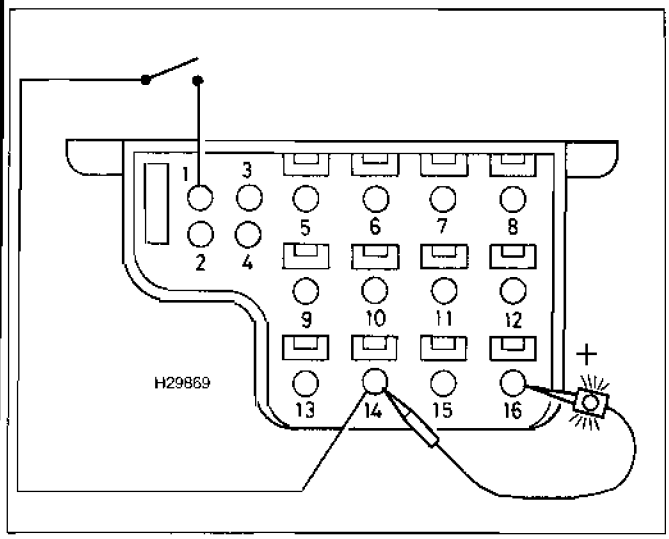


**22.9 Connect a diode light and accessory switch to the 16-pin SD connector in order to retrieve control module flash codes**

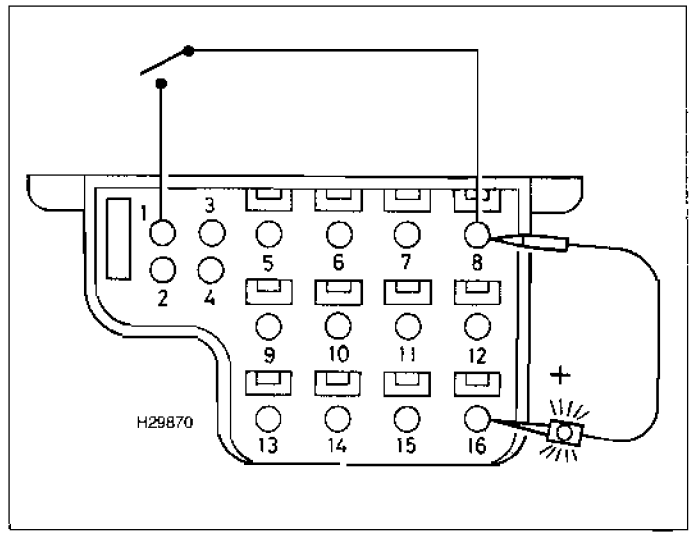


**22.10 Connect a diode light and accessory switch to the 16-pin SD connector in order to retrieve ignition flash codes**

SD pin 16 (+) and SD pin 8 (–) as shown **(see illustration 22.10)**.

**23** Start the engine and warm it to normal operating temperature.

**24** Allow the engine to idle.

**25** Raise the engine speed to between 3100 and 3600 rpm for approximately 8 seconds, and then allow the engine to idle once more.

**26** Detach the vacuum hose from the connection on the EZ-L ignition module.

**27** Move the automatic transmission selector lever from the "P" position to "D", and then back to "P".

**28** Raise the engine speed to 5000 rpm for a minimum of 2 seconds, and then allow the engine to idle once more.

**29** Reconnect the vacuum hose to the connection on the EZ-L ignition module.

**30** Raise the engine speed to 2300 rpm, and then briefly snap the throttle fully open so that the throttle switch full-load contacts become closed. Allow the engine to idle once more. **Note:** *If the ignition is turned off at any point, the whole procedure must be restarted from the beginning of the EZ-L ignition codes retrieval routine.*

**31** Close the accessory switch for between 2 and 4 seconds, and then open the switch. After approximately 2 seconds, the LED light will begin to flash.

**32** The LED light displays the 2-digit fault codes as a straight count. One flash is equal to one code number, so five flashes denotes fault code number 5, twenty-two flashes denotes fault code number 22, and so on. Each flash lasts for 0.5 seconds, and there is a 1-second pause between each digit.

**33** Count the number of flashes, and record the code. Refer to the tables at the end of the Chapter to determine the meaning of the flash code.

**34** If code number 1 is transmitted, no faults codes are stored.

**35** Retrieve subsequent codes by once more closing the accessory switch for between 2 and 4 seconds. Open the switch, and after approximately 2 seconds the LED light will begin to flash.

**36** Turning off the ignition ends ignition module fault code retrieval, and also clears all fault codes from memory. Fault codes are not retained in memory after the ignition has been turned off.

**37** Remove the accessory switch and diode light from the SD connector.

## 6 Bosch LH4.1-Jetronic and EZ-L ignition module duty cycle and flash code retrieval (38-pin)

**Note:** *During the course of certain test procedures, it is possible for additional codes to be generated. Care must be taken that any codes generated during test routines do not mislead diagnosis. All codes must be cleared once testing is complete. If using a fault code reader, proceed to Section 9.*

**1** Duty cycle codes and 2-digit fault codes can be retrieved from LH4.1-Jetronic systems. Duty cycle codes are available either with the engine stopped (ignition on) or with the engine running at idle speed, and must be retrieved prior to 2-digit fault code retrieval. In addition, EZ-L ignition codes can also be retrieved from the 38-pin SD connector.

**2** Attach the positive probe of a digital multimeter (DMM) to pin number 3 of the 9-pin SD connector. Attach the DMM negative probe to earth, and switch the meter to read duty cycle **(refer to illustration 22.6)**.

**3** Start and warm-up the engine so that the coolant temperature is at least 80°C (normal operating temperature).

**4** Stop the engine. Ensure that the air conditioning is turned off, and the automatic transmission selector is in "P" (where applicable). Switch on the ignition

**5** The meter should display the 2-digit duty cycle codes as a percentage.

**6** Record the duty cycle. The displayed value will be 50% if all sensor inputs are within the pre-determined operating parameters. If the display indicates another value, refer to the duty cycle % code chart to determine the reason.

**7** Start the engine and allow it to idle. The duty cycle should fluctuate if the system is operating correctly. If the duty cycle value remains fixed at one particular figure, refer to the duty cycle % code chart to determine the reason.

**8** Turning off the ignition ends duty cycle code retrieval. Remove the DMM probes from the SD connector. All of the following fault code retrieval routines must be performed immediately after duty cycle code retrieval

**9** Attach the wires of an accessory switch between pins 1 and 4 in the 38-pin SD connector. Connect an LED diode test light between SD pin 3 (+) and SD pin 4 (–) as shown **(see illustration 22.11)**.



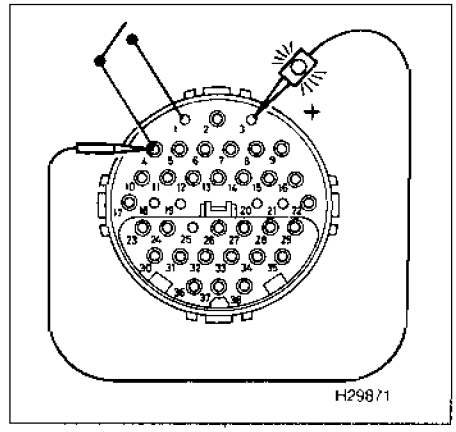


**22.11 Connect a diode light and accessory switch to the 38-pin SD connector in order to retrieve flash codes**

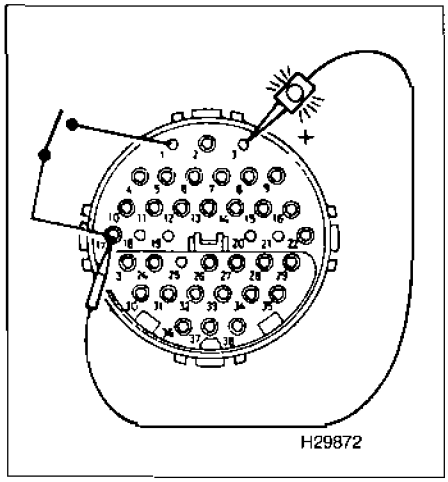


**22.12 Connect a diode light and accessory switch to the 38-pin SD connector in order to retrieve ignition flash codes**

**10** Switch on the ignition.
**11** Close the accessory switch for between 2 and 4 seconds, and then open the switch. After approximately 2-seconds the LED light will begin to flash.
**12** The LED light displays the 2-digit fault codes as a straight count. One flash is equal to one code number, so five flashes denotes fault code number 5, twenty-two flashes denotes fault code number 22, and so on. Each flash lasts for 0.5 seconds, and there is a 1-second pause between each digit
**13** Count the number of flashes, and record the code. Refer to the tables at the end of the Chapter to determine the meaning of the flash code.
**14** If code number 1 is transmitted, no faults codes are stored.
**15** Retrieve subsequent codes by once more closing the accessory switch for at least 5 seconds. Open the switch, and after approximately 2 seconds the LED light will begin to flash. After all stored codes have been displayed, the codes will be repeated.
**16** Turning off the ignition ends LH4.1 fault code retrieval. Remove the accessory switch and diode light from the SD connector.

### Bosch EZ-L ignition module flash code retrieval (38-pin)

**17** Attach the wires of an accessory switch between pins 1 and 17 in the 38-pin SD connector. Connect a diode test light between SD pin 3 (+) and SD pin 17 (–) as shown **(see illustration 22.12)**.
**18** Switch on the ignition.
**19** Close the accessory switch for between 2 and 4 seconds, and then open the switch. After approximately 2 seconds the LED will begin to flash.
**20** The flashing of the LED light displays the 2-digit fault codes as a straight count. One flash is equal to one code number, so five flashes denotes fault code number 5, twenty-two flashes denotes fault code number 22, and so on. Each flash lasts for 0.5 seconds, and there is a 1-second pause between each digit.
**21** Count the number of flashes, and record the code. Refer to the tables at the end of the Chapter to determine the meaning of the flash code.
**22** If code number 1 is transmitted, no faults codes are stored.
**23** Retrieve subsequent codes by once more closing the accessory switch for between 2 and 4 seconds. Open the switch, and after approximately 2 seconds the LED will begin to flash. After all stored codes have been displayed, the codes will be repeated.
**24** Turning off the ignition ends ignition module fault code retrieval. Remove the accessory switch and diode light from the SD connector.

### Base module flash code retrieval (38-pin)

**25** Attach the wires of an accessory switch between pins 1 and 8 in the 38-pin SD connector. Connect an LED diode test light between SD pin 3 (+) and SD pin 8 (–) as shown **(see illustration 22.13)**.

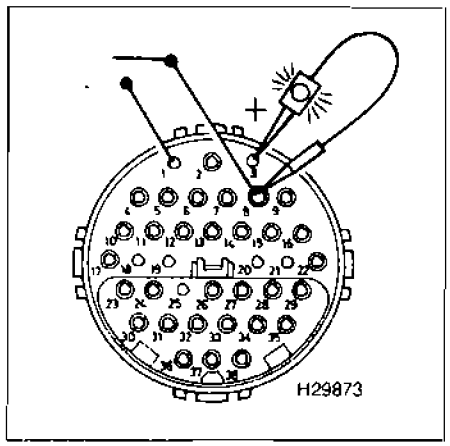


**22.13 Connect a diode light and accessory switch to the 38-pin SD connector in order to retrieve base module flash codes**

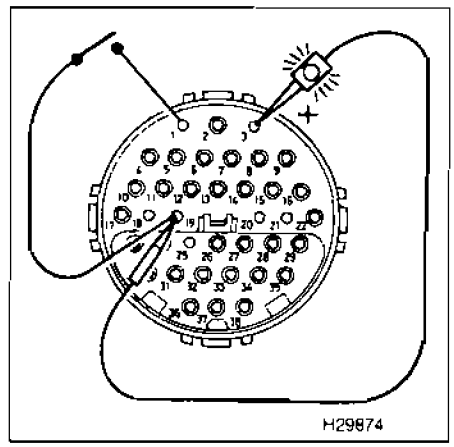


**22.14 Connect a diode light and accessory switch to the 38-pin SD connector in order to retrieve diagnostic module flash codes**

**26** Switch on the ignition. The method for code retrieval is identical to that for the EZ-L module (paragraphs 19 to 24).

### Diagnostic module flash code retrieval (38-pin)

**27** Attach the wires of an accessory switch between pins 1 and 19 in the 38-pin SD connector. Connect an LED diode test light between SD pin 3 (+) and SD pin 19 (–) as shown **(see illustration 22.14)**.
**28** Switch on the ignition. The method for code retrieval is identical to that for the EZ-L module (paragraphs 19 to 24).

## 7 Bosch Motronic MP6.0/6.1 and HFM/PMS flash code retrieval

**Note 1:** *During the course of certain test procedures, it is possible for additional codes to be generated. Care must be taken that any codes generated during test routines do not mislead diagnosis. All codes must be cleared once testing is complete. If using a fault code reader, proceed to Section 9.*
**Note 2:** *Flash codes retrieved using this method may be different to codes retrieved with the aid of an FCR. Refer to the fault code tables at the end of this Chapter - if following the procedures in this Section, use the column headed "Flash code".*
**1** Only 2-digit codes can be retrieved from Motronic MP6.0/6.1.

### Models with 16-pin SD connector

**2** Attach the wires of an accessory switch between pins 1 and 3 in the 16-pin SD connector. Connect an LED diode test light between SD pin 16 (+) and SD pin 3 (–) as shown **(refer to illustration 22.8)**.

### Models with 38-pin SD connector

**3** Attach the wires of an accessory switch between pins 1 and 4 in the 38-pin SD connector. Connect an LED diode test light between SD pin 3 (+) and SD pin 4 (–) as shown **(refer to illustration 22.11)**.

### All models

**4** Switch on the ignition
**5** Close the accessory switch for between 2 and 4 seconds, and then open the switch. After approximately 2 seconds, the LED light will begin to flash.
**6** The LED displays the 2-digit fault codes as a straight count. One flash is equal to one code number, so five flashes denotes fault code number 5, twenty-two flashes denotes fault code number 22, and so on. Each flash lasts for 0.5 seconds, and there is a 1-second pause between each digit.
**7** Count the number of flashes, and record the code. Refer to the tables at the end of the Chapter to determine the meaning of the flash code.
**8** If code number 1 is transmitted, no faults codes are stored.

9 Retrieve subsequent codes by once more closing the accessory switch for at least 5 seconds. Open the switch, and after approximately 2 seconds the LED light will begin to flash
10 Repeat code retrieval by turning off the ignition and repeating the whole procedure from the beginning.
11 Turning off the ignition ends fault code retrieval. Remove the accessory switch and diode light from the SD connector.

## 8 Clearing fault codes without a fault code reader (FCR)

**Note:** *It is not possible to clear fault codes by disconnection of the battery terminals. Fault code memory in Mercedes vehicles is non-volatile, and battery power is not required to retain codes.*

### 16-pin Bosch EZ-L

1 Turning off the ignition ends fault code retrieval, and also clears all fault codes from memory. Fault codes are not retained in memory after the ignition has been turned off.

### All systems except 16-pin Bosch EZ-L

2 Each fault code must be individually cleared as described in the following routines.
3 Carry out the procedure to retrieve the first fault code.
4 Clear the first code by depressing the accessory switch for a period of between 6 and 8 seconds.
5 Continue the process by retrieving and clearing each code in turn until all codes have been cleared.
6 In some systems, several different modules are connected to the SD connector. Each code in each module must be retrieved and then cleared one after the other until all are clear.
7 Turn off the ignition and remove the accessory switch and diode light from the SD connector.

## 9 Self-Diagnosis with a fault code reader (FCR)

**Note:** *During the course of certain test procedures, it is possible for additional fault codes to be generated. Care must be taken that any codes generated during test routines do not mislead diagnosis.*

### All Mercedes models

1 Connect an FCR to the SD connector. Use the FCR for the following purposes, in strict compliance with the FCR manufacturer's instructions:

*a) Retrieving fault codes.*
*b) Clearing fault codes.*
*c) Testing actuators.*
*d) Making service adjustments.*
*e) Displaying Datastream.*

**Note:** *Not all of the above functions are available in all vehicles. Fault codes that are retrieved by FCR may be 2-digit or 3-digit. Refer to the tables at the end of this Chapter. Codes retrieved with the aid of an FCR may be different to flash codes retrieved manually.*
2 Codes must always be cleared after component testing, or after repairs involving the removal of an EMS component.

## 10 Guide to test procedures

1 Use an FCR to interrogate the ECM for fault codes, or gather flash codes manually.

### Codes stored

2 If one or more fault codes are gathered, refer to the fault code tables at the end of this Chapter to determine their meaning.
3 If several codes are gathered, look for a common factor such as a defective earth return or supply.
4 Refer to the component test procedures in Chapter 4, where you will find a means of testing the majority of components and circuits found in the modern EMS.
5 Once the fault has been repaired, clear the codes and run the engine under various conditions to determine if the problem has cleared.
6 Check the ECM for fault codes once more. Repeat the above procedures where codes are still being stored.
7 Refer to Chapter 3 for more information on how to effectively test the EMS.

### No codes stored

8 Where a running problem is experienced, but no codes are stored, the fault is outside of the parameters designed into the SD system. Refer to Chapter 3 for more information on how to effectively test the engine management system.
9 If the problem points to a specific component, refer to the test procedures in Chapter 4, where you will find a means of testing the majority of components and circuits found in the modern EMS.



# Fault code tables

### Bosch LH-Jetronic, LH4.1-Jetronic, KE3.5-Jetronic, KE5.2-Jetronic

| Flash/ FCR code | Description |
|---|---|
| 1 | No faults found in the ECM. Proceed with normal diagnostic methods |
| 2 | Coolant temperature sensor (CTS) 1 or CTS circuit |
| 2 | Throttle pot sensor (TPS) or TPS circuit, full-load (KE5.2) |
| 3 | Coolant temperature sensor (CTS) 2 or CTS circuit |
| 4 | Mass airflow (MAF) sensor or MAF sensor circuit |
| 5 | Oxygen sensor (OS) or OS circuit (KE5.2) |
| 6 | CO pot or CO pot circuit |
| 7 | TN (engine speed) signal incorrect |
| 7 | Vehicle speed sensor (VSS) or VSS circuit (LH4.1, KE5.2) |
| 8 | Camshaft position sensor (CMP) or CMP circuit |
| 8 | Cylinder identification (CID) sensor or CID sensor circuit (LH4.1 |
| 8 | Ignition system or circuit (KE5.2) |
| 8 | Barometric pressure sensor (BPS) or BPS circuit (KE3.5) |
| 9 | Starter signal |
| 9 | Pressure actuator (KE5.2, KE3.5) |
| 10 | Idle speed control valve (ISCV) or ISCV circuit |
| 10 | Throttle pot sensor (TPS) or TPS circuit (LH4.1, KE5.2, KE3 5) |
| 11 | Secondary air pump system |
| 12 | Mass airflow (MAF) sensor burn-off or MAF sensor circuit |
| 12 | Pressure signal from ignition system or circuit (KE5.2) |
| 13 | Air temperature sensor (ATS) or ATS circuit |
| 14 | Vehicle speed sensor (VSS) or VSS circuit (KE5.2) |
| 15 | Catalytic converter control unit (Japan only) |
| 15 | Exhaust gas recirculation (EGR) valve (LH4.1) |
| 16 | Exhaust gas recirculation (EGR) or EGR circuit |
| 17 | Throttle switch (TS), full-load switch |
| 17 | Idle speed control valve (ISCV) or ISCV circuit |
| 17 | CAN signal (LH4.1) - communication between system computers |
| 17 | Oxygen sensor (OS) or OS circuit (KE5.2) |
| 18 | Data transfer from ignition system |
| 18 | CAN signal (LH4.1) - communication between system computers |
| 18 | Idle speed control valve (ISCV) or ISCV circuit (KE5.2) |
| 20 | Electronic control module (ECM) |
| 20 | CAN signal (LH4.1) - communication between system computers |

| Flash/ FCR code | Description |
|---|---|
| 21 | Oxygen sensor (OS) or OS circuit |
| 22 | Oxygen sensor (OS) heater or OS circuit |
| 23 | Regeneration valve or circuit |
| 23 | Carbon filter solenoid valve (CFSV) or CFSV circuit (LH4.1, KE5.2) |
| 24 | Left camshaft control actuator or circuit (119 engine) |
| 25 | Right camshaft control actuator or circuit (119 engine) |
| 25 | Camshaft control actuator or circuit (104 engine) |
| 25 | Cold start valve (CSV) or CSV circuit (KE5.2) |
| 26 | Automatic transmission (AT) shift point relay or circuit |
| 27 | Injectors or injector circuit |
| 27 | Data exchange between KE and EZ control units (KE5.2) |
| 28 | Electronic control module (ECM) |
| 28 | Coolant temperature sensor (CTS) or CTS circuit (KE5.2) |
| 29 | 1st gear relay (LH4.1) |
| 29 | Coolant temperature sensor (CTS) or CTS circuit (KE5.2) |
| 30 | Immobiliser system fault (LH4.1) |
| 31 | Air temperature sensor (ATS) or ATS circuit (KE5.2) |
| 32 | MKV resistor (engine coding plug, KE5.2) |
| 34 | Coolant temperature sensor (CTS) or CTS circuit (KE5.2) |

### *Bosch LH4.1 base module*

| Flash/ FCR code | Description |
|---|---|
| 1 | No faults found in the ECM. Proceed with normal diagnostic methods |
| 5 | Maximum permissible temperature in module box exceeded |
| 6 | Electromagnetic air conditioning compressor clutch blocked |
| 7 | Poly-V-belt slipping |
| 9 | Voltage supply for electronic control module (ECM) (N3/1) interrupted |
| 10 | Voltage supply for electronic control module (ECM) (N3/1) interrupted |
| 10 | Voltage supply for fuel injectors interrupted (alternative code) |
| 11 | Voltage supply for accessory equipment control modules interrupted |
| 12 | Voltage supply for ABS (anti-lock brakes) control module (N30) or ABS/ASR (anti-lock brakes/traction control) control module (N30/1) |
| 12 | Automatic locking differential (ASD) control module (N30/2) interrupted (alternative code) |
| 15 | Voltage supply for automatic transmission kickdown valve (Y3) interrupted |
| 16 | Voltage supply for electromagnetic air conditioning compressor clutch (A9K1) interrupted |
| 17 | Voltage supply for module box blower motor (M2/2) interrupted |

### *Bosch LH4.1 diagnostic module*

| Flash/ FCR code | Description |
|---|---|
| 1 | No faults found in the ECM. Proceed with normal diagnostic methods. |
| 2 | Oxygen sensor (OS) or OS circuit, inoperative |
| 3 | Oxygen sensor (OS) or OS circuit, inoperative |
| 4 | Secondary air injection, inoperative |
| 5 | Exhaust gas recirculation (EGR) valve or EGR circuit, inoperative |
| 6 | Idle speed control valve (ISCV) or ISCV circuit, inoperative |
| 7 | Ignition system defective |
| 8 | Coolant temperature sensor (CTS) or CTS circuit, open/short-circuit |
| 9 | Air temperature sensor (ATS) or ATS circuit, open/short-circuit |
| 10 | Mass airflow (MAF) sensor or MAF sensor circuit, voltage too high/low |
| 11 | TN (engine speed) signal defective |
| 12 | Oxygen sensor (OS) or OS circuit, open/short-circuit |
| 13 | Camshaft position sensor (CMP) or CMP circuit, signal defective |
| 14 | Variable induction solenoid valve (VISV) or VISV circuit, pressure too low |
| 15 | Wide-open throttle, information defective |
| 16 | Closed throttle, information defective |
| 17 | Data exchange malfunction between individual control modules |
| 18 | Adjustable camshaft timing solenoid, open/short-circuit |
| 19 | Fuel injectors open/short-circuit or emission control system adaption at limit |
| 20 | Speed signal missing |
| 21 | Purge switchover valve, open/short-circuit |
| 22 | Camshaft position sensor (CMP) or CMP circuit, signal defective |
| 23 | Variable induction solenoid valve (VISV) or VISV circuit, pressure with engine running too low |
| 24 | Starter ring gear segments defective |
| 25 | Knock sensor (KS) or KS circuit |
| 26 | Upshift delay switchover valve, open short-circuit |
| 27 | Coolant temperature sensor (CTS) or CTS circuit |
| 28 | Coolant temperature sensor (CTS) or CTS circuit |

### *Bosch KE5.2 control module*

| Flash/ FCR code | Description |
|---|---|
| 1 | No faults found in the ECM. Proceed with normal diagnostic methods |
| 2 | Fuel pump relay or circuit |
| 3 | TN (engine speed) signal interrupted |
| 4 | Oxygen sensor (OS) or OS circuit |
| 5 | Output for secondary air injection pump control defective |
| 6 | Output for kickdown switch control defective |
| 9 | Oxygen sensor (OS) heater or OS circuit, open |
| 11 | Air conditioning (AC) compressor engagement signal missing |
| 12 | Output for air conditioning (AC) compressor control defective |
| 13 | Excessive air conditioning compressor belt slippage |
| 14 | Speed signal implausible |
| 15 | Short-circuit detected in fuel pump circuit |

### *Bosch EZ-L ignition*

| Flash/ FCR code | Description |
|---|---|
| 01 | No faults found in the ECM. Proceed with normal diagnostic methods |
| 02 | Knock sensor (KS) or KS circuit |
| 03 | Coolant temperature sensor (CTS) or CTS circuit |
| 04 | Manifold absolute pressure (MAP) sensor or MAP sensor circuit |
| 05 | Knock sensor (KS) or KS circuit |
| 06 | Camshaft position sensor (CMP) or CMP circuit |
| 07 | Knock sensor (KS) or KS circuit |
| 08 | Automatic transmission |
| 09 | Automatic transmission |
| 10 | Data exchange between KE and EZ control units |
| 11 | Ignition control |
| 12 | Vehicle speed sensor (VSS) or VSS circuit |
| 13 | Throttle pot sensor (TPS) or TPS circuit |

| Flash/ FCR code | Description |
|---|---|
| 14 | Throttle pot sensor (TPS) or TPS circuit |
| 15 | Ignition end stage fault |
| 16 | Ignition end stage fault |
| 17 | Vehicle speed sensor (VSS) or VSS circuit |
| 18 | Crank angle sensor (CAS) or CAS circuit |
| 20 | Electronic control module (ECM) or ECM circuit |
| 21 | Manifold absolute pressure (MAP) sensor or MAP sensor circuit |
| 26 | Data exchange between LH and EZ control units |
| 27 | Data exchange between LH and EZ control units |
| 34 | Ignition fault No.1 cylinder |
| 35 | Ignition fault No.5 cylinder |
| 36 | Ignition fault No.4 cylinder |
| 37 | Ignition fault No.8 cylinder |
| 38 | Ignition fault No.6 cylinder |
| 39 | Ignition fault No.3 cylinder |
| 40 | Ignition fault No.7 cylinder |
| 41 | Ignition fault No.2 cylinder |

### *Bosch Motronic 6.0/6.1*

| Flash/ FCR code | Description |
|---|---|
| 1 | No faults found in the ECM. Proceed with normal diagnostic methods |
| 2 | Coolant temperature sensor (CTS) or CTS circuit |
| 3 | Air temperature sensor (ATS) or ATS circuit |
| 4 | Manifold absolute pressure (MAP) sensor or MAP sensor circuit |
| 5 | Throttle switch (TS) or TS circuit |
| 6 | Throttle pot sensor (TPS) or TPS circuit |
| 7 | Throttle pot sensor (TPS) or TPS circuit |
| 8 | Idle speed control valve (ISCV) or ISCV circuit |
| 9 | Oxygen sensor (OS) or OS circuit |
| 11 | Oxygen sensor (OS) or OS circuit |
| 13 | Oxygen sensor (OS) or OS circuit |
| 14 | Injectors 4 cylinder Nos 1 and 4 |
| 15 | Injectors 4 cylinder Nos. 2 and 3 |
| 20 | Oxygen sensor (OS) or OS circuit |
| 21 | Ignition primary circuit, cylinders 1 and 4 |
| 22 | Ignition primary circuit, cylinders 2 and 3 |
| 24 | Engine speed signal or circuit |
| 26 | Octane encoding or circuit |
| 27 | Engine speed signal or circuit |
| 28 | Vehicle speed sensor (VSS) or VSS circuit |
| 29 | Variable induction solenoid valve (VISV) or VISV circuit, preheating relay or circuit |
| 30 | Fuel pump circuit |
| 31 | CO adjuster or CO circuit |
| 36 | Carbon filter solenoid valve (CFSV) or CFSV circuit |
| 37 | Automatic transmission (AT) |
| 49 | Electronic control module (ECM) |

### *PMS (Siemens)*

| Flash code | FCR code | Description |
|---|---|---|
| 01 | - | No faults found in the ECM. Proceed with normal diagnostic methods |
| 02 | 02 | Coolant temperature sensor (CTS) or CTS circuit |
| 02 | 00 | Coolant temperature sensor (CTS) or CTS circuit |
| 02 | 01 | Coolant temperature sensor (CTS) or CTS circuit |
| 03 | 03 | Air temperature sensor (ATS) or ATS circuit |
| 03 | 04 | Air temperature sensor (ATS) or ATS circuit |
| 04 | 06 | Manifold absolute pressure (MAP) sensor or MAP sensor circuit |
| 04 | 05 | Manifold absolute pressure (MAP) sensor or MAP sensor circuit |
| 05 | 07 | Throttle pot sensor (TPS) or TPS circuit |
| 06 | 13 | Throttle pot sensor (TPS) or TPS circuit |
| 06 | 14 | Throttle pot sensor (TPS) or TPS circuit |
| 07 | 15 | Idle speed control valve (ISCV) or ISCV circuit |
| 07 | 16 | Idle speed control valve (ISCV) or ISCV circuit |
| 08 | 17 | Idle speed control valve (ISCV) or ISCV circuit |
| 08 | 20 | Idle speed control valve (ISCV) or ISCV circuit |
| 08 | 21 | Idle speed control valve (ISCV) or ISCV circuit |
| 09 | 22 | Oxygen sensor (OS) or OS circuit |
| 09 | 23 | Oxygen sensor (OS) or OS circuit |
| 11 | 30 | Oxygen sensor (OS) or OS circuit |
| 11 | 32 | Oxygen sensor (OS) or OS circuit |
| 11 | 31 | Oxygen sensor (OS) or OS circuit |
| 13 | 37 | Oxygen sensor (OS) or OS circuit |
| 13 | 36 | Oxygen sensor (OS) or OS circuit |
| 14 | 42 | Injectors (4-cylinder) numbers 2 and 3 |
| 14 | 40 | Injectors (4-cylinder) numbers 1 and 4 |
| 14 | 41 | Injectors (4-cylinder) numbers 1 and 3 |
| 15 | 43 | Injectors (4-cylinder) numbers 2 and 4 |
| 20 | 54 | Oxygen sensor (OS) or OS circuit |
| 20 | 55 | Oxygen sensor (OS) or OS circuit |
| 20 | 57 | Oxygen sensor (OS) or OS circuit |
| 20 | 56 | Oxygen sensor (OS) or OS circuit |
| 21 | 64 | Ignition primary circuit - cylinders 1 and 4 |
| 21 | 62 | Ignition primary circuit - cylinders 1 and 4 |
| 21 | 63 | Ignition primary circuit - cylinders 1 and 4 |
| 22 | 65 | Ignition primary circuit - cylinders 2 and 3 |
| 22 | 67 | Ignition primary circuit - cylinders 2 and 3 |
| 22 | 66 | Ignition primary circuit - cylinders 2 and 3 |
| 24 | 73 | Engine speed sensor or circuit |
| 24 | 75 | Engine speed sensor or circuit |
| 26 | 77 | MKV (engine coding plug) |
| 26 | 80 | MKV (engine coding plug) |
| 27 | 81 | Tachometer circuit |
| 27 | 82 | Tachometer circuit |
| 28 | 83 | Vehicle speed sensor (VSS) or VSS circuit |
| 28 | 84 | Vehicle speed sensor (VSS) or VSS circuit |
| 29 | 86 | Variable induction solenoid valve (VISV) or VISV circuit, preheating relay |
| 29 | 85 | Variable induction solenoid valve (VISV) or VISV circuit, preheating relay |
| 30 | 00 | Fuel pump circuit |
| 30 | 87 | Fuel pump circuit |
| 36 | A4 | Carbon filter solenoid valve (CFSV) or CFSV circuit |
| 36 | A3 | Carbon filter solenoid valve (CFSV) or CFSV circuit |
| 37 | A5 | Automatic transmission (AT) |
| 49 | E6 | Electronic control module (ECM) |

### *HFM*

| Flash code | FCR code | Description |
|---|---|---|
| 1 | - | No faults found in the ECM. Proceed with normal diagnostic methods |
| 2 | 002 | Coolant temperature sensor (CTS) or CTS circuit, short-circuit |
| 2 | 003 | Coolant temperature sensor (CTS) or CTS circuit, open-circuit |
| 2 | 004 | Coolant temperature sensor (CTS) or CTS circuit, implausible signal |
| 2 | 005 | Coolant temperature sensor (CTS) or CTS circuit, loose contact |
| 3 | 006 | Air temperature sensor (ATS) or ATS circuit, short-circuit |
| 3 | 007 | Air temperature sensor (ATS) or ATS circuit, open-circuit |

| Flash code | FCR code | Description |
|---|---|---|
| 3 | 008 | Air temperature sensor (ATS) or ATS circuit, loose contact |
| 4 | 009 | Mass airflow (MAF) sensor or MAF sensor circuit, implausibly high signal |
| 4 | 010 | Mass airflow (MAF) sensor or MAF sensor circuit, open-circuit |
| 5 | 011 | Throttle switch (TS) |
| 5 | 012 | Throttle switch (TS), closed |
| 5 | 013 | Throttle switch (TS), loose contact |
| 6 | 014 | Throttle pot sensor (TPS) or TPS circuit, implausibly high signal |
| 6 | 015 | Throttle pot sensor (TPS) or TPS circuit, implausibly low signal |
| 6 | 016 | Throttle pot sensor (TPS) or TPS circuit, loose contact |
| 7 | 017 | Throttle pot sensor (TPS) or TPS circuit, implausibly high signal |
| 7 | 018 | Throttle pot sensor (TPS) or TPS circuit, implausibly low signal |
| 7 | 019 | Throttle pot sensor (TPS) or TPS circuit, loose contact |
| 8 | 020 | Idle speed control valve (ISCV) or ISCV circuit, bottom control stop |
| 8 | 021 | Idle speed control valve (ISCV) or ISCV circuit, top control stop |
| 9 | 023 | Oxygen sensor (OS) or OS circuit, voltage high |
| 9 | 024 | Oxygen sensor (OS) or OS circuit, cold or open-circuit |
| 9 | 025 | Oxygen sensor (OS) or OS circuit, sensor voltage implausible |
| 11 | 029 | Oxygen sensor (OS) or OS circuit, heater current low |
| 11 | 030 | Oxygen sensor (OS) or OS circuit, heater current high |
| 11 | 031 | Oxygen sensor (OS) or OS circuit, heater short-circuit |
| 13 | 035 | Oxygen sensor (OS) or OS circuit, mixture lean |
| 13 | 036 | Oxygen sensor (OS) or OS circuit, mixture rich |
| 14 | 037 | Injector No. 1, short-circuit |
| 14 | 038 | Injector No. 1, open/short-circuit |
| 15 | 039 | Injector No. 2, short-circuit to positive |
| 15 | 040 | Injector No. 2, open/short-circuit to earth |
| 16 | 041 | Injector No. 3, short-circuit to positive |
| 16 | 042 | Injector No. 3, open/short-circuit to positive |
| 17 | 043 | Injector No. 4, short-circuit to positive |
| 17 | 044 | Injector No. 4, open/short-circuit to positive |
| 20 | 049 | Oxygen sensor (OS) or OS circuit |
| 20 | 050 | Oxygen sensor (OS) or OS circuit |
| 20 | 051 | Oxygen sensor (OS) or OS circuit |
| 20 | 052 | Oxygen sensor (OS) or OS circuit |
| 20 | 053 | Oxygen sensor (OS) or OS circuit |
| 20 | 054 | Oxygen sensor (OS) or OS circuit |
| 22 | 055 | Ignition coil, No. 1 cylinder misfire or circuit |
| 22 | 056 | Ignition coil, No. 4 cylinder misfire or circuit |
| 22 | 057 | Ignition coil or circuit, current not reached |
| 23 | 058 | Ignition coil, No. 2 cylinder misfire or circuit |
| 23 | 059 | Ignition coil, No. 3 cylinder misfire or circuit |
| 23 | 060 | Ignition coil or circuit, current not reached |
| 24 | 064 | Crank angle sensor (CAS) or CAS circuit |
| 24 | 065 | Crank angle sensor (CAS) or CAS circuit |
| 24 | 066 | Crank angle sensor (CAS) or CAS circuit |
| 25 | 067 | Camshaft position (CMP) sensor or CMP sensor circuit |
| 26 | 068 | Electronic control module (ECM) |
| 26 | 069 | Electronic control module (ECM) |
| 27 | 070 | RPM sensor or circuit |
| 27 | 071 | RPM sensor or circuit |
| 28 | 072 | Vehicle speed sensor (VSS) or VSS circuit, signal not recognised |
| 28 | 073 | Vehicle speed sensor (VSS) or VSS circuit, signal implausibly high |
| 29 | 074 | Variable induction solenoid valve (VISV) or VISV circuit, heater relay or circuit |
| 29 | 075 | Variable induction solenoid valve (VISV) or VISV circuit, heater relay or circuit |
| 30 | 076 | Fuel pump relay or circuit |
| 32 | 079 | Knock sensor (KS) 1 or circuit |
| 32 | 080 | Knock sensor (KS) 2 or circuit |
| 33 | 081 | Ignition timing, maximum retardation at No. 1 cylinder |
| 33 | 082 | Ignition timing, variation in cylinder firing point greater than 6° |
| 34 | 083 | Knock sensor (KS) control circuit in ECM |
| 34 | 084 | Oxygen sensor (OS) or OS circuit |
| 36 | 086 | Carbon filter solenoid valve (CFSV) or CFSV circuit |
| 36 | 087 | Carbon filter solenoid valve (CFSV) or CFSV circuit |
| 37 | 088 | Automatic transmission (AT) or AT circuit |
| 38 | 089 | Camshaft timing actuator, short-circuit to positive |
| 38 | 090 | Camshaft timing actuator, open/short-circuit to earth |
| 43 | 101 | No starter signal, terminal 50 |
| - | 107 | Dwell angle control at ignition output stage |
| 49 | 110 | Electronic control module (ECM), supply voltage implausible |
| 49 | 111 | Electronic control module (ECM), supply voltage low |
| 50 | 112 | Electronic control module (ECM) |
| - | 113 | Electronic control module (ECM) |
| - | 114 | Incorrect electronic control module (ECM) coding, from 01/94 |
| - | 115 | Incorrect electronic control module (ECM) coding, from 01/94 |
| - | 116 | Infra-red control unit signal from 12/94 |
| - | 117 | Attempt to start when infra-red locking system locked, from 12/94 |

### *Bosch KE3.1-Jetronic, KE3.5-Jetronic, KE5.2-Jetronic, LH4.1-Jetronic*

| Duty cycle % | Description |
|---|---|
| 0% | Oxygen sensor (OS) or OS circuit |
| 0% | Self-Diagnosis connector (non-cat vehicles) |
| 10% | Throttle pot sensor (TPS) or TPS circuit |
| 20% | Throttle pot sensor (TPS) or TPS circuit |
| 20% | Injectors or injectors circuit (LH4.1) |
| 30% | Coolant temperature sensor (CTS) or CTS circuit |
| 40% | Airflow sensor (AFS) or AFS circuit |
| 50% | Oxygen sensor signal (cat vehicles) |
| 50% | Input signals ok |
| 60% | Vehicle speed sensor (VSS) or VSS circuit |
| 60% | Camshaft position sensor (CMP) or CMP circuit |
| 70% | Engine speed signal |
| 80% | Air temperature sensor (ATS) or ATS circuit |
| 80% | Barometric pressure sensor (BPS) or BPS circuit (KE3.5) |
| 80% | Drive engaged (KE5.2) |
| 80% | CAN signal (LH4.1) - communication between system computers |
| 90% | Pressure actuator (KE5.2) |
| 90% | Safety fuel cut-off active (LH4.1) |
| 100% | Oxygen sensor (OS) or OS circuit |
| 100% | Electronic control module (ECM) (non-cat vehicles) |

# Chapter 23
# Mitsubishi

## Contents

**Index of vehicles**
**Self-Diagnosis**
Clearing fault codes without a fault code reader (FCR) . . . . . 4
Guide to test procedures . . . . . 6
Introduction . . . . . 1
Retrieving codes without a fault code reader (FCR) . . . . . 3
Self-Diagnosis connector location . . . . . 2
Self-Diagnosis with a fault code reader (FCR) . . . . . 5
**Fault code table**

## Index of vehicles

| Model | Engine code | Year | System |
|---|---|---|---|
| 3000 GT 24V | 6G72 | 1992 to 1997 | Mitsubishi ECI-Multi- MPi |
| Carisma 1.6 SOHC 16V | 4G92 | 1996 to 1997 | Mitsubishi ECI-Multi- MPi |
| Carisma 1.8 SOHC 16V | 4G93 | 1996 to 1997 | Mitsubishi ECI-Multi- MPi |
| Carisma 1.8 DOHC 16V | 4G93 | 1996 to 1997 | Mitsubishi ECI-Multi- MPi |
| Colt 1.3i SOHC 12V cat | 4G13 | 1992 to 1996 | Mitsubishi ECI-Multi- MPi |
| Colt 1.3 SOHC 12V | 4G13 | 1996 to 1997 | Mitsubishi ECI-Multi- MPi |
| Colt 1600 GTi DOHC | 4G61 | 1988 to 1990 | Mitsubishi ECI-Multi- MPi |
| Colt 1.6i SOHC 16V | 4G92 | 1992 to 1996 | Mitsubishi ECI-Multi- MPi |
| Colt 1.6i 4x4 SOHC 16V cat | 4G92 | 1992 to 1996 | Mitsubishi ECI-Multi- MPi |
| Colt 1.6 SOHC 16V | 4G92 | 1996 to 1997 | Mitsubishi ECI-Multi- SEFi |
| Colt 1800 GTi-16V DOHC 16V | 4G67 | 1990 to 1993 | Mitsubishi ECI-Multi- MPi |
| Colt 1.8 GTi DOHC 16V cat | 4G93 | 1992 to 1995 | Mitsubishi ECI-Multi- MPi |
| Cordia 1800 Turbo | 4G62T | 1985 to 1989 | Mitsubishi ECI-Multi- MPi |
| Galant 1800 SOHC 16V cat | 4G93 | 1993 to 1997 | Mitsubishi ECI-Multi- MPi |
| Galant Turbo | 4G63T | 1985 to 1988 | Mitsubishi ECI-Multi- Turbo |
| Galant 2000 GLSi SOHC | 4G63 | 1988 to 1993 | Mitsubishi ECI-Multi- MPi |
| Galant 2000 GTi 16V DOHC | 4G63 | 1988 to 1993 | Mitsubishi ECI-Multi- MPi |
| Galant 2000 4WD DOHC | 4G63 | 1989 to 1994 | Mitsubishi ECI-Multi- MPi |
| Galant 2000 4WS cat DOHC | 4G63 | 1989 to 1994 | Mitsubishi ECI-Multi- MPi |
| Galant 2.0i SOHC 16V cat | - | 1993 to 1997 | Mitsubishi ECI-Multi- MPi |
| Galant 2.0i V6 DOHC 24V | 6A12 | 1993 to 1997 | Mitsubishi ECI-Multi- MPi |
| Galant Sapporo 2400 | 4G64 | 1987 to 1989 | Mitsubishi ECI-Multi- MPi |
| Galant 2.5i V6 DOHC 24V | 6G73 | 1993 to 1995 | Mitsubishi ECI-Multi- MPi |
| L300 SOHC 16V | 4G63 | 1994 to 1997 | Mitsubishi ECI-Multi- MPi |
| Lancer 1600 GTi 16V DOHC | 4G61 | 1988 to 1990 | Mitsubishi ECI-Multi- MPi |
| Lancer 1.6i SOHC 16V | 4G92 | 1992 to 1996 | Mitsubishi ECI-Multi- MPi |
| Lancer 1.6i 4x4 SOHC 16V cat | 4G92 | 1992 to 1996 | Mitsubishi ECI-Multi- MPi |
| Lancer 1800 GTi DOHC 16V | 4G67 | 1990 to 1993 | Mitsubishi ECI-Multi- MPi |
| Lancer 1.8 GTi DOHC 16V cat | 4G93 | 1992 to 1995 | Mitsubishi ECI-Multi- MPi |
| Lancer 1800 4WD cat | 4G37-8 | 1989 to 1993 | Mitsubishi ECI-Multi- MPi |
| Shogun 3.5i V6 DOHC 24V | 6G74 | 1994 to 1997 | Mitsubishi ECI-Multi- MPi |
| Sigma Estate 12V | 6G72 | 1993 to 1996 | Mitsubishi ECI-Multi- MPi |
| Sigma Wagon 12V cat | 6G72 | 1993 to 1996 | Mitsubishi ECI-Multi- MPi |
| Sigma 3.0i 24V cat | 6G72 | 1991 to 1996 | Mitsubishi ECI-Multi- MPi |
| Space Wagon 1.8i SOHC 16V | 4G93 | 1991 to 1997 | Mitsubishi ECI-Multi- MPi |
| Space Wagon 2.0i DOHC 16V | 4G63 | 1992 to 1997 | Mitsubishi ECI-Multi- MPi |
| Starion Turbo | 4G63T | 1986 to 1989 | Mitsubishi ECI-Multi- + Turbo |
| Starion 2.6 Turbo cat | G54B1 | 1989 to 1991 | Mitsubishi ECI-Multi- + Turbo |

# Self-Diagnosis

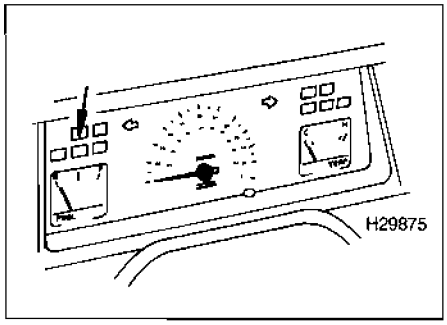


**23.1 SD warning light in instrument panel (arrowed)**

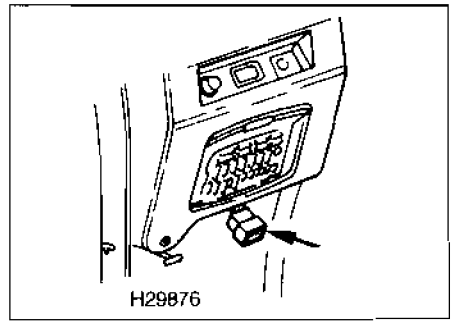


**23.2 SD connector located below radio in centre console (arrowed)**

## 1 Introduction

Mitsubishi vehicles are equipped with the Mitsubishi ECI-Multi engine management system that controls primary ignition, fuel injection and idle functions from within the same control module.

### *Self-Diagnosis (SD) function*

The ECM (Electronic control module) has a self-test capability that continually examines the signals from certain engine sensors and actuators, and then compares each signal to a table of programmed values. If the diagnostic software determines that a fault is present, the ECM stores one or more fault codes in the ECM memory. Codes will not be stored about components for which a code is not available, or for conditions not covered by the diagnostic software. Mitsubishi systems generate 2-digit fault codes for retrieval by manual means or by a dedicated FCR.

### *Limited operating strategy (LOS)*

Mitsubishi systems featured in this Chapter utilise LOS (a function that is commonly called the "limp-home mode"). Once certain faults have been identified (not all faults will initiate LOS), the ECM will implement LOS and refer to a programmed default value rather than the sensor signal. This enables the vehicle to be safely driven to a workshop/garage for repair or testing. Once the fault has cleared, the ECM will revert to normal operation.

### *Adaptive or learning capability*

Mitsubishi systems also utilise an adaptive function that will modify the basic programmed values for most effective operation during normal running, and with due regard to engine wear.

### *Self-Diagnosis (SD) warning light*

Mitsubishi models are equipped with a Self-Diagnosis warning light located within the instrument panel **(see illustration 23.1)**

## 2 Self-Diagnosis connector location

**Note:** *The Mitsubishi SD connector is provided both for retrieving flash codes and for dedicated FCR use*

### *Early Shogun models*

The SD connector is located in the console, below the radio **(see illustration 23.2)**

### *Galant 2.0 and Sapporo 2.4, Colt/Lancer, Sigma, Shogun 3.0V6*

The SD connector is located below the facia, next to the fusebox **(see illustration 23.3)**

## 3 Retrieving codes without a fault code reader (FCR)

**Note:** *During the course of certain test procedures, it is possible for additional fault codes to be generated. Care must be taken that any codes generated during test routines do not mislead diagnosis. All codes must be cleared once testing is complete*

### *Analogue voltmeter method*

**1** Attach an analogue voltmeter to terminals A and B in the SD connector **(see illustration 23.4)**.

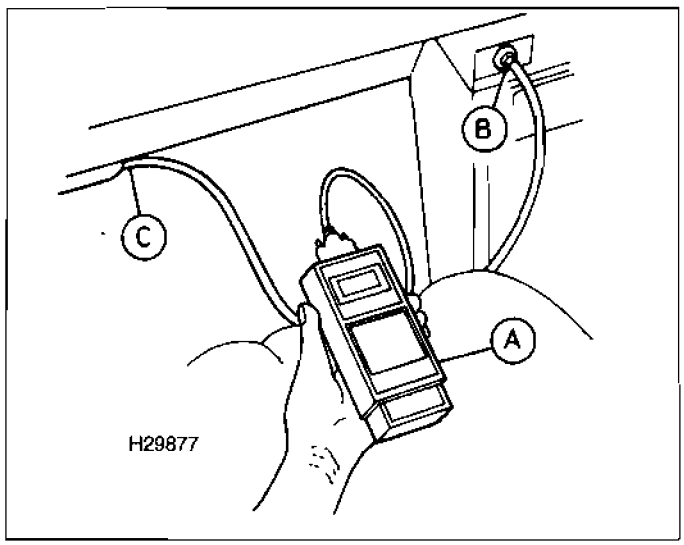


**23.3 FCR attached for fault code reading**

*A FCR*
*B Cigarette lighter used for electrical power source*
*C SD connector*

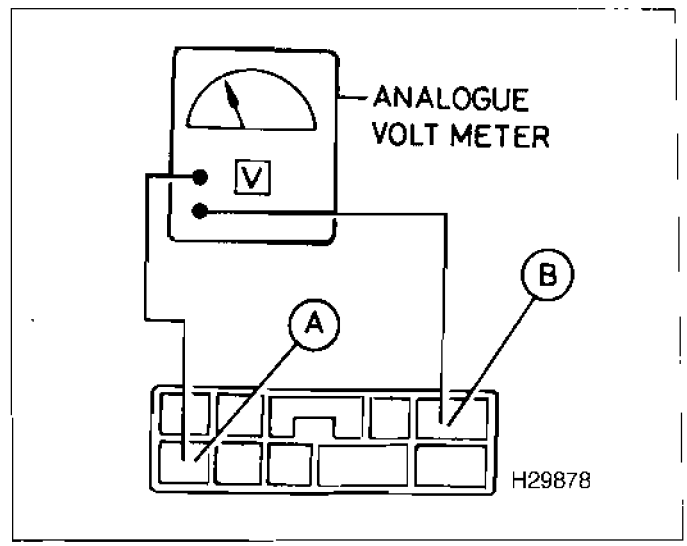


**23.4 Terminals A and B of the SD connector bridged by an analogue voltmeter**

*A Earth terminal* *B SD terminal*

# Fault code table

### *Mitsubishi ECI-Multi*

| Flash/ FCR code | Description |
|---|---|
| 0 | No faults found in the ECM. Proceed with normal diagnostic methods |
| 11 | Oxygen sensor (OS) or OS circuit |
| 12 | Mass airflow (MAF) sensor or MAF sensor circuit |
| 12 | Manifold absolute pressure (MAP) sensor or MAP sensor circuit (alternative code) |
| 13 | Air temperature sensor (ATS) or ATS circuit |
| 14 | Throttle position sensor (TPS) or TPS circuit |
| 15 | Idle speed control valve (ISCV) or ISCV circuit |
| 21 | Coolant temperature sensor (CTS) or CTS circuit |
| 22 | Crank angle sensor (CAS) or CAS circuit |
| 23 | Crank angle sensor (CAS) or CAS circuit (alternative code) |
| 24 | Vehicle speed sensor (VSS) or VSS circuit |
| 25 | Atmospheric pressure sensor (APS) or APS circuit |
| 31 | Knock sensor (KS) or KS circuit |
| 32 | Manifold absolute pressure (MAP) sensor or MAP sensor circuit |
| 36 | Ignition timing adjuster earthed |
| 39 | Oxygen sensor (OS) or OS circuit |
| 41 | Injector or injector circuit |
| 42 | Fuel pump or fuel pump circuit |
| 44 | Ignition coil (1 and 4 cylinders) or circuit |
| 52 | Ignition coil (2 and 5 cylinders) or circuit |
| 53 | Ignition coil (3 and 6 cylinders) or circuit |
| 55 | Idle speed control valve (ISCV) or ISCV circuit |
| 61 | Automatic transmission (AT) electronic control module (ECM) cable |
| 62 | Induction control valve sensor or circuit |
| 71 | Vacuum solenoid - ETC or circuit |
| 72 | Ventilation solenoid - ETC or circuit |

# Self-Diagnosis

## 1 Introduction

The engine management system (EMS) fitted to Nissan vehicles is Nissan ECCS, which exists in both single-point and multi-point injection (SPI and MPI) forms. Nissan ECCS controls the primary ignition, fuel injection and idle functions from within the same control module.

### *Self-Diagnosis (SD) function*

Each ECM (electronic control module) has a self-test capability that continually examines the signals from certain engine sensors and actuators, and then compares each signal to a table of programmed values. If the diagnostic software determines that a fault is present, the ECM stores one or more fault codes in the ECM memory. Codes will not be stored about components for which a code is not available, or for conditions not covered by the diagnostic software. Nissan ECCS generates 2-digit fault codes for retrieval by manual means or by a dedicated FCR.

### *Limited operating strategy (LOS)*

Nissan systems featured in this Chapter utilise LOS (a function that is commonly called the "limp-home mode"). Once certain faults have been identified (not all faults will initiate LOS), the ECM will implement LOS and refer to a programmed default value rather than the sensor signal. This enables the vehicle to be safely driven to a workshop/garage for repair or testing. Once the fault has cleared, the ECM will revert to normal operation.

### *Adaptive or learning capability*

Nissan systems also utilise an adaptive function that will modify the basic programmed values for most effective operation during normal running, and with due regard to engine wear.

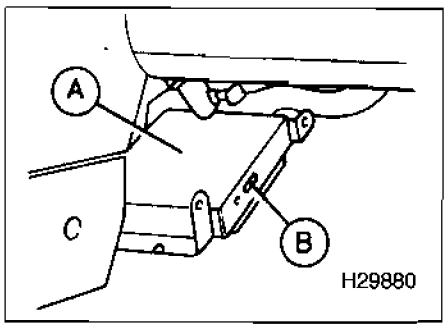


**24.2 The ECM (A) and integral LED/LEDs (B) are located under a panel on the centre console under the facia**

*The single red LED, or the red and green LED(s), will be set into the ECM casing beside the mode selector (as applicable)*

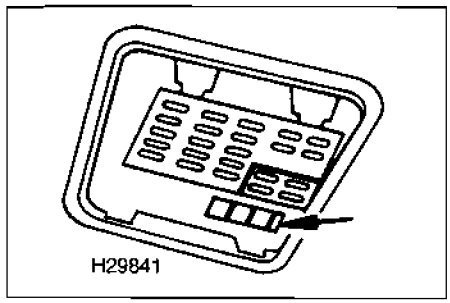


**24.1 The SD connector is located behind the fusebox cover**

### *Self-Diagnosis (SD) warning light*

All Nissan models are equipped with either a single red LED, or a red and a green LED, set in the casing of the ECM. In addition, a Self-Diagnosis warning light is located within the instrument panel, and can also be used to display fault codes. The warning light will flash in unison with the LED on the ECM, or will remain illuminated while a fault is stored.

## 2 Self-Diagnosis connector and ECM locations

**Note:** *The Nissan SD connector is provided for connecting to a dedicated FCR. Flash codes are retrieved via the SD connector, or by turning a mode selector on the ECM.*

### *SD connector location*

Under a panel on the centre console, under the facia, or behind the fusebox cover **(see illustration 24.1)**.

### *ECM location*

Under the facia on the driver's side, under the driver's seat, or behind a cover on the right-hand side of the centre console **(see illustration 24.2)**.

## 3 Retrieving fault codes without a fault code reader (FCR) - flash codes

**Note:** *During the course of certain test procedures, it is possible for additional fault codes to be generated. Care must be taken that any codes generated during test routines do not mislead diagnosis. All codes must be cleared once testing is complete.*

**1** In the Nissan ECCS system, a number of diagnostic modes may be used to retrieve codes and associated information, depending on model and on the number of LEDs present on the electronic control module (ECM).

### *Single red LED on the ECM*

**2** There are two self-diagnosis modes available on these models. **Note:** *Where fitted, the SD warning light will flash in unison with the LED on the ECM, or will remain illuminated while fault codes are present.*

### Mode I

**3** Switch the ignition on.
**4** Check that the LED on the ECM casing is illuminated. If not, check the bulb.
**5** Start the engine. The LED should extinguish and remain extinguished to indicate that no fault codes have been recorded. If the LED becomes illuminated while the engine is running, a system fault is indicated.
**6** Stop the engine and turn off the ignition.

### Mode II - fault code retrieval

**7** Switch the ignition on.
**8** Use a jumper lead to bridge the IGN and CHK terminals in the SD connector **(see illustration 24.3)**. Remove the bridge after 2 seconds, and any fault codes will be displayed on the LED as 2-digit flash codes.

*a) The first series of flashes indicates the multiples of ten, the second series of flashes indicates the single units.*
*b) Tens are indicated by 0.6-second flashes, separated by a short pause.*
*c) A pause of 0.9 seconds separates tens and units (the light remains extinguished during pauses).*
*d) Units are indicated by 0.3-second flashes, separated by short pauses.*
*e) Four long flashes and one short flash, for example, displays code 41.*
*f) A pause of 2.1 seconds separates the transmission of each individual code*
*g) The code is repeated with a 4-second pause between each code that is displayed*

**9** Count the number of flashes in each series, and record each code as it is transmitted. Refer to the table at the end of the Chapter to determine the meaning of the fault code.
**10** Continue retrieving codes until all stored codes have been retrieved and recorded.
**11** If the system is free of faults, continue with mode II, engine running (see paragraph 12 onwards). All system faults must be repaired before the closed-loop control system will function correctly.

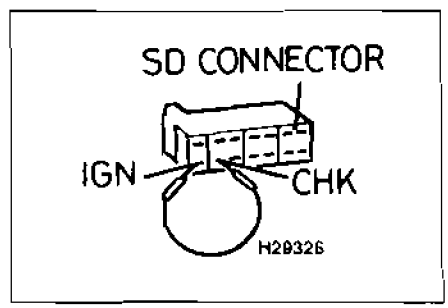


**24.3 Use a jumper lead to bridge the IGN and CHK terminals in the SD connector**

### Mode II - sensor diagnosis, engine running (check of closed-loop control system)

12 Start the engine and run it to normal operating temperature.
13 Raise the engine speed to 2000 rpm for a period of 2 minutes
14 Observe the warning light or LED display. If the LED switches off and on at a frequency of 5 times in 10 seconds, this indicates that the engine is in closed-loop control. If the LED remains constantly off or on, this indicates that the engine is in open-loop control:
*a) When the LED is on, the fuelling is lean.*
*b) When the LED is off, the fuelling is rich.*
15 The SD light or LED will reflect the current condition of lean or rich by staying on or off immediately before switching to open-loop control.

## Red and green LEDs on ECM (300ZX 1984-1990 and Silvia Turbo )

16 There are two self-diagnosis modes available on these models. A mode selector is provided on the ECM casing to select the correct SD mode **(see illustration 24.4)** Carefully use a screwdriver to turn the mode selector as required during the following procedures. Be warned that harsh treatment can damage the mode selector.

### Mode I

17 Turn the mode selector fully anti-clockwise.
18 Switch on the ignition.
19 Check that the red and green LEDs on the ECM casing are illuminated. If not, check the bulb(s).

### Mode II

20 Turn the mode selector fully clockwise.
21 The ECM red and green LEDs will now display fault codes
*a) The red LED indicates the multiples of ten, and the green LED the single units.*
*b) Two red flashes followed by two green flashes indicates code 22.*
22 During fault code transmission, the following codes will be displayed, even if the components are not faulty:
*a) 23*
*b) 24 (VG30ET)*
*c) 31*
23 Record all displayed codes and continue. The next part of the routine will determine whether faults do indeed exist in the components represented by code numbers 23, 24 (VG30ET) and 31
24 Depress the accelerator pedal fully and then release it.
25 The LEDs should flash code numbers 24 (VG30ET) and 31. If code 23 is repeated, this indicates that a fault has been found in that circuit. Record any other codes displayed and continue.
26 On models with the VG30ET engine only, move the transmission selector from neutral to one of the other positions. The LED should

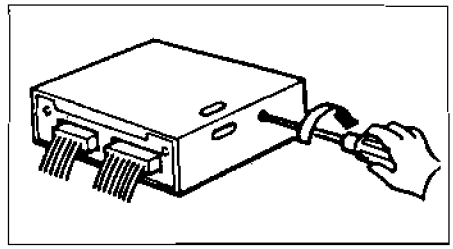

**24.4 A mode selector is provided on the ECM. Carefully use a screwdriver to turn the mode selector as required**

flash code 31 to signify that no fault has been recorded. If code 24 is repeated, this indicates that a fault has been found in that circuit. Record any other codes displayed and continue.
27 Start the engine and allow it to idle.
28 The LEDs should flash code number code 14 (VG30ET) and 31. Record any other codes displayed and continue.
29 On models with the VG30ET engine only, drive the vehicle at more than 10km/h. Stop the vehicle, but leave the engine running. If code 14 is repeated, this indicates that a fault has been found in that circuit. Record any other codes displayed and continue
30 Turn the air conditioner switch on and off (where fitted). The LEDs should flash code number 44, indicating that there are no faults in the system. If air conditioning is not fitted to the vehicle, code 31 will be transmitted in place of code 44.
31 Record any other codes displayed, and repair the indicated circuits. Repeat the whole process if necessary.
32 Turn the mode selector fully anti-clockwise.
33 Turn off the ignition and stop the engine.

## Red and green LEDs on the ECM (except 300ZX 1984-1990 and Silvia Turbo)

34 There are five self-diagnosis modes available on these models. A mode selector is provided on the ECM casing to select the correct SD mode. Carefully use a screwdriver to turn the mode selector as required during the following procedures. Be warned that harsh treatment can damage the mode selector.
35 Switch on the ignition.
36 Turn the mode selector fully clockwise.
37 Both red and green LEDs will begin to flash, and will cycle through five modes signified by one, two, three, four and five flashes.
38 A mode is selected by turning the mode selector fully anti-clockwise immediately after it has flashed the mode required. To select mode III, turn the mode selector fully anti-clockwise immediately after it has flashed three times.
39 Once the ignition is turned off, the ECM will return to mode I.
40 After self-diagnosis is completed, ensure that the mode selector is returned to the normal running position by turning it fully anti-clockwise. **Note:** *Modes I and II are only available in catalyst-equipped engines. The engine must be at normal operating temperature and functioning in closed-loop control.*

### Mode I (oxygen sensor monitor)

41 After the green LED has flashed once, turn the mode selector fully anti-clockwise.
42 Check that the red and green LEDs on the ECM casing are illuminated. If not, check the bulb(s).
43 Start the engine, and the fuel control system will initially enter the open-loop condition:
*a) The green LED will either remain illuminated or extinguished.*
*b) The red LED will remain extinguished unless a fault has been detected by the ECM.*
44 After the fuel control system has reached the closed-loop condition, the green LED will begin to flash. If the green LED does not flash, a fault has been detected in the fuel system:
*a) The green LED will illuminate during lean running conditions and extinguish during rich running conditions.*
*b) The red LED will remain extinguished unless a fault has been detected by the ECM.*

### Mode II (mixture ratio feedback control monitor)

45 After the green LED has flashed twice, turn the mode selector fully anti-clockwise.
46 Check that the green LED on the ECM casing is illuminated, and the red LED is extinguished. If not, check the bulb(s).
47 Start the engine, and the fuel control system will initially enter the open-loop condition. The green and red LEDs will remain synchronised in either the illuminated or extinguished condition.
48 After the fuel control system has reached the closed-loop condition, the green LED will begin to flash. If the green LED does not flash, a fault has been detected in the fuel system.
49 The red light will illuminate during lean running conditions (more than 5% leaner) and extinguish during rich running conditions (more than 5% richer). During the time that the mixture ratio is controlled within 5% of its operating parameters, the red LED will flash in synchronisation with the green LED.

### Mode III (fault code output)

**Note:** *Codes will be stored in the ECM memory until the starter has been operated fifty times, after which it will be cleared or replaced by a new code.*
50 After the green LED has flashed three times, turn the mode selector fully anti-clockwise.
51 The red and green LEDs on the ECM will now display fault codes:
*a) The red LED indicates the multiples of ten, and the green LED indicates the single units.*
*b) Two red flashes followed by two green flashes indicates code number 22.*
52 Record all codes that are transmitted. If code 55 is transmitted, no fault is stored.

**53** It is now possible to enter the clear codes routine. Refer to Section 4.
**54** Turn off the ignition.

### Mode IV (switch-on/switch-off monitor)

**55** After the green LED has flashed four times, turn the mode selector fully anti-clockwise.
**56** The red LED should remain extinguished.
**57** Start the engine. The red LED must illuminate during the time that the starter motor is in operation. If the LED remains off, check the starter signal circuit to the ECM.
**58** Depress the accelerator pedal. The red LED must illuminate during the time that the accelerator pedal is depressed. If the LED remains off, check the idle switch. The LED can be toggled on and off with every depression of the accelerator pedal.
**59** Lift the drive wheels so that the wheels can turn. Observe all safety principles.
**60** Engage a gear and drive the wheels so that 12 mph is exceeded. The green LED will illuminate at speeds over 12 mph, and extinguish at speeds below 12 mph. If the green LED does not behave as described, check the VSS circuit.
**61** Turn the ignition off.

### Mode V (dynamic test of components)

**62** Switch on the ignition and start the engine.
**63** Turn the mode selector fully clockwise.
**64** After the green LED has flashed five times, turn the mode selector fully anti-clockwise.
**65** Run the engine under various operating conditions, and observe the LEDs.
**66** If the LEDs begin to flash, count the flashes to determine the fault. The fault code is flashed once, and is not stored in memory:

*a) One red flash - fault detected in the crank angle sensor circuit*
*b) Two green flashes - fault detected in the airflow sensor circuit.*
*c) Three red flashes - fault detected in the fuel pump circuit.*
*d) Four green flashes - fault detected in the ignition system circuit.*

**67** Stop the engine.

## 4 Clearing fault codes without a fault code reader (FCR)

**1** A number of methods may be used to clear codes from the ECM, depending on model. All methods are described below.

### *Single red LED on the ECM*

**2** Turn the ignition.
**3** Place the system into mode II and retrieve the fault codes as described in Section 3.
**4** After diagnostic mode two has been completed:

*a) Bridge the SD terminals IGN and CHK*
*b) Wait for at least 2 seconds.*
*c) Disconnect the bridging wire*
*d) Turn off the ignition.*

### *Red and green LEDs on the ECM (300ZX 1984-1990 and Silvia Turbo)*

**5** Use the following method to clear the codes from these models:

*a) Switch on the ignition.*
*b) Turn the mode selector fully clockwise for a period exceeding two seconds.*
*c) Turn the mode selector fully anti clockwise for a period exceeding two seconds.*
*d) Turn off the ignition.*

### *Red and green LEDs on the ECM (except 300ZX 1984-1990 and Silvia Turbo)*

**6** Place the system in to mode III and retrieve the fault codes as described in Section 3.
**Note:** *Record all codes before completing the following routines to clear the codes. When selecting mode IV after mode III, the codes will be cleared from the ECM memory.*

*a) Turn the mode selector fully clockwise.*
*b) After the LED has flashed four times, turn the mode selector fully anti-clockwise, which selects mode IV.*
*c) Turn the ignition off.*

### *All models (alternative method)*

**7** Disconnect the battery for a period of twenty-four hours. **Note:** *The first drawback to this method is that battery disconnection will re-initialise all ECM adaptive values. Re-learning the appropriate adaptive values requires starting the engine from cold, and driving at various engine speeds for approximately 20 to 30 minutes. The engine should also be allowed to idle for approximately 10 minutes. The second drawback is that the radio security codes, clock setting and other stored values will be initialised, and these must be re-entered once the battery has been reconnected. Where possible, an FCR should be used for code clearing.*
**8** A fault is automatically cleared once the engine starter has been used for a total of fifty times after the fault has cleared. If the fault recurs before 50 starts have been made, the counter will be reset to zero, and another 50 starts must occur before the fault is automatically cleared. This procedure occurs on an individual fault code basis; each code will only be cleared after 50 starts with no recurrence of that particular fault.

## 5 Self-Diagnosis with a fault code reader (FCR)

**Note:** *During the course of certain test procedures, it is possible for additional fault codes to be generated. Care must be taken that any codes generated during test routines do not mislead diagnosis.*

### *All Nissan models*

**1** Connect an FCR to the SD connector. Use the FCR for the following purposes, in strict compliance with the FCR manufacturer's instructions:

*a) Retrieving fault codes.*
*b) Clearing fault codes.*
*c) Displaying Datastream.*
*d) Checking the closed-loop mixture control.*
*e) Testing actuators.*
*f) Returning adaptive function to original default values.*
*g) Making adjustments:*
  *Setting TPS position*
  *Setting ignition timing advance.*
  *Adjusting CO/mixture value (non-catalyst models).*
  *Setting base idle speed*
*h) Changing the following parameters (engine running):*
  *ISCV duty cycle.*
  *Fuel injection pulse rate.*
  *Ignition timing retard.*
  *Coolant temperature sensor (changing temperature).*

**2** Codes must always be cleared after component testing, or after repairs involving the removal or replacement of an engine management system component.

## 6 Guide to test procedures

**1** Use an FCR to interrogate the ECM for fault codes, or gather codes manually, as described in Sections 3 or 5.

### *Codes stored*

**2** If one or more fault codes are gathered refer to the fault code table at the end of this Chapter to determine their meaning.
**3** If several codes are gathered, look for a common factor such as a defective earth return or supply.
**4** Refer to the component test procedures in Chapter 4, where you will find a means of testing the majority of components and circuits found in the modern EMS.
**5** Once the fault has been repaired, clear the codes and run the engine under various conditions to determine if the problem has cleared.
**6** Check the ECM for fault codes once more. Repeat the above procedures where codes are still being stored.
**7** Refer to Chapter 3 for more information on how to effectively test the EMS.

### *No codes stored*

**8** Where a running problem is experienced, but no codes are stored, the fault is outside of the parameters designed into the SD system. Refer to Chapter 3 for more information on how to effectively test the engine management system.
**9** If the problem points to a specific component, refer to the test procedures in Chapter 4, where you will find a means of testing the majority of components and circuits found in the modern EMS.

# Fault code table

## *Nissan ECCS*

| Flash/ FCR code | Description |
|---|---|
| 11 | Crank angle sensor (CAS) in distributor or CAS circuit |
| 11 | RPM or RPM circuit (alternative code) |
| 12 | Mass airflow (MAF) sensor or MAF circuit |
| 13 | Coolant temperature sensor (CTS) or CTS circuit |
| 14 | Vehicle speed sensor (VSS) or VSS circuit |
| 21* | Ignition signal circuit |
| 22 | Fuel pump or fuel pump circuit |
| 23 | Throttle pot sensor (TPS) - idle or TPS circuit |
| 24 | Throttle pot sensor (TPS) or TPS circuit |
| 24 | Neutral/park switch (alternative code) |
| 25 | Auxiliary air valve (AAV) or AAV circuit |
| 26 | Turbo, boost pressure sensor (BPS) or BPS circuit |
| 31 | Air conditioning (A/C models) |
| 31 | No faults found (non-A/C models) - alternative code |
| 31 | Electronic control module (ECM) - alternative code for GA16i, CA18DE engines |
| 32 | Starter signal |
| 33 | Oxygen sensor (OS) or OS circuit |
| 34 | Knock sensor (KS) or KS circuit |
| 34 | Throttle pot sensor (TPS) or TPS circuit (alternative code) |
| 41 | Air temperature sensor (ATS) or ATS circuit |
| 42 | Fuel temperature sensor (FTS) or FTS circuit |
| 43 | Throttle pot sensor (TPS) or TPS circuit |
| 44 | No faults found in the ECM. Proceed with normal diagnostic methods |
| 51 | Injectors or injector circuit |
| 54 | Automatic transmission (AT) signal lost |
| 55 | No faults found in the ECM. Proceed with normal diagnostic methods |

***Note:** If code 11 and code 21 are both displayed in the same incident, check the CAS circuit before checking other circuits.*

# Chapter 25
# Peugeot

## Contents

**Index of vehicles**
**Self-Diagnosis**
Actuator testing without a fault code reader (FCR) . . . . . 5
Clearing fault codes without a fault code reader (FCR) . . . . . 4
Guide to test procedures . . . . . 7
Introduction . . . . . 1
Retrieving fault codes without a fault code reader (FCR) - flash codes . . . . . 3
Self-Diagnosis connector location . . . . . 2
Self-Diagnosis with a fault code reader (FCR) . . . . . 6
**Fault code tables**

## Index of vehicles

| Model | Engine code | Year | System |
|---|---|---|---|
| 106 1.0 cat | TU9ML/Z (CDY, CDZ) | 1993 to 1996 | Bosch Mono-Motronic MA3.0 |
| 106 1.1 | TU1M/L3/L (HDY, HDZ) | 1996 to 1997 | Bosch Mono-Motronic MA3.1 |
| 106 1.1i cat | TU1ML/Z (HDY, HDZ) | 1991 to 1992 | Bosch Mono-Jetronic A2.2 |
| 106 1.1i cat | TU1ML/Z (HDY, HDZ) | 1993 to 1996 | Magneti-Marelli FDG6 |
| 106 1.4 | TU3JP/L3 | 1996 to 1997 | Magneti-Marelli 1 AP |
| 106 1 4i 8V SOHC Rallye cat | TU2J2L/Z (MFZ) | 1993 to 1996 | Magneti-Marelli 8P |
| 106 1.4i | TU3J2K (K6B) | 1991 to 1992 | Bosch Motronic MP3.1 |
| 106 1.4i cat | TU3J2L/Z (KFZ) | 1991 to 1996 | Bosch Motronic MP3.1 |
| 106 1 4i cat | TU3MCL/Z (KDX) | 1993 to 1996 | Bosch Mono Motronic MA3.0 |
| 106 1 6 | TU5JPL/Z (NFZ) | 1994 to 1996 | Bosch Motronic MP5.1 |
| 106 1 6 | TU5JP/L3 | 1996 to 1997 | Bosch Motronic 5.2 |
| 106 1.6 MPi | TU5J2L/Z/K (NFY) | 1994 to 1996 | Magneti-Marelli 8P |
| 205 1.1i cat | TU1ML/Z (HDZ) | 1989 to 1992 | Bosch Mono-Jetronic A2.2 |
| 205 1.1i cat | TU1ML/Z (HDZ) | 1992 to 1996 | Magneti-Marelli FDG6 |
| 205 1.4i LC cat | TU3MZ (KDZ) | 1988 to 1991 | Bosch Mono-Jetronic A2.2 |
| 205 1 4i HC cat | TU3ML/Z (KDY) | 1991 to 1994 | Bosch Mono-Jetronic A2 2 |
| 205 1.4i | TU3FM/L (KDY2) | 1994 to 1996 | Bosch Mono-Motronic MA3.0 |
| 205 1 6i cat | XU5M2L/Z (BDY) | 1990 to 1991 | Magneti-Marelli BAG5 |
| 205 1.6i and AT cat | XU5M3L/Z (BDY) | 1992 to 1997 | Magneti-Marelli FDG6 |
| 205 GTi 1 9 8V cat | XU9JAZ (DKZ) | 1989 to 1993 | Bosch Motronic 1 3 |
| 306 1 1i | TU1ML/Z (HDY, HDZ) | 1993 to 1997 | Magneti-Marelli FDG6 |
| 306 1.1i | TU1ML/Z (HDY, HDZ) | 1993 to 1996 | Bosch Mono-Motronic MA3.0 |
| 306 1.4i cat | TU3MCL/Z (KDX) | 1993 to 1995 | Bosch Mono-Motronic MA3.0 |
| 306 1.4i cat | TU3MCL/Z (KDX) | 1994 to 1997 | Magneti-Marelli FDG6 |
| 306 1.6i cat | TU5JPL/Z (NFZ) | 1993 to 1997 | Bosch Motronic MP5.1 |
| 306 1 8i Cabrio and cat | XU7JPL/Z (LFZ) | 1993 to 1997 | Magneti-Marelli 8P |
| 306 2 0i Cabrio and cat | XU10J2CL/Z (RFX) | 1994 to 1997 | Magneti-Marelli 8P |
| 306 2.0i 16V cat | XU10J4L/Z (RFY) | 1994 to 1996 | Bosch Motronic MP3.2 |
| 306 2.0i GT-6 | XU10J4RS | 1996 to 1997 | Magneti-Marelli AP 10 |
| 309 1.1i cat | TU1ML/Z (HDZ) | 1991 to 1994 | Bosch Mono-Jetronic A2.2 |
| 309 1 4i cat | TU3MZ (KDZ) | 1988 to 1991 | Bosch Mono-Jetronic A2.2 |
| 309 1.4i cat | TU3ML/Z (KDY) | 1991 to 1994 | Bosch Mono-Jetronic A2.2 |
| 309 1.6i cat | XU5MZ (BDZ) | 1989 to 1991 | Magneti-Marelli BAG5 |
| 309 1.6i cat | XU5M2L/Z (BDY) | 1991 to 1992 | Magneti-Marelli G5 |
| 309 1 6i cat | XU5M3L/Z (BDY) | 1992 to 1994 | Magneti-Marelli FDG6 |
| 309 1 9 8V | XU9JA/Z (DKZ) | 1988 to 1992 | Bosch Motronic 1.3 |
| 309 1 9 16V DOHC | XU9J4K (D6C) | 1990 to 1991 | Bosch Motronic 4.1 |
| 309 1.9 16V DOHC | XU9J4K (D6C) | 1991 to 1992 | Bosch Motronic 1.3 |
| 309 1 9 16V cat | XU9J4L/Z (DFW) | 1990 to 1992 | Bosch Motronic 1.3 |
| 309 1.9 SPi cat | XU9M/Z (DDZ) | 1988 to 1993 | Fenix 1B |

| Model | Engine code | Year | System |
|---|---|---|---|
| 405 1.4i cat | TU3MCL/Z (KDX) | 1992 to 1994 | Mono Motronic MA3.0 |
| 405 1.6i cat | XU5MZ (BDZ) | 1989 to 1991 | Magneti-Marelli BAG5 |
| 405 1.6i cat | XU5M2L/Z (BDY) | 1989 to 1991 | Magneti-Marelli FDG5 |
| 405 1.6i cat | XU5M3Z (BDY) | 1991 to 1992 | Magneti-Marelli FDG6 |
| 405 1.6i cat | XU5M3L/Z (BDY) | 1992 to 1993 | Magneti-Marelli FDG6 |
| 405 1.6i cat | XU5JPL/Z (BFZ) | 1989 to 1992 | Bosch Motronic 1.3 |
| 405 1.6i cat | XU5JPL/Z (BFZ) | 1993 to 1995 | Magneti-Marelli DCM8P13 |
| 405 1.8i cat | XU7JPL/Z (LFZ) | 1992 to 1997 | Bosch Motronic MP5.1 |
| 405 1.9 8V cat | XU9JA/Z (DKZ) | 1989 to 1992 | Bosch Motronic 1.3 |
| 405 1.9 Mi16 and 4x4 16V | XU9J4K (D6C) | 1988 to 1991 | Bosch Motronic ML4.1 |
| 405 1.9 Mi16 and 4x4 16V | XU9J4K (D6C) | 1990 to 1992 | Bosch Motronic 1.3 |
| 405 1.9 Mi16 cat | XU9J4/Z (DFW) | 1990 to 1992 | Bosch Motronic 1.3 |
| 405 1.9i W/distributor | XU9J2K (D6D) | 1990 to 1991 | Bosch Motronic MP3.1 |
| 405 1.9i DIS | XU9J2K (D6D) | 1991 to 1992 | Bosch Motronic MP3.1 |
| 405 1.9 SPi cat | XU9M/Z (DDZ) | 1989 to 1992 | Fenix 1B |
| 405 2.0i and 4x4 8V cat | XU10J2CL/Z (RFX) | 1992 to 1997 | Magneti-Marelli 8P |
| 405 2.0i 16V cat | XU10J4/Z (RFY) | 1992 to 1995 | Bosch Motronic MP3.2 |
| 405 2.0i 16V turbo cat | XU10J4TEL/Z (RGZ) | 1993 to 1995 | Magneti-Marelli AP MPi |
| 406 1.6i cat | XU5JPL3(BFZ) | 1996 to 1997 | Magneti-Marelli 8P |
| 406 1.8i cat | XU7JPK(L6A) | 1996 to 1997 | Magneti-Marelli 8P |
| 406 1.8 16V | XU7JP4L | 1995 to 1997 | Bosch Motronic MP5 1 1 |
| 406 2.0 16V | XU10J4RL | 1995 to 1997 | Bosch Motronic MP5 1 1 |
| 406 2.0 Turbo | XU10J2TE/L3 | 1996 to 1997 | Bosch Motronic MP5 1 1 |
| 605 2.0i cat | XU10ML/Z (RDZ) | 1989 to 1994 | Magneti-Marelli G5 |
| 605 2.0i cat | XU10J2L/Z (RFZ) | 1990 to 1995 | Bosch Motronic MP3.1 |
| 605 2.0i 16V | XU10J4RL/Z/L3 (RFV) | 1995 to 1997 | Bosch Motronic MP5 1 1 |
| 605 2.0i turbo cat | XU10J2TEL/Z (RGY) | 1993 to 1994 | Bosch Motronic MP3 2 |
| 605 2.0i turbo | XU10J2CTEL/Z (RGX) | 1995 to 1997 | Bosch Motronic MP3.2 |
| 605 3.0i cat | ZPJL/Z (SFZ) | 1990 to 1995 | Fenix 3B |
| 605 3.0i 24V DOHC cat | ZPJ4L/Z (SKZ) | 1990 to 1994 | Fenix 4 |
| 605 3.0i 24V V6 | ZPJ4L/Z (UKZ) | 1995 to 1997 | Fenix 4 |
| 806 2.0 | XU10J2CL/Z (RFU) | 1995 to 1997 | Magneti-Marelli 8P-22 |
| 806 2.0 Turbo | XU10J2CTEL/Z (RGX) | 1995 to 1997 | Bosch Motronic MP3.2 |
| Boxer 2.0 | XU10J2U (RFW) | 1994 to 1997 | Magneti-Marelli 8P11 |

# Self-Diagnosis

## 1 Introduction

The engine management systems (EMSs) fitted to Peugeot vehicles are mainly of Bosch origin, and include Bosch Motronic versions 1.3, 3.1, 3.2, 4.1, 5 1. Other systems include Bosch Mono-Jetronic A2.2 and Bosch Mono-Motronic MA3.0, Fenix 1B, 3B and 4, and Magneti-Marelli G5, G6, and 8P.

The majority of Peugeot engine management systems control primary ignition, fuelling and idle functions from within the same control module. Early versions of Motronic 4.1 and 1.3 utilised an auxiliary air valve (AAV) that was not ECM-controlled. Bosch Mono-Jetronic fuel management systems control fuelling and idle functions alone.

### *Self-Diagnosis (SD) function*

Each ECM has a self-test capability that continually examines the signals from certain engine sensors and actuators, and compares each signal to a table of programmed values. If the diagnostic software determines that a fault is present, the ECM stores one or more fault codes. Codes will not be stored about components for which a code is not available, or for conditions not covered by the diagnostic software. In Peugeot systems, the control module generates 2-digit fault codes for retrieval either by manual means or by fault code reader (FCR).

### *Limited operating strategy (LOS)*

Peugeot systems featured in this Chapter utilise LOS (a function that is commonly called the "limp-home mode"). Once certain faults have been identified (not all faults will initiate LOS), the ECM will implement LOS and refer to a programmed default value rather than the sensor signal. This enables the vehicle to be safely driven to a workshop/garage for repair or testing. Once the fault has cleared, the ECM will revert to normal operation.

### *Adaptive or learning capability*

Peugeot systems also utilise an adaptive function that will modify the basic programmed values for most effective operation during normal running, and with due regard to engine wear.

### *Self-Diagnosis warning light*

The majority of Peugeot models are equipped with a facia-mounted SD warning light located within the instrument panel. When the ignition is switched on, the light will illuminate. Once the engine has started, the light will extinguish if the diagnostic software determines that a major fault is not present. If the light illuminates at any time during a period of engine running, the ECM has diagnosed presence of a major fault. Please note that failure of certain components designated as "minor" faults will not cause the light to illuminate. The warning light can also be triggered to transmit flash codes (see Section 3).

## 2 Self-Diagnosis connector location

The 2-pin SD connector is coloured green, and is located in the engine compartment. It is commonly mounted along the left- or right-hand inner wing, either close to the ECM, the battery, or the cooling system expansion bottle. In some vehicles, the SD connector is located inside the relay box on either the left- or right-hand wing. The SD connector is provided for both manual retrieval of flash codes and for dedicated FCR use.

The 30-pin SD connector fitted to many later models is located in the passenger compartment, either under the facia or behind a cover on the facia **(see illustration 25.1)** and is for dedicated FCR use alone.

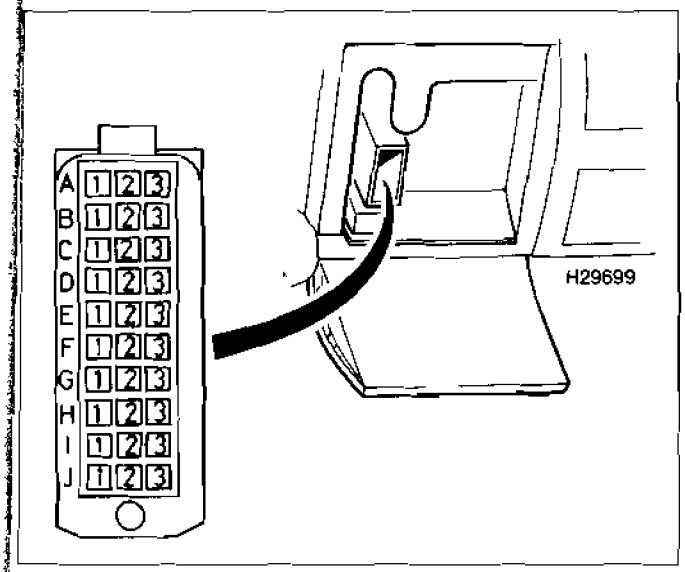


**25.1 30-pin SD connector and typical location**

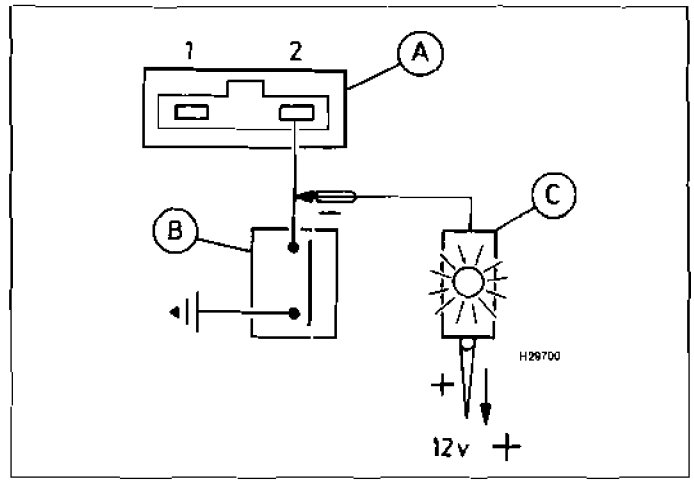


**25.2 Retrieve flash codes by connecting an accessory switch and LED light (when a warning light is not fitted) to terminal 2 in the 2-pin SD connector**

*A SD connector* *B Accessory switch* *C LED light*

## 3 Retrieving fault codes without a fault code reader (FCR) - flash codes

**Note:** *During the course of certain test procedures, it is possible for additional fault codes to be generated. Care must be taken that any codes generated during test routines do not mislead diagnosis. All codes must be cleared once testing is complete.*

### *Bosch Motronic ML4.1*

1 Attach an on/off accessory switch to the green 2-pin SD connector **(see illustration 25.2)**.

2 Switch on the ignition. The warning light should illuminate

3 Close the accessory switch The light will extinguish.

4 Open the switch after 3 seconds The warning light will begin to flash the 2-digit fault codes as follows:

*a) The two digits are indicated by two series of flashes.*

*b) The first series of flashes indicates the multiples of ten, the second series of flashes indicates the single units.*

*c) Each series consists of a number of 1-second flashes, separated by a 1.5-second pause.*

*d) The code number "13" is indicated by a 1-second flash, a 1.5-second pause and three 1-second flashes After a 2.5-second pause, the code will be repeated.*

5 Count the number of flashes in each series, and record each code as it is transmitted. Refer to the tables at the end of the Chapter to determine the meaning of the fault code

6 The first code to be displayed will be code "12", which indicates initiation of diagnosis.

7 The warning light will extinguish; wait for 3 seconds before continuing.

8 Close the accessory switch for 3 seconds.

9 Open the switch. The warning light will begin flashing to indicate a code.

10 The warning light will extinguish; wait for 3 seconds before continuing.

11 Repeat the test to retrieve further codes.

12 Continue retrieving codes until code 11 is transmitted. Code 11 signifies that no more codes are stored.

13 If the engine is a non-starter, crank the engine on the starter motor for 5 seconds, and return the ignition key to the "on" position. Do not switch off the ignition.

14 If code 11 is the first code transmitted after code 12, no faults are stored by the ECM.

15 After code 11 is transmitted, the complete test may be repeated from the start

16 Switching off the ignition ends fault code retrieval.

### *All other systems with green 2-pin SD connector*

17 Attach an on/off accessory switch to the green 2-pin SD connector **(refer to illustration 25.2)**. If the vehicle is not equipped with an SD warning light, attach an LED diode light to the SD connector as shown in the illustration.

18 Switch on the ignition. The warning light or LED should illuminate

19 Close the accessory switch; the light will remain illuminated.

20 Open the switch after 3 seconds. The warning light or LED will begin to flash the 2-digit fault codes as follows:

*a) The two digits are indicated by two series of flashes.*

*b) The first series of flashes indicates the multiples of ten, the second series of flashes indicates the single units.*

*c) Each series consists of a number of 1-second flashes, separated by a 1.5 second pause.*

*d) The code number "13" is indicated by a 1-second flash, a 1.5-second pause and three 1-second flashes. After a 2.5-second pause, the code will be repeated.*

21 Count the number of flashes in each series, and record the code. Refer to the tables at the end of the Chapter to determine the meaning of the fault code.

22 The first code indicated will be code "12", which indicates initiation of diagnosis.

23 Before continuing, wait 3 seconds for the warning light or LED to illuminate.

24 Close the accessory switch for 3 seconds; the light or LED will remain illuminated

25 Open the switch. The warning light or LED will begin flashing to indicate a code.

26 Before continuing, wait 3 seconds for the warning light or LED to illuminate.

27 Repeat the test to retrieve further codes.

28 Continue retrieving codes until code 11 is transmitted. Code 11 signifies that no more codes are stored.

29 If the engine is a non-starter, crank the engine on the starter motor for 5 seconds, and return the ignition key to the "on" position. Do not switch off the ignition.

30 If code 11 is the first code transmitted after code 12, no faults are stored by the ECM

31 After code 11 is transmitted, the complete test may be repeated from the start.

32 Turning off the ignition ends fault code retrieval.

### *30-pin SD connector*

33 A fault code reader (FCR) is required for those systems equipped with the 30-pin SD connector - flash codes are not available.

## 4 Clearing fault codes without a fault code reader (FCR)

### All systems with 2-pin SD connector

1 Repair all circuits indicated by the fault codes.
2 Switch on the ignition.
3 Perform the routines described above to retrieve code 11, signifying no other fault codes stored.
4 Close the accessory switch for more than ten seconds.
5 All fault codes should now be cleared.

### All systems (alternative)

6 Turn off the ignition and disconnect the battery negative terminal for a period of approximately 2 minutes.
7 Reconnect the battery negative terminal.
**Note:** *The first drawback to this method is that battery disconnection will re-initialise all ECM adaptive values. Re-learning the appropriate adaptive values requires starting the engine from cold, and driving at various engine speeds for approximately 20 to 30 minutes. The engine should also be allowed to idle for approximately 10 minutes. The second drawback is that the radio security codes, clock setting and other stored values will be initialised, and these must be re-entered once the battery has been reconnected. For preference, where possible clear the fault codes manually (2-pin SD connector) or use an FCR for code clearing.*

## 5 Actuator testing without a fault code reader (FCR)

### Bosch Motronic ML4.1

1 Attach an on/off accessory switch to the green 2-pin SD connector **(refer to illustration 25.2)**.
2 Close the accessory switch.
3 Switch on the ignition.
4 Wait 3 seconds and then open the accessory switch. The warning light will flash the appropriate code (refer to the actuator selection code table at the end of this Chapter) and the injector circuit will actuate. Audible clicking of the injector solenoids should be heard.

***Warning: The injectors will actuate for as long as the circuit is closed, and there is a real danger of filling the cylinders with petrol. If testing is required for more than 1 second, disconnect the fuel pump supply (or remove the fuel pump fuse) before commencing this test.***

5 Discontinue the injector test and continue with the next test by closing the accessory switch once more.
6 Wait 3 seconds and then open the accessory switch. The warning light will flash the appropriate code and the next actuator circuit will function.
7 Repeat the procedure to test each of the other actuators in turn
8 Turn off the ignition to end the test.

### Systems with 30-pin SD connector

9 A dedicated FCR must be used to test the actuators for these systems.

## 6 Self-Diagnosis with a fault code reader (FCR)

**Note:** *During the course of certain test procedures, it is possible for additional fault codes to be generated. Care must be taken that any codes generated during test routines do not mislead diagnosis.*

### All Peugeot models

1 Connect an FCR to the SD connector. Use the FCR for the following purposes, in strict compliance with the FCR manufacturer's instructions.
*a) Retrieving fault codes.*
*b) Clearing fault codes.*
*c) Testing actuators.*
*d) Displaying Datastream.*
*e) Making adjustments to the ignition timing or mixture (some Magneti-Marelli systems).*
2 Codes must always be cleared after component testing, or after repairs involving the removal or replacement of an EMS component.

## 7 Guide to test procedures

1 Use an FCR to interrogate the ECM for fault codes, or (where possible) manually gather codes as described in Sections 3 or 6.

### Codes stored

2 If one or more fault codes are gathered, refer to the fault code tables at the end of this Chapter to determine their meaning.
3 If several codes are gathered, look for a common factor such as a defective earth return or supply.
4 Refer to the component test procedures in Chapter 4, where you will find a means of testing the majority of components and circuits found in the modern EMS.
5 Once the fault has been repaired, clear the codes and run the engine under various conditions to determine if the problem has cleared.
6 Check the ECM for fault codes once more. Repeat the above procedures where codes are still being stored.
7 Refer to Chapter 3 for more information on how to effectively test the EMS.

### No codes stored

8 Where a running problem is experienced but no codes are stored, the fault is outside of the parameters designed into the SD system. Refer to Chapter 3 for more information on how to effectively test the engine management system.
9 If the problem points to a specific component, refer to the test procedures in Chapter 4, where you will find a means of testing the majority of components and circuits found in the modern EMS.

# Fault code tables

## Fault codes - all Peugeot models

| Flash/ FCR code | Description |
|---|---|
| 11 | End of diagnosis |
| 12 | Initiation of diagnosis |
| 13x | Air temperature sensor (ATS) or ATS circuit |
| 14x | Coolant temperature sensor (CTS) or CTS circuit |
| 15 | Fuel pump relay, supply fault or fuel pump control circuit |
| 18 | Turbo coolant pump control |
| 21x | Throttle pot sensor (TPS) or TPS circuit |
| 21x | Throttle switch (TS), idle contact or TS circuit |
| 22 | Idle speed control valve (ISCV), supply fault |
| 23 | Idle speed control valve (ISCV) or ISCV circuit |
| 25x | Variable acoustic characteristic induction (ACAV) solenoid L or circuit |
| 26x | Vehicle speed sensor (VSS) or VSS circuit |
| 31x | Throttle switch (TS), idle contact or TS circuit |
| 31x | Oxygen sensor (OS), mixture regulation or OS circuit (alternative code) |
| 32 | Mixture regulation, exhaust, inlet leak(s) or fuel pressure |
| 33x | Airflow sensor (AFS) or AFS circuit |
| 33x | Manifold absolute pressure (MAP) sensor or MAP sensor circuit (alternative code) |
| 33x | Throttle pot sensor (TPS) or TPS circuit (alternative code, Bosch Mono-Jetronic only) |
| 34 | Carbon filter solenoid valve (CFSV) or CFSV circuit |
| 35 | Throttle switch (TS), full-load contact |
| 36 | Crank angle sensor (CAS) or CAS circuit |
| 42 | Injectors or injector circuit |
| 43x | Knock sensor (KS), knock regulation |
| 44x | Knock sensor (KS) (knock detection) |
| 45 | Ignition coil control (coil one) |
| 46 | Turbo boost pressure solenoid valve (BPSV) or BPSV circuit |
| 47 | Turbo pressure regulation |
| 51x | Oxygen sensor (OS) or OS circuit |
| 52 | Mixture control, supply voltage, air or exhaust leak |
| 53x | Battery voltage, charging or battery fault |
| 54 | Electronic control module (ECM) |
| 55x | CO pot or CO pot circuit |
| 56 | Immobiliser system |
| 57 | Ignition coil (coil two) |
| 58 | Ignition coil (coil three) |
| 59 | Ignition coil (coil four) |
| 61 | Variable turbo regulation valve or circuit |
| 62x | Knock sensor (KS) 2 or KS circuit |
| 63x | Oxygen sensor (OS) or OS circuit |
| 64 | Mixture control B |
| 65x | Cylinder identification (CID) or CID circuit |
| 71 | Injector No. 1 control or injector circuit |
| 72 | Injector No. 2 control or injector circuit |
| 73 | Injector No. 3 control or injector circuit |
| 74 | Injector No. 4 control or injector circuit |
| 75 | Injector No. 5 control or injector circuit |
| 76 | Injector No. 6 control or injector circuit |
| 79x | Manifold absolute pressure (MAP) sensor or MAP sensor circuit |
| x | Faults that typically will cause the ECM to enter LOS and use a default value in place of the sensor |

Some faults are designated as "major" faults and will illuminate the warning light. However, major faults that will illuminate the warning light vary from system to system, and it is best to interrogate the ECM for codes if a fault is suspected. Codes designated as "minor" faults will not illuminate the warning light.

## Actuator selection code

| Flash/ FCR code | Description |
|---|---|
| 81 | Fuel pump relay |
| 82 | Injector or injector circuit |
| 83 | Idle speed control valve (ISCV) or ISCV circuit |
| 84 | Carbon filter solenoid valve (CFSV) or CFSV circuit |
| 85 | Air conditioning (A/C) compressor supply relay |
| 91 | Fuel pump or fuel pump relay |
| 92 | Injector or injector circuit |
| 93 | Idle speed control valve (ISCV) or ISCV circuit |
| 94 | Carbon filter solenoid valve (CFSV) or CFSV circuit |
| 95 | Air conditioning (A/C) compressor supply relay |

The above codes are displayed during actuator test mode when the relevant circuit has been actuated. Not all components are present in any one particular system.

# Chapter 26
# Proton

## Contents

**Index of vehicles**
**Self-Diagnosis**
Clearing fault codes without a fault code reader (FCR) . . . . . 4
Guide to test procedures . . . . . 6
Introduction . . . . . 1
Retrieving fault codes without a fault code reader (FCR) . . . . . 3
Self-Diagnosis connector location . . . . . 2
Self-Diagnosis with a fault code reader (FCR) . . . . . 5
**Fault code table**

## Index of vehicles

| Model | Engine code | Year | System |
|---|---|---|---|
| 1.3 MPi 12V SOHC cat | 4G13-2 | 1992 to 1997 | ECI-Multi- MPi |
| 1.5 MPi 12V SOHC cat | 4G15-2 | 1992 to 1997 | ECI-Multi- MPi |
| Persona 1.3 Compact SOHC 12V | 4G13-2 | 1995 to 1997 | ECI-Multi- SEFi |
| Persona 1.5 SOHC 12V | 4G15 | 1993 to 1997 | ECI-Multi- SEFi |
| Persona 1.5 Compact SOHC 12V | 4G15 | 1993 to 1997 | ECI-Multi- SEFi |
| Persona 1.6 SOHC 16V | 4G92 | 1993 to 1997 | ECI-Multi- SEFi |
| Persona 1.6 Compact SOHC 16V | 4G92 | 1993 to 1997 | ECI-Multi- SEFi |
| Persona 1.8 12V SOHC | 4G93 | 1996 to 1997 | ECI-Multi- SEFi |
| Persona 1.8 16V DOHC | 4G93 | 1996 to 1997 | ECI-Multi- SEFi |

## Self-Diagnosis

### 1 Introduction

Proton vehicles are equipped with the ECI-Multi engine management system, which controls primary ignition, fuel injection and idle functions from within the same control module.

#### *Self-Diagnosis (SD) function*

The ECM has a self-test capability that continually examines the signals from certain engine sensors and actuators, and then compares each signal to a table of programmed values. If the diagnostic software determines that a fault is present, the ECM stores one or more fault codes in the ECM memory. Codes will not be stored about components for which a code is not available, or for conditions not covered by the diagnostic software. In Proton systems, the control module generates 2-digit fault codes, for retrieval either by manual methods or by using a fault code reader (FCR).

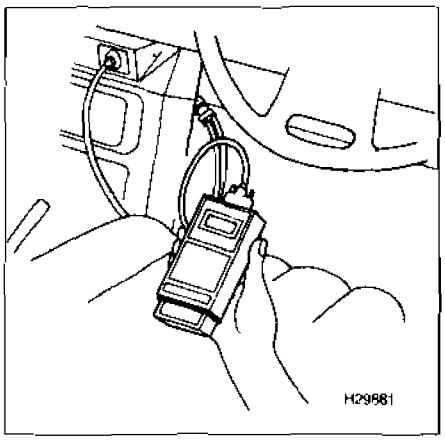


**26.1 FCR attached to read fault codes**

#### *Limited operating strategy (LOS)*

Proton systems featured in this Chapter utilise LOS (a function that is commonly called the "limp-home mode"). Once certain faults have been identified (not all faults will initiate LOS), the ECM will implement LOS and refer to a programmed default value rather than the sensor signal. This enables the vehicle to be safely driven to a workshop/garage for repair or testing. Once the fault has cleared, the ECM will revert to normal operation.

#### *Self-Diagnosis (SD) warning light*

Proton models are equipped with a self-diagnosis warning light located within the instrument panel.

### 2 Self-Diagnosis connector location

The SD connector is located where the facia and the centre console meet, on the right-hand (driver's) side **(see illustration 26.1)**. **Note:** *The Proton SD connector is provided both for retrieving codes via an analogue voltmeter and for dedicated FCR use.*

### 3 Retrieving fault codes without a fault code reader (FCR)

**Note:** *During the course of certain test procedures, it is possible for additional fault codes to be generated. Care must be taken that any codes generated during test routines do not mislead diagnosis. All codes must be cleared once testing is complete.*

1 Attach an analogue voltmeter to the A and B terminals in the SD connector **(see illustration 26.2)**.

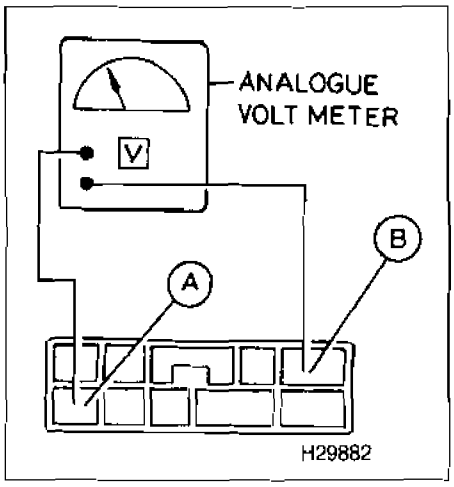


**26.2 Terminals A and B of the SD connector bridged by an analogue voltmeter**

*A Earth terminal* *B SD terminal*

2 Switch on the ignition. If the ECM has stored one or more fault codes, the voltmeter needle will begin to sweep between a higher and lower level. If no codes are stored, the needle will remain level.

*a) The first series of sweeps indicates the multiples of ten, the second series of sweeps indicates the single units.*

*b) The voltmeter needle will move for a longer period of deflection when transmitting codes in tens, and a shorter spell of deflection for units.*

*c) If faults are not found, the meter will indicate regular on/off pulses.*

3 Count the number of sweeps in each series, and record each code as it is transmitted. Refer to the table at the end of the Chapter to determine the meaning of the fault code.

4 Continue retrieving codes until all stored codes have been retrieved and recorded.

5 Turn off the ignition and remove the voltmeter to end fault code retrieval.

## 4 Clearing fault codes without a fault code reader (FCR)

1 Turn off the ignition and disconnect the battery negative terminal for a period of at least 30 seconds.

2 Reconnect the battery negative terminal.

**Note:** *The first drawback to this method is that battery disconnection will re-initialise any ECM adaptive values (where applicable). Re-learning the appropriate adaptive values requires starting the engine from cold, and driving at various engine speeds for approximately 20 to 30 minutes. The engine should also be allowed to idle for approximately 10 minutes. The second drawback is that the radio security codes, clock setting and other stored values will be initialised, and these must be re-entered once the battery has been reconnected. Where possible, an FCR should be used for code clearing.*

## 5 Self-Diagnosis with a fault code reader (FCR)

**Note:** *During the course of certain test procedures, it is possible for additional fault codes to be generated. Care must be taken that any codes generated during test routines do not mislead diagnosis.*

### All Proton models

1 Connect an FCR to the SD connector. Use the FCR for the following purposes, in strict compliance with the FCR manufacturer's instructions:

*a) Retrieving fault codes.*

*b) Clearing fault codes.*

2 Codes must always be cleared after component testing, or after repairs involving the removal or replacement of an EMS component.

## 6 Guide to test procedures

1 Use an FCR to interrogate the ECM for fault codes, or gather codes using an analogue voltmeter, as described in Sections 3 or 5

### Codes stored

2 If one or more fault codes are gathered, refer to the fault code table at the end of this Chapter to determine their meaning

3 If several codes are gathered, look for a common factor such as a defective earth return or supply.

4 Refer to the component test procedures in Chapter 4, where you will find a means of testing the majority of components and circuits found in the modern EMS.

5 Once the fault has been repaired, clear the codes and run the engine under various conditions to determine if the problem has cleared.

6 Check the ECM for fault codes once more Repeat the above procedures where codes are still being stored

7 Refer to Chapter 3 for more information on how to effectively test the EMS.

### No codes stored

8 Where a running problem is experienced but no codes are stored, the fault is outside of the parameters designed into the SD system Refer to Chapter 3 for more information on how to effectively test the engine management system.

9 If the problem points to a specific component, refer to the test procedures in Chapter 4, where you will find a means of testing the majority of components and circuits found in the modern EMS

# Fault code table

### ECI-Multi

| Voltmeter/ FCR code | Description |
|---|---|
| 7 | Fuel pump or fuel pump circuit |
| 8 | Carbon filter solenoid valve (CFSV) or CFSV circuit |
| 11 | Oxygen sensor (OS) or OS circuit |
| 13 | Air temperature sensor (ATS) or ATS circuit |
| 14 | Throttle pot sensor (TPS) or TPS circuit |
| 16 | Power supply |
| 18 | Ignition switch or circuit |
| 21 | Coolant temperature sensor (CTS) or CTS circuit |
| 22 | Crank angle sensor (CAS) or CAS circuit |
| 26 | Idle position switch or circuit |
| 27 | Power steering pressure switch (PSPS) or PSPS circuit |
| 28 | Air conditioning (A/C) or A/C circuit |
| 29 | Inhibitor switch or circuit |
| 32 | Vacuum sensor or circuit |
| 41 | Injectors or injector circuit |
| 44 | Ignition advance |
| 49 | Air conditioning or A/C circuit |

# Chapter 27
# Renault

## Contents

**Index of vehicles**
**Self-Diagnosis**
Clearing fault codes without a fault code reader (FCR) . . . . . 4
Guide to test procedures . . . . . 6
Introduction . . . . . 1
Retrieving fault codes without a fault code reader (FCR) . . . . . 3
Self-Diagnosis connector location . . . . . 2
Self-Diagnosis with a fault code reader (FCR) . . . . . 5
**Fault table**

## Index of vehicles

| Model | Engine code | Year | System |
|---|---|---|---|
| 5 1.4 cat | C3J700 (B/C/F407) | 1986 to 1990 | Renix SPi |
| 5 1.4 cat | C3J760 (B/C/F407) | 1990 to 1997 | Renix SPi |
| 5 1.7i cat | F3NG716 (B/C408) | 1987 to 1991 | Renix SPi |
| 5 1.7i cat | F3NG717 (B/C409) | 1987 to 1991 | Renix SPi |
| 5 1 7 cat | F3N702 (C409) | 1989 to 1992 | Renix MPi |
| 9 1721 cat | F3N718(L42F/BC37F) | 1986 to 1989 | Renix SPi |
| 9 1.7 cat | F3N708(L42E/C37E) | 1986 to 1989 | Renix MPi |
| 11 1721 cat | F3N718(L42F/BC37F) | 1986 to 1989 | Renix SPi |
| 11 1 7 cat | F3N708 L42E/C37E) | 1986 to 1989 | Renix MPi |
| 19 1.4i cat | C3J710 (B/C/L532) | 1990 to 1992 | Renix SPi |
| 19 1.4i cat | C3J700 | 1991 to 1992 | Renix SPi |
| 19 1 4 cat | E7J700 (B/C/L53A) | 1991 to 1995 | Bosch SPi |
| 19 1 7i cat | F3N740 (B/C/L53B | 1990 to 1992 | Renix SPi |
| 19 1 7i cat auto | F3N741 (B/C/L53B) | 1990 to 1992 | Renix SPi |
| 19 1 7 DOHC 16V | F7P700(B/C/L/D53D) | 1991 to 1993 | Renix MPi |
| 19 1.7 DOHC 16V cat | F7P704(B/C/L/D53D) | 1991 to 1995 | Renix MPi |
| 19 1 7 DOHC 16V cat | F7P704 (X53D) | 1991 to 1995 | Renix MPi |
| 19 1.7i cat | F3N746 (B/C/L53F) | 1992 to 1993 | Renix MPi |
| 19 1.7i cat | F3N742(B/C/L/X53C) | 1990 to 1992 | Renix MPi |
| 19 1 7i auto cat | F3N743 (X53C) | 1990 to 1992 | Renix MPi |
| 19 1 8i cat and Cabrio | F3P704 (X53Y) | 1992 to 1996 | Bosch SPi |
| 19 1.8i cat and Cabrio | F3P705 (X53Y) | 1992 to 1995 | Bosch SPi |
| 19 1.8i cat and Cabrio | F3P706 (X53Y) | 1992 to 1995 | Bosch SPi |
| 19 1 8i cat and Cabrio | F3P707 (X53Y) | 1992 to 1995 | Bosch SPi |
| 19 1 8 cat | F3P700 (X538) | 1992 to 1996 | Renix MPi |
| 21 1.7i cat | F3N723 (X48F) | 1991 to 1995 | Renix SPi |
| 21 1 7i cat | F3N722(B/K/L/48E) | 1991 to 1995 | Renix MPi |
| 21 1721 cat | F3N 726(L42F/BC37F) | 1986 to 1989 | Renix SPi |
| 21 2 0 12V and 4x4 cat | J7R740 (B/L/X48R) | 1991 to 1995 | Renix MPi |
| 21 2.0 cat | J7R746 (B/K/L48C) | 1991 to 1995 | Renix MPi |
| 21 2.0 auto cat | J7R747 (B/K/L48C) | 1991 to 1995 | Renix MPi |
| 21 2 0 and 4x4 | J7R750 (B/L/K483) | 1986 to 1993 | Renix MPi |
| 21 2 0 and 4x4 auto | J7R751 (K483) | 1986 to 1993 | Renix MPi |
| 21 2 0 TXi 12V | J7RG754(X48Q/Y/R) | 1989 to 1994 | Renix MPi |
| 21 2 0 turbo and 4x4 cat | J7R756 (L48L) | 1991 to 1994 | Renix MPi |
| 21 2 0 turbo | J7R752 (L485) | 1988 to 1992 | Renix MPi |
| 21 2.0 turbo 4x4 | J7R752 (L485) | 1991 to 1992 | Renix MPi |
| 21 2.2 cat | J7T754 (B/K/L48K) | 1992 to 1995 | Renix MPi |
| 21 2.2 auto cat | J7T755 (B/K/L48K) | 1992 to 1995 | Renix MPi |
| 25 2.0 | J7R722 (B29H) | 1986 to 1992 | Renix MPi |
| 25 2 0 auto | J7R723 (B29H) | 1986 to 1992 | Renix MPi |
| 25 2.0 TXi 12V | J7RG720 (B292) | 1989 to 1992 | Renix MPi |
| 25 2 0 TXi 12V auto | J7RG721 (B292) | 1989 to 1993 | Renix MPi |
| 25 2 0 TXi 12V cat | J7R726 (B294) | 1991 to 1993 | Renix MPi |
| 25 2 2 | J7TE706 (B29E) | 1984 to 1987 | Renix MPi |
| 25 2.2 auto | J7TG707 (B29E) | 1984 to 1987 | Renix MPi |
| 25 2.2 | J7TJ730 (B29E) | 1987 to 1990 | Renix MPi |
| 25 2 2 auto | J7TK731 (B29E) | 1987 to 1990 | Renix MPi |
| 25 2.2 cat | J7T732 (B29B) | 1990 to 1991 | Renix MPi |
| 25 2.2 auto cat | J7T733 (B29B) | 1990 to 1991 | Renix MPi |

| Model | Engine code | Year | System |
|---|---|---|---|
| 25 2 5 V6 turbo | Z7UA702 (B295 | 1985 to 1990 | Renix MPi |
| 25 2 5 V6 turbo cat | Z7U700 (B29G) | 1991 to 1993 | Renix MPi |
| 25 V6 2.9i | Z7WA700 (B293) | 1989 to 1993 | Renix MPi |
| 25 V6 2 9i auto | Z7W701 (B293) | 1989 to 1992 | Renix MPi |
| 25 V6 2 9i auto | Z7W709 (B293) | 1992 to 1993 | Renix MPi |
| 25 V6 2.9i cat | Z7W706 (B29F) | 1991 to 1992 | Renix MPi |
| 25 V6 2 9i cat auto | Z7W707 (B29F) | 1991 to 1992 | Renix MPi |
| Alpine 2 5 GTA V6 turbo | Z7UC730 (D501) | 1986 to 1992 | Renix MPi |
| Alpine 2.5 GTA V6 turbo cat | Z7U734 (D502) | 1990 to 1992 | Renix MPi |
| Alpine 2.5 V6 turbo cat | Z7X744 (D503) | 1992 to 1995 | Renix MPi |
| Chamade 1.4i cat | (B/C/L532)C31710 | 1990 to 1992 | Renix SPi |
| Chamade 1 4i cat | C3J700 | 1991 to 1992 | Renix SPi |
| Chamade 1 4 cat | E7J700( B/C/L53A) | 1991 to 1996 | Bosch SPi |
| Chamade 1 7i cat | F3N742 (X53C) | 1990 to 1992 | Renix MPi |
| Chamade 1 7i auto cat | F3N743 (X53C) | 1990 to 1992 | Renix MPi |
| Chamade 19 1.7i cat | F3N740 | 1990 to 1992 | Renix SPi |
| Chamade 19 1 7i auto cat | F3N741 (B/C/L53B) | 1990 to 1992 | Renix SPi |
| Chamade 1 8 cat | F3P700 | 1992 to 1994 | Renix MPi |
| Clio 1 2 cat | E7F700 (B/C/S57A/R) | 1991 to 1997 | Bosch SPi |
| Clio 1.2 cat | E7F706 (B/C/S57A/R) | 1991 to 1995 | Bosch SPi |
| Clio 1 2i | C3G720 (B/C/S577) | 1995 to 1997 | Magneti Marelli SPi |
| Clio 1 4 cat | E7J718 (B/C/S57T) | 1991 to 1997 | Bosch SPi |
| Clio 1 4 auto cat | E7J719 (B/C/S57T) | 1991 to 1996 | Bosch SPi |
| Clio 1.4 cat | E7J710 (B/C/S57B/57T) | 1991 to 1995 | Bosch SPi |
| Clio 1 4 auto cat | E7J711(B/C/S57B/57T) | 1991 to 1995 | Bosch SPi |
| Clio 16V/16S | F7P-7-22 (US87) | 1991 to 1997 | Siemens Bendix MPi |
| Clio 1 8 cat | F3P710 (B/C57C) | 1991 to 1997 | Bosch SPi |
| Clio 1.8 cat | F3P714 (B/C57U) | 1991 to 1994 | Bosch SPi |
| Clio 1 8 cat | F3P712 (C579) | 1993 to 1996 | Renix MPi |
| Clio 1 8i auto | F3P755 | 1995 to 1997 | Siemens Bendix MPi |
| Clio 1 8i | F3P758 | 1995 to 1997 | Siemens Bendix MPi |
| Clio 1 8 16V DOHC | F7P720 (C575) | 1991 to 1992 | Renix MPi |
| Clio 1.8 16V DOHC cat | F7P722 (C57D) | 1991 to 1996 | Renix MPi |

| Model | Engine code | Year | System |
|---|---|---|---|
| Safrane Quadra 3.0i V6 cat | Z7X722 (B544) | 1992 to 1994 | Renix MPi |
| Savanna 1.7i cat | F3N722 (X48E) | 1991 to 1995 | Renix MPi |
| Savanna 1.7i cat | F3N723 (X48F) | 1991 to 1995 | Renix SPi |
| Savanna 2.0 and 4x4 | J7R750 (K483) | 1986 to 1993 | Renix MPi |
| Savanna 2.0 and 4x4 auto | J7R751 (K483) | 1986 to 1993 | Renix MPi |
| Trafic 2.2i and 4x4 cat | J7T 780 (T/VxxA) | 1991 to 1993 | Renix MPi |
| Twingo 1.3 | C3G (C063) | 1994 to 1997 | Magneti-Marelli SPi |

# Self-Diagnosis

## 1 Introduction

The engine management systems fitted to Renault vehicles include Bendix, Fenix, Renix, Siemens and Magneti-Marelli, in both multi-point and single-point fuel injection (MPi and SPi) forms. All of the systems are basically similar, and components supplied by Bosch, Bendix, Fenix, Renix Siemens and Magneti-Marelli will be found on almost a "mix-and-match" basis. Renault engine management systems control the primary ignition, fuelling and idle functions from within the same control module.

### *Self-Diagnosis (SD) function*

Each ECM has a self-test capability that continually examines the signals from certain engine sensors and actuators, and compares each signal to a table of programmed values. If the diagnostic software determines that a fault is present, the ECM stores a fault. Codes will not be stored about components for which a code is not available, or for conditions not covered by the diagnostic software. Renault software does not usually generate fault codes and the FCR normally displays faults on the FCR screen without reference to a specific code number.

Renault software does not generate fault code numbers, and the FCR normally displays faults on the FCR screen without reference to a specific code number. Although actual code numbers are not available, faults in one or more of the circuits and components covered by the diagnostic software will cause a fault to be stored.

### *Limited operating strategy (LOS)*

Renault systems featured in this Chapter utilise LOS (a function that is commonly called the "limp-home mode"). Once certain faults have been identified (not all faults will initiate LOS), the ECM will implement LOS and refer to a programmed default value rather than the sensor signal. This enables the vehicle to be safely driven to a workshop/garage for repair or testing. Once the fault has cleared, the ECM will revert to normal operation.

### *Adaptive or learning capability*

Renault systems also utilise an adaptive function that will modify the basic programmed values for most effective operation during normal running, and with due regard to engine wear.

### *Self-Diagnosis warning light*

Many Renault models are equipped with an SD warning light located within the instrument panel. When the ignition is switched on, the light will illuminate. Once the engine has started, the light will extinguish if the diagnostic software determines that a fault is not present. If the light remains illuminated at any time whilst the engine is running, the ECM has diagnosed presence of a system fault.

## 2 Self-Diagnosis connector location

The 12-pin SD connector **(see illustration 27.1)** is for FCR use alone, and usually located in the driver's side fuse/relay box, or close to the MAP sensor or ignition coil/amplifier unit within the engine compartment. Renault engine management systems do not generate flash codes.

## 3 Retrieving fault codes without a fault code reader (FCR)

Flash codes are not generated in SD systems fitted to Renault vehicles, and an FCR is essential for code retrieval.

## 4 Clearing fault codes without a fault code reader (FCR)

1 Turn off the ignition and disconnect the battery negative terminal for a period of approximately 2 minutes.

2 Reconnect the battery negative terminal.

**Note:** *The first drawback to this method is that battery disconnection will re-initialise all ECM adaptive values. Re-learning the appropriate adaptive values requires starting the engine from cold, and driving at various engine speeds for approximately 20 to 30 minutes. The engine should also be allowed to idle for approximately 10 minutes. The second drawback is that the radio security codes, clock setting and other stored values will be initialised, and these must be re-entered once the battery has been reconnected. Where possible, an FCR should be used for code clearing.*

## 5 Self-Diagnosis with a fault code reader (FCR)

**Note:** *During the course of certain test procedures, it is possible for additional faults to be generated. Care must be taken that any faults generated during test routines do not mislead diagnosis.*

### *All Renault models*

1 Connect an FCR to the SD connector Use the FCR for the following purposes, in strict compliance with the FCR manufacturer's instructions:

*a) Displaying system faults.*
*b) Clearing stored system faults.*
*c) Testing actuators.*
*d) Viewing Datastream.*
*e) Making adjustments to the ignition timing or mixture (some vehicles).*
*f) Changing system parameters (some selected components)*

2 Faults must always be cleared after component testing, or after repairs involving the removal or replacement of an EMS component.

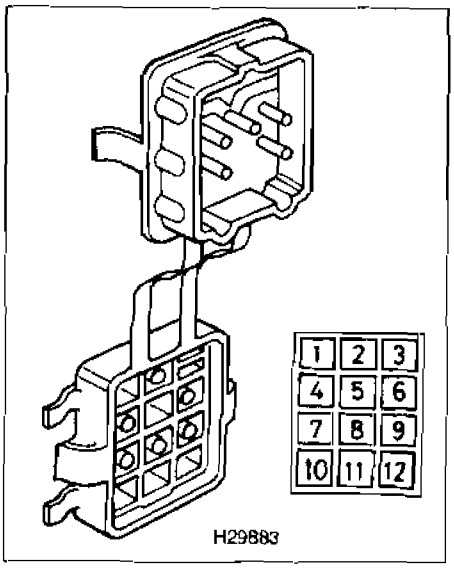


**27.1 Renault SD connector**

27

## 6 Guide to test procedures

**1** Use an FCR to interrogate the ECM for faults, as described in Section 5.

### *Faults stored*

**2** If one or more faults are gathered, refer to the fault table at the end of this Chapter to determine their meaning.

**3** If several faults are gathered, look for a common factor such as a defective earth return or supply.

**4** Refer to the component test procedures in Chapter 4, where you will find a means of testing the majority of components and circuits found in the modern EMS.

**5** Once the fault has been repaired, clear the codes and run the engine under various conditions to determine if the problem has cleared.

**6** Check the ECM for faults once more. Repeat the above procedures where faults are still being stored.

**7** Refer to Chapter 3 for more information on how to effectively test the EMS.

### *No faults stored*

**8** Where a running problem is experienced, but no faults are stored, the fault is outside of the parameters designed into the SD system. Refer to Chapter 3 for more information on how to effectively test the engine management system.

**9** If the problem points to a specific component, refer to the test procedures in Chapter 4, where you will find a means of testing the majority of components and circuits found in the modern EMS.

# Fault table

### *All Renault models*

Renault software does not usually generate fault codes. A fault code reader normally displays faults on the FCR screen without reference to a specific code number. Although actual code numbers are not available, faults in one or more of the following list of circuits and components will cause a fault to be stored.

#### List of circuits checked by Renault SD system

*Air conditioning (A/C) or A/C circuit*
*Air temperature sensor (ATS) or ATS circuit*
*Battery supply to electronic control module (ECM)*
*Crank angle sensor (CAS) or CAS circuit*
*CO pot or CO pot circuit (where used - non-cat models only)*
*Coolant temperature sensor (CTS) or CTS circuit*
*Fuel pump control (relay driver circuit)*
*Heated windscreen (if so equipped)*
*Ignition signal or circuit*
*Injector or injector circuit*
*Idle speed control valve (ISCV) or ISCV circuit*
*Knock sensor (KS) or KS circuit*
*Manifold absolute pressure (MAP) sensor or MAP sensor circuit*
*Oxygen sensor (OS) or OS circuit*
*Power assisted steering or circuit (if so equipped)*
*Main relay or circuit*
*Serial (SD) communication*
*Throttle pot sensor (TPS) or circuit*
*Throttle switch (TS) or circuit*
*Vehicle speed sensor (VSS) or VSS circuit (if so equipped)*
**Note:** *Not all components are fitted to all vehicles.*

# Chapter 28
# Rover

## Contents


**Index of vehicles**
**Self-Diagnosis**
Clearing fault codes without a fault code reader (FCR) . . . 4
Guide to test procedures . . . . . 6
Introduction . . . . . 1
Retrieving fault codes without a fault code reader (FCR) - flash codes . . . . . 3
Self-Diagnosis connector location . . . . . 2
Self-Diagnosis with a fault code reader (FCR) . . . . . 5
**Fault code tables**


## Index of vehicles

| Model | Engine code | Year | System |
|---|---|---|---|
| 111 1.1 SOHC | K8 | 1995 to 1997 | Rover MEMS SPi |
| 114 1.4 SOHC | K8 | 1995 to 1997 | Rover MEMS SPi |
| 200 Vi DOHC 16V | 18K16 | 1995 to 1997 | Rover MEMS MPi |
| 214 1.4 DOHC 16V | K16 | 1989 to 1992 | Rover MEMS SPi |
| 214 1.4 DOHC 16V cat | K16 | 1990 to 1993 | Rover MEMS SPi |
| 214 1.4 DOHC 16V cat | K16 | 1992 to 1996 | Rover MEMS MPi |
| 214 SOHC 8V | 14K8 | 1995 to 1997 | Rover MEMS MPi |
| 214 DOHC 16V | 14K16 | 1995 to 1997 | Rover MEMS MPi |
| 216 SOHC 16V | D16A7 | 1989 to 1996 | Honda PGM-Fi |
| 216 SOHC 16V cat | D16A6 | 1989 to 1996 | Honda PGM-Fi |
| 216 SOHC 16V auto cat | D16Z2 | 1989 to 1996 | Honda PGM-Fi |
| 216 DOHC 16V | D16A9 | 1990 to 1994 | Honda PGM-Fi |
| 216 DOHC 16V auto | D16Z4 | 1990 to 1994 | Honda PGM-Fi |
| 216 DOHC 16V cat | D16A8 | 1990 to 1994 | Honda PGM-Fi |
| 216 DOHC 16V | 16K16 | 1995 to 1997 | Rover MEMS MPi |
| 220 2.0 DOHC 16V cat | 20M4 M16 | 1991 to 1994 | Rover MEMS MPi |
| 220 2.0 DOHC 16V turbo cat | 20T4 T16 | 1992 to 1996 | Rover MEMS MPi |
| 220 2.0 DOHC 16V cat | 20T4 T16 | 1992 to 1996 | Rover MEMS MPi |
| 414 1.4 DOHC 16V | K16 | 1990 to 1993 | Rover MEMS SPi |
| 414 1.4 DOHC 16V cat | K16 | 1990 to 1993 | Rover MEMS SPi |
| 414 1.4 DOHC 16V cat | K16 | 1992 to 1997 | Rover MEMS MPi |
| 414 1.4 DOHC 16V | K16 | 1995 to 1997 | Rover MEMS MPi |
| 416 SOHC 16V | D16A7 | 1989 to 1996 | Honda PGM-Fi |
| 416 SOHC 16V cat | D16A6 | 1989 to 1996 | Honda PGM-Fi |
| 416 SOHC 16V auto cat | D16Z2 | 1989 to 1996 | Honda PGM-Fi |
| 416 DOHC 16V | D16A9 | 1990 to 1994 | Honda PGM-Fi |
| 416 DOHC 16V auto | D16Z4 | 1990 to 1994 | Honda PGM-Fi |
| 416 DOHC 16V cat | D16A8 | 1990 to 1994 | Honda PGM-Fi |
| 416 1.6 SOHC 16V auto | D16 | 1995 to 1996 | Honda PGM-Fi |
| 416 1.6 DOHC 16V | K16 | 1995 to 1996 | Rover MEMS MPi |
| 420 2.0 DOHC 16V cat | 20M4 M16 | 1991 to 1994 | Rover MEMS MPi |
| 420 2.0 DOHC 16V turbo cat | 20T4 T16 | 1992 to 1997 | Rover MEMS MPi |
| 420 2.0 DOHC 16V cat | 20T4 T16 | 1992 to 1997 | Rover MEMS MPi |
| 618 SOHC 16V | F18A3 | 1995 to 1997 | Honda PGM-Fi |
| 620i SOHC 16V | F20Z2 | 1993 to 1997 | Honda PGM-Fi |
| 620i S SOHC 16V | F20Z1 | 1993 to 1997 | Honda PGM-Fi |
| 620 2.0 DOHC 16V turbo | 20T4 T16 | 1994 to 1997 | Rover MEMS MPi |
| 623 DOHC 16V | H23A3 | 1993 to 1997 | Honda PGM-Fi |
| 820F SPi DOHC | 20HD/M16e | 1986 to 1990 | Rover SPi 10CU |
| 820SE SPi DOHC | 20HD/M16e | 1986 to 1990 | Rover SPi 10CU |
| 820i/Si DOHC cat | 20HD M16 | 1988 to 1990 | Lucas MPi 11CU |
| 820i 2.0 DOHC 16V cat | 20T4 | 1991 to 1996 | Rover MEMS MPi |
| 820 2.0 DOHC 16V turbo cat | 20T4 | 1992 to 1997 | Rover MEMS MPi |
| 820 DOHC 16V | 20T4 | 1996 to 1997 | Rover MEMS MPi |
| 825 Sterling V6 | KV6 | 1996 to 1997 | Rover MEMS MPi |
| 825i V6 SOHC 24V | V6 2.5 | 1986 to 1988 | Honda PGM-Fi |
| 827i V6 SOHC 24V | V6 2.7 | 1988 to 1991 | Honda PGM-Fi |
| 827i V6 SOHC 24V cat | V6 2.7 | 1988 to 1991 | Honda PGM-Fi |
| 827i V6 SOHC 24V cat | V6 2.7 | 1991 to 1996 | Honda PGM-Fi |

| Model | Engine code | Year | System |
|---|---|---|---|
| Coupe 1.6 | 16K16 | 1996 to 1997 | Rover MEMS MPi |
| Coupe 1.8 16V VVC | 18K16 | 1996 to 1997 | Rover MEMS MPi |
| Cabrio 1.6 | 16K16 | 1996 to 1997 | Rover MEMS MPi |
| Cabrio 1.8 16V VVC | 18K16 | 1996 to 1997 | Rover MEMS MPi |
| Tourer 1.6 | 16K16 | 1996 to 1997 | Rover MEMS MPi |
| Tourer 1.8 16V VVC | 18K16 | 1996 to 1997 | Rover MEMS MPi |
| Metro 1.1i SOHC cat | K8 | 1991 to 1994 | Rover MEMS SPi |
| Metro 1.4i SOHC | K8 | 1991 to 1992 | Rover MEMS SPi |
| Metro 1.4i SOHC cat | K8 | 1991 to 1994 | Rover MEMS SPi |
| Metro 1.4i GTa DOHC 16V cat | K16 | 1991 to 1992 | Rover MEMS SPi |
| Metro 1.4 GTi DOHC 16V | K16 | 1990 to 1992 | Rover MEMS SPi |
| Metro 1.4 GTi DOHC 16V cat | K16 | 1990 to 1993 | Rover MEMS SPi |
| Metro 1.4 GTi DOHC 16V cat | K16 | 1991 to 1994 | Rover MEMS MPi |
| MGF 1.8 DOHC 16V | K16 | 1995 to 1997 | Rover MEMS 1.9 MPi |
| MGF 1.8 VVC DOHC 16V | K16 | 1995 to 1997 | Rover MEMS 2J SFi |
| MG RV8 OHC 16V | V8 4.0 | 1993 to 1996 | Lucas 14CUX MPi |
| Mini Cooper 1.3i | 12A2DF75 | 1991 to 1996 | Rover MEMS SPi |
| Mini Cooper 1.3i auto | 12A2DF76 | 1991 to 1996 | Rover MEMS SPi |
| Mini Cooper 1.3i Cabriolet | 12A2EF77 | 1993 to 1994 | Rover MEMS SPi |
| Mini 1.3i | 12A2EK71 | 1996 to 1997 | Rover MEMS SPi |
| Mini 1.3 MPi | 12A2LK70 | 1996 to 1997 | Rover MEMS MPi |
| Montego 2.0 EFi cat | 20HF51 | 1990 to 1992 | Lucas MPi 11CU |
| Montego 2.0 EFi auto cat | 20HF52 | 1990 to 1992 | Lucas MPi 11CU |
| Montego 2.0 EFi | 20HE36 | 1989 to 1992 | Rover MEMS MPi |
| Montego 2.0 EFi auto | 20HE37 | 1989 to 1992 | Rover MEMS MPi |
| Sterling V6 SOHC 24V | V6 2.5 | 1986 to 1988 | Honda PGM-Fi |

# Self-Diagnosis

## 1 Introduction

The engine management systems fitted to Rover vehicles are Honda PGM-Fi, Rover MEMS (MPi and SPi), Lucas MPi 11CU and Rover SPi 10CU. Honda PGM-Fi, MEMS and Rover SPi systems control the primary ignition, fuel injection and idling functions from within the same control module. The Lucas MPi system (Lucas LH-Jetronic) controls the fuel injection and idle functions alone.

### *Self-Diagnosis (SD) function*

Each ECM (electronic control module) has a self-test capability that continually examines the signals from certain engine sensors and actuators, and then compares each signal to a table of programmed values. If the diagnostic software determines that a fault is present, the ECM stores one or more fault codes in the ECM memory. Codes will not be stored about components for which a code is not available, or for conditions not covered by the diagnostic software.

#### Honda PGM-Fi

The Honda PGM-Fi system generates 2-digit fault codes. Code retrieval in models manufactured before 1992 (approximately) is by ECM-mounted LED, and after 1992 (approximately) by SD warning light. Fault code retrieval by FCR is not possible on vehicles equipped with Honda PGM-Fi.

#### All other Rover systems

The majority of Rover systems do not generate fault code numbers. A fault code reader normally displays faults on the FCR screen without reference to a specific code number. Although actual code numbers are not available, faults in one or more of the circuits and components covered by the diagnostic software will cause a fault to be stored.

### *Limited operating strategy (LOS)*

The Rover systems featured in this Chapter utilise LOS (a function that is commonly called the "limp-home mode"). Once certain faults have been identified (not all faults will initiate LOS), the ECM will implement LOS and refer to a programmed default value rather than the sensor signal. This enables the vehicle to be safely driven to a workshop/garage for repair or testing. Once the fault has cleared, the ECM will revert to normal operation.

### *Adaptive or learning capability*

Rover systems also utilise an adaptive function that will modify the basic programmed values for most effective operation during normal running, and with due regard to engine wear.

### *Self-Diagnosis (SD) warning light*

The majority of Rover models with PGM-Fi that were manufactured before 1992 are equipped with an SD warning light located within the instrument panel, and a red LED mounted on the ECM.

The 825 2.5i and 2.7i have a red and a yellow LED; the yellow LED is used for rpm adjustment only, while the red LED is used for fault code retrieval. These models are not fitted with an SD connector.

Once the ignition has been switched on, the SD light illuminates as a bulb check, and after a few seconds extinguishes. If the SD warning light comes on at any time when the engine is running, this indicates that a fault in the system has been identified. The LED mounted in the ECM will flash to display a fault code, while the SD warning light will remain illuminated without flashing. When the ignition is switched off, both the SD warning light and LED will extinguish. When the ignition is switched on again, the SD warning light will only illuminate if the fault is still present, and the LED will resume flashing the fault code. This code will be stored in memory until cleared by following the procedures described later.

From approximately 1992 onwards, the majority of Rover vehicles with PGM-Fi are equipped with an SD connector and SD warning light; the LED(s) mounted on the ECM are no longer fitted. Once the ignition has been switched on, the SD light illuminates as a bulb check, and after a few seconds extinguishes. If the SD warning light comes on at any time when the engine is running, this indicates that a fault in the system has been identified. If a fault is indicated, bridging the terminals in the SD connector triggers the SD procedure, as described later. The control module generates 2-digit fault codes for display on the SD warning light.

Vehicles fitted with MEMS, Lucas MPi and Rover SPi are not equipped with either an LED or an SD warning light.

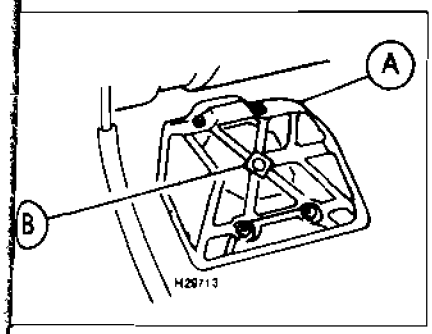


**28.1 ECM location - PGM-FI**

*A Under metal cover plate in the front passenger footwell*
*B The LED is visible through a cut-out*

## 2 Self-Diagnosis connector location

### PGM-Fi systems

The ECM is either located under the driver's seat, or under a metal cover fitted to the passenger's side footwell, under the carpet. The SD connector (where fitted) is located under the kick panel or the facia on the left-hand side **(see illustration 28.1). Note:** *The SD connector is provided for retrieving flash codes alone. Prior to 1992, flash codes can be observed on the LED on the ECM.*

### MEMS and Lucas SPi systems

On the majority of vehicles equipped with MEMS and Rover SPi, the SD connector is located adjacent to the ECM. The ECM is located either close to the battery, or mounted centrally on the bulkhead **(see illustration 28.2) Note:** *The SD connector is provided for dedicated FCR use. Flash codes cannot be retrieved from these vehicles.*

### Lucas MPi systems

On vehicles equipped with Lucas MPi, the SD connector is located close to the injection ECM, either under the driver's or the front passenger's seat.

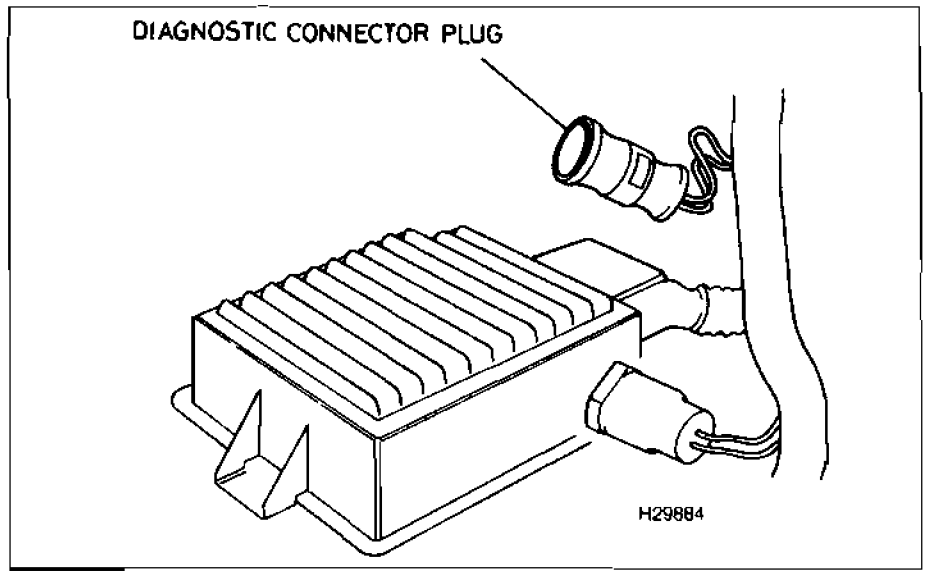


**28.2 Rover MEMS - SD connector located close to the ECM, disconnected from wiring loom**

## 3 Retrieving fault codes without a fault code reader (FCR) - flash codes

**Note:** *During the course of certain test procedures, it is possible for additional fault codes to be generated. Care must be taken that any codes generated during test routines do not mislead diagnosis. All codes must be cleared once testing is complete.*

### Rover 216 and 416 with PGM-Fi (up to 1992)

**1** Switch on the ignition.
**2** Observe the red LED mounted in the centre of the ECM **(see illustration 28.3)**

*a) The flashes are transmitted as a straight count, so fifteen flashes indicates code number 15.*
*b) The LED will pause for 2 seconds and then transmit the next code.*
*c) When all codes have been transmitted, the LED will pause for 2 seconds and then repeat the sequence.*

**3** Record the codes, and refer to the fault code table at the end of the Chapter to determine their meaning.
**4** If the number of flashes indicates a number for which there is no code, the ECM is suspect. Recheck the code output several times, and then check the earth and supply voltages to the ECM before fitting a replacement.
**5** When the ignition is switched off, the LED will extinguish. However, the LED will resume flashing once the ignition has been switched on again.
**6** If the fault(s) are corrected, the LED will continue to flash until the ECM memory is cleared. The method is detailed in Section 4.

### Rover 216, 416, 620 and 623 with PGM-Fi (1992 onwards)

**7** Use a jumper lead to bridge the two terminals in the SD connector.
**8** Switch on the ignition.
**9** Observe the SD warning light on the facia. If the warning light remains on and does not flash, the ECM is in back-up mode. In this instance, the ECM should be removed and checked by one of the specialist ECM testing companies.
**10** The flashes are transmitted as a series of long and short flashes:

*a) Short flashes indicate single units - four short flashes indicates code number 4.*
*b) Long flashes indicate multiples of ten - four long flashes and one short flash indicates code 41.*

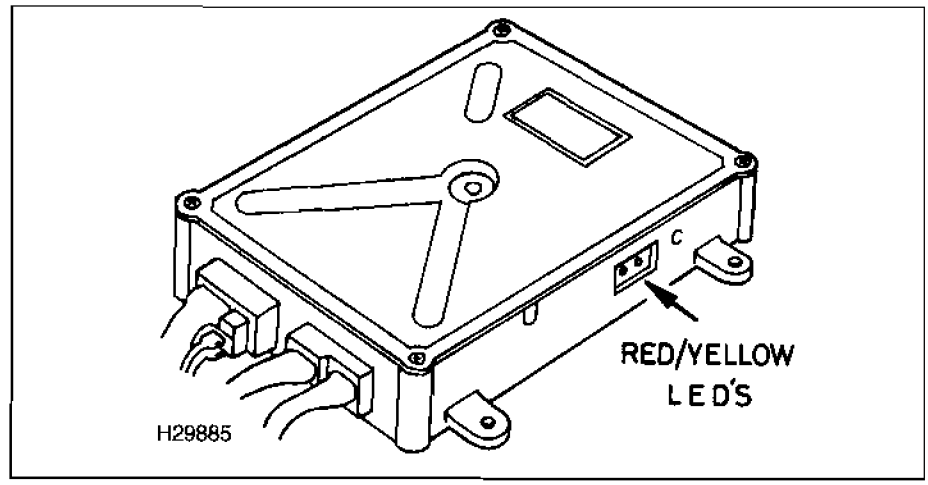


**28.3 PGM-Fi ECM with LEDs set into the casing**

28

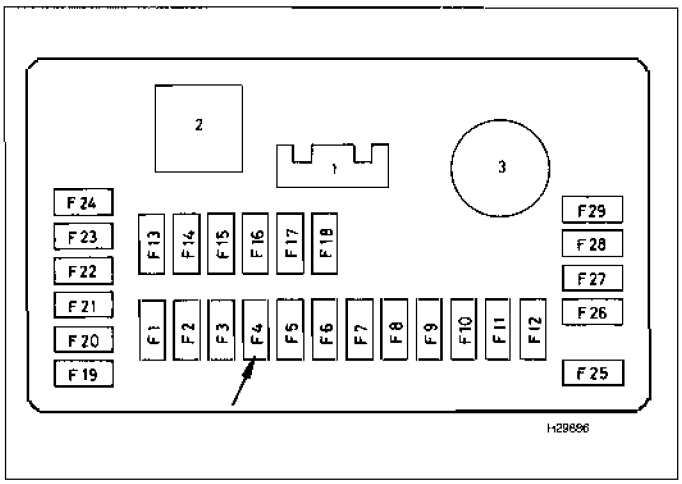


28.4 Location of 10-amp No 4 fuse

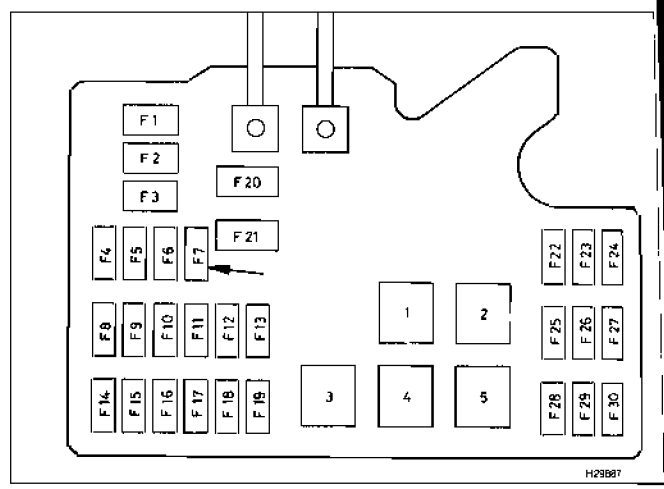


28.5 Location of back-up fuse

**11** After the first code is transmitted, the warning light will pause and then transmit the next code.

**12** Count the number of flashes transmitted by the warning light, record the codes and refer to the fault code table at the end of the Chapter to determine their meaning.

**13** When all codes have been transmitted, the warning light will pause and then repeat the sequence.

**14** If the number of flashes indicates a number for which there is no code, the ECM is suspect. Recheck the code output several times, and then check the earth and supply voltages before fitting a replacement ECM.

### *Rover 825 2.5i and 827 2.7i with PGM-Fi*

**15** Switch on the ignition.

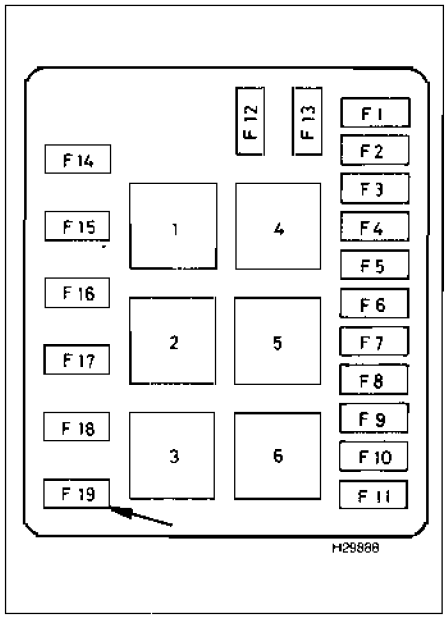


28.6 Location of alternator fuse

**16** View the red LED mounted in the centre of the ECM (the yellow LED is used for rpm adjustment).

**17** The flashes are transmitted as a straight count:

*a) Fifteen flashes indicates code number 15.*

*b) The LED will then pause for 2 seconds and then transmit the next code.*

**18** Record the codes. When all codes have been transmitted, the LED will pause for 2 seconds and then repeat the sequence.

**19** If the number of flashes indicate a number for which there is no code, the ECM is suspect. Recheck several times and then check the earth and supply voltages to the ECM before fitting a replacement.

**20** When the ignition is switched off, the LED will extinguish. However, the LED will resume flashing once the ignition has been switched on again.

**21** If the fault(s) are corrected, the LED will continue to flash until the ECM memory is cleared. The method is detailed in Section 4.

### *All other models*

**22** A fault code reader (FCR) is required to display faults generated in Rover SD systems other than PGM-Fi.

## 4 Clearing fault codes without a fault code reader (FCR)

### *Rover 216 and 416 with PGM-Fi (before 1992)*

**1** Clear the fault codes by removing the 10-amp No 4 fuse in the fusebox for a period of 10 seconds **(see illustration 28.4)**.

### *Rover 216, 416, 620 and 623 with PGM-Fi (after 1992)*

**2** Clear the fault codes by removing the 7.5-amp No 7 back-up fuse in the fusebox for a period of 30 seconds **(see illustration 28.5)**.

### *Rover 825 2.5i and 827 2.7i with PGM-Fi*

**3** Clear the fault codes by removing the 10-amp No 19 alternator fuse in the main fusebox for at least 10 seconds **(see illustration 28.6)**

### *Rover 820 and Montego with Lucas MPi*

**4** Lucas MPi utilises volatile memory, and disconnecting the battery will clear any faults. **Note:** *The first drawback to this method is that battery disconnection will re-initialise all ECM adaptive values. Re-learning the appropriate adaptive values requires starting the engine from cold, and driving at various engine speeds for approximately 20 to 30 minutes. The engine should also be allowed to idle for approximately 10 minutes. The second drawback is that the radio security codes, clock setting and other stored values will be initialised, and these must be re-entered once the battery has been reconnected. Where possible, an FCR should be used for fault clearing.*

### *Rover 820 with Rover SPi*

**5** Rover SPi utilises volatile memory, and disconnecting the battery will clear faults. Refer to the note in paragraph 4 above. When disconnecting the battery, the ECM will clear the programmed CO mixture setting and return to a default value, which usually results in a rich mixture. The remedy is to reset the CO mixture with the aid of an FCR. Where possible, an FCR should be used for fault clearing.

### *Rover MEMS*

**6** Vehicles fitted with MEMS are equipped with non-volatile memory, and faults cannot be cleared by disconnecting the battery. An FCR must be used for fault clearing in this instance.

## 5 Self-Diagnosis with a fault code reader (FCR)

**Note:** *During the course of certain test procedures, it is possible for additional fault codes to be generated. Care must be taken that any codes generated during test routines do not mislead diagnosis.*

### *All Rover systems except PGM-Fi*

1 Connect an FCR to the SD connector. Use the FCR for the following purposes, in strict compliance with the FCR manufacturer's instructions:

*a) Displaying faults.*
*b) Clearing fault codes or faults.*
*c) Testing actuators*
*d) Displaying Datastream (Rover MEMS only).*
*e) Making adjustments.*

2 Codes must always be cleared after component testing, or after repairs involving the removal or replacement of an engine management component

### *PGM-Fi systems*

3 Fault code retrieval by FCR is not possible on vehicles equipped with Honda PGM-Fi. Refer to Section 3.

## 6 Guide to test procedures

1 Use an FCR to interrogate the ECM for faults, or gather fault codes manually, as applicable (see Section 3 or 5).

### *Faults/codes stored*

2 If one or more faults or codes are gathered, refer to the fault code tables at the end of this Chapter to determine their meaning.
3 If several faults or codes are gathered, look for a common factor such as a defective earth return or supply.
4 Refer to the component test procedures in Chapter 4, where you will find a means of testing the majority of components and circuits found in the modern EMS.
5 Once the fault has been repaired, clear the codes and run the engine under various conditions to determine if the problem has cleared.
6 Check the ECM for faults or codes once more. Repeat the above procedures where faults are still being stored.
7 Refer to Chapter 3 for more information on how to effectively test the EMS.

### *No faults/codes stored*

8 Where a running problem is experienced, but no faults are stored, the fault is outside of the parameters designed into the SD system. Refer to Chapter 3 for more information on how to effectively test the engine management system.
9 If the problem points to a specific component, refer to the test procedures in Chapter 4, where you will find a means of testing the majority of components and circuits found in the modern EMS.

# Fault code tables

### *Honda PGM-Fi*

| Flash/ FCR code | Description |
|---|---|
| 0 | Electronic control module (ECM) |
| 1 | Oxygen sensor (OS) or OS circuit (except D16A9 engine) |
| 3 | Manifold absolute pressure (MAP) sensor or MAP sensor circuit |
| 5 | Manifold absolute pressure (MAP) sensor or MAP sensor circuit |
| 4 | Crank angle sensor (CAS) or CAS circuit |
| 6 | Coolant temperature sensor (CTS) or CTS circuit |
| 7 | Throttle pot sensor (TPS) or TPS circuit |
| 8 | Top dead centre (TDC) position sensor or TDC circuit |
| 9 | No 1 cylinder position (CID sensor) |
| 10 | Air temperature sensor (ATS) or ATS circuit |
| 11 | CO pot or CO pot circuit |
| 12 | Exhaust gas recirculation (EGR) system or EGR circuit |
| 13 | Atmospheric pressure sensor (APS) or APS circuit |
| 14 | Idle speed control valve (ISCV) or ISCV circuit |
| 15 | Ignition output signal |
| 16 | Fuel injector or fuel injector circuit (D15B2 engine) |
| 17 | Vehicle speed sensor (VSS) or VSS circuit |
| 18 | Ignition timing |
| 19 | Automatic transmission lock-up control solenoid valve A/B |
| 20 | Electronic load detector (ELD) or ELD circuit |
| 21 | Spool solenoid valve (variable valve timing) or spool solenoid circuit |
| 22 | Valve timing oil pressure switch |
| 30 | Automatic transmission (AT), signal A |
| 31 | Automatic transmission (AT), signal B |
| 41 | Oxygen sensor (OS) heater or OS circuit (D16Z6, D16Z7, B16A2 engine) |
| 41 | Linear airflow (LAF, oxygen sensor) heater or LAF sensor circuit (D15Z1 engine) |
| 43 | Fuel supply system or circuit (D16Z6, D16Z7, B16Z2 engine) |
| 48 | Linear airflow (LAF, oxygen sensor) sensor or LAF sensor circuit (D15Z1 engine) |

### *Rover MEMS, Lucas MPi and Lucas SPi*

Rover software generates only limited fault codes, and the FCR normally displays faults on the FCR screen without reference to a specific code number. Faults in one or more of the following list of circuits and components will cause a fault to be stored. Please note that not all circuits are available on all systems.

#### Typical circuits checked by Rover MEMS, Lucas SPi and Lucas MPi

*Airflow sensor (AFS) or AFS circuit*
*Air conditioning*
*Air temperature sensor (ATS) or ATS circuit*
*Alternator*
*Battery supply to ECM*
*Camshaft position sensor (CMP) or CMP circuit*
*Coolant temperature sensor (CTS) or CTS circuit*
*Crank angle sensor (CAS) or CAS circuit*
*Fuel temperature sensor/switch (FTS) or FTS circuit*
*Heated rear window*
*Injectors*
*Knock sensor (KS) or KS sensor*
*Manifold absolute pressure (MAP) sensor or MAP circuit*
*Oxygen sensor (OS) or OS circuit (cat only)*
*Relay circuit*
*Stepper motor*
*Starter motor*
*Throttle pot sensor (TPS) or TPS circuit*
*Turbo boost valve*
*Vehicle speed sensor (VSS) or VSS circuit*

# Chapter 29
# Saab

## Contents


**Index of vehicles**
**Self-Diagnosis**
Actuator testing without a fault code reader (FCR) - Bosch LH2.4 only ..... 5
Clearing fault codes without a fault code reader (FCR) ..... 4
Guide to test procedures ..... 7
Introduction ..... 1
Retrieving fault codes without a fault code reader (FCR) - flash codes ..... 3
Self-Diagnosis connector location ..... 2
Self-Diagnosis with a fault code reader (FCR) ..... 6
**Fault code tables**


## Index of vehicles

| Model | Engine code | Year | System |
|---|---|---|---|
| 900i 16V DOHC | B202i | 1989 to 1990 | Lucas 14CU LH-Jetronic |
| 900 Turbo 16V DOHC | B202 2S | 1988 to 1990 | Lucas 14CU LH-Jetronic |
| 900 2.0 16V DOHC cat | B202 2L | 1989 to 1993 | Lucas 14CU LH1-Jetronic |
| 900i 16V DOHC cat | B202i | 1990 to 1993 | Lucas 14CU LH-Jetronic |
| 900S Turbo cat | B202i | 1990 to 1993 | Lucas 14CU LH-Jetronic |
| 900 2.0i 16V DOHC | B202i | 1993 to 1997 | Bosch Motronic 2.10.2 |
| 900 Turbo 16V DOHC | B202i | 1994 to 1997 | Saab Trionic |
| 900i 16V DOHC | B206i | 1994 to 1997 | Bosch Motronic 2.10.2 |
| 900i 16V DOHC | B204L | 1994 to 1997 | Bosch Motronic 2.10.2 |
| 900 2.3i 16V DOHC | B234i | 1993 to 1997 | Bosch Motronic 2.10.2 |
| 900 2.5i 24V DOHC | B258i | 1993 to 1997 | Bosch Motronic 2.8.1 |
| 9000i 16V cat | B202i | 1988 to 1993 | Bosch LH2.4-Jetronic |
| 9000 and CD16 | B202 | 1991 to 1993 | Bosch LH2.4.2-Jetronic |
| 9000 16V cat | B202 | 1988 to 1993 | Bosch LH2.4-Jetronic |
| 9000 Turbo 16 | B202 | 1991 to 1993 | Bosch LH2.4.2-Jetronic |
| 9000 Turbo 16 cat | B202 | 1989 to 1993 | Bosch LH2.4-Jetronic |
| 9000 2.0i cat | B204i | 1994 to 1997 | Saab Trionic |
| 9000 2.0 Turbo cat | B204S | 1994 to 1997 | Saab Trionic |
| 9000 2.0 Ecopower | B202S | 1992 to 1993 | Bosch LH2.4-Jetronic |
| 9000 2.0 Turbo Intercooler | B204L | 1994 to 1997 | Saab Trionic |
| 9000i 2.3 cat | B234i | 1990 to 1991 | Bosch LH2.4.1-Jetronic |
| 9000i 2.3 cat | B234i | 1991 to 1993 | Bosch LH2.4.2-Jetronic |
| 9000 2 3i cat | B234i | 1994 to 1997 | Saab Trionic |
| 9000 2 3 Turbo cat | B234L | 1994 to 1997 | Saab Trionic |
| 9000 2.3 Turbo cat | B234R | 1994 to 1997 | Saab Trionic |
| 9000 2.3 Turbo cat | B234R | 1993 | Saab Trionic |
| 9000 2 3 Turbo cat | B234L | 1991 to 1993 | Bosch LH2.4-Jetronic/ Saab Direct Ignition |
| 9000 2 3 Ecopower L/P Turbo | B234E | 1994 to 1997 | Saab Trionic |
| 9000 3 0 24V DOHC | B308i | 1995 to 1997 | Bosch Motronic 2.8.1 |

## Self-Diagnosis

### 1 Introduction

The engine management systems fitted to Saab vehicles are Lucas 14CU, Bosch 2.8.1 and 2.10.2, Saab Trionic and Saab Direct Ignition (with Bosch LH 2.4.1and 2 4.2 fuel injection). Bosch Motronic controls fuel injection, ignition and idle functions from within the same control module. Saab Trionic controls the ignition, fuel injection, idle and turbo boost pressure Saab Direct Ignition controls ignition and Turbo boost alone Lucas 14CU and Bosch LH fuel injection systems control fuel injection and idle functions alone

#### *Self-Diagnosis (SD) function*

Each ECM (electronic control module) has a self-test capability that continually examines the signals from certain engine sensors and actuators, and then compares each signal to a table of programmed values. If the diagnostic software determines that a fault is present, the ECM stores one or more fault codes in the ECM memory. Codes will not be stored about components for which a code is not available, or for conditions not covered by the diagnostic software Saab models generate either 2- or 5-digit fault codes, which may be retrieved either by fault code reader (all systems) or by manual means as flash codes (all except Saab Trionic and Saab Direct Ignition).

#### *Limited operating strategy (LOS)*

Saab systems featured in this Chapter utilise LOS (a function that is commonly called the "limp-home mode"). Once certain faults have been identified (not all faults will initiate LOS), the ECM will implement LOS and refer to a programmed default value rather than the sensor signal. This enables the vehicle to be safely driven to a workshop/garage for repair or testing. Once the fault has cleared, the ECM will revert to normal operation.

### Adaptive or learning capability

Saab systems also utilise an adaptive function that will modify the basic programmed values for most effective operation during normal running, and with due regard to engine wear.

### Self-Diagnosis (SD) warning light

Saab models are equipped with an SD (Check Engine) warning light located within the instrument panel. Some fault conditions will illuminate the light during normal engine operation, and the ECM will need to be interrogated to determine if fault codes are indeed stored in ECM fault memory.

## 2 Self-Diagnosis connector location

### Bosch Motronic and Saab Trionic

The 16-pin SD connector for FCR use and manual code retrieval is located either under the facia on the driver's side above the foot pedals **(see illustration 29.1)** or under the passenger's seat.

### Lucas 14CU

The 3-pin SD connector is for FCR use and manual code retrieval, and is located in the engine compartment, adjacent to the heater air intake.

### Bosch LH 2.4, 2.4.1, 2.4.2

The SD connector for FCR use and manual code retrieval is situated in one of the following locations: under the rear seat, in the engine compartment, or in front of the gear selector.

### Saab Trionic and Saab Direct Ignition

The SD connector is black, and is located close to the ECM under the right-hand front seat.

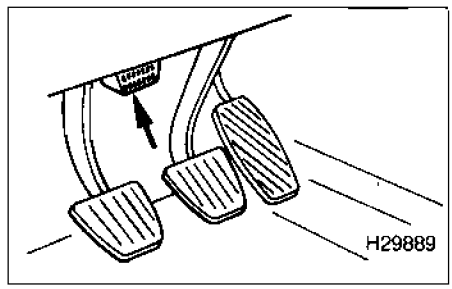


**29.1 Location of 16-pin SD connector (arrowed) under facia and above pedals**

## 3 Retrieving fault codes without a fault code reader (FCR) - flash codes

**Note:** *During the course of certain test procedures, it is possible for additional fault codes to be generated. Care must be taken that any codes generated during test routines do not mislead diagnosis. All codes must be cleared once testing is complete.*

### Lucas 14CU

1 Attach an accessory switch between the SD connector and earth **(see illustration 29.2).**
2 Switch on the ignition and the SD warning light will illuminate.
3 Immediately close the accessory switch. The SD warning light will extinguish and then illuminate for one short flash.
4 Immediately open the accessory switch.
5 The SD warning light will display the 5-digit fault codes as follows:

*a) The five digits are indicated by five series of flashes.*
*b) The first series of flashes indicates the first digit, the second series of flashes indicates the second digit, and so on until all five digits have been flashed.*
*c) Each series consists of a number of flashes separated by short pauses. Each integer (whole number) in the range 1 to 9 is represented by a number of short flashes, and each zero is represented by a longer flash.*
*d) A pause separates each series of flashes.*
*e) The code number "12232" is indicated by a flash, a short pause, two flashes, a short pause, two flashes, a short pause, three flashes, a short pause and two flashes. A long flash is displayed at the beginning and end of each code.*

6 Count the number of flashes in each series, and record each code as it is transmitted. Refer to the tables at the end of the Chapter to determine the meaning of the fault code.
7 To retrieve the next code, close the accessory switch and wait for the SD warning light to flash once.
8 Immediately open the accessory switch, and the SD warning light will display the next 5-digit fault code.
9 Repeat the procedure until all fault codes have been retrieved.
10 If a return to the first code is required, close the accessory switch and wait for the SD warning light to flash twice, then immediately open the accessory switch. The first code will be transmitted again.
11 Five long flashes indicates that all the fault codes have been retrieved, or that no codes are stored.
12 Turn off the ignition and remove the accessory switch to end fault code retrieval.

### Bosch LH 2.4, 2.4.1, 2.4.2

13 Attach an accessory switch between the SD connector and earth **(see illustrations 29.2 to 29.4).**
14 Switch on the ignition, and the SD warning light will illuminate and then extinguish.
15 Close the accessory switch. The SD warning light will illuminate for one short flash.
16 Immediately open the accessory switch.
17 The SD warning light will display the 5-digit fault codes in the same way as described for the Lucas 14CU system (see paragraphs 5 to 12).

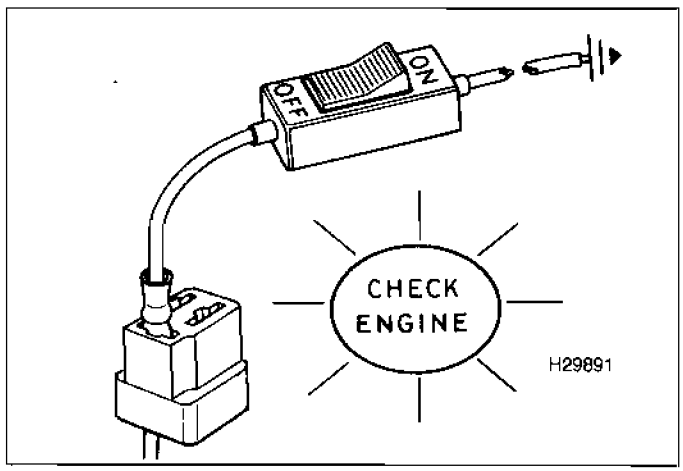


**29.2 Initiation of flash codes with the aid of an accessory switch connected to the SD connector - Lucas 14CU and Bosch LH**

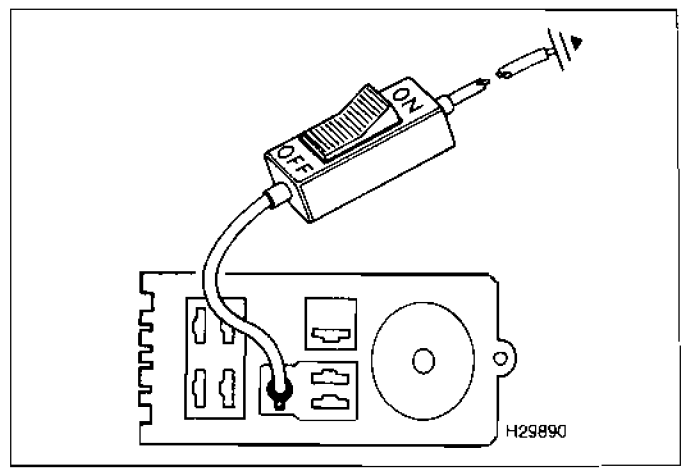


**29.3 Initiation of flash codes with the aid of an accessory switch connected to the SD connector - Bosch LH**

### Bosch Motronic 2.8.1 and 2.10.2

20 Attach an accessory switch between pin 6 of the 16-pin SD connector and earth
21 Switch on the ignition.
22 Close the accessory switch for between 1 and 4 seconds.
23 Open the switch, the SD warning light will now illuminate for 2.5 seconds, extinguish and then flash to indicate the 2-digit fault codes as follows:

a) *The two digits are indicated by two series of flashes.*
b) *The first series of flashes indicates the multiples of ten, the second series of flashes indicates the single units.*
c) *A 1-second flash followed by a 0.5-second interval indicates fault codes in tens. After a 1.5-second pause, a 1-second flash followed by a 0.5-second interval indicates units.*
d) *Code number "12" is indicated by one 1-second flash, followed by a 1.5-second pause, then two 1-second flashes with a 0.5-second pause.*
e) *A 2-second pause separates the transmission of each individual code.*

24 Count the number of flashes in each series, and record each code as it is transmitted. Refer to the tables at the end of the Chapter to determine the meaning of the fault code.
25 Turn off the ignition and remove the accessory switch to end fault code retrieval.

### Saab Trionic and Saab Direct Ignition

26 Fault codes can only be retrieved with the aid of a dedicated fault code reader.

## 4 Clearing fault codes without a fault code reader (FCR)

### Bosch LH 2.4, 2.4.1, 2.4.2

1 Retrieve codes from the ECM by the methods described in Section 3. **Note:** *The ECM memory can be cleared only after all codes have been transmitted and the five long flashes have been displayed*
2 Close the accessory switch, and wait for the warning light to flash three times. Open the accessory switch. The memory has now been cleared of all fault codes.

### All other systems

3 Disconnect the battery negative terminal for five minutes
4 Reconnect the battery negative terminal.
**Note.** *The first drawback to this method is that battery disconnection will re-initialise all ECM adaptive values. Re-learning the appropriate adaptive values requires starting the engine from cold, and driving at various engine speeds for approximately 20 to 30 minutes. The engine should also be allowed to idle for approximately 10 minutes. The second drawback is that the radio security codes, clock setting and other stored values will be initialised, and these must be re-entered once the battery has been reconnected. Where possible, an FCR should be used for code clearing.*

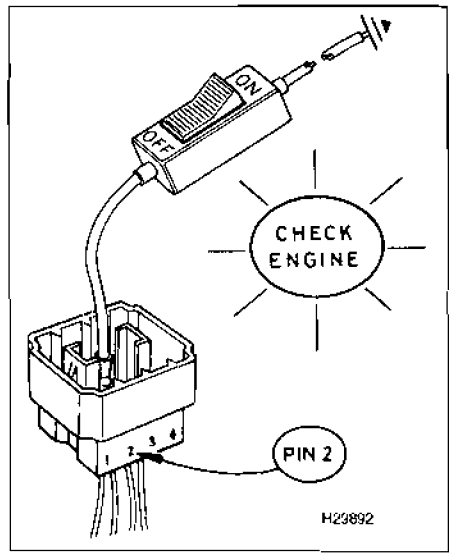


**29.4 Initiation of flash codes with the aid of an accessory switch connected to the SD connector - Bosch LH**

## 5 Actuator testing without a fault code reader (FCR) - Bosch LH2.4 only

### Bosch LH 2.4 only (1989 Saab 900 T16 automatic)

1 Attach an accessory switch between the SD connector and earth **(refer to illustrations 29.2 to 29.4)**.
2 Close the accessory switch.
3 Switch on the ignition, and the SD warning light will briefly flash once.
4 Immediately open the accessory switch.
5 The warning light will flash the appropriate code (see the actuator selection code table at the end of this Chapter) and the first component circuit will actuate. Audible operation (typically, clicking or buzzing) of the actuator solenoid or component should be heard.

***Warning: When testing the injectors, there is a real danger of filling the cylinders with petrol. If testing is required for more than 1 second, disconnect the fuel pump supply (or remove the fuel pump fuse) before commencing this test.***

6 Discontinue the first test, and continue with the next component by closing the accessory switch once more.
7 Wait until the SD warning light briefly flashes once, and then immediately open the accessory switch
8 The warning light will flash the appropriate code, and the next actuator circuit will function.
9 Repeat the procedure to test each of the other actuators in turn.
10 Turn off the ignition to end the test.

## 6 Self-Diagnosis with a fault code reader (FCR)

**Note:** *During the course of certain test procedures, it is possible for additional fault codes to be generated. Care must be taken that any codes generated during test routines do not mislead diagnosis.*

### All Saab models

1 Connect an FCR to the SD connector. Use the FCR for the following purposes, in strict compliance with the FCR manufacturer's instructions:
*a) Retrieving fault codes.*
*b) Clearing fault codes.*
*c) Testing actuators.*
*d) Displaying Datastream.*
*e) Making adjustments.*
2 Codes must always be cleared after component testing, or after repairs involving the removal or replacement of an engine management system component.

## 7 Guide to test procedures

1 Use an FCR to interrogate the ECM for fault codes, or (where possible) gather codes manually, as described in Sections 3 or 6.

### Codes stored

2 If one or more fault codes are gathered, refer to the fault code tables at the end of this Chapter to determine their meaning.
3 If several codes are gathered, look for a common factor such as a defective earth return or supply.
4 Refer to the component test procedures in Chapter 4, where you will find a means of testing the majority of components and circuits found in the modern EMS
5 Once the fault has been repaired, clear the codes and run the engine under various conditions to determine if the problem has cleared.
6 Check the ECM for fault codes once more. Repeat the above procedures where codes are still being stored.
7 Refer to Chapter 3 for more information on how to effectively test the EMS.

### No codes stored

8 Where a running problem is experienced, but no codes are stored, the fault is outside of the parameters designed into the SD system. Refer to Chapter 3 for more information on how to effectively test the engine management system.
9 If the problem points to a specific component, refer to the test procedures in Chapter 4, where you will find a means of testing the majority of components and circuits found in the modern EMS.

# Fault code tables

### *Lucas 14CU*

| Flash/ FCR code | Description |
|---|---|
| 13212 | Throttle pot sensor (TPS) or TPS circuit |
| 13213 | Throttle pot sensor (TPS) or TPS circuit |
| 13214 | Coolant temperature sensor (CTS) or CTS circuit |
| 13215 | Throttle pot sensor (TPS) or TPS circuit |
| 13221 | Airflow sensor (AFS) or AFS circuit |
| 13222 | Idle air control |
| 13223 | Weak mixture |
| 13224 | Rich mixture |
| 13225 | Oxygen sensor (OS) or OS circuit |
| 13231 | Ignition signal |
| 13233 | Electronic control module (ECM) fault |
| 13234 | Vehicle speed sensor (VSS) or VSS circuit |
| 13235 | No "Drive" signal - automatic transmission or circuit |

### *Motronic 2.10.2, 2.8.1*

| Flash/ FCR code | Description |
|---|---|
| 11 | Secondary injection or circuit |
| 12 | No faults found in the ECM. Proceed with normal diagnostic methods |
| 21 | Airflow sensor (AFS) or AFS circuit |
| 31 | Air temperature sensor (ATS) or ATS circuit |
| 41 | Coolant temperature sensor (CTS) or CTS circuit |
| 51 | Throttle pot sensor (TPS) or TPS circuit |
| 61 | Oxygen sensor (OS) cylinder 1, 3, 5 or OS circuit |
| 62 | Oxygen sensor (OS) cylinder 2, 4, 6 or OS circuit |
| 71 | Oxygen sensor (OS) cylinder 1, 3, 5, rich or lean |
| 72 | Oxygen sensor (OS) cylinder 2, 4, 6, rich or lean |
| 73 | Oxygen sensor (OS) rich or lean |
| 81 | Evaporative emission canister purge valve or circuit |
| 91 | Electronic control module (ECM) |
| 92 | Electronic control module (ECM) |

### *Saab Trionic*

| FCR code | Description |
|---|---|
| P0105 | Manifold absolute pressure (MAP) sensor or MAP sensor circuit |
| P0106 | Manifold absolute pressure (MAP) sensor or MAP sensor circuit, signal low |
| P0107 | Manifold absolute pressure (MAP) sensor or MAP sensor circuit, signal high |
| P0108 | Manifold absolute pressure (MAP) sensor or MAP sensor circuit |
| P0110 | Air temperature sensor (ATS) or ATS circuit |
| P0112 | Air temperature sensor (ATS) or ATS circuit, signal low |
| P0113 | Air temperature sensor (ATS) or ATS circuit, signal high |
| P0115 | Coolant temperature sensor (CTS) or CTS circuit |
| P0117 | Coolant temperature sensor (CTS) or CTS circuit, signal low |
| P0118 | Coolant temperature sensor (CTS) or CTS circuit, signal high |
| P0120 | Throttle pot sensor (TPS) or TPS circuit |
| P0121 | Throttle pot sensor (TPS) or TPS circuit |
| P0122 | Throttle pot sensor (TPS) or TPS circuit, signal low |
| P0123 | Throttle pot sensor (TPS) or TPS circuit, signal high |
| P0130 | Oxygen sensor (OS) or OS circuit |
| P0135 | Oxygen sensor (OS) or OS circuit |
| P1130 | Oxygen sensor (OS) or OS circuit, current high |
| P1135 | Oxygen sensor (OS) or OS circuit, current low |
| P0170 | Fuel/air mixture or circuit |
| P0171 | Weak mixture |
| P0172 | Rich mixture |
| P1322 | Engine speed (RPM) sensor or circuit |
| P0325 | Knock sensor (KS) or KS circuit |
| P0335 | Engine speed (RPM) sensor or circuit |
| P0335 | Crank angle sensor (CAS) or CAS circuit |
| P0443 | Carbon filter solenoid valve (CFSV) or CFSV circuit |
| P1443 | Carbon filter solenoid valve (CFSV) or CFSV circuit |
| P1444 | Carbon filter solenoid valve (CFSV) or CFSV circuit, current high |
| P1445 | Carbon filter solenoid valve (CFSV) or CFSV circuit, current low |
| P0500 | Vehicle speed sensor (VSS) or VSS circuit |
| P0501 | Vehicle speed sensor (VSS) or VSS circuit |
| P0502 | Vehicle speed sensor (VSS) or VSS circuit, signal low |
| P0505 | Idle speed control valve (ISCV) or ISCV circuit |
| P1500 | Battery voltage |
| P0605 | Electronic control module (ECM) |
| P1651 | Electronic control module (ECM) |
| P1652 | Electronic control module (ECM) |

### *Bosch LH 2.4/2.4.1/2.4.2 (flash codes)*

| Flash code | Description |
|---|---|
| 12111 | Oxygen sensor (OS) fault (fuel air mixture on idling) |
| 12112 | Oxygen sensor (OS) fault (fuel air mixture engine at cruising speed) |
| 12113 | Idle speed control valve (ISCV) adaption fault, pulse ratio too low |
| 12114 | Idle speed control valve (ISCV) adaption fault, pulse ratio to high |
| 12211 | Battery voltage, less than 10 volts or greater than 16 volts |
| 12212 | Throttle switch (TS), idle contacts |
| 12213 | Throttle switch (TS), full-load contacts |
| 12214 | Temperature sensor signal faulty (below 90°C or above 160°C) |
| 12221 | No air mass meter signal |
| 12222 | Air conditioning system faulty |
| 12223 | Fuel air mixture lean, OS sensor shorting to earth |
| 12224 | Fuel air mixture rich, OS sensor shorting to battery voltage |
| 12225 | Oxygen sensor (OS) or OS heater fault |
| 12232 | Voltage supply to ECM pin 4 is less than 1 volt |
| 12233 | Fault in electronic control module (ECM) - read only memory (ROM) |
| 12241 | Mixture lean |
| 12242 | Hot-wire burn-off function faulty |
| 12243 | No signal from vehicle speed sensor |
| 12244 | No "Drive" signal (automatic transmission) |
| 12245 | Exhaust gas recirculation (EGR) function faulty |
| 00000 | No faults detected, or all fault codes have been transmitted |

### *Bosch LH 2.4 actuator selection code table*

**Note:** *The actuators will actuate in the following sequence. Listen for an audible sound, or touch the component to determine whether it has been activated*

| Code | Description |
|---|---|
| No display | Fuel pump circuit |
| 12411 | Injector circuit |
| 12412 | Idle speed control valve (ISCV) circuit |
| 12413 | Carbon filter solenoid valve (CFSV) circuit |
| 12421 | Automatic transmission (auto) drive signal. The SD light ceases flashing when the gear lever is moved from "D" to "N" |
| 12424 | Throttle switch (TS), idle contacts. Slightly open the throttle. The SD light ceases flashing once the throttle moves away from the idle position |
| 12431 | Throttle switch (TS), full-load contacts. Fully open the throttle. The SD light ceases flashing as the throttle approaches the fully-open position |

## *Bosch LH 2.4/2.4.2 and Saab Direct Ignition (FCR codes)*

| FCR code (permanent) | FCR code (intermittent) | Description |
|---|---|---|
| 11111 | - | Reply code for OK |
| 42241 | 22241 | High voltage (1991-on) |
| 42251 | 22251 | Electronic control module (ECM) pin 4, signal low |
| 42252 | 22252 | Signal low, less than 10 volts |
| 42291 | 22291 | Battery voltage, less than 10 volts/greater than 16 volts |
| 42440 | 22440 | Oxygen sensor (OS) or OS circuit, rich mixture |
| 42441 | 22441 | Rich mixture, idling (1991-on) |
| 42442 | 22442 | Rich mixture, driving (1991-on) |
| 42450 | 22450 | Oxygen sensor (OS) or OS circuit, weak mixture |
| 42451 | 22451 | Weak mixture, idling (1991-on) |
| 42452 | 22452 | Weak mixture, driving (1991-on) |
| 42460 | 22460 | Oxygen sensor (OS) or OS circuit |
| 42491 | 22491 | Idling mixture incorrect |
| 42492 | 22492 | Driving mixture incorrect |
| 44221 | 24221 | Engine RPM signal absent (1991-on) |
| 44261 | 24261 | Vehicle speed sensor (VSS) or VSS circuit (1991-on) |
| 44360 | 24360 | Crank angle sensor (CAS) or CAS circuit |
| 44460 | 24460 | Engine load signal faulty |
| 44660 | 24660 | Pre-ignition fault (knocking or pinking) |
| 44661 | 24461 | Knock sensor (KS) or KS circuit |
| 44662 | 24462 | Combustion, synchronising fault |
| 44671 | 24671 | Pre-ignition signal over 20 seconds |
| 45641 | 25641 | Mass airflow (MAF) sensor or MAF sensor circuit, signal high |
| 45651 | 25651 | Mass airflow (MAF) sensor or MAF sensor circuit, signal low |
| 45691 | 25691 | Mass Airflow (MAF) sensor or MAF sensor circuit |
| 45723 | 25723 | "Drive" signal (automatic transmission) |
| 45771 | 25771 | Throttle pot sensor (TPS) signal or TPS circuit |
| 45772 | 25772 | Throttle pot sensor (TPS) signal or TPS circuit |
| 46221 | 26221 | Coolant temperature sensor (CTS) or CTS circuit, signal low |
| 46271 | 26271 | Coolant temperature sensor (CTS) or CTS circuit, signal high |
| 46391 | 26391 | Exhaust gas recirculation (EGR) system or EGR circuit |
| 58121 | 38121 | Mass airflow (MAF) sensor or MAF sensor circuit, burn-off absent |
| 58321 | 38321 | Air conditioning valve function or circuit |
| 58322 | 38322 | Evaporative loss control device (ELCD) valve function or circuit |
| 58371 | 38371 | Injector or injector circuit |
| 58372 | 38372 | Evaporative loss control device (ELCD) valve or circuit |
| 58382 | 38382 | Evaporative loss control device (ELCD) valve short-circuit (1991-on) |
| 60000 | - | Internal monitoring |
| 60001 | - | Read only memory (ROM) fault |
| 60002 | - | Random access memory (RAM) fault |
| 67192 | - | Electronic control module (ECM), read only memory (ROM) |

# Chapter 30
# SEAT

## Contents

**Index of vehicles**
**Self-Diagnosis**
Clearing fault codes without a fault code reader (FCR) . . . . . 4
Guide to test procedures . . . . . 6
Introduction . . . . . 1
Retrieving fault codes without a fault code reader (FCR) - flash codes . . . . . 3
Self-Diagnosis connector location . . . . . 2
Self-Diagnosis with a fault code reader (FCR) . . . . . 5
**Fault code table**

## Index of vehicles

| Model | Engine code | Year | System |
|---|---|---|---|
| Alhambra 2.0 | ADY | 1996 to 1997 | Simos |
| Cordoba 1.4i SOHC 8V | ABD | 1994 to 1997 | Bosch Mono-Motronic |
| Cordoba 1.6i SOHC 8V | ABU | 1993 to 1997 | Bosch Mono-Motronic |
| Cordoba 1.8i SOHC 8V | ABS | 1993 to 1995 | Bosch Mono-Motronic |
| Cordoba 1.8i 16V | ADL | 1994 to 1997 | VAG Digifant |
| Cordoba 2.0i SOHC 8V | 2E | 1993 to 1997 | VAG Digifant |
| Ibiza 1.05i SOHC 8V | AAU | 1993 to 1997 | Bosch Mono-Motronic |
| Ibiza 1.3i US83 | AAV | 1993 to 1994 | Bosch Mono-Motronic |
| Ibiza 1.4i SOHC 8V | ABD | 1994 to 1997 | Bosch Mono-Motronic |
| Ibiza 1.6i SOHC 8V | ABU | 1993 to 1997 | Bosch Mono-Motronic |
| Ibiza 1.8i SOHC 8V | ABS | 1993 to 1995 | Bosch Mono-Motronic |
| Ibiza 1.8i 16V | ADL | 1994 to 1997 | VAG Digifant |
| Ibiza 2.0i SOHC 8V | 2E | 1993 to 1997 | VAG Digifant |
| Inca 1.4i | - | 1995 to 1996 | Bosch Motronic MP 9.0 |
| Inca 1.6i | - | 1995 to 1996 | Bosch Mono-Motronic |
| Toledo 1.6i cat SOHC | 1F | 1991 to 1997 | Bosch Mono-Jetronic |
| Toledo 1.6i SOHC | 1F | 1994 to 1997 | Bosch Mono-Motronic |
| Toledo 1.8i SOHC | RP | 1991 to 1995 | Bosch Mono-Jetronic |
| Toledo 1.8i cat SOHC | RP | 1991 to 1995 | Bosch Mono-Jetronic |
| Toledo 1.8i cat SOHC | RP | 1991 to 1996 | Bosch Mono-Motronic |
| Toledo 1.8i SOHC 8V | ABS | 1994 to 1997 | Bosch Mono-Motronic |
| Toledo 2.0i | 2E | 1991 to 1997 | VAG Digifant |

## Self-Diagnosis

### 1 Introduction

The engine management systems (EMSs) fitted to SEAT models include Bosch Motronic MP9.0, Mono-Jetronic, Mono-Motronic, and also VAG Digifant and Simos. Bosch Motronic MP9.0, Mono-Motronic, VAG Digifant and Simos systems control the primary ignition, fuel injection and idling functions from within the same control module. Mono-Jetronic controls the fuel injection and idle functions alone.

#### *Self-Diagnosis (SD) function*

Each electronic control module (ECM) has a self-test capability that continually examines the signals from certain engine sensors and actuators, and compares each signal to a table of programmed values. If the diagnostic software determines that a fault is present, the ECM stores one or more fault codes. Codes will not be stored about components for which a code is not available, or for conditions not covered by the diagnostic software.

SEAT systems are capable of generating two kinds of fault codes. These are 4-digit flash codes and 5-digit fault codes:

*a) Mono-Jetronic systems can only generate 4-digit flash codes. These can be retrieved via the warning light (where fitted), or by using a separate LED. Alternatively, fault codes can be displayed on a dedicated fault code reader (FCR).*

*b) Later systems can generate both 4-digit and 5-digit fault codes, and retrieval requires a dedicated FCR. These systems include early versions of Bosch Mono-Motronic and some VAG Digifant (45-pin).*

*c) The very latest systems can only generate 5-digit fault codes, and these must be retrieved with the aid of a dedicated FCR. These systems include Bosch Mono-Motronic MA1.2.2 (later 45-pin), Simos and VAG Digifant (68-pin).*

#### *Limited operating strategy (LOS)*

All SEAT models featured in this Chapter except those with Bosch Mono-Jetronic utilise LOS (a function that is commonly called the "limp-home mode"). Once certain faults have been identified (not all faults will initiate LOS), the ECM will implement LOS and refer to a programmed default value rather than the sensor signal. This enables the vehicle to be safely driven to a workshop/garage for repair or testing. Once the fault has cleared, the ECM will revert to normal operation. Bosch Mono-Jetronic does not have LOS.

#### *Adaptive or learning capability*

SEAT systems also utilise an adaptive function that will modify the basic programmed values for most effective operation during normal running and with due regard to engine wear.

#### *Self-Diagnosis (SD) warning light*

Bosch Mono-Jetronic equipped vehicles are also fitted with an SD warning light located

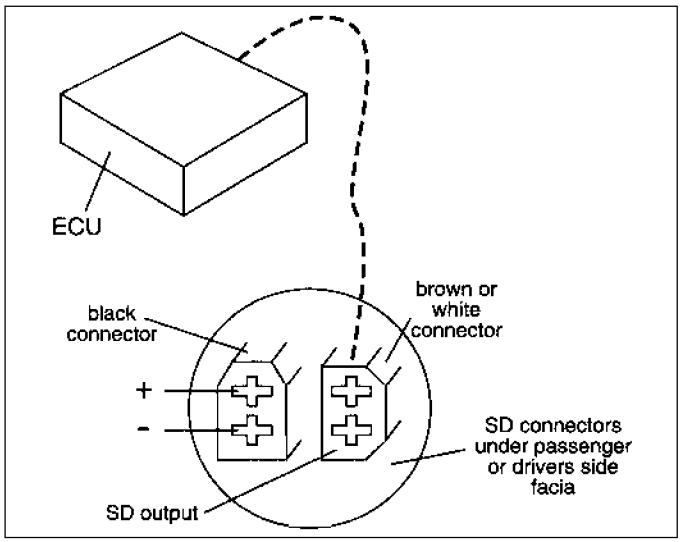


**30.1 Location of SD connectors under facia**

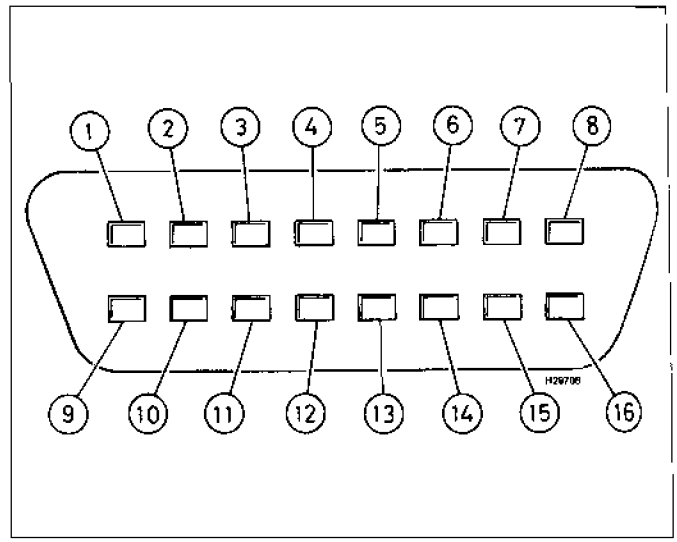


**30.2 The 16-pin OBD connector**

within the instrument panel. SEAT models equipped with engine management systems other than Bosch Mono-Jetronic are not fitted with a SD warning light.

## 2 Self-Diagnosis connector location

### *Bosch Mono-Jetronic and Mono-Motronic with dual 2-pin connectors*

The two SD connectors are located in the passenger compartment under the facia, or in the switch hole next to the light switch on the instrument panel **(see illustration 30.1)** and is provided for retrieving flash codes (Mono-Jetronic only) and for use with a dedicated fault code reader (FCR).

### *Alhambra*

The 16-pin SD connector is located under the ashtray in the centre console **(see illustration 30.2)**, and is provided for use with a dedicated FCR only.

### *Other systems*

The 16-pin SD connector may be located in the passenger compartment to the right of the steering column, or under the facia in the fusebox above the foot pedals. The SD connector is provided for use with a dedicated FCR only.

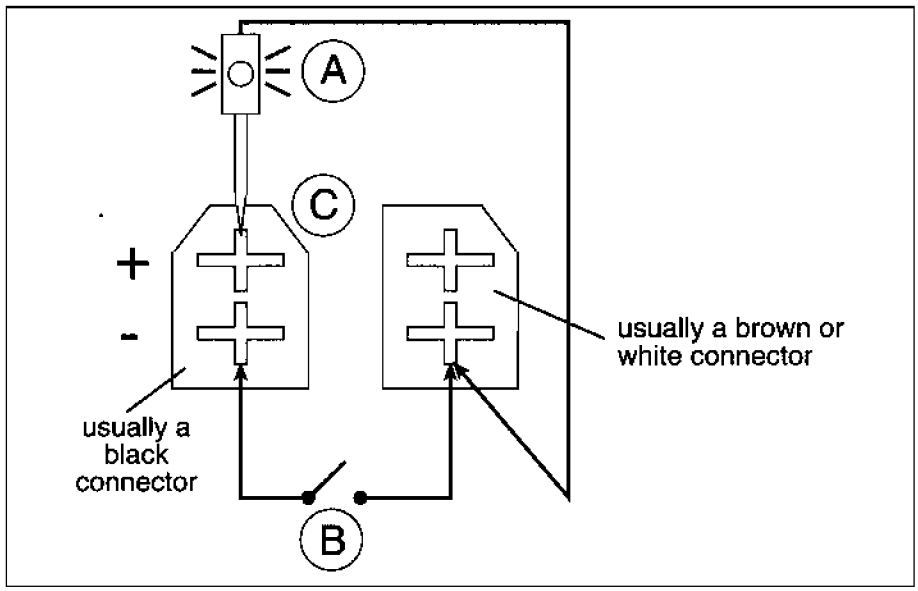


**30.3 Initiation of Mono-Jetronic flash codes**

*A LED diode light* *B Accessory switch* *C SD connectors*

## 3 Retrieving fault codes without a fault code reader (FCR) - flash codes

**Note:** *During the course of certain test procedures, it is possible for additional fault codes to be generated. Care must be taken that any codes generated during test routines do not mislead diagnosis. All codes must be cleared once testing is complete.*

### *Mono-Jetronic*

**1** Attach an accessory switch to the dual 2-pin SD connectors **(refer to illustration 30.1)**. If the vehicle is not equipped with a facia-mounted SD warning light, connect an LED diode light between the battery (+) supply and the SD connector as shown **(see illustration 30.3)**.

**2** Start the engine and allow it to warm up to normal operating temperature. **Note:** *Oxygen sensor (OS) fault codes can only be retrieved after a road test of at least 10 minutes' duration.*

**3** Stop the engine and switch on the ignition

**4** If the engine will not start, crank the engine for at least 6 seconds, and leave the ignition switched on.

**5** Close the accessory switch for at least 5 seconds. Open the switch, and the warning light or LED light will flash to indicate the 4-digit fault codes as follows:

*a) The four digits are indicated by four series of flashes.*

*b) The first series of flashes indicates the first digit, the second series of flashes indicates the second digit, and so on until all four digits have been flashed.*

*c) Each series consists of a number of 1- or 2-second flashes, separated by short*

*pauses. Each integer (whole number) in the range 1 to 9 is represented by a number of 1-second flashes, and each zero is represented by 2-second flashes.*

*d) The code number "1231" is indicated by a 1-second flash, a short pause, two 1-second flashes, a short pause, three 1-second flashes, a short pause and a 1-second flash.*

*e) A 2.5-second pause separates each series of flashes. After this pause, the code will be repeated.*

6 Count the number of flashes in each series, and record the code. Refer to the table at the end of the Chapter to determine the meaning of the fault code.

7 The code will be repeated until the accessory switch is once more closed for at least 5 seconds. Open the switch and the next code will then be displayed.

8 Continue retrieving codes until code 0000 is transmitted. Code 0000 signifies that no more codes are stored, and is displayed when the light flashes off and on at 2.5-second intervals.

9 If code 4444 is transmitted, no fault codes are stored.

10 Turning off the ignition ends fault code retrieval.

### *All other systems*

11 Flash codes are not available, and a dedicated FCR must be used to retrieve fault codes.

## 4 Clearing fault codes without a fault code reader (FCR)

### *Bosch Mono-Jetronic*

1 Carry out the procedure in Section 3 to retrieve all fault codes (wait until code 0000 or code 4444 is displayed).

2 Turn off the ignition, and close the accessory switch.

3 Switch the ignition on.

4 After 5 seconds, open the accessory switch. All fault codes should now be cleared. Turn off the ignition on completion.

### *All systems (alternative method)*

5 Turn off the ignition and disconnect the battery negative terminal for a period of approximately 5 minutes.

6 Reconnect the battery negative terminal.

**Note**: *The first drawback to this method is that battery disconnection will initialise all ECM adaptive values (not Mono-Jetronic). Re-learning the appropriate adaptive values requires starting the engine from cold, and driving at various engine speeds for approximately 20 to 30 minutes. The engine should also be allowed to idle for approximately 10 minutes. The second drawback is that the radio security codes, clock setting and other stored values will be initialised, and these must be re-entered once the battery has been reconnected. Where possible, an FCR should be used for code clearing.*

## 5 Self-Diagnosis with a fault code reader (FCR)

**Note:** *During the course of certain test procedures, it is possible for additional fault codes to be generated. Care must be taken that any codes generated during test routines do not mislead diagnosis.*

### *All SEAT models*

1 Connect an FCR to the SD connector. Use the FCR for the following purposes, in strict compliance with the FCR manufacturer's instructions:

*a) Retrieving fault codes.*
*b) Clearing fault codes.*
*c) Testing actuators.*
*d) Displaying Datastream.*
*e) Making adjustments to the ignition timing or mixture (some systems).*

2 Codes must always be cleared after component testing, or after repairs involving the removal or replacement of an EMS component.

## 6 Guide to test procedures

### *Engine management fault codes*

1 Use an FCR to interrogate the ECM for fault codes, or manually gather codes (where possible) as described in Section 3 or 5.

#### Codes stored by ECM

2 If one or more fault codes are gathered, refer to the fault code table at the end of this Chapter to determine their meaning.

3 If several codes are gathered, look for a common factor such as a defective earth return or supply.

4 Refer to the component test procedures in Chapter 4, where you will find a means of testing the majority of components and circuits found in the modern EMS

5 Once the fault has been repaired, clear the codes and run the engine under various conditions to determine if the problem has cleared.

6 Check the ECM for fault codes once more Repeat the above procedures where codes are still being stored.

7 Refer to Chapter 3 for more information on how to effectively test the EMS.

#### No codes stored

8 Where a running problem is experienced, but no codes are stored, the fault is outside of the parameters designed into the SD system. Refer to Chapter 3 for more information on how to effectively test the engine management system.

9 If the problem points to a specific component, refer to the test procedures in Chapter 4, where you will find a means of testing the majority of components and circuits found in the modern EMS

### *Non-engine management fault codes*

10 A number of codes that could be stored by the ECM and retrieved during the code gathering operation may refer to the air conditioning system, fan control and automatic transmission. This manual specifically covers engine management components, and diagnosis of codes pointing to faults in ancillary components is not covered.

Fault code tables appear overleaf

# Fault code table

***All SEAT models***

| Flash code | FCR code | Description |
|---|---|---|
| 0000 | - | End of fault code output |
| 4444 | 00000 | No faults found in the ECM. Proceed with normal diagnostic methods |
| 1111 | 65535 | Electronic control module (ECM) |
| 1231 | 00281 | Vehicle speed sensor (VSS) or VSS circuit |
| 1232 | 00282 | Throttle pot sensor (TPS) or TPS circuit, implausible signal |
| 2111 | 00513 | RPM sensor or circuit |
| 2113 | 00515 | Hall-effect sensor (HES) or HES circuit |
| 2121 | 00516 | Throttle pot sensor (TPS) or TPS circuit |
| 2121 | 00516 | Idle speed switch or circuit (alternative code) |
| 2122 | - | No engine speed signal |
| 2142 | 00545 | Automatic transmission signal missing |
| 2212 | 00518 | Throttle pot sensor (TPS) or TPS circuit |
| 2222 | 00519 | Manifold absolute pressure (MAP) sensor or MAP sensor circuit |
| 2231 | 00533 | Idle speed control valve (ISCV) or ISCV circuit |
| 2232 | 00520 | Mass airflow (MAF) sensor or MAF sensor circuit |
| 2234 | 00532 | Voltage supply or circuit |
| 2312 | 00522 | Coolant temperature sensor (CTS) or CTS circuit |
| 2322 | 00523 | Air temperature sensor (ATS) or ATS circuit |
| 2342 | 00525 | Oxygen sensor (OS) or OS circuit |
| 2323 | 00552 | Mass airflow (MAF) sensor or MAF sensor circuit |
| 2341 | 00537 | Oxygen sensor (OS) or OS circuit |
| 2413 | 00561 | Mixture control 1 |
| 4343 | 01243 | Changeover valve inlet manifold |
| 4412 | 01247 | Carbon filter solenoid valve (CFSV) or CFSV circuit |
| 4413 | 01249 | Injector valve No.1 or injector circuit |
| 4414 | 01250 | Injector valve No.2 or injector circuit |
| 4421 | 01251 | Injector valve No.3 or injector circuit |
| 4431 | - | Idle speed control valve (ISCV) or ISCV circuit |
| - | 00530 | Throttle pot sensor (TPS) or TPS circuit |
| - | 00543 | Maximum engine speed exceeded |
| - | 00546 | Defective data cable |
| - | 00624 | Air conditioning (A/C) or A/C circuit |
| - | 00625 | Vehicle speed sensor (VSS) or VSS circuit |
| - | 00635 | Oxygen sensor (OS) or OS circuit |
| - | 00638 | Transmission electrical connector No. 2 |
| - | 00670 | Throttle pot sensor (TPS) or TPS circuit |
| - | 01087 | Basic setting not completed |
| - | 01252 | Injector valve No.4 or injector circuit |
| - | 01259 | Fuel pump relay or circuit |
| - | 01265 | Exhaust gas recirculation (EGR) valve or EGR circuit |
| - | 17978 | Electronic control module (ECM) |
| - | 65535 | Electronic control module (ECM) |

# Chapter 31
# Skoda

## Contents

**Index of vehicles**
**Self-Diagnosis**
Actuator testing without a fault code reader (FCR) . . . 4
Clearing fault codes without a fault code reader (FCR) . . 5
Guide to test procedures . . . . . 7
Introduction . . . . . 1
Retrieving fault codes without a fault code reader (FCR) - flash codes . . . . . 3
Self-Diagnosis connector location . . . . . 2
Self-Diagnosis with a fault code reader (FCR) . . . . 6
**Fault code tables**

## Index of vehicles

| Model | Engine code | Year | System |
|---|---|---|---|
| Favorit 1.3i cat | 135B | 1992 to 1996 | Bosch Mono-Motronic MA1.2.2 |
| Favorit 1.3i cat | 136B | 1994 to 1996 | Bosch Mono-Motronic MA1.2.3 |
| Foreman 1.3i cat | 135B | 1992 to 1996 | Bosch Mono-Motronic MA1.2.2 |
| Foreman 1.3i cat | 136B | 1994 to 1996 | Bosch Mono-Motronic MA1.2.3 |
| Felicia 1.3i | 135B | 1995 to 1997 | Bosch Mono-Motronic MA1.2.2 |

## 3 Retrieving fault codes without a fault code reader (FCR) - flash codes

**Note** *During the course of certain test procedures, it is possible for additional fault codes to be generated Care must be taken that codes generated during test routines do not mislead diagnosis All codes must be cleared once testing is complete.*

### *Bosch Mono-Motronic MA1.2.2*

**1** Attach an on/off accessory switch between terminals A and D of the SD connector **(see illustration 31.2)**
**2** Connect the positive probe of an LED to terminal E and the negative probe of the LED to terminal C in the SD connector.
**3** Switch on the ignition
**4** Close the accessory switch for 4 seconds and then release
**5** The LED light will flash the 4-digit fault codes as follows

*a) The four digits are indicated by four series of flashes*
*b) The first series of flashes indicates the first digit the second series of flashes indicates the second digit, and so on until all four digits have been flashed*
*c) Each series consists of a number of 1- or 2-second flashes, separated by short pauses Each integer (whole number) in the range 1 to 9 is represented by a second flashes a short pause, three 1-second flashes, a short pause and a 1-second flash*

**Note:** *If the LED does not behave as described, reverse the connections to the SD connector*

**6** Count the number of flashes in each series, and record each code as it is transmitted. Refer to the tables at the end of the Chapter to determine the meaning of the fault code.
**7** Retrieve the next fault code by closing the accessory switch for 3 seconds The next fault code will then be displayed
**8** Repeat the procedure to retrieve further codes until "0000" is transmitted Code 0000 signifies that no more codes are stored
**9** Turn off the ignition and remove the jumper lead and LED to end fault code retrieval

### *All other systems*

**10** Flash codes are not available on any other Skoda system, and a fault code reader is required to gather fault codes.

## 4 Actuator testing without a fault code reader (FCR)

### *Bosch Mono-Motronic MA1.2.2*

**1** Attach an on/off accessory switch between terminals A and D of the SD connector **(refer to illustration 31.2)**
**4** Wait 4 seconds and then open the accessory switch
**5** The LED light will flash code "1232" and the idle speed control valve should be heard to move as it extends and retracts
**6** Wait 3 seconds and then close the accessory switch Wait 4 seconds and then open the accessory switch to implement the next actuator procedure
**7** The LED light will flash code "4342" which can be ignored because it is not relevant to the test procedure for these vehicles
**8** Wait 3 seconds and then close the accessory switch Wait 4 seconds and then open the accessory switch to implement the next actuator procedure
**9** The LED light will flash code "4343" and the carbon filter solenoid valve should be heard to operate (a clicking sound)
**10** End the actuator test as follows Wait 3 seconds and then close the accessory switch Wait 4 seconds and then open the accessory switch The LED should display a continual sequence of on/off flashes, indicating that the actuator test has been completed, and that fault codes have been cleared from ECM memory

### *All other systems*

**11** Actuator testing without an FCR is not available on any other Skoda system

## 6 Self-Diagnosis with a fault code reader (FCR)

**Note:** *During the course of certain test procedures, it is possible for additional fault codes to be generated Care must be taken that any codes generated during test routines do not mislead diagnosis*

### All Skoda models

1 Connect an FCR to the SD connector Use the FCR for the following purposes in strict compliance with the FCR manufacturer's instructions

*a) Retrieving fault codes*
*b) Clearing fault codes*
*c) Testing actuators*

2 Codes must always be cleared after component testing, or after repairs involving the removal or replacement of an EMS component

## 7 Guide to test procedures

1 Use an FCR to interrogate the ECM for fault codes, or (where possible) manually gather codes as described in Section 3 or 5

### Codes stored

2 If one or more fault codes are gathered, refer to the fault code tables at the end of this Chapter to determine their meaning
3 If several codes are gathered, look for a common factor such as a defective earth return or supply
4 Refer to the component test procedures in Chapter 4, where you will find a means of testing the majority of components and circuits found in the modern EMS
5 Once the fault has been repaired, clear the codes and run the engine under various conditions to determine if the problem has cleared
6 Check the ECM for fault codes once more Repeat the above procedures where codes are still being stored
7 Refer to Chapter 3 for more information on how to effectively test the EMS

### No codes stored

8 Where a running problem is experienced, but no codes are stored, the fault is outside of the parameters designed into the SD system Refer to Chapter 3 for more information on how to effectively test the engine management system
9 If the problem points to a specific component, refer to the test procedures in Chapter 4 where you will find a means of testing the majority of components and circuits found in the modern EMS

# Fault code tables

### Bosch Mono-Motronic

| Flash code | FCR code | Description |
|---|---|---|
| 1111 | 65535 | Electronic control module (ECM) |

### Actuator selection code for Bosch Mono-Motronic MA1.2.2

*The above codes are displayed during actuator test mode when the*

# Chapter 32
# Subaru

## Contents

**Index of vehicles**
**Self-Diagnosis**
Clearing fault codes without a fault code reader (FCR) 4
Guide to test procedures 6
Introduction 1
Retrieving fault codes without a fault code reader (FCR) flash codes 3
Self-Diagnosis connector location 2
Self Diagnosis with a fault code reader (FCR) 5
**Fault code table**

## Index of vehicles

| Model | Engine code | Year | System |
|---|---|---|---|
| 1 8 Turbo Coupe 4x4 | EA82 | 1986 to 1989 | Subaru MPFi + Turbo |
| Impreza 1 6i SOHC 16V | - | 1993 to 1997 | Subaru MPFi |
| Impreza 1 8i SOHC 16V | - | 1993 to 1997 | Subaru MPFi |
| Impreza 2 0 Turbo DOHC 16V | | 1994 to 1997 | Subaru MPFi |
| Impreza 2 0i 16V | - | 1996 to 1997 | Subaru MPFi |
| Justy (J12) 1 2i cat | - | 1992 to 1997 | Subaru MPFi |
| Legacy 1 8i SOHC 16V | AY/EJ18 | 1991 to 1993 | Subaru SPFi |
| Legacy 2 0 SOHC 16V cat | AY/EJ20EN | 1991 to 1996 | Subaru MPFi |
| Legacy 2 0 4 Cam Turbo DOHC 16V | AY/EJ20-GN | 1991 to 1994 | Subaru MPFi |
| Legacy 2 2 & cat | EJ22 | 1989 to 1997 | Subaru MPFi |
| L Series Coupe 1 8 | EA82 | 1988 to 1990 | Subaru MPFi |
| L-Series Turbo 4x4 | EA82 | 1985 to 1989 | Subaru MPFi + Turbo |
| SVX DOHC 24V | | 1992 to 1997 | Subaru MPFi |
| Vivio SOHC 8V | - | 1992 to 1996 | Subaru MPFi |
| XT Turbo Coupe | EA82 | 1985 to 1989 | Subaru MPFi + Turbo |
| XT Turbo Coupe | EA82 | 1989 to 1991 | Subaru MPFi + Turbo |

## 3 Retrieving fault codes without a fault code reader (FCR) - flash codes

**Note:** *During the course of certain test procedures, it is possible for additional fault codes to be generated. Care must be taken that any codes generated during test routines do not mislead diagnosis. All codes must be cleared once testing is complete*

**1** Fault codes are displayed by both the SD warning light on the instrument panel and by the LED set into the casing of the ECM. Subaru MPFI employs four diagnostic modes, which utilise combinations of the facia-mounted warning light and the LED to display various fault conditions. Each mode can be triggered with either the ignition switched on, engine stopped or with the engine running.

### *U-check (start-up and drive components)*

**2** Switch on the ignition. If the ECM is fault free, the SD light will illuminate without flashing, and the LED will display the vehicle specification code (differentiation of catalyst or non catalyst models).

**3** If fault codes have been stored, the warning light remains illuminated while the LED displays the codes. A limited number of 2-digit codes that affect start up and drive will be displayed in this mode.

a) *The two digits are indicated by two separate series of flashes. The first series indicates the first digit, and the second series indicates the second digit.*

b) *Each digit is a multiple of 1 second flash, with a 1.5 second gap between the first and second digit.*

c) *A 2.5 second gap occurs between each code.*

**4** If no fault codes are stored, the SD warning light will blink, and the LED will display the vehicle specification code.

**5** If fault codes have been stored, both the SD warning light and the LED will flash to display the fault code. Refer to the information on the U-check (paragraph 3) for a description of what the flashes represent.

**6** Count the number of flashes in each series, and record the code. Refer to the table at the end of the Chapter to determine the meaning of the fault code.

**7** Start up the engine and allow it to idle. If no faults have been stored, the SD warning light will blink, and the LED will display the vehicle specification code.

**8** If fault codes have been stored, both the SD warning light and the LED will flash to display the fault code. Refer to the information on the U-check (paragraph 3) for a description of what the flashes represent.

**9** Count the number of flashes in each series, and record the code. Refer to the table at the end of the Chapter to determine the meaning of the fault code.

**10** Start up the engine and allow it to idle. If no faults have been stored, the SD warning light will blink, and the LED will display the vehicle specification code.

**11** If fault codes have been stored, both the SD warning light and the LED will flash to display the fault code. Refer to the information on the U-check (paragraph 3) for a description of what the flashes represent.

**12** Count the number of flashes in each series, and record the code. Refer to the table at the end of the Chapter to determine the meaning of the fault code.

**13** Count the number of flashes in each series, and record the code. Refer to the table at the end of the Chapter to determine the meaning of the fault code.

**14** Turn off the ignition and disconnect the black read memory connectors (male and female) to end fault code retrieval.

### *D-check (major faults and system test)*

**15** Start the engine and warm it to normal operating temperature. Stop the engine.

**16** Ensure that the two black read-memory connectors are connected.

**17** Switch on the ignition.

**18** The LED set into the ECM case will display the vehicle specification code (differing for the catalyst or non-catalyst models) and the SD light should remain illuminated.

**19** Fully depress the accelerator pedal. Allow the pedal to return to the idle position.

**20** Repeat paragraph 19 four times.

**21** The LED will flash to display the fault code. The SD warning light will flash regularly if no faults have been detected.

**22** If fault codes have been stored, both the SD warning light and the LED will flash to display the fault code. Refer to the information on the U-check (paragraph 3) for a description of what the flashes represent.

**23** Count the number of flashes in each series, and record the code. Refer to the table at the end of the Chapter to determine the meaning of the fault code.

**24** Start up the engine and allow it to idle. If no faults have been stored, the SD warning light will blink, and the LED will display the vehicle specification code.

**25** If fault codes have been stored, both the SD warning light and the LED will flash to display the fault code. Refer to the information on the U-check (paragraph 3) for a description of what the flashes represent.

**26** If fault codes have been stored, both the SD warning light and the LED will flash to display the fault code. Refer to the information on the U-check (paragraph 3) for a description of what the flashes represent.

**27** Count the number of flashes in each series, and record the code. Refer to the table at the end of the Chapter to determine the meaning of the fault code.

**28** Turn off the ignition and disconnect the two green multi-plug test connectors (male and female) to end fault code retrieval.

## 4 Clearing fault codes without a fault code reader (FCR)

### *Clear-memory mode*

**1** Start the engine and warm it to normal operating temperature. Stop the engine.

**2** Connect both the green test connectors and black read-memory connectors (male and female).

**3** Switch on the ignition.

**4** The LED set into the ECM case will display the vehicle specification code (differing for the catalyst or non-catalyst models) and the SD light should remain illuminated.

**5** Fully depress the accelerator pedal. Allow the pedal to return to the idle position.

**6** Repeat paragraph 5 four times.

**7** The LED will flash to display the fault code. The SD warning light will flash regularly if no faults have been detected.

**8** If fault codes have been stored, both the SD warning light and the LED will flash to display the fault code. Refer to the information on the U-check (paragraph 3) for a description of what the flashes represent.

**9** Count the number of flashes in each series, and record the code. Refer to the table at the end of the Chapter to determine the meaning of the fault code.

**10** Start up the engine and allow it to idle. If no faults have been stored, the SD warning light will blink, and the LED will display the vehicle specification code.

**11** If fault codes have been stored, both the SD warning light and the LED will flash to display the fault code. Refer to the information on the U-check (paragraph 3) for a description of what the flashes represent.

**12** Count the number of flashes in each series, and record the code. Refer to the table at the end of the Chapter to determine the meaning of the fault code.

**13** Start up the engine and allow it to idle. If no faults have been stored, the SD warning light will blink, and the LED will display the vehicle specification code.

**14** If fault codes have been stored, both the SD warning light and the LED will flash to display the fault code. Refer to the information on the U-check (paragraph 3) for a description of what the flashes represent.

**15** Count the number of flashes in each series, and record the code. Refer to the table at the end of the Chapter to determine the meaning of the fault code.

**16** Turn off the ignition and disconnect the two green multi-plug test connectors (male and female) to end fault code retrieval.

### *All Subaru models*

1 Connect an FCR to the 9-pin SD connector Use the FCR for the following purposes in strict compliance with the FCR manufacturer's instructions

*a) Retrieving fault codes*

*b) Clearing fault codes*

2 Codes must always be cleared after component testing or after repairs involving the removal or replacement of an EMS component

## 6 Guide to test procedures

1 Use an FCR to interrogate the ECM for fault codes, or gather codes manually, as described in Section 3 or 5

### *Codes stored*

2 If one or more fault codes are gathered refer to the fault code table at the end of this Chapter to determine their meaning

3 If several codes are gathered, look for a common factor such as a defective earth return or supply

4 Refer to the component test procedures in Chapter 4 where you will find a means of testing the majority of components and circuits found in the modern EMS

5 Once the fault has been repaired clear the codes and run the engine under various conditions to determine if the problem has cleared

6 Check the ECM for fault codes once more Repeat the above procedures where codes are still being stored

7 Refer to Chapter 3 for more information on how to effectively test the EMS

### *No codes stored*

8 Where a running problem is experienced, but no codes are stored, the fault is outside of the parameters designed into the SD system Refer to Chapter 3 for more information on how to effectively test the engine management system

9 If the problem points to a specific component, refer to the test procedures in Chapter 4 where you will find a means of testing the majority of components and circuits found in the modern EMS

# Fault code table

### *Subaru MPFi*

| Flash/ FCR code | Description |
|---|---|
| 11 | Crank angle sensor (CAS) or CAS circuit |
| 12 | Starter switch |
| 13 | Camshaft position sensor (CMP) or circuit |
| 14 | Injector valve No 1 or injector circuit |
| 15 | Injector valve No 2 or injector circuit |
| 16 | Injector valve No 3 or injector circuit |
| 17 | Injector valve No 4 or injector circuit |
| 29 | Crank angle sensor (CAS) or CAS circuit |
| 31 | Throttle pot sensor (TPS) or TPS circuit |
| 32 | Oxygen sensor (OS) 1 or OS circuit |
| 33 | Vehicle speed sensor (VSS) or VSS circuit |
| 35 | Carbon filter solenoid valve (CFSV) or CFSV circuit |
| 37 | Oxygen sensor (OS) 2 or OS circuit |
| 38 | Engine torque control or circuit |
| 41 | Oxygen sensor (OS) learning control |

# Chapter 33
# Suzuki

## Contents

**Index of vehicles**
**Self-Diagnosis**
Clearing fault codes without a fault code reader (FCR) . . . 4
Guide to test procedures . . . . . 6
Introduction . . . . . 1
Retrieving fault codes without a fault code reader (FCR) flash codes . . . . . 3
Self-Diagnosis connector location . . . . 2
Self-Diagnosis with a fault code reader (FCR) 5
**Fault code table**

## Index of vehicles

| Model | Engine code | Year | System |
|---|---|---|---|
| Alto 1.0 | G10B | 1997 | Suzuki EPi-MPi |
| Baleno 1.3 | G13BB | 1995 to 1997 | Suzuki EPi-MPi |
| Baleno 1.6 | G16B | 1995 to 1997 | Suzuki EPi-MPi |
| Baleno 1.8 | J18A | 1996 to 1997 | Suzuki EPi MPi |
| Cappuccino DOHC 12V | F6A | 1993 to 1996 | Suzuki EPi-MPi |
| Swift 1.0i cat SOHC 6V | G10A | 1991 to 1997 | Suzuki EPi SPi |
| Swift GTi DOHC 16V | - | 1986 to 1989 | Suzuki EPi-MPi |
| Swift SF 413 GTi DOHC | G13B | 1988 to 1992 | Suzuki EPi-MPi |
| Swift SF 413 DOHC cat | G13B | 1988 to 1992 | Suzuki EPi-MPi |
| Swift 1.3i DOHC 16V | G13B | 1992 to 1995 | Suzuki EPi-MPi |
| Swift Cabrio DOHC cat | G13B | 1992 to 1995 | Suzuki EPi-MPi |
| Swift 1.3i cat SOHC 8V | G13BA | 1992 to 1997 | Suzuki EPi-SPi |
| Swift SF 416i SOHC 16V | G16B | 1989 to 1992 | Suzuki EPi-SPi |
| Swift SF 416i 4x4 SOHC | G16B | 1989 to 1992 | Suzuki EPi-SPi |
| Swift SF 416i 4x4 cat | G16B | 1989 to 1992 | Suzuki EPi-SPi |
| Vitara EFi SOHC 16V | | 1991 to 1997 | Suzuki EPi-MPi |
| Vitara Sport SPi SOHC | - | 1994 to 1997 | Suzuki EPi-SPi |

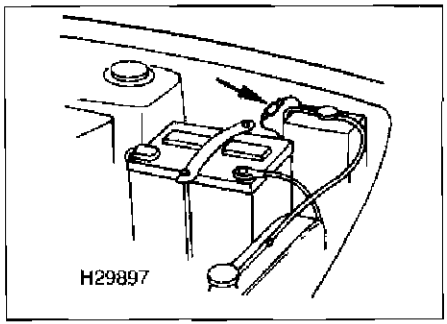


**33.2 The SD connector is located in the engine compartment, next to the battery**

### *Swift GTi 1986 to 1989 and Vitara 1.6i*

The SD connector is attached to the monitor coupler which is located next to the battery in the engine compartment **(refer to illustration 33.2)** The connector is provided for manual retrieval of flash codes, and for dedicated FCR use

## 3 Retrieving fault codes without a fault code reader (FCR) - flash codes

**Note** *During the course of certain test procedures, it is possible for additional fault codes to be generated Care must be taken that any codes generated during test routines*

*flashes indicates the single units*

*c) Tens are indicated by 0 3-second flashes, separated by short pauses Units are indicated by 0.3-second flashes, separated by short pauses*

*d) A 1-second pause separates the tens from the units*

*e) Code "42" is indicated by four 0 3-second flashes, a 1 second pause, followed by two 0 3-second flashes.*

*f) A 3-second pause separates the transmission of each individual code*

**4** Count the number of flashes in each series, and record each code as it is transmitted Refer to the table at the end of the Chapter to determine the meaning of the fault code.

**5** Each flash code will be repeated three times, followed by the next code in sequence.

**6** Code number "12 will be transmitted if no faults are stored

**7** Turn off the ignition and reconnect the two halves of the SD connector to end fault code retrieval

### *Swift 1.0i and 1.3i*

**8** Switch on the ignition (do not start the engine)

**9** Connect a spare fuse to the SD connector located in the fusebox **(refer to illustration 33.1).** If the engine is a non-starter crank it for 3 to 5 seconds leave the ignition switched on to avoid losing codes

**10** The codes are displayed on the SD warning light in the instrument panel The A and B of the SD connector **(see illustration 33.3).** If the engine is a non-starter, crank it for 3 to 5 seconds, leave the ignition switched on to avoid losing codes

**17** The codes are displayed on the SD warning light in the instrument panel The flashing of the light indicates the 2-digit fault codes as follows

*a) The two digits are indicated by two series of flashes*

*b) The first series of flashes indicates the multiples of ten, the second series of flashes indicates the single units*

*c) Tens are indicated by 0 3-second flashes, separated by short pauses Units are indicated by 0 3-second flashes, separated by short pauses*

*d) A 0 6-second pause separates the tens from the units*

*e) Code "42" is indicated by four 0 3-second flashes, a 0 6-second pause, followed by two 0 3 second flashes*

*f) A 3-second pause separates the transmission of each individual codes*

**18** Count the number of flashes in each series, and record each code as it is transmitted Refer to the table at the end of the Chapter to determine the meaning of the fault code

**19** Each flash code will be repeated three times, followed by the next code in sequence

**20** Code number "12" will be transmitted if no faults are stored

**21** Turn off the ignition and remove the

### *All Suzuki models*

1 Connect an FCR to the SD connector Use the FCR for the following purposes in strict compliance with the FCR manufacturer's instructions

*a) Retrieving fault codes*
*b) Clearing fault codes*

2 Codes must always be cleared after component testing, or after repairs involving the removal or replacement of an engine management system component

## 6 Guide to test procedures

1 Use an FCR to interrogate the ECM for fault codes, or gather codes manually, as described in Section 3 or 5

### *Codes stored*

2 If one or more fault codes are gathered, refer to the fault code table at the end of this Chapter to determine their meaning.

3 If several codes are gathered, look for a common factor such as a defective earth return or supply

4 Refer to the component test procedures in Chapter 4, where you will find a means of testing the majority of components and circuits found in the modern EMS

5 Once the fault has been repaired, clear the codes and run the engine under various conditions to determine if the problem has cleared.

6 Check the ECM for fault codes once more Repeat the above procedures where codes are still being stored

7 Refer to Chapter 3 for more information on how to effectively test the EMS

### *No codes stored*

8 Where a running problem is experienced, but no codes are stored, the fault is outside of the parameters designed into the SD system Refer to Chapter 3 for more information on how to effectively test the engine management system

9 If the problem points to a specific component, refer to the test procedures in Chapter 4, where you will find a means of testing the majority of components and circuits found in the modern EMS

# Fault code table

### *Suzuki EPi-MPi and EPi-SPi*

| Flash/ FCR code | Description |
|---|---|
| 12 | No faults found in the ECM Proceed with normal diagnostic methods |
| 13 | Oxygen sensor (OS) or OS circuit |
| 14 | Coolant temperature sensor (CTS) or CTS circuit |
| 25 | Air temperature sensor (ATS) or ATS circuit |
| 31 | Manifold absolute pressure (MAP) sensor or MAP sensor circuit |
| 32 | Manifold absolute pressure (MAP) sensor or MAP sensor circuit |
| 33 | Airflow sensor (AFS) or AFS circuit |

# Chapter 34
# Toyota

## Contents

**Index of vehicles**
**Self-Diagnosis**
Clearing fault codes without a fault code reader (FCR) . 4
Guide to test procedures 6
Introduction 1
Retrieving fault codes without a fault code reader (FCR) - flash codes . 3
Self Diagnosis connector location . 2
Self-Diagnosis with a fault code reader (FCR) 5
**Fault code tables**

## Index of vehicles

| Model | Engine code | Year | System |
|---|---|---|---|
| Camry 2 0i OHC | 3S-FE | 1987 to 1991 | Toyota TCCS/MAP or AFS |
| Camry 2 0i OHC 4WD | 3S-FE | 1988 to 1989 | Toyota TCCS/MAP or AFS |
| Camry 2 2i 16V DOHC cat | 5S-FE | 1991 to 1996 | Toyota TCCS/AFS, TDCL |
| Camry 2 2 16V DOHC | 5S-FE | 1997 | Toyota TCCS |
| Camry 2 5i V6 OHC cat | 2VZ-FE | 1989 to 1991 | Toyota TCCS/AFS |
| Camry 3 0i V6 24V DOHC cat | 3VZ-FE | 1991 to 1996 | Toyota TCCS/AFS TDCL |
| Camry 3 0 V6 DOHC | 1MZ-FE | 1997 | Toyota TCCS |
| Carina E 1 6i 16V DOHC | 4A-FE | 1992 to 1997 | Toyota TCCS/MAP |
| Carina E 1 6i 16V DOHC cat | 4A-FE | 1992 to 1996 | Toyota TCCS/MAP, TDCL |
| Carina E 1 8 16V DOHC | 7A-FE | 1995 to 1997 | Toyota TCCS MPI |
| Carina II 1 8i OHC | 1S-E | 1986 to 1988 | Toyota TCCS |
| Carina II 2 0i OHC & cat | 3S-FE | 1988 to 1992 | Toyota TCCS/AFS, TDCL |
| Carina E 2 0i DOHC cat | 3S FE | 1992 to 1997 | Toyota TCCS/MAP TDCL |
| Carina E 2 0i DOHC cat | 3S GE | 1992 to 1995 | Toyota TCCS/MAP, TDCL |
| Celica 1 8i 16V DOHC | 7A-FE | 1995 to 1997 | Toyota TCCS |
| Celica 2 0 16V DOHC & cat | 3S GE | 1990 to 1994 | Toyota TCCS/MAP, TDCL |
| Celica 2 0i 16V DOHC | 3S GE | 1994 to 1997 | Toyota TCCS |
| Celica 2 0 16V DOHC | 3S-GEI | 1985 to 1990 | Toyota TCCS/AFS |

# Self-Diagnosis

## 1 Introduction

The original engine management system (EMS) fitted to Toyota vehicles was Toyota EFI, an analogue system that controlled fuel injection alone

The first Toyota computer-controlled system (TCCS) was introduced in 1983, and by 1990 had replaced all of the early EFI systems Toyota TCCS controls the primary ignition, fuel injection and the idle functions from within the same control module Toyota sometimes refers to early TCCS as EFI, which can cause some confusion when attempting to identify the two systems. However the original EFI system did not employ a self-diagnosis function

The first versions of TCCS utilised a 2-pin SD connector, which was later replaced by a multi-pin SD connector. From about 1989, in addition to the multi-pin SD connector, Toyota vehicles were equipped with a Toyota data communication link (TDCL), which enabled full serial analysis by fault code reader From 1983 to 1987, 4A-GE and 3S-FE engine models equipped with a MAP sensor transmitted fault codes as a straight count from 1 to 11. From about 1988, the 4A-GE or 3S-FE engines could be equipped with either table of programmed values If the diagnostic software determines that a fault is present, the ECM stores one or more fault codes in the ECM memory Codes will not be stored about components for which a code is not available or for conditions not covered by the diagnostic software

### *Limited operating strategy (LOS)*

Toyota TCCS systems featured in this Chapter utilise LOS (a function that is commonly called the "limp-home mode") Once certain faults have been identified (not all faults will initiate LOS), the ECM will implement LOS and refer to a programmed default value rather than the sensor signal This enables the vehicle to be safely driven to a workshop/garage for repair or testing Once the fault has cleared, the ECM will revert to normal operation

### *Adaptive or learning capability*

Toyota systems also utilise an adaptive function that will modify the basic programmed values for most effective operation during normal running, and with due regard to engine wear

### *Self-Diagnosis (SD) warning light*

## 2 Self-Diagnosis connector location

### *5M-GE and 6M-GE engines*

The very first Toyota models equipped with TCCS were fitted with a 2-pin and a single-pin SD connector positioned together in the loom **(see illustration 34.1)** The 2-pin and 1-pin connectors are located either close to the wiper motor, or near the distributor

### *4A-GE engines (1983 to 1987) and 3S-FE engines (1986 to 1988)*

4A-GE and 3S FE models (with MAP sensor) are equipped with either a 2-pin and single SD connector positioned together in the loom **(refer to illustration 34.1)** or a multi-pin SD connector **(see illustration 34.2)** The 2-pin and 1-pin connectors are located either close to the wiper motor, or near the distributor The multi-pin connector is usually located next to the battery All models with the multi-pin SD connector also have a MAP sensor

### *All Toyota engines from 1988*

Later Toyota models were fitted with a multi-pin SD connector **(refer to illustration**

## 3 Retrieving fault codes without a fault code reader (FCR) - flash codes

**Note 1:** *During the course of certain test procedures, it is possible for additional fault codes to be generated. Care must be taken that any codes generated during test routines do not mislead diagnosis. All codes must be cleared once testing is complete.*
**Note 2.** *Prior to fault code retrieval, ensure that the engine is at normal operating temperature and the throttle switch is functioning correctly (indicating the idle condition).*

### 5M-GE and 6M-GE engines

1 Attach a voltmeter between the single-pin connector and a good vehicle earth.
2 Switch on the ignition, but do not start the engine.
3 Use a jumper lead to bridge the terminals of the two pin connector **(refer to illustration 34.1)**.
4 The voltmeter needle should register 5 volts for two seconds and then swing down to register 2.5 volts. Codes are output as needle sweeps between 2.5 volts and 5 volts, or between 2.5 volts and zero volts, as follows:
*a) The two digits are indicated by two series of sweeps.*
*b) The first series of sweeps indicate the multiples of ten, the second series of sweeps indicate the single units.*
**11** The codes are displayed on the SD warning light in the instrument panel. The flashes are output as a straight count.
*a) If a fault code has been stored, the SD warning light will flash at 0.5 second intervals.*
*b) A pause of 1.5 seconds separates each flash.*
*c) A 2.5-second pause separates the transmission of each individual code.*
*d) Code number "4" is indicated by four 0.5-second flashes, with a pause of 1.5 seconds between each flash.*
*e) The codes will be transmitted in sequence. After the highest code is transmitted (in the range 1 to 11), there will be a 4.5 second pause before the sequence is repeated.*
**12** Count the number of flashes, and record each code as it is transmitted. Refer to the tables at the end of the Chapter to determine the meaning of the fault code.
**13** Fault codes will be transmitted in sequential order, and repeated after the highest recorded code has been displayed.
**14** The SD warning light will flash on and off at regular 0.3 second intervals if no faults have been stored.
**15** Turn off the ignition and remove the jumper lead to end fault code retrieval.

### All Toyota models with a multi-pin connector, except TDCL

**16** Switch on the ignition, but do not start the

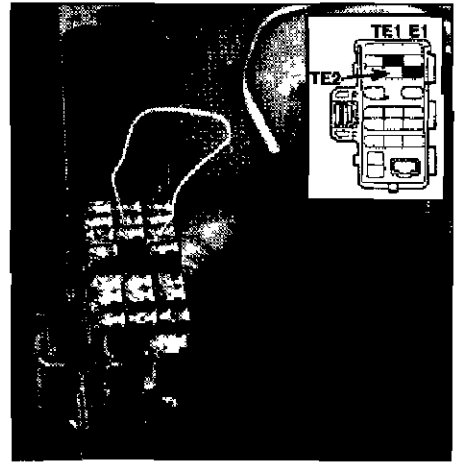


**34.4 Bridge terminals TE1 (or T1) and E1 in the SD connector. This causes TCCS to flash fault codes on the SD warning light**

**21** The SD warning light will flash on and off at regular 0.3-second intervals if no faults have been stored.
**22** Turn off the ignition and remove the jumper lead to end fault code retrieval.

### All other models

**23** The codes are output on the SD warning light. The flashing of the light indicates the 2-digit fault codes as follows:
*a) The two digits are indicated by two series of flashes.*

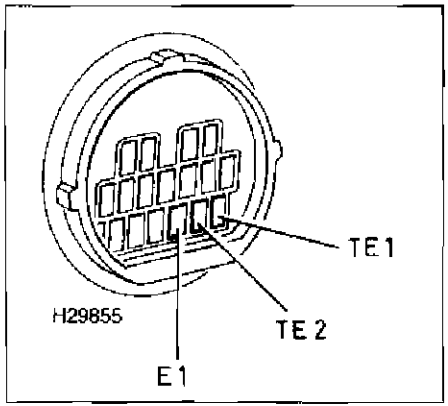


**34.6 Layout of the TDCL connector intended for FCR use**

*TDCL pin numbers are similar to those used in the multi-pin SD connector, and this connector can also be used to retrieve flash codes*

**25** Fault codes will be transmitted in sequential order, and repeated after the highest recorded code has been displayed

**26** When all codes have been transmitted, the warning light will pause and then repeat the sequence

**27** If no faults have been detected, the warning light will flash on and off every 0 5 seconds for eight flashes After a 3 second pause, the sequence will be repeated

**28** Turn off the ignition and remove the

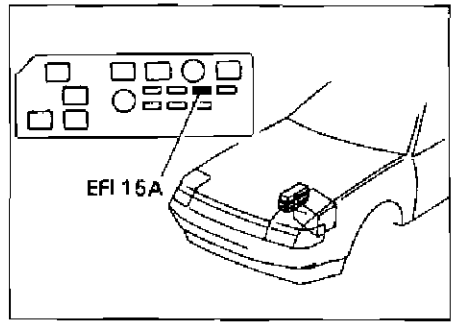


**34.7 EFI fuse in the fusebox located behind the left-hand headlight**

**31** Switch on the ignition **Note:** *If the jumper lead is connected after the ignition is switched on, the test mode will fail to start.*

**32** The SD warning light will flash regularly to indicate that the system has initiated test mode

**33** Start the engine and road test the vehicle Run the vehicle at a speed of more than 6 mph (10 km/h) and attempt to reproduce the conditions during which the fault might occur

**34** Bring the vehicle to a halt with the ignition still on

**35** Remove the jumper lead from terminals TE2 and E1, and connect the lead between terminals TE1 and E1

**36** The codes recorded during the road test are output on the SD warning light The

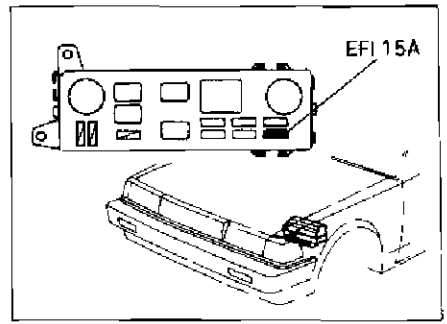


**34.8 EFI fuse in the fusebox located behind the left-hand headlight (5M-GE/6M-GE)**

*e) Code "34" is indicated by three 0 5-second flashes, followed by a 1 5 second pause, followed by four 0 5-second flashes*

**37** Count the number of flashes in each series, and record each code as it is transmitted Refer to the tables at the end of the Chapter to determine the meaning of the fault code

**38** Fault codes will be transmitted in sequential order, and repeated after the highest recorded code has been displayed

**39** When all codes have been transmitted the warning light will pause and then repeat the sequence

**40** If no faults have been detected the warning light will flash on and off every 0 5 seconds for eight flashes After a 3 second

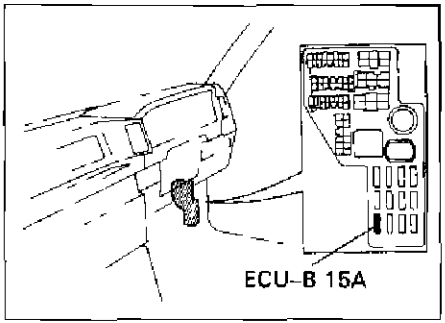


**34.11 ECU-B fuse in the fusebox located on the driver's side kick panel under the facia**

**5M-GE/6M-GE engines**

4 Remove the STOP fuse for at least 10 seconds **(see illustration 34.13).**

### *Method 2*

5 Turn off the ignition and disconnect the battery negative terminal for a period of approximately 15 seconds

6 Reconnect the battery negative terminal

**Note** *The first drawback to this method is that battery disconnection will re initialise all ECM adaptive values. Re-learning the appropriate adaptive values requires starting the engine from cold, and driving at various engine speeds for approximately 20 to 30 minutes. The engine should also be allowed to idle for approximately*

**Note 2:** *Prior to fault code retrieval, ensure that the engine is at normal operating temperature and the throttle switch is functioning correctly (indicating the idle condition)*

### *All Toyota models*

1 Connect an FCR to the SD connector. Use the FCR for the following purposes, in strict compliance with the FCR manufacturer's instructions

*a) Retrieving fault codes*
*b) Clearing fault codes*
*c) Making adjustments.*
*d) Displaying Datastream.*

2 Codes must always be cleared after component testing, or after repairs involving the removal or replacement of an EMS component

## 6 Guide to test procedures

1 Use an FCR to interrogate the ECM for fault codes, or gather codes manually as described in Section 3 or 5

### *Codes stored*

2 If one or more fault codes are gathered, refer to the fault code tables at the end of this

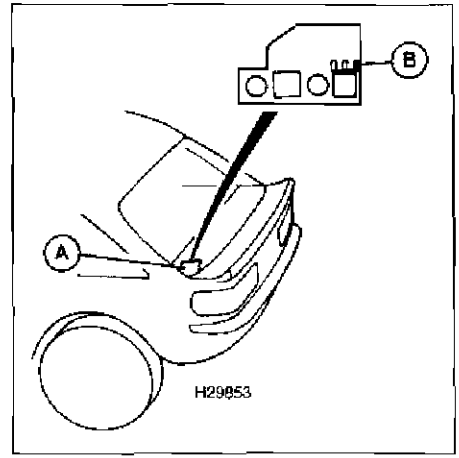


**34.12 AM2 fuse (B) in the fusebox (A) located in the left-hand luggage compartment (MR2)**

### *No codes stored*

8 Where a running problem is experienced, but no codes are stored, the fault is outside of the parameters designed into the SD system. Refer to Chapter 3 for more information on how to effectively test the engine management system.

9 If the problem points to a specific component, refer to the test procedures in Chapter 4, where you will find a means of testing the majority of components and

# Fault code tables

### *Toyota TCCS fault codes (MAP sensor system, straight count)*

| Flash/ FCR code | Description |
|---|---|
| 1 | System OK |
| 2 | Manifold absolute pressure (MAP) sensor or MAP sensor circuit |
| 3 | Ignition signal from amplifier |
| 4 | Coolant temperature sensor (CTS) or CTS circuit |
| 6 | RPM signal or circuit, no RPM, TDC signal |
| 7 | Throttle pot sensor (TPS) or TPS circuit |
| 8 | Air temperature sensor (ATS) or ATS circuit |
| 9 | Vehicle speed sensor (VSS) or VSS circuit |
| 10 | Cranking signal or circuit |
| 11 | Air conditioning (A/C) switch signal or circuit |

### *Toyota TCCS fault codes (2-digit)*

| Flash/ FCR code | Description |
|---|---|
| 12 | RPM signal or circuit |
| 13 | RPM signal or circuit |
| 14 | Ignition signal from amplifier |
| 16 | ECT control signal or circuit |
| 21 | Oxygen sensor (OS) or OS circuit, OS signal decreases |
| 22 | Coolant temperature sensor (CTS) or CTS circuit |
| 24 | Air temperature sensor (ATS) or ATS circuit |
| 25 | Oxygen sensor (OS) lean signal or OS circuit |
| 26 | Oxygen sensor (OS) rich signal or OS circuit |
| 27 | Oxygen sensor (OS) or OS circuit |
| 28 | Oxygen sensor (OS) or OS circuit |
| 31 | Airflow sensor (AFS) (when fitted) or AFS circuit |
| 31 | Manifold absolute pressure (MAP) sensor (when fitted) or MAP sensor circuit (alternative code) |
| 32 | Vane airflow sensor (AFS) or AFS circuit |
| 34 | Turbo pressure signal or circuit |
| 35 | Turbo pressure signal or circuit |
| 41 | Throttle pot sensor (TPS) or TPS circuit |
| 42 | Vehicle speed sensor (VSS) or VSS circuit |
| 43 | Cranking signal or circuit |
| 47 | Throttle pot sensor (TPS) or TPS circuit |
| 51 | Air conditioning (A/C) Switch signal or circuit |
| 52 | Knock sensor (KS) or KS circuit |
| 53 | Knock control (ECM) or circuit |
| 54 | Turbo intercooler signal or circuit |
| 55 | Knock sensor (KS) (V6) or KS circuit |

**Note:** *Codes 16, 42, 43 and 51 are not retained by the ECM, and are only available whilst the ignition is on. Once the ignition is switched off, these codes will be cleared*

# Chapter 35
# Vauxhall/Opel

## Contents

**Index of vehicles**
**Self-Diagnosis**
Clearing fault codes without a fault code reader (FCR) . 4
Guide to test procedures . . . . . 6
Introduction . . . 1
Retrieving fault codes without a fault code reader (FCR) - flash codes . . . . 3
Self-Diagnosis connector location 2
Self Diagnosis with a fault code reader (FCR) . 5
**Fault code tables**

## Index of vehicles

| Model | Engine code | Year | System |
|---|---|---|---|
| Astra-F 1.4i cat | C14NZ | 1990 to 1996 | GM-Multec CFi-he |
| Astra-F 1.4i cat | C14SE | 1991 to 1997 | GM-Multec MPi |
| Astra F 1.4i cat | C14SE | 1993 to 1994 | GM Multec MPi-DIS |
| Astra 1.4i cat | C14NZ | 1990 to 1993 | GM Multec ZE CFi |
| Astra-F 1.4i | X14NZ | 1997 | GM-Multec CFi |
| Astra-F 1.4i 16V | X14XE | 1996 to 1997 | GM-Multec-S MPi |
| Astra-F 1.6 cat | C16NZ | 1990 to 1995 | GM-Multec CFi |
| Astra Van 1.6i cat | C16NZ | 1991 to 1994 | GM-Multec CFi |
| Astra-F 1.6i cat | C16SE | 1992 to 1997 | GM-Multec MPi |
| Astra-F 1.6i | X16SZ | 1993 to 1996 | GM-Multec CFi |
| Astra F 1.6i cat | C16SE | 1992 to 1994 | GM Multec MPi |
| Astra 1.6 cat | C16NZ | 1987 to 1993 | GM-Multec ZE CFi |
| Astra-F 1.6i cat | C16NZ | 1991 to 1995 | GM-Multec ZE CFi |
| Astra-F 1.6i | X16SZR | 1996 to 1997 | GM-Multec CFi |
| Astra F 1.6i 16V | X16XEL | 1995 to 1997 | GM Multec-S |
| Astra-F 1.8i cat | C18NZ | 1991 to 1994 | GM-Multec CFi |

| Model | Engine code | Year | System |
|---|---|---|---|
| Carlton 3 0i CIH cat | C30NE | 1990 to 1994 | Bosch Motronic 1 5 |
| Carlton 24V DOHC 24V cat | C30SE | 1989 to 1994 | Bosch Motronic 1 5 |
| Carlton 24V Estate DOHC 24V cat | C30SEJ | 1990 to 1994 | Bosch Motronic 1 5 |
| Cavalier 1.6i cat | C16NZ | 1990 to 1993 | GM-Multec CFi |
| Cavalier 1 6i cat | C16NZ2 | 1993 to 1994 | GM-Multec CFi |
| Cavalier 1.6i 7 cat | E16NZ | 1988 to 1995 | GM-Multec ZE CFi |
| Cavalier 1 6i E-Drive | X16XZ | 1993 to 1995 | GM-Multec ZE CFi |
| Cavalier 1 6i | C16NZ | 1995 on | GM-Multec CFi |
| Cavalier 1 6i | C16NZ2 | 1995 on | GM-Multec CFi |
| Cavalier 1 8i cat | C18NZ | 1990 to 1995 | GM-Multec CFi |
| Cavalier 2.0 | 20NE | 1987 to 1988 | Bosch Motronic ML4 1 |
| Cavalier SRi 130 | 20SEH | 1987 to 1988 | Bosch Motronic ML4 1 |
| Cavalier 2.0 SRi | 20SEH | 1988 to 1990 | Bosch Motronic ML4 1 |
| Cavalier 2 0i SOHC | 20NE | 1990 to 1993 | Bosch Motronic 1.5 |
| Cavalier 2.0i SRi SOHC | 20SEH | 1990 to 1993 | Bosch Motronic 1 5 |
| Cavalier 2 0i 4x4 SOHC | 20SEH | 1990 to 1993 | Bosch Motronic 1.5 |
| Cavalier 2 0i cat SOHC | C20NE | 1990 to 1993 | Bosch Motronic 1 5 |
| Cavalier 2 0i 16V DOHC | 20XEJ | 1989 to 1991 | Bosch Motronic 2 5 |
| Cavalier 2 0 16V | C20XE | 1989 to 1995 | Bosch Motronic 2 5 |
| Cavalier 2.0i 16V | X20XEV | 1995 | Simtec 56 1 |
| Cavalier Turbo cat | C20LET | 1993 to 1995 | Bosch Motronic 2.7 |
| Cavalier 2 5i 24V | C25XE | 1993 to 1995 | Bosch Motronic 2 8 |
| Corsa 1 2i cat | X12SZ | 1993 to 1996 | GM-Multec CFi |
| Corsa 1 2i cat | C12NZ | 1990 to 1994 | GM-Multec CFi |
| Corsa-B and Combo 1.2i | C12NZ | 1993 to 1997 | GM-Multec CFi |
| Corsa-B 1 2i E-Drive | X12SZ | 1993 to 1997 | Multec ZE CFi |
| Corsa 1.4i cat | C14NZ | 1990 to 1993 | GM-Multec CFi |
| Corsa-B 1 4i and Van | C14NZ | 1993 to 1997 | GM-Multec ZE CFi |
| Corsa 1 4i cat | C14SE | 1993 to 1994 | GM-Multec MPi |
| Corsa-B 1 4i and Van | C14NZ | 1993 to 1996 | GM-Multec CFi |
| Corsa-B 1 4i 16V | X14XE | 1995 to 1997 | GM-Multec XS |
| Corsa-B and Combo 1 4i | X14SZ | 1996 to 1997 | GM-Multec CFi |
| Corsa 1 4i cat | C14SE | 1992 to 1993 | GM-Multec MPi |

| Model | Engine code | Year | System |
|---|---|---|---|
| Omega-B 2 0i 16V | X20XEV | 1997 | Simtec 56 5 |
| Omega 2 4i CIH cat | C24NE | 1990 to 1993 | Bosch Motronic 1 5 |
| Omega 2 5i | X25XE | 1994 to 1997 | Bosch Motronic 2 8 1 |
| Omega 2 6i CIH cat | C26NE | 1990 to 1993 | Bosch Motronic 1 5 |
| Omega 3 0i | X30XE | 1994 to 1997 | Bosch Motronic 2 8 1 |
| Omega 3 0i CIH cat | C30NE | 1990 to 1994 | Bosch Motronic 1 5 |
| Omega 24V DOHC cat | C30SE | 1989 to 1994 | Bosch Motronic 1 5 |
| Omega 24V DOHC Estate cat | C30SEJ | 1990 to 1994 | Bosch Motronic 1 5 |
| Senator 2 6i CIH cat | C26NE | 1990 to 1993 | Bosch Motronic 1 5 |
| Senator 3 0i CIH cat | C30NE | 1990 to 1994 | Bosch Motronic 1 5 |
| Senator 24V DOHC cat | C30SE | 1989 to 1994 | Bosch Motronic 1 5 |
| Senator 24V DOHC Estate cat | C30SEJ | 1990 to 1992 | Bosch Motronic 1 5 |
| Tigra 1 4i 16V | X14XE | 1994 to 1997 | GM-Multec MPi |
| Tigra 1 6i | X16XE | 1994 to 1997 | GM-Multec MPi |
| Vectra 1 6i cat | C16NZ | 1990 to 1993 | GM-Multec CFi |
| Vectra 1 6i cat | C16NZ2 | 1993 to 1994 | GM-Multec CFi |
| Vectra 1 6i & cat | E16NZ | 1988 to 1995 | GM Multec ZE CFi |
| Vectra A 1 6i E-Drive | X16XZ | 1993 to 1995 | GM-Multec ZE CFi |
| Vectra B 1 6i | X16SZR | 1995 to 1997 | GM-Multec SPi |
| Vectra-B 1 6i 16V | X16XEL | 1995 to 1997 | GM Multec S SEFi |
| Vectra 1 8i cat | C18NZ | 1990 to 1994 | GM-Multec CFi |
| Vectra-B 1 8i 16V | X18XE | 1995 to 1997 | Simtec 56 5 |
| Vectra B 2 0i 16V | X20XEV | 1995 to 1997 | Simtec 56 5 |
| Vectra 2 0i | 20SEH | 1987 to 1990 | Bosch Motronic ML4 1 |
| Vectra 2 0i cat | C20NE | 1991 to 1992 | Bosch Motronic 1 5 |
| Vectra 2 0 SOHC | 20NE | 1990 to 1993 | Bosch Motronic 1 5 |
| Vectra 2 0i and 4x4 SOHC | 20SEH | 1990 to 1993 | Bosch Motronic 1 5 |
| Vectra 2 0i SOHC cat | - | 1990 to 1993 | Bosch Motronic 1 5 |
| Vectra GSi 200016V DOHC | | 1989 to 1991 | Bosch Motronic 2 5 |
| Vectra 2 0 16V 4x4 DOHC cat | C20XE | 1989 to 1992 | Bosch Motronic 2 5 |
| Vectra-A 2 0i 16V | X20XEV | 1995 | Simtec 56 1 |
| Vectra A Turbo cat | C20LET | 1993 to 1995 | Bosch Motronic 2 7 |

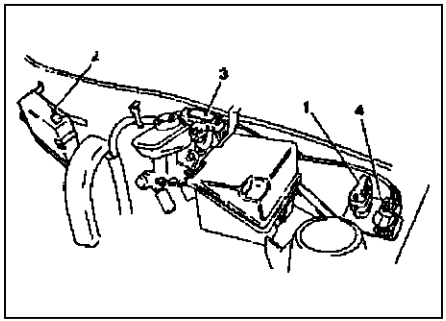

**35.2 SD connector (ALDL) located on the bulkhead (Bosch EZ-Plus)**

*1 SD connector*
*2 ECM*
*3 MAP sensor*
*4 Octane plug*

the right-hand headlight **Note:** *The GM 10-pin SD connector is provided for transmission of fault codes to a dedicated FCR. Retrieval of flash codes by manual means is also possible.*

### 16-pin OBD connector

From 1995 onwards, a 16-pin OBD SD connector, located in a central position under the facia, is provided in some models for transmission of fault codes to a dedicated FCR. In some early models it is also possible to retrieve flash codes from vehicles equipped with the 16-pin OBD connector. A fault code reader must be used to retrieve the 4-digit P-codes generated by later vehicles.

**2** The codes are output on the SD warning light. The flashing of the light indicates the fault codes as follows:

*a) The two digits are indicated by two series of flashes.*
*b) The first series of flashes indicates the multiples of ten, the second series of flashes indicates the single units*
*c) Tens are indicated by 1-second flashes, separated by short pauses. Units are indicated by 1-second flashes, separated by short pauses.*
*d) A short pause separates the tens from the units. A slightly longer pause separates the transmission of each individual code.*
*e) Code "42" is indicated by four 1-second flashes, followed by a pause, followed by two further 1-second flashes.*

**3** Count the number of flashes in each series, and record each code as it is transmitted. Refer to the tables at the end of the Chapter to determine the meaning of the fault code.
**4** The first code that is retrieved will be code number "12", which indicates the start of code output. Ignore this code.
**5** Each flash code will be repeated three times, followed by the next code in sequence.
**6** Turn off the ignition and remove the jumper lead to end fault code retrieval.

### 16-pin OBD connector

**7** Use a jumper lead to bridge terminals 5 and 6 in the SD connector **(see illustration 35.4)**.

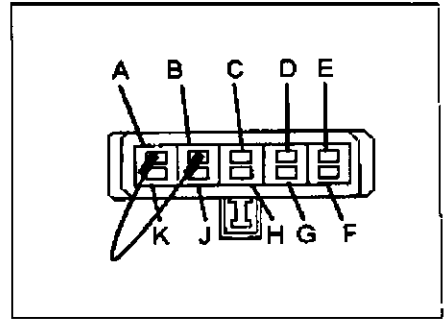


**35.3 10-pin SD connector - initiate flash code retrieval by bridging terminals A and B in the SD connector. Observe code output on the SD warning light**

## 4 Clearing fault codes without a fault code reader (FCR)

### All models

**1** Turn off the ignition and disconnect the battery negative terminal for a period of approximately 5 minutes.
**2** Reconnect the battery negative terminal.
**Note:** *The first drawback to this method is that battery disconnection will re-initialise all ECM adaptive values. Re-learning the appropriate adaptive values requires starting the engine from cold, and driving at various engine*

## 6 Guide to test procedures

1 Use an FCR to interrogate the ECM for fault codes or manually gather codes as described above

### *Codes stored*

**2** If one or more fault codes are gathered, refer to the fault code tables at the end of this Chapter to determine their meaning

**3** If several codes are gathered, look for a common factor such as a defective earth return or supply

**4** Refer to the component test procedures in Chapter 4, where you will find a means of testing the majority of components and circuits found in the modern EMS

**5** Once the fault has been repaired clear the codes and run the engine under various conditions to determine if the problem has cleared

**6** Check the ECM for fault codes once more Repeat the above procedures where codes are still being stored.

**7** Refer to Chapter 3 for more information on how to effectively test the EMS

### *No codes stored*

**8** Where a running problem is experienced, but no codes are stored, the fault is outside of the parameters designed into the SD system Refer to Chapter 3 for more information on how to effectively test the engine management system

**9** If the problem points to a specific component, refer to the test procedures in Chapter 4, where you will find a means of testing the majority of components and circuits found in the modern EMS.

# Fault code tables

### *Bosch Motronic, GM Multec and Simtec*

| Flash/ FCR code | Description |
|---|---|
| 12 | Initiation of diagnosis |
| 13 | Oxygen sensor (OS) or OS circuit, no change in voltage/open circuit |
| 14 | Coolant temperature sensor (CTS) or CTS circuit, low voltage |
| 15 | Coolant temperature sensor (CTS) or CTS circuit, high voltage |
| 16 | Knock sensor (KS) or KS circuit, no change in voltage (Bosch Motronic, Simtec) |
| 17 | Knock sensor (KS) two or KS circuit no change in voltage (Bosch Motronic, GM Multec) |
| 18 | Knock control unit or circuit, no signal, ECM fault (Bosch |
| 38 | Oxygen sensor (OS) or OS circuit, voltage low (model year 1990 on) (Bosch Motronic, Simtec) |
| 39 | Oxygen sensor (OS) or OS circuit, voltage high (model year 1990 on) (Bosch Motronic, Simtec) |
| 41 | Vehicle speed sensor (VSS) or VSS circuit, low voltage (Bosch Motronic) |
| 41 | Amplifier control signal, cylinders 2 and 3 (DIS) or circuit high voltage (GM Multec) |
| 41 | Amplifier control signal, cylinders 1 and 4 (DIS) or circuit, high voltage (GM Multec) |
| 42 | Primary ignition w/distributor or circuit, high voltage (GM Multec) |
| 42 | Vehicle speed sensor (VSS) or VSS circuit, high voltage |

| Flash/ FCR code | Description |
|---|---|
| 63 | Amplifier control signal, cylinders 2 and 3 (DIS) low voltage (GM Multec) |
| 64 | Amplifier control signal cylinders 1 and 4 (DIS) low voltage (GM Multec) |
| 64 | Primary ignition (w/distributor) or circuit, low voltage (GM Multec) |
| 65 | CO pot or CO pot circuit, low voltage (Bosch Motronic) |
| 66 | CO pot or CO pot circuit, high voltage (Bosch Motronic) |
| 67 | Throttle switch (TS), idle contact (Bosch Motronic) |
| 67 | Mass airflow sensor (AFS) or AFS circuit (GM Multec) |
| 69 | Air temperature sensor (ATS) or ATS circuit, low voltage (Bosch Motronic, Simtec) |
| 69 | Mass airflow sensor (AFS) or AFS circuit (GM Multec) |
| 71 | Air temperature sensor (ATS) or ATS circuit, high voltage |
| 72 | Throttle switch (TS), full-load contact (Bosch Motronic) |
| 72 | Amplifier (DIS) control signal (A+B) or circuit (GM Multec) |
| 73 | Airflow sensor (AFS) or AFS circuit, low voltage (Bosch Motronic, Simtec) |
| 74 | Airflow sensor (AFS) or AFS circuit, high voltage (Bosch Motronic, Simtec) |
| 75 | Transmission switch, low voltage |
| 76 | Automatic transmission torque control or circuit |
| 79 | Traction control unit (Bosch Motronic) |
| 81 | Injector number one or Injector circuit, low voltage |
| 82 | Injector number two or Injector circuit, low voltage (Bosch Motronic, Simtec) |
| 83 | Injector number three or Injector circuit, low voltage (Bosch Motronic, Simtec) |
| 84 | Injector number four or Injector circuit low voltage (Bosch Motronic, Simtec) |
| 85 | Injector number five or Injector circuit, low voltage (Bosch |

| Flash/ FCR code | Description |
|---|---|
| 117 | Wastegate valve or circuit, low voltage (Bosch Motronic) |
| 118 | Wastegate valve or circuit, high voltage (Bosch Motronic) |
| 121 | Oxygen sensor (OS) 2 or OS circuit, lean exhaust (Bosch Motronic) |
| 122 | Oxygen sensor (OS) 2 or OS circuit, rich exhaust (Bosch Motronic) |
| 123 | Inlet manifold valve 1 (Bosch Motronic) |
| 124 | Inlet manifold valve 2 (Bosch Motronic) |
| 132 | Exhaust gas recirculation (EGR) valve or EGR circuit (Bosch Motronic) |
| 133 | Inlet manifold valve 2 or circuit, high voltage (Bosch Motronic) |
| 133 | Inlet manifold valve 2 or circuit, low voltage (Bosch Motronic) |
| 134 | Exhaust gas recirculation (EGR) valve 2 or EGR circuit low voltage (Bosch Motronic) |
| 134 | Inlet manifold valve 2 or circuit, high voltage (Bosch Motronic) |
| 135 | Check engine light, low voltage (Bosch Motronic) |
| 136 | Electronic control module (ECM) (Bosch Motronic) |
| 137 | Electronic control module (ECM) box, high temperature (Bosch Motronic) |

**Note: If code 93, "quad driver" is present, the fault may be in one of three circuits. The circuits are:*

*a) Warning light circuit*
*b) Air conditioning circuit*
*c) Engine speed signal to automatic transmission ECM*

*If the quad driver is actuated, the FCR will test the circuits and report on which is the faulty one.*

### *Bosch EZ-Plus*

| Flash/ | Description |
|---|---|

# Chapter 36
# Volkswagen

## Contents

**Index of vehicles**
**Self-Diagnosis**
Clearing fault codes without a fault code reader (FCR) . 4
Guide to test procedures . . 6
Introduction . . 1
Retrieving fault codes without a fault code reader (FCR) flash codes . . . 3
Self-Diagnosis connector location . . . 2
Self-Diagnosis with a fault code reader (FCR) . . . 5
**Fault code table**

## Index of vehicles

| Model | Engine code | Year | System |
|---|---|---|---|
| Caddy Pick-up | AEE | 1997 | Magneti-Marelli 1AV |
| Caravelle 2 0i and cat | AAC | 1991 to 1997 | VAG Digifant |
| Caravelle 2 0i cat | AAC | 1994 to 1995 | VAG Digifant |
| Caravelle 2 5i | ACU | 1994 to 1997 | VAG Digifant |
| Caravelle 2 8 | AES | 1996 to 1997 | Bosch Motronic |
| Corrado 1 8i (G60 supercharger) cat | PG | 1992 to 1993 | VAG |
| Corrado 2 0 16V | 9A | 1992 to 1996 | Bosch KE Motronic 1.2 |
| Corrado 2 0 8V | ADY | 1994 to 1996 | Simos |
| Corrado VR6 | ABV | 1992 to 1996 | Bosch Motronic 2 9 |
| Corrado 2 0i cat | 2E | 1993 to 1994 | VAG Digifant |
| Golf 1 3i cat | AAV | 1991 to 1992 | Bosch Mono-Motronic 1 2 1 |
| Golf 1 4i cat | ABD | 1991 to 1995 | Bosch Mono-Motronic 1 2.3R |
| Golf 1 4i | AEX | 1995 to 1997 | Bosch Motronic MP9 0 |
| Golf 1 6i cat | ABU | 1993 to 1995 | Bosch Mono-Motronic 1 2.3 |
| Golf 1 6i cat | AEA | 1994 to 1995 | Bosch Mono Motronic 1 3 |
| Golf 1 6i | AEK | 1994 to 1995 | Bosch Motronic |

| Model | Engine code | Year | System |
|---|---|---|---|
| Passat 1 8i | ABS | 1992 to 1994 | Bosch Mono-Motronic 1 2 3 |
| Passat 1 8i cat | ABS | 1992 to 1994 | Bosch Mono-Motronic 1 2 3 |
| Passat 1 8i cat | ADZ | 1994 to 1997 | Bosch Mono-Motronic 1 2 3 |
| Passat 2 0 and Syncro | ADY | 1994 to 1996 | Simos |
| Passat 2 0i | AGG | 1995 to 1997 | Simos |
| Passat VR6 | AAA | 1991 to 1993 | Bosch Motronic M2.7/2.9 |
| Passat 2 0i and 4 x 4 cat | 2E | 1992 to 1994 | VAG Digifant |
| Passat 2 0i cat | ABF | 1994 to 1995 | VAG Digifant |
| Passat 2 8 VR6 | AAA | 1993 to 1996 | Bosch Motronic M2 7/2 9 |
| Passat 2 9 Syncro | ABV | 1994 to 1996 | Bosch Motronic M2.9 |
| Polo 1 05i cat | AAK | 1989 to 1990 | Bosch Mono-Jetronic A2 2 |
| Polo 1 0i cat | AEV | 1994 to 1997 | Bosch Mono-Motronic 1.2 3 |
| Polo 1 05i cat | AAU | 1990 to 1993 | Bosch Mono-Motronic 1 2 1 |
| Polo 1 05i cat | AAU | 1993 to 1994 | Bosch Mono-Motronic 1 2 3 |
| Polo 1 3i cat | AAV | 1991 to 1994 | Bosch Mono Motronic 1 2 3 |
| Polo 1 3i cat | ADX | 1994 to 1995 | Bosch Mono-Motronic 1 3 |
| Polo Classic/Caddy 1 4 | AEX | 1996 to 1997 | Bosch Motronic MP9 0 MPi |
| Polo Classic/Caddy 1.6 | 1F | 1996 to 1997 | Bosch Mono Motronic |
| Polo 1 4 8V 44kW | AEX | 1995 to 1997 | Bosch Motronic MP9 0 |
| Polo 1 4 16V | AFH | 1996 to 1997 | Magneti-Marelli 1AV |
| Polo 1 6i 8V | AEE | 1995 to 1997 | Magneti-Marelli 1AV |
| Polo Classic 1 6 8V | AFT | 1996 to 1997 | Simos MPi |
| Polo 1 6i cat | AEA | 1994 to 1996 | Bosch Mono Motronic 1 3 |
| Santana 1 8 cat | JN | 1984 to 1988 | Bosch KE-Jetronic |
| Sharan 2 0 | ADY | 1995 to 1997 | Simos |
| Sharan 2 8 | AAA | 1995 to 1997 | Bosch Motronic 3 8 1 |
| Transporter 2 0i and cat | AAC | 1991 to 1997 | VAG Digifant |
| Transporter 2 5i cat | AAF | 1991 to 1995 | VAG Digifant |
| Transporter 2 5i cat | ACU | 1994 to 1997 | VAG Digifant |
| Transporter 2 8 | AES | 1996 to 1997 | Bosch Motronic |
| Vento 1 4i cat | ABD | 1992 to 1995 | Bosch Mono-Motronic 1.2 3R |
| Vento 1 4i | AEX | 1995 to 1997 | Bosch Motronic MP9.0 |
| Vento 1 6i 8V | AEE | 1995 to 1997 | Magneti-Marelli 1AV |

each signal to a table of programmed values If the diagnostic software determines that a fault is present, the ECM stores one or more fault codes Codes will not be stored about components for which a code is not available, or for conditions not covered by the diagnostic software.

### Limited operating strategy (LOS)

VW systems featured in this Chapter utilise LOS (a function that is commonly called the "limp-home mode") Once certain faults have been identified (not all faults will initiate LOS), the ECM will implement LOS and refer to a programmed default value rather than the sensor signal. This enables the vehicle to be safely driven to a workshop/garage for repair or testing Once the fault has cleared, the ECM will revert to normal operation

### Adaptive or learning capability

VW systems also utilise an adaptive function that will modify the basic programmed values for most effective operation during normal running, and with due regard to engine wear The exception to this is the Mono-Jetronic system, which does not have an adaptive or learning capability

### Self-Diagnosis (SD) warning light

Certain models are equipped with an SD warning light located within the instrument panel

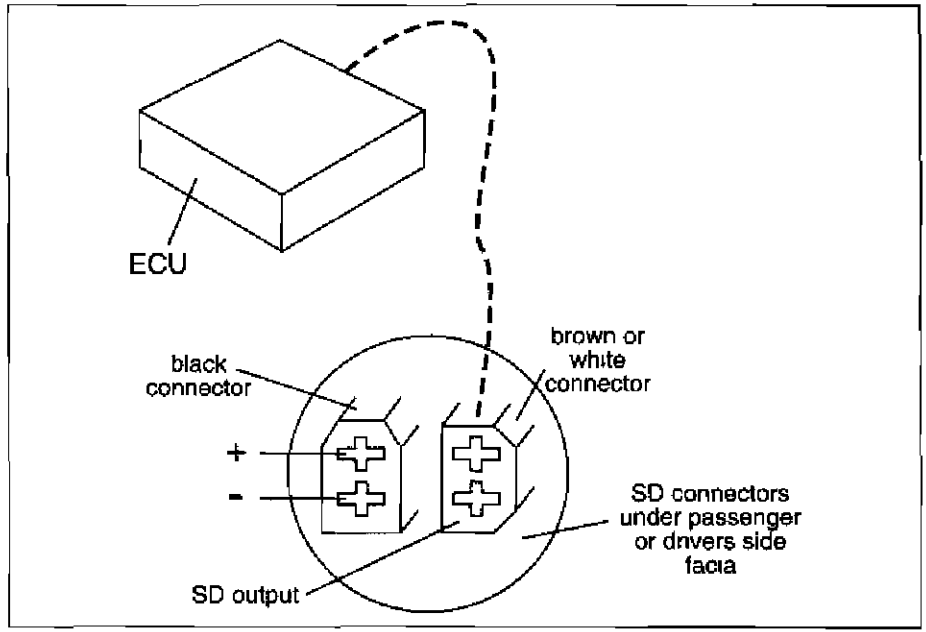


**36.1 Location of SD connectors under facia**

*KE-Jetronic, KE-Motronic 1.1 and 1 2 and Mono-Motronic 1.2 1 and 1 1.2 systems From 1995 onwards a 16-pin OBD connector is provided in some models for transmission of fault codes to a dedicated FCR alone It is not possible to retrieve flash codes from vehicles*

### Bosch Mono-Jetronic (VW Golf and Jetta)

1 pin connector located near the ignition coil, with yellow or red/white wire.

### Bosch Mono-Jetronic

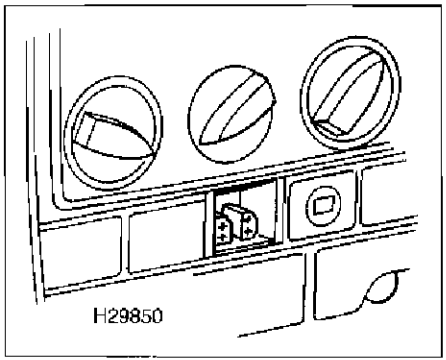


**36.3 Location of SD connector behind a cover under the heater controls**

### *Bosch Mono-Motronic*

In the passenger's side footwell **(refer to illustration 36.1)**, or behind a cover under the heating and ventilation controls **(see illustration 36.3)**.

### *VAG Digifant, Motronic 2.7/2.9*

Dual 2-pin connectors located in the passenger's side footwell, behind a cover under the heating and ventilation controls, in the left-hand electrical box close to the bulkhead or near the gear lever (Passat) **(refer to illustrations 36.1 to 36.3)**

### *Bosch KE-Jetronic, KE-Motronic 1.1*

Dual 2-pin connectors located underneath

### *16-pin SD connector (Bosch Mono-Motronic, Motronic MP9.0 and Magneti-Marelli 1AV, 68-pin Digifant)*

Situated under the facia heating/ventilation controls adjacent to the ashtray

### *16-pin SD connector (other models)*

Situated under a cover in the rear passenger console, adjacent to the ashtray **(see illustration 36.4)** or in the lower facia to the right of the steering column

## 3 Retrieving fault codes without a fault code reader (FCR) - flash codes

**Note 1:** *During the course of certain test procedures, it is possible for additional fault codes to be generated. Care must be taken that any codes generated during test routines do not mislead diagnosis. All codes must be cleared once testing is complete*

### *Bosch Mono-Jetronic, KE-Jetronic and KE-Motronic 1.1 and 1.2*

**1** Attach an accessory switch to the single 1-pin **(refer to illustration 36.2)**, dual 2 pin or 3 pin SD connectors **(see illustrations 36.5 and 36.6)**. If the vehicle is not equipped with a facia-mounted SD warning light, connect a

**5** Close the accessory switch for at least 5 seconds and then open the switch. The LED light will flash to indicates the 4 digit fault codes as follows

*a) The four digits are indicated by four series of flashes*
*b) The first series of flashes indicates the first digit, the second series of flashes indicates the second digit, and so on until all four digits have been flashed*
*c) Each series consists of a number of 1 or 2 second flashes, separated by short pauses. Each integer (whole number) in the range 1 to 9 is represented by a number of 1-second flashes, and each zero is represented by 2-second flashes*
*d) A 2.5-second pause separates each series of flashes*
*e) The code number "1231" is indicated by a 1-second flash, a short pause, two 1-second flashes, a short pause, three 1-second flashes, a short pause, and a 1 second flash. After a 2.5-second pause, the code will be repeated*

**6** Count the number of flashes in each series and record the code. Refer to the table at the end of the Chapter to determine the meaning of the fault code.

**7** The code will be repeated until the accessory switch is once more closed for at least 5 seconds. Open the switch and the next

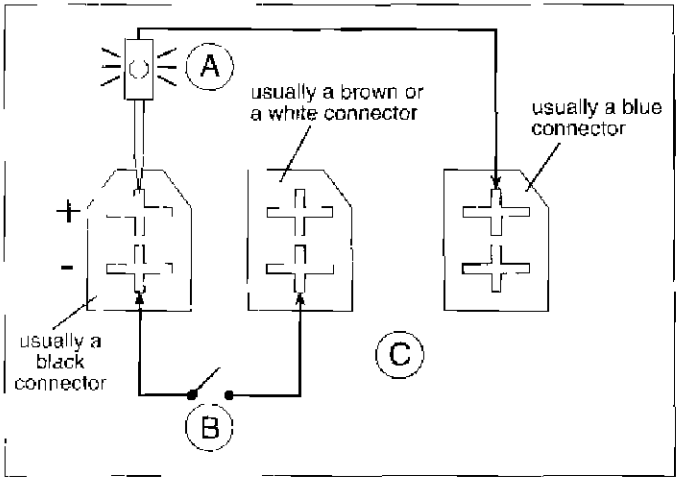


**36.6 Initiation of flash codes - triple 2-pin SD connectors**

*A LED diode light B Accessory switch C SD connectors*

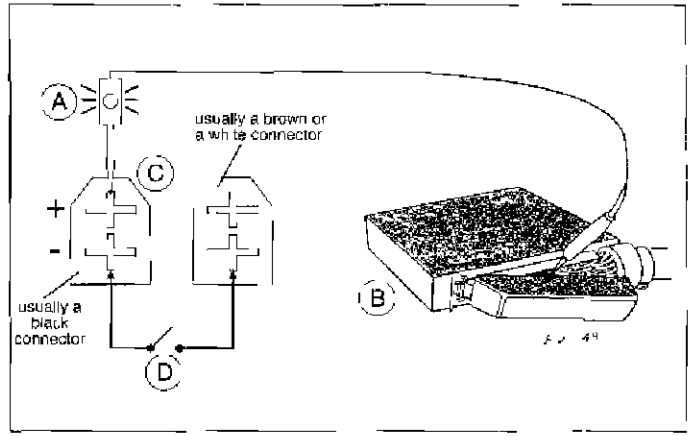


**36.7 Initiation of 35-pin and some 45-pin Mono-Motronic flash codes (see text)**

*A LED diode light C SD connectors*
*B ECM D Accessory switch*

### *Bosch Mono-Motronic (35-pin version 1.2.1 and 45-pin version 1.2.2)*

11 Attach an accessory switch to the dual 2 pin SD connectors **(see illustration 36.7)** If the vehicle is not equipped with a facia mounted SD warning light connect a diode test light between the battery (+) supply and ECM pin number 33 (35 pin or ECM pin

*ond flashes, a short pause three 1-second flashes a short pause and a 1 second flash After a 2 5 second pause the code will be repeated*

17 Count the number of flashes in each series and record the code Refer to the table at the end of the Chapter to determine the meaning of the fault code

18 The code will be repeated until the accessory switch is once more closed for at

4 Open the accessory switch after a period of 5 seconds The fault codes should now be cleared

5 Turn off the ignition on completion

### Clearing fault codes 2341 or 2343 (oxygen sensor)

6 Turn off the ignition Remove the ECM multi-plug connector from the ECM for at least 30 seconds - see Note below)

*that any codes generated during test routines do not mislead diagnosis*

### *All Volkswagen models*

**1** Connect an FCR to the SD connector Use the FCR for the following purposes, in strict compliance with the FCR manufacturer's instructions

*a) Retrieving fault codes*
*b) Clearing fault codes*
*c) Testing actuators.*
*d) Displaying Datastream*
*e) Making service adjustments.*

**2** The FCR may be able to display 4-digit flash codes and/or 5 digit fault codes Refer to appropriate column in the fault code table at the end of this Chapter

**3** Codes must always be cleared after component testing, or after repairs involving the removal or replacement of an engine management system component

## 6 Guide to test procedures

**1** Use an FCR to interrogate the ECM for fault codes, or manually gather codes as described in Sections 3 or 5

### *Codes stored*

**2** If one or more fault codes are gathered, refer to the fault code table to determine their meaning

**3** If several codes are gathered, look for a common factor such as a defective earth return or supply

**4** Refer to the component test procedures in Chapter 4, where you will find a means of testing the majority of components and circuits found in the modern EMS

**5** Once the fault has been repaired, clear the codes and run the engine under various conditions to determine if the problem has cleared

**6** Check the ECM for fault codes once more Repeat the above procedures where codes are still being stored

**7** Refer to Chapter 3 for more information on how to effectively test the EMS

### *No codes stored*

**8** Where a running problem is experienced, but no codes are stored, the fault is outside of the parameters designed into the SD system Refer to Chapter 3 for more information on how to effectively test the engine management system

**9** If the problem points to a specific component, refer to the test procedures in Chapter 4, where you will find a means of testing the majority of components and circuits found in the modern EMS

# Fault code table

### *All Volkswagen models*

**Note:** *Similar codes are generated by each individual system A small number of codes may suggest alternative meanings depending on which system and what components are fitted For example, one particular code may indicate an airflow sensor or a MAP sensor, depending on which of those components is fitted When a code with an alternative meaning is generated, the correct meaning will usually be obvious*

| Flash code | FCR code | Description |
|---|---|---|
| 2232 | 00520 | Vane airflow sensor (AFS) or AFS circuit |
| 2232 | 00520 | Mass airflow (MAF) sensor or MAF sensor circuit (alternative code) |
| 2233 | 00531 | Vane airflow sensor (AFS) or AFS circuit |
| 2233 | 00531 | Mass airflow (MAF) sensor or MAF circuit (alternative code) |

| Flash code | FCR code | Description |
|---|---|---|
| - | 00561 | Mixture control 1 |
| | 00575 | Manifold absolute pressure (MAP) sensor or MAP sensor circuit |
| - | 00577 | Knock control cylinder 1 or circuit |
| | 00578 | Knock control cylinder 2 or circuit |
| - | 00579 | Knock control cylinder 3 or circuit |
| - | 00580 | Knock control cylinder 4 or circuit |
| - | 00581 | Knock control cylinder 5 or circuit |
| | 00582 | Knock control cylinder 6 or circuit |
| | 00585 | Exhaust gas recirculation (EGR) temperature sensor or EGR circuit |
| | 00586 | Exhaust gas recirculation (EGR) valve or EGR circuit |
| - | 00609 | Amplifier 1 or amplifier circuit |
| - | 00610 | Amplifier 2 or amplifier circuit |
| | 00611 | Amplifier 3 or amplifier circuit |
| - | 00624 | Air conditioning (A/C) |
| - | 00625 | Vehicle speed sensor (VSS) or VSS circuit |
| | 00635 | Oxygen sensor (OS) heater or OS circuit |
| | 00640 | Oxygen sensor (OS) or OS circuit |
| - | 00670 | Idle speed stepper motor (ISSM) pot or ISSM circuit |
| | 00689 | Excessive air in inlet manifold |
| - | 00750 | Warning light |
| - | 01025 | Self Diagnosis warning light |
| | 01087 | Basic setting not completed |
| - | 01088 | Mixture control 2 |
| - | 01119 | Gear recognition signal |
| - | 01120 | Camshaft timing control |
| | 01165 | Throttle pot sensor (TPS) or TPS circuit |
| - | 01182 | Altitude adaptation |
| - | 01235 | Secondary air valve |

| Flash code | FCR code | Description |
|---|---|---|
| | 16518 | Oxygen sensor (OS) or OS circuit |
| - | 16519 | Oxygen sensor (OS) or OS circuit |
| - | 16534 | Oxygen sensor (OS) or OS circuit |
| - | 16535 | Oxygen sensor (OS) or OS circuit |
| - | 16536 | Oxygen sensor (OS) or OS circuit, signal high |
| - | 16538 | Oxygen sensor (OS) or OS circuit |
| - | 16554 | Injector bank 1 |
| | 16555 | Injector bank 1, fuel system too lean |
| - | 16556 | Injector bank 1, fuel system too rich |
| - | 16557 | Injector bank 2 |
| - | 16558 | Injector bank 2, fuel system too lean |
| - | 16559 | Injector bank 2, fuel system too rich |
| - | 16684 | Engine misfire |
| | 16685 | Cylinder No. 1 misfire |
| | 16686 | Cylinder No. 2 misfire |
| - | 16687 | Cylinder No. 3 misfire |
| | 16688 | Cylinder No. 4 misfire |
| - | 16689 | Cylinder No. 5 misfire |
| - | 16690 | Cylinder No. 6 misfire |
| - | 16691 | Cylinder No. 7 misfire |
| - | 16692 | Cylinder No. 8 misfire |
| | 16705 | RPM sensor or circuit |
| - | 16706 | RPM sensor or circuit |
| - | 16711 | Knock sensor (KS) 1 signal or KS circuit, signal low |
| - | 16716 | Knock sensor (KS) 2 signal or KS circuit, signal low |
| | 16721 | Crank angle sensor (CAS) or CAS circuit |
| - | 16785 | Exhaust gas |
| - | 16786 | Exhaust gas |
| - | 16885 | Vehicle speed sensor (VSS) or VSS circuit |
| - | 16989 | Electronic control module (ECM) |

| Flash code | FCR code | Description |
|---|---|---|
| - | 17740 | Knock sensor (KS) control No 8 cylinder or KS circuit |
| - | 17747 | Crank angle sensor (CAS) and vehicle speed sensor (VSS) signals transposed |
| - | 17749 | Ignition output 1, short-circuit to earth |
| - | 17751 | Ignition output 2 short-circuit to earth |
| - | 17753 | Ignition output 3 short circuit to earth |
| - | 17799 | Camshaft sensor (CMP) or CMP circuit |
| - | 17800 | Camshaft sensor (CMP) or CMP circuit |
| - | 17801 | Ignition output 1 |
| | 17802 | Ignition output 2 |
| - | 17803 | Ignition output 3 |
| | 17808 | Exhaust gas recirculation (EGR) valve or EGR circuit |
| - | 17810 | Exhaust gas recirculation (EGR) valve or EGR circuit |
| - | 17815 | Exhaust gas recirculation (EGR) valve or EGR circuit, signal too small |
| | 17816 | Exhaust gas recirculation (EGR) valve or EGR circuit, signal too large |
| - | 17817 | Carbon filter solenoid valve (CFSV) or CFSV circuit |
| - | 17818 | Carbon filter solenoid valve (CFSV) or CFSV circuit |
| - | 17908 | Fuel pump relay or fuel pump circuit |
| - | 17910 | Fuel pump relay or fuel pump circuit |
| - | 17912 | Intake system |
| - | 17913 | Idling switch, throttle switch (TS) or TS circuit |
| | 17914 | Idling switch, throttle switch (TS) or TS circuit |
| | 17915 | Idle speed control valve (ISCV) or ISCV circuit |
| - | 17916 | Idle speed control valve (ISCV) or ISCV circuit |
| - | 17917 | Idle speed control valve (ISCV) or ISCV circuit |
| - | 17918 | Idle speed control valve (ISCV) or ISCV circuit |
| - | 17919 | Inlet manifold changeover valve (IMCV) or IMCV circuit |
| - | 17920 | Inlet manifold changeover valve (IMCV) or IMCV circuit |
| - | 17966 | Throttle drive |
| - | 17976 | Electronic immobiliser |
| - | 18008 | Voltage supply |
| - | 18010 | Battery |
| - | 18020 | Electronic control module (ECM) incorrectly coded |

***Note:** *Fault code number 2113 will always be present when the ignition is switched on and the engine is stopped in systems that utilise a Hall sensor as the primary trigger*

# Chapter 37
# Volvo

## Contents

**Index of vehicles**
**Self-Diagnosis**
Bosch EZ-116K and Bendix Rex-1 ignition systems - testing without a fault code reader (FCR) . . . . . 4
Bosch EZ-129K ignition system - testing without a fault code reader (FCR) . . . . . 6
Bosch LH2.4 Jetronic - testing without a fault code reader (FCR) 3
Bosch LH3.2-Jetronic - testing without a fault code reader (FCR) 5
Clearing fault codes without a fault code reader (FCR) . . 10
Fenix 3B - testing without a fault code reader (FCR) . . . 7
Fenix 5.2 - testing without a fault code reader (FCR) . . . 8
Guide to test procedures . . . . . 12
Introduction . . . . . 1
Motronic 4.3 - testing without a fault code reader (FCR) 9
Self-Diagnosis with a fault code reader (FCR) . . . . 11
Self-Diagnostic unit (SD connector) location . . . . 2
**Fault code tables**

## Index of vehicles

| Model | Engine code | Year | System |
|---|---|---|---|
| 240 2.0i cat | B200F | 1991 to 1993 | Bosch LH2.4 Jetronic |
| 240 2.3 cat | B230F | 1984 to 1991 | Bosch LH2.4-Jetronic |
| 240 2.3i cat | B230F | 1989 to 1993 | Bosch LH2.4-Jetronic |
| 240 2.3i cat | B230FD | 1993 to 1994 | Bosch LH2.4-Jetronic |
| 400 1.7i SOHC | B18ED-104 | 1986 to 1990 | Fenix 1 or 3.2 |
| 400 1.7i SOHC cat | B18ES-105 | 1986 to 1990 | Fenix 1 or 3.2 |
| 400 1.7i SOHC 8V | B18EP-115 | 1990 to 1994 | Fenix 3B |
| 400 1.7i SOHC 8V cat | B18FP-115 | 1990 to 1995 | Fenix 3B |
| 400 1.8i SOHC cat | B18U-103 | 1992 to 1997 | Fenix 3BF SPI |
| 400 1.8i SOHC cat | B18U-103 | 1996 to 1997 | Fenix 3BF SPI |
| 400 2.0i SOHC 8V cat | B20F-116/118 | 1993 to 1996 | Fenix 3B MPi |
| 400 2.0i SOHC 8V cat | B20F 208/209 | 1994 to 1997 | Fenix 3B MPi |

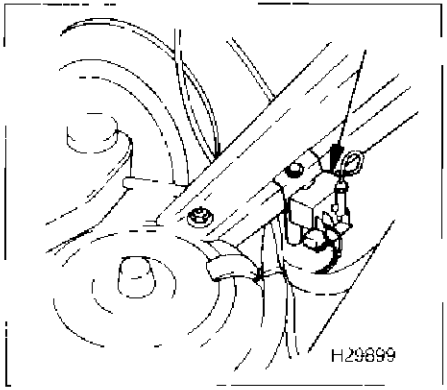


**37 1 The SD unit is located in front of the left-hand front suspension strut mounting in the engine compartment**

Volvo vehicles are provided with a self-diagnostic unit (SD unit) that contains an LED, a test button, a test lead and six sockets for fault code retrieval. Once the test lead is connected to the appropriate socket, a number of test modes can be initiated, which include retrieving fault codes, clearing fault codes and testing various engine management components. Where the vehicle is equipped with Bosch EZK ignition and the LH-Jetronic fuel system, the ignition and fuel system will generate fault codes separately; these can be retrieved by attaching the test lead to the appropriate socket in the SD unit.

### Self-Diagnosis (SD) function

The SD function is controlled by the engine control module (ECM). The ECM monitors many of the engine management system components and circuits during normal driving conditions. If the software determines that a fault is present, the ECM stores one or more fault codes in the ECM memory. Codes will not be stored about components for which a code is not available or for conditions not covered by the diagnostic software.

### Limited operating strategy (LOS)

Volvo systems featured in this Chapter utilise LOS (a function that is commonly called the "limp-home mode"). Once certain faults have been identified (not all faults will initiate LOS), the ECM will implement LOS and refer to a programmed default value rather than the sensor signal. This enables the vehicle to be safely driven to a workshop/garage for repair or testing. Once the fault has cleared, the ECM will revert to normal operation.

### Adaptive or learning capability

Volvo systems also utilise an adaptive function that will modify the basic programmed values for most effective operation during normal running and with due regard to engine wear.

### Self-Diagnosis warning light

Most Volvo vehicles are equipped with an SD warning light located within the instrument panel.

## 2 Self-Diagnostic unit (SD connector) location

### Bosch Motronic 4.3, Fenix 3B and 5.2

Where two SD units are fitted, SD unit A is used for engine management fault code retrieval. It is located behind the right-hand headlight in front of the control unit box (**refer to illustration 37.2**).

Vehicles built after 1995 are usually fitted with a 16-pin OBD connector located on the centre console behind a trim panel and above the gear/drive selector (**see illustration 37.3**).

## 3 Bosch LH2.4-Jetronic - testing without a fault code reader (FCR)

**Note 1** *During the course of the following procedures it is possible for additional fault codes to be generated. Care must be taken that any codes generated during test routines do not mislead diagnosis. All codes must be cleared once testing is complete.*

**Note 2** *Where applicable, use SD unit A for the following test modes (refer to illustration 37.6). Do not start the engine unless the test routine demands it.*

### Test mode 1 (retrieving flash codes)

1 Connect the test lead to socket 1 of the SD unit (**see illustration 37.4**).

2 Switch on the ignition, without starting the

*e) Code "142" is indicated by one 0 5 second flash followed by a 3 5 second pause, four 0 5 second flashes, a further 3 5-second pause, and two 0 5-second flashes*

**5** Count the number of flashes in each series, and record each code as it is transmitted Refer to the tables at the end of the Chapter to determine the meaning of the fault code

**6** Each code is displayed once by the LED

**7** Retrieve the next code by pressing the test button once more for 1 to 3 seconds After a pause of 3 5 seconds, the code will be displayed All stored fault codes are transmitted in sequential order **Note:** *In early versions of Bosch LH 2 4, only the last three codes stored can be retrieved at one time Before other possible codes can be retrieved, the reason for the first set of faults must be repaired and the fault codes cleared from memory as described later In later versions of Bosch LH 2 4, this restriction is lifted, and all stored codes can be retrieved at one time*

**8** Repeat the procedure and continue retrieving codes until all codes have been transmitted

**9** If no codes are stored the LED will flash code "111"

**10** Turn off the ignition to end test mode 1

## Test mode 2 (sensor inputs to the ECM)

**11** Connect the test lead to socket 2 on the SD unit

**19** Ensure that the handbrake is firmly applied Move the automatic transmission gear selector to the "D" position, and return to the "P" position If the ECM receives a satisfactory signal from the gear position switch, the LED will display confirmation code "124"

**20** Turn the air conditioning (A/C) control switch on If the ECM receives a satisfactory signal from the A/C switch, the LED will display confirmation code "114" If the ECM receives a satisfactory signal from the A/C compressor, the LED will also display confirmation code "134"

**21** Turn off the ignition to end test mode 2

## Test mode 3 (activate selected actuators)

**22** Connect the test lead to socket 2 on the SD unit

**23** Switch on the ignition, without starting the engine

**24** Press the test button three times to initiate test mode 3 The correct method is as follows

*a) Press the test button for approximately 1 to 3 seconds*
*b) Pause for 1 to 2 seconds.*
*c) Press the test button again for approximately 1 to 3 seconds*
*d) Pause for 1 to 2 seconds*
*e) Press the test button again for approximately 1 to 3 seconds*

**25** The ECM will automatically activate each actuator on the actuator list below, one after the other Listen for an audible sound or

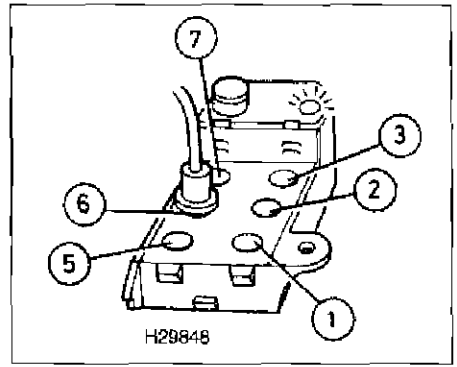


**37.5 Retrieval of ignition codes with the test lead connected to socket number 6**

**Note 2:** *Do not start the engine unless the test routine demands it*

## Test mode 1 (retrieving flash codes)

**1** Connect the test lead to socket 6 on the SD unit **(see illustration 37 5)**

**2** Switch on the ignition, without starting the engine

**3** Press the test button once for 1 to 3 seconds

**4** After a pause of 3 5 seconds, the LED on the SD unit will begin flashing to display each 3-digit code as follows

*a) The three digits are indicated by three series of flashes*
*b) The first series of flashes indicates the first digit, the second series of flashes*

### *Test mode 2 (sensor inputs to the ECM)*

**11** Connect the test lead to socket 6 on the SD unit

**12** Switch on the ignition, without starting the engine

**13** Press the test button twice to initiate test mode 2. The correct method is as follows

*a) Press the test button for approximately 1 to 3 seconds*
*b) Pause for 1 to 2 seconds*
*c) Press the test button again for approximately 1 to 3 seconds*

**14** The LED will flash continually at approximately 6 flashes per second indicating that the SD unit is in test mode 2

**15** Perform the sensor tests, and observe the behaviour of the LED as follows

*a) After each test routine, the LED will flash a confirmation code. If the LED does not display a confirmation code, this indicates a faulty component, connection or switch*
*b) After displaying a confirmation code, the LED will return to flashing at approximately 6 times per second*
*c) Repeat each test if required*

**16** Fully open the throttle. If the full load switch has closed, the LED will display confirmation code "334". Release the throttle.

**17** Start the engine or, if it does not start, crank the engine for 10 seconds and leave the ignition switched on. If the ECM receives a satisfactory signal from the crank angle sensor, the LED will display confirmation code "331".

**18** Ensure that the handbrake is firmly applied. Move the automatic transmission gear selector to the "D" position and return to the "P" position. If the ECM receives a satisfactory signal from the gear position switch, the LED will display confirmation code "124".

**19** Turn the air conditioning (A/C) control switch on. If the ECM receives a satisfactory

*b) The first series of flashes indicates the first digit, the second series of flashes indicates the second digit, and the third series of flashes indicates the third digit, until all three digits have been flashed*
*c) Each series is indicated by 0.5-second flashes, separated by 0.5-second pauses*
*d) A 3.5 second pause separates each series of flashes*
*e) Code "142" is indicated by one 0.5-second flash, followed by a 3.5 second pause, four 0.5-second flashes, a further 3.5 second pause, and two 0.5-second flashes*

**5** Count the number of flashes in each series and record each code as it is transmitted. Refer to the tables at the end of the Chapter to determine the meaning of the fault code.

**6** Each code is displayed once by the LED.

**7** Retrieve the next code by pressing the test button once more for 1 to 3 seconds. After a pause of 3.5 seconds, the code will be displayed. All stored fault codes are transmitted in sequential order. **Note:** *In Bosch LH 3.2 systems, only the last five codes stored can be retrieved at one time. Before other possible codes can be retrieved, the reason for the first set of faults must be repaired, and the fault codes cleared from memory as described later.*

**8** Repeat the procedure and continue retrieving codes until all codes have been transmitted.

**9** If no codes are stored, the LED will flash code "111".

**14** The LED will flash continually at approximately 6 flashes per second indicating that the SD unit is in test mode 2.

**15** Perform the sensor tests, and observe the behaviour of the LED as follows

*a) After each test routine, the LED will flash a confirmation code. If the LED does not display a confirmation code, this indicates a faulty component, connection or switch*
*b) After displaying a confirmation code, the LED will return to flashing at approximately 6 times per second*
*c) Repeat each test if required*

**16** Open the throttle mid way. The LED will display confirmation code "332" to signify that the idle switch has opened.

**17** Fully open the throttle. If the full-load switch has closed, the LED will display confirmation code "333".

**18** Start the engine or, if it does not start, crank the engine for 10 seconds and leave the ignition switched on. If the ECM receives a satisfactory signal from the crank angle sensor, the LED will display confirmation code "331".

**19** Ensure that the handbrake is firmly applied. Move the automatic transmission gear selector to the "D" position and return to the "P" position. If the ECM receives a satisfactory signal from the gear position switch, the LED will display confirmation code "124".

**20** Turn the air conditioning (A/C) control switch on. If the ECM receives a satisfactory

***there is a real danger of filling the cylinders with petrol. For this reason, it would be wise to disconnect the fuel pump supply (or remove the fuel pump fuse) before commencing the test. Turn off the ignition at any time to end test mode 3***

**26** The test sequence is repeated twice before the procedure ends automatically

**27** Turn off the ignition to end test mode 3

## 6 Bosch EZ-129K ignition system - testing without a fault code reader (FCR)

**Note 1:** *During the course of certain test procedures it is possible for additional fault codes to be generated Care must be taken that any codes generated during test routines do not mislead diagnosis All codes must be cleared once testing is complete*

**Note 2:** *Do not start the engine unless the test routine demands it*

### *Test mode 1 (retrieving flash codes)*

**1** Connect the test lead to socket 6 on the SD unit

**2** Switch on the ignition without starting the engine

**3** Press the test button once for 1 to 3 seconds

**4** After a pause of 3 5 seconds the LED on the SD unit will begin flashing to display each 3 digit code as follows

**9** If no codes are stored the LED will flash code "111"

**10** Turn off the ignition to end test mode 1

### *Test mode 2 (sensor inputs to the ECM)*

**11** Connect the test lead to socket 6 on the SD unit

**12** Switch on the ignition without starting the engine

**13** Press the test button twice to initiate test mode 2 The correct method is as follows

*a) Press the test button for approximately 1 to 3 seconds*
*b) Pause for 1 to 2 seconds*
*c) Press the test button again for approximately 1 to 3 seconds*

**14** The LED will flash continually at approximately 6 flashes per second, indicating that the SD unit is in test mode 2

**15** Perform the sensor tests and observe the behaviour of the LED as follows

*a) After each test routine, the LED will flash a confirmation code If the LED does not display a confirmation code, this indicates a faulty component connection or switch*
*b) After displaying a confirmation code, the LED will return to flashing at approximately 6 times per second*
*c) Repeat each test if required*

**16** Fully open the throttle If the full-load switch has closed the LED will display confirmation code 344

**17** Push the vehicle for approximately one

actuator on the appropriate actuator list below one after the other Listen for an audible sound or (where appropriate) touch the component to determine whether it has been activated The LED will flash in time with the audible operation of the actuator

#### Actuator list for vehicles before chassis number 30700

*1) Cooling fan at half speed*
*2) Cooling fan at full speed*
*3) Variable induction sensor valve*
*4) Rev counter (generating engine speeds of up to 1500 rpm)*

#### Actuator list for vehicles after chassis number 30700

*1) Variable induction sensor valve*
*2) Cooling fan at half-speed*
*3) Exhaust gas regulator*
*4) Rev counter (generating engine speeds of up to 1500 rpm)*

**25** The test sequence is repeated twice before the procedure ends automatically

**26** Turn off the ignition to end test mode 3

## 7 Fenix 3B - testing without a fault code reader (FCR)

**Note 1.** *During the course of certain test procedures it is possible for additional fault codes to be generated Care must be taken*

**6** Each code is displayed once by the LED
**7** Retrieve the next code by pressing the test button once more for 1 to 3 seconds After a pause of 3 5 seconds, the code will be displayed All stored fault codes are transmitted in sequential order **Note:** *In early versions of Fenix 3B, only the last three codes stored can be retrieved at one time Before any other possible codes can be retrieved, the reason for the first set of faults must be repaired and the fault codes cleared from memory as described later In later versions of Fenix 3B, this restriction is lifted, and all stored codes can be retrieved at one time*
**8** Repeat the procedure and continue retrieving codes until all codes have been transmitted
**9** If no codes are stored, the LED will flash code "111"
**10** Turn off the ignition to end test mode 1

## Test mode 2 (sensor inputs to the ECM)

**Note:** *On models with the B18U engine test mode 2 must always be selected if the throttle cable has been removed and refitted*
**11** Connect the test lead to socket 2 on the SD unit
**12** Switch on the ignition, without starting the engine
**13** Press the test button twice to initiate test mode 2 The correct method is as follows
*a) Press the test button for approximately 1 to 3 seconds*
*b) Pause for 1 to 2 seconds*
*c) Press the test button again for approximately 1 to 3 seconds.*
*d) Pause for 1 to 2 seconds*
*e) Press the test button again for approximately 1 to 3 seconds*
**14** The ECM will automatically activate each actuator on the actuator list below one after the other, with several seconds pause between each actuator Listen for an audible sound or (where appropriate) touch the component to determine whether it has been activated The LED will flash in time with the audible operation of the actuator



***Warning: The injectors will actuate for 5 or 10 seconds during this test routine, and there is a real danger of filling the cylinders with petrol For this reason, it would be wise to disconnect the fuel pump supply (or remove the fuel pump fuse) before commencing the test. Turn off the ignition at any time to end test mode 3.***

## Test mode 3 (activate selected actuators)

**20** Connect the test lead to socket 2 on the SD unit
**21** Switch on the ignition, without starting the engine
**22** Press the test button three times to initiate test mode 3 The correct method is as follows
*a) Press the test button for approximately 1 to 3 seconds*
*b) Pause for 1 to 2 seconds*
*c) Press the test button again for approximately 1 to 3 seconds.*
*d) Pause for 1 to 2 seconds*
*e) Press the test button again for approximately 1 to 3 seconds*
**23** The ECM will automatically activate each actuator on the actuator list below one after the other, with several seconds pause between each actuator Listen for an audible sound or (where appropriate) touch the component to determine whether it has been activated The LED will flash in time with the audible operation of the actuator

***Warning: The injectors will actuate for 5 or 10 seconds during this test routine, and there is a real danger of filling the cylinders with petrol For this reason, it would be wise to disconnect the fuel pump supply (or remove the fuel pump fuse) before commencing the test. Turn off the ignition at any time to end test mode 3.***

3-digit code as follows
*a) The three digits are indicated by three series of flashes*
*b) The first series of flashes indicates the first digit, the second series of flashes indicates the second digit, and the third series of flashes indicates the third digit, until all three digits have been flashed*
*c) Each series is indicated by 0 5-second flashes separated by 0 5-second pauses*
*d) A 3 5-second pause separates each series of flashes*
*e) Code "142" is indicated by one 0 5 second flash, followed by a 3 5 second pause, four 0 5-second flashes, a further 3 5-second pause, and two 0 5 second flashes*
**5** Count the number of flashes in each series, and record each code as it is transmitted Refer to the tables at the end of the Chapter to determine the meaning of the fault code
**6** Each code is displayed once by the LED
**7** Retrieve the next code by pressing the test button once more for 1 to 3 seconds After a pause of 3.5 seconds, the code will be displayed All stored fault codes are transmitted in sequential order **Note:** *In early versions of Fenix 5 2, only the last three codes stored can be retrieved at one time Before other possible codes can be retrieved, the reason for the first set of faults must be repaired, and the fault codes cleared from memory as described later In later versions of Fenix 5 2, this restriction is lifted, and all stored codes can be retrieved at one time*

**17** Release the throttle The LED will display confirmation code 332 to signify that the throttle position sensor has moved to the idle position
**18** Start the engine, allow it to idle and ensure that the handbrake is firmly applied
**19** Move the automatic transmission gear selector to the D" position, and return to the "P' position If the ECM receives a satisfactory signal from the gear position switch the LED will display confirmation code "124
**20** Turn the air conditioning (A/C) control switch on If the ECM receives a satisfactory signal from the A/C switch, the LED will display confirmation code "114"
**21** Turn off the ignition to end test mode 2

### *Test mode 3 (automatic actuator test)*

**22** Connect the test lead to socket 2 on the SD unit
**23** Switch on the ignition, without starting the engine
**24** Press the test button three times to initiate test mode 3 The correct method is as follows
*a) Press the test button for approximately 1 to 3 seconds*
*b) Pause for 1 to 2 seconds*
*c) Press the test button again for approximately 1 to 3 seconds*
*d) Pause for 1 to 2 seconds*
*e) Press the test button again for approximately 1 to 3 seconds*
**25** The ECM will automatically activate each

### *Test mode 4 (manual actuator test)*

**28** Connect the test lead to socket 2 on the SD unit
**29** Switch on the ignition without starting the engine
**30** Press the test button four times to initiate Test Mode 4 The correct method is as follows
*a) Press the test button for approximately 1 to 3 seconds*
*b) Pause for 1 to 2 seconds*
*c) Press the test button again for approximately 1 to 3 seconds*
*d) Pause for 1 to 2 seconds*
*e) Press the test button again for approximately 1 to 3 seconds*
*f) Pause for 1 to 2 seconds*
*g) Press the test button again for approximately 1 to 3 seconds*
**31** The LED will illuminate and wait for input of a 3-digit code
**32** Select a component from the actuator list below and enter the associated 3 digit code as follows
*a) Press the test button the same number of times as corresponds to the first digit of the 3 digit code for the selected component The LED will extinguish as the first code is entered After a few seconds the LED will illuminate again, ready for the second digit*
*b) Press the test button the same number of times as corresponds to the second digit*

*145 Injector valve No 4*
*155 Injector valve No 5*
*222 Main injection relay*
*223 Idle speed control valve*
*235 EGR solenoid valve*
*342 Air conditioning pump*
*343 Fuel pump relay*
*442 Air injection pump*
*514 Engine cooling fan (at low speed)*
*515 Engine cooling fan (at high speed)*
*523 ECM box cooling fan*
**34** Turn off the ignition to end test mode 4

## 9 Motronic 4.3 - testing without a fault code reader (FCR)

**Note 1:** *During the course of certain test procedures, it is possible for additional fault codes to be generated Care must be taken that any codes generated during test routines do not mislead diagnosis All codes must be cleared once testing is complete*
**Note 2:** *Do not start the engine unless the test routine demands it*

### *Test mode 1 (retrieving fault codes)*

**1** Connect the test lead to socket 2 of the SD unit
**2** Switch on the ignition, without starting the engine
**3** Press the test button once for 1 to 3 seconds

**8** Repeat the procedure and continue retrieving codes until all codes have been transmitted

**9** If no codes are stored, the LED will flash code "111".

**10** Turn off the ignition to end test mode 1.

### *Test mode 2 (sensor inputs to the ECM)*

**11** Connect the test lead to socket 2 on the SD unit

**12** Switch on the ignition, without starting the engine

**13** Press the test button twice to initiate test mode 2. The correct method is as follows:

*a) Press the test button for approximately 1 to 3 seconds.*
*b) Pause for 1 to 2 seconds*
*c) Press the test button again for approximately 1 to 3 seconds.*

**14** The LED will flash continually at approximately 6 flashes per second, indicating that the SD unit is in test mode 2.

**15** Perform the sensor tests and observe the behaviour of the LED as follows

*a) After each test routine, the LED will flash a confirmation code. If the LED does not display a confirmation code, this indicates a faulty component, connection or switch*
*b) After displaying a confirmation code, the LED will return to flashing at approximately 6 times per second*
*c) Repeat each test if required*

**16** Fully open the throttle. The LED will

*approximately 1 to 3 seconds*
*d) Pause for 1 to 2 seconds*
*e) Press the test button again for approximately 1 to 3 seconds*

**26** The ECM will automatically activate each actuator on the actuator list below, one after the other with several seconds' pause between each actuator. Listen for an audible sound or (where appropriate) touch the component to determine whether it has been activated. The LED will flash in time with the audible operation of the actuator



***Warning: The injectors will actuate for 5 or 10 seconds during this test routine, and there is a real danger of filling the cylinders with petrol. For this reason, it would be wise to disconnect the fuel pump supply (or remove the fuel pump fuse) before commencing the test. Turn off the ignition at any time to end test mode 3.***

#### Actuator list

*1) Engine cooling fan (at low speed)*
*2) Engine cooling fan (at high speed).*
*3) Injector valves*
*4) Idle speed control valve*
*5) Air conditioning pump.*

Models up to 1994:

*6) Air conditioning compressor*

1995-on models

*7) EGR valve*
*8) Air pump*
*9) Air conditioning compressor*

## 11 Self-Diagnosis with a fault code reader (FCR)

**Note:** *During the course of certain test procedures, it is possible for additional fault codes to be generated. Care must be taken that any codes generated during test routines do not mislead diagnosis.*

### *All Volvo models*

**1** Connect an FCR to the SD unit. Use the FCR for the following purposes, in strict compliance with the FCR manufacturer's instructions

*a) Retrieving fault codes*
*b) Clearing fault codes*
*c) Testing sensor inputs*
*d) Testing actuators (automatically)*
*e) Testing actuators (manually)*

**Note:** *Not all test modes are available on all systems fitted to Volvo vehicles*

**2** Codes must always be cleared after component testing, or after repairs involving the removal or replacement of an engine management system component.

## 12 Guide to test procedures

**1** Use an FCR to interrogate the ECM for fault codes, or gather codes manually using the

# Fault code tables

### *Fenix 3B, Fenix 5.2, Bosch Motronic 4.3, and Bosch LH3.2-Jetronic*

| Flash/ FCR code | Description |
|---|---|
| 111 | No faults found in the ECM. Proceed with normal diagnostic methods |
| 112 | Electronic control module (ECM) |
| 113 | Injector or injector circuit |
| 113 | Oxygen sensor (OS) or OS circuit (alternative code) |
| 115 | Injector No. 1 or injector circuit (850 models) |
| 121 | Mass airflow (MAF) sensor signal or MAF sensor circuit |
| 122 | Air temperature sensor (ATS) or ATS circuit |
| 123 | Coolant temperature sensor (CTS) or CTS circuit |
| 125 | Injector No. 2 or injector circuit (850 models) |
| 131 | RPM sensor signal or RPM sensor circuit |
| 132 | Battery voltage too low/high |
| 133 | Coolant temperature sensor (CTS) or CTS circuit |
| 135 | Injector No. 3 or injector circuit (850 models) |
| 143 | Knock sensor (KS) or KS circuit |
| 144 | Load signal absent or faulty |
| 145 | Injector No. 4 or injector circuit (850 models) |
| 152 | Air pump valve signal or circuit |
| 154 | Leak in exhaust gas recirculation (EGR) system (Fenix 5.2) |
| 155 | Injector No. 5 or injector circuit (850 models) |
| 211 | CO pot or CO pot circuit |
| 212 | Oxygen sensor (OS) signal or (OS) circuit |
| 214 | RPM sensor signal or RPM sensor circuit |
| 221 | Oxygen sensor (OS) control or OS circuit |
| 222 | Relay coil |
| 223 | Idle speed control valve (ISCV) or ISCV circuit |
| 225 | Air conditioning (A/C) pressure sensor or circuit |
| 412 | Full throttle signal or circuit |
| 413 | Exhaust gas recirculation (EGR) temperature sensor or EGR circuit (Fenix 5.2) |
| 432 | Electronic control module (ECM) |
| 432 | Temperature over 95°C |
| 433 | Rear knock sensor (KS) signal or KS circuit |
| 442 | Air pump relay signal or circuit |
| 511 | Oxygen sensor (OS) control or OS circuit, mixture weak at idle |
| 512 | Oxygen sensor control or OS circuit, at weak running limit |
| 513 | Temperature over 90°C |
| 514 | Engine cooling fan |
| 515 | Engine cooling fan |
| 521 | Oxygen sensor (OS) or OS circuit |
| 523 | Electronic control module (ECM) |
| 524 | Transmission torque control |
| 535 | Turbo regulation (Fenix 5.2) |

### *Bosch LH2.4-Jetronic*

| Flash/ FCR code | Description |
|---|---|
| 111 | No faults found in the ECM. Proceed with normal diagnostic methods |
| 112 | Electronic control module (ECM) fault |
| 113 | Short-term fuel mixture too weak |
| 121 | Manifold absolute pressure (MAP) sensor, signal absent or faulty |
| 123 | Coolant temperature sensor (CTS), signal absent or faulty |
| 132 | Battery voltage too low or too high |