Haynes THE BOOK

Automotive Technical

DATA BOOK

Click on one of the buttons above to view data for this car. To return to this screen and make another choice, click anywhere on the data screen.

MENU | HELP

Engine and cooling system

AX 1.4 1992 to 1993

Type		TU3F/2/K (K2D) 55kW 15.04
Capacity (cm³) / number of cylinders		1360 / 4
Compression ratio / pressure	bar	9.3 / _
Oil pressure	bar	[4.0]
Oil temperature	ºC	90
Valve clearance - inlet	mm	0.20±0.05
Valve clearance - exhaust	mm	0.40±0.05
Firing order		1-3-4-2
No 1 cylinder position		FE
Thermostat opening temperature	ºC	88
Radiator cap pressure	bar	1.4

Fuel system

AX 1.4 1992 to 1993

Idle speed - manual [auto]	rpm	750±50
Fast idle speed - manual [auto]	rpm	_
CO @ idle speed [3000 rpm] - see page VI	%	_
HC @ idle speed [3000 rpm] - see page VI	ppm	≤1200
CO2 @ idle speed [3000 rpm] - see page VI	%	≥10.0
O2 @ idle speed [3000 rpm] - see page VI	%	_
Carburettor / fuel injection		Solex
Type / ref		32-34 Z2 Ref 528
Main jet / needle		115, 120
Injection pressure	bar	_
Pump pressure	bar	0.25
Octane rating	RON	95[E 95 RON]

Ignition system

AX 1.4 1992 to 1993

Type		Electronic - Hall effect
Ignition coil		BTR 05
Primary resistance	ohms	0.8
Ballast resistor	ohms	_
Voltage - Tmnl 15(+) to earth	V	_
Distributor		Bosch/Ducellier
Points gap (air gap)	mm	_
Dwell angle	º (%)	_
Condenser capacity	µF	_
Rotation		Anticlockwise
Ignition timing - basic [static	º Crankshaft @ rpm	8±2 BTDC @ 750
V = Vacuum NV = No Vacuum		NV
Total ignition advance	º Crankshaft @ rpm	C068-D047
	º Crankshaft @ rpm	_
	º Crankshaft @ rpm	_
Centrifugal check.	º Crankshaft @ rpm	_
	º Crankshaft @ rpm	_
	º Crankshaft @ rpm	_
Vacuum range check	mbar	_
Maximum vacuum advance	º Crankshaft	_
Spark plugs		Bosch/Champion
Type		F7DCOR / C9YCX
Electrode gap	mm	0.80

Electrical system

AX 1.4 1992 to 1993

Battery	V / CC / RC	12 / 150 / 25
Alternator voltage / full load current / engine rpm		13.5 / 50 / 3650
Starter motor current / voltage - cranking	A / V	105 / 12
- locked	A / V	_

Running gear

AX 1.4 1992 to 1993

Brakes -		
Front (min. friction material thickness)	mm	2.0
Rear (min. friction material thickness)	mm	1.0
Tyres		
Saloon	Size	155/70x13
Estate / Van	Size	_
Pressure - front / rear - Saloon	bar	1.9 / 1.9
- Estate / Van	bar	_
Front suspension / wheel alignment		
Toe-in (+) / Toe-out (–)	mm [º]	-2.0±1.5
Camber		-30'+30'
Castor		+2°15'±30'
King pin inclination		+12.58°
Rear suspension / wheel alignment		
Toe-in (+) / Toe-out (–)	mm [º]	+1.8 to 5.4
Camber		-1°15'±20'

Torque wrench settings

AX 1.4 1992 to 1993

Cylinder head - stage 1	Nm	20
- stage 2	Nm	+ 120°
Cylinder head - stage 3	Nm	+ 120°
- stage 4	Nm	_
Big-end bearings	Nm	40
Main bearings	Nm	20 + 45°
Clutch cover	Nm	13
Flywheel [driveplate]	Nm	65 LkC
Front hubs	Nm	250
Rear hubs	Nm	140
Wheel nuts / bolts	Nm	90
Spark plugs	Nm	25

Capacities

AX 1.4 1992 to 1993

Engine oil & filter	litres	3.5
Gearbox - 4-speed [5-speed]	litres	2.0
Automatic transmission - refill	litres	_
Final drive	litres	WT
Cooling system	litres	4.8
Fuel tank	litres	43

Notes and Illustrations

_

1: Idle speed 2: CO / Mixture

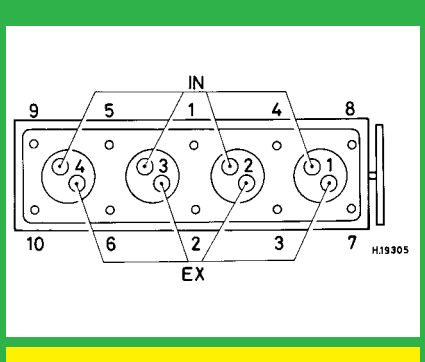

1360 cm³

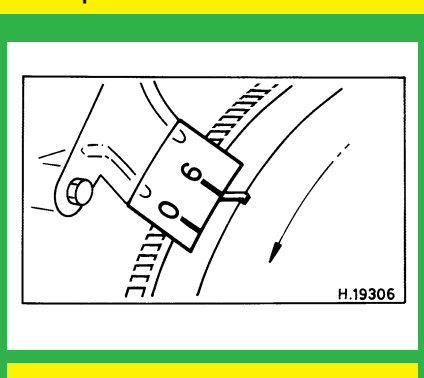

1360 cm³

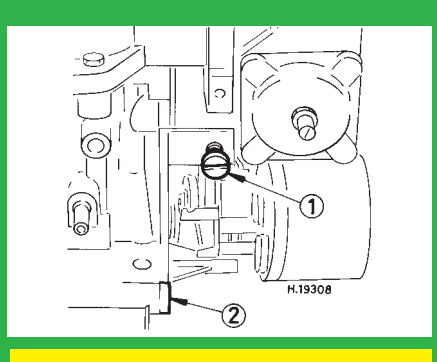

Solex Z2