Haynes THE BOOK

Automotive Technical DATA BOOK

Click on one of the buttons above to view data for this car. To return to this screen and make another choice, click anywhere on the data screen.

MENU | HELP

Engine and cooling system

309, 1.6 — 1989 to 1992

Type		XU52C/K (B2B) (68kW)
Capacity (cm³) / number of cylinders		1580 / 4
Compression ratio / pressure	bar	8.95 / _
Oil pressure	bar	1.4 [3.5]
Oil temperature	ºC	80
Valve clearance - inlet	mm	0.20
Valve clearance - exhaust	mm	0.40
Firing order		1-3-4-2
No 1 cylinder position		FE
Thermostat opening temperature	ºC	82
Radiator cap pressure	bar	1.0

Fuel system

309, 1.6 — 1989 to 1992

Idle speed - manual [auto]	rpm	800±50
Fast idle speed - manual [auto]	rpm	_
CO @ idle speed [3000 rpm] - see page VI	%	0.8 to 1.5
HC @ idle speed [3000 rpm] - see page VI	ppm	≤1200
CO2 @ idle speed [3000 rpm] - see page VI	%	_
O2 @ idle speed [3000 rpm] - see page VI	%	_
Carburettor / fuel injection		Solex
Type / ref		34-34 Z1 473/485
Main jet / needle		112±5, 112±5
Injection pressure	bar	_
Pump pressure	bar	0.32
Octane rating	RON	95[E 95 RON]

Ignition system

309, 1.6 — 1989 to 1992

Type		Electronic
Ignition coil		_
Primary resistance	ohms	0.7
Ballast resistor	ohms	_
Voltage - Tmnl 15(+) to earth	V	_
Distributor		Bosch/Ducellier
Points gap (air gap)	mm	_
Dwell angle	º (%)	_
Condenser capacity	µF	_
Rotation		Anticlockwise
Ignition timing - basic [static	º Crankshaft @ rpm	10 BTDC @ 700
V = Vacuum NV = No Vacuum		NV
Total ignition advance	º Crankshaft @ rpm	C005-D005
	º Crankshaft @ rpm	_
	º Crankshaft @ rpm	_
Centrifugal check.	º Crankshaft @ rpm	10 to 16 @ 1200
	º Crankshaft @ rpm	24 to 28 @ 3000
	º Crankshaft @ rpm	32 to 36 @ 4800
Vacuum range check	mbar	159 to 345
Maximum vacuum advance	º Crankshaft	10 to 12
Spark plugs		Eyquem/Champion
Type		FC58LS / C7YCX
Electrode gap	mm	0.80

Electrical system

309, 1.6 — 1989 to 1992

Battery	V / CC / RC	12 / 210 / 65
Alternator voltage / full load current / engine rpm		13.8 to 14.8 / _ / 3000
Starter motor current / voltage - cranking	A / V	_
- locked	A / V	_

Running gear

309, 1.6 — 1989 to 1992

Brakes -		
Front (min. friction material thickness)	mm	1.0
Rear (min. friction material thickness)	mm	_
Tyres		
Saloon	Size	165/70x13: 155x14
Estate / Van	Size	_
Pressure - front / rear - Saloon	bar	1.9 / 2.1
- Estate / Van	bar	_
Front suspension / wheel alignment		
Toe-in (+) / Toe-out (–)	mm [º]	+0.5±0.5 PW
Camber		-30'±30'
Castor		+2°±30'
King pin inclination		+10°15'±30'
Rear suspension / wheel alignment		
Toe-in (+) / Toe-out (–)	mm [º]	+1.6±0.8 PW[1]
Camber		-50'±30'

Torque wrench settings

309, 1.6 — 1989 to 1992

Cylinder head - stage 1	Nm	60
- stage 2	Nm	Slacken
Cylinder head - stage 3	Nm	20
- stage 4	Nm	+ 300°
Big-end bearings	Nm	40[2]
Main bearings	Nm	49
Clutch cover	Nm	25
Flywheel [driveplate]	Nm	49 LkC
Front hubs	Nm	265
Rear hubs	Nm	215
Wheel nuts / bolts	Nm	85
Spark plugs	Nm	10 to 20

Capacities

309, 1.6 — 1989 to 1992

Engine oil & filter	litres	5.0
Gearbox - 4-speed [5-speed]	litres	2.0
Automatic transmission - refill	litres	2.4
Final drive	litres	WT
Cooling system	litres	8.0
Fuel tank	litres	55

Notes and Illustrations

[1]**1990 ▶: +1.8±0.8 PW**
[2]**Slacken, then 20 + 70°**

1: Idle speed 2: CO / Mixture

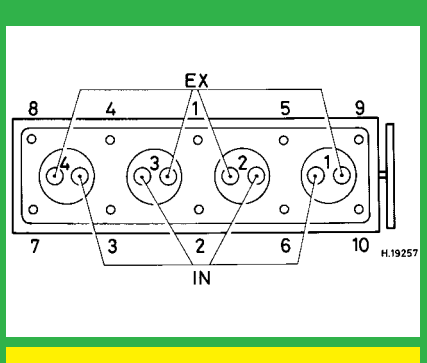

1580 cm³

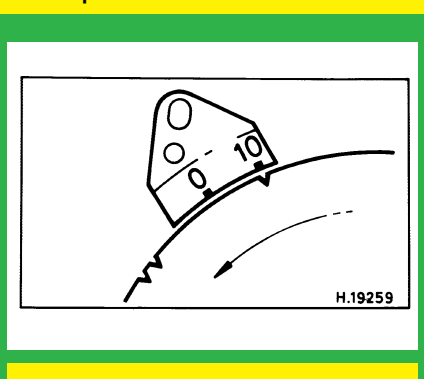

1580 cm³

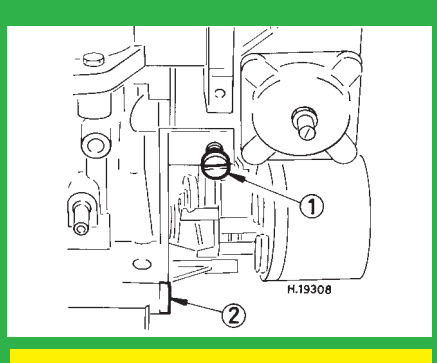

Solex Z1