Haynes THE BOOK

Automotive Technical DATA BOOK

Click on one of the buttons above to view data for this car. To return to this screen and make another choice, click anywhere on the data screen.

MENU | HELP

Engine and cooling system — 9 & 11 1.7 (L42N/B/C37N) — 1986 to 1989

Type		F2N-E7-08
Capacity (cm³) / number of cylinders		1721 / 4
Compression ratio / pressure	bar	10.0 / _
Oil pressure	bar	2.0 [3.5]
Oil temperature	ºC	80
Valve clearance - inlet	mm	0.20
Valve clearance - exhaust	mm	0.40
Firing order		1-3-4-2
No 1 cylinder position		FE
Thermostat opening temperature	ºC	86 or 89
Radiator cap pressure	bar	_

Fuel system — 9 & 11 1.7 (L42N/B/C37N) — 1986 to 1989

Idle speed - manual [auto]	rpm	700±50 (943 & Z13: 800±50)
Fast idle speed - manual [auto]	rpm	(943: 1050±50)
CO @ idle speed [3000 rpm] - see page VI	%	1.5±0.5
HC @ idle speed [3000 rpm] - see page VI	ppm	≤1200
CO2 @ idle speed [3000 rpm] - see page VI	%	_
O2 @ idle speed [3000 rpm] - see page VI	%	_
Carburettor / fuel injection		Solex
Type / ref		28-34 Z10 920/943 or Z13
Main jet / needle		102, 145 (943: 97.5, 145)[1]
Injection pressure	bar	_
Pump pressure	bar	_
Octane rating	RON	98[E 98 RON]

Ignition system — 9 & 11 1.7 (L42N/B/C37N) — 1986 to 1989

Type		AEI
Ignition coil		Renix
Primary resistance	ohms	0.4 to 0.8
Ballast resistor	ohms	_
Voltage - Tmnl 15(+) to earth	V	_
Distributor		Renix
Points gap (air gap)	mm	_
Dwell angle	º (%)	_
Condenser capacity	µF	_
Rotation		_
Ignition timing - basic [static	º Crankshaft @ rpm	7±1 BTDC @ idle
V = Vacuum NV = No Vacuum		NV
Total ignition advance	º Crankshaft @ rpm	RE232
	º Crankshaft @ rpm	_
	º Crankshaft @ rpm	_
Centrifugal check.	º Crankshaft @ rpm	5 to 9 @ 750
	º Crankshaft @ rpm	8 to 12 @ 1550
	º Crankshaft @ rpm	26 to 29 @ 4050
Vacuum range check	mbar	300 @ 4550 rpm
Maximum vacuum advance	º Crankshaft	≥8
Spark plugs		AC/Champion
Type		C41CXLS / N279YC
Electrode gap	mm	0.75 to 0.85

Electrical system — 9 & 11 1.7 (L42N/B/C37N) — 1986 to 1989

Battery	V / CC / RC	12 / 175 / 60
Alternator voltage / full load current / engine rpm		_
Starter motor current / voltage - cranking	A / V	_
- locked	A / V	350 to 420 / _

Running gear — 9 & 11 1.7 (L42N/B/C37N) — 1986 to 1989

Brakes -		
Front (min. friction material thickness)	mm	6.0 with backing
Rear (min. friction material thickness)	mm	2.5 with backing
Tyres		
Saloon	Size	155x13: 175/70x13
Estate / Van	Size	_
Pressure - front / rear - Saloon	bar	1.8 / 2.0
- Estate / Van	bar	_
Front suspension / wheel alignment		
Toe-in (+) / Toe-out (–)	mm [º]	-1.0±1.0
Camber		0±30'
Castor		+1°±30'
King pin inclination		+12°55'±30'
Rear suspension / wheel alignment		
Toe-in (+) / Toe-out (–)	mm [º]	0 to +3.0
Camber		-50'±30'

Torque wrench settings — 9 & 11 1.7 (L42N/B/C37N) — 1986 to 1989

Cylinder head - stage 1	Nm	30
- stage 2	Nm	70, wait 3 min, loosen
Cylinder head - stage 3	Nm	20
- stage 4	Nm	+ 123±2°
Big-end bearings	Nm	45 to 50
Main bearings	Nm	60 to 65
Clutch cover	Nm	25
Flywheel [driveplate]	Nm	50 to 55
Front hubs	Nm	250
Rear hubs	Nm	160
Wheel nuts / bolts	Nm	80
Spark plugs	Nm	_

Capacities — 9 & 11 1.7 (L42N/B/C37N) — 1986 to 1989

Engine oil & filter	litres	5.2
Gearbox - 4-speed [5-speed]	litres	3.4
Automatic transmission - refill	litres	_
Final drive	litres	WT
Cooling system	litres	6.5
Fuel tank	litres	47

Notes and Illustrations

[1]**32-34 Z13: 115, 137.5**

1: Idle speed 2: CO / Mixture

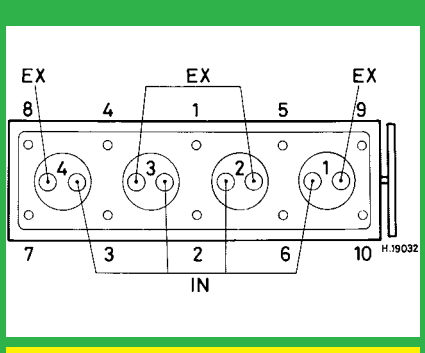

1721 cm³

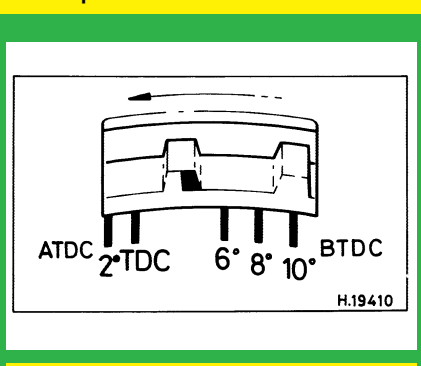

1721 cm³

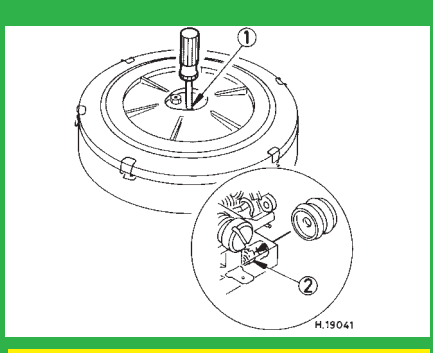

Solex Z10

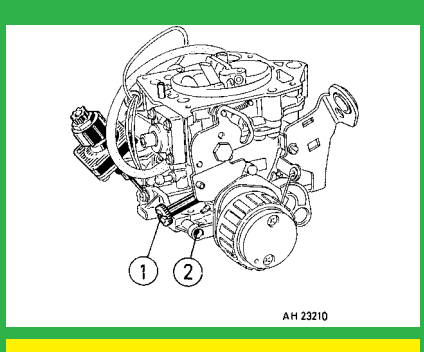

Solex Z13