Haynes THE BOOK

Automotive Technical DATA BOOK

Click on one of the buttons above to view data for this car. To return to this screen and make another choice, click anywhere on the data screen.

MENU | HELP

Engine and cooling system

		Montego 1.3 (LC) 1989 to 1991
Type		12HE44 or 12HE19[1]
Capacity (cm³) / number of cylinders		1275 / 4
Compression ratio / pressure	bar	8.0 / _
Oil pressure	bar	1.0 [4.1]
Oil temperature	ºC	_
Valve clearance - inlet	mm	0.33
Valve clearance - exhaust	mm	0.33
Firing order		1-3-4-2
No 1 cylinder position		TCE
Thermostat opening temperature	ºC	88
Radiator cap pressure	bar	1.04

Fuel system

		Montego 1.3 (LC) 1989 to 1991
Idle speed - manual [auto]	rpm	750±50
Fast idle speed - manual [auto]	rpm	1100±50. 12HE19: 1200±50
CO @ idle speed [3000 rpm] - see page VI	%	2.5±1.0
HC @ idle speed [3000 rpm] - see page VI	ppm	≤1200
CO2 @ idle speed [3000 rpm] - see page VI	%	_
O2 @ idle speed [3000 rpm] - see page VI	%	_
Carburettor / fuel injection		SU
Type / ref		HIF 44E / FZX1468/1422
Main jet / needle		0.100 / BGW or 66XC. 1422: BCZ
Injection pressure	bar	_
Pump pressure	bar	0.3
Octane rating	RON	91[E 95 RON][1]

Ignition system

		Montego 1.3 (LC) 1989 to 1991
Type		Electronic
Ignition coil		Unipart GCL 143
Primary resistance	ohms	0.71 to 0.81
Ballast resistor	ohms	_
Voltage - Tmnl 15(+) to earth	V	12-1
Distributor		Lucas
Points gap (air gap)	mm	[0.28±0.08]
Dwell angle	º (%)	_
Condenser capacity	µF	_
Rotation		Anticlockwise
Ignition timing - basic [static	º Crankshaft @ rpm	9±1 BTDC @ 1500
V = Vacuum NV = No Vacuum		NV
Total ignition advance	º Crankshaft @ rpm	_
	º Crankshaft @ rpm	_
	º Crankshaft @ rpm	_
Centrifugal check.	º Crankshaft @ rpm	2 to 6 @ 2000
	º Crankshaft @ rpm	10 to 14 @ 4000
	º Crankshaft @ rpm	16 to 20 @ 5500
Vacuum range check	mbar	101 to 373
Maximum vacuum advance	º Crankshaft	20
Spark plugs		Unipart/Champion
Type		GSP4362 / N9YC
Electrode gap	mm	0.80

Electrical system

		Montego 1.3 (LC) 1989 to 1991
Battery	V / CC / RC	12 / 280 / 50
Alternator voltage / full load current / engine rpm		14.0 / _ / 3000
Starter motor current / voltage - cranking	A / V	65 / 12
- locked	A / V	340 to 390 / 7

Running gear

		Montego 1.3 (LC) 1989 to 1991
Brakes -		
Front (min. friction material thickness)	mm	3.0
Rear (min. friction material thickness)	mm	1.5
Tyres		
Saloon	Size	165x13: 185/65x14
Estate / Van	Size	_
Pressure - front / rear - Saloon	bar	1.8 / 2.0
- Estate / Van	bar	_
Front suspension / wheel alignment		
Toe-in (+) / Toe-out (–)	mm [º]	[0±8']
Camber		+30'±21'
Castor		+37'±30'
King pin inclination		+12°33'
Rear suspension / wheel alignment		
Toe-in (+) / Toe-out (–)	mm [º]	[+20' to 40']
Camber		0 to -1°

Torque wrench settings

		Montego 1.3 (LC) 1989 to 1991
Cylinder head - stage 1	Nm	38
- stage 2	Nm	75
Cylinder head - stage 3	Nm	_
- stage 4	Nm	_
Big-end bearings	Nm	40
Main bearings	Nm	85
Clutch cover	Nm	15
Flywheel [driveplate]	Nm	75
Front hubs	Nm	203
Rear hubs	Nm	68
Wheel nuts / bolts	Nm	72
Spark plugs	Nm	25

Capacities

		Montego 1.3 (LC) 1989 to 1991
Engine oil & filter	litres	2.7
Gearbox - 4-speed [5-speed]	litres	1.5 [2.0]
Automatic transmission - refill	litres	_
Final drive	litres	WT
Cooling system	litres	6.6
Fuel tank	litres	50

Notes and Illustrations

[1]**12HE19: [L]**

1: Idle speed 2: CO / Mixture

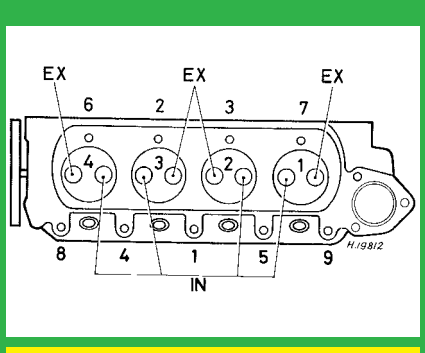

1275 cm³

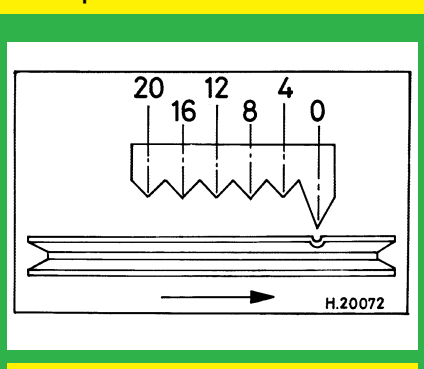

1275 cm³

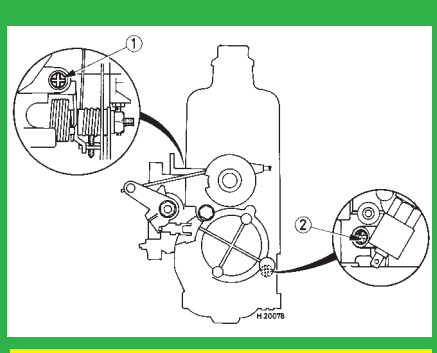

SU HIF44E