Haynes THE BOOK

Automotive Technical

DATA BOOK

Click on one of the buttons above to view data for this car. To return to this screen and make another choice, click anywhere on the data screen.

MENU | HELP

Engine and cooling system

Swift GTi 1986 to 1989

Type		DOHC 16 valve
Capacity (cm³) / number of cylinders		1298 / 4
Compression ratio / pressure	bar	10.0 / 10.8
Oil pressure	bar	[4.0 to 4.8]
Oil temperature	ºC	85
Valve clearance - inlet	mm	0: Hyd.
- exhaust	mm	0: Hyd.
Firing order		1-3-4-2
No 1 cylinder position		TBE
Thermostat opening temperature	ºC	82 or 88
Radiator cap pressure	bar	0.90

Fuel system

Swift GTi 1986 to 1989

Idle speed - manual [auto]	rpm	800±50
Fast idle speed - manual [auto]	rpm	_
CO @ idle speed [3000 rpm] - see page VI	%	≤0.3
HC @ idle speed [3000 rpm] - see page VI	ppm	≤200
CO2 @ idle speed [3000 rpm] - see page VI	%	_
O2 @ idle speed [3000 rpm] - see page VI	%	_
Carburettor / fuel injection		Suzuki
Type / ref		EPi (Electronic Petrol Inj.)
Main jet / needle		_
Injection pressure	bar	_
Pump pressure	bar	1.8 to 2.1
Octane rating	RON	95[E 95 RON]

Ignition system

Swift GTi 1986 to 1989

Type		Electronic
Ignition coil		_
Primary resistance	ohms	1.1 to 1.4
Ballast resistor	ohms	_
Voltage - Tmnl 15(+) to earth	V	_
Distributor		Nippon Denso
Points gap (air gap)	mm	[0.20 to 0.40]
Dwell angle	º (%)	_
Condenser capacity	µF	_
Rotation		Clockwise
Ignition timing - basic [static	º Crankshaft @ rpm	6 BTDC @ 800±50
V = Vacuum NV = No Vacuum		_
Total ignition advance	º Crankshaft @ rpm	_
	º Crankshaft @ rpm	_
	º Crankshaft @ rpm	_
Centrifugal check.	º Crankshaft @ rpm	Electronic control
	º Crankshaft @ rpm	_
	º Crankshaft @ rpm	_
Vacuum range check	mbar	Electronic control
Maximum vacuum advance	º Crankshaft	_
Spark plugs		NGK/Champion
Type		BPR6ES / RN9YC
Electrode gap	mm	0.70 to 0.80

Electrical system

Swift GTi 1986 to 1989

Battery	V / CC / RC	12 / 190 / 65
Alternator voltage / full load current / engine rpm		14.2 to 15.0 / _ / 3000
Starter motor current / voltage - cranking	A / V	150 / 9.0 or 300 / 7.7 (1.2kW)
- locked	A / V	380 / 5.0 (0.8kW)[1]

Running gear

Swift GTi 1986 to 1989

Brakes -		
Front (min. friction material thickness)	mm	8.0 with backing
Rear (min. friction material thickness)	mm	2.8
Tyres		
Saloon	Size	165/65x13
Estate / Van	Size	_
Pressure - front / rear - Saloon	bar	1.8 / 1.8
- Estate / Van	bar	_
Front suspension / wheel alignment		
Toe-in (+) / Toe-out (–)	mm [º]	0±2.0
Camber		+15'±1°
Castor		+3°10'±2°
King pin inclination		+12°50'±3°
Rear suspension / wheel alignment		
Toe-in (+) / Toe-out (–)	mm [º]	_
Camber		_

Torque wrench settings

Swift GTi 1986 to 1989

Cylinder head - stage 1	Nm	63 to 70
- stage 2	Nm	_
- stage 3	Nm	_
- stage 4	Nm	_
Big-end bearings	Nm	33 to 37
Main bearings	Nm	50 to 57
Clutch cover	Nm	18 to 28
Flywheel [driveplate]	Nm	57 to 65
Front hubs	Nm	150 to 270
Rear hubs	Nm	80 to 120
Wheel nuts / bolts	Nm	50 to 80
Spark plugs	Nm	20 to 30

Capacities

Swift GTi 1986 to 1989

Engine oil & filter	litres	4.0
Gearbox - 4-speed [5-speed]	litres	2.3
Automatic transmission - refill	litres	_
Final drive	litres	WT
Cooling system	litres	4.7
Fuel tank	litres	33

Notes and Illustrations

[1]500 / 5.0 (0.9kW). 780 / 4.0 (1.2kW)

1: Idle speed 2: CO / Mixture

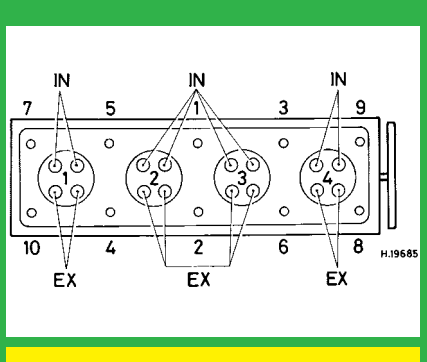

1298 cm³, 16V

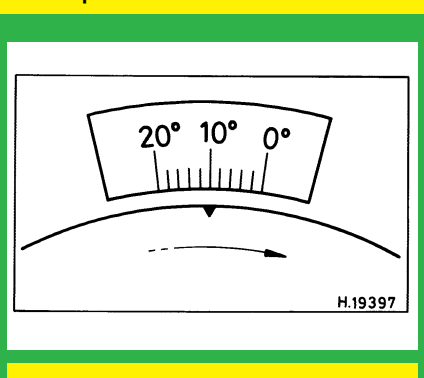

1298 cm³

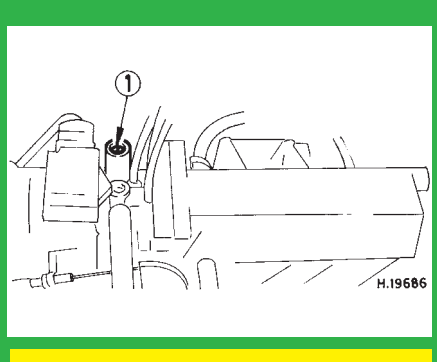

EPi

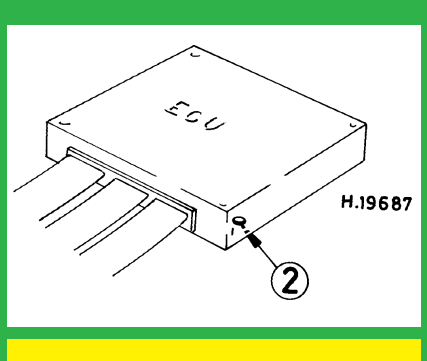

EPi